DR. D. TAYLOR

VOLUME 30 BOOK 18
AUGUST 1985

1985 D.A.T.A.BOOK®

ELECTRONIC INFORMATION SERIES

MICROWAVE
EDITION 52

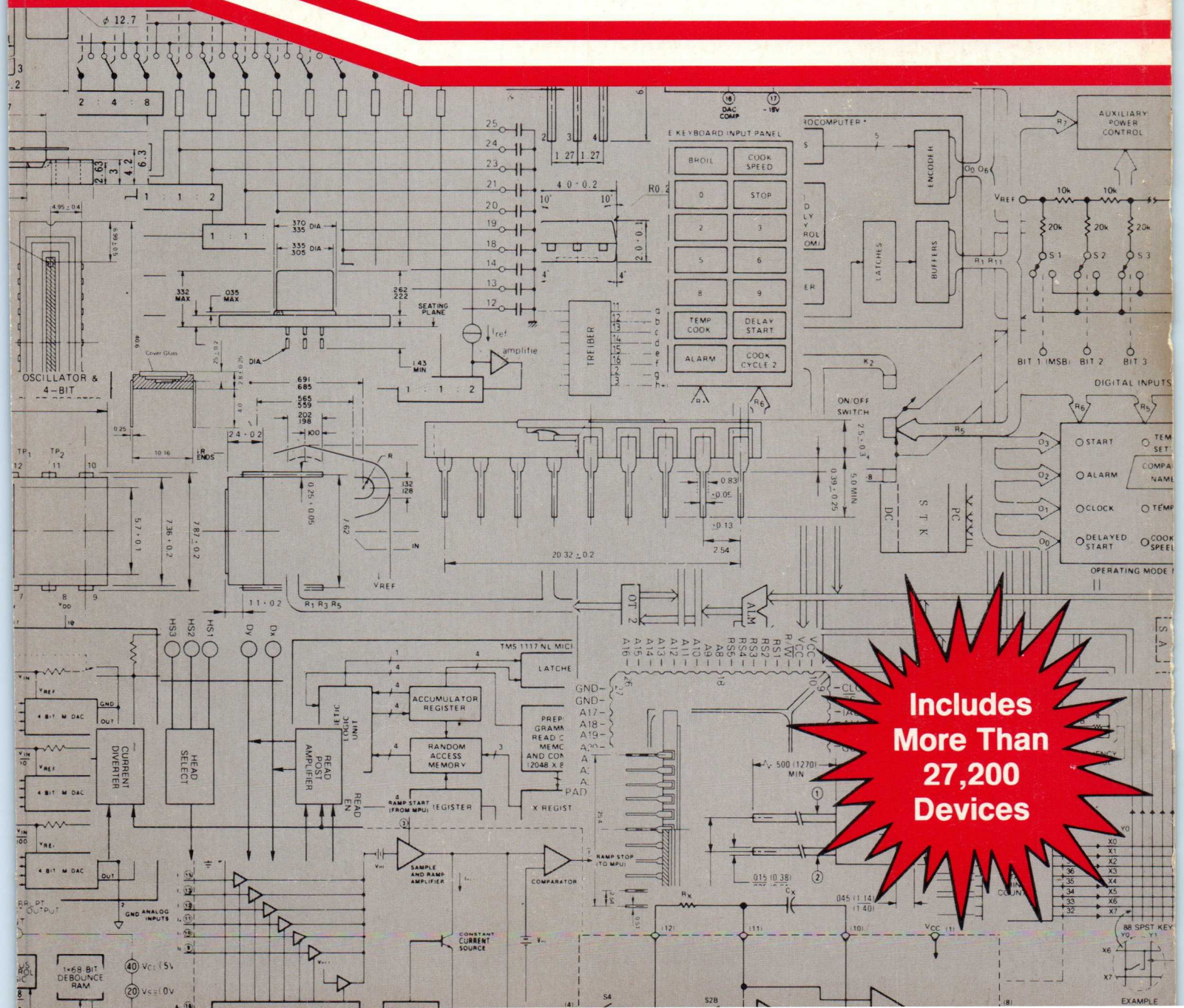

Includes More Than 27,200 Devices

Part of your next 35 GHz radar is already in production.

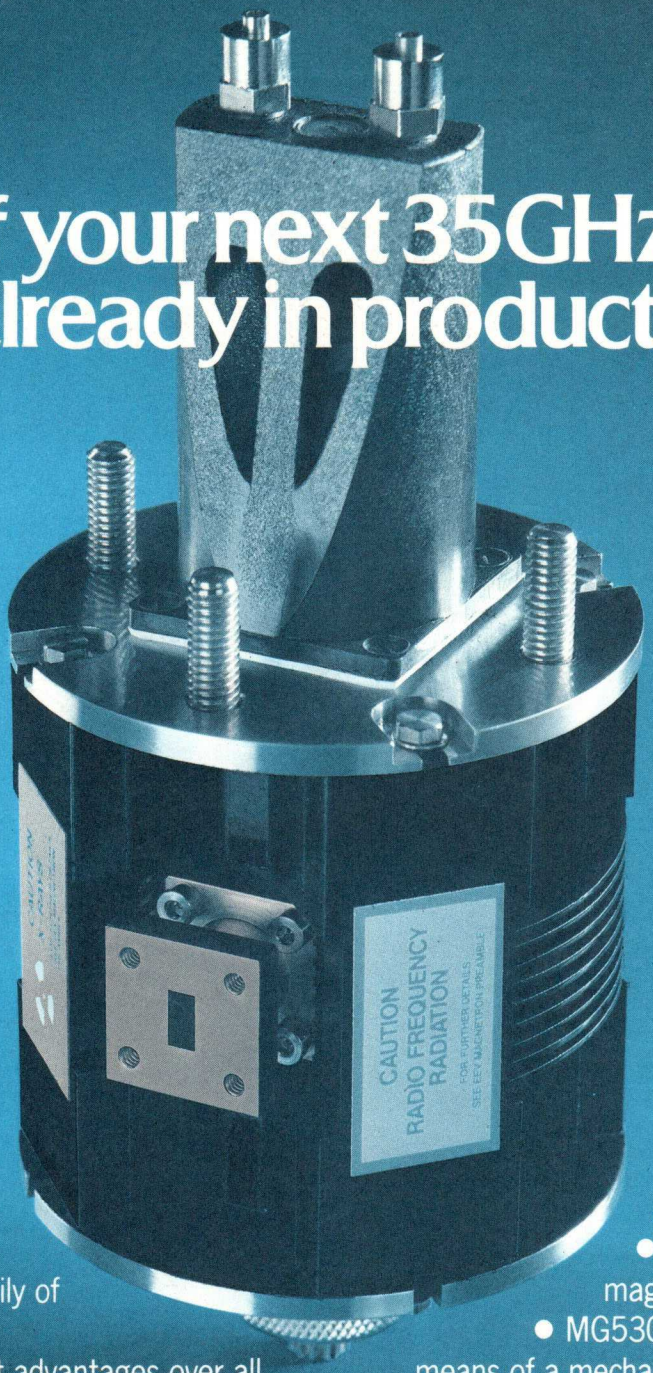

Shown actual size

The millimeter magnetron has entered a new era. Now, EEV, world leaders in this technology, have produced a totally new family of 35 GHz magnetrons.

These offer significant advantages over all previous designs. Size and weight have been more than halved, thanks to the advanced Samarium Cobalt magnet assembly. What is more, this design ensures a considerably reduced external magnetic field and much greater resistance to demagnetisation.

New cathode technology means greater reliability and improved life with a minimum 40 watts mean power. And much wider capability since all the new magnetrons operate efficiently at peak power outputs from 20KW to over 40KW.

Already in production are:

- MG5301 A fixed-frequency magnetron weighing only 3.3lbs.
- MG5302 Tunable over 300 MHz by means of a mechanical tuner. Weighs only 3.9lbs. (Shown above)
- MG5303 Designed for continuous precision tuning. Operation is particularly smooth and free from backlash. Weighs only 4.1lbs.

Non-cyclic frequency agile variants are currently under development.

If you're designing systems, particularly those calling for phase priming or MTI in rugged and airborne environments, talk to EEV today about our new magnetron family.

EEV Magnetrons

EEV Inc, 7 Westchester Plaza, Elmsford, NY 10523, USA. Tel: 914 592 6050. Telex: 6818096.
EEV Canada Ltd, 67 Westmore Drive, Rexdale, Ontario M9V 3Y6, Canada. Tel: 416 745 9494. Telex: 06 989 363.
EEV, Waterhouse Lane, Chelmsford, Essex CM1 2QU, England. Tel: 0245 261777. Telex: 99103.

Ad Referral Number MW2

D.A.T.A. INC.

A Cordura Company
9889 Willow Creek Rd. P.O. Box 26875
San Diego, California 92126
TOLL-FREE (800) 854-7030, in CA
(800) 421-0159 (619) 578-7600

NEW Western Union Easylink:
Telex – 910530606
Mailbox – 62773091

PUBLISHER
Laurence E. Laumann, *President*
Virginia Sorrells, *Administrative Assistant*

PRODUCT DEVELOPMENT
Steve d'Adolf, *Technical Director*
Frank E. Kupec, *Product Development Coordinator*

EDITORIAL
David M. Rady, *Managing Editor*
Karen E. Wilcox, *Assistant Managing Editor*
Cheryl Stamm, *Manufacturers Service Representative*

ENGINEERING EDITORS
Jim Fitzgerald, *Q.A. Editor*
James Mastt, *Sr. Editor*
Janice H. Perley
William T. Dennison
Steven H. Rohrick
Paul Magin
Michael S. Bridges

PRODUCTION EDITORS
Mary Herrin, *Coordinator*
Larisa Botvinik
Margaret Kelder
Dixie Wilson

GRAPHICS
Eloise S. Stiverson, *Art Director*
Cynthia P. Wilson, *Graphics Supervisor*
Lynda Bennett
Douglas Mooney
Robert Reynolds

OPERATIONS
Karen Detert, *Marketing Operations Manager*
Sherry Spina, *Financial Coordinator*
Phyllis Gosse, *Customer Service*
Maureen Meals, *Customer Service*
Sheree Wrightman, *Customer Service*

MARKETING & ADVERTISING
Norris Durham, *Director of Market Development*
Patricia A. Wilson, *Direct Response Marketing Manager*
Karen Castillo, *Marketing Production Coordinator*
Nita Main, *Secretary*
Chuck Hirsch, *Director of Telemarketing*
George Orndoff, *Advertising Sales Representative*
Deborah L. Hubbard, *Advertising Production Coordinator*

DIRECT SALES
Robert Bryden, *National Sales Manager*
Betty Davis, *Sales Coordinator*

EUROPEAN MARKETING
Doug Daniel, *European Sales Manager*
European Office:
D.A.T.A. International, Inc.
Orpin House
Hilders Lane
Edenbridge TN8 6JX
Kent, England
Telex: (851) 95671 EDNMET G

D.A.T.A., Inc., is a subsidiary of CORDURA PUBLICATIONS, INC., 9889 Willow Creek Rd., P.O. Box 26260, San Diego, CA 92126

D.A.T.A.BOOK (USPS 559-390) Electronic Information Series is published 38 times per year in the following sequence: 0 in Jan., 2 in Feb., 7 in Mar., 0 in Apr., 0 in May, 7 in Jun., 1 in Jul., 7 in Aug., 4 in Sept., 0 in Oct., 5 in Nov., 5 in Dec., for $2,512.00 (Full U.S. Price) by D.A.T.A. Inc., 9889 Willow Creek Rd., P.O. Box 26875, San Diego, CA 92126. Second-class postage paid at San Diego, CA ISSN 0732-5894.

POSTMASTER: Send address changes to D.A.T.A., Inc., P.O. Box 26875, San Diego, CA 92126.

COPYRIGHT©1985 by Derivation and Tabulation Associates, Inc., a Cordura Company, all rights reserved. No part of this publication may be transmitted, in any form or by any means, electronic, mechanical, photocopying, recording or otherwise, without the prior written permission of the publisher and corporate officer of CPI. This includes text, tabularized information and illustrations.

1985 D.A.T.A.BOOK®

ELECTRONIC INFORMATION SERIES

VOLUME 30 BOOK 18 AUGUST 1985

MICROWAVE

EDITION 52
27,201 TYPES **111 MANUFACTURERS**

TABLE OF CONTENTS

COMPONENT LOCATOR i

HOW TO USE THIS BOOK
2 Basic Ways xv

GENERAL INFORMATION
How Type Numbers Are Arranged In The Technical Sections - Sequencing Parameters xvii
How Families Of Types Are Listed In Section 6 xvii
How Type Numbers Are Sequenced In The Type No. Cross Index xviii

TYPE NO. CROSS INDEX
1. All Types 1

TECHNICAL DATA SECTIONS – TUBES
2. Source, Amplifier, Output Tubes 60
3. Duplexer Tubes 105

TECHNICAL DATA SECTIONS – SEMICONDUCTORS
Diodes
4. Microwave Mixer Diodes 112
5. Microwave Video Detector Diodes 128
6. Voltage Variable Capacitors & Varactor Diodes 134
7. Tunnel Diodes 205
8. Miscellaneous Devices 212

Transistors
10. UHF/Microwave Transistors 300

SUPPLEMENTARY SECTIONS
11. Types With U.S. Military Specifications Tubes and Semiconductors 323
12. Outline Drawings 326
JEDEC Gauge Designations 516
Lead Code Identification Guide 517
13. Manufacturers' Device Numbering Keys 518
14. Manufacturers' Logos 522

INTERPRETER - Symbols & Codes Explained MW-1

DRAWING INDEX MW-13

SPECIAL INSERT
Manufacturers' Sales Office Listings C2
Manufacturers' Codes, Names, & Addresses C10

DISCLAIMER OF WARRANTIES: Although the information contained within this volume has been obtained from sources generally believed to be reliable, no warranty (express or implied) can be made as to its accuracy or completeness, nor is any responsibility assumed by the publisher or anyone connected with it for loss or damages suffered through reliance on any information contained in this volume. Specifically, no warranty of merchantability, fitness for a particular purpose or any other warranty is made or to be implied with respect to this volume, and no person has the authority to modify such limitation except in a writing signed by a corporate officer of the publisher. The acceptance of this manual is conditional on the acceptance of this disclaimer. If the buyer does not accept the terms of this disclaimer, return the manual within thirty (30) days and the publisher will refund any money advanced by the buyer toward the purchase of this manual.

EDITORIAL POLICY AND PROCEDURES

PURPOSE

This D.A.T.A.BOOK is designed to report comprehensively on what is presently being produced throughout the world in the field of Microwave devices. While a book such as this can not provide 100% of the information you might need, its primary aims are those of facilitating the selection of types suitable to your technical requirements, and of directing you to the sources of their manufacture.

TECHNICAL DATA ACQUISITION

D.A.T.A. acquires and processes the information presented in this D.A.T.A.BOOK with the cooperation of the participating manufacturers who supply us with their latest technical information. Manufacturers are not charged for the listing of their products.

JEDEC OUTLINES

The electrical, mechanical and environmental characteristics tabulated for the standard 1N, 2N, 3N type numbers are derived directly from the JEDEC registration releases. The particular manufacturer or manufacturers for whom such types are registered are so indicated by the use of a symbol next to their manufacturer codes in the Type No. Cross Index. In general, the JEDEC-designated types produced by the various manufacturers, whether registered or not, do conform with the registered specifications; however, there may be exceptions, and it is recommended that the individual manufacturers be consulted.

MILITARY TYPE NUMBERS

The electrical, mechanical and environmental information tabulated for the military types in the technical sections is derived directly from the applicable military specifications and standards. The source information, showing the particular manufacturers qualified for each type, is derived from the QPL (Qualified Parts List) associated with the governing specification, or from the manufacturers' Qualification Test Letters.

MICROFILM SERVICE

Type numbers in the Cross Index indicating data sheets are available, can be obtained in a Microfilm Service. Inquires should be directed to Customer Service at 1-800-854-7030.

SUBSTITUTE TYPES AND COMPATIBILITY

This D.A.T.A.BOOK can not truly claim to be an interchangeability chart; however, because of the sequencing arrangement of selected characteristics in the technical sections, types with the same or similar characteristics are grouped together. For the purposes of replacement, this means of thorough, convenient technical comparison should prove superior to, and safer than, a mere listing of possible substitute type numbers.

PRICE AND AVAILABILITY

Because of the rapidly-changing and complex nature of this field, current price and delivery information should be obtained direct from the manufacturers. The list of manufacturers and the Local Offices Section in back of the book will assist you in this.

MANUFACTURERS' SPECIFICATIONS

This book includes currently-manufactured devices and devices soon-to-be available with their major characteristics, drawings and manufacturers. Every effort is made to ensure the accuracy of the entries herein; however, the publisher can not be held responsible nor guarantee against the possibility of error or omission. Only the manufacturers or their authorized representatives can provide you with complete technical details.

D.A.T.A.BOOKS®

Component Locator

COMPONENT	TITLE OF PUBLICATION: TRANSISTOR	DIODE	THYRISTOR	POWER SEMICONDUCTOR	DIGITAL I.C.'s	INTERFACE I.C.'s	LINEAR I.C.'s	MEMORY I.C.'s	AUDIO/VIDEO I.C.'s	MICROPROCESSOR I.C.'s	MICROCOMPUTER SYSTEMS	OPTOELECTRONICS	MICROWAVE	MODULES/HYBRIDS	POWER SUPPLIES
	SECTION NUMBER														
A/D Converter						8								13	
A/A I/O Converter										7	5				
AC Switch (ACS)			5	25											
Active Filter							11							21	
A/D I/O Converter										7	5				
Adder: Half, Full					15										
Adder/Subtractor					15										
Address MUX/Refresh Counter						20									
AFC Circuit									3						
AGC Circuit									3						
ALARM Circuit							9								
ALU Status/Shift Controller										6					
ALU					18										
AM Receiver									3						
AM/FM RF-IF Circuit									3						
Amorphous Sense Amplifier						17									
Amplifier-Antilog							3								
Amplifier-Audio									2					21	
Amplifier-Buffer							2								
Amplifier-CATV									3						
Amplifier-Current							2							21	
Amplifier-Differential							2							3	
Amplifier-Gas FET														21	
Amplifier-Instrumentation							2							21	
Amplifier-Isolation							2							21	
Amplifier-Logarithmic							3							21	
Amplifier-Microwave													8		
Amplifier-Operational							5							2	
Amplifier-Optoelectronic												46			
Amplifier-Programmable Gain							5							21	
Amplifier-Reference		2					2								
Amplifier-RF/IF							8		2					4	
Amplifier-Sample/Hold						18								17	
Amplifier-Sense-Amorphous						17									
Amplifier-Sense-Core						17									
Amplifier-Sense-Mag Bubble Mem						17									
Amplifier-Sense-Magnetic Tape						17									
Amplifier-Sense-MOS						17									
Amplifier-Sense-NMOS						17									
Amplifier-Sense-Plated Wire						17									

COMPONENT	TITLE OF PUBLICATION: TRANSISTOR	DIODE	THYRISTOR	POWER SEMICONDUCTOR	DIGITAL I.C.'s	INTERFACE I.C.'s	LINEAR I.C.'s	MEMORY I.C.'s	AUDIO/VIDEO I.C.'s	MICROPROCESSOR I.C.'s	MICROCOMPUTER SYSTEMS	OPTOELECTRONICS	MICROWAVE	MODULES/HYBRIDS	POWER SUPPLIES
	SECTION NUMBER														
Amplifier-Servo							4								
Amplifier-Squaring							3								
Amplifier-Track & Hold						20								21	
Amplifier-Video							2		4						
Amplifier-Wideband							16		4					5	
Analog Signal Level Detector							14							21	
Analog MUX						12								15	
Analog Multiplier							3								
Analog Delay (SAD)							3								
Analog Switches-SPDT						11								21	
Analog Switches-SSNC						11								21	
Analog Switches-SSNO						11								21	
Antilog Amplifiers							3								
Arithmetic Logic Unit					18										
Array-Analog Switch						11									
Array-Diode		6													
Array-LED												4			
Array-Photodiode												15			
Array-Phototransistor												15			
Array-Photovoltaic												18			
Array-Programmable Gate								20							
Array-Programmable Logic								20							
Array-Transistor							13								
Astable Multivibrator					12										
Attenuator							3								
Audio Amplifier									2						
Audio Processor (Stereo/4 Channel)									3						
Automatic Call Processing Unit (ACPU)										7					
Automatic Frequency Control									3						
Automatic Gain Control									3						
Automotive									7						
Avalanche Diode		7													
Avalanche Mode Transistor	15												8		
Backward Diode													2		
Backward Wave Tube															
Bar Graph Display												46			
Bargraph Generator									7						
Baud Rate Generator						20									
Bi-Directional Transistor	15														
Bi-Directional Switch			6												
Binary Coded Decimal Counter					11										
Bridges-Silicon Controlled			7												
Bubble Memory								20							
Bubble Memory Support								20							
Buffer Amplifier							2								
Buffer Hex Bus					5										
Buffer/Driver										8					
Buffer/Driver-Logic						2	2								
Buffer Gates					5										
Buffer Octal						2									
Bus Arbiter										7					
Bus Driver						3									
Bus Interface						20									
Bus Receiver						15									
Bus Transceiver						16								21	
Calculators									6						
CAM								20							
CATV Amplifier									3						
Card Controller											4				
CPU Board											2				
CCD							3	20							
Channel Scanner									3						
Character Generator								4							
Charge-Coupled Device (CCD)							3	20							
Checker-Parity					25										

COMPONENT	TITLE OF PUBLICATION: TRANSISTOR	DIODE	THYRISTOR	POWER SEMICONDUCTOR	DIGITAL I.C.'s	INTERFACE I.C.'s	LINEAR I.C.'s	MEMORY I.C.'s	AUDIO/VIDEO I.C.'s	MICROPROCESSOR I.C.'s	MICROCOMPUTER SYSTEMS	OPTOELECTRONICS	MICROWAVE	MODULES/HYBRIDS	POWER SUPPLIES
	SECTION NUMBER														
Chip Set Microprocessor										3					
Circular Detector												46			
Clamp						20									
Clamp/Terminator						20								21	
Clock-Digital									7						
Clock Driver						4								11	
Clock Generator/Driver										9					
Clocks/Multivibrators					12										
Code Converter								6							
CODEC							11								
Color TV Circuits									5					21	
Compander							11								
Comparator-Current							7,14								
Comparator-Identity					17										
Comparator-Magnitude					17										
Comparator-Phase							6								
Comparator-Unified Bus					17										
Comparator-Voltage							14							7	
Complementary Symm (PNP & NPN)	15						13								
Computer-on-a-chip										3					
Contact Protector Diode		6													
Content Addressable Memory								20							
Control-Store Sequencer										7					
Controller-ALU Status										6					
Controller-Card											4				
Controller-Data Interface						20				6					
Controller-DMA										6					
Controller-Diskette						20				6					
Controller-Display						20				6					
Controller-Floppy Disk						20				6					
Controller-Interrupt System										6					
Controller-Industrial Timer					10										
Controller-Keyboard Encoder						20				6					
Controller-Magnetic Tape						20				6					
Controller-Memory/Interface						20				6					
Controller-Microcomputer Bus										6					
Controller-Motor Speed							4		7					21	
Controller-Optoelectronic												46			
Controller-Paper Tape						20				6					
Controller-Power Supply							7								
Controller-Printer						20				6					
Controller-Program Sequence										6					
Controller-Serial Communication						20				6	5				
Controller-Shift										6					
Controller-Switching Power Supply							7								
Controller-TTY Interface						20				6					
Controller-Winchester Chip (Flop Disk)						20					4				
Controls					27										
Controls/Counters/Converters					27										
Converter-A/D (All)						8								13	
Converter-A to A I/O										7	5				
Converter-A to D I/O										7	5				
Converter-Code								6							
Converter-D to A						9								14	
Converter-D to A I/O										7	5				
Converter-Digital to Synchro														8	
Converter-Freq. to DC							6							21	
Converter, Hybrid, Volt-Freq.							6							21	
Converter-Logic Level						10								21	
Converter-Volt to Current							10,7							21	
Converter-Voltage to Freq.							6							21	
Converter Sub-System						20								21	
Converter-Synchro to Digital														9	
Converters					27										
Core Sense Amplifier						17									

COMPONENT	TITLE OF PUBLICATION: TRANSISTOR	DIODE	THYRISTOR	POWER SEMICONDUCTOR	DIGITAL I.C.'s	INTERFACE I.C.'s	LINEAR I.C.'s	MEMORY I.C.'s	AUDIO/VIDEO I.C.'s	MICROPROCESSOR I.C.'s	MICROCOMPUTER SYSTEMS	OPTOELECTRONICS	MICROWAVE	MODULES/HYBRIDS	POWER SUPPLIES
	SECTION NUMBER														
Counter-A/D Converter						8								13	
Counter-BCD					11										
Counter-Decimal					11										
Counter-Display Driver						6									
Counter-Fast Carry					11										
Counter-Gray Code					11										
Counter-Hexadecimal					11										
Counter-Ring/Johnson					11										
Counter-Straight Binary					11										
Counters					11										
Crosspoint Switch							11								
CRT Correction Circuit									4						
Crystal Controlled Oscillator					12										
Current Amplifier							2							21	
Current Limiter		7					7								
Current Source							10								
Current Stabilizer							7							21	
DAC Current Switching Network						9									
Darlington Transistor	13			13											
Data Acquisition System						20				9				21	
Data Interface Controller										6					
Data Security Device										9					
Data Selectors/MUX's						13									
DC/DC Converters							7								4
Decimal Counter					11										
Decoder-Display Driver						6									
Decoder-DTMF							11								
Decoder/Encoder					27				5					21	
Decoders					6										
Decryption						20									
Deglitcher						20									
Delay Line (Analog)							3		7					21	
Delay Time					10										
Demodulator						20									
Demultiplexer										7					
Demultiplexer-Digital						14									
Detector-Carrier							11							21	
Detector Error/Corrector					27										
Detector-Analog Signal Level							14							21	
Detector-Address Mark										7					
Detector Devices-Microwave Video													5		
Detector-Emitter/Sensor Pairs/Arrays												45			
Detector-Fluid Level							9								
Detector-Gap												45			
Detector-Infrared												10			
Detector-Microwave													8		
Detector-Null												46			
Detector-Phase									7						
Detector-Quadrant												46			
Detector-Reflex												45			
Detector-Thermopile												46			
Detector-Zero Crossing						20	7								
Diac			2												
Dialer-DTMF						20									
Dialer-Phone							11								
Differential Amplifiers							2								
Differential Line Driver/Transmitter						3									
Differential Line Receiver						15									
Differential Line Transceiver						16									
Differential Pair-Temperature Cont.							9								
Digital Multiplexer						13									
Digital to Synchro Converter														8	
Diode-Array		6													
Diode-Avalanche		7													
Diode-Backward													8		

COMPONENT	TITLE OF PUBLICATION: TRANSISTOR	DIODE	THYRISTOR	POWER SEMICONDUCTOR	DIGITAL I.C.'s	INTERFACE I.C.'s	LINEAR I.C.'s	MEMORY I.C.'s	AUDIO/VIDEO I.C.'s	MICROPROCESSOR I.C.'s	MICROCOMPUTER SYSTEMS	OPTOELECTRONICS	MICROWAVE	MODULES/HYBRIDS	POWER SUPPLIES
	SECTION NUMBER														
Diode-Breakover		7													
Diode-Bridge		6													
Diode-Contact Protector		7													
Diode-Current Limiter		7					7								
Diode-Detector													8		
Diode-Detector-UHF		7													
Diode-Gunn													8		
Diode-Harmonic Generator													8		
Diode-Impatt													8		
Diode-Infrared Emitter												3			
Diode-Infrared Emitter-Array												4			
Diode-Infrared Emitter-Laser												3			
Diode-Infrared Emitter-Negative Resis.												3			
Diode-JFET		7													
Diode-Laser-LED												2			
Diode-LED												2			
Diode-LED-Array												4			
Diode-Light Emitting												2			
Diode-Limiter		7											8		
Diode-Logarithmic Conversion		7													
Diode-Matched		7													
Diode-Matrixes		6													
Diode-Microwave-Mixer													4		
Diode-Negative Resistive-LED												2			
Diode-Noise		7											8		
Diode-Noise Generator		7													
Diode-Oscillator													8		
Diode-PIN												10	8		
Diode-Radiation Detector		7													
Diode-Radiation Resistant		7													
Diode-Rectifier		4		2-5											
Diode-Reference		2													
Diode-Ring/Quad													8		
Diode-Schottky Barrier		7													
Diode-Shockley			2												
Diode-Silicon Asym Trigger (SAT)			2												
Diode-Step Recovery													8		
Diode-Switching		4													
Diode-Transient Voltage Suppressor		7													
Diode-Tuning		7													
Diode-Tunnel													7		
Diode-UHF Detector		7											5		
Diode-UHF Mixer		7											4		
Diode-Varactor													6		
Diode-Voltage Regulator		2													
Diode Array		6													
Diode Matrix		6													
Diodes		3													
Diodes-Zener		2		6											
Diskette Controller						20				6	4				
Display-Integrated Logic												46			
Display-LED												35			
Display-Liquid Crystal												36			
Display-Misc.(incand.,Gas,Disch.,etc.)												37			
Display-Multiplexer						6								12	
Display-Oscillator						6								12	
Display-Shift Register						6								12	
Display Controller										6	4				
Display Driver-Multiplexer						6								12	
Display Driver-Shift Register						6								12	
Display Driver/Counter						6								12	
Display Driver/Decoder						6								12	
Display Driver/Latch						6								12	
Display Driver/Oscillator						6								12	
Divider														21	

COMPONENT	TITLE OF PUBLICATION / SECTION NUMBER														
	TRANSISTOR	DIODE	THYRISTOR	POWER SEMICONDUCTOR	DIGITAL I.C.'s	INTERFACE I.C.'s	LINEAR I.C.'s	MEMORY I.C.'s	AUDIO/VIDEO I.C.'s	MICROPROCESSOR I.C.'s	MICROCOMPUTER SYSTEMS	OPTOELECTRONICS	MICROWAVE	MODULES/HYBRIDS	POWER SUPPLIES
Divider, Frequency					13										
DMA Controller										6					
DPM Module						20									
Driver-Bus						3									
Driver-Clock						4								11	
Driver-Clock Generator										8/9					
Driver-Display (Digital)						6								12	
Driver-Line						3									
Driver-Memory						4								11	
Driver-Optoelect Photoelectronic, IR												46			
Driver-Peripheral						5									
Driver-Power						5								21	
Drivers/Predrivers/Scalers					27										
DTMF Decoder							11							21	
DTMF Dialer							11							21	
DTMF Filter							11							21	
DTMF Generator							11							21	
DTMF Receiver							11							21	
Dual Quad Transistor	15						13								
Dual Ramp (Slope)-A/D Converter						10								13	
Duplexer Tube													3		
DVM Module						20									
Emitter-Sensor Array Detector												45			
Emitter-Sensor Pair Detector												45			
Emitter Array												4			
Encoder-Keyboard						20									
Encoder-Priority						20									
Encoder-"X" Input to "Y" Output						20									
Encoder-"X" Line to "Y" Line						20									
Encoder/Decoder					27									21	
Encoder/Decoder Remote Cont. Sets									7						
Encryption						20									
Error Detection/Correction Unit										9					
Facsimile Circuit							11								
Fast Carry Counter					11										
Fiberoptic XCURS/XMTRS												46			
Field Effect Transistor	6-7			14/15											
Field Prog Logic Array (FPLA)								20							
FIFO								7							
Filter-Active							11							21	
Filter-DTMF, Telecomm Equipment							11								
Filter (Transversal)							3								
Flip/Flop					4										
Flip/Flop (J-K)					4										
Flip/Flop (R-S)					4										
Flip/Flop (R-S-T)					4										
Flip/Flop (T)					4										
Flip/Flop, Complementary (R-S)					4										
Flip/Flop (D Type)					4										
Floppy Disk Controller						20				6	4				
Floppy Disk Read Amplifier						20									
Fluid Detector							9								
FM Multiplexer									3					21	
FM Receiver									3						
Frequency Divider					13										
Frequency Synthesizer							6								
Frequency to DC Converter							6							21	
Full Adder					15										
Function Generator							3							21	
Game-Video									6						
Gap Detector												45			
Gate Turnoff			5	25											
Gates					5										
Generator					27										
Generator-Baud Rate						20									

COMPONENT	TITLE OF PUBLICATION: TRANSISTOR	DIODE	THYRISTOR	POWER SEMICONDUCTOR	DIGITAL I.C.'s	INTERFACE I.C.'s	LINEAR I.C.'s	MEMORY I.C.'s	AUDIO/VIDEO I.C.'s	MICROPROCESSOR I.C.'s	MICROCOMPUTER SYSTEMS	OPTOELECTRONICS	MICROWAVE	MODULES/HYBRIDS	POWER SUPPLIES
	SECTION NUMBER														
Generator-Character								4							
Generator-Clock										9					
Generator-DTMF						20									
Generator-Function							3							21	
Generator-Look-ahead Carry					19										
Generator-Parity Checker					25										
Generator-Sin/Cos Function							3							21	
Generator-Special Device					27										
Generator/Oscillator-Sine/Sq/Tri							3								
Generator-Video Display									7						
Gray Code Counter					11										
Ground Fault Interrupt							7								
Gunn Diode													8		
Half Adder					15										
Hall Effect Device							9								
Harmonic Generator Diode													8		
Hex Bus Buffer, Inverting/Non-Invert					5										
Hexadecimal Counter					11										
High Voltage/High Current Driver														21	
I/O Converter										7					
Identity Comparator					17										
Image Scanning/Matrix Sensor												46			
Infrared Detector												10			
Infrared Emitting Diode												3			
Instrumentation Amplifier							2								
Integrated Logic/Display												46			
Integrated Thyristor/Rectifier (ITR)			5												
Interface-General Purpose										7/8					
Interface-Parallel Peripheral										7/8					
Interface-Programmable										7/8					
Interrupt System-Priority Encoder						20				8/9					
Interrupt System Controller										6					
Inverters-Hex					5										
Inverting						2									
Isolation Amplifier							2								
Keyboard Encoder						20									
Keyboard Encoder Controller										6	4				
Keyless Lock CKT									7						
Klystron Tube													2		
Ladder Network						9									
Laser Diode												2			
Latches					26										
Latches Display						6									
LC Oscillator					12										
LDR-Light Dependent Resistor												16			
LED-Negative Resistive												2			
LED Array												4			
LED Display												35			
LED-Dichromatic, Multicolor												4			
Level Detector, Analog							7,14							21	
Level Detector, Voltage							7,14								
LIFO								20							
Light Activated Switch			5	25											
Light Dependent Resistor												16			
Light Emitting Diode												2			
Light Pen												46			
Limiter-Current		7					7								
Limiter-Microwave													8		
Limiter-Voltage							7								
Line Driver/Transmitter-Differential						3									
Line Driver/Transmitter-Single-Ended						3									
Line Receiver-Differential						15									
Line Receiver-Single-Ended						15									
Line Scanning Sensor												46			
Line Transceiver-Differential						16									

COMPONENT	TITLE OF PUBLICATION: TRANSISTOR	DIODE	THYRISTOR	POWER SEMICONDUCTOR	DIGITAL I.C.'s	INTERFACE I.C.'s	LINEAR I.C.'s	MEMORY I.C.'s	AUDIO/VIDEO I.C.'s	MICROPROCESSOR I.C.'s	MICROCOMPUTER SYSTEMS	OPTOELECTRONICS	MICROWAVE	MODULES/HYBRIDS	POWER SUPPLIES
	SECTION NUMBER														
Line Transceiver-Single-Ended						16									2
Linear Power Supplies												36			
Liquid Crystal Display														21	
Logarithmic Amplifier							3								
Logic-Special Device					27										
Logic Buffer/Driver						2								21	
Logic Level Converter						10									
Logic Level Translators						10									
Logarithmic Conversion Diode		7													
Look-Ahead Carry Generator					19										
Magnetic Bubble Memory								20							
Magnetic Bubble Memory Sense Amp.						17									
Magnetic Tape Controller										6	4				
Magnetic Tape Preamplifier						20									
Magnetic Tape Sense Amplifier						17									
Magnetron Tube													2		
Magnitude Comparator					17										
Matched Pair (PNP & NPN)	15						13								
Matrix/Image Scanning Sensor												46			
Memory-Content Addressable								20							
Memory-Magnetic Bubble								20							
Memory-Mgmt Unit										9					
Memory Driver						4		20						11	
Memory Interface Controller										6	4				
Memory Interface Sub-system						20									
Microcomputer Bus Controller										6					
Microcontroller										6					
Microprocessor-Card Set											2				
Microprocessor-Chip-Single										3					
Microprocessor-Chip-Set										3					
Microprocessor Converter										9					
Microwave-Ring/Bridge Quad													8		
Microwave-Special Device													8		
Microwave Amplifier													8		
Microwave Detector													8		
Microwave Limiter													8		
Microwave Mixer Diode													4		
Microwave Oscillator													8		
Microwave Transistor													10		
Microwave Trans.-Junction Field Eff.													10		
Microwave Transistor-MOSFET													10		
Microwave Video Detector Devices													5		
Mixer													8	21	
MOD/DEMOD-Slope Delta (Telephone)							11								
MODEM							11		3					21	
Modulator-Pulse Width							11								
Modulator-Ring							11								
Monostable Multivibrator					12										
MOS FET-Microwave													10		
MOS Sense Amplifier						17									
Motion Detector									7						
Motor Speed Controller							4		7					21	
Motor Starting CKT							4								
Multiplexer						13									
Multiplexer-FM									3					21	
Multiplier					16		3	20					8	21	
Multivibrator-Astable					12										
Multivibrator-Monostable					12		12								
MUX						13									
MUX-Analog						12								15	
MUX-Display						6									
MUX-Digital						13									
MUX-Programmable								20							
Negative Resistive LED												2			
NMOS Sense Amplifier						17									

COMPONENT	TITLE OF PUBLICATION / SECTION NUMBER														
	TRANSISTOR	DIODE	THYRISTOR	POWER SEMICONDUCTOR	DIGITAL I.C.'s	INTERFACE I.C.'s	LINEAR I.C.'s	MEMORY I.C.'s	AUDIO/VIDEO I.C.'s	MICROPROCESSOR I.C.'s	MICROCOMPUTER SYSTEMS	OPTOELECTRONICS	MICROWAVE	MODULES/HYBRIDS	POWER SUPPLIES
Noise Diode													8		
Noise Generator Circuit							3								
Noise Generator Diode		7													
Null Detector												46			
Operational Amplifiers							5							2	
Optical Limit Switch												45			
Optically Isolated Logic Gate												46			
Optoelectronic Amplifier												46			
Optoelectronic Controller												46			
Optoelectronic Driver												46			
Optoelectronic Switch or Relay												45			
Opto-isolator												25-29			
Oscillator							6							21	
Oscillator Diode													8		
Oscillator-Crystal Controlled					12										
Oscillator-Display						6									
Oscillator-LC					12										
Oscillator-Microwave													8		
Oscillator-RC					12		3,6,12								
Oscillator-Sine/Sq/Triangle Wave							3							21	
Oscillator-Tuning Fork					12										
Oscillator-Varactor Tuner													8		
Oscillator-Voltage Controlled					12									21	
Oscillator-Volt. Controlled Crystal							10,6								
Over Voltage Protector							7							21	
Paper Tape Controller						20				6					
Parallel A/D Converter						8								13	
Parallel Communication Transceiver										9					
Parallel Peripheral Interface										9					
Parity Generator/Checker					25										
Peripheral Driver						5									
Peripheral Interface Adapter (PIA)										7					
PGA (Programmable Gate Array)								20							
Phase Control Circuit							6,7							21	
Phase Lock Loop							6							21	
Photo Bridge												46			
Photo Circuit												14			
Photoconductive Cell												16			
Photocoupler-Photocell Output												25			
Photocoupler-Photocircuit Output												29			
Photocoupler-Photodarlington Output												27			
Photocoupler-Photothyristor Output												28			
Photocoupler-Phototransistor Output												26			
Photodarlington												12			
Photodiode												10			
Photodiode, IR Detector												10			
Photodiode, LASER Detector												10			
Photodiode Array												15			
Photo Potentiometer												46			
Photothyristor												13			
Phototransistor												11			
Phototransistor Array												15			
Photovoltaic Array												18			
Photovoltaic Cell (Solar;IR Detectors)												17			
PIN Diode													8		
PIN Photo Diode												10			
PLA (Programmable Logic Array)								20							
PLL-Phase Lock Loop							6								
PLS (Programmable Logic Sequence)								20							
Potentiometer Circuit							3								
Potentiometer-Photo												46			
Power-Integrated Thyristor/Rectifier			5	25											
Power-SCR			3	20-23											
Power-Triac			4	24											
Power Device						5									

COMPONENT	TITLE OF PUBLICATION: TRANSISTOR	DIODE	THYRISTOR	POWER SEMICONDUCTOR	DIGITAL I.C.'s	INTERFACE I.C.'s	LINEAR I.C.'s	MEMORY I.C.'s	AUDIO/VIDEO I.C.'s	MICROPROCESSOR I.C.'s	MICROCOMPUTER SYSTEMS	OPTOELECTRONICS	MICROWAVE	MODULES/HYBRIDS	POWER SUPPLIES
	SECTION NUMBER														
Power-Drivers Peripheral						5								21	
Power Supplies Linear															2
Power Supplies Switching															3
Power Supply-Switching-Controller							7								
Power Supply Controller, TV							7		7						
Pre-drivers					27										
Prescaler					27				6						
Pressure/Temp Sensor Transistor							9								
Printer Controller										6	4				
Priority Encoder						20									
Priority Encoder-Interrupt System						20				8					
Program Sequence Controller										6					
Program Storage Unit (PSU)								20		8					
Programmable Gain Amplifier							2,15							21	
Programmable Gate Array (PGA)								20							
Programmable Interface						20									
Programmable Logic Array (PLA)								20							
Programmable Logic Sequence (PLS)								20							
Programmable Multiplexer								20							
Programmable Power Source						20								21	
Programmable Read Only Memory								3							
Programmable ROM Patch (PRP)								20							
Prog. Unijunc. Trans. (PUT)-Thyristor			6												
Programmer/Sequencer						20								21	
PROM								3							
Proximity Switch, Solid State							9								
PRP (Programmable ROM Patch)								20							
PSU (Program Storage Unit)								20		8					
Pulse Dialer						20									
Pulse Width Modulator							4								
Pulse Width Modulator Control CKT							4								
PUT (Prog. Unijunction Trans.)			6												
Pyroelectric Detector												45			
Quadrant Detector												46			
Radiation Detector Diode		7													
Radiation Resistant Diode		7													
Radiation Resistant Transistor	15														
Radio, AM									3						
Radio, FM									3						
RAM								2		4					
RC Oscillator					12										
RC Timer					10										
RCT (Reverse Conducting Triode)			5	25											
Read/Write Memory								2		4					
Receiver-DTMF						20									
Rectifier		5		2-5											
Rectifier-Bridge		5													
Rectifier Diode		4		2-5											
Rectifier-Silicon Controlled			3	20-23											
Reference Amplifier							2							21	
Reference Diode		2													
Reflex Detector												45			
Register File								7							
Regulator-Voltage							7							6	
Relay Lamp Driver						5									
Relay Solid State						11									
Remote Control Unit-General Purpose						20			7						
Remote Control Unit-Receiver									6						
Remote Control Unit-Transmitter									6						
Repertory Dialer							11								
Resolver to Digital A/D Converter						8									
Reverse Conducting Triode (RCT)			5	25											
RF/IF Amplifiers							8		2					4	
RF Power Amplifier Transistor	15														
Ring/Bridge Quad													8		

COMPONENT	TITLE OF PUBLICATION / SECTION NUMBER														
	TRANSISTOR	DIODE	THYRISTOR	POWER SEMICONDUCTOR	DIGITAL I.C.'s	INTERFACE I.C.'s	LINEAR I.C.'s	MEMORY I.C.'s	AUDIO/VIDEO I.C.'s	MICROPROCESSOR I.C.'s	MICROCOMPUTER SYSTEMS	OPTOELECTRONICS	MICROWAVE	MODULES/HYBRIDS	POWER SUPPLIES
Ring/Johnson Counter					11										
Ring Modulator							11								
Ring/Quad Diode													8		
RMS to DC Converter							3								
ROM								3		5					
ROM, Speech Synthesis									7						
SAS			6												
Sample/Hold						18								17	
Sample/Hold Amplifier						18								21	
SAT (Silicon Asymmetrical Trigger)			2												
SBS (Silicon Bi-directional Switch)			6												
SCA (Silicon Controlled Assembly)			7												
Scaler					27										
Schmitt Trigger						19									
Schottky-Barrier Diode		7													
SCR			3	20-23											
Sense Amplifier						17									
Sense Amplifier-Amorphous						17									
Sense Amplifier-Core						17									
Sense Amp-Magnetic Bubble Mem.						17									
Sense Amplifier-Magnetic Tape						17									
Sense Amplifier-MOS						17									
Sense Amplifier-NMOS						17									
Sensor-Array-Photodiode												15			
Sensor-Array-Phototransistor												15			
Sensor-Array-Photovoltaic												18			
Sensor-Line-Scanning												46			
Sensor-Matrix/Image Scanning												46			
Sensor-Photocircuit-Camera Control									7			14			
Sensor-Photocircuit-Darlington Stage												14			
Sensor-Photocircuit-Light to Freq.												14			
Sensor-Photocircuit-Multifunc. Proc.												14			
Sensor-Photocircuit-Oper. Amp.												14			
Sensor-Photocircuit-Optical Receiv.												14			
Sensor-Photocircuit-Oscillator												14			
Sensor-Photocircuit-Schmitt Trigger												14			
Sensor-Photocircuit-Transistor Stage												16			
Sensor-Photoconductive Cell												12			
Sensor-Photodarlington												10			
Sensor-Photodiode-Avalanche												10			
Sensor-Photodiode-IR Detector												10			
Sensor-Photodiode-Laser Detector												10			
Sensor-Photodiode-Multielement												10			
Sensor-Photodiode-Pin												10			
Sensor-Photodiode-Special Purpose												13			
Sensor-Photothyristor												11			
Sensor-Phototransistor-Field Eff.												17			
Sensor-Photovoltaic Cell															
Sensor-Temperature							9								
Serial Communication Controller						20					4				
Servo Amplifier							4								
Shift Controller										6					
Shift Register								7							
Shift Register/Analog							3								
Shockley Diode			2												
Signal Processor						20	3		3-4					21	
Signal Conditioner						20	3							21	
Silicon Asymm. Switch (SAS) Trig.			6												
Silicon Asymmetrical Trigger (SAT)			2												
Silicon Bi-directional Switch (SBS)			6												
Silicon Bi-directional Switch Trigger			6												
Silicon Controlled Assembly (SCA)			7												
Silicon Controlled Bridges			7												
Silicon Controlled Rectifier (SCR)			3	20-23											
Silicon Controlled Switches (4 Term)			7												

COMPONENT	TITLE OF PUBLICATION: TRANSISTOR	DIODE	THYRISTOR	POWER SEMICONDUCTOR	DIGITAL I.C.'s	INTERFACE I.C.'s	LINEAR I.C.'s	MEMORY I.C.'s	AUDIO/VIDEO I.C.'s	MICROPROCESSOR I.C.'s	MICROCOMPUTER SYSTEMS	OPTOELECTRONICS	MICROWAVE	MODULES/HYBRIDS	POWER SUPPLIES
	SECTION NUMBER														
Silicon Field Effect Trans.-P Channel	6			14											
Silicon Field Effect Trans.-N Channel	7			15											
Silicon Undirectional Switch			6												
Sin/Cos Function Generator							3							21	
Sine/Square/Triangle Wave Oscillator							3							21	
Single Chip Microprocessor										3					
Single Ended Line Driver/Transmitter						3									
Single Ended Line Receiver						15									
Single Ended Line Transceiver						16									
Solar Cell												17			
Speech Circuit (telephone)							11								
Speech Generator									6						
Speech Synthesizer									6						
SPDT Analog Gate Switches						11									
Squaring Amplifier							3								
SSNC Analog Gate Switches						11									
SSNO Analog Gate Switches						11									
Stabilizer-Current							7							21	
Stabilizer-Voltage							7							21	
Stabistor-Regulating Diode		7													
Step Recovery Diode													8		
Stepper Motor Circuit							9								
Stereo Decoder									3						
Storage					27										
Storage Register								7							
Storage-Special Device					27										
Storage/Shift Register/RAM-ROM								20							
Straight Binary Counter					11										
Subscriber Loop Interface (SLIC)						20	11								
Subtractor					15										
Successive Approx A/D Converter						8								13	
Successive Approximation Register						20								21	
SUS (Silicon Undirectional Switch)			6												
Switch-Cross Point							11								
Switch-Debouncer						20									
Switch-Hall Effect							9								
Switch-Light Activated			5	25											
Switch-Optical Limit												45			
Switch, Proximity, Solid State							9								
Switch-Silicon Undirectional			6												
Switch-Solid State					11								21		
Switch-Zero Voltage							7								
Switch, Touch Control, Interface						20									
Switch Driver						7								21	
Switches (4 Term)-Silicon Controlled			7												
Switch Mode Regulator							7								
Switching Diode		4													
Switching Network-DAC Current						9									
Switching Power Supply Controller							7								
Switching Power Supplies															3
Switching Transistor	12			12									8		
Switching Voltage Regulator							7								
Synchro Conversion Device						20								9	
Synchro Related Devices						20									
Synchro to Digital A/D Converter						8									
Tape System									3						
Telephone Switching Circuit							11								
Telex Circuit							11								
Telecom. Device (Telephone)						8								21	
Temp. Controlled Differential Pair							9								
Temperature Transducer						20	9								
Terminator						20									
Thermopile Detector												46			
Thyristor-ACS-AC Switch			5	25											
Thyristor-GTO-Gate Turnoff Device			5	25											

	TITLE OF PUBLICATION														
	TRANSISTOR	DIODE	THYRISTOR	POWER SEMICONDUCTOR	DIGITAL I.C.'s	INTERFACE I.C.'s	LINEAR I.C.'s	MEMORY I.C.'s	AUDIO/VIDEO I.C.'s	MICROPROCESSOR I.C.'s	MICROCOMPUTER SYSTEMS	OPTOELECTRONICS	MICROWAVE	MODULES/HYBRIDS	POWER SUPPLIES
COMPONENT	**SECTION NUMBER**														
Thyristor-ITR-Integrated			5	25											
Thyristor/Rectifier			5	25											
Thyristor-LAS-Light Activated Switch			5	25											
Transistor (PUT)			6												
Thyristor-RCT-Rev Conducting Triode			5	25											
Thyristor-Silicon Asym. Switch (SAS)			6												
Thyristor-Silicon Bidirect Switch (SBS)			6												
Thyristor-Silicon Undirect Switch (SUS)			6												
Time Base/Counter					10										
Time Delays					10										
Timer-RC					10		12								
Time Slot Assigner Circuit							11								
Tone Ringer							11								
Touch Control Switch Interface						20			7						
Track & Hold Amplifier						20								21	
Transceiver-Line						16									
Transceiver-Parallel Communications						20									
Transducer-Device						20								21	
Transient Voltage Suppressor Diode		7													
Transistor-Avalanche Mode	15														
Transistor-Bidirectional	15														
Transistor-Complementary Symmetry	15														
Transistor-Darlington	13			13											
Transistor-Dual/Quad	15						13								
Transistor-Field Effect	6-7			14/15											
Transistor-Field Effect-N Channel	7			15											
Transistor-Field Effect-P Channel	6			14											
Transistor-Junction Field Effect MW													10		
Transistor-Matched Pair	15														
Transistor-Microwave													10		
Transistor-MOSFET-Microwave													10		
Transistor-NPN-HiPower-Germanium	9			10											
Transistor-NPN-HiPower-Silicon	11			11											
Transistor-NPN-LoPower-Germanium	3														
Transistor-NPN-LoPower-Silicon	5														
Transistor-Photo												11			
Transistor-PNP-HiPower-Germanium	8			10											
Transistor-PNP-HiPower-Silicon	10			11											
Transistor-PNP-LoPower-Germanium	2														
Transistor-PNP-LoPower-Silicon	4														
Transistor-Pressure/Temp. Sensor							9								
Transistor-Programmable Unijunction			3												
Transistor-Radiation Resistant	15														
Transistor-Silicon Field Eff. N Channel	7			15											
Transistor-Silicon Field Eff. P Channel	6			14											
Transistor-Switching	12			12									8		
Transistor-UHF/Microwave													10		
Transistor-Unijunction N	15														
Transistor-Unijunction P	15														
Transistor Array	14														
Transistor Chips	15														
Transistor Chopper	15														
Translators-Logic Level						10									
Transmitter/Encoder						16									
Traveling Wave Tube													2		
Triac			4	24											
Trigger-Schmitt						19									
Trigger-Silicon Asymmetrical			6												
Trigger-Silicon Asymmetrical Switch			6												
Triode-Reverse Conducting			5	25											
TTY Interface/Controller						20				6					
Tube-Backward Wave													2		
Tube-Duplexer													3		
Tube-Klystron													2		
Tube-Magnetron													2		

COMPONENT	TITLE OF PUBLICATION: TRANSISTOR	DIODE	THYRISTOR	POWER SEMICONDUCTOR	DIGITAL I.C.'s	INTERFACE I.C.'s	LINEAR I.C.'s	MEMORY I.C.'s	AUDIO/VIDEO I.C.'s	MICROPROCESSOR I.C.'s	MICROCOMPUTER SYSTEMS	OPTOELECTRONICS	MICROWAVE	MODULES/HYBRIDS	POWER SUPPLIES
	SECTION NUMBER														
Tube-Traveling Wave													2		
Tuning Fork Controlled Oscillator					12										
Tunnel Diode													7		
TV-B/W									4						
TV-Color									5						
UART						20								21	
UHF Detector Diode		7													
UHF Mixer Diode		7													
UHF Microwave Transistor													10		
Ultrasonic Device						20			3						
Unified Bus Comparator					17										
Unijunction Transistor-Programmable			6												
Univ Asynchronous Rec/Trans						20								21	
Univ Synchronous Rec/Trans						20								21	
(USYNR/T)						20									
USYNRT						20									
Varactor Diode													6		
Varistor		7													
Video Circuits									4						
Video Detector Devices													5		
Video Game									6						
Video Modulator							11		7						
Voice/Data Circuit							11								
Voice Synthesis									7						
Voltage Comparator							14							7	
Voltage Controlled Amp							3								
Voltage Controlled Crystal Oscillator					12		6								
Voltage Controlled Oscillator					12		6		7					21	
Voltage Follower							2							21	
Voltage Level Detector							7,14								
Voltage Limiter							7								
Voltage Reference Precision							15								
Voltage Reference Amplifier							15								
Voltage Regulator							7		7					6	
Voltage Regulator-Diode		2													
Voltage Stabilizer							7		7					21	
Voltage to Frequency Converter							6							21	
Voltage Variable Capacitor													6		
Wideband Amplifier							16		4					5	
Window Detector							14								
Zero Voltage Switch							7								
X-Mitter (UART)						20									
X-Mitter (USYNR/T)						20									

HOW TO USE THIS BOOK

2 BASIC WAYS:

	If you know:	And need to know:	Read:
1	Electrical & mechanical requirements	A type number	Explanation 1
2	A type number	The electrical and/or mechanical characteristics or its circuit and outline configuration or who manufactures it or an equivalent type	Explanation 2

1

If you know: the electrical and mechanical requirements (including military):

And need to know: a suitable type number:

a. Select from the Table of Contents the Technical Section corresponding to the known device type.

b. Turn to that section. Symbols and codes used in these technical sections are explained in the "Interpreter" pages at the back of the book.

c. Notice the sequencing parameters in top right corner of the page

4. MICROWAVE MIXER DIODES

IN ORDER OF (1) TEST FREQ (OR AVG FREQ WHEN TEST FREQ NOT AVAILABLE) and (2) TYPE No.

LINE No.	[2] TYPE No.	BAND	[1] TEST FREQ. (Hz)	FREQUENCY RANGE MIN - MAX (Hz)	NOISE MAX RATIO NR times	NOISE MAX REC. NF (dB)	TEST COND. FOR- Pin (W)	RL (Ω)	Zm (Ω)	MAX. CONV. LOSS (dB)	MAX. VSWR	IF IMPEDANCE RANGE MIN - MAX (Ω)	ABSOLUTE MAX RATING BURN-OUT (Erg)	MAX. TEMP (°C)	MAT.	DESCRIPTION DWG. No.
1	DMD5827A	X	9375M			6.5	1.0m							150	Si	M491b
2	DMD5[illegible]	X	9375M			7.5	1.0m							150	Si	M491c
3	DM[illegible]	X	9375M			6.5	1.0m							150	Si	M491c

d. Locate the type numbers that are in general agreement with your requirements. Because of the sequencing these types will appear together; select your type number. Military types are prefaced with JAN.

e. If you need the manufacturer, use the manufacturer code from the Type Index page.

f. Turn to the Manufacturers' Codes, Names and Addresses Section.

MANUFACTURERS' CODES, NAMES & ADDRESSES

MANUFACTURERS IN ORDER OF D.A.T.A. CODE LETTERS (Cont'd)

(*) **HIS** - Honeywell Information Systems, Old Connecticut Path, Framingham, MA 01701
HITJ - Hitachi Ltd., 1450 Josuihon-Cho, Kodaira-Shi, Tokyo 187, Japan

g. Find the manufacturer code and thus the name.

h. Local offices of the manufacturer can be found in the Sales Office Listing Section and company logos are listed in the Logo Section.

---

2 **If you know:** the type number (including military which has JAN prefix):
First: Turn to the TYPE NUMBER CROSS INDEX and find your type number.

If you need to know:

a. The electrical characteristics:
Note the page and line number beside your Type.

TYPE No. CROSS INDEX — IN TYPE NUMBER SEQUENCE

TYPE No.	MFRS	Pg&Line	TYPE No.	MFRS	Pg&Line	TYPE No.	MFRS	Pg&Line	TYPE No.	MFRS	Pg&Line	TYPE No.	MFRS	Pg&Line
HA1199	HITJ	4- 4												
HA11225	HITJ	4- 7												
HA11227	HITJ	4- 1												

Locate that page and line number, and you will find the electrical characteristics.

or b. The circuit and outline drawings:
Those numbers are in the last column

4. MICROWAVE MIXER DIODES

IN ORDER OF (1) TEST FREQ (OR AVG FREQ WHEN TEST FREQ NOT AVAILABLE) and (2) TYPE No.

LINE No.	[2] TYPE No.	BAND	[1] TEST FREQ. (Hz)	FREQUENCY RANGE MIN - MAX (Hz)	NOISE MAX RATIO NR times	NOISE MAX REC. NF (dB)	TEST COND. FOR- Pin (W)	RL (Ω)	Zm (Ω)	MAX. CONV. LOSS (dB)	MAX. VSWR	IF IMPEDANCE RANGE MIN - MAX (Ω)	ABSOLUTE MAX RATING BURN-OUT (Erg)	MAX. TEMP (°C)	DESCRIPTION MAT.	DWG. No.
1	D4081A	Ku	16000M		1.3	7.3	1.0m	100	500	5.7	1.6	365- 565	1.0	70A	Si□	P1b□□
2	D4082	Ku	16000M		2.5		1.0m	100	500	7.5		325- 625	1.0	150A	Si	P1b□□
3	D4082A	Ku	16000M		1.5		1.0m	100	500	7.0	1.6	365- 565	1.0	150A	Si	P1b□□

and the drawings are listed sequentially in the Drawing Index. Locate the drawing number and note the page number listed. Your drawing will be on the page indicated.

or c. Who manufactures it:
Use the manufacturer code

TYPE No. CROSS INDEX — IN TYPE NUMBER SEQUENCE

TYPE No.	MFRS	Pg&Line	TYPE No.	MFRS	Pg&Line	TYPE No.	MFRS	Pg&Line	TYPE No.	MFRS	Pg&Line	TYPE No.	MFRS	Pg&Line
HA1199	HITJ	4- 4												
HA11225	HITJ	4- 7												

refer to the Manufacturers' Codes, Names and Addresses for complete information. Local offices can be found in the Sales Office Listings Section.

or d. An equivalent type:
Survey the type numbers with similar electrical parameters surrounding the known number to determine the suitable alternatives.

Symbols and codes used in these technical sections are explained in the "Interpreter" pages at the back of the book.

HOW TYPE NOS. ARE ARRANGED IN THE TECHNICAL SECTION — SEQUENCING PARAMETERS

The arrangement of types in the technical sections is keyed to a set of special characteristics selected for their importance from among the general group of characteristics tabulated in each section. These selected characteristics, or sequencing parameters, differ from one section to another, and are indentified at the top of each page, as shown in the sample below.

MAJOR CHARACTERISTICS **SEQUENCING PARAMETERS**

2. SOURCE,AMPLIFIER,OUTPUT TUBES

IN ORDER OF (1)TUBE TYPE (2)CENTER FREQUENCY (3)POWER OUTPUT (4)TYPE No.

LINE No.	[4] TYPE No.	[2] CENTER FREQ. (Hz)	[3] POWER OUTPUT (W)	FREQUENCY RANGE (Hz)	MAX. DUTY CYCLE	MAX. BEAM VOLTAGE (Note 1) (V)	MAX. CATH-ODE CUR. (A)	GAIN (dB)	NF (dB)	DESCRIPTION [1] TUBE TYPE	FUNC-TION	TUN-ING	OUT PUT	WEIGHT (lb)

The different types within a section are first arranged in ascending numeric (or alphabetic) order of the first such parameters. Groups of types having a common value for the first parameter are then arranged in ascending order of the second parameter. This process continues for each parameter in turn, up to and including the last parameter which, in every instance, is the type number itself. The final arrangement, by type number, is done in accordance with the sequencing of type numbers in the cross-index, as explained on the preceding page.

A simplified model of the arrangement as described is shown below.

[4] Type Number	Characteristics [1] A	[2] B	C	[3] D
A13	100		325	
A4	100		1000	20
A9	100	A	20	25
A10	100	A	200	25
A3	100	B	40	15
A1	100	C	80	10
A8	100	C	900	15
A7	100	D	35	30
A11	110	A	60	25
A2	120	A	300	15
A5	120	B	150	20
A6	120	B	200	20
A12	120	B	475	25
	Last Seq. Par.	1st Seq. Par.	2nd Seq. Par.	(Not Seq.) 3rd Seq. Par.

Note that the absence of an entry for any sequencing parameter is regarded as a zero, and precedes any actual entries in the sequencing.

HOW FAMILIES OF TYPES ARE LISTED IN SECTION 6

Section 6. VOLTAGE VARIABLE CAPACITORS AND VARACTOR DIODES

Two families or series are found in this section: One of these groups consists of types which are identical except for min. cutoff frequency; the other group is composed of types which are identical except for capacitance range. In either case the values given correspond in sequence to the basic type number and its suffices. In some cases, it is necessary to use two or more lines to depict the series.

EXPLANATION OF EXAMPLES

Actual Type Nos. and Tolerances
Line 1 PL0113A(30GHz), PL0113B(40GHz)
PL0113C(50GHz), PL0113D(60GHz)
PL0113E(70GHz), PL0113F(80GHz)
Line 4 MV12(12±2.4pf), MV12A(12±1.2pf)

6. VOLTAGE VARIABLE CAPACITORS & VARACTOR DIODES

LINE No.	[3] TYPE No.	MINIMUM CUTOFF FREQUENCY (Corresponding to Type Numbers in previous column) (Hz)	(Hz)	(Hz)	(Hz)	(Hz)	(Hz)	TYP. CAP. [1] CAP. Cj (F)	[2] at TEST VOLT (V)	CAPACITANCE RANGE (for V = 0 to PIV) Ø - at TEST VOLT. (pF)
1	PL0113A,B-F	30G	40G	50G	60G	70G	80G	3.0p	6.0	2.0-4.0Ø
2	PL0113G,H	90G	100G					3.0p	6.0	2.0-4.0Ø
3	PL0123-1,2,3,4		5.0G	10G	15G	20G		3.0p	6.0	2.0-4.0Ø
4	MV12,A							12p	4.0	±2.4,±1.2Ø

HOW TYPE NUMBERS ARE SEQUENCED IN THE TYPE NUMBER CROSS INDEX

Sequencing of type numbers in the Type Number Cross-Index is governed by the following rules:

Rules	Examples
1. Type numbers are listed in numeric-alphabetic sequence; i.e., type numbers beginning with a number (decimal, fraction, or whole) precede type numbers beginning with a letter.	13A01 143 1202 A147 AN127 B2000
2. Decimals and fractions precede whole numbers. An equivalent decimal precedes the fraction when the remainder of type number is identical.	.25Z150 1/4Z150 3/4M12Z 1T3
3. Zeros are ignored in sequencing except when the zero is the only basis for distinguishing one type number from another. In this case the type number containing the zero is listed first.	0112 112 0113 00115 AP01 AP1 AP02
4. Number and/or letter groupings preceding hyphens or slashes are the controlling factors in sequencing. The hyphens and slashes themselves precede any identically positioned letters also having the same beginning number/letter groupings.	66-0706 66M1 70/10 70A9

USE OF POWERS-OF-TEN MULTIPLIERS AND SYMBOLS & CODES IN THE TECHNICAL SECTIONS

To present a maximum amount of information in a minimum amount of space, use is made in this book of the following data modifiers:

POWERS-OF-TEN MULTIPLIERS

The powers-of-ten multipliers shown below are used in numeric columns when the value being entered is many times greater or smaller than the units of measure indicated in the column heading. Usually, the latter are the so-called 'basic' units; such as V (volts), A (amperes) and s (seconds). The multipliers and an explanation of their use are given below:

MULTIPLIERS

Power	Prefix	Symbol
10^{12}	tera	T
10^{9}	giga	G
10^{6}	mega	M
10^{3}	kilo	k
10^{2}	hecto	h
10	deka	da
10^{-1}	deci	d
10^{-2}	canti	c
10^{-3}	milli	m
10^{-6}	micro	μ
10^{-9}	nano	n
10^{-12}	pico	p
10^{-15}	femto	f
10^{-18}	atto	a

Recommended by International Committee on Weights and Measures. Adopted by National Bureau of Standards

EXPLANATION

Value of Data To Be Entered	Basic Unit In Column Heading	Actual Entry
3 milliamperes	A (amperes)	3.0m
9 megaohms	Ω (ohms)	9.0M
0.5 volt	V (volts)	500m*
10 amperes	A (amperes)	10

*May also be written as 0.5, with no multiplier

SYMBOLS & CODES

Symbols: Symbols such as #, △, and $ are used in all columns, numeric or otherwise, whenever the data entries differ in some way from the entity defined in the column heading. For instance, if a given heading specifies Max. Power (in Watts) and the numeric value being entered for a given type represents the minimum power instead, the variance is denoted by the appearance of a special symbol alongside the numeric entry.

Codes: Codes are used in some columns as means to abbreviate the data being entered. The codes may be alphabetic (A, B, C, etc.) numeric (1,2,3, etc.) or some combination of both.

Note:
The symbols and codes used herein are explained on the Interpreter Pages in back of the book.

1. TYPE No. CROSS INDEX

IN TYPE NUMBER SEQUENCE

TYPE No.	MFRS	Pg&Line
.1P.5-1	MIT	77 - 48
.1P.35-1	MIT	77 - 45
.25PL.4-1.2	♦MIT	77 - 57
.25PL.4-1.2S	MIT	77 - 58
.25P.25-.75	MIT	77 - 37
.25P.25-.75S	MIT	77 - 38
.25P.35-1	MIT	77 - 46
.25P.35-1S	MIT	77 - 47
.5L1-2	MIT	78 - 35
.5LS1-3	♦MIT	78 - 54
.5LS1-3S	MIT	78 - 55
.5LS1.2-3.6	MIT	78 - 66
.5LS1.2-3.6S	MIT	78 - 67
.5LS1.5-3	MIT	78 - 57
.5PL.5-1.5	MIT	77 - 71
.5PL.5-1.5S	MIT	77 - 72
.5PL.8-2.4	MIT	78 - 44
.5PL.8-2.4S	MIT	78 - 45
.5P.2-.4	MIT	77 - 26
.5P.2-.4S	MIT	77 - 27
.5P.5-1	MIT	77 - 49
.5P.5-1.5	MIT	77 - 70
.5P.25-.5	♦MIT	77 - 28
.5P.25-.5S	MIT	77 - 29
1AV30	NECJ	73 - 57
1AV35	NECJ	73 - 78
1AV48	TOSJ	73 - 80
1AV50	NECJ	73 - 58
1AV51	NECJ	73 -110
1AV56	TOSJ	73 - 79
1AV57	NECJ	73 - 64
1AV58	NECJ	73 - 89
1AV59	NECJ	74 - 6
1AV60	NECJ	73 - 62
1AV61	NECJ	73 - 87
1AV62	NECJ	74 - 17
1AV65	TOSJ	75 -103
1AV67	NECJ	75 - 43
1AV68	NECJ	75 - 63
1AV69	NECJ	75 - 77
1AV81	TOSJ	75 - 52
1AV82	TOSJ	75 - 86
1AV83	TOSJ	75 - 55
1AV84	TOSJ	75 - 89
1AV85	TOSJ	75 - 36
1AV86	TOSJ	75 - 56
1AV87	TOSJ	75 - 90
1AV88	TOSJ	75 - 54
1AV89	TOSJ	75 - 88
1AV95	TOSJ	75 - 53
1AV96	TOSJ	75 - 87
1AV97	♦NECJ	75 - 46
1AV97A	♦NECJ	75 - 44
1AV98	NECJ	75 - 66
1AV98A	♦NECJ	75 - 64
1AV99	NECJ	75 - 79
1AV99A	♦NECJ	75 - 78
1B23	VET	106 - 68
JAN1B23	VET	106 - 67
1B24A	NJRC	108 - 24
THC	TOSJ	
	VET	
JAN1B24A	OWE	108 - 25
	VET	
1B24A/MXT14	OWE	108 - 29
1B27	NJRC	106 -103
THC	VET	
JAN1B27	VET	107 - 37
1B35A	NJRC	105 - 60
THC	TOSJ	
	VET	
JAN1B35A	OWE	105 - 61
	VET	
1B35A/MXA14	OWE	105 - 62
1B37A	THC	105 - 41
	VET	
JAN1B37A	OWE	105 - 42
	VET	
1B37A/MXA19	OWE	105 - 43
1B38	THC	106 - 2
1B38/MST26	OWE	106 - 3
1B44	VET	105 - 6
1B44/MSA12	OWE	105 - 7
1B52/MSA21	OWE	105 - 31
1B53/MSA15	OWE	105 - 29
1B54	VET	106 - 13
JAN1B54	VET	106 - 14
1B54/MST27	OWE	106 - 15
1B55/MST18	OWE	107 - 53
1B56	VET	105 - 13
1B56/MSA11	OWE	105 - 14
1B58A	NJRC	106 -110
THC	VET	
JAN1B58A	MIC	107 - 1
	VET	
1B58A/MST12	OWE	107 - 2
1B63A	NJRC	108 - 9
THC	TOSJ	
	VET	
JAN1B63A	MIC	108 - 16
OWE	VET	
1B63A/MXT15	OWE	108 - 17
1B63B	VET	108 - 34
1K75CH	♦VAR	66 - 24
1K75CK8199	♦VAR	66 - 28
1K75CK	♦VAR	66 - 25
1K75CLA	♦VAR	66 - 32
1K75CS	♦VAR	66 - 30
1K125CA	♦VAR	66 - 22
1K125CB	♦VAR	66 - 40
1K125CB-B	VAR	66 - 44
1K125CD	VAR	66 - 42
1L1-2R	MIT	78 - 36
1M70A	TOSJ	77 - 65
1M99	NJRC	77 - 66
1N21B	AMR	113 -109
	CRI	HTN
	♦MIC	NECJ
	SPE	STR
1N21C	Δ♦ALP	113 -110
	AMR	CRI
	HTN	♦MIC
	NECJ	♦PII
	SPE	STR
1N21D	Δ♦ALP	114 - 1
	AMR	CRI
	HTN	♦MIC
	NECJ	♦PII
	SPE	STR
1N21E	Δ♦MIC	114 - 2
	♦ALP	AMR
	CRI	HTN
	NECJ	♦PII
	SPE	STR
1N21F	Δ♦ALP	114 - 3
	AMR	CRI
	HTN	MIC
	NECJ	♦PII
	SPE	STR
1N21G	Δ♦ALP	114 - 4
	AMR	CRI
	HTN	♦MIC
	NECJ	♦PII
	SPE	STR
JAN1N21WE,WEM,WEMR		
	ALP	MIC 114 - 5
	HTN	MIC
	PII	SPE
JAN1N21WG,WGM,WGMR		
	ALP	MIC 114 - 6
		PII
1N23A	CRI	122 - 68
	HTN	NECJ
	SPE	STR
1N23B	AMR	116 - 71
	CRI	HTN
	♦MIC	NECJ
	SPE	STR
1N23C	Δ♦ALP	116 - 72
	AMR	CRI
	HTN	♦MIC
	NECJ	♦PII
	SPE	STR
1N23D	Δ♦ALP	116 - 73
	AMR	CRI
	HTN	♦MIC
	NECJ	PHIN
	♦PII	SPE
		STR
1N23E	Δ♦MIC	116 - 74
	♦ALP	AMR
	CRI	HTN
	NECJ	PHIN
	♦PII	SPE
		STR
1N23F	Δ♦MIC	116 - 75
	♦ALP	AMR
	CRI	HTN
	NECJ	PHIN
	♦PII	SPE
		STR
1N23G	Δ♦ALP	116 - 76
	AMR	HTN
	♦MIC	NECJ
	PHIN	♦PII
	SPE	STR
1N23H	Δ♦ALP	116 - 77
	AMR	HTN
	MIC	SPE
		STR
JAN1N23WE,WEM,WEMR		
	ALP	MIC 116 - 78
		PII
JAN1N23WG,WGM,WGMR		
	ALP	MIC 116 - 79
		PII
1N25	AMR	113 - 43
	CRI	HTN
	MIC	♦PII
		SPE
JAN1N25		none 113 - 44
1N25A	AMR	113 - 45
	HTN	MIC
	♦PII	SPE
1N25B		HTN 113 - 46
	MIC	♦PII
		SPE
JAN1N25WA		ALP 113 - 47
1N26	Δ♦ALP	126 - 16
	HTN	♦MIC
	PII	SPE
1N26A	Δ♦ALP	126 - 17
	HTN	♦MIC
	♦PII	SPE
1N26B	♦ALP	113 - 48
	HTN	♦MIC
	♦PII	SPE
JAN1N26B,BM,BMR,BR		
	ALP	MIC 126 - 30
1N26C	Δ♦ALP	126 - 18
	HTN	♦MIC
	♦PII	SPE
1N28J		NECJ 116 - 44
1N31		CRI 129 - 66
	HTN	MIC
	PII	SPE
JAN1N31		none 129 - 67
1N31A		HTN 129 - 68
	MIC	SPE
1N32		HTN 128 - 87
	MIC	PII
		SPE
JAN1N32		none 128 - 88
1N32A		HTN 128 - 89
	MIC	SPE
1N53	Δ♦ALP	126 - 66
	AMR	CRI
	HTN	♦MIC
	♦PII	SPE
JAN1N53		none 126 - 67
1N53A	Δ♦MIC	126 - 68
	♦ALP	AMR
	HTN	♦PII
		SPE
1N53B	Δ♦ALP	126 - 69
	AMR	HTN
	♦MIC	♦PII
		SPE
JAN1N53B,BM,BMR,BR		
	ALP	MIC 126 - 70
1N53C	Δ♦ALP	126 - 71
	HTN	♦MIC
	♦PII	SPE
1N53D	Δ♦ALP	126 - 72
	HTN	MIC
	♦PII	SPE
1N76		HTN 129 - 69
	MIC	PII
		SPE
1N76A		AMR 129 - 70
	HTN	MIC
	PII	SPE
1N76C		HTN 129 - 71
	MIC	SPE
1N78		CRI 123 - 16
	HTN	MIC
		SPE
1N78A		AMR 123 - 17
	CRI	HTN
	MIC	SPE
1N78B	Δ♦ALP	123 - 18
	AMR	HTN
	MIC	♦PII
		SPE
1N78C		♦ALP 123 - 19
	AMR	CRI
	HTN	MIC
	♦PII	SPE
JAN1N78C,CM,CMR,CR		
	ALP	MIC 123 - 20
1N78D	Δ♦ALP	123 - 21
	AMR	CRI
	HTN	MIC
	♦PII	SPE
1N78E	ΔMIC	123 - 22
	♦ALP	AMR
	HTN	♦PII
		SPE
1N78F		♦ALP 123 - 23
	AMR	HTN
	MIC	♦PII
		SPE
JAN1N78F,FM,FMR,FR		
	ALP	MIC 123 - 24
1N78G		♦ALP 123 - 25
	AMR	CRI
	HTN	♦MIC
		SPE
1N109		MIC 240 - 15
1N149		ΔMIC 116 - 80
	AMR	CRI
	HTN	♦PII
		SPE
1N150	Δ♦MIC	116 - 55
	CRI	HTN
		SPE
1N160	Δ♦MIC	116 - 56
	CRI	HTN
		SPE
1N263		AMR 116 - 81
	HTN	♦MIC
	NECJ	PII
		SPE
JAN1N263		♦MIC 116 - 82
1N286A		HTN 123 - 26
	♦PII	SPE
1N358		AMR 129 - 8
	HTN	MIC
		SPE
1N358A	Δ♦ALP	129 - 9
	AMR	HTN
	MIC	SPE
JAN1N358A,AM,AMR,AR		
		ALP 129 - 2
1N369		AMR 129 - 10
	CRI	HTN
	IDC	MIC
		SPE
1N369A		AMR 129 - 11
	HTN	IDC
	MIC	SPE
1N415B		AMR 116 - 83
	HTN	♦MIC
	SPE	STR
1N415C		HTN 116 - 84
	♦MIC	♦PII
	SPE	STR
1N415D		HTN 116 - 85
	♦MIC	PHIN
	♦PII	SPE
		STR
1N415E	Δ♦MIC	116 - 86
cont.next col.		
1N415E (cont.)		HTN
	PHIN	♦PII
	SPE	STR
1N415F		HTN 116 - 87
	MIC	PHIN
	♦PII	SPE
1N415G		HTN 116 - 88
	MIC	PHIN
	♦PII	SPE
1N416C		HTN 114 - 8
	♦MIC	♦PII
		SPE
1N415H		HTN 116 - 89
	MIC	SPE
1N416B		CRI 114 - 7
	HTN	♦MIC
		SPE
1N416D		CRI 114 - 9
	HTN	♦MIC
	♦PII	SPE
1N416E	Δ♦MIC	114 - 10
	HTN	♦PII
		SPE
1N416F		HTN 114 - 11
	♦MIC	♦PII
		SPE
1N416G		HTN 114 - 12
	♦MIC	♦PII
		SPE
1N630		AMR 129 - 12
	HTN	MIC
		SPE
1N831		AMR 114 - 13
	CRI	♦MIC
	♦PII	SPE
		STR
1N831A		AMR 114 - 14
	CRI	♦MIC
	♦PII	SPE
		STR
JAN1N831A		MIC 114 - 15
1N831B		AMR 114 - 16
	HTN	♦MIC
	♦PII	SPE
		STR
1N831C		AMR 114 - 17
	HTN	♦MIC
	♦PII	SPE
		STR
1N832		AMR 116 - 90
	CRI	HTN
	♦MIC	♦PII
		SPE
1N832A	Δ♦MIC	116 - 91
	AMR	CRI
	HTN	♦PII
		SPE
1N832B		AMR 116 - 92
	HTN	♦MIC
	♦PII	SPE
JAN1N832B		none 116 - 93
1N832C		AMR 116 - 94
	HTN	♦MIC
	♦PII	SPE
1N833		AMR 129 - 72
	CRI	HTN
	♦MIC	PII
	SPE	STR
1N833A	Δ♦MIC	129 - 73
	AMR	HTN
	PII	SPE
		STR
1N950		AMR 191 - 22
	CODI	EAS
	GHZ	♦KSI
	MDC	MSI
	SPE	♦TCY
1N950A		KSI 191 - 23
		SPE
1N950B		KSI 191 - 24
		SPE
1N951		AMR 195 - 3
	CODI	CRI
	EAS	GHZ
	♦KSI	MDC
	MSI	SPE
	♦TCY	WAB
1N951A		KSI 195 - 4
		SPE
1N951B		KSI 195 - 5
		SPE
1N952		AMR 197 - 80
	CODI	EAS
	GHZ	♦KSI
	MDC	MSI
	SPE	♦TCY
1N952A		KSI 197 - 81
		SPE
1N952B		KSI 197 - 82
		SPE
1N953		AMR 198 - 89
	CODI	CRI
	EAS	GHZ
	♦KSI	MDC
	MSI	SPE
		♦TCY
1N953A		KSI 198 - 90
		SPE
1N953B		KSI 198 - 91
		SPE
1N954		AMR 191 - 25
	CODI	CRI
	EAS	GHZ
	♦KSI	MDC
	MSI	SPE
		♦TCY
1N954A		KSI 191 - 26
		SPE
1N954B		KSI 191 - 27
		SPE
1N955		AMR 195 - 6
	CODI	CRI
	EAS	GHZ
	♦KSI	MDC
	MSI	SPE
		♦TCY
1N955A		KSI 195 - 7
		SPE
1N955B		KSI 195 - 8
		SPE
1N956		AMR 197 - 83
	CODI	CRI
	EAS	GHZ
	♦KSI	MDC
	MSI	SPE
		♦TCY
1N956A		KSI 197 - 84
		SPE
1N956B		KSI 197 - 85
		SPE
1N1132		HTN 116 - 61
	♦MIC	SPE
JAN1N1132,R		ALP 116 - 57
1N1610		HTN 129 - 15
	MIC	SPE
1N1611	Δ♦ALP	129 - 23
	AMR	HTN
	MIC	PII
		SPE
1N1611A	ΔMIC	129 - 24
	♦ALP	AMR
	HTN	PII
		SPE
1N1611B	ΔMIC	129 - 25
	♦ALP	AMR
	PII	SPE
1N1838		HTN 123 - 6
	♦MIC	PII
	SCA	SPE
JAN1N1838		♦MIC 122 - 92
1N2102	ΔMIC	128 - 90
	CRI	HTN
	PII	SPE
1N2127		CRI 129 - 74
	HTN	MIC
		SPE
1N2509		MIC 116 - 66
		SPE
1N2510		HTN 122 - 69
	♦PII	SPE
1N2771	Δ♦MIC	128 - 26
	HTN	SPE
1N2802		MIC 116 - 95
1N2926		HTN 132 - 61
		PII
1N2926A		HTN 132 - 62
		PII
1N2927		DIT 205 - 43
		MSC
1N2927A		DIT 205 - 49
		MSC
1N2928		DIT 205 - 86
		MSC
1N2928A		DIT 205 - 94
		MSC
1N2929		DIT 206 - 56
		MSC
1N2929A		DIT 206 - 57
	MSC	UPI
1N2930		DIT 208 - 38
		MSC
1N2930A		DIT 208 - 39
	MSC	UPI
1N2931		DIT 209 - 77
		MSC
1N2931A		DIT 209 - 78
		MSC
1N2932		DIT 210 - 44
		MSC
1N2932A		DIT 210 - 45
		MSC
1N2933		DIT 210 - 56
		MSC
1N2933A		DIT 210 - 57
		MSC
1N2934		DIT 211 - 4
		MSC
1N2934A		DIT 211 - 5
		MSC
1N3118		MIC 209 - 67
1N3128	♦MIC	208 - 97
		SPE
1N3129	♦MIC	210 - 19
1N3130	♦MIC	210 - 70
1N3138	MIC	210 - 79
1N3143	Δ♦MIC	129 - 75
	HTN	PII
1N3150		CRI 210 - 41
1N3182	ΔAPX	189 - 1
	CODI	CRI
	EAS	KSI
		SPE

1. TYPE No. CROSS INDEX

IN TYPE NUMBER SEQUENCE

TYPE No.	MFRS	Pg&Line
1N3205	CRI	123 - 27
HTN	MIC	
	♦PII	
1N3217	CRI	205 - 85
1N3218	CRI	206 - 51
1N3219	CRI	207 - 85
1N3220	CRI	208 - 35
1N3221	CRI	209 - 76
1N3222	CRI	210 - 42
1N3353	CRI	212 - 25
1N3481	CRI	212 - 96
1N3482	CRI	212 - 97
1N3488	CODI	195 - 63
CRI	EAS	
GHZ	KSI	
	TCY	
1N3539	CRI	212 - 26
	MSC	
1N3539A	MSC	212 - 27
1N3540	CRI	212 - 28
	MSC	
1N3540A	MSC	212 - 29
1N3541	CRI	212 - 30
	MSC	
1N3541A	MSC	212 - 31
1N3542	CRI	212 - 32
	MSC	
1N3542A	MSC	212 - 33
1N3543	CRI	212 - 34
	MSC	
1N3543A	MSC	212 - 35
1N3551	CODI	195 - 9
CRI	EAS	
GHZ	KSI	
	TCY	
1N3552	CODI	183 - 63
CRI	EAS	
GHZ	KSI	
	TCY	
1N3554	CODI	175 - 78
CRI	EAS	
GHZ	KSI	
	TCY	
1N3555	CODI	182 - 65
CRI	EAS	
GHZ	KSI	
SPE	♦TCY	
1N3556	CODI	193 - 21
CRI	EAS	
GHZ	KSI	
	TCY	
1N3557	CODI	186 - 24
CRI	EAS	
1N3560	CRI	206 - 54
1N3561	CRI	206 - 55
1N3562	CRI	208 -103
1N3627	CRI	183 - 64
EAS	GHZ	
KSI	TCY	
1N3628	CRI	195 - 10
EAS	GHZ	
KSI	TCY	
1N3655	Δ ♦MIC	114 - 18
CRI	HTN	
	♦PII	
1N3655A	Δ ♦MIC	114 - 19
HTN	♦PII	
JAN1N3655A,AM,AMR		
ALP	MIC	114 - 20
	PII	
1N3655B	HTN	114 - 21
♦MIC	♦PII	
1N3712	Δ ♦GESY	206 - 52
AMR	CRI	
DIT	♦MIC	
SPE	WAB	
1N3713	Δ ♦GESY	206 - 44
AMR	CRI	
DIT	♦MIC	
	SPE	
JAN1N3713	♦GESY	206 - 45
1N3714	Δ ♦GESY	207 - 86
CRI	DIT	
♦MIC	SPE	
	UPI	
1N3715	Δ ♦GESY	207 - 83
AMR	CRI	
DIT	♦MIC	
JAN1N3715	♦GESY	207 - 84
1N3716	Δ ♦GESY	208 - 37
AMR	CRI	
DIT	♦MIC	
SPE	SST	
1N3717	Δ ♦GESY	208 - 32
AMR	CRI	
DIT	♦MIC	
SPE	SST	
JAN1N3717	♦GESY	208 - 33
1N3718	Δ ♦GESY	209 - 75
AMR	CRI	
	DIT	
1N3719	Δ ♦GESY	209 - 73
AMR	CRI	
DIT	♦MIC	
JAN1N3719	♦GESY	209 - 74
1N3720	Δ ♦GESY	210 - 43
CRI	DIT	
♦MIC	SPE	
1N3721	Δ ♦GESY	210 - 39
CRI	DIT	
♦MIC	WAB	
JAN1N3721	GESY	210 - 40
1N3733	ΔMIC	114 - 22
CRI	HTN	

TYPE No.	MFRS	Pg&Line
1N3745	CRI	116 - 96
HTN	♦MIC	
♦PII	WAB	
1N3746	CRI	116 - 97
HTN	♦PII	
1N3747	CRI	116 - 98
HTN	MIC	
	SPE	
1N3747W	MIC	116 - 99
1N3770	Δ ♦MIC	153 - 69
	CRI	
1N3778	Δ ♦MIC	129 - 76
CRI	HTN	
	PII	
1N3847	♦MIC	208 -102
1N3848	♦MIC	209 - 69
1N3849	♦MIC	210 - 33
1N3850	♦MIC	210 - 81
1N3851	♦MIC	210 -103
1N3852	♦MIC	208 - 98
1N3853	♦MIC	209 - 65
1N3854	♦MIC	210 - 20
1N3856	♦MIC	210 - 98
1N3857	♦MIC	208 - 94
1N3858	♦MIC	209 - 48
1N3859	♦MIC	210 - 3
1N3860	♦MIC	210 - 66
1N3862	UPI	209 - 28
1N3945	CODI	182 - 66
EAS	GHZ	
	KSI	
1N3946	CODI	197 - 95
EAS	GHZ	
	KSI	
1N3947	CODI	197 - 86
EAS	GHZ	
	KSI	
1N4091	ΔMIC	162 - 1
1N4294	ΔMIC	114 - 23
1N4320	MIC	148 - 36
1N4379	ΔMIC	128 - 60
	HTN	
1N4386	MIC	195 - 44
	PII	
1N4387	MIC	191 - 35
PII	STR	
	TIC	
1N4388	MIC	183 - 54
PII	SPE	
	STR	
1N4393	MSC	205 - 44
1N4393A	MSC	205 - 45
1N4393B	MSC	205 - 46
1N4394	MSC	205 - 57
1N4394A	MSC	205 - 58
1N4394B	MSC	205 - 59
1N4395	MSC	205 - 87
1N4395A	MSC	205 - 88
1N4395B	MSC	205 - 89
1N4396	MSC	206 - 58
1N4396A	MSC	205 - 47
1N4396B	MSC	205 - 48
1N4397	MSC	207 - 87
1N4397A	MSC	205 - 60
1N4397B	MSC	205 - 61
1N4398	MSC	208 - 40
1N4398A	MSC	208 - 41
1N4398B	MSC	208 - 42
1N4399	MSC	209 - 79
1N4399A	MSC	209 - 80
1N4399B	MSC	209 - 81
1N4598	CODI	183 - 97
	KSI	
1N4599	ΔTCY	193 - 22
CODI	KSI	
1N4600	Δ ♦MIC	122 - 93
1N4601	Δ ♦MIC	122 - 94
1N4602	Δ ♦MIC	122 - 95
1N4603	Δ ♦MIC	123 - 28
HTN	♦PII	
1N4604	Δ ♦MIC	123 - 29
HTN	♦PII	
1N4605	Δ ♦MIC	123 - 30
HTN	♦PII	
1N4609	CODI	183 - 98
KSI	MSC	
1N4609A	IDC	183 - 99
	KSI	
1N4786	CODI	166 -106
EAS	GHZ	
♦KSI	TCY	
1N4786A	CODI	166 -107
CRI	EAS	
GHZ	KSI	
MDC	MSI	
	TCY	
1N4786B	CODI	166 -108
CRI	EAS	
GHZ	KSI	
MSI	TCY	
1N4786C	CODI	166 -109
CRI	EAS	
GHZ	KSI	
MSI	TCY	
1N4786D	CODI	166 -110
CRI	EAS	
GHZ	KSI	
MSI	TCY	
1N4787	CODI	170 - 2
CRI	EAS	
GHZ	♦KSI	
	TCY	
1N4787A	CODI	170 - 3
cont.next col.		

TYPE No.	MFRS	Pg&Line
1N4787A		
(cont.)	CRI	
EAS	GHZ	
KSI	MDC	
MSI	TCY	
1N4787B	CODI	170 - 4
CRI	EAS	
GHZ	KSI	
MSI	TCY	
1N4787C	CODI	170 - 5
CRI	EAS	
GHZ	KSI	
MSI	TCY	
1N4787D	CODI	170 - 6
CRI	EAS	
GHZ	KSI	
MSI	TCY	
1N4788	CODI	172 - 17
CRI	EAS	
GHZ	♦KSI	
	TCY	
1N4788A	CODI	172 - 18
CRI	EAS	
GHZ	KSI	
MDC	MSI	
	TCY	
1N4788B	CODI	172 - 19
CRI	EAS	
GHZ	KSI	
MSI	TCY	
1N4788C	CODI	172 - 20
CRI	EAS	
GHZ	KSI	
MSI	TCY	
1N4788D	CODI	172 - 21
CRI	EAS	
GHZ	KSI	
MSI	TCY	
1N4789	CODI	175 - 79
CRI	EAS	
GHZ	♦KSI	
	TCY	
1N4789A	CODI	175 - 80
CRI	EAS	
GHZ	KSI	
MDC	MSI	
	TCY	
1N4789B	CODI	175 - 81
CRI	EAS	
GHZ	KSI	
MSI	TCY	
1N4789C	CODI	175 - 82
CRI	EAS	
GHZ	KSI	
MSI	TCY	
1N4789D	CODI	175 - 83
CRI	EAS	
GHZ	KSI	
MSI	TCY	
1N4790	CODI	178 - 4
CRI	EAS	
GHZ	♦KSI	
	TCY	
1N4790A	CODI	178 - 5
CRI	EAS	
GHZ	KSI	
MDC	MSI	
	TCY	
1N4790B	CODI	178 - 6
CRI	EAS	
GHZ	KSI	
MSI	TCY	
1N4790C	CODI	178 - 7
CRI	EAS	
GHZ	KSI	
MSI	TCY	
1N4790D	CODI	178 - 8
CRI	EAS	
GHZ	KSI	
MSI	TCY	
1N4791	CODI	181 - 35
CRI	EAS	
GHZ	♦KSI	
	TCY	
1N4791A	CODI	181 - 36
CRI	EAS	
GHZ	KSI	
MDC	MSI	
	TCY	
1N4791B	CODI	181 - 37
CRI	EAS	
GHZ	KSI	
MSI	TCY	
1N4791C	CODI	181 - 38
CRI	EAS	
GHZ	KSI	
MSI	TCY	
1N4791D	CODI	181 - 39
CRI	EAS	
GHZ	KSI	
MSI	TCY	
1N4792	CODI	183 -100
CRI	EAS	
GHZ	♦KSI	
	TCY	
1N4792A	CODI	183 -101
CRI	EAS	
GHZ	KSI	
MDC	MSI	
	TCY	
1N4792B	CODI	183 -102
CRI	EAS	
GHZ	KSI	
MSI	TCY	

TYPE No.	MFRS	Pg&Line
1N4792C	CODI	183 -103
CRI	EAS	
GHZ	KSI	
MSI	TCY	
1N4792D	CODI	183 -104
CRI	EAS	
GHZ	KSI	
MSI	TCY	
1N4793	CODI	186 - 82
CRI	EAS	
GHZ	♦KSI	
	TCY	
1N4793A	CODI	186 - 83
CRI	EAS	
GHZ	KSI	
MDC	MSI	
	TCY	
1N4793B	CODI	186 - 84
CRI	EAS	
GHZ	KSI	
MSI	TCY	
1N4793C	CODI	186 - 85
CRI	EAS	
GHZ	KSI	
MSI	TCY	
1N4793D	CODI	186 - 86
CRI	EAS	
GHZ	KSI	
MSI	TCY	
1N4794	CODI	189 - 2
CRI	EAS	
GHZ	♦KSI	
	TCY	
1N4794A	CODI	189 - 3
CRI	EAS	
GHZ	KSI	
MDC	MSI	
	TCY	
1N4794B	CODI	189 - 4
CRI	EAS	
GHZ	KSI	
MSI	TCY	
1N4794C	CODI	189 - 5
CRI	EAS	
GHZ	KSI	
MSI	TCY	
1N4794D	CODI	189 - 6
CRI	EAS	
GHZ	KSI	
MSI	TCY	
1N4795	CODI	191 - 59
CRI	EAS	
GHZ	♦KSI	
SPE	TCY	
1N4795A	CODI	191 - 60
CRI	EAS	
GHZ	KSI	
MDC	MSI	
	TCY	
1N4795B	CODI	191 - 61
CRI	EAS	
GHZ	KSI	
MSI	TCY	
1N4795C	CODI	191 - 62
CRI	EAS	
GHZ	KSI	
MSI	TCY	
1N4795D	CRI	191 - 63
EAS	GHZ	
KSI	MSI	
	TCY	
1N4796	CODI	193 - 23
CRI	EAS	
GHZ	♦KSI	
	TCY	
1N4796A	CODI	193 - 24
CRI	EAS	
GHZ	KSI	
MDC	MSI	
	TCY	
1N4796B	CODI	193 - 25
CRI	EAS	
GHZ	KSI	
MSI	TCY	
1N4796C	CODI	193 - 26
CRI	EAS	
GHZ	KSI	
MSI	TCY	
1N4796D	CODI	193 - 27
CRI	EAS	
GHZ	KSI	
MSI	TCY	
1N4797	CODI	195 - 64
CRI	EAS	
GHZ	♦KSI	
	TCY	
1N4797A	CODI	195 - 65
CRI	EAS	
GHZ	KSI	
MDC	MSI	
	TCY	
1N4797B	CODI	195 - 66
CRI	EAS	
GHZ	KSI	
MSI	TCY	
1N4797C	CODI	195 - 67
CRI	EAS	
GHZ	KSI	
MSI	TCY	
1N4797D	CODI	195 - 68
CRI	EAS	
GHZ	KSI	
MSI	TCY	

TYPE No.	MFRS	Pg&Line
1N4798	CODI	196 - 84
CRI	EAS	
GHZ	♦KSI	
	TCY	
1N4798A	CODI	196 - 85
CRI	EAS	
GHZ	KSI	
MDC	MSI	
	TCY	
1N4798B	CODI	196 - 86
CRI	EAS	
GHZ	KSI	
MSI	TCY	
1N4798C	CODI	196 - 87
CRI	EAS	
GHZ	KSI	
MSI	TCY	
1N4798D	CODI	196 - 88
CRI	EAS	
GHZ	KSI	
MSI	TCY	
1N4799	CODI	197 -106
CRI	EAS	
GHZ	♦KSI	
	TCY	
1N4799A	CODI	197 -107
CRI	EAS	
GHZ	KSI	
MDC	MSI	
	TCY	
1N4799B	CODI	197 -108
CRI	EAS	
GHZ	KSI	
MSI	TCY	
1N4799C	CODI	197 -109
CRI	EAS	
GHZ	KSI	
MSI	TCY	
1N4799D	CODI	197 -110
CRI	EAS	
GHZ	KSI	
MSI	TCY	
1N4800	CODI	198 - 92
CRI	EAS	
GHZ	♦KSI	
	TCY	
1N4800A	CODI	198 - 93
CRI	EAS	
GHZ	KSI	
MDC	MSI	
	TCY	
1N4800B	CODI	198 - 94
CRI	EAS	
GHZ	KSI	
MSI	TCY	
1N4800C	CODI	198 - 95
CRI	EAS	
GHZ	KSI	
MSI	TCY	
1N4800D	CODI	198 - 96
♦CRI	EAS	
GHZ	KSI	
MSI	TCY	
1N4801	CODI	167 - 1
CRI	EAS	
GHZ	♦KSI	
	TCY	
1N4801A	CODI	167 - 2
CRI	EAS	
GHZ	KSI	
MDC	MSI	
	TCY	
JAN1N4801A	none	167 - 3
1N4801B	CODI	167 - 4
CRI	EAS	
GHZ	KSI	
MSI	TCY	
JAN1N4801B	none	167 - 5
1N4801C	CODI	167 - 6
CRI	EAS	
GHZ	KSI	
MSI	TCY	
1N4801D	CODI	167 - 7
CRI	EAS	
GHZ	KSI	
MSI	TCY	
1N4802	CODI	170 - 7
CRI	EAS	
GHZ	♦KSI	
	TCY	
1N4802A	CODI	170 - 8
CRI	EAS	
GHZ	KSI	
MDC	MSI	
	TCY	
JAN1N4802A	none	170 - 9
1N4802B	CODI	170 - 10
CRI	EAS	
GHZ	KSI	
MSI	TCY	
JAN1N4802B	none	170 - 11
1N4802C	CODI	170 - 12
CRI	EAS	
GHZ	KSI	
MSI	TCY	
1N4802D	CODI	170 - 13
CRI	EAS	
GHZ	KSI	
MSI	TCY	
1N4803	CODI	172 - 22
CRI	EAS	
GHZ	♦KSI	
	TCY	

Δ-Registered with JEDEC by this manufacturer

♦-Mfr's data sheet available in microfilm service

1. TYPE No. CROSS INDEX

IN TYPE NUMBER SEQUENCE

TYPE No.	MFRS	Pg&Line
1N4803A	CODI	172 - 23
	CRI	EAS
	GHZ	KSI
	MDC	MSI
		TCY
JAN1N4803A	none	172 - 24
1N4803B	CODI	172 - 25
	CRI	EAS
	GHZ	KSI
	MSI	TCY
JAN1N4803B	none	172 - 26
1N4803C	CODI	172 - 27
	CRI	EAS
	GHZ	KSI
	MSI	TCY
1N4803D	CODI	172 - 28
	CRI	EAS
	GHZ	KSI
	MSI	TCY
1N4804	CODI	175 - 84
	CRI	EAS
	GHZ	♦KSI
		TCY
1N4804A	CODI	175 - 85
	CRI	EAS
	GHZ	KSI
	MDC	MSI
		TCY
JAN1N4804A	none	175 - 86
1N4804B	CODI	175 - 87
	CRI	EAS
	GHZ	KSI
	MSI	TCY
JAN1N4804B	none	175 - 88
1N4804C	CODI	175 - 89
	CRI	EAS
	GHZ	KSI
	MSI	TCY
1N4804D	CODI	175 - 90
	CRI	EAS
	GHZ	KSI
	MSI	TCY
1N4805	CODI	178 - 9
	CRI	EAS
	GHZ	♦KSI
		TCY
1N4805A	CODI	178 - 10
	CRI	EAS
	GHZ	KSI
	MDC	MSI
		TCY
JAN1N4805A	none	178 - 11
1N4805B	CODI	178 - 12
	CRI	EAS
	GHZ	KSI
	MSI	TCY
JAN1N4805B	none	178 - 13
1N4805C	CODI	178 - 14
	CRI	EAS
	GHZ	KSI
	MSI	TCY
1N4805D	CODI	178 - 15
	CRI	EAS
	GHZ	KSI
	MSI	TCY
1N4806	CODI	181 - 40
	CRI	EAS
	GHZ	♦KSI
		TCY
1N4806A	CODI	181 - 41
	CRI	EAS
	GHZ	KSI
	MDC	MSI
	SPE	TCY
JAN1N4806A	none	181 - 42
1N4806B	CODI	181 - 43
	CRI	EAS
	GHZ	KSI
	MSI	TCY
JAN1N4806B	none	181 - 44
1N4806C	CODI	181 - 45
	CRI	EAS
	GHZ	KSI
	MSI	TCY
1N4806D	CODI	181 - 46
	CRI	EAS
	GHZ	KSI
	MSI	TCY
1N4807	CODI	183 -105
	CRI	EAS
	GHZ	♦KSI
		TCY
1N4807A	CODI	183 -106
	CRI	EAS
	GHZ	KSI
	MDC	MSI
		TCY
JAN1N4807A	none	183 -107
1N4807B	CODI	183 -108
	CRI	EAS
	GHZ	KSI
	MSI	TCY
JAN1N4807B	none	183 -109
1N4807C	CODI	183 -110
	CRI	EAS
	GHZ	KSI
	MSI	TCY
1N4807D	CODI	184 - 1
	CRI	EAS
	GHZ	KSI
	MSI	TCY
1N4808	CODI	186 - 87
	CRI	EAS
cont.next col.		

TYPE No.	MFRS	Pg&Line
1N4808		
(cont.)	GHZ	
	♦KSI	TCY
1N4808A	CODI	186 - 88
	CRI	EAS
	GHZ	KSI
	MDC	MSI
		TCY
JAN1N4808A	none	186 - 89
1N4808B	CODI	186 - 90
	CRI	EAS
	GHZ	KSI
	MSI	TCY
JAN1N4808B	none	186 - 91
1N4808C	CODI	186 - 92
	CRI	EAS
	GHZ	KSI
	MSI	TCY
1N4808D	CODI	186 - 93
	CRI	EAS
	GHZ	KSI
	MSI	TCY
1N4809	CODI	189 - 7
	CRI	EAS
	GHZ	♦KSI
		TCY
1N4809A	CODI	189 - 8
	CRI	EAS
	GHZ	KSI
	MDC	MSI
	SPE	TCY
JAN1N4809A	none	189 - 9
1N4809B	CODI	189 - 10
	CRI	EAS
	GHZ	KSI
	MSI	TCY
JAN1N4809B	none	189 - 11
1N4809C	CODI	189 - 12
	CRI	EAS
	GHZ	KSI
	MSI	TCY
1N4809D	CODI	189 - 13
	CRI	EAS
	GHZ	KSI
	MSI	TCY
1N4810	CODI	191 - 64
	CRI	EAS
	GHZ	♦KSI
		TCY
1N4810A	CODI	191 - 65
	CRI	EAS
	GHZ	KSI
	MDC	MSI
		TCY
JAN1N4810A	none	191 - 66
1N4810B	CODI	191 - 67
	CRI	EAS
	GHZ	KSI
	MSI	TCY
JAN1N4810B	none	191 - 68
1N4810C	CODI	191 - 69
	CRI	EAS
	GHZ	KSI
	MSI	TCY
1N4810D	CODI	191 - 70
	CRI	EAS
	GHZ	KSI
	MSI	TCY
1N4811	CODI	193 - 28
	CRI	EAS
	GHZ	♦KSI
		TCY
1N4811A	CODI	193 - 29
	CRI	EAS
	GHZ	KSI
	MDC	MSI
		TCY
JAN1N4811A	none	193 - 30
1N4811B	CODI	193 - 31
	CRI	EAS
	GHZ	KSI
	MSI	TCY
JAN1N4811B	none	193 - 32
1N4811C	CODI	193 - 33
	CRI	EAS
	GHZ	KSI
	MSI	TCY
1N4811D	CODI	193 - 34
	CRI	EAS
	GHZ	KSI
	MSI	TCY
1N4812	CODI	195 - 69
	CRI	EAS
	GHZ	♦KSI
	SPE	TCY
1N4812A	CODI	195 - 70
	CRI	EAS
	GHZ	KSI
	MDC	MSI
		TCY
JAN1N4812A	none	195 - 71
1N4812B	CODI	195 - 72
	CRI	EAS
	GHZ	KSI
	MSI	TCY
JAN1N4812B	none	195 - 73
1N4812C	CODI	195 - 74
	CRI	EAS
	GHZ	KSI
	MSI	TCY
1N4812D	CODI	195 - 75
	CRI	EAS
	GHZ	KSI
	MSI	TCY

TYPE No.	MFRS	Pg&Line
1N4813	CODI	196 - 89
	CRI	EAS
	GHZ	♦KSI
		TCY
1N4813A	CODI	196 - 90
	CRI	EAS
	GHZ	KSI
	MDC	MSI
		TCY
JAN1N4813A	none	196 - 91
1N4813B	CODI	196 - 92
	CRI	EAS
	GHZ	KSI
	MSI	TCY
JAN1N4813B	none	196 - 93
1N4813C	CODI	196 - 94
	CRI	EAS
	GHZ	KSI
	MSI	TCY
1N4813D	CODI	196 - 95
	CRI	EAS
	GHZ	KSI
	MSI	TCY
1N4814	CODI	198 - 1
	CRI	EAS
	GHZ	♦KSI
	SPE	TCY
1N4814A	CODI	198 - 2
	CRI	EAS
	GHZ	KSI
	MDC	MSI
		TCY
JAN1N4814A	none	198 - 3
1N4814B	CODI	198 - 4
	CRI	EAS
	GHZ	KSI
	MSI	TCY
JAN1N4814B	none	198 - 5
1N4814C	CODI	198 - 6
	CRI	EAS
	GHZ	KSI
	MSI	TCY
1N4814D	CODI	198 - 7
	CRI	EAS
	GHZ	KSI
	MSI	TCY
1N4815	CODI	198 - 97
	CRI	EAS
	GHZ	♦KSI
		TCY
1N4815A	CODI	198 - 98
	CRI	EAS
	GHZ	KSI
	MDC	MSI
		TCY
JAN1N4815A	none	198 - 99
1N4815B	CODI	198 -100
	CRI	EAS
	GHZ	KSI
	MSI	TCY
JAN1N4815B	none	198 -101
1N4815C	CODI	198 -102
	CRI	EAS
	GHZ	KSI
	MSI	TCY
1N4815D	CODI	198 -103
	CRI	EAS
	GHZ	KSI
	MSI	TCY
1N4885	PHIN	135 - 26
	SPE	SWT
	UPI	♦VALG
1N5136	CODI	147 - 53
	EAS	KSI
1N5136A	CODI	147 - 54
	EAS	KSI
1N5137	CODI	158 -100
	EAS	KSI
1N5137A	CODI	158 -101
	EAS	KSI
1N5138	CODI	154 - 79
	EAS	KSI
1N5138A	CODI	154 - 80
	EAS	KSI
1N5139	CODI	167 - 8
	EAS	GHZ
	♦KSI	MIC
	♦MOTA	♦MSI
	SPE	TCY
1N5139A	CODI	167 - 9
	EAS	GHZ
	KSI	♦MOTA
	MSC	♦MSI
		♦TCY
JAN1N5139A	CODI	167 - 10
		TCY
1N5140	CODI	172 - 29
	EAS	GHZ
	♦KSI	MIC
	♦MOTA	MSC
	♦MSI	♦TCY
1N5140A	CODI	172 - 30
	EAS	GHZ
	KSI	♦MOTA
	MSC	MSI
	TCY	TIC
JAN1N5140A	CODI	172 - 31
	TCY	STR
1N5141	CODI	175 - 91
	EAS	GHZ
	♦KSI	MIC
	♦MOTA	MSC
	♦MSI	SPE
		♦TCY

TYPE No.	MFRS	Pg&Line
1N5141A	CODI	175 - 92
	EAS	GHZ
	KSI	♦MOTA
	MSC	♦MSI
	TCY	TIC
JAN1N5141A	CODI	175 - 93
		TCY
1N5142	CODI	178 - 16
	EAS	GHZ
	♦KSI	MIC
	♦MOTA	MSC
	♦MSI	♦TCY
1N5142A	CODI	178 - 17
	EAS	GHZ
	KSI	♦MOTA
	MSC	♦MSI
		TCY
JAN1N5142A	CODI	178 - 18
		♦TCY
1N5143	CODI	181 - 47
	EAS	GHZ
	♦KSI	MIC
	♦MOTA	MSC
	♦MSI	TCY
1N5143A	CODI	181 - 48
	EAS	GHZ
	KSI	♦MOTA
	MSC	MSI
		TCY
JAN1N5143A	CODI	181 - 49
		TCY
1N5144	CODI	184 - 2
	EAS	GHZ
	♦KSI	MIC
	♦MOTA	MSC
	♦MSI	SPE
		♦TCY
1N5144A	CODI	184 - 3
	EAS	GHZ
	KSI	♦MOTA
	MSC	MSI
		TCY
JAN1N5144A	CODI	184 - 4
		TCY
1N5145	CODI	186 - 94
	EAS	GHZ
	♦KSI	MIC
	♦MOTA	MSC
	♦MSI	♦TCY
1N5145A	CODI	186 - 95
	EAS	GHZ
	KSI	♦MOTA
	MSC	MSI
		TCY
JAN1N5145A	CODI	186 - 96
		TCY
1N5146	Δ ♦MOTA	189 - 14
	CODI	EAS
	GHZ	♦KSI
	MIC	MSC
	♦MSI	♦TCY
1N5146A	Δ ♦MOTA	189 - 15
	CODI	EAS
	GHZ	KSI
	MSC	MSI
	SPE	TCY
JAN1N5146A	CODI	189 - 16
		TCY
1N5147	CODI	191 - 71
	EAS	GHZ
	♦KSI	MIC
	♦MOTA	MSC
	♦MSI	♦TCY
1N5147A	CODI	191 - 72
	EAS	GHZ
	KSI	♦MOTA
	MSC	MSI
	TCY	TIC
JAN1N5147A	CODI	191 - 73
		TCY
1N5148	CODI	194 - 97
	EAS	GHZ
	♦KSI	MIC
	♦MOTA	MSC
	♦MSI	SPE
		♦TCY
1N5148A	CODI	194 - 98
	EAS	GHZ
	KSI	♦MOTA
	MSC	♦MSI
	♦TCY	TIC
JAN1N5148A	CODI	193 - 35
		TCY
1N5149	MIC	177 - 23
	PII	STR
1N5150	MIC	177 - 24
	PII	SPE
		STR
1N5150A	MIC	177 - 25
		PII
1N5151	MIC	166 - 48
		PII
1N5152	MIC	166 - 49
	♦MULB	♦PHIN
	PII	♦RTCF
	STR	♦VALG
1N5152A	MIC	165 -102
	PII	STR
1N5153	MIC	166 - 50
	♦MULB	♦PHIN
	PII	♦RTCF
	STR	♦VALG
1N5153A	MIC	165 -103
	PII	STR

TYPE No.	MFRS	Pg&Line
1N5154	MIC	154 - 17
	PII	STR
1N5155	MIC	154 - 18
	♦MULB	♦PHIN
	PII	♦RTCF
	STR	♦VALG
1N5155A	MIC	153 - 66
	PII	STR
1N5156	MIC	146 - 35
	PII	STR
1N5157	MIC	146 - 36
	♦MULB	♦PHIN
	PII	♦RTCF
	STR	♦VALG
1N5165	HPA	212 - 98
	TRWM	
1N5166	HPA	212 - 99
	TRWM	
1N5167	HPA	212 -100
	TRWM	
1N5421	ΔMIC	200 - 55
	TCY	
1N5422	ΔMIC	201 - 76
	TCY	
1N5423	ΔMIC	202 - 82
	TCY	
1N5424	ΔMIC	202 - 83
	SPE	TCY
1N5425	ΔMIC	203 - 30
		TCY
1N5436	ΔMIC	123 - 31
1N5437	ΔMIC	123 - 32
1N5438	ΔMIC	123 - 33
1N5440	KSI	163 - 3
1N5440,A,B,C,D		163 - 4
		CODI
1N5440A	KSI	163 - 5
1N5440B	KSI	163 - 6
1N5440C	KSI	163 - 7
1N5440D	KSI	163 - 8
1N5441	CODI	167 - 11
	EAS	GHZ
	♦KSI	♦TCY
1N5441A	Δ ♦MOTA	167 - 12
	AMR	CODI
	EAS	GHZ
	KSI	MIC
	MSI	SPE
		♦TCY
1N5441B	Δ ♦MOTA	167 - 13
	CODI	EAS
	GHZ	KSI
	MSI	♦TCY
1N5441C	Δ ♦MOTA	167 - 14
	CODI	EAS
	GHZ	KSI
	MSI	♦TCY
1N5442	CODI	170 - 14
	CRI	EAS
	GHZ	♦KSI
		♦TCY
1N5442A	Δ ♦MOTA	170 - 15
	AMR	CODI
	EAS	GHZ
	KSI	MIC
	MSI	SPE
		♦TCY
1N5442B	Δ ♦MOTA	170 - 16
	CODI	EAS
	GHZ	MSI
		♦TCY
1N5442C	Δ ♦MOTA	170 - 17
	CODI	EAS
	GHZ	KSI
	MSI	♦TCY
1N5442D	CODI	170 - 18
	GHZ	KSI
		♦TCY
1N5443	CODI	172 - 32
	EAS	GHZ
	♦KSI	♦TCY
1N5443A	Δ ♦MOTA	172 - 33
	AMR	CODI
	EAS	GHZ
	KSI	MIC
	MSI	♦TCY
1N5443B	Δ ♦MOTA	172 - 34
	CODI	EAS
	GHZ	KSI
	MSI	♦TCY
1N5443C	Δ ♦MOTA	172 - 35
	CODI	EAS
	GHZ	KSI
	MSI	♦TCY
1N5443D	CODI	172 - 36
	GHZ	KSI
		♦TCY
1N5444	CODI	175 - 94
	CRI	EAS
	GHZ	♦KSI
		♦TCY
1N5444A	Δ ♦MOTA	175 - 95
	AMR	CODI
	EAS	GHZ
	KSI	MIC
	MSI	♦TCY
1N5444B	Δ ♦MOTA	175 - 96
	CODI	EAS
	GHZ	KSI
	MSI	♦TCY

Δ-Registered with JEDEC by this manufacturer

♦-Mfr's data sheet available in microfilm service

1. TYPE No. CROSS INDEX

IN TYPE NUMBER SEQUENCE

TYPE No.	MFRS	Pg&Line
1N5444C	△♦MOTA	175 - 97
	CODI	
	EAS	
	GHZ	
	KSI	
	MSI	
	♦TCY	
1N5444D	CODI	175 - 98
	GHZ	
	KSI	
	♦TCY	
1N5445	CODI	178 - 19
	EAS	
	GHZ	
	♦KSI	
	♦TCY	
1N5445A	△♦MOTA	178 - 20
	AMR	
	CODI	
	EAS	
	GHZ	
	KSI	
	MIC	
	MSI	
	♦TCY	
	TIC	
1N5445B	△♦MOTA	178 - 21
	CODI	
	EAS	
	GHZ	
	KSI	
	MSI	
	♦TCY	
1N5445C	△♦MOTA	178 - 22
	CODI	
	EAS	
	GHZ	
	KSI	
	MSI	
	♦TCY	
1N5445D	CODI	178 - 23
	GHZ	
	KSI	
	♦TCY	
1N5446	CODI	181 - 50
	CRI	
	EAS	
	GHZ	
	♦KSI	
	♦TCY	
1N5446A	△♦MOTA	181 - 51
	AMR	
	CODI	
	DIT	
	EAS	
	GHZ	
	KSI	
	MIC	
	MSI	
	♦TCY	
1N5446B	△♦MOTA	181 - 52
	CODI	
	EAS	
	GHZ	
	KSI	
	MSI	
	♦TCY	
1N5446C	△♦MOTA	181 - 53
	CODI	
	EAS	
	GHZ	
	KSI	
	MSI	
	♦TCY	
1N5446D	CODI	181 - 54
	GHZ	
	KSI	
	♦TCY	
1N5447	CODI	182 - 67
	CRI	
	EAS	
	GHZ	
	♦KSI	
	♦TCY	
1N5447A	△♦MOTA	182 - 68
	AMR	
	CODI	
	DIT	
	EAS	
	GHZ	
	KSI	
	MIC	
	MSI	
	♦TCY	
1N5447B	△♦MOTA	182 - 69
	CODI	
	EAS	
	GHZ	
	KSI	
	MSI	
	♦TCY	
1N5447C	△♦MOTA	182 - 70
	CODI	
	EAS	
	GHZ	
	KSI	
	MSI	
	♦TCY	
1N5447D	CODI	182 - 71
	GHZ	
	KSI	
	TCY	
1N5448	CODI	184 - 5
	CRI	
	EAS	
	GHZ	
	♦KSI	
	♦TCY	
1N5448A	△♦MOTA	184 - 6
	AMR	
	CODI	
	DIT	
	EAS	
	GHZ	
	KSI	
	MIC	
	MSI	
	♦TCY	
1N5448B	△♦MOTA	184 - 7
	CODI	
	EAS	
	GHZ	
	KSI	
	MSI	
	♦TCY	
1N5448C	△♦MOTA	184 - 8
	CODI	
	EAS	
	GHZ	
	KSI	
	MSI	
	♦TCY	
1N5448D	CODI	184 - 9
	GHZ	
	KSI	
	♦TCY	
1N5449	CODI	186 - 97
	EAS	
	GHZ	
	♦KSI	
	♦TCY	
1N5449A	△♦MOTA	186 - 98
	AMR	
	CODI	
	DIT	
	EAS	
	GHZ	
	KSI	
	MIC	
	MSI	
	♦TCY	
1N5449B	△♦MOTA	186 - 99
	CODI	
	EAS	
	GHZ	
	KSI	
	MSI	
	♦TCY	
1N5449C	△♦MOTA	186 -100
	CODI	
	EAS	
	GHZ	
	KSI	
	MSI	
	♦TCY	
1N5449D	CODI	186 -101
	GHZ	
	KSI	
	♦TCY	
1N5450	CODI	189 - 17
	CRI	
	EAS	
	GHZ	
	♦KSI	
	♦TCY	
1N5450A	△♦MOTA	189 - 18
	AMR	
	CODI	
	DIT	
	EAS	
	GHZ	
	KSI	
	MIC	
	MSI	
	♦TCY	
1N5450B	△♦MOTA	189 - 19
	CODI	
	EAS	
	GHZ	
	KSI	
	MSI	
	♦TCY	
1N5450C	△♦MOTA	189 - 20
	CODI	
	EAS	
	GHZ	
	KSI	
	MSI	
	♦TCY	
1N5450D	CODI	189 - 21
	GHZ	
	KSI	
	♦TCY	
1N5451	CODI	191 - 74
	CRI	
	EAS	
	GHZ	
	♦KSI	
	♦TCY	
1N5451A	△♦MOTA	191 - 75
	AMR	
	CODI	
	DIT	
	EAS	
	GHZ	
	KSI	
	MIC	
	MSI	
	♦TCY	
1N5451B	△♦MOTA	191 - 76
	CODI	
	EAS	
	GHZ	
	KSI	
	MSI	
	♦TCY	
1N5451C	△♦MOTA	191 - 77
	CODI	
	EAS	
	GHZ	
	KSI	
	MSI	
	♦TCY	
1N5451D	CODI	191 - 78
	GHZ	
	KSI	
	♦TCY	
1N5452	CODI	193 - 36
	EAS	
	GHZ	
	♦KSI	
	♦TCY	
1N5452A	△♦MOTA	193 - 37
	AMR	
	CODI	
	DIT	
	EAS	
	GHZ	
	KSI	
	MIC	
	MSI	
	♦TCY	
1N5452B	△♦MOTA	193 - 38
	CODI	
	EAS	
	GHZ	
	KSI	
	MSI	
	♦TCY	
1N5452C	△♦MOTA	193 - 39
	CODI	
	EAS	
	GHZ	
	KSI	
	MSI	
	♦TCY	
1N5452D	CODI	193 - 40
	GHZ	
	KSI	
	♦TCY	
1N5453	CODI	195 - 76
	EAS	
	GHZ	
	♦KSI	
	♦TCY	
1N5453A	△♦MOTA	195 - 77
	AMR	
	CODI	
	DIT	
	EAS	
	GHZ	
	KSI	
	MIC	
	MSI	
	♦TCY	
1N5453B	△♦MOTA	195 - 78
	CODI	
	EAS	
	GHZ	
	KSI	
	MSI	
	♦TCY	
1N5453C	△♦MOTA	195 - 79
	CODI	
	EAS	
	GHZ	
	KSI	
	MSI	
	♦TCY	
1N5453D	CODI	195 - 80
	GHZ	
	KSI	
	♦TCY	
1N5454	CODI	196 - 96
	CRI	
	EAS	
	GHZ	
	KSI	
	♦TCY	
	TIC	
1N5454A	△♦MOTA	196 - 97
	AMR	
	CODI	
	DIT	
	EAS	
	GHZ	
	KSI	
	MSI	
	♦TCY	
1N5454B	△♦MOTA	196 - 98
	CODI	
	EAS	
	GHZ	
	KSI	
	MSI	
	♦TCY	
1N5454C	△♦MOTA	196 - 99
	CODI	
	EAS	
	GHZ	
	KSI	
	MSI	
	♦TCY	
1N5454D	CODI	196 -100
	GHZ	
	KSI	
	♦TCY	
1N5455	CODI	198 - 8
	CRI	
	EAS	
	GHZ	
	♦KSI	
	♦TCY	
1N5455A	△♦MOTA	198 - 9
	AMR	
	CODI	
	DIT	
	EAS	
	GHZ	
	KSI	
	MSI	
	♦TCY	
1N5455B	△♦MOTA	198 - 10
	CODI	
	EAS	
	GHZ	
	KSI	
	MSI	
	♦TCY	
1N5455C	△♦MOTA	198 - 11
	CODI	
	EAS	
cont.next col.		
1N5455C		
(cont.)	GHZ	
	KSI	
	MSI	
	♦TCY	
1N5455D	CODI	198 - 12
	GHZ	
	KSI	
	♦TCY	
1N5456	CODI	198 -104
	CRI	
	EAS	
	GHZ	
	♦KSI	
	♦TCY	
1N5456A	△♦MOTA	198 -105
	AMR	
	CODI	
	DIT	
	EAS	
	GHZ	
	KSI	
	MSI	
	♦TCY	
1N5456B	△♦MOTA	198 -106
	CODI	
	EAS	
	GHZ	
	KSI	
	MSI	
	♦TCY	
1N5456C	△♦MOTA	198 -107
	CODI	
	EAS	
	GHZ	
	KSI	
	MSI	
	♦TCY	
1N5456D	CODI	198 -108
	GHZ	
	KSI	
	♦TCY	
1N5457	KSI	200 - 3
1N5457,A,B,C,D		200 - 4
	CODI	
1N5457A	KSI	200 - 5
1N5457B	KSI	200 - 6
1N5457C	KSI	200 - 7
1N5457D	KSI	200 - 8
1N5458	KSI	160 -110
1N5458,A,B,C,D		161 - 1
	CODI	
1N5458A	KSI	161 - 2
1N5458B	KSI	161 - 3
1N5458C	KSI	161 - 4
1N5458D	KSI	161 - 5
1N5459	KSI	163 - 9
1N5459,A,B,C,D		163 - 10
	CODI	
1N5459A	KSI	163 - 11
1N5459B	KSI	163 - 12
1N5459C	KSI	163 - 13
1N5459D	KSI	163 - 14
1N5460	KSI	164 - 86
1N5460,A,B,C,D		164 - 87
	CODI	
1N5460A	KSI	164 - 88
1N5460B	KSI	164 - 89
1N5460C	KSI	164 - 90
1N5460D	KSI	164 - 91
1N5461	CODI	167 - 16
	EAS	
	GHZ	
	♦KSI	
	♦TCY	
1N5461A	△♦MOTA	167 - 17
	AMR	
	CODI	
	EAS	
	GHZ	
	KSI	
	MIC	
	MSI	
	♦TCY	
1N5461B	△♦MOTA	167 - 18
	CODI	
	EAS	
	GHZ	
	KSI	
	MSI	
	♦TCY	
JAN1N5461B	TCY	167 - 19
1N5461C	△♦MOTA	167 - 20
	CODI	
	EAS	
	GHZ	
	KSI	
	MSI	
	♦TCY	
JAN1N5461C	TCY	167 - 21
1N5461D	CODI	167 - 22
	GHZ	
	KSI	
	♦TCY	
1N5462	CODI	170 - 19
	EAS	
	GHZ	
	♦KSI	
	♦TCY	
1N5462A	△♦MOTA	170 - 20
	AMR	
	CODI	
	EAS	
	GHZ	
	KSI	
	MIC	
	MSI	
	♦TCY	
1N5462B	△♦MOTA	170 - 21
	CODI	
	EAS	
	GHZ	
	KSI	
	MSI	
	♦TCY	
	TIC	
JAN1N5462B	TCY	170 - 22
1N5462C	△♦MOTA	170 - 23
	CODI	
	EAS	
	GHZ	
	KSI	
	MSI	
	♦TCY	
JAN1N5462C	TCY	170 - 24
1N5462D	CODI	170 - 25
	GHZ	
	KSI	
	♦TCY	
1N5463	CODI	172 - 37
	EAS	
	GHZ	
	♦KSI	
	♦TCY	
1N5463A	△♦MOTA	172 - 38
	AMR	
	CODI	
	EAS	
	GHZ	
	KSI	
	MIC	
	MSI	
	♦TCY	
1N5463B	△♦MOTA	172 - 39
	CODI	
	EAS	
	GHZ	
	KSI	
	MSI	
	♦TCY	
JAN1N5463B	TCY	172 - 40
1N5463C	△♦MOTA	172 - 41
	CODI	
	EAS	
cont.next col.		
1N5463C		
(cont.)	GHZ	
	KSI	
	MSI	
	♦TCY	
JAN1N5463C	TCY	172 - 42
1N5463D	CODI	172 - 43
	GHZ	
	KSI	
	♦TCY	
1N5464	CODI	175 - 99
	EAS	
	GHZ	
	♦KSI	
	♦TCY	
1N5464A	△♦MOTA	175 -100
	AMR	
	CODI	
	EAS	
	GHZ	
	KSI	
	MIC	
	MSI	
	♦TCY	
	TIC	
1N5464B	△♦MOTA	175 -101
	CODI	
	EAS	
	GHZ	
	KSI	
	MSI	
	♦TCY	
JAN1N5464B	TCY	175 -102
1N5464C	△♦MOTA	175 -103
	CODI	
	EAS	
	GHZ	
	KSI	
	MSI	
	♦TCY	
JAN1N5464C	TCY	175 -104
1N5464D	CODI	175 -105
	GHZ	
	KSI	
	♦TCY	
1N5465	CODI	178 - 24
	EAS	
	GHZ	
	♦KSI	
	♦TCY	
1N5465A	△♦MOTA	178 - 25
	AMR	
	CODI	
	EAS	
	GHZ	
	KSI	
	MIC	
	MSI	
	♦TCY	
1N5465B	△♦MOTA	178 - 26
	CODI	
	EAS	
	GHZ	
	KSI	
	MSI	
	♦TCY	
JAN1N5465B	TCY	178 - 27
1N5465C	△♦MOTA	178 - 28
	CODI	
	EAS	
	GHZ	
	KSI	
	MSI	
	♦TCY	
JAN1N5465C	TCY	178 - 29
1N5465D	CODI	178 - 30
	GHZ	
	KSI	
	♦TCY	
1N5466	CODI	181 - 55
	EAS	
	GHZ	
	♦KSI	
	♦TCY	
1N5466A	△♦MOTA	181 - 56
	AMR	
	CODI	
	EAS	
	GHZ	
	KSI	
	MIC	
	MSI	
	♦TCY	
1N5466B	△♦MOTA	181 - 57
	CODI	
	EAS	
	GHZ	
	KSI	
	MSI	
	♦TCY	
JAN1N5466B	TCY	181 - 58
1N5466C	△♦MOTA	181 - 59
	CODI	
	EAS	
	GHZ	
	KSI	
	MSI	
	♦TCY	
JAN1N5466C	TCY	181 - 60
1N5466D	CODI	181 - 61
	GHZ	
	KSI	
	♦TCY	
1N5467	CODI	182 - 72
	EAS	
	GHZ	
	♦KSI	
	♦TCY	
1N5467A	△♦MOTA	182 - 73
	AMR	
	CODI	
	EAS	
	GHZ	
	KSI	
	MIC	
	MSI	
	♦TCY	
1N5467B	△♦MOTA	182 - 74
	CODI	
	EAS	
	GHZ	
	KSI	
	MSI	
	♦TCY	
JAN1N5467B	TCY	182 - 75
1N5467C	△♦MOTA	182 - 76
	CODI	
	EAS	
	GHZ	
	KSI	
	MSI	
	♦TCY	
JAN1N5467C	TCY	182 - 77
1N5467D	CODI	182 - 78
	GHZ	
	KSI	
	♦TCY	
1N5468	CODI	184 - 10
	EAS	
	GHZ	
	♦KSI	
	♦TCY	
1N5468A	△♦MOTA	184 - 11
	AMR	
	CODI	
	EAS	
	GHZ	
	KSI	
	MIC	
	MSI	
	♦TCY	
1N5468B	△♦MOTA	184 - 12
	CODI	
	EAS	
	GHZ	
	KSI	
	MSI	
	♦TCY	
JAN1N5468B	TCY	184 - 13
1N5468C	△♦MOTA	184 - 14
	CODI	
	EAS	
	GHZ	
	KSI	
	MSI	
	♦TCY	
JAN1N5468C	TCY	184 - 15
1N5468D	CODI	184 - 16
	GHZ	
	KSI	
	♦TCY	
1N5469	CODI	186 -102
	EAS	
	GHZ	
	♦KSI	
	♦TCY	
1N5469A	△♦MOTA	186 -103
	AMR	
	CODI	
	EAS	
	GHZ	
	KSI	
	MIC	
	MSI	
	♦TCY	
1N5469B	△♦MOTA	186 -104
	CODI	
	EAS	
	GHZ	
	KSI	
	MSI	
	♦TCY	
JAN1N5469B	TCY	186 -105
1N5469C	△♦MOTA	186 -106
	CODI	
	EAS	
	GHZ	
	KSI	
	MSI	
	♦TCY	
JAN1N5469C	TCY	186 -107
1N5469D	CODI	186 -108
	GHZ	
	KSI	
	♦TCY	
1N5470	CODI	189 - 22
	EAS	
	GHZ	
	♦KSI	
	♦TCY	
1N5470A	△♦MOTA	189 - 23
	AMR	
	CODI	
	EAS	
	GHZ	
	KSI	
	MIC	
	MSI	
	♦TCY	
1N5470B	△♦MOTA	189 - 24
	CODI	
	EAS	
	GHZ	
	KSI	
	MSI	
	♦TCY	
JAN1N5470B	TCY	189 - 25
1N5470C	△♦MOTA	189 - 26
	CODI	
	EAS	
	GHZ	
	KSI	
	MSI	
	♦TCY	
JAN1N5470C	TCY	189 - 27
1N5470D	CODI	189 - 28
	GHZ	
	KSI	
	♦TCY	
1N5471	CODI	191 - 79
	EAS	
	GHZ	
	♦KSI	
	♦TCY	
1N5471A	△♦MOTA	191 - 80
	AMR	
	CODI	
	EAS	
	GHZ	
	KSI	
	MIC	
	MSI	
	♦TCY	
1N5471B	△♦MOTA	191 - 81
	CODI	
	EAS	
	GHZ	
	KSI	
	MSI	
	♦TCY	
JAN1N5471B	TCY	191 - 82
1N5471C	△♦MOTA	191 - 83
	CODI	
	EAS	
	GHZ	
	KSI	
	MSI	
	♦TCY	
JAN1N5471C	TCY	191 - 84
1N5471D	CODI	191 - 85
	GHZ	
	KSI	
	♦TCY	
1N5472	CODI	193 - 41
	EAS	
	GHZ	
	♦KSI	
	♦TCY	
1N5472A	△♦MOTA	193 - 42
	AMR	
	CODI	
	EAS	
	GHZ	
	KSI	
	MIC	
	MSI	
	♦TCY	
1N5472B	△♦MOTA	193 - 43
	CODI	
	EAS	
	GHZ	
	KSI	
	MSI	
	♦TCY	
JAN1N5472B	TCY	193 - 44
1N5472C	△♦MOTA	193 - 45
	CODI	
	EAS	
	GHZ	
	KSI	
	MSI	
	♦TCY	
JAN1N5472C	TCY	193 - 46
1N5472D	CODI	193 - 47
	GHZ	
	KSI	
	♦TCY	
1N5473	CODI	195 - 81
	EAS	
	GHZ	
	♦KSI	
	♦TCY	
1N5473A	△♦MOTA	195 - 82
	AMR	
	CODI	
	EAS	
	GHZ	
	KSI	
	MIC	
	MSI	
	♦TCY	
1N5473B	△♦MOTA	195 - 83
	CODI	
	EAS	
	GHZ	
	KSI	
	MSI	
	♦TCY	
JAN1N5473B	TCY	195 - 84
1N5473C	△♦MOTA	195 - 85
	CODI	
	EAS	
	GHZ	
	KSI	
	MSI	
	♦TCY	
JAN1N5473C	TCY	195 - 86
1N5473D	CODI	195 - 87
	GHZ	
	KSI	
	♦TCY	
1N5474	CODI	196 -101
	EAS	
	GHZ	
	♦KSI	
	MIC	
	♦TCY	
1N5474A	△♦MOTA	196 -102
	AMR	
	CODI	
	EAS	
	GHZ	
	KSI	
	MSI	
	♦TCY	

△-Registered with JEDEC by this manufacturer

♦-Mfr's data sheet available in microfilm service

1. TYPE No. CROSS INDEX

IN TYPE NUMBER SEQUENCE

TYPE No.	MFRS	Pg&Line
1N5474B	Δ♦MOTA	196 -103
CODI	EAS	
GHZ	KSI	
MSI	♦TCY	
JAN1N5474B	TCY	196 -104
1N5474C	Δ♦MOTA	196 -105
CODI	EAS	
GHZ	KSI	
MSI	♦TCY	
JAN1N5474C	TCY	196 -106
1N5474D	CODI	196 -107
GHZ	KSI	
	♦TCY	
1N5475	CODI	198 - 13
EAS	GHZ	
♦KSI	MIC	
	♦TCY	
1N5475A	Δ♦MOTA	198 - 14
AMR	CODI	
EAS	GHZ	
KSI	MSI	
	♦TCY	
1N5475B	Δ♦MOTA	198 - 15
CODI	EAS	
GHZ	KSI	
MSI	♦TCY	
JAN1N5475B	TCY	198 - 16
1N5475C	Δ♦MOTA	198 - 17
CODI	EAS	
GHZ	KSI	
MSI	♦TCY	
JAN1N5475C	TCY	198 - 18
1N5475D	CODI	198 - 19
GHZ	KSI	
	♦TCY	
1N5476	CODI	198 -109
EAS	GHZ	
♦KSI	MIC	
	♦TCY	
1N5476A	Δ♦MOTA	198 -110
AMR	CODI	
EAS	GHZ	
KSI	MSI	
	♦TCY	
1N5476B	Δ♦MOTA	199 - 1
CODI	EAS	
GHZ	KSI	
MSI	♦TCY	
	TIC	
JAN1N5476B	TCY	199 - 2
1N5476C	Δ♦MOTA	199 - 3
CODI	EAS	
GHZ	KSI	
MSI	♦TCY	
JAN1N5476C	TCY	199 - 4
1N5476D	CODI	199 - 5
GHZ	KSI	
	♦TCY	
1N5681	CODI	167 - 23
♦KSI	MSI	
1N5681A	CODI	167 - 24
KSI	♦MSI	
1N5681B	CODI	167 - 25
KSI	♦MSI	
1N5682	CODI	170 - 26
♦KSI	♦MSI	
1N5682A	♦CODI	170 - 27
KSI	♦MSI	
1N5682B	CODI	170 - 28
KSI	♦MSI	
1N5683	CODI	172 - 44
♦KSI	MSI	
1N5683A	CODI	172 - 45
KSI	♦MSI	
1N5683B	CODI	172 - 46
KSI	♦MSI	
1N5684	CODI	175 -106
♦KSI	♦MSI	
1N5684A	CODI	175 -107
KSI	♦MSI	
1N5684B	CODI	175 -108
♦KSI	MSI	
1N5685	CODI	178 - 31
♦KSI	MSI	
1N5685A	CODI	178 - 32
♦KSI	♦MSI	
1N5685B	CODI	178 - 33
♦KSI	MSI	
1N5686	CODI	181 - 62
♦KSI	MSI	
1N5686A	CODI	181 - 63
♦KSI	♦MSI	
1N5686B	CODI	181 - 64
♦KSI	MSI	
1N5687	CODI	184 - 17
♦KSI	MSI	
1N5687A	CODI	184 - 18
♦KSI	♦MSI	
1N5687B	CODI	184 - 19
♦KSI	MSI	
1N5688	CODI	186 -109
♦KSI	MSI	
1N5688A	CODI	186 -110
♦KSI	♦MSI	
1N5688B	CODI	187 - 1
♦KSI	MSI	
1N5689	CODI	189 - 29
♦KSI	MSI	
1N5689A	CODI	189 - 30
♦KSI	♦MSI	
1N5689B	ΔTRWS	189 - 31
CODI	♦KSI	
	MSI	
1N5690	CODI	191 - 86
♦KSI	MSI	
1N5690A	CODI	191 - 87
♦KSI	♦MSI	
1N5690B	CODI	191 - 88
♦KSI	MSI	
1N5691	CODI	193 - 48
♦KSI	MSI	
1N5691A	CODI	193 - 49
♦KSI	♦MSI	
1N5691B	CODI	193 - 50
♦KSI	MSI	
1N5692	CODI	195 - 88
♦KSI	MSI	
1N5692A	CODI	195 - 89
♦KSI	♦MSI	
1N5692B	CODI	195 - 90
♦KSI	MSI	
1N5693	CODI	196 -108
♦KSI	MSI	
1N5693A	CODI	196 -109
♦KSI	♦MSI	
1N5693B	CODI	196 -110
♦KSI	MSI	
1N5694	CODI	198 - 20
♦KSI	MSI	
1N5694A	CODI	198 - 21
♦KSI	♦MSI	
1N5694B	CODI	198 - 22
♦KSI	MSI	
1N5695	CODI	199 - 6
♦KSI	♦MSI	
1N5695A	CODI	199 - 7
♦KSI	♦MSI	
1N5695B	CODI	199 - 8
♦KSI	MSI	
1N5696	CODI	167 - 26
♦KSI	MSI	
1N5696A	CODI	167 - 27
♦KSI	♦MSI	
1N5696B	CODI	167 - 28
♦KSI	MSI	
1N5697	CODI	170 - 29
♦KSI	MSI	
1N5697A	CODI	170 - 30
♦KSI	♦MSI	
1N5697B	CODI	170 - 31
♦KSI	MSI	
1N5698	CODI	172 - 47
♦KSI	MSI	
1N5698A	CODI	172 - 48
♦KSI	♦MSI	
1N5698B	CODI	172 - 49
♦KSI	MSI	
1N5699	CODI	175 -109
♦KSI	MSI	
1N5699A	CODI	175 -110
♦KSI	♦MSI	
1N5699B	CODI	176 - 1
♦KSI	MSI	
1N5700	CODI	178 - 34
♦KSI	MSI	
1N5700A	CODI	178 - 35
♦KSI	♦MSI	
1N5700B	CODI	178 - 36
♦KSI	MSI	
1N5701	CODI	181 - 65
♦KSI	MSI	
1N5701A	CODI	181 - 66
♦KSI	♦MSI	
1N5701B	CODI	181 - 67
♦KSI	MSI	
1N5702	CODI	184 - 20
♦KSI	MSI	
1N5702A	CODI	184 - 21
♦KSI	♦MSI	
1N5702B	CODI	184 - 22
♦KSI	MSI	
1N5703	CODI	187 - 2
♦KSI	MSI	
1N5703A	CODI	187 - 3
♦KSI	♦MSI	
1N5703B	CODI	187 - 4
♦KSI	MSI	
1N5704	CODI	189 - 32
♦KSI	MSI	
1N5704A	CODI	189 - 33
♦KSI	♦MSI	
1N5704B	CODI	189 - 34
♦KSI	MSI	
1N5705	CODI	191 - 89
♦KSI	MSI	
1N5705A	CODI	191 - 90
♦KSI	♦MSI	
1N5705B	CODI	191 - 91
♦KSI	MSI	
1N5706	CODI	193 - 51
♦KSI	MSI	
1N5706A	CODI	193 - 52
♦KSI	♦MSI	
1N5706B	CODI	193 - 53
♦KSI	MSI	
1N5707	CODI	195 - 91
♦KSI	MSI	
1N5707A	CODI	195 - 92
♦KSI	♦MSI	
1N5707B	CODI	195 - 93
♦KSI	MSI	
1N5708	CODI	197 - 1
♦KSI	MSI	
1N5708A	CODI	197 - 2
♦KSI	♦MSI	
	TIC	
1N5708B	CODI	197 - 3
♦KSI	MSI	
1N5709	CODI	198 - 23
♦KSI	MSI	
1N5709A	CODI	198 - 24
♦KSI	♦MSI	
1N5709B	CODI	198 - 25
♦KSI	MSI	
1N5710	CODI	199 - 9
♦KSI	MSI	
1N5710A	CODI	199 - 10
♦KSI	♦MSI	
1N5710B	CODI	199 - 11
♦KSI	MSI	
1N5711	♦HPA	213 - 1
MIC	♦TRWM	
JAN1N5711	♦HPA	213 - 2
	♦TRWM	
1N5712	♦HPA	213 - 3
MIC	♦TRWM	
JAN1N5712	♦HPA	213 - 4
	♦TRWM	
1N5713	MIC	213 - 5
	TRWM	
1N5714	Δ♦TCY	200 - 56
1N5715	Δ♦TCY	201 - 77
1N5716	Δ♦TCY	202 - 84
1N5717	Δ♦TCY	202 - 85
1N5718	Δ♦TCY	203 - 31
1N5719	♦HPA	213 - 6
	♦TRWM	
JAN1N5719	♦HPA	213 - 7
	♦TRWM	
1N5764	ΔMIC	123 - 34
JAN1N5764,M,MR		122 - 96
	none	
1N5767	♦GHZ	213 - 8
♦HPA	TRWM	
	♦UNI	
1N5906	ΔMIC	123 - 35
1N5957	Δ♦UNI	213 - 9
1N6263	HPA	213 - 10
	THEF	
1P.5-1	♦MIT	77 - 50
1P.5-1R	MIT	77 - 51
1P.5-1S	MIT	77 - 52
1P.25-.5	MIT	77 - 30
1P.25-.5S	MIT	77 - 31
1P.375-.75	MIT	77 - 39
1P.375-.75S	MIT	77 - 40
1S360	NECJ	164 - 46
1S361	NECJ	159 -103
1S362,3	NECJ	153 - 67
1S553T	TSAJ	177 - 84
1S554T	TSAJ	182 - 59
1S1198A	NECJ	207 - 78
1S1199A	NECJ	207 - 76
1S1200A	NECJ	207 - 70
1S1617	NECJ	196 - 58
1S1618	NECJ	196 - 59
1S1619	NECJ	196 - 42
1S1658	CEI	188 - 99
1S1676	♦NECJ	207 - 10
1S1677	♦NECJ	207 - 9
1S1760	♦NECJ	208 - 34
1S1761	♦NECJ	208 - 36
1S1762	♦NECJ	208 -107
1S1763	♦NECJ	208 -108
1S1764	♦NECJ	210 - 63
1S1765	♦NECJ	197 -103
1S2085	NECJ	175 - 67
1S2086	NECJ	175 - 68
1S2087	NECJ	175 - 69
1S2088	NECJ	175 - 70
1S2090	♦HITJ	162 - 96
1S2094	TOSJ	168 - 92
1S2199	NECJ	209 - 19
1S2200	NECJ	209 - 49
1S2201	NECJ	210 -100
1S2207	NECE	177 - 81
1S2208B	♦NECE	175 - 71
1S2209B	♦NECE	174 - 95
1S2222	♦NECE	147 - 10
1S2267	♦HITJ	162 -107
1S2268	♦HITJ	162 -108
1S2339	NJRC	162 -109
1SS29	NECJ	146 -107
1SS70	CEI	243 - 51
1SS85	♦HITJ	213 - 11
1SS103	NECE	152 - 70
1SS154	TOSJ	112 - 1
1SS239	♦TOSJ	112 - 2
1SS242	♦TOSJ	112 - 3
1ST11	♦NECJ	230 - 45
1ST12	♦NECJ	230 - 46
1ST13	♦NECJ	230 - 47
1ST14	♦NECJ	230 - 48
1ST15	♦NECJ	230 - 49
1ST16	♦NECJ	230 - 50
1ST17	♦NECJ	230 - 51
1ST18	♦NECJ	230 - 52
1ST20	♦NECJ	230 - 53
1ST21	NECJ	230 - 54
1ST22	♦NECJ	230 - 55
1SV25/S3015A	TOSJ	238 - 37
1SV26	♦NECJ	213 - 12
1SV27	♦NECJ	213 - 13
1SV28	♦NECJ	213 - 14
1SV34	♦NECJ	213 - 15
1SV35	♦NECJ	213 - 16
1SV36	♦NECJ	213 - 17
1SV37	♦NECJ	213 - 18
1SV46	♦NECJ	213 - 19
1SV47	♦NECJ	213 - 20
1SV48	♦NECJ	213 - 21
1SV50	NECE	188 - 35
1SV65	♦NECJ	213 - 22
1SV66	♦NECJ	213 - 23
1SV70	♦HITJ	154 - 39
1SV75	TOSJ	188 - 36
1SV80	♦NECE	140 - 6
1SV88	♦NECE	186 - 25
1SV89	♦HITJ	165 - 71
1SV100	TOSJ	202 - 55
1SV101	TOSJ	188 - 65
1SV102	♦TOSJ	202 - 45
1SV103	♦TOSJ	192 -108
1SV117	NECE	202 - 98
1SV118	NECE	202 - 64
1SV123	♦TOSJ	177 - 39
1SV147	♦TOSJ	188 - 98
1SV149	♦TOSJ	202 - 53
1SV153	♦TOSJ	178 - 3
1SV160	TOSJ	168 - 93
1SV161	TOSJ	188 - 34
1SV162	TOSJ	188 - 66
1T25	SONY	177 -107
1T32	SONY	155 - 87
1T33	SONY	157 - 80
1T1101	♦SONY	207 - 71
1T1102	♦SONY	207 - 72
1T1103	♦SONY	207 - 73
1T1104	♦SONY	208 -109
1T1110	♦SONY	207 - 80
1T1401	♦SONY	212 - 36
1T1402	♦SONY	212 - 37
1W20	NECJ	89 - 76
1W20A	NECJ	89 - 70
1W50	TOSJ	89 - 63
1W80	TOSJ	89 - 64
2AV30	TOSJ	76 - 12
2AV41	NECJ	76 - 3
2BAS22	MULB	116 -100
2BAS23	MULB	116 -101
2BAS24	MULB	116 -102
2BAS25	MULB	116 -103
2C4-6S	♦MIT	80 - 89
2C6-7S	MIT	81 - 51
2J30	RTN	79 - 61
JAN2J30	none	79 - 60
2J31	RTN	79 - 48
JAN2J31	none	79 - 47
2J32	RTN	79 - 22
JAN2J32	none	79 - 21
2J33	RTN	79 - 7
JAN2J33	none	79 - 6
2J34	RTN	78 -109
JAN2J34	none	78 -108
2J42	LIT	83 - 33
MIC	NJRC	
RTN	TOSJ	
JAN2J42	LIT	83 - 53
2J42A	♦NJRC	83 - 73
2J42A-6027	NJRC	83 - 74
2J42H	LIT	83 - 32
MIC	♦NJRC	
RTN		
JAN2J42H	LIT	83 - 31
JAN2J49	none	82 - 40
2J50	♦RTN	81 -100
JAN2J50	none	81 -101
2J51	♦NJRC	82 - 13
	THC	
2J51A	♦NJRC	82 - 8
	RTN	
JAN2J51A	none	82 - 15
2J53	RTN	83 - 95
2J55	♦NJRC	83 - 96
RTN	THC	
	TOSJ	
JAN2J55	none	83 - 97
2J70A	♦NJRC	80 - 6
	RTN	
2J70B	♦NJRC	80 - 8
	RTN	
2K22	♦RTN	66 - 35
JAN2K22	none	66 - 34
2K25	♦ALGG	68 - 53
APX	♦NJRC	
♦RTN	TOSJ	
JAN2K25	none	63 - 51
2K25A	THC	68 - 43
2K26	NECJ	66 - 96
	♦RTN	
2K28	RTN	66 - 4
	THC	
JAN2K28	none	66 - 12
2K28A	♦RTN	65 -109
2K29	♦RTN	66 - 13
JAN2K41	none	63 - 5
2K45	♦RTN	68 - 48
JAN2K45	none	63 - 49
JAN2K48	BTC	67 - 60
2K56	♦RTN	66 - 23
2L1-2	♦MIT	78 - 37
2L1-2S	MIT	78 - 38
2L02	♦CTR	312 - 10
2L08	♦CTR	319 - 22
2L15A	♦CTR	319 - 23
2L15B	♦CTR	319 - 24
2L15C	♦CTR	319 - 25
2LS1.5-3	♦MIT	78 - 58
2LS1.5-3S	MIT	78 - 59
2M13	♦NJRC	86 - 87
2M53	APX	86 - 53
2M53A	HITJ	86 - 54
	TOSJ	
2M53G	TOSJ	86 - 70
2M60A	TOSJ	78 - 96
2M66	APX	78 - 75
2M68	TOSJ	78 -100
2M107A	HITJ	78 -104
2M120	♦HITJ	86 - 72
2M125	TOSJ	78 -101
2M125H	TOSJ	86 - 64
2M125J	TOSJ	86 - 65
2M130	♦HITJ	86 - 74
2M131	♦HITJ	86 - 73
2M132A	TOSJ	86 - 71
2M140	TOSJ	86 - 66
2M140A	HITJ	78 -103
	TOSJ	
2M142	TOSJ	86 - 45
2M142G	TOSJ	86 - 46
2M142H	TOSJ	86 - 47
2M142J	TOSJ	86 - 48
2M156	♦HITJ	78 -102
2M158	TOSJ	86 - 67
2M158H	TOSJ	86 - 68
2M158J	TOSJ	86 - 69
2M162	TOSJ	86 - 49
2M162G	TOSJ	86 - 50
2M162H	TOSJ	86 - 51
2M162J	TOSJ	86 - 52
2M164	TOSJ	86 - 60
2M172	TOSJ	86 - 55
2M172G	TOSJ	86 - 56
2M172H	TOSJ	86 - 57
2M172J	TOSJ	86 - 58
2M182	TOSJ	86 - 59
2N708	AMR	302 - 63
ASI	CEI	
CEN	CRI	
CSR	ESE	
ETC	FERB	
FSC	GTC	
HTN	IDI	
NASG	NJS	
NSC	PHIN	
RTN	SCA	
SES	SGSI	
SPE	SST	
STR	SWT	
THEF	TIIF	
UPI	WAB	
2N834A	AMR	305 - 66
CEN	CSR	
FSC	GTC	
HTN	NASG	
RTN	SCA	
SES	SPE	
	SST	
2N914	AMR	302 - 67
ASI	CEI	
CEN	CRI	
CSR	ETC	
GTC	HSE	
HTN	IDC	
IDI	NASG	
NJS	PHIN	
SEI	SES	
♦SGSI	SPE	
SST	STI	
STR	SWT	
THEF	TIIF	
UPI	WAB	
2N918	♦ALGG	306 - 98
AMR	ASI	
BELI	CEI	
CEN	CRI	
CSR	ETC	
♦FERB	GTC	
HTN	IDI	
NASG	NJS	
NSC	♦PHIN	
RTN	SCA	
SEI	SES	
♦SGSI	SPE	
SST	STR	
SWT	THEF	
♦TIC	♦TII	
♦TIID	TIIF	
UPI	WAB	
2N1141A	AMR	305 - 63
HTN	IDI	
	SPE	
2N1142A	AMR	303 - 29
HTN	IDI	
NJS	SPE	
	SST	
2N1195	AMR	308 - 5
ASI	CRI	
HTN	NJS	
SPE	TIC	
	WAB	
2N2415	AMR	311 - 60
CRI	ESE	
HTN	NJS	
SST	STI	
	TIID	
2N2416	AMR	311 - 61
CRI	HTN	
NJS	SPE	
SST	STI	
	TIID	
2N2857	AMR	311 - 55
APX	ASI	
CEI	CRI	
GTC	HSE	
HTN	IDI	

cont.next page

Δ-Registered with JEDEC by this manufacturer

♦-Mfr's data sheet available in microfilm service

1. TYPE No. CROSS INDEX

IN TYPE NUMBER SEQUENCE

TYPE No.	MFRS	Pg&Line
2N2857		
(cont.)	♦MOTA	
	NJS	SCA
	SES	♦SGSI
	SPE	STI
	SWT	TIC
2N2996	AMR	306 - 9
	CRI	GTC
	HTN	NJS
	SPE	SST
	STI	TIID
2N2997	AMR	303 - 5
	CRI	GTC
	HTN	NJS
	SPE	SST
	STI	TIID
2N2998	AMR	307 - 60
	GTC	HTN
	SPE	SST
2N2999	AMR	308 - 89
	CEN	CRI
	CSR	GTC
	HTN	SPE
		SST
2N3014	AMR	306 - 18
	CEN	CRI
	CSR	GTC
	HTN	MOTA
	NJS	SCA
	SES	SGSI
	SPE	SST
	SWT	TIIF
		UPI
2N3251	AMR	247 - 34
	ASI	CEI
	CEN	CRI
	CSR	DIT
	ESE	FSC
	GTC	HTN
	IDI	MOTA
	NASG	NJS
	NSC	RHM
	RTN	SES
	SGSI	SPE
	SST	STI
	SWT	TII
	TIID	TIIF
	UPI	WAB
2N3371	AMR	303 - 6
	CRI	HSE
	HTN	IDI
	SPE	SST
		TIID
2N3375	APX	305 - 71
	BELI	CSR
	DIT	FERB
	HTN	♦MOTA
	♦MULB	NJS
	♦PHIN	PPC
	SEI	SES
	SPE	SST
	TIC	UPI
	UTS	VALG
2N3570	AMR	310 - 91
	CEI	GTC
	HSE	HTN
	♦MIC	NASG
	PHIN	SCA
	SPE	STI
	THEF	♦TII
	♦TIID	UPI
2N3571	AMR	309 - 43
	CEI	CRI
	GTC	HSE
	HTN	MIC
	NASG	PHIN
	SCA	SPE
	SST	STI
	STI	THEF
	♦TII	♦TIID
		UPI
2N3866	AMR	306 -101
	APX	ASI
	BELI	CEN
	CRI	CSR
	DIT	ESE
	♦FERB	GTC
	HTN	HVS
	IDC	IDI
	♦MOTA	♦MULB
	NASG	NJS
	♦PHIN	♦RTCF
	RTN	SCA
	SEI	SES
	♦SGSI	SPE
	SST	STI
	THEF	TIC
	UPI	♦VALG
		WAB
2N4034	CEN	303 - 30
	CRI	CSR
	ESE	GTC
	HSE	HTN
cont.next col.		

TYPE No.	MFRS	Pg&Line
2N4034		
(cont.)		
	IDC	
	IDI	NJS
	SCA	SES
	SGSI	SPE
	SST	STI
	STR	SWT
		WAB
2N4257	CEN	305 - 60
	CRI	CSR
	HTN	IDI
	NASG	SPE
	SST	STI
JAN2N6603	none	311 - 82
2N4313	ASI	306 - 54
	CEN	CRI
	CSR	HTN
	IDI	NASG
	SPE	STI
2N4428	CRI	306 - 77
	CSR	DIT
	GTC	HTN
	IDI	♦MOTA
	NASG	SCA
	SES	♦SGSI
	SPE	THEF
	TIC	TIID
		UPI
2N4429	CRI	306 - 57
	DIT	HTN
	SES	SPE
	THEF	TIC
	♦TRWS	UPI
2N4430	CRI	306 - 44
	DIT	HTN
	NJS	SES
	SPE	THEF
	TIC	UPI
2N4431	CRI	306 - 45
	DIT	HTN
	IDI	SES
	SPE	THEF
	TIC	UPI
2N4957	ASI	310 - 92
	CEI	DIT
	GTC	HTN
	IDI	♦MOTA
	SCA	SPE
	STI	TIC
2N4958	ASI	310 - 93
	CEI	DIT
	GTC	HTN
	IDI	SCA
	SPE	STI
2N4959	ASI	311 - 1
	CEI	DIT
	GTC	HTN
	♦NECJ	SST
	IDI	SCA
	SPE	STI
2N5031	GTC	311 - 67
2N5032	GTC	311 - 68
2N5043	CEI	314 - 32
	CRI	DIT
	GTC	HTN
	IDC	SPE
		TIID
2N5044	CEI	313 - 79
	CRI	GTC
	HTN	SPE
	TIC	WAB
2N5829	GTC	311 - 2
	HTN	SPE
2N5915	CRI	304 - 62
	HTN	NJS
		SPE
2N5943	GTC	308 - 40
	HTN	SPE
2N5944	CRI	308 - 45
	HTN	MOTA
	SPE	THEF
2N5945	CRI	308 - 62
	ESE	HTN
	MOTA	SPE
		THEF
2N5946	CRI	308 - 71
	ESE	HTN
	MOTA	SPE
		THEF
2N6304	GTC	307 -101
	HTN	
2N6305	GTC	308 - 1
	HTN	
2N6439	♦CTR	303 - 72
	HTN	♦MOTA
		SPE
2N6595	ΔAPX	305 - 45
	CRI	HSE
	HTN	SPE
2N6596	ΔAPX	305 - 46
	CRI	HSE
	HTN	SPE
2N6597	ΔAPX	305 - 47
	CRI	HSE
	HTN	SPE

TYPE No.	MFRS	Pg&Line
2N6598	ΔAPX	305 - 48
	HTN	SPE
2N6599	ΔAPX	305 - 56
	HSE	HTN
		SPE
2N6600	ΔAPX	305 - 57
	HTN	SPE
2N6602	ΔAPX	311 - 92
	HTN	SPE
2N6603	Δ ♦MOTA	308 - 19
	CRI	HTN
		SPE
JAN2N6603	none	311 - 82
2N6604	Δ ♦MOTA	308 - 23
	HTN	SPE
JAN2N6604	none	311 - 86
2N6617	Δ ♦HPA	316 - 1
	CRI	HTN
2N6618	Δ ♦HPA	311 - 62
		MIC
2N6619	Δ ♦SIEG	306 - 92
2N6620	Δ ♦SIEG	306 - 93
2N6621	ΔSIEG	306 - 94
2N6665	ΔMIC	305 - 59
		HTN
2N6679	♦HPA	316 - 44
		HTN
2N6701	♦HPA	213 - 24
2N6838	HPA	319 - 53
2N6839	HPA	318 - 67
2NJ770A	FCAJ	306 - 82
2NJ771A	FCAJ	306 - 83
2PL.75-1.5	♦MIT	77 - 75
2PL.75-1.5S	MIT	77 - 76
2P.5-1	MIT	77 - 53
2P.5-1S	MIT	77 - 54
2S2-4	♦MIT	79 - 92
2S2-4S	MIT	79 - 93
2SA983	♦NECJ	308 - 2
2SA1005	♦NECJ	303 - 15
2SA1153	NECJ	303 - 28
2SA1161	♦TOSJ	315 - 20
2SA1223	♦NECJ	308 - 9
2SA1245	TOSJ	300 - 15
2SC287A-B	♦NECJ	308 - 88
2SC288A1	♦NECJ	308 - 90
2SC288A1B	♦NECJ	308 - 95
2SC288A5-B	♦NECJ	310 - 54
2SC288A	♦NECJ	308 - 91
2SC387AGTM	♦TOSJ	308 - 10
2SC800	♦NECJ	307 - 96
2SC817	WAB	306 - 11
2SC823	♦NECJ	311 - 15
2SC824	♦NECJ	310 - 66
2SC890	HSE	305 - 68
2SC891	♦NECJ	305 - 70
2SC892	♦NECJ	305 - 74
2SC922	WAB	303 - 16
2SC987A	♦NECJ	317 - 32
2SC988	♦NECJ	314 - 34
2SC988A	♦NECJ	314 - 35
2SC988B	♦NECJ	314 - 36
2SC1001	HSE	304 - 47
	♦TOSJ	
2SC1038	♦NECJ	313 - 23
2SC1039	♦NECJ	313 - 33
2SC1040	♦NECJ	305 - 72
2SC1043	♦NECJ	312 - 96
2SC1044	♦NECJ	308 - 26
2SC1070	♦NECJ	307 - 61
2SC1070-1	♦NECJ	308 - 3
2SC1070-2	♦NECJ	308 - 4
2SC1070-B	♦NECJ	307 - 58
2SC1082	FCAJ	306 - 58
2SC1083	FCAJ	311 - 31
2SC1118	♦NECJ	305 - 76
2SC1119	♦NECJ	317 - 33
2SC1165	HSE	304 - 48
	SST	♦TOSJ
2SC1254	♦NECJ	308 - 11
	SST	
2SC1268	♦NECJ	318 - 96
2SC1269	♦NECJ	318 - 97
2SC1270	♦NECJ	318 - 98
2SC1271	♦NECJ	318 - 99
2SC1271A	♦NECJ	318 -100
2SC1275	♦NECJ	311 - 71
2SC1333	♦NECJ	308 - 54
2SC1334	♦NECJ	308 - 58
2SC1336	♦NECJ	317 - 34
2SC1355	FCAJ	306 - 59
2SC1356	FCAJ	306 - 63
2SC1393	♦NECE	306 - 51
	♦NECJ	
2SC1395	♦NECE	308 - 99
	♦NECJ	
2SC1414	FCAJ	306 - 67
2SC1415	FCAJ	306 - 69
2SC1425	♦NECJ	308 - 59
2SC1426	♦NECJ	314 - 9
2SC1457	♦NECJ	314 - 6
2SC1458	NECJ	314 - 42
2SC1464	FCAJ	310 - 67
2SC1465	FCAJ	306 - 60
2SC1524	FCAJ	306 - 64
2SC1525	FCAJ	306 - 68
2SC1526	FCAJ	306 - 70
2SC1533	FCAJ	306 - 61
2SC1534	FCAJ	306 - 65
2SC1535	FCAJ	306 - 71
2SC1536	FCAJ	306 - 73
2SC1561	FCAJ	306 - 62
2SC1562	FCAJ	306 - 66

TYPE No.	MFRS	Pg&Line
2SC1563	FCAJ	306 - 72
2SC1564	FCAJ	306 - 74
2SC1594	♦NECJ	313 - 93
2SC1603	♦MITJ	305 - 42
2SC1604	♦MITJ	305 - 43
2SC1607	FCAJ	300 - 18
2SC1608	FCAJ	304 - 49
2SC1655	♦NECJ	320 - 4
2SC1655A	♦NECJ	320 - 5
2SC1657	♦NECJ	320 - 18
2SC1659	♦NECJ	319 - 55
2SC1673	♦NECJ	313 - 94
2SC1730	♦NECJ	308 -100
2SC1731	♦NECJ	314 - 43
2SC1732	♦NECJ	314 - 44
2SC1765	♦TOSJ	304 - 56
2SC1803	♦NECJ	314 - 7
2SC1812	SONY	307 - 68
2SC1820	FCAJ	301 - 27
2SC1821	FCAJ	304 - 53
2SC1822	FCAJ	304 - 64
2SC1823	FCAJ	304 - 73
2SC1824	FCAJ	305 - 13
2SC1907	♦HITJ	307 - 69
2SC1948-1	♦NECJ	320 - 6
2SC1948-2	♦NECJ	320 - 7
2SC1948-5	♦NECJ	320 - 8
2SC1949	♦NECJ	314 - 8
2SC1950	♦NECJ	318 - 46
2SC1952	♦NECJ	312 - 32
2SC2026	♦NECJ	311 - 72
2SC2031	FCAJ	304 - 57
2SC2032	FCAJ	304 - 67
2SC2033	FCAJ	305 - 3
2SC2037	♦NECJ	311 - 73
2SC2065	♦NECJ	315 - 5
2SC2066	NECJ	305 - 39
2SC2093	♦NECJ	318 - 47
2SC2104	♦TOSJ	304 - 58
2SC2105	♦TOSJ	304 - 68
2SC2106	♦TOSJ	305 - 4
2SC2142	♦SONY	317 - 26
2SC2143	♦SONY	317 - 31
2SC2144	♦SONY	309 - 47
2SC2148	♦NECJ	314 - 26
2SC2149	♦NECJ	317 - 8
2SC2150	♦NECJ	318 - 63
2SC2173	♦TOSJ	305 - 16
2SC2212	♦SONY	310 - 78
2SC2213	♦SONY	313 - 81
2SC2223	♦NECE	306 - 20
	♦NECJ	
2SC2273	♦NECJ	311 - 93
2SC2318	♦TOSJ	312 - 16
2SC2319	♦TOSJ	312 - 94
2SC2350	NECE	314 - 25
	♦NECJ	
2SC2351	NECE	317 - 35
	♦NECJ	
2SC2352	♦NECJ	307 - 11
2SC2353	♦NECJ	313 - 13
2SC2367	♦NECJ	320 - 20
2SC2368	♦NECJ	300 - 35
2SC2369	♦NECJ	300 - 36
2SC2379	♦TOSJ	304 - 69
2SC2380	♦TOSJ	305 - 5
2SC2381	♦TOSJ	305 - 17
2SC2391	♦TOSJ	304 - 59
2SC2408	♦NECJ	315 - 39
2SC2465	♦HITJ	303 - 8
2SC2466	♦HITJ	311 - 3
2SC2467	♦HITJ	306 - 26
2SC2468	♦HITJ	307 - 64
2SC2469	♦HITJ	306 - 27
2SC2470	♦HITJ	311 - 4
2SC2471	♦HITJ	308 - 14
2SC2490	♦FCAJ	306 - 84
2SC2498	♦TOSJ	314 - 45
2SC2499	♦TOSJ	316 - 21
2SC2512	♦HITJ	306 - 40
2SC2548	♦TOSJ	316 - 14
2SC2549	♦SONY	317 - 36
2SC2570	♦NECJ	318 - 9
2SC2570A	♦NECJ	318 - 32
2SC2641	TOSJ	310 - 70
2SC2642	♦TOSJ	305 - 6
2SC2643	♦TOSJ	305 - 18
2SC2644	TOSJ	316 - 38
2SC2701	FCAJ	313 - 21
2SC2702	FCAJ	313 - 24
2SC2718	♦NECJ	303 - 99
2SC2727	♦HITJ	306 - 50
2SC2728	♦HITJ	311 - 5
2SC2729	♦HITJ	306 - 95
2SC2730	♦HITJ	309 - 44
2SC2731	♦HITJ	311 - 69
2SC2732	♦HITJ	306 - 49
2SC2733	♦HITJ	306 - 21
2SC2734	♦HITJ	310 - 74
2SC2735	♦HITJ	306 - 22
2SC2736	♦HITJ	310 - 75
2SC2737	♦NECJ	320 - 22
2SC2753	♦TOSJ	308 - 12
2SC2754	♦TOSJ	302 - 52
2SC2755	♦NECJ	306 - 23
2SC2756	♦NECJ	307 - 9
2SC2757	♦NECE	308 - 96
2SC2758	♦NECJ	307 - 97
2SC2781	FCAJ	313 - 25
2SC2783	TOSJ	305 - 33
2SC2805	♦TOSJ	308 - 97
2SC2806	♦TOSJ	306 - 28
2SC2869	♦NECJ	320 - 19
2SC2876	♦TOSJ	319 - 47

TYPE No.	MFRS	Pg&Line
2SC2901	♦NECJ	306 - 76
2SC2969	FCAJ	305 - 7
2SC3006	♦TOSJ	304 - 63
2SC3011	♦TOSJ	319 - 36
2SC3015	♦HITJ	306 - 89
2SC3016	♦HITJ	308 - 92
2SC3037	♦SONY	318 - 19
2SC3098	♦TOSJ	307 - 98
2SC3099	♦TOSJ	307 - 99
2SC3102	♦MITJ	306 - 6
2SC3103	♦MITJ	306 - 3
2SC3104	♦MITJ	306 - 5
2SC3119	♦TOSJ	306 - 24
2SC3120	♦TOSJ	310 - 88
2SC3121	♦TOSJ	308 - 93
2SC3126	♦HITJ	315 - 21
2SC3127	♦HITJ	315 - 19
2SC3128	♦HITJ	315 - 30
2SC3137	♦TOSJ	311 - 6
2SC3268	♦TOSJ	318 - 36
2SC3301	♦TOSJ	319 - 60
2SC3302	♦TOSJ	317 - 90
2SC3379	♦MITJ	306 - 4
2SC3429	♦TOSJ	317 - 69
2SC3445	♦TOSJ	319 - 45
2SC3510	♦HITJ	315 - 40
2SC3547	TOSJ	300 - 16
2SC3548	TOSJ	300 - 19
2SC3605	TOSJ	300 - 54
2SC3606	TOSJ	300 - 17
2SC3607	TOSJ	300 - 71
2SC3608	TOSJ	300 - 20
2SK125	♦SONY	305 - 61
2SK138	♦NECJ	300 - 40
2SK140	♦NECJ	300 - 41
2.3L15	CTR	313 - 35
2.3L30	CTR	313 - 44
2.3L60	CTR	313 - 51
3AV85	TOSJ	77 - 9
3K3000LQ	EEVB	73 - 27
3K210000LQ	VAR	73 - 28
3KM3LB	VAR	73 - 24
3KM300LA	♦VAR	73 - 23
3KM3000LA	VAR	73 - 25
3KM50000PA2	VAR	73 - 22
3L1.4-1.6	MIT	78 - 39
3L1.8-2.1	MIT	78 - 53
3M90	♦NJRC	79 - 89
3M95	TOSJ	79 - 35
3S2.8-3.1	MIT	79 - 72
3SK48	♦SONY	306 - 81
3SK53	♦HITJ	306 - 99
3SK70	♦HITJ	307 - 70
3SK76	♦SONY	306 - 97
3SK80	HITJ	307 - 65
3SK113	♦HITJ	300 - 1
4J31	EEVB	79 - 63
	RTN	
4J32	EEVB	79 - 50
	RTN	
4J33	EEVB	79 - 26
	RTN	
4J34	EEVB	79 - 10
	RTN	
4J35	EEVB	79 - 1
	RTN	
4J36	RTN	80 - 79
4J37	RTN	80 - 76
JAN4J38	none	80 - 75
4J43	EEVB	80 - 1
4J44	EEVB	79 - 79
4J50	LIT	84 - 5
4J50A	♦EEVB	84 - 2
	THC	
4J50TO	THC	82 - 23
4J50TR	THC	82 - 24
4J52A	EEVB	83 -104
	LIT	
JAN4J52A	LIT	83 -105
4J53	EEVB	79 - 36
4J57	RTN	81 - 58
JAN4J57	none	81 - 59
4J58	RTN	81 - 49
JAN4J58	none	81 - 50
4J59	RTN	81 - 47
JAN4J59	none	81 - 48
4K3CB	♦VAR	74 - 83
4K3CC	VAR	74 - 85
4K3SJ	♦VAR	74 - 46
4K3SK	♦VAR	74 - 62
4K3SL3	VAR	74 - 47
4K3SN	VAR	74 - 76
4K5SL1	♦VAR	74 - 52
4K5SL2	♦VAR	74 - 41
4K5SL3	VAR	74 - 53
4K200LW	VAR	74 - 32
4K200LX	♦VAR	74 - 34
4KM50LB	VAR	73 - 50
4KM50LC	VAR	73 - 49
4KM50SI	VAR	74 - 58
4KM50SJ	♦VAR	74 - 55
4KM50SK	VAR	74 - 65
4KM70LH2	VAR	74 - 19
4KM70LH	VAR	74 - 4
4KM70SJ	♦VAR	74 - 57
4KM70SK	VAR	74 - 66
4KM100LA	♦VAR	73 - 75
4KM100LF	VAR	73 - 97
4KM100LH	VAR	74 - 8
4KM150LA	VAR	73 - 70
4KM150LB	VAR	73 - 52
4KM150LF	VAR	73 - 98
4KM150LH1	VAR	74 - 20
4KM150LH	VAR	74 - 12

Δ-Registered with JEDEC by this manufacturer

♦-Mfr's data sheet available in microfilm service

1. TYPE No. CROSS INDEX

IN TYPE NUMBER SEQUENCE

TYPE No.	MFRS	Pg&Line
4KM3000LR	♦VAR	74 - 18
4KM50000LA3	VAR	73 - 56
4KM50000LA5	VAR	73 - 55
4KM50000LQ	VAR	74 - 22
4KM50000LR	VAR	74 - 28
4KMP300LU	VAR	73 - 41
4KMP10000LF	VAR	62 - 67
4KMV150LH1	VAR	74 - 2
4KP3SN	VAR	64 - 86
4V27	NECJ	66 - 21
4W70	NECJ	92 - 78
4W80	NECJ	93 - 39
4W81	NECJ	92 - 87
4W82	NECJ	92 - 98
5C4-5S	MIT	80 - 86
5C4.5-5.5S	MIT	80 - 90
5C5-6S	MIT	80 -108
5C5.4-5.9S	MIT	81 - 22
5C5.5-6.5S	MIT	81 - 44
5C6-7S	MIT	81 - 52
5J26	APX	77 - 96
♦NJRC	RTN	
	THC	
JAN5J26	APX	77 - 97
5K50SE	VAR	75 -108
5K50SG	♦VAR	76 - 9
5K70SG	♦VAR	76 - 4
5K70SG-WB	♦VAR	76 - 5
5K70SH1	♦VAR	76 - 11
5K300SK	VAR	76 - 14
5KM50SJ	VAR	76 - 1
5KM70SI	VAR	76 - 6
5KM70SJ	VAR	76 - 2
5KM300SI	VAR	76 - 8
5KM1000SG	♦VAR	76 - 10
5L1-2	MIT	78 - 40
5L1-2S	MIT	78 - 41
5M20	♦NJRC	80 - 99
5M80	NJRC	87 - 8
5M80/E3517	TOSJ	87 - 7
5M81	TOSJ	87 - 6
5PL.6-1.2	MIT	77 - 62
5PL.6-1.2S	MIT	77 - 63
5P.4-.8	MIT	77 - 41
5P.4-.8S	MIT	77 - 42
5P.35-.5	MIT	77 - 32
5P.35-.5S	MIT	77 - 33
5S2.7-2.85	MIT	79 - 11
5S3.4-3.7	MIT	80 - 74
5W70	♦NECJ	93 - 62
5W71	NECJ	93 - 61
5X10	TOSJ	107 - 66
6BL6	♦RTN	66 - 20
	THC	
JAN6BL6	LIT	66 - 9
6BM6	RTN	65 - 99
	THC	
JAN6BM6	LIT	65 -101
6BM6A	RTN	65 -106
JAN6BM6A	LIT	65 -102
6M70	TOSJ	80 -110
6M72	TOSJ	81 - 1
6V23	NECJ	66 - 70
6V200	NECJ	66 - 82
6V203	NECJ	66 - 92
6V211	NECJ	66 - 74
6V221	NECJ	66 - 73
6W52	NECJ	95 - 19
6W70	NECJ	95 - 34
6W73	♦NECJ	95 - 54
6W411	TOSJ	95 - 17
6W411V	TOSJ	95 - 18
7V204	NECJ	67 - 12
7V205	NECJ	67 - 31
7V224	NECJ	67 - 13
7V242	NECJ	67 - 23
7V254	NECJ	67 - 14
7V272	NECJ	67 - 19
7V273	NECJ	67 - 58
7V312	TOSJ	67 - 34
7W412	TOSJ	96 - 78
7W412V	TOSJ	96 - 79
8MOB15E	♦CTR	306 -104
8MOB25	♦CTR	306 -105
8V228	NECJ	67 - 78
8V257	NECJ	67 - 67
8V274	NECJ	67 - 86
8W413	TOSJ	97 - 20
8W413V	TOSJ	97 - 21
9BSE2	♦CTR	307 - 75
9BSE10	♦CTR	307 - 77
9BSE35	♦CTR	307 - 82
9BSE55	♦CTR	307 - 84
9M31	♦NJRC	84 - 61
	TOSJ	
9M40	♦NJRC	83 - 77
	TOSJ	
9M61	♦NJRC	84 - 38
	TOSJ	
9M62A	♦NJRC	83 - 49
	TOSJ	
9M64A	♦NJRC	84 - 28
	TOSJ	
9M65	TOSJ	84 - 83
9M65A	NJRC	84 - 85
9M66	TOSJ	84 - 88
9M72	♦NJRC	84 - 52
	TOSJ	
9M73	TOSJ	83 - 98
9M80	♦NJRC	84 - 29
	TOSJ	
9M80A	♦NJRC	84 - 36
	TOSJ	

TYPE No.	MFRS	Pg&Line
9M90	♦NJRC	84 - 48
	TOSJ	
9M301	TOSJ	86 - 80
9M302	♦NJRC	86 - 81
	TOSJ	
9M303	TOSJ	86 - 82
9M501	♦NJRC	83 - 50
	TOSJ	
9M502	NJRC	84 - 30
	TOSJ	
9M503	♦NJRC	84 - 84
	TOSJ	
9M601	♦NJRC	83 - 58
	TOSJ	
9M602	♦NJRC	84 - 39
	TOSJ	
9M603	♦NJRC	84 - 89
	TOSJ	
9M611	♦NJRC	83 - 59
9M612	♦NJRC	84 - 40
9M613	♦NJRC	84 - 90
9M751	TOSJ	83 - 88
9M752	TOSJ	84 - 53
9M753	TOSJ	84 - 91
9V54	NECJ	68 - 7
9V58	NECJ	68 - 87
9X64	TOSJ	108 - 90
10C4-5	MIT	80 - 87
10C4.5-5.5	MIT	80 - 91
10C5-6	MIT	80 -109
10C5.5-6.5	MIT	81 - 45
10C6-7	MIT	81 - 53
10C6.5-7.5	MIT	81 - 61
10L1-1.5	♦MIT	77 - 83
10L1-1.5S	MIT	77 - 84
10L1.5-2	♦MIT	78 - 42
10L1.5-2S	MIT	78 - 43
10P.5-.75	MIT	77 - 43
10P.5-.75S	MIT	77 - 44
10P.75-1	♦MIT	77 - 60
10P.75-1S	MIT	77 - 61
10S2-3	♦MIT	78 -105
10S2-3S	MIT	78 -106
10S2.5-3R	MIT	79 - 4
10S2.5-3.5	♦MIT	79 - 94
10S2.5-3.5S	MIT	79 - 95
10S3-4	♦MIT	80 - 69
10S3-4S	MIT	80 - 70
10S3.5R	MIT	80 - 63
10SC3.5-3.5S	MIT	80 - 80
10SC3.5-4.5	♦MIT	80 - 81
10SL101	FERS	110 - 23
10V13	NECJ	69 - 48
10X7-8	MIT	81 - 66
10X7.5-8.5	MIT	81 - 72
10X8-9	MIT	81 - 86
10X8.5-9.6	MIT	82 - 7
10X9-10	MIT	84 -108
11V53A	NECJ	69 - 75
11V54	NECJ	69 - 71
11V64	NECJ	69 - 77
11V651	NECJ	69 - 64
11V652	NECJ	69 - 88
11W71	NECJ	100 - 64
11W72	NECJ	100 - 53
12V66	NECJ	69 - 99
13M85	OKIJ	85 - 47
13V64	NECJ	70 - 10
13V66/LD932	NECJ	70 - 11
13V92	NECJ	70 - 35
15V66	NECJ	70 - 39
15W71	NECJ	102 - 98
16M10	NJRC	88 - 49
16M11	NJRC	88 - 76
16M12	NJRC	88 - 79
16SL107	♦FERS	110 - 84
16SL108	♦FERS	110 - 85
17V10	♦OKIJ	70 - 63
20V10	OKIJ	70 - 69
22V10	♦OKIJ	70 - 71
24V10A	♦OKIJ	70 - 80
24V11	♦OKIJ	70 - 81
25M10	NECJ	86 - 2
28V12	OKIJ	70 - 84
30V10	♦OKIJ	70 - 85
30V11	♦OKIJ	70 - 86
30V12	OKIJ	70 - 87
33M10	♦OKIJ	86 - 4
33V10	♦OKIJ	70 - 93
34V12	OKIJ	70 - 96
35M10	♦OKIJ	86 - 13
35V10	♦OKIJ	70 - 97
35V11	♦OKIJ	70 - 98
35V12	OKIJ	70 -101
36V12	OKIJ	70 -103
40V10	♦OKIJ	70 -106
40V12	OKIJ	70 -107
45V10	♦OKIJ	70 -110
45V12	OKIJ	71 - 1
47V10	♦OKIJ	71 - 2
47V11	♦OKIJ	71 - 3
47V12	OKIJ	71 - 4
50C6-7	MIT	81 - 54
50C6.5-7.5	MIT	81 - 62
50S2.5-3.5	MIT	79 - 96
50S3-4	MIT	80 - 71
50V10	♦OKIJ	71 - 6
50V11	OKIJ	71 - 7
50X7-8	MIT	81 - 67
50X7.5-8.5	MIT	81 - 75
50X8-9	MIT	81 - 87
50X8.5-9.5	MIT	82 - 1
50X9-10	MIT	84 -110
55V10	♦OKIJ	71 - 13

TYPE No.	MFRS	Pg&Line
55V11	♦OKIJ	71 - 14
60V10	♦OKIJ	71 - 22
60V12	OKIJ	71 - 23
70V10	♦OKIJ	71 - 37
70V10A	♦OKIJ	71 - 38
70V11A	OKIJ	71 - 41
80V10A	♦OKIJ	71 - 58
80V11	OKIJ	71 - 59
80X8-8.5	MIT	81 - 83
80X8.5-9	MIT	81 - 91
80X9-9.5	MIT	82 - 77
80X9.5-10	MIT	85 - 24
90V10A	♦OKIJ	71 - 71
90V11	OKIJ	71 - 72
90X9.5-10.5	MIT	85 - 28
100C3.8-4.4	MIT	80 - 82
100C4.4-5	MIT	80 - 88
100C4.8-5.4	MIT	80 - 95
100C5.4-5.9	MIT	81 - 23
100C5.9-6.4	MIT	81 - 46
100C6-7	MIT	81 - 56
100C6.2-6.8	MIT	81 - 55
100C6.8-7.4	MIT	81 - 63
100L1-1.2	MIT	77 - 74
100L1.05-1.25	MIT	77 - 77
100L1.05-2.5	MIT	77 - 78
100L1.25-1.5	MIT	78 - 34
100L1.5-1.8	MIT	78 - 47
100L1.6-2	MIT	78 - 51
100S2-2.6	MIT	78 - 60
100S2.5-3	MIT	79 - 5
100S2.6-3.2	MIT	79 - 66
100S3-3.5	MIT	80 - 64
100S3.2-3.8	MIT	80 - 72
100V10A	♦OKIJ	71 - 82
100V11	OKIJ	71 - 83
100X7-8	MIT	81 - 68
100X7.4-8.0	MIT	81 - 69
100X8-9	MIT	81 - 88
100X9-10	MIT	85 - 1
101LLS	♦FERS	110 - 6
101XLS	♦FERS	111 - 5
103LLS	♦FERS	110 - 7
0104-100	♦CTR	303 - 89
0105-12	♦CTR	305 - 75
0105-50	♦CTR	305 - 79
0105-100	♦CTR	305 - 84
105V10	OKIJ	71 - 89
106LLS	♦FERS	110 - 8
109LLS	♦FERS	110 - 10
109SLS	♦FERS	110 - 24
110LLS	FERS	110 - 11
120V10	♦OKIJ	71 -103
125V10	OKIJ	72 - 2
150C4.7-5.3	MIT	80 - 92
150C6.2-6.8	MIT	81 - 57
150S2-2.65	MIT	78 - 62
150X9-9.75	MIT	83 - 37
173H	♦HAC	64 -108
200C4.7-5.3	MIT	80 - 93
200S2-2.65	MIT	78 - 63
203B	VET	68 - 21
203J	VET	68 - 22
0204-125	♦CTR	303 - 90
214H	♦HAC	90 - 73
219H	♦HAC	98 - 39
230H	♦HAC	93 - 8
235H	HAC	93 - 38
240H	♦HAC	97 - 22
242H	HAC	90 - 68
244H	♦HAC	93 - 3
246H	♦HAC	93 - 20
249H	♦HAC	93 - 14
249HA	♦HAC	93 - 15
250H	HAC	103 - 85
251H	HAC	103 -102
254H	♦HAC	103 -101
263H	♦HAC	97 - 10
264H	HAC	102 - 91
265H	♦HAC	97 - 67
268H	♦HAC	103 - 83
271H	♦HAC	93 - 1
272H	♦HAC	92 -108
275H	♦HAC	93 - 5
276H	♦HAC	93 - 47
277H	♦HAC	92 -110
278H	♦HAC	90 - 61
279H	♦HAC	95 - 12
280H	♦HAC	100 - 90
283H	HAC	90 - 74
284H	HAC	101 - 47
285H	♦HAC	98 - 35
286H	HAC	100 - 91
286HM	HAC	103 - 9
286HP	HAC	101 - 18
287H	♦HAC	97 - 99
288H	♦HAC	102 - 97
288HC	HAC	103 - 77
289H	HAC	100 -101
291H#1	HAC	90 - 29
291H#2	HAC	90 - 30
291H#3	HAC	90 - 31
292H	HAC	103 - 78
293H	♦HAC	97 - 23
294H	♦HAC	101 - 46
295H	HAC	102 - 26
296H	♦HAC	92 -109
297H	HAC	90 - 89
298H	♦HAC	97 - 15
299H	HAC	93 - 6
307H	♦HAC	98 -106
308H	♦HAC	99 - 15
400S2-2.6	MIT	78 - 61
412H	♦HAC	90 - 59

TYPE No.	MFRS	Pg&Line
414H	♦HAC	90 - 35
JAN417C	VAR	63 - 6
417HD	♦HAC	90 - 4
418H	HAC	90 - 8
419H	HAC	90 - 41
0461	WAB	302 - 62
0462	WAB	302 - 64
0491	WAB	305 - 52
0492	WAB	305 - 53
0493	WAB	305 - 54
499BFY(A)	♦PHIN	320 -101
500S2.8-3.2	MIT	79 - 99
0510-10	♦CTR	308 - 66
0510-25	♦CTR	308 - 75
543H	HAC	91 - 24
544H	HAC	91 -104
551H	HAC	91 - 82
554H	HAC	92 -105
555H	HAC	91 - 95
559H	♦HAC	92 - 40
560H	HAC	92 - 18
564HD	HAC	91 - 40
564HDS	HAC	92 - 20
568H	HAC	91 - 50
570H	HAC	91 - 99
580H#1	HAC	94 - 92
580H#2	HAC	94 -108
589H	HAC	91 - 1
598H	HAC	92 - 43
614H	♦HAC	95 - 27
621H	♦HAC	94 - 18
622H	HAC	94 - 20
634H	♦HAC	93 -104
635H	♦HAC	93 -105
636H	HAC	93 - 70
639H	HAC	95 - 7
640H	HAC	94 - 74
641H	♦HAC	94 - 47
646H	HAC	93 - 94
648HD	HAC	94 - 61
648HDS	HAC	96 -107
657H	HAC	93 - 99
658H	HAC	93 - 84
662HA	♦HAC	95 - 99
664H	HAC	97 - 39
670HA	♦HAC	95 - 81
676H	HAC	94 - 17
677H	♦HAC	95 - 93
719H	♦HAC	99 - 24
JAN721B	VET	107 - 20
723A/B	♦ALGG	68 - 58
725A	APX	83 - 35
	RTN	
725H	HAC	99 - 1
726B	RTN	66 - 6
JAN726B	none	66 - 5
726C	♦RTN	66 - 3
JAN726C	none	66 - 2
745H	♦HAC	98 - 6
746H	HAC	97 - 16
750H	♦HAC	99 - 38
751H	♦HAC	99 - 20
756H	♦HAC	97 - 71
759H	HAC	89 - 37
760H	♦HAC	99 - 25
767H	♦HAC	98 - 9
771HD	HAC	100 - 11
771HDS	HAC	99 - 89
774H	♦HAC	101 - 45
781H	♦HAC	99 - 39
783H	HAC	100 - 18
784H	HAC	98 - 13
785H	HAC	100 - 92
786H	♦HAC	99 - 45
790H	HAC	99 - 58
792H	♦HAC	98 - 12
796H	♦HAC	99 - 40
812H	HAC	104 - 14
813H	HAC	104 - 15
814H	HAC	104 - 18
819H	HAC	104 - 16
820H	♦HAC	103 - 70
830H	♦HAC	103 - 65
832H	HAC	103 - 67
835H	♦HAC	103 - 62
837H	♦HAC	101 - 69
838H	HAC	103 - 63
839H	HAC	103 - 55
845H	♦HAC	101 - 86
846H	HAC	101 -103
848HA	HAC	102 - 49
848HD	♦HAC	103 - 26
848HDS	HAC	102 - 43
851H	♦HAC	102 - 34
854H	HAC	103 - 64
856H	HAC	102 - 2
861H	♦HAC	103 - 73
863H	HAC	104 - 5
866H	♦HAC	103 - 71
869H#1	HAC	101 - 35
869H#2	HAC	101 - 41
870H	HAC	102 - 81
874H	♦HAC	102 - 88
876H	♦HAC	102 - 70
881H	♦HAC	102 - 63
910H	HAC	89 - 41
911H	HAC	103 - 87
0912-7	♦CTR	309 - 93
0912-25	♦CTR	310 - 6
0912-45	♦CTR	310 - 16
0912-125A	♦CTR	310 - 26
0912-125B	♦CTR	310 - 27
0912P200	♦CTR	310 - 39
0912P250	♦CTR	310 - 40

TYPE No.	MFRS	Pg&Line
0912P250A	♦CTR	310 - 45
0912P250B	♦CTR	310 - 46
0912P400A	♦CTR	310 - 48
0912P400B	♦CTR	310 - 49
0912P600A	♦CTR	310 - 51
0912P600B	♦CTR	310 - 52
912H#	HAC	103 -110
913H	HAC	89 - 30
914H	HAC	89 - 33
0915-40	♦CTR	311 - 22
915H	HAC	89 - 36
916H	HAC	62 - 47
918H-1	HAC	103 - 81
918H-2	HAC	103 - 82
919H-XX	HAC	62 - 46
924H	HAC	104 - 2
926H	HAC	104 - 10
931H-XX	HAC	62 - 48
932H	HAC	104 - 9
934H-XX	HAC	62 - 49
944H	HAC	89 - 31
950H	HAC	103 - 93
950HA-1	HAC	103 - 92
950HA-2	HAC	103 -104
980H	HAC	89 - 38
981H	HAC	89 - 34
982H	HAC	89 - 32
983H	HAC	89 - 42
985H	HAC	89 - 35
1077H11	HAC	103 - 89
1077H12	♦HAC	103 -109
1160H	♦HAC	91 -102
1177H01	♦HAC	91 - 41
1177H02	♦HAC	94 - 62
1177H03	♦HAC	100 - 12
1177H04	♦HAC	103 - 27
1177H09	♦HAC	90 - 5
1190H	♦HAC	90 - 69
1200H	♦HAC	97 - 11
1202H	♦HAC	97 - 68
1218H	HAC	102 - 32
1220H	HAC	102 - 35
1222H	HAC	95 - 21
1224H	HAC	93 - 46
1226H	HAC	90 - 70
1228H	HAC	104 - 4
1233H	HAC	91 - 38
1234H	HAC	94 - 75
1235H	HAC	100 - 9
1236H	HAC	103 - 25
1238H	♦HAC	97 - 24
1240H	♦HAC	97 - 66
1241H	HAC	97 - 25
1243H	HAC	93 - 4
1244H	♦HAC	93 - 16
1245H	HAC	103 - 8
1247H	HAC	102 - 30
1248H	♦HAC	97 - 17
1253H	HAC	93 - 17
1254H	HAC	103 -103
1255H	HAC	97 - 26
1256H	HAC	102 - 29
1264H	♦HAC	93 - 9
1266H	♦HAC	90 - 62
1268H	♦HAC	101 - 87
1272H	HAC	90 - 90
1276H	HAC	89 - 28
1288H	♦HAC	93 - 7
1292H	♦HAC	101 - 14
1294H	♦HAC	103 - 79
1618-35	♦CTR	311 - 54
1652H	♦HAC	93 - 26
1653H	♦HAC	100 - 99
1654H	♦HAC	100 -102
1655H	♦HAC	100 -110
1656H	HAC	97 - 18
1661H	HAC	101 - 31
2001	♦CTR	182 - 79
	♦MSI	312 - 33
2001A	CTR	182 - 80
	♦MSI	312 - 34
2002	♦CTR	182 - 81
	♦MSI	
2002A	♦MSI	182 - 82
2003(A)	♦CTR	186 - 80
	♦MSI	312 - 60
2003A	♦MSI	186 - 81
2005(A)	♦CTR	312 - 67
2010	♦CTR	312 - 77
2015M(A)	♦CTR	311 - 58
2023-1.5(A)	♦CTR	312 -101
2023-1.5T(A)	♦CTR	313 - 1
2023-3(A)	♦CTR	313 - 2
2023-3T(A)	♦CTR	313 - 3
2023-6(A)	♦CTR	313 - 4
2023-12(A)	♦CTR	313 - 5
2023-16(A)	♦CTR	313 - 6
2101	♦MSI	174 - 96
2101A	♦MSI	174 - 97
2102	♦MSI	174 - 98
2102A	♦MSI	174 - 99
2103	♦MSI	174 -100
2103A	♦MSI	174 -101
2108	ITT	91 - 83
2152	ITT	98 - 51
2153	ITT	92 - 4
2154	ITT	95 - 6
2156	ITT	100 - 85
2169	ITT	100 - 41
2176	ITT	99 - 32
2177	ITT	99 - 91
2195	ITT	95 - 85
2201	♦MSI	195 - 11
2201A	♦MSI	195 - 12

Δ-Registered with JEDEC by this manufacturer

♦-Mfr's data sheet available in microfilm service

1. TYPE No. CROSS INDEX

IN TYPE NUMBER SEQUENCE

TYPE No.	MFRS	Pg&Line
2202	♦MSI	195 - 13
2202A	♦MSI	195 - 14
2203	♦MSI	196 - 70
2203A	♦MSI	196 - 71
2301	♦MSI	199 - 78
2301#(A)	♦CTR	314 - 28
2301A	♦MSI	199 - 79
2302	♦MSI	199 - 80
2302A	♦MSI	199 - 81
2303	♦MSI	200 - 37
2303A	♦MSI	200 - 38
2401	♦MSI	200 - 69
2401A	♦MSI	200 - 70
2402	♦MSI	200 - 71
2402A	♦MSI	200 - 72
2403	♦MSI	201 - 42
2403A	♦MSI	201 - 43
2501	♦MSI	201 - 3
2501A	♦MSI	201 - 4
2502	♦MSI	201 - 5
2502A	♦MSI	201 - 6
2503	♦MSI	201 - 89
2503A	♦MSI	201 - 90
2601	♦MSI	201 -104
2601A	♦MSI	201 -105
2602	♦MSI	201 -106
2602A	♦MSI	201 -107
2603	♦MSI	202 - 46
2603A	♦MSI	202 - 47
2701	♦MSI	202 - 65
2701A	♦MSI	202 - 66
2702	♦MSI	202 - 67
2702A	♦MSI	202 - 68
2703	♦MSI	202 -103
2703A	♦MSI	202 -104
2801	MSI	188 - 9
2801A	MSI	188 - 10
2802	MSI	188 - 11
2802A	MSI	188 - 12
2803	MSI	188 - 13
2803A	MSI	188 - 14
2936	ITT	76 - 21
3000	♦CTR	314 - 70
3001(A)	♦CTR	314 - 72
3003(A)	♦CTR	314 - 77
3005	♦CTR	314 - 89
5586	♦APX	79 - 27
EEVB	NJRC	
	RTN	
JAN5586	APX	79 - 16
5609	NJRC	78 - 69
5609A	RTN	78 - 70
5657	♦APX	79 -104
EEVB	RTN	
JAN5657	APX	79 - 98
5721	NECJ	67 - 25
	♦RTN	
JAN5721	BTC	67 - 47
5780	LIT	82 - 32
JAN5780	LIT	82 - 33
5789	♦MIC	86 - 14
5792	VET	105 - 15
5792/MSA16	OWE	105 - 16
5793	VET	105 - 21
5793/MSA17	OWE	105 - 22
5795	RTN	80 - 65
JAN5795	none	80 - 66
5836	♦RTN	66 - 18
JAN5836	none	66 - 10
5837	♦RTN	65 -100
	THC	
JAN5837#1	none	65 - 94
JAN5837#2	none	65 -105
JAN5837#3	none	65 - 95
JAN5837#4	none	65 -108
5853	THC	107 - 30
	VET	
5853/MST23	OWE	107 - 31
JAN5863	MIC	108 - 11
OWE	VET	
JAN5864	OWE	105 - 72
	VET	
5864/ATR321	VET	105 - 71
5865	VET	107 - 91
JAN5865	MIC	107 - 92
	VET	
5865/MCT32	OWE	107 - 93
5865/TR361	NJRC	107 - 79
5866/MST15	OWE	107 - 24
5883	VET	105 - 47
5921	VET	105 - 23
JAN5921	OWE	105 - 25
	VET	
5921/MSA18	OWE	105 - 24
5922	VET	105 - 26
JAN5922	OWE	105 - 28
	VET	
5922/MSA19	OWE	105 - 27
5925	NJRC	107 - 59
5927	THC	107 - 45
	VET	
JAN5927	OWE	107 - 46
	VET	
5927/MST21	OWE	107 - 41
5939A	NJRC	105 -103
	VET	
5976	NECJ	67 - 20
	♦RTN	
5981	♦RTN	65 - 98
JAN5981	none	65 - 97
6002	RTN	83 - 7
JAN6002	none	83 - 6
6022	NJRC	105 - 32
	VET	
6022/MCA13	OWE	105 - 33
6024	VET	105 - 9
JAN6024	VET	105 - 8
6024/ATR387	NJRC	105 - 10
6024/MSA20	OWE	105 - 11
6027	MIC	83 - 75
	NJRC	
6027H	APX	83 - 78
	EEVB	
6033	VET	105 - 63
6034	VET	105 - 44
6043	♦RTN	66 - 8
6081	VET	105 - 36
JAN6081	OWE	105 - 35
	VET	
6081/ATR408	NJRC	105 - 37
6081/MCA11	OWE	105 - 38
6115A	♦NJRC	66 - 53
	♦RTN	
JAN6115A	none	66 - 51
6116	♦RTN	68 - 49
	THC	
6117	ΔVET	106 -108
6117/MST11	OWE	107 - 3
6133	RTN	65 -110
JAN6133	none	63 - 22
JAN6162	OWE	105 - 52
	VET	
6162/ATR388	NJRC	105 - 53
	VET	
6163	VET	105 - 50
6177A	RTN	80 - 84
JAN6177A	none	80 - 85
6214	VET	105 - 73
6229	♦MIC	82 - 45
6230	♦MIC	82 - 51
6233	ΔLIT	83 - 1
6236	Δ ♦RTN	66 - 63
JAN6236	BTC	66 - 67
6260	VET	105 -102
6276	VET	105 - 56
6304	ΔVET	105 - 64
6304/BL43	VET	105 - 65
6310	ΔVAR	68 - 77
RTN	VARC	
	VET	
JAN6310	OWE	68 - 65
VARC	VET	
6310/MXK14	OWE	68 - 61
6312	ΔVAR	68 - 78
RTN	VARC	
	VET	
JAN6312	VARC	63 - 52
	VET	
6312/MXK15	OWE	68 - 62
6314	ΔVAR	69 - 8
6314/MXK16	OWE	68 - 63
6315	ΔVAR	68 - 72
JAN6315	none	68 - 68
6316	ΔVAR	68 - 66
	VET	
6322	ΔVET	106 - 72
NJRC	THC	
JAN6322	OWE	106 - 73
	VET	
6322/BL25	VET	106 - 70
6322/MLT11	OWE	106 - 74
6334	ΔVET	108 - 19
	THC	
6334/BL27	VET	109 - 79
6344	ALGG	81 - 17
6344-QKH235	♦NJRC	81 - 10
6344A	♦LIT	81 - 15
	RTN	
JAN6344A	LIT	81 - 6
6378	ΔVET	108 - 71
JAN6378	OWE	108 - 26
	VET	
6378/BL62	VET	108 - 27
6378/MXT20	OWE	108 - 30
6390	ΔRTN	68 - 5
	VAR	
JAN6390	BTC	68 - 6
6393	ΔVET	105 - 57
JAN6402	none	80 - 68
6406A	NECJ	79 - 59
	RTN	
6410A	RTN	79 - 37
	TOSJ	
JAN6410A	none	79 - 38
6455	ΔVET	105 - 39
6455/MCA12	OWE	105 - 40
JAN6460	VAR	66 - 68
6510	LIT	83 -106
JAN6510	LIT	83 -107
6517	RTN	77 -108
6521S	TOSJ	80 -103
6543	LIT	82 - 16
JAN6543	LIT	86 - 77
6543A	LIT	82 - 17
6551	VET	85 -109
JAN6560	MIC	109 - 99
OWE	VET	
6564	ΔVET	108 - 50
6564/BL71	VET	109 - 83
6565	ΔVET	108 - 76
6568/MCT17	OWE	107 -106
JAN6584	OWE	66 - 54
6584/OMK7000/TK69		
	OWE	66 - 52
6589	♦APX	80 - 67
6591/MCA10	OWE	105 - 34
6592	ΔVET	107 - 60
6592/MCC10	OWE	107 - 58
6593	ΔVET	108 - 23
6593/MXC11	OWE	108 - 5
6594	ΔVET	107 - 94
6594/MCC1	OWE	107 - 95
6595	ΔVET	108 - 31
6596	ΔVET	109 - 70
	THC	
6596/BL317	VET	109 - 89
6597	ΔVET	108 - 20
6599	ΔVET	109 - 64
6601	ΔVET	109 - 71
6602	ΔVET	107 - 42
6602/MSC10	OWE	109 - 30
6604	ΔVET	109 - 72
6605	ΔVET	105 -104
6605/MLT23	OWE	105 -105
6613/BL324	VET	109 - 90
6615	THC	108 - 21
6615/BL312	VET	108 - 65
6616	ΔVET	108 - 22
6624	VET	107 - 62
6624/MCT18	OWE	107 - 63
6629	ΔVET	105 - 48
6630	ΔVET	105 - 74
6631	ΔVET	105 - 45
6632	ΔVET	106 - 76
6632/MLT24	OWE	106 - 77
6633	ΔVET	106 - 80
6633/MLT17	OWE	106 - 81
6634/MLT25	OWE	109 - 29
6635	ΔVET	106 - 98
6635/MST18	OWE	106 - 99
6636	ΔVET	109 - 31
6636/BL87	VET	109 - 32
6636/MST24	OWE	109 - 33
6637	ΔVET	106 -104
6637/MST29	OWE	109 - 37
6638/MST30	OWE	109 - 38
6639	ΔVET	107 - 71
6639/BL46	VET	107 - 72
6639/MCT14	OWE	107 - 73
6640	ΔVET	109 - 47
	THC	
6640/BL60	VET	109 - 48
6640/MCT16	OWE	109 - 49
6641	ΔVET	109 - 41
6641/BL86	VET	109 - 40
6642	ΔVET	109 - 73
6644	ΔVET	108 - 12
6644/BL95	VET	108 - 32
6645	ΔVET	108 - 13
6645/BL95H	VET	108 - 33
6645/MXT61	OWE	108 - 14
6646	ΔVET	109 - 66
6646/BL604	VET	109 - 78
6646/MXT70	OWE	108 - 15
6647	ΔVET	109 - 67
6648	ΔVET	109 - 65
6649	ΔVET	108 -109
6650	ΔVET	109 - 19
6685	ΔVET	110 - 2
6780	VET	68 - 91
6780/MXK47	OWE	68 - 30
6781	VET	68 - 90
JAN6781	OWE	68 - 69
	VET	
6781/MXK11	OWE	68 - 64
6795	VET	108 - 72
6795A/MXT12	OWE	108 - 59
6805	VAR	109 - 68
6845	RTN	68 - 50
6890	VET	105 - 58
6890/BL650	VET	105 - 59
6904	ΔVET	109 - 74
6905	ΔVET	109 - 59
6905/BL613	VET	109 - 60
6905/MCT10	OWE	109 - 61
6906	ΔVET	107 - 82
6906/BL643	VET	107 - 83
6906/MCT26	OWE	107 - 84
6915	VARC	68 - 79
6959	RTN	83 - 39
6962/BL665	VET	105 - 2
6967A	RTN	82 - 72
6975	ΔVAR	68 - 35
BTC	NECJ	
THC	VARC	
	VET	
JAN6975	BTC	68 - 23
EEVB	VARC	
	VET	
6975/MXK21	OWE	68 - 31
JAN6995	none	70 - 51
7006	LIT	82 -105
7008	APX	82 - 30
LIT	♦NJRC	
	THC	
7088	VET	81 - 24
7090	♦APX	78 - 71
	RTCF	
7111	♦LIT	82 - 25
JAN7111	LIT	82 - 31
7152	NJRC	105 -107
7152/BL612	VET	105 -108
7152/MLT16B	OWE	105 -106
7156	ΔRTN	81 - 16
JAN7156A	LIT	81 - 7
7166	NJRC	106 - 82
7166/BL933	VET	106 - 79
7166/MLT10	OWE	106 - 71
7182	EEVB	79 - 39
7208	♦LIT	88 - 70
	TOSJ	
7208B	LIT	88 - 53
NJRC	RTN	
JAN7208B	LIT	85 -102
7256	RTN	82 - 9
JAN7256	none	82 - 39
7300/MPT26	OWE	106 - 61
7309/BL693	VET	106 - 53
7324/MPT11	OWE	106 - 62
JAN7381	MIC	109 - 81
OWE	VET	
7381/BL979	VET	109 - 82
7393	VAR	94 - 30
7394	VAR	99 - 78
JAN7417	OWE	81 - 2
7443	VET	81 - 25
7446	VET	83 - 43
7447/BL325A	VET	109 - 50
7447/MCT30	OWE	109 - 51
7449A	LIT	85 -110
7452A	VET	78 - 46
7460	RTN	81 - 14
JAN7460	LIT	81 - 11
JAN7471	VAR	66 - 56
7484A	NECJ	77 -109
	RTN	
7503	VET	84 - 16
7504	♦LIT	73 - 43
7521	♦MIC	82 - 52
7529	ΔRTN	79 - 12
	TOSJ	
JAN7529	none	86 - 89
7547	RTN	77 - 34
7577	RTN	61 - 59
7619	LIT	86 - 15
7640	VAR	91 - 84
JAN7640	none	91 - 85
7662	VAR	74 - 67
7663	VAR	74 - 70
7692	LIT	83 - 38
7821	VET	109 - 28
7821/MPT12	OWE	106 - 43
7823/MLT13	OWE	106 - 85
7829A	ΔVAR	69 - 66
JAN7829A	VAR	69 - 67
7849/BTR140	VET	107 -101
7849/MCT23	OWE	107 -102
7901/MPT13	OWE	106 - 55
7902/MPT17	OWE	106 - 64
7950	LIT	82 - 29
8099/MST38	OWE	106 -100
8111	VAR	92 - 46
8128	Δ ♦RTN	91 - 97
JAN8129D	none	61 - 85
8154	VAR	98 - 61
8198	VAR	97 - 54
8199	ΔVAR	66 - 29
8232	VAR	92 - 9
8272/MLT41	OWE	106 - 91
8281H	HAC	90 - 64
8294H	HAC	102 - 94
8313/MPT16	OWE	106 - 58
JAN8315	none	63 - 27
JAN8316	VAR	66 - 61
8332	VAR	63 - 54
8356	♦EEVB	83 - 79
JAN8362	none	94 - 2
JAN8364	none	93 -110
8366	LIT	86 - 6
JAN8405	VAR	63 - 28
JAN8406	none	63 - 26
8467	VAR	70 - 31
JAN8467	VAR	70 - 32
8468	LIT	85 - 82
8481/BLT032	VET	105 - 70
JAN8493	ITT	62 - 84
8493/F2913	ITT	73 - 31
8502H	HAC	92 - 21
8507H	♦HAC	93 - 83
8508H	♦HAC	93 - 85
8510H	♦HAC	93 - 12
8511H	♦HAC	93 - 19
8512	ΔMIT	78 - 56
8513H	HAC	93 - 10
8514H	HAC	93 - 18
8515H	HAC	93 - 27
8516H	HAC	100 -100
8517H	HAC	100 -103
8517HA	HAC	100 -104
8518H	HAC	101 - 1
8519H	HAC	103 - 10
8520H	HAC	93 - 13
8522H	HAC	101 - 65
8523H	HAC	101 - 66
8524H	HAC	93 - 21
8525H	HAC	93 - 25
8526H	HAC	93 - 28
8533H	HAC	101 - 32
8568	ITT	76 - 19
	VAR	
8574/MXT132	OWE	107 -107
8578/MST60	OWE	109 - 34
8599/MKT39	OWE	109 - 16
8609	♦RTN	98 - 77
8622/MST52	OWE	106 - 5
8682	VET	88 - 94
JAN8682	VET	88 - 95
8713H	♦HAC	98 - 57
8715H	HAC	99 - 46
8722H	HAC	101 - 75
8730H	HAC	102 - 27
8736H	HAC	97 -100
8740H	HAC	99 - 47
8741H	HAC	99 -109
JAN8742	none	91 -105
8753H	HAC	99 - 9
8754H	HAC	102 - 23
8757H	HAC	99 - 44
8760H#1	♦HAC	98 - 7
8760H#2	♦HAC	98 - 2
8763	VET	87 - 12
8764	ΔRTN	80 - 78
8770/BTR546	VET	107 - 77
8774H	HAC	99 - 67
8798	ΔRTN	79 - 17
	APX	
JAN8798	APX	79 - 28
8821	ΔVAR	67 - 45
JAN8821	VAR	67 - 41
8824	ITT	73 - 59
8825	ITT	73 - 85
8826	ITT	74 - 14
JAN8827	VET	85 -103
8835	ΔMIC	105 - 18
8836	ΔMIC	105 - 19
8840	ITT	76 - 20
8848	ΔVAR	68 - 74
8849	ΔVAR	67 - 61
JAN8849	none	67 - 64
8855	NECJ	87 - 44
	RTN	
JAN8855	LIT	87 - 45
	VET	
JAN8880	none	92 - 5
JAN8881	none	94 - 23
JAN8882	none	99 - 16
8895	ΔVARC	69 - 25
8896	ΔVET	87 - 70
	RTN	
8898	ΔRTN	61 - 76
8899	ΔRTN	61 - 78
8900	ΔRTN	61 - 67
8902	ΔLIT	88 - 90
8934	RTN	61 - 82
JAN8939	VET	87 - 61
8945	ΔLIT	87 - 46
8947	ΔRTN	87 - 38
8948	ΔRTN	88 - 65
8949	ΔRTN	88 - 69
8955	ΔLIT	88 - 48
8956	ΔVAR	63 - 30
8979	ΔVAR	69 - 2
JAN8979	VAR	69 - 3
JAN8982	VET	88 - 72
9001	WAB	303 - 17
9002	WAB	303 - 18
9003	WAB	303 - 19
9020H04	HAC	102 - 50
9040H-03	HAC	97 -101
9210H-02	HAC	95 - 90
9225H-04	HAC	102 - 62
9240H02	♦HAC	95 - 98
9740H02	HAC	95 -107
10100BD	CCI	205 - 54
10150BD	CCI	205 - 55
10200BD	CCI	205 - 62
10250BD	CCI	205 - 64
10300BD	CCI	205 - 78
10350BD	CCI	205 - 80
10400BD	CCI	205 - 95
10450BD	CCI	205 - 96
13100BD2	CCI	128 - 34
13100BD4	CCI	128 - 92
13100BD8	CCI	129 - 16
13100BD16	CCI	132 - 63
13150BD2	CCI	128 - 35
13150BD4	CCI	128 - 93
13150BD8	CCI	129 - 17
13150BD16	CCI	132 - 64
13200BD2	CCI	128 - 36
13200BD4	CCI	128 - 94
13200BD8	CCI	129 - 18
13200BD16	CCI	132 - 65
13300BD8	CCI	129 - 19
13300BD16	CCI	132 - 66
13400BD	CCI	129 - 20
23100BD	CCI	129 - 77
23150BD	CCI	129 - 78
23200BD	CCI	129 - 79
23300BD	CCI	129 - 80
23350BD	CCI	129 - 81
23400BD	CCI	129 - 82
23450BD	CCI	129 - 83
40235	♦SCA	247 - 56
40236	♦SCA	247 - 57
40237	♦SCA	247 - 58
40238	♦SCA	247 - 59
40239	♦SCA	247 - 60
40240	♦SCA	247 - 61
40242	♦SCA	247 - 62
40243	♦SCA	247 - 63
40244	♦SCA	247 - 64
40245	♦SCA	247 - 65
40246	♦SCA	247 - 66
40894	♦SCA	247 - 67
40895	♦SCA	247 - 68
40896	♦SCA	247 - 69
40897	♦SCA	247 - 70
41024	CRI	308 - 41
	SCA	
41038	CRI	311 - 32
	SCA	
46101	♦CTR	308 - 48
46104	♦CTR	308 - 55
46110	♦CTR	308 - 67
46120	♦CTR	308 - 73
101010A	CCI	210 -104
101010G	CCI	210 -105
101015A	CCI	205 - 35

Δ-Registered with JEDEC by this manufacturer

♦-Mfr's data sheet available in microfilm service

1. TYPE No. CROSS INDEX

IN TYPE NUMBER SEQUENCE

TYPE No.	MFRS	Pg&Line
101020A	CCI	205 - 29
101025A	CCI	205 - 24
101030A	CCI	205 - 21
101040A	CCI	211 - 11
101050A	CCI	209 - 30
101050G	CCI	209 - 31
101100A	CCI	209 - 52
101100G	CCI	209 - 53
102050A	CCI	210 - 4
102050G	CCI	210 - 5
102100A	CCI	210 - 21
102100G	CCI	210 - 22
102510A	CCI	205 - 36
102515A	CCI	205 - 30
102520A	CCI	205 - 37
102525A	CCI	205 - 18
102530A	CCI	205 - 14
102540A	CCI	205 - 7
104510A	CCI	205 - 31
104510G	CCI	205 - 34
104515A	CCI	205 - 26
104515G	CCI	205 - 27
104520A	CCI	205 - 19
104520G	CCI	205 - 23
104525A	CCI	205 - 13
104525G	CCI	205 - 20
104530A	CCI	205 - 9
104530G	CCI	205 - 15
104540A	CCI	205 - 4
104540G	CCI	205 - 10
104550G	CCI	205 - 5
105010A	CCI	210 - 82
105010G	CCI	210 - 83
105050A	CCI	208 - 75
105100A	CCI	208 - 76
105100G	CCI	208 - 77
106010G	CCI	205 - 33
106015G	CCI	205 - 28
106020G	CCI	205 - 22
106025G	CCI	205 - 16
106030G	CCI	205 - 11
106040G	CCI	205 - 6
106050G	CCI	205 - 2
107510G	CCI	205 - 32
107515G	CCI	205 - 25
107520G	CCI	205 - 17
107525G	CCI	205 - 12
107530G	CCI	205 - 8
107540G	CCI	205 - 3
107550G	CCI	205 - 1
111010A	CCI	209 -107
111015A	CCI	209 -104
111020A	CCI	209 - 99
111025A	CCI	209 - 93
111030A	CCI	209 - 92
111040A	CCI	209 - 91
112510A	CCI	209 - 22
112515A	CCI	209 - 14
112520A	CCI	209 - 6
112525A	CCI	209 - 3
112530A	CCI	209 - 2
112540A	CCI	209 - 1
114510A	CCI	208 - 57
114510G	CCI	207 -110
114515A	CCI	208 - 54
114515G	CCI	207 -101
114520A	CCI	208 - 47
114520G	CCI	207 - 97
114525A	CCI	208 - 46
114525G	CCI	207 - 94
114530A	CCI	208 - 45
114530G	CCI	207 - 91
114540A	CCI	208 - 44
114540G	CCI	207 - 89
114550G	CCI	207 - 88
116010G	CCI	207 - 48
116015G	CCI	207 - 40
116020G	CCI	207 - 30
116025G	CCI	207 - 28
116030G	CCI	207 - 24
116040G	CCI	207 - 22
116050G	CCI	207 - 21
117510G	CCI	206 - 90
117515G	CCI	206 - 76
117520G	CCI	206 - 67
117525G	CCI	206 - 65
117530G	CCI	206 - 63
117540G	CCI	206 - 60
117550G	CCI	206 - 59
151010A	CCI	210 -106
151010G	CCI	210 -107
151050A	CCI	209 - 32
151050G	CCI	209 - 33
151100A	CCI	209 - 54
151100G	CCI	209 - 55
152050A	CCI	210 - 6
152050G	CCI	210 - 7
152100A	CCI	210 - 23
152100G	CCI	210 - 24
155010A	CCI	210 - 84
155010G	CCI	210 - 85
155050A	CCI	208 - 78
155050G	CCI	208 - 79
155100A	CCI	208 - 80
155100G	CCI	208 - 81
A1E207A	♦TRWM	205 - 50
A1E210A	♦TRWM	205 - 51
A1E215A	♦TRWM	205 - 52
A1E220A	♦TRWM	205 - 53
A1E250A	♦TRWM	205 - 56
A1E307A	♦TRWM	205 - 63
A1E310A	♦TRWM	205 - 65
A1E315A	♦TRWM	205 - 75
A1E320A	♦TRWM	205 - 77
A1E407A	♦TRWM	205 - 79
A1E410A	♦TRWM	205 - 81
A1E415A	♦TRWM	205 - 82
A1E420A	♦TRWM	205 - 83
A1E507A	♦TRWM	205 - 90
A1E510A	♦TRWM	205 - 91
A1E515A	♦TRWM	205 - 92
A1E520A	♦TRWM	205 - 93
A1G205D	♦TRWM	207 - 18
A1G210D	♦TRWM	207 - 17
A1G215D	♦TRWM	207 - 16
A1G220D	♦TRWM	207 - 15
A1G225D	♦TRWM	207 - 14
A1G230D	♦TRWM	207 - 13
A1G240D	♦TRWM	207 - 12
A1G250D	♦TRWM	207 - 11
A1G405D	♦TRWM	207 - 64
A1G410D	♦TRWM	207 - 56
A1G415D	♦TRWM	207 - 35
A1G420D	♦TRWM	207 - 31
A1G425D	♦TRWM	207 - 29
A1G430D	♦TRWM	207 - 26
A1G440D	♦TRWM	207 - 25
A1G450D	♦TRWM	207 - 23
A1G605D	♦TRWM	208 - 6
A1G610D	♦TRWM	208 - 3
A1G615D	♦TRWM	207 -107
A1G620D	♦TRWM	207 -106
A1G625D	♦TRWM	207 - 98
A1G630D	♦TRWM	207 - 95
A1G640D	♦TRWM	207 - 93
A1G650D	♦TRWM	207 - 90
A2S009	♦TRWM	131 - 59
A2S014	♦TRWM	116 -104
A2S024	♦TRWM	213 - 25
A2S029	♦TRWM	116 -105
A2S031	♦TRWM	213 - 26
A2S050	♦TRWM	131 - 60
A2S051	♦TRWM	131 - 61
A2S087	♦TRWM	213 - 27
A2S097	♦TRWM	213 - 28
A2S101	♦TRWM	116 -106
A2S103	♦TRWM	116 -107
A2S106	♦TRWM	116 -108
A2S108	♦TRWM	117 - 1
A2S120	♦TRWM	117 - 2
A2S121	♦TRWM	123 - 36
A2S122	♦TRWM	123 - 37
A2S123	♦TRWM	123 - 38
A2S124	♦TRWM	123 - 39
A2S130	♦TRWM	113 - 70
A2S201	♦TRWM	131 - 62
A2S202	♦TRWM	131 - 63
A2S206	♦TRWM	131 - 64
A2S207	♦TRWM	131 - 65
A2S220	♦TRWM	131 - 66
A2S250	♦TRWM	131 - 67
A2S251	♦TRWM	131 - 68
		243 - 52
A2S252	♦TRWM	131 - 69
A2S253	♦TRWM	131 - 70
A2S254	♦TRWM	131 - 71
A2S255	♦TRWM	131 - 72
A2S257	♦TRWM	131 - 73
A2S258	♦TRWM	131 - 74
A2S259	♦TRWM	131 - 75
A2S262	♦TRWM	131 - 76
A2S263	♦TRWM	131 - 77
A2S264	♦TRWM	131 - 78
A2S270	♦TRWM	113 - 56
A2S271	♦TRWM	113 - 57
A2S272	♦TRWM	117 - 3
A2S273	♦TRWM	117 - 4
A2S274	♦TRWM	117 - 5
A2S275	♦TRWM	117 - 6
A2S276	♦TRWM	117 - 7
A2S301	♦TRWM	213 - 29
A2S302	♦TRWM	213 - 30
A2S303	♦TRWM	213 - 31
A2S305	♦TRWM	213 - 32
A2S306	♦TRWM	213 - 33
A2S308	♦TRWM	213 - 34
A2S350	♦TRWM	113 - 58
A2S356	♦TRWM	213 - 35
A2S370	♦TRWM	213 - 36
A2S396	♦TRWM	213 - 37
A2S400	♦TRWM	113 - 59
A2S401	♦TRWM	113 - 60
A2S520	♦TRWM	113 - 71
A2S565	♦TRWM	113 - 72
A2S566	♦TRWM	113 - 73
A2S611	♦TRWM	117 - 8
A2S612	♦TRWM	117 - 9
A2S613	♦TRWM	117 - 10
A2S614	♦TRWM	123 - 40
A2S615	♦TRWM	123 - 41
A2S621	♦TRWM	117 - 11
A2S622	♦TRWM	117 - 12
A2S623	♦TRWM	117 - 13
A2S624	♦TRWM	123 - 42
A2S625	♦TRWM	123 - 43
A2S630	♦TRWM	245 - 46
A2S631	♦TRWM	245 - 47
A2S633	♦TRWM	245 - 48
A2S634	♦TRWM	245 - 49
A2S637	♦TRWM	245 - 50
A2S638	♦TRWM	245 - 51
A2S701	♦TRWM	117 - 14
A2S702	♦TRWM	117 - 15
A2S703	♦TRWM	117 - 16
A2S711	♦TRWM	117 - 17
A2S713	♦TRWM	117 - 18
A2S714	♦TRWM	117 - 19
A2S720	♦TRWM	123 - 44
A2S721	♦TRWM	123 - 45
A2S722	♦TRWM	123 - 46
A2S723	♦TRWM	123 - 47
A2S730	♦TRWM	245 - 52
A2S731	♦TRWM	245 - 53
A2S733	♦TRWM	245 - 54
A2S734	♦TRWM	245 - 55
A2S737	♦TRWM	245 - 56
A2S738	♦TRWM	245 - 57
A2S740	♦TRWM	117 - 20
A2S741	♦TRWM	117 - 21
A2S742	♦TRWM	117 - 22
A2S743	♦TRWM	117 - 23
A2S744	♦TRWM	117 - 24
A2S745	♦TRWM	117 - 25
A2S781	♦TRWM	123 - 48
A2S782	♦TRWM	123 - 49
A2S783	♦TRWM	117 - 26
A2S791	♦TRWM	132 - 67
A2S792	♦TRWM	131 - 79
A2S793	♦TRWM	128 - 95
A2S800	♦TRWM	213 - 38
A2S804	♦TRWM	213 - 39
A2S805	♦TRWM	213 - 40
A2S807	♦TRWM	213 - 41
A2S810	♦TRWM	213 - 42
A2S811	♦TRWM	213 - 43
A2S813	♦TRWM	213 - 44
A2S814	♦TRWM	213 - 45
A2S815	♦TRWM	213 - 46
A2S817	♦TRWM	113 - 61
A2S818	♦TRWM	113 - 62
A2S819	♦TRWM	113 - 63
A2S821	♦TRWM	113 - 64
A2S822	♦TRWM	113 - 65
A2S823	♦TRWM	113 - 66
A2S824	♦TRWM	128 - 37
A2S825	♦TRWM	128 - 38
A2S826	♦TRWM	213 - 47
A2S827	♦TRWM	128 - 39
A2S828	♦TRWM	128 - 40
A2S835	♦TRWM	213 - 48
A2S838	♦TRWM	213 - 49
A2S839	♦TRWM	213 - 50
A2S860	♦TRWM	213 - 51
A2S861	♦TRWM	213 - 52
A2S862	♦TRWM	213 - 53
A2S863	♦TRWM	213 - 54
A2S864	♦TRWM	213 - 55
A2S865	♦TRWM	213 - 56
A2S866	♦TRWM	213 - 57
A2S900	♦TRWM	213 - 58
A2S912	♦TRWM	213 - 59
A2S970	♦TRWM	213 - 60
A4S008	♦TRWM	238 - 38
A4S015	♦TRWM	238 - 39
A4S017	♦TRWM	238 - 40
A4S020	♦TRWM	238 - 41
A4S021	♦TRWM	238 - 42
A4S112	♦TRWM	238 - 43
A4S151	♦TRWM	238 - 44
A4S153	♦TRWM	238 - 45
A4S180	♦TRWM	238 - 46
A4S360	♦TRWM	238 - 47
A4S365	♦TRWM	238 - 48
A4S370	♦TRWM	238 - 49
A4S374	♦TRWM	238 - 50
A4S376	♦TRWM	238 - 51
A4S386	♦TRWM	238 - 52
A5S001	♦TRWM	213 - 61
A5S012	♦TRWM	213 - 62
A5S013	♦TRWM	213 - 63
A5S025	♦TRWM	213 - 64
A5S034	♦TRWM	213 - 65
A5S090	♦TRWM	213 - 66
A5S091	♦TRWM	213 - 67
A5S092	♦TRWM	213 - 68
A5S093	♦TRWM	213 - 69
A5S105	♦TRWM	213 - 70
A5S107	♦TRWM	213 - 71
A5S113	♦TRWM	213 - 72
A5S115	♦TRWM	213 - 73
A5S125	♦TRWM	238 - 53
A5S127	♦TRWM	238 - 54
A5S138	♦TRWM	213 - 74
A5S139	♦TRWM	213 - 75
A5S161	♦TRWM	213 - 76
A5S163	♦TRWM	213 - 77
A5S165	♦TRWM	213 - 78
A5S168	♦TRWM	213 - 79
A5S188	♦TRWM	213 - 80
A5S301	♦TRWM	213 - 81
A5S302	♦TRWM	213 - 82
A5S303	♦TRWM	213 - 83
A5S339	♦TRWM	213 - 84
A5S342	♦TRWM	213 - 85
A5S350	♦TRWM	213 - 86
A5S377	♦TRWM	213 - 87
A5S400	♦TRWM	213 - 88
A5S401	♦TRWM	213 - 89
A5S402	♦TRWM	213 - 90
A5S403	♦TRWM	213 - 91
A5S420	♦TRWM	213 - 92
A5S423	♦TRWM	213 - 93
A9G100AN	♦TRWM	238 - 55
A9G100AR	♦TRWM	238 - 56
A9G100BN	♦TRWM	238 - 57
A9G100BR	♦TRWM	238 - 58
A9G200AN	♦TRWM	238 - 59
A9G200AR	♦TRWM	238 - 60
A9G200BN	♦TRWM	238 - 61
A9G200BR	♦TRWM	238 - 62
A9G250AN	♦TRWM	238 - 63
A9G250AR	♦TRWM	238 - 64
A9G250BN	♦TRWM	238 - 65
A9G250BR	♦TRWM	238 - 66
A9G500AN	♦TRWM	238 - 67
A9G500AR	♦TRWM	238 - 68
A9G500BN	♦TRWM	238 - 69
A9G500BR	♦TRWM	238 - 70
A9G1000AN	♦TRWM	238 - 71
A9G1000AR	♦TRWM	238 - 72
A9G1000BN	♦TRWM	238 - 73
A9G1000BR	♦TRWM	238 - 74
A210	♦APX	309 - 50
A400	♦APX	317 - 91
A401	♦APX	317 - 92
A406	♦APX	318 - 27
A424	♦APX	313 - 10
A430	♦APX	311 - 26
HSE	WAB	
A440	APX	317 - 93
A441	♦APX	317 - 94
A485	♦APX	310 - 59
A486	♦APX	310 - 58
A500	APX	317 - 76
A501	APX	318 - 20
A510	APX	317 - 77
A511	APX	318 - 21
A551	APX	321 - 34
A561	APX	318 - 68
A590	APX	310 - 57
A591	♦APX	310 - 64
A750	♦ALP	213 - 94
A751	♦ALP	213 - 95
A921	♦ALP	255 - 13
A936W	♦ALP	240 - 16
A964	♦ALP	247 - 6
A972	♦ALP	243 - 53
A5916	♦CTR	303 - 39
A5918	♦CTR	303 - 50
A5919	♦CTR	303 - 56
A9300	♦ALP	230 - 56
A9400	♦ALP	230 - 57
A9500	♦ALP	230 - 58
AA111A	USSR	117 - 27
AA112A	USSR	117 - 28
AA112B	USSR	117 - 29
AAY39	♦PHIN	117 - 30
	♦VALG	
AAY39A	♦PHIN	117 - 31
	♦VALG	
AAY51	PHIN	123 - 7
	♦VALG	
AAY52	PHIN	123 - 8
	♦VALG	
AAY59	♦PHIN	126 - 73
	♦VALG	
ABG1250	♦AVA	249 - 40
ABG2002	♦AVA	249 - 41
ABG2003	♦AVA	249 - 42
ABG2010	♦AVA	249 - 43
ABG2011	♦AVA	249 - 44
ABG2012	♦AVA	249 - 45
ABG2013	♦AVA	249 - 46
ABG2014	♦AVA	249 - 47
ABG2015	♦AVA	249 - 48
ABG2400	♦AVA	249 - 49
ABG2404	♦AVA	249 - 50
ABG4030	♦AVA	249 - 51
ABG4032	♦AVA	249 - 52
ABG4033	♦AVA	249 - 53
ABG4034	♦AVA	249 - 54
ABG4035	♦AVA	249 - 55
ABG4036	♦AVA	249 - 56
ACSM2001N	♦ACI	243 - 54
ACSM2001P	♦ACI	243 - 55
ACSM2002N	♦ACI	243 - 56
ACSM2002P	♦ACI	243 - 57
ACSM2003N	♦ACI	243 - 58
ACSM2003P	♦ACI	243 - 59
ACSM2004N	♦ACI	243 - 60
ACSM2004P	♦ACI	243 - 61
ACSM2005N	♦ACI	243 - 62
ACSM2005P	♦ACI	243 - 63
ACSM2006N	♦ACI	243 - 64
ACSM2006P	♦ACI	243 - 65
ACSM2007N	♦ACI	243 - 66
ACSM2007P	♦ACI	243 - 67
ACTP1501N	♦ACI	243 - 68
ACTP1501P	♦ACI	243 - 69
ACTP1502N	♦ACI	243 - 70
ACTP1502P	♦ACI	243 - 71
ACTP1503N	♦ACI	243 - 72
ACTP1503P	♦ACI	243 - 73
ACTP1504N	♦ACI	243 - 74
ACTP1504P	♦ACI	243 - 75
ACTP1505N	♦ACI	243 - 76
ACTP1505P	♦ACI	243 - 77
ACTP1506N	♦ACI	243 - 78
ACTP1506P	♦ACI	243 - 79
ACTP1514N	♦ACI	243 - 80
ACTP1514P	♦ACI	243 - 81
ACTP1523N	♦ACI	243 - 82
ACTP1523P	♦ACI	243 - 83
ACTP1524N	♦ACI	243 - 84
ACTP1524P	♦ACI	243 - 85
ACTP1525N	♦ACI	243 - 86
ACTP1525P	♦ACI	243 - 87
AD611A	♦NECJ	230 - 59
AD611B	♦NECJ	230 - 60
AD611C	♦NECJ	230 - 61
AEY17	♦MULB	129 - 84
♦PHIN	♦RTCF	212 - 38
AEY29	♦MULB	133 - 9
♦PHIN	♦RTCF	
	♦VALG	
AEY31	♦MULB	132 - 68
♦PHIN	♦RTCF	
	♦VALG	
AEY31A	♦PHIN	132 - 69
RTCF	♦VALG	
AEY32	♦MULB	133 - 32
♦PHIN	♦RTCF	212 - 39
AF280S	♦SIEG	306 - 8
AF367	♦PHIN	307 - 59
	♦VALG	
AFP20821	♦AVA	248 - 60
AFP21821	♦AVA	248 - 61
AFP21841	♦AVA	248 - 62
AFP30821	♦AVA	248 - 63
AFP31821	♦AVA	248 - 64
AFP31841	♦AVA	248 - 65
AFP40821	♦AVA	248 - 66
AFP41821	♦AVA	248 - 67
AFP41841	♦AVA	248 - 68
AFT2032	♦AVA	249 - 57
AFT4231	♦AVA	249 - 58
AFT4232	♦AVA	249 - 59
AFT6231	♦AVA	249 - 60
AFT6232	♦AVA	249 - 61
AFT8431	♦AVA	249 - 62
AFT8432	♦AVA	249 - 63
AFT12631	♦AVA	249 - 64
AFT12632	♦AVA	249 - 65
AFT18632	♦AVA	249 - 66
AFT18832	♦AVA	249 - 67
AGC330	♦AVA	249 - 68
AGC553	♦AVA	249 - 69
AGC1053	♦AVA	249 - 70
AHD0402-0	♦AVA	213 - 96
AHD0802-0	♦AVA	213 - 97
AHD1202-0	♦AVA	213 - 98
AHD1802-0	♦AVA	213 - 99
AHF0402-0	♦AVA	213 -100
AHF0802-0	♦AVA	213 -101
AHF1202-0	♦AVA	213 -102
AHF1802-0	♦AVA	213 -103
AHL0402-0	♦AVA	213 -104
AHL0802-0	♦AVA	213 -105
AHL1202-0	♦AVA	213 -106
AHL1802-0	♦AVA	213 -107
AHQ0402-0	♦AVA	213 -108
AHQ0802-0	♦AVA	213 -109
AHQ1202-0	♦AVA	213 -110
AHQ1802-0	♦AVA	214 - 1
AHS0402-0	♦AVA	214 - 2
AHS0402-1	♦AVA	214 - 3
AHS0802-0	♦AVA	214 - 4
AHS0802-1	♦AVA	214 - 5
AHS1202-0	♦AVA	214 - 6
AHS1202-1	♦AVA	214 - 7
AHS1802-0	♦AVA	214 - 8
AHS1802-1	♦AVA	214 - 9
AHT0402-0	♦AVA	214 - 10
AHT0802-0	♦AVA	214 - 11
AHT1202-0	♦AVA	214 - 12
AHT1802-0	♦AVA	214 - 13
ALD4200	♦AVA	249 - 71
ALD4201	♦AVA	212 - 1
ALF1020	♦ALP	300 - 48
ALF1025	♦ALP	300 - 49
ALF3000	ALP	300 - 2
ALF3003	ALP	300 - 3
AM4262	♦AVA	249 - 72
AM4263	♦AVA	249 - 73
AM4264	♦AVA	249 - 74
AM4265	♦AVA	249 - 75
AM4282	♦AVA	249 - 76
AM4283	♦AVA	249 - 77
AM4284	♦AVA	249 - 78
AM4285	♦AVA	249 - 79
AM5001	♦AVA	249 - 80
AM5002	♦AVA	249 - 81
AM5003	♦AVA	249 - 82
AM5004	♦AVA	249 - 83
AM5005	♦AVA	249 - 84
AM5006	♦AVA	249 - 85
AM5007	♦AVA	249 - 86
AM5022	♦AVA	249 - 87
AM5023	♦AVA	249 - 88
AM5024	♦AVA	249 - 89
AM5025	♦AVA	249 - 90
AM5026	♦AVA	249 - 91
AM6001	♦AVA	249 - 92
AM6002	♦AVA	249 - 93
AM6003	♦AVA	249 - 94
AM6004	♦AVA	249 - 95
AM6005	♦AVA	249 - 96
AM6006	♦AVA	249 - 97
AM6007	♦AVA	249 - 98
AM6022	♦AVA	249 - 99
AM6023	♦AVA	249 -100
AM6024	♦AVA	249 -101
AM6025	♦AVA	249 -102
AM6026	♦AVA	249 -103
AM7702	♦AVA	249 -104
AM7703	♦AVA	249 -105
AM7704	♦AVA	249 -106
AM7705	♦AVA	249 -107
AM7706	♦AVA	249 -108
AM7712	♦AVA	249 -109
AM7713	♦AVA	249 -110
AM7714	♦AVA	250 - 1
AM7715	♦AVA	250 - 2
AM7716	♦AVA	250 - 3
AM7722	♦AVA	250 - 4
AM7723	♦AVA	250 - 5
AM7724	♦AVA	250 - 6
AM7725	♦AVA	250 - 7
AM7726	♦AVA	250 - 8

△-Registered with JEDEC by this manufacturer

♦-Mfr's data sheet available in microfilm service

1. TYPE No. CROSS INDEX

IN TYPE NUMBER SEQUENCE

TYPE No.	MFRS	Pg&Line
AM7732	♦AVA	250 - 9
AM7733	♦AVA	250 - 10
AM7734	♦AVA	250 - 11
AM7735	♦AVA	250 - 12
AM8402	♦AVA	250 - 13
AM8403	♦AVA	250 - 14
AM8404	♦AVA	250 - 15
AM8405	♦AVA	250 - 16
AM8406	♦AVA	250 - 17
AM8422	♦AVA	250 - 18
AM8423	♦AVA	250 - 19
AM8424	♦AVA	250 - 20
AM8425	♦AVA	250 - 21
AM8426	♦AVA	250 - 22
AM9922	♦AVA	250 - 23
AM9923	♦AVA	250 - 24
AM9924	♦AVA	250 - 25
AM9925	♦AVA	250 - 26
AM9926	♦AVA	250 - 27
AM14512	♦AVA	250 - 28
AM14513	♦AVA	250 - 29
AM14514	♦AVA	250 - 30
AM14515	♦AVA	250 - 31
AM14516	♦AVA	250 - 32
AM14517	♦AVA	250 - 33
AMF4556F	♦AVA	250 - 34
AMG4000	♦AVA	250 - 35
AMG4003	♦AVA	250 - 36
AMG4010	♦AVA	250 - 37
AMG4030	♦AVA	250 - 38
AMG4031	♦AVA	250 - 39
AMG4032	♦AVA	250 - 40
AMG4033	♦AVA	250 - 41
AMG4034	♦AVA	250 - 42
AMG4045	♦AVA	250 - 43
AMG4050	♦AVA	250 - 44
AMG4051	♦AVA	250 - 45
AMG4052	♦AVA	250 - 46
AMG4053	♦AVA	250 - 47
AMG4500	♦AVA	250 - 48
AMG4501	♦AVA	250 - 49
AMG4502	♦AVA	250 - 50
AMG4503	♦AVA	250 - 51
AMG4504	♦AVA	250 - 52
AMG5200	♦AVA	250 - 53
AMG5201	♦AVA	250 - 54
AMG5202	♦AVA	250 - 55
AMG5203	♦AVA	250 - 56
AMG5204	♦AVA	250 - 57
AMP6423	♦AVA	250 - 58
AMP6424	♦AVA	250 - 59
AMP6425	♦AVA	250 - 60
AMP6426	♦AVA	250 - 61
AMP8422	♦AVA	250 - 62
AMP8423	♦AVA	250 - 63
AMP8424	♦AVA	250 - 64
AMP8425	♦AVA	250 - 65
AMP8426	♦AVA	250 - 66
AMT4012	♦AVA	250 - 67
AMT4013	♦AVA	250 - 68
AMT4014	♦AVA	250 - 69
AMT4015	♦AVA	250 - 70
AMT4016	♦AVA	250 - 71
AMT4017	♦AVA	250 - 72
AMT4018	♦AVA	250 - 73
AMT4022	♦AVA	250 - 74
AMT4023	♦AVA	250 - 75
AMT4024	♦AVA	250 - 76
AMT4051	♦AVA	250 - 77
AMT4052	♦AVA	250 - 78
AMT4053	♦AVA	250 - 79
AMT4054	♦AVA	250 - 80
AMT4063	♦AVA	250 - 81
AMT8032	♦AVA	250 - 82
AMT8033	♦AVA	250 - 83
AMT8034	♦AVA	250 - 84
AMT8035	♦AVA	250 - 85
AMT8045	♦AVA	250 - 86
AMT8052	♦AVA	250 - 87
AMT8053	♦AVA	250 - 88
AMT8054	♦AVA	250 - 89
AMT8055	♦AVA	250 - 90
AMT10033	♦AVA	250 - 91
AMT10034	♦AVA	250 - 92
AMT10035	♦AVA	250 - 93
AMT10045	♦AVA	250 - 94
AMT12013	♦AVA	250 - 95
AMT12014	♦AVA	250 - 96
AMT12015	♦AVA	250 - 97
AMT12016	♦AVA	250 - 98
AMT12017	♦AVA	250 - 99
AMT12033	♦AVA	250 -100
AMT12034	♦AVA	250 -101
AMT12035	♦AVA	250 -102
AMT12036	♦AVA	250 -103
AMT12046	♦AVA	250 -104
AMT12413	♦AVA	250 -105
AMT12414	♦AVA	250 -106
AMT12415	♦AVA	250 -107
AMT12416	♦AVA	250 -108
AMT12417	♦AVA	250 -109
AMT12433	♦AVA	250 -110
AMT12434	♦AVA	251 - 1
AMT12435	♦AVA	251 - 2
AMT12436	♦AVA	251 - 3
AMT12466	♦AVA	251 - 4
AMT18003	♦AVA	251 - 5
AMT18004	♦AVA	251 - 6
AMT18005	♦AVA	251 - 7
AMT18006	♦AVA	251 - 8
AMT18007	♦AVA	251 - 9
AMT18008	♦AVA	251 - 10
AMT18033	♦AVA	251 - 11
AMT18034	♦AVA	251 - 12
ATR12081TDA	♦AVA	251 - 13
ATR12085MBA	♦AVA	251 - 14
ATR12085MDA	♦AVA	251 - 15
ATR12085NBA	♦AVA	251 - 16
ATR12085NDA	♦AVA	251 - 17
ATR12085TBA	♦AVA	251 - 18
ATR12085TDA	♦AVA	251 - 19
ATR12091MBA	♦AVA	251 - 20
ATR12091MDA	♦AVA	251 - 21
ATR12091NBA	♦AVA	251 - 22
ATR12091NDA	♦AVA	251 - 23
ATR12091TBA	♦AVA	251 - 24
ATR12091TDA	♦AVA	251 - 25
ATR12095MBA	♦AVA	251 - 26
ATR12095MDA	♦AVA	251 - 27
ATR12095NBA	♦AVA	251 - 28
ATR12095NDA	♦AVA	251 - 29
ATR12095TBA	♦AVA	251 - 30
ATR12095TDA	♦AVA	251 - 31
ATR12451MBA	♦AVA	251 - 32
ATR12451MDA	♦AVA	251 - 33
ATR12451NBA	♦AVA	251 - 34
ATR12451NDA	♦AVA	251 - 35
ATR12451TBA	♦AVA	251 - 36
ATR12451TDA	♦AVA	251 - 37
ATR12455MBA	♦AVA	251 - 38
ATR12455MDA	♦AVA	251 - 39
ATR12455NBA	♦AVA	251 - 40
ATR12455NDA	♦AVA	251 - 41
ATR12455TBA	♦AVA	251 - 42
ATR12455TDA	♦AVA	251 - 43
ATR12481MBA	♦AVA	251 - 44
ATR12481MDA	♦AVA	251 - 45
ATR12481NBA	♦AVA	251 - 46
ATR12481NDA	♦AVA	251 - 47
ATR12481TBA	♦AVA	251 - 48
ATR12481TDA	♦AVA	251 - 49
ATR12485MBA	♦AVA	251 - 50
ATR12485MDA	♦AVA	251 - 51
ATR12485NBA	♦AVA	251 - 52
ATR12485NDA	♦AVA	251 - 53
ATR12485TBA	♦AVA	251 - 54
ATR12485TDA	♦AVA	251 - 55
ATR12491MBA	♦AVA	251 - 56
ATR12491MDA	♦AVA	251 - 57
ATR12491NBA	♦AVA	251 - 58
ATR12491NDA	♦AVA	251 - 59
ATR12491TBA	♦AVA	251 - 60
ATR12491TDA	♦AVA	251 - 61
ATR12495MBA	♦AVA	251 - 62
ATR12495MDA	♦AVA	251 - 63
ATR12495NBA	♦AVA	251 - 64
ATR12495NDA	♦AVA	251 - 65
ATR12495TBA	♦AVA	251 - 66
ATR12495TDA	♦AVA	251 - 67
ATR16051MBA	♦AVA	251 - 68
ATR16051MDA	♦AVA	251 - 69
ATR16055MBA	♦AVA	251 - 70
ATR16055MDA	♦AVA	251 - 71
ATR16081MBA	♦AVA	251 - 72
ATR16081MDA	♦AVA	251 - 73
ATR16081NBA	♦AVA	251 - 74
ATR16081NDA	♦AVA	251 - 75
ATR16081TBA	♦AVA	251 - 76
ATR16081TDA	♦AVA	251 - 77
ATR16085MBA	♦AVA	251 - 78
ATR16085MDA	♦AVA	251 - 79
ATR16085NBA	♦AVA	251 - 80
ATR16085NDA	♦AVA	251 - 81
ATR16085TBA	♦AVA	251 - 82
ATR16085TDA	♦AVA	251 - 83
ATR16091MBA	♦AVA	251 - 84
ATR16091MDA	♦AVA	251 - 85
ATR16091NBA	♦AVA	251 - 86
ATR16091NDA	♦AVA	251 - 87
ATR16091TBA	♦AVA	251 - 88
ATR16091TDA	♦AVA	251 - 89
ATR16095MBA	♦AVA	251 - 90
ATR16095MDA	♦AVA	251 - 91
ATR16095NBA	♦AVA	251 - 92
ATR16095NDA	♦AVA	251 - 93
ATR16095TBA	♦AVA	251 - 94
ATR16095TDA	♦AVA	251 - 95
ATR18051MBA	♦AVA	251 - 96
ATR18051MDA	♦AVA	251 - 97
ATR18055MBA	♦AVA	251 - 98
ATR18055MDA	♦AVA	251 - 99
ATR18071	♦AVA	252 - 47
ATR18081MBA	♦AVA	252 - 48
ATR18081MDA	♦AVA	252 - 49
ATR18081NBA	♦AVA	252 - 50
ATR18081NDA	♦AVA	252 - 51
ATR18081TBA	♦AVA	252 - 52
ATR18081TDA	♦AVA	252 - 53
ATR18085MBA	♦AVA	252 - 54
ATR18085MDA	♦AVA	252 - 55
ATR18085NBA	♦AVA	252 - 56
ATR18085NDA	♦AVA	252 - 57
ATR18085TBA	♦AVA	252 - 58
ATR18085TDA	♦AVA	252 - 59
ATR18091MBA	♦AVA	252 - 60
ATR18091MDA	♦AVA	252 - 61
ATR18091NBA	♦AVA	252 - 62
ATR18091NDA	♦AVA	252 - 63
ATR18091TBA	♦AVA	252 - 64
ATR18091TDA	♦AVA	252 - 65
ATR18095MBA	♦AVA	252 - 66
ATR18095MDA	♦AVA	252 - 67
ATR18095NBA	♦AVA	252 - 68
ATR18095NDA	♦AVA	252 - 69
ATR18095TBA	♦AVA	252 - 70
ATR18095TDA	♦AVA	252 - 71
ATR26071	♦AVA	252 - 72
ATR40071	♦AVA	252 - 73
ATV5030	♦TRWS	252 - 74
ATV5080	♦TRWS	252 - 75
AV7104	♦AVA	248 - 69
AV7203	♦AVA	248 - 70
AV7204	♦AVA	248 - 71
AV7206	♦AVA	248 - 72
AV7216	♦AVA	248 - 73
AV7218	♦AVA	248 - 74
AV7224	♦AVA	248 - 75
AV7236	♦AVA	248 - 76
AV7238	♦AVA	248 - 77
AV7248	♦AVA	248 - 78
AV7403	♦AVA	248 - 79
AV7413	♦AVA	248 - 80
AV7443	♦AVA	248 - 81
AV7453	♦AVA	248 - 82
AV7814	AVA	248 - 83
AV7871	♦AVA	248 - 84
AV7872	♦AVA	248 - 85
AV78218	AVA	248 - 92
AV78318	AVA	248 - 93
AV78418	♦AVA	248 - 94
AVD7104	♦AVA	248 - 95
AVD7203	♦AVA	248 - 96
AVD7204	♦AVA	248 - 97
AVD7206	♦AVA	248 - 98
AVD7216	♦AVA	248 - 99
AVD7218	♦AVA	248 -100
AVD7224	♦AVA	248 -101
AVD7236	♦AVA	248 -102
AVD7238	♦AVA	248 -103
AVD7403	♦AVA	248 -104
AVD7413	♦AVA	248 -105
AVD7443	♦AVA	248 -106
AVD7453	♦AVA	248 -107
AVD7814	♦AVA	248 -108
AVD7871	♦AVA	248 -109
AVD7872	♦AVA	248 -110
AVD71214	♦AVA	249 - 1
AVD71241	♦AVA	249 - 3
AVD71251	♦AVA	249 - 4
AVD71261	♦AVA	249 - 5
AVD71826	♦AVA	249 - 6
AVD78218	♦AVA	249 - 7
AVD78318	♦AVA	249 - 8
AVD78418	♦AVA	249 - 9
AW11700	♦AVA	252 - 76
AW14502	♦AVA	252 - 77
AW14503	♦AVA	252 - 78
AW14504	♦AVA	252 - 79
AW14505	♦AVA	252 - 80
AW14506	♦AVA	252 - 81
AW14507	♦AVA	252 - 82
AWT2032	♦AVA	252 - 83
AWT2033	♦AVA	252 - 84
AWT2034	♦AVA	252 - 85
AWT2044	♦AVA	252 - 86
AWT6032	♦AVA	252 - 87
AWT6033	♦AVA	252 - 88
AWT6034	♦AVA	252 - 89
AWT6035	♦AVA	252 - 90
AWT6045	♦AVA	252 - 91
AWT6054	♦AVA	252 - 92
AWT8032	♦AVA	252 - 93
AWT8033	♦AVA	252 - 94
AWT8034	♦AVA	252 - 95
AWT8035	♦AVA	252 - 96
AWT18014	♦AVA	252 - 97
AWT18015	♦AVA	252 - 98
AWT18016	♦AVA	252 - 99
AWT18017	♦AVA	252 -100
AWT18018	♦AVA	252 -101
AWT18033	♦AVA	252 -102
AWT18034	♦AVA	252 -103
AWT18035	♦AVA	252 -104
AWT18036	♦AVA	252 -105
AWT18037	♦AVA	252 -106
AWT18038	♦AVA	252 -107
AWT18039	♦AVA	252 -108
AWT18057	♦AVA	252 -109
AWT18633	♦AVA	252 -110
AWT18634	♦AVA	253 - 1
AWT18635	♦AVA	253 - 2
AWT18636	♦AVA	253 - 3
AWT18637	♦AVA	253 - 4
AWT18638	♦AVA	253 - 5
AWT18645	♦AVA	253 - 6
AWT18647	♦AVA	253 - 7
AWT18656	♦AVA	253 - 8
AWT18668	♦AVA	253 - 9
B3NG1601	♦EEVB	89 - 9
B3NG1605	♦EEVB	89 - 10
B3NG9800	♦EEVB	88 -110
B3NG9830	♦EEVB	89 - 11
B3NG9840	♦EEVB	89 - 12
B3NG9850	♦EEVB	89 - 1
B3NG9860	♦EEVB	89 - 2
B3NG9890	♦EEVB	88 -106
B3RH1000	♦EEVB	80 - 11
B3RH1600	♦EEVB	84 - 19
B921	♦ALP	255 - 14
B936W	♦ALP	240 - 17
B964	♦ALP	247 - 7
B972	♦ALP	243 - 88
B9400	♦ALP	230 - 62
B9500	♦ALP	230 - 63
BA47F	♦OKIJ	61 - 3
BA50G	♦OKIJ	61 - 5
BA55B	♦OKIJ	61 - 7
BA60C	♦OKIJ	61 - 8
BA65A	OKIJ	61 - 10
BA70C	OKIJ	61 - 13
BA70X	OKIJ	61 - 12
BA75C	OKIJ	61 - 19
BA80A	OKIJ	61 - 20
BA85A	OKIJ	61 - 21
BA85X	♦OKIJ	61 - 22
BA90A	OKIJ	61 - 24
BA95A	OKIJ	61 - 25
BA100C	OKIJ	61 - 26
BA102	♦PHIN	182 - 83
	♦VALG	
BA102A	PHIN	182 - 84
	VALG	
BA102B	PHIN	186 - 15
	VALG	
BA102C	PHIN	188 - 45
	VALG	
BA102D	PHIN	191 - 45
	VALG	
BA119	TIID	191 - 21
	TIIF	
BA120	TIID	172 - 11
	TIIF	
BA120A	OKIJ	61 - 28
BA138	♦SIEG	163 - 2
BA150Δ	THEF	195 - 61
BA243A	♦ITTG	214 - 14
BA244A	♦ITTG	214 - 15
BA282	♦ITTG	214 - 16
BA283	♦ITTG	214 - 17
BA379	♦APX	214 - 18
	♦VALG	
BA479	♦ALGG	214 - 19
BA479A	♦ALGG	214 - 20
BA479G	♦ALGG	214 - 21
BA481	♦APX	113 - 42
	♦MULB	
BA682	♦ITTG	214 - 22
BA683	♦ITTG	214 - 23
BAL0004-50	CTR	303 - 73
BAL0004-100	♦CTR	303 - 81
BAL0105-50	CTR	305 - 80
BAL0105-100	♦CTR	305 - 82
BAL0204-50	♦CTR	303 - 74
BAL0204-125	♦CTR	303 - 91
BAL0305-P300	♦CTR	304 - 36
BAL0710-50	♦CTR	308 - 78
BAL0710-75	♦CTR	308 - 80
BAR12-1	♦SIEG	214 - 24
BAR12-2	♦SIEG	214 - 25
BAR12-3	♦SIEG	214 - 26
BAR12-5	♦SIEG	214 - 27
BAR13-1	♦SIEG	214 - 28
BAR13-2	♦SIEG	214 - 29
BAR13-3	♦SIEG	214 - 30
BAR13-5	♦SIEG	214 - 31
BAR14-1	♦SIEG	214 - 32
BAR14-2	♦SIEG	214 - 33
BAR14-3	♦SIEG	214 - 34
BAR14-5	♦SIEG	214 - 35
BAR15-1	♦SIEG	214 - 36
BAR15-2	♦SIEG	214 - 37
BAR15-3	♦SIEG	214 - 38
BAR15-5	♦SIEG	214 - 39
BAR16-1	♦SIEG	214 - 40
BAR16-2	♦SIEG	214 - 41
BAR16-3	♦SIEG	214 - 42
BAR16-5	♦SIEG	214 - 43
BAS22	♦MULB	117 - 32
	♦PHIN	
BAS23	♦MULB	117 - 33
	♦PHIN	
BAS24	♦MULB	117 - 34
	♦PHIN	
BAS25	♦MULB	117 - 35
	♦PHIN	
BAS46	♦MULB	243 - 89
	♦PHIN	
BAT10	♦MULB	117 - 36
♦PHIN	♦RTCF	
	♦VALG	
BAT11	♦MULB	117 - 37
♦PHIN	♦RTCF	
	♦VALG	
BAT14-020D	♦SIEG	129 - 85
BAT14-020R	♦SIEG	129 - 86
BAT14-020S	♦SIEG	129 - 87
BAT14-022R	♦SIEG	129 - 88
BAT14-025R	♦SIEG	129 - 89
BAT14-050D	♦SIEG	129 - 90
BAT14-050R	♦SIEG	129 - 91
BAT14-050S	♦SIEG	129 - 92
BAT14-052R	♦SIEG	129 - 93
BAT14-055R	♦SIEG	129 - 94
BAT14-090D	♦SIEG	129 - 95
BAT14-090R	♦SIEG	129 - 96
BAT14-090S	♦SIEG	129 - 97
BAT14-092R	♦SIEG	129 - 98
BAT14-095R	♦SIEG	129 - 99
BAT14-110D	♦SIEG	129 -100
BAT14-110R	♦SIEG	129 -101
BAT14-110S	♦SIEG	129 -102
BAT14-112R	♦SIEG	129 -103
BAT14-115R	♦SIEG	129 -104
BAT15-020D	♦SIEG	129 -105
BAT15-020R	♦SIEG	129 -106
BAT15-020S	♦SIEG	129 -107
BAT15-022R	♦SIEG	129 -108
BAT15-025R	♦SIEG	129 -109
BAT15-050D	♦SIEG	130 - 1
BAT15-050R	♦SIEG	130 - 2
BAT15-050S	♦SIEG	130 - 3
BAT15-052R	♦SIEG	130 - 4
BAT15-055R	♦SIEG	130 - 5
BAT15-090D	♦SIEG	130 - 6
BAT15-090R	♦SIEG	130 - 7
BAT15-090S	♦SIEG	130 - 8
BAT15-092R	♦SIEG	130 - 9

Δ-Registered with JEDEC by this manufacturer

♦-Mfr's data sheet available in microfilm service

1. TYPE No. CROSS INDEX

IN TYPE NUMBER SEQUENCE

TYPE No.	MFRS	Pg&Line
BAT15-095R	♦SIEG	130 - 10
BAT15-110D	♦SIEG	130 - 11
BAT15-110R	♦SIEG	130 - 12
BAT15-110S	♦SIEG	130 - 13
BAT15-112R	♦SIEG	130 - 14
BAT15-115R	♦SIEG	130 - 15
BAT16	♦SIEG	243 - 90
BAT31	♦MULB	240 - 4
♦PHIN	♦RTCF	
	♦VALG	
BAT38	♦MULB	126 - 74
♦PHIN	♦RTCF	
BAT39	♦MULB	117 - 38
♦PHIN	♦RTCF	
	♦VALG	
BAT39A	RTCF	117 - 39
	♦VALG	
BAT50	♦MULB	117 - 40
♦PHIN	♦RTCF	
	♦VALG	
BAT51	♦MULB	123 - 9
♦PHIN	♦RTCF	
	♦VALG	
BAT52	♦MULB	123 - 10
♦PHIN	♦RTCF	
	♦VALG	
BAT59	♦PHIN	126 - 75
	♦VALG	
BAV22	♦PHIN	117 - 41
♦RTCF	♦VALG	
BAV46	PHIN	130 - 16
	♦VALG	
BAV71	♦VALG	116 - 43
BAV72	♦MULB	126 - 76
♦RTCF	♦VALG	
BAV75	♦MULB	132 - 35
♦PHIN	RTCF	
	♦VALG	
BAV96A	♦MULB	117 - 42
♦PHIN	♦RTCF	
	♦VALG	
BAV96B	♦MULB	117 - 43
♦PHIN	♦RTCF	
	♦VALG	
BAV96C	♦MULB	117 - 44
♦PHIN	♦RTCF	
	♦VALG	
BAV96D	♦MULB	117 - 45
♦PHIN	♦RTCF	
	♦VALG	
BAV97	♦MULB	130 - 17
PHIN	♦RTCF	
	♦VALG	
BAW95D	♦MULB	117 - 46
♦PHIN	♦RTCF	
	♦VALG	
BAW95E	♦MULB	117 - 47
♦PHIN	♦RTCF	
	♦VALG	
BAW95F	♦MULB	117 - 48
♦PHIN	♦RTCF	
	♦VALG	
BAW95G	♦MULB	117 - 49
♦PHIN	♦RTCF	
	♦VALG	
BAY96	♦MULB	188 - 32
♦PHIN	♦RTCF	
	♦VALG	
BB103	♦SIEG	188 - 67
BB104	PHIN	191 - 43
	♦SIEG	
BB104B	PHIN	191 - 56
BB104G	PHIN	191 - 57
BB105B	♦APX	154 - 40
BB105G	♦APX	153 - 56
BB106	♦APX	182 - 64
♦PHIN	♦VALG	
BB109G	♦APX	162 - 6
BB110	PHIN	188 - 68
	♦VALG	
BB110B	♦PHIN	188 - 75
BB110G	♦PHIN	188 -110
BB112	♦APX	181 - 2
BB113	PHIN	201 -103
	♦SIEG	
BB117	♦APX	171 - 71
♦PHIN	♦VALG	
BB119	♦APX	182 - 85
BB121A	♦ITT	174 -102
	♦ITTG	
BB121B	♦ITT	175 - 72
	♦ITTG	
BB122	♦ITT	177 - 40
BB130	♦APX	177 - 35
BB139	♦ITT	188 - 37
	♦ITTG	
BB141A	♦ITT	174 -103
BB141B	♦ITT	177 - 41
BB142	♦ITT	175 - 73
BB204	♦ALGG	191 - 50
♦SIEG	♦VALG	
BB204B	♦APX	177 - 87
BB204G	♦APX	177 - 88
BB205A	♦APX	174 -104
♦PHIN	♦VALG	
BB205A#	♦ALGG	180 - 81
BB205B	♦APX	180 - 82
♦PHIN	♦VALG	
BB205B#	♦ALGG	180 - 83
BB205G	♦APX	174 -105
♦PHIN	♦VALG	
BB205G#	♦ALGG	180 - 84
BB209	♦SIEG	188 - 74
BB209#	♦ALGG	183 - 62
BB212	MULB	186 - 12
♦PHIN	♦RTCF	
	♦VALG	
BB221	♦ITT	174 -106
	♦ITTG	
BB222	♦ITT	174 -107
	♦ITTG	
BB304I	♦ALGG	193 - 2
BB304II	♦ALGG	193 - 3
BB304III	♦ALGG	193 - 6
BB304IV	♦ALGG	193 - 8
BB304V	♦ALGG	194 - 96
BB329	♦ITTG	186 - 55
BB405B	♦APX	153 -109
♦MULB	♦PHIN	
♦RTCF	♦VALG	
BB405G	♦APX	153 - 57
♦MULB	♦PHIN	
	♦VALG	
BB505B	♦SIEG	155 - 92
BB505B#	♦ALGG	174 -108
BB505G	♦SIEG	156 - 71
BB505G#	♦ALGG	174 -109
BB509	♦ITTG	202 - 97
BB521	♦ITTG	203 - 47
BB529	♦ITTG	203 - 50
BB609	♦ALGG	191 - 49
BB621	♦ALGG	203 - 48
BB622	♦ALGG	203 - 49
	♦ITTG	214 - 44
	♦ITTG	214 - 45
BB629	♦ALGG	203 - 51
	♦ITTG	214 - 46
BB809	♦MULB	188 - 38
	♦VALG	
BBY24S1	♦SIEG	177 - 42
BBY25S1	♦SIEG	181 - 4
BBY26S1	♦SIEG	183 - 66
BBY27S1	♦SIEG	191 - 48
BBY31	♦APX	174 -110
	♦PHIN	
BBY32CB	♦SIEG	147 - 29
BBY32DA	♦SIEG	152 - 29
BBY32DB	♦SIEG	153 - 58
BBY32EA	♦SIEG	160 -100
BBY32FA	♦SIEG	164 - 71
BBY33DA2	♦SIEG	153 - 68
BBY34A	♦SIEG	149 - 85
BBY34B	♦SIEG	152 - 69
BBY34C	♦SIEG	156 - 70
BBY34D	♦SIEG	160 - 74
BBY35F	♦SIEG	171 - 70
BBY36	♦SIEG	160 - 75
BBY37	♦SIEG	162 -106
BBY38	♦SIEG	186 - 16
BBY40	♦APX	204 - 5
♦MULB	♦PHIN	
	VALG	
BD1	♦GESY	212 - 40
BD2	♦GESY	212 - 41
BD3	♦GESY	212 - 42
BD4	♦GESY	212 - 43
BD5	♦GESY	212 - 44
BD6	♦GESY	212 - 45
BD7	♦GESY	212 - 46
BD402	♦GESY	212 - 47
BD403	♦GESY	212 - 48
BD404	♦GESY	212 - 49
BD405	♦GESY	212 - 50
BD406	♦GESY	212 - 51
BD407	♦GESY	212 - 52
BES042	VET	109 -100
BES043	VET	108 -110
BES044	VET	109 - 27
BES046	VET	107 - 47
BES048	VET	109 - 56
BES050	VET	107 - 32
BES051	VET	108 -100
BES063	VET	109 - 26
BF158	WAB	306 - 29
BF159	WAB	306 - 30
BF160	WAB	303 - 9
BF160C	WAB	303 - 10
BF167	MISI	303 - 7
BF173	ALGG	306 - 14
BELI	CEN	
MISI	NASG	
SGSI	SWT	
THEF	TIIF	
	WAB	
BF181	CRI	306 - 25
♦PHIN	TIIF	
♦VALG	WAB	
BF182	CRI	306 - 47
HSE	♦PHIN	
♦VALG	WAB	
BF183	CRI	306 - 90
♦PHIN	♦VALG	
	WAB	
BF198	MISI	303 - 27
BF199	MISI	306 - 17
PHIN	♦VALG	
BF240	MISI	302 - 73
	♦VALG	
BF241	MISI	302 - 72
	♦VALG	
BF271	NSC	303 -100
	WAB	
BF273	WAB	306 - 31
BF274	WAB	306 - 32
BF370	♦VALG	305 - 44
BF450	♦VALG	302 - 68
BF451	♦VALG	302 - 69
BF480	♦PHIN	311 - 70
♦RTCF	♦VALG	
BF496	♦VALG	306 - 15
BF502S(A)	♦THEF	306 - 53
BF536	♦MULB	302 - 70
♦PHIN	VALG	
BF536#	♦APX	302 - 71
BF568	SIEG	306 - 19
BF569	♦MULB	307 - 8
	♦SIEG	
BF579	♦APX	310 - 56
♦MULB	♦PHIN	
♦SIEG	VALG	
BF599	♦SIEG	306 - 10
	THEF	
BF606A	♦SIEG	306 - 48
	♦VALG	
BF660	♦MULB	306 - 46
	♦SIEG	
BF763	♦VALG	311 - 48
BF767	♦APX	307 - 66
♦MULB	♦PHIN	
	♦SIEG	
BF799	♦SIEG	308 - 98
BF907	♦TIID	306 - 91
BF926	MULB	305 - 55
PHIN	SIEG	
	♦VALG	
BF939	MULB	306 - 75
♦PHIN	SIEG	
	♦VALG	
BF960	SIEG	300 - 21
BF967	MULB	307 - 62
♦PHIN	♦VALG	
BF968	SIEG	308 - 94
BF970	♦PHIN	307 - 10
	SIEG	
BF970#	♦VALG	307 - 63
BF979	♦MULB	310 - 55
PHIN	♦VALG	
BF979S	♦SIEG	311 - 24
BF989	♦MULB	300 - 22
	♦PHIN	
BF990	♦MULB	300 - 23
	♦PHIN	
BF994	♦PHIN	300 - 24
BF996	♦MULB	300 - 25
	♦PHIN	
BFG34	♦VALG	315 - 83
BFG65	♦VALG	319 - 74
BFG90A	♦ALP	317 - 78
♦MULB	♦PHIN	
	♦VALG	
BFG91A	♦MULB	319 - 4
♦PHIN	♦VALG	
BFG96	♦ALP	318 - 28
♦MULB	♦PHIN	
	♦VALG	
BFP10	♦THEF	316 - 30
BFP90	THEF	318 -101
BFP90A	♦ALP	318 - 10
♦MULB	♦PHIN	
♦RTCF	♦VALG	
BFP91	♦THEF	319 - 40
BFP91A	♦ALP	319 - 8
♦MULB	♦PHIN	
♦RTCF	♦VALG	
BFP96	♦ALP	317 - 49
♦MULB	♦PHIN	
♦RTCF	♦THEF	
BFQ17	♦MULB	309 - 48
	♦PHIN	
BFQ18	APX	315 - 47
♦MULB	RTCF	
	♦VALG	
BFQ19	♦MULB	318 - 29
	♦PHIN	
BFQ22	♦PHIN	318 - 90
♦RTCF	♦THEF	
BFQ22Ø	THEF	318 - 91
BFQ22#	♦VALG	317 - 70
BFQ23	♦APX	317 - 79
♦MULB	♦PHIN	
	RTCF	
BFQ23#	♦VALG	317 - 80
BFQ24	♦MULB	317 - 71
♦PHIN	♦RTCF	
	♦VALG	
BFQ28	♦SIEG	316 - 10
BFQ29	♦SIEG	316 - 2
BFQ31AR	♦FERB	306 - 33
BFQ31R	♦FERB	306 - 34
	THEF	
BFQ32	♦MULB	315 - 81
♦PHIN	RTCF	
BFQ32#	♦VALG	316 - 77
BFQ32S	♦VALG	317 - 54
BFQ33	♦MULB	321 - 35
♦PHIN	♦RTCF	
BFQ33#	♦VALG	320 -102
BFQ34	♦MULB	315 - 53
♦PHIN	RTCF	
BFQ34#	♦VALG	316 - 54
BFQ34T	♦ALP	315 - 82
♦MULB	♦PHIN	
♦RTCF	♦VALG	
BFQ51	♦MULB	317 - 81
♦PHIN	♦RTCF	
	♦VALG	
BFQ52	♦PHIN	317 - 72
BFQ52#	♦MULB	317 - 73
♦RTCF	♦VALG	
BFQ53	♦PHIN	317 - 74
BFQ53#	♦MULB	317 - 75
♦RTCF	♦VALG	
BFQ57	♦SIEG	319 - 41
BFQ58	♦SIEG	319 - 42
BFQ59	♦SIEG	316 - 40
BFQ60	♦SIEG	316 - 41
BFQ63	♦MULB	317 - 37
♦PHIN	♦RTCF	
♦THEF	♦VALG	
BFQ64	♦SIEG	314 - 53
BFQ65	♦ALP	319 - 75
♦MULB	♦PHIN	
♦RTCF	♦VALG	
BFQ66	♦MULB	319 - 76
♦PHIN	♦RTCF	
BFQ68	♦MULB	316 - 61
♦PHIN	♦RTCF	
	♦VALG	
BFQ69	♦SIEG	318 - 61
BFQ70	♦SIEG	316 - 20
BFQ71	♦SIEG	317 - 41
BFQ72	♦SIEG	317 - 42
BFQ73	♦SIEG	318 - 18
BFQ74	♦SIEG	319 - 39
BFQ77	♦SIEG	319 - 51
BFQ78	♦SIEG	315 - 12
BFR14A	♦SIEG	318 - 11
BFR14B	♦SIEG	318 -102
BFR14C	♦SIEG	317 - 9
BFR15A	♦SIEG	317 - 28
BFR34A	♦SIEG	317 - 45
BFR35A	ALGG	317 - 29
	♦SIEG	
BFR49	♦MULB	317 - 82
♦PHIN	♦RTCF	
	♦VALG	
BFR53R	APX	311 - 74
♦MULB	♦PHIN	
	♦RTCF	
BFR90	♦APX	318 - 93
♦MOTA	♦MULB	
♦PHIN	♦RTCF	
♦SIEG	♦THEF	
	♦VALG	
BFR90%	♦ALGG	317 - 83
BFR90A	♦MULB	317 - 84
♦PHIN	♦RTCF	
	♦VALG	
BFR90A%	♦ALGG	317 - 85
BFR90A#	VALG	317 - 86
BFR91	♦APX	318 - 94
CRI	♦MOTA	
♦MULB	♦PHIN	
♦RTCF	♦SIEG	
♦THEF	♦VALG	
BFR91A	♦MULB	319 - 5
♦PHIN	♦RTCF	
	♦VALG	
BFR91A%	♦ALGG	318 - 95
BFR92	♦MULB	317 - 95
♦PHIN	♦THEF	
BFR92A	♦MULB	317 - 96
	♦PHIN	
BFR92AR	♦MULB	317 - 97
	♦PHIN	
BFR92R	♦MULB	317 - 98
♦PHIN	♦THEF	
BFR93	♦MULB	318 - 1
♦PHIN	♦THEF	
BFR93A	♦MULB	318 - 12
	♦PHIN	
BFR93AR	♦MULB	318 - 13
	♦PHIN	
BFR93R	♦MULB	318 - 2
♦PHIN	♦THEF	
BFR94	♦APX	315 - 54
CRI	♦MULB	
♦PHIN	♦RTCF	
	♦VALG	
BFR95	♦APX	315 - 51
♦PHIN	♦RTCF	
BFR95#	VALG	315 - 52
BFR96	♦APX	318 - 69
CRI	♦MOTA	
♦MULB	♦PHIN	
♦RTCF	♦SIEG	
♦THEF	♦VALG	
BFR96%	♦ALGG	318 - 30
BFR96S	♦MULB	318 - 34
♦PHIN	♦RTCF	
	♦VALG	
BFR96S%	♦ALGG	318 - 35
BFR99	♦SGSI	310 - 77
	♦THEF	
BFRC96	♦MOTA	317 - 55
BFS17	♦MULB	310 - 62
	♦PHIN	
BFS17R	♦MULB	310 - 63
	♦PHIN	
BFS55A	♦SIEG	317 - 44
BFS85	♦FERB	308 - 24
BFS88	♦FERB	308 - 25
BFT12	♦SIEG	311 - 97
BFT24	♦APX	313 - 8
♦MULB	♦PHIN	
♦RTCF	♦VALG	
BFT25	♦MULB	313 - 11
	♦PHIN	
BFT25R	♦MULB	313 - 12
	♦PHIN	
BFT50	♦THEF	315 - 27
BFT51	♦RTCF	314 - 59
BFT65	♦SIEG	317 - 24
BFT66	♦SIEG	316 - 28
BFT67	♦SIEG	316 - 29
BFT92	♦MULB	318 - 3
	♦PHIN	
BFT92R	♦MULB	318 - 4
	♦PHIN	
BFT93	♦MULB	318 - 5
	♦PHIN	
BFT93R	♦MULB	318 - 6
	♦PHIN	
BFT97	♦SIEG	316 - 11
BFT98	♦SIEG	314 - 61
BFT98T	♦SIEG	315 - 1
BFT99	♦SIEG	314 - 73
BFT99A	♦SIEG	315 - 11
BFW16A	CRI	309 - 51
♦MULB	♦PHIN	
♦RTCF	♦SGSI	
♦SIEG	♦THEF	
	♦VALG	
BFW30	HSE	311 - 27
♦MULB	♦PHIN	
♦RTCF	♦SIEG	
	♦VALG	
BFW41	WAB	306 - 35
BFW92	MULB	311 - 25
♦PHIN	♦RTCF	
SGSI	♦SIEG	
THEF	♦VALG	
BFW92%	♦ALGG	311 - 23
BFW92#	♦THEF	310 - 90
BFW92A	♦MOTA	317 - 27
BFW92A#	♦RTCF	314 - 24
	♦VALG	
BFW93	♦APX	311 - 40
♦PHIN	♦RTCF	
♦SIEG	♦VALG	
BFX19	WAB	303 - 11
BFX20	WAB	303 - 12
BFX48	HSE	303 - 24
	WAB	
BFX55	♦SIEG	306 - 55
BFX59	HSE	308 - 17
	♦SIEG	
BFX59F	HSE	308 - 18
	♦SIEG	
BFX60	♦SIEG	306 - 16
SWT	WAB	
BFX89	♦ALGG	309 - 45
♦APX	CRI	
♦FERB	HSE	
♦MOTA	♦MULB	
♦PHIN	♦RTCF	
SGSI	♦SIEG	
♦THEF	♦VALG	
	WAB	
BFY78	TIIF	305 - 58
	WAB	
BFY79	HSE	303 - 22
	WAB	
BFY90	♦FERB	310 - 60
HSE	♦MOTA	
	♦THEF	
BFY90%	♦ALGG	310 - 61
BFY90#	♦FERB	310 - 76
♦MULB	♦PHIN	
♦RTCF	♦SIEG	
	♦VALG	
BGY22	APX	305 - 86
	♦VALG	
BGY22A	APX	305 - 40
	♦VALG	
BGY23	APX	305 - 88
BGY23A	APX	305 - 41
BL221	VET	86 - 34
BL234C	♦VET	86 - 35
BL244	♦VET	81 - 3
BL245	♦VET	81 - 35
BL246	♦VET	86 - 33
BL246A	VET	86 - 36
BL325	♦VET	108 - 64
BL336	♦VET	109 - 52
BL350	♦VET	107 - 96
BL362	VET	109 - 53
BL364	VET	108 -105
BL366	♦VET	107 - 97
BL367A	VET	108 - 77
BL397A	VET	108 - 82
BL640	VET	105 - 3
BL644	VET	109 - 42
BL696	VET	107 - 36
BL800A	VET	68 - 89
BL803	♦VET	68 - 70
BL807	♦VET	69 - 6
BL814	♦VET	69 - 85
BL825	♦VET	68 - 85
BL829	♦VET	67 -104
BL843	♦VET	67 -103
BL844	♦VET	70 - 29
BL847	♦VET	68 - 73
BL849	♦VET	69 - 68
BL934A	VET	109 -105
BL962	VET	106 - 35
BL965	VET	108 - 37
BL967A	VET	109 - 9
BL970	VET	108 - 49
BL973	VET	107 - 75
BL982	VET	106 - 32
BLA007-1	VET	106 - 26
BLA009	VET	105 - 66
BLA011	VET	105 - 17
BLA012	VET	105 - 30
BLA013	VET	106 - 25
BLA019	VET	105 - 12
BLK001	♦VET	69 - 5

Δ-Registered with JEDEC by this manufacturer

♦-Mfr's data sheet available in microfilm service

1. TYPE No. CROSS INDEX

IN TYPE NUMBER SEQUENCE

TYPE No.	MFRS	Pg&Line
BLK002	♦VET	68 - 93
BLK003	♦VET	66 - 31
BLK004	♦VET	69 - 52
BLK005	♦VET	69 - 19
BLK006	♦VET	69 - 60
BLK007	♦VET	69 - 33
BLK008	♦VET	69 - 32
BLK010	♦VET	69 - 65
BLK011	♦VET	69 - 4
BLK012	♦VET	69 - 50
BLK020	♦VET	69 - 62
BLK022	♦VET	68 -104
BLK024	VET	68 - 19
BLK829	♦VET	67 -105
BLM003	♦VET	82 - 78
BLM006	VET	86 - 1
BLM014	VET	81 - 92
BLM017	♦VET	81 - 28
BLM071	♦VET	85 - 65
BLM076A	VET	86 - 18
BLM086	♦VET	81 - 27
BLM093	♦VET	81 - 30
BLM095	♦VET	81 - 36
BLM116	♦VET	81 - 38
BLM127	♦VET	81 - 40
BLM129	♦VET	82 - 79
BLM136	♦VET	82 - 53
BLM138	♦VET	82 - 46
BLM143A	♦VET	85 - 71
BLM148	VET	78 - 48
BLM149A	♦VET	81 - 32
BLM153	♦VET	81 - 43
BLM154	VET	78 - 49
BLM155	♦VET	81 - 33
BLM162	♦VET	85 - 84
BLM167	♦VET	80 -105
BLM176	♦VET	83 - 13
BLM179	♦VET	81 - 39
BLM181	VET	88 - 58
BLM183	VET	88 - 84
BLM184	VET	83 - 3
BLM186	♦VET	81 - 42
BLM188	♦VET	83 - 41
BLM190	♦VET	81 - 34
BLM192	♦VET	88 - 68
BLM195	♦VET	83 - 42
BLM196	VET	81 - 31
BLM198	♦VET	85 - 69
BLM199	VET	85 -104
BLM201	♦VET	81 - 37
BLM203	♦VET	82 - 59
BLM204	♦VET	82 - 47
BLM205	♦VET	81 - 26
BLM207	♦VET	83 - 2
BLM211	♦VET	82 - 48
BLM213	♦VET	81 - 29
BLM256	♦VET	82 - 49
BLM304	♦VET	85 - 44
BLM306	♦VET	88 - 35
BLM309	♦VET	88 - 80
BLM310	♦VET	85 - 72
BLM311	♦VET	87 -106
BLM312	♦VET	87 - 97
BLM313	♦VET	87 - 95
BLP005D	VET	105 - 97
BLP017D	VET	105 - 95
BLP027D	VET	105 - 99
BLP136D	VET	105 - 96
BLP149D	VET	105 - 89
BLP215	VET	105 -100
BLS032	VET	107 - 67
BLS526	VET	107 - 86
BLS530	VET	109 - 4
BLS531	VET	109 -103
BLT028	VET	108 - 43
BLT033	VET	109 - 35
BLT036	VET	110 - 1
BLT072	VET	107 -110
BLT074	VET	106 - 69
BLT088	VET	108 - 69
BLT101	VET	108 - 74
BLT114A	VET	108 - 41
BLT119	VET	107 - 21
BLU20(A)	♦RTCF	305 - 23
BLU30(A)	♦RTCF	305 - 26
BLU99	♦ALP	315 - 90
♦MULB	♦PHIN	
	♦RTCF	
BLW17	♦FERB	307 - 72
BLW27	♦THEF	314 - 56
BLW32	APX	245 -107
♦MULB	♦PHIN	315 - 14
♦RTCF	♦VALG	
BLW33	APX	245 -108
♦MULB	♦PHIN	315 - 15
♦RTCF	♦VALG	
BLW34	APX	245 -109
♦MULB	♦PHIN	315 - 13
♦RTCF	♦VALG	
BLW39	♦FERB	307 - 73
BLW50F	♦PHIN	306 - 7
BLW75	♦MULB	306 -103
	♦RTCF	
BLW79	APX	311 - 20
♦MULB	♦PHIN	
♦RTCF	♦VALG	
BLW80	APX	311 - 44
♦MULB	♦PHIN	
♦RTCF	♦VALG	
BLW81	APX	310 - 71
♦MULB	♦PHIN	
♦RTCF	♦VALG	
BLW82	APX	312 - 99
cont.next col.		

TYPE No.	MFRS	Pg&Line
BLW82		
(cont.)	♦MULB	
♦PHIN	RTCF	
SIEG	♦VALG	
BLW89	♦MULB	305 - 38
PHIN	♦RTCF	
	♦VALG	
BLW90	♦MULB	309 - 81
PHIN	♦RTCF	
	♦VALG	
BLW91	♦MULB	309 - 87
♦PHIN	♦RTCF	
	VALG	
BLW98	♦MULB	307 - 23
♦PHIN	♦RTCF	
SIEG	♦VALG	
BLX37	♦RTCF	315 - 2
BLX37C	♦RTCF	315 - 3
BLX37D	♦RTCF	315 - 4
BLX38	♦RTCF	315 - 7
BLX38C	RTCF	315 - 8
BLX38D(A)	♦RTCF	315 - 9
BLX65	APX	310 - 79
HSE	♦MULB	
♦PHIN	♦RTCF	
	♦VALG	
BLX66	APX	310 - 80
♦MULB	♦PHIN	
♦RTCF	♦VALG	
BLX67	APX	310 - 81
CRI	♦MULB	
♦PHIN	♦RTCF	
	♦VALG	
BLX68	APX	310 - 69
♦MULB	♦PHIN	
♦RTCF	♦VALG	
BLX69A	APX	308 - 72
♦MULB	♦PHIN	
♦RTCF	♦VALG	
BLX91A	APX	309 - 52
♦MULB	♦PHIN	
♦RTCF	♦VALG	
BLX92A	APX	309 - 56
♦MULB	♦PHIN	
♦RTCF	♦VALG	
BLX93A	APX	309 - 76
♦MULB	♦PHIN	
	♦VALG	
BLX94A	APX	308 -103
♦MULB	♦PHIN	
	♦VALG	
BLX94C	♦MULB	308 - 87
♦PHIN	♦RTCF	
	♦VALG	
BLX95	♦APX	307 - 81
♦MULB	♦PHIN	
♦RTCF	♦VALG	
BLX96	APX	309 - 57
♦MULB	♦PHIN	
♦RTCF	♦VALG	
BLX97	APX	309 - 77
♦MULB	♦PHIN	
♦RTCF	♦VALG	
BLX98	APX	314 - 3
♦MULB	♦PHIN	
♦RTCF	♦VALG	
BLY38	♦FERB	310 - 68
BM25LE	♦EEVB	86 - 83
BM1038	EEVB	82 - 90
BM1039	EEVB	81 - 94
BS48	♦EEVB	105 - 76
BS52	♦EEVB	108 - 99
BS58	♦EEVB	107 - 5
BS60	EEVB	111 - 18
BS63	♦EEVB	111 - 22
BS68	♦EEVB	111 - 23
BS70	EEVB	111 - 19
BS71	♦EEVB	111 - 21
BS72	♦EEVB	111 - 25
BS73	♦EEVB	111 - 26
BS76	♦EEVB	109 - 25
BS80	EEVB	109 - 21
BS82	♦EEVB	105 - 51
BS84	♦EEVB	105 - 54
BS92	♦EEVB	105 - 68
BS102	♦EEVB	110 - 20
BS104	♦EEVB	106 -109
BS110	♦EEVB	107 - 26
BS114	♦EEVB	105 - 77
BS116	♦EEVB	105 - 67
BS118	♦EEVB	105 - 46
BS128	♦EEVB	106 - 94
BS138	♦EEVB	106 - 22
BS148	♦EEVB	105 - 78
BS156	♦EEVB	108 - 67
BS158	♦EEVB	108 - 2
BS162	♦EEVB	110 - 52
BS166	♦EEVB	111 - 6
BS168	♦EEVB	110 - 28
BS172	♦EEVB	107 - 13
BS178	♦EEVB	110 - 90
BS188	♦EEVB	110 - 98
BS190	♦EEVB	110 - 39
BS192	EEVB	108 - 92
BS194	♦EEVB	110 - 32
BS196	♦EEVB	108 - 93
BS200	♦EEVB	109 - 96
BS202	♦EEVB	108 - 4
BS204	♦EEVB	107 - 23
BS206	♦EEVB	108 - 88
BS216	♦EEVB	110 - 91
BS217	♦EEVB	110 - 3
BS219	♦EEVB	110 - 4
BS220	EEVB	106 - 18

TYPE No.	MFRS	Pg&Line
BS224	EEVB	106 - 34
BS226	♦EEVB	110 - 45
BS228	♦EEVB	108 - 57
BS232	♦EEVB	111 - 1
BS234	♦EEVB	105 - 1
BS246	♦EEVB	111 - 24
BS248	♦EEVB	105 - 49
BS256	♦EEVB	110 - 92
BS258	♦EEVB	110 - 76
BS260	♦EEVB	110 - 99
BS262	♦EEVB	110 -100
BS264	♦EEVB	110 - 77
BS276	♦EEVB	110 - 73
BS277	♦EEVB	110 - 5
BS280	♦EEVB	110 -101
BS286	♦EEVB	107 - 35
BS310	♦EEVB	105 - 69
BS314	EEVB	108 - 44
BS316	♦EEVB	109 - 84
BS320	♦EEVB	109 - 95
BS324	♦EEVB	106 -107
BS342	♦EEVB	89 - 18
BS344	♦EEVB	88 - 98
BS384	♦EEVB	89 - 3
BS386	♦EEVB	89 - 22
BS390	♦EEVB	107 - 22
BS412	♦EEVB	105 - 55
BS426	♦EEVB	107 - 55
BS430	♦EEVB	107 - 48
BS440	♦EEVB	108 - 3
BS450	♦EEVB	108 - 91
BS452	♦EEVB	108 - 97
BS454	♦EEVB	110 -108
BS462	♦EEVB	108 - 56
BS466	♦EEVB	108 - 89
BS500	♦EEVB	110 - 64
BS608A	♦EEVB	105 - 90
BS608B	♦EEVB	105 - 91
BS616A	♦EEVB	105 - 93
BS616B	♦EEVB	105 - 94
BS620	♦EEVB	89 - 21
BS624A	♦EEVB	105 - 79
BS624B	♦EEVB	105 - 80
BS624C	♦EEVB	105 - 81
BS624D	♦EEVB	105 - 82
BS624E	♦EEVB	105 - 83
BS624K	♦EEVB	105 - 84
BS624L	♦EEVB	105 - 85
BS624M	♦EEVB	105 - 86
BS624N	♦EEVB	105 - 87
BS624P	♦EEVB	105 - 88
BS630	♦EEVB	105 - 92
BS640	♦EEVB	89 - 13
BS644	♦EEVB	88 -100
BS646	♦EEVB	88 -109
BS648	♦EEVB	88 -105
BS658	♦EEVB	89 - 6
BS660	♦EEVB	89 - 4
BS662	♦EEVB	89 - 8
BS674	♦EEVB	89 - 19
BS676	♦EEVB	88 -104
BS678	♦EEVB	89 - 14
BS698	♦EEVB	88 -103
BS702	♦EEVB	106 - 7
BS710	♦EEVB	106 - 6
BS714	♦EEVB	107 - 38
BS716	♦EEVB	106 - 12
BS718	♦EEVB	107 - 7
BS720	♦EEVB	107 - 6
BS724	♦EEVB	107 - 49
BS726	♦EEVB	107 - 50
BS728	♦EEVB	107 - 51
BS732	♦EEVB	107 - 39
BS748	♦EEVB	105 - 98
BS750	♦EEVB	89 - 7
BS752	♦EEVB	89 - 15
BS756	♦EEVB	240 - 5
BS758	♦EEVB	89 - 23
BS760	♦EEVB	89 - 25
BS762	♦EEVB	88 -102
BS764	♦EEVB	89 - 16
BS766#ai	EEVB	247 - 8
BS772	EEVB	247 - 9
BS774	♦EEVB	89 - 24
BS776	♦EEVB	88 -101
BS778	♦EEVB	89 - 27
BS784	♦EEVB	89 - 26
BS798	♦EEVB	111 - 28
BS800	♦EEVB	107 - 16
BS806A	♦EEVB	110 - 86
BS806B	♦EEVB	110 - 74
BS806C	♦EEVB	110 -105
BS806D	♦EEVB	110 -106
BS806E	♦EEVB	110 - 75
BS806F	♦EEVB	110 - 48
BS806G	♦EEVB	110 - 87
BS806H	♦EEVB	110 - 68
BS810	♦EEVB	108 - 96
BS814	♦EEVB	110 - 79
BS816	♦EEVB	110 - 49
BS818	♦EEVB	111 - 4
BS822	♦EEVB	108 -102
BS824	♦EEVB	107 - 9
BS826	♦EEVB	111 - 2
BS828	♦EEVB	110 - 53
BS830	EEVB	110 -104
BS832	♦EEVB	107 - 10
BS833	♦EEVB	106 - 4
BS834	EEVB	106 - 23
BS836	EEVB	106 - 20
BS838	EEVB	106 - 21
BS842	EEVB	108 - 54
BS844	EEVB	110 -109
BS846	EEVB	107 - 11

TYPE No.	MFRS	Pg&Line
BS848	EEVB	107 - 14
BS854	♦EEVB	106 - 97
BS856	EEVB	107 - 68
BS858	EEVB	106 - 31
BS860	EEVB	108 - 10
BS868	EEVB	107 - 15
BS870	♦EEVB	106 - 96
BS872	♦EEVB	106 - 95
BS874	EEVB	106 - 78
BS876	EEVB	106 - 84
BS880	EEVB	106 - 24
BS882	EEVB	110 - 78
BS894	EEVB	107 - 33
BS898	EEVB	111 - 29
BS902	EEVB	107 - 40
BS904	EEVB	107 - 8
BS908	EEVB	110 - 96
BS910	♦EEVB	106 - 27
BS912	♦EEVB	106 - 28
BS914	EEVB	108 - 18
BS916	EEVB	106 - 29
BS918	EEVB	109 - 85
BS928	EEVB	108 - 63
BS930	EEVB	106 - 37
BS932	EEVB	107 - 54
BS940	EEVB	106 - 16
BS946	EEVB	107 - 52
BS950	EEVB	110 - 51
BS952	EEVB	110 - 80
BS956	EEVB	108 - 62
BS958	EEVB	110 - 93
BS958D	EEVB	110 - 94
BS959	♦EEVB	110 - 95
BS960	EEVB	110 - 50
BS962	EEVB	110 - 82
BS966	EEVB	107 - 69
BS968	EEVB	110 - 71
BS969	EEVB	110 - 70
BS970	EEVB	106 - 36
BS974	EEVB	110 - 72
BS975	EEVB	111 - 30
BS976	EEVB	111 - 27
BS986	EEVB	106 - 17
BS990	EEVB	106 - 30
BS994	EEVB	107 - 34
BSS65	♦FERB	303 - 13
BSS65R	FERB	303 - 14
BSV52	♦FERB	305 - 49
BSV52R	♦FERB	305 - 50
BSX27	WAB	306 - 41
BSX28	HSE	303 - 23
	WAB	
BSX29	HSE	303 - 25
	WAB	
BT237D	BTC	69 -102
BT860	BTC	68 - 12
BT1315	BTC	68 - 13
BT1316	BTC	66 - 62
BT6236A	BTC	66 - 64
BT6390A	BTC	68 - 15
BT6390B	BTC	68 - 20
BTR123	VET	109 - 45
BTR136	VET	106 -101
BTR141	VET	109 -101
BTR147	VET	109 -110
BTR156	VET	109 -106
BTR162	VET	109 - 57
BTR171	VET	108 - 45
BTR174	VET	108 - 46
BTR198A	VET	109 - 91
BTR202	VET	109 -109
BTR209	VET	109 - 80
BTR537	VET	109 - 1
BTR540	VET	109 - 17
BTR541	VET	107 - 29
BTR545A	VET	108 - 73
BTR547	VET	107 - 64
BTR554	VET	109 - 2
BTR570A	VET	108 - 28
BTR574	VET	109 - 10
BTR576	VET	109 - 20
BTR583	VET	106 -102
BTR608	VET	109 - 6
BTR614	VET	107 - 85
BTR629A	VET	108 -101
BTR630	VET	109 - 7
BTR632A	VET	106 - 92
BTR633	VET	106 - 86
BTR639	VET	108 - 70
BTR640	VET	109 - 24
BTR641	VET	107 - 12
BTR647	VET	106 - 83
BTR666	VET	108 - 47
BW050	OKIJ	61 - 4
BW080	♦OKIJ	61 - 18
BWS1	♦MOVB	60 - 24
BWS2	♦MOVB	60 - 29
BWX5	♦MOVB	60 - 33
BXY10C	♦SIEG	156 - 2
BXY10D	♦SIEG	162 - 14
BXY11E	♦SIEG	168 - 90
BXY11F	♦SIEG	177 - 90
BXY13C	♦SIEG	156 - 3
BXY13CA	♦SIEG	134 - 1
BXY13D	♦SIEG	162 - 15
BXY14E	♦SIEG	168 - 91
BXY14F	♦SIEG	177 - 91
BXY15CA3	♦SIEG	134 - 2
BXY15CA5	♦SIEG	135 - 27
BXY18A2	♦SIEG	134 - 3
BXY18AB2	♦SIEG	134 - 4
BXY18AB4	♦SIEG	135 - 28

TYPE No.	MFRS	Pg&Line
BXY18AB5	♦SIEG	135 - 29
BXY18AB6	♦SIEG	135 - 30
BXY18AB	♦SIEG	134 - 5
BXY19E	♦SIEG	169 - 95
BXY19F	♦SIEG	177 - 92
BXY19GB	♦SIEG	134 - 6
BXY22G	♦SIEG	174 - 93
BXY22H	♦SIEG	177 - 33
BXY22J	♦SIEG	177 - 86
BXY23	♦SIEG	177 - 34
BXY27	♦MULB	162 - 97
♦PHIN	♦RTCF	
BXY28	♦MULB	151 - 20
♦PHIN	♦RTCF	
BXY29	♦MULB	148 - 23
♦PHIN	♦RTCF	
BXY32	♦MULB	145 - 30
♦PHIN	♦RTCF	
BXY35	♦PHIN	171 - 64
	♦RTCF	
BXY35A	♦MULB	171 - 65
	♦PHIN	
BXY36	♦RTCF	164 - 60
BXY36B	♦MULB	164 - 61
	♦PHIN	
BXY36C	♦MULB	164 - 62
	♦PHIN	
BXY36D	♦MULB	164 - 63
	♦PHIN	
BXY36E	♦MULB	164 - 64
	♦PHIN	
BXY37	♦RTCF	158 - 4
BXY37B	♦MULB	158 - 5
	♦PHIN	
BXY37C	♦MULB	158 - 6
	♦PHIN	
BXY37D	♦MULB	158 - 7
	♦PHIN	
BXY37E	♦MULB	158 - 8
	♦PHIN	
BXY38	♦RTCF	152 - 37
BXY38B	♦MULB	152 - 38
	♦PHIN	
BXY38C	♦MULB	152 - 39
	♦PHIN	
BXY38D	♦MULB	152 - 40
	♦PHIN	
BXY38E	♦MULB	152 - 41
	♦PHIN	
BXY39	♦RTCF	148 - 24
BXY39B	♦MULB	148 - 25
	♦PHIN	
BXY39C	♦MULB	148 - 26
	♦PHIN	
BXY39D	♦MULB	148 - 27
	♦PHIN	
BXY39E	♦MULB	148 - 28
	♦PHIN	
BXY40	♦RTCF	143 - 30
BXY40B	♦MULB	143 - 31
	♦PHIN	
BXY40C	♦MULB	143 - 32
	♦PHIN	
BXY40D	♦MULB	143 - 33
	♦PHIN	
BXY40E	♦MULB	143 - 34
	♦PHIN	
BXY41	♦PHIN	139 -110
	♦RTCF	
BXY41B	♦MULB	139 - 73
	♦PHIN	
BXY41C	♦MULB	139 - 74
	♦PHIN	
BXY41D	♦MULB	139 - 75
	♦PHIN	
BXY41E	♦MULB	139 - 76
	♦PHIN	
BXY42B	SDI	214 - 47
BXY42BA2	♦SIEG	214 - 48
BXY42BA3	♦SIEG	214 - 49
BXY42BA4	♦SIEG	214 - 50
BXY42BA5	♦SIEG	214 - 51
BXY42BA6	♦SIEG	214 - 52
BXY43A	♦SIEG	214 - 53
BXY43B	♦SIEG	214 - 54
BXY43C#	♦SIEG	214 - 55
BXY44E	♦SIEG	214 - 56
BXY48-20(A)	♦MULB	138 - 77
BXY48-30(A)	♦MULB	140 - 5
BXY48-40(A)	♦MULB	142 - 99
BXY50	♦MULB	230 - 64
♦PHIN	RTCF	
	♦VALG	
BXY51	♦MULB	230 - 65
♦PHIN	RTCF	
	♦VALG	
BXY52	♦MULB	230 - 66
♦PHIN	RTCF	
	♦VALG	
BXY53	♦MULB	147 - 55
♦PHIN	♦RTCF	
	VALG	
BXY54	♦MULB	163 - 15
♦PHIN	♦RTCF	
	VALG	
BXY55	♦MULB	178 - 37
♦PHIN	♦RTCF	
	VALG	
BXY56	♦MULB	154 - 19
♦PHIN	RTCF	
	♦VALG	
BXY57	♦MULB	158 - 9
♦PHIN	RTCF	
	VALG	

△-Registered with JEDEC by this manufacturer

♦-Mfr's data sheet available in microfilm service

1. TYPE No. CROSS INDEX

IN TYPE NUMBER SEQUENCE

TYPE No.	MFRS	Pg&Line
BXY58EA	♦SIEG	214 - 57
BXY59D	♦SIEG	214 - 58
BXY60	♦MULB	230 - 67
♦PHIN	♦RTCF	
	VALG	
C1-28	♦CTR	303 - 34
C1/2-12	♦CTR	305 - 90
C2M50-28	♦CTR	305 - 78
C2M70-28R	♦CTR	303 - 75
C2M100-28A	♦CTR	303 - 82
C096509	♦CCI	117 - 50
C106009	♦CCI	117 - 51
C106509	♦CCI	117 - 52
C106516	♦CCI	123 - 50
C107009	♦CCI	117 - 53
C107016	♦CCI	123 - 51
C107509	♦CCI	117 - 54
C107516	♦CCI	123 - 52
C108016	♦CCI	123 - 53
C136009	♦CCI	117 - 55
C136509	♦CCI	117 - 56
C137009	♦CCI	117 - 57
C137509	♦CCI	117 - 58
C206009	♦CCI	117 - 59
C206509	♦CCI	117 - 60
C206516	♦CCI	123 - 54
C207009	♦CCI	117 - 61
C207016	♦CCI	123 - 55
C207509	♦CCI	117 - 62
C207516	♦CCI	123 - 56
C208016	♦CCI	123 - 57
C216509	♦CCI	117 - 63
CAY10	♦MULB	139 - 82
♦PHIN	♦RTCF	
	♦VALG	
CC095509	♦CCI	130 - 18
CC104816	♦CCI	132 - 70
CC105009	♦CCI	130 - 19
CC105016	♦CCI	132 - 71
CC105209	♦CCI	130 - 20
CC105216	♦CCI	132 - 72
CC105509	♦CCI	130 - 21
CC134816	♦CCI	132 - 73
CC135009	♦CCI	130 - 22
CC135016	♦CCI	132 - 74
CC135209	♦CCI	130 - 23
CC135216	♦CCI	132 - 75
CC135509	♦CCI	130 - 24
CC204816	♦CCI	132 - 76
CC205009	♦CCI	130 - 25
CC205016	♦CCI	132 - 77
CC205209	♦CCI	130 - 26
CC205216	♦CCI	132 - 78
CC205509	♦CCI	130 - 27
CC215509	♦CCI	130 - 28
CD1979	CTR	312 -100
CD1984	♦CTR	314 - 20
CD1985	♦CTR	314 - 23
CD2035	♦CTR	303 - 35
CD2087	♦CTR	303 - 36
CD2088	♦CTR	303 - 45
CD2089	♦CTR	303 - 53
CD2434	♦CTR	307 - 78
CD2435	♦CTR	308 - 74
CD2505	CTR	305 - 73
CD2810	CTR	311 - 35
CD2811	CTR	311 - 36
CD2812	♦CTR	311 - 37
CD2813	♦CTR	311 - 38
CD3025	♦CTR	305 - 97
CD3285	CTR	305 - 95
CD3449	♦CTR	307 - 30
CD3872	♦CTR	308 - 56
CD5916	♦CTR	303 - 37
CD5918	♦CTR	303 - 43
CD5919	♦CTR	303 - 54
CD5919A	♦CTR	303 - 55
CD5944	♦CTR	305 - 91
CD5945	CTR	305 - 94
CD6105	♦CTR	303 - 62
CD6105A	♦CTR	303 - 63
CDB7605	♦ALP	131 - 80
CDC7609	♦ALP	131 - 9
CDC7609A	♦ALP	131 - 10
CDC7609B	♦ALP	131 - 11
CDC7609C	♦ALP	131 - 12
CDC7609D	♦ALP	131 - 13
CDR075	♦CTR	308 - 83
CDR500	♦CTR	308 - 86
CF4-28	CTR	303 - 46
CFX13	MULB	321 - 1
♦PHIN	♦RTCF	
CFX14	PHIN	321 - 64
	♦RTCF	
CFX21	MULB	320 - 90
♦PHIN	♦RTCF	
CFX30	♦MULB	320 - 91
PHIN	♦RTCF	
CFX31	♦MULB	320 - 92
PHIN	♦RTCF	
CFX32	♦MULB	320 - 57
PHIN	♦RTCF	
CFX33	♦MULB	320 - 61
PHIN	♦RTCF	
CFY10	♦SIEG	321 - 5
CFY11	♦SIEG	321 - 41
CFY12	♦SIEG	320 - 82
CFY13	♦SIEG	321 - 6
CFY14	♦SIEG	321 - 7
CFY15	♦SIEG	321 - 72
CFY16	♦SIEG	321 - 73
CFY20	♦SIEG	321 - 8
CGB204001-14	♦FMI	91 - 64
CGB204002-02	♦FMI	91 - 66
CGB252710-01	♦FMI	90 - 87
CGB374008-01	FMI	253 - 10
CGB374202-01	♦FMI	93 - 29
CGB374203-02	♦FMI	93 - 30
CGB374205-01	♦FMI	93 - 31
CGB394208-01	FMI	253 - 11
CGB408001-16	♦FMI	94 - 90
CGB408002-03	♦FMI	94 - 91
CGB445005-01	♦FMI	93 - 64
CGB505110-02	♦FMI	93 - 79
CGB596402-06	♦FMI	95 - 69
CGB596402-07	♦FMI	95 - 70
CGB596403-10	♦FMI	95 - 71
CGB596403-11	♦FMI	95 - 72
CGB596405-09	♦FMI	95 - 76
CGB596405-10	♦FMI	95 - 77
CGB596408-02	FMI	253 - 12
CGB596410-03	FMI	253 - 13
CGB596410-10	♦FMI	95 - 78
CGB647101-09	♦FMI	96 - 72
CGB647103-08	♦FMI	96 - 73
CGB647105-04	♦FMI	96 - 74
CGB717701-04	♦FMI	97 - 4
CGB717702-03	♦FMI	97 - 5
CGB717704-01	♦FMI	97 - 6
CGB798404-01	♦FMI	97 - 93
CGB798405-01	FMI	253 - 14
CGC081001-01	♦FMI	98 - 80
CGC081201-07	FMI	253 - 15
CGC081201-10	♦FMI	99 - 96
CGC091001-02	♦FMI	99 - 30
CGC101201-03	FMI	253 - 16
CGC101201-07	♦FMI	100 - 76
CGC121301-02	♦FMI	101 - 79
CGC141501-04	♦FMI	102 - 55
CGY20	♦SIEG	307 - 13
CGY20B	♦SIEG	307 - 14
CGY21	♦SIEG	307 - 15
CGY21B	♦SIEG	307 - 16
CGY30	♦SIEG	311 - 49
CGY31	♦SIEG	311 - 50
CKV2010-19	ALP	134 - 7
CKV2010-20	ALP	134 - 8
CKV2010-21	ALP	134 - 9
CKV2010-22	ALP	134 - 10
CKV2010-23	ALP	134 - 11
CKV2020-01	♦ALP	134 - 12
CKV2020-02	♦ALP	134 - 13
CKV2020-03	♦ALP	134 - 14
CKV2020-04	♦ALP	134 - 15
CKV2020-05	♦ALP	134 - 16
CKV2020-06	♦ALP	134 - 17
CKV2020-07	ALP	134 - 18
CKV2020-08	♦ALP	134 - 19
CKV2020-09	♦ALP	134 - 20
CKV2020-10	♦ALP	134 - 21
CKV2020-11	♦ALP	134 - 22
CKV2020-12	♦ALP	134 - 23
CKV2020-13	♦ALP	134 - 24
CKV2020-14	♦ALP	134 - 25
CKV2020-15	♦ALP	134 - 26
CKV2020-16	ALP	134 - 27
CKV2020-17	ALP	134 - 28
CKV2020-18	ALP	134 - 29
CKV2020-19	♦ALP	134 - 30
CKV2020-20	♦ALP	134 - 31
CKV2020-21	♦ALP	134 - 32
CKV2020-22	♦ALP	134 - 33
CKV2020-23	♦ALP	134 - 34
CKV2020-24	ALP	134 - 35
CKV2020-25	ALP	134 - 36
CKV2020-26	ALP	134 - 37
CKV2020-27	ALP	134 - 38
CKV2020-28	ALP	134 - 39
CKV2020-29	ALP	134 - 40
CKV2020-30	ALP	134 - 41
CKV2020-31	ALP	134 - 42
CKV2020-32	ALP	134 - 43
CKV2020-33	ALP	134 - 44
CKV2020-34	ALP	134 - 45
CKV2020-35	ALP	134 - 46
CKV2020-36	ALP	134 - 47
CKV2020-37	ALP	134 - 48
CKV2020-38	ALP	134 - 49
CKV2020-39	ALP	134 - 50
CKV2020-40	ALP	134 - 51
CKV2020-41	♦ALP	134 - 52
CKV2020-42	♦ALP	134 - 53
CKV2020-43	♦ALP	134 - 54
CKV2020-44	♦ALP	134 - 55
CKV2020-45	♦ALP	134 - 56
CKV2020-46	♦ALP	134 - 57
CKV2020-47	♦ALP	134 - 58
CKV2020-48	♦ALP	134 - 59
CKV2020-49	♦ALP	134 - 60
CKV2020-50	♦ALP	134 - 61
CKV2020-51	♦ALP	134 - 62
CKV2020-52	♦ALP	134 - 63
CKV2020-53	♦ALP	134 - 64
CKV2020-54	ALP	134 - 65
CL7500	♦MULB	243 - 91
CL7520	♦MULB	243 - 92
	♦RTCF	
CL8630	♦MULB	230 - 68
CL8630S	♦MULB	230 - 69
CL8633	♦MULB	230 - 70
CL8633S	♦MULB	230 - 71
CLA3131-01	♦ALP	214 - 59
CLA3131-02	♦ALP	214 - 60
CLA3131-03	♦ALP	214 - 61
CLA3132-01	♦ALP	214 - 62
CLA3132-02	♦ALP	214 - 63
CLA3132-03	♦ALP	214 - 64
CLA3133-01	♦ALP	214 - 65
CLA3133-02	♦ALP	214 - 66
CLA3133-03	♦ALP	214 - 67
CLA3134-01	♦ALP	214 - 68
CLA3134-02	♦ALP	214 - 69
CLA3135-01	♦ALP	214 - 70
CLA3135-02	♦ALP	214 - 71
CM10-12A#	♦CTR	305 - 9
CM10-28	♦CTR	303 - 44
CM20-12A#	♦CTR	305 - 24
CM25-28	CTR	303 - 64
CM25-28A	CTR	303 - 65
CM30-12A#	♦CTR	305 - 27
CM45-12A#	♦CTR	305 - 30
CM45-28	CTR	303 - 70
CM60-12A#	♦CTR	305 - 32
CM80-28	♦CTR	305 - 83
CM80-28R	♦CTR	303 - 83
CMA30000	♦ALP	249 - 19
CMA40000	♦ALP	249 - 20
CMB7601	♦ALP	123 - 58
CMB7601A	♦ALP	123 - 59
CMB7602	♦ALP	120 - 52
CMB7602A	♦ALP	120 - 53
CME30-12	♦CTR	305 - 28
CME50-12	♦CTR	305 -105
CME70-12	CTR	306 - 2
CME1207	♦ALP	256 - 1
CME1210	♦ALP	256 - 2
CME1212	♦ALP	256 - 3
CME1213	♦ALP	256 - 4
CMK7701	♦ALP	112 - 4
CMK7702	♦ALP	112 - 5
CMK7703	♦ALP	112 - 6
CMK7703A	♦ALP	112 - 7
CMK7704	♦ALP	112 - 8
CMK7704A	♦ALP	112 - 9
CMK7705	♦ALP	112 - 10
CMK7705A	♦ALP	112 - 11
CMP18-12	♦CTR	305 -101
CMP1115	THC	62 - 12
CMW907	♦ALP	256 - 5
CMW910	♦ALP	256 - 6
CO09	THC	61 - 45
CO10	THC	61 - 43
CO20A	THC	61 - 34
CO20B	THC	61 - 29
CO40A	THC	61 - 16
CO40B	THC	61 - 14
CO80	THC	60 -110
CP5-12	♦CTR	305 - 93
CP10-12	♦CTR	305 - 98
CS9B	♦AEIL	117 - 64
CS9BR	♦AEIL	117 - 65
CS10B	♦AEIL	117 - 66
CS10BR	♦AEIL	117 - 67
CS12B	AEIL	113 - 74
CS12BR	AEIL	113 - 75
CS9018	WAB	306 - 36
CSA7205	♦ALP	214 - 72
CSA7205A	♦ALP	214 - 73
CSA7205B	♦ALP	214 - 74
CSA7205C	♦ALP	214 - 75
CSB7002-01	♦ALP	214 - 76
CSB7002-02	♦ALP	214 - 77
CSB7002-03	♦ALP	214 - 78
CSB7002-04	♦ALP	214 - 79
CSB7002-05	♦ALP	214 - 80
CSB7002-06	♦ALP	214 - 81
CSB7002-07	♦ALP	214 - 82
CSB7003-01	♦ALP	214 - 83
CSB7003-02	♦ALP	214 - 84
CSB7003-03	♦ALP	214 - 85
CSB7003-04	♦ALP	214 - 86
CSB7201-01	♦ALP	214 - 87
CSB7201-02	♦ALP	214 - 88
CSB7201-03	♦ALP	214 - 89
CSB7401-01	♦ALP	214 - 90
CSB7401-02	♦ALP	214 - 91
CSB7401-03	♦ALP	214 - 92
CSM7301-01	♦ALP	214 - 93
CSM7301-02	♦ALP	214 - 94
CSM7301-03	♦ALP	214 - 95
CSM7301-04	♦ALP	214 - 96
CSM7301-05	♦ALP	214 - 97
CSM7301-06	♦ALP	214 - 98
CV830	KSI	178 - 38
	♦TCY	
CV831	KSI	181 - 68
	♦TCY	
CV832	KSI	184 - 23
	♦TCY	
CV833	KSI	187 - 5
	♦TCY	
CV834	KSI	189 - 35
	♦TCY	
CV835	KSI	191 - 92
	♦TCY	
CV836	KSI	193 - 54
	♦TCY	
CV837	KSI	195 - 94
	♦TCY	
CV838	KSI	197 - 4
	♦TCY	
CV839	KSI	198 - 26
	♦TCY	
CV840	KSI	199 - 12
	♦TCY	
CV1006,A,B,C,D		167 - 29
KSI	♦TCY	
CV1008,A,B,C,D		172 - 50
KSI	♦TCY	
CV1010,A,B,C,D		178 - 39
KSI	♦TCY	
CV1012,A,B,C,D		184 - 24
KSI	♦TCY	
CV1014,A,B,C,D		189 - 36
KSI	♦TCY	
CV1016,A,B,C,D		193 - 55
KSI	♦TCY	
CV1106,A,B,C,D		167 - 30
KSI	♦TCY	
CV1108,A,B,C,D		172 - 51
KSI	♦TCY	
CV1110,A,B,C,D		178 - 40
KSI	♦TCY	
CV1112,A,B,C,D		184 - 25
KSI	♦TCY	
CV1114,A,B,C,D		189 - 37
KSI	♦TCY	
CV1116,A,B,C,D		193 - 56
KSI	♦TCY	
CV1620	KSI	167 - 31
	♦TCY	
CV1622	KSI	170 - 32
	♦TCY	
CV1624	KSI	172 - 52
	♦TCY	
CV1626	KSI	176 - 2
	♦TCY	
CV1628	KSI	178 - 41
	♦TCY	
CV1630	KSI	181 - 69
	♦TCY	
CV1632	KSI	182 - 86
	♦TCY	
CV1634	KSI	184 - 26
	♦TCY	
CV1636	KSI	187 - 6
	♦TCY	
CV1638	KSI	189 - 38
	♦TCY	
CV1640	KSI	191 - 93
	♦TCY	
CV1642	KSI	193 - 57
	♦TCY	
CV1644	KSI	195 - 95
	♦TCY	
CV1646	KSI	197 - 5
	♦TCY	
CV1648	KSI	198 - 27
	♦TCY	
CV1650	♦TCY	199 - 13
CV1652	♦TCY	200 - 9
CV1654	♦TCY	200 - 43
CV1656	♦TCY	200 -101
CV1658	♦TCY	201 - 7
CV1660	KSI	201 - 45
	♦TCY	
CV1662	KSI	201 - 67
	♦TCY	
CV1664	KSI	201 - 93
	♦TCY	
CV1666	KSI	202 - 12
	♦TCY	
CV1844	♦AEIL	117 - 68
CV1858B	TCY	147 - 56
CV1858D	♦TCY	147 - 57
CV1860B	TCY	154 - 81
CV1860D	♦TCY	154 - 82
CV1862B	TCY	158 -102
CV1862D	♦TCY	158 -103
CV1863B	TCY	163 - 16
CV1863D	♦TCY	163 - 17
CV1864B	TCY	167 - 32
CV1864D	♦TCY	167 - 33
CV1865B	TCY	170 - 33
CV1865D	♦TCY	170 - 34
CV1866B	TCY	172 - 53
CV1866D	♦TCY	172 - 54
CV1868B	TCY	176 - 3
CV1868D	♦TCY	176 - 4
CV1870B	TCY	178 - 42
CV1870D	♦TCY	178 - 43
CV1871B	TCY	181 - 70
CV1871D	♦TCY	181 - 71
CV1872B	TCY	182 - 87
CV1872D	♦TCY	182 - 88
CV1873B	TCY	184 - 27
CV1873D	♦TCY	184 - 28
CV2154	♦AEIL	117 - 69
CV2155	♦AEIL	117 - 70
CV5007	KSI	167 - 34
	♦TCY	
CV5008	KSI	170 - 35
	♦TCY	
CV5010	KSI	172 - 55
	♦TCY	
CV5012	KSI	176 - 5
	♦TCY	
CV5015	KSI	178 - 44
	♦TCY	
CV5018	KSI	83 -108
	♦TCY	181 - 72
CV5020	KSI	182 - 89
	♦TCY	
CV5022	KSI	184 - 29
	♦TCY	
CV5027	KSI	187 - 7
	♦TCY	
CV5033	KSI	189 - 39
	♦TCY	
CV5039	KSI	191 - 94
	♦TCY	
CV5047	KSI	193 - 58
	♦TCY	
CV5056	KSI	195 - 96
	♦TCY	
CV5068	KSI	197 - 6
	♦TCY	
CV5082	KSI	198 - 28
	♦TCY	
CV5100	KSI	199 - 14
	♦TCY	
CV7108	♦AEIL	117 - 71
CV7109	♦AEIL	117 - 72
CV7180	♦AEIL	130 - 29
CV7181	♦AEIL	130 - 30
CV7182	♦AEIL	130 - 31
CV7183	♦AEIL	130 - 32
CV7377	♦AEIL	117 - 73
CV7378	♦AEIL	117 - 74
CV7771	AEIL	113 - 76
CV7772	AEIL	113 - 77
CV8163	♦AEIL	117 - 75
CV8164	♦AEIL	117 - 76
CVA1116A	♦ALP	240 - 18
CVA1116B	♦ALP	240 - 19
CVA1116C	♦ALP	240 - 20
CVA1116D	♦ALP	240 - 21
CVA1116E	♦ALP	240 - 22
CVA1116F	♦ALP	240 - 23
CVA1116G	♦ALP	240 - 24
CVB1015A	♦ALP	238 - 75
CVB1015B	♦ALP	238 - 76
CVB1015C	♦ALP	238 - 77
CVB1030A	♦ALP	238 - 78
CVB1030B	♦ALP	238 - 79
CVB1030C	♦ALP	238 - 80
CVB1045B	♦ALP	238 - 81
CVB1045D	♦ALP	238 - 82
CVB1045E	♦ALP	238 - 83
CVE7800A	ALP	134 - 66
CVE7800B	ALP	134 - 67
CVE7800C	ALP	134 - 68
CVE7800D	ALP	134 - 69
CVE7800E	ALP	134 - 70
CVE7800F	ALP	134 - 71
CVE7800G	ALP	134 - 72
CVE7800H	ALP	134 - 73
CVE7900A	ALP	134 - 74
CVE7900B	ALP	134 - 75
CVE7900C	ALP	134 - 76
CVE7900D	ALP	134 - 77
CVE7900E	ALP	134 - 78
CVE7900F	ALP	134 - 79
CVE7900G	ALP	134 - 80
CVE7900H	ALP	134 - 81
CVE7900J	ALP	134 - 82
CVE7900K	ALP	134 - 83
CVH2030-01	♦ALP	147 - 30
CVH2030-02	♦ALP	142 - 68
CVH2030-03	♦ALP	145 - 91
CVH2030-04	♦ALP	147 - 58
CVH2030-05	♦ALP	148 - 90
CVH2030-07	♦ALP	150 - 51
CVH2030-08	♦ALP	152 - 83
CVH2030-09	♦ALP	154 - 83
CVH2030-10	♦ALP	156 - 92
CVH2030-11	♦ALP	158 -104
CVH2030-13	♦ALP	161 - 6
CVH2030-14	♦ALP	163 - 18
CVH2030-15	♦ALP	164 - 92
CVH2030-16	♦ALP	167 - 35
CVH2030-17	♦ALP	170 - 36
CVH2030-19	♦ALP	172 - 56
CVH2030-20	♦ALP	176 - 6
CVH2030-21	♦ALP	178 - 45
CVH2030-22	♦ALP	181 - 73
CVH2030-23	♦ALP	184 - 30
CVH2030-25	♦ALP	187 - 8
CVH2030-26	♦ALP	189 - 40
CVH2030-27	♦ALP	191 - 95
CVH2045-01	♦ALP	139 - 95
CVH2045-02	♦ALP	142 - 69
CVH2045-03	♦ALP	145 - 92
CVH2045-04	♦ALP	147 - 59
CVH2045-05	♦ALP	148 - 91
CVH2045-07	♦ALP	150 - 52
CVH2045-08	♦ALP	152 - 84
CVH2045-09	♦ALP	154 - 84
CVH2045-10	♦ALP	156 - 93
CVH2045-11	♦ALP	158 -105
CVH2045-13	♦ALP	161 - 7
CVH2045-14	♦ALP	163 - 19
CVH2045-15	♦ALP	164 - 93
CVH2045-16	♦ALP	167 - 36
CVH2045-17	♦ALP	170 - 37
CVH2045-19	♦ALP	172 - 57
CVH2060-03	♦ALP	145 - 93
CVH2060-04	♦ALP	147 - 60
CVH2060-05	♦ALP	148 - 92
CVH2060-07	♦ALP	150 - 53
CVH2060-08	♦ALP	152 - 85
CVH2060-09	♦ALP	154 - 85
CVH2060-10	♦ALP	156 - 94
CVH2060-11	♦ALP	158 -106
CVH2060-13	♦ALP	204 - 53
CVH2060-14	♦ALP	163 - 20
CVH2060-15	♦ALP	164 - 94
CVH2060-16	♦ALP	167 - 37
CVH2060-17	♦ALP	170 - 38
CVH2060-19	♦ALP	172 - 58
CVH2060-20	♦ALP	176 - 7
CVH2060-21	♦ALP	178 - 46
CVH2060-22	♦ALP	181 - 74
CVH2060-23	♦ALP	184 - 31
CVH2060-25	♦ALP	187 - 9
CVH2060-26	♦ALP	189 - 41
CVH2060-27	♦ALP	191 - 96
CVH2090-03	♦ALP	145 - 94
CVH2090-04	♦ALP	147 - 61

△-Registered with JEDEC by this manufacturer

♦-Mfr's data sheet available in microfilm service

1. TYPE No. CROSS INDEX

IN TYPE NUMBER SEQUENCE

TYPE No.	MFRS	Pg&Line
CVH2090-05	♦ALP	148 - 93
CVH2090-07	♦ALP	150 - 54
CVH2090-08	♦ALP	152 - 86
CVH2090-09	♦ALP	154 - 86
CVH2090-10	♦ALP	156 - 95
CVH2090-11	♦ALP	158 -107
CVH2090-13	♦ALP	161 - 8
CVH2090-14	♦ALP	163 - 21
CVH2090-15	♦ALP	164 - 95
CVH2090-16	♦ALP	167 - 38
CVH2090-17	♦ALP	170 - 39
CVH2090-19	♦ALP	172 - 59
CVH2090-20	♦ALP	176 - 8
CVH2090-21	♦ALP	178 - 47
CX918	WAB	303 - 20
CXY10	♦MULB	136 - 32
♦PHIN	♦RTCF	
	♦VALG	
CXY11A	♦MULB	230 - 72
♦PHIN	RTCF	
	♦VALG	
CXY11B	♦MULB	230 - 73
♦PHIN	RTCF	
	♦VALG	
CXY11C09	RTCF	230 - 74
CXY11C10	RTCF	230 - 75
CXY11C11	RTCF	230 - 76
CXY11C	♦MULB	230 - 77
♦PHIN	RTCF	
	♦VALG	
CXY12	♦MULB	137 - 31
♦PHIN	♦RTCF	
	♦VALG	
CXY13E09	RTCF	230 - 78
CXY13E10	RTCF	230 - 79
CXY13E11	RTCF	230 - 80
CXY13E	RTCF	238 - 84
CXY14A	♦MULB	230 - 81
♦PHIN	RTCF	
	♦VALG	
CXY14B	♦MULB	230 - 82
♦PHIN	RTCF	
	♦VALG	
CXY14C	♦MULB	230 - 83
♦PHIN	RTCF	
	♦VALG	
CXY16A	♦PHIN	230 - 84
	♦VALG	
CXY16B	♦PHIN	230 - 85
	♦VALG	
CXY16C	♦PHIN	230 - 86
	♦VALG	
CXY16D	♦PHIN	230 - 87
	♦VALG	
CXY16E	♦PHIN	230 - 88
	♦VALG	
CXY16F	♦PHIN	230 - 89
CXY17A	PHIN	230 - 90
	♦VALG	
CXY17B	PHIN	230 - 91
	♦VALG	
CXY17C	PHIN	230 - 92
	♦VALG	
CXY17D	PHIN	230 - 93
	♦VALG	
CXY17E	PHIN	230 - 94
	♦VALG	
CXY18A	PHIN	230 - 95
	♦VALG	
CXY18B	PHIN	230 - 96
	♦VALG	
CXY18C	PHIN	230 - 97
	♦VALG	
CXY18D	PHIN	230 - 98
	♦VALG	
CXY18E	PHIN	230 - 99
	♦VALG	
CXY19	♦MULB	230 -100
♦PHIN	RTCF	
	VALG	
CXY19A	♦MULB	230 -101
♦PHIN	RTCF	
	VALG	
CXY19B	♦MULB	230 -102
♦PHIN	RTCF	
	VALG	
CXY21	♦MULB	230 -103
♦PHIN	RTCF	
	VALG	
CXY22A	♦MULB	146 - 47
♦PHIN	♦RTCF	
CXY22B	♦MULB	141 - 95
♦PHIN	♦RTCF	
CXY23A	♦MULB	147 - 31
♦PHIN	♦RTCF	
CXY23B	♦MULB	149 -105
♦PHIN	♦RTCF	
CXY23C	♦MULB	153 - 70
♦PHIN	♦RTCF	
CXY23D	♦MULB	157 - 84
♦PHIN	♦RTCF	
CXY24A	♦MULB	230 -104
♦PHIN	RTCF	
CXY24B	♦MULB	230 -105
♦PHIN	RTCF	
D1-7E	♦CTR	307 - 32
D1-12B	♦CTR	307 - 31
D1-12E	♦CTR	306 -102
D1-28	♦CTR	309 - 53
D1/2-12	♦CTR	308 - 46
D2-12B	CTR	307 - 33
D2-12E	♦CTR	307 - 34
D2M5001	♦SDI	240 - 25
D2M5002	♦SDI	240 - 26
D2M5003	♦SDI	240 - 27
D3-28	♦CTR	309 - 69
D4-28G	CTR	308 - 57
D10-28	♦CTR	309 - 82
D10P	♦CTR	308 -102
D12-28G	♦CTR	308 - 68
D20-28	♦CTR	309 - 92
D102BSM-1	TRWM	243 - 93
D102BSZS	TRWM	243 - 94
D102BSZS-1	TRWM	243 - 95
D110DS-1	TRWM	243 - 96
D212BSZS	TRWM	243 - 97
D212BSZS-1	TRWM	243 - 98
D405	USSR	117 - 77
D510DSZS	TRWM	243 - 99
D510DSZS-1	TRWM	243 -100
D812BSZS	TRWM	243 -101
D1720,B,C	♦MSI	167 - 39
D1722,B,C	♦MSI	170 - 40
D1724,B,C	♦MSI	172 - 60
D1726,B,C	KSI	176 - 9
	♦MSI	
D1728,B,C	KSI	178 - 48
	♦MSI	
D1730,B,C	KSI	181 - 75
	♦MSI	
D1732,B,C	KSI	182 - 90
	♦MSI	
D1734,B,C	KSI	184 - 32
	♦MSI	
D1736,B,C	KSI	187 - 10
	♦MSI	
D1738,B,C	KSI	189 - 42
	♦MSI	
D1740,B,C	KSI	191 - 97
	♦MSI	
D1742,B,C	KSI	193 - 59
	♦MSI	
D1744,B,C	KSI	195 - 97
	♦MSI	
D1746,B,C	KSI	197 - 7
	♦MSI	
D1748,B,C	KSI	198 - 29
	♦MSI	
D1750,B,C	KSI	199 - 15
	♦MSI	
D5002-06	♦ALP	240 - 28
D5002-12	♦ALP	240 - 29
D5002-18	♦ALP	240 - 30
D5002-24	♦ALP	240 - 31
D5002-30	♦ALP	240 - 32
D5002-36	♦ALP	240 - 33
D5002-42	♦ALP	240 - 34
D5002-48	♦ALP	240 - 35
D5005-06	♦ALP	240 - 36
D5005-12	♦ALP	240 - 37
D5005-18	♦ALP	240 - 38
D5006-06	♦ALP	240 - 39
D5006-12	♦ALP	240 - 40
D5006-18	♦ALP	240 - 41
D5006-24	♦ALP	240 - 42
D5006-30	♦ALP	240 - 43
D5006-36	♦ALP	240 - 44
D5007-06	♦ALP	240 - 45
D5007-12	♦ALP	240 - 46
D5007-18	♦ALP	240 - 47
D5008-06	♦ALP	240 - 48
D5008-12	♦ALP	240 - 49
D5008-18	♦ALP	240 - 50
D5008-24	♦ALP	240 - 51
D5008-30	♦ALP	240 - 52
D5009-06	♦ALP	240 - 53
D5009-12	♦ALP	240 - 54
D5018-06	ALP	203 - 44
D5018-12	ALP	142 -100
D5018-18	ALP	142 -101
D5018-24	ALP	142 -102
D5019-06	ALP	148 - 34
D5046	♦ALP	141 - 96
D5046A	♦ALP	141 - 2
D5046B	♦ALP	139 - 83
D5046C	♦ALP	138 - 31
D5090Ø	ALP	128 - 23
D5091AM	ALP	114 - 24
D5091M	ALP	114 - 25
D5092AM	ALP	117 - 78
D5092BM	ALP	117 - 79
D5092M	ALP	117 - 80
D5146A	♦ALP	142 -110
D5146B	♦ALP	141 - 3
D5146C	♦ALP	141 - 4
D5146D	♦ALP	140 - 39
D5146E	♦ALP	141 - 97
D5146F	♦ALP	141 - 5
D5146G	♦ALP	139 - 84
D5146H	♦ALP	138 - 32
D5151	♦ALP	214 - 99
D5151A	♦ALP	214 -100
D5151B	♦ALP	214 -101
D5221CM	ALP	114 - 26
D5221EM	ALP	114 - 27
D5221FM	ALP	114 - 28
D5221GM	♦ALP	114 - 29
D5223CM	♦ALP	117 - 81
D5223EM	♦ALP	117 - 82
D5223F	♦ALP	117 - 83
D5223FM	♦ALP	117 - 84
D5223FM#	♦ALP	117 - 85
D5223G	ALP	117 - 86
D5233	ALP	130 - 33
D5236	ALP	129 - 26
D5244-06	♦ALP	240 - 55
D5244-12	♦ALP	240 - 56
D5244-18	♦ALP	240 - 57
D5244-24	♦ALP	240 - 58
D5244-30	♦ALP	240 - 59
D5244-36	♦ALP	240 - 60
D5244-42	♦ALP	240 - 61
D5244-48	♦ALP	240 - 62
D5245-06	♦ALP	240 - 63
D5245-12	♦ALP	240 - 64
D5245-18	♦ALP	240 - 65
D5245-24	♦ALP	240 - 66
D5245-30	♦ALP	240 - 67
D5245-36	♦ALP	240 - 68
D5246-06	♦ALP	240 - 69
D5246-12	♦ALP	240 - 70
D5246-18	♦ALP	240 - 71
D5246-24	♦ALP	240 - 72
D5246-30	♦ALP	240 - 73
D5249-06	♦ALP	240 - 74
D5249-12	♦ALP	240 - 75
D5249-18	♦ALP	240 - 76
D5249-24	ALP	240 - 77
D5253B	ALP	126 - 77
D5253BM	ALP	126 - 55
D5253C	ALP	126 - 78
D5253CM	ALP	126 - 56
D5253D	ALP	126 - 79
D5253DM	ALP	126 - 57
D5253E	ALP	126 - 80
D5253EM	ALP	126 - 81
D5254-06	♦ALP	240 - 78
D5254-12	♦ALP	240 - 79
D5254-18	♦ALP	240 - 80
D5255-06	♦ALP	240 - 81
D5255-12	♦ALP	240 - 82
D5255-18	♦ALP	240 - 83
D5256-06	♦ALP	240 - 84
D5256-12	♦ALP	240 - 85
D5259-06	ALP	148 - 35
D5278B	ALP	123 - 60
D5278BM	ALP	123 - 61
D5278C	ALP	123 - 62
D5278CM	ALP	123 - 63
D5278D	ALP	123 - 64
D5278DM	ALP	123 - 65
D5278E	ALP	123 - 66
D5278EM	ALP	123 - 67
D5282F	ALP	123 - 68
D5282FM	ALP	123 - 69
D5282FMR	ALP	123 - 70
D5282G	ALP	123 - 71
D5282GM	ALP	123 - 72
D5282GMR	ALP	123 - 73
D5326	ALP	126 - 19
D5326A	ALP	126 - 20
D5326AM	ALP	126 - 21
D5326AMR	ALP	126 - 22
D5326B	ALP	126 - 23
D5326BM	ALP	126 - 24
D5326BMR	ALP	126 - 25
D5326M	ALP	126 - 26
D5326MR	ALP	126 - 27
D5337	♦ALP	142 - 31
D5337-00	♦ALP	143 - 1
D5337-06	♦ALP	141 - 6
D5337-12	♦ALP	139 - 85
D5337A	♦ALP	142 - 32
D5337B	♦ALP	142 - 33
D5353B	ALP	126 - 82
D5353BM	ALP	126 - 58
D5353BMR	ALP	126 - 59
D5353C	ALP	126 - 83
D5353CM	ALP	126 - 60
D5353CMR	ALP	126 - 61
D5353D	ALP	126 - 84
D5353DM	ALP	126 - 62
D5353DMR	ALP	126 - 63
D5353E	ALP	126 - 85
D5353EM	ALP	126 - 86
D5353EMR	ALP	126 - 64
D5353F	ALP	126 - 87
D5353FM	ALP	126 - 88
D5353MR	ALP	126 - 89
D5371A	♦ALP	143 - 2
D5371B	♦ALP	141 - 7
D5371C	♦ALP	141 - 8
D5371D	♦ALP	140 - 40
D5392	ALP	117 - 87
D5392A	ALP	117 - 88
D5392AM	ALP	117 - 89
D5392AMR	ALP	117 - 90
D5392B	ALP	117 - 91
D5392BM	ALP	117 - 92
D5392BMR	ALP	117 - 93
D5392M	ALP	117 - 94
D5392MR	ALP	117 - 95
D5444-48	ALP	240 - 86
D5600	♦ALP	123 - 74
D5600A	♦ALP	123 - 75
D5632	ALP	116 - 62
D5632A	♦ALP	116 - 63
D5632AM	♦ALP	112 - 12
D5632AMR	♦ALP	112 - 13
D5632M	ALP	112 - 14
D5632MR	ALP	112 - 15
D5638	ALP	129 - 3
D5817	♦ALP	114 - 30
D5817A	♦ALP	114 - 31
D5818	♦ALP	117 - 96
D5818A	♦ALP	117 - 97
D5827	♦ALP	117 - 98
D5827A	♦ALP	117 - 99
D5828	ALP	117 -100
D5828A	ALP	117 -101
D5829	ALP	117 -102
D5829A	ALP	117 -103
D5841	♦ALP	114 - 32
D5841A	♦ALP	114 - 33
D5842	ALP	114 - 34
D5842A	ALP	114 - 35
D5843	ALP	114 - 36
D5843A	ALP	114 - 37
D5844	ALP	114 - 38
D5844A	ALP	114 - 39
D5845	♦ALP	114 - 40
D5845A	♦ALP	114 - 41
D5846	ALP	114 - 42
D5846A	ALP	114 - 43
D5847	ALP	114 - 44
D5847A	ALP	114 - 45
D5848	ALP	114 - 46
D5848A	ALP	114 - 47
DB104BSxxxx	TRWM	243 -102
DB105Dxxxx	TRWM	243 -103
DB110DSxxxx	TRWM	243 -104
DB112BSxxxx	TRWM	243 -105
DB204BSxxxx	TRWM	243 -106
DB212BSxxxx	TRWM	243 -107
DB408BSxxxx	TRWM	243 -108
DB510DSxxxx	TRWM	243 -109
DB520DSxxxx	TRWM	243 -110
DB711BSxxxx	TRWM	244 - 1
DB812BSxxxx	TRWM	244 - 2
DB816BSxxxx	TRWM	244 - 3
DB1724BSxxxx	TRWM	244 - 4
DB5459BSxxxx	TRWM	244 - 5
DB7585BSxxxx	TRWM	244 - 6
DB8596BSxxxx	TRWM	244 - 7
DBL45-12	CTR	307 - 37
DBL60-12	♦CTR	307 - 38
DBX72H	AVA	255 - 46
DBX72L	♦AVA	212 - 2
DBX72M	AVA	255 - 47
DBX72S	AVA	255 - 48
DBX158H	AVA	255 - 49
DBX158L	♦AVA	212 - 3
DBX158M	♦AVA	212 - 4
DBX158S	AVA	255 - 50
DBX167H	AVA	255 - 51
DBX167L	♦AVA	212 - 5
DBX167M	♦AVA	212 - 6
DBX167S	AVA	255 - 52
DBX184H	AVA	255 - 53
DBX184HS	AVA	255 - 54
DBX184L	♦AVA	255 - 55
DBX184LS	♦AVA	212 - 7
DBX184M	♦AVA	255 - 56
DBX184MS	♦AVA	212 - 8
DBX184S	AVA	255 - 57
DBX185H	AVA	255 - 58
DBX185L	♦AVA	212 - 9
DBX185M	♦AVA	212 - 10
DBX185S	AVA	255 - 59
DBX186H	AVA	255 - 60
DBX186L	AVA	255 - 61
DBX186M	AVA	255 - 62
DBX186S	AVA	255 - 63
DBX824H	AVA	255 - 64
DBX824M	AVA	255 - 65
DBX824S	AVA	255 - 66
DBX824SS	AVA	255 - 67
DBX1221H	♦AVA	255 - 68
DBX1221L	♦AVA	255 - 69
DBX1221M	♦AVA	255 - 70
DBX1221S	♦AVA	255 - 71
DBX1824H	AVA	255 - 72
DBX1824M	AVA	255 - 73
DBX18212H	AVA	255 - 74
DBX18212M	AVA	255 - 75
DBY72H	AVA	255 - 76
DBY72L	♦AVA	255 - 77
DBY72M	♦AVA	255 - 78
DBY72S	♦AVA	255 - 79
DBY158H	♦AVA	255 - 80
DBY158L	♦AVA	255 - 81
DBY158M	♦AVA	255 - 82
DBY158S	♦AVA	255 - 83
DBY167H	♦AVA	255 - 84
DBY167L	♦AVA	255 - 85
DBY167M	♦AVA	255 - 86
DBY167S	♦AVA	255 - 87
DBY184H	♦AVA	255 - 88
DBY184HS	♦AVA	255 - 89
DBY184L	♦AVA	255 - 90
DBY184LS	♦AVA	255 - 91
DBY184M	♦AVA	255 - 92
DBY184MS	♦AVA	255 - 93
DBY184S	♦AVA	255 - 94
DBY185H	♦AVA	255 - 95
DBY185L	♦AVA	255 - 96
DBY185M	♦AVA	255 - 97
DBY185S	♦AVA	255 - 98
DBY186H	♦AVA	255 - 99
DBY186L	♦AVA	255 -100
DBY186M	♦AVA	255 -101
DBY186S	♦AVA	255 -102
DBY824H	♦AVA	212 - 11
DBY824M	♦AVA	212 - 12
DBY824S	♦AVA	212 - 13
DBY824SS	♦AVA	212 - 14
DBY1221H	AVA	255 -103
DBY1221L	AVA	255 -104
DBY1221M	AVA	255 -105
DBY1221S	AVA	255 -106
DBY1824H	♦AVA	255 -107
DBY1824M	♦AVA	255 -108
DBY18212H	♦AVA	212 - 15
DBY18212M	♦AVA	255 -109
DC1016	♦AEIL	214 -102
DC1028A	♦AEIL	214 -103
DC1101	♦AEIL	230 -106
DC1151	♦AEIL	230 -107
DC1152	♦AEIL	230 -108
DC1201A	♦AEIL	230 -109
DC1201B	♦AEIL	230 -110
DC1201C	♦AEIL	231 - 1
DC1201D	♦AEIL	231 - 2
DC1201E	♦AEIL	231 - 3
DC1202A	♦AEIL	231 - 4
DC1202B	♦AEIL	231 - 5
DC1202C	♦AEIL	231 - 6
DC1202D	♦AEIL	231 - 7
DC1202E	♦AEIL	231 - 8
DC1203A	♦AEIL	231 - 9
DC1203B	♦AEIL	231 - 10
DC1203C	♦AEIL	231 - 11
DC1203D	♦AEIL	231 - 12
DC1203E	♦AEIL	231 - 13
DC1222A	♦AEIL	214 -104
DC1222B	♦AEIL	214 -105
DC1222C	♦AEIL	214 -106
DC1222D	♦AEIL	214 -107
DC1222E	♦AEIL	214 -108
DC1231A	♦AEIL	231 - 14
DC1231B	♦AEIL	231 - 15
DC1231C	♦AEIL	231 - 16
DC1231D	♦AEIL	231 - 17
DC1231E	♦AEIL	231 - 18
DC1232A	♦AEIL	231 - 19
DC1232B	♦AEIL	231 - 20
DC1232C	♦AEIL	231 - 21
DC1232D	♦AEIL	231 - 22
DC1232E	♦AEIL	231 - 23
DC1233A	♦AEIL	231 - 24
DC1233B	♦AEIL	231 - 25
DC1233C	♦AEIL	231 - 26
DC1233D	♦AEIL	231 - 27
DC1233E	♦AEIL	231 - 28
DC1251F	♦AEIL	231 - 29
DC1251G	♦AEIL	231 - 30
DC1251H	♦AEIL	231 - 31
DC1251J	♦AEIL	231 - 32
DC1252F	♦AEIL	231 - 33
DC1252G	♦AEIL	231 - 34
DC1252H	♦AEIL	231 - 35
DC1253F	♦AEIL	231 - 36
DC1253G	♦AEIL	231 - 37
DC1253H	♦AEIL	231 - 38
DC1272F	♦AEIL	214 -109
DC1272G	♦AEIL	214 -110
DC1272H	♦AEIL	215 - 1
DC1275F	♦AEIL	231 - 39
DC1275G	♦AEIL	231 - 40
DC1275H	♦AEIL	231 - 41
DC1276F	♦AEIL	231 - 42
DC1276G	♦AEIL	231 - 43
DC1281F	♦AEIL	231 - 44
DC1281G	♦AEIL	231 - 45
DC1281H	♦AEIL	231 - 46
DC1281J	♦AEIL	231 - 47
DC1282F	♦AEIL	231 - 48
DC1282G	♦AEIL	231 - 49
DC1282H	♦AEIL	231 - 50
DC1283F	♦AEIL	231 - 51
DC1283G	♦AEIL	231 - 52
DC1283H	♦AEIL	231 - 53
DC1301	♦AEIL	117 -104
DC1301C	♦AEIL	117 -105
DC1302	♦AEIL	117 -106
DC1303	♦AEIL	130 - 34
DC1304	♦AEIL	117 -107
DC1304/3	♦AEIL	117 -108
DC1304C	♦AEIL	117 -109
DC1306	♦AEIL	126 - 12
DC1311	AEIL	300 - 5
DC1312	♦AEIL	130 - 35
DC1314	♦AEIL	133 - 10
DC1316	♦AEIL	133 - 11
DC1321	♦AEIL	130 - 36
DC1322	♦AEIL	130 - 37
DC1323	♦AEIL	123 - 13
DC1324	♦AEIL	130 - 38
DC1325	♦AEIL	123 - 14
DC1330	♦AEIL	117 -110
DC1331	♦AEIL	118 - 1
DC1332	♦AEIL	118 - 2
DC1333	♦AEIL	118 - 3
DC1334	♦AEIL	123 - 15
DC1335	♦AEIL	133 - 12
DC1338	♦AEIL	127 - 48
DC1339	♦AEIL	127 - 49
DC1340	♦AEIL	300 - 6
DC1346	♦AEIL	247 - 10
DC1501/1	♦AEIL	130 - 39
DC1501E	♦AEIL	118 - 4
DC1501F	♦AEIL	118 - 5
DC1501G	♦AEIL	118 - 6
DC1502E	♦AEIL	118 - 7
DC1502F	♦AEIL	118 - 8
DC1503	♦AEIL	113 - 49
DC1504E	♦AEIL	118 - 9
DC1504F	♦AEIL	118 - 10
DC1505F	♦AEIL	113 - 78
DC1505G	♦AEIL	113 - 79
DC1506E	♦AEIL	118 - 11
DC1506F	♦AEIL	118 - 12
DC1506G	♦AEIL	118 - 13
DC1507F	♦AEIL	113 - 80
DC1507G	♦AEIL	113 - 81
DC1507H	♦AEIL	113 - 82
DC1508F	♦AEIL	113 - 83
DC1508G	♦AEIL	113 - 84
DC1508H	♦AEIL	113 - 85
DC1509	♦AEIL	128 - 42

Δ-Registered with JEDEC by this manufacturer

♦-Mfr's data sheet available in microfilm service

1. TYPE No. CROSS INDEX

IN TYPE NUMBER SEQUENCE

TYPE No.	MFRS	Pg&Line
DC1510	♦AEIL	130 - 40
DC1511F	♦AEIL	113 - 86
DC1511G	♦AEIL	113 - 87
DC1511H	♦AEIL	113 - 88
DC1512	♦AEIL	130 - 41
DC1512/1	♦AEIL	130 - 42
DC1513	♦AEIL	128 - 43
DC1514	♦AEIL	130 - 43
DC1515	♦AEIL	128 - 44
DC1516	♦AEIL	130 - 44
DC1517	♦AEIL	128 - 45
DC1518	♦AEIL	118 - 14
DC1519	♦AEIL	113 - 89
DC1520	♦AEIL	133 - 13
DC1521	♦AEIL	130 - 45
DC1523	♦AEIL	116 - 58
DC1526	♦AEIL	130 - 46
DC1527	♦AEIL	128 - 46
DC1528	♦AEIL	116 - 54
DC1529	♦AEIL	116 - 46
DC1533E	♦AEIL	118 - 15
DC1533F	♦AEIL	118 - 16
DC1533G	♦AEIL	118 - 17
DC1534E	♦AEIL	118 - 18
DC1534F	♦AEIL	118 - 19
DC1535	♦AEIL	133 - 14
DC1536F	♦AEIL	118 - 20
DC1536G	♦AEIL	118 - 21
DC1542	♦AEIL	126 - 13
DC1544/1	♦AEIL	132 - 32
DC1544/3	♦AEIL	130 - 47
DC1544/4	♦AEIL	130 - 48
DC1544/5	♦AEIL	132 - 33
DC1544/7	♦AEIL	132 - 34
DC1544/8	♦AEIL	128 - 22
DC1546	♦AEIL	126 - 14
DC1547	♦AEIL	133 - 15
DC1549	♦AEIL	128 - 1
DC1551	♦AEIL	130 - 49
DC1553	♦AEIL	130 - 50
DC1554	♦AEIL	130 - 51
DC1557	♦AEIL	130 - 52
DC1558	♦AEIL	130 - 53
DC1570E	♦AEIL	113 - 90
DC1570F	♦AEIL	113 - 91
DC1570G	♦AEIL	113 - 92
DC1571E	♦AEIL	113 - 93
DC1571F	♦AEIL	113 - 94
DC1571G	♦AEIL	113 - 95
DC1572E	♦AEIL	113 - 96
DC1572F	♦AEIL	113 - 97
DC1572G	♦AEIL	113 - 98
DC1573E	♦AEIL	113 - 99
DC1573F	♦AEIL	113 -100
DC1573G	♦AEIL	113 -101
DC1574E	♦AEIL	120 - 54
DC1574F	♦AEIL	120 - 55
DC1574G	AEIL	120 - 56
DC1575E	♦AEIL	120 - 57
DC1575F	♦AEIL	120 - 58
DC1575G	♦AEIL	120 - 59
DC1576E	♦AEIL	120 - 60
DC1576F	♦AEIL	120 - 61
DC1576G	AEIL	120 - 62
DC1577E	♦AEIL	120 - 63
DC1577F	♦AEIL	120 - 64
DC1577G	♦AEIL	120 - 65
DC1578E	♦AEIL	120 - 66
DC1578F	♦AEIL	120 - 67
DC1578G	♦AEIL	120 - 68
DC1579E	♦AEIL	123 - 11
DC1585	♦AEIL	126 - 15
DC1590/1	♦AEIL	118 - 22
DC1590/2	♦AEIL	118 - 23
DC1590/3	♦AEIL	118 - 24
DC1591	♦AEIL	118 - 25
DC1593	♦AEIL	118 - 26
DC1595	♦AEIL	118 - 27
DC1596	♦AEIL	118 - 28
DC1597	♦AEIL	113 -102
DC2011	♦AEIL	215 - 2
DC2011A,B,C,D,G	♦AEIL	215 - 3
DC2011AR	♦AEIL	215 - 4
DC2012	♦AEIL	215 - 5
DC2013	♦AEIL	215 - 6
DC2013A,B,C,D,G	AEIL	215 - 7
DC2013AR	♦AEIL	215 - 8
DC2020	♦AEIL	215 - 9
DC2023	♦AEIL	215 - 10
DC2101A	♦AEIL	215 - 11
DC2101B	♦AEIL	215 - 12
DC2101C	♦AEIL	215 - 13
DC2101G	♦AEIL	215 - 14
DC2103A	♦AEIL	215 - 15
DC2103B	♦AEIL	215 - 16
DC2103C	♦AEIL	215 - 17
DC2103G	♦AEIL	215 - 18
DC2104A	♦AEIL	215 - 19
DC2104B	♦AEIL	215 - 20
DC2104C	♦AEIL	215 - 21
DC2104G	♦AEIL	215 - 22
DC2110A	♦AEIL	215 - 23
DC2110B	♦AEIL	215 - 24
DC2110C	♦AEIL	215 - 25
DC2110G	♦AEIL	215 - 26
DC2118A	♦AEIL	215 - 27
DC2118B	♦AEIL	215 - 28
DC2118C	♦AEIL	215 - 29
DC2118G	♦AEIL	215 - 30
DC2119A	♦AEIL	215 - 31
DC2119B	♦AEIL	215 - 32
DC2119C	♦AEIL	215 - 33
DC2119G	♦AEIL	215 - 34
DC2130A	♦AEIL	215 - 35
DC2130G	♦AEIL	215 - 36
DC2140A	♦AEIL	215 - 37
DC2140G	♦AEIL	215 - 38
DC2171H	♦AEIL	215 - 39
DC2172H	♦AEIL	215 - 40
DC2403A	♦AEIL	215 - 41
DC2410A	♦AEIL	215 - 42
DC2412A	♦AEIL	215 - 43
DC2418A1	♦AEIL	215 - 44
DC2418A	♦AEIL	215 - 45
DC2419A1	♦AEIL	215 - 46
DC2419A	♦AEIL	215 - 47
DC2443A	♦AEIL	215 - 48
DC2460A	♦AEIL	215 - 49
DC2510A,B,C,D,G	AEIL	215 - 50
DC2512A,B,C,D,G	AEIL	215 - 51
DC2518A,B,C,D,G	AEIL	215 - 52
DC2519A,B,C,D,G	AEIL	215 - 53
DC2552A,B,C,D,G	AEIL	215 - 54
DC2602	♦AEIL	215 - 55
DC2603	♦AEIL	215 - 56
DC2610A	♦AEIL	215 - 57
DC2611	♦AEIL	215 - 58
DC2612A	♦AEIL	215 - 59
DC2613	♦AEIL	215 - 60
DC2614	♦AEIL	215 - 61
DC2615	♦AEIL	215 - 62
DC2616	♦AEIL	215 - 63
DC2618A	♦AEIL	215 - 64
DC2619A	♦AEIL	215 - 65
DC2624D	♦AEIL	215 - 66
DC2652A	♦AEIL	215 - 67
DC2801A	♦AEIL	215 - 68
DC2802G	♦AEIL	215 - 69
DC2825E	♦AEIL	215 - 70
DC2840E	♦AEIL	215 - 71
DC2841E	♦AEIL	215 - 72
DC2842E	♦AEIL	215 - 73
DC2843E	♦AEIL	215 - 74
DC2844E	♦AEIL	215 - 75
DC2845E	♦AEIL	215 - 76
DC2846E	♦AEIL	215 - 77
DC2847E	♦AEIL	215 - 78
DC2848E	♦AEIL	215 - 79
DC2849E	♦AEIL	215 - 80
DC2850E	♦AEIL	215 - 81
DC2870C	AEIL	215 - 82
DC3010	♦AEIL	130 - 54
DC3011	♦AEIL	133 - 16
DC3012	♦AEIL	130 - 55
DC3013	♦AEIL	128 - 47
DC3016	♦AEIL	130 - 56
DC3018	♦AEIL	130 - 57
DC3021	♦AEIL	130 - 58
DC3022	♦AEIL	128 - 48
DC3023	♦AEIL	132 - 79
DC3024	♦AEIL	133 - 17
DC4210B	♦AEIL	167 - 40
DC4211B	♦AEIL	170 - 41
DC4212B	♦AEIL	172 - 61
DC4213B	♦AEIL	176 - 10
DC4214B	♦AEIL	178 - 49
DC4215B	♦AEIL	181 - 76
DC4216B	♦AEIL	184 - 33
DC4217B	♦AEIL	187 - 11
DC4218B	♦AEIL	189 - 43
DC4224B	♦AEIL	191 - 98
DC4225B	♦AEIL	193 - 60
DC4226B	♦AEIL	195 - 98
DC4227B	♦AEIL	197 - 8
DC4228B	♦AEIL	197 -104
DC4232B	♦AEIL	199 - 16
DC4233B	♦AEIL	200 - 10
DC4234B	♦AEIL	200 - 44
DC4243C	♦AEIL	201 - 94
DC4244C	♦AEIL	202 - 30
DC4255B	♦AEIL	154 - 87
DC4256B	♦AEIL	158 -108
DC4257B	♦AEIL	163 - 22
DC4265B	♦AEIL	154 - 88
DC4266B	♦AEIL	158 -109
DC4267B	♦AEIL	163 - 23
DC4285B	♦AEIL	154 - 89
DC4286B	♦AEIL	158 -110
DC4287B	♦AEIL	163 - 24
DC4298	♦AEIL	201 - 44
DC4299	♦AEIL	202 - 31
DC4301A	♦AEIL	136 - 33
DC4301B	♦AEIL	136 - 34
DC4302A	♦AEIL	149 - 88
DC4302B	♦AEIL	149 - 89
DC4303A	♦AEIL	159 - 98
DC4303B	♦AEIL	146 - 32
DC4304A	♦AEIL	159 - 99
DC4304B	♦AEIL	159 -100
DC4305A	♦AEIL	164 - 19
DC4305B	♦AEIL	164 - 20
DC4371A	♦AEIL	155 - 83
DC4371B	♦AEIL	155 - 84
DC4372A	♦AEIL	149 - 90
DC4372B	♦AEIL	149 - 91
DC4373A	♦AEIL	146 - 33
DC4373B	♦AEIL	146 - 34
DC4374A	♦AEIL	159 -101
DC4374B	♦AEIL	159 -102
DC4375A	♦AEIL	164 - 21
DC4375B	♦AEIL	164 - 22
DC5021	♦AEIL	318 - 74
DC5022	♦AEIL	318 - 75
DC5023	♦AEIL	318 - 81
DC5108	♦AEIL	300 - 7
DC5125	♦AEIL	311 - 94
DC5141	♦AEIL	316 - 3
DC5142	♦AEIL	316 - 4
DC5143	♦AEIL	316 - 5
DC5402	♦AEIL	320 - 1
DC5403	♦AEIL	320 - 2
DC5404	♦AEIL	320 - 3
DC5405	♦AEIL	320 - 75
DC5411	♦AEIL	318 - 92
DC5412	♦AEIL	320 -103
DC5414	♦AEIL	319 - 48
DC5415	♦AEIL	319 - 49
DC5416	♦AEIL	319 - 50
DC5421	♦AEIL	318 - 76
DC5422	♦AEIL	318 - 77
DC5423	♦AEIL	318 - 78
DC5424	♦AEIL	318 - 79
DC5425	♦AEIL	318 - 80
DC5441	♦AEIL	318 - 71
DC5442	♦AEIL	318 - 72
DC5443	♦AEIL	318 - 73
DC5445	♦AEIL	318 - 62
DC5623	♦AEIL	318 - 82
DC5631	♦AEIL	318 - 83
DC5632	♦AEIL	322 - 38
DC5651	♦AEIL	317 - 58
DC5652	♦AEIL	313 - 91
DC5653	AEIL	312 - 29
DDA4072	♦ALP	131 - 14
DDA4072A	♦ALP	131 - 15
DDA4072B	♦ALP	131 - 16
DDA5012	♦ALP	131 - 17
DDA5036	♦ALP	131 - 18
DDA5093	♦ALP	131 - 19
DDA5093A	♦ALP	131 - 20
DDA5233	♦ALP	131 - 21
DDA5236	♦ALP	131 - 22
DDA5360	♦ALP	132 - 80
DDA5360R	♦ALP	132 - 81
DDA5361	♦ALP	133 - 18
DDA5361R	♦ALP	133 - 19
DDA5362	♦ALP	133 - 20
DDA5363	♦ALP	133 - 33
DDA5363R	♦ALP	133 - 34
DDA5364	♦ALP	133 - 35
DDA5365	♦ALP	128 - 2
DDA5365R	♦ALP	128 - 3
DDA5366	♦ALP	128 - 4
DDA5367	♦ALP	128 - 5
DDA5367R	♦ALP	128 - 6
DDA5368	♦ALP	128 - 7
DDA5638	♦ALP	132 - 47
DDA5638R	♦ALP	132 - 48
DDB4009	ALP	122 - 67
DDB4037	ALP	120 - 69
DDB4503	♦ALP	131 - 81
DDB4504	♦ALP	132 - 82
DDB4517	♦ALP	132 - 36
DDB4517A	♦ALP	132 - 37
DDB5098	♦ALP	133 - 29
		244 - 8
DDB6224	ALP	118 - 29
DDB6672	♦ALP	132 - 38
DDB6672A	♦ALP	132 - 39
DDB6673	♦ALP	133 - 36
DDB6673Y	♦ALP	133 - 30
		244 - 9
DDB6783	♦ALP	133 - 31
		244 - 10
DDC4561	♦ALP	131 - 23
DDC4561A	♦ALP	131 - 24
DDC4561B	♦ALP	131 - 25
DDC4561C	♦ALP	131 - 26
DDC4561D	♦ALP	131 - 27
DDC4562	♦ALP	131 - 28
DDC4562A	♦ALP	131 - 29
DDC4562B	♦ALP	131 - 30
DDC4562C	♦ALP	131 - 31
DDC4562D	♦ALP	131 - 32
DDC4563	♦ALP	131 - 33
DDC4563A	♦ALP	131 - 34
DDC4563B	♦ALP	131 - 35
DDC4563C	♦ALP	131 - 36
DDC4563D	♦ALP	131 - 37
DDC4564	♦ALP	131 - 38
DDC4564A	♦ALP	131 - 39
DDC4564B	♦ALP	131 - 40
DDC4564C	♦ALP	131 - 41
DDC4564D	♦ALP	131 - 42
DDC4565	♦ALP	131 - 43
DDC4565A	♦ALP	131 - 44
DDC4565B	♦ALP	131 - 45
DDC4565C	♦ALP	131 - 46
DDC4565D	♦ALP	131 - 47
DDC4582	♦ALP	131 - 48
DDC4582A	♦ALP	131 - 49
DDC4582B	♦ALP	131 - 50
DDC4582C	♦ALP	131 - 51
DDC4582D	♦ALP	131 - 52
DDC6757	♦ALP	244 - 11
DDC6757A	♦ALP	244 - 12
DDC6757B	♦ALP	244 - 13
DDC6757C	♦ALP	244 - 14
DDC6757D	♦ALP	244 - 15
DDL6672	♦ALP	128 - 8
DDL6672A	♦ALP	132 - 40
DDL6725	♦ALP	132 - 26
DGB8064	♦ALP	231 - 54
DGB8065	♦ALP	231 - 55
DGB8066	♦ALP	231 - 56
DGB8081	♦ALP	231 - 57
DGB8091	♦ALP	231 - 58
DGB8094	♦ALP	231 - 59
DGB8095	♦ALP	231 - 60
DGB8121	♦ALP	231 - 61
DGB8122	♦ALP	231 - 62
DGB8123	♦ALP	231 - 63
DGB8124	♦ALP	231 - 64
DGB8125	♦ALP	231 - 65
DGB8131	♦ALP	231 - 66
DGB8132	♦ALP	231 - 67
DGB8133	♦ALP	231 - 68
DGB8134	♦ALP	231 - 69
DGB8135	♦ALP	231 - 70
DGB8141	♦ALP	231 - 71
DGB8144	♦ALP	231 - 72
DGB8145	♦ALP	231 - 73
DGB8154	♦ALP	231 - 74
DGB8155	♦ALP	231 - 75
DGB8156	♦ALP	231 - 76
DGB8164	♦ALP	231 - 77
DGB8165	♦ALP	231 - 78
DGB8166	♦ALP	231 - 79
DGB8181	♦ALP	231 - 80
DGB8191	♦ALP	231 - 81
DGB8194	♦ALP	231 - 82
DGB8195	♦ALP	231 - 83
DGB8211	♦ALP	231 - 84
DGB8212	♦ALP	231 - 85
DGB8213	♦ALP	231 - 86
DGB8214	♦ALP	231 - 87
DGB8215	♦ALP	231 - 88
DGB8221	♦ALP	231 - 89
DGB8222	♦ALP	231 - 90
DGB8223	♦ALP	231 - 91
DGB8224	♦ALP	231 - 92
DGB8225	♦ALP	231 - 93
DGB8231	♦ALP	231 - 94
DGB8232	♦ALP	231 - 95
DGB8233	♦ALP	231 - 96
DGB8234	♦ALP	231 - 97
DGB8235	♦ALP	231 - 98
DGB8241	♦ALP	231 - 99
DGB8244	♦ALP	231 -100
DGB8245	♦ALP	231 -101
DGB8254	♦ALP	231 -102
DGB8255	♦ALP	231 -103
DGB8256	♦ALP	231 -104
DGB8266	♦ALP	231 -105
DGB8281	♦ALP	231 -106
DGB8291	♦ALP	231 -107
DGB8294	♦ALP	231 -108
DGB8295	♦ALP	231 -109
DGB8311	♦ALP	231 -110
DGB8312	♦ALP	232 - 1
DGB8313	♦ALP	232 - 2
DGB8314	♦ALP	232 - 3
DGB8315	♦ALP	232 - 4
DGB8321	♦ALP	232 - 5
DGB8322	♦ALP	232 - 6
DGB8323	♦ALP	232 - 7
DGB8324	♦ALP	232 - 8
DGB8325	♦ALP	232 - 9
DGB8331	♦ALP	232 - 10
DGB8332	♦ALP	232 - 11
DGB8333	♦ALP	232 - 12
DGB8334	♦ALP	232 - 13
DGB8335	♦ALP	232 - 14
DGB8344	♦ALP	232 - 15
DGB8345	♦ALP	232 - 16
DGB8354	♦ALP	232 - 17
DGB8355	♦ALP	232 - 18
DGB8356	♦ALP	232 - 19
DGB8366	♦ALP	232 - 20
DGB8411	♦ALP	232 - 21
DGB8412	♦ALP	232 - 22
DGB8413	♦ALP	232 - 23
DGB8414	♦ALP	232 - 24
DGB8415	♦ALP	232 - 25
DGB8421	♦ALP	232 - 26
DGB8422	♦ALP	232 - 27
DGB8423	♦ALP	232 - 28
DGB8424	♦ALP	232 - 29
DGB8425	♦ALP	232 - 30
DGB8431	♦ALP	232 - 31
DGB8432	♦ALP	232 - 32
DGB8433	♦ALP	232 - 33
DGB8434	♦ALP	232 - 34
DGB8435	♦ALP	232 - 35
DGB8444	♦ALP	232 - 36
DGB8445	♦ALP	232 - 37
DGB8454	♦ALP	232 - 38
DGB8455	♦ALP	232 - 39
DGB8456	♦ALP	232 - 40
DGB8466	♦ALP	232 - 41
DGB8511	♦ALP	232 - 42
DGB8512	♦ALP	232 - 43
DGB8513	♦ALP	232 - 44
DGB8515	♦ALP	232 - 45
DGB8521	♦ALP	232 - 46
DGB8522	♦ALP	232 - 47
DGB8523	♦ALP	232 - 48
DGB8524	♦ALP	232 - 49
DGB8525	♦ALP	232 - 50
DGB8531	♦ALP	232 - 51
DGB8532	♦ALP	232 - 52
DGB8533	♦ALP	232 - 53
DGB8534	♦ALP	232 - 54
DGB8535	♦ALP	232 - 55
DGB8544	♦ALP	232 - 56
DGB8545	♦ALP	232 - 57
DGB8554	♦ALP	232 - 58
DGB8555	♦ALP	232 - 59
DGB8556	♦ALP	232 - 60
DGB8599	♦ALP	232 - 61
DGB8612	♦ALP	232 - 62
DGB8613	♦ALP	232 - 63
DGB8614	♦ALP	232 - 64
DGB8615	♦ALP	232 - 65
DGB8622	♦ALP	232 - 66
DGB8623	♦ALP	232 - 67
DGB8624	♦ALP	232 - 68
DGB8625	♦ALP	232 - 69
DGB8632	♦ALP	232 - 70
DGB8633	♦ALP	232 - 71
DGB8634	♦ALP	232 - 72
DGB8635	♦ALP	232 - 73
DGB8645	ALP	232 - 74
DGB8655	ALP	232 - 75
DGB8656	ALP	232 - 76
DGB8666	♦ALP	232 - 77
DGB8712	♦ALP	232 - 78
DGB8713	♦ALP	232 - 79
DGB8714	♦ALP	232 - 80
DGB8715	♦ALP	232 - 81
DGB8722	♦ALP	232 - 82
DGB8723	♦ALP	232 - 83
DGB8723#	♦ALP	232 - 84
DGB8724	♦ALP	232 - 85
DGB8725	♦ALP	232 - 86
DGB8732	♦ALP	232 - 87
DGB8733	♦ALP	232 - 88
DGB8734	♦ALP	232 - 89
DGB8735	♦ALP	232 - 90
DGB8754	ALP	232 - 91
DGB8755	ALP	232 - 92
DGB8756	ALP	232 - 93
DGB8766	♦ALP	232 - 94
DGB8812	♦ALP	232 - 95
DGB8813	♦ALP	232 - 96
DGB8822	♦ALP	232 - 97
DGB8823	♦ALP	232 - 98
DGB8912	♦ALP	232 - 99
DGB8913	♦ALP	232 -100
DGB8922	♦ALP	232 -101
DGB8923	♦ALP	232 -102
DGB9211	♦ALP	232 -103
DGB9212	♦ALP	232 -104
DGB9213	♦ALP	232 -105
DGB9214	♦ALP	232 -106
DGB9215	♦ALP	232 -107
DGB9221	♦ALP	232 -108
DGB9222	♦ALP	232 -109
DGB9223	♦ALP	232 -110
DGB9224	♦ALP	233 - 1
DGB9225	♦ALP	233 - 2
DGB9234	♦ALP	233 - 3
DGB9235	♦ALP	233 - 4
DGB9244	♦ALP	233 - 5
DGB9245	♦ALP	233 - 6
DGB9246	♦ALP	233 - 7
DGB9311	♦ALP	233 - 8
DGB9312	♦ALP	233 - 9
DGB9313	♦ALP	233 - 10
DGB9314	♦ALP	233 - 11
DGB9315	♦ALP	233 - 12
DGB9321	♦ALP	233 - 13
DGB9322	♦ALP	233 - 14
DGB9323	♦ALP	233 - 15
DGB9324	♦ALP	233 - 16
DGB9325	♦ALP	233 - 17
DGB9334	♦ALP	233 - 18
DGB9335	♦ALP	233 - 19
DGB9344	♦ALP	233 - 20
DGB9345	♦ALP	233 - 21
DGB9346	♦ALP	233 - 22
DGB9411	♦ALP	233 - 23
DGB9412	♦ALP	233 - 24
DGB9413	♦ALP	233 - 25
DGB9414	♦ALP	233 - 26
DGB9415	♦ALP	233 - 27
DGB9421	♦ALP	233 - 28
DGB9422	♦ALP	233 - 29
DGB9423	♦ALP	233 - 30
DGB9424	♦ALP	233 - 31
DGB9425	♦ALP	233 - 32
DGB9434	♦ALP	233 - 33
DGB9435	♦ALP	233 - 34
DHA6520	♦MSI	182 - 91
DHA6520A	♦MSI	182 - 92
DHA6520B	♦MSI	182 - 93
DHA6520C	♦MSI	182 - 94
DHA6520D	♦MSI	182 - 95
DHA6522	♦MSI	195 - 15
DHA6522A	♦MSI	195 - 16
DHA6522B	♦MSI	195 - 17
DHA6522C	♦MSI	195 - 18
DHA6522D	♦MSI	195 - 19
DHA6523	♦MSI	199 - 82
DHA6523A	♦MSI	199 - 83
DHA6523B	♦MSI	199 - 84
DHA6523C	♦MSI	199 - 85
DHA6523D	♦MSI	199 - 86
DHA6524	♦MSI	200 - 73
DHA6524A	♦MSI	200 - 74
DHA6524B	♦MSI	200 - 75
DHA6524C	♦MSI	200 - 76
DHA6524D	♦MSI	200 - 77
DHA6525	♦MSI	201 - 91
DHA6525A	♦MSI	201 - 8
DHA6525B	♦MSI	201 - 9
DHA6525C	♦MSI	201 - 10
DHA6525D	♦MSI	201 - 11
DKV6510	♦ALP	193 - 5
DKV6510A	♦ALP	196 - 50
DKV6510B	♦ALP	196 - 51
DKV6515	♦ALP	200 - 20
DKV6515A	♦ALP	200 - 21

Δ-Registered with JEDEC by this manufacturer

♦-Mfr's data sheet available in microfilm service

1. TYPE No. CROSS INDEX

IN TYPE NUMBER SEQUENCE

TYPE No.	MFRS	Pg&Line	TYPE No.	MFRS	Pg&Line	TYPE No.	MFRS	Pg&Line	TYPE No.	MFRS	Pg&Line	TYPE No.	MFRS	Pg&Line
DKV6515B	♦ALP	200 - 22	DM6050	♦SDI	240 -102	DMA6497AR	♦ALP	118 - 34	DMC5910	♦ALP	115 - 60	DME3205	♦ALP	128 - 82
DKV6516	♦ALP	200 - 88	DM7585BSxxxx	TRWM	244 - 38	DMA6497B	♦ALP	118 - 35	DMC5910A	♦ALP	115 - 61	DME3206	♦ALP	131 - 54
DKV6516A	♦ALP	200 - 89	DM8596BSxxxx	TRWM	244 - 39	DMA6497BM	♦ALP	118 - 36	DMC5910AM	♦ALP	115 - 62	DME3207	♦ALP	132 - 84
DKV6516B	♦ALP	200 - 90	DMA4148G	♦ALP	114 - 48	DMA6497BMR	♦ALP	118 - 37	DMC5910AMR	♦ALP	115 - 63	DME4370	♦ALP	121 - 57
DKV6517	♦ALP	201 - 54	DMA4148GM	♦ALP	114 - 49	DMA6497BR	♦ALP	118 - 38	DMC5910B	♦ALP	112 - 91	DME4541	♦ALP	124 - 37
DKV6517A	♦ALP	201 - 55	DMA4148GMR	♦ALP	114 - 50	DMA6497C	♦ALP	118 - 39	DMC5910BM	♦ALP	112 - 92	DME4750	♦ALP	121 - 58
DKV6517B	♦ALP	201 - 56	DMA5091	♦ALP	115 - 40	DMA6497CM	♦ALP	118 - 40	DMC5910BMR	♦ALP	112 - 93	DME4756	♦ALP	121 - 59
DKV6518	♦ALP	202 - 58	DMA5091A	ALP	115 - 41	DMA6497CMR	♦ALP	118 - 41	DMC5910C	♦ALP	112 - 94	DME4765	♦ALP	121 - 60
DKV6518A	♦ALP	202 - 59	DMA5091AM	ALP	115 - 42	DMA6497CR	♦ALP	118 - 42	DMC5910CM	♦ALP	112 - 95	DME4790	♦ALP	121 - 61
DKV6518B	♦ALP	202 - 60	DMA5091M	♦ALP	115 - 43	DMA6497M	♦ALP	118 - 43	DMC5910CMR	♦ALP	112 - 96	DME6507	♦ALP	124 - 38
DKV6520	♦ALP	182 - 96	DMA5092	♦ALP	120 - 70	DMA6497MR	♦ALP	118 - 44	DMC5910M	♦ALP	115 - 64	DME6549	♦ALP	112 - 19
DKV6520A	♦ALP	182 - 97	DMA5092A	♦ALP	120 - 71	DMA6497R	♦ALP	118 - 45	DMC5910MR	♦ALP	115 - 65	DME6553	♦ALP	124 - 39
DKV6520B	♦ALP	182 - 98	DMA5092AM	♦ALP	120 - 72	DMA6498A	ALP	118 - 46	DMC6224	♦ALP	121 - 32	DME6557	♦ALP	121 - 62
DKV6520C	♦ALP	182 - 99	DMA5092B	♦ALP	120 - 73	DMA6498AM	♦ALP	118 - 47	DMD6022	ALP	124 - 4	DME6561	♦ALP	245 - 58
DKV6520D	♦ALP	182 -100	DMA5092BM	♦ALP	120 - 74	DMA6498AMR	♦ALP	118 - 48	DMD6022A	ALP	124 - 5	DME6562	♦ALP	245 - 59
DKV6522	♦ALP	195 - 20	DMA5092C	♦ALP	120 - 75	DMA6498C	♦ALP	118 - 49	DMD6023	ALP	124 - 6	DME6563	♦ALP	245 - 60
DKV6522A	♦ALP	195 - 21	DMA5092CM	♦ALP	120 - 76	DMA6498CM	♦ALP	118 - 50	DMD6023A	ALP	124 - 7	DME6567	♦ALP	121 - 63
DKV6522B	♦ALP	195 - 22	DMA5092M	ALP	120 - 77	DMA6498CMR	♦ALP	118 - 51	DMD6288	ALP	121 - 33	DME6569	♦ALP	121 - 64
DKV6522C	♦ALP	195 - 23	DMA5221C	♦ALP	115 - 44	DMA6499	♦ALP	123 - 92	DMD6288A	ALP	121 - 34	DME6957	♦ALP	121 - 65
DKV6522D	♦ALP	195 - 24	DMA5221CM	♦ALP	115 - 45	DMA6499A	♦ALP	123 - 93	DMD6298	ALP	126 - 43	DMEG250	♦CTR	310 - 41
DKV6523	♦ALP	199 - 87	DMA5221E	♦ALP	115 - 46	DMA6499AM	♦ALP	123 - 94	DMD6298A	ALP	126 - 44	DMF3059	♦ALP	112 - 20
DKV6523A	♦ALP	199 - 88	DMA5221EM	♦ALP	115 - 47	DMA6499AMR	♦ALP	123 - 95	DMD6395	ALP	126 - 45	DMF3061	♦ALP	121 - 66
DKV6523B	♦ALP	199 - 89	DMA5221F	♦ALP	115 - 48	DMA6499AR	♦ALP	123 - 96	DMD6395A	ALP	126 - 46	DMF3061A	♦ALP	121 - 67
DKV6523C	♦ALP	199 - 90	DMA5221FM	♦ALP	115 - 49	DMA6499B	♦ALP	123 - 97	DMD6459	ALP	124 - 8	DMF3062	♦ALP	124 - 40
DKV6523D	♦ALP	199 - 91	DMA5221G	♦ALP	115 - 50	DMA6499BM	♦ALP	123 - 98	DMD6459A	ALP	124 - 9	DMF3062A	♦ALP	124 - 41
DKV6524	♦ALP	200 - 78	DMA5221GM	♦ALP	115 - 51	DMA6499BMR	♦ALP	123 - 99	DMD6460	ALP	121 - 35	DMF3063	♦ALP	115 - 86
DKV6524A	♦ALP	200 - 79	DMA5223C	♦ALP	120 - 78	DMA6499BR	♦ALP	123 -100	DMD6460A	ALP	121 - 36	DMF3063A	♦ALP	115 - 87
DKV6524B	♦ALP	200 - 80	DMA5223CM	♦ALP	120 - 79	DMA6499M	♦ALP	123 -101	DMD6829	ALP	115 - 66	DMF3064	♦ALP	121 - 68
DKV6524C	♦ALP	200 - 81	DMA5223E	ALP	120 - 80	DMA6499MR	♦ALP	123 -102	DMD6829A	ALP	115 - 67	DMF3064A	♦ALP	121 - 69
DKV6524D	♦ALP	200 - 82	DMA5223EM	ALP	120 - 81	DMA6499R	♦ALP	123 -103	DMD6884	ALP	124 - 10	DMF3065	♦ALP	124 - 42
DKV6525	♦ALP	201 - 92	DMA5223F	♦ALP	120 - 82	DMB5-12	♦CTR	307 - 35	DMD6884A	ALP	124 - 11	DMF3065A	♦ALP	124 - 43
DKV6525A	♦ALP	201 - 12	DMA5223FM	♦ALP	120 - 83	DMB15-12	♦CTR	307 - 36	DMD6885	ALP	124 - 12	DMF3066	♦ALP	121 - 70
DKV6525B	♦ALP	201 - 13	DMA5223G	♦ALP	120 - 84	DMB20-12	♦CTR	307 - 39	DMD6885A	ALP	124 - 13	DMF3066A	♦ALP	121 - 71
DKV6525C	♦ALP	201 - 14	DMA5223GM	♦ALP	120 - 85	DMB30-12	♦CTR	307 - 40	DMD6886	ALP	124 - 14	DMF3067	♦ALP	115 - 88
DKV6525D	♦ALP	201 - 15	DMA5253B	♦ALP	126 -107	DMB3000	♦ALP	112 -110	DMD6886A	ALP	124 - 15	DMF3067A	♦ALP	115 - 89
DKV6533	♦ALP	175 - 1	DMA5253BM	♦ALP	126 -108	DMB3000A	♦ALP	113 - 1	DME6L	CTR	309 - 86	DMF3068	♦ALP	121 - 72
DKV6533A	♦ALP	175 - 2	DMA5253C	♦ALP	127 - 1	DMB3001	♦ALP	113 - 7	DME7	♦CTR	309 - 94	DMF3068A	♦ALP	121 - 73
DKV6533B	♦ALP	175 - 3	DMA5253CM	♦ALP	127 - 2	DMB3001A	♦ALP	113 - 8	DME25	♦CTR	310 - 7	DMF3069	♦ALP	124 - 44
DKV6533C	♦ALP	175 - 4	DMA5253D	♦ALP	127 - 3	DMB3002	♦ALP	113 - 2	DME30L	CTR	310 - 8	DMF3069A	♦ALP	124 - 45
DKV6533D	♦ALP	175 - 5	DMA5253DM	ALP	127 - 4	DMB3002A	♦ALP	113 - 3	DME50	♦CTR	310 - 17	DMF3070	♦ALP	115 - 90
DKV6533E	♦ALP	175 - 6	DMA5253E	♦ALP	127 - 5	DMB3003	♦ALP	113 - 4	DME120L	♦CTR	310 - 28	DMF3070A	♦ALP	115 - 91
DKV6533F	♦ALP	175 - 7	DMA5253EM	♦ALP	127 - 6	DMB3003A	♦ALP	113 - 5	DME150	♦CTR	310 - 29	DMF3071	♦ALP	121 - 74
DKV6534	♦ALP	188 - 15	DMA5278B	♦ALP	123 - 76	DMB3004	♦ALP	113 - 9	DME250	♦CTR	309 - 19	DMF3071A	♦ALP	121 - 75
DKV6534A	♦ALP	188 - 16	DMA5278BM	♦ALP	123 - 77	DMB3004A	♦ALP	113 - 10	DME300	♦CTR	308 - 84	DMF3072	♦ALP	121 - 76
DKV6534B	♦ALP	188 - 17	DMA5278C	♦ALP	123 - 78	DMB4009	♦ALP	120 - 98	DME375	♦CTR	310 - 47	DMF3072A	♦ALP	121 - 77
DKV6534C	♦ALP	188 - 18	DMA5278CM	♦ALP	123 - 79	DMB4500	♦ALP	120 - 99	DME375A	♦CTR	309 - 14	DMF3073	♦ALP	124 - 46
DKV6534D	♦ALP	188 - 19	DMA5278D	♦ALP	123 - 80	DMB4500A	♦ALP	120 -100	DME500	♦CTR	309 - 27	DMF3073A	♦ALP	124 - 47
DKV6534E	♦ALP	188 - 20	DMA5278DM	♦ALP	123 - 81	DMB4501	♦ALP	123 -104	DME600	♦CTR	310 - 50	DMF3074	♦ALP	121 - 78
DKV6534F	♦ALP	188 - 21	DMA5278E	♦ALP	123 - 82	DMB4501A	♦ALP	123 -105	DME800	♦CTR	310 - 53	DMF3074A	♦ALP	121 - 79
DKV6550A	♦ALP	147 - 62	DMA5278EM	♦ALP	123 - 83	DMB5880	♦ALP	120 -101	DME3005	♦ALP	121 - 37	DMF3075	♦ALP	124 - 48
DKV6550B	♦ALP	150 - 55	DMA5282F	♦ALP	123 - 84	DMB5880A	♦ALP	120 -102	DME3006	♦ALP	115 - 68	DMF3075A	♦ALP	124 - 49
DKV6550C	♦ALP	153 -110	DMA5282FM	♦ALP	123 - 85	DMB5880AM	♦ALP	120 -103	DME3007	♦ALP	121 - 38	DMF3076	♦ALP	115 - 92
DKV6550D	♦ALP	157 - 87	DMA5282FMR	♦ALP	123 - 86	DMB5880AMR	♦ALP	120 -104	DME3008	♦ALP	124 - 16	DMF3076A	♦ALP	115 - 93
DKV6550E	♦ALP	164 - 47	DMA5282FR	♦ALP	123 - 87	DMB5880B	♦ALP	120 -105	DME3009	♦ALP	115 - 69	DMF3077	♦ALP	121 - 80
DL0200	♦SDI	215 - 83	DMA5282G	♦ALP	123 - 88	DMB5880BM	♦ALP	120 -106	DME3010	♦ALP	121 - 39	DMF3077A	♦ALP	121 - 81
DL0201	♦SDI	215 - 84	DMA5282GM	♦ALP	123 - 89	DMB5880BMR	♦ALP	120 -107	DME3011	♦ALP	124 - 17	DMF3078	♦ALP	124 - 50
DL201	♦SIEG	215 - 85	DMA5282GMR	♦ALP	123 - 90	DMB5880C	♦ALP	120 -108	DME3012	♦ALP	115 - 70	DMF3078A	♦ALP	124 - 51
DL202	♦SIEG	215 - 86	DMA5282GR	♦ALP	123 - 91	DMB5880CM	♦ALP	120 -109	DME3013	♦ALP	121 - 40	DMF3079	♦ALP	121 - 82
DL203	♦SIEG	215 - 87	DMA5326	♦ALP	126 - 31	DMB5880CMR	♦ALP	120 -110	DME3014	♦ALP	124 - 18	DMF3079A	♦ALP	121 - 83
DL204	♦SIEG	215 - 88	DMA5326A	♦ALP	126 - 32	DMB5880M	♦ALP	121 - 1	DME3015	♦ALP	121 - 41	DMF3080	♦ALP	124 - 52
DL0300	♦SDI	215 - 89	DMA5326AM	♦ALP	126 - 33	DMB5880MR	♦ALP	121 - 2	DME3016	♦ALP	124 - 19	DMF3080A	♦ALP	124 - 53
DL0301	♦SDI	215 - 90	DMA5326AMR	♦ALP	126 - 34	DMB6411	♦ALP	121 - 3	DME3017	♦ALP	121 - 42	DMF3182	♦ALP	128 - 83
DL401	♦SIEG	215 - 91	DMA5326AR	♦ALP	126 - 35	DMB6411A	♦ALP	121 - 4	DME3018	♦ALP	124 - 20	DMF3183	♦ALP	131 - 55
DL402	♦SIEG	215 - 92	DMA5326B	♦ALP	126 - 36	DMB6411AM	♦ALP	121 - 5	DME3019	♦ALP	115 - 71	DMF3184	♦ALP	132 - 85
DL403	♦SIEG	215 - 93	DMA5326BM	♦ALP	126 - 37	DMB6411AMR	♦ALP	121 - 6	DME3020	♦ALP	121 - 43	DMF3185	♦ALP	115 - 94
DL404	♦SIEG	215 - 94	DMA5326BMR	♦ALP	126 - 38	DMB6411B	♦ALP	121 - 7	DME3021	♦ALP	115 - 72	DMF3186	♦ALP	121 - 84
DL0500	♦SDI	215 - 95	DMA5326BR	♦ALP	126 - 39	DMB6411BM	♦ALP	121 - 8	DME3022	♦ALP	121 - 44	DMF3187	♦ALP	124 - 54
DL0501	♦SDI	215 - 96	DMA5326M	♦ALP	126 - 40	DMB6411BMR	♦ALP	121 - 9	DME3023	♦ALP	121 - 45	DMF3188	♦ALP	115 - 95
DL601	♦SIEG	215 - 97	DMA5326MR	♦ALP	126 - 41	DMB6411C	♦ALP	121 - 10	DME3024	♦ALP	124 - 21	DMF3189	♦ALP	121 - 85
DL602	♦SIEG	215 - 98	DMA5326R	♦ALP	126 - 42	DMB6411CM	♦ALP	121 - 11	DME3025	♦ALP	121 - 46	DMF3190	♦ALP	124 - 55
DL603	♦SIEG	215 - 99	DMA5353B	♦ALP	127 - 7	DMB6411CMR	♦ALP	121 - 12	DME3026	♦ALP	124 - 22	DMF3196	♦ALP	128 - 84
DL604	♦SIEG	215 -100	DMA5353BM	♦ALP	127 - 8	DMB6411M	♦ALP	121 - 13	DME3027	♦ALP	112 - 16	DMF3197	♦ALP	131 - 56
DL801	♦SIEG	215 -101	DMA5353BMR	♦ALP	127 - 9	DMB6411MR	♦ALP	121 - 14	DME3028	♦ALP	115 - 73	DMF3198	♦ALP	132 - 86
DL802	♦SIEG	215 -102	DMA5353BR	♦ALP	127 - 10	DMB6780	♦ALP	121 - 15	DME3029	♦ALP	115 - 74	DMF4000	♦ALP	114 - 51
DL803	♦SIEG	215 -103	DMA5353C	♦ALP	127 - 11	DMB6780A	♦ALP	121 - 16	DME3030	♦ALP	121 - 47	DMF4011	♦ALP	121 - 86
DL804	♦SIEG	215 -104	DMA5353CM	♦ALP	127 - 12	DMB6781	ALP	121 - 17	DME3031	♦ALP	124 - 23	DMF4011A	♦ALP	121 - 87
DM3-7E	♦CTR	307 - 7	DMA5353CMR	♦ALP	127 - 13	DMB6781A	ALP	121 - 18	DME3032	♦ALP	115 - 75	DMF4012	♦ALP	124 - 56
DM102BSxxxx	TRWM	244 - 16	DMA5353CR	♦ALP	127 - 14	DMB6782	ALP	123 -106	DME3033	♦ALP	121 - 48	DMF4012A	♦ALP	124 - 57
DM104BSxxxx	TRWM	244 - 17	DMA5353D	♦ALP	127 - 15	DMB6782A	ALP	123 -107	DME3034	♦ALP	121 - 49	DMF4018	♦ALP	121 - 88
DM105Dxxxx	TRWM	244 - 18	DMA5353DM	♦ALP	127 - 16	DMB6984	ALP	113 - 11	DME3035	♦ALP	124 - 24	DMF4018A	♦ALP	121 - 89
DM110DSxxxx	TRWM	244 - 19	DMA5353DMR	♦ALP	127 - 17	DMB6984A	ALP	113 - 12	DME3036	♦ALP	121 - 50	DMF4018AM	♦ALP	121 - 90
DM112BSxxxx	TRWM	244 - 20	DMA5353DR	♦ALP	127 - 18	DMC4037	♦ALP	121 - 19	DME3037	♦ALP	124 - 25	DMF4018B	♦ALP	121 - 91
DM204BSxxxx	TRWM	244 - 21	DMA5353E	♦ALP	127 - 19	DMC5501	♦ALP	115 - 52	DME3038	♦ALP	115 - 76	DMF4018BM	♦ALP	121 - 92
DM212BSxxxx	TRWM	244 - 22	DMA5353EM	♦ALP	127 - 20	DMC5501A	♦ALP	115 - 53	DME3039	♦ALP	124 - 26	DMF4018C	♦ALP	121 - 93
DM218BS	TRWM	244 - 23	DMA5353EMR	♦ALP	127 - 21	DMC5501AM	♦ALP	115 - 54	DME3040	♦ALP	115 - 77	DMF4018CM	♦ALP	121 - 94
DM218BS-1	TRWM	244 - 24	DMA5353ER	♦ALP	127 - 22	DMC5501B	♦ALP	112 - 83	DME3041	♦ALP	124 - 27	DMF4018M	♦ALP	121 - 95
DM218BSTZS	TRWM	244 - 25	DMA5353F	♦ALP	127 - 23	DMC5501BM	♦ALP	112 - 84	DME3042	♦ALP	112 - 17	DMF4019	♦ALP	124 - 58
DM218BSTZS-1	TRWM	244 - 26	DMA5353FM	♦ALP	127 - 24	DMC5501C	♦ALP	112 - 85	DME3043	♦ALP	115 - 78	DMF4019A	♦ALP	124 - 59
DM218BSZS	TRWM	244 - 27	DMA5353FMR	♦ALP	127 - 25	DMC5501CM	♦ALP	112 - 86	DME3044	♦ALP	115 - 79	DMF4019AM	♦ALP	124 - 60
DM218BSZS-1	TRWM	244 - 28	DMA5353FR	♦ALP	127 - 26	DMC5501M	♦ALP	115 - 55	DME3045	♦ALP	112 - 18	DMF4019B	♦ALP	124 - 61
DM250	♦SDI	240 - 87	DMA5392	♦ALP	120 - 86	DMC5503	♦ALP	115 - 56	DME3046	♦ALP	124 - 28	DMF4019BM	♦ALP	124 - 62
DM350	♦SDI	240 - 88	DMA5392A	♦ALP	120 - 87	DMC5503A	♦ALP	115 - 57	DME3047	♦ALP	124 - 29	DMF4019C	♦ALP	124 - 63
DM408BSxxxx	TRWM	244 - 29	DMA5392AM	♦ALP	120 - 88	DMC5503AM	♦ALP	115 - 58	DME3048	♦ALP	121 - 51	DMF4019CM	♦ALP	124 - 64
DM450	♦SDI	240 - 89	DMA5392AMR	♦ALP	120 - 89	DMC5503B	♦ALP	112 - 87	DME3049	♦ALP	124 - 30	DMF4019M	♦ALP	124 - 65
DM510DSxxxx	TRWM	244 - 30	DMA5392AR	♦ALP	120 - 90	DMC5503BM	♦ALP	112 - 88	DME3050	♦ALP	115 - 80	DMF4035	♦ALP	121 - 96
DM520DSxxxx	TRWM	244 - 31	DMA5392B	♦ALP	120 - 91	DMC5503C	♦ALP	112 - 89	DME3051	♦ALP	121 - 52	DMF4035A	♦ALP	121 - 97
DM550	♦SDI	240 - 90	DMA5392BM	♦ALP	120 - 92	DMC5503CM	♦ALP	112 - 90	DME3052	♦ALP	115 - 81	DMF4039	♦ALP	127 - 27
DM650	♦SDI	240 - 91	DMA5392BMR	♦ALP	120 - 93	DMC5503M	♦ALP	115 - 59	DME3053	♦ALP	124 - 31	DMF4039A	♦ALP	127 - 28
DM711BSxxxx	TRWM	244 - 32	DMA5392BR	♦ALP	120 - 94	DMC5504A	♦ALP	121 - 20	DME3054	♦ALP	124 - 32	DMF4039AM	♦ALP	127 - 29
DM750	♦SDI	240 - 92	DMA5392M	ALP	120 - 95	DMC5504AM	♦ALP	121 - 21	DME3055	♦ALP	121 - 53	DMF4039B	♦ALP	127 - 30
DM812BSxxxx	TRWM	244 - 33	DMA5392MR	♦ALP	120 - 96	DMC5504B	♦ALP	121 - 22	DME3056	♦ALP	124 - 33	DMF4039BM	♦ALP	127 - 31
DM816BSxxxx	TRWM	244 - 34	DMA5392R	♦ALP	120 - 97	DMC5504BM	♦ALP	121 - 23	DME3057	♦ALP	121 - 54	DMF4039C	♦ALP	127 - 32
DM950	♦SDI	240 - 93	DMA5632	♦ALP	122 - 84	DMC5504C	♦ALP	121 - 24	DME3058	♦ALP	124 - 34	DMF4039CM	♦ALP	127 - 33
DM1724BSxxxx	TRWM	244 - 35	DMA5632A	♦ALP	122 - 85	DMC5504CM	♦ALP	121 - 25	DME3124	♦ALP	115 - 82	DMF4039D	♦ALP	127 - 34
DM2223BSxxxx	TRWM	244 - 36	DMA5632AM	♦ALP	122 - 86	DMC5506	♦ALP	121 - 26	DME3125	♦ALP	121 - 55	DMF4039DM	♦ALP	127 - 35
DM3510	♦SDI	240 - 94	DMA5632AMR	♦ALP	122 - 87	DMC5506A	♦ALP	121 - 27	DME3126	♦ALP	124 - 35	DMF4039M	♦ALP	127 - 36
DM3520	♦SDI	240 - 95	DMA5632AR	♦ALP	122 - 88	DMC5506AM	♦ALP	121 - 28	DME3127	♦ALP	115 - 83	DMF4040	♦ALP	115 - 96
DM3530	♦SDI	240 - 96	DMA5632M	♦ALP	122 - 89	DMC5506B	♦ALP	121 - 29	DME3128	♦ALP	115 - 84	DMF4040A	♦ALP	115 - 97
DM3540	♦SDI	240 - 97	DMA5632MR	♦ALP	122 - 90	DMC5506BM	♦ALP	121 - 30	DME3178	♦ALP	124 - 36	DMF4052	♦ALP	124 - 66
DM5459BSxxxx	TRWM	244 - 37	DMA5632R	♦ALP	122 - 91	DMC5506CM	♦ALP	121 - 31	DME3191	♦ALP	115 - 85	DMF4052A	♦ALP	124 - 67
DM6010	♦SDI	240 - 98	DMA6497	♦ALP	118 - 30	DMC5507B	♦ALP	123 -108	DME3192	♦ALP	121 - 56	DMF4059	♦ALP	115 - 98
DM6020	♦SDI	240 - 99	DMA6497A	♦ALP	118 - 31	DMC5507BM	♦ALP	124 - 1	DME3199	♦ALP	128 - 81	DMF4059A	♦ALP	115 - 99
DM6030	♦SDI	240 -100	DMA6497AM	♦ALP	118 - 32	DMC5507C	♦ALP	124 - 2	DME3200	♦ALP	131 - 53	DMF4352	♦ALP	121 - 98
DM6040	♦SDI	240 -101	DMA6497AMR	♦ALP	118 - 33	DMC5507CM	♦ALP	124 - 3	DME3201	♦ALP	132 - 83	DMF4352A	♦ALP	121 - 99

Δ-Registered with JEDEC by this manufacturer

♦-Mfr's data sheet available in microfilm service

1. TYPE No. CROSS INDEX

IN TYPE NUMBER SEQUENCE

TYPE No.	MFRS	Pg&Line
DMF4365	♦ALP	112 - 97
DMF4365A	♦ALP	112 - 98
DMF4384	♦ALP	115 -100
DMF4384A	♦ALP	115 -101
DMF4513	♦ALP	121 -100
DMF4513A	♦ALP	121 -101
DMF4518	♦ALP	121 -102
DMF4518A	♦ALP	121 -103
DMF4520	♦ALP	112 - 21
DMF4526	♦ALP	121 -104
DMF4526A	♦ALP	121 -105
DMF4540	♦ALP	112 - 22
DMF4549	♦ALP	115 -102
DMF4549A	♦ALP	115 -103
DMF4574	♦ALP	124 - 68
DMF4574A	♦ALP	124 - 69
DMF4593	♦ALP	124 - 70
DMF4593A	♦ALP	124 - 71
DMF4713	♦ALP	121 -106
DMF4713A	♦ALP	121 -107
DMF4734	♦ALP	124 - 72
DMF4734A	♦ALP	124 - 73
DMF4745	♦ALP	121 -108
DMF4745A	♦ALP	121 -109
DMF4788	♦ALP	124 - 74
DMF4788A	♦ALP	124 - 75
DMF4792	♦ALP	113 - 50
DMF5078	♦ALP	127 - 37
DMF5078A	♦ALP	127 - 38
DMF5078AM	♦ALP	127 - 39
DMF5078B	♦ALP	127 - 40
DMF5078BM	♦ALP	127 - 41
DMF5078C	♦ALP	127 - 42
DMF5078CM	♦ALP	127 - 43
DMF5078D	♦ALP	127 - 44
DMF5078DM	♦ALP	127 - 45
DMF5078M	♦ALP	127 - 46
DMF5078Y	♦ALP	121 -110
DMF5079	♦ALP	115 -104
DMF5079A	♦ALP	115 -105
DMF5080	♦ALP	122 - 1
DMF5080A	♦ALP	122 - 2
DMF5600	♦ALP	124 - 76
DMF5600A	♦ALP	124 - 77
DMF5817	♦ALP	112 - 99
DMF5817A	♦ALP	112 -100
DMF5818	♦ALP	122 - 3
DMF5818A	♦ALP	122 - 4
DMF5819	♦ALP	122 - 5
DMF5819A	♦ALP	122 - 6
DMF5827	♦ALP	122 - 7
DMF5827A	♦ALP	113 - 6
DMF5828	♦ALP	122 - 8
DMF5828A	♦ALP	122 - 9
DMF5829	♦ALP	122 - 10
DMF5829A	♦ALP	122 - 11
DMF5835	♦ALP	115 -106
DMF5835A	♦ALP	115 -107
DMF5845	♦ALP	112 -101
DMF5845A	♦ALP	112 -102
DMF5846	♦ALP	115 -108
DMF5846A	♦ALP	115 -109
DMF5847	♦ALP	115 -110
DMF5847A	♦ALP	116 - 1
DMF5848	♦ALP	116 - 2
DMF5848A	♦ALP	116 - 3
DMF6022	♦ALP	124 - 78
DMF6022A	♦ALP	124 - 79
DMF6023	♦ALP	124 - 80
DMF6023A	♦ALP	124 - 81
DMF6106	♦ALP	118 - 52
DMF6106A	♦ALP	118 - 53
DMF6106AM	♦ALP	118 - 54
DMF6106B	♦ALP	118 - 55
DMF6106BM	♦ALP	122 - 12
DMF6106C	♦ALP	122 - 13
DMF6106CM	♦ALP	118 - 56
DMF6106M	♦ALP	118 - 57
DMF6107	♦ALP	124 - 82
DMF6107A	♦ALP	124 - 83
DMF6107AM	♦ALP	124 - 84
DMF6107B	♦ALP	124 - 85
DMF6107BM	♦ALP	124 - 86
DMF6107C	♦ALP	124 - 87
DMF6107CM	♦ALP	124 - 88
DMF6107M	♦ALP	124 - 89
DMF6130	♦ALP	118 - 58
DMF6130A	♦ALP	118 - 59
DMF6130AM	♦ALP	122 - 14
DMF6130B	♦ALP	118 - 60
DMF6130BM	♦ALP	122 - 15
DMF6130M	♦ALP	122 - 16
DMF6288	♦ALP	122 - 17
DMF6288A	ALP	122 - 18
DMF6298	♦ALP	124 - 90
DMF6298A	♦ALP	124 - 91
DMF6395	♦ALP	124 - 92
DMF6395A	♦ALP	124 - 93
DMF6426	ALP	116 - 4
DMF6426A	ALP	116 - 5
DMF6459	♦ALP	124 - 94
DMF6459A	♦ALP	124 - 95
DMF6460	♦ALP	122 - 19
DMF6460A	♦ALP	122 - 20
DMF6544	♦ALP	122 - 21
DMF6544A	♦ALP	122 - 22
DMF6554	♦ALP	124 - 96
DMF6554A	♦ALP	124 - 97
DMF6558	♦ALP	122 - 23
DMF6558A	♦ALP	122 - 24
DMF6574	♦ALP	124 - 98
DMF6574A	♦ALP	124 - 99
DMF6576	♦ALP	116 - 6
DMF6576A	♦ALP	116 - 7
DMF6607	♦ALP	122 - 25
DMF6607A	♦ALP	122 - 26
DMF6704	♦ALP	122 - 27
DMF6704A	♦ALP	122 - 28
DMF6724	♦ALP	122 - 29
DMF6829	♦ALP	116 - 8
DMF6829A	♦ALP	116 - 9
DMF6884	♦ALP	124 -100
DMF6884A	♦ALP	124 -101
DMF6885	♦ALP	124 -102
DMF6885A	♦ALP	124 -103
DMF6886	♦ALP	124 -104
DMF6886A	♦ALP	124 -105
DMF6887	♦ALP	116 - 10
DMF6887A	♦ALP	116 - 11
DMF6887AM	♦ALP	116 - 12
DMF6887B	♦ALP	112 -103
DMF6887BM	♦ALP	112 -104
DMF6887C	♦ALP	116 - 13
DMF6887CM	♦ALP	112 -105
DMF6887M	♦ALP	116 - 14
DMF6898	♦ALP	116 - 15
DMF6898A	♦ALP	116 - 16
DMF6898AM	♦ALP	116 - 17
DMF6898B	♦ALP	112 -106
DMF6898BM	♦ALP	112 -107
DMF6898C	♦ALP	112 -108
DMF6898CM	♦ALP	112 -109
DMF6898M	♦ALP	116 - 18
DMG6412	♦ALP	114 - 52
DMG6412A	♦ALP	116 - 19
DMG6413	♦ALP	118 - 61
DMG6413A	♦ALP	122 - 30
DMG6414	♦ALP	124 -106
DMG6414A	♦ALP	124 -107
DMG6415	♦ALP	127 - 47
DMH3156	♦ALP	124 -108
DMH3157	♦ALP	124 -109
DMH3158	♦ALP	124 -110
DMH3159	♦ALP	125 - 1
DMH4383	♦ALP	125 - 2
DMH6570	♦ALP	125 - 3
DMJ3081	♦ALP	125 - 4
DMJ3082	♦ALP	125 - 5
DMJ3083	♦ALP	125 - 6
DMJ3084	♦ALP	122 - 31
DMJ3085	♦ALP	125 - 7
DMJ3086	♦ALP	116 - 20
DMJ3087	♦ALP	122 - 32
DMJ3088	♦ALP	122 - 33
DMJ3089	♦ALP	125 - 8
DMJ3090	♦ALP	122 - 34
DMJ3091	♦ALP	125 - 9
DMJ3092	♦ALP	116 - 21
DMJ3093	♦ALP	122 - 35
DMJ3094	♦ALP	122 - 36
DMJ3095	♦ALP	116 - 22
DMJ3096	♦ALP	122 - 37
DMJ3097	♦ALP	125 - 10
DMJ3098	♦ALP	116 - 23
DMJ3099	♦ALP	122 - 38
DMJ3100	♦ALP	125 - 11
DMJ3101	♦ALP	122 - 39
DMJ3102	♦ALP	125 - 12
DMJ3103	♦ALP	122 - 40
DMJ3104	♦ALP	125 - 13
DMJ3105	♦ALP	122 - 41
DMJ3106	♦ALP	122 - 42
DMJ3107	♦ALP	125 - 14
DMJ3108	♦ALP	122 - 43
DMJ3109	♦ALP	125 - 15
DMJ3110	♦ALP	122 - 44
DMJ3111	♦ALP	125 - 16
DMJ3112	♦ALP	122 - 45
DMJ3113	♦ALP	125 - 17
DMJ3114	♦ALP	116 - 24
DMJ3115	♦ALP	122 - 46
DMJ3116	♦ALP	125 - 18
DMJ3117	♦ALP	116 - 25
DMJ3118	♦ALP	122 - 47
DMJ3119	♦ALP	125 - 19
DMJ3120	♦ALP	116 - 26
DMJ3121	♦ALP	122 - 48
DMJ3122	♦ALP	122 - 49
DMJ3123	♦ALP	113 - 13
DMJ3129	♦ALP	122 - 50
DMJ3151	♦ALP	122 - 51
DMJ3152	♦ALP	125 - 20
DMJ3153	♦ALP	116 - 27
DMJ3154	♦ALP	122 - 52
DMJ3155	♦ALP	125 - 21
DMJ3180	♦ALP	233 - 35
DMJ3181	♦ALP	233 - 36
DMJ3193	♦ALP	116 - 28
DMJ3194	♦ALP	122 - 53
DMJ3195	♦ALP	125 - 22
DMJ3202	♦ALP	128 - 85
DMJ3203	♦ALP	131 - 57
DMJ3204	♦ALP	132 - 87
DMJ3208	♦ALP	128 - 86
DMJ3209	♦ALP	131 - 58
DMJ3210	♦ALP	132 - 88
DMJ4007	♦ALP	116 - 29
DMJ4014	ALP	116 - 30
DMJ4015	ALP	116 - 31
DMJ4312	♦ALP	116 - 32
DMJ4313	ALP	122 - 54
DMJ4317	♦ALP	122 - 55
DMJ4394	♦ALP	122 - 56
DMJ4397	♦ALP	125 - 23
DMJ4502	♦ALP	116 - 33
DMJ4546	♦ALP	122 - 57
DMJ4705	♦ALP	125 - 24
DMJ4708	♦ALP	122 - 58
DMJ4747	♦ALP	125 - 25
DMJ4759	♦ALP	245 - 61
DMJ4760	♦ALP	122 - 59
DMJ4766	♦ALP	125 - 26
DMJ4768	♦ALP	125 - 27
DMJ4771	♦ALP	245 - 62
DMJ4783	ALP	116 - 34
DMJ4798	♦ALP	245 - 63
DMJ5034	♦ALP	116 - 35
DMJ5099	♦ALP	116 - 36
DMJ6531	♦ALP	116 - 37
DMJ6564	♦ALP	245 - 64
DMJ6575	♦ALP	116 - 38
DMJ6665	♦ALP	125 - 28
DMJ6666	♦ALP	125 - 29
DMJ6667	♦ALP	125 - 30
DMJ6668	♦ALP	116 - 39
DMJ6669	♦ALP	122 - 60
DMJ6670	♦ALP	125 - 31
DMJ6777	♦ALP	122 - 61
DMJ6778	♦ALP	125 - 32
DMJ6784	♦ALP	116 - 40
DMJ6785	♦ALP	116 - 41
DMJ6786	♦ALP	122 - 62
DMJ6788	♦ALP	122 - 63
DMJ6789	♦ALP	122 - 64
DMJ6990	♦ALP	122 - 65
DMK4058	♦ALP	112 - 23
DMK4058A	♦ALP	112 - 24
DMK4784	♦ALP	112 - 25
DMK4791	♦ALP	127 - 77
DMK5068	♦ALP	125 - 33
DMK5068A	♦ALP	125 - 34
DMK6591	♦ALP	112 - 26
DMK6592	♦ALP	112 - 27
DMK6600	♦ALP	112 - 28
DMK6600A	♦ALP	112 - 29
DMK6601	♦ALP	112 - 30
DMK6601A	♦ALP	112 - 31
DMK6602	♦ALP	112 - 32
DMK6602A	♦ALP	112 - 33
DMK6603	♦ALP	112 - 34
DMK6603A	♦ALP	112 - 35
DMK6604	♦ALP	112 - 36
DMK6604A	♦ALP	112 - 37
DMK6605	♦ALP	112 - 38
DMK6605A	♦ALP	112 - 39
DMK6606	♦ALP	112 - 40
DMK6606A	♦ALP	112 - 41
DMM102BSxxxx	TRWM	244 - 40
DMM104BSxxxx	TRWM	244 - 41
DMM105Dxxxx	TRWM	244 - 42
DMM110DSxxxx	TRWM	244 - 43
DMM112BSxxxx	TRWM	244 - 44
DMM204BSxxxx	TRWM	244 - 45
DMM208FSxxxx	TRWM	244 - 46
DMM212BSxxxx	TRWM	244 - 47
DMM218BSxxxx	TRWM	244 - 48
DMM408BSxxxx	TRWM	244 - 49
DMM510DSxxxx	TRWM	244 - 50
DMM520DSxxxx	TRWM	244 - 51
DMM711BSxxxx	TRWM	244 - 52
DMM812BSxxxx	TRWM	244 - 53
DMM816BSxxxx	TRWM	244 - 54
DMM1724BSxxxx	TRWM	244 - 55
DMM5459BSxxxx	TRWM	244 - 56
DMM7585BSxxxx	TRWM	244 - 57
DMM8596BSxxxx	TRWM	244 - 58
DN0700	♦SDI	215 -105
	♦SIEG	
DN0700A	SDI	255 - 10
DN0701	♦SDI	215 -106
	♦SIEG	
DN0702	♦SDI	215 -107
	♦SIEG	
DN1000	♦SDI	215 -108
	♦SIEG	
DN1000A	SDI	255 - 11
DN1001	♦SDI	215 -109
	♦SIEG	
DN1002	♦SDI	215 -110
	♦SIEG	
DN1005AM	SDI	216 - 1
DN1005BM	SDI	216 - 2
DN1005CM	SDI	216 - 3
DN2000	♦SDI	216 - 4
	SIEG	
DN2002	♦SDI	216 - 5
	SIEG	
DN3000	♦SDI	216 - 6
	SIEG	
DN3000A	SDI	216 - 7
DN3001	♦SDI	216 - 8
	SIEG	
DN3002	♦SDI	216 - 9
	SIEG	
DN5000	♦SDI	216 - 10
	SIEG	
DN5001	♦SDI	216 - 11
	SIEG	
DN5002	♦SDI	216 - 12
	SIEG	
DN8000	SIEG	216 - 13
DN8001	SIEG	216 - 14
DN8002	SIEG	216 - 15
DN10001	SDI	216 - 16
DN10002	SDI	216 - 17
DN10003	SDI	216 - 18
DN10004	SDI	216 - 19
DO104BSxxxx	TRWM	244 - 59
DO105Dxxxx	TRWM	244 - 60
DO110DSxxxx	TRWM	244 - 61
DO112BSxxxx	TRWM	244 - 62
DO204BSxxxx	TRWM	244 - 63
DO208FSxxxx	TRWM	244 - 64
DO212BSxxxx	TRWM	244 - 65
DO218BSxxxx	TRWM	244 - 66
DO408BSxxxx	TRWM	244 - 67
DO510DSxxxx	TRWM	244 - 68
DO520DSxxxx	TRWM	244 - 69
DO711BSxxxx	TRWM	244 - 70
DO812BSxxxx	TRWM	244 - 71
DO816BSxxxx	TRWM	244 - 72
DO1724BSxxxx	TRWM	244 - 73
DO5459BSxxxx	TRWM	244 - 74
DO7585BSxxxx	TRWM	244 - 75
DO8596BSxxxx	TRWM	244 - 76
JANDOD001	none	67 - 55
JANDOD002	none	66 - 26
JANDOD003	VET	69 - 44
JANDOD004	VET	109 -102
JANDOD005	VET	109 - 3
JANDOD031	VET	87 - 29
JANDOD032	VET	88 - 23
JANDOD033	VET	88 - 30
JANDOD039	ITT	91 -106
	VAR	
DOM102BSxxxx	TRWM	244 - 77
DOM104BSxxxx	TRWM	244 - 78
DOM105Dxxxx	♦TRWM	244 - 79
DOM110DSxxxx	TRWM	244 - 80
DOM112BSxxxx	TRWM	244 - 81
DOM204BSxxxx	TRWM	244 - 82
DOM208FSxxxx	TRWM	244 - 83
DOM212BSxxxx	TRWM	244 - 84
DOM218BSxxxx	TRWM	244 - 85
DOM408BSxxxx	TRWM	244 - 86
DOM510DSxxxx	TRWM	244 - 87
DOM520DSxxxx	TRWM	244 - 88
DOM711BSxxxx	TRWM	244 - 89
DOM812BSxxxx	TRWM	244 - 90
DOM816BSxxxx	TRWM	244 - 91
DOM1724BSxxxx	TRWM	244 - 92
DOM5459BSxxxx	TRWM	244 - 93
DOM7585BSxxxx	TRWM	244 - 94
DOM8596BSxxxx	TRWM	244 - 95
DOS118BZS	TRWM	244 - 96
DOZ105Dxxxx	TRWM	244 - 97
DP0300	♦SDI	216 - 20
DP0301	♦SDI	216 - 21
DP0302	♦SDI	216 - 22
DP0700	♦SDI	216 - 23
	♦SIEG	
DP0700A	SDI	216 - 24
DP0701	♦SDI	216 - 25
	♦SIEG	
DP0702	♦SDI	216 - 26
	♦SIEG	
DP1000	♦SDI	216 - 27
	♦SIEG	
DP1000A	SDI	255 - 12
DP1001	♦SDI	216 - 28
	♦SIEG	
DP1002	♦SDI	216 - 29
	♦SIEG	
DP1005A000	♦SDI	216 - 30
DP1005A003	SDI	216 - 31
DP1005AM	SDI	216 - 32
DP1005B000	♦SDI	216 - 33
DP1005B003	SDI	216 - 34
DP1005BM	SDI	216 - 35
DP1005C000	♦SDI	216 - 36
DP1005C003	SDI	216 - 37
DP1005CM	SDI	216 - 38
DP1501	♦SDI	216 - 39
DP1502	♦SDI	216 - 40
DP1503	♦SDI	216 - 41
DP1504	♦SDI	216 - 42
DP1505	♦SDI	216 - 43
DP1506	♦SDI	216 - 44
DP2000	♦SDI	216 - 45
	♦SIEG	
DP2001	♦SDI	216 - 46
	♦SIEG	
DP2002	♦SDI	216 - 47
	♦SIEG	
DP3000	♦SDI	216 - 48
	♦SIEG	
DP3000A	SDI	216 - 49
DP3001	♦SDI	216 - 50
	SIEG	
DP3002	♦SDI	216 - 51
	SIEG	
DP5000	♦SDI	216 - 52
	♦SIEG	
DP5001	♦SDI	216 - 53
	♦SIEG	
DP5002	♦SDI	216 - 54
	♦SIEG	
DP8000	♦SIEG	216 - 55
DP8001	♦SIEG	216 - 56
DP8002	♦SIEG	216 - 57
DP10001	SDI	216 - 58
DP10002	SDI	216 - 59
DP10003	SDI	216 - 60
DP10004	SDI	216 - 61
DPB101-00S	SDI	216 - 62
DPB102-00S	SDI	216 - 63
DPB103-00S	SDI	216 - 64
DPB104-00S	SDI	216 - 65
DPB105-00S	SDI	216 - 66
DPB106-00S	SDI	216 - 67
DS150	♦SDI	238 - 85
DS151	♦SDI	238 - 86
DS152	♦SDI	238 - 87
DS200	♦SDI	238 - 88
DS201	♦SDI	238 - 89
DS202	♦SDI	238 - 90
DS300	♦SDI	238 - 91
DS301	♦SDI	238 - 92
DS302	♦SDI	238 - 93
DS400	♦SDI	238 - 94
DS401	♦SDI	238 - 95
DS402	♦SDI	238 - 96
DS500	♦SDI	238 - 97
DS501	♦SDI	238 - 98
DS502	♦SDI	238 - 99
DS2016	♦SDI	240 -103
DS2020	♦SDI	240 -104
DS2030	♦SDI	240 -105
DS2040	♦SDI	240 -106
DS2050	♦SDI	240 -107
DS2060	♦SDI	240 -108
DS2070	♦SDI	240 -109
DS2080	♦SDI	240 -110
DS3010	♦SDI	241 - 1
DS3020	♦SDI	241 - 2
DS3030	♦SDI	241 - 3
DS3040	♦SDI	241 - 4
DS4510	♦SDI	241 - 5
DS4520	♦SDI	241 - 6
DS4530	♦SDI	241 - 7
DS4540	♦SDI	241 - 8
DS4550	♦SDI	241 - 9
DS4560	♦SDI	241 - 10
DS4570	♦SDI	241 - 11
DSA6925	ALP	216 - 68
DSA6925A	ALP	216 - 69
DSA6925B	ALP	216 - 70
DSA6925C	ALP	216 - 71
DSA6928	♦ALP	216 - 72
DSA6928A	♦ALP	216 - 73
DSA6928B	♦ALP	216 - 74
DSA6928C	♦ALP	216 - 75
DSG6470A	♦ALP	216 - 76
DSG6470B	♦ALP	216 - 77
DSG6470C	♦ALP	216 - 78
DSG6470D	♦ALP	216 - 79
DSG6470E	♦ALP	216 - 80
DSG6474A	♦ALP	216 - 81
DSG6474B	♦ALP	216 - 82
DSG6474C	♦ALP	216 - 83
DSG6474D	♦ALP	216 - 84
DSG6474E	♦ALP	216 - 85
DSH6172	♦ALP	216 - 86
DSH6173	♦ALP	216 - 87
DSH6174	♦ALP	216 - 88
DSM4380A	♦ALP	216 - 89
DSM4380B	♦ALP	216 - 90
DSM4380C	♦ALP	216 - 91
DSM4380D	♦ALP	216 - 92
DSM4380E	♦ALP	216 - 93
DSM4381A	♦ALP	216 - 94
DSM4381B	♦ALP	216 - 95
DSM4381C	♦ALP	216 - 96
DSM4381D	♦ALP	216 - 97
DSM4381E	♦ALP	216 - 98
DT104BSxxxx	TRWM	244 - 98
DT105Dxxxx	TRWM	244 - 99
DT110DSxxxx	TRWM	244 -100
DT112BSxxxx	TRWM	244 -101
DT204BSxxxx	TRWM	244 -102
DT212BSxxxx	TRWM	244 -103
DT300	♦SDI	145 - 95
	♦SIEG	
DT300A	♦SDI	139 - 96
DT301	♦SDI	147 - 63
	♦SIEG	
DT302	♦SDI	148 - 94
	♦SIEG	
DT303	♦SDI	150 - 56
	♦SIEG	
DT304	♦SDI	152 - 87
	♦SIEG	
DT305	♦SDI	154 - 90
	♦SIEG	
DT306	♦SDI	156 - 96
	♦SIEG	
DT307	♦SDI	159 - 1
	♦SIEG	
DT308	♦SDI	161 - 9
	♦SIEG	
DT309	♦SDI	163 - 25
	♦SIEG	
DT310	♦SDI	164 - 96
	♦SIEG	
DT311	♦SDI	167 - 41
	♦SIEG	
DT312	♦SDI	170 - 42
	♦SIEG	
DT313	♦SDI	172 - 62
	♦SIEG	
DT314	♦SDI	176 - 11
	♦SIEG	
DT315	♦SDI	178 - 50
	♦SIEG	
DT316	♦SDI	181 - 77
DT408BSxxxx	TRWM	244 -104
DT510DSxxxx	TRWM	244 -105
DT520DSxxxx	TRWM	244 -106
DT600	♦SDI	145 - 96
	♦SIEG	
DT600A	♦SDI	139 - 97
DT601	♦SDI	147 - 64
	♦SIEG	
DT602	♦SDI	148 - 95
	♦SIEG	
DT603	♦SDI	150 - 57
	♦SIEG	
DT604	♦SDI	152 - 88
	♦SIEG	

Δ-Registered with JEDEC by this manufacturer

♦-Mfr's data sheet available in microfilm service

1. TYPE No. CROSS INDEX

IN TYPE NUMBER SEQUENCE

TYPE No.	MFRS	Pg&Line
DT605	♦SDI	154 - 91
	♦SIEG	
DT606	♦SDI	156 - 97
	♦SIEG	
DT607	♦SDI	159 - 2
	♦SIEG	
DT608	♦SDI	161 - 10
	♦SIEG	
DT609	♦SDI	163 - 26
	♦SIEG	
DT610	♦SDI	164 - 97
	♦SIEG	
DT611	♦SDI	167 - 42
	♦SIEG	
DT612	♦SDI	170 - 43
	♦SIEG	
DT613	♦SDI	172 - 63
	♦SIEG	
DT614	♦SDI	176 - 12
	♦SIEG	
DT615	♦SDI	178 - 51
	♦SIEG	
DT616	♦SDI	181 - 78
DT711BSxxxx	TRWM	244 -107
DT816BSxxxx	TRWM	244 -108
DT900	♦SDI	145 - 97
	♦SIEG	
DT900A	♦SDI	139 - 98
DT901	♦SDI	147 - 65
	♦SIEG	
DT902	♦SDI	148 - 96
	♦SIEG	
DT903	♦SDI	150 - 58
	♦SIEG	
DT904	♦SDI	152 - 89
	♦SIEG	
DT905	♦SDI	154 - 92
	♦SIEG	
DT906	♦SDI	156 - 98
	♦SIEG	
DT907	♦SDI	159 - 3
	♦SIEG	
DT908	♦SDI	161 - 11
	♦SIEG	
DT909	♦SDI	163 - 27
	♦SIEG	
DT910	♦SDI	164 - 98
	♦SIEG	
DT911	♦SDI	167 - 43
	♦SIEG	
DT912	♦SDI	170 - 44
	♦SIEG	
DT913	♦SDI	172 - 64
	♦SIEG	
DT914	♦SDI	176 - 13
	♦SIEG	
DT915	♦SDI	178 - 52
	♦SIEG	
DT916	♦SDI	181 - 79
DT1724BSxxxx	TRWM	244 -109
DT4500	♦SDI	145 - 98
	♦SIEG	
DT4500A	♦SDI	139 - 99
DT4501	♦SDI	147 - 66
	♦SIEG	
DT4502	♦SDI	148 - 97
	♦SIEG	
DT4503	♦SDI	150 - 59
	♦SIEG	
DT4504	♦SDI	152 - 90
	♦SIEG	
DT4505	♦SDI	154 - 93
	♦SIEG	
DT4506	♦SDI	156 - 99
	♦SIEG	
DT4507	♦SDI	159 - 4
	♦SIEG	
DT4508	♦SDI	161 - 12
	♦SIEG	
DT4509	♦SDI	163 - 28
	♦SIEG	
DT4510	♦SDI	164 - 99
	♦SIEG	
DT4511	♦SDI	167 - 44
	♦SIEG	
DT4512	♦SDI	170 - 45
	♦SIEG	
DT4513	♦SDI	172 - 65
	♦SIEG	
DT4514	♦SDI	176 - 14
	♦SIEG	
DT4515	♦SDI	178 - 53
	♦SIEG	
DT4516	♦SDI	181 - 80
DT5459BSxxxx	TRWM	244 -110
DT7585BSxxxx	TRWM	245 - 1
DT8596BSxxxx	TRWM	245 - 2
DTH3511,A	SDI	201 - 16
DV1210S	♦SIX	302 - 25
DV1210W	♦SIX	302 - 26
DV1220S	♦SIX	302 - 30
DV1220W	♦SIX	302 - 31
DV1230T	♦SIX	302 - 34
DV1240T	♦SIX	302 - 38
DV1240W	♦SIX	302 - 39
DV2810V	♦SIX	245 -110
DV2820V	♦SIX	246 - 1
DV2840V	SIX	246 - 2
DV2880V	♦SIX	246 - 3
DV2880X	♦SIX	246 - 4
DVA4580A	♦ALP	241 - 12
DVA4580B	♦ALP	241 - 13
DVA4580C	♦ALP	241 - 14
DVA4580D	♦ALP	241 - 15
DVA4580E	♦ALP	241 - 16
DVA4580F	♦ALP	241 - 17
DVA6735A	♦ALP	241 - 18
DVA6735B	♦ALP	241 - 19
DVA6735C	♦ALP	241 - 20
DVA6735D	♦ALP	241 - 21
DVA6736A	♦ALP	241 - 22
DVA6736B	♦ALP	241 - 23
DVA6736C	♦ALP	241 - 24
DVA6736D	♦ALP	241 - 25
DVA6737A	♦ALP	241 - 26
DVA6737B	♦ALP	241 - 27
DVA6737C	♦ALP	241 - 28
DVA6737D	♦ALP	241 - 29
DVA6737E	♦ALP	241 - 30
DVA6738A	♦ALP	241 - 31
DVA6738B	♦ALP	241 - 32
DVA6738C	♦ALP	241 - 33
DVA6738D	♦ALP	241 - 34
DVA6738E	♦ALP	241 - 35
DVA6738F	♦ALP	241 - 36
DVA6738G	♦ALP	241 - 37
DVA6738H	♦ALP	241 - 38
DVA6739A	♦ALP	241 - 39
DVA6739B	♦ALP	241 - 40
DVA6739C	♦ALP	241 - 41
DVA6739D	♦ALP	241 - 42
DVA6739E	♦ALP	241 - 43
DVA6739F	♦ALP	241 - 44
DVB1015B	♦ALP	238 -100
DVB6100A	♦ALP	238 -101
DVB6100B	♦ALP	238 -102
DVB6100C	♦ALP	238 -103
DVB6101A	♦ALP	238 -104
DVB6101B	♦ALP	238 -105
DVB6101C	♦ALP	238 -106
DVB6101D	♦ALP	238 -107
DVB6101E	♦ALP	238 -108
DVB6102A	♦ALP	238 -109
DVB6102B	♦ALP	238 -110
DVB6102C	♦ALP	239 - 1
DVB6102D	♦ALP	239 - 2
DVB6103A	♦ALP	239 - 3
DVB6103B	♦ALP	239 - 4
DVB6103C	♦ALP	239 - 5
DVB6103D	♦ALP	239 - 6
DVB6104A	♦ALP	239 - 7
DVB6104B	♦ALP	239 - 8
DVB6104C	♦ALP	239 - 9
DVB6104D	♦ALP	239 - 10
DVB6850A	♦ALP	239 - 11
DVB6850B	♦ALP	239 - 12
DVB6850C	♦ALP	239 - 13
DVB6851A	♦ALP	239 - 14
DVB6851B	♦ALP	239 - 15
DVB6851C	♦ALP	239 - 16
DVB6852A	♦ALP	239 - 17
DVB6852B	♦ALP	239 - 18
DVB6852C	♦ALP	239 - 19
DVB6860A	♦ALP	239 - 20
DVB6860B	♦ALP	239 - 21
DVB6860C	♦ALP	239 - 22
DVB6861A	♦ALP	239 - 23
DVB6861B	♦ALP	239 - 24
DVB6861C	♦ALP	239 - 25
DVB6862A	♦ALP	239 - 26
DVB6862B	♦ALP	239 - 27
DVB6870A	♦ALP	239 - 28
DVB6870B	♦ALP	239 - 29
DVB6870C	♦ALP	239 - 30
DVB6871A	♦ALP	239 - 31
DVB6871B	♦ALP	239 - 32
DVB6871C	♦ALP	239 - 33
DVB6872A	♦ALP	239 - 34
DVB6872B	♦ALP	239 - 35
DVD5001	♦ALP	139 - 86
DVD5001A	♦ALP	138 - 33
DVE4550A	♦ALP	141 - 9
DVE4550B	♦ALP	143 - 59
DVE4550C	♦ALP	146 - 68
DVE4550D	♦ALP	148 - 56
DVE4550E	♦ALP	152 - 45
DVE4550F	♦ALP	154 - 66
DVE4550G	♦ALP	156 - 83
DVE4550H	♦ALP	159 -110
DVE4551A	♦ALP	141 - 10
DVE4551B	♦ALP	143 - 60
DVE4551C	♦ALP	146 - 69
DVE4551D	♦ALP	148 - 57
DVE4551E	♦ALP	152 - 46
DVE4551F	♦ALP	154 - 67
DVE4551G	♦ALP	156 - 84
DVE4551H	♦ALP	160 - 1
DVE4552A	♦ALP	141 - 11
DVE4552B	♦ALP	143 - 61
DVE4552C	♦ALP	146 - 70
DVE4552D	♦ALP	148 - 58
DVE4552E	♦ALP	152 - 47
DVE4552F	♦ALP	154 - 68
DVE4552G	♦ALP	156 - 85
DVE4552H	♦ALP	160 - 2
DVE4555A	♦ALP	141 - 12
DVE4555B	♦ALP	143 - 62
DVE4555C	♦ALP	146 - 71
DVE4555D	♦ALP	148 - 59
DVE4555E	♦ALP	152 - 48
DVE4555F	♦ALP	154 - 69
DVE4555G	♦ALP	156 - 86
DVE4555H	♦ALP	160 - 3
DVE4556-01	♦ALP	138 - 92
DVE4556-02	♦ALP	138 - 93
DVE4556-03	♦ALP	138 - 94
DVE4556-04	♦ALP	138 - 95
DVE4556-05	♦ALP	138 - 96
DVE4556-06	♦ALP	138 - 97
DVE4556-07	♦ALP	138 - 98
DVE4556-08	♦ALP	138 - 99
DVE4556-11	♦ALP	139 - 39
DVE4556-12	♦ALP	139 - 40
DVE4556-13	♦ALP	139 - 41
DVE4556-14	♦ALP	139 - 42
DVE4556-15	♦ALP	139 - 43
DVE4556-16	♦ALP	139 - 44
DVE4556-17	♦ALP	139 - 45
DVE4556-21	♦ALP	140 - 17
DVE4556-22	♦ALP	140 - 18
DVE4556-23	♦ALP	140 - 19
DVE4556-24	♦ALP	140 - 20
DVE4556-25	♦ALP	140 - 21
DVE4556-26	♦ALP	140 - 22
DVE4556-31	♦ALP	141 - 13
DVE4556-32	♦ALP	141 - 14
DVE4556-33	♦ALP	141 - 15
DVE4556-34	♦ALP	141 - 16
DVE4556-35	♦ALP	202 - 54
DVE4556-41	♦ALP	142 - 34
DVE4556-42	♦ALP	142 - 35
DVE4556-43	♦ALP	142 - 36
DVE4556-44	♦ALP	142 - 37
DVE4556-51	♦ALP	144 - 67
DVE4556-52	♦ALP	144 - 68
DVE4556-53	♦ALP	144 - 69
DVE4556-61	♦ALP	146 - 72
DVE4556-62	♦ALP	146 - 73
DVE4556-71	♦ALP	148 - 37
DVE4557-01	♦ALP	138 -100
DVE4557-02	♦ALP	138 -101
DVE4557-03	♦ALP	138 -102
DVE4557-04	♦ALP	138 -103
DVE4557-05	♦ALP	138 -104
DVE4557-06	♦ALP	138 -105
DVE4557-07	♦ALP	138 -106
DVE4557-08	♦ALP	138 -107
DVE4557-11	♦ALP	139 - 46
DVE4557-12	♦ALP	139 - 47
DVE4557-13	♦ALP	139 - 48
DVE4557-14	♦ALP	139 - 49
DVE4557-15	♦ALP	139 - 50
DVE4557-16	♦ALP	139 - 51
DVE4557-17	♦ALP	139 - 52
DVE4557-21	♦ALP	140 - 23
DVE4557-22	♦ALP	140 - 24
DVE4557-23	♦ALP	140 - 25
DVE4557-24	♦ALP	140 - 26
DVE4557-25	♦ALP	140 - 27
DVE4557-26	♦ALP	140 - 28
DVE4557-31	♦ALP	141 - 17
DVE4557-32	♦ALP	141 - 18
DVE4557-33	♦ALP	141 - 19
DVE4557-34	♦ALP	141 - 20
DVE4557-35	♦ALP	141 - 21
DVE4557-41	♦ALP	142 - 38
DVE4557-42	♦ALP	142 - 39
DVE4557-43	♦ALP	142 - 40
DVE4557-44	♦ALP	142 - 41
DVE4557-51	♦ALP	144 - 70
DVE4557-52	♦ALP	144 - 71
DVE4557-53	♦ALP	144 - 72
DVE4557-61	♦ALP	146 - 74
DVE4557-62	♦ALP	146 - 75
DVE4557-71	♦ALP	148 - 38
DVE4558-01	♦ALP	138 -108
DVE4558-02	♦ALP	138 -109
DVE4558-03	♦ALP	138 -110
DVE4558-04	♦ALP	139 - 1
DVE4558-05	♦ALP	139 - 2
DVE4558-06	♦ALP	139 - 3
DVE4558-07	♦ALP	139 - 4
DVE4558-08	♦ALP	139 - 5
DVE4558-11	♦ALP	139 - 53
DVE4558-12	♦ALP	139 - 54
DVE4558-13	♦ALP	139 - 55
DVE4558-14	♦ALP	139 - 56
DVE4558-15	♦ALP	139 - 57
DVE4558-16	♦ALP	139 - 58
DVE4558-17	♦ALP	139 - 59
DVE4558-21	♦ALP	140 - 29
DVE4558-22	♦ALP	140 - 30
DVE4558-23	♦ALP	140 - 31
DVE4558-24	♦ALP	140 - 32
DVE4558-25	♦ALP	140 - 33
DVE4558-26	♦ALP	140 - 34
DVE4558-31	♦ALP	141 - 22
DVE4558-32	♦ALP	141 - 23
DVE4558-33	♦ALP	141 - 24
DVE4558-34	♦ALP	141 - 25
DVE4558-35	♦ALP	141 - 26
DVE4558-41	♦ALP	142 - 42
DVE4558-42	♦ALP	142 - 43
DVE4558-43	♦ALP	142 - 44
DVE4558-44	♦ALP	142 - 45
DVE4558-51	♦ALP	144 - 73
DVE4558-52	♦ALP	144 - 74
DVE4558-53	♦ALP	144 - 75
DVE4558-61	♦ALP	146 - 76
DVE4558-62	♦ALP	146 - 77
DVE4558-71	♦ALP	148 - 39
DVE4560-00	♦ALP	138 - 27
DVE4560-06	♦ALP	136 - 65
DVE4560-12	♦ALP	136 - 24
DVE4560-18	♦ALP	135 - 84
DVE4560-24	♦ALP	135 - 33
DVE4575A	ALP	141 - 27
DVE4575B	ALP	143 - 63
DVE4575C	ALP	146 - 78
DVE4575D	ALP	148 - 60
DVE4575E	ALP	152 - 49
DVE4575F	ALP	154 - 70
DVE4575G	ALP	156 - 87
DVE4575H	ALP	160 - 4
DVE4576A	♦ALP	141 - 28
DVE4576B	♦ALP	143 - 64
DVE4576C	♦ALP	146 - 79
DVE4576D	♦ALP	148 - 61
DVE4576E	♦ALP	152 - 50
DVE4576F	♦ALP	154 - 71
DVE4576G	♦ALP	156 - 88
DVE4576H	♦ALP	160 - 5
DVE4588-01	♦ALP	135 - 34
DVE4588-02	♦ALP	135 - 85
DVE4588-03	♦ALP	136 - 25
DVE4588-11	♦ALP	135 - 35
DVE4588-12	♦ALP	135 - 86
DVE4588-13	♦ALP	136 - 26
DVE5033-01	♦ALP	136 - 30
DVE5033-02	♦ALP	136 - 31
DVE5033-03	♦ALP	136 - 5
DVE5033-04	♦ALP	136 - 6
DVE5033-05	♦ALP	136 - 7
DVE5033-06	♦ALP	135 - 96
DVE5033-07	♦ALP	135 - 97
DVE5033-08	♦ALP	135 - 98
DVE5033-09	♦ALP	135 - 99
DVE5033-10	♦ALP	135 - 73
DVE5033-11	♦ALP	135 - 74
DVE5033-12	♦ALP	135 - 75
DVE5033-13	♦ALP	135 - 76
DVE5033-14	♦ALP	135 - 77
DVE6722A	♦ALP	139 - 60
DVE6722B	♦ALP	139 - 6
DVE6722C	♦ALP	138 - 28
DVE6722D	♦ALP	136 - 66
DVE6722E	♦ALP	136 - 27
DVE6722F	♦ALP	135 - 87
DVE6810A	♦ALP	139 - 61
DVE6810B	♦ALP	139 - 7
DVE6810C	♦ALP	138 - 29
DVE6810D	♦ALP	136 - 67
DVE6810E	♦ALP	136 - 28
DVE6810F	♦ALP	135 - 88
DVE6951A	♦ALP	140 -106
DVE6951B	♦ALP	143 - 51
DVE6951C	♦ALP	146 - 62
DVE6951D	♦ALP	148 - 49
DVE6951E	♦ALP	152 - 71
DVE6951F	♦ALP	154 - 60
DVE6951G	♦ALP	157 - 68
DVE6951H	♦ALP	159 -104
DVE6951J	♦ALP	162 - 8
DVE6951K	♦ALP	164 - 72
DVE6952A	♦ALP	140 -107
DVE6952B	♦ALP	143 - 52
DVE6952C	♦ALP	146 - 63
DVE6952D	♦ALP	148 - 50
DVE6952E	♦ALP	152 - 72
DVE6952F	♦ALP	154 - 61
DVE6952G	♦ALP	157 - 69
DVE6952H	♦ALP	159 -105
DVE6952J	♦ALP	162 - 9
DVE6952K	♦ALP	164 - 73
DVE6953A	♦ALP	140 -108
DVE6953B	♦ALP	143 - 53
DVE6953C	♦ALP	146 - 64
DVE6953D	♦ALP	148 - 51
DVE6953E	♦ALP	152 - 73
DVE6953F	♦ALP	154 - 62
DVE6953G	♦ALP	157 - 70
DVE6953H	♦ALP	159 -106
DVE6953J	♦ALP	162 - 10
DVE6953K	♦ALP	164 - 74
DVE6954A	♦ALP	140 -109
DVE6954B	♦ALP	143 - 54
DVE6954C	♦ALP	146 - 65
DVE6954D	♦ALP	148 - 52
DVE6954E	♦ALP	152 - 74
DVE6954F	♦ALP	154 - 63
DVE6954G	♦ALP	157 - 71
DVE6954H	♦ALP	159 -107
DVE6954J	♦ALP	162 - 11
DVE6954K	♦ALP	164 - 75
DVE6955A	♦ALP	140 -110
DVE6955B	♦ALP	143 - 55
DVE6955C	♦ALP	146 - 66
DVE6955D	♦ALP	148 - 53
DVE6955E	♦ALP	152 - 75
DVE6955F	♦ALP	154 - 64
DVE6955G	♦ALP	157 - 72
DVE6955H	♦ALP	159 -108
DVE6955J	♦ALP	162 - 12
DVE6955K	♦ALP	164 - 76
DVE6956A	♦ALP	141 - 1
DVE6956B	♦ALP	143 - 56
DVE6956C	♦ALP	146 - 67
DVE6956D	♦ALP	148 - 54
DVE6956E	♦ALP	152 - 76
DVE6956F	♦ALP	154 - 65
DVE6956G	♦ALP	157 - 73
DVE6956H	♦ALP	159 -109
DVE6956J	♦ALP	162 - 13
DVE6956K	♦ALP	164 - 77
DVF4559-01	♦ALP	241 - 45
DVF4559-02	♦ALP	241 - 46
DVF4559-03	♦ALP	241 - 47
DVF4559-04	♦ALP	241 - 48
DVF4559-11	♦ALP	241 - 49
DVF4559-12	♦ALP	241 - 50
DVF4559-21	♦ALP	241 - 51
DVF4559-22	♦ALP	241 - 52
DVF4559-23	♦ALP	241 - 53
DVF4559-24	♦ALP	241 - 54
DVF4559-31	♦ALP	241 - 55
DVF4559-32	♦ALP	241 - 56
DVF4559-41	♦ALP	241 - 57
DVF4559-42	♦ALP	241 - 58
DVF4559-43	♦ALP	241 - 59
DVF4559-51	♦ALP	241 - 60
DVH6730-01	♦ALP	139 -100
DVH6730-02	♦ALP	142 - 70
DVH6730-03	♦ALP	145 - 99
DVH6730-04	♦ALP	147 - 67
DVH6730-05	♦ALP	148 - 98
DVH6730-07	♦ALP	150 - 60
DVH6730-08	♦ALP	152 - 91
DVH6730-09	♦ALP	154 - 94
DVH6730-10	♦ALP	156 -100
DVH6730-11	♦ALP	159 - 5
DVH6730-13	♦ALP	161 - 13
DVH6730-14	♦ALP	163 - 29
DVH6730-15	♦ALP	164 -100
DVH6730-16	♦ALP	167 - 45
DVH6730-17	♦ALP	170 - 46
DVH6730-19	♦ALP	172 - 66
DVH6730-20	♦ALP	176 - 15
DVH6730-21	♦ALP	178 - 54
DVH6730-22	♦ALP	181 - 81
DVH6730-23	♦ALP	184 - 34
DVH6730-25	♦ALP	187 - 12
DVH6730-26	♦ALP	189 - 44
DVH6730-27	♦ALP	191 - 99
DVH6731-01	♦ALP	139 -101
DVH6731-02	♦ALP	142 - 71
DVH6731-03	♦ALP	145 -100
DVH6731-04	♦ALP	147 - 68
DVH6731-05	♦ALP	148 - 99
DVH6731-07	♦ALP	150 - 61
DVH6731-08	♦ALP	152 - 92
DVH6731-09	♦ALP	154 - 95
DVH6731-10	♦ALP	156 -101
DVH6731-11	♦ALP	159 - 6
DVH6731-13	♦ALP	161 - 14
DVH6731-14	♦ALP	163 - 30
DVH6731-15	♦ALP	164 -101
DVH6731-16	♦ALP	167 - 46
DVH6731-17	♦ALP	170 - 47
DVH6731-19	♦ALP	172 - 67
DVH6731-20	♦ALP	176 - 16
DVH6731-21	♦ALP	178 - 55
DVH6731-22	♦ALP	181 - 82
DVH6731-23	♦ALP	184 - 35
DVH6731-25	♦ALP	187 - 13
DVH6731-26	♦ALP	189 - 45
DVH6731-27	♦ALP	191 -100
DVH6732-01	♦ALP	139 -102
DVH6732-02	♦ALP	142 - 72
DVH6732-03	♦ALP	145 -101
DVH6732-04	♦ALP	147 - 69
DVH6732-05	♦ALP	148 -100
DVH6732-07	♦ALP	150 - 62
DVH6732-08	♦ALP	152 - 93
DVH6732-09	♦ALP	154 - 96
DVH6732-10	♦ALP	156 -102
DVH6732-11	♦ALP	159 - 7
DVH6732-13	♦ALP	161 - 15
DVH6732-14	♦ALP	163 - 31
DVH6732-15	♦ALP	164 -102
DVH6732-16	♦ALP	167 - 47
DVH6732-17	♦ALP	170 - 48
DVH6732-19	♦ALP	172 - 68
DVH6732-20	♦ALP	176 - 17
DVH6732-21	♦ALP	178 - 56
DVH6732-22	♦ALP	181 - 83
DVH6732-23	♦ALP	184 - 36
DVH6732-25	♦ALP	187 - 14
DVH6732-26	♦ALP	189 - 46
DVH6732-27	♦ALP	191 -101
DVH6733-01	♦ALP	139 -103
DVH6733-02	♦ALP	142 - 73
DVH6733-03	♦ALP	145 -102
DVH6733-04	♦ALP	147 - 70
DVH6733-05	♦ALP	148 -101
DVH6733-07	♦ALP	150 - 63
DVH6733-08	♦ALP	152 - 94
DVH6733-09	♦ALP	154 - 97
DVH6733-10	♦ALP	156 -103
DVH6733-11	♦ALP	159 - 8
DVH6733-13	♦ALP	161 - 16
DVH6733-14	♦ALP	163 - 32
DVH6733-15	♦ALP	164 -103
DVH6733-16	♦ALP	167 - 48
DVH6733-17	♦ALP	170 - 49
DVH6733-19	♦ALP	172 - 69
DVH6733-20	♦ALP	176 - 18
DVH6733-21	♦ALP	178 - 57
DVH6733-22	♦ALP	181 - 84
DVH6733-23	♦ALP	184 - 37
DVH6733-25	♦ALP	187 - 15
DVH6733-26	♦ALP	189 - 47
DVH6733-27	♦ALP	191 -102
DVH6734-01	♦ALP	139 -104
DVH6734-02	♦ALP	142 - 74
DVH6734-03	♦ALP	145 -103
DVH6734-04	♦ALP	147 - 71
DVH6734-05	♦ALP	148 -102
DVH6734-07	♦ALP	150 - 64
DVH6734-08	♦ALP	152 - 95
DVH6734-09	♦ALP	154 - 98
DVH6734-10	♦ALP	156 -104
DVH6734-11	♦ALP	159 - 9
DVH6734-13	♦ALP	161 - 17
DVH6734-14	♦ALP	163 - 33
DVH6734-15	♦ALP	164 -104
DVH6734-16	♦ALP	167 - 49
DVH6734-17	♦ALP	170 - 50
DVH6734-19	♦ALP	172 - 70
DVH6734-20	♦ALP	176 - 19
DVH6734-21	♦ALP	178 - 58

Δ-Registered with JEDEC by this manufacturer

♦-Mfr's data sheet available in microfilm service

1. TYPE No. CROSS INDEX

IN TYPE NUMBER SEQUENCE

TYPE No.	MFRS	Pg&Line
DVH6734-22	♦ALP	181 - 85
DVH6734-23	♦ALP	184 - 38
DVH6734-25	♦ALP	187 - 16
DVH6734-26	♦ALP	189 - 48
DVH6734-27	♦ALP	191 -103
DVH6740-01	♦ALP	139 -105
DVH6740-02	♦ALP	142 - 75
DVH6740-03	♦ALP	145 -104
DVH6740-04	♦ALP	147 - 72
DVH6740-05	♦ALP	148 -103
DVH6740-07	♦ALP	150 - 65
DVH6740-08	♦ALP	152 - 96
DVH6740-09	♦ALP	154 - 99
DVH6740-10	♦ALP	156 -105
DVH6740-11	♦ALP	159 - 10
DVH6740-13	♦ALP	161 - 18
DVH6740-14	♦ALP	163 - 34
DVH6740-15	♦ALP	164 -105
DVH6740-16	♦ALP	167 - 50
DVH6740-17	♦ALP	170 - 51
DVH6740-19	♦ALP	172 - 71
DVH6741-01	♦ALP	139 -106
DVH6741-02	♦ALP	142 - 76
DVH6741-03	♦ALP	145 -105
DVH6741-04	♦ALP	147 - 73
DVH6741-05	♦ALP	148 -104
DVH6741-07	♦ALP	150 - 66
DVH6741-08	♦ALP	152 - 97
DVH6741-09	♦ALP	154 -100
DVH6741-10	♦ALP	156 -106
DVH6741-11	♦ALP	159 - 11
DVH6741-13	♦ALP	161 - 19
DVH6741-14	♦ALP	163 - 35
DVH6741-15	♦ALP	164 -106
DVH6741-16	♦ALP	167 - 51
DVH6741-17	♦ALP	170 - 52
DVH6741-19	♦ALP	172 - 72
DVH6742-01	♦ALP	139 -107
DVH6742-02	♦ALP	142 - 77
DVH6742-03	♦ALP	145 -106
DVH6742-04	♦ALP	147 - 74
DVH6742-05	♦ALP	148 -105
DVH6742-07	♦ALP	150 - 67
DVH6742-08	♦ALP	152 - 98
DVH6742-09	♦ALP	154 -101
DVH6742-10	♦ALP	156 -107
DVH6742-11	♦ALP	159 - 12
DVH6742-13	♦ALP	161 - 20
DVH6742-14	♦ALP	163 - 36
DVH6742-15	♦ALP	164 -107
DVH6742-16	♦ALP	167 - 52
DVH6742-17	♦ALP	170 - 53
DVH6742-19	♦ALP	172 - 73
DVH6743-01	♦ALP	139 -108
DVH6743-02	♦ALP	142 - 78
DVH6743-03	♦ALP	145 -107
DVH6743-04	♦ALP	147 - 75
DVH6743-05	♦ALP	148 -106
DVH6743-07	♦ALP	150 - 68
DVH6743-08	♦ALP	152 - 99
DVH6743-09	♦ALP	154 -102
DVH6743-10	♦ALP	156 -108
DVH6743-11	♦ALP	159 - 13
DVH6743-13	♦ALP	161 - 21
DVH6743-14	♦ALP	163 - 37
DVH6743-15	♦ALP	164 -108
DVH6743-16	♦ALP	167 - 53
DVH6743-17	♦ALP	170 - 54
DVH6743-19	♦ALP	172 - 74
DVH6744-01	♦ALP	139 -109
DVH6744-02	♦ALP	142 - 79
DVH6744-03	♦ALP	145 -108
DVH6744-04	♦ALP	147 - 76
DVH6744-05	♦ALP	148 -107
DVH6744-07	♦ALP	150 - 69
DVH6744-08	♦ALP	152 -100
DVH6744-09	♦ALP	154 -103
DVH6744-10	♦ALP	156 -109
DVH6744-11	♦ALP	159 - 14
DVH6744-13	♦ALP	161 - 22
DVH6744-14	♦ALP	163 - 38
DVH6744-15	♦ALP	164 -109
DVH6744-16	♦ALP	167 - 54
DVH6744-17	♦ALP	170 - 55
DVH6744-19	♦ALP	172 - 75
DVH6760-03	♦ALP	145 -109
DVH6760-04	♦ALP	147 - 77
DVH6760-05	♦ALP	148 -108
DVH6760-07	♦ALP	150 - 70
DVH6760-08	♦ALP	152 -101
DVH6760-09	♦ALP	154 -104
DVH6760-10	♦ALP	156 -110
DVH6760-11	♦ALP	159 - 15
DVH6760-13	♦ALP	161 - 23
DVH6760-14	♦ALP	163 - 39
DVH6760-15	♦ALP	164 -110
DVH6760-16	♦ALP	167 - 55
DVH6760-17	♦ALP	170 - 56
DVH6760-19	♦ALP	172 - 76
DVH6760-20	♦ALP	176 - 20
DVH6760-21	♦ALP	178 - 59
DVH6760-22	♦ALP	181 - 86
DVH6760-23	♦ALP	184 - 39
DVH6760-25	♦ALP	187 - 17
DVH6760-26	♦ALP	189 - 49
DVH6760-27	♦ALP	191 -104
DVH6761-03	♦ALP	145 -110
DVH6761-04	♦ALP	147 - 78
DVH6761-05	♦ALP	148 -109
DVH6761-07	♦ALP	150 - 71
DVH6761-08	♦ALP	152 -102
DVH6761-09	♦ALP	154 -105
DVH6761-10	♦ALP	157 - 1
DVH6761-11	♦ALP	159 - 16
DVH6761-13	♦ALP	161 - 24
DVH6761-14	♦ALP	163 - 40
DVH6761-15	♦ALP	165 - 1
DVH6761-16	♦ALP	167 - 56
DVH6761-17	♦ALP	170 - 57
DVH6761-19	♦ALP	172 - 77
DVH6761-20	♦ALP	176 - 21
DVH6761-21	♦ALP	178 - 60
DVH6761-22	♦ALP	181 - 87
DVH6761-23	♦ALP	184 - 40
DVH6761-25	♦ALP	187 - 18
DVH6761-26	♦ALP	189 - 50
DVH6761-27	♦ALP	191 -105
DVH6762-03	♦ALP	146 - 1
DVH6762-04	♦ALP	147 - 79
DVH6762-05	♦ALP	148 -110
DVH6762-07	♦ALP	150 - 72
DVH6762-08	♦ALP	152 -103
DVH6762-09	♦ALP	154 -106
DVH6762-10	♦ALP	157 - 2
DVH6762-11	♦ALP	159 - 17
DVH6762-13	♦ALP	161 - 25
DVH6762-14	♦ALP	163 - 41
DVH6762-15	♦ALP	165 - 2
DVH6762-16	♦ALP	167 - 57
DVH6762-17	♦ALP	170 - 58
DVH6762-19	♦ALP	172 - 78
DVH6762-20	♦ALP	176 - 22
DVH6762-21	♦ALP	178 - 61
DVH6762-22	♦ALP	181 - 88
DVH6762-23	♦ALP	184 - 41
DVH6762-25	♦ALP	187 - 19
DVH6762-26	♦ALP	189 - 51
DVH6762-27	♦ALP	191 -106
DVH6763-03	♦ALP	146 - 2
DVH6763-04	♦ALP	147 - 80
DVH6763-05	♦ALP	149 - 1
DVH6763-07	♦ALP	150 - 73
DVH6763-08	♦ALP	152 -104
DVH6763-09	♦ALP	154 -107
DVH6763-10	♦ALP	157 - 3
DVH6763-11	♦ALP	159 - 18
DVH6763-13	♦ALP	161 - 26
DVH6763-14	♦ALP	163 - 42
DVH6763-15	♦ALP	165 - 3
DVH6763-16	♦ALP	167 - 58
DVH6763-17	♦ALP	170 - 59
DVH6763-19	♦ALP	172 - 79
DVH6763-20	♦ALP	176 - 23
DVH6763-21	♦ALP	178 - 62
DVH6763-22	♦ALP	181 - 89
DVH6763-23	♦ALP	184 - 42
DVH6763-25	♦ALP	187 - 20
DVH6763-26	♦ALP	189 - 52
DVH6763-27	♦ALP	191 -107
DVH6764-03	♦ALP	146 - 3
DVH6764-04	♦ALP	147 - 81
DVH6764-05	♦ALP	149 - 2
DVH6764-07	♦ALP	150 - 74
DVH6764-08	♦ALP	152 -105
DVH6764-09	♦ALP	154 -108
DVH6764-10	♦ALP	157 - 4
DVH6764-11	♦ALP	159 - 19
DVH6764-13	♦ALP	161 - 27
DVH6764-14	♦ALP	163 - 43
DVH6764-15	♦ALP	165 - 4
DVH6764-16	♦ALP	167 - 59
DVH6764-17	♦ALP	170 - 60
DVH6764-19	♦ALP	172 - 80
DVH6764-20	♦ALP	176 - 24
DVH6764-21	♦ALP	178 - 63
DVH6764-22	♦ALP	181 - 90
DVH6764-23	♦ALP	184 - 43
DVH6764-25	♦ALP	187 - 21
DVH6764-26	♦ALP	189 - 53
DVH6764-27	♦ALP	191 -108
DVH6790-03	♦ALP	146 - 4
DVH6790-04	♦ALP	147 - 82
DVH6790-05	♦ALP	149 - 3
DVH6790-07	♦ALP	150 - 75
DVH6790-08	♦ALP	152 -106
DVH6790-09	♦ALP	154 -109
DVH6790-10	♦ALP	157 - 5
DVH6790-11	♦ALP	159 - 20
DVH6790-13	♦ALP	161 - 28
DVH6790-14	♦ALP	163 - 44
DVH6790-15	♦ALP	165 - 5
DVH6790-16	♦ALP	167 - 60
DVH6790-17	♦ALP	170 - 61
DVH6790-19	♦ALP	172 - 81
DVH6790-20	♦ALP	176 - 25
DVH6790-21	♦ALP	178 - 64
DVH6791-03	♦ALP	146 - 5
DVH6791-04	♦ALP	147 - 83
DVH6791-05	♦ALP	149 - 4
DVH6791-07	♦ALP	150 - 76
DVH6791-08	♦ALP	152 -107
DVH6791-09	♦ALP	154 -110
DVH6791-10	♦ALP	157 - 6
DVH6791-11	♦ALP	159 - 21
DVH6791-13	♦ALP	161 - 29
DVH6791-14	♦ALP	163 - 45
DVH6791-15	♦ALP	165 - 6
DVH6791-16	♦ALP	167 - 61
DVH6791-17	♦ALP	170 - 62
DVH6791-19	♦ALP	172 - 82
DVH6791-20	♦ALP	176 - 26
DVH6791-21	♦ALP	178 - 65
DVH6792-03	♦ALP	146 - 6
DVH6792-04	♦ALP	147 - 84
DVH6792-05	♦ALP	149 - 5
DVH6792-07	♦ALP	150 - 77
DVH6792-08	♦ALP	152 -108
DVH6792-09	♦ALP	155 - 1
DVH6792-10	♦ALP	157 - 7
DVH6792-11	♦ALP	159 - 22
DVH6792-13	♦ALP	161 - 30
DVH6792-14	♦ALP	163 - 46
DVH6792-15	♦ALP	165 - 7
DVH6792-16	♦ALP	167 - 62
DVH6792-17	♦ALP	170 - 63
DVH6792-19	♦ALP	172 - 83
DVH6792-20	♦ALP	176 - 27
DVH6792-21	♦ALP	178 - 66
DVH6793-03	♦ALP	146 - 7
DVH6793-04	♦ALP	147 - 85
DVH6793-05	♦ALP	149 - 6
DVH6793-07	♦ALP	150 - 78
DVH6793-08	♦ALP	152 -109
DVH6793-09	♦ALP	155 - 2
DVH6793-10	♦ALP	157 - 8
DVH6793-11	♦ALP	159 - 23
DVH6793-13	♦ALP	161 - 31
DVH6793-14	♦ALP	163 - 47
DVH6793-15	♦ALP	165 - 8
DVH6793-16	♦ALP	167 - 63
DVH6793-17	♦ALP	170 - 64
DVH6793-19	♦ALP	172 - 84
DVH6793-20	♦ALP	176 - 28
DVH6793-21	♦ALP	178 - 67
DVH6794-03	♦ALP	146 - 8
DVH6794-04	♦ALP	147 - 86
DVH6794-05	♦ALP	149 - 7
DVH6794-07	♦ALP	150 - 79
DVH6794-08	♦ALP	152 -110
DVH6794-09	♦ALP	155 - 3
DVH6794-10	♦ALP	157 - 9
DVH6794-11	♦ALP	159 - 24
DVH6794-13	♦ALP	161 - 32
DVH6794-14	♦ALP	163 - 48
DVH6794-15	♦ALP	165 - 9
DVH6794-16	♦ALP	167 - 64
DVH6794-17	♦ALP	170 - 65
DVH6794-19	♦ALP	172 - 85
DVH6794-20	♦ALP	176 - 29
DVH6794-21	♦ALP	178 - 68
DX206	♦APX	78 - 86
DX260	♦APX	78 - 87
DX267	♦APX	77 - 99
DX276	♦APX	79 - 23
DX285	♦APX	82 - 36
DX286	APX	77 -100
DX290	♦APX	85 - 95
DX332	APX	78 - 82
DX342	♦APX	77 - 59
DX343	APX	77 - 55
DX368	APX	81 - 82
DX373	APX	84 - 20
DX423	APX	86 - 41
DX450	APX	77 - 73
DX453	APX	78 - 80
DX453B	♦APX	77 - 23
DX481	APX	79 - 29
DX482	APX	79 -105
DXA3115-01	DEX	253 - 17
DXA3115-02	DEX	253 - 18
DXA3115-03	DEX	253 - 19
DXA3157-01	DEX	253 - 20
DXA3157-02	DEX	253 - 21
DXA3157-03	DEX	253 - 22
DXA020401	DEX	253 - 23
DXA020402	DEX	253 - 24
DXA020403	DEX	253 - 25
DXA020404	DEX	253 - 26
DXA020405	DEX	253 - 27
DXA020406	DEX	253 - 28
DXA020407	DEX	253 - 29
DXA020408	DEX	253 - 30
DXA020409	DEX	253 - 31
DXA020410	DEX	253 - 32
DXA020411	DEX	253 - 33
DXA020412	DEX	253 - 34
DXA020413	DEX	253 - 35
DXA020414	DEX	253 - 36
DXA020415	DEX	253 - 37
DXA020416	DEX	253 - 38
DXA020417	DEX	253 - 39
DXA020418	DEX	253 - 40
DXA020419	DEX	253 - 41
DXA020420	DEX	253 - 42
DXA020601	♦DEX	253 - 43
DXA020602	♦DEX	253 - 44
DXA020603	♦DEX	253 - 45
DXA020604	♦DEX	253 - 46
DXA020605	♦DEX	253 - 47
DXA020606	♦DEX	253 - 48
DXA020607	♦DEX	253 - 49
DXA020608	♦DEX	253 - 50
DXA020609	♦DEX	253 - 51
DXA020610	♦DEX	253 - 52
DXA020611	♦DEX	253 - 53
DXA020612	♦DEX	253 - 54
DXA020613	♦DEX	253 - 55
DXA020614	♦DEX	253 - 56
DXA020615	♦DEX	253 - 57
DXA020801	♦DEX	253 - 58
DXA020802	♦DEX	253 - 59
DXA020803	♦DEX	253 - 60
DXA020804	♦DEX	253 - 61
DXA020805	♦DEX	253 - 62
DXA020806	♦DEX	253 - 63
DXA020807	♦DEX	253 - 64
DXA020808	♦DEX	253 - 65
DXA020809	♦DEX	253 - 66
DXA020810	♦DEX	253 - 67
DXA020811	♦DEX	253 - 68
DXA020812	♦DEX	253 - 69
DXA020813	♦DEX	253 - 70
DXA020814	♦DEX	253 - 71
DXA020815	♦DEX	253 - 72
DXA040801	♦DEX	253 - 73
DXA040802	♦DEX	253 - 74
DXA040803	♦DEX	253 - 75
DXA040804	♦DEX	253 - 76
DXA040805	♦DEX	253 - 77
DXA040806	♦DEX	253 - 78
DXA040807	♦DEX	253 - 79
DXA040808	♦DEX	253 - 80
DXA040809	♦DEX	253 - 81
DXA040810	♦DEX	253 - 82
DXA040811	♦DEX	253 - 83
DXA040812	♦DEX	253 - 84
DXA040813	♦DEX	253 - 85
DXA040814	♦DEX	253 - 86
DXA040815	♦DEX	253 - 87
DXA040816	♦DEX	253 - 88
DXA040817	♦DEX	253 - 89
DXA040818	♦DEX	253 - 90
DXA040819	♦DEX	253 - 91
DXA040820	♦DEX	253 - 92
DXA040821	♦DEX	253 - 93
DXA040822	♦DEX	253 - 94
DXA040823	♦DEX	253 - 95
DXA040824	♦DEX	253 - 96
DXA051001	DEX	253 - 97
DXA051002	DEX	253 - 98
DXA051003	DEX	253 - 99
DXA051004	DEX	253 -100
DXA051005	DEX	253 -101
DXA051006	DEX	253 -102
DXA051007	DEX	253 -103
DXA051008	DEX	253 -104
DXA051009	DEX	253 -105
DXA051010	DEX	253 -106
DXA051011	DEX	253 -107
DXA051012	DEX	253 -108
DXA061801	♦DEX	253 -109
DXA061802	♦DEX	253 -110
DXA061803	♦DEX	254 - 1
DXA061804	♦DEX	254 - 2
DXA061805	♦DEX	254 - 3
DXA061806	♦DEX	254 - 4
DXA061807	♦DEX	254 - 5
DXA061808	♦DEX	254 - 6
DXA061809	♦DEX	254 - 7
DXA061810	♦DEX	254 - 8
DXA061811	♦DEX	254 - 9
DXA061812	♦DEX	254 - 10
DXA061813	♦DEX	254 - 11
DXA061814	♦DEX	254 - 12
DXA061815	♦DEX	254 - 13
DXA081201	♦DEX	254 - 14
DXA081202	♦DEX	254 - 15
DXA081203	♦DEX	254 - 16
DXA081204	♦DEX	254 - 17
DXA081205	♦DEX	254 - 18
DXA081206	♦DEX	254 - 19
DXA081207	♦DEX	254 - 20
DXA081208	♦DEX	254 - 21
DXA081209	♦DEX	254 - 22
DXA081210	♦DEX	254 - 23
DXA081211	♦DEX	254 - 24
DXA081212	♦DEX	254 - 25
DXA081801	♦DEX	254 - 26
DXA081802	♦DEX	254 - 27
DXA081803	♦DEX	254 - 28
DXA081804	♦DEX	254 - 29
DXA081805	♦DEX	254 - 30
DXA081806	♦DEX	254 - 31
DXA081807	♦DEX	254 - 32
DXA081808	♦DEX	254 - 33
DXA081809	♦DEX	254 - 34
DXA081810	♦DEX	254 - 35
DXA081811	♦DEX	254 - 36
DXA081812	♦DEX	254 - 37
DXA081813	♦DEX	254 - 38
DXA081814	♦DEX	254 - 39
DXA081815	♦DEX	254 - 40
DXA081816	♦DEX	254 - 41
DXA081817	♦DEX	254 - 42
DXA081818	♦DEX	254 - 43
DXA081819	♦DEX	254 - 44
DXA081820	♦DEX	254 - 45
DXL1503A	♦DEX	321 - 2
DXL1503A-P70	♦DEX	321 - 3
DXL2501A	♦DEX	321 - 74
DXL2501A-P70	♦DEX	321 - 75
DXL2502A	♦DEX	321 - 76
DXL2502A-P70	♦DEX	321 - 9
DXL2503A	♦DEX	321 - 77
DXL2503A-CR	♦DEX	321 - 78
DXL2503A-CRES		321 - 79
	♦DEX	
DXL2608A	♦DEX	321 - 43
DXL2704A	♦DEX	321 - 40
DXL3501A	♦DEX	321 - 12
DXL3501A-P100F		321 - 13
	♦DEX	
DXL3503A	♦DEX	321 - 80
DXL3503A-CR	♦DEX	321 - 81
DXL3503A-CRES		321 - 82
	♦DEX	
DXL3504A	♦DEX	321 - 83
DXL3504A-CR	♦DEX	322 - 1
DXL3504A-CRES		322 - 2
	♦DEX	
DXL3605A	♦DEX	322 - 3
DXL3608A	♦DEX	322 - 5
DXL3610A	♦DEX	322 - 6
DXL3615A	♦DEX	321 - 15
DXL3615A-P100F		321 - 16
	♦DEX	
DXL3630A	♦DEX	321 - 17
DXL3630A-P100F		321 - 18
	♦DEX	
DXL3640A	♦DEX	321 - 21
DXL3640A-P100F		321 - 22
	♦DEX	
DXL3680-4(A)	♦DEX	301 - 39
DXL3680-6(A)	♦DEX	301 - 40
DXL36120-4(A)		301 - 61
	♦DEX	
DXL36120-6(A)		301 - 62
	♦DEX	
E1B5	♦CTR	312 - 35
E1B6	♦CTR	312 - 36
E1B7	♦CTR	312 - 37
E1B8	♦CTR	312 - 38
E1B9	♦CTR	312 - 39
E602	♦EAS	155 - 4
E603	♦EAS	159 - 25
E605	♦EAS	163 - 49
E607	♦EAS	167 - 65
E610	♦EAS	172 - 86
E700	♦EAS	147 - 87
E701	♦EAS	150 - 80
E702	♦EAS	155 - 5
E703	♦EAS	159 - 26
E705	♦EAS	163 - 50
E707	♦EAS	167 - 66
E710	♦EAS	172 - 87
E715	♦EAS	178 - 69
E722	♦EAS	184 - 44
E921	♦ALP	255 - 15
E1712A	♦MSI	149 - 8
E1714A	♦MSI	155 - 6
E1716A	♦MSI	157 - 88
E1717A	♦MSI	160 - 87
E1718A	♦MSI	162 - 73
E1719A	♦MSI	165 - 10
E1720A	♦MSI	167 - 67
E1722A	♦MSI	170 - 66
E1724A	♦MSI	172 - 88
E1726A	♦MSI	176 - 30
E3274A	♦MOVB	80 - 59
E3274B	♦MOVB	80 - 60
E3389	MOVB	85 - 53
E3456	♦MOVB	85 - 85
E3470A	♦MOVB	86 - 7
E3470B	♦MOVB	86 - 8
E3474	♦MOVB	85 - 54
E3479	MOVB	79 - 52
E3479T	MOVB	79 - 51
E3480	♦MOVB	85 - 83
E3494	MOVB	85 - 30
E3509A	TOSJ	84 - 54
E3509H	TOSJ	84 - 92
E3509L	TOSJ	83 - 89
E3513	TOSJ	84 - 23
E3513H	TOSJ	84 - 74
E3513L	TOSJ	83 - 44
E3574	MOVB	79 - 53
E3753	TOSJ	73 - 68
E3774	TOSJ	75 - 37
E3775A	TOSJ	75 -104
E3776	TOSJ	65 - 87
E3778	TOSJ	77 - 8
E3780	TOSJ	75 - 95
E3822B	TOSJ	101 - 36
E3824A	TOSJ	103 -100
E3825	TOSJ	102 - 73
E3832	TOSJ	103 - 97
E3839	TOSJ	103 - 94
E3840	TOSJ	103 - 95
E3902	TOSJ	110 - 97
E9400	♦ALP	233 - 37
EM1095	VAR	66 - 85
EM1114,B	♦VARC	70 - 36
EM1114A,C	♦VARC	70 - 9
EM1137L	VAR	66 - 16
EM1138	♦VAR	70 - 73
EM1138M	VAR	70 -100
EM1149	♦VAR	70 - 41
EM1188	♦VAR	70 - 74
EP1014A	♦MSI	155 - 7
EP1014B	♦MSI	155 - 8
EP1014D	♦MSI	155 - 9
EP1014E	♦MSI	155 - 10
EP1014H	♦MSI	155 - 11
EP1016A	♦MSI	157 - 89
EP1016B	♦MSI	157 - 90
EP1016D	♦MSI	157 - 91
EP1016E	♦MSI	157 - 92
EP1016H	♦MSI	157 - 93
EP1017A	♦MSI	160 - 88
EP1017B	♦MSI	160 - 89
EP1017D	♦MSI	160 - 90
EP1017E	♦MSI	160 - 91
EP1017H	♦MSI	160 - 92
EP1018A	♦MSI	162 - 74
EP1018B	♦MSI	162 - 75
EP1018D	♦MSI	162 - 76
EP1018E	♦MSI	162 - 77
EP1018H	♦MSI	162 - 78
EP1019A	♦MSI	165 - 11
EP1019B	♦MSI	165 - 12
EP1019D	♦MSI	165 - 13
EP1019E	♦MSI	165 - 14
EP1019H	♦MSI	165 - 15
EP1020A	♦MSI	167 - 68
EP1020B	♦MSI	167 - 69
EP1020D	♦MSI	167 - 70
EP1020E	♦MSI	167 - 71
EP1020H	♦MSI	167 - 72
EP1022A	♦MSI	170 - 67
EP1022B	♦MSI	170 - 68

△-Registered with JEDEC by this manufacturer

♦-Mfr's data sheet available in microfilm service

1. TYPE No. CROSS INDEX

IN TYPE NUMBER SEQUENCE

TYPE No.	MFRS	Pg&Line
EP1022D	♦MSI	170 - 69
EP1022E	♦MSI	170 - 70
EP1022H	♦MSI	170 - 71
EP1024A	♦MSI	172 - 89
EP1024B	♦MSI	172 - 90
EP1024D	♦MSI	172 - 91
EP1024E	♦MSI	172 - 92
EP1024H	♦MSI	172 - 93
EP1026A	♦MSI	176 - 31
EP1026B	♦MSI	176 - 32
EP1026D	♦MSI	176 - 33
EP1026E	♦MSI	176 - 34
EP1026H	♦MSI	176 - 35
EP1028A	♦MSI	178 - 70
EP1028B	♦MSI	178 - 71
EP1028D	♦MSI	178 - 72
EP1028E	♦MSI	178 - 73
EP1028H	♦MSI	178 - 74
EP1030A	♦MSI	181 - 91
EP1030B	♦MSI	181 - 92
EP1030D	♦MSI	181 - 93
EP1030E	♦MSI	181 - 94
EP1030H	♦MSI	181 - 95
EP1032A	♦MSI	182 -101
EP1032B	♦MSI	182 -102
EP1032D	♦MSI	182 -103
EP1032E	♦MSI	182 -104
EP1032H	♦MSI	182 -105
EP1034A	♦MSI	184 - 45
EP1034B	♦MSI	184 - 46
EP1034D	♦MSI	184 - 47
EP1034E	♦MSI	184 - 48
EP1034H	♦MSI	184 - 49
EP1036A	♦MSI	187 - 22
EP1036B	♦MSI	187 - 23
EP1036D	♦MSI	187 - 24
EP1036E	♦MSI	187 - 25
EP1036H	♦MSI	187 - 26
EP1038A	♦MSI	189 - 54
EP1038B	♦MSI	189 - 55
EP1038D	♦MSI	189 - 56
EP1038E	♦MSI	189 - 57
EP1038H	♦MSI	189 - 58
EP1712A	♦MSI	149 - 9
EP1714A	♦MSI	155 - 12
EP1716A	♦MSI	157 - 94
EP1717A	♦MSI	160 - 93
EP1718A	♦MSI	162 - 79
EP1719A	♦MSI	165 - 16
EP1720A	♦MSI	167 - 73
EP1722A	♦MSI	170 - 72
EP1724A	♦MSI	172 - 94
EP1726A	♦MSI	176 - 36
ESM269	♦THEF	315 - 31
ESM690	♦THEF	318 -103
ESM691	♦THEF	315 - 28
ESM791	♦THEF	318 - 66
ESM796	♦THEF	302 - 46
F1B5	♦CTR	312 - 40
F1B6	♦CTR	312 - 41
F1B7	♦CTR	312 - 42
F1B8	♦CTR	312 - 43
F1B9	♦CTR	312 - 44
F921	♦ALP	255 - 16
F1005	THC	86 - 78
F1025	♦THC	82 - 18
F1030	THC	80 - 21
F1031	THC	80 - 22
F1032	THC	80 - 23
F1033	THC	80 - 24
F1034	THC	80 - 25
F1035	THC	80 - 26
F1036	THC	80 - 27
F1037	THC	80 - 28
F1038	THC	80 - 29
F1039	THC	80 - 30
F1040	THC	80 - 31
F1041	THC	80 - 32
F1042	THC	80 - 33
F1043	THC	80 - 34
F1044	THC	80 - 35
F1050	♦THC	81 - 12
F1054	THC	79 - 74
F1055	THC	80 - 18
F1056	THC	80 - 55
F1088	THC	77 - 88
F1089	THC	77 -102
F1090	THC	78 - 8
F1091	THC	78 - 13
F1092	THC	78 - 17
F1093	THC	78 - 20
F1094	THC	78 - 27
F1095	THC	78 - 31
F1096	THC	78 - 33
F1103	THC	86 - 79
F1119	THC	77 -101
F1120	THC	78 - 16
F1121	THC	78 - 18
F1123	THC	78 - 97
F1127	THC	78 - 10
F1128	THC	78 - 30
F2006	♦THC	63 - 23
F2008	♦THC	62 - 65
F2009	♦THC	62 - 77
F2040	♦THC	63 - 10
F2042	♦THC	63 - 11
F2043	♦THC	63 - 9
F2055	THC	73 - 54
F2084	♦ITT	98 - 30
F2085	♦ITT	98 - 96
F2098	ITT	94 -103
F2099	♦ITT	94 -109
F2106	♦ITT	94 - 3
F2107	♦ITT	90 - 93
F2120	♦ITT	91 -101
F2124	♦ITT	91 -107
F2125	♦ITT	91 - 86
F2128	♦ITT	91 -103
F2129	♦ITT	92 - 90
F2130	♦ITT	97 - 45
F2131	♦ITT	101 - 27
F2137	♦ITT	98 - 86
F2147	♦ITT	93 - 77
F2153	ITT	91 - 87
F2154	ITT	94 -110
F2161	ITT	99 - 93
F2169	♦ITT	101 - 58
F2180	ITT	102 - 36
F2184	ITT	89 - 53
F2191	ITT	99 - 99
F2194	ITT	89 - 52
F2195	ITT	95 - 86
F2196	ITT	101 - 73
F2197	ITT	99 - 62
F2208	ITT	99 - 22
F2209	ITT	99 - 98
F2213	ITT	91 - 88
F2214	ITT	95 - 1
F2223	ITT	99 -100
F2233	ITT	102 -100
F2246	ITT	92 - 28
F2268	ITT	102 - 3
F2548	ITT	98 - 32
F2576	ITT	94 - 4
F2577	♦ITT	91 - 89
F2578	♦ITT	91 - 90
F2909	ITT	73 - 38
F2910	ITT	73 - 30
F2911	♦ITT	73 - 32
F2912	♦ITT	73 - 37
F2914	ITT	73 - 35
F2917/8315	ITT	73 - 21
F2919	ITT	73 - 36
F2920	ITT	73 - 45
F2922	ITT	67 -106
F2923	ITT	70 - 59
F2924	ITT	70 - 57
F2932	ITT	73 - 39
F2933/DOD034	ITT	76 - 87
F2934	ITT	70 - 58
F2945	ITT	74 - 86
F2946	ITT	70 - 60
F2947	ITT	73 - 34
F2948	ITT	76 - 73
F2951	ITT	74 - 93
F2953	ITT	76 - 77
F3003	THC	106 - 11
F3004	THC	106 - 9
F3012	THC	108 - 48
F4017D	THC	90 - 65
F4024B	THC	92 - 19
F4025B	THC	93 - 91
F4026B	THC	98 - 63
F4029E	THC	60 - 49
F4032B	THC	60 - 93
F4074	THC	61 - 44
F4075	THC	61 - 30
F4076	THC	61 - 15
F4084	THC	60 - 64
F4123A	THC	89 -109
F4129	THC	91 - 11
F4146	THC	61 - 35
F4150	THC	61 - 17
F4156	THC	102 - 90
F4171A	THC	60 - 99
F4185	THC	100 - 10
F4186	THC	97 - 58
FAA237D	BTC	69 -100
FC51M	FCAJ	200 - 39
FC52M	FCAJ	197 -102
FC53M	FCAJ	193 - 4
FC54M	FCAJ	186 - 26
FC55	FCAJ	181 - 34
FC56	FCAJ	175 - 8
FC57	FCAJ	175 - 74
FC63	FCAJ	197 - 94
FC64M	FCAJ	200 - 36
FC66M	FCAJ	202 -102
FDP522	♦AVA	254 - 46
FHB5	CTR	314 - 62
FHB6	CTR	314 - 63
FHB7	CTR	314 - 64
FHB8	CTR	314 - 65
FHB9	CTR	314 - 66
FHE5	CTR	312 - 17
FHE6	CTR	312 - 18
FHE7	CTR	312 - 19
FHE8	CTR	312 - 20
FHE9	CTR	312 - 21
FIB5	CTR	312 - 45
FIB6	CTR	312 - 46
FIB7	CTR	312 - 47
FIB8	CTR	312 - 48
FIB9	CTR	312 - 49
FJ001A	FCAJ	315 - 46
	FMI	
FJ001B	FCAJ	315 - 29
	FMI	
FJ002B	FMI	314 - 37
FJ04A2-28	♦FCAJ	303 - 92
FJ04A2-28GG	FMI	303 - 93
FJ101E	FCAJ	308 - 81
	FMI	
FJ101M	FMI	314 - 46
FJ101R	FMI	314 - 47
FJ201E	FCAJ	318 - 55
	♦FMI	
FJ201F	FCAJ	318 - 52
	♦FMI	
FJ201M	♦FMI	318 - 14
FJ201R	♦FMI	318 - 15
FJ202E	FMI	319 - 38
FJ202F	FMI	319 - 37
FJ203E	FMI	320 - 11
FJ203F	FMI	320 - 9
FJ0204-12AA	FMI	302 - 58
FJ0230-12	FCAJ	302 - 55
FJ0230-12FF	FMI	302 - 56
FJ0240-12GG	FMI	302 - 57
FJ401E	FCAJ	319 - 79
	♦FMI	
FJ401F	FCAJ	319 - 77
	♦FMI	
FJ401J	FCAJ	319 - 78
	♦FMI	
FJ0402-12	♦FCAJ	304 - 60
	♦FMI	
FJ402E	FCAJ	318 - 56
	FMI	
FJ402F	FCAJ	318 - 53
	FMI	
FJ402J	FCAJ	318 - 54
	FMI	
FJ0403-28	♦FCAJ	304 - 54
	♦FMI	
FJ0403-28RR	♦FMI	304 - 55
FJ0406-28	♦FCAJ	304 - 65
	♦FMI	
FJ0406-28RR	♦FMI	304 - 66
FJ0408-12	♦FCAJ	304 - 72
	♦FMI	
FJ0410-28	♦FCAJ	304 - 74
	♦FMI	
FJ0410-28RR	♦FMI	305 - 1
FJ0415-12	♦FCAJ	305 - 8
	♦FMI	
FJ0425-28	♦FCAJ	305 - 14
	♦FMI	
FJ0425-28RR	♦FMI	305 - 15
FJ0430-12	♦FCAJ	305 - 19
FJ0430-12GG	FMI	305 - 20
FJ450E	FMI	316 - 31
FJ451E	FCAJ	319 - 9
	♦FMI	
FJ451J	FCAJ	319 - 10
	♦FMI	
FJ451LE	FCAJ	316 - 32
	♦FMI	
FJ0480-28	♦FCAJ	303 - 21
FJ0480-28GG	FMI	303 - 84
FJ0801-12LL	FMI	307 - 17
FJ0804-12LL	FMI	307 - 19
FJ0807B12LL	FMI	307 - 20
FJ0812-12LL	FMI	307 - 25
FJ0820B12LL	FMI	307 - 26
FJ0830-28	♦FMI	307 - 27
FJ0850-28	♦FMI	307 - 28
FJ0880-28	♦FMI	307 - 29
FJ901E	FCAJ	320 - 12
	♦FMI	
FJ901F	FCAJ	320 - 10
	♦FMI	
FJ901M	♦FMI	320 - 13
FJ901R	♦FMI	320 - 14
FJ902E	FCAJ	316 - 12
	FMI	
FJ902F	FCAJ	316 - 6
	FMI	
FJ902M	FMI	318 - 7
FJ902R	FMI	318 - 8
FJ951E	FMI	318 - 22
FJ952DD	♦FMI	319 - 61
FJ952E	FCAJ	319 - 14
	♦FMI	
FJ954DD	FMI	318 - 38
FJ954E	FMI	316 - 74
FJ2301B-24	FCAJ	313 - 22
	♦FMI	
FJ2302B-24	FCAJ	313 - 26
	♦FMI	
FJ2304B-24	FCAJ	313 - 36
	♦FMI	
FJ2306B-24#ai		313 - 46
	♦FCAJ	
FJ7201BB	♦FCAJ	313 - 27
	♦FMI	
FJ7201CC	♦FMI	313 - 28
FJ9203BB	FCAJ	313 - 14
	♦FMI	
FJ9203CC	FCAJ	313 - 15
	♦FMI	
FJ9203DD	FCAJ	313 - 16
	♦FMI	
FJ9208BB	♦FCAJ	313 - 17
	♦FMI	
FJ9208CC	♦FCAJ	313 - 18
	♦FMI	
FJ9208DD	♦FCAJ	313 - 19
	♦FMI	
FJ9215BB	♦FCAJ	313 - 29
	♦FMI	
FJ9215CC	♦FCAJ	313 - 30
	♦FMI	
FJ9215DD	♦FCAJ	313 - 31
	♦FMI	
FJ9225BB	♦FCAJ	313 - 37
	♦FMI	
FJ9225CC	♦FCAJ	313 - 38
	♦FMI	
FJ9225DD	♦FCAJ	313 - 39
	♦FMI	
FJ9235BB	♦FCAJ	313 - 47
	♦FMI	
FJ9235CC	♦FCAJ	313 - 48
	♦FMI	
FLC02WF	♦FMI	320 - 35
FLC08ME	♦FCAJ	316 - 56
	♦FMI	
FLC15ME	♦FCAJ	316 - 64
	♦FMI	
FLC30ME	♦FCAJ	316 - 68
	♦FMI	
FLC053WG	♦FMI	320 - 45
FLC081WF	♦FCAJ	320 - 47
	♦FMI	
FLC081X	♦FCAJ	320 - 44
FLC103WG	♦FMI	320 - 51
FLC151MF	♦FMI	320 - 49
FLC151WF	♦FCAJ	320 - 52
	♦FMI	
FLC151X	FCAJ	320 - 50
FLC253MH8	♦FMI	320 - 67
FLC301MG-4	♦FCAJ	316 - 91
	♦FMI	
FLC301MG-6	♦FMI	319 - 65
FLC301MG-8	♦FMI	320 - 68
FLK03WG	FCAJ	321 - 49
FLK06MH14(A)	FCAJ	321 - 50
FLK06WG	♦FCAJ	321 - 51
FLK12MH14(A)	FCAJ	321 - 56
FLK022WG	♦FMI	321 - 46
FLK052WG	♦FMI	321 - 48
FLK102MH14	♦FMI	321 - 52
FLK202MH14	♦FMI	321 - 55
FLL10ME	♦FMI	313 - 20
FLL17ME	♦FMI	313 - 32
FLL35ME	♦FMI	313 - 40
FLL50MK	♦FMI	313 - 45
FLL100MK	♦FMI	313 - 49
FLM0910-2	♦FMI	320 - 88
FLM0910-4	♦FMI	320 - 89
FLM1011-2	♦FMI	320 - 93
FLM1011-4	♦FMI	320 - 94
FLM1414-2	♦FMI	321 - 57
FLM1414-4	♦FMI	321 - 58
FLM3642-6(A)	♦FCAJ	317 - 7
FLM3742-3	♦FCAJ	246 - 5
		316 - 92
FLM3742-3D	♦FMI	316 -100
FLM3742-5	♦FCAJ	246 - 6
		317 - 1
FLM3742-5IM	♦FMI	317 - 2
FLM3742-6#ai	♦FCAJ	317 - 6
	♦FMI	
FLM4450-3	♦FCAJ	246 - 7
	♦FMI	318 - 48
FLM4450-5	♦FCAJ	246 - 8
		318 - 49
FLM4450-5IM	♦FMI	318 - 50
FLM4450-6#ai	♦FCAJ	318 - 51
	♦FMI	
FLM5964-3	♦FCAJ	246 - 9
		319 - 27
FLM5964-3B#ai		319 - 30
	♦FCAJ	
FLM5964-3IM	♦FMI	319 - 28
FLM5964-4C	♦FMI	319 - 31
FLM5964-5	♦FCAJ	246 - 10
		319 - 32
FLM5964-5IM	♦FMI	300 - 8
FLM5964-6(A)	♦FCAJ	319 - 33
FLM5964-6#ai	♦FCAJ	319 - 35
FLM5964-8C	♦FMI	319 - 34
FLM6472-3B#ai		319 - 67
	♦FCAJ	
FLM6472-4C	♦FMI	319 - 68
FLM6472-5	♦FCAJ	246 - 11
		319 - 69
FLM6472-5IM	♦FMI	319 - 70
FLM6472-6(A)	♦FCAJ	319 - 71
FLM6472-6#ai	♦FCAJ	319 - 73
FLM6472-8C	♦FMI	319 - 72
FLM7177-3B#ai		319 - 80
	♦FCAJ	
FLM7177-4C	♦FMI	319 - 81
FLM7177-5	♦FCAJ	246 - 12
		319 - 82
FLM7177-5IM	♦FMI	319 - 83
FLM7177-6(A)	♦FCAJ	319 - 84
FLM7177-6#ai	♦FCAJ	319 - 86
FLM7177-8C	♦FMI	319 - 85
FLM7785-3B(A)		320 - 69
	♦FCAJ	
FLM7785-3B#ai		320 - 70
	♦FCAJ	
FLM7785-4	♦FCAJ	246 - 13
		320 - 72
FLM7785-4C	♦FMI	320 - 71
FLM7785-6#ai	♦FCAJ	320 - 74
FLM7785-8C	♦FMI	320 - 73
FLS09	♦FCAJ	316 - 57
FLS09ME	FCAJ	316 - 58
FLS09MM	FCAJ	316 - 59
FLS16	FCAJ	316 - 65
FLS16ME	FCAJ	316 - 66
FLS16MM	FCAJ	316 - 67
FLS31	FCAJ	316 - 69
FLS31ME	FCAJ	316 - 70
FLS31MM	FCAJ	316 - 71
FLS50	FCAJ	316 - 72
FLS50ME	FCAJ	316 - 73
	♦FMI	
FLX03MB	FCAJ	321 - 19
	FMI	
FLX03WG	♦FCAJ	321 - 23
FLX03X	FCAJ	321 - 20
FLX06MB	♦FCAJ	321 - 25
	♦FMI	
FLX06MH12(A)	♦FCAJ	321 - 27
FLX06WG	♦FCAJ	321 - 28
FLX06X	FCAJ	321 - 26
FLX12MB	FCAJ	321 - 30
	FMI	
FLX12MH12(A)	FCAJ	321 - 32
FLX102MH12	♦FMI	321 - 29
FLX202MH12	♦FMI	321 - 31
FM150	♦CTR	302 - 53
FMMD109	♦FERB	188 - 39
FMMD3102	♦FERB	183 - 95
FP1	♦ALP	247 - 71
FP3	♦ALP	247 - 72
FP5	♦ALP	247 - 73
FP7	♦ALP	247 - 74
FP9	♦ALP	247 - 75
FP11	♦ALP	247 - 76
FP11-1	♦ALP	247 - 77
FP11-2	♦ALP	247 - 78
FP15	♦ALP	247 - 79
FP17	♦ALP	247 - 80
FP18	♦ALP	247 - 81
FP19	♦ALP	247 - 82
FP23	♦ALP	247 - 83
FP24	♦ALP	247 - 84
FP25	♦ALP	247 - 85
FP27	♦ALP	247 - 86
FP28	♦ALP	247 - 87
FP29	♦ALP	247 - 88
FP31	♦ALP	247 - 89
FP33	♦ALP	247 - 90
FP35	♦ALP	247 - 91
FP37	♦ALP	247 - 92
FP39	♦ALP	247 - 93
FP53	♦ALP	247 - 94
FP54	♦ALP	247 - 95
FP55	♦ALP	247 - 96
FP56	♦ALP	247 - 97
FP57-1	♦ALP	247 - 98
FP58	♦ALP	247 - 99
FP59	♦ALP	247 -100
FP59-1	♦ALP	247 -101
FP63	♦ALP	247 -102
FP64	♦ALP	247 -103
FP65	♦ALP	247 -104
FP74	♦ALP	247 -105
FP74-1	♦ALP	247 -106
FP75	♦ALP	247 -107
FP75-2	♦ALP	247 -108
FP76	♦ALP	247 -109
FP77	♦ALP	247 -110
FP77-1	♦ALP	248 - 1
FP79	♦ALP	248 - 2
FP401	♦ALP	248 - 3
FP402	♦ALP	248 - 4
FP404	♦ALP	248 - 5
FP521	♦ALP	248 - 6
FP522	♦ALP	248 - 7
FP591	♦ALP	248 - 8
FP592	♦ALP	248 - 9
FP593	♦ALP	248 - 10
FP594	♦ALP	248 - 11
FPD20821	♦AVA	249 - 10
FPD21821	♦AVA	249 - 11
FPD21841	♦AVA	249 - 12
FPD30821	♦AVA	249 - 13
FPD31821	♦AVA	249 - 14
FPD31841	♦AVA	249 - 15
FPD40821	♦AVA	249 - 16
FPD41821	♦AVA	249 - 17
FPD41841	♦AVA	249 - 18
FPF1	♦ALP	248 - 12
FPF3	♦ALP	248 - 13
FPF5	♦ALP	248 - 14
FPF7	♦ALP	248 - 15
FPF9	♦ALP	248 - 16
FPF11	♦ALP	248 - 17
FPF11-1	♦ALP	248 - 18
FPF11-2	♦ALP	248 - 19
FPF15	♦ALP	248 - 20
FPF17	♦ALP	248 - 21
FPF18	♦ALP	248 - 22
FPF19	♦ALP	248 - 23
FPF23	♦ALP	248 - 24
FPF24	♦ALP	248 - 25
FPF25	♦ALP	248 - 26
FPF27	♦ALP	248 - 27
FPF28	♦ALP	248 - 28
FPF29	♦ALP	248 - 29
FPF31	♦ALP	248 - 30
FPF33	♦ALP	248 - 31
FPF35	♦ALP	248 - 32
FPF37	♦ALP	248 - 33
FPF39	♦ALP	248 - 34
FPF53	♦ALP	248 - 35
FPF54	♦ALP	248 - 36
FPF55	♦ALP	248 - 37
FPF56	♦ALP	248 - 38
FPF57-1	♦ALP	248 - 39
FPF58	♦ALP	248 - 40
FPF59	♦ALP	248 - 41
FPF59-1	♦ALP	248 - 42
FPF63	♦ALP	248 - 43
FPF64	♦ALP	248 - 44
FPF65	♦ALP	248 - 45
FPF74	♦ALP	248 - 46
FPF74-1	♦ALP	248 - 47
FPF75	♦ALP	248 - 48
FPF75-2	♦ALP	248 - 49
FPF76	♦ALP	248 - 50
FPF77	♦ALP	248 - 51

△-Registered with JEDEC by this manufacturer

♦-Mfr's data sheet available in microfilm service

1. TYPE No. CROSS INDEX

IN TYPE NUMBER SEQUENCE

TYPE No.	MFRS	Pg&Line
FPF77-1	♦ALP	248 - 52
FPF79	♦ALP	248 - 53
FPF521	♦ALP	248 - 54
FPF522	♦ALP	248 - 55
FPF591	♦ALP	248 - 56
FPF592	♦ALP	248 - 57
FPF593	♦ALP	248 - 58
FPF594	♦ALP	248 - 59
FSC10FA	♦FMI	316 - 15
FSC10LF	♦FMI	316 - 16
FSC11FA	♦FMI	316 - 17
FSC11LF	♦FMI	316 - 18
FSX51X	♦FCAJ	320 - 33
FSX52X	♦FCAJ	320 - 36
FSX53W	♦FCAJ FMI	320 - 41
FSX53WF	♦FCAJ FMI	320 - 42
FSX53X	♦FCAJ	320 - 43
FSX100FA	FCAJ	321 - 11
FSX100X	FCAJ	321 - 14
G106,A,B	♦MSI	167 - 74
G110,A,B	♦MSI	172 - 95
G115,A,B	♦MSI	178 - 75
G122,A,B	♦MSI	184 - 50
G133,A,B	♦MSI	189 - 59
G147,A,B	♦MSI	193 - 61
G168,A,B	♦MSI	197 - 9
G206,A,B	♦MSI	167 - 75
G210,A,B	♦MSI	172 - 96
G215,A,B	♦MSI	178 - 76
G222,A,B	♦MSI	184 - 51
G233,A,B	♦MSI	189 - 60
G247,A,B	♦MSI	193 - 62
G268,A,B	♦MSI	197 - 10
G306,A,B	♦MSI	167 - 76
G310,A,B	♦MSI	172 - 97
G315,A,B	♦MSI	178 - 77
G322,A,B	♦MSI	184 - 52
G333,A,B	♦MSI	189 - 61
G347,A,B	♦MSI	193 - 63
G406,A,B	♦MSI	167 - 77
G410,A,B	♦MSI	172 - 98
G415,A,B	♦MSI	178 - 78
G422,A,B	♦MSI	184 - 53
G433,A,B	♦MSI	189 - 62
G506A,B	♦MSI	167 - 78
G510A,B	♦MSI	172 - 99
G515,A,B	♦MSI	178 - 79
G522A,B,C	♦MSI	184 - 54
G603A,B,C	♦MSI	159 - 27
G604A,B,C	♦MSI	161 - 33
G605A,B,C	♦MSI	165 - 17
G606A,B,C	♦MSI	167 - 79
G610A,B,C	♦MSI	172 -100
G615A,B,C	♦MSI	178 - 80
G702A,B,C	♦MSI	155 - 13
G20001G	MIC	206 - 11
G20002G	MIC	207 - 41
G20015G	MIC	206 - 77
GA504A	USSR	216 - 99
GA504B	USSR	216 -100
GA504V	USSR	216 -101
GAO2D-D	♦SIEG	233 - 38
GAO5D-D	♦SIEG	233 - 39
GAO10C-D	♦SIEG	233 - 40
GAO10C-H	♦SIEG	233 - 41
GAO10D-D	♦SIEG	233 - 42
GAO10D-H	♦SIEG	233 - 43
GAO10E-D	♦SIEG	233 - 44
GAO10E-H	♦SIEG	233 - 45
GAO10F-D	♦SIEG	233 - 46
GAO10F-H	♦SIEG	233 - 47
GAO10G-D	♦SIEG	233 - 48
GAO10G-H	♦SIEG	233 - 49
GAO10I-D	♦SIEG	233 - 50
GAO10I-H	♦SIEG	233 - 51
GAO20C-D	♦SIEG	233 - 52
GAO20C-H	♦SIEG	233 - 53
GAO20D-D	♦SIEG	233 - 54
GAO20D-H	♦SIEG	233 - 55
GAO20E-D	♦SIEG	233 - 56
GAO20E-H	♦SIEG	233 - 57
GAO20F-D	♦SIEG	212 - 16
GAO20F-H	♦SIEG	233 - 58
GAO20G-D	♦SIEG	233 - 59
GAO20G-H	♦SIEG	233 - 60
GAO20I-D	♦SIEG	233 - 61
GAO20I-H	♦SIEG	233 - 62
GAO50C-D	♦SIEG	233 - 63
GAO50C-H	♦SIEG	233 - 64
GAO50D-D	♦SIEG	233 - 65
GAO50D-H	♦SIEG	233 - 66
GAO50E-D	♦SIEG	233 - 67
GAO50E-H	♦SIEG	233 - 68
GAO50F-D	♦SIEG	233 - 69
GAO50F-H	♦SIEG	233 - 70
GAO50G-D	♦SIEG	233 - 71
GAO50G-H	♦SIEG	233 - 72
GAO50I-D	♦SIEG	233 - 73
GAO50I-H	♦SIEG	233 - 74
GAO100C-D	♦SIEG	233 - 75
GAO100C-H	♦SIEG	233 - 76
GAO100D-D	♦SIEG	233 - 77
GAO100D-H	♦SIEG	233 - 78
GAO100E-D	♦SIEG	233 - 79
GAO100E-H	♦SIEG	233 - 80
GAO100F-D	♦SIEG	233 - 81
GAO100F-H	♦SIEG	233 - 82
GAO100G-D	♦SIEG	233 - 83
GAO100G-H	♦SIEG	233 - 84
GAO100I-D	♦SIEG	233 - 85
GAO100I-H	♦SIEG	233 - 86
GAO200C-D	♦SIEG	233 - 87
GAO200C-H	♦SIEG	233 - 88
GAO200D-D	♦SIEG	233 - 89
GAO200D-H	♦SIEG	233 - 90
GAO200E-D	♦SIEG	233 - 91
GAO200E-H	♦SIEG	233 - 92
GAO200F-D	♦SIEG	233 - 93
GAO200F-H	♦SIEG	233 - 94
GAO200G-D	♦SIEG	233 - 95
GAO200G-H	♦SIEG	233 - 96
GAO200I-D	♦SIEG	233 - 97
GAO200I-E	SIEG	233 - 98
GAO200I-H	♦SIEG	233 - 99
GC1500	♦GHZ	146 - 9
GC1500A	♦MSI	146 - 10
GC1500AØ	♦GHZ	142 - 80
GC1500B	♦MSI	146 - 11
GC1500D	♦MSI	146 - 12
GC1500E	♦MSI	146 - 13
GC1500H	♦MSI	146 - 14
GC1501	♦GHZ	147 - 88
GC1501A	♦MSI	147 - 89
GC1501B	♦MSI	147 - 90
GC1501D	♦MSI	147 - 91
GC1501E	♦MSI	147 - 92
GC1501H	♦MSI	147 - 93
GC1502	♦GHZ	149 - 10
GC1502A	♦MSI	149 - 11
GC1502B	♦MSI	149 - 12
GC1502D	♦MSI	149 - 13
GC1502E	♦MSI	149 - 14
GC1502H	♦MSI	149 - 15
GC1503	♦GHZ	150 - 81
GC1503A	♦MSI	150 - 82
GC1503B	♦MSI	150 - 83
GC1503D	♦MSI	150 - 84
GC1503E	♦MSI	150 - 85
GC1503H	MSI	150 - 86
GC1504	♦GHZ	153 - 1
GC1504A	♦MSI	153 - 2
GC1504B	♦MSI	153 - 3
GC1504D	♦MSI	153 - 4
GC1504E	♦MSI	153 - 5
GC1504H	♦MSI	153 - 6
GC1505	♦GHZ	155 - 14
GC1505A	♦MSI	155 - 15
GC1505B	♦MSI	155 - 16
GC1505D	♦MSI	155 - 17
GC1505E	♦MSI	155 - 18
GC1505H	♦MSI	155 - 19
GC1506	♦GHZ	157 - 10
GC1506A	♦MSI	157 - 11
GC1506B	♦MSI	157 - 12
GC1506D	♦MSI	157 - 13
GC1506E	♦MSI	157 - 14
GC1506H	♦MSI	157 - 15
GC1507	♦GHZ	159 - 28
GC1507A	♦MSI	159 - 29
GC1507B	♦MSI	159 - 30
GC1507D	♦MSI	159 - 31
GC1507E	♦MSI	159 - 32
GC1507H	♦MSI	159 - 33
GC1508	♦GHZ	161 - 34
GC1508A	♦MSI	161 - 35
GC1508B	♦MSI	161 - 36
GC1508D	♦MSI	161 - 37
GC1508E	♦MSI	161 - 38
GC1508H	♦MSI	161 - 39
GC1509	♦GHZ	163 - 51
GC1509A	♦MSI	163 - 52
GC1509B	♦MSI	163 - 53
GC1509D	♦MSI	163 - 54
GC1509E	♦MSI	163 - 55
GC1509H	♦MSI	163 - 56
GC1510	♦GHZ	165 - 18
GC1510A	♦MSI	165 - 19
GC1510B	♦MSI	165 - 20
GC1510D	♦MSI	165 - 21
GC1510E	♦MSI	165 - 22
GC1510H	♦MSI	165 - 23
GC1511	♦GHZ	167 - 80
GC1511A	♦MSI	167 - 81
GC1511B	♦MSI	167 - 82
GC1511D	♦MSI	167 - 83
GC1511E	♦MSI	167 - 84
GC1511H	♦MSI	167 - 85
GC1512	♦GHZ	170 - 73
GC1512A	MSI	170 - 74
GC1512B	♦MSI	170 - 75
GC1512D	♦MSI	170 - 76
GC1512E	♦MSI	170 - 77
GC1512H	♦MSI	170 - 78
GC1513	♦GHZ	172 -101
GC1513A	♦MSI	172 -102
GC1513B	♦MSI	172 -103
GC1513D	♦MSI	172 -104
GC1513E	♦MSI	172 -105
GC1513H	♦MSI	172 -106
GC1514A	♦MSI	176 - 37
GC1514B	♦MSI	176 - 38
GC1514D	♦MSI	176 - 39
GC1514E	♦MSI	176 - 40
GC1514H	♦MSI	176 - 41
GC1600	♦GHZ	146 - 15
GC1600A	♦MSI	146 - 16
GC1600AØ	♦GHZ	142 - 81
GC1600B	♦MSI	146 - 17
GC1600D	♦MSI	146 - 18
GC1600E	♦MSI	146 - 19
GC1600H	♦MSI	146 - 20
GC1601	♦GHZ	147 - 94
GC1601A	♦MSI	147 - 95
GC1601B	♦MSI	147 - 96
GC1601D	♦MSI	147 - 97
GC1601E	♦MSI	147 - 98
GC1601H	♦MSI	147 - 99
GC1602	♦GHZ	149 - 16
GC1602A	♦MSI	149 - 17
GC1602B	♦MSI	149 - 18
GC1602D	♦MSI	149 - 19
GC1602E	♦MSI	149 - 20
GC1602H	♦MSI	149 - 21
GC1603	♦GHZ	150 - 87
GC1603A	♦MSI	150 - 88
GC1603B	♦MSI	150 - 89
GC1603D	♦MSI	150 - 90
GC1603E	♦MSI	150 - 91
GC1603H	♦MSI	150 - 92
GC1604	♦GHZ	153 - 7
GC1604A	♦MSI	153 - 8
GC1604B	♦MSI	153 - 9
GC1604D	♦MSI	153 - 10
GC1604E	♦MSI	153 - 11
GC1604H	♦MSI	153 - 12
GC1605	♦GHZ	155 - 20
GC1605A	♦MSI	155 - 21
GC1605B	♦MSI	155 - 22
GC1605D	♦MSI	155 - 23
GC1605E	♦MSI	155 - 24
GC1605H	♦MSI	155 - 25
GC1606	♦GHZ	157 - 16
GC1606A	♦MSI	157 - 17
GC1606B	♦MSI	157 - 18
GC1606D	♦MSI	157 - 19
GC1606E	♦MSI	157 - 20
GC1606H	♦MSI	157 - 21
GC1607	♦GHZ	159 - 34
GC1607A	♦MSI	159 - 35
GC1607B	♦MSI	159 - 36
GC1607D	♦MSI	159 - 37
GC1607E	♦MSI	159 - 38
GC1607H	♦MSI	159 - 39
GC1608	♦GHZ	161 - 40
GC1608A	♦MSI	161 - 41
GC1608B	♦MSI	161 - 42
GC1608D	♦MSI	161 - 43
GC1608E	♦MSI	161 - 44
GC1608H	♦MSI	161 - 45
GC1609	♦GHZ	163 - 57
GC1609A	♦MSI	163 - 58
GC1609B	♦MSI	163 - 59
GC1609D	♦MSI	163 - 60
GC1609E	♦MSI	163 - 61
GC1609H	♦MSI	163 - 62
GC1610	♦GHZ	165 - 24
GC1611	♦GHZ	167 - 86
GC1612	♦GHZ	170 - 79
GC1613	♦GHZ	172 -107
GC1700	♦GHZ	146 - 21
GC1700AØ	♦GHZ	142 - 82
GC1701	♦GHZ	147 -100
GC1702	♦GHZ	149 - 22
GC1702A	♦MSI	149 - 23
GC1702B	♦MSI	149 - 24
GC1702D	♦MSI	149 - 25
GC1702E	♦MSI	149 - 26
GC1702H	♦MSI	149 - 27
GC1703	♦GHZ	150 - 93
GC1703A	♦MSI	150 - 94
GC1703B	♦MSI	150 - 95
GC1703D	♦MSI	150 - 96
GC1703E	♦MSI	150 - 97
GC1703H	♦MSI	150 - 98
GC1704	♦GHZ	153 - 13
GC1704A	♦MSI	153 - 14
GC1704B	♦MSI	153 - 15
GC1704D	♦MSI	153 - 16
GC1704E	♦MSI	153 - 17
GC1704H	♦MSI	153 - 18
GC1705	♦GHZ	155 - 26
GC1705A	♦MSI	155 - 27
GC1705B	♦MSI	155 - 28
GC1705D	♦MSI	155 - 29
GC1705E	♦MSI	155 - 30
GC1705H	♦MSI	155 - 31
GC1706	♦GHZ	157 - 22
GC1706A	♦MSI	157 - 23
GC1706B	♦MSI	157 - 24
GC1706D	♦MSI	157 - 25
GC1706E	♦MSI	157 - 26
GC1706H	♦MSI	157 - 27
GC1707	♦GHZ	159 - 40
GC1707A	♦MSI	159 - 41
GC1707B	♦MSI	159 - 42
GC1707D	♦MSI	159 - 43
GC1707E	♦MSI	159 - 44
GC1707H	♦MSI	159 - 45
GC1708	♦GHZ	161 - 46
GC1708A	♦MSI	161 - 47
GC1708B	♦MSI	161 - 48
GC1708D	♦MSI	161 - 49
GC1708E	♦MSI	161 - 50
GC1708H	♦MSI	161 - 51
GC1709	♦GHZ	163 - 63
GC1709A	♦MSI	163 - 64
GC1709B	♦MSI	163 - 65
GC1709D	♦MSI	163 - 66
GC1709E	♦MSI	163 - 67
GC1709H	♦MSI	163 - 68
GC1710	♦GHZ	165 - 25
GC1710A	♦MSI	165 - 26
GC1710B	♦MSI	165 - 27
GC1710D	♦MSI	165 - 28
GC1710E	♦MSI	165 - 29
GC1710H	♦MSI	165 - 30
GC1711	♦GHZ ♦MSI	167 - 87
GC1711A	♦MSI	167 - 88
GC1711B	♦MSI	167 - 89
GC1711D	♦MSI	167 - 90
GC1711E	♦MSI	167 - 91
GC1711H	♦MSI	167 - 92
GC1712	♦GHZ ♦MSI	170 - 80
GC1712A	♦MSI	170 - 81
GC1712B	♦MSI	170 - 82
GC1712D	♦MSI	170 - 83
GC1712E	♦MSI	170 - 84
GC1712H	♦MSI	170 - 85
GC1713	♦GHZ ♦MSI	172 -108
GC1713A	♦MSI	172 -109
GC1713B	♦MSI	172 -110
GC1713D	♦MSI	173 - 1
GC1713E	♦MSI	173 - 2
GC1713H	♦MSI	173 - 3
GC1714	♦GHZ ♦MSI	176 - 42
GC1714A	♦MSI	176 - 43
GC1714B	♦MSI	176 - 44
GC1714D	♦MSI	176 - 45
GC1714E	♦MSI	176 - 46
GC1714H	♦MSI	176 - 47
GC1715	♦GHZ ♦MSI	178 - 81
GC1715A	♦MSI	178 - 82
GC1715B	♦MSI	178 - 83
GC1715D	♦MSI	178 - 84
GC1715E	♦MSI	178 - 85
GC1715H	♦MSI	178 - 86
GC1716	♦GHZ ♦MSI	181 - 96
GC1716A	♦MSI	181 - 97
GC1716B	♦MSI	181 - 98
GC1716D	♦MSI	181 - 99
GC1716E	♦MSI	181 -100
GC1716H	♦MSI	181 -101
GC1717	♦GHZ ♦MSI	184 - 55
GC1717A	♦MSI	184 - 56
GC1717B	♦MSI	184 - 57
GC1717D	♦MSI	184 - 58
GC1717E	♦MSI	184 - 59
GC1717H	♦MSI	184 - 60
GC1718	♦GHZ	187 - 27
GC1719	♦GHZ	189 - 63
GC1720	♦GHZ	191 -109
GC1754	♦MSI	153 - 19
GC1754B	♦MSI	153 - 20
GC1754C	♦MSI	153 - 21
GC1755	♦MSI	155 - 32
GC1755B	♦MSI	155 - 33
GC1755C	♦MSI	155 - 34
GC1756	♦MSI	157 - 28
GC1756B	♦MSI	157 - 29
GC1756C	♦MSI	157 - 30
GC1757	♦MSI	159 - 46
GC1757B	♦MSI	159 - 47
GC1757C	♦MSI	159 - 48
GC1758	♦MSI	161 - 52
GC1758B	♦MSI	161 - 53
GC1758C	♦MSI	161 - 54
GC1759	♦MSI	163 - 69
GC1759B	♦MSI	163 - 70
GC1759C	♦MSI	163 - 71
GC1760	♦MSI	165 - 31
GC1760B	♦MSI	165 - 32
GC1760C	♦MSI	165 - 33
GC1761	♦MSI	167 - 93
GC1761B	♦MSI	167 - 94
GC1761C	♦MSI	167 - 95
GC1762	♦MSI	170 - 86
GC1762B	♦MSI	170 - 87
GC1762C	♦MSI	170 - 88
GC1763	♦MSI	173 - 4
GC1763B	♦MSI	173 - 5
GC1763C	♦MSI	173 - 6
GC1764	♦MSI	176 - 48
GC1764B	♦MSI	176 - 49
GC1764C	♦MSI	176 - 50
GC1765	♦MSI	178 - 87
GC1765B	♦MSI	178 - 88
GC1765C	♦MSI	178 - 89
GC1766	♦MSI	181 -102
GC1766B	♦MSI	181 -103
GC1766C	♦MSI	181 -104
GC1767	♦MSI	184 - 61
GC1767B	♦MSI	184 - 62
GC1767C	♦MSI	184 - 63
GC1768	♦MSI	187 - 28
GC1768B	♦MSI	187 - 29
GC1768C	♦MSI	187 - 30
GC1769	♦MSI	189 - 64
GC1769B	♦MSI	189 - 65
GC1769C	♦MSI	189 - 66
GC1770	♦MSI	191 -110
GC1770B	♦MSI	192 - 1
GC1770C	♦MSI	192 - 2
GC1800	♦GHZ	146 - 22
GC1800AØ	♦GHZ	142 - 83
GC1801	♦GHZ	147 -101
GC1802	♦GHZ	147 -102
GC1803	♦GHZ	149 - 87
GC1804	♦GHZ	150 - 99
GC1805	♦GHZ	153 - 65
GC1806	♦GHZ	156 - 62
GC1807	♦GHZ	158 - 90
GC1808	♦GHZ	160 -101
GC1809	♦GHZ	162 - 80
GC1810	♦GHZ	164 - 70
GC1811	♦GHZ	166 -103
GC1812	♦GHZ	169 -108
GC1813	♦GHZ	171 - 78
GC1814	♦GHZ	175 - 27
GC1815	♦GHZ	177 - 82
GC1816	♦GHZ	180 - 85
GC2510	♦GHZ	239 - 36
GC2511	♦GHZ	239 - 37
GC2512	♦GHZ	239 - 38
GC2513	♦GHZ	239 - 39
GC2514	♦GHZ	239 - 40
GC2515	♦GHZ	239 - 41
GC2516	♦GHZ	239 - 42
GC2520	♦GHZ	239 - 43
GC2521	♦GHZ	239 - 44
GC2522	♦GHZ	239 - 45
GC2523	♦GHZ	239 - 46
GC2524	♦GHZ	239 - 47
GC2525	♦GHZ	239 - 48
GC2526	♦GHZ	239 - 49
GC2530	♦GHZ	239 - 50
GC2531	♦GHZ	239 - 51
GC2532	♦GHZ	239 - 52
GC2533	♦GHZ	239 - 53
GC2534	♦GHZ	239 - 54
GC2535	♦GHZ	239 - 55
GC2536	♦GHZ	239 - 56
GC2540	♦GHZ	239 - 57
GC2541	♦GHZ	239 - 58
GC2542	♦GHZ	239 - 59
GC2543	♦GHZ	239 - 60
GC2544	♦GHZ	239 - 61
GC2545	♦GHZ	239 - 62
GC2546	♦GHZ	239 - 63
GC3202	♦GHZ	241 - 61
GC3203	♦GHZ	241 - 62
GC3204	♦GHZ	241 - 63
GC3205	♦GHZ	241 - 64
GC3206	♦GHZ	241 - 65
GC3207	♦GHZ	241 - 66
GC3208	♦GHZ	241 - 67
GC3209	♦GHZ	239 - 64
GC3302	♦GHZ	241 - 68
GC3303	♦GHZ	241 - 69
GC3304	♦GHZ	241 - 70
GC3304A	♦GHZ	241 - 71
GC3305	♦GHZ	241 - 72
GC3306	♦GHZ	241 - 73
GC3307	♦GHZ	241 - 74
GC3307A	♦GHZ	241 - 75
GC3308	♦GHZ	241 - 76
GC4210	♦GHZ	216 -102
GC4211	♦GHZ	216 -103
GC4212	♦GHZ	216 -104
GC4213	♦GHZ	216 -105
GC4214	♦GHZ	216 -106
GC4215	♦GHZ	216 -107
GC4220	♦GHZ	216 -108
GC4221	♦GHZ	216 -109
GC4222	♦GHZ	216 -110
GC4223	♦GHZ	217 - 1
GC4224	♦GHZ	217 - 2
GC4225	♦GHZ	217 - 3
GC4271	♦GHZ	217 - 4
GC4272	♦GHZ	217 - 5
GC4273	♦GHZ	217 - 6
GC4274	♦GHZ	217 - 7
GC4275	♦GHZ	217 - 8
GC4310	♦GHZ	217 - 9
GC4311	♦GHZ	217 - 10
GC4312	♦GHZ	217 - 11
GC4313	♦GHZ	217 - 12
GC4314	♦GHZ	217 - 13
GC4315	♦GHZ	217 - 14
GC4320	♦GHZ	217 - 15
GC4321	♦GHZ	217 - 16
GC4322	♦GHZ	217 - 17
GC4323	♦GHZ	217 - 18
GC4324	♦GHZ	217 - 19
GC4325	♦GHZ	217 - 20
GC4371	♦GHZ	217 - 21
GC4372	♦GHZ	217 - 22
GC4373	♦GHZ	217 - 23
GC4374	♦GHZ	217 - 24
GC4375	♦GHZ	217 - 25
GC4410	♦GHZ	217 - 26
GC4411	♦GHZ	217 - 27
GC4412	♦GHZ	217 - 28
GC4413	♦GHZ	217 - 29
GC4430	♦GHZ	217 - 30
GC4431	♦GHZ	217 - 31
GC4432	♦GHZ	217 - 32
GC4433	♦GHZ	217 - 33
GC4490	♦GHZ	217 - 34
GC4491	♦GHZ	217 - 35
GC4492	♦GHZ	217 - 36
GC4493	♦GHZ	217 - 37
GC4510	♦GHZ	217 - 38
GC4511	♦GHZ	217 - 39
GC4512	♦GHZ	217 - 40
GC4513	♦GHZ	217 - 41
GC4530	♦GHZ	217 - 42
GC4531	♦GHZ	217 - 43
GC4532	♦GHZ	217 - 44
GC4533	♦GHZ	217 - 45
GC4590	♦GHZ	217 - 46
GC4591	♦GHZ	217 - 47
GC4592	♦GHZ	217 - 48

Δ-Registered with JEDEC by this manufacturer

♦-Mfr's data sheet available in microfilm service

1. TYPE No. CROSS INDEX

IN TYPE NUMBER SEQUENCE

TYPE No.	MFRS	Pg&Line
GC4593	♦GHZ	217 - 49
GC4710	♦GHZ	217 - 50
GC4711	♦GHZ	217 - 51
GC4712	♦GHZ	217 - 52
GC4720	♦GHZ	217 - 53
GC4721	♦GHZ	217 - 54
GC4722	♦GHZ	217 - 55
GC5511A,B,C,D,E,F	♦GHZ	135 -100
GC5511G,H,J,K,L,M	♦GHZ	135 -101
GC5512A,B,C,D,E,F	♦GHZ	136 -103
GC5512G,H,J,K,L,M	♦GHZ	136 -104
GC5513A,B,C,D,E,F	♦GHZ	139 - 17
GC5513G,H,J,K,L,M	♦GHZ	139 - 18
GC5514A,B,C,D,E,F	♦GHZ	140 - 41
GC5514G,H,J,K	♦GHZ	140 - 42
GC5514L	♦GHZ	140 - 37
GC5514M	♦GHZ	140 - 38
GC5515A,B,C,D,E,F	♦GHZ	141 - 98
GC5515G,H,J	♦GHZ	141 - 99
GC5515K	♦GHZ	141 - 93
GC5515L	♦GHZ	141 - 94
GC5516A,B,C,D,E,F	♦GHZ	143 - 3
GC5516G,H	♦GHZ	143 - 4
GC5516J	♦GHZ	142 -108
GC5516K	♦GHZ	142 -109
GC5517A,B,C,D,E,F	♦GHZ	144 - 93
GC5517G	♦GHZ	144 - 94
GC5517H	♦GHZ	144 - 91
GC5517J	♦GHZ	144 - 92
GC5518A,B,C,D,E,F	♦GHZ	146 - 48
GC5518G	♦GHZ	146 - 45
GC5518H	♦GHZ	146 - 46
GC5519A,B,C,D,E	♦GHZ	147 - 13
GC5519F	♦GHZ	147 - 11
GC5519G	♦GHZ	147 - 12
GC5531C,D,E,F,G	GHZ	135 -109
GC5532C,D,E,F,G	GHZ	137 - 32
GC5533C,D,E,F,G	GHZ	139 - 28
GC5534C,D,E,F,G	GHZ	140 - 80
GC5535C,D,E,F,G	GHZ	142 - 23
GC5536C,D,E,F,G	GHZ	143 - 35
GC5537C,D,E,F	GHZ	145 - 31
GC5538C,D,E	GHZ	146 - 49
GC5539C,D	GHZ	147 - 18
GC5601A	♦GHZ	233 -100
GC5601B	♦GHZ	233 -101
GC5601C	♦GHZ	233 -102
GC5601D	♦GHZ	233 -103
GC5601E	♦GHZ	233 -104
GC5601F	♦GHZ	233 -105
GC5601G	♦GHZ	233 -106
GC5601H	♦GHZ	233 -107
GC5602A	♦GHZ	233 -108
GC5602B	♦GHZ	233 -109
GC5602C	♦GHZ	233 -110
GC5602D	♦GHZ	234 - 1
GC5602E	♦GHZ	234 - 2
GC5602F	♦GHZ	234 - 3
GC5602G	♦GHZ	234 - 4
GC5602H	♦GHZ	234 - 5
GC5605A	♦GHZ	234 - 6
GC5605B	♦GHZ	234 - 7
GC5605C	♦GHZ	234 - 8
GC5605D	♦GHZ	234 - 9
GC5605E	♦GHZ	234 - 10
GC5605F	♦GHZ	234 - 11
GC5605G	♦GHZ	234 - 12
GC5605H	♦GHZ	234 - 13
GC5607A	♦GHZ	234 - 14
GC5607B	♦GHZ	234 - 15
GC5607C	♦GHZ	234 - 16
GC5607D	♦GHZ	234 - 17
GC5607E	♦GHZ	234 - 18
GC5607F	♦GHZ	234 - 19
GC5607G	♦GHZ	234 - 20
GC5610A	♦GHZ	234 - 21
GC5610B	♦GHZ	234 - 22
GC5610C	♦GHZ	234 - 23
GC5610D	♦GHZ	234 - 24
GC5610E	♦GHZ	234 - 25
GC5610F	♦GHZ	234 - 26
GC5610G	♦GHZ	234 - 27
GC5615A	♦GHZ	234 - 28
GC5615B	♦GHZ	234 - 29
GC5615C	♦GHZ	234 - 30
GC5615D	♦GHZ	234 - 31
GC5615E	♦GHZ	234 - 32
GC5615F	♦GHZ	234 - 33
GC5620A	♦GHZ	234 - 34
GC5620B	♦GHZ	234 - 35
GC5620C	♦GHZ	234 - 36
GC5620D	♦GHZ	234 - 37
GC5620E	♦GHZ	234 - 38
GC5620F	♦GHZ	234 - 39
GC5625A	♦GHZ	234 - 40
GC5625B	♦GHZ	234 - 41
GC5625C	♦GHZ	234 - 42
GC5625D	♦GHZ	234 - 43
GC5625E	♦GHZ	234 - 44
GC5630A	♦GHZ	234 - 45
GC5630B	♦GHZ	234 - 46
GC5630C	♦GHZ	234 - 47
GC5630D	♦GHZ	234 - 48
GC5630E	♦GHZ	234 - 49
GC5640A	♦GHZ	234 - 50
GC5640B	♦GHZ	234 - 51
GC5640C	♦GHZ	234 - 52
GC5640D	♦GHZ	234 - 53
GC5640E	♦GHZ	234 - 54
GC5650A	♦GHZ	234 - 55
GC5650B	♦GHZ	234 - 56
GC5650C	♦GHZ	234 - 57
GC5650D	♦GHZ	234 - 58
GC5730A	♦GHZ	234 - 59
GC5730B	♦GHZ	234 - 60
GC5730C	♦GHZ	234 - 61
GC5730D	♦GHZ	234 - 62
GC5730E	♦GHZ	234 - 63
GC5740A	♦GHZ	234 - 64
GC5740B	♦GHZ	234 - 65
GC5740C	♦GHZ	234 - 66
GC5740D	♦GHZ	234 - 67
GC5740E	♦GHZ	234 - 68
GC5750A	♦GHZ	234 - 69
GC5750B	♦GHZ	234 - 70
GC5750C	♦GHZ	234 - 71
GC5750D	♦GHZ	234 - 72
GC5830A	♦GHZ	234 - 73
GC5830B	♦GHZ	234 - 74
GC5830C	♦GHZ	234 - 75
GC5830D	♦GHZ	234 - 76
GC5830E	♦GHZ	234 - 77
GC5840A	♦GHZ	234 - 78
GC5840B	♦GHZ	234 - 79
GC5840C	♦GHZ	234 - 80
GC5840D	♦GHZ	234 - 81
GC5840E	♦GHZ	234 - 82
GC5850A	♦GHZ	234 - 83
GC5850B	♦GHZ	234 - 84
GC5850C	♦GHZ	234 - 85
GC5850D	♦GHZ	234 - 86
GC5901	♦GHZ	234 - 87
GC5902	♦GHZ	234 - 88
GC5903	♦GHZ	234 - 89
GC5904	♦GHZ	234 - 90
GC51101	♦GHZ	138 - 13
GC51102	♦GHZ	139 - 9
GC51103	♦GHZ	139 - 77
GC51104	♦GHZ	140 - 82
GC51105	♦GHZ	142 - 24
GC51106	♦GHZ	143 - 47
GC51107	♦GHZ	146 - 41
GC51108	♦GHZ	147 -103
GC51109	♦GHZ	149 - 28
GC51110	♦GHZ	150 -100
GC51111	♦GHZ	153 - 22
GC51112	♦GHZ	155 - 35
GC51113	♦GHZ	157 - 31
GC51301	♦GHZ	138 - 14
GC51302	♦GHZ	139 - 10
GC51303	♦GHZ	139 - 78
GC51304	♦GHZ	140 - 83
GC51305	♦GHZ	142 - 25
GC51306	♦GHZ	143 - 48
GC51307	♦GHZ	146 - 42
GC51308	♦GHZ	147 -104
GC51309	♦GHZ	149 - 29
GC51310	♦GHZ	150 -101
GC51311	♦GHZ	153 - 23
GC51312	♦GHZ	155 - 36
GC51313	♦GHZ	157 - 32
GC51401	♦GHZ	138 - 15
GC51402	♦GHZ	139 - 11
GC51403	♦GHZ	139 - 79
GC51404	♦GHZ	140 - 84
GC51405	♦GHZ	142 - 26
GC51406	♦GHZ	143 - 49
GC51407	♦GHZ	146 - 43
GC51408	♦GHZ	147 -105
GC51409	♦GHZ	149 - 30
GC51410	♦GHZ	150 -102
GC51411	♦GHZ	153 - 24
GC51412	♦GHZ	155 - 37
GC51413	♦GHZ	157 - 33
GC51601	♦GHZ	138 - 16
GC51602	♦GHZ	139 - 12
GC51603	♦GHZ	139 - 80
GC51604	♦GHZ	140 - 85
GC51605	♦GHZ	142 - 27
GC51606	♦GHZ	143 - 50
GC51607	♦GHZ	146 - 44
GC51608	♦GHZ	147 -106
GC51609	♦GHZ	149 - 31
GC51610	♦GHZ	150 -103
GC51611	♦GHZ	153 - 25
GC51612	♦GHZ	155 - 38
GC55010A,B,C,D,E,F	GHZ	135 - 89
GC55015A,B,C,D,E,F	GHZ	136 - 29
GC55020A,B,C,D,E,F	GHZ	136 - 68
GC55025A,B,C,D,E,F	GHZ	138 - 30
GC55030A,B,C,D,E	GHZ	139 - 8
GC55035A,B,C,D	GHZ	139 - 62
GD402A	USSR	217 - 56
GD408A	♦NECJ	234 - 91
GD408B	♦NECJ	234 - 92
GD408C	♦NECJ	234 - 93
GD408D	♦NECJ	234 - 94
GD411A	♦NECJ	234 - 95
GD411B	♦NECJ	234 - 96
GD411C	♦NECJ	234 - 97
GD411D	♦NECJ	234 - 98
GD411E	♦NECJ	234 - 99
GD508A	♦NECJ	234 -100
GD508B	♦NECJ	234 -101
GD508C	♦NECJ	234 -102
GD508D	♦NECJ	234 -103
GD508E	♦NECJ	234 -104
GD511A	♦NECJ	234 -105
GD511B	♦NECJ	234 -106
GD511C	♦NECJ	234 -107
GD511D	♦NECJ	234 -108
GD511E	♦NECJ	234 -109
GD514A	♦NECJ	234 -110
GD514B	♦NECJ	235 - 1
GD514C	♦NECJ	235 - 2
GD514D	♦NECJ	235 - 3
GD514E	♦NECJ	235 - 4
GD518A	♦NECJ	235 - 5
GD518B	♦NECJ	235 - 6
GD518C	♦NECJ	235 - 7
GD731	♦SIEG	245 - 3
GD732	♦SIEG	245 - 4
GD733	♦SIEG	245 - 5
GD741	♦SIEG	245 - 6
GD742	♦SIEG	245 - 7
GD743	♦SIEG	245 - 8
GD744	♦SIEG	245 - 9
GI103A	USSR	206 -109
GI103B	USSR	206 -101
GI103G	USSR	207 - 19
GI103V	USSR	206 - 99
GI304A	USSR	208 - 43
GI304B	USSR	208 -104
GI305A	USSR	208 -110
GI305B	USSR	209 - 82
GI307A	USSR	207 - 79
GI308A	USSR	208 - 82
GI308B	USSR	208 - 83
GI308D	USSR	209 - 20
GI308E	USSR	210 - 18
GI308G	USSR	209 - 34
GI308I	USSR	210 - 68
GI308K	USSR	210 - 64
GI308SZ	USSR	209 -110
GI308V	USSR	209 - 56
GI401A	USSR	212 - 53
GI401B	USSR	212 - 54
GI403A	USSR	212 - 55
GM0104-100	♦CTR	303 - 85
GOS2572	♦ALP	245 - 10
GOS2573	♦ALP	245 - 11
GOS2574	♦ALP	245 - 12
GOS2575	♦ALP	245 - 13
GOS2576	♦ALP	245 - 14
GOS2577	♦ALP	245 - 15
GOS2580	♦ALP	245 - 16
GOS2581	♦ALP	245 - 17
GPD110	♦AVA	254 - 47
GPD130	♦AVA	254 - 48
GPD201	♦AVA	254 - 49
GPD202	♦AVA	254 - 50
GPD251	♦AVA	254 - 51
GPD252	♦AVA	254 - 52
GPD310	♦AVA	254 - 53
GPD311	♦AVA	254 - 54
GPD320	♦AVA	254 - 55
GPD321	♦AVA	254 - 56
GPD330	♦AVA	254 - 57
GPD331	♦AVA	254 - 58
GW1	USSR	88 -107
GW2	USSR	89 - 5
GW3	USSR	88 - 99
GW5	USSR	89 - 20
GW10	USSR	88 -108
GW11	USSR	89 - 17
HA1215A	♦MSI	157 - 34
HA1215B	MSI	157 - 35
HA1215C	MSI	157 - 36
HA1216A	♦MSI	159 - 49
HA1216B	MSI	159 - 50
HA1216C	MSI	159 - 51
HA1217A	♦MSI	161 - 55
HA1217B	MSI	161 - 56
HA1217C	MSI	161 - 57
HA1218A	♦MSI	163 - 72
HA1218B	MSI	163 - 73
HA1218C	MSI	163 - 74
HA1219A	♦MSI	165 - 34
HA1219B	MSI	165 - 35
HA1219C	MSI	165 - 36
HA1220A	♦MSI	167 - 96
HA1220B	MSI	167 - 97
HA1220C	MSI	167 - 98
HA1222A	♦MSI	170 - 89
HA1222B	MSI	170 - 90
HA1222C	MSI	170 - 91
HA1224A	♦MSI	173 - 7
HA1224B	MSI	173 - 8
HA1224C	MSI	173 - 9
HA1226A	♦MSI	176 - 51
HA1226B	MSI	176 - 52
HA1226C	MSI	176 - 53
HA1228A	♦MSI	178 - 90
HA1228B	MSI	178 - 91
HA1228C	MSI	178 - 92
HA1230A	♦MSI	181 -105
HA1230B	MSI	181 -106
HA1230C	MSI	181 -107
HA1234A	♦MSI	184 - 64
HA1234B	MSI	184 - 65
HA1234C	MSI	184 - 66
HA1236A	♦MSI	187 - 31
HA1236B	MSI	187 - 32
HA1236C	MSI	187 - 33
HA1238A	♦MSI	189 - 67
HA1238B	♦MSI	189 - 68
HA1238C	♦MSI	189 - 69
HA1702A	MSI	149 - 32
HA1702B	MSI	149 - 33
HA1702D	MSI	149 - 34
HA1702E	MSI	149 - 35
HA1702H	MSI	149 - 36
HA1703A	MSI	150 -104
HA1703B	MSI	150 -105
HA1703D	MSI	150 -106
HA1703E	MSI	150 -107
HA1703H	MSI	150 -108
HA1704A	MSI	153 - 26
HA1704B	MSI	153 - 27
HA1704D	MSI	153 - 28
HA1704E	MSI	153 - 29
HA1704H	MSI	153 - 30
HA1705A	MSI	155 - 39
HA1705B	MSI	155 - 40
HA1705D	MSI	155 - 41
HA1705E	MSI	155 - 42
HA1705H	MSI	155 - 43
HA1706A	MSI	157 - 37
HA1706B	MSI	157 - 38
HA1706D	MSI	157 - 39
HA1706E	MSI	157 - 40
HA1706H	MSI	157 - 41
HA1707A	MSI	159 - 52
HA1707B	MSI	159 - 53
HA1707D	MSI	159 - 54
HA1707E	MSI	159 - 55
HA1707H	MSI	159 - 56
HA1708A	MSI	161 - 58
HA1708B	MSI	161 - 59
HA1708D	MSI	161 - 60
HA1708E	MSI	161 - 61
HA1708H	MSI	161 - 62
HA1709A	MSI	163 - 75
HA1709B	MSI	163 - 76
HA1709D	MSI	163 - 77
HA1709E	MSI	163 - 78
HA1709H	MSI	163 - 79
HA1710A	MSI	165 - 37
HA1710B	MSI	165 - 38
HA1710D	MSI	165 - 39
HA1710E	MSI	165 - 40
HA1710H	MSI	165 - 41
HA1711A	MSI	167 - 99
HA1711B	MSI	167 -100
HA1711D	MSI	167 -101
HA1711E	MSI	167 -102
HA1711H	MSI	167 -103
HA1712A	MSI	170 - 92
HA1712B	MSI	170 - 93
HA1712D	MSI	170 - 94
HA1712E	MSI	170 - 95
HA1712H	MSI	170 - 96
HA1713A	MSI	173 - 10
HA1713B	MSI	173 - 11
HA1713D	MSI	173 - 12
HA1713E	MSI	173 - 13
HA1713H	MSI	173 - 14
HA1714A	MSI	176 - 54
HA1714B	MSI	176 - 55
HA1714D	MSI	176 - 56
HA1714E	MSI	176 - 57
HA1714H	MSI	176 - 58
HA1715A	MSI	178 - 93
HA1715B	MSI	178 - 94
HA1715D	MSI	178 - 95
HA1715E	MSI	178 - 96
HA1715H	MSI	178 - 97
HA1716A	MSI	181 -108
HA1716B	MSI	181 -109
HA1716D	MSI	181 -110
HA1716E	MSI	182 - 1
HA1716H	MSI	182 - 2
HA1717A	MSI	184 - 67
HA1717B	MSI	184 - 68
HA1717D	MSI	184 - 69
HA1717E	MSI	184 - 70
HA1717H	MSI	184 - 71
HA1822A	♦MSI	177 - 36
HA1822B	♦MSI	177 - 37
HA1822C	♦MSI	177 - 38
HA1824A	♦MSI	182 - 61
HA1824B	♦MSI	182 - 62
HA1824C	♦MSI	182 - 63
HA1826A	♦MSI	188 - 62
HA1826B	♦MSI	188 - 63
HA1826C	♦MSI	188 - 64
HA1836A	♦MSI	193 - 10
HA1836B	♦MSI	193 - 11
HA1836C	♦MSI	193 - 12
HA1838A	♦MSI	196 - 73
HA1838B	♦MSI	196 - 74
HA1838C	♦MSI	196 - 75
HA1844A	♦MSI	198 - 78
HA1844B	♦MSI	198 - 79
HA1844C	♦MSI	198 - 80
HA1848A	♦MSI	200 - 40
HA1848B	♦MSI	200 - 41
HA1848C	♦MSI	200 - 42
HA1850A	♦MSI	200 -110
HA1850B	♦MSI	201 - 1
HA1850C	♦MSI	201 - 2
HA1915A	♦MSI	157 - 42
HA1915B	MSI	157 - 43
HA1915C	MSI	157 - 44
HA1916A	♦MSI	159 - 57
HA1916B	MSI	159 - 58
HA1916C	MSI	159 - 59
HA1917A	♦MSI	161 - 63
HA1917B	MSI	161 - 64
HA1917C	MSI	161 - 65
HA1918A	♦MSI	163 - 80
HA1918B	MSI	163 - 81
HA1918C	MSI	163 - 82
HA1919A	♦MSI	165 - 42
HA1919B	MSI	165 - 43
HA1919C	MSI	165 - 44
HA1920A	♦MSI	167 -104
HA1920B	MSI	167 -105
HA1920C	MSI	167 -106
HA1922A	♦MSI	170 - 97
HA1922B	MSI	170 - 98
HA1922C	MSI	170 - 99
HA1924A	♦MSI	173 - 15
HA1924B	MSI	173 - 16
HA1924C	MSI	173 - 17
HA1926A	♦MSI	176 - 59
HA1926B	MSI	176 - 60
HA1926C	MSI	176 - 61
HA1928A	♦MSI	178 - 98
HA1928B	MSI	178 - 99
HA1928C	MSI	178 -100
HA1930A	♦MSI	182 - 3
HA1930B	MSI	182 - 4
HA1930C	MSI	182 - 5
HA1934A	♦MSI	184 - 72
HA1934B	MSI	184 - 73
HA1934C	MSI	184 - 74
HA1936A	♦MSI	187 - 34
HA1936B	MSI	187 - 35
HA1936C	MSI	187 - 36
HA1938A	♦MSI	189 - 70
HA1938B	MSI	189 - 71
HA1938C	MSI	189 - 72
HA1940A	♦MSI	192 - 3
HA1940B	MSI	192 - 4
HA1940C	MSI	192 - 5
HA1942A	♦MSI	193 - 64
HA1942B	MSI	193 - 65
HA1942C	MSI	193 - 66
HA1944A	♦MSI	195 - 99
HA1944B	MSI	195 -100
HA1944C	MSI	195 -101
HA1946A	♦MSI	197 - 11
HA1946B	MSI	197 - 12
HA1946C	MSI	197 - 13
HA1948A	♦MSI	198 - 30
HA1948B	MSI	198 - 31
HA1948C	MSI	198 - 32
HA1950A	♦MSI	199 - 17
HA1950B	♦MSI	199 - 18
HA1950C	♦MSI	199 - 19
HC7001	KSI	191 - 28
	STI	
HC7002	KSI	195 - 25
	STI	
HC7004	KSI	197 - 87
	STI	
HC7005	KSI	199 - 20
	STI	
HC7006	KSI	191 - 29
	STI	
HC7007	KSI	195 - 26
	STI	
HC7008	KSI	197 - 88
	STI	
HC7060	KSI	195 -102
	STI	
HC7082	KSI	182 -106
	STI	
HC7083	KSI	187 - 37
	STI	
HC7084	KSI	189 - 73
	STI	
HC7085	KSI	192 - 6
	STI	
HC7086	KSI	193 - 67
	STI	
HC7087	KSI	195 -103
	STI	
HC7088	KSI	197 - 14
	STI	
HC7089	KSI	198 - 33
	STI	
HC7090	KSI	199 - 21
	STI	
HC7095	KSI	187 - 38
	STI	
HC7096	KSI	189 - 74
	STI	
HC7097	KSI	192 - 7
	STI	
HC7098	KSI	193 - 68
	STI	
HC7127	KSI	182 -107
	STI	
HFET1001	♦HPA	320 - 96
HFET1101	HPA	321 - 10
HFET1102	HPA	320 - 97
HFET2001	♦HPA	320 - 98
HFET2201	♦HPA	321 - 69
HFET2202	HPA	320 - 99
HFET2204	HPA	321 - 4
HFET5001	HPA	321 - 33
HMF0300	♦HMS	322 - 4
HMF0301(A)	♦HMS	321 - 42

Δ-Registered with JEDEC by this manufacturer

♦-Mfr's data sheet available in microfilm service

1. TYPE No. CROSS INDEX

IN TYPE NUMBER SEQUENCE

TYPE No.	MFRS	Pg&Line	TYPE No.	MFRS	Pg&Line	TYPE No.	MFRS	Pg&Line	TYPE No.	MFRS	Pg&Line	TYPE No.	MFRS	Pg&Line
HMF0302(A)	♦HMS	321 - 44	HP5082-2713	♦HPA	118 - 75	HTO2600	♦AVA	256 - 8	K386	♦EEVB	74 - 31	KIU12BM	USSR	64 - 99
HMF0310	♦HMS	322 - 8	HP5082-2714	♦HPA	217 -108	HTO4000	♦AVA	256 - 9	K386W	♦EEVB	74 - 30	KN1201	♦GHZ	240 - 6
HMF0600	♦HMS	322 - 7	HP5082-2723	♦HPA	125 - 36	HTO7500	♦AVA	256 - 10	K387	♦EEVB	74 - 27	KN1201A	♦GHZ	240 - 7
HMF0602(A)	♦HMS	321 - 47	HP5082-2724	♦HPA	217 -109	HXTR2101	♦HPA	316 - 34	K391	♦EEVB	68 - 71	KN1301	♦GHZ	240 - 8
HMF0610	♦HMS	322 - 9	HP5082-2750	♦HPA	131 - 82	HXTR2102	♦HPA	316 - 35	K391A	♦EEVB	68 - 4	KN1401	♦GHZ	240 - 9
HMF0620	♦HMS	321 - 45	HP5082-2751	♦HPA	131 - 83	HXTR3103	♦HPA	319 - 58	K408	MIC	129 - 27	KRA1080	THC	65 -103
HMF1200	♦HMS	321 - 66	HP5082-2755	♦HPA	131 - 84	HXTR3104	♦HPA	318 - 70	K408A	MIC	129 - 28	KRA1081	THC	65 -107
HMF1202(A)	♦HMS	321 - 24	HP5082-2765	♦HPA	118 - 76	HXTR3615	♦HPA	318 - 31	K408B	MIC	129 - 29	KS9-20B	APX	68 -107
HMF2400	♦HMS	321 - 53	HP5082-2766	♦HPA	118 - 77	HXTR3645	♦HPA	319 - 15	K700-1	USSR	68 - 55	KS9-20D	APX	68 -105
HMF2402(A)	♦HMS	321 - 54	HP5082-2774	♦HPA	118 - 78	HXTR3675	♦HPA	319 - 16	K728	USSR	68 - 99	KS9-20G	APX	69 - 17
HP5082-0001	♦HPA	217 - 57	HP5082-2775	♦HPA	118 - 79	HXTR4101	♦HPA	320 - 84	K728T	USSR	68 -100	KS35A2	GHZ	218 - 80
HP5082-0008	♦HPA	239 - 65	HP5082-2785	♦HPA	118 - 80	HXTR5101	♦HPA	316 - 42	K743A	USSR	70 -108	KS1001	♦GHZ	218 - 81
HP5082-0009	HPA	217 - 58	HP5082-2786	♦HPA	118 - 81	HXTR5102	♦HPA	316 - 55	K743B	USSR	70 -102	KS1002	♦GHZ	218 - 82
HP5082-0012	♦HPA	217 - 59	HP5082-2787	♦HPA	131 - 85	HXTR5103	♦HPA	218 - 60	K744	USSR	70 - 88	KS1003	♦GHZ	218 - 83
HP5082-0013	♦HPA	217 - 60	HP5082-2794	♦HPA	118 - 82	HXTR5104	♦HPA	218 - 61	K745	USSR	70 - 82	KS2243	♦GHZ	218 - 84
HP5082-0015	♦HPA	212 - 17	HP5082-2795	♦HPA	118 - 83	HXTR6101	♦HPA	316 - 7	K746	USSR	70 - 70	KS2244	♦GHZ	218 - 85
HP5082-0017	♦HPA	212 - 18	HP5082-2804	♦HPA	217 -110	HXTR6102	♦HPA	316 - 9	K750	♦ALP	218 - 62	KS3522	♦GHZ	218 - 86
HP5082-0018	♦HPA	212 - 19	HP5082-2805	♦HPA	218 - 1	HXTR6103	♦HPA	311 - 63	K751	♦ALP	218 - 63	KS3542	GHZ	218 - 87
HP5082-0020	♦HPA	239 - 66	HP5082-2810	♦HPA	218 - 2	HXTR6104	♦HPA	310 - 89	K765	USSR	71 - 52	KS3543	GHZ	218 - 88
HP5082-0021	♦HPA	212 - 20	HP5082-2811	♦HPA	218 - 3	HXTR6105	♦HPA	316 - 33	K766	USSR	71 - 47	KS4522	GHZ	218 - 89
HP5082-0023	HPA	217 - 61	HP5082-2813	♦HPA	218 - 4	HXTR6106	♦HPA	316 - 36	K767	USSR	71 - 33	KS4523	GHZ	218 - 90
HP5082-0024	HPA	217 - 62	HP5082-2814	♦HPA	218 - 5	HXTR7011	♦HPA	319 - 17	K768	USSR	71 - 24	KS4524	GHZ	218 - 91
HP5082-0025	♦HPA	217 - 63	HP5082-2815	♦HPA	218 - 6	HXTR7111	♦HPA	319 - 18	K769	USSR	71 - 16	KS7522	GHZ	218 - 92
HP5082-0029	HPA	217 - 64	HP5082-2817	♦HPA	113 - 69	HXTR-2001	♦HPA	316 - 45	K770	USSR	71 - 5	KS7523	GHZ	218 - 93
HP5082-0030	♦HPA	217 - 65	HP5082-2818	♦HPA	218 - 7	HXTR-3001	♦HPA	312 - 6	K771	USSR	70 -105	KS7524	GHZ	218 - 94
HP5082-0031	HPA	217 - 66	HP5082-2824	♦HPA	128 - 41	HXTR-3002	♦HPA	308 - 32	K805	USSR	66 - 1	KS8303	♦GHZ	218 - 95
HP5082-0032	♦HPA	212 - 21	HP5082-2826	♦HPA	218 - 8	HXTR-3101	♦HPA	319 - 19	K806	USSR	66 - 66	KS8304	♦GHZ	218 - 96
HP5082-0034	♦HPA	217 - 67	HP5082-2830	♦HPA	218 - 9	HXTR-3102	♦HPA	319 - 20	K920A	ALP	255 - 17	KS8379	♦GHZ	218 - 97
HP5082-0039	♦HPA	217 - 68	HP5082-2831	♦HPA	218 - 10	HXTR-4101	HPA	320 - 85	K920B	ALP	255 - 18	KS8380	♦GHZ	218 - 98
HP5082-0041	♦HPA	217 - 69	HP5082-2835	♦HPA	218 - 11	HXTR-5001	♦HPA	318 - 37	K920E	♦ALP	255 - 19	KS8381	♦GHZ	218 - 99
HP5082-0047	♦HPA	217 - 70	HP5082-2836	HPA	218 - 12	HXTR-5002	♦HPA	318 - 43	K920F	♦ALP	255 - 20	KS9301	♦GHZ	218 -100
HP5082-0049	♦HPA	217 - 71	HP5082-2837	♦HPA	218 - 13	HXTR-6001	♦HPA	316 - 22	K920U	♦ALP	255 - 21	KS9302	♦GHZ	218 -101
HP5082-0057	♦HPA	217 - 72	HP5082-2900	♦HPA	218 - 14	IM3742-3	♦AVA	301 - 50	K920V	♦ALP	255 - 22	KS9339	♦GHZ	218 -102
HP5082-0058	♦HPA	217 - 73	HP5082-2912	♦HPA	218 - 15	IM4450-3	AVA	301 - 51	K920W	♦ALP	255 - 23	KS9342	♦GHZ	218 -103
HP5082-0087	♦HPA	217 - 74	HP5082-2970	♦HPA	218 - 16	IM5459-3	AVA	301 - 52	K928	WAB	306 - 12	KS9343	♦GHZ	218 -104
HP5082-0090	♦HPA	212 - 22	HP5082-2997	♦HPA	218 - 17	IM5964-3	♦AVA	301 - 53	K936	♦ALP	241 - 77	KS9377	♦GHZ	218 -105
HP5082-0094	♦HPA	217 - 75	HP5082-3001	♦HPA	218 - 18	IM6471-3	AVA	301 - 54	K3007	EEVB	68 - 95	KT607A4	♦USSR	301 - 18
HP5082-0097	♦HPA	217 - 76	HP5082-3002	♦HPA	218 - 19	IM7178-3	AVA	301 - 55	K3069	♦EEVB	69 - 56	KT607B4	♦USSR	301 - 19
HP5082-0112	♦HPA	239 - 67	HP5082-3039	♦HPA	218 - 20	IM7984-3	AVA	301 - 56	K3073	♦EEVB	69 - 43	KT612A4	♦USSR	300 - 43
HP5082-0113	♦HPA	239 - 68	HP5082-3040	♦HPA	218 - 21	J02058	♦TRWS	307 - 56	K3076	♦EEVB	69 - 57	KT624AM	♦USSR	300 - 72
HP5082-0114	♦HPA	239 - 69	HP5082-3041	♦HPA	218 - 22	J03020	♦TRWS	305 -100	K3077	♦EEVB	68 -108	KT625AM	♦USSR	300 - 73
HP5082-0132	♦HPA	239 - 70	HP5082-3042	♦HPA	218 - 23	J03037	♦TRWS	305 -102	K3078-6975	EEVB	68 - 33	Ku750	♦ALP	218 -106
HP5082-0151	♦HPA	239 - 71	HP5082-3043	♦HPA	218 - 24	J03050	♦TRWS	305 -103	K3079	♦EEVB	67 - 98	Ku920A	♦ALP	255 - 24
HP5082-0153	♦HPA	239 - 72	HP5082-3046	♦HPA	218 - 25	J03055	♦TRWS	305 -104	K3080	♦EEVB	70 - 62	Ku920B	♦ALP	255 - 25
HP5082-0180	♦HPA	239 - 73	HP5082-3071	♦HPA	218 - 26	J03401	♦TRWS	307 - 48	K3081	♦EEVB	68 -110	Ku920E	♦ALP	255 - 26
HP5082-0241	♦HPA	239 - 74	HP5082-3077	♦HPA	218 - 27	J03402	♦TRWS	307 - 50	K3091	♦EEVB	68 -109	Ku920F	ALP	255 - 27
HP5082-0243	♦HPA	239 - 75	HP5082-3080	♦HPA	218 - 28	J03403	♦TRWS	307 - 52	K3094	♦EEVB	68 - 96	Ku920U	♦ALP	255 - 28
HP5082-0253	♦HPA	239 - 76	HP5082-3081	♦HPA	218 - 29	J03404	♦TRWS	307 - 54	K3097	♦EEVB	68 - 14	Ku920V	♦ALP	255 - 29
HP5082-0300	♦HPA	239 - 77	HP5082-3101	♦HPA	218 - 30	JE7001	♦NECJ	308 -101	K3098	♦EEVB	68 - 2	Ku920W	♦ALP	255 - 30
HP5082-0310	♦HPA	239 - 78	HP5082-3102	♦HPA	218 - 31	JF421L	♦FERS	111 - 7	K3111	♦EEVB	68 - 34	Ku936	♦ALP	241 - 78
HP5082-0320	♦HPA	239 - 79	HP5082-3140	♦HPA	218 - 32	JF444L	FERS	110 - 88	K3118	♦EEVB	68 - 59	Ku9300	ALP	235 - 11
HP5082-0335	♦HPA	239 - 80	HP5082-3141	♦HPA	218 - 33	JF447L	FERS	110 - 89	K3217H	♦EEVB	73 - 65	Ku9400	ALP	235 - 12
HP5082-0800	♦HPA	239 - 81	HP5082-3168	♦HPA	218 - 34	JO2015A	♦TRWS	302 - 74	K3218H	♦EEVB	73 - 92	Ku9500	♦ALP	235 - 13
HP5082-0803	♦HPA	239 - 82	HP5082-3170	♦HPA	218 - 35	JP2-22D	EMIB	77 - 24	K3219H	♦EEVB	74 - 9	KU103	USSR	63 - 34
HP5082-0805	♦HPA	239 - 83	HP5082-3188	♦HPA	218 - 36	JP8-02B	♦EMIB	81 - 98	K3230BCD	♦EEVB	73 - 69	KU304A	USSR	64 - 93
HP5082-0810	♦HPA	239 - 84	HP5082-3201	♦HPA	218 - 37	JP9-2.5	APX	84 - 24	K3231BCD	♦EEVB	73 - 93	KU308	USSR	64 - 95
HP5082-0815	♦HPA	239 - 85	HP5082-3202	♦HPA	218 - 38	JP9-2.5D	APX	84 - 75	K3270	♦EEVB	73 -103	KV31S1	GHZ	175 - 9
HP5082-0820	♦HPA	239 - 86	HP5082-3303	♦HPA	218 - 39	JP9-2.5E	APX	84 - 76	K3270BCD	♦EEVB	62 - 75	KV38S2	GHZ	188 - 40
HP5082-0821	♦HPA	239 - 87	HP5082-3304	♦HPA	218 - 40	JP9-2.5F	APX	84 - 77	K3271	♦EEVB	73 -105	KV105A	USSR	202 - 69
HP5082-0825	♦HPA	239 - 88	HP5082-3305	♦HPA	218 - 41	JP9-2.5H	APX	83 - 46	K3271BCD	♦EEVB	73 - 94	KV105B	USSR	202 - 70
HP5082-0830	♦HPA	239 - 89	HP5082-3306	♦HPA	218 - 42	JP9-50A	EMIB	83 -100	K3272BCD	♦EEVB	73 - 90	KV109A	USSR	156 - 72
HP5082-0833	♦HPA	239 - 90	HP5082-3340	♦HPA	218 - 43	JS2737AS	♦TOSJ	320 - 15	K3272WBCD	♦EEVB	73 - 91	KV109B	USSR	154 - 59
HP5082-0835	♦HPA	239 - 91	HP5082-3379	♦HPA	218 - 44	JS8804AS	♦TOSJ	320 -100	K3276H	♦EEVB	73 - 66	KV109G	USSR	175 - 75
HP5082-0840	♦HPA	239 - 92	HP5082-3900	♦HPA	218 - 45	JS8818AS(A)	TOSJ	321 - 70	K3276HBCD	♦EEVB	73 - 71	KV109V	USSR	156 - 73
HP5082-0885	♦HPA	239 - 93	HP5082-9394	♦HPA	218 - 46	JS8819AS(A)	TOSJ	321 - 71	K3277H	♦EEVB	73 - 95	KV110A	USSR	178 -101
HP5082-2080	HPA	217 - 77	HP5082-9395	♦HPA	212 - 23	JTDB50(A)	♦CTR	310 - 9	K3278H	♦EEVB	74 - 3	KV110B	USSR	182 - 6
HP5082-2200	♦HPA	118 - 62	HP5082-9396	♦HPA	218 - 47	JTDB100	♦CTR	310 - 18	K3282	♦EEVB	73 - 76	KV110D	USSR	182 - 7
HP5082-2201	♦HPA	118 - 63	HP5082-9397	♦HPA	218 - 48	K3A	MIC	113 - 40	K3283	♦EEVB	73 -101	KV110E	USSR	184 - 75
HP5082-2202	♦HPA	118 - 64	HP5082-9398	♦HPA	218 - 49	K3F	MIC	113 - 41	K3284	♦EEVB	74 - 10	KV110G	USSR	178 -102
HP5082-2203	♦HPA	118 - 65	HP5082-9399	♦HPA	218 - 50	K11	USSR	66 - 7	K3286	♦EEVB	74 - 23	KV110V	USSR	184 - 76
HP5082-2207	♦HPA	118 - 66	HP5082-9696	♦HPA	218 - 51	K15	USSR	66 - 33	K3287	♦EEVB	74 - 25	KV620	GHZ	167 -107
HP5082-2208	♦HPA	118 - 67	HP5082-9697	♦HPA	218 - 52	K19	USSR	68 - 97	K3382	♦EEVB	73 - 63		KSI	
HP5082-2209	♦HPA	118 - 68	HP5082-9891	HPA	218 - 53	K20	USSR	68 - 42	K3382BCD	♦EEVB	73 - 67	KV622	GHZ	170 -100
HP5082-2210	♦HPA	118 - 69	HP35831EOpt005		315 - 89	K25A	MIC	113 - 51	K3383	♦EEVB	73 - 88		KSI	
HP5082-2231	♦HPA	217 - 78		HPA		K25B	MIC	113 - 52	K3383BCD	♦EEVB	73 - 96	KV624	GHZ	173 - 18
HP5082-2233	♦HPA	217 - 79	HP35861EOpt100		319 - 6	K26	USSR	65 - 93	K3384	♦EEVB	74 - 16		KSI	
HP5082-2263	♦HPA	217 - 80		HPA		K27	USSR	68 - 54	K3384BCD	♦EEVB	74 - 13	KV626	GHZ	176 - 62
HP5082-2271	♦HPA	217 - 81	HP35866EOpt100		319 - 7	K27A	USSR	68 - 98	K9300	♦ALP	235 - 8		KSI	
HP5082-2272	♦HPA	217 - 82		HPA		K29	USSR	69 - 11	K9400	♦ALP	235 - 9	KV628	GHZ	178 -103
HP5082-2273	♦HPA	125 - 35	HPND4165	♦HPA	218 - 54	K29M	USSR	69 - 12	K9500	♦ALP	235 - 10		KSI	
HP5082-2274	♦HPA	217 - 83	HPND4166	♦HPA	218 - 55	K30	USSR	67 - 95	KA507A	USSR	218 - 64	KV630	GHZ	182 - 8
HP5082-2277	♦HPA	217 - 84	HPND-4001	♦HPA	218 - 56	K30M	USSR	67 - 96	KA507B	USSR	218 - 65		KSI	
HP5082-2279	♦HPA	217 - 85	HPND-4005	♦HPA	218 - 57	K31	USSR	67 - 59	KA507V	USSR	218 - 66	KV632	GHZ	182 -108
HP5082-2280	♦HPA	217 - 86	HPND-4050	♦HPA	218 - 58	K32	USSR	66 - 86	KA509A	USSR	218 - 67		KSI	
HP5082-2291	♦HPA	217 - 87	HSCH0812	♦HPA	131 - 86	K33	USSR	70 - 44	KA509B	USSR	218 - 68	KV634	GHZ	184 - 77
HP5082-2292	♦HPA	217 - 88	HSCH3206	♦HPA	131 - 87	K33M	USSR	70 - 45	KA509V	USSR	218 - 69		KSI	
HP5082-2294	♦HPA	217 - 89	HSCH3207	♦HPA	131 - 88	K34	USSR	70 - 16	KA510A	USSR	218 - 70	KV636	GHZ	187 - 39
HP5082-2295	♦HPA	118 - 70	HSCH3486	♦HPA	131 - 89	K34M	USSR	70 - 17	KA510B	USSR	218 - 71		KSI	
HP5082-2296	♦HPA	217 - 90	HSCH5310	♦HPA	131 - 90	K35-1	USSR	69 - 69	KA510D	USSR	218 - 72	KV638	GHZ	189 - 75
HP5082-2297	♦HPA	118 - 71	HSCH5311	♦HPA	131 - 91	K35M	USSR	69 - 70	KA510E	USSR	218 - 73		KSI	
HP5082-2298	♦HPA	217 - 91	HSCH5312	♦HPA	131 - 92	K41	USSR	65 -104	KA510G	USSR	218 - 74	KV640	GHZ	192 - 8
HP5082-2301	♦HPA	217 - 92	HSCH5313	♦HPA	131 - 93	K42	USSR	65 - 96	KA510V	USSR	218 - 75		KSI	
HP5082-2302	♦HPA	217 - 93	HSCH5315	♦HPA	113 - 36	K48	USSR	66 - 14	KA513A	USSR	218 - 76	KV642	GHZ	193 - 69
HP5082-2303	♦HPA	217 - 94	HSCH5316	♦HPA	131 - 94	K308	USSR	68 - 3	KA513B	USSR	218 - 77		KSI	
HP5082-2305	♦HPA	217 - 95	HSCH5317	♦HPA	131 - 95	K314	USSR	67 - 38	KA602A	USSR	166 -105	KV644	GHZ	195 -104
HP5082-2306	♦HPA	217 - 96	HSCH5318	♦HPA	113 - 37	K314A	USSR	67 - 37	KA602B	USSR	160 -102		KSI	
HP5082-2308	HPA	217 - 97	HSCH5330	♦HPA	131 - 96	K315	USSR	67 - 71	KA602D	USSR	148 - 44	KV646	GHZ	197 - 15
HP5082-2350	♦HPA	113 - 67	HSCH5331	♦HPA	131 - 97	K315A	USSR	67 - 70	KA602G	USSR	149 -100		KSI	
HP5082-2351	♦HPA	217 - 98	HSCH5332	♦HPA	131 - 98	K316	USSR	67 -102	KA602V	USSR	155 - 85	KV648	GHZ	198 - 34
HP5082-2356	HPA	217 - 99	HSCH5333	♦HPA	131 - 99	K316A	USSR	67 -101	KA651	♦OKIJ	71 - 29		KSI	
HP5082-2370	HPA	217 -100	HSCH5336	♦HPA	131 -100	K335	EEVB	69 - 16	KA701A	♦OKIJ	71 - 44	KV650	GHZ	199 - 22
HP5082-2396	HPA	217 -101	HSCH5337	♦HPA	131 -101	K347A	EEVB	73 - 26	KA1330	♦OKIJ	72 - 13		KSI	
HP5082-2400	♦HPA	113 - 68	HSCH5510	♦HPA	125 - 37	K351	EEVB	68 - 40	KA1390	♦OKIJ	72 - 20	KV652	GHZ	200 - 11
HP5082-2401	♦HPA	217 -102	HSCH5511	♦HPA	132 - 89		USSR		KA1450	♦OKIJ	72 - 27		KSI	
HP5082-2520	♦HPA	113 -103	HSCH5530	♦HPA	125 - 38	K352	USSR	66 - 48	KA1510	♦OKIJ	72 - 36	KV654	GHZ	200 - 45
HP5082-2521	♦HPA	217 -103	HSCH5531	♦HPA	132 - 90	K359	EEVB	67 - 97	KA1570	OKIJ	72 - 45		KSI	
HP5082-2565	♦HPA	113 -104	HSCH-1001	♦HPA	218 - 59	K370	♦EEVB	73 - 73	KA1630	OKIJ	72 - 54	KV656	GHZ	200 -102
HP5082-2566	♦HPA	217 -104	HSCH-5314	♦HPA	125 - 39	K370W	♦EEVB	73 - 72	KA1690	OKIJ	72 - 63		KSI	
HP5082-2701	♦HPA	118 - 72	HSCH-5319	♦HPA	118 - 84	K371	♦EEVB	73 - 99	KA1750	OKIJ	72 - 66	KV658	GHZ	201 - 17
HP5082-2702	♦HPA	118 - 73	HSCH-5334	♦HPA	125 - 40	K371W	♦EEVB	73 -108	KAP1151	♦THC	62 - 66		KSI	
HP5082-2706	♦HPA	217 -105	HSCH-5335	♦HPA	125 - 41	K372	♦EEVB	74 - 7	KAP1152	♦THC	62 - 76	KV660	GHZ	201 - 46
HP5082-2707	♦HPA	217 -106	HSCH-5338	♦HPA	118 - 85	K372W	♦EEVB	74 - 21	KD407A	USSR	218 - 78		KSI	
HP5082-2711	♦HPA	118 - 74	HSCH-5339	♦HPA	118 - 86	K376L	EEVB	73 - 74	KD409A	USSR	218 - 79	KV662	GHZ	201 - 68
HP5082-2712	♦HPA	217 -107	HTO2000	♦AVA	256 - 7	K377L	EEVB	73 -100	KIU12AM	USSR	64 - 98		KSI	

Δ-Registered with JEDEC by this manufacturer

♦-Mfr's data sheet available in microfilm service

1. TYPE No. CROSS INDEX

IN TYPE NUMBER SEQUENCE

TYPE No.	MFRS	Pg&Line	TYPE No.	MFRS	Pg&Line	TYPE No.	MFRS	Pg&Line	TYPE No.	MFRS	Pg&Line	TYPE No.	MFRS	Pg&Line
KV664	GHZ	201 - 95	KV4802A	GHZ	170 -102	L3039H	♦LIT	82 - 6	L5049	♦LIT	88 - 50	L5604	LIT	90 - 85
	KSI			KSI		L3039I	♦LIT	82 - 43	L5079	LIT	88 - 55	L5605-50	LIT	92 - 6
KV666	GHZ	201 -108	KV4802B	GHZ	170 -103	L3039J	♦LIT	82 - 60	L5080	♦LIT	81 - 19	L5606-50	LIT	102 - 93
	KSI			KSI		L3039K	♦LIT	82 - 65	L5081	LIT	75 -105	L5611	LIT	103 - 68
KV950	GHZ	191 - 30	KV4802C	GHZ	170 -104	L3039L	♦LIT	82 - 92	L5089	♦LIT	98 - 98	L5617-50	LIT	99 - 71
	KSI			KSI		L3039M	♦LIT	83 - 16	L5104	LIT	82 -102	L5619	LIT	89 - 92
KV950A	GHZ	191 - 31	KV4802D	GHZ	170 -105	L3039N	♦LIT	84 - 22	L5115	LIT	85 -101	L5620-50	LIT	90 - 40
	KSI			KSI		L3039P	♦LIT	84 - 3	L5117	♦LIT	103 - 24	L5624-50	LIT	95 - 3
KV950B	GHZ	191 - 32	KV4803	GHZ	173 - 19	L3039R	LIT	81 - 95	L5137	LIT	94 - 50	L5632-52	♦LIT	98 - 55
	KSI			KSI		L3058	♦LIT	83 - 14	L5137-00	♦LIT	94 - 51	L5634-50	♦LIT	98 -104
KV950C	GHZ	191 - 33	KV4803A	GHZ	173 - 20	L3083	♦LIT	85 - 89	L5145	LIT	82 - 93	L5655-50	LIT	97 - 70
	KSI			KSI		L3083A	LIT	85 - 90	L5191	LIT	83 - 21	L5660	LIT	99 - 5
KV950D	GHZ	191 - 34	KV4803B	GHZ	173 - 21	L3089B	♦LIT	81 - 96	L5196	LIT	88 - 1	L5663	LIT	97 - 36
	KSI			KSI		L3101A	♦LIT	85 - 91	L5200	LIT	88 - 56	L5664	LIT	97 - 38
KV951	GHZ	195 - 27	KV4803C	GHZ	173 - 22	L3103	♦LIT	82 - 12	L5201	LIT	78 - 76	L5665-50	LIT	99 - 19
	KSI			KSI		L3156	♦LIT	84 - 1	L5209	LIT	85 - 3	L5671-50	LIT	90 - 72
KV951A	GHZ	195 - 28	KV4803D	GHZ	173 - 23	L3168	♦LIT	83 - 94	L5211	LIT	88 - 2	L5679-50	LIT	92 - 44
	KSI			KSI		L3189	♦LIT	78 - 83	L5223	LIT	88 - 77	L5684-01	LIT	96 - 88
KV951B	GHZ	195 - 29	KV4804	GHZ	176 - 63	L3225	♦LIT	83 - 12	L5224	LIT	82 -104	L5704-50	LIT	99 - 31
	KSI			KSI		L3234	♦LIT	60 - 36	L5227	LIT	103 - 14	L5711-00	♦LIT	102 - 16
KV951C	GHZ	195 - 30	KV4804A	GHZ	176 - 64	L3250	♦LIT	62 - 88	L5235	LIT	62 - 92	L5713-50	LIT	60 - 6
	KSI			KSI		L3268	♦LIT	82 -103	L5237	LIT	62 - 93	L5714-50	LIT	60 - 3
KV951D	GHZ	195 - 31	KV4804B	GHZ	176 - 65	L3359	LIT	85 - 77	L5260A	LIT	78 - 77	L5715-50	LIT	60 - 11
	KSI			KSi		L3403	♦LIT	62 - 56	L5261A	LIT	78 - 74	L5716-00	LIT	60 - 2
KV952	GHZ	197 - 89	KV4804C	GHZ	176 - 66	L3431A	♦LIT	83 - 76	L5271	LIT	88 - 45	LAE2001R	MULB	312 - 5
	KSI			KSI		L3456	LIT	77 - 36	L5273	LIT	82 - 20	♦PHIN	♦RTCF	
KV952A	GHZ	197 - 90	KV4804D	GHZ	176 - 67	L3459	LIT	77 - 56	L5274	LIT	83 - 18	LAE4000Q	MULB	316 - 43
	KSI			KSI		L3460	♦LIT	79 - 76	L5283	LIT	91 - 92	♦PHIN	♦RTCF	
KV952B	GHZ	197 - 91	KV4805	GHZ	178 -104	L3461	♦LIT	80 - 83	L5316	LIT	60 - 28	LAE4001R	♦MULB	316 - 37
	KSI			KSI		L3463	♦LIT	85 - 14	L5317	LIT	60 - 31	♦PHIN	♦RTCF	
KV952C	GHZ	197 - 92	KV4805A	GHZ	178 -105	L3464	♦LIT	78 - 52	L5318	LIT	60 - 34	LAE4002S	MULB	316 - 39
	KSI			KSI		L3465	♦LIT	77 - 82	L5320	LIT	93 - 33	♦PHIN	♦RTCF	
KV952D	GHZ	197 - 93	KV4805B	GHZ	178 -106	L3467	♦LIT	81 - 4	L5328	LIT	88 - 34	LAE6000Q	MULB	311 - 64
	KSI			KSI		L3468	♦LIT	81 - 60	L5329	LIT	88 - 39	♦PHIN	♦RTCF	
KV1401	GHZ	164 - 23	KV4805C	GHZ	178 -107	L3496A	♦LIT	85 - 73	L5330	LIT	85 - 92	LBE1001T	MULB	308 - 27
KV1402	GHZ	164 - 24		KSI		L3601	♦LIT	83 - 10	L5334	LIT	62 - 13	♦PHIN	♦RTCF	
KV1403	GHZ	164 - 25	KV4805D	GHZ	178 -108	L3635	♦LIT	83 - 65	L5336	LIT	91 - 93	LBE1004R	MULB	308 - 35
KV1501	GHZ	200 - 23		KSI		L3645	♦LIT	85 - 68	L5341	LIT	63 - 70	♦PHIN	♦RTCF	
KV1502	GHZ	200 - 24	KV4806	GHZ	182 - 9	L3654A	♦LIT	83 - 85	L5346	LIT	62 - 40	LBE1010R	MULB	308 - 50
KV1503	GHZ	200 - 25		KSI		L3660	♦LIT	62 - 89	L5347	LIT	62 - 21	♦PHIN	♦RTCF	
KV1601	GHZ	200 - 91	KV4806A	GHZ	182 - 10	L3661	♦LIT	62 - 91	L5359	LIT	87 -108	LBE2003S	MULB	312 - 8
KV1602	GHZ	200 - 92		KSI		L3668H	LIT	74 - 68	L5365	LIT	83 - 19	♦PHIN	♦RTCF	
KV1603	GHZ	200 - 93	KV4806B	GHZ	182 - 11	L3694	♦LIT	62 - 57	L5366-50	♦LIT	92 - 22	LBE2005Q	MULB	311 - 29
KV1701	GHZ	201 - 57		KSI		L3721	♦LIT	60 - 21	L5371	LIT	62 - 35	♦PHIN	♦RTCF	
KV1702	GHZ	201 - 58	KV4806C	GHZ	182 - 12	L3724	♦LIT	60 - 25	L5372	LIT	62 - 36	LBE2008T	MULB	311 - 33
KV1703	GHZ	201 - 59		KSI		L3724A	♦LIT	60 - 27	L5373	LIT	61 - 94	♦PHIN	♦RTCF	
KV1801	GHZ	202 - 61	KV4806D	GHZ	182 - 13	L3726	♦LIT	60 - 32	L5390-01	LIT	99 - 65	LBE2009S	MULB	312 - 22
KV1802	GHZ	202 - 62		KSI		L3728	♦LIT	60 - 38	L5391-51	♦LIT	99 - 52	♦PHIN	♦RTCF	
KV1803	GHZ	202 - 63	KV4807	GHZ	184 - 78	L3729A	♦LIT	60 - 30	L5396	LIT	101 -100	LCE1001T	MULB	308 - 28
KV2001	GHZ	182 -109		KSI		L3738	LIT	85 - 87	L5408	LIT	61 -106	♦PHIN	♦RTCF	
KV2001A	GHZ	182 -110	KV4807A	GHZ	184 - 79	L3742	♦LIT	63 - 16	L5420	LIT	94 - 10	LCE1004R	MULB	308 - 36
KV2002	GHZ	183 - 1		KSI		L3858	♦LIT	78 - 91	L5436	LIT	88 - 78	♦PHIN	♦RTCF	
KV2002A	GHZ	183 - 2	KV4807B	GHZ	184 - 80	L3890A	♦LIT	83 - 86	L5444	LIT	101 - 42	LCE1010R	MULB	308 - 51
KV2004	GHZ	183 - 3		KSI		L3897	LIT	80 - 96	L5444-50	LIT	101 - 33	♦PHIN	♦RTCF	
KV2101	GHZ	175 - 10	KV4807C	GHZ	184 - 81	L3910	♦LIT	62 -100	L5462	LIT	87 - 40	LCE2003S	MULB	312 - 9
KV2101A	GHZ	175 - 11		KSI		L3915	♦LIT	85 - 80	L5495	LIT	102 - 22	♦PHIN	♦RTCF	
KV2102	GHZ	175 - 12	KV4807D	GHZ	184 - 82	L3928	♦LIT	98 - 70	L5509-50	LIT	99 - 42	LCE2005Q	MULB	311 - 30
KV2102A	GHZ	175 - 13		KSI		L3943	♦LIT	62 - 86	L5512	♦LIT	91 -109	♦PHIN	♦RTCF	
KV2103	GHZ	175 - 14	L2055	♦LIT	90 - 36	L3944	♦LIT	62 - 90	L5512-50	♦LIT	91 -110	LCE2008T	MULB	311 - 34
KV2103A	GHZ	175 - 15	L2063-50	♦LIT	90 - 34	L3950	♦LIT	88 - 59	L5514	LIT	99 - 48	♦PHIN	♦RTCF	
KV2104	GHZ	175 - 16	L2067	LIT	93 - 44	L3956	LIT	81 -107	L5514-50	♦LIT	99 - 49	LCE2009S	MULB	312 - 23
KV2201	GHZ	195 - 32	L2082-50	♦LIT	93 - 45	L3957-00	♦LIT	97 - 59	L5519	♦LIT	99 - 72	♦PHIN	♦RTCF	
KV2201A	GHZ	195 - 33	L2086-50	♦LIT	90 - 91	L3958	♦LIT	85 - 57	L5519-55	♦LIT	99 - 73	LD550	NECJ	96 - 77
KV2202	GHZ	195 - 34	L2089-50	♦LIT	93 - 43	L3958A	♦LIT	88 - 33	L5521	LIT	100 - 93	LD561	NECJ	69 - 98
KV2202A	GHZ	195 - 35	L2098-50	♦LIT	91 - 91	L3971-51	♦LIT	91 - 25	L5536	LIT	88 - 8	LD585A	♦NECJ	74 - 43
KV2204	GHZ	195 - 36	L2102	LIT	89 - 82	L3972	♦LIT	97 - 73	L5543	LIT	88 - 6	LD597A	NECJ	92 - 85
KV2301	GHZ	199 - 92	L2107	LIT	89 - 77	L3972-50	♦LIT	97 - 55	L5546	LIT	99 -101	LD656	♦NECJ	69 -107
KV2301A	GHZ	199 - 93	L2303	LIT	94 - 34	L3975	♦LIT	63 - 17	L5548	LIT	75 -100	LD659	NECJ	74 - 38
KV2302	GHZ	199 - 94	L2364	LIT	101 - 15	L3976	♦LIT	88 - 71	L5550	LIT	91 - 96	LD700	NECJ	95 - 62
KV2302A	GHZ	199 - 95	L2365	LIT	101 - 10	L3978	♦LIT	85 - 79	L5555	LIT	97 - 69	LD747	NECJ	95 - 55
KV2304	GHZ	199 - 96	L2369	LIT	92 - 64	L3987	♦LIT	85 - 99	L5557	♦LIT	103 - 7	LD793B	♦NECJ	96 - 15
KV2401	GHZ	200 - 83	L2370	LIT	92 - 67	L3989	♦LIT	62 -104	L5557-01	♦LIT	103 - 59	LD800	NECJ	96 - 64
KV2401A	GHZ	200 - 84	L2371	LIT	96 -110	L3990	LIT	83 - 87	L5558	LIT	100 - 19	LD812	NECJ	96 - 89
KV2402	GHZ	200 - 85	L2372	LIT	97 - 1	L4064A	♦LIT	86 - 12	L5558-02	♦LIT	99 - 92	LD812A	NECJ	97 - 31
KV2402A	GHZ	200 - 86	L2374	LIT	101 - 95	L4193C	LIT	82 - 19	L5559	LIT	94 - 76	LD812B	NECJ	96 - 51
KV2404	GHZ	200 - 87	L2376	LIT	102 - 89	L4396A	LIT	82 - 34	L5559-02	♦LIT	94 - 77	LD821	NECJ	90 - 55
KV2501	GHZ	201 - 18	L2377	LIT	94 - 21	L4419	♦LIT	85 - 96	L5560	LIT	90 - 9	LD824	NECJ	90 - 56
KV2501A	GHZ	201 - 19	L2378	LIT	98 - 68	L4451	♦LIT	85 -108	L5560-02	♦LIT	90 - 10	LD837	NECJ	90 - 37
KV2502	GHZ	201 - 20	L2379	LIT	91 - 21	L4472	♦LIT	85 - 97	L5561	LIT	91 - 51	LD845	NECJ	102 - 25
KV2502A	GHZ	201 - 21	L2381	LIT	94 - 46	L4495	LIT	83 - 57	L5561-02	♦LIT	91 - 52	LD850	NECJ	100 - 86
KV2504	GHZ	201 - 22	L2382	LIT	97 - 12	L4497	LIT	83 - 47	L5563	LIT	99 - 60	LD853	NECJ	90 - 57
KV2601	GHZ	201 -109	L2383	LIT	99 - 55	L4502	LIT	82 - 26	L5566	LIT	98 - 71	LD857	NECJ	67 - 44
KV2601A	GHZ	201 -110	L2384	LIT	101 - 16	L4516	♦LIT	86 - 11	L5567	LIT	98 -110	LD863	NECJ	96 - 63
KV2602	GHZ	202 - 1	L2385	LIT	96 -106	L4527	♦LIT	88 - 66	L5570	LIT	89 - 91	LD892	NECJ	95 - 43
KV2602A	GHZ	202 - 2	L2387	LIT	92 - 68	L4547	LIT	88 - 93	L5571	LIT	99 - 68	LD910	NECJ	100 - 54
KV2604	GHZ	202 - 3	L2388	LIT	101 - 80	L4555-8902	LIT	88 - 88	L5573	LIT	90 - 6	LD914	NECJ	100 - 65
KV2701	GHZ	202 - 71	L2389	LIT	101 - 93	L4564	LIT	86 - 5	L5573-02	♦LIT	90 - 7	LD919	NECJ	74 - 36
KV2701A	GHZ	202 - 72	L2390	LIT	94 - 1	L4571/8947	LIT	87 - 39	L5574	LIT	91 - 44	LD920	NECJ	95 - 64
KV2702	GHZ	202 - 73	L2391	LIT	101 - 48	L4575	LIT	87 - 47	L5574-02	♦LIT	91 - 45	LD927	NECJ	93 - 11
KV2702A	GHZ	202 - 74	L2392	LIT	101 - 19	L4581	LIT	87 - 48	L5575	LIT	94 - 65	LD928	NECJ	96 - 61
KV2704	GHZ	202 - 75	L2396	LIT	94 - 44	L4583A	LIT	87 - 75	L5575-02	♦LIT	94 - 66	LD929	NECJ	101 - 78
KV2801	GHZ	188 - 22	L2397	LIT	99 - 86	L4593	LIT	87 - 68	L5576	♦LIT	100 - 13	LD945	NECJ	77 - 64
KV2801A	GHZ	188 - 23	L2398	LIT	103 - 6	L4601B	LIT	83 - 60	L5576-03	♦LIT	99 - 90	LD952A	NECJ	74 - 40
KV2802	GHZ	188 - 24	L3028D	♦LIT	83 - 5	L4625	LIT	85 - 51	L5577	♦LIT	101 - 22	LD958	♦NECJ	95 - 40
KV2802A	GHZ	188 - 25	L3029A	♦LIT	82 - 89	L4642	♦LIT	87 -109	L5577-01	♦LIT	102 - 33	LD4001	NECJ	95 - 38
KV2803	GHZ	188 - 26	L3029B	♦LIT	82 - 94	L4644	LIT	83 - 54	L5579	LIT	93 - 73	LD4007	♦NECJ	92 - 79
KV2803A	GHZ	188 - 27	L3029C	♦LIT	83 - 11	L4648	LIT	88 - 16	L5579-51	LIT	94 - 78	LD4010	NECJ	95 - 35
KV2804	GHZ	188 - 28	L3029D	♦LIT	82 - 96	L4649	LIT	88 - 81	L5581	LIT	99 - 69	LD4018	NECJ	97 - 74
KV3101	♦GHZ	175 - 17	L3030	♦LIT	82 - 37	L5001	♦LIT	78 - 84	L5584	LIT	90 - 84	LD4025A	♦NECJ	95 - 96
KV3111	♦GHZ	175 - 18	L3030B	♦LIT	82 - 4	L5007	♦LIT	91 - 26	L5585	LIT	89 -102	LD4034	NECJ	92 - 94
KV3801	♦GHZ	188 - 41	L3030C	♦LIT	82 - 64	L5007-00	♦LIT	91 - 27	L5585-50	LIT	89 -103	LD4035	NECJ	95 - 56
KV3802	♦GHZ	186 - 27	L3030D	♦LIT	84 - 6	L5008	♦LIT	99 - 87	L5588	LIT	100 - 39	LD4035A	NECJ	94 - 27
KV4801	GHZ	167 -108	L3035	♦LIT	62 - 87	L5008-00	♦LIT	99 - 88	L5588-50	LIT	100 - 40	LD4036	NECJ	74 - 63
	KSI		L3036A	♦LIT	84 - 64	L5009	♦LIT	94 - 48	L5590	LIT	92 - 36	LD4065	NECJ	89 - 58
KV4801A	GHZ	167 -109	L3036B	♦LIT	82 - 91	L5009-00	♦LIT	94 - 49	L5590-50	LIT	92 - 37	LD4065A	NECJ	89 - 59
	KSI		L3036E	♦LIT	83 -103	L5010	♦LIT	91 - 42	L5591-50	LIT	99 - 14	LD4067A	NECJ	90 - 38
KV4801B	GHZ	167 -110	L3036F	♦LIT	82 - 70	L5010-01	♦LIT	91 - 43	L5592-50	LIT	102 - 20	LD4070	♦NECJ	95 - 26
	KSI		L3036G	♦LIT	82 - 71	L5011	♦LIT	94 - 63	L5596-50	LIT	95 - 2	LD4086	NECJ	96 - 66
KV4801C	GHZ	168 - 1	L3039	♦LIT	82 - 87	L5011-02	♦LIT	94 - 64	L5597	LIT	92 - 69	LD4088	♦NECJ	96 - 67
	KSI		L3039A	♦LIT	81 - 93	L5013	♦LIT	85 - 63	L5598	LIT	92 - 76	LD4100	NECJ	92 - 96
KV4801D	GHZ	168 - 2	L3039D	♦LIT	81 - 97	L5022	LIT	98 - 97	L5599-50	LIT	101 - 43	LD4103	NECJ	92 - 47
	KSI		L3039E	♦LIT	81 -105	L5035	♦LIT	88 - 44	L5600-50	LIT	90 - 94	LD4107	NECJ	100 - 49
KV4802	GHZ	170 -101	L3039F	♦LIT	81 -109	L5042	LIT	88 - 47	L5601-50	LIT	99 - 70	LD4116A	NECJ	95 - 36
	KSI		L3039G	♦LIT	81 -110	L5047	♦LIT	88 - 10	L5602	LIT	98 - 38	LD4117C/D	♦NECJ	76 - 54

Δ-Registered with JEDEC by this manufacturer

♦-Mfr's data sheet available in microfilm service

1. TYPE No. CROSS INDEX

IN TYPE NUMBER SEQUENCE

TYPE No.	MFRS	Pg&Line
LD4117J	♦NECJ	76 - 55
LD4117K	♦NECJ	76 - 56
LD4117L	♦NECJ	76 - 57
LD4128	NECJ	95 - 30
LD4130	NECJ	60 - 7
LD4131	NECJ	60 - 16
LD4134A/B	NECJ	76 - 58
LD4134C/D	♦NECJ	76 - 59
LD4134J	♦NECJ	76 - 60
LD4134K	♦NECJ	76 - 61
LD4134L	♦NECJ	76 - 62
LD4136	NECJ	100 - 51
LD4157	NECJ	60 - 14
LD4170	NECJ	101 -102
LD4171	NECJ	60 - 1
LD4180	NECJ	97 - 62
LD4184A/B	NECJ	76 - 49
LD4184J	♦NECJ	76 - 50
LD4184K	♦NECJ	76 - 51
LD4184L	♦NECJ	76 - 52
LD4187	NECJ	60 - 15
LD4193	NECJ	76 - 7
LD4200	NECJ	97 - 63
LD4212	NECJ	100 -105
LD4215	♦NECJ	76 -102
LD4218	NECJ	75 -110
LD4219A	♦NECJ	102 - 72
LD4223	NECJ	76 - 16
LD4225A	♦NECJ	95 -110
LD4225C	♦NECJ	96 - 1
LD4228A	♦NECJ	96 - 2
LD4228C	♦NECJ	96 - 3
LD4233	NECJ	74 - 59
LD4235A/B	♦NECJ	76 - 48
LD4236	NECJ	95 - 47
LD4240	NECJ	102 - 38
LD4246	NECJ	96 - 62
LD4255	♦NECJ	95 -100
LD4255C	♦NECJ	95 -101
LD4274A/B	NECJ	76 - 53
LD4281	♦NECJ	96 - 9
LD4281C	NECJ	95 - 13
LD4294	NECJ	100 - 55
LD4297	NECJ	100 - 56
LD4322	♦NECJ	92 - 56
LD4325	♦NECJ	102 - 64
LD4327	NECJ	101 - 64
LD4331	NECJ	74 - 39
LD4337	♦NECJ	96 - 20
LD4346	♦NECJ	102 - 80
LD4353	♦NECJ	95 - 50
LD4359	♦NECJ	97 - 41
LD4362	♦NECJ	100 - 88
LD4369	♦NECJ	103 - 98
LD4384	♦NECJ	74 - 44
LD4396L	NECJ	76 - 31
LD4404	♦NECJ	74 - 37
LD4405	♦NECJ	77 - 14
LD4406	♦NECJ	77 - 15
LD4410	♦NECJ	74 - 48
LD4411	♦NECJ	74 - 64
LD4412	♦NECJ	74 - 45
LD4413	♦NECJ	74 - 60
LD4415A	♦NECJ	94 -102
LD4416	♦NECJ	76 - 15
LD4417	♦NECJ	92 - 89
LD4418	♦NECJ	102 - 84
LD4423L	♦NECJ	76 - 30
LD4453A	NECJ	76 - 32
LD4453B	NECJ	76 - 33
LD4511	NECJ	76 -103
LDA407	APX	311 - 41
LDA412	APX	311 - 28
LDA424	♦APX	313 - 9
LDA490	APX	317 - 87
LDA491	♦APX	317 - 88
LDA496	♦APX	318 - 24
LDR10SB	♦CTR	310 - 82
LDR40SB	♦CTR	310 - 83
LDR100SB	♦CTR	310 - 85
LEE0030X(A)	♦RTCF	307 - 76
LEE0060X(A)	♦RTCF	307 - 79
LEE1010T	♦RTCF	316 - 60
LJE42002T	MULB	316 - 53
♦PHIN	♦RTCF	
LJE42004T	MULB	316 - 76
♦PHIN	♦RTCF	
LKE1004R	MULB	308 - 37
♦PHIN	♦RTCF	
LKE2002T	MULB	312 - 11
♦PHIN	♦RTCF	
LKE2004T	MULB	312 - 13
♦PHIN	♦RTCF	
LKE2015T	MULB	312 - 59
♦PHIN	♦RTCF	
LKE21004R	MULB	312 - 86
♦PHIN	♦RTCF	
LKE21015T	MULB	312 - 87
♦PHIN	♦RTCF	
LKE21050T	MULB	312 - 91
♦PHIN	♦RTCF	
LKE27010R	MULB	314 - 10
♦PHIN	♦RTCF	
LKE27025R	MULB	314 - 13
♦PHIN	♦RTCF	
LKE32001QC	MULB	314 - 54
♦PHIN	♦RTCF	
LKE32002T	MULB	314 - 55
♦PHIN	♦RTCF	
LKE32004T	MULB	314 - 60
♦PHIN	♦RTCF	
LMT4035	♦AVA	254 - 59
LMT4046	♦AVA	254 - 60
LMT8035	♦AVA	254 - 61
LMT8046	♦AVA	254 - 62
LMT12037	♦AVA	254 - 63
LMT12048	♦AVA	254 - 64
LMT18038	♦AVA	254 - 65
LMT18049	♦AVA	254 - 66
LP1014A	♦MSI	155 - 44
LP1014B	♦MSI	155 - 45
LP1014D	♦MSI	155 - 46
LP1014E	♦MSI	155 - 47
LP1014H	♦MSI	155 - 48
LP1016A	♦MSI	157 - 95
LP1016B	♦MSI	157 - 96
LP1016D	♦MSI	157 - 97
LP1016E	♦MSI	157 - 98
LP1016H	♦MSI	157 - 99
LP1017A	♦MSI	160 - 94
LP1017B	♦MSI	160 - 95
LP1017D	♦MSI	160 - 96
LP1017E	♦MSI	160 - 97
LP1017H	♦MSI	160 - 98
LP1018A	♦MSI	162 - 81
LP1018B	♦MSI	162 - 82
LP1018D	♦MSI	162 - 83
LP1018E	♦MSI	162 - 84
LP1018H	♦MSI	162 - 85
LP1019A	♦MSI	165 - 45
LP1019B	♦MSI	165 - 46
LP1019D	♦MSI	165 - 47
LP1019E	♦MSI	165 - 48
LP1019H	♦MSI	165 - 49
LP1020A	♦MSI	168 - 3
LP1020B	♦MSI	168 - 4
LP1020D	♦MSI	168 - 5
LP1020E	♦MSI	168 - 6
LP1020H	♦MSI	168 - 7
LP1022A	♦MSI	170 -106
LP1022B	♦MSI	170 -107
LP1022D	♦MSI	170 -108
LP1022E	♦MSI	170 -109
LP1022H	♦MSI	170 -110
LP1024A	♦MSI	173 - 24
LP1024B	♦MSI	173 - 25
LP1024D	♦MSI	173 - 26
LP1024E	♦MSI	173 - 27
LP1024H	♦MSI	173 - 28
LP1026A	♦MSI	176 - 68
LP1026B	♦MSI	176 - 69
LP1026D	♦MSI	176 - 70
LP1026E	♦MSI	176 - 71
LP1026H	♦MSI	176 - 72
LP1028A	♦MSI	178 -109
LP1028B	♦MSI	178 -110
LP1028D	♦MSI	179 - 1
LP1028E	♦MSI	179 - 2
LP1028H	♦MSI	179 - 3
LP1030A	♦MSI	182 - 14
LP1030B	♦MSI	182 - 15
LP1030D	♦MSI	182 - 16
LP1030E	♦MSI	182 - 17
LP1030H	♦MSI	182 - 18
LP1032A	♦MSI	183 - 4
LP1032B	♦MSI	183 - 5
LP1032D	♦MSI	183 - 6
LP1032E	♦MSI	183 - 7
LP1032H	♦MSI	183 - 8
LP1034A	♦MSI	184 - 83
LP1034B	♦MSI	184 - 84
LP1034D	♦MSI	184 - 85
LP1034E	♦MSI	184 - 86
LP1034H	♦MSI	184 - 87
LP1036A	♦MSI	187 - 40
LP1036B	♦MSI	187 - 41
LP1036D	♦MSI	187 - 42
LP1036E	♦MSI	187 - 43
LP1036H	♦MSI	187 - 44
LP1038A	♦MSI	189 - 76
LP1038B	♦MSI	189 - 77
LP1038D	♦MSI	189 - 78
LP1038E	♦MSI	189 - 79
LP1038H	♦MSI	189 - 80
LT1001A	♦TRWS	314 - 67
LT1817	♦TRWS	312 - 50
LT1839	♦TRWS	308 - 38
LT2001	♦TRWS	314 - 74
LT3005	♦TRWS	315 - 61
LT3014	♦TRWS	315 - 62
LT3046	♦TRWS	314 - 68
LT3203	♦TRWS	313 - 86
LT3204	TRWS	313 - 78
LT3700	♦TRWS	318 - 84
LT3703	♦TRWS	315 - 16
LT3704	♦TRWS	315 - 17
LT3746	♦TRWS	315 - 18
LT3772	♦TRWS	314 - 29
LT3785	♦TRWS	318 - 85
LT4400	♦TRWS	318 - 86
LT4403	♦TRWS	317 - 64
LT4404	♦TRWS	317 - 65
LT4446	♦TRWS	317 - 66
LT4485	♦TRWS	318 - 87
LT4700	♦TRWS	318 - 57
LT4703	♦TRWS	318 - 58
LT4704	♦TRWS	318 - 59
LT4746	♦TRWS	318 - 88
LT4772	♦TRWS	318 - 89
LT4785	♦TRWS	319 - 44
LTE42005S	MULB	316 - 80
♦PHIN	♦RTCF	
LTE42008R	MULB	316 - 81
♦PHIN		
LTE42012R	MULB	316 - 82
♦PHIN	♦RTCF	
LV1721E50R	MULB	312 - 89
♦PHIN	♦RTCF	
LV2024E45R	♦PHIN	313 - 62
	♦RTCF	
LV2327E40R	MULB	314 - 16
♦PHIN	♦RTCF	
LV3742E16R	MULB	316 - 90
♦PHIN	♦RTCF	
LV3742E24R	MULB	316 - 93
♦PHIN	♦RTCF	
LWE2015R	MULB	302 - 45
♦PHIN	♦RTCF	
LWE2025R	MULB	313 - 34
♦PHIN	♦RTCF	
LWT6034	♦AVA	254 - 67
LWT6048	♦AVA	254 - 68
LWT8036	♦AVA	254 - 69
LWT8049	♦AVA	254 - 70
LWT18038	♦AVA	254 - 71
LWT18049	♦AVA	254 - 72
LY30	♦FERS	98 -103
LY50	♦FERS	97 - 72
LY61	FERS	91 - 4
LY70	♦FERS	92 - 16
LY71	FERS	91 - 5
LY73	FERS	92 - 45
LY100	♦FERS	102 - 28
LZ1418E100R	♦RTCF	302 - 44
LZ1418E100T	♦PHIN	311 - 52
M62	USSR	78 - 64
M81	USSR	78 - 68
M82	USSR	86 - 27
M89	USSR	78 - 65
M159A	♦NJRC	79 - 45
M190	NJRC	79 - 90
M190B	NJRC	79 - 85
M193	♦NJRC	78 - 6
M432A	♦ALP	127 - 50
M433B	♦ALP	127 - 58
M433U	♦ALP	127 - 62
M433V	♦ALP	127 - 65
M434A	♦ALP	127 - 51
M434E	♦ALP	127 - 75
M435B	♦ALP	127 - 59
M435U	♦ALP	127 - 63
M435V	♦ALP	127 - 66
M436E	♦ALP	127 - 76
M436W	♦ALP	127 - 78
M437F	♦ALP	127 - 80
M438W	♦ALP	127 - 79
M439F	♦ALP	127 - 81
M441A	♦ALP	127 - 52
M442B	♦ALP	127 - 60
M442U	♦ALP	127 - 64
M442V	♦ALP	127 - 67
M443A	♦ALP	127 - 53
M444B	♦ALP	127 - 61
M444V	♦ALP	127 - 68
M504	EEVB	84 - 7
M523	EEVB	85 - 16
M529	EEVB	81 -108
M538A	EEVB	82 - 69
M539	EEVB	81 - 90
M541A	♦ALP	127 - 54
M542V	♦ALP	127 - 69
M543A	♦ALP	127 - 55
M544V	♦ALP	127 - 70
M549	EEVB	81 - 89
M554	♦EEVB	78 - 19
M565	EEVB	77 -103
M566	EEVB	79 - 40
M569	EEVB	79 - 67
M570	EEVB	80 - 2
M573	EEVB	79 - 68
M574	EEVB	80 - 3
M575	♦EEVB	83 -109
M575A	♦EEVB	83 - 9
M575B	♦EEVB	84 - 97
M577B	♦EEVB	80 - 4
M578B	♦EEVB	80 - 49
M579	EEVB	80 - 52
M586	♦EEVB	77 - 94
M595B	♦EEVB	79 - 64
M596	♦EEVB	84 - 21
M1222	♦NJRC	79 - 9
M1223	♦NJRC	79 - 43
M1224	♦NJRC	79 - 54
M1225	♦NJRC	79 - 65
M1226	♦NJRC	79 - 70
M1227	♦NJRC	79 - 2
M1230	♦NJRC	80 - 98
M1233	NJRC	82 - 3
M1243	NJRC	88 - 38
M1274	NJRC	85 -100
M1300	♦NJRC	83 - 61
M1302	♦NJRC	80 - 13
M1304	♦NJRC	83 - 84
M1305	♦NJRC	84 - 43
M1306	NJRC	84 - 55
M1308	♦NJRC	83 - 64
M1310	♦NJRC	83 - 68
M1311	♦NJRC	83 - 90
M1312	♦NJRC	84 - 50
M1313	♦NJRC	83 - 80
M1315	♦NJRC	84 - 78
M1316	NJRC	83 - 62
M1320	NJRC	88 - 86
M1321	♦NJRC	84 - 65
M1323	♦NJRC	83 - 48
M1325	♦NJRC	84 - 56
M1326	NJRC	84 - 49
M1327	♦NJRC	83 - 91
M1328	♦NJRC	84 - 94
M1337	♦NJRC	85 - 25
M1341	NJRC	87 - 5
M1347	♦NJRC	83 - 55
M1348	♦NJRC	83 -101
M1350	♦NJRC	84 - 79
M1353	♦NJRC	84 - 35
M1354	♦NJRC	84 - 86
M1355	♦NJRC	83 - 63
M1359	♦NJRC	77 - 69
M1361	NJRC	84 - 31
M1369	NJRC	84 - 41
M1373	NJRC	87 - 4
M1379	NJRC	88 - 13
M1406	NJRC	88 - 22
M2797-02/L2376-01		
	LIT	102 - 86
M4505E	TOSJ	84 - 62
M4508B	TOSJ	80 -100
M4537	TOSJ	85 - 64
M4543	TOSJ	79 - 56
M4628A	♦TOSJ	76 - 18
M4634	TOSJ	74 - 69
M4826F	TOSJ	97 - 19
M5005	♦EEVB	83 -102
M5005A	♦EEVB	83 - 36
M5028	♦EEVB	86 - 3
M5030A	♦EEVB	79 - 77
M5032	♦EEVB	80 -101
M5033	♦EEVB	80 -107
M5034A	♦EEVB	80 - 53
M5035	♦EEVB	79 -108
M5042S	♦EEVB	83 - 22
M5048	EEVB	79 - 73
M5051	♦EEVB	77 - 91
M5052	♦EEVB	78 - 21
M5053	♦EEVB	86 - 10
M5054	♦EEVB	86 - 9
M5055	♦EEVB	86 - 16
M5057	♦EEVB	86 - 38
JANM5058A	none	94 - 25
M5059	♦EEVB	86 - 28
M5063-2J70B	♦EEVB	80 - 15
M5068	♦EEVB	85 - 17
M5079A	♦EEVB	80 - 57
M5080	♦EEVB	82 - 68
M5081	♦EEVB	83 -110
M5083A	♦EEVB	79 - 18
M5084	♦EEVB	77 - 92
M5085	♦EEVB	78 - 22
M5086	♦EEVB	77 - 93
M5087	♦EEVB	78 - 23
M5089	♦EEVB	84 - 73
M5091A	♦EEVB	79 -100
M5094	EEVB	79 - 25
M5113	EEVB	79 -107
M5114B	♦EEVB	79 - 32
M5123	♦EEVB	86 - 17
M5124	♦EEVB	86 - 39
M5125	♦EEVB	79 - 84
M5125X	♦EEVB	86 - 90
M5126A	♦EEVB	80 - 58
M5127	♦EEVB	86 - 21
M5133	EEVB	79 - 41
M5134	EEVB	79 - 69
M5135	♦EEVB	79 -110
M5136	♦EEVB	80 - 51
M5137	♦EEVB	86 - 37
M5149	♦EEVB	84 - 66
M5154	♦EEVB	86 - 19
M5155	♦EEVB	84 - 51
M5156	♦EEVB	84 - 63
M5157A	♦EEVB	85 - 8
M5157B	♦EEVB	85 - 18
M5157C	♦EEVB	85 - 9
M5157D	♦EEVB	85 - 19
M5162	♦EEVB	79 - 19
M5167	EEVB	79 - 81
M5168	♦EEVB	86 - 22
M5169	EEVB	77 - 80
M5170	♦EEVB	79 -101
M5187	EEVB	84 - 10
M5191	♦EEVB	85 - 35
M5193	EEVB	79 - 82
M5196F	♦EEVB	84 - 25
M5199	EEVB	84 - 95
M5508K	MEC	93 - 72
M06075B200Z	RTCF	306 - 78
M7366	♦NJRC	79 - 86
M7880	TOSJ	96 - 19
M7880B	TOSJ	96 - 16
MA4B300	♦MIC	170 - 1
MA4C11	MIC	210 - 71
MA4C100	♦MIC	205 - 97
MA4C100B	♦MIC	205 - 98
MA4C100C	♦MIC	205 - 99
MA4C102	♦MIC	205 -108
MA4C102B	♦MIC	205 -109
MA4C102C	♦MIC	205 -110
MA4C103	♦MIC	206 - 27
MA4C103B	♦MIC	206 - 28
MA4C103C	♦MIC	206 - 29
MA4C104	♦MIC	206 - 36
MA4C104B	♦MIC	206 - 37
MA4C104C	♦MIC	206 - 38
MA4C105	♦MIC	208 - 65
MA4C105B	♦MIC	208 - 66
MA4C105C	♦MIC	208 - 67
MA4C106	♦MIC	208 - 84
MA4C106B	♦MIC	208 - 85
MA4C106C	♦MIC	208 - 86
MA4C107	♦MIC	209 - 35
MA4C107B	♦MIC	209 - 36
MA4C107C	♦MIC	209 - 37
MA4C108	♦MIC	209 - 57
MA4C108B	♦MIC	209 - 58
MA4C108C	♦MIC	209 - 59
MA4C109	♦MIC	210 - 8
MA4C109B	♦MIC	210 - 9
MA4C109C	♦MIC	210 - 10
MA4C110	♦MIC	210 - 25
MA4C110B	♦MIC	210 - 26
MA4C110C	♦MIC	210 - 27
MA4C111	♦MIC	210 - 72
MA4C111B	♦MIC	210 - 73
MA4C111C	♦MIC	210 - 74
MA4C112	♦MIC	210 - 86
MA4C112B	♦MIC	210 - 87
MA4C112C	♦MIC	210 - 88
MA4C113	♦MIC	210 -108
MA4C113B	♦MIC	210 -109
MA4C113C	♦MIC	210 -110
MA4C114B	MIC	211 - 7
MA4C114C	MIC	211 - 8
MA4C157	♦MIC	209 - 88
MA4C157B	♦MIC	209 - 89
MA4C157C	♦MIC	209 - 90
MA4C158	♦MIC	210 - 58
MA4C158B	♦MIC	210 - 59
MA4C158C	♦MIC	210 - 60
MA4C250D	MIC	206 - 50
MA4C250H	MIC	206 - 49
MA4C251D	MIC	206 - 43
MA4C251H	MIC	206 - 42
MA4C252D	MIC	206 - 26
MA4C252H	MIC	206 - 25
MA4C253D	MIC	206 - 24
MA4C253H	MIC	206 - 23
MA4C254D	MIC	206 - 20
MA4C254H	MIC	206 - 19
MA4C255D	MIC	206 - 15
MA4C255H	MIC	206 - 14
MA4C256D	MIC	206 - 10
MA4C256H	MIC	206 - 9
MA4C257D	MIC	206 - 8
MA4C257H	MIC	206 - 7
MA4C258D	MIC	206 - 6
MA4C258H	MIC	206 - 5
MA4C260D	MIC	207 - 8
MA4C260H	MIC	207 - 7
MA4C261D	MIC	207 - 3
MA4C261H	MIC	207 - 2
MA4C262D	MIC	206 -103
MA4C262H	MIC	206 -102
MA4C263D	MIC	206 - 98
MA4C263H	MIC	206 - 97
MA4C264D	MIC	206 - 92
MA4C264H	MIC	206 - 91
MA4C265D	MIC	206 - 85
MA4C265H	MIC	206 - 84
MA4C266D	MIC	206 - 79
MA4C266H	MIC	206 - 78
MA4C267D	MIC	206 - 74
MA4C267H	MIC	206 - 73
MA4C268D	MIC	206 - 70
MA4C268H	MIC	206 - 69
MA4C270D	MIC	207 - 69
MA4C270H	MIC	207 - 68
MA4C271D	MIC	207 - 66
MA4C271H	MIC	207 - 65
MA4C272D	MIC	207 - 58
MA4C272H	MIC	207 - 57
MA4C273D	MIC	207 - 55
MA4C273H	MIC	207 - 54
MA4C274D	MIC	207 - 51
MA4C274H	MIC	207 - 50
MA4C275D	MIC	207 - 47
MA4C275H	MIC	207 - 46
MA4C276D	MIC	207 - 45
MA4C276H	MIC	207 - 44
MA4C277D	MIC	207 - 39
MA4C277H	MIC	207 - 38
MA4C278D	MIC	207 - 34
MA4C278H	MIC	207 - 33
MA4C400	♦MIC	210 - 46
MA4C400A,B,C,D		212 - 56
	♦MIC	
MA4C400D1,D2,188		212 - 57
	♦MIC	
MA4C401	♦MIC	205 - 39
MA4C401A,B,C,D		212 - 58
	♦MIC	
MA4C401D1,D2,188		212 - 59
	♦MIC	
MA4C402	♦MIC	205 - 41
MA4C402A,B,C,D		212 - 60
	♦MIC	
MA4C402D1,D2,188		212 - 61
	♦MIC	
MA4C403	♦MIC	205 - 66
MA4C403A,B,C,D		212 - 62
	♦MIC	
MA4C403D1,D2,188		212 - 63
	♦MIC	
MA4C404	♦MIC	205 - 84
MA4C404A,B,C,D		212 - 64
	♦MIC	
MA4C404D1,D2,188		212 - 65
	♦MIC	
MA4C405	♦MIC	205 -100
MA4C405A,B,C,D		212 - 66
	♦MIC	
MA4C405D1,D2,188		212 - 67
	♦MIC	
MA4C550	♦MIC	205 -101
MA4C550B	♦MIC	205 -102
MA4C550C	♦MIC	205 -103
MA4C551	♦MIC	206 - 1
MA4C551B	♦MIC	206 - 2
MA4C551C	♦MIC	206 - 3
MA4C552	♦MIC	206 - 30
MA4C552B	♦MIC	206 - 31

Δ-Registered with JEDEC by this manufacturer

♦-Mfr's data sheet available in microfilm service

1. TYPE No. CROSS INDEX

IN TYPE NUMBER SEQUENCE

TYPE No.	MFRS	Pg&Line
MA4C552C	♦MIC	206 - 32
MA4C553	♦MIC	206 - 39
MA4C553B	♦MIC	206 - 40
MA4C553C	♦MIC	206 - 41
MA4C554	♦MIC	208 - 68
MA4C554B	♦MIC	208 - 69
MA4C554C	♦MIC	208 - 70
MA4C555	♦MIC	208 - 87
MA4C555B	♦MIC	208 - 88
MA4C555C	♦MIC	208 - 89
MA4C556	♦MIC	209 - 38
MA4C556B	♦MIC	209 - 39
MA4C556C	♦MIC	209 - 40
MA4C557	♦MIC	209 - 60
MA4C557B	♦MIC	209 - 61
MA4C557C	♦MIC	209 - 62
MA4C558	♦MIC	210 - 11
MA4C558B	♦MIC	210 - 12
MA4C558C	♦MIC	210 - 13
MA4C559	♦MIC	210 - 28
MA4C559B	♦MIC	210 - 29
MA4C559C	♦MIC	210 - 30
MA4C560	♦MIC	210 - 75
MA4C560B	♦MIC	210 - 76
MA4C560C	♦MIC	210 - 77
MA4C561	♦MIC	210 - 89
MA4C561B	♦MIC	210 - 90
MA4C561C	♦MIC	210 - 91
MA4C562B	MIC	211 - 1
MA4C562C	MIC	211 - 2
MA4C563B	MIC	211 - 9
MA4C563C	MIC	211 - 10
MA4C700D	MIC	208 - 61
MA4C700H	MIC	208 - 60
MA4C701D	MIC	208 - 58
MA4C701H	MIC	208 - 59
MA4C702D	MIC	208 - 56
MA4C702H	MIC	208 - 55
MA4C703D	MIC	208 - 53
MA4C703H	MIC	208 - 52
MA4C704D	MIC	208 - 51
MA4C704H	MIC	208 - 50
MA4C705D	MIC	208 - 49
MA4C705H	MIC	208 - 48
MA4C710D	MIC	209 - 25
MA4C710H	MIC	209 - 24
MA4C711D	MIC	209 - 17
MA4C711H	MIC	209 - 16
MA4C712D	MIC	209 - 13
MA4C712H	MIC	209 - 12
MA4C713D	MIC	209 - 10
MA4C713H	MIC	209 - 9
MA4C714D	MIC	209 - 8
MA4C714H	MIC	209 - 7
MA4C715D	MIC	209 - 5
MA4C715H	MIC	209 - 4
MA4C720D	MIC	209 -109
MA4C720H	MIC	209 -108
MA4C721D	MIC	209 -106
MA4C721H	MIC	209 -105
MA4C722D	MIC	209 -103
MA4C722H	MIC	209 -102
MA4C723D	MIC	209 -100
MA4C723H	MIC	209 - 98
MA4C724D	MIC	209 - 97
MA4C724H	MIC	209 - 96
MA4C725D	MIC	209 - 95
MA4C725H	MIC	209 - 94
MA4C850	♦MIC	205 - 38
MA4C850A,B,C,D	♦MIC	212 - 68
MA4C850D1,D2,188	♦MIC	212 - 69
MA4C851	♦MIC	205 - 40
MA4C851A,B,C,D	♦MIC	212 - 70
MA4C851D1,D2,188	♦MIC	212 - 71
MA4C852	♦MIC	205 - 42
MA4C852A,B,C,D	♦MIC	212 - 72
MA4C852D1,D2,188	♦MIC	212 - 73
MA4C853	♦MIC	205 - 76
MA4C853A,B,C,D	♦MIC	212 - 74
MA4C853D1,D2,188	♦MIC	212 - 75
MA4E003	♦MIC	245 - 18
MA4E004	MIC	245 - 19
MA4E005	MIC	245 - 20
MA4E180	MIC	118 - 87
MA4E181	MIC	118 - 88
MA4E182	MIC	118 - 89
MA4E183	MIC	118 - 90
MA4E184	MIC	118 - 91
MA4E185	MIC	118 - 92
MA4E186	MIC	118 - 93
MA4E187	MIC	118 - 94
MA4E188	MIC	125 - 42
MA4E189	MIC	125 - 43
MA4E190	MIC	125 - 44
MA4E191	MIC	125 - 45
MA4E200	♦MIC	112 - 42
MA4E201	♦MIC	112 - 43
MA4E202	♦MIC	112 - 44
MA4E203	♦MIC	112 - 45
MA4E204	♦MIC	112 - 46
MA4E205	♦MIC	112 - 47
MA4E206	♦MIC	112 - 48
MA4E207	♦MIC	112 - 49
MA4E208	♦MIC	112 - 50
MA4E400H226	♦MIC	245 - 65
MA4E400H227	♦MIC	245 - 66
MA4E400H228	♦MIC	245 - 67
MA4E400H906	♦MIC	245 - 68
MA4E400L226	♦MIC	245 - 69
MA4E400L227	♦MIC	245 - 70
MA4E400L228	♦MIC	245 - 71
MA4E400L906	♦MIC	245 - 72
MA4E400M906	♦MIC	245 - 73
MA4E401H226	♦MIC	245 - 74
MA4E401H227	♦MIC	245 - 75
MA4E401H228	♦MIC	245 - 76
MA4E401H906	♦MIC	245 - 77
MA4E401L226	♦MIC	245 - 78
MA4E401L227	♦MIC	245 - 79
MA4E401L228	♦MIC	245 - 80
MA4E401L906	♦MIC	245 - 81
MA4E401M226	♦MIC	245 - 82
MA4E401M227	♦MIC	245 - 83
MA4E401M228	♦MIC	245 - 84
MA4E401M906	♦MIC	245 - 85
MA4E402H226	♦MIC	245 - 86
MA4E402H227	♦MIC	245 - 87
MA4E402H228	♦MIC	245 - 88
MA4E402H906	♦MIC	245 - 89
MA4E402L226	♦MIC	245 - 90
MA4E402L227	♦MIC	245 - 91
MA4E402L228	♦MIC	245 - 92
MA4E402L906	♦MIC	245 - 93
MA4E402M226	♦MIC	245 - 94
MA4E402M227	♦MIC	245 - 95
MA4E402M228	♦MIC	245 - 96
MA4E402M906	♦MIC	245 - 97
MA4H001	♦MIC	147 -107
MA4H002	♦MIC	150 -109
MA4H003	♦MIC	153 - 31
MA4H004	♦MIC	155 - 49
MA4H005	♦MIC	157 - 45
MA4H006	♦MIC	159 - 60
MA4H007	♦MIC	161 - 66
MA4H008	♦MIC	163 - 83
MA4H009	♦MIC	165 - 50
MA4H020	♦MIC	147 -108
MA4H020C	♦MIC	147 -109
MA4H021	♦MIC	149 - 37
MA4H021C	♦MIC	149 - 38
MA4H022	♦MIC	150 -110
MA4H022C	♦MIC	151 - 1
MA4H023	♦MIC	153 - 32
MA4H023C	♦MIC	153 - 33
MA4H024	♦MIC	155 - 50
MA4H024C	♦MIC	155 - 51
MA4H025	♦MIC	157 - 46
MA4H025C	♦MIC	157 - 47
MA4H026	♦MIC	159 - 61
MA4H026C	♦MIC	159 - 62
MA4H027	♦MIC	161 - 67
MA4H027C	♦MIC	161 - 68
MA4H028	♦MIC	163 - 84
MA4H028C	♦MIC	163 - 85
MA4H029	♦MIC	165 - 51
MA4H029C	♦MIC	165 - 52
MA4H030	♦MIC	173 - 29
MA4H031	♦MIC	176 - 73
MA4H032	♦MIC	179 - 4
MA4H033	♦MIC	182 - 19
MA4H034	♦MIC	184 - 88
MA4H035	♦MIC	187 - 45
MA4H036	♦MIC	189 - 81
MA4H037	♦MIC	192 - 9
MA4H038	♦MIC	193 - 70
MA4H039	♦MIC	195 -105
MA4H040	♦MIC	197 - 16
MA4K001-184	♦MIC	195 - 46
MA4K001-935	♦MIC	195 - 47
MA4K006-184	♦MIC	199 - 68
MA4K006-935	♦MIC	199 - 69
MA4K007-184	♦MIC	200 - 26
MA4K007-935	♦MIC	200 - 27
MA4K008-184	♦MIC	200 - 57
MA4K008-935	♦MIC	200 - 58
MA4K009-184	♦MIC	201 - 32
MA4K009-935	♦MIC	201 - 33
MA4K016-184	♦MIC	195 - 48
MA4K016-935	♦MIC	195 - 49
MA4K021-184	♦MIC	199 - 70
MA4K021-935	♦MIC	199 - 71
MA4K022-184	♦MIC	200 - 28
MA4K022-935	♦MIC	200 - 29
MA4K023-184	♦MIC	200 - 59
MA4K023-935	♦MIC	200 - 60
MA4K024-184	♦MIC	201 - 34
MA4K024-935	♦MIC	201 - 35
MA4K025-184	♦MIC	201 - 78
MA4K025-935	♦MIC	201 - 79
MA4K026-184	♦MIC	202 - 4
MA4K026-935	♦MIC	202 - 5
MA4K027-184	♦MIC	202 - 36
MA4K027-935	♦MIC	202 - 37
MA4K028-184	♦MIC	202 - 86
MA4K028-935	♦MIC	202 - 87
MA4K029-184	♦MIC	203 - 2
MA4K029-935	♦MIC	203 - 3
MA4K030-184	♦MIC	203 - 32
MA4K030-935	♦MIC	203 - 33
MA4K031-184	♦MIC	195 - 50
MA4K031-935	♦MIC	195 - 51
MA4K036-184	♦MIC	199 - 72
MA4K036-935	♦MIC	199 - 73
MA4K037-184	♦MIC	200 - 30
MA4K037-935	♦MIC	200 - 31
MA4K038-184	♦MIC	200 - 61
MA4K038-935	♦MIC	200 - 62
MA4K039-184	♦MIC	201 - 36
MA4K039-935	♦MIC	201 - 37
MA4K040-184	♦MIC	201 - 80
MA4K040-935	♦MIC	201 - 81
MA4K041-184	♦MIC	202 - 6
MA4K041-935	♦MIC	202 - 7
MA4K042-184	♦MIC	202 - 38
MA4K042-935	♦MIC	202 - 39
MA4K043-184	♦MIC	202 - 88
MA4K043-935	♦MIC	202 - 89
MA4K044-184	♦MIC	203 - 4
MA4K044-935	♦MIC	203 - 5
MA4K045-184	♦MIC	203 - 34
MA4K045-935	♦MIC	203 - 35
MA4K046-184	♦MIC	195 - 52
MA4K046-935	♦MIC	195 - 53
MA4K051-184	♦MIC	199 - 74
MA4K051-935	♦MIC	199 - 75
MA4K052-184	♦MIC	200 - 32
MA4K052-935	♦MIC	200 - 33
MA4K053-184	♦MIC	201 - 38
MA4K053-935	♦MIC	200 - 63
MA4K054-935	♦MIC	201 - 39
MA4K055-184	♦MIC	201 - 82
MA4K055-935	♦MIC	201 - 83
MA4K056-184	♦MIC	202 - 8
MA4K056-935	♦MIC	202 - 9
MA4K057-184	♦MIC	202 - 40
MA4K057-935	♦MIC	202 - 41
MA4K058-184	♦MIC	202 - 90
MA4K058-935	♦MIC	202 - 91
MA4K059-184	♦MIC	203 - 6
MA4K059-935	♦MIC	203 - 7
MA4K060-184	♦MIC	203 - 36
MA4K060-935	♦MIC	203 - 37
MA4K061-184	♦MIC	195 - 54
MA4K061-935	♦MIC	195 - 55
MA4K066-184	♦MIC	199 - 76
MA4K066-935	♦MIC	199 - 77
MA4K067-184	♦MIC	200 - 34
MA4K067-935	♦MIC	200 - 35
MA4K068-184	♦MIC	200 - 64
MA4K068-935	♦MIC	200 - 65
MA4K069-184	♦MIC	201 - 40
MA4K069-935	♦MIC	201 - 41
MA4K070-184	♦MIC	201 - 84
MA4K070-935	♦MIC	201 - 85
MA4K071-184	♦MIC	202 - 10
MA4K071-935	♦MIC	202 - 11
MA4K072-184	♦MIC	202 - 42
MA4K072-935	♦MIC	202 - 43
MA4K073-184	♦MIC	202 - 92
MA4K073-935	♦MIC	202 - 93
MA4K074-184	♦MIC	203 - 8
MA4K074-935	♦MIC	203 - 9
MA4K075-184	♦MIC	203 - 38
MA4K075-935	♦MIC	203 - 39
MA4P101	MIC	218 -107
MA4P102	MIC	218 -108
MA4P103-30	MIC	218 -109
MA4P202-30	MIC	218 -110
MA4P203-30	MIC	219 - 1
MA4P303-30	MIC	219 - 2
MA4P404-30	MIC	219 - 3
MA4P504-30	MIC	219 - 4
MA4P505-30	MIC	219 - 5
MA4P506-30	MIC	219 - 6
MA4P604-30	MIC	219 - 7
MA4P606-30	MIC	219 - 8
MA4P607	MIC	219 - 9
MA4P608	MIC	219 - 10
MA4P709	MIC	219 - 11
MA212	MIC	85 - 11
MA212A	MIC	84 - 12
MA212B	♦MIC	84 - 11
MA212C	MIC	84 - 13
MA212D	MIC	84 - 14
MA214	MIC	84 -105
MA214B	♦MIC	84 -106
MA214C	♦MIC	84 -107
MA214D	♦MIC	84 -109
MA217	MIC	81 - 70
MA217A	♦MIC	81 - 73
MA217B	♦MIC	81 - 71
MA217C	♦MIC	81 - 74
MA219G	MIC	82 - 97
MA221A	♦MIC	81 - 77
MA221B	♦MIC	81 - 76
MA221C	♦MIC	81 - 78
MA221D	♦MIC	81 - 79
MA231A	♦MIC	81 - 81
MA231B	♦MIC	81 - 80
MA232A	MIC	84 - 17
MA232B	♦MIC	84 - 15
MA239	MIC	85 - 42
MA239A	MIC	85 - 40
MA239B	MIC	85 - 39
MA240	MIC	85 - 48
MA240A	MIC	85 - 49
MA240B	MIC	85 - 55
MA240C	MIC	85 - 50
MA241	MIC	82 - 80
MA245	MIC	85 - 56
MA246	MIC	85 -106
MA246A	MIC	85 -107
MA249	MIC	83 - 23
MA250	MIC	82 - 83
MA252	MIC	82 - 82
MA257	MIC	85 - 74
MA257T	MIC	85 - 75
MA258	MIC	85 - 59
MA259	MIC	81 - 64
MA260	MIC	85 - 76
MA261	MIC	82 - 10
MA262	MIC	81 - 85
MA264	MIC	85 - 46
MA265	MIC	82 - 50
MA266	MIC	82 -101
MA270	MIC	82 - 81
MA271	MIC	82 - 98
MA272	MIC	82 - 11
MA273	MIC	85 - 61
MA274	MIC	85 - 62
MA277	MIC	82 - 54
MA278	MIC	85 - 21
MA279	MIC	85 - 22
MA281	MIC	85 - 45
MA285	MIC	82 - 99
MA286	HSE	86 - 30
	MIC STI	
MA287	HSE	85 - 70
	MIC STI	
MA293	MIC	81 - 84
MA294	MIC	82 - 38
MA320	♦MATJ	175 - 19
MA322	MATJ	188 - 76
MA340	MATJ	180 - 76
MA345	MATJ	180 - 79
MA408	♦MIC	129 - 47
MA408A	♦MIC	129 - 30
MA408B	♦MIC	129 - 48
MA414	MIC	118 - 95
MA417	MIC	128 - 91
MA418	MIC	129 - 31
MA418A	MIC	129 - 32
MA418B	MIC	129 - 33
MA419	MIC	116 - 59
MA419A	MIC	116 - 60
MA421A	MIC	114 - 53
MA421B	MIC	114 - 54
MA423A	MIC	118 - 96
MA425	♦MIC	130 - 59
MA435	MIC	241 - 79
MA437	♦MIC	133 - 42
MA441	♦MIC	133 - 41
MA443	♦MIC	125 - 46
MA443A	♦MIC	125 - 47
MA443B	♦MIC	125 - 48
MA444	♦MIC	125 - 49
MA444A	♦MIC	125 - 50
MA444B	♦MIC	125 - 51
MA444C	♦MIC	125 - 52
MA444D	♦MIC	125 - 53
MA445	♦MIC	125 - 54
MA445A	♦MIC	125 - 55
MA445B	♦MIC	125 - 56
MA449B	MIC	114 - 55
MA449C	MIC	114 - 56
MA449D	MIC	114 - 57
MA449E	MIC	114 - 58
MA449F	MIC	114 - 59
MA450A	♦MIC	154 - 51
MA450B	♦MIC	151 - 21
MA450C	♦MIC	148 - 45
MA450D	♦MIC	146 - 37
MA450E,F,G,H	♦MIC	142 - 90
MA451A	MIC	118 - 97
MA451B	MIC	118 - 98
MA451C	MIC	118 - 99
MA451D	MIC	118 -100
MA451E	MIC	118 -101
MA451F	MIC	118 -102
MA452	♦MIC	129 - 34
MA452A	♦MIC	129 - 35
MA452B	♦MIC	129 - 49
MA458B	♦MIC	118 -103
MA458C	♦MIC	118 -104
MA458D	♦MIC	118 -105
MA458E	♦MIC	118 -106
MA458F	♦MIC	118 -107
MA459B	♦MIC	114 - 60
MA459C	♦MIC	114 - 61
MA459D	♦MIC	114 - 62
MA459F	♦MIC	114 - 63
MA460A	♦MIC	154 - 52
MA460B	♦MIC	151 - 22
MA460C	♦MIC	148 - 46
MA460D	♦MIC	146 - 38
MA460E,F,G,H	♦MIC	142 - 91
MA461	♦MIC	129 - 36
MA461A	♦MIC	129 - 37
MA461B	♦MIC	129 - 38
MA490	♦MIC	125 - 57
MA490A	♦MIC	125 - 58
MA490B	♦MIC	125 - 59
MA490C	♦MIC	125 - 60
MA490D	♦MIC	125 - 61
MA490E	♦MIC	125 - 62
MA490F	♦MIC	125 - 63
MA490G	♦MIC	125 - 64
MA490H	♦MIC	125 - 65
MA491	♦MIC	125 - 66
MA491A	♦MIC	122 - 97
MA491B	♦MIC	122 - 98
MA491C	♦MIC	122 - 99
MA491D	♦MIC	122 -100
MA491E	♦MIC	122 -101
MA491F	♦MIC	122 -102
MA491G	♦MIC	122 -103
MA491H	♦MIC	122 -104
MA492C	♦MIC	118 -108
MA492D	♦MIC	118 -109
MA492E	♦MIC	118 -110
MA492F	MIC	119 - 1
MA492G	MIC	119 - 2
MA493B	♦MIC	126 - 28
MA493C	♦MIC	126 - 29
MA494	♦MIC	126 - 90
MA494A	♦MIC	126 - 91
MA494B	♦MIC	126 - 65
MA494C	♦MIC	126 - 92
MA494D	MIC	126 - 93
MA2801	MIC	85 - 58
MA2802	MIC	85 - 81
MA2803	MIC	82 -100
MA2804	MIC	86 - 29
MA2805	MIC	85 - 41
MA2807	MIC	84 - 18
MA2808	MIC	85 - 43
MA2810	MIC	85 - 37
MA2811	MIC	85 - 52
MA2812	MIC	85 - 78
MA2813	MIC	81 - 65
MA2820	MIC	85 - 38
MA2822	MIC	83 - 45
MA2823	MIC	83 - 51
MA2824	MIC	83 - 66
MA4011B	MIC	219 - 12
MA4011C	MIC	219 - 13
MA4011D	MIC	219 - 14
MA4019B	♦MIC	166 - 84
MA4019C	♦MIC	173 - 30
MA4019D	♦MIC	179 - 5
MA4019E	♦MIC	184 - 89
MA4019F	♦MIC	189 - 82
MA4019G	♦MIC	193 - 71
MA4034	MIC	147 - 32
MA4035	MIC	144 - 95
MA4036	MIC	141 - 84
MA4037	MIC	141 - 29
MA4038	MIC	141 - 30
MA4039	MIC	139 - 87
MA4060A	♦MIC	196 - 43
MA4060AA	♦MIC	199 -101
MA4060B	♦MIC	188 - 46
MA4060C	♦MIC	177 - 93
MA4060D	♦MIC	169 - 75
MA4061A	♦MIC	196 - 44
MA4061AA	♦MIC	199 -102
MA4061B	♦MIC	188 - 47
MA4061C	♦MIC	177 - 94
MA4061D	♦MIC	169 - 76
MA4062A	♦MIC	196 - 45
MA4062B	♦MIC	188 - 48
MA4062C	♦MIC	177 - 95
MA4062D	♦MIC	169 - 77
MA4063	♦MIC	186 - 28
MA4064	MIC	186 - 29
MA4065	♦MIC	162 - 98
MA4071B	♦MIC	147 - 33
MA4072B	♦MIC	147 - 34
MA4083	♦MIC	149 - 77
MA4084	MIC	149 - 78
MA4085	MIC	142 - 92
MA4086	♦MIC	138 - 54
MA4098AA	♦MIC	199 -103
MA4099D	♦MIC	169 - 78
MA4101	♦MIC	119 - 3
MA4116	♦MIC	132 - 91
MA4123	♦MIC	128 - 61
MA4123A	♦MIC	128 - 62
MA4123B	♦MIC	128 - 63
MA4124	♦MIC	125 - 67
MA4124A	♦MIC	125 - 68
MA4125	♦MIC	119 - 4
MA4125A	♦MIC	119 - 5
MA4126	MIC	114 - 64
MA4126A	MIC	114 - 65
MA4127	♦MIC	114 - 66
MA4127A	♦MIC	114 - 67
MA4128	♦MIC	129 - 39
MA4129	♦MIC	129 - 40
MA4130	♦MIC	119 - 6
MA4130A	♦MIC	119 - 7
MA4131	♦MIC	114 - 68
MA4131A	♦MIC	114 - 69
MA4133	♦MIC	119 - 8
MA4135	♦MIC	132 - 92
MA4136	♦MIC	114 - 70
MA4136A	♦MIC	114 - 71
MA4137	MIC	114 - 72
MA4139	♦MIC	128 - 64
MA4142	♦MIC	128 - 65
MA4142A	♦MIC	128 - 66
MA4146	♦MIC	241 - 80
MA4147	♦MIC	132 - 52
MA4171	MIC	114 - 73
MA4172	MIC	114 - 74
MA4173	MIC	119 - 9
MA4174	MIC	119 - 10
MA4251	♦MIC	158 - 88
MA4253	MIC	153 - 71
MA4254	MIC	153 - 72
MA4255	MIC	145 - 60
MA4256	MIC	153 - 52
MA4257	♦MIC	158 - 93
MA4259	♦MIC	158 - 3
MA4260	♦MIC	162 - 99
MA4261	♦MIC	165 -101
MA4263	♦MIC	219 - 15
MA4264	♦MIC	219 - 16
MA4265	♦MIC	219 - 17
MA4266	♦MIC	219 - 18
MA4267	♦MIC	219 - 19
MA4268	♦MIC	219 - 20
MA4273B	♦MIC	166 -104
MA4273C	♦MIC	173 - 31
MA4273D	♦MIC	179 - 6
MA4273E	♦MIC	184 - 90
MA4273F	♦MIC	189 - 83
MA4273G	♦MIC	193 - 72
MA4280	♦MIC	138 - 55
MA4281	♦MIC	142 - 93
MA4282	♦MIC	149 - 79
MA4283	♦MIC	152 - 42

Δ-Registered with JEDEC by this manufacturer

♦-Mfr's data sheet available in microfilm service

1. TYPE No. CROSS INDEX

IN TYPE NUMBER SEQUENCE

TYPE No.	MFRS	Pg&Line	TYPE No.	MFRS	Pg&Line	TYPE No.	MFRS	Pg&Line	TYPE No.	MFRS	Pg&Line	TYPE No.	MFRS	Pg&Line
MA4284	♦MIC	156 - 67	MA4653C	MIC	210 - 31	MA7715A-0002	♦MIC	128 - 32	MA40102	♦MIC	119 - 21	MA40410	MIC	230 - 43
MA4285	♦MIC	161 -105	MA4654A1	MIC	210 - 61	MA7715A-0003	♦MIC	128 - 52	MA40103	♦MIC	119 - 22	MA40412	MIC	230 - 44
MA4286	♦MIC	165 -104	MA4654A	MIC	210 - 65	MA7715A-0004	♦MIC	128 -104	MA40104	♦MIC	119 - 23	MA40417	MIC	127 - 71
MA4287	♦MIC	171 - 54	MA4654B	MIC	210 - 67	MA7715A-0005	♦MIC	132 - 1	MA40105	♦MIC	119 - 24	MA40423	MIC	116 - 42
MA4288	♦MIC	177 - 26	MA4654C	MIC	210 - 80	MA7715A-0006	♦MIC	132 - 56	MA40106	♦MIC	119 - 25	MA40426	MIC	122 - 66
MA4289	♦MIC	180 - 86	MA4655	♦MIC	209 -101	MA7715A-0007	♦MIC	129 - 13	MA40107	♦MIC	119 - 26	MA40427	MIC	125 - 92
MA4290	♦MIC	186 - 9	MA4684	♦MIC	155 - 88	MA7715A-0008	♦MIC	132 - 45	MA40110	♦MIC	125 - 79	MA40428	MIC	127 - 56
MA4291	♦MIC	187 -107	MA4685	♦MIC	165 - 74	MA7715A-0009	♦MIC	132 - 2	MA40111	♦MIC	125 - 80	MA40430	♦MIC	112 - 53
MA4292	MIC	188 -100	MA4686	♦MIC	140 - 43	MA7715A-0012	♦MIC	132 - 3	MA40115	♦MIC	125 - 81	MA40431	♦MIC	112 - 54
MA4296	♦MIC	153 - 73	MA4687	♦MIC	138 - 34	MA7715A-0013	♦MIC	128 -109	MA40116	♦MIC	125 - 82	MA40432	♦MIC	112 - 55
MA4297	♦MIC	153 - 74	MA4688	♦MIC	135 -102	MA7715U-0012	♦MIC	132 - 4	MA40120	♦MIC	119 - 27	MA40433	♦MIC	112 - 56
MA4298	♦MIC	153 - 75	MA4748	♦MIC	142 - 49	MA7715U-0013	♦MIC	128 -110	MA40121	♦MIC	119 - 28	MA40434	♦MIC	112 - 57
MA4337F	MIC	162 -110	MA4749	♦MIC	148 - 40	MA7717J-0009	♦MIC	132 - 5	MA40122	♦MIC	119 - 29	MA40435	♦MIC	112 - 58
MA4341AA,1,2	♦MIC	138 - 56	MA4750	♦MIC	148 - 41	MA7717N-0001	♦MIC	128 - 28	MA40123	♦MIC	119 - 30	MA40436	♦MIC	112 - 59
MA4341B,1,2	♦MIC	149 - 80	MA4751	♦MIC	148 - 42	MA7717N-0002	♦MIC	128 - 33	MA40124	♦MIC	119 - 31	MA40439	MIC	112 - 60
MA4341C,1,2	♦MIC	155 - 89	MA4752	♦MIC	152 - 30	MA7717N-0003	♦MIC	128 - 53	MA40126	♦MIC	119 - 32	MA40440	♦MIC	112 - 61
MA4341D1	♦MIC	162 -100	MA4753	♦MIC	153 - 80	MA7717N-0004	♦MIC	128 -105	MA40127	♦MIC	119 - 33	MA40441	♦MIC	112 - 62
MA4341D2	♦MIC	162 -101	MA4754	♦MIC	149 -110	MA7717N-0005	♦MIC	132 - 6	MA40128	♦MIC	119 - 34	MA40442	♦MIC	112 - 63
MA4341D	♦MIC	162 -102	MA4755	♦MIC	157 - 85	MA7717N-0006	♦MIC	132 - 57	MA40140	♦MIC	119 - 35	MA40443	♦MIC	112 - 64
MA4341E1	♦MIC	171 - 66	MA4756	♦MIC	171 - 84	MA7717N-0007	♦MIC	129 - 14	MA40150	♦MIC	119 - 36	MA40444	♦MIC	112 - 65
MA4341E	♦MIC	171 - 67	MA4760A	♦MIC	196 - 46	MA7717N-0008	♦MIC	132 - 46	MA40151	♦MIC	119 - 37	MA40445	♦MIC	112 - 66
MA4341F1	♦MIC	182 - 58	MA4760AA	♦MIC	199 -104	MA7717N-0012	♦MIC	132 - 7	MA40152	♦MIC	119 - 38	MA40446	♦MIC	112 - 67
MA4352G1	MIC	191 - 47	MA4760B	♦MIC	188 - 49	MA7717N-0013	♦MIC	129 - 1	MA40153	♦MIC	119 - 39	MA40447	♦MIC	112 - 68
MA4358F	MIC	163 - 1	MA4760C	♦MIC	177 - 97	MA7742J-0001	MIC	128 - 10	MA40154	♦MIC	119 - 40	MA40449	MIC	112 - 69
MA4361	♦MIC	149 - 81	MA4760D	♦MIC	169 - 79	MA7742N-0005	MIC	128 - 11	MA40155	♦MIC	119 - 41	MA40480	♦MIC	112 - 70
MA4362	MIC	142 - 46	MA4761A	♦MIC	196 - 47	MA7742N-0007	MIC	128 - 12	MA40156	♦MIC	119 - 42	MA40482-226	♦MIC	245 - 98
MA4372C	♦MIC	149 -106	MA4761AA	♦MIC	199 -105	MA7742N-0009	MIC	128 - 13	MA40157	♦MIC	119 - 43	MA40482-227	♦MIC	245 - 99
MA4373C	♦MIC	149 -107	MA4761B	♦MIC	188 - 50	MA7742N-0011	MIC	128 - 14	MA40160	♦MIC	125 - 83	MA40482-905	♦MIC	245 -100
MA4374C	♦MIC	149 -108	MA4761C	♦MIC	177 - 98	MA7742N-0012	MIC	128 - 15	MA40161	♦MIC	125 - 84	MA40483-226	♦MIC	245 -101
MA4375C	♦MIC	149 -109	MA4761D	♦MIC	169 - 80	MA7744A-0001	MIC	128 - 16	MA40162	♦MIC	125 - 85	MA40483-227	♦MIC	245 -102
MA4375E	MIC	177 - 96	MA4762	♦MIC	186 - 10	MA7744A-0003	MIC	128 - 17	MA40163	♦MIC	125 - 86	MA40483-905	♦MIC	245 -103
MA4380	♦MIC	138 - 57	MA4763	♦MIC	186 - 11	MA7744A-0005	MIC	128 - 18	MA40165	MIC	125 - 87	MA40484-226	♦MIC	245 -104
MA4381	♦MIC	142 - 94	MA4764	♦MIC	151 - 23	MA7744A-0007	MIC	128 - 19	MA40166	MIC	125 - 88	MA40484-227	♦MIC	245 -105
MA4382	♦MIC	149 - 82	MA4765	♦MIC	146 -109	MA7744A-0009	MIC	128 - 20	MA40167	MIC	112 - 51	MA40484-905	♦MIC	245 -106
MA4383	♦MIC	152 - 43	MA4815	♦MIC	128 - 24	MA7744A-0012	MIC	128 - 21	MA40168	MIC	112 - 52	MA40490	MIC	112 - 71
MA4384	♦MIC	156 - 68	MA4815A	♦MIC	128 - 25	MA7757J-0012	♦MIC	219 - 22	MA40170	♦MIC	119 - 44	MA40491	MIC	112 - 72
MA4385	♦MIC	161 -106	MA4850	♦MIC	245 - 21	MA7757J-0013	♦MIC	219 - 23	MA40171	♦MIC	119 - 45	MA40492	MIC	112 - 73
MA4386	♦MIC	165 -105	MA4851	♦MIC	230 - 36	MA8334	MIC	219 - 24	MA40172	♦MIC	119 - 46	MA40493-226	MIC	112 - 74
MA4387	♦MIC	171 - 55	MA4852	♦MIC	230 - 37	MA8342-0001	MIC	219 - 25	MA40173	♦MIC	119 - 47	MA40494-227	MIC	112 - 75
MA4388	♦MIC	177 - 27	MA4853	♦MIC	230 - 38	MA8342-0002	MIC	219 - 26	MA40174	♦MIC	119 - 48	MA40495-228	MIC	112 - 76
MA4400	♦MIC	119 - 11	MA4854	♦MIC	245 - 22	MA8342-0003	MIC	219 - 27	MA40175	MIC	130 - 62	MA40496-227	MIC	112 - 77
MA4400A	♦MIC	119 - 12	MA4855	♦MIC	230 - 39	MA8342-0004	MIC	219 - 28	MA40176	♦MIC	119 - 49	MA40497-227	MIC	112 - 78
MA4534	♦MIC	148 - 62	MA4856	♦MIC	230 - 40	MA8342-0005	♦MIC	219 - 29	MA40177	♦MIC	119 - 50	MA40499	MIC	112 - 79
MA4535	♦MIC	144 - 96	MA4861C	♦MIC	125 - 69	MA8342-0006	♦MIC	219 - 30	MA40178	♦MIC	119 - 51	MA40543	♦MIC	122 - 78
MA4536	♦MIC	143 - 5	MA4861D	♦MIC	125 - 70	MA8342-0007	MIC	219 - 31	MA40182	♦MIC	125 - 89	MA40995	MIC	122 - 79
MA4537	♦MIC	142 - 47	MA4861E	♦MIC	125 - 71	MA8342-0008	♦MIC	219 - 32	MA40183	♦MIC	125 - 90	MA40996	MIC	122 - 80
MA4538	♦MIC	142 - 48	MA4861F	♦MIC	125 - 72	MA8342-0009	MIC	219 - 33	MA40184	♦MIC	125 - 91	MA40997	MIC	122 - 81
MA4539	MIC	139 - 88	MA4861G	♦MIC	125 - 73	MA8342-0010	MIC	219 - 34	MA40185	♦MIC	127 - 57	MA40998	MIC	122 - 82
MA4540	♦MIC	148 - 63	MA4861H	♦MIC	125 - 74	MA8342-0011	MIC	219 - 35	MA40190	♦MIC	122 - 70	MA40999	MIC	122 - 83
MA4541	♦MIC	144 - 97	MA4882	♦MIC	230 - 41	MA8343-0001	♦MIC	219 - 36	MA40191	♦MIC	122 - 71	MA41201C	♦MIC	123 - 12
MA4542	♦MIC	143 - 6	MA4883	♦MIC	230 - 42	MA8343-0005	♦MIC	219 - 37	MA40192	♦MIC	122 - 72	MA41201D	♦MIC	125 - 93
MA4544	MIC	219 - 21	MA4953B	♦MIC	171 - 68	MA8343-0006	♦MIC	219 - 38	MA40193	♦MIC	122 - 73	MA41201E	♦MIC	125 - 94
MA4546	MIC	144 - 98	MA4953C	♦MIC	171 - 69	MA8343-0050	♦MIC	219 - 39	MA40194	♦MIC	122 - 74	MA41201F	♦MIC	125 - 95
MA4547	♦MIC	148 - 64	MA4954B	♦MIC	164 - 78	MA8343-0051	♦MIC	219 - 40	MA40195	♦MIC	122 - 75	MA41201G	♦MIC	125 - 96
MA4551	♦MIC	148 - 65	MA4954C	♦MIC	164 - 79	MA8343-0052	♦MIC	219 - 41	MA40201	♦MIC	129 - 51	MA41202C	♦MIC	119 - 52
MA4552	MIC	153 - 76	MA4955C	♦MIC	158 - 10	MA8343-0053	♦MIC	219 - 42	MA40202	♦MIC	129 - 52	MA41202D	♦MIC	119 - 53
MA4553	MIC	153 - 77	MA4955E	♦MIC	158 - 11	MA8343-0054	♦MIC	219 - 43	MA40203	♦MIC	129 - 53	MA41202E	♦MIC	119 - 54
MA4554	MIC	153 - 78	MA4956C	♦MIC	153 - 53	MA8343-0055	♦MIC	219 - 44	MA40204	♦MIC	129 - 54	MA41202F	♦MIC	119 - 55
MA4555	MIC	153 - 79	MA4956E	♦MIC	153 - 54	MA8345-0001	♦MIC	219 - 45	MA40205	♦MIC	132 - 95	MA41202G	♦MIC	119 - 56
MA4556	MIC	156 - 4	MA4956F	♦MIC	153 - 55	MA8345-0002	♦MIC	219 - 46	MA40206	♦MIC	132 - 96	MA41205	MIC	132 - 28
MA4557	MIC	161 - 84	MA4957E	♦MIC	147 - 19	MA8345-0003	♦MIC	219 - 47	MA40207	♦MIC	129 - 55	MA41206	MIC	132 - 29
MA4562	MIC	158 - 89	MA4957F	♦MIC	147 - 20	MA8345-0056	♦MIC	219 - 48	MA40208	♦MIC	129 - 56	MA41207	MIC	132 - 30
MA4604A1	♦MIC	206 - 68	MA4958E	♦MIC	141 - 80	MA8345-0057	♦MIC	219 - 49	MA40215	♦MIC	132 - 97	MA41220C	MIC	119 - 57
MA4604A	♦MIC	206 - 93	MA4958F	♦MIC	141 - 81	MA8345-0058	♦MIC	219 - 50	MA40216	♦MIC	132 - 98	MA41220E	MIC	119 - 58
MA4604B	♦MIC	206 -106	MA4961A,B	♦MIC	183 - 55	MA8345-0059	♦MIC	219 - 51	MA40220	♦MIC	132 - 24	MA41220F	MIC	119 - 59
MA4604C	♦MIC	207 - 4	MA4962B,C	♦MIC	177 - 28	MA40000	MIC	113 -105	MA40221	♦MIC	132 - 25	MA41220G	MIC	119 - 60
MA4605A	♦MIC	207 - 49	MA4963B,C	♦MIC	169 - 66	MA40001	♦MIC	113 -106	MA40222	♦MIC	132 - 60	MA41221D	MIC	125 - 97
MA4605B	♦MIC	207 - 59	MA4964B,C	♦MIC	164 - 65	MA40002	♦MIC	113 -107	MA40227	MIC	245 - 25	MA41221E	MIC	125 - 98
MA4605C	♦MIC	207 - 67	MA4965C,D,E	♦MIC	161 -107	MA40003	♦MIC	113 -108	MA40228	MIC	245 - 26	MA41221F	MIC	125 - 99
MA4606A1	♦MIC	208 - 24	MA4966C,E,F	♦MIC	156 - 69	MA40006	♦MIC	116 - 67	MA40230	♦MIC	132 - 14	MA41222	MIC	130 - 63
MA4606A2	♦MIC	208 - 23	MA4967E,F	MIC	142 - 95	MA40007	♦MIC	116 - 68	MA40231	♦MIC	132 - 15	MA41223	MIC	130 - 64
MA4606A	♦MIC	208 - 27	MA4968E,F	MIC	138 - 58	MA40008	♦MIC	116 - 69	MA40232	♦MIC	132 - 16	MA41224	MIC	132 -110
MA4606B	♦MIC	208 - 28	MA4969E,F	MIC	140 - 1	MA40009	♦MIC	116 - 70	MA40233	♦MIC	132 - 17	MA41225	MIC	133 - 1
MA4606C	♦MIC	208 - 29	MA4980	MIC	235 - 14	MA40012	♦MIC	125 - 75	MA40234	♦MIC	132 - 18	MA41500	♦MIC	114 - 80
MA4607A1	♦MIC	209 - 15	MA4984	MIC	235 - 15	MA40013	♦MIC	125 - 76	MA40235	♦MIC	132 - 19	MA41501	♦MIC	114 - 81
MA4607A2	♦MIC	209 - 11	MA4985	MIC	235 - 16	MA40014	♦MIC	125 - 77	MA40236	♦MIC	129 - 4	MA41502	♦MIC	114 - 82
MA4607A	♦MIC	209 - 23	MA4986	MIC	235 - 17	MA40015	♦MIC	125 - 78	MA40237	♦MIC	129 - 5	MA41503	♦MIC	114 - 83
MA4607B	♦MIC	209 - 29	MA4987	MIC	235 - 18	MA40024	♦MIC	128 - 54	MA40240	♦MIC	132 - 99	MA41504	♦MIC	114 - 84
MA4607C	♦MIC	209 - 50	MA4988	MIC	235 - 19	MA40025	♦MIC	128 - 55	MA40241	♦MIC	132 -100	MA41505	♦MIC	119 - 61
MA4608A	♦MIC	210 - 48	MA4989	MIC	235 - 20	MA40026	♦MIC	132 - 8	MA40242	♦MIC	132 -101	MA41506	♦MIC	119 - 62
MA4608B	♦MIC	210 - 50	MA4992	MIC	235 - 21	MA40027	♦MIC	132 - 9	MA40243	♦MIC	132 - 58	MA41507	♦MIC	119 - 63
MA4608C	♦MIC	210 - 52	MA4998	MIC	235 - 22	MA40028	♦MIC	132 - 93	MA40244	♦MIC	132 -102	MA41508	♦MIC	119 - 64
MA4609A	♦MIC	210 - 93	MA7700A-0004	♦MIC	131 -102	MA40029	♦MIC	132 - 94	MA40245	♦MIC	133 - 21	MA41509	♦MIC	119 - 65
MA4609B	♦MIC	210 - 94	MA7700A-0005	♦MIC	132 - 53	MA40033	♦MIC	116 - 47	MA40246	♦MIC	132 - 59	MA41510	♦MIC	128 - 69
MA4609C	♦MIC	210 - 95	MA7700K-0001	♦MIC	128 - 29	MA40034	♦MIC	116 - 48	MA40248	♦MIC	132 -103	MA41511	♦MIC	128 - 70
MA4610	♦MIC	212 - 76	MA7700K-0002	♦MIC	128 - 49	MA40035	♦MIC	116 - 49	MA40249	♦MIC	133 - 22	MA41512	♦MIC	128 - 71
MA4610A	♦MIC	212 - 77	MA7700K-0003	♦MIC	128 - 98	MA40040	♦MIC	128 - 56	MA40251	MIC	129 - 57	MA41513	♦MIC	130 - 65
MA4613	♦MIC	128 - 67	MA7707H	♦MIC	245 - 23	MA40041	♦MIC	128 - 57	MA40252	MIC	129 - 58	MA41514	♦MIC	130 - 66
MA4614	♦MIC	130 - 60	MA7707J	♦MIC	245 - 24	MA40042	♦MIC	132 - 10	MA40253	MIC	129 - 59	MA41515	♦MIC	130 - 67
MA4615	♦MIC	132 - 49	MA7707J-0003	♦MIC	128 - 30	MA40043	♦MIC	132 - 11	MA40254	MIC	129 - 60	MA41801	MIC	122 -105
MA4616	♦MIC	128 - 68	MA7707J-0012	♦MIC	132 - 54	MA40051D	♦MIC	114 - 75	MA40255	MIC	132 -104	MA41802	MIC	122 -106
MA4617	♦MIC	130 - 61	MA7707J-0013	♦MIC	128 - 9	MA40051E	♦MIC	114 - 76	MA40256	MIC	132 -105	MA41803	MIC	122 -107
MA4618	♦MIC	132 - 50	MA7707N-0006	♦MIC	128 - 50	MA40051F	♦MIC	114 - 77	MA40257	MIC	129 - 61	MA41804	MIC	122 -108
MA4619	♦MIC	212 - 78	MA7707N-0008	♦MIC	128 - 99	MA40051G	♦MIC	114 - 78	MA40258	MIC	129 - 62	MA41805	MIC	122 -109
MA4619A	♦MIC	212 - 79	MA7707N-0009	♦MIC	131 -103	MA40051H	♦MIC	114 - 79	MA40265	MIC	132 -106	MA41806	MIC	122 -110
MA4623	♦MIC	116 - 64	MA7707N-0012	♦MIC	131 -104	MA40052	♦MIC	128 - 58	MA40266	MIC	132 -107	MA41807	♦MIC	119 - 66
MA4623A	♦MIC	116 - 65	MA7707N-0013	♦MIC	128 -106	MA40053	♦MIC	128 - 59	MA40267	MIC	133 - 39	MA41808	♦MIC	119 - 67
MA4624	MIC	212 - 80	MA7707N-0014	♦MIC	128 -100	MA40054	♦MIC	122 - 76	MA40268	MIC	133 - 40	MA41809	♦MIC	123 - 1
MA4624A	MIC	212 - 81	MA7707N-0015	♦MIC	131 -105	MA40061	MIC	116 - 50	MA40270	MIC	129 - 63	MA41810	♦MIC	123 - 2
MA4625	MIC	212 - 82	MA7709A-0001	♦MIC	128 - 31	MA40062	MIC	116 - 51	MA40271	♦MIC	129 - 64	MA41811	♦MIC	123 - 3
MA4625A	MIC	212 - 83	MA7709A-0003	♦MIC	128 - 51	MA40071-I	♦MIC	119 - 13	MA40272	♦MIC	132 -108	MA41812	♦MIC	123 - 4
MA4631A,1,2	MIC	146 - 39	MA7709A-0005	♦MIC	128 -101	MA40071D	♦MIC	119 - 14	MA40273	MIC	129 - 65	MA41813	♦MIC	130 - 68
MA4633A,1,2	MIC	146 - 40	MA7709A-0007	♦MIC	131 -106	MA40071E	♦MIC	119 - 15	MA40274	♦MIC	132 -109	MA41814	MIC	130 - 69
MA4644A-E	♦MIC	136 - 54	MA7709A-0009	♦MIC	132 - 55	MA40071F	♦MIC	119 - 16	MA40278H	♦MIC	255 - 31	MA41816	♦MIC	119 - 68
MA4645B-E	♦MIC	140 - 81	MA7709A-0011	♦MIC	129 - 50	MA40071G	♦MIC	119 - 17	MA40278L	♦MIC	255 - 32	MA41817	♦MIC	123 - 5
MA4646C-E	♦MIC	146 -108	MA7709A-0012	♦MIC	131 -107	MA40071H	♦MIC	119 - 18	MA40279H	♦MIC	255 - 33	MA41819	♦MIC	130 - 70
MA4651A	MIC	208 - 62	MA7709A-0013	♦MIC	128 -107	MA40072	♦MIC	132 - 12	MA40279L	♦MIC	255 - 34	MA41820	♦MIC	132 - 51
MA4651B	MIC	208 - 64	MA7709A-0014	♦MIC	128 -102	MA40073	♦MIC	132 - 13	MA40279M	♦MIC	255 - 35	MA42001-509	♦MIC	304 - 14
MA4651C	MIC	208 - 90	MA7709A-0015	♦MIC	131 -108	MA40074	MIC	132 - 27	MA40291	♦MIC	129 - 6	MA42001-510	♦MIC	301 - 5
MA4652A	MIC	209 - 26	MA7709U-0012	♦MIC	131 -109	MA40075	♦MIC	122 - 77	MA40292	♦MIC	129 - 7	MA42001-511	♦MIC	300 - 58
MA4652B	MIC	209 - 41	MA7709U-0013	♦MIC	128 -108	MA40081	♦MIC	116 - 52	MA40293	♦MIC	132 - 20	MA42002-509	♦MIC	304 - 15
MA4652C	MIC	209 - 63	MA7709U-0014	♦MIC	128 -103	MA40082	♦MIC	116 - 53	MA40294	♦MIC	132 - 21	MA42002-510	♦MIC	301 - 6
MA4653A	MIC	210 - 1	MA7709U-0015	♦MIC	131 -110	MA40100	♦MIC	119 - 19	MA40295	♦MIC	132 - 22	MA42002-511	♦MIC	300 - 59
MA4653B	MIC	210 - 2	MA7715A-0001	♦MIC	128 - 27	MA40101	♦MIC	119 - 20	MA40296	♦MIC	132 - 23	MA42003-509	♦MIC	304 - 16

Δ-Registered with JEDEC by this manufacturer

♦-Mfr's data sheet available in microfilm service

1. TYPE No. CROSS INDEX

IN TYPE NUMBER SEQUENCE

TYPE No.	MFRS	Pg&Line	TYPE No.	MFRS	Pg&Line	TYPE No.	MFRS	Pg&Line	TYPE No.	MFRS	Pg&Line	TYPE No.	MFRS	Pg&Line
MA42003-510	♦MIC	301 - 7	MA42265-287	♦MIC	300 - 31	MA45068	♦MIC	135 - 32	MA45251	♦MIC	153 - 40	MA46019	♦MIC	235 - 23
MA42003-511	♦MIC	300 - 60	MA42266-287	♦MIC	302 - 35	MA45070	MIC	171 - 1	MA45251C	MIC	153 - 41	MA46020	♦MIC	235 - 24
MA42004-509	♦MIC	304 - 17	MA42267-287	♦MIC	302 - 36	MA45071	MIC	176 - 74	MA45252	♦MIC	155 - 54	MA46036	♦MIC	235 - 25
MA42004-510	♦MIC	301 - 8	MA42268-287	♦MIC	302 - 37	MA45072	MIC	182 - 20	MA45252C	MIC	155 - 55	MA46037	♦MIC	235 - 26
MA42004-511	♦MIC	300 - 61	MA43000	♦MIC	162 -103	MA45073	MIC	187 - 46	MA45253	♦MIC	157 - 55	MA46038	♦MIC	235 - 27
MA42005-509	♦MIC	304 - 18	MA43001	♦MIC	166 -102	MA45074	MIC	192 - 10	MA45253C	MIC	157 - 56	MA46039	♦MIC	235 - 28
MA42005-510	♦MIC	301 - 9	MA43002	♦MIC	155 -110	MA45075	MIC	195 -106	MA45254	♦MIC	159 - 70	MA46040	♦MIC	235 - 29
MA42005-511	♦MIC	300 - 62	MA43003	♦MIC	160 - 76	MA45101	♦MIC	146 - 23	MA45254C	MIC	159 - 71	MA46041	♦MIC	235 - 30
MA42006-510	♦MIC	304 - 28	MA43004	♦MIC	146 - 50	MA45102	♦MIC	149 - 40	MA45255	♦MIC	161 - 71	MA46042	♦MIC	235 - 31
MA42006-511	♦MIC	300 - 63	MA43005	♦MIC	149 - 92	MA45103	♦MIC	153 - 35	MA45255C	MIC	161 - 72	MA46044	♦MIC	235 - 32
MA42008-509	♦MIC	300 - 44	MA43007	♦MIC	149 - 93	MA45104	♦MIC	157 - 48	MA45256	♦MIC	163 - 95	MA46045	♦MIC	235 - 33
MA42008-510	♦MIC	301 - 10	MA43030	♦MIC	160 -103	MA45105	♦MIC	159 - 63	MA45256C	MIC	163 - 96	MA46046	♦MIC	235 - 34
MA42008-511	♦MIC	304 - 25	MA43031	♦MIC	154 - 20	MA45106	♦MIC	163 - 86	MA45257	♦MIC	165 - 55	MA46046-275	♦MIC	235 - 35
MA42009-509	♦MIC	304 - 19	MA43032	♦MIC	143 - 36	MA45107	♦MIC	168 - 8	MA45257C	MIC	165 - 56	MA46047	♦MIC	235 - 36
MA42009-510	♦MIC	301 - 11	MA43033	♦MIC	137 - 33	MA45108	♦MIC	173 - 32	MA45258	♦MIC	168 - 17	MA46048	♦MIC	235 - 37
MA42009-511	♦MIC	300 - 64	MA43034	♦MIC	164 - 66	MA45109	♦MIC	179 - 7	MA45258C	MIC	168 - 18	MA46049	♦MIC	235 - 38
MA42010-509	♦MIC	304 - 20	MA43035	♦MIC	155 - 86	MA45110	♦MIC	163 - 87	MA45259	♦MIC	171 - 6	MA46520A	♦MIC	183 - 9
MA42010-510	♦MIC	304 - 29	MA43036	♦MIC	148 - 29	MA45111	♦MIC	168 - 9	MA45259C	MIC	171 - 7	MA46520B	♦MIC	183 - 10
MA42010-511	♦MIC	300 - 65	MA43037	♦MIC	140 - 2	MA45112	♦MIC	173 - 33	MA45260	♦MIC	142 - 88	MA46520C	♦MIC	183 - 11
MA42011-509	♦MIC	304 - 21	MA43543	♦MIC	139 - 63	MA45113	♦MIC	179 - 8	MA45260C	MIC	142 - 89	MA46520D	♦MIC	183 - 12
MA42011-510	♦MIC	304 - 30	MA43592	♦MIC	137 - 34	MA45114	♦MIC	184 - 91	MA45261	♦MIC	146 - 30	MA46522A	♦MIC	195 - 37
MA42011-511	♦MIC	300 - 66	MA44010	♦MIC	156 - 82	MA45115	♦MIC	189 - 84	MA45261C	MIC	146 - 31	MA46522B	♦MIC	195 - 38
MA42012-509	♦MIC	300 - 45	MA44020	♦MIC	152 - 44	MA45116	♦MIC	193 - 73	MA45262	♦MIC	148 - 4	MA46522C	♦MIC	195 - 39
MA42012-510	♦MIC	304 - 31	MA44030	♦MIC	149 - 86	MA45121	♦MIC	146 - 24	MA45262C	MIC	148 - 5	MA46522D	♦MIC	195 - 40
MA42012-511	♦MIC	300 - 67	MA44040	♦MIC	144 - 66	MA45122	♦MIC	149 - 41	MA45263	♦MIC	149 - 47	MA46523A	♦MIC	199 - 97
MA42014-509	♦MIC	304 - 22	MA44050	♦MIC	149 -101	MA45123	♦MIC	153 - 36	MA45263C	MIC	149 - 48	MA46523B	♦MIC	199 - 98
MA42014-510	♦MIC	301 - 12	MA44051	♦MIC	149 - 83	MA45124	♦MIC	157 - 49	MA45264	♦MIC	151 - 6	MA46523C	♦MIC	199 - 99
MA42014-511	♦MIC	300 - 68	MA44052	♦MIC	155 - 90	MA45125	♦MIC	159 - 64	MA45264C	MIC	151 - 7	MA46523D	♦MIC	199 -100
MA42015-509	♦MIC	300 - 46	MA44053	♦MIC	164 - 67	MA45126	♦MIC	163 - 88	MA45265	♦MIC	153 - 42	MA46524A	♦MIC	204 - 47
MA42015-510	♦MIC	304 - 32	MA44058	♦MIC	149 -102	MA45127	♦MIC	168 - 10	MA45265C	MIC	153 - 43	MA46524B	♦MIC	204 - 48
MA42015-511	♦MIC	300 - 69	MA44060	♦MIC	147 - 21	MA45128	♦MIC	173 - 34	MA45266	♦MIC	155 - 56	MA46524C	♦MIC	204 - 49
MA42016-509	♦MIC	300 - 47	MA44061	♦MIC	147 - 22	MA45129	♦MIC	179 - 9	MA45266C	MIC	155 - 57	MA46524D	♦MIC	204 - 50
MA42016-510	♦MIC	304 - 33	MA44070	♦MIC	141 - 82	MA45130	♦MIC	163 - 89	MA45267	♦MIC	157 - 57	MA46525A	♦MIC	201 - 23
MA42016-511	♦MIC	300 - 70	MA44071	♦MIC	141 - 83	MA45131	♦MIC	168 - 11	MA45267C	MIC	157 - 58	MA46525B	♦MIC	201 - 24
MA42020-509	♦MIC	303 -101	MA44100	♦MIC	188 - 72	MA45132	♦MIC	173 - 35	MA45268	♦MIC	159 - 72	MA46525C	♦MIC	201 - 25
MA42021-509	♦MIC	304 - 1	MA44110	♦MIC	180 - 77	MA45133	♦MIC	179 - 10	MA45268C	MIC	159 - 73	MA46525D	♦MIC	201 - 26
MA42022-509	♦MIC	304 - 2	MA44120	♦MIC	169 -109	MA45134	♦MIC	184 - 92	MA45269	♦MIC	161 - 73	MA46533A	MIC	175 - 20
MA42023-509	♦MIC	304 - 3	MA44130	♦MIC	160 - 71	MA45135	♦MIC	189 - 85	MA45269C	MIC	161 - 74	MA46533B	MIC	175 - 21
MA42024-509	♦MIC	304 - 4	MA44140	♦MIC	151 - 24	MA45136	♦MIC	193 - 74	MA45270	♦MIC	163 - 97	MA46533C	MIC	175 - 22
MA42025-509	♦MIC	304 - 5	MA44150	♦MIC	142 - 96	MA45141	♦MIC	146 - 25	MA45270C	MIC	163 - 98	MA46533D	MIC	175 - 23
MA42026-509	♦MIC	304 - 6	MA44200	♦MIC	188 - 73	MA45142	♦MIC	149 - 42	MA45271	♦MIC	165 - 57	MA46533E	MIC	175 - 24
MA42027-509	♦MIC	304 - 7	MA44210	♦MIC	180 - 78	MA45143	♦MIC	153 - 37	MA45271C	MIC	165 - 58	MA46533F	MIC	175 - 25
MA42028-509	♦MIC	304 - 8	MA44220	♦MIC	169 -110	MA45144	♦MIC	157 - 50	MA45272	♦MIC	168 - 19	MA46534A	MIC	191 - 51
MA42029-509	MIC	300 - 42	MA44230	♦MIC	160 - 72	MA45145	♦MIC	159 - 65	MA45272C	MIC	168 - 20	MA46534B	MIC	191 - 52
MA42051-509	♦MIC	304 - 9	MA44240	♦MIC	151 - 25	MA45146	♦MIC	163 - 90	MA45273	♦MIC	171 - 8	MA46534C	MIC	191 - 53
MA42051-510	♦MIC	304 - 23	MA44250	♦MIC	142 - 97	MA45147	♦MIC	168 - 12	MA45274	♦MIC	173 - 40	MA46534D	MIC	188 - 29
MA42051-511	♦MIC	304 - 11	MA44300	♦MIC	164 - 68	MA45148	♦MIC	173 - 36	MA45275	♦MIC	176 - 79	MA46534E	MIC	188 - 30
MA42052-509	♦MIC	304 - 10	MA44310	♦MIC	158 - 12	MA45149	♦MIC	179 - 11	MA45276	♦MIC	179 - 15	MA46534F	MIC	188 - 31
MA42052-510	♦MIC	304 - 24	MA44320	♦MIC	148 - 30	MA45150	MIC	171 - 2	MA45277	♦MIC	182 - 22	MA46540C	♦MIC	137 - 15
MA42052-511	♦MIC	304 - 12	MA44631-287	♦MIC	239 - 94	MA45151	MIC	176 - 75	MA45278	♦MIC	184 - 93	MA46540D	♦MIC	137 - 16
MA42055-510	MIC	308 - 21	MA44632-287	♦MIC	239 - 95	MA45152	MIC	182 - 21	MA45279	♦MIC	187 - 48	MA46540E	♦MIC	137 - 17
MA42055-511	MIC	308 - 15	MA44642-287	♦MIC	239 - 96	MA45153	MIC	187 - 47	MA45280	♦MIC	189 - 86	MA46540F	♦MIC	137 - 18
MA42056-510	MIC	308 - 22	MA44643-287	♦MIC	239 - 97	MA45154	MIC	192 - 11	MA45290	♦MIC	148 - 6	MA46541C	♦MIC	143 - 16
MA42056-511	♦MIC	308 - 16	MA44900A	MIC	135 - 78	MA45156	♦MIC	159 - 66	MA45290-287	♦MIC	135 - 13	MA46541D	♦MIC	143 - 17
MA42057-510	MIC	307 - 89	MA44900B	MIC	135 - 79	MA45157	♦MIC	163 - 91	MA45290C	MIC	148 - 7	MA46541E	♦MIC	143 - 18
MA42057-511	MIC	307 - 90	MA44900C	MIC	135 - 80	MA45158	♦MIC	168 - 13	MA45291	♦MIC	149 - 49	MA46541F	♦MIC	143 - 19
MA42060	MIC	313 - 52	MA44900D	MIC	135 - 81	MA45159	♦MIC	171 - 3	MA45291C	MIC	149 - 50	MA46542C	♦MIC	149 - 51
MA42061	MIC	313 - 83	MA44900E	MIC	135 - 82	MA45160	♦MIC	173 - 37	MA45292	♦MIC	151 - 8	MA46542D	♦MIC	149 - 52
MA42062	MIC	313 - 84	MA44900F	MIC	135 - 83	MA45161	♦MIC	176 - 76	MA45292C	MIC	151 - 9	MA46542E	♦MIC	149 - 53
MA42063	MIC	313 - 85	MA44901A	MIC	136 - 18	MA45162	♦MIC	179 - 12	MA45293	♦MIC	153 - 44	MA46543B	♦MIC	154 - 1
MA42100-509	MIC	317 - 15	MA44901B	MIC	136 - 19	MA45164	♦MIC	157 - 51	MA45293C	MIC	153 - 45	MA46543C	♦MIC	154 - 2
MA42100-510	MIC	317 - 16	MA44901C	MIC	136 - 20	MA45165	♦MIC	157 - 52	MA45294	♦MIC	155 - 58	MA46543D	♦MIC	154 - 3
MA42100-511	MIC	317 - 17	MA44901D	MIC	136 - 21	MA45166	♦MIC	159 - 67	MA45294C	MIC	155 - 59	MA46543E	♦MIC	154 - 4
MA42100-512	MIC	317 - 18	MA44901E	MIC	136 - 22	MA45167	♦MIC	163 - 92	MA45295	♦MIC	157 - 59	MA46544B	♦MIC	157 -100
MA42110-509	♦MIC	317 - 19	MA44901F	MIC	136 - 23	MA45168	♦MIC	168 - 14	MA45295C	MIC	157 - 60	MA46544C	♦MIC	157 -101
MA42110-510	♦MIC	317 - 20	MA44902A	MIC	136 - 59	MA45169	♦MIC	171 - 4	MA45296	♦MIC	159 - 74	MA46544D	♦MIC	157 -102
MA42110-511	♦MIC	317 - 21	MA44902B	MIC	136 - 60	MA45170	♦MIC	173 - 38	MA45296C	MIC	159 - 75	MA46545B	♦MIC	162 - 3
MA42110-512	♦MIC	317 - 22	MA44902C	MIC	136 - 61	MA45171	♦MIC	176 - 77	MA45297	♦MIC	161 - 75	MA46545C	♦MIC	162 - 4
MA42111-509	♦MIC	315 - 33	MA44902D	MIC	136 - 62	MA45172	♦MIC	179 - 13	MA45297C	MIC	161 - 76	MA46545D	♦MIC	162 - 5
MA42111-510	♦MIC	315 - 48	MA44902E	MIC	136 - 63	MA45200-287	♦MIC	135 - 10	MA45298	♦MIC	163 - 99	MA46546A	♦MIC	165 - 89
MA42111-511	♦MIC	315 - 43	MA44902F	MIC	136 - 64	MA45225	♦MIC	141 - 69	MA45298C	MIC	163 -100	MA46546B	♦MIC	165 - 90
MA42112-509	♦MIC	315 - 34	MA44903A	MIC	138 - 21	MA45225-287	♦MIC	135 - 11	MA45299	♦MIC	165 - 59	MA46546C	♦MIC	165 - 91
MA42112-510	♦MIC	315 - 49	MA44903B	MIC	138 - 22	MA45226	♦MIC	142 - 84	MA45299C	MIC	165 - 60	MA46547A	♦MIC	171 - 42
MA42112-511	♦MIC	315 - 44	MA44903C	MIC	138 - 23	MA45226C	MIC	142 - 85	MA45330	♦MIC	163 -101	MA46547B	♦MIC	171 - 43
MA42113-509	♦MIC	315 - 35	MA44903D	MIC	138 - 24	MA45227	♦MIC	146 - 26	MA45331	♦MIC	165 - 61	MA46547C	♦MIC	171 - 44
MA42113-510	♦MIC	315 - 50	MA44903E	MIC	138 - 25	MA45227C	MIC	146 - 27	MA45332	♦MIC	168 - 21	MA46550C	♦MIC	137 - 19
MA42113-511	♦MIC	315 - 45	MA44903F	MIC	138 - 26	MA45228	♦MIC	147 -110	MA45333	♦MIC	171 - 9	MA46550D	♦MIC	137 - 20
MA42120-508	♦MIC	315 - 86	MA44904A	MIC	138 - 86	MA45228C	MIC	148 - 1	MA45334	♦MIC	173 - 41	MA46550E	♦MIC	137 - 21
MA42120-509	♦MIC	301 - 1	MA44904B	MIC	138 - 87	MA45229	♦MIC	149 - 43	MA45335	♦MIC	176 - 80	MA46550F	♦MIC	137 - 22
MA42121-508	♦MIC	316 - 78	MA44904C	MIC	138 - 88	MA45229C	MIC	149 - 44	MA45336	♦MIC	179 - 16	MA46551C	♦MIC	143 - 20
MA42121-509	♦MIC	301 - 2	MA44904D	MIC	138 - 89	MA45230	♦MIC	151 - 2	MA45337	♦MIC	182 - 23	MA46551D	♦MIC	143 - 21
MA42122-508	♦MIC	301 - 3	MA44904E	MIC	138 - 90	MA45230C	MIC	151 - 3	MA45338	♦MIC	184 - 94	MA46551E	♦MIC	143 - 22
MA42122-509	♦MIC	310 - 65	MA44904F	MIC	138 - 91	MA45231	♦MIC	153 - 38	MA45339	MIC	187 - 49	MA46551F	♦MIC	143 - 23
MA42123-508	♦MIC	301 - 4	MA44905A	MIC	139 - 33	MA45231C	MIC	153 - 39	MA45340	MIC	189 - 87	MA46552C	♦MIC	149 - 54
MA42123-509	♦MIC	311 - 14	MA44905B	MIC	139 - 34	MA45232	♦MIC	155 - 52	MA45341	MIC	192 - 12	MA46552D	♦MIC	135 - 14
MA42141-509	♦MIC	311 - 95	MA44905C	MIC	139 - 35	MA45232C	MIC	155 - 53	MA45342	♦MIC	193 - 75	MA46552E	♦MIC	135 - 15
MA42141-510	♦MIC	311 - 98	MA44905D	MIC	139 - 36	MA45233	♦MIC	157 - 53	MA45343	♦MIC	195 -107	MA46553B	♦MIC	135 - 16
MA42141-511	♦MIC	312 - 1	MA44905E	MIC	139 - 37	MA45233C	MIC	157 - 54	MA45345	♦MIC	163 -102	MA46553C	♦MIC	135 - 17
MA42142-509	♦MIC	311 - 96	MA44905F	MIC	139 - 38	MA45234	♦MIC	159 - 68	MA45346	♦MIC	165 - 62	MA46553D	♦MIC	135 - 18
MA42142-510	♦MIC	312 - 2	MA44906A	MIC	140 - 11	MA45234C	MIC	159 - 69	MA45347	♦MIC	168 - 22	MA46553E	♦MIC	135 - 19
MA42142-511	♦MIC	312 - 3	MA44906B	MIC	140 - 12	MA45235	♦MIC	161 - 69	MA45348	♦MIC	171 - 10	MA46554B	♦MIC	135 - 20
MA42143-509	♦MIC	304 - 13	MA44906C	MIC	140 - 13	MA45235C	MIC	161 - 70	MA45349	♦MIC	173 - 42	MA46554C	♦MIC	135 - 21
MA42143-510	♦MIC	304 - 26	MA44906D	MIC	140 - 14	MA45236	♦MIC	163 - 93	MA45350	♦MIC	176 - 81	MA46554D	♦MIC	135 - 22
MA42143-511	♦MIC	304 - 27	MA44906E	MIC	140 - 15	MA45236C	MIC	163 - 94	MA45351	♦MIC	179 - 17	MA46555B	♦MIC	135 - 23
MA42151-510	♦MIC	320 - 76	MA44906F	MIC	140 - 16	MA45237	♦MIC	165 - 53	MA45352	♦MIC	182 - 24	MA46555C	♦MIC	135 - 24
MA42151-511	♦MIC	314 - 52	MA44907A	MIC	140 - 88	MA45237C	MIC	165 - 54	MA45353	♦MIC	184 - 95	MA46555D	♦MIC	135 - 25
MA42161-511	♦MIC	318 - 16	MA44907B	MIC	140 - 89	MA45238	♦MIC	168 - 15	MA45354	♦MIC	187 - 50	MA46556A	♦MIC	165 - 92
MA42161-512	♦MIC	300 - 37	MA44907C	MIC	140 - 90	MA45238C	MIC	168 - 16	MA45355	♦MIC	189 - 88	MA46556B	♦MIC	165 - 93
MA42161-535	MIC	300 - 38	MA44907D	MIC	140 - 91	MA45239C	MIC	171 - 5	MA45356	♦MIC	192 - 13	MA46556C	♦MIC	165 - 94
MA42162-511	♦MIC	318 - 17	MA44907E	MIC	140 - 92	MA45240C	MIC	173 - 39	MA45357	♦MIC	193 - 76	MA46557A	♦MIC	171 - 45
MA42162-512	MIC	300 - 39	MA44907F	MIC	140 - 93	MA45241C	MIC	176 - 78	MA45358	♦MIC	195 -108	MA46557B	♦MIC	171 - 46
MA42181-510	♦MIC	319 - 43	MA44908A	MIC	141 - 87	MA45242C	MIC	179 - 14	MA45360	♦MIC	163 -103	MA46557C	♦MIC	171 - 47
MA42191-510	♦MIC	312 - 14	MA44909A	MIC	142 - 30	MA45245	♦MIC	141 - 70	MA45361	♦MIC	165 - 63	MA46560C	♦MIC	137 - 23
MA42197	♦MIC	300 - 56	MA44910A	MIC	142 -107	MA45245-287	♦MIC	135 - 12	MA45362	♦MIC	168 - 23	MA46560D	♦MIC	137 - 24
MA42197-524	♦MIC	300 - 57	MA44911A	MIC	143 - 46	MA45246	♦MIC	142 - 86	MA45363	♦MIC	171 - 11	MA46560E	♦MIC	137 - 25
MA42217	♦MIC	300 - 50	MA45054	♦MIC	146 - 91	MA45246C	MIC	142 - 87	MA45364	♦MIC	173 - 43	MA46560F	♦MIC	137 - 26
MA42217-524	♦MIC	300 - 51	MA45055	♦MIC	143 - 74	MA45247	♦MIC	146 - 28	MA45365	♦MIC	176 - 82	MA46561C	♦MIC	203 - 45
MA42218	♦MIC	300 - 52	MA45056	♦MIC	141 - 67	MA45247C	MIC	146 - 29	MA45366	♦MIC	179 - 18	MA46561D	♦MIC	203 - 46
MA42218-524	♦MIC	300 - 53	MA45062	♦MIC	149 - 39	MA45248	♦MIC	148 - 2	MA45367	♦MIC	182 - 25	MA46561E	♦MIC	143 - 24
MA42260-287	♦MIC	300 - 26	MA45063	♦MIC	153 - 34	MA45248C	MIC	148 - 3	MA45368	♦MIC	184 - 96	MA46561F	♦MIC	143 - 25
MA42261-287	♦MIC	300 - 27	MA45064	♦MIC	141 - 68	MA45249	♦MIC	149 - 45	MA45369	♦MIC	187 - 51	MA46562C	♦MIC	149 - 55
MA42262-287	♦MIC	300 - 28	MA45065	♦MIC	143 - 75	MA45249C	MIC	149 - 46	MA45370	♦MIC	189 - 89	MA46562D	♦MIC	149 - 56
MA42263-287	♦MIC	300 - 29	MA45066	♦MIC	146 - 92	MA45250	♦MIC	151 - 4	MA45371	♦MIC	192 - 14	MA46562E	♦MIC	149 - 57
MA42264-287	♦MIC	300 - 30	MA45067	♦MIC	135 - 31	MA45250C	MIC	151 - 5	MA45372	♦MIC	193 - 77	MA46563B	♦MIC	154 - 5

△-Registered with JEDEC by this manufacturer

♦-Mfr's data sheet available in microfilm service

1. TYPE No. CROSS INDEX

IN TYPE NUMBER SEQUENCE

TYPE No.	MFRS	Pg&Line	TYPE No.	MFRS	Pg&Line	TYPE No.	MFRS	Pg&Line	TYPE No.	MFRS	Pg&Line	TYPE No.	MFRS	Pg&Line
MA46563C	♦MIC	154 - 6	MA46623G	♦MIC	135 - 4	MA47404	♦MIC	220 - 52	MA49137	♦MIC	235 - 55	MC502B	MSC	221 - 14
MA46563D	♦MIC	154 - 7	MA46624D	♦MIC	156 - 91	MA47405	♦MIC	220 - 53	MA49138	♦MIC	235 - 56	MC503A	MSC	221 - 15
MA46563E	♦MIC	154 - 8	MA46624E	♦MIC	135 - 5	MA47406	♦MIC	220 - 54	MA49139	♦MIC	235 - 57	MC503B	MSC	221 - 16
MA46564B	♦MIC	157 -103	MA46624F	♦MIC	135 - 6	MA47407	♦MIC	220 - 55	MA49140-118	♦MIC	235 - 58	MC504A	MSC	221 - 17
MA46564C	♦MIC	157 -104	MA47000	♦MIC	219 - 52	MA47408	♦MIC	220 - 56	MA49145	MIC	235 - 59	MC504B	MSC	221 - 18
MA46564D	♦MIC	157 -105	MA47001	♦MIC	219 - 53	MA47409	MIC	220 - 57	MA49146	MIC	235 - 60	MC505A	MSC	221 - 19
MA46565B	♦MIC	162 - 86	MA47002	♦MIC	219 - 54	MA47410	♦MIC	220 - 58	MA49147	MIC	235 - 61	MC505B	MSC	221 - 20
MA46565C	♦MIC	162 - 87	MA47003	♦MIC	219 - 55	MA47411	MIC	220 - 59	MA49148	MIC	235 - 62	MC506A	MSC	221 - 21
MA46565D	♦MIC	162 - 88	MA47004	♦MIC	219 - 56	MA47412	MIC	220 - 60	MA49151	♦MIC	235 - 63	MC506B	MSC	221 - 22
MA46566A	♦MIC	165 - 95	MA47005	♦MIC	219 - 57	MA47413	MIC	220 - 61	MA49152	♦MIC	235 - 64	MC507A	MSC	221 - 23
MA46566B	♦MIC	165 - 96	MA47006	♦MIC	219 - 58	MA47414	♦MIC	220 - 62	MA49153	♦MIC	235 - 65	MC507B	MSC	221 - 24
MA46566C	♦MIC	165 - 97	MA47007	♦MIC	219 - 59	MA47416	♦MIC	220 - 63	MA49154	♦MIC	235 - 66	MC508A	MSC	221 - 25
MA46567A	♦MIC	171 - 48	MA47008	♦MIC	219 - 60	MA47418	♦MIC	220 - 64	MA49156	♦MIC	235 - 67	MC508B	MSC	221 - 26
MA46567B	♦MIC	171 - 49	MA47009	♦MIC	219 - 61	MA47419	♦MIC	220 - 65	MA49157	♦MIC	235 - 68	MC509A	MSC	221 - 27
MA46567C	♦MIC	171 - 50	MA47010	♦MIC	219 - 62	MA47420	♦MIC	220 - 66	MA49158	♦MIC	235 - 69	MC509B	MSC	221 - 28
MA46570C	♦MIC	137 - 27	MA47011	♦MIC	219 - 63	MA47421	♦MIC	220 - 67	MA49159	♦MIC	235 - 70	MC510A	MSC	221 - 29
MA46570D	♦MIC	137 - 28	MA47012	♦MIC	219 - 64	MA47422	♦MIC	220 - 68	MA49161	♦MIC	235 - 71	MC510B	MSC	221 - 30
MA46570E	♦MIC	137 - 29	MA47013	♦MIC	219 - 65	MA47423	♦MIC	220 - 69	MA49162	♦MIC	235 - 72	MC511A	MSC	221 - 31
MA46570F	♦MIC	137 - 30	MA47014	♦MIC	219 - 66	MA47424	♦MIC	220 - 70	MA49163	♦MIC	235 - 73	MC511B	MSC	221 - 32
MA46571C	♦MIC	143 - 26	MA47015	♦MIC	219 - 67	MA47425	♦MIC	220 - 71	MA49164	♦MIC	235 - 74	MC512A	MSC	221 - 33
MA46571D	♦MIC	143 - 27	MA47016	♦MIC	219 - 68	MA47426	♦MIC	220 - 72	MA49172-138	♦MIC	235 - 75	MC512B	MSC	221 - 34
MA46571E	♦MIC	143 - 28	MA47017	♦MIC	219 - 69	MA47427	♦MIC	220 - 73	MA49173-138	♦MIC	235 - 76	MC513A	MSC	221 - 35
MA46571F	♦MIC	143 - 29	MA47018	♦MIC	219 - 70	MA47600	♦MIC	220 - 74	MA49177-138	♦MIC	235 - 77	MC513B	MSC	221 - 36
MA46572C	♦MIC	149 - 58	MA47019	♦MIC	219 - 71	MA47865	MIC	220 - 75	MA49178-118	♦MIC	235 - 78	MC514A	MSC	221 - 37
MA46572D	♦MIC	149 - 59	MA47020	♦MIC	219 - 72	MA47867	MIC	220 - 76	MA49179-118	♦MIC	235 - 79	MC514B	MSC	221 - 38
MA46572E	♦MIC	149 - 60	MA47021	♦MIC	219 - 73	MA47868	MIC	220 - 77	MA49179-138	♦MIC	235 - 80	MC515A	MSC	221 - 39
MA46573B	♦MIC	154 - 9	MA47022	♦MIC	219 - 74	MA47869	MIC	220 - 78	MA49180-118	♦MIC	235 - 81	MC515B	MSC	221 - 40
MA46573C	♦MIC	154 - 10	MA47023	♦MIC	219 - 75	MA47870	MIC	220 - 79	MA49180-138	♦MIC	235 - 82	MC516A	MSC	221 - 41
MA46573D	♦MIC	154 - 11	MA47024	♦MIC	219 - 76	MA47876	MIC	220 - 80	MA49181-138	♦MIC	235 - 83	MC516B	MSC	221 - 42
MA46573E	♦MIC	154 - 12	MA47025	♦MIC	219 - 77	MA47878	MIC	220 - 81	MA49182-138	♦MIC	235 - 84	MC517A	MSC	221 - 43
MA46574B	♦MIC	157 -106	MA47026	♦MIC	219 - 78	MA47879	MIC	220 - 82	MA49183	MIC	235 - 85	MC517B	MSC	221 - 44
MA46574C	♦MIC	157 -107	MA47027	♦MIC	219 - 79	MA47880	MIC	220 - 83	MA49184	MIC	235 - 86	MC518A	MSC	221 - 45
MA46574D	♦MIC	157 -108	MA47028	♦MIC	219 - 80	MA47881	MIC	220 - 84	MA49185	MIC	235 - 87	MC518B	MSC	221 - 46
MA46575B	♦MIC	162 - 89	MA47029	♦MIC	219 - 81	MA47883	MIC	220 - 85	MA49186	MIC	235 - 88	MC519A	MSC	221 - 47
MA46575C	♦MIC	162 - 90	MA47030	♦MIC	219 - 82	MA47890-131	MIC	220 - 86	MA49187	MIC	235 - 89	MC519B	MSC	221 - 48
MA46575D	♦MIC	162 - 91	MA47031	♦MIC	219 - 83	MA47890-150	MIC	220 - 87	MA49188	MIC	235 - 90	MC567	THC	77 -105
MA46576A	♦MIC	165 - 98	MA47032	♦MIC	219 - 84	MA47891-109	MIC	220 - 88	MA49189	MIC	235 - 91	MC600	♦EAS	148 - 12
MA46576B	♦MIC	165 - 99	MA47033	♦MIC	219 - 85	MA47891-131	MIC	220 - 89	MA49190	MIC	235 - 92	MC601	♦EAS	151 - 14
MA46576C	♦MIC	165 -100	MA47034	♦MIC	219 - 86	MA47891-150	MIC	220 - 90	MA49191	MIC	235 - 93	MC602	♦EAS	155 - 64
MA46577A	♦MIC	171 - 51	MA47035	♦MIC	219 - 87	MA47892-109	MIC	220 - 91	MA49191-138	♦MIC	235 - 94	MC603	♦EAS	159 - 80
MA46577B	♦MIC	171 - 52	MA47036	♦MIC	219 - 88	MA47892-131	MIC	220 - 92	MA49192	MIC	235 - 95	MC605	♦EAS	164 - 52
MA46577C	♦MIC	171 - 53	MA47037	♦MIC	219 - 89	MA47892-150	MIC	220 - 93	MA49192-138	♦MIC	235 - 96	MC607	♦EAS	168 - 96
MA46600D	♦MIC	144 - 76	MA47038	♦MIC	219 - 90	MA47893-30	MIC	220 - 94	MA49193	MIC	235 - 97	MC610	♦EAS	173 - 46
MA46600E	♦MIC	144 - 77	MA47039	♦MIC	219 - 91	MA47893-109	MIC	220 - 95	MA49193-138	♦MIC	235 - 98	MC615	♦EAS	179 - 21
MA46600F	♦MIC	144 - 78	MA47040	♦MIC	219 - 92	MA47893-131	MIC	220 - 96	MA49195	MIC	235 - 99	MC622	♦EAS	184 - 99
MA46600G	♦MIC	144 - 79	MA47041	♦MIC	219 - 93	MA47894-30	MIC	220 - 97	MA49260	MIC	235 -100	MC720	♦EAS	168 - 24
MA46600H	♦MIC	144 - 80	MA47042	♦MIC	219 - 94	MA47894-109	MIC	220 - 98	MA49265	MIC	235 -101	MC722	♦EAS	171 - 12
MA46600J	♦MIC	144 - 81	MA47043	♦MIC	219 - 95	MA47894-131	MIC	220 - 99	MA49508	♦MIC	235 -102	MC724	♦EAS	173 - 47
MA46601D	♦MIC	148 - 66	MA47044	♦MIC	219 - 96	MA47895-30	MIC	220 -100	MA49618	MIC	235 -103	MC726	♦EAS	176 - 83
MA46601E	♦MIC	148 - 67	MA47045	♦MIC	219 - 97	MA47895-54	MIC	220 -101	MA49628	MIC	235 -104	MC728	♦EAS	179 - 22
MA46601F	♦MIC	148 - 68	MA47046	♦MIC	219 - 98	MA47895-109	MIC	220 -102	MA49837-138	♦MIC	235 -105	MC730	♦EAS	182 - 26
MA46601G	♦MIC	148 - 69	MA47047	♦MIC	219 - 99	MA47895-131	MIC	220 -103	MA49838-138	♦MIC	235 -106	MC732	♦EAS	183 - 13
MA46601H	♦MIC	134 - 84	MA47051	♦MIC	219 -100	MA47896-30	MIC	220 -104	MAG15	♦MOVB	85 - 2	MC1055A	♦THC	86 - 75
MA46601J	♦MIC	134 - 85	MA47052	♦MIC	219 -101	MA47896-54	MIC	220 -105	MAG17	♦MOVB	85 - 29	MC1055B	♦THC	80 - 36
MA46602D	♦MIC	152 - 51	MA47053	♦MIC	219 -102	MA47896-131	MIC	220 -106	MAG19	♦MOVB	85 - 86	MC1055C	♦THC	80 - 37
MA46602E	♦MIC	152 - 52	MA47054	♦MIC	219 -103	MA47897-30	MIC	220 -107	MAG20	♦MOVB	85 - 31	MC1055D	♦THC	80 - 38
MA46602F	♦MIC	152 - 53	MA47057	♦MIC	219 -104	MA47897-54	MIC	220 -108	MAG21A	MOVB	85 - 6	MC1055E	♦THC	80 - 39
MA46602G	♦MIC	134 - 86	MA47066	♦MIC	219 -105	MA47897-131	MIC	220 -109	MAG21B	MOVB	85 - 13	MC1055F	♦THC	80 - 40
MA46602H	♦MIC	134 - 87	MA47067	♦MIC	219 -106	MA47898-30	MIC	220 -110	MAG21C	MOVB	85 - 20	MC1055G	♦THC	80 - 41
MA46602J	♦MIC	134 - 88	MA47068	♦MIC	219 -107	MA47898-54	MIC	221 - 1	MAG23A	♦MOVB	85 - 15	MC1055H	♦THC	80 - 42
MA46603D	♦MIC	154 - 72	MA47069	♦MIC	219 -108	MA47898-131	MIC	221 - 2	MAG23B	♦MOVB	85 - 23	MC1055I	THC	80 - 43
MA46603E	♦MIC	154 - 73	MA47071	♦MIC	219 -109	MA47899-30	MIC	221 - 3	MAG23C	♦MOVB	85 - 26	MC1055J	THC	80 - 44
MA46603F	♦MIC	134 - 89	MA47075	♦MIC	219 -110	MA47899-54	MIC	221 - 4	MAG23D	♦MOVB	85 - 27	MC1055K	THC	80 - 45
MA46603G	♦MIC	134 - 90	MA47076	MIC	220 - 1	MA47899-131	MIC	221 - 5	MAG24	♦MOVB	85 - 33	MC1055L	THC	80 - 46
MA46603H	♦MIC	134 - 91	MA47077	♦MIC	220 - 2	MA48182-138	MIC	235 - 39	MAG25	MOVB	85 - 34	MC1055M	THC	80 - 47
MA46604D	♦MIC	156 - 89	MA47078	MIC	220 - 3	MA48501A,B-F	MIC	136 - 14	MAG25T	MOVB	85 - 32	MC1055N	THC	80 - 48
MA46604E	♦MIC	134 - 92	MA47079	♦MIC	220 - 4	MA48501G,H-K	MIC	136 - 15	MAH6552D	MIC	149 - 61	MC1055O	THC	86 - 76
MA46604F	♦MIC	134 - 93	MA47080	♦MIC	220 - 5	MA48502A,B-F	MIC	136 - 55	MAH6552E	MIC	149 - 62	MC1354	♦MSC	221 - 49
MA46604G	♦MIC	134 - 94	MA47081	♦MIC	220 - 6	MA48502G,H-K	MIC	136 - 56	MAH6553B	MIC	154 - 13	MC1444	♦MSC	221 - 50
MA46610D	♦MIC	144 - 82	MA47082	♦MIC	220 - 7	MA48503A,B-F	MIC	138 - 17	MAH6553C	MIC	154 - 14	MC1462	♦MSC	221 - 51
MA46610E	♦MIC	144 - 83	MA47083	♦MIC	220 - 8	MA48503G,H,I	MIC	138 - 18	MAH6553D	MIC	154 - 15	MC1465	♦MSC	221 - 52
MA46610F	♦MIC	144 - 84	MA47084	♦MIC	220 - 9	MA48504A,B-F	MIC	138 - 83	MAH6553E	MIC	154 - 16	MCC12	OWE	109 - 58
MA46610G	♦MIC	144 - 85	MA47085	♦MIC	220 - 10	MA48504G,H	MIC	138 - 84	MAH6554B	MIC	157 -109	MCC15	OWE	109 - 54
MA46610H	♦MIC	144 - 86	MA47086	♦MIC	220 - 11	MA48505A,B-F	MIC	139 - 29	MAH6554C	MIC	157 -110	MCC16	OWE	107 - 88
MA46610J	♦MIC	134 - 95	MA47088	♦MIC	220 - 12	MA48505G	MIC	139 - 30	MAH6554D	MIC	158 - 1	MCC17	OWE	107 - 78
MA46611D	♦MIC	148 - 70	MA47089	♦MIC	220 - 13	MA48506A,B-F	MIC	140 - 9	MAH6555B	MIC	162 - 92	MCC19	OWE	107 - 98
MA46611E	♦MIC	148 - 71	MA47090	♦MIC	220 - 14	MA48507A,B-F	MIC	140 - 86	MAH6555C	MIC	162 - 93	MCC20	OWE	107 - 89
MA46611F	♦MIC	148 - 72	MA47091	MIC	220 - 15	MA48508A,B-E	MIC	141 - 85	MAH6555D	MIC	162 - 94	MCC21	OWE	107 - 76
MA46611G	♦MIC	148 - 73	MA47100	♦MIC	220 - 16	MA48509A,B-E	MIC	142 - 28	MC0	♦EAS	148 - 8	MCF1145	THC	82 - 85
MA46611H	♦MIC	134 - 96	MA47101	♦MIC	220 - 17	MA48510A,B-E	MIC	142 -105	MC1	♦EAS	151 - 10	MCF1165	THC	86 - 61
MA46611J	♦MIC	134 - 97	MA47110	♦MIC	220 - 18	MA48511A,B-E	MIC	143 - 44	MC2	♦EAS	155 - 60	MCF1166	THC	86 - 62
MA46612D	♦MIC	152 - 54	MA47111	♦MIC	220 - 19	MA48701A,B-F	MIC	136 - 16	MC3	♦EAS	159 - 76	MCF1327	THC	78 - 98
MA46612E	♦MIC	152 - 55	MA47120	♦MIC	220 - 20	MA48701G,H-K	MIC	136 - 17	MC5	♦EAS	164 - 48	MCF1329	THC	77 - 79
MA46612F	♦MIC	152 - 56	MA47121	♦MIC	220 - 21	MA48702A,B-F	MIC	136 - 57	MC7	♦EAS	168 - 94	MCF1330	THC	77 - 87
MA46612G	♦MIC	134 - 98	MA47122	♦MIC	220 - 22	MA48702G,H-K	MIC	136 - 58	MC10	♦EAS	173 - 44	MCF1331	THC	78 - 15
MA46612H	♦MIC	134 - 99	MA47123	♦MIC	220 - 23	MA48703A,B-F	MIC	138 - 19	MC15	♦EAS	179 - 19	MCF1492	THC	77 -107
MA46613D	♦MIC	154 - 74	MA47131	♦MIC	220 - 24	MA48703G,H-K	MIC	138 - 20	MC22	♦EAS	184 - 97	MCF1493	THC	78 - 29
MA46613E	♦MIC	154 - 75	MA47132	♦MIC	220 - 25	MA48703G,H,I	♦MIC	135 - 7	MC103A	MITJ	221 - 6	MCF1510	THC	84 - 4
MA46613F	♦MIC	134 -100	MA47133	♦MIC	220 - 26	MA48704A,B-F	MIC	138 - 85	MC200	EAS	148 - 9	MCT11	OWE	107 -105
MA46613G	♦MIC	134 -101	MA47134	♦MIC	220 - 27	MA48704G,H	♦MIC	135 - 8	MC201	EAS	151 - 11	MCT12	OWE	106 - 33
MA46614D	♦MIC	156 - 90	MA47135	♦MIC	220 - 28	MA48705A,B-F	MIC	139 - 31	MC202	EAS	155 - 61	MCT15	OWE	107 - 70
MA46614E	♦MIC	134 -102	MA47160	♦MIC	220 - 29	MA48705G	♦MIC	135 - 9	MC203	EAS	159 - 77	MCT18	OWE	106 - 19
MA46614F	♦MIC	134 -103	MA47161	♦MIC	220 - 30	MA48705G,H,I	MIC	139 - 32	MC205	EAS	164 - 49	MCT19	OWE	107 - 80
MA46620D	♦MIC	144 - 87	MA47162	♦MIC	220 - 31	MA48706A,B-F	MIC	140 - 10	MC300	EAS	148 - 10	MCT20	OWE	109 - 43
MA46620E	♦MIC	144 - 88	MA47200	♦MIC	220 - 32	MA48707A,B-F	MIC	140 - 87	MC301	MITJ	221 - 7	MCT21	OWE	107 -103
MA46620F	♦MIC	144 - 89	MA47201	♦MIC	220 - 33	MA48708A,B-E	MIC	141 - 86	MC301☑	EAS	151 - 12	MCT24	OWE	107 - 57
MA46620G	♦MIC	144 - 90	MA47202	♦MIC	220 - 34	MA48709A,B-E	MIC	142 - 29	MC302	EAS	155 - 62	MCT27	OWE	107 - 90
MA46620H	♦MIC	134 -104	MA47203	♦MIC	220 - 35	MA48710A,B-E	MIC	142 -106	MC302#	MITJ	221 - 8	MCT28	OWE	107 - 81
MA46620J	♦MIC	134 -105	MA47204	♦MIC	220 - 36	MA48711A,B-E	MIC	143 - 45	MC303	EAS	159 - 78	MCT29	OWE	107 - 65
MA46620K	♦MIC	134 -106	MA47205	♦MIC	220 - 37	MA49104	♦MIC	235 - 40	MC305	EAS	164 - 50	MCT36	OWE	107 - 56
MA46621D	♦MIC	148 - 74	MA47206	♦MIC	220 - 38	MA49106	♦MIC	235 - 41	MC400	♦EAS	148 - 11	MCT37	OWE	107 - 74
MA46621E	♦MIC	148 - 75	MA47207	♦MIC	220 - 39	MA49107	♦MIC	235 - 42	MC401	♦EAS	151 - 13	MCT38	OWE	109 - 62
MA46621F	♦MIC	148 - 76	MA47208	♦MIC	220 - 40	MA49109	♦MIC	235 - 43	MC402	♦EAS	155 - 63	MCT40	OWE	107 - 99
MA46621G	♦MIC	134 -107	MA47220	♦MIC	220 - 41	MA49110	♦MIC	235 - 44	MC403	♦EAS	159 - 79	MCT41	OWE	109 - 46
MA46621H	♦MIC	134 -108	MA47221	♦MIC	220 - 42	MA49117-118	♦MIC	235 - 45	MC405	♦EAS	164 - 51	MCT43	OWE	107 -108
MA46621J	♦MIC	134 -109	MA47222	♦MIC	220 - 43	MA49121	♦MIC	235 - 46	MC407	♦EAS	168 - 95	MCT44	OWE	109 - 44
MA46622D	♦MIC	152 - 57	MA47223	♦MIC	220 - 44	MA49122	♦MIC	235 - 47	MC410	♦EAS	173 - 45	MCT45	OWE	107 - 61
MA46622E	♦MIC	152 - 58	MA47266	♦MIC	220 - 45	MA49123	♦MIC	235 - 48	MC415	♦EAS	179 - 20	MCT46	OWE	107 -104
MA46622F	♦MIC	134 -110	MA47301	♦MIC	220 - 46	MA49124	♦MIC	235 - 49	MC422	♦EAS	184 - 98	MCV1055E	THC	79 - 75
MA46622G	♦MIC	135 - 1	MA47302	♦MIC	220 - 47	MA49126-118	♦MIC	235 - 50	MC500A	MSC	221 - 9	MCV1055F	THC	80 - 19
MA46622H	♦MIC	135 - 2	MA47400	♦MIC	220 - 48	MA49126-138	♦MIC	235 - 51	MC500B	MSC	221 - 10	MCV1055G	THC	80 - 56
MA46623D	♦MIC	154 - 76	MA47401	♦MIC	220 - 49	MA49128-138	♦MIC	235 - 52	MC501A	MSC	221 - 11	MCV1125	THC	82 -106
MA46623E	♦MIC	154 - 77	MA47402	♦MIC	220 - 50	MA49135	♦MIC	235 - 53	MC501B	MSC	221 - 12	MCV1170	THC	88 - 40
MA46623F	♦MIC	135 - 3	MA47403	♦MIC	220 - 51	MA49136	♦MIC	235 - 54	MC502A	MSC	221 - 13	MCV1300	THC	87 - 49

△-Registered with JEDEC by this manufacturer

♦-Mfr's data sheet available in microfilm service

1. TYPE No. CROSS INDEX

IN TYPE NUMBER SEQUENCE

TYPE No.	MFRS	Pg&Line
MCV1352	THC	77 -104
MCV1353	THC	78 - 26
MCV1420	♦THC	87 - 13
MCV1421	THC	81 - 9
MD20	♦TII	240 - 10
MD90	♦TII	221 - 53
MD100	♦TII	221 - 54
MD101	♦TII	221 - 55
MD189	♦TII	119 - 69
MD189F	TII	119 - 70
MD190	♦TII	119 - 71
MD190F	TII	119 - 72
MD191	♦TII	119 - 73
MD191F	TII	119 - 74
MD219	♦TII	125 -100
MD219F	♦TII	125 -101
MD220	♦TII	125 -102
MD220F	♦TII	125 -103
MD221	♦TII	125 -104
MD221F	♦TII	125 -105
MD630	♦TII	239 - 98
MD631	♦TII	239 - 99
MD632	♦TII	239 -100
MD633	♦TII	239 -101
MD634	♦TII	239 -102
MD635	♦TII	239 -103
MD636	♦TII	239 -104
MD700	♦TII	154 - 53
MD700Y	♦TII	154 - 54
MD701	♦TII	151 - 26
MD701Y	♦TII	151 - 27
MD702	♦TII	146 - 51
MD702Y	♦TII	146 - 52
MD703	♦TII	140 - 94
MD703Y	♦TII	140 - 95
MD704	♦TII	138 - 59
MD704Y	♦TII	138 - 60
MD705	♦TII	154 - 55
MD705Y	♦TII	154 - 56
MD706	♦TII	151 - 28
MD706Y	♦TII	151 - 29
MD707	♦TII	146 - 53
MD707Y	♦TII	146 - 54
MD708	♦TII	140 - 96
MD708Y	♦TII	140 - 97
MD709	♦TII	138 - 61
MD709Y	♦TII	138 - 62
MD710	♦TII	158 - 91
MD710Y	♦TII	158 - 92
MD711	♦TII	154 - 57
MD711Y	♦TII	154 - 58
MD712	♦TII	151 - 30
MD712Y	♦TII	151 - 31
MD713	♦TII	146 - 55
MD713Y	♦TII	146 - 56
MD714	♦TII	140 - 98
MD714Y	♦TII	140 - 99
MD715	♦TII	138 - 63
MD715Y	♦TII	138 - 64
MD4957	♦MOTA	308 - 20
MDX580C	♦TII	135 - 36
MDX580D	♦TII	135 - 37
MDX580M	♦TII	135 - 38
MDX580N	♦TII	135 - 39
MDX581C	♦TII	135 - 40
MDX581D	♦TII	135 - 41
MDX581M	♦TII	135 - 42
MDX581N	♦TII	135 - 43
MDX582C	♦TII	135 - 44
MDX582D	♦TII	135 - 45
MDX582M	♦TII	135 - 46
MDX582N	♦TII	135 - 47
MDX583C	♦TII	135 - 48
MDX583D	♦TII	135 - 49
MDX583M	♦TII	135 - 50
MDX583N	♦TII	135 - 51
MDX584C	♦TII	135 - 52
MDX584D	♦TII	135 - 53
MDX584M	♦TII	135 - 54
MDX584N	♦TII	135 - 55
MDX585C	♦TII	136 - 69
MDX585D	♦TII	136 - 70
MDX585M	♦TII	136 - 71
MDX585N	♦TII	136 - 72
MDX586C	♦TII	136 - 73
MDX586D	♦TII	136 - 74
MDX586M	♦TII	136 - 75
MDX586N	♦TII	136 - 76
MDX587C	♦TII	136 - 77
MDX587D	♦TII	136 - 78
MDX587M	♦TII	136 - 79
MDX587N	♦TII	136 - 80
MDX588C	♦TII	136 - 81
MDX588D	♦TII	136 - 82
MDX588M	♦TII	136 - 83
MDX588N	♦TII	136 - 84
MDX589C	♦TII	140 - 44
MDX589D	♦TII	140 - 45
MDX589M	♦TII	140 - 46
MDX589N	♦TII	140 - 47
MDX590C	♦TII	140 - 48
MDX590D	♦TII	140 - 49
MDX590M	♦TII	140 - 50
MDX590N	♦TII	140 - 51
MDX591C	♦TII	140 - 52
MDX591D	♦TII	140 - 53
MDX591M	♦TII	140 - 54
MDX591N	♦TII	140 - 55
MDX592C	♦TII	140 - 56
MDX592D	♦TII	140 - 57
MDX592M	♦TII	140 - 58
MDX592N	♦TII	140 - 59
MDX593C	♦TII	140 - 60
MDX593D	♦TII	140 - 61
MDX593M	♦TII	140 - 62
MDX593N	♦TII	140 - 63
MDX594C	♦TII	145 - 61
MDX594D	♦TII	145 - 62
MDX594M	♦TII	145 - 63
MDX594N	♦TII	145 - 64
MDX595C	♦TII	145 - 65
MDX595D	♦TII	145 - 66
MDX595M	♦TII	145 - 67
MDX595N	♦TII	145 - 68
MDX596C	♦TII	145 - 69
MDX596D	♦TII	145 - 70
MDX596M	♦TII	145 - 71
MDX596N	♦TII	145 - 72
MDX597C	♦TII	145 - 73
MDX597D	♦TII	145 - 74
MDX597M	♦TII	145 - 75
MDX597N	♦TII	145 - 76
MDX598C	♦TII	145 - 77
MDX598D	♦TII	145 - 78
MDX598M	♦TII	145 - 79
MDX598N	♦TII	145 - 80
MDX599C	♦TII	145 - 81
MDX599D	♦TII	145 - 82
MDX599M	♦TII	145 - 83
MDX599N	♦TII	145 - 84
MDX623	♦TII	127 - 72
MDX624	♦TII	127 - 73
MDX625	♦TII	127 - 74
MDX640	♦TII	146 -110
MDX641	♦TII	147 - 1
MDX642	♦TII	147 - 2
MDX643	♦TII	147 - 3
MDX644	♦TII	147 - 4
MDX645	♦TII	147 - 5
MDX646	♦TII	147 - 6
MDX647	♦TII	147 - 7
MDX653	TII	126 - 52
MDX654	TII	126 - 53
MDX655	TII	126 - 54
ME3001	WAB	306 - 37
ME3002	WAB	307 - 67
ME3011	WAB	306 - 38
MG60T1	♦LMTF	85 - 12
MG91T2	LMTF	85 - 7
MG5201	♦EEVB	78 - 12
MG5202	♦EEVB	86 - 97
MG5204	♦EEVB	86 -104
MG5206	♦EEVB	86 -107
MG5213	♦EEVB	83 - 26
MG5216	♦EEVB	78 - 9
MG5218	♦EEVB	84 - 57
MG5222	♦EEVB	83 - 92
MG5223	♦EEVB	80 - 14
MG5230	♦EEVB	82 - 61
MG5231	♦EEVB	84 -102
MG5232	♦EEVB	84 - 32
MG5233	♦EEVB	84 - 37
MG5234	♦EEVB	84 - 87
MG5236	♦EEVB	79 - 33
MG5237	♦EEVB	79 -109
MG5238A	♦EEVB	84 - 80
MG5238B	♦EEVB	84 - 81
MG5239#ai	♦EEVB	83 - 93
MG5240	♦EEVB	80 - 16
MG5241	♦EEVB	84 - 45
MG5242	♦EEVB	84 - 58
MG5243	♦EEVB	84 - 82
MG5244	♦EEVB	83 - 70
MG5245	♦EEVB	83 - 71
MG5248	♦EEVB	84 - 26
MG5249	♦EEVB	79 - 83
MG5251	♦EEVB	84 - 27
MG5252	♦EEVB	80 - 10
MG5253	♦EEVB	83 - 67
MG5254	♦EEVB	83 - 69
MG5255	♦EEVB	84 - 33
MG5256	♦EEVB	83 - 72
MG5257	♦EEVB	84 - 46
MG5258	♦EEVB	84 - 47
MG5259	♦EEVB	83 - 52
MG5260	♦EEVB	79 - 87
MG5261	♦EEVB	88 - 87
MG5262	♦EEVB	79 - 91
MG5263	♦EEVB	77 - 90
MG5264	♦EEVB	84 - 59
MG5265	♦EEVB	84 - 98
MG5267	♦EEVB	80 - 17
MG5271	♦EEVB	84 - 8
MG5272	♦EEVB	85 - 88
MG5273	♦EEVB	84 - 34
MG5274	♦EEVB	82 - 66
MG5280	♦EEVB	86 - 20
MG5282	♦EEVB	79 - 34
MG5283	♦EEVB	78 - 11
MG5284	♦EEVB	79 -103
MG5286	♦EEVB	82 - 95
MG5289	♦EEVB	80 - 12
MG5294	♦EEVB	86 - 42
MG5295	♦EEVB	86 - 40
MG5298	♦EEVB	79 - 55
MG5301	♦EEVB	86 - 23
MG5302	♦EEVB	86 - 24
MG5303	♦EEVB	86 - 25
MG5304	♦EEVB	86 - 26
MGF1100	♦MITJ	316 - 8
MGF1200	♦MITJ	322 - 31
MGF1202	♦MITJ	322 - 35
MGF1400	♦MITJ	322 - 34
MGF1402	♦MITJ	322 - 40
MGF1403	♦MITJ	322 - 48
MGF1404-11-07	♦MITJ	300 - 32
MGF1404-61-16	♦MITJ	300 - 33
MGF1404-61-17	♦MITJ	300 - 34
MGF1412	♦MITJ	322 - 41
MGF1801	♦MITJ	322 - 33
MGF1802	♦MITJ	301 - 20
MGF2116	♦MITJ	322 - 26
MGF2117	♦MITJ	301 - 28
MGF2124	♦MITJ	322 - 23
MGF2124F#ai	♦MITJ	322 - 21
MGF2124G#ai	♦MITJ	322 - 22
MGF2148	♦MITJ	322 - 17
MGF2148F#ai	♦MITJ	322 - 15
MGF2148G#ai	♦MITJ	322 - 16
MGF2172	♦MITJ	322 - 13
MGF2205	♦MITJ	301 - 58
MGF2260	♦MITJ	302 - 8
MGF-C34M	♦MITJ	300 - 14
MGF-C34MA	♦MITJ	301 - 57
MGF-C37MA	♦MITJ	302 - 9
MGF-X34M#ai	♦MITJ	301 - 59
MGFC1402	♦MITJ	322 - 42
MGFC1403	♦MITJ	322 - 49
MGFC1412	♦MITJ	322 - 43
MGFC1801	♦MITJ	322 - 30
MHW2172	♦MOTA	254 - 73
MI12	USSR	80 - 20
MI13	USSR	79 - 97
MI14	USSR	79 - 71
MI15	USSR	79 - 58
MI16	USSR	79 - 44
MI22	USSR	78 -107
MI23	USSR	79 - 3
MI24	USSR	79 - 46
MI25	USSR	79 - 80
MI26	USSR	80 - 5
MI51	USSR	84 -101
MI52	USSR	84 - 67
MI53	USSR	83 - 24
MI54	USSR	82 -108
MI89	USSR	80 - 50
MI90	USSR	80 - 62
MI95	USSR	82 - 74
MI105	MITJ	221 - 56
MI120	USSR	79 - 14
MI137	USSR	78 - 50
MI158-1	USSR	83 - 29
MI202	USSR	79 - 15
MI204	MITJ	221 - 57
MI206	MITJ	221 - 58
MI268	USSR	83 - 30
MI301	MITJ	221 - 59
MI303	♦MITJ	221 - 60
MI308	MITJ	221 - 61
MI402	MITJ	221 - 62
MI407	MITJ	221 - 63
MI501M	USSR	84 - 68
MI505	USSR	84 - 9
MI507	USSR	84 - 69
MI508	USSR	86 - 31
MI509A	USSR	84 -100
MI509B	USSR	84 - 70
MI509D	USSR	82 - 75
MI509E	USSR	82 - 62
MI509G	USSR	82 -109
MI509V	USSR	83 - 25
MI521A2	USSR	84 -103
MI521B2	USSR	84 - 71
MI521D2	USSR	82 - 76
MI521G2	USSR	83 - 4
MI521V2	USSR	83 - 27
MI522	USSR	81 -106
MI588M	USSR	86 - 32
MI589A	USSR	84 -104
MI589B	USSR	84 - 72
MI589V	USSR	83 - 28
MK0912B15Y	PHIN	309 - 88
	♦RTCF	
MK312040WD	PHIN	309 - 1
MKB12040W	PHIN	308 - 76
MKB12040WD	♦PHIN	309 - 2
	♦RTCF	
MKB12040WS	PHIN	309 - 3
	♦RTCF	
MKB12100W	PHIN	308 - 82
MKB12100WS	PHIN	309 - 5
	♦RTCF	
MKB12140W	PHIN	309 - 6
MKK12	OWE	70 - 19
MKK16	OWE	70 - 22
MKK22	OWE	70 - 21
MKK25	OWE	70 - 47
MKK26	OWE	70 - 54
MKK26A	OWE	70 - 56
MKK29	OWE	70 - 34
MKK37	OWE	70 - 20
MKT25	OWE	109 - 11
MKT27	OWE	109 - 8
MKT32	OWE	109 - 12
MKT33	OWE	109 - 98
MKT34	OWE	108 -107
MKT35	OWE	108 -108
MKT36	OWE	109 -104
MKT37	OWE	109 - 13
MKT42	OWE	109 - 18
ML4202	MICB	221 - 64
ML4204	MICB	221 - 65
ML4206	MICB	221 - 66
ML4310	MICB	141 - 71
ML4311	MICB	143 - 76
ML4312	MICB	146 - 93
ML4313	MICB	149 - 63
ML4314	MICB	153 - 46
ML4315	MICB	155 - 65
ML4316	MICB	157 - 61
ML4317	MICB	159 - 81
ML4318	MICB	161 - 77
ML4319	MICB	163 -104
ML4331	MICB	143 - 77
ML4332	MICB	146 - 94
ML4333	MICB	149 - 64
ML4334	MICB	153 - 47
ML4335	MICB	155 - 66
ML4336	MICB	157 - 62
ML4337	MICB	159 - 82
ML4338	MICB	161 - 78
ML4339	MICB	163 -105
ML4340	MICB	165 - 64
ML4341	MICB	168 - 25
ML4342	MICB	171 - 13
ML4343	MICB	173 - 48
ML4351	MICB	143 - 78
ML4352	MICB	146 - 95
ML4353	MICB	149 - 65
ML4354	MICB	153 - 48
ML4355	MICB	155 - 67
ML4356	MICB	157 - 63
ML4357	MICB	159 - 83
ML4358	MICB	161 - 79
ML4359	MICB	163 -106
ML4360	MICB	165 - 65
ML4361	MICB	168 - 26
ML4362	MICB	171 - 14
ML4363	MICB	173 - 49
ML4364	MICB	176 - 84
ML4365	MICB	179 - 23
ML4372	MICB	146 - 96
ML4373	MICB	149 - 66
ML4374	MICB	153 - 49
ML4375	MICB	155 - 68
ML4376	MICB	157 - 64
ML4377	MICB	159 - 84
ML4378	MICB	161 - 80
ML4379	MICB	163 -107
ML4380	MICB	165 - 66
ML4381	MICB	168 - 27
ML4382	MICB	171 - 15
ML4383	MICB	173 - 50
ML4384	MICB	176 - 85
ML4385	MICB	179 - 24
ML4404	♦MICB	136 - 41
ML4405	♦MICB	140 - 3
ML4406	♦MICB	143 - 87
ML4407	♦MICB	148 - 31
ML4408	♦MICB	154 - 21
ML4409	♦MICB	160 - 73
ML4602	MICB	221 - 67
ML4603	MICB	221 - 68
ML4604	MICB	221 - 69
ML4605	MICB	221 - 70
ML4610	♦MICB	221 - 71
ML4611	♦MICB	221 - 72
ML4612	♦MICB	221 - 73
ML4613	♦MICB	221 - 74
ML4614	♦MICB	221 - 75
ML4615	♦MICB	221 - 76
ML4616	♦MICB	221 - 77
ML4617	♦MICB	221 - 78
ML4618	♦MICB	221 - 79
ML4619	♦MICB	221 - 80
ML4620	♦MICB	221 - 81
ML4621	♦MICB	221 - 82
ML4622	♦MICB	221 - 83
ML4623	♦MICB	221 - 84
ML4624	♦MICB	221 - 85
ML4625	♦MICB	221 - 86
ML4626	♦MICB	221 - 87
ML4627	♦MICB	221 - 88
ML4628	♦MICB	221 - 89
ML4629	♦MICB	221 - 90
ML4630	♦MICB	221 - 91
ML4631	♦MICB	221 - 92
ML4640	♦MICB	221 - 93
ML4641	♦MICB	221 - 94
ML4642	♦MICB	221 - 95
ML4643	♦MICB	221 - 96
ML4644	♦MICB	221 - 97
ML4645	♦MICB	221 - 98
ML4646	♦MICB	221 - 99
ML4647	♦MICB	221 -100
ML4648	♦MICB	221 -101
ML4649	♦MICB	221 -102
ML4650	♦MICB	221 -103
ML4651	♦MICB	221 -104
ML4652	♦MICB	221 -105
ML4653	♦MICB	221 -106
ML4654	♦MICB	221 -107
ML4655	♦MICB	221 -108
ML4660-114	♦MICB	221 -109
ML4660-115	♦MICB	221 -110
ML4660-144	♦MICB	222 - 1
ML4661-114	♦MICB	222 - 2
ML4661-115	♦MICB	222 - 3
ML4661-144	♦MICB	222 - 4
ML4662-114	♦MICB	222 - 5
ML4662-115	♦MICB	222 - 6
ML4662-144	♦MICB	222 - 7
ML4663-114	♦MICB	222 - 8
ML4663-115	♦MICB	222 - 9
ML4663-144	♦MICB	222 - 10
ML4664-114	♦MICB	222 - 11
ML4664-115	♦MICB	222 - 12
ML4664-144	♦MICB	222 - 13
ML4665-114	♦MICB	222 - 14
ML4665-115	♦MICB	222 - 15
ML4665-144	♦MICB	222 - 16
ML4666-114	♦MICB	222 - 17
ML4666-115	♦MICB	222 - 18
ML4666-144	♦MICB	222 - 19
ML4667-114	♦MICB	222 - 20
ML4667-115	♦MICB	222 - 21
ML4667-144	♦MICB	222 - 22
ML4668-114	♦MICB	222 - 23
ML4668-115	♦MICB	222 - 24
ML4668-144	♦MICB	222 - 25
ML4669-114	♦MICB	222 - 26
ML4669-115	♦MICB	222 - 27
ML4669-144	♦MICB	222 - 28
ML4670-114	♦MICB	222 - 29
ML4670-115	♦MICB	222 - 30
ML4670-144	♦MICB	222 - 31
ML4671-114	♦MICB	222 - 32
ML4671-115	♦MICB	222 - 33
ML4671-144	♦MICB	222 - 34
ML4672-114	♦MICB	222 - 35
ML4672-115	♦MICB	222 - 36
ML4672-144	♦MICB	222 - 37
ML4673-114	♦MICB	222 - 38
ML4673-115	♦MICB	222 - 39
ML4673-144	♦MICB	222 - 40
ML4674-114	♦MICB	222 - 41
ML4674-115	♦MICB	222 - 42
ML4674-144	♦MICB	222 - 43
ML4703	MIC	235 -107
	MICB	
ML4703S	♦MICB	235 -108
ML4704	MIC	235 -109
	♦MICB	
ML4704S	♦MICB	235 -110
ML4705	MIC	236 - 1
	♦MICB	
ML4705S	MICB	236 - 2
ML4706	MIC	236 - 3
	MICB	
ML4707	MIC	236 - 4
	MICB	
ML4708	♦MICB	236 - 5
ML4709	♦MICB	236 - 6
ML4750	♦MICB	236 - 7
ML4803	MIC	236 - 8
	♦MICB	
ML4804	MIC	236 - 9
	♦MICB	
ML4805	MIC	236 - 10
	♦MICB	
ML5620C	MICB	222 - 44
ML5620CJ	MICB	222 - 45
ML5620J	MICB	222 - 46
ML5620PL	MICB	222 - 47
ML5620PS	MICB	222 - 48
ML5620S	MICB	222 - 49
ML5620X	MICB	222 - 50
ML5621C	MICB	222 - 51
ML5621CJ	MICB	222 - 52
ML5621J	MICB	222 - 53
ML5621PL	MICB	222 - 54
ML5621PS	MICB	222 - 55
ML5621S	MICB	222 - 56
ML5621X	MICB	222 - 57
ML5624C	MICB	222 - 58
ML5624J	MICB	222 - 59
ML5624PL	MICB	222 - 60
ML5624PS	MICB	222 - 61
ML5624S	MICB	222 - 62
ML5624SJ	MICB	222 - 63
ML5624X	MICB	222 - 64
ML5625C	MICB	222 - 65
ML5625J	MICB	222 - 66
ML5625PL	MICB	222 - 67
ML5625PS	MICB	222 - 68
ML5625S	MICB	222 - 69
ML5625SJ	MICB	222 - 70
ML5625X	MICB	222 - 71
ML5640C	MICB	222 - 72
ML5640J	MICB	222 - 73
ML5640PL	MICB	222 - 74
ML5640PS	MICB	222 - 75
ML5640S	MICB	222 - 76
ML5640X	MICB	222 - 77
ML5640XJ	MICB	222 - 78
ML5641C	MICB	222 - 79
ML5641J	MICB	222 - 80
ML5641PL	MICB	222 - 81
ML5641PS	MICB	222 - 82
ML5641S	MICB	222 - 83
ML5641X	MICB	222 - 84
ML5641XJ	MICB	222 - 85
ML5642J	MICB	222 - 86
ML5642X	MICB	222 - 87
ML5643J	MICB	222 - 88
ML5643X	MICB	222 - 89
ML5644C	MICB	222 - 90
ML5644J	MICB	222 - 91
ML5644PL	MICB	222 - 92
ML5644PS	MICB	222 - 93
ML5644S	MICB	222 - 94
ML5644X	MICB	222 - 95
ML5644XJ	MICB	222 - 96
ML5645C	MICB	222 - 97
ML5645J	MICB	222 - 98
ML5645PL	MICB	222 - 99
ML5645PS	MICB	222 -100
ML5645S	MICB	222 -101
ML5645X	MICB	222 -102
ML5645XJ	MICB	222 -103
ML5646J	MICB	222 -104
ML5646X	MICB	222 -105
ML5647J	MICB	222 -106
ML5647X	MICB	222 -107
ML5710C	MICB	222 -108
ML5710J	MICB	222 -109

△-Registered with JEDEC by this manufacturer

♦-Mfr's data sheet available in microfilm service

1. TYPE No. CROSS INDEX

IN TYPE NUMBER SEQUENCE

TYPE No.	MFRS	Pg&Line
ML5710LJ	MICB	222 -110
ML5710PL	MICB	223 - 1
ML5710PX	MICB	223 - 2
ML5710S	MICB	223 - 3
ML5710X	MICB	223 - 4
ML5720C	MICB	223 - 5
ML5720J	MICB	223 - 6
ML5720LJ	MICB	223 - 7
ML5720PL	MICB	223 - 8
ML5720PX	MICB	223 - 9
ML5720S	MICB	223 - 10
ML5720X	MICB	223 - 11
ML5730C	MICB	223 - 12
ML5730J	MICB	223 - 13
ML5730PL	MICB	223 - 14
ML5730S	MICB	223 - 15
ML5730X	MICB	223 - 16
ML5740C	MICB	223 - 17
ML5740PL	MICB	223 - 18
ML5740S	MICB	223 - 19
ML5740X	MICB	223 - 20
ML17310M2	MICB	223 - 21
ML17310M3	MICB	223 - 22
ML17310M4	MICB	223 - 23
ML17320M2	MICB	223 - 24
ML17320M3	MICB	223 - 25
ML17320M4	MICB	223 - 26
ML17330M2	MICB	223 - 27
ML17330M3	MICB	223 - 28
ML17330M4	MICB	223 - 29
ML17340M2	MICB	223 - 30
ML17340M3	MICB	223 - 31
ML17340M4	MICB	223 - 32
ML17350M2	MICB	223 - 33
ML17350M3	MICB	223 - 34
ML17370M1	MICB	223 - 35
ML17370M2	MICB	223 - 36
ML17380M1	MICB	223 - 37
ML17380M2	MICB	223 - 38
ML40100	♦MICB	113 - 14
ML40101	♦MICB	113 - 15
ML40102	♦MICB	113 - 16
ML40105	♦MICB	113 - 17
ML40106	♦MICB	113 - 18
ML40107	♦MICB	113 - 19
ML40110	♦MICB	113 - 20
ML40111	♦MICB	113 - 21
ML40115	♦MICB	113 - 22
ML40116	♦MICB	113 - 23
ML40121	♦MICB	113 - 24
ML40150	♦MICB	113 - 25
ML40151	♦MICB	113 - 26
ML40152	♦MICB	113 - 27
ML40155	♦MICB	113 - 28
ML40156	♦MICB	113 - 29
ML40157	♦MICB	113 - 30
ML40160	♦MICB	113 - 31
ML40161	♦MICB	113 - 32
ML40162	♦MICB	113 - 33
ML40163	♦MICB	113 - 34
ML40171	♦MICB	113 - 35
ML40597	♦MICB	113 - 38
ML40597M	♦MICB	113 - 39
MLT29	OWE	106 - 87
MLT33	OWE	106 - 88
MLT40	OWE	106 - 89
MLT47	OWE	106 - 90
MLT49	OWE	106 - 93
MM4049	♦MOTA	316 - 23
MM8000	♦MOTA	306 - 56
MM8001	♦MOTA	307 - 71
MM8002	♦MOTA	308 - 42
MM8009	♦MOTA	308 - 29
	SCA	
MMBV3I02	♦MOTA	183 - 96
MMC600	EAS	148 - 13
MMC601	EAS	151 - 15
MMC602	EAS	155 - 69
MMC603	EAS	159 - 85
MMC605	EAS	164 - 53
MMC607	EAS	168 - 97
MMC4049	♦MOTA	316 - 24
MMT2857	♦MOTA	303 - 95
MMT2857A	♦MOTA	303 - 96
MMT5031	♦MOTA	303 - 97
MMT5031A	♦MOTA	303 - 98
MMT8006	♦MOTA	308 - 6
MMT8007	♦MOTA	308 - 7
MMT8008	♦MOTA	308 - 8
MO1011B150Y	PHIN	309 - 7
	♦RTCF	
MO1011B250Y	PHIN	309 - 13
	♦RTCF	
MO1706A1	♦ALP	256 - 31
MO1706A3	♦ALP	256 - 32
MO1706A4	♦ALP	256 - 33
MO1706B	♦ALP	256 - 34
MO1706C	♦ALP	256 - 35
MO1706F	♦ALP	256 - 36
MO1706H3	♦ALP	256 - 37
MO1706H4	♦ALP	256 - 38
MO1707A1	♦ALP	256 - 39
MO1707A3	♦ALP	256 - 40
MO1707A4	♦ALP	256 - 41
MO1707B	♦ALP	256 - 42
MO1707C	♦ALP	256 - 43
MO1707F	♦ALP	256 - 44
MO1707H3	♦ALP	256 - 45
MO1707H4	♦ALP	256 - 46
MO1708A1	♦ALP	256 - 47
MO1708A3	♦ALP	256 - 48
MO1708A4	♦ALP	256 - 49
MO1708B	♦ALP	256 - 50
MO1708C	♦ALP	256 - 51
MO1708F	♦ALP	256 - 52
MO1708H3	♦ALP	256 - 53
MO1708H4	♦ALP	256 - 54
MO1709A1	♦ALP	256 - 55
MO1709A3	♦ALP	256 - 56
MO1709A4	♦ALP	256 - 57
MO1709B	♦ALP	256 - 58
MO1709C	♦ALP	256 - 59
MO1709F	♦ALP	256 - 60
MO1709H3	♦ALP	256 - 61
MO1709H4	♦ALP	256 - 62
MO1710A	♦ALP	256 - 63
MO1710B2	♦ALP	256 - 64
MO1710E	♦ALP	256 - 65
MO1710H3	♦ALP	256 - 66
MO1710H	♦ALP	256 - 67
MO1712A	♦ALP	256 - 68
MO1712B2	♦ALP	256 - 69
MO1712E	♦ALP	256 - 70
MO1712H3	♦ALP	256 - 71
MO1712H	♦ALP	256 - 72
MO1713A	♦ALP	256 - 73
MO1713B2	♦ALP	256 - 74
MO1713E	♦ALP	256 - 75
MO1713H3	♦ALP	256 - 76
MO1713H	♦ALP	256 - 77
MO1720A	♦ALP	256 - 78
MO1720B2	♦ALP	256 - 79
MO1720E	♦ALP	256 - 80
MO1720H3	♦ALP	256 - 81
MO1720H	♦ALP	256 - 82
MO1722A	♦ALP	256 - 83
MO1722B2	♦ALP	256 - 84
MO1722E	♦ALP	256 - 85
MO1722H3	♦ALP	256 - 86
MO1722H	♦ALP	256 - 87
MO1723A	♦ALP	256 - 88
MO1723B2	♦ALP	256 - 89
MO1723E	♦ALP	256 - 90
MO1723H3	♦ALP	256 - 91
MO1723H	♦ALP	256 - 92
MO1730A	♦ALP	256 - 93
MO1730B2	♦ALP	256 - 94
MO1730E	♦ALP	256 - 95
MO1730H3	♦ALP	256 - 96
MO1732A	♦ALP	256 - 97
MO1732B2	♦ALP	256 - 98
MO1732E	♦ALP	256 - 99
MO1732H3	♦ALP	256 -100
MO1733A	♦ALP	256 -101
MO1733B2	♦ALP	256 -102
MO1733E	♦ALP	256 -103
MO1733H3	♦ALP	256 -104
MO1806A1	♦ALP	256 -105
MO1806A3	♦ALP	256 -106
MO1806A4	♦ALP	256 -107
MO1806B	♦ALP	256 -108
MO1806C	♦ALP	256 -109
MO1806F	♦ALP	256 -110
MO1806H3	♦ALP	257 - 1
MO1806H4	♦ALP	257 - 2
MO1807A1	♦ALP	257 - 3
MO1807A3	♦ALP	257 - 4
MO1807A4	♦ALP	257 - 5
MO1807B	♦ALP	257 - 6
MO1807C	♦ALP	257 - 7
MO1807F	♦ALP	257 - 8
MO1807H3	♦ALP	257 - 9
MO1807H4	♦ALP	257 - 10
MO1808A1	♦ALP	257 - 11
MO1808A3	♦ALP	257 - 12
MO1808A4	♦ALP	257 - 13
MO1808B	♦ALP	257 - 14
MO1808C	♦ALP	257 - 15
MO1808F	♦ALP	257 - 16
MO1808H3	♦ALP	257 - 17
MO1808H4	♦ALP	257 - 18
MO1809A1	♦ALP	257 - 19
MO1809A3	♦ALP	257 - 20
MO1809A4	♦ALP	257 - 21
MO1809B	♦ALP	257 - 22
MO1809C	♦ALP	257 - 23
MO1809F	♦ALP	257 - 24
MO1809H3	♦ALP	257 - 25
MO1809H4	♦ALP	257 - 26
MO1838-00	♦ALP	257 - 27
MO1838-01	♦ALP	257 - 28
MO1838A	♦ALP	257 - 29
MO1838B	♦ALP	257 - 30
MO1838C	♦ALP	257 - 31
MO1838H4	♦ALP	257 - 32
MO1839-00	♦ALP	257 - 33
MO1839-01	♦ALP	257 - 34
MO1839A	♦ALP	257 - 35
MO1839B	♦ALP	257 - 36
MO1839C	♦ALP	257 - 37
MO1839H4	♦ALP	257 - 38
MO1840-00	♦ALP	257 - 39
MO1840-01	♦ALP	257 - 40
MO1840A	♦ALP	257 - 41
MO1840B	♦ALP	257 - 42
MO1840C	♦ALP	257 - 43
MO1840H4	♦ALP	257 - 44
MO1841-00	♦ALP	257 - 45
MO1841-01	♦ALP	257 - 46
MO1841A	♦ALP	257 - 47
MO1841B	♦ALP	257 - 48
MO1841C	♦ALP	257 - 49
MO1841H4	♦ALP	257 - 50
MO1842-00	♦ALP	257 - 51
MO1842-01	♦ALP	257 - 52
MO1842A	♦ALP	257 - 53
MO1842B	♦ALP	257 - 54
MO1842C	♦ALP	257 - 55
MO1842H4	♦ALP	257 - 56
MO1843-00	♦ALP	257 - 57
MO1843-01	♦ALP	257 - 58
MO1843A	♦ALP	257 - 59
MO1843B	♦ALP	257 - 60
MO1843C	♦ALP	257 - 61
MO1843H4	♦ALP	257 - 62
MO1852-00	♦ALP	257 - 63
MO1852-01	♦ALP	257 - 64
MO1852A	♦ALP	257 - 65
MO1852B	♦ALP	257 - 66
MO1852C	♦ALP	257 - 67
MO1852H4	♦ALP	257 - 68
MO1875-00	♦ALP	257 - 69
MO1875-01	♦ALP	257 - 70
MO1875A	♦ALP	257 - 71
MO1875B	♦ALP	257 - 72
MO1875C	♦ALP	257 - 73
MO1875H4	♦ALP	257 - 74
MO1876-00	♦ALP	257 - 75
MO1876-01	♦ALP	257 - 76
MO1876A	♦ALP	257 - 77
MO1876B	♦ALP	257 - 78
MO1876C	♦ALP	257 - 79
MO1876H4	♦ALP	257 - 80
MO1877-00	♦ALP	257 - 81
MO1877-01	♦ALP	257 - 82
MO1877A	♦ALP	257 - 83
MO1877B	♦ALP	257 - 84
MO1877C	♦ALP	257 - 85
MO1877H4	♦ALP	257 - 86
MO1878-00	♦ALP	257 - 87
MO1878-01	♦ALP	257 - 88
MO1878A	♦ALP	257 - 89
MO1878B	♦ALP	257 - 90
MO1878C	♦ALP	257 - 91
MO1878H4	♦ALP	257 - 92
MO1879-00	♦ALP	257 - 93
MO1879-01	♦ALP	257 - 94
MO1879A	♦ALP	257 - 95
MO1879B	♦ALP	257 - 96
MO1879C	♦ALP	257 - 97
MO1879H4	♦ALP	257 - 98
MO1880-00	♦ALP	257 - 99
MO1880-01	♦ALP	257 -100
MO1880A	♦ALP	257 -101
MO1880B	♦ALP	257 -102
MO1880C	♦ALP	257 -103
MO1880H4	♦ALP	257 -104
MO1881-00	♦ALP	257 -105
MO1881-01	♦ALP	257 -106
MO1881A	♦ALP	257 -107
MO1881B	♦ALP	257 -108
MO1881C	♦ALP	257 -109
MO1881H4	♦ALP	257 -110
MO1882-00	♦ALP	258 - 1
MO1882-01	♦ALP	258 - 2
MO1882A	♦ALP	258 - 3
MO1882B	♦ALP	258 - 4
MO1882C	♦ALP	258 - 5
MO1882H4	♦ALP	258 - 6
MO1883-00	♦ALP	258 - 7
MO1883-01	♦ALP	258 - 8
MO1883A	♦ALP	258 - 9
MO1883B	♦ALP	258 - 10
MO1883C	♦ALP	258 - 11
MO1883H4	♦ALP	258 - 12
MO1884-00	♦ALP	258 - 13
MO1884-01	♦ALP	258 - 14
MO1884A	♦ALP	258 - 15
MO1884B	♦ALP	258 - 16
MO1884C	♦ALP	258 - 17
MO1884H4	♦ALP	258 - 18
MO1885-00	♦ALP	258 - 19
MO1885-01	♦ALP	258 - 20
MO1885A	♦ALP	258 - 21
MO1885B	♦ALP	258 - 22
MO1885C	♦ALP	258 - 23
MO1885H4	♦ALP	258 - 24
MO1886-00	♦ALP	258 - 25
MO1886-01	♦ALP	258 - 26
MO1886A	♦ALP	258 - 27
MO1886B	♦ALP	258 - 28
MO1886C	♦ALP	258 - 29
MO1886H4	♦ALP	258 - 30
MO1887-00	♦ALP	258 - 31
MO1887-01	♦ALP	258 - 32
MO1887A	♦ALP	258 - 33
MO1887B	♦ALP	258 - 34
MO1887C	♦ALP	258 - 35
MO1887H4	♦ALP	258 - 36
MO1888-00	♦ALP	258 - 37
MO1888-01	♦ALP	258 - 38
MO1888A	♦ALP	258 - 39
MO1888B	♦ALP	258 - 40
MO1888C	♦ALP	258 - 41
MO1888H4	♦ALP	258 - 42
MO1889-00	♦ALP	258 - 43
MO1889-01	♦ALP	258 - 44
MO1889A	♦ALP	258 - 45
MO1889B	♦ALP	258 - 46
MO1889C	♦ALP	258 - 47
MO1889H4	♦ALP	258 - 48
MO1890-00	♦ALP	258 - 49
MO1890-01	♦ALP	258 - 50
MO1890A	♦ALP	258 - 51
MO1890B	♦ALP	258 - 52
MO1890C	♦ALP	258 - 53
MO1890H4	♦ALP	258 - 54
MO1891-00	♦ALP	258 - 55
MO1891-01	♦ALP	258 - 56
MO1891A	♦ALP	258 - 57
MO1891B	♦ALP	258 - 58
MO1891C	♦ALP	258 - 59
MO1891H4	♦ALP	258 - 60
MO1892-00	♦ALP	258 - 61
MO1892-01	♦ALP	258 - 62
MO1892A	♦ALP	258 - 63
MO1892B	♦ALP	258 - 64
MO1892C	♦ALP	258 - 65
MO1892H4	♦ALP	258 - 66
MO1893-00	♦ALP	258 - 67
MO1893-01	♦ALP	258 - 68
MO1893A	♦ALP	258 - 69
MO1893B	♦ALP	258 - 70
MO1893C	♦ALP	258 - 71
MO1893H4	♦ALP	258 - 72
MO1894-00	♦ALP	258 - 73
MO1894-01	♦ALP	258 - 74
MO1894A	♦ALP	258 - 75
MO1894B	♦ALP	258 - 76
MO1894C	♦ALP	258 - 77
MO1894H4	♦ALP	258 - 78
MO1895-00	♦ALP	258 - 79
MO1895-01	♦ALP	258 - 80
MO1895A	♦ALP	258 - 81
MO1895B	♦ALP	258 - 82
MO1895C	♦ALP	258 - 83
MO1895H4	♦ALP	258 - 84
MO1896-00	♦ALP	258 - 85
MO1896-01	♦ALP	258 - 86
MO1896A	♦ALP	258 - 87
MO1896B	♦ALP	258 - 88
MO1896C	♦ALP	258 - 89
MO1896H4	♦ALP	258 - 90
MO1897-00	♦ALP	258 - 91
MO1897-01	♦ALP	258 - 92
MO1897A	♦ALP	258 - 93
MO1897B	♦ALP	258 - 94
MO1897C	♦ALP	258 - 95
MO1897H4	♦ALP	258 - 96
MO1898-00	♦ALP	258 - 97
MO1898-01	♦ALP	258 - 98
MO1898A	♦ALP	258 - 99
MO1898B	♦ALP	258 -100
MO1898C	♦ALP	258 -101
MO1898H4	♦ALP	258 -102
MO1899-00	♦ALP	258 -103
MO1899-01	♦ALP	258 -104
MO1899A	♦ALP	258 -105
MO1899B	♦ALP	258 -106
MO1899C	♦ALP	258 -107
MO1899H4	♦ALP	258 -108
MO1930A2	♦ALP	258 -109
MO1930A4	♦ALP	258 -110
MO1930A	♦ALP	259 - 1
MO1930B	♦ALP	259 - 2
MO1930C	♦ALP	259 - 3
MO1930E	♦ALP	259 - 4
MO1930H3	♦ALP	259 - 5
MO1930H4	♦ALP	259 - 6
MO1930H5	♦ALP	259 - 7
MO1947-95	♦ALP	259 - 8
MO1948A2	♦ALP	259 - 9
MO1948A4	♦ALP	259 - 10
MO1948A	♦ALP	259 - 11
MO1948B	♦ALP	259 - 12
MO1948C	♦ALP	259 - 13
MO1948H4	♦ALP	259 - 14
MO1948H	♦ALP	259 - 15
MO1949A2	♦ALP	259 - 16
MO1949A4	♦ALP	259 - 17
MO1949A	♦ALP	259 - 18
MO1949B	♦ALP	259 - 19
MO1949C	♦ALP	259 - 20
MO1949H4	♦ALP	259 - 21
MO1949H	♦ALP	259 - 22
MO1950A2	♦ALP	259 - 23
MO1950A4	♦ALP	259 - 24
MO1950A	♦ALP	259 - 25
MO1950B	♦ALP	259 - 26
MO1950C	♦ALP	259 - 27
MO1950H4	♦ALP	259 - 28
MO1950H	♦ALP	259 - 29
MO1951A2	♦ALP	259 - 30
MO1951A4	♦ALP	259 - 31
MO1951A	♦ALP	259 - 32
MO1951B	♦ALP	259 - 33
MO1951C	♦ALP	259 - 34
MO1951H4	♦ALP	259 - 35
MO1951H	♦ALP	259 - 36
MO1967-94	♦ALP	259 - 37
MO1970A2	♦ALP	259 - 38
MO1970A4	♦ALP	259 - 39
MO1970B	♦ALP	259 - 40
MO1970C	♦ALP	259 - 41
MO1970H4	♦ALP	259 - 42
MO1970H5	♦ALP	259 - 43
MO1971A2	♦ALP	259 - 44
MO1971A4	♦ALP	259 - 45
MO1971B	♦ALP	259 - 46
MO1971C	♦ALP	259 - 47
MO1971H4	♦ALP	259 - 48
MO1971H5	♦ALP	259 - 49
MO1972A2	♦ALP	259 - 50
MO1972A4	♦ALP	259 - 51
MO1972B	♦ALP	259 - 52
MO1972C	♦ALP	259 - 53
MO1972H4	♦ALP	259 - 54
MO1972H5	♦ALP	259 - 55
MO2352A	♦ALP	259 - 56
MO2352B2	♦ALP	259 - 57
MO2352E	♦ALP	259 - 58
MO2352H3	♦ALP	259 - 59
MO2352H	♦ALP	259 - 60
MO2353A	♦ALP	259 - 61
MO2353B2	♦ALP	259 - 62
MO2353E	♦ALP	259 - 63
MO2353H3	♦ALP	259 - 64
MO2353H	♦ALP	259 - 65
MO2362A	♦ALP	259 - 66
MO2362B2	♦ALP	259 - 67
MO2362E	♦ALP	259 - 68
MO2362H3	♦ALP	259 - 69
MO2362H	♦ALP	259 - 70
MO2372A	♦ALP	259 - 71
MO2372B2	♦ALP	259 - 72
MO2372E	♦ALP	259 - 73
MO2372H3	♦ALP	259 - 74
MO2372H	♦ALP	259 - 75
MO2382A	♦ALP	259 - 76
MO2382B2	♦ALP	259 - 77
MO2382E	♦ALP	259 - 78
MO2382H3	♦ALP	259 - 79
MO2382H	♦ALP	259 - 80
MO3740A1	♦ALP	259 - 81
MO3740A3	♦ALP	259 - 82
MO3740A4	♦ALP	259 - 83
MO3740B	♦ALP	259 - 84
MO3740C	♦ALP	259 - 85
MO3740F	♦ALP	259 - 86
MO3740H3	♦ALP	259 - 87
MO3740H4	♦ALP	259 - 88
MO3741A1	♦ALP	259 - 89
MO3741A3	♦ALP	259 - 90
MO3741A4	♦ALP	259 - 91
MO3741B	♦ALP	259 - 92
MO3741C	♦ALP	259 - 93
MO3741F	♦ALP	259 - 94
MO3741H3	♦ALP	259 - 95
MO3741H4	♦ALP	259 - 96
MO3742A1	♦ALP	259 - 97
MO3742A3	♦ALP	259 - 98
MO3742A4	♦ALP	259 - 99
MO3742B	♦ALP	259 -100
MO3742C	♦ALP	259 -101
MO3742F	♦ALP	259 -102
MO3742H3	♦ALP	259 -103
MO3742H4	♦ALP	259 -104
MO3743A1	♦ALP	259 -105
MO3743A3	♦ALP	259 -106
MO3743A4	♦ALP	259 -107
MO3743B	♦ALP	259 -108
MO3743C	♦ALP	259 -109
MO3743F	♦ALP	259 -110
MO3743H3	♦ALP	260 - 1
MO3743H4	♦ALP	260 - 2
MO3744A1	♦ALP	260 - 3
MO3744A3	♦ALP	260 - 4
MO3744A4	♦ALP	260 - 5
MO3744B	♦ALP	260 - 6
MO3744C	♦ALP	260 - 7
MO3744F	♦ALP	260 - 8
MO3744H3	♦ALP	260 - 9
MO3744H4	♦ALP	260 - 10
MO3745A1	♦ALP	260 - 11
MO3745A3	♦ALP	260 - 12
MO3745A4	♦ALP	260 - 13
MO3745B	♦ALP	260 - 14
MO3745C	♦ALP	260 - 15
MO3745F	♦ALP	260 - 16
MO3745H3	♦ALP	260 - 17
MO3745H4	♦ALP	260 - 18
MO3746A1	♦ALP	260 - 19
MO3746A3	♦ALP	260 - 20
MO3746A4	♦ALP	260 - 21
MO3746B	♦ALP	260 - 22
MO3746C	♦ALP	260 - 23
MO3746F	♦ALP	260 - 24
MO3746H3	♦ALP	260 - 25
MO3746H4	♦ALP	260 - 26
MO3747A1	♦ALP	260 - 27
MO3747A3	♦ALP	260 - 28
MO3747A4	♦ALP	260 - 29
MO3747B	♦ALP	260 - 30
MO3747C	♦ALP	260 - 31
MO3747F	♦ALP	260 - 32
MO3747H3	♦ALP	260 - 33
MO3747H4	♦ALP	260 - 34
MO3748A1	♦ALP	260 - 35
MO3748A3	♦ALP	260 - 36
MO3748A4	♦ALP	260 - 37
MO3748B	♦ALP	260 - 38
MO3748C	♦ALP	260 - 39
MO3748F	♦ALP	260 - 40
MO3748H3	♦ALP	260 - 41
MO3748H4	♦ALP	260 - 42
MO3749A1	♦ALP	260 - 43
MO3749A3	♦ALP	260 - 44
MO3749A4	♦ALP	260 - 45
MO3749B	♦ALP	260 - 46
MO3749C	♦ALP	260 - 47
MO3749F	♦ALP	260 - 48
MO3749H3	♦ALP	260 - 49
MO3749H4	♦ALP	260 - 50
MO3754	♦ALP	260 - 51
MO3754A	♦ALP	260 - 52
MO3754B	♦ALP	260 - 53
MO3754C	♦ALP	260 - 54
MO3754H4	♦ALP	260 - 55
MO3754H5	♦ALP	260 - 56
MO3755	♦ALP	260 - 57
MO3755A	♦ALP	260 - 58
MO3755B	♦ALP	260 - 59
MO3755C	♦ALP	260 - 60
MO3755H4	♦ALP	260 - 61
MO3755H5	♦ALP	260 - 62
MO3756	♦ALP	260 - 63
MO3756A	♦ALP	260 - 64
MO3756B	♦ALP	260 - 65
MO3756C	♦ALP	260 - 66
MO3756H4	♦ALP	260 - 67

Δ-Registered with JEDEC by this manufacturer

♦-Mfr's data sheet available in microfilm service

1. TYPE No. CROSS INDEX

IN TYPE NUMBER SEQUENCE

TYPE No.	MFRS	Pg&Line
MO3756H5	♦ALP	260 - 68
MO3757	♦ALP	260 - 69
MO3757A	♦ALP	260 - 70
MO3757B	♦ALP	260 - 71
MO3757C	♦ALP	260 - 72
MO3757H4	♦ALP	260 - 73
MO3757H5	♦ALP	260 - 74
MO3758	♦ALP	260 - 75
MO3758A	♦ALP	260 - 76
MO3758B	♦ALP	260 - 77
MO3758C	♦ALP	260 - 78
MO3758H4	♦ALP	260 - 79
MO3758H5	♦ALP	260 - 80
MO3759	♦ALP	260 - 81
MO3759A	♦ALP	260 - 82
MO3759B	♦ALP	260 - 83
MO3759C	♦ALP	260 - 84
MO3759H4	♦ALP	260 - 85
MO3759H5	♦ALP	260 - 86
MO6075B210Z	PHIN	306 - 79
	♦RTCF	
MO6075B400Z	PHIN	306 - 80
	♦RTCF	
MO7132-97	♦ALP	260 - 87
MO7200A	♦ALP	260 - 88
MO7200B2	♦ALP	260 - 89
MO7200E	♦ALP	260 - 90
MO7200H3	♦ALP	260 - 91
MO7200H	♦ALP	260 - 92
MO7201A	♦ALP	260 - 93
MO7201B2	♦ALP	260 - 94
MO7201E	♦ALP	260 - 95
MO7201H3	♦ALP	260 - 96
MO7201H	♦ALP	260 - 97
MO7202A	♦ALP	260 - 98
MO7202B2	♦ALP	260 - 99
MO7202E	♦ALP	260 -100
MO7202H3	♦ALP	260 -101
MO7202H	♦ALP	260 -102
MO7203A	♦ALP	260 -103
MO7203B2	♦ALP	260 -104
MO7203E	♦ALP	260 -105
MO7203H3	♦ALP	260 -106
MO7203H	♦ALP	260 -107
MO7204A	♦ALP	260 -108
MO7204B2	♦ALP	260 -109
MO7204E	♦ALP	260 -110
MO7204H3	♦ALP	261 - 1
MO7204H	♦ALP	261 - 2
MO7205A	♦ALP	261 - 3
MO7205B2	♦ALP	261 - 4
MO7205E	♦ALP	261 - 5
MO7205H3	♦ALP	261 - 6
MO7205H	♦ALP	261 - 7
MO7206A	♦ALP	261 - 8
MO7206B2	♦ALP	261 - 9
MO7206E	♦ALP	261 - 10
MO7206H3	♦ALP	261 - 11
MO7206H	♦ALP	261 - 12
MO7207A	♦ALP	261 - 13
MO7207B2	♦ALP	261 - 14
MO7207E	♦ALP	261 - 15
MO7207H3	♦ALP	261 - 16
MO7207H	♦ALP	261 - 17
MO7208A	♦ALP	261 - 18
MO7208B2	♦ALP	261 - 19
MO7208E	♦ALP	261 - 20
MO7208H3	♦ALP	261 - 21
MO7208H	♦ALP	261 - 22
MO7209A	♦ALP	261 - 23
MO7209B2	♦ALP	261 - 24
MO7209E	♦ALP	261 - 25
MO7209H3	♦ALP	261 - 26
MO7209H	♦ALP	261 - 27
MO7210A	♦ALP	261 - 28
MO7210B2	♦ALP	261 - 29
MO7210E	♦ALP	261 - 30
MO7210H3	♦ALP	261 - 31
MO7210H	♦ALP	261 - 32
MO7211A	♦ALP	261 - 33
MO7211B2	♦ALP	261 - 34
MO7211E	♦ALP	261 - 35
MO7211H3	♦ALP	261 - 36
MO7211H	♦ALP	261 - 37
MO7212A	♦ALP	261 - 38
MO7212B2	♦ALP	261 - 39
MO7212E	♦ALP	261 - 40
MO7212H3	♦ALP	261 - 41
MO7212H	♦ALP	261 - 42
MO7213A	♦ALP	261 - 43
MO7213B2	♦ALP	261 - 44
MO7213E	♦ALP	261 - 45
MO7213H3	♦ALP	261 - 46
MO7213H	♦ALP	261 - 47
MO7214A	♦ALP	261 - 48
MO7214B2	♦ALP	261 - 49
MO7214E	♦ALP	261 - 50
MO7214H3	♦ALP	261 - 51
MO7214H	♦ALP	261 - 52
MO7215A	♦ALP	261 - 53
MO7215B2	♦ALP	261 - 54
MO7215E	♦ALP	261 - 55
MO7215H3	♦ALP	261 - 56
MO7215H	♦ALP	261 - 57
MPN3401	♦MOTA	223 - 39
MPN3402	♦MOTA	223 - 40
MPN3404	♦MOTA	223 - 41
MPN3700	♦MOTA	223 - 42
MPT10	OWE	106 - 65
MPT14	OWE	106 - 44
MPT15	OWE	106 - 54
MPT15A	OWE	106 - 56
MPT16A	OWE	106 - 59
MPT18	OWE	106 - 51
MPT20	OWE	106 - 52
MPT21	OWE	106 - 45
MPT22	OWE	106 - 41
MPT25	OWE	106 - 63
MPT27	OWE	106 - 48
MPT28	OWE	106 - 60
MPT29	OWE	106 - 42
MPT31	OWE	106 - 66
MPT33	OWE	106 - 38
MPT34	OWE	106 - 39
MPT35	OWE	106 - 40
MPT37	OWE	106 - 57
MPT40	OWE	106 - 46
MPT41	OWE	106 - 47
MPT42	OWE	106 - 75
MPT45	OWE	106 - 49
MPT47	OWE	106 - 50
MR1011B40W	PHIN	309 - 4
	♦RTCF	
MR1011B150Y	PHIN	309 - 9
	♦RTCF	
MR1011B300Y	PHIN	309 - 20
	♦RTCF	
MR1011B375Y	PHIN	309 - 17
	♦RTCF	
MRA0610-3	♦TRWS	254 - 74
MRA0610-9	♦TRWS	254 - 75
MRA0610-18	♦TRWS	254 - 76
MRA0610-40	♦TRWS	254 - 77
MRA1014-2	♦TRWS	254 - 78
MRA1014-6	♦TRWS	254 - 79
MRA1014-12	♦TRWS	254 - 80
MRA1014-35	♦TRWS	254 - 81
MRA1214-55H	♦TRWS	310 - 72
MRA1417-2	♦TRWS	254 - 82
MRA1417-2H	♦TRWS	254 - 83
MRA1417-6	♦TRWS	254 - 84
MRA1417-6H	TRWS	254 - 85
MRA1417-11	♦TRWS	254 - 86
MRA1417-11H	TRWS	254 - 87
MRA1417-25	♦TRWS	254 - 88
MRA1417-25H	TRWS	254 - 89
MRA1720-2	♦TRWS	254 - 90
MRA1720-5	♦TRWS	254 - 91
MRA1720-9	♦TRWS	254 - 92
MRA1720-20	♦TRWS	254 - 93
MRAL1417-2	♦TRWS	254 - 94
MRAL1417-6	♦TRWS	254 - 95
MRAL1417-11	♦TRWS	254 - 96
MRAL1417-25	♦TRWS	254 - 97
MRAL1720-2	♦TRWS	254 - 98
MRAL1720-5	♦TRWS	254 - 99
MRAL1720-9	♦TRWS	254 -100
MRAL1720-20	♦TRWS	254 -101
MRAL2023-1.5	♦TRWS	254 -102
MRAL2023-1.5H		254 -103
	♦TRWS	
MRAL2023-3	♦TRWS	254 -104
MRAL2023-3H	♦TRWS	254 -105
MRAL2023-6	♦TRWS	254 -106
MRAL2023-6H	♦TRWS	254 -107
MRAL2023-12	♦TRWS	254 -108
MRAL2023-12H	♦TRWS	254 -109
MRAL2023-18H	♦TRWS	313 - 7
MRAL2327-1.3	TRWS	314 - 4
MRAL2327-3	♦TRWS	254 -110
MRAL2327-6	♦TRWS	255 - 1
MRB12175YR	PHIN	309 - 10
	♦RTCF	
MRB12350YR	PHIN	309 - 21
	♦RTCF	
MRB12375Y	PHIN	309 - 18
	RTCF	
MRB12900Y	PHIN	309 - 29
	RTCF	
MRF134	♦MOTA	303 - 41
MRF136	♦MOTA	303 - 57
MRF137	♦MOTA	303 - 69
MRF309	♦MOTA	304 - 35
MRF313	♦MOTA	303 - 31
MRF313A	♦MOTA	303 - 32
MRF321	♦MOTA	303 - 48
MRF323	♦MOTA	303 - 58
MRF325	♦MOTA	303 - 68
MRF326	♦MOTA	303 - 71
MRF327	♦MOTA	303 - 86
MRF331	♦MOTA	303 - 49
MRF338	♦MOTA	305 - 37
MRF390(A)	♦MOTA	305 - 81
MRF501	♦MOTA	306 - 39
MRF502	♦MOTA	306 - 96
MRF511	♦MOTA	311 - 18
MRF515	♦MOTA	304 - 42
MRF517	♦MOTA	312 - 93
MRF525	♦MOTA	303 - 33
MRF531	♦MOTA	305 - 67
MRF534	♦MOTA	316 - 25
MRF536	♦MOTA	318 - 23
MRF559	♦MOTA	311 - 16
MRF571	♦MOTA	320 - 29
MRF572	♦MOTA	320 - 30
MRF573	♦MOTA	320 - 31
MRF580	♦MOTA	317 - 67
MRF580A	♦MOTA	318 - 39
MRF581	♦MOTA	317 - 68
MRF581A	♦MOTA	318 - 40
MRF586	♦MOTA	317 - 23
MRF587	♦MOTA	318 - 60
MRF597#ai	♦MOTA	319 - 26
MRF626	♦MOTA	304 - 43
MRF627	♦MOTA	304 - 44
MRF628	♦MOTA	304 - 46
MRF629	HSE	304 - 61
	♦MOTA	
MRF630	♦MOTA	304 - 41
MRF641	♦MOTA	305 - 21
MRF644	♦MOTA	305 - 29
MRF646	♦MOTA	305 - 31
MRF648	♦MOTA	305 - 34
MRF652	♦MOTA	305 - 85
MRF660	♦MOTA	305 - 2
MRF750	♦MOTA	305 - 87
MRF752	♦MOTA	305 - 92
MRF754	♦MOTA	305 - 99
MRF838	♦MOTA	307 - 42
MRF838A	♦MOTA	307 - 43
MRF840	♦MOTA	307 - 49
MRF841	♦MOTA	307 - 41
MRF842	♦MOTA	307 - 51
MRF844	♦MOTA	307 - 53
MRF846	♦MOTA	307 - 55
MRF870	♦MOTA	307 - 46
MRF870A	♦MOTA	307 - 47
MRF890	♦MOTA	307 - 74
MRF892	♦MOTA	307 - 80
MRF894	♦MOTA	307 - 83
MRF901	♦MOTA	317 - 48
MRF904	♦MOTA	316 - 13
MRF905	♦MOTA	313 - 89
MRF911	♦MOTA	318 - 26
MRF914	♦MOTA	317 - 30
MRF931	♦MOTA	314 - 33
MRF961	♦MOTA	317 - 50
MRF962	♦MOTA	317 - 56
MRF965	♦MOTA	317 - 57
MRF966	♦MOTA	311 - 87
MRF967	♦MOTA	311 - 88
MRF1000MA	♦MOTA	309 - 58
MRF1000MB	♦MOTA	309 - 59
MRF1000MC	♦MOTA	309 - 60
MRF1002MA	♦MOTA	309 - 61
MRF1002MB	♦MOTA	309 - 62
MRF1002MC	♦MOTA	309 - 63
MRF1004MA	♦MOTA	309 - 64
MRF1004MB	♦MOTA	309 - 65
MRF1004MC	♦MOTA	309 - 66
MRF1008MA	♦MOTA	309 - 71
MRF1008MB	♦MOTA	309 - 72
MRF1008MC	♦MOTA	309 - 73
MRF1015MA	♦MOTA	309 - 78
MRF1015MB	♦MOTA	309 - 79
MRF1015MC	♦MOTA	309 - 80
MRF1035MA	♦MOTA	309 - 89
MRF1035MB	♦MOTA	309 - 90
MRF1035MC	♦MOTA	309 - 91
MRF1090MA	♦MOTA	310 - 19
MRF1090MB	♦MOTA	310 - 20
MRF1090MC	♦MOTA	310 - 21
MRF1150M	♦MOTA	309 - 12
MRF1150MA	♦MOTA	310 - 30
MRF1150MB	♦MOTA	310 - 31
MRF1150MC	♦MOTA	310 - 32
MRF1250M	♦MOTA	309 - 22
MRF1325M	♦MOTA	309 - 23
MRF2001	♦MOTA	312 - 54
MRF2001B	♦MOTA	312 - 55
MRF2001M	♦MOTA	312 - 56
MRF2003	♦MOTA	312 - 61
MRF2003B	♦MOTA	312 - 62
MRF2003M	♦MOTA	312 - 63
MRF2005	♦MOTA	312 - 71
MRF2005B	♦MOTA	312 - 72
MRF2005M	♦MOTA	312 - 70
MRF2010	♦MOTA	312 - 79
MRF2010B	♦MOTA	312 - 80
MRF2010M	♦MOTA	312 - 81
MRF2016M	♦MOTA	312 - 84
MRF5174	♦MOTA	306 - 43
MRF5177	♦MOTA	303 - 59
MRF5177A	♦MOTA	303 - 60
MRFC572	♦MOTA	320 - 32
MRFC581	♦MOTA	318 - 41
MRFC581A	♦MOTA	318 - 42
MRFC592	MOTA	319 - 88
MRFC966	♦MOTA	311 - 89
MRP1214-55A(A)		310 - 73
	TRWS	
MS12H	♦TII	311 - 90
MS120KE	♦TII	315 - 55
MS173JE	♦TII	313 - 87
MS173TE	♦TII	313 - 88
MS175H	♦TII	311 - 91
MS175JB	♦TII	316 - 46
MS175JE	♦TII	308 - 30
MS175TB	♦TII	316 - 47
MS175TE	♦TII	308 - 31
MS224A	♦MDO	207 - 5
MS225A	♦MDO	208 - 22
MS233A	♦MDO	206 - 46
MS250JE	♦TII	316 - 48
MS262,3,4	♦MDO	143 - 65
MS265	♦MDO	141 - 31
MS266	♦MDO	140 - 64
MS300H	♦TII	315 - 32
MS300JE	♦TII	312 - 7
MS311-8	MDO	145 - 52
MS311-8A	MDO	145 - 53
MS311-21	MDO	145 - 54
MS311-21A	MDO	145 - 55
MS312-8	MDO	152 - 21
MS312-8A	MDO	152 - 22
MS312-21	MDO	152 - 23
MS312-21A	MDO	152 - 24
MS313-8	MDO	156 - 74
MS313-8A	MDO	156 - 75
MS313-21	MDO	156 - 76
MS313-21A	MDO	156 - 77
MS331-8	MDO	145 - 56
MS331-8A	MDO	145 - 57
MS331-21	MDO	145 - 58
MS331-21A	MDO	145 - 59
MS332-8	MDO	152 - 25
MS332-8A	MDO	152 - 26
MS332-21	MDO	152 - 27
MS332-21A	MDO	152 - 28
MS333-8	MDO	156 - 78
MS333-8A	MDO	156 - 79
MS333-21	MDO	156 - 80
MS333-21A	MDO	156 - 81
MS334-8	MDO	160 - 77
MS334-8A	MDO	160 - 78
MS334-21	MDO	160 - 79
MS334-21A	MDO	160 - 80
MS510	♦TII	305 - 64
MS805B	MDO	236 - 11
MS806B	MDO	236 - 12
MS809B	MDO	236 - 13
MS811B	MDO	236 - 14
MS821A	♦MDO	236 - 15
MS821B	♦MDO	236 - 16
MS822A	♦MDO	236 - 17
MS822B	♦MDO	236 - 18
MS823A	♦MDO	236 - 19
MS823B	♦MDO	236 - 20
MS824A	♦MDO	236 - 21
MS824B	♦MDO	236 - 22
MS825A	♦MDO	236 - 23
MS825B	♦MDO	236 - 24
MS826A	♦MDO	236 - 25
MS826B	♦MDO	236 - 26
MS827A	♦MDO	236 - 27
MS827B	♦MDO	236 - 28
MS833B	MDO	236 - 29
MS834B	MDO	236 - 30
MS835B	MDO	236 - 31
MS836B	MDO	236 - 32
MS837B	MDO	236 - 33
MS855B	MDO	236 - 34
MS856B	MDO	236 - 35
MS858B	MDO	236 - 36
MS871B	MDO	236 - 37
MS872B	MDO	236 - 38
MS873B	MDO	236 - 39
MS891B	MDO	236 - 40
MS892B	MDO	236 - 41
MS925A	MDO	236 - 42
MS925B	MDO	236 - 43
MS927A	MDO	236 - 44
MS927B	MDO	236 - 45
MS928A	MDO	236 - 46
MS928B	MDO	236 - 47
MS1005A	♦MDO	206 -104
MS1007A	♦MDO	206 - 94
MS1010	MDO	212 - 84
	♦TII	305 - 65
MS1011	MDO	212 - 85
MS1011B700Y	PHIN	309 - 30
	♦RTCF	
MS1011B800Y	PHIN	302 - 48
	♦RTCF	
MS1012	MDO	212 - 86
MS1020A	♦MDO	206 - 86
MS1021A	♦MDO	206 - 80
MS1040	♦MDO	128 - 96
MS1041	♦MDO	128 - 97
MS1042	♦MDO	129 - 21
MS1043	♦MDO	129 - 22
MS1100A	♦MDO	208 - 20
MS1101A	♦MDO	208 - 18
MS1102A	♦MDO	208 - 16
MS1140A	♦MDO	208 - 7
MS1141A	♦MDO	208 - 4
MS1142A	♦MDO	208 - 1
MS1143A	♦MDO	207 -108
MS1144A	♦MDO	207 -104
MS1145A	MDO	207 -102
MS1146A	MDO	207 - 99
MS1152	MDO	208 - 71
MS1154	MDO	209 - 42
MS1159	MDO	210 - 14
MS1163	MDO	208 - 72
MS1163A	MDO	208 - 73
MS1165	MDO	209 - 43
MS1165A	MDO	209 - 44
MS1167	MDO	210 - 15
MS1167A	MDO	210 - 16
MS1201A	♦MDO	206 -105
MS1202A	♦MDO	206 - 95
MS1204A	♦MDO	206 - 87
MS1205A	♦MDO	206 - 81
MS1206A	♦MDO	206 - 75
MS1207A	♦MDO	206 - 71
MS1208A	♦MDO	206 - 66
MS1209A	♦MDO	206 - 64
MS1220A	♦MDO	208 - 21
MS1221A	♦MDO	208 - 19
MS1222A	♦MDO	208 - 17
MS1223A	♦MDO	208 - 15
MS1224A	♦MDO	208 - 14
MS1225A	♦MDO	208 - 13
MS1241A	♦MDO	208 - 5
MS1242A	♦MDO	208 - 2
MS1243A	♦MDO	207 -109
MS1244A	♦MDO	207 -105
MS1245A	♦MDO	207 -103
MS1246A	♦MDO	207 -100
MS1247A	♦MDO	207 - 96
MS1248A	♦MDO	207 - 92
MS1300	♦MDO	207 - 62
MS1301	♦MDO	208 - 95
MS1302	♦MDO	208 - 91
MS1303	♦MDO	209 - 68
MS1304	♦MDO	209 - 64
MS1305	♦MDO	210 - 32
MS1504A	♦MDO	206 - 34
MS1505A	♦MDO	206 - 16
MS1506A	♦MDO	207 - 52
MS1507A	♦MDO	206 - 21
MS1508A	♦MDO	206 - 17
MS1509A	♦MDO	207 - 60
MS1510A	♦MDO	207 - 42
MS1511A	♦MDO	207 - 36
MS1512A	♦MDO	206 - 12
MS1520A	♦MDO	207 - 6
MS1521A	♦MDO	206 -110
MS1522A	♦MDO	206 -107
MS1523A	♦MDO	206 - 96
MS1524A	♦MDO	206 - 88
MS1525A	♦MDO	206 - 82
MS1560A	♦MDO	206 - 35
MS1561A	♦MDO	206 - 33
MS1562A	♦MDO	206 - 22
MS1563A	♦MDO	206 - 18
MS1564A	♦MDO	206 - 13
MS1570A	♦MDO	207 - 61
MS1571A	♦MDO	207 - 53
MS1572A	♦MDO	207 - 43
MS1573A	♦MDO	207 - 37
MS1574A	♦MDO	207 - 32
MS1575A	♦MDO	207 - 27
MS1581A	♦MDO	207 - 1
MS1582A	♦MDO	206 -108
MS1583A	♦MDO	206 -100
MS1584A	♦MDO	206 - 89
MS1585A	♦MDO	206 - 83
MS1586A	♦MDO	206 - 72
MS2006	♦MDO	139 - 19
MS2110JE	♦TII	316 - 49
MS4101,2,3	♦MDO	143 - 66
MS4104	♦MDO	141 - 32
MS4105	♦MDO	140 - 65
MS4106	♦MDO	139 - 20
MS4107	♦MDO	138 - 35
MS4108	♦MDO	136 -105
MS4109	♦MDO	241 - 81
MS4110	♦MDO	241 - 82
MS4111	♦MDO	241 - 83
MS4112	♦MDO	241 - 84
MS4150,1-5	♦MDO	143 - 37
MS4156	♦MDO	143 - 38
MS4160,1-5	♦MDO	154 - 22
MS4166	♦MDO	154 - 23
MS4200,1-5	♦MDO	143 - 39
MS4206	♦MDO	143 - 40
MS4210,1-5	♦MDO	154 - 24
MS4250,1-5	♦MDO	143 - 41
MS4256	♦MDO	143 - 42
MS4260,1-5	♦MDO	154 - 25
MS4300,1-5	♦MDO	143 - 43
MS4310,11-14	♦MDO	154 - 26
MS4403	♦MDO	143 - 67
MS4404	♦MDO	141 - 33
MS4405	♦MDO	140 - 66
MS4406	♦MDO	139 - 21
MS4407	♦MDO	138 - 36
MS4408	♦MDO	136 -106
MS4409	♦MDO	241 - 85
MS4410	♦MDO	241 - 86
MS4411	♦MDO	241 - 87
MS4412	♦MDO	241 - 88
MS6075B800Z	PHIN	300 - 9
	♦RTCF	
MS6102-8	MDO	223 - 43
MS6102-8A	MDO	223 - 44
MS6102-22	MDO	223 - 45
MS6102-23	MDO	223 - 46
MS6102-24	MDO	223 - 47
MS6104-8	MDO	223 - 48
MS6104-8A	MDO	223 - 49
MS6104-22	MDO	223 - 50
MS6104-23	MDO	223 - 51
MS6104-24	MDO	223 - 52
MS6106-8	MDO	223 - 53
MS6106-8A	MDO	223 - 54
MS6106-22	MDO	223 - 55
MS6106-23	MDO	223 - 56
MS6106-24	MDO	223 - 57
MS8108-8	MDO	223 - 58
MS6108-8A	MDO	223 - 59
MS6108-22	MDO	223 - 60
MS6108-23	MDO	223 - 61
MS6108-24	MDO	223 - 62
MS8111	♦SODI	223 - 63
MS8121	♦SODI	223 - 64
MS8211	♦SODI	223 - 65
MS8221	♦SODI	223 - 66
MS8311	♦SODI	223 - 67
MSB12900Y	♦PHIN	309 - 31
	♦RTCF	
MSC11	OWE	109 - 39
MSC13	OWE	107 - 43
MSC15	OWE	107 - 44
MSM1201KU	♦SDI	223 - 68
MSM3122VK	♦SDI	223 - 69
MSM3122X	♦SDI	223 - 70
MST16	OWE	106 -105
MST22	OWE	109 - 36
MST45	OWE	106 -106
MST48	OWE	107 - 4
MT3057A2	♦ALP	261 - 58
MT3057A4	♦ALP	261 - 59
MT3057B	♦ALP	261 - 60
MT3057C	♦ALP	261 - 61
MT3057D1	♦ALP	261 - 62
MT3057H3	♦ALP	261 - 63
MT3057H	♦ALP	261 - 64

△-Registered with JEDEC by this manufacturer

♦-Mfr's data sheet available in microfilm service

1. TYPE No. CROSS INDEX

IN TYPE NUMBER SEQUENCE

TYPE No.	MFRS	Pg&Line
MT3058A2	♦ALP	261 - 65
MT3058A4	♦ALP	261 - 66
MT3058B	♦ALP	261 - 67
MT3058C	♦ALP	261 - 68
MT3058D1	♦ALP	261 - 69
MT3058H3	♦ALP	261 - 70
MT3058H	♦ALP	261 - 71
MT3059A2	♦ALP	261 - 72
MT3059A4	♦ALP	261 - 73
MT3059B	♦ALP	261 - 74
MT3059C	♦ALP	261 - 75
MT3059D1	♦ALP	261 - 76
MT3059H3	♦ALP	261 - 77
MT3059H	♦ALP	261 - 78
MT3060A2	♦ALP	261 - 79
MT3060A4	♦ALP	261 - 80
MT3060B	♦ALP	261 - 81
MT3060C	♦ALP	261 - 82
MT3060D1	♦ALP	261 - 83
MT3060H3	♦ALP	261 - 84
MT3060H	♦ALP	261 - 85
MT3061A2	♦ALP	261 - 86
MT3061A4	♦ALP	261 - 87
MT3061B	♦ALP	261 - 88
MT3061C	♦ALP	261 - 89
MT3061D1	♦ALP	261 - 90
MT3061H3	♦ALP	261 - 91
MT3061H	♦ALP	261 - 92
MT3062A2	♦ALP	261 - 93
MT3062A4	♦ALP	261 - 94
MT3062B	♦ALP	261 - 95
MT3062C	♦ALP	261 - 96
MT3062D1	♦ALP	261 - 97
MT3062H3	♦ALP	261 - 98
MT3062H	♦ALP	261 - 99
MT3063A2	♦ALP	261 -100
MT3063A4	♦ALP	261 -101
MT3063B	♦ALP	261 -102
MT3063C	♦ALP	261 -103
MT3063D1	♦ALP	261 -104
MT3063H3	♦ALP	261 -105
MT3063H	♦ALP	261 -106
MT3064A2	♦ALP	261 -107
MT3064A4	♦ALP	261 -108
MT3064B	♦ALP	261 -109
MT3064C	♦ALP	261 -110
MT3064D1	♦ALP	262 - 1
MT3064H3	♦ALP	262 - 2
MT3064H	♦ALP	262 - 3
MT3065A2	♦ALP	262 - 4
MT3065A4	♦ALP	262 - 5
MT3065B	♦ALP	262 - 6
MT3065C	♦ALP	262 - 7
MT3065D1	♦ALP	262 - 8
MT3065H3	♦ALP	262 - 9
MT3065H	♦ALP	262 - 10
MT3066A2	♦ALP	262 - 11
MT3066A4	♦ALP	262 - 12
MT3066B	♦ALP	262 - 13
MT3066C	♦ALP	262 - 14
MT3066D1	♦ALP	262 - 15
MT3066H3	♦ALP	262 - 16
MT3066H	♦ALP	262 - 17
MT3085A2P1	♦ALP	262 - 18
MT3085A2P2	♦ALP	262 - 19
MT3085A2P3	♦ALP	262 - 20
MT3085A4P1	♦ALP	262 - 21
MT3085A4P2	♦ALP	262 - 22
MT3085A4P3	♦ALP	262 - 23
MT3085A-P1	♦ALP	262 - 24
MT3085A-P2	♦ALP	262 - 25
MT3085A-P3	♦ALP	262 - 26
MT3085B2P1	♦ALP	262 - 27
MT3085B2P2	♦ALP	262 - 28
MT3085B2P3	♦ALP	262 - 29
MT3085B-P1	♦ALP	262 - 30
MT3085B-P2	♦ALP	262 - 31
MT3085B-P3	♦ALP	262 - 32
MT3085C-P1	♦ALP	262 - 33
MT3085C-P2	♦ALP	262 - 34
MT3085C-P3	♦ALP	262 - 35
MT3085D1P1	♦ALP	262 - 36
MT3085D1P2	♦ALP	262 - 37
MT3085D1P3	♦ALP	262 - 38
MT3085D-P1	♦ALP	262 - 39
MT3085D-P2	♦ALP	262 - 40
MT3085D-P3	♦ALP	262 - 41
MT3085E-P1	♦ALP	262 - 42
MT3085E-P2	♦ALP	262 - 43
MT3085E-P3	♦ALP	262 - 44
MT3085F1P1	♦ALP	262 - 45
MT3085F1P2	♦ALP	262 - 46
MT3085F1P3	♦ALP	262 - 47
MT3085H1P1	ALP	262 - 48
MT3085H1P2	ALP	262 - 49
MT3085H1P3	ALP	262 - 50
MT3085H3P1	♦ALP	262 - 51
MT3085H3P2	♦ALP	262 - 52
MT3085H3P3	♦ALP	262 - 53
MT3085H4P1	♦ALP	262 - 54
MT3085H4P2	♦ALP	262 - 55
MT3085H4P3	♦ALP	262 - 56
MT3085H-P1	♦ALP	262 - 57
MT3085H-P2	♦ALP	262 - 58
MT3085H-P3	♦ALP	262 - 59
MT3086A2P1	♦ALP	262 - 60
MT3086A2P2	♦ALP	262 - 61
MT3086A2P3	♦ALP	262 - 62
MT3086A4P1	♦ALP	262 - 63
MT3086A4P2	♦ALP	262 - 64
MT3086A4P3	♦ALP	262 - 65
MT3086A-P1	♦ALP	262 - 66
MT3086A-P2	♦ALP	262 - 67
MT3086A-P3	♦ALP	262 - 68
MT3086B2P1	♦ALP	262 - 69
MT3086B2P2	♦ALP	262 - 70
MT3086B2P3	♦ALP	262 - 71
MT3086B-P1	♦ALP	262 - 72
MT3086B-P2	♦ALP	262 - 73
MT3086B-P3	♦ALP	262 - 74
MT3086C-P1	♦ALP	262 - 75
MT3086C-P2	♦ALP	262 - 76
MT3086C-P3	♦ALP	262 - 77
MT3086D1P1	♦ALP	262 - 78
MT3086D1P2	♦ALP	262 - 79
MT3086D1P3	♦ALP	262 - 80
MT3086D-P1	♦ALP	262 - 81
MT3086D-P2	♦ALP	262 - 82
MT3086D-P3	♦ALP	262 - 83
MT3086E-P1	♦ALP	262 - 84
MT3086E-P2	♦ALP	262 - 85
MT3086E-P3	♦ALP	262 - 86
MT3086F1P1	♦ALP	262 - 87
MT3086F1P2	♦ALP	262 - 88
MT3086F1P3	♦ALP	262 - 89
MT3086H1P1	♦ALP	262 - 90
MT3086H1P2	♦ALP	262 - 91
MT3086H1P3	♦ALP	262 - 92
MT3086H3P1	♦ALP	262 - 93
MT3086H3P2	♦ALP	262 - 94
MT3086H3P3	♦ALP	262 - 95
MT3086H4P1	♦ALP	262 - 96
MT3086H4P2	♦ALP	262 - 97
MT3086H4P3	♦ALP	262 - 98
MT3086H-P1	♦ALP	262 - 99
MT3086H-P2	♦ALP	262 -100
MT3086H-P3	♦ALP	262 -101
MT3121A2	♦ALP	262 -102
MT3121A4	♦ALP	262 -103
MT3121B	♦ALP	262 -104
MT3121C	♦ALP	262 -105
MT3121D1	♦ALP	262 -106
MT3121H3	♦ALP	262 -107
MT3121H	♦ALP	262 -108
MT3124A2	♦ALP	262 -109
MT3124A4	♦ALP	262 -110
MT3124B	♦ALP	263 - 1
MT3124C	♦ALP	263 - 2
MT3124D1	♦ALP	263 - 3
MT3124G1	♦ALP	263 - 4
MT3124G	♦ALP	263 - 5
MT3125A2	♦ALP	263 - 6
MT3125A4	♦ALP	263 - 7
MT3125B	♦ALP	263 - 8
MT3125C	♦ALP	263 - 9
MT3125D1	♦ALP	263 - 10
MT3125H3	♦ALP	263 - 11
MT3125H	♦ALP	263 - 12
MT3127A2	♦ALP	263 - 13
MT3127A4	♦ALP	263 - 14
MT3127B	♦ALP	263 - 15
MT3127C	♦ALP	263 - 16
MT3127D1	♦ALP	263 - 17
MT3127H3	♦ALP	263 - 18
MT3127H	♦ALP	263 - 19
MT3260A2	♦ALP	263 - 20
MT3260A4	♦ALP	263 - 21
MT3260A	♦ALP	263 - 22
MT3260B	♦ALP	263 - 23
MT3260C	♦ALP	263 - 24
MT3260H4	♦ALP	263 - 25
MT3260H5	♦ALP	263 - 26
MT3280A2	♦ALP	263 - 27
MT3280A4	♦ALP	263 - 28
MT3280A	♦ALP	263 - 29
MT3280B	♦ALP	263 - 30
MT3280C	♦ALP	263 - 31
MT3280H4	♦ALP	263 - 32
MT3280H	♦ALP	263 - 33
MT3281A2	♦ALP	263 - 34
MT3281A4	♦ALP	263 - 35
MT3281A	♦ALP	263 - 36
MT3281B	♦ALP	263 - 37
MT3281C	♦ALP	263 - 38
MT3281H4	♦ALP	263 - 39
MT3281H	♦ALP	263 - 40
MT3282A2	♦ALP	263 - 41
MT3282A4	♦ALP	263 - 42
MT3282A	♦ALP	263 - 43
MT3282B	♦ALP	263 - 44
MT3282C	♦ALP	263 - 45
MT3282H4	♦ALP	263 - 46
MT3282H	♦ALP	263 - 47
MT3283A2	♦ALP	263 - 48
MT3283A4	♦ALP	263 - 49
MT3283A	♦ALP	263 - 50
MT3283B	♦ALP	263 - 51
MT3283C	♦ALP	263 - 52
MT3283H4	♦ALP	263 - 53
MT3283H	♦ALP	263 - 54
MT3358A-P1I	♦ALP	263 - 55
MT3358A-P1N	♦ALP	263 - 56
MT3358A-P2I	♦ALP	263 - 57
MT3358A-P2N	♦ALP	263 - 58
MT3358A-P3I	♦ALP	263 - 59
MT3358A-P3N	♦ALP	263 - 60
MT3358B2P1I	♦ALP	263 - 61
MT3358B2P1N	♦ALP	263 - 62
MT3358B2P2I	♦ALP	263 - 63
MT3358B2P2N	♦ALP	263 - 64
MT3358B2P3I	♦ALP	263 - 65
MT3358B2P3N	♦ALP	263 - 66
MT3358E-P1I	♦ALP	263 - 67
MT3358E-P1N	♦ALP	263 - 68
MT3358E-P2I	♦ALP	263 - 69
MT3358E-P2N	♦ALP	263 - 70
MT3358E-P3I	♦ALP	263 - 71
MT3358E-P3N	♦ALP	263 - 72
MT3358H3P1I	♦ALP	263 - 73
MT3358H3P1N	♦ALP	263 - 74
MT3358H3P2I	♦ALP	263 - 75
MT3358H3P2N	♦ALP	263 - 76
MT3358H3P3I	♦ALP	263 - 77
MT3358H3P3N	♦ALP	263 - 78
MT3358H-P1I	♦ALP	263 - 79
MT3358H-P1N	♦ALP	263 - 80
MT3358H-P2I	♦ALP	263 - 81
MT3358H-P2N	♦ALP	263 - 82
MT3358H-P3I	♦ALP	263 - 83
MT3358H-P3N	♦ALP	263 - 84
MT3359A-P1I	♦ALP	263 - 85
MT3359A-P1N	♦ALP	263 - 86
MT3359A-P2I	♦ALP	263 - 87
MT3359A-P2N	♦ALP	263 - 88
MT3359A-P3I	♦ALP	263 - 89
MT3359A-P3N	♦ALP	263 - 90
MT3359B2P1I	♦ALP	263 - 91
MT3359B2P1N	♦ALP	263 - 92
MT3359B2P2I	♦ALP	263 - 93
MT3359B2P2N	♦ALP	263 - 94
MT3359B2P3I	♦ALP	263 - 95
MT3359B2P3N	♦ALP	263 - 96
MT3359E-P1I	♦ALP	263 - 97
MT3359E-P1N	♦ALP	263 - 98
MT3359E-P2I	♦ALP	263 - 99
MT3359E-P2N	♦ALP	263 -100
MT3359E-P3I	♦ALP	263 -101
MT3359E-P3N	♦ALP	263 -102
MT3359H3P1I	♦ALP	263 -103
MT3359H3P1N	♦ALP	263 -104
MT3359H3P2I	♦ALP	263 -105
MT3359H3P2N	♦ALP	263 -106
MT3359H3P3I	♦ALP	263 -107
MT3359H3P3N	♦ALP	263 -108
MT3359H-P1I	♦ALP	263 -109
MT3359H-P1N	♦ALP	263 -110
MT3359H-P2I	♦ALP	264 - 1
MT3359H-P2N	♦ALP	264 - 2
MT3359H-P3I	♦ALP	264 - 3
MT3359H-P3N	♦ALP	264 - 4
MT3360A-P1I	♦ALP	264 - 5
MT3360A-P1N	♦ALP	264 - 6
MT3360A-P2I	♦ALP	264 - 7
MT3360A-P2N	♦ALP	264 - 8
MT3360A-P3I	♦ALP	264 - 9
MT3360A-P3N	♦ALP	264 - 10
MT3360B2P1I	♦ALP	264 - 11
MT3360B2P1N	♦ALP	264 - 12
MT3360B2P2I	♦ALP	264 - 13
MT3360B2P2N	♦ALP	264 - 14
MT3360B2P3I	♦ALP	264 - 15
MT3360B2P3N	♦ALP	264 - 16
MT3360E-P1I	♦ALP	264 - 17
MT3360E-P1N	♦ALP	264 - 18
MT3360E-P2I	♦ALP	264 - 19
MT3360E-P2N	♦ALP	264 - 20
MT3360E-P3I	♦ALP	264 - 21
MT3360E-P3N	♦ALP	264 - 22
MT3360H3P1I	♦ALP	264 - 23
MT3360H3P1N	♦ALP	264 - 24
MT3360H3P2I	♦ALP	264 - 25
MT3360H3P2N	♦ALP	264 - 26
MT3360H3P3I	♦ALP	264 - 27
MT3360H3P3N	♦ALP	264 - 28
MT3360H-P1I	♦ALP	264 - 29
MT3360H-P1N	♦ALP	264 - 30
MT3360H-P2I	♦ALP	264 - 31
MT3360H-P2N	♦ALP	264 - 32
MT3360H-P3I	♦ALP	264 - 33
MT3360H-P3N	♦ALP	264 - 34
MT3361A-P1I	♦ALP	264 - 35
MT3361A-P1N	♦ALP	264 - 36
MT3361A-P2I	♦ALP	264 - 37
MT3361A-P2N	♦ALP	264 - 38
MT3361A-P3I	♦ALP	264 - 39
MT3361A-P3N	♦ALP	264 - 40
MT3361B2P1I	♦ALP	264 - 41
MT3361B2P1N	♦ALP	264 - 42
MT3361B2P2I	♦ALP	264 - 43
MT3361B2P2N	♦ALP	264 - 44
MT3361B2P3I	♦ALP	264 - 45
MT3361B2P3N	♦ALP	264 - 46
MT3361E-P1I	♦ALP	264 - 47
MT3361E-P1N	♦ALP	264 - 48
MT3361E-P2I	♦ALP	264 - 49
MT3361E-P2N	♦ALP	264 - 50
MT3361E-P3I	♦ALP	264 - 51
MT3361E-P3N	♦ALP	264 - 52
MT3361H3P1I	♦ALP	264 - 53
MT3361H3P1N	♦ALP	264 - 54
MT3361H3P2I	♦ALP	264 - 55
MT3361H3P2N	♦ALP	264 - 56
MT3361H3P3I	♦ALP	264 - 57
MT3361H3P3N	♦ALP	264 - 58
MT3361H-P1I	♦ALP	264 - 59
MT3361H-P1N	♦ALP	264 - 60
MT3361H-P2I	♦ALP	264 - 61
MT3361H-P2N	♦ALP	264 - 62
MT3361H-P3I	♦ALP	264 - 63
MT3361H-P3N	♦ALP	264 - 64
MT3363A	♦ALPM	264 - 65
MT3363B2	♦ALPM	264 - 66
MT3363E	♦ALPM	264 - 67
MT3363H3	♦ALPM	264 - 68
MT3363H	♦ALPM	264 - 69
MT3364A	♦ALPM	264 - 70
MT3364B2	♦ALPM	264 - 71
MT3364E	♦ALPM	264 - 72
MT3364H3	♦ALPM	264 - 73
MT3364H	♦ALPM	264 - 74
MT3365A	♦ALPM	264 - 75
MT3365B2	♦ALPM	264 - 76
MT3365E	♦ALPM	264 - 77
MT3365H3	♦ALPM	264 - 78
MT3365H	♦ALPM	264 - 79
MT3366A	♦ALPM	264 - 80
MT3366B2	♦ALPM	264 - 81
MT3366E	♦ALPM	264 - 82
MT3366H3	♦ALPM	264 - 83
MT3366H	♦ALPM	264 - 84
MT3367A	♦ALPM	264 - 85
MT3367B2	♦ALP	264 - 86
MT3367E	♦ALP	264 - 87
MT3367H3	♦ALP	264 - 88
MT3367H	♦ALP	264 - 89
MT3368A-P1I	♦ALP	264 - 90
MT3368A-P1N	♦ALP	264 - 91
MT3368A-P2I	♦ALP	264 - 92
MT3368A-P2N	♦ALP	264 - 93
MT3368A-P3I	♦ALP	264 - 94
MT3368A-P3N	♦ALP	264 - 95
MT3368B2P1I	♦ALP	264 - 96
MT3368B2P1N	♦ALP	264 - 97
MT3368B2P2I	♦ALP	264 - 98
MT3368B2P2N	♦ALP	264 - 99
MT3368B2P3I	♦ALP	264 -100
MT3368B2P3N	♦ALP	264 -101
MT3368E-P1I	♦ALP	264 -102
MT3368E-P1N	♦ALP	264 -103
MT3368E-P2I	♦ALP	264 -104
MT3368E-P2N	♦ALP	264 -105
MT3368E-P3I	♦ALP	264 -106
MT3368E-P3N	♦ALP	264 -107
MT3368H3P1I	♦ALP	264 -108
MT3368H3P1N	♦ALP	264 -109
MT3368H3P2I	♦ALP	264 -110
MT3368H3P2N	♦ALP	265 - 1
MT3368H3P3I	♦ALP	265 - 2
MT3368H3P3N	♦ALP	265 - 3
MT3368H-P1I	♦ALP	265 - 4
MT3368H-P1N	♦ALP	265 - 5
MT3368H-P2I	♦ALP	265 - 6
MT3368H-P2N	♦ALP	265 - 7
MT3368H-P3I	♦ALP	265 - 8
MT3368H-P3N	♦ALP	265 - 9
MT3369A-P1I	♦ALP	265 - 10
MT3369A-P1N	♦ALP	265 - 11
MT3369A-P2I	♦ALP	265 - 12
MT3369A-P2N	♦ALP	265 - 13
MT3369A-P3I	♦ALP	265 - 14
MT3369A-P3N	♦ALP	265 - 15
MT3369B2P1I	♦ALP	265 - 16
MT3369B2P1N	♦ALP	265 - 17
MT3369B2P2I	♦ALP	265 - 18
MT3369B2P2N	♦ALP	265 - 19
MT3369B2P3I	♦ALP	265 - 20
MT3369B2P3N	♦ALP	265 - 21
MT3369E-P1I	♦ALP	265 - 22
MT3369E-P1N	♦ALP	265 - 23
MT3369E-P2I	♦ALP	265 - 24
MT3369E-P2N	♦ALP	265 - 25
MT3369E-P3I	♦ALP	265 - 26
MT3369E-P3N	♦ALP	265 - 27
MT3369H3P1I	♦ALP	265 - 28
MT3369H3P1N	♦ALP	265 - 29
MT3369H3P2I	♦ALP	265 - 30
MT3369H3P2N	♦ALP	265 - 31
MT3369H3P3I	♦ALP	265 - 32
MT3369H3P3N	♦ALP	265 - 33
MT3369H-P1I	♦ALP	265 - 34
MT3369H-P1N	♦ALP	265 - 35
MT3369H-P2I	♦ALP	265 - 36
MT3369H-P2N	♦ALP	265 - 37
MT3369H-P3I	♦ALP	265 - 38
MT3369H-P3N	♦ALP	265 - 39
MT3370A-P1I	♦ALP	265 - 40
MT3370A-P1N	♦ALP	265 - 41
MT3370A-P2I	♦ALP	265 - 42
MT3370A-P2N	♦ALP	265 - 43
MT3370A-P3I	♦ALP	265 - 44
MT3370A-P3N	♦ALP	265 - 45
MT3370B2P1I	♦ALP	265 - 46
MT3370B2P1N	♦ALP	265 - 47
MT3370B2P2I	♦ALP	265 - 48
MT3370B2P2N	♦ALP	265 - 49
MT3370B2P3I	♦ALP	265 - 50
MT3370B2P3N	♦ALP	265 - 51
MT3370E-P1I	♦ALP	265 - 52
MT3370E-P1N	♦ALP	265 - 53
MT3370E-P2I	♦ALP	265 - 54
MT3370E-P2N	♦ALP	265 - 55
MT3370E-P3I	♦ALP	265 - 56
MT3370E-P3N	♦ALP	265 - 57
MT3370H3P1I	♦ALP	265 - 58
MT3370H3P1N	♦ALP	265 - 59
MT3370H3P2I	♦ALP	265 - 60
MT3370H3P2N	♦ALP	265 - 61
MT3370H3P3I	♦ALP	265 - 62
MT3370H3P3N	♦ALP	265 - 63
MT3370H-P1I	♦ALP	265 - 64
MT3370H-P1N	♦ALP	265 - 65
MT3370H-P2I	♦ALP	265 - 66
MT3370H-P2N	♦ALP	265 - 67
MT3370H-P3I	♦ALP	265 - 68
MT3370H-P3N	♦ALP	265 - 69
MT3371A-P1I	♦ALP	265 - 70
MT3371A-P1N	♦ALP	265 - 71
MT3371A-P2I	♦ALP	265 - 72
MT3371A-P2N	♦ALP	265 - 73
MT3371A-P3I	♦ALP	265 - 74
MT3371A-P3N	♦ALP	265 - 75
MT3371B2P1I	♦ALP	265 - 76
MT3371B2P1N	♦ALP	265 - 77
MT3371B2P2I	♦ALP	265 - 78
MT3371B2P2N	♦ALP	265 - 79
MT3371B2P3I	♦ALP	265 - 80
MT3371B2P3N	♦ALP	265 - 81
MT3371E-P1I	♦ALP	265 - 82
MT3371E-P1N	♦ALP	265 - 83
MT3371E-P2I	♦ALP	265 - 84
MT3371E-P2N	♦ALP	265 - 85
MT3371E-P3I	♦ALP	265 - 86
MT3371E-P3N	♦ALP	265 - 87
MT3371H3P1I	♦ALP	265 - 88
MT3371H3P1N	♦ALP	265 - 89
MT3371H3P2I	♦ALP	265 - 90
MT3371H3P2N	♦ALP	265 - 91
MT3371H3P3I	♦ALP	265 - 92
MT3371H3P3N	♦ALP	265 - 93
MT3371H-P1I	♦ALP	265 - 94
MT3371H-P1N	♦ALP	265 - 95
MT3371H-P2I	♦ALP	265 - 96
MT3371H-P2N	♦ALP	265 - 97
MT3371H-P3I	♦ALP	265 - 98
MT3371H-P3N	♦ALP	265 - 99
MT3485A2P1I-S1	♦ALP	265 -100
MT3485A2P1I-S2	♦ALP	265 -101
MT3485A2P1I-S3	♦ALP	265 -102
MT3485A2P1I-S9	♦ALP	265 -103
MT3485A2P1N-S1	♦ALP	265 -104
MT3485A2P1N-S2	♦ALP	265 -105
MT3485A2P1N-S3	♦ALP	265 -106
MT3485A2P1N-S9	♦ALP	265 -107
MT3485A2P2I-S1	♦ALP	265 -108
MT3485A2P2I-S2	♦ALP	265 -109
MT3485A2P2I-S3	♦ALP	265 -110
MT3485A2P2I-S9	♦ALP	266 - 1
MT3485A2P2N-S1	♦ALP	266 - 2
MT3485A2P2N-S2	♦ALP	266 - 3
MT3485A2P2N-S3	♦ALP	266 - 4
MT3485A2P2N-S9	♦ALP	266 - 5
MT3485A2P3I-S1	♦ALP	266 - 6
MT3485A2P3I-S2	♦ALP	266 - 7
MT3485A2P3I-S3	♦ALP	266 - 8
MT3485A2P3I-S9	♦ALP	266 - 9
MT3485A2P3N-S1	♦ALP	266 - 10
MT3485A2P3N-S2	♦ALP	266 - 11
MT3485A2P3N-S3	♦ALP	266 - 12
MT3485A2P3N-S9	♦ALP	266 - 13
MT3485A4P1I-S1	♦ALP	266 - 14
MT3485A4P1I-S2	♦ALP	266 - 15
MT3485A4P1I-S3	♦ALP	266 - 16
MT3485A4P1I-S9	♦ALP	266 - 17
MT3485A4P1N-S1	♦ALP	266 - 18
MT3485A4P1N-S2	♦ALP	266 - 19
MT3485A4P1N-S3	♦ALP	266 - 20
MT3485A4P1N-S9	♦ALP	266 - 21
MT3485A4P2I-S1	♦ALP	266 - 22
MT3485A4P2I-S2	♦ALP	266 - 23
MT3485A4P2I-S3	♦ALP	266 - 24
MT3485A4P2I-S9	♦ALP	266 - 25
MT3485A4P2N-S1	♦ALP	266 - 26
MT3485A4P2N-S2	♦ALP	266 - 27
MT3485A4P2N-S3	♦ALP	266 - 28
MT3485A4P2N-S9	♦ALP	266 - 29
MT3485A4P3I-S1	♦ALP	266 - 30
MT3485A4P3I-S2	♦ALP	266 - 31
MT3485A4P3I-S3	♦ALP	266 - 32
MT3485A4P3I-S9	♦ALP	266 - 33
MT3485A4P3N-S1	♦ALP	266 - 34
MT3485A4P3N-S2	♦ALP	266 - 35
MT3485A4P3N-S3	♦ALP	266 - 36

Δ-Registered with JEDEC by this manufacturer

♦-Mfr's data sheet available in microfilm service

1. TYPE No. CROSS INDEX

IN TYPE NUMBER SEQUENCE

TYPE No.	MFRS	Pg&Line
MT3485A4P3N-S9	♦ALP	266 - 37
MT3485A-P1I-S1	♦ALP	266 - 38
MT3485A-P1I-S2	♦ALP	266 - 39
MT3485A-P1I-S3	♦ALP	266 - 40
MT3485A-P1I-S9	♦ALP	266 - 41
MT3485A-P1N-S1	♦ALP	266 - 42
MT3485A-P1N-S2	♦ALP	266 - 43
MT3485A-P1N-S3	♦ALP	266 - 44
MT3485A-P1N-S9	♦ALP	266 - 45
MT3485A-P2I-S1	♦ALP	266 - 46
MT3485A-P2I-S2	♦ALP	266 - 47
MT3485A-P2I-S3	♦ALP	266 - 48
MT3485A-P2I-S9	♦ALP	266 - 49
MT3485A-P2N-S1	♦ALP	266 - 50
MT3485A-P2N-S2	♦ALP	266 - 51
MT3485A-P2N-S3	♦ALP	266 - 52
MT3485A-P2N-S9	♦ALP	266 - 53
MT3485A-P3I-S1	♦ALP	266 - 54
MT3485A-P3I-S2	♦ALP	266 - 55
MT3485A-P3I-S3	♦ALP	266 - 56
MT3485A-P3I-S9	♦ALP	266 - 57
MT3485A-P3N-S1	♦ALP	266 - 58
MT3485A-P3N-S2	♦ALP	266 - 59
MT3485A-P3N-S3	♦ALP	266 - 60
MT3485A-P3N-S9	♦ALP	266 - 61
MT3485B2P1I-S1	♦ALP	266 - 62
MT3485B2P1I-S2	♦ALP	266 - 63
MT3485B2P1I-S3	♦ALP	266 - 64
MT3485B2P1I-S9	♦ALP	266 - 65
MT3485B2P1N-S1	♦ALP	266 - 66
MT3485B2P1N-S2	♦ALP	266 - 67
MT3485B2P1N-S3	♦ALP	266 - 68
MT3485B2P1N-S9	♦ALP	266 - 69
MT3485B2P2I-S1	♦ALP	266 - 70
MT3485B2P2I-S2	♦ALP	266 - 71
MT3485B2P2I-S3	♦ALP	266 - 72
MT3485B2P2I-S9	♦ALP	266 - 73
MT3485B2P2N-S1	♦ALP	266 - 74
MT3485B2P2N-S2	♦ALP	266 - 75
MT3485B2P2N-S3	♦ALP	266 - 76
MT3485B2P2N-S9	♦ALP	266 - 77
MT3485B2P3I-S1	♦ALP	266 - 78
MT3485B2P3I-S2	♦ALP	266 - 79
MT3485B2P3I-S3	♦ALP	266 - 80
MT3485B2P3I-S9	♦ALP	266 - 81
MT3485B2P3N-S1	♦ALP	266 - 82
MT3485B2P3N-S2	♦ALP	266 - 83
MT3485B2P3N-S3	♦ALP	266 - 84
MT3485B2P3N-S9	♦ALP	266 - 85
MT3485B-P1I-S1	♦ALP	266 - 86
MT3485B-P1I-S2	♦ALP	266 - 87
MT3485B-P1I-S3	♦ALP	266 - 88
MT3485B-P1I-S9	♦ALP	266 - 89
MT3485B-P1N-S1	♦ALP	266 - 90
MT3485B-P1N-S2	♦ALP	266 - 91
MT3485B-P1N-S3	♦ALP	266 - 92
MT3485B-P1N-S9	♦ALP	266 - 93
MT3485B-P2I-S1	♦ALP	266 - 94
MT3485B-P2I-S2	♦ALP	266 - 95
MT3485B-P2I-S3	♦ALP	266 - 96
MT3485B-P2I-S9	♦ALP	266 - 97
MT3485B-P2N-S1	♦ALP	266 - 98
MT3485B-P2N-S2	♦ALP	266 - 99
MT3485B-P2N-S3	♦ALP	266 -100
MT3485B-P2N-S9	♦ALP	266 -101
MT3485B-P3I-S1	♦ALP	266 -102
MT3485B-P3I-S2	♦ALP	266 -103
MT3485B-P3I-S3	♦ALP	266 -104
MT3485B-P3I-S9	♦ALP	266 -105
MT3485B-P3N-S1	♦ALP	266 -106
MT3485B-P3N-S2	♦ALP	266 -107
MT3485B-P3N-S3	♦ALP	266 -108
MT3485B-P3N-S9	♦ALP	266 -109
MT3485C-P1I-S1	♦ALP	266 -110
MT3485C-P1I-S2	♦ALP	267 - 1
MT3485C-P1I-S3	♦ALP	267 - 2
MT3485C-P1I-S9	♦ALP	267 - 3
MT3485C-P1N-S1	♦ALP	267 - 4
MT3485C-P1N-S2	♦ALP	267 - 5
MT3485C-P1N-S3	♦ALP	267 - 6
MT3485C-P1N-S9	♦ALP	267 - 7
MT3485C-P2I-S1	♦ALP	267 - 8
MT3485C-P2I-S2	♦ALP	267 - 9
MT3485C-P2I-S3	♦ALP	267 - 10
MT3485C-P2I-S9	♦ALP	267 - 11
MT3485C-P2N-S1	♦ALP	267 - 12
MT3485C-P2N-S2	♦ALP	267 - 13
MT3485C-P2N-S3	♦ALP	267 - 14
MT3485C-P2N-S9	♦ALP	267 - 15
MT3485C-P3I-S1	♦ALP	267 - 16
MT3485C-P3I-S2	♦ALP	267 - 17
MT3485C-P3I-S3	♦ALP	267 - 18
MT3485C-P3I-S9	♦ALP	267 - 19
MT3485C-P3N-S1	♦ALP	267 - 20
MT3485C-P3N-S2	♦ALP	267 - 21
MT3485C-P3N-S3	♦ALP	267 - 22
MT3485C-P3N-S9	♦ALP	267 - 23
MT3485D1P1I-S1	♦ALP	267 - 24
MT3485D1P1I-S2	♦ALP	267 - 25
MT3485D1P1I-S3	♦ALP	267 - 26
MT3485D1P1I-S9	♦ALP	267 - 27
MT3485D1P1N-S1	♦ALP	267 - 28
MT3485D1P1N-S2	♦ALP	267 - 29
MT3485D1P1N-S3	♦ALP	267 - 30
MT3485D1P1N-S9	♦ALP	267 - 31
MT3485D1P2I-S1	♦ALP	267 - 32
MT3485D1P2I-S2	♦ALP	267 - 33
MT3485D1P2I-S3	♦ALP	267 - 34
MT3485D1P2I-S9	♦ALP	267 - 35
MT3485D1P2N-S1	♦ALP	267 - 36
MT3485D1P2N-S2	♦ALP	267 - 37
MT3485D1P2N-S3	♦ALP	267 - 38
MT3485D1P2N-S9	♦ALP	267 - 39
MT3485D1P3I-S1	♦ALP	267 - 40
MT3485D1P3I-S2	♦ALP	267 - 41
MT3485D1P3I-S3	♦ALP	267 - 42
MT3485D1P3I-S9	♦ALP	267 - 43
MT3485D1P3N-S1	♦ALP	267 - 44
MT3485D1P3N-S2	♦ALP	267 - 45
MT3485D1P3N-S3	♦ALP	267 - 46
MT3485D1P3N-S9	♦ALP	267 - 47
MT3485D-P1I-S1	♦ALP	267 - 48
MT3485D-P1I-S2	♦ALP	267 - 49
MT3485D-P1I-S3	♦ALP	267 - 50
MT3485D-P1I-S9	♦ALP	267 - 51
MT3485D-P1N-S1	♦ALP	267 - 52
MT3485D-P1N-S2	♦ALP	267 - 53
MT3485D-P1N-S3	♦ALP	267 - 54
MT3485D-P1N-S9	♦ALP	267 - 55
MT3485D-P2I-S1	♦ALP	267 - 56
MT3485D-P2I-S2	♦ALP	267 - 57
MT3485D-P2I-S3	♦ALP	267 - 58
MT3485D-P2I-S9	♦ALP	267 - 59
MT3485D-P2N-S1	♦ALP	267 - 60
MT3485D-P2N-S2	♦ALP	267 - 61
MT3485D-P2N-S3	♦ALP	267 - 62
MT3485D-P2N-S9	♦ALP	267 - 63
MT3485D-P3I-S1	♦ALP	267 - 64
MT3485D-P3I-S2	♦ALP	267 - 65
MT3485D-P3I-S3	♦ALP	267 - 66
MT3485D-P3I-S9	♦ALP	267 - 67
MT3485D-P3N-S1	♦ALP	267 - 68
MT3485D-P3N-S2	♦ALP	267 - 69
MT3485D-P3N-S3	♦ALP	267 - 70
MT3485D-P3N-S9	♦ALP	267 - 71
MT3485E-P1I-S1	♦ALP	267 - 72
MT3485E-P1I-S2	♦ALP	267 - 73
MT3485E-P1I-S3	♦ALP	267 - 74
MT3485E-P1I-S9	♦ALP	267 - 75
MT3485E-P1N-S1	♦ALP	267 - 76
MT3485E-P1N-S2	♦ALP	267 - 77
MT3485E-P1N-S3	♦ALP	267 - 78
MT3485E-P1N-S9	♦ALP	267 - 79
MT3485E-P2I-S1	♦ALP	267 - 80
MT3485E-P2I-S2	♦ALP	267 - 81
MT3485E-P2I-S3	♦ALP	267 - 82
MT3485E-P2I-S9	♦ALP	267 - 83
MT3485E-P2N-S1	♦ALP	267 - 84
MT3485E-P2N-S2	♦ALP	267 - 85
MT3485E-P2N-S3	♦ALP	267 - 86
MT3485E-P2N-S9	♦ALP	267 - 87
MT3485E-P3I-S1	♦ALP	267 - 88
MT3485E-P3I-S2	♦ALP	267 - 89
MT3485E-P3I-S3	♦ALP	267 - 90
MT3485E-P3I-S9	♦ALP	267 - 91
MT3485E-P3N-S1	♦ALP	267 - 92
MT3485E-P3N-S2	♦ALP	267 - 93
MT3485E-P3N-S3	♦ALP	267 - 94
MT3485E-P3N-S9	♦ALP	267 - 95
MT3485F1P1I-S1	♦ALP	267 - 96
MT3485F1P1I-S2	♦ALP	267 - 97
MT3485F1P1I-S3	♦ALP	267 - 98
MT3485F1P1I-S9	♦ALP	267 - 99
MT3485F1P1N-S1	♦ALP	267 -100
MT3485F1P1N-S2	♦ALP	267 -101
MT3485F1P1N-S3	♦ALP	267 -102
MT3485F1P1N-S9	♦ALP	267 -103
MT3485F1P2I-S1	♦ALP	267 -104
MT3485F1P2I-S2	♦ALP	267 -105
MT3485F1P2I-S3	♦ALP	267 -106
MT3485F1P2I-S9	♦ALP	267 -107
MT3485F1P2N-S1	♦ALP	267 -108
MT3485F1P2N-S2	♦ALP	267 -109
MT3485F1P2N-S3	♦ALP	267 -110
MT3485F1P2N-S9	♦ALP	268 - 1
MT3485F1P3I-S1	♦ALP	268 - 2
MT3485F1P3I-S2	♦ALP	268 - 3
MT3485F1P3I-S3	♦ALP	268 - 4
MT3485F1P3I-S9	♦ALP	268 - 5
MT3485F1P3N-S1	♦ALP	268 - 6
MT3485F1P3N-S2	♦ALP	268 - 7
MT3485F1P3N-S3	♦ALP	268 - 8
MT3485F1P3N-S9	♦ALP	268 - 9
MT3485H1P1I-S1	♦ALP	268 - 10
MT3485H1P1I-S2	♦ALP	268 - 11
MT3485H1P1I-S3	♦ALP	268 - 12
MT3485H1P1I-S9	♦ALP	268 - 13
MT3485H1P1N-S1	♦ALP	268 - 14
MT3485H1P1N-S2	♦ALP	268 - 15
MT3485H1P1N-S3	♦ALP	268 - 16
MT3485H1P1N-S9	♦ALP	268 - 17
MT3485H1P2I-S1	♦ALP	268 - 18
MT3485H1P2I-S2	♦ALP	268 - 19
MT3485H1P2I-S3	♦ALP	268 - 20
MT3485H1P2I-S9	♦ALP	268 - 21
MT3485H1P2N-S1	♦ALP	268 - 22
MT3485H1P2N-S2	♦ALP	268 - 23
MT3485H1P2N-S3	♦ALP	268 - 24
MT3485H1P2N-S9	♦ALP	268 - 25
MT3485H1P3I-S1	♦ALP	268 - 26
MT3485H1P3I-S2	♦ALP	268 - 27
MT3485H1P3I-S3	♦ALP	268 - 28
MT3485H1P3I-S9	♦ALP	268 - 29
MT3485H1P3N-S1	♦ALP	268 - 30
MT3485H1P3N-S2	♦ALP	268 - 31
MT3485H1P3N-S3	♦ALP	268 - 32
MT3485H1P3N-S9	♦ALP	268 - 33
MT3485H3P1I-S1	♦ALP	268 - 34
MT3485H3P1I-S2	♦ALP	268 - 35
MT3485H3P1I-S3	♦ALP	268 - 36
MT3485H3P1I-S9	♦ALP	268 - 37
MT3485H3P1N-S1	♦ALP	268 - 38
MT3485H3P1N-S2	♦ALP	268 - 39
MT3485H3P1N-S3	♦ALP	268 - 40
MT3485H3P1N-S9	♦ALP	268 - 41
MT3485H3P2I-S1	♦ALP	268 - 42
MT3485H3P2I-S2	♦ALP	268 - 43
MT3485H3P2I-S3	♦ALP	268 - 44
MT3485H3P2I-S9	♦ALP	268 - 45
MT3485H3P2N-S1	♦ALP	268 - 46
MT3485H3P2N-S2	♦ALP	268 - 47
MT3485H3P2N-S3	♦ALP	268 - 48
MT3485H3P2N-S9	♦ALP	268 - 49
MT3485H3P3I-S1	♦ALP	268 - 50
MT3485H3P3I-S2	♦ALP	268 - 51
MT3485H3P3I-S3	♦ALP	268 - 52
MT3485H3P3I-S9	♦ALP	268 - 53
MT3485H3P3N-S1	♦ALP	268 - 54
MT3485H3P3N-S2	♦ALP	268 - 55
MT3485H3P3N-S3	♦ALP	268 - 56
MT3485H3P3N-S9	♦ALP	268 - 57
MT3485H4P1I-S1	♦ALP	268 - 58
MT3485H4P1I-S2	♦ALP	268 - 59
MT3485H4P1I-S3	♦ALP	268 - 60
MT3485H4P1I-S9	♦ALP	268 - 61
MT3485H4P1N-S1	♦ALP	268 - 62
MT3485H4P1N-S2	♦ALP	268 - 63
MT3485H4P1N-S3	♦ALP	268 - 64
MT3485H4P1N-S9	♦ALP	268 - 65
MT3485H4P2I-S1	♦ALP	268 - 66
MT3485H4P2I-S2	♦ALP	268 - 67
MT3485H4P2I-S3	♦ALP	268 - 68
MT3485H4P2I-S9	♦ALP	268 - 69
MT3485H4P2N-S1	♦ALP	268 - 70
MT3485H4P2N-S2	♦ALP	268 - 71
MT3485H4P2N-S3	♦ALP	268 - 72
MT3485H4P2N-S9	♦ALP	268 - 73
MT3485H4P3I-S1	♦ALP	268 - 74
MT3485H4P3I-S2	♦ALP	268 - 75
MT3485H4P3I-S3	♦ALP	268 - 76
MT3485H4P3I-S9	♦ALP	268 - 77
MT3485H4P3N-S1	♦ALP	268 - 78
MT3485H4P3N-S2	♦ALP	268 - 79
MT3485H4P3N-S3	♦ALP	268 - 80
MT3485H4P3N-S9	♦ALP	268 - 81
MT3485H-P1I-S1	♦ALP	268 - 82
MT3485H-P1I-S2	♦ALP	268 - 83
MT3485H-P1I-S3	♦ALP	268 - 84
MT3485H-P1I-S9	♦ALP	268 - 85
MT3485H-P1N-S1	♦ALP	268 - 86
MT3485H-P1N-S2	♦ALP	268 - 87
MT3485H-P1N-S3	♦ALP	268 - 88
MT3485H-P1N-S9	♦ALP	268 - 89
MT3485H-P2I-S1	♦ALP	268 - 90
MT3485H-P2I-S2	♦ALP	268 - 91
MT3485H-P2I-S3	♦ALP	268 - 92
MT3485H-P2I-S9	♦ALP	268 - 93
MT3485H-P2N-S1	♦ALP	268 - 94
MT3485H-P2N-S2	♦ALP	268 - 95
MT3485H-P2N-S3	♦ALP	268 - 96
MT3485H-P2N-S9	♦ALP	268 - 97
MT3485H-P3I-S1	♦ALP	268 - 98
MT3485H-P3I-S2	♦ALP	268 - 99
MT3485H-P3I-S3	♦ALP	268 -100
MT3485H-P3I-S9	♦ALP	268 -101

△-Registered with JEDEC by this manufacturer

♦-Mfr's data sheet available in microfilm service

1. TYPE No. CROSS INDEX

IN TYPE NUMBER SEQUENCE

TYPE No.	MFRS	Pg&Line
MT3485H-P3N-S1	♦ALP	268 -102
MT3485H-P3N-S2	♦ALP	268 -103
MT3485H-P3N-S3	♦ALP	268 -104
MT3485H-P3N-S9	♦ALP	268 -105
MT3486A2P1I-S1	♦ALP	268 -106
MT3486A2P1I-S2	♦ALP	268 -107
MT3486A2P1I-S3	♦ALP	268 -108
MT3486A2P1I-S9	♦ALP	268 -109
MT3486A2P1N-S1	♦ALP	268 -110
MT3486A2P1N-S2	♦ALP	269 - 1
MT3486A2P1N-S3	♦ALP	269 - 2
MT3486A2P1N-S9	♦ALP	269 - 3
MT3486A2P2I-S1	♦ALP	269 - 4
MT3486A2P2I-S2	♦ALP	269 - 5
MT3486A2P2I-S3	♦ALP	269 - 6
MT3486A2P2I-S9	♦ALP	269 - 7
MT3486A2P2N-S1	♦ALP	269 - 8
MT3486A2P2N-S2	♦ALP	269 - 9
MT3486A2P2N-S3	♦ALP	269 - 10
MT3486A2P2N-S9	♦ALP	269 - 11
MT3486A2P3I-S1	♦ALP	269 - 12
MT3486A2P3I-S2	♦ALP	269 - 13
MT3486A2P3I-S3	♦ALP	269 - 14
MT3486A2P3I-S9	♦ALP	269 - 15
MT3486A2P3N-S1	♦ALP	269 - 16
MT3486A2P3N-S2	♦ALP	269 - 17
MT3486A2P3N-S3	♦ALP	269 - 18
MT3486A2P3N-S9	♦ALP	269 - 19
MT3486A4P1I-S1	♦ALP	269 - 20
MT3486A4P1I-S2	♦ALP	269 - 21
MT3486A4P1I-S3	♦ALP	269 - 22
MT3486A4P1I-S9	♦ALP	269 - 23
MT3486A4P1N-S1	♦ALP	269 - 24
MT3486A4P1N-S2	♦ALP	269 - 25
MT3486A4P1N-S3	♦ALP	269 - 26
MT3486A4P1N-S9	♦ALP	269 - 27
MT3486A4P2I-S1	♦ALP	269 - 28
MT3486A4P2I-S2	♦ALP	269 - 29
MT3486A4P2I-S3	♦ALP	269 - 30
MT3486A4P2I-S9	♦ALP	269 - 31
MT3486A4P2N-S1	♦ALP	269 - 32
MT3486A4P2N-S2	♦ALP	269 - 33
MT3486A4P2N-S3	♦ALP	269 - 34
MT3486A4P2N-S9	♦ALP	269 - 35
MT3486A4P3I-S1	♦ALP	269 - 36
MT3486A4P3I-S2	♦ALP	269 - 37
MT3486A4P3I-S3	♦ALP	269 - 38
MT3486A4P3I-S9	♦ALP	269 - 39
MT3486A4P3N-S1	♦ALP	269 - 40
MT3486A4P3N-S2	♦ALP	269 - 41
MT3486A4P3N-S3	♦ALP	269 - 42
MT3486A4P3N-S9	♦ALP	269 - 43
MT3486A-P1I-S1	♦ALP	269 - 44
MT3486A-P1I-S2	♦ALP	269 - 45
MT3486A-P1I-S3	♦ALP	269 - 46
MT3486A-P1I-S9	♦ALP	269 - 47
MT3486A-P1N-S1	♦ALP	269 - 48
MT3486A-P1N-S2	♦ALP	269 - 49
MT3486A-P1N-S3	♦ALP	269 - 50
MT3486A-P1N-S9	♦ALP	269 - 51
MT3486A-P2I-S1	♦ALP	269 - 52
MT3486A-P2I-S2	♦ALP	269 - 53
MT3486A-P2I-S3	♦ALP	269 - 54
MT3486A-P2N-S1	♦ALP	269 - 55
MT3486A-P2N-S2	♦ALP	269 - 56
MT3486A-P2N-S3	♦ALP	269 - 57
MT3486A-P2N-S9	♦ALP	269 - 58
MT3486A-P3I-S1	♦ALP	269 - 59
MT3486A-P3I-S2	♦ALP	269 - 60
MT3486A-P3I-S3	♦ALP	269 - 61
MT3486A-P3I-S9	♦ALP	269 - 62
MT3486A-P3N-S1	♦ALP	269 - 63
MT3486A-P3N-S2	♦ALP	269 - 64
MT3486A-P3N-S3	♦ALP	269 - 65
MT3486A-P3N-S9	♦ALP	269 - 66
MT3486B2P1I-S1	♦ALP	269 - 67
MT3486B2P1I-S2	♦ALP	269 - 68
MT3486B2P1I-S3	♦ALP	269 - 69
MT3486B2P1I-S9	♦ALP	269 - 70
MT3486B2P1N-S1	♦ALP	269 - 71
MT3486B2P1N-S2	♦ALP	269 - 72
MT3486B2P1N-S3	♦ALP	269 - 73
MT3486B2P1N-S9	♦ALP	269 - 74
MT3486B2P2I-S1	♦ALP	269 - 75
MT3486B2P2I-S2	♦ALP	269 - 76
MT3486B2P2I-S3	♦ALP	269 - 77
MT3486B2P2I-S9	♦ALP	269 - 78
MT3486B2P2N-S1	♦ALP	269 - 79
MT3486B2P2N-S2	♦ALP	269 - 80
MT3486B2P2N-S3	♦ALP	269 - 81
MT3486B2P2N-S9	♦ALP	269 - 82
MT3486B2P3I-S1	♦ALP	269 - 83
MT3486B2P3I-S2	♦ALP	269 - 84
MT3486B2P3I-S3	♦ALP	269 - 85
MT3486B2P3I-S9	♦ALP	269 - 86
MT3486B2P3N-S1	♦ALP	269 - 87
MT3486B2P3N-S2	♦ALP	269 - 88
MT3486B2P3N-S3	♦ALP	269 - 89
MT3486B2P3N-S9	♦ALP	269 - 90
MT3486B-P1I-S1	♦ALP	269 - 91
MT3486B-P1I-S2	♦ALP	269 - 92
MT3486B-P1I-S3	♦ALP	269 - 93
MT3486B-P1I-S9	♦ALP	269 - 94
MT3486B-P1N-S1	♦ALP	269 - 95
MT3486B-P1N-S2	♦ALP	269 - 96
MT3486B-P1N-S3	♦ALP	269 - 97
MT3486B-P1N-S9	♦ALP	269 - 98
MT3486B-P2I-S1	♦ALP	269 - 99
MT3486B-P2I-S2	♦ALP	269 -100
MT3486B-P2I-S3	♦ALP	269 -101
MT3486B-P2I-S9	♦ALP	269 -102
MT3486B-P2N-S1	♦ALP	269 -103
MT3486B-P2N-S2	♦ALP	269 -104
MT3486B-P2N-S3	♦ALP	269 -105
MT3486B-P2N-S9	♦ALP	269 -106
MT3486B-P3I-S1	♦ALP	269 -107
MT3486B-P3I-S2	♦ALP	269 -108
MT3486B-P3I-S3	♦ALP	269 -109
MT3486B-P3I-S9	♦ALP	269 -110
MT3486B-P3N-S1	♦ALP	270 - 1
MT3486B-P3N-S2	♦ALP	270 - 2
MT3486B-P3N-S3	♦ALP	270 - 3
MT3486B-P3N-S9	♦ALP	270 - 4
MT3486C-P1I-S1	♦ALP	270 - 5
MT3486C-P1I-S2	♦ALP	270 - 6
MT3486C-P1I-S3	♦ALP	270 - 7
MT3486C-P1I-S9	♦ALP	270 - 8
MT3486C-P1N-S1	♦ALP	270 - 9
MT3486C-P1N-S2	♦ALP	270 - 10
MT3486C-P1N-S3	♦ALP	270 - 11
MT3486C-P1N-S9	♦ALP	270 - 12
MT3486C-P2I-S1	♦ALP	270 - 13
MT3486C-P2I-S2	♦ALP	270 - 14
MT3486C-P2I-S3	♦ALP	270 - 15
MT3486C-P2I-S9	♦ALP	270 - 16
MT3486C-P2N-S1	♦ALP	270 - 17
MT3486C-P2N-S2	♦ALP	270 - 18
MT3486C-P2N-S3	♦ALP	270 - 19
MT3486C-P2N-S9	♦ALP	270 - 20
MT3486C-P3I-S1	♦ALP	270 - 21
MT3486C-P3I-S2	♦ALP	270 - 22
MT3486C-P3I-S3	♦ALP	270 - 23
MT3486C-P3I-S9	♦ALP	270 - 24
MT3486C-P3N-S1	♦ALP	270 - 25
MT3486C-P3N-S2	♦ALP	270 - 26
MT3486C-P3N-S3	♦ALP	270 - 27
MT3486C-P3N-S9	♦ALP	270 - 28
MT3486D1P1I-S1	♦ALP	270 - 29
MT3486D1P1I-S2	♦ALP	270 - 30
MT3486D1P1I-S3	♦ALP	270 - 31
MT3486D1P1I-S9	♦ALP	270 - 32
MT3486D1P1N-S1	♦ALP	270 - 33
MT3486D1P1N-S2	♦ALP	270 - 34
MT3486D1P1N-S3	♦ALP	270 - 35
MT3486D1P1N-S9	♦ALP	270 - 36
MT3486D1P2I-S1	♦ALP	270 - 37
MT3486D1P2I-S2	♦ALP	270 - 38
MT3486D1P2I-S3	♦ALP	270 - 39
MT3486D1P2I-S9	♦ALP	270 - 40
MT3486D1P2N-S1	♦ALP	270 - 41
MT3486D1P2N-S2	♦ALP	270 - 42
MT3486D1P2N-S3	♦ALP	270 - 43
MT3486D1P2N-S9	♦ALP	270 - 44
MT3486D1P3I-S1	♦ALP	270 - 45
MT3486D1P3I-S2	♦ALP	270 - 46
MT3486D1P3I-S3	♦ALP	270 - 47
MT3486D1P3I-S9	♦ALP	270 - 48
MT3486D1P3N-S1	♦ALP	270 - 49
MT3486D1P3N-S2	♦ALP	270 - 50
MT3486D1P3N-S3	♦ALP	270 - 51
MT3486D1P3N-S9	♦ALP	270 - 52
MT3486D-P1I-S1	♦ALP	270 - 53
MT3486D-P1I-S2	♦ALP	270 - 54
MT3486D-P1I-S3	♦ALP	270 - 55
MT3486D-P1I-S9	♦ALP	270 - 56
MT3486D-P1N-S1	♦ALP	270 - 57
MT3486D-P1N-S2	♦ALP	270 - 58
MT3486D-P1N-S3	♦ALP	270 - 59
MT3486D-P1N-S9	♦ALP	270 - 60
MT3486D-P2I-S1	♦ALP	270 - 61
MT3486D-P2I-S2	♦ALP	270 - 62
MT3486D-P2I-S3	♦ALP	270 - 63
MT3486D-P2I-S9	♦ALP	270 - 64
MT3486D-P2N-S1	♦ALP	270 - 65
MT3486D-P2N-S2	♦ALP	270 - 66
MT3486D-P2N-S3	♦ALP	270 - 67
MT3486D-P2N-S9	♦ALP	270 - 68
MT3486D-P3I-S1	♦ALP	270 - 69
MT3486D-P3I-S2	♦ALP	270 - 70
MT3486D-P3I-S3	♦ALP	270 - 71
MT3486D-P3I-S9	♦ALP	270 - 72
MT3486D-P3N-S1	♦ALP	270 - 73
MT3486D-P3N-S2	♦ALP	270 - 74
MT3486D-P3N-S3	♦ALP	270 - 75
MT3486D-P3N-S9	♦ALP	270 - 76
MT3486E-P1I-S1	♦ALP	270 - 77
MT3486E-P1I-S2	♦ALP	270 - 78
MT3486E-P1I-S3	♦ALP	270 - 79
MT3486E-P1I-S9	♦ALP	270 - 80
MT3486E-P1N-S1	♦ALP	270 - 81
MT3486E-P1N-S2	♦ALP	270 - 82
MT3486E-P1N-S3	♦ALP	270 - 83
MT3486E-P1N-S9	♦ALP	270 - 84
MT3486E-P2I-S1	♦ALP	270 - 85
MT3486E-P2I-S2	♦ALP	270 - 86
MT3486E-P2I-S3	♦ALP	270 - 87
MT3486E-P2I-S9	♦ALP	270 - 88
MT3486E-P2N-S1	♦ALP	270 - 89
MT3486E-P2N-S2	♦ALP	270 - 90
MT3486E-P2N-S3	♦ALP	270 - 91
MT3486E-P2N-S9	♦ALP	270 - 92
MT3486E-P3I-S1	♦ALP	270 - 93
MT3486E-P3I-S2	♦ALP	270 - 94
MT3486E-P3I-S3	♦ALP	270 - 95
MT3486E-P3I-S9	♦ALP	270 - 96
MT3486E-P3N-S1	♦ALP	270 - 97
MT3486E-P3N-S2	♦ALP	270 - 98
MT3486E-P3N-S3	♦ALP	270 - 99
MT3486E-P3N-S9	♦ALP	270 -100
MT3486F1P1I-S1	♦ALP	270 -101
MT3486F1P1I-S2	♦ALP	270 -102
MT3486F1P1I-S3	♦ALP	270 -103
MT3486F1P1I-S9	♦ALP	270 -104
MT3486F1P1N-S1	♦ALP	270 -105
MT3486F1P1N-S2	♦ALP	270 -106
MT3486F1P1N-S3	♦ALP	270 -107
MT3486F1P1N-S9	♦ALP	270 -108
MT3486F1P2I-S1	♦ALP	270 -109
MT3486F1P2I-S2	♦ALP	270 -110
MT3486F1P2I-S3	♦ALP	271 - 1
MT3486F1P2I-S9	♦ALP	271 - 2
MT3486F1P2N-S1	♦ALP	271 - 3
MT3486F1P2N-S2	♦ALP	271 - 4
MT3486F1P2N-S3	♦ALP	271 - 5
MT3486F1P2N-S9	♦ALP	271 - 6
MT3486F1P3I-S1	♦ALP	271 - 7
MT3486F1P3I-S2	♦ALP	271 - 8
MT3486F1P3I-S3	♦ALP	271 - 9
MT3486F1P3I-S9	♦ALP	271 - 10
MT3486F1P3N-S1	♦ALP	271 - 11
MT3486F1P3N-S2	♦ALP	271 - 12
MT3486F1P3N-S3	♦ALP	271 - 13
MT3486F1P3N-S9	♦ALP	271 - 14
MT3486H1P1I-S1	♦ALP	271 - 15
MT3486H1P1I-S2	♦ALP	271 - 16
MT3486H1P1I-S3	♦ALP	271 - 17
MT3486H1P1I-S9	♦ALP	271 - 18
MT3486H1P1N-S1	♦ALP	271 - 19
MT3486H1P1N-S2	♦ALP	271 - 20
MT3486H1P1N-S3	♦ALP	271 - 21
MT3486H1P1N-S9	♦ALP	271 - 22
MT3486H1P2I-S1	♦ALP	271 - 23
MT3486H1P2I-S2	♦ALP	271 - 24
MT3486H1P2I-S3	♦ALP	271 - 25
MT3486H1P2I-S9	♦ALP	271 - 26
MT3486H1P2N-S1	♦ALP	271 - 27
MT3486H1P2N-S2	♦ALP	271 - 28
MT3486H1P2N-S3	♦ALP	271 - 29
MT3486H1P2N-S9	♦ALP	271 - 30
MT3486H1P3I-S1	♦ALP	271 - 31
MT3486H1P3I-S2	♦ALP	271 - 32
MT3486H1P3I-S3	♦ALP	271 - 33
MT3486H1P3I-S9	♦ALP	271 - 34
MT3486H1P3N-S1	♦ALP	271 - 35
MT3486H1P3N-S2	♦ALP	271 - 36
MT3486H1P3N-S3	♦ALP	271 - 37
MT3486H1P3N-S9	♦ALP	271 - 38
MT3486H3P1I-S1	♦ALP	271 - 39
MT3486H3P1I-S2	♦ALP	271 - 40
MT3486H3P1I-S3	♦ALP	271 - 41
MT3486H3P1I-S9	♦ALP	271 - 42
MT3486H3P1N-S1	♦ALP	271 - 43
MT3486H3P1N-S2	♦ALP	271 - 44
MT3486H3P1N-S3	♦ALP	271 - 45
MT3486H3P1N-S9	♦ALP	271 - 46
MT3486H3P2I-S1	♦ALP	271 - 47
MT3486H3P2I-S2	♦ALP	271 - 48
MT3486H3P2I-S3	♦ALP	271 - 49
MT3486H3P2I-S9	♦ALP	271 - 50
MT3486H3P2N-S1	♦ALP	271 - 51
MT3486H3P2N-S2	♦ALP	271 - 52
MT3486H3P2N-S3	♦ALP	271 - 53
MT3486H3P2N-S9	♦ALP	271 - 54
MT3486H3P3I-S1	♦ALP	271 - 55
MT3486H3P3I-S2	♦ALP	271 - 56

Δ-Registered with JEDEC by this manufacturer

♦-Mfr's data sheet available in microfilm service

1. TYPE No. CROSS INDEX

IN TYPE NUMBER SEQUENCE

TYPE No.	MFRS	Pg&Line
MT3486H3P3I-S3	♦ALP	271 - 57
MT3486H3P3I-S9	♦ALP	271 - 58
MT3486H3P3N-S1	♦ALP	271 - 59
MT3486H3P3N-S2	♦ALP	271 - 60
MT3486H3P3N-S3	♦ALP	271 - 61
MT3486H3P3N-S9	♦ALP	271 - 62
MT3486H4P1I-S1	♦ALP	271 - 63
MT3486H4P1I-S2	♦ALP	271 - 64
MT3486H4P1I-S3	♦ALP	271 - 65
MT3486H4P1I-S9	♦ALP	271 - 66
MT3486H4P1N-S1	♦ALP	271 - 67
MT3486H4P1N-S2	♦ALP	271 - 68
MT3486H4P1N-S3	♦ALP	271 - 69
MT3486H4P1N-S9	♦ALP	271 - 70
MT3486H4P2I-S1	♦ALP	271 - 71
MT3486H4P2I-S2	♦ALP	271 - 72
MT3486H4P2I-S3	♦ALP	271 - 73
MT3486H4P2I-S9	♦ALP	271 - 74
MT3486H4P2N-S1	♦ALP	271 - 75
MT3486H4P2N-S2	♦ALP	271 - 76
MT3486H4P2N-S3	♦ALP	271 - 77
MT3486H4P2N-S9	♦ALP	271 - 78
MT3486H4P3I-S1	♦ALP	271 - 79
MT3486H4P3I-S2	♦ALP	271 - 80
MT3486H4P3I-S3	♦ALP	271 - 81
MT3486H4P3I-S9	♦ALP	271 - 82
MT3486H4P3N-S1	♦ALP	271 - 83
MT3486H4P3N-S2	♦ALP	271 - 84
MT3486H4P3N-S3	♦ALP	271 - 85
MT3486H4P3N-S9	♦ALP	271 - 86
MT3486H-P1I-S1	♦ALP	271 - 87
MT3486H-P1I-S2	♦ALP	271 - 88
MT3486H-P1I-S3	♦ALP	271 - 89
MT3486H-P1I-S9	♦ALP	271 - 90
MT3486H-P1N-S1	♦ALP	271 - 91
MT3486H-P1N-S2	♦ALP	271 - 92
MT3486H-P1N-S3	♦ALP	271 - 93
MT3486H-P1N-S9	♦ALP	271 - 94
MT3486H-P2I-S1	♦ALP	271 - 95
MT3486H-P2I-S2	♦ALP	271 - 96
MT3486H-P2I-S3	♦ALP	271 - 97
MT3486H-P2I-S9	♦ALP	271 - 98
MT3486H-P2N-S1	♦ALP	271 - 99
MT3486H-P2N-S2	♦ALP	271 -100
MT3486H-P2N-S3	♦ALP	271 -101
MT3486H-P2N-S9	♦ALP	271 -102
MT3486H-P3I-S1	♦ALP	271 -103
MT3486H-P3I-S2	♦ALP	271 -104
MT3486H-P3I-S3	♦ALP	271 -105
MT3486H-P3I-S9	♦ALP	271 -106
MT3486H-P3N-S1	♦ALP	271 -107
MT3486H-P3N-S2	♦ALP	271 -108
MT3486H-P3N-S3	♦ALP	271 -109
MT3486H-P3N-S9	♦ALP	271 -110
MT3497A-P1I	♦ALP	272 - 1
MT3497A-P1N	♦ALP	272 - 2
MT3497A-P2I	♦ALP	272 - 3
MT3497A-P2N	♦ALP	272 - 4
MT3497A-P3I	♦ALP	272 - 5
MT3497A-P3N	♦ALP	272 - 6
MT3497D1P1I	♦ALP	272 - 7
MT3497D1P1N	♦ALP	272 - 8
MT3497D1P2I	♦ALP	272 - 9
MT3497D1P2N	♦ALP	272 - 10
MT3497D1P3I	♦ALP	272 - 11
MT3497D1P3N	♦ALP	272 - 12
MT3497E-P1I	♦ALP	272 - 13
MT3497E-P1N	♦ALP	272 - 14
MT3497E-P2I	♦ALP	272 - 15
MT3497E-P2N	♦ALP	272 - 16
MT3497E-P3I	♦ALP	272 - 17
MT3497E-P3N	♦ALP	272 - 18
MT3497H3P1I	♦ALP	272 - 19
MT3497H3P1N	♦ALP	272 - 20
MT3497H3P2I	♦ALP	272 - 21
MT3497H3P2N	♦ALP	272 - 22
MT3497H3P3I	♦ALP	272 - 23
MT3497H3P3N	♦ALP	272 - 24
MT3497H-P1I	♦ALP	272 - 25
MT3497H-P1N	♦ALP	272 - 26
MT3497H-P2I	♦ALP	272 - 27
MT3497H-P2N	♦ALP	272 - 28
MT3497H-P3I	♦ALP	272 - 29
MT3497H-P3N	♦ALP	272 - 30
MT3498A-P1I	♦ALP	272 - 31
MT3498A-P1N	♦ALP	272 - 32
MT3498A-P2I	♦ALP	272 - 33
MT3498A-P2N	♦ALP	272 - 34
MT3498A-P3I	♦ALP	272 - 35
MT3498A-P3N	♦ALP	272 - 36
MT3498D1P1I	♦ALP	272 - 37
MT3498D1P1N	♦ALP	272 - 38
MT3498D1P2I	♦ALP	272 - 39
MT3498D1P2N	♦ALP	272 - 40
MT3498D1P3I	♦ALP	272 - 41
MT3498D1P3N	♦ALP	272 - 42
MT3498E-P1I	♦ALP	272 - 43
MT3498E-P1N	♦ALP	272 - 44
MT3498E-P2I	♦ALP	272 - 45
MT3498E-P2N	♦ALP	272 - 46
MT3498E-P3I	♦ALP	272 - 47
MT3498E-P3N	♦ALP	272 - 48
MT3498H3P1I	♦ALP	272 - 49
MT3498H3P1N	♦ALP	272 - 50
MT3498H3P2I	♦ALP	272 - 51
MT3498H3P2N	♦ALP	272 - 52
MT3498H3P3I	♦ALP	272 - 53
MT3498H3P3N	♦ALP	272 - 54
MT3498H-P1I	♦ALP	272 - 55
MT3498H-P1N	♦ALP	272 - 56
MT3498H-P2I	♦ALP	272 - 57
MT3498H-P2N	♦ALP	272 - 58
MT3498H-P3I	♦ALP	272 - 59
MT3498H-P3N	♦ALP	272 - 60
MT3580A4P1C1S1	♦ALP	272 - 61
MT3580A4P1C1S2	♦ALP	272 - 62
MT3580A4P1C1S3	♦ALP	272 - 63
MT3580A4P1C2S1	♦ALP	272 - 64
MT3580A4P1C2S2	♦ALP	272 - 65
MT3580A4P1C2S3	♦ALP	272 - 66
MT3580A4P2C1S1	♦ALP	272 - 67
MT3580A4P2C1S2	♦ALP	272 - 68
MT3580A4P2C1S3	♦ALP	272 - 69
MT3580A4P2C2S1	♦ALP	272 - 70
MT3580A4P2C2S2	♦ALP	272 - 71
MT3580A4P2C2S3	♦ALP	272 - 72
MT3580A4P3C1S1	♦ALP	272 - 73
MT3580A4P3C1S2	♦ALP	272 - 74
MT3580A4P3C1S3	♦ALP	272 - 75
MT3580A4P3C2S1	♦ALP	272 - 76
MT3580A4P3C2S2	♦ALP	272 - 77
MT3580A4P3C2S3	♦ALP	272 - 78
MT3580A-P1C1S1	♦ALP	272 - 79
MT3580A-P1C1S2	♦ALP	272 - 80
MT3580A-P1C1S3	♦ALP	272 - 81
MT3580A-P1C2S1	♦ALP	272 - 82
MT3580A-P1C2S2	♦ALP	272 - 83
MT3580A-P1C2S3	♦ALP	272 - 84
MT3580A-P2C1S1	♦ALP	272 - 85
MT3580A-P2C1S2	♦ALP	272 - 86
MT3580A-P2C1S3	♦ALP	272 - 87
MT3580A-P2C2S1	♦ALP	272 - 88
MT3580A-P2C2S2	♦ALP	272 - 89
MT3580A-P2C2S3	♦ALP	272 - 90
MT3580A-P3C1S1	♦ALP	272 - 91
MT3580A-P3C1S2	♦ALP	272 - 92
MT3580A-P3C1S3	♦ALP	272 - 93
MT3580A-P3C2S1	♦ALP	272 - 94
MT3580A-P3C2S2	♦ALP	272 - 95
MT3580A-P3C2S3	♦ALP	272 - 96
MT3580B2P1C1S1	♦ALP	272 - 97
MT3580B2P1C1S2	♦ALP	272 - 98
MT3580B2P1C1S3	♦ALP	272 - 99
MT3580B2P1C2S1	♦ALP	272 -100
MT3580B2P1C2S2	♦ALP	272 -101
MT3580B2P1C2S3	♦ALP	272 -102
MT3580B2P2C1S1	♦ALP	272 -103
MT3580B2P2C1S2	♦ALP	272 -104
MT3580B2P2C1S3	♦ALP	272 -105
MT3580B2P2C2S1	♦ALP	272 -106
MT3580B2P2C2S2	♦ALP	272 -107
MT3580B2P2C2S3	♦ALP	272 -108
MT3580B2P3C1S1	♦ALP	272 -109
MT3580B2P3C1S2	♦ALP	272 -110
MT3580B2P3C1S3	♦ALP	273 - 1
MT3580B2P3C2S1	♦ALP	273 - 2
MT3580B2P3C2S2	♦ALP	273 - 3
MT3580B2P3C2S3	♦ALP	273 - 4
MT3580B-P1C1S1	♦ALP	273 - 5
MT3580B-P1C1S2	♦ALP	273 - 6
MT3580B-P1C1S3	♦ALP	273 - 7
MT3580B-P1C2S1	♦ALP	273 - 8
MT3580B-P1C2S2	♦ALP	273 - 9
MT3580B-P1C2S3	♦ALP	273 - 10
MT3580B-P2C1S1	♦ALP	273 - 11
MT3580B-P2C1S2	♦ALP	273 - 12
MT3580B-P2C1S3	♦ALP	273 - 13
MT3580B-P2C2S1	♦ALP	273 - 14
MT3580B-P2C2S2	♦ALP	273 - 15
MT3580B-P2C2S3	♦ALP	273 - 16
MT3580B-P3C1S1	♦ALP	273 - 17
MT3580B-P3C1S2	♦ALP	273 - 18
MT3580B-P3C1S3	♦ALP	273 - 19
MT3580B-P3C2S1	♦ALP	273 - 20
MT3580B-P3C2S2	♦ALP	273 - 21
MT3580B-P3C2S3	♦ALP	273 - 22
MT3580C-P1C1S1	♦ALP	273 - 23
MT3580C-P1C1S2	♦ALP	273 - 24
MT3580C-P1C1S3	♦ALP	273 - 25
MT3580C-P1C2S1	♦ALP	273 - 26
MT3580C-P1C2S2	♦ALP	273 - 27
MT3580C-P1C2S3	♦ALP	273 - 28
MT3580C-P2C1S1	♦ALP	273 - 29
MT3580C-P2C1S2	♦ALP	273 - 30
MT3580C-P2C1S3	♦ALP	273 - 31
MT3580C-P2C2S1	♦ALP	273 - 32
MT3580C-P2C2S2	♦ALP	273 - 33
MT3580C-P2C2S3	♦ALP	273 - 34
MT3580C-P3C1S1	♦ALP	273 - 35
MT3580C-P3C1S2	♦ALP	273 - 36
MT3580C-P3C1S3	♦ALP	273 - 37
MT3580C-P3C2S1	♦ALP	273 - 38
MT3580C-P3C2S2	♦ALP	273 - 39
MT3580C-P3C2S3	♦ALP	273 - 40
MT3580D1P1C1S1	♦ALP	273 - 41
MT3580D1P1C1S2	♦ALP	273 - 42
MT3580D1P1C1S3	♦ALP	273 - 43
MT3580D1P1C2S1	♦ALP	273 - 44
MT3580D1P1C2S2	♦ALP	273 - 45
MT3580D1P1C2S3	♦ALP	273 - 46
MT3580D1P2C1S1	♦ALP	273 - 47
MT3580D1P2C1S2	♦ALP	273 - 48
MT3580D1P2C1S3	♦ALP	273 - 49
MT3580D1P2C2S1	♦ALP	273 - 50
MT3580D1P2C2S2	♦ALP	273 - 51
MT3580D1P2C2S3	♦ALP	273 - 52
MT3580D1P3C1S1	♦ALP	273 - 53
MT3580D1P3C1S2	♦ALP	273 - 54
MT3580D1P3C1S3	♦ALP	273 - 55
MT3580D1P3C2S1	♦ALP	273 - 56
MT3580D1P3C2S2	♦ALP	273 - 57
MT3580D1P3C2S3	♦ALP	273 - 58
MT3580D-P1C1S1	♦ALP	273 - 59
MT3580D-P1C1S2	♦ALP	273 - 60
MT3580D-P1C1S3	♦ALP	273 - 61
MT3580D-P1C2S1	♦ALP	273 - 62
MT3580D-P1C2S2	♦ALP	273 - 63
MT3580D-P1C2S3	♦ALP	273 - 64
MT3580D-P2C1S1	♦ALP	273 - 65
MT3580D-P2C1S2	♦ALP	273 - 66
MT3580D-P2C1S3	♦ALP	273 - 67
MT3580D-P2C2S1	♦ALP	273 - 68
MT3580D-P2C2S2	♦ALP	273 - 69
MT3580D-P2C2S3	♦ALP	273 - 70
MT3580D-P3C1S1	♦ALP	273 - 71
MT3580D-P3C1S2	♦ALP	273 - 72
MT3580D-P3C1S3	♦ALP	273 - 73
MT3580D-P3C2S1	♦ALP	273 - 74
MT3580D-P3C2S2	♦ALP	273 - 75
MT3580D-P3C2S3	♦ALP	273 - 76
MT3580E-P1C1S1	♦ALP	273 - 77
MT3580E-P1C1S2	♦ALP	273 - 78
MT3580E-P1C1S3	♦ALP	273 - 79
MT3580E-P1C2S1	♦ALP	273 - 80
MT3580E-P1C2S2	♦ALP	273 - 81
MT3580E-P1C2S3	♦ALP	273 - 82
MT3580E-P2C1S1	♦ALP	273 - 83
MT3580E-P2C1S2	♦ALP	273 - 84
MT3580E-P2C1S3	♦ALP	273 - 85
MT3580E-P2C2S1	♦ALP	273 - 86
MT3580E-P2C2S2	♦ALP	273 - 87
MT3580E-P2C2S3	♦ALP	273 - 88
MT3580E-P3C1S1	♦ALP	273 - 89
MT3580E-P3C1S2	♦ALP	273 - 90
MT3580E-P3C1S3	♦ALP	273 - 91
MT3580E-P3C2S1	♦ALP	273 - 92
MT3580E-P3C2S2	♦ALP	273 - 93
MT3580E-P3C2S3	♦ALP	273 - 94
MT3580F1P1C1S1	♦ALP	273 - 95
MT3580F1P1C1S2	♦ALP	273 - 96
MT3580F1P1C1S3	♦ALP	273 - 97
MT3580F1P1C2S1	♦ALP	273 - 98
MT3580F1P1C2S2	♦ALP	273 - 99
MT3580F1P1C2S3	♦ALP	273 -100
MT3580F1P2C1S1	♦ALP	273 -101
MT3580F1P2C1S2	♦ALP	273 -102
MT3580F1P2C1S3	♦ALP	273 -103
MT3580F1P2C2S1	♦ALP	273 -104
MT3580F1P2C2S2	♦ALP	273 -105
MT3580F1P2C2S3	♦ALP	273 -106
MT3580F1P3C1S1	♦ALP	273 -107
MT3580F1P3C1S2	♦ALP	273 -108
MT3580F1P3C1S3	♦ALP	273 -109
MT3580F1P3C2S1	♦ALP	273 -110
MT3580F1P3C2S2	♦ALP	274 - 1
MT3580F1P3C2S3	♦ALP	274 - 2
MT3580H1P1C1S1	♦ALP	274 - 3
MT3580H1P1C1S2	♦ALP	274 - 4
MT3580H1P1C1S3	♦ALP	274 - 5
MT3580H1P1C2S1	♦ALP	274 - 6
MT3580H1P1C2S2	♦ALP	274 - 7
MT3580H1P1C2S3	♦ALP	274 - 8
MT3580H1P2C1S1	♦ALP	274 - 9
MT3580H1P2C1S2	♦ALP	274 - 10
MT3580H1P2C1S3	♦ALP	274 - 11
MT3580H1P2C2S1	♦ALP	274 - 12
MT3580H1P2C2S2	♦ALP	274 - 13
MT3580H1P2C2S3	♦ALP	274 - 14
MT3580H1P3C1S1	♦ALP	274 - 15
MT3580H1P3C1S2	♦ALP	274 - 16
MT3580H1P3C1S3	♦ALP	274 - 17
MT3580H1P3C2S1	♦ALP	274 - 18
MT3580H1P3C2S2	♦ALP	274 - 19
MT3580H1P3C2S3	♦ALP	274 - 20
MT3580H3P1C1S1	♦ALP	274 - 21
MT3580H3P1C1S2	♦ALP	274 - 22
MT3580H3P1C1S3	♦ALP	274 - 23
MT3580H3P1C2S1	♦ALP	274 - 24
MT3580H3P1C2S2	♦ALP	274 - 25
MT3580H3P1C2S3	♦ALP	274 - 26
MT3580H3P2C1S1	♦ALP	274 - 27
MT3580H3P2C1S2	♦ALP	274 - 28
MT3580H3P2C1S3	♦ALP	274 - 29
MT3580H3P2C2S1	♦ALP	274 - 30
MT3580H3P2C2S2	♦ALP	274 - 31
MT3580H3P2C2S3	♦ALP	274 - 32
MT3580H3P3C1S1	♦ALP	274 - 33
MT3580H3P3C1S2	♦ALP	274 - 34
MT3580H3P3C1S3	♦ALP	274 - 35
MT3580H3P3C2S1	♦ALP	274 - 36
MT3580H3P3C2S2	♦ALP	274 - 37
MT3580H3P3C2S3	♦ALP	274 - 38
MT3580H4P1C1S1	♦ALP	274 - 39
MT3580H4P1C1S2	♦ALP	274 - 40
MT3580H4P1C1S3	♦ALP	274 - 41

Δ-Registered with JEDEC by this manufacturer

♦-Mfr's data sheet available in microfilm service

1. TYPE No. CROSS INDEX

IN TYPE NUMBER SEQUENCE

TYPE No.	MFRS	Pg&Line
MT3580H4P1C2S1	♦ALP	274 - 42
MT3580H4P1C2S2	♦ALP	274 - 43
MT3580H4P1C2S3	♦ALP	274 - 44
MT3580H4P2C1S1	♦ALP	274 - 45
MT3580H4P2C1S2	♦ALP	274 - 46
MT3580H4P2C1S3	♦ALP	274 - 47
MT3580H4P2C2S1	♦ALP	274 - 48
MT3580H4P2C2S2	♦ALP	274 - 49
MT3580H4P2C2S3	♦ALP	274 - 50
MT3580H4P3C1S1	♦ALP	274 - 51
MT3580H4P3C1S2	♦ALP	274 - 52
MT3580H4P3C1S3	♦ALP	274 - 53
MT3580H4P3C2S1	♦ALP	274 - 54
MT3580H4P3C2S2	♦ALP	274 - 55
MT3580H4P3C2S3	♦ALP	274 - 56
MT3580H-P1C1S1	♦ALP	274 - 57
MT3580H-P1C1S2	♦ALP	274 - 58
MT3580H-P1C1S3	♦ALP	274 - 59
MT3580H-P1C2S1	♦ALP	274 - 60
MT3580H-P1C2S2	♦ALP	274 - 61
MT3580H-P1C2S3	♦ALP	274 - 62
MT3580H-P2C1S1	♦ALP	274 - 63
MT3580H-P2C1S2	♦ALP	274 - 64
MT3580H-P2C1S3	♦ALP	274 - 65
MT3580H-P2C2S1	♦ALP	274 - 66
MT3580H-P2C2S2	♦ALP	274 - 67
MT3580H-P2C2S3	♦ALP	274 - 68
MT3580H-P3C1S1	♦ALP	274 - 69
MT3580H-P3C1S2	♦ALP	274 - 70
MT3580H-P3C1S3	♦ALP	274 - 71
MT3580H-P3C2S1	♦ALP	274 - 72
MT3580H-P3C2S2	♦ALP	274 - 73
MT3580H-P3C2S3	♦ALP	274 - 74
MT3581A4P1C1S1	♦ALP	274 - 75
MT3581A4P1C1S2	♦ALP	274 - 76
MT3581A4P1C1S3	♦ALP	274 - 77
MT3581A4P1C2S1	♦ALP	274 - 78
MT3581A4P1C2S2	♦ALP	274 - 79
MT3581A4P1C2S3	♦ALP	274 - 80
MT3581A4P2C1S1	♦ALP	274 - 81
MT3581A4P2C1S2	♦ALP	274 - 82
MT3581A4P2C1S3	♦ALP	274 - 83
MT3581A4P2C2S1	♦ALP	274 - 84
MT3581A4P2C2S2	♦ALP	274 - 85
MT3581A4P2C2S3	♦ALP	274 - 86
MT3581A4P3C1S1	♦ALP	274 - 87
MT3581A4P3C1S2	♦ALP	274 - 88
MT3581A4P3C1S3	♦ALP	274 - 89
MT3581A4P3C2S1	♦ALP	274 - 90
MT3581A4P3C2S2	♦ALP	274 - 91
MT3581A4P3C2S3	♦ALP	274 - 92
MT3581A-P1C1S1	♦ALP	274 - 93
MT3581A-P1C1S2	♦ALP	274 - 94
MT3581A-P1C1S3	♦ALP	274 - 95
MT3581A-P1C2S1	♦ALP	274 - 96
MT3581A-P1C2S2	♦ALP	274 - 97
MT3581A-P1C2S3	♦ALP	274 - 98
MT3581A-P2C1S1	♦ALP	274 - 99
MT3581A-P2C1S2	♦ALP	274 -100
MT3581A-P2C1S3	♦ALP	274 -101
MT3581A-P2C2S1	♦ALP	274 -102
MT3581A-P2C2S2	♦ALP	274 -103
MT3581A-P2C2S3	♦ALP	274 -104
MT3581A-P3C1S1	♦ALP	274 -105
MT3581A-P3C1S2	♦ALP	274 -106
MT3581A-P3C1S3	♦ALP	274 -107
MT3581A-P3C2S1	♦ALP	274 -108
MT3581A-P3C2S2	♦ALP	274 -109
MT3581A-P3C2S3	♦ALP	274 -110
MT3581B2P1C1S1	♦ALP	275 - 1
MT3581B2P1C1S2	♦ALP	275 - 2
MT3581B2P1C1S3	♦ALP	275 - 3
MT3581B2P1C2S1	♦ALP	275 - 4
MT3581B2P1C2S2	♦ALP	275 - 5
MT3581B2P1C2S3	♦ALP	275 - 6
MT3581B2P2C1S1	♦ALP	275 - 7
MT3581B2P2C1S2	♦ALP	275 - 8
MT3581B2P2C1S3	♦ALP	275 - 9
MT3581B2P2C2S1	♦ALP	275 - 10
MT3581B2P2C2S2	♦ALP	275 - 11
MT3581B2P2C2S3	♦ALP	275 - 12
MT3581B2P3C1S1	♦ALP	275 - 13
MT3581B2P3C1S2	♦ALP	275 - 14
MT3581B2P3C1S3	♦ALP	275 - 15
MT3581B2P3C2S1	♦ALP	275 - 16
MT3581B2P3C2S2	♦ALP	275 - 17
MT3581B2P3C2S3	♦ALP	275 - 18
MT3581B-P1C1S1	♦ALP	275 - 19
MT3581B-P1C1S2	♦ALP	275 - 20
MT3581B-P1C1S3	♦ALP	275 - 21
MT3581B-P1C2S1	♦ALP	275 - 22
MT3581B-P1C2S2	♦ALP	275 - 23
MT3581B-P1C2S3	♦ALP	275 - 24
MT3581B-P2C1S1	♦ALP	275 - 25
MT3581B-P2C1S2	♦ALP	275 - 26
MT3581B-P2C1S3	♦ALP	275 - 27
MT3581B-P2C2S1	♦ALP	275 - 28
MT3581B-P2C2S2	♦ALP	275 - 29
MT3581B-P2C2S3	♦ALP	275 - 30
MT3581B-P3C1S1	♦ALP	275 - 31
MT3581B-P3C1S2	♦ALP	275 - 32
MT3581B-P3C1S3	♦ALP	275 - 33
MT3581B-P3C2S1	♦ALP	275 - 34
MT3581B-P3C2S2	♦ALP	275 - 35
MT3581B-P3C2S3	♦ALP	275 - 36
MT3581C-P1C1S1	♦ALP	275 - 37
MT3581C-P1C1S2	♦ALP	275 - 38
MT3581C-P1C1S3	♦ALP	275 - 39
MT3581C-P1C2S1	♦ALP	275 - 40
MT3581C-P1C2S2	♦ALP	275 - 41
MT3581C-P1C2S3	♦ALP	275 - 42
MT3581C-P2C1S1	♦ALP	275 - 43
MT3581C-P2C1S2	♦ALP	275 - 44
MT3581C-P2C1S3	♦ALP	275 - 45
MT3581C-P2C2S1	♦ALP	275 - 46
MT3581C-P2C2S2	♦ALP	275 - 47
MT3581C-P2C2S3	♦ALP	275 - 48
MT3581C-P3C1S1	♦ALP	275 - 49
MT3581C-P3C1S2	♦ALP	275 - 50
MT3581C-P3C1S3	♦ALP	275 - 51
MT3581C-P3C2S1	♦ALP	275 - 52
MT3581C-P3C2S2	♦ALP	275 - 53
MT3581C-P3C2S3	♦ALP	275 - 54
MT3581D1P1C1S1	♦ALP	275 - 55
MT3581D1P1C1S2	♦ALP	275 - 56
MT3581D1P1C1S3	♦ALP	275 - 57
MT3581D1P1C2S1	♦ALP	275 - 58
MT3581D1P1C2S2	♦ALP	275 - 59
MT3581D1P1C2S3	♦ALP	275 - 60
MT3581D1P2C1S1	♦ALP	275 - 61
MT3581D1P2C1S2	♦ALP	275 - 62
MT3581D1P2C1S3	♦ALP	275 - 63
MT3581D1P2C2S1	♦ALP	275 - 64
MT3581D1P2C2S2	♦ALP	275 - 65
MT3581D1P2C2S3	♦ALP	275 - 66
MT3581D1P3C1S1	♦ALP	275 - 67
MT3581D1P3C1S2	♦ALP	275 - 68
MT3581D1P3C1S3	♦ALP	275 - 69
MT3581D1P3C2S1	♦ALP	275 - 70
MT3581D1P3C2S2	♦ALP	275 - 71
MT3581D1P3C2S3	♦ALP	275 - 72
MT3581D-P1C1S1	♦ALP	275 - 73
MT3581D-P1C1S2	♦ALP	275 - 74
MT3581D-P1C1S3	♦ALP	275 - 75
MT3581D-P1C2S1	♦ALP	275 - 76
MT3581D-P1C2S2	♦ALP	275 - 77
MT3581D-P1C2S3	♦ALP	275 - 78
MT3581D-P2C1S1	♦ALP	275 - 79
MT3581D-P2C1S2	♦ALP	275 - 80
MT3581D-P2C1S3	♦ALP	275 - 81
MT3581D-P2C2S1	♦ALP	275 - 82
MT3581D-P2C2S2	♦ALP	275 - 83
MT3581D-P2C2S3	♦ALP	275 - 84
MT3581D-P3C1S1	♦ALP	275 - 85
MT3581D-P3C1S2	♦ALP	275 - 86
MT3581D-P3C1S3	♦ALP	275 - 87
MT3581D-P3C2S1	♦ALP	275 - 88
MT3581D-P3C2S2	♦ALP	275 - 89
MT3581D-P3C2S3	♦ALP	275 - 90
MT3581E-P1C1S1	♦ALP	275 - 91
MT3581E-P1C1S2	♦ALP	275 - 92
MT3581E-P1C1S3	♦ALP	275 - 93
MT3581E-P1C2S1	♦ALP	275 - 94
MT3581E-P1C2S2	♦ALP	275 - 95
MT3581E-P1C2S3	♦ALP	275 - 96
MT3581E-P2C1S1	♦ALP	275 - 97
MT3581E-P2C1S2	♦ALP	275 - 98
MT3581E-P2C1S3	♦ALP	275 - 99
MT3581E-P2C2S1	♦ALP	275 -100
MT3581E-P2C2S2	♦ALP	275 -101
MT3581E-P2C2S3	♦ALP	275 -102
MT3581E-P3C1S1	♦ALP	275 -103
MT3581E-P3C1S2	♦ALP	275 -104
MT3581E-P3C1S3	♦ALP	275 -105
MT3581E-P3C2S1	♦ALP	275 -106
MT3581E-P3C2S2	♦ALP	275 -107
MT3581E-P3C2S3	♦ALP	275 -108
MT3581F1P1C1S1	♦ALP	275 -109
MT3581F1P1C1S2	♦ALP	275 -110
MT3581F1P1C1S3	♦ALP	276 - 1
MT3581F1P1C2S1	♦ALP	276 - 2
MT3581F1P1C2S2	♦ALP	276 - 3
MT3581F1P1C2S3	♦ALP	276 - 4
MT3581F1P2C1S1	♦ALP	276 - 5
MT3581F1P2C1S2	♦ALP	276 - 6
MT3581F1P2C1S3	♦ALP	276 - 7
MT3581F1P2C2S1	♦ALP	276 - 8
MT3581F1P2C2S2	♦ALP	276 - 9
MT3581F1P2C2S3	♦ALP	276 - 10
MT3581F1P3C1S1	♦ALP	276 - 11
MT3581F1P3C1S2	♦ALP	276 - 12
MT3581F1P3C1S3	♦ALP	276 - 13
MT3581F1P3C2S1	♦ALP	276 - 14
MT3581F1P3C2S2	♦ALP	276 - 15
MT3581F1P3C2S3	♦ALP	276 - 16
MT3581H1P1C1S1	♦ALP	276 - 17
MT3581H1P1C1S2	♦ALP	276 - 18
MT3581H1P1C1S3	♦ALP	276 - 19
MT3581H1P1C2S1	♦ALP	276 - 20
MT3581H1P1C2S2	♦ALP	276 - 21
MT3581H1P1C2S3	♦ALP	276 - 22
MT3581H1P2C1S1	♦ALP	276 - 23
MT3581H1P2C1S2	♦ALP	276 - 24
MT3581H1P2C1S3	♦ALP	276 - 25
MT3581H1P2C2S1	♦ALP	276 - 26
MT3581H1P2C2S2	♦ALP	276 - 27
MT3581H1P2C2S3	♦ALP	276 - 28
MT3581H1P3C1S1	♦ALP	276 - 29
MT3581H1P3C1S2	♦ALP	276 - 30
MT3581H1P3C1S3	♦ALP	276 - 31
MT3581H1P3C2S1	♦ALP	276 - 32
MT3581H1P3C2S2	♦ALP	276 - 33
MT3581H1P3C2S3	♦ALP	276 - 34
MT3581H3P1C1S1	♦ALP	276 - 35
MT3581H3P1C1S2	♦ALP	276 - 36
MT3581H3P1C1S3	♦ALP	276 - 37
MT3581H3P1C2S1	♦ALP	276 - 38
MT3581H3P1C2S2	♦ALP	276 - 39
MT3581H3P1C2S3	♦ALP	276 - 40
MT3581H3P2C1S1	♦ALP	276 - 41
MT3581H3P2C1S2	♦ALP	276 - 42
MT3581H3P2C1S3	♦ALP	276 - 43
MT3581H3P2C2S1	♦ALP	276 - 44
MT3581H3P2C2S2	♦ALP	276 - 45
MT3581H3P2C2S3	♦ALP	276 - 46
MT3581H3P3C1S1	♦ALP	276 - 47
MT3581H3P3C1S2	♦ALP	276 - 48
MT3581H3P3C1S3	♦ALP	276 - 49
MT3581H3P3C2S1	♦ALP	276 - 50
MT3581H3P3C2S2	♦ALP	276 - 51
MT3581H3P3C2S3	♦ALP	276 - 52
MT3581H4P1C1S1	♦ALP	276 - 53
MT3581H4P1C1S2	♦ALP	276 - 54
MT3581H4P1C1S3	♦ALP	276 - 55
MT3581H4P1C2S1	♦ALP	276 - 56
MT3581H4P1C2S2	♦ALP	276 - 57
MT3581H4P1C2S3	♦ALP	276 - 58
MT3581H4P2C1S1	♦ALP	276 - 59
MT3581H4P2C1S2	♦ALP	276 - 60
MT3581H4P2C1S3	♦ALP	276 - 61
MT3581H4P2C2S1	♦ALP	276 - 62
MT3581H4P2C2S2	♦ALP	276 - 63
MT3581H4P2C2S3	♦ALP	276 - 64
MT3581H4P3C1S1	♦ALP	276 - 65
MT3581H4P3C1S2	♦ALP	276 - 66
MT3581H4P3C1S3	♦ALP	276 - 67
MT3581H4P3C2S1	♦ALP	276 - 68
MT3581H4P3C2S2	♦ALP	276 - 69
MT3581H4P3C2S3	♦ALP	276 - 70
MT3581H-P1C1S1	♦ALP	276 - 71
MT3581H-P1C1S2	♦ALP	276 - 72
MT3581H-P1C1S3	♦ALP	276 - 73
MT3581H-P1C2S1	♦ALP	276 - 74
MT3581H-P1C2S2	♦ALP	276 - 75
MT3581H-P1C2S3	♦ALP	276 - 76
MT3581H-P2C1S1	♦ALP	276 - 77
MT3581H-P2C1S3	♦ALP	276 - 78
MT3581H-P2C2S1	♦ALP	276 - 79
MT3581H-P2C2S2	♦ALP	276 - 80
MT3581H-P2C2S3	♦ALP	276 - 81
MT3581H-P3C1S1	♦ALP	276 - 82
MT3581H-P3C1S2	♦ALP	276 - 83
MT3581H-P3C1S3	♦ALP	276 - 84
MT3581H-P3C2S1	♦ALP	276 - 85
MT3581H-P3C2S2	♦ALP	276 - 86
MT3581H-P3C2S3	♦ALP	276 - 87
MT3583A-P1S1	♦ALP	276 - 88
MT3583A-P1S2	♦ALP	276 - 89
MT3583A-P1S3	♦ALP	276 - 90
MT3583A-P2S1	♦ALP	276 - 91
MT3583A-P2S2	♦ALP	276 - 92
MT3583A-P2S3	♦ALP	276 - 93
MT3583A-P3S1	♦ALP	276 - 94
MT3583A-P3S2	♦ALP	276 - 95
MT3583A-P3S3	♦ALP	276 - 96
MT3583B-P1S1	♦ALP	276 - 97
MT3583B-P1S2	♦ALP	276 - 98
MT3583B-P1S3	♦ALP	276 - 99
MT3583B-P2S1	♦ALP	276 -100
MT3583B-P2S2	♦ALP	276 -101
MT3583B-P2S3	♦ALP	276 -102
MT3583B-P3S1	♦ALP	276 -103
MT3583B-P3S2	♦ALP	276 -104
MT3583B-P3S3	♦ALP	276 -105
MT3583C-P1S1	♦ALP	276 -106
MT3583C-P1S2	♦ALP	276 -107
MT3583C-P1S3	♦ALP	276 -108
MT3583C-P2S1	♦ALP	276 -109
MT3583C-P2S2	♦ALP	276 -110
MT3583C-P2S3	♦ALP	277 - 1
MT3583C-P3S1	♦ALP	277 - 2
MT3583C-P3S2	♦ALP	277 - 3
MT3583C-P3S3	♦ALP	277 - 4
MT3583H4P1S1	♦ALP	277 - 5
MT3583H4P1S2	♦ALP	277 - 6
MT3583H4P1S3	♦ALP	277 - 7
MT3583H4P2S1	♦ALP	277 - 8
MT3583H4P2S2	♦ALP	277 - 9
MT3583H4P2S3	♦ALP	277 - 10
MT3583H4P3S1	♦ALP	277 - 11
MT3583H4P3S2	♦ALP	277 - 12
MT3583H4P3S3	♦ALP	277 - 13
MT3583H-P1S1	♦ALP	277 - 14
MT3583H-P1S2	♦ALP	277 - 15

△-Registered with JEDEC by this manufacturer

♦-Mfr's data sheet available in microfilm service

1. TYPE No. CROSS INDEX

IN TYPE NUMBER SEQUENCE

TYPE No.	MFRS	Pg&Line	TYPE No.	MFRS	Pg&Line	TYPE No.	MFRS	Pg&Line	TYPE No.	MFRS	Pg&Line	TYPE No.	MFRS	Pg&Line
MT3583H-P1S3	♦ALP	277 - 16	MT3586B-P3S3	♦ALP	278 - 20	MT3674H-P2I	♦ALP	279 - 24	MT3680D-P3	♦ALP	280 - 28	MT3684B-P1Q3	♦ALP	281 - 32
MT3583H-P2S1	♦ALP	277 - 17	MT3586C-P1S1	♦ALP	278 - 21	MT3674H-P2N	♦ALP	279 - 25	MT3680E-P1	♦ALP	280 - 29	MT3684B-P2Q1	♦ALP	281 - 33
MT3583H-P2S2	♦ALP	277 - 18	MT3586C-P1S2	♦ALP	278 - 22	MT3674H-P3I	♦ALP	279 - 26	MT3680E-P2	♦ALP	280 - 30	MT3684B-P2Q2	♦ALP	281 - 34
MT3583H-P2S3	♦ALP	277 - 19	MT3586C-P1S3	♦ALP	278 - 23	MT3674H-P3N	♦ALP	279 - 27	MT3680E-P3	♦ALP	280 - 31	MT3684B-P2Q3	♦ALP	281 - 35
MT3583H-P3S1	♦ALP	277 - 20	MT3586C-P2S1	♦ALP	278 - 24	MT3675A-P1I	♦ALP	279 - 28	MT3680F1P1	♦ALP	280 - 32	MT3684B-P3Q1	♦ALP	281 - 36
MT3583H-P3S2	♦ALP	277 - 21	MT3586C-P2S2	♦ALP	278 - 25	MT3675A-P1N	♦ALP	279 - 29	MT3680F1P2	♦ALP	280 - 33	MT3684B-P3Q2	♦ALP	281 - 37
MT3583H-P3S3	♦ALP	277 - 22	MT3586C-P2S3	♦ALP	278 - 26	MT3675A-P2I	♦ALP	279 - 30	MT3680F1P3	♦ALP	280 - 34	MT3684B-P3Q3	♦ALP	281 - 38
MT3584A-P1S1	♦ALP	277 - 23	MT3586C-P3S1	♦ALP	278 - 27	MT3675A-P2N	♦ALP	279 - 31	MT3680H1P1	♦ALP	280 - 35	MT3684C-P1Q1	♦ALP	281 - 39
MT3584A-P1S2	♦ALP	277 - 24	MT3586C-P3S2	♦ALP	278 - 28	MT3675A-P3I	♦ALP	279 - 32	MT3680H1P2	♦ALP	280 - 36	MT3684C-P1Q2	♦ALP	281 - 40
MT3584A-P1S3	♦ALP	277 - 25	MT3586C-P3S3	♦ALP	278 - 29	MT3675A-P3N	♦ALP	279 - 33	MT3680H1P3	♦ALP	280 - 37	MT3684C-P1Q3	♦ALP	281 - 41
MT3584A-P2S1	♦ALP	277 - 26	MT3586H4P1S1	♦ALP	278 - 30	MT3675B2P1I	♦ALP	279 - 34	MT3680H3P1	♦ALP	280 - 38	MT3684C-P2Q1	♦ALP	281 - 42
MT3584A-P2S2	♦ALP	277 - 27	MT3586H4P1S2	♦ALP	278 - 31	MT3675B2P1N	♦ALP	279 - 35	MT3680H3P2	♦ALP	280 - 39	MT3684C-P2Q2	♦ALP	281 - 43
MT3584A-P2S3	♦ALP	277 - 28	MT3586H4P1S3	♦ALP	278 - 32	MT3675B2P2I	♦ALP	279 - 36	MT3680H3P3	♦ALP	280 - 40	MT3684C-P2Q3	♦ALP	281 - 44
MT3584A-P3S1	♦ALP	277 - 29	MT3586H4P2S1	♦ALP	278 - 33	MT3675B2P2N	♦ALP	279 - 37	MT3680H4P1	♦ALP	280 - 41	MT3684C-P3Q1	♦ALP	281 - 45
MT3584A-P3S2	♦ALP	277 - 30	MT3586H4P2S2	♦ALP	278 - 34	MT3675B2P3I	♦ALP	279 - 38	MT3680H4P2	♦ALP	280 - 42	MT3684C-P3Q2	♦ALP	281 - 46
MT3584A-P3S3	♦ALP	277 - 31	MT3586H4P2S3	♦ALP	278 - 35	MT3675B2P3N	♦ALP	279 - 39	MT3680H4P3	♦ALP	280 - 43	MT3684C-P3Q3	♦ALP	281 - 47
MT3584B-P1S1	♦ALP	277 - 32	MT3586H4P3S1	♦ALP	278 - 36	MT3675E-P1I	♦ALP	279 - 40	MT3680H-P1	♦ALP	280 - 44	MT3684H4P1Q1	♦ALP	281 - 48
MT3584B-P1S2	♦ALP	277 - 33	MT3586H4P3S2	♦ALP	278 - 37	MT3675E-P1N	♦ALP	279 - 41	MT3680H-P2	♦ALP	280 - 45	MT3684H4P1Q2	♦ALP	281 - 49
MT3584B-P1S3	♦ALP	277 - 34	MT3586H4P3S3	♦ALP	278 - 38	MT3675E-P2I	♦ALP	279 - 42	MT3680H-P3	♦ALP	280 - 46	MT3684H4P1Q3	♦ALP	281 - 50
MT3584B-P2S1	♦ALP	277 - 35	MT3586H-P1S1	♦ALP	278 - 39	MT3675E-P2N	♦ALP	279 - 43	MT3681A4P1	♦ALP	280 - 47	MT3684H4P2Q1	♦ALP	281 - 51
MT3584B-P2S2	♦ALP	277 - 36	MT3586H-P1S2	♦ALP	278 - 40	MT3675E-P3I	♦ALP	279 - 44	MT3681A4P2	♦ALP	280 - 48	MT3684H4P2Q2	♦ALP	281 - 52
MT3584B-P2S3	♦ALP	277 - 37	MT3586H-P1S3	♦ALP	278 - 41	MT3675E-P3N	♦ALP	279 - 45	MT3681A4P3	♦ALP	280 - 49	MT3684H4P2Q3	♦ALP	281 - 53
MT3584B-P3S1	♦ALP	277 - 38	MT3586H-P2S1	♦ALP	278 - 42	MT3675H3P1I	♦ALP	279 - 46	MT3681A-P1	♦ALP	280 - 50	MT3684H4P3Q1	♦ALP	281 - 54
MT3584B-P3S2	♦ALP	277 - 39	MT3586H-P2S2	♦ALP	278 - 43	MT3675H3P1N	♦ALP	279 - 47	MT3681A-P2	♦ALP	280 - 51	MT3684H4P3Q2	♦ALP	281 - 55
MT3584B-P3S3	♦ALP	277 - 40	MT3586H-P2S3	♦ALP	278 - 44	MT3675H3P2I	♦ALP	279 - 48	MT3681A-P3	♦ALP	280 - 52	MT3684H4P3Q3	♦ALP	281 - 56
MT3584C-P1S1	♦ALP	277 - 41	MT3586H-P3S1	♦ALP	278 - 45	MT3675H3P2N	♦ALP	279 - 49	MT3681B2P1	♦ALP	280 - 53	MT3684H-P1Q1	♦ALP	281 - 57
MT3584C-P1S2	♦ALP	277 - 42	MT3586H-P3S2	♦ALP	278 - 46	MT3675H3P3I	♦ALP	279 - 50	MT3681B2P2	♦ALP	280 - 54	MT3684H-P1Q2	♦ALP	281 - 58
MT3584C-P1S3	♦ALP	277 - 43	MT3586H-P3S3	♦ALP	278 - 47	MT3675H3P3N	♦ALP	279 - 51	MT3681B2P3	♦ALP	280 - 55	MT3684H-P1Q3	♦ALP	281 - 59
MT3584C-P2S1	♦ALP	277 - 44	MT3653A	♦ALP	278 - 48	MT3675H-P1I	♦ALP	279 - 52	MT3681B-P1	♦ALP	280 - 56	MT3684H-P2Q1	♦ALP	281 - 60
MT3584C-P2S2	♦ALP	277 - 45	MT3653B2	♦ALP	278 - 49	MT3675H-P1N	♦ALP	279 - 53	MT3681B-P2	♦ALP	280 - 57	MT3684H-P2Q2	♦ALP	281 - 61
MT3584C-P2S3	♦ALP	277 - 46	MT3653E	♦ALP	278 - 50	MT3675H-P2I	♦ALP	279 - 54	MT3681B-P3	♦ALP	280 - 58	MT3684H-P2Q3	♦ALP	281 - 62
MT3584C-P3S1	♦ALP	277 - 47	MT3653H3	♦ALP	278 - 51	MT3675H-P2N	♦ALP	279 - 55	MT3681C-P1	♦ALP	280 - 59	MT3684H-P3Q1	♦ALP	281 - 63
MT3584C-P3S2	♦ALP	277 - 48	MT3653H	♦ALP	278 - 52	MT3675H-P3I	♦ALP	279 - 56	MT3681C-P2	♦ALP	280 - 60	MT3684H-P3Q2	♦ALP	281 - 64
MT3584C-P3S3	♦ALP	277 - 49	MT3654A	♦ALP	278 - 53	MT3675H-P3N	♦ALP	279 - 57	MT3681C-P3	♦ALP	280 - 61	MT3684H-P3Q3	♦ALP	281 - 65
MT3584H4P1S1	♦ALP	277 - 50	MT3654B2	♦ALP	278 - 54	MT3676A-P1I	♦ALP	279 - 58	MT3681D1P1	♦ALP	280 - 62	MT3685A-P1Q1	♦ALP	281 - 66
MT3584H4P1S2	♦ALP	277 - 51	MT3654E	♦ALP	278 - 55	MT3676A-P1N	♦ALP	279 - 59	MT3681D1P2	♦ALP	280 - 63	MT3685A-P1Q2	♦ALP	281 - 67
MT3584H4P1S3	♦ALP	277 - 52	MT3654H3	♦ALP	278 - 56	MT3676A-P2I	♦ALP	279 - 60	MT3681D1P3	♦ALP	280 - 64	MT3685A-P1Q3	♦ALP	281 - 68
MT3584H4P2S1	♦ALP	277 - 53	MT3654H	♦ALP	278 - 57	MT3676A-P2N	♦ALP	279 - 61	MT3681D-P1	♦ALP	280 - 65	MT3685A-P2Q1	♦ALP	281 - 69
MT3584H4P2S2	♦ALP	277 - 54	MT3655A	♦ALP	278 - 58	MT3676A-P3I	♦ALP	279 - 62	MT3681D-P2	♦ALP	280 - 66	MT3685A-P2Q2	♦ALP	281 - 70
MT3584H4P2S3	♦ALP	277 - 55	MT3655B2	♦ALP	278 - 59	MT3676A-P3N	♦ALP	279 - 63	MT3681D-P3	♦ALP	280 - 67	MT3685A-P2Q3	♦ALP	281 - 71
MT3584H4P3S1	♦ALP	277 - 56	MT3655E	♦ALP	278 - 60	MT3676B2P1I	♦ALP	279 - 64	MT3681E-P1	♦ALP	280 - 68	MT3685A-P3Q1	♦ALP	281 - 72
MT3584H4P3S2	♦ALP	277 - 57	MT3655H3	♦ALP	278 - 61	MT3676B2P1N	♦ALP	279 - 65	MT3681E-P2	♦ALP	280 - 69	MT3685A-P3Q2	♦ALP	281 - 73
MT3584H4P3S3	♦ALP	277 - 58	MT3655H	♦ALP	278 - 62	MT3676B2P2I	♦ALP	279 - 66	MT3681E-P3	♦ALP	280 - 70	MT3685A-P3Q3	♦ALP	281 - 74
MT3584H-P1S1	♦ALP	277 - 59	MT3656A	♦ALP	278 - 63	MT3676B2P2N	♦ALP	279 - 67	MT3681F1P1	♦ALP	280 - 71	MT3685B-P1Q1	♦ALP	281 - 75
MT3584H-P1S2	♦ALP	277 - 60	MT3656B2	♦ALP	278 - 64	MT3676B2P3I	♦ALP	279 - 68	MT3681F1P2	♦ALP	280 - 72	MT3685B-P1Q2	♦ALP	281 - 76
MT3584H-P1S3	♦ALP	277 - 61	MT3656E	♦ALP	278 - 65	MT3676B2P3N	♦ALP	279 - 69	MT3681F1P3	♦ALP	280 - 73	MT3685B-P1Q3	♦ALP	281 - 77
MT3584H-P2S1	♦ALP	277 - 62	MT3656H3	♦ALP	278 - 66	MT3676E-P1I	♦ALP	279 - 70	MT3681H1P1	♦ALP	280 - 74	MT3685B-P2Q1	♦ALP	281 - 78
MT3584H-P2S2	♦ALP	277 - 63	MT3656H	♦ALP	278 - 67	MT3676E-P1N	♦ALP	279 - 71	MT3681H1P2	♦ALP	280 - 75	MT3685B-P2Q2	♦ALP	281 - 79
MT3584H-P2S3	♦ALP	277 - 64	MT3657A	♦ALP	278 - 68	MT3676E-P2I	♦ALP	279 - 72	MT3681H1P3	♦ALP	280 - 76	MT3685B-P2Q3	♦ALP	281 - 80
MT3584H-P3S1	♦ALP	277 - 65	MT3657B2	♦ALP	278 - 69	MT3676E-P2N	♦ALP	279 - 73	MT3681H3P1	♦ALP	280 - 77	MT3685B-P3Q1	♦ALP	281 - 81
MT3584H-P3S2	♦ALP	277 - 66	MT3657E	♦ALP	278 - 70	MT3676E-P3I	♦ALP	279 - 74	MT3681H3P2	♦ALP	280 - 78	MT3685B-P3Q2	♦ALP	281 - 82
MT3584H-P3S3	♦ALP	277 - 67	MT3657H3	♦ALP	278 - 71	MT3676E-P3N	♦ALP	279 - 75	MT3681H3P3	♦ALP	280 - 79	MT3685B-P3Q3	♦ALP	281 - 83
MT3585A-P1S1	♦ALP	277 - 68	MT3657H	♦ALP	278 - 72	MT3676H3P1I	♦ALP	279 - 76	MT3681H4P1	♦ALP	280 - 80	MT3685C-P1Q1	♦ALP	281 - 84
MT3585A-P1S2	♦ALP	277 - 69	MT3666A	♦ALP	278 - 73	MT3676H3P1N	♦ALP	279 - 77	MT3681H4P2	♦ALP	280 - 81	MT3685C-P1Q2	♦ALP	281 - 85
MT3585A-P1S3	♦ALP	277 - 70	MT3666B2	♦ALP	278 - 74	MT3676H3P2I	♦ALP	279 - 78	MT3681H4P3	♦ALP	280 - 82	MT3685C-P1Q3	♦ALP	281 - 86
MT3585A-P2S1	♦ALP	277 - 71	MT3666E	♦ALP	278 - 75	MT3676H3P2N	♦ALP	279 - 79	MT3681H-P1	♦ALP	280 - 83	MT3685C-P2Q1	♦ALP	281 - 87
MT3585A-P2S2	♦ALP	277 - 72	MT3666H3	♦ALP	278 - 76	MT3676H3P3I	♦ALP	279 - 80	MT3681H-P2	♦ALP	280 - 84	MT3685C-P2Q2	♦ALP	281 - 88
MT3585A-P2S3	♦ALP	277 - 73	MT3666H	♦ALP	278 - 77	MT3676H3P3N	♦ALP	279 - 81	MT3681H-P3	♦ALP	280 - 85	MT3685C-P2Q3	♦ALP	281 - 89
MT3585A-P3S1	♦ALP	277 - 74	MT3673A-P1I	♦ALP	278 - 78	MT3676H-P1I	♦ALP	279 - 82	MT3683A-P1Q1	♦ALP	280 - 86	MT3685C-P3Q1	♦ALP	281 - 90
MT3585A-P3S2	♦ALP	277 - 75	MT3673A-P1N	♦ALP	278 - 79	MT3676H-P1N	♦ALP	279 - 83	MT3683A-P1Q2	♦ALP	280 - 87	MT3685C-P3Q2	♦ALP	281 - 91
MT3585A-P3S3	♦ALP	277 - 76	MT3673A-P2I	♦ALP	278 - 80	MT3676H-P2I	♦ALP	279 - 84	MT3683A-P1Q3	♦ALP	280 - 88	MT3685C-P3Q3	♦ALP	281 - 92
MT3585B-P1S1	♦ALP	277 - 77	MT3673A-P2N	♦ALP	278 - 81	MT3676H-P2N	♦ALP	279 - 85	MT3683A-P2Q1	♦ALP	280 - 89	MT3685H4P1Q1	♦ALP	281 - 93
MT3585B-P1S2	♦ALP	277 - 78	MT3673A-P3I	♦ALP	278 - 82	MT3676H-P3I	♦ALP	279 - 86	MT3683A-P2Q2	♦ALP	280 - 90	MT3685H4P1Q2	♦ALP	281 - 94
MT3585B-P1S3	♦ALP	277 - 79	MT3673A-P3N	♦ALP	278 - 83	MT3676H-P3N	♦ALP	279 - 87	MT3683A-P2Q3	♦ALP	280 - 91	MT3685H4P1Q3	♦ALP	281 - 95
MT3585B-P2S1	♦ALP	277 - 80	MT3673B2P1I	♦ALP	278 - 84	MT3677A-P1I	♦ALP	279 - 88	MT3683A-P3Q1	♦ALP	280 - 92	MT3685H4P2Q1	♦ALP	281 - 96
MT3585B-P2S2	♦ALP	277 - 81	MT3673B2P1N	♦ALP	278 - 85	MT3677A-P1N	♦ALP	279 - 89	MT3683A-P3Q2	♦ALP	280 - 93	MT3685H4P2Q2	♦ALP	281 - 97
MT3585B-P2S3	♦ALP	277 - 82	MT3673B2P2I	♦ALP	278 - 86	MT3677A-P2I	♦ALP	279 - 90	MT3683A-P3Q3	♦ALP	280 - 94	MT3685H4P2Q3	♦ALP	281 - 98
MT3585B-P3S1	♦ALP	277 - 83	MT3673B2P2N	♦ALP	278 - 87	MT3677A-P2N	♦ALP	279 - 91	MT3683B-P1Q1	♦ALP	280 - 95	MT3685H4P3Q1	♦ALP	281 - 99
MT3585B-P3S2	♦ALP	277 - 84	MT3673B2P3I	♦ALP	278 - 88	MT3677A-P3I	♦ALP	279 - 92	MT3683B-P1Q2	♦ALP	280 - 96	MT3685H4P3Q2	♦ALP	281 -100
MT3585B-P3S3	♦ALP	277 - 85	MT3673B2P3N	♦ALP	278 - 89	MT3677A-P3N	♦ALP	279 - 93	MT3683B-P1Q3	♦ALP	280 - 97	MT3685H4P3Q3	♦ALP	281 -101
MT3585C-P1S1	♦ALP	277 - 86	MT3673E-P1I	♦ALP	278 - 90	MT3677B2P1I	♦ALP	279 - 94	MT3683B-P2Q1	♦ALP	280 - 98	MT3685H-P1Q1	♦ALP	281 -102
MT3585C-P1S2	♦ALP	277 - 87	MT3673E-P1N	♦ALP	278 - 91	MT3677B2P1N	♦ALP	279 - 95	MT3683B-P2Q2	♦ALP	280 - 99	MT3685H-P1Q2	♦ALP	281 -103
MT3585C-P1S3	♦ALP	277 - 88	MT3673E-P2I	♦ALP	278 - 92	MT3677B2P2I	♦ALP	279 - 96	MT3683B-P2Q3	♦ALP	280 -100	MT3685H-P1Q3	♦ALP	281 -104
MT3585C-P2S1	♦ALP	277 - 89	MT3673E-P2N	♦ALP	278 - 93	MT3677B2P2N	♦ALP	279 - 97	MT3683B-P3Q1	♦ALP	280 -101	MT3685H-P2Q1	♦ALP	281 -105
MT3585C-P2S2	♦ALP	277 - 90	MT3673E-P3I	♦ALP	278 - 94	MT3677B2P3I	♦ALP	279 - 98	MT3683B-P3Q2	♦ALP	280 -102	MT3685H-P2Q2	♦ALP	281 -106
MT3585C-P2S3	♦ALP	277 - 91	MT3673E-P3N	♦ALP	278 - 95	MT3677B2P3N	♦ALP	279 - 99	MT3683B-P3Q3	♦ALP	280 -103	MT3685H-P2Q3	♦ALP	281 -107
MT3585C-P3S1	♦ALP	277 - 92	MT3673H3P1I	♦ALP	278 - 96	MT3677E-P1I	♦ALP	279 -100	MT3683C-P1Q1	♦ALP	280 -104	MT3685H-P3Q1	♦ALP	281 -108
MT3585C-P3S2	♦ALP	277 - 93	MT3673H3P1N	♦ALP	278 - 97	MT3677E-P1N	♦ALP	279 -101	MT3683C-P1Q2	♦ALP	280 -105	MT3685H-P3Q2	♦ALP	281 -109
MT3585C-P3S3	♦ALP	277 - 94	MT3673H3P2I	♦ALP	278 - 98	MT3677E-P2I	♦ALP	279 -102	MT3683C-P1Q3	♦ALP	280 -106	MT3685H-P3Q3	♦ALP	281 -110
MT3585H4P1S1	♦ALP	277 - 95	MT3673H3P2N	♦ALP	278 - 99	MT3677E-P2N	♦ALP	279 -103	MT3683C-P2Q1	♦ALP	280 -107	MT3686A-P1Q1	♦ALP	282 - 1
MT3585H4P1S2	♦ALP	277 - 96	MT3673H3P3I	♦ALP	278 -100	MT3677E-P3I	♦ALP	279 -104	MT3683C-P2Q2	♦ALP	280 -108	MT3686A-P1Q2	♦ALP	282 - 2
MT3585H4P1S3	♦ALP	277 - 97	MT3673H3P3N	♦ALP	278 -101	MT3677E-P3N	♦ALP	279 -105	MT3683C-P2Q3	♦ALP	280 -109	MT3686A-P1Q3	♦ALP	282 - 3
MT3585H4P2S1	♦ALP	277 - 98	MT3673H-P1I	♦ALP	278 -102	MT3677H3P1I	♦ALP	279 -106	MT3683C-P3Q1	♦ALP	280 -110	MT3686A-P2Q1	♦ALP	282 - 4
MT3585H4P2S2	♦ALP	277 - 99	MT3673H-P1N	♦ALP	278 -103	MT3677H3P1N	♦ALP	279 -107	MT3683C-P3Q2	♦ALP	281 - 1	MT3686A-P2Q2	♦ALP	282 - 5
MT3585H4P2S3	♦ALP	277 -100	MT3673H-P2I	♦ALP	278 -104	MT3677H3P2I	♦ALP	279 -108	MT3683C-P3Q3	♦ALP	281 - 2	MT3686A-P2Q3	♦ALP	282 - 6
MT3585H4P3S1	♦ALP	277 -101	MT3673H-P2N	♦ALP	278 -105	MT3677H3P2N	♦ALP	279 -109	MT3683H4P1Q1	♦ALP	281 - 3	MT3686A-P3Q1	♦ALP	282 - 7
MT3585H4P3S2	♦ALP	277 -102	MT3673H-P3I	♦ALP	278 -106	MT3677H3P3I	♦ALP	279 -110	MT3683H4P1Q2	♦ALP	281 - 4	MT3686A-P3Q2	♦ALP	282 - 8
MT3585H4P3S3	♦ALP	277 -103	MT3673H-P3N	♦ALP	278 -107	MT3677H3P3N	♦ALP	280 - 1	MT3683H4P1Q3	♦ALP	281 - 5	MT3686A-P3Q3	♦ALP	282 - 9
MT3585H-P1S1	♦ALP	277 -104	MT3674A-P1I	♦ALP	278 -108	MT3677H-P1I	♦ALP	280 - 2	MT3683H4P2Q1	♦ALP	281 - 6	MT3686B-P1Q1	♦ALP	282 - 10
MT3585H-P1S2	♦ALP	277 -105	MT3674A-P1N	♦ALP	278 -109	MT3677H-P1N	♦ALP	280 - 3	MT3683H4P2Q2	♦ALP	281 - 7	MT3686B-P1Q2	♦ALP	282 - 11
MT3585H-P1S3	♦ALP	277 -106	MT3674A-P2I	♦ALP	278 -110	MT3677H-P2I	♦ALP	280 - 4	MT3683H4P2Q3	♦ALP	281 - 8	MT3686B-P1Q3	♦ALP	282 - 12
MT3585H-P2S1	♦ALP	277 -107	MT3674A-P2N	♦ALP	279 - 1	MT3677H-P2N	♦ALP	280 - 5	MT3683H4P3Q1	♦ALP	281 - 9	MT3686B-P2Q1	♦ALP	282 - 13
MT3585H-P2S2	♦ALP	277 -108	MT3674A-P3I	♦ALP	279 - 2	MT3677H-P3I	♦ALP	280 - 6	MT3683H4P3Q2	♦ALP	281 - 10	MT3686B-P2Q2	♦ALP	282 - 14
MT3585H-P2S3	♦ALP	277 -109	MT3674A-P3N	♦ALP	279 - 3	MT3677H-P3N	♦ALP	280 - 7	MT3683H4P3Q3	♦ALP	281 - 11	MT3686B-P2Q3	♦ALP	282 - 15
MT3585H-P3S1	♦ALP	277 -110	MT3674B2P1I	♦ALP	279 - 4	MT3680A4P1	♦ALP	280 - 8	MT3683H-P1Q1	♦ALP	281 - 12	MT3686B-P3Q1	♦ALP	282 - 16
MT3585H-P3S2	♦ALP	278 - 1	MT3674B2P1N	♦ALP	279 - 5	MT3680A4P2	♦ALP	280 - 9	MT3683H-P1Q2	♦ALP	281 - 13	MT3686B-P3Q2	♦ALP	282 - 17
MT3585H-P3S3	♦ALP	278 - 2	MT3674B2P2I	♦ALP	279 - 6	MT3680A4P3	♦ALP	280 - 10	MT3683H-P1Q3	♦ALP	281 - 14	MT3686B-P3Q3	♦ALP	282 - 18
MT3586A-P1S1	♦ALP	278 - 3	MT3674B2P2N	♦ALP	279 - 7	MT3680A-P1	♦ALP	280 - 11	MT3683H-P2Q1	♦ALP	281 - 15	MT3686C-P1Q1	♦ALP	282 - 19
MT3586A-P1S2	♦ALP	278 - 4	MT3674B2P3I	♦ALP	279 - 8	MT3680A-P2	♦ALP	280 - 12	MT3683H-P2Q2	♦ALP	281 - 16	MT3686C-P1Q2	♦ALP	282 - 20
MT3586A-P1S3	♦ALP	278 - 5	MT3674B2P3N	♦ALP	279 - 9	MT3680A-P3	♦ALP	280 - 13	MT3683H-P2Q3	♦ALP	281 - 17	MT3686C-P1Q3	♦ALP	282 - 21
MT3586A-P2S1	♦ALP	278 - 6	MT3674E-P1I	♦ALP	279 - 10	MT3680B2P1	♦ALP	280 - 14	MT3683H-P3Q1	♦ALP	281 - 18	MT3686C-P2Q1	♦ALP	282 - 22
MT3586A-P2S2	♦ALP	278 - 7	MT3674E-P1N	♦ALP	279 - 11	MT3680B2P2	♦ALP	280 - 15	MT3683H-P3Q2	♦ALP	281 - 19	MT3686C-P2Q2	♦ALP	282 - 23
MT3586A-P2S3	♦ALP	278 - 8	MT3674E-P2I	♦ALP	279 - 12	MT3680B2P3	♦ALP	280 - 16	MT3683H-P3Q3	♦ALP	281 - 20	MT3686C-P2Q3	♦ALP	282 - 24
MT3586A-P3S1	♦ALP	278 - 9	MT3674E-P2N	♦ALP	279 - 13	MT3680B-P1	♦ALP	280 - 17	MT3684A-P1Q1	♦ALP	281 - 21	MT3686C-P3Q1	♦ALP	282 - 25
MT3586A-P3S2	♦ALP	278 - 10	MT3674E-P3I	♦ALP	279 - 14	MT3680B-P2	♦ALP	280 - 18	MT3684A-P1Q2	♦ALP	281 - 22	MT3686C-P3Q2	♦ALP	282 - 26
MT3586A-P3S3	♦ALP	278 - 11	MT3674E-P3N	♦ALP	279 - 15	MT3680B-P3	♦ALP	280 - 19	MT3684A-P1Q3	♦ALP	281 - 23	MT3686C-P3Q3	♦ALP	282 - 27
MT3586B-P1S1	♦ALP	278 - 12	MT3674H3P1I	♦ALP	279 - 16	MT3680C-P1	♦ALP	280 - 20	MT3684A-P2Q1	♦ALP	281 - 24	MT3686H4P1Q1	♦ALP	282 - 28
MT3586B-P1S2	♦ALP	278 - 13	MT3674H3P1N	♦ALP	279 - 17	MT3680C-P2	♦ALP	280 - 21	MT3684A-P2Q2	♦ALP	281 - 25	MT3686H4P1Q2	♦ALP	282 - 29
MT3586B-P1S3	♦ALP	278 - 14	MT3674H3P2I	♦ALP	279 - 18	MT3680C-P3	♦ALP	280 - 22	MT3684A-P2Q3	♦ALP	281 - 26	MT3686H4P1Q3	♦ALP	282 - 30
MT3586B-P2S1	♦ALP	278 - 15	MT3674H3P2N	♦ALP	279 - 19	MT3680D1P1	♦ALP	280 - 23	MT3684A-P3Q1	♦ALP	281 - 27	MT3686H4P2Q1	♦ALP	282 - 31
MT3586B-P2S2	♦ALP	278 - 16	MT3674H3P3I	♦ALP	279 - 20	MT3680D1P2	♦ALP	280 - 24	MT3684A-P3Q2	♦ALP	281 - 28	MT3686H4P2Q2	♦ALP	282 - 32
MT3586B-P2S3	♦ALP	278 - 17	MT3674H3P3N	♦ALP	279 - 21	MT3680D1P3	♦ALP	280 - 25	MT3684A-P3Q3	♦ALP	281 - 29	MT3686H4P2Q3	♦ALP	282 - 33
MT3586B-P3S1	♦ALP	278 - 18	MT3674H-P1I	♦ALP	279 - 22	MT3680D-P1	♦ALP	280 - 26	MT3684B-P1Q1	♦ALP	281 - 30	MT3686H4P3Q1	♦ALP	282 - 34
MT3586B-P3S2	♦ALP	278 - 19	MT3674H-P1N	♦ALP	279 - 23	MT3680D-P2	♦ALP	280 - 27	MT3684B-P1Q2	♦ALP	281 - 31	MT3686H4P3Q2	♦ALP	282 - 35

△-Registered with JEDEC by this manufacturer

♦-Mfr's data sheet available in microfilm service

1. TYPE No. CROSS INDEX

IN TYPE NUMBER SEQUENCE

TYPE No.	MFRS	Pg&Line
MT3686H4P3Q3	♦ALP	282 - 36
MT3686H-P1Q1	♦ALP	282 - 37
MT3686H-P1Q2	♦ALP	282 - 38
MT3686H-P1Q3	♦ALP	282 - 39
MT3686H-P2Q1	♦ALP	282 - 40
MT3686H-P2Q2	♦ALP	282 - 41
MT3686H-P2Q3	♦ALP	282 - 42
MT3686H-P3Q1	♦ALP	282 - 43
MT3686H-P3Q2	♦ALP	282 - 44
MT3686H-P3Q3	♦ALP	282 - 45
MT3693A	♦ALP	282 - 46
MT3693B2	♦ALP	282 - 47
MT3693E	♦ALP	282 - 48
MT3693H3	♦ALP	282 - 49
MT3693H	♦ALP	282 - 50
MT3694A	♦ALP	282 - 51
MT3694B2	♦ALP	282 - 52
MT3694E	♦ALP	282 - 53
MT3694H3	♦ALP	282 - 54
MT3694H	♦ALP	282 - 55
MT3695A	♦ALP	282 - 56
MT3695B2	♦ALP	282 - 57
MT3695E	♦ALP	282 - 58
MT3695H3	♦ALP	282 - 59
MT3695H	♦ALP	282 - 60
MT3696A	♦ALP	282 - 61
MT3696B2	♦ALP	282 - 62
MT3696E	♦ALP	282 - 63
MT3696H3	♦ALP	282 - 64
MT3696H	♦ALP	282 - 65
MT3697A	♦ALP	282 - 66
MT3697B2	♦ALP	282 - 67
MT3697E	♦ALP	282 - 68
MT3697H3	♦ALP	282 - 69
MT3697H	♦ALP	282 - 70
MT3860A-P1C1I-S5	♦ALP	282 - 71
MT3860A-P1C1I-S6	♦ALP	282 - 72
MT3860A-P1C1N-S10	♦ALP	282 - 73
MT3860A-P1C1N-S11	♦ALP	282 - 74
MT3860A-P1C1N-S5	♦ALP	282 - 75
MT3860A-P1C1N-S6	♦ALP	282 - 76
MT3860A-P1C1N-S7	♦ALP	282 - 77
MT3860A-P1C1N-S8	♦ALP	282 - 78
MT3860A-P1C2I-S10	♦ALP	282 - 79
MT3860A-P1C2I-S11	♦ALP	282 - 80
MT3860A-P1C2I-S5	♦ALP	282 - 81
MT3860A-P1C2I-S6	♦ALP	282 - 82
MT3860A-P1C2I-S7	♦ALP	282 - 83
MT3860A-P1C2I-S8	♦ALP	282 - 84
MT3860A-P1C2N-S10	♦ALP	282 - 85
MT3860A-P1C2N-S11	♦ALP	282 - 86
MT3860A-P1C2N-S5	♦ALP	282 - 87
MT3860A-P1C2N-S6	♦ALP	282 - 88
MT3860A-P1C2N-S7	♦ALP	282 - 89
MT3860A-P1C2N-S8	♦ALP	282 - 90
MT3860A-P2C1I-S10	♦ALP	283 - 1
MT3860A-P2C1I-S11	♦ALP	283 - 2
MT3860A-P2C1I-S5	♦ALP	283 - 3
MT3860A-P2C1I-S6	♦ALP	283 - 4
MT3860A-P2C1I-S7	♦ALP	283 - 5
MT3860A-P2C1I-S8	♦ALP	283 - 6
MT3860A-P2C1N-S10	♦ALP	283 - 7
MT3860A-P2C1N-S11	♦ALP	283 - 8
MT3860A-P2C1N-S5	♦ALP	283 - 9
MT3860A-P2C1N-S6	♦ALP	283 - 10
MT3860A-P2C1N-S7	♦ALP	283 - 11
MT3860A-P2C1N-S8	♦ALP	283 - 12
MT3860A-P2C2I-S10	♦ALP	283 - 13
MT3860A-P2C2I-S11	♦ALP	283 - 14
MT3860A-P2C2I-S5	♦ALP	283 - 15
MT3860A-P2C2I-S6	♦ALP	283 - 16
MT3860A-P2C2I-S7	♦ALP	283 - 17
MT3860A-P2C2I-S8	♦ALP	283 - 18
MT3860A-P2C2N-S10	♦ALP	283 - 19
MT3860A-P2C2N-S11	♦ALP	283 - 20
MT3860A-P2C2N-S5	♦ALP	283 - 21
MT3860A-P2C2N-S6	♦ALP	283 - 22
MT3860A-P2C2N-S7	♦ALP	283 - 23
MT3860A-P2C2N-S8	♦ALP	283 - 24
MT3860A-P3C1I-S10	♦ALP	283 - 25
MT3860A-P3C1I-S11	♦ALP	283 - 26
MT3860A-P3C1I-S5	♦ALP	283 - 27
MT3860A-P3C1I-S6	♦ALP	283 - 28
MT3860A-P3C1I-S7	♦ALP	283 - 29
MT3860A-P3C1I-S8	♦ALP	283 - 30
MT3860A-P3C1N-S10	♦ALP	283 - 31
MT3860A-P3C1N-S11	♦ALP	283 - 32
MT3860A-P3C1N-S5	♦ALP	283 - 33
MT3860A-P3C1N-S6	♦ALP	283 - 34
MT3860A-P3C1N-S7	♦ALP	283 - 35
MT3860A-P3C1N-S8	♦ALP	283 - 36
MT3860A-P3C2I-S10	♦ALP	283 - 37
MT3860A-P3C2I-S11	♦ALP	283 - 38
MT3860A-P3C2I-S5	♦ALP	283 - 39
MT3860A-P3C2I-S6	♦ALP	283 - 40
MT3860A-P3C2I-S7	♦ALP	283 - 41
MT3860A-P3C2I-S8	♦ALP	283 - 42
MT3860A-P3C2N-S10	♦ALP	283 - 43
MT3860A-P3C2N-S11	♦ALP	283 - 44
MT3860A-P3C2N-S5	♦ALP	283 - 45
MT3860A-P3C2N-S6	♦ALP	283 - 46
MT3860A-P3C2N-S7	♦ALP	283 - 47
MT3860A-P3C2N-S8	♦ALP	283 - 48
MT3860D1P1C1I-S10	♦ALP	283 - 49
MT3860D1P1C1I-S11	♦ALP	283 - 50
MT3860D1P1C1I-S5	♦ALP	283 - 51
MT3860D1P1C1I-S6	♦ALP	283 - 52
MT3860D1P1C1I-S7	♦ALP	283 - 53
MT3860D1P1C1I-S8	♦ALP	283 - 54
MT3860D1P1C1N-S10	♦ALP	283 - 55
MT3860D1P1C1N-S11	♦ALP	284 - 1
MT3860D1P1C1N-S5	♦ALP	284 - 2
MT3860D1P1C1N-S6	♦ALP	284 - 3
MT3860D1P1C1N-S7	♦ALP	284 - 4
MT3860D1P1C1N-S8	♦ALP	284 - 5
MT3860D1P1C2I-S10	♦ALP	284 - 6
MT3860D1P1C2I-S11	♦ALP	284 - 7
MT3860D1P1C2I-S5	♦ALP	284 - 8
MT3860D1P1C2I-S6	♦ALP	284 - 9
MT3860D1P1C2I-S7	♦ALP	284 - 10
MT3860D1P1C2I-S8	♦ALP	284 - 11
MT3860D1P1C2N-S10	♦ALP	284 - 12
MT3860D1P1C2N-S11	♦ALP	284 - 13
MT3860D1P1C2N-S5	♦ALP	284 - 14
MT3860D1P1C2N-S6	♦ALP	284 - 15
MT3860D1P1C2N-S7	♦ALP	284 - 16
MT3860D1P1C2N-S8	♦ALP	284 - 17
MT3860D1P2C1I-S10	♦ALP	284 - 18
MT3860D1P2C1I-S11	♦ALP	284 - 19
MT3860D1P2C1I-S5	♦ALP	284 - 20
MT3860D1P2C1I-S6	♦ALP	284 - 21
MT3860D1P2C1I-S7	♦ALP	284 - 22
MT3860D1P2C1I-S8	♦ALP	284 - 23
MT3860D1P2C1N-S10	♦ALP	284 - 24
MT3860D1P2C1N-S11	♦ALP	284 - 25
MT3860D1P2C1N-S5	♦ALP	284 - 26
MT3860D1P2C1N-S6	♦ALP	284 - 27
MT3860D1P2C1N-S7	♦ALP	284 - 28
MT3860D1P2C1N-S8	♦ALP	284 - 29
MT3860D1P2C2I-S10	♦ALP	284 - 30
MT3860D1P2C2I-S11	♦ALP	284 - 31
MT3860D1P2C2I-S5	♦ALP	284 - 32
MT3860D1P2C2I-S6	♦ALP	284 - 33
MT3860D1P2C2I-S7	♦ALP	284 - 34
MT3860D1P2C2I-S8	♦ALP	284 - 35
MT3860D1P2C2N-S10	♦ALP	284 - 36
MT3860D1P2C2N-S11	♦ALP	284 - 37
MT3860D1P2C2N-S5	♦ALP	284 - 38
MT3860D1P2C2N-S6	♦ALP	284 - 39
MT3860D1P2C2N-S7	♦ALP	284 - 40
MT3860D1P2C2N-S8	♦ALP	284 - 41
MT3860D1P3C1I-S10	♦ALP	284 - 42
MT3860D1P3C1I-S11	♦ALP	284 - 43
MT3860D1P3C1I-S5	♦ALP	284 - 44
MT3860D1P3C1I-S6	♦ALP	284 - 45
MT3860D1P3C1I-S7	♦ALP	284 - 46
MT3860D1P3C1I-S8	♦ALP	284 - 47
MT3860D1P3C1N-S10	♦ALP	284 - 48
MT3860D1P3C1N-S11	♦ALP	284 - 49
MT3860D1P3C1N-S5	♦ALP	284 - 50
MT3860D1P3C1N-S6	♦ALP	284 - 51
MT3860D1P3C1N-S7	♦ALP	284 - 52
MT3860D1P3C1N-S8	♦ALP	284 - 53
MT3860D1P3C2I-S10	♦ALP	284 - 54
MT3860D1P3C2I-S11	♦ALP	284 - 55
MT3860D1P3C2I-S5	♦ALP	285 - 1
MT3860D1P3C2I-S6	♦ALP	285 - 2
MT3860D1P3C2I-S7	♦ALP	285 - 3
MT3860D1P3C2I-S8	♦ALP	285 - 4
MT3860D1P3C2N-S10	♦ALP	285 - 5
MT3860D1P3C2N-S11	♦ALP	285 - 6
MT3860D1P3C2N-S5	♦ALP	285 - 7
MT3860D1P3C2N-S6	♦ALP	285 - 8
MT3860D1P3C2N-S7	♦ALP	285 - 9
MT3860D1P3C2N-S8	♦ALP	285 - 10
MT3860E-P1C1I-S10	♦ALP	285 - 11
MT3860E-P1C1I-S11	♦ALP	285 - 12
MT3860E-P1C1I-S5	♦ALP	285 - 13
MT3860E-P1C1I-S6	♦ALP	285 - 14
MT3860E-P1C1I-S7	♦ALP	285 - 15
MT3860E-P1C1I-S8	♦ALP	285 - 16
MT3860E-P1C1N-S10	♦ALP	285 - 17
MT3860E-P1C1N-S11	♦ALP	285 - 18
MT3860E-P1C1N-S5	♦ALP	285 - 19
MT3860E-P1C1N-S6	♦ALP	285 - 20
MT3860E-P1C1N-S7	♦ALP	285 - 21
MT3860E-P1C1N-S8	♦ALP	285 - 22
MT3860E-P1C2I-S10	♦ALP	285 - 23
MT3860E-P1C2I-S11	♦ALP	285 - 24
MT3860E-P1C2I-S5	♦ALP	285 - 25
MT3860E-P1C2I-S6	♦ALP	285 - 26
MT3860E-P1C2I-S7	♦ALP	285 - 27
MT3860E-P1C2I-S8	♦ALP	285 - 28
MT3860E-P1C2N-S10	♦ALP	285 - 29
MT3860E-P1C2N-S11	♦ALP	285 - 30
MT3860E-P1C2N-S5	♦ALP	285 - 31
MT3860E-P1C2N-S6	♦ALP	285 - 32
MT3860E-P1C2N-S7	♦ALP	285 - 33
MT3860E-P1C2N-S8	♦ALP	285 - 34
MT3860E-P2C1I-S10	♦ALP	285 - 35
MT3860E-P2C1I-S11	♦ALP	285 - 36
MT3860E-P2C1I-S5	♦ALP	285 - 37
MT3860E-P2C1I-S6	♦ALP	285 - 38
MT3860E-P2C1I-S7	♦ALP	285 - 39
MT3860E-P2C1I-S8	♦ALP	285 - 40
MT3860E-P2C1N-S10	♦ALP	285 - 41
MT3860E-P2C1N-S11	♦ALP	285 - 42
MT3860E-P2C1N-S5	♦ALP	285 - 43
MT3860E-P2C1N-S6	♦ALP	285 - 44
MT3860E-P2C1N-S7	♦ALP	285 - 45
MT3860E-P2C1N-S8	♦ALP	285 - 46
MT3860E-P2C2I-S10	♦ALP	285 - 47
MT3860E-P2C2I-S11	♦ALP	285 - 48
MT3860E-P2C2I-S5	♦ALP	285 - 49
MT3860E-P2C2I-S6	♦ALP	285 - 50
MT3860E-P2C2I-S7	♦ALP	285 - 51
MT3860E-P2C2I-S8	♦ALP	285 - 52
MT3860E-P2C2N-S10	♦ALP	285 - 53
MT3860E-P2C2N-S11	♦ALP	285 - 54
MT3860E-P2C2N-S5	♦ALP	285 - 55
MT3860E-P2C2N-S6	♦ALP	286 - 1
MT3860E-P2C2N-S7	♦ALP	286 - 2
MT3860E-P2C2N-S8	♦ALP	286 - 3
MT3860E-P3C1I-S10	♦ALP	286 - 4
MT3860E-P3C1I-S11	♦ALP	286 - 5
MT3860E-P3C1I-S5	♦ALP	286 - 6
MT3860E-P3C1I-S6	♦ALP	286 - 7
MT3860E-P3C1I-S7	♦ALP	286 - 8
MT3860E-P3C1I-S8	♦ALP	286 - 9
MT3860E-P3C1N-S10	♦ALP	286 - 10
MT3860E-P3C1N-S11	♦ALP	286 - 11
MT3860E-P3C1N-S5	♦ALP	286 - 12
MT3860E-P3C1N-S6	♦ALP	286 - 13
MT3860E-P3C1N-S7	♦ALP	286 - 14
MT3860E-P3C1N-S8	♦ALP	286 - 15
MT3860E-P3C2I-S10	♦ALP	286 - 16
MT3860E-P3C2I-S11	♦ALP	286 - 17
MT3860E-P3C2I-S5	♦ALP	286 - 18
MT3860E-P3C2I-S6	♦ALP	286 - 19
MT3860E-P3C2I-S7	♦ALP	286 - 20
MT3860E-P3C2I-S8	♦ALP	286 - 21
MT3860E-P3C2N-S10	♦ALP	286 - 22
MT3860E-P3C2N-S11	♦ALP	286 - 23
MT3860E-P3C2N-S5	♦ALP	286 - 24
MT3860E-P3C2N-S6	♦ALP	286 - 25
MT3860E-P3C2N-S7	♦ALP	286 - 26
MT3860E-P3C2N-S8	♦ALP	286 - 27
MT3860H3P1C1I-S10	♦ALP	286 - 28
MT3860H3P1C1I-S11	♦ALP	286 - 29
MT3860H3P1C1I-S5	♦ALP	286 - 30
MT3860H3P1C1I-S6	♦ALP	286 - 31
MT3860H3P1C1I-S7	♦ALP	286 - 32
MT3860H3P1C1I-S8	♦ALP	286 - 33
MT3860H3P1C1N-S10	♦ALP	286 - 34
MT3860H3P1C1N-S11	♦ALP	286 - 35
MT3860H3P1C1N-S5	♦ALP	286 - 36
MT3860H3P1C1N-S6	♦ALP	286 - 37
MT3860H3P1C1N-S7	♦ALP	286 - 38
MT3860H3P1C1N-S8	♦ALP	286 - 39
MT3860H3P1C2I-S10	♦ALP	286 - 40
MT3860H3P1C2I-S11	♦ALP	286 - 41
MT3860H3P1C2I-S5	♦ALP	286 - 42
MT3860H3P1C2I-S6	♦ALP	286 - 43
MT3860H3P1C2I-S7	♦ALP	286 - 44
MT3860H3P1C2I-S8	♦ALP	286 - 45
MT3860H3P1C2N-S10	♦ALP	286 - 46
MT3860H3P1C2N-S11	♦ALP	286 - 47
MT3860H3P1C2N-S5	♦ALP	286 - 48
MT3860H3P1C2N-S6	♦ALP	286 - 49
MT3860H3P1C2N-S7	♦ALP	286 - 50
MT3860H3P1C2N-S8	♦ALP	286 - 51
MT3860H3P2C1I-S10	♦ALP	286 - 52
MT3860H3P2C1I-S11	♦ALP	286 - 53
MT3860H3P2C1I-S5	♦ALP	286 - 54
MT3860H3P2C1I-S6	♦ALP	286 - 55
MT3860H3P2C1I-S7	♦ALP	287 - 1
MT3860H3P2C1I-S8	♦ALP	287 - 2
MT3860H3P2C1N-S10	♦ALP	287 - 3
MT3860H3P2C1N-S11	♦ALP	287 - 4
MT3860H3P2C1N-S5	♦ALP	287 - 5
MT3860H3P2C1N-S6	♦ALP	287 - 6
MT3860H3P2C1N-S7	♦ALP	287 - 7
MT3860H3P2C1N-S8	♦ALP	287 - 8
MT3860H3P2C2I-S10	♦ALP	287 - 9
MT3860H3P2C2I-S11	♦ALP	287 - 10
MT3860H3P2C2I-S5	♦ALP	287 - 11
MT3860H3P2C2I-S6	♦ALP	287 - 12
MT3860H3P2C2I-S7	♦ALP	287 - 13
MT3860H3P2C2I-S8	♦ALP	287 - 14
MT3860H3P2C2N-S10	♦ALP	287 - 15
MT3860H3P2C2N-S11	♦ALP	287 - 16
MT3860H3P2C2N-S5	♦ALP	287 - 17
MT3860H3P2C2N-S6	♦ALP	287 - 18
MT3860H3P2C2N-S7	♦ALP	287 - 19
MT3860H3P2C2N-S8	♦ALP	287 - 20
MT3860H3P3C1I-S10	♦ALP	287 - 21
MT3860H3P3C1I-S11	♦ALP	287 - 22
MT3860H3P3C1I-S5	♦ALP	287 - 23
MT3860H3P3C1I-S6	♦ALP	287 - 24
MT3860H3P3C1I-S7	♦ALP	287 - 25
MT3860H3P3C1I-S8	♦ALP	287 - 26
MT3860H3P3C1N-S10	♦ALP	287 - 27

Δ-Registered with JEDEC by this manufacturer

♦-Mfr's data sheet available in microfilm service

1. TYPE No. CROSS INDEX

IN TYPE NUMBER SEQUENCE

TYPE No.	MFRS	Pg&Line
MT3860H3P3C1N-S11	♦ALP	287 - 28
MT3860H3P3C1N-S5	♦ALP	287 - 29
MT3860H3P3C1N-S6	♦ALP	287 - 30
MT3860H3P3C1N-S7	♦ALP	287 - 31
MT3860H3P3C1N-S8	♦ALP	287 - 32
MT3860H3P3C2I-S10	♦ALP	287 - 33
MT3860H3P3C2I-S11	♦ALP	287 - 34
MT3860H3P3C2I-S5	♦ALP	287 - 35
MT3860H3P3C2I-S6	♦ALP	287 - 36
MT3860H3P3C2I-S7	♦ALP	287 - 37
MT3860H3P3C2I-S8	♦ALP	287 - 38
MT3860H3P3C2N-S10	♦ALP	287 - 39
MT3860H3P3C2N-S11	♦ALP	287 - 40
MT3860H3P3C2N-S5	♦ALP	287 - 41
MT3860H3P3C2N-S6	♦ALP	287 - 42
MT3860H3P3C2N-S7	♦ALP	287 - 43
MT3860H3P3C2N-S8	♦ALP	287 - 44
MT3860H-P1C1I-S10	♦ALP	287 - 45
MT3860H-P1C1I-S11	♦ALP	287 - 46
MT3860H-P1C1I-S5	♦ALP	287 - 47
MT3860H-P1C1I-S6	♦ALP	287 - 48
MT3860H-P1C1I-S7	♦ALP	287 - 49
MT3860H-P1C1N-S10	♦ALP	287 - 50
MT3860H-P1C1N-S11	♦ALP	287 - 51
MT3860H-P1C1N-S5	♦ALP	287 - 52
MT3860H-P1C1N-S6	♦ALP	287 - 53
MT3860H-P1C1N-S7	♦ALP	287 - 54
MT3860H-P1C1N-S8	♦ALP	287 - 55
MT3860H-P1C2I-S10	♦ALP	288 - 1
MT3860H-P1C2I-S11	♦ALP	288 - 2
MT3860H-P1C2I-S5	♦ALP	288 - 3
MT3860H-P1C2I-S6	♦ALP	288 - 4
MT3860H-P1C2I-S7	♦ALP	288 - 5
MT3860H-P1C2I-S8	♦ALP	288 - 6
MT3860H-P1C2N-S10	♦ALP	288 - 7
MT3860H-P1C2N-S11	♦ALP	288 - 8
MT3860H-P1C2N-S5	♦ALP	288 - 9
MT3860H-P1C2N-S6	♦ALP	288 - 10
MT3860H-P1C2N-S7	♦ALP	288 - 11
MT3860H-P1C2N-S8	♦ALP	288 - 12
MT3860H-P2C1I-S10	♦ALP	288 - 13
MT3860H-P2C1I-S11	♦ALP	288 - 14
MT3860H-P2C1I-S5	♦ALP	288 - 15
MT3860H-P2C1I-S6	♦ALP	288 - 16
MT3860H-P2C1I-S7	♦ALP	288 - 17
MT3860H-P2C1I-S8	♦ALP	288 - 18
MT3860H-P2C1N-S10	♦ALP	288 - 19
MT3860H-P2C1N-S11	♦ALP	288 - 20
MT3860H-P2C1N-S5	♦ALP	288 - 21
MT3860H-P2C1N-S6	♦ALP	288 - 22
MT3860H-P2C1N-S7	♦ALP	288 - 23
MT3860H-P2C1N-S8	♦ALP	288 - 24
MT3860H-P2C2I-S10	♦ALP	288 - 25
MT3860H-P2C2I-S11	♦ALP	288 - 26
MT3860H-P2C2I-S5	♦ALP	288 - 27
MT3860H-P2C2I-S6	♦ALP	288 - 28
MT3860H-P2C2I-S7	♦ALP	288 - 29
MT3860H-P2C2I-S8	♦ALP	288 - 30
MT3860H-P2C2N-S10	♦ALP	288 - 31
MT3860H-P2C2N-S11	♦ALP	288 - 32
MT3860H-P2C2N-S5	♦ALP	288 - 33
MT3860H-P2C2N-S6	♦ALP	288 - 34
MT3860H-P2C2N-S7	♦ALP	288 - 35
MT3860H-P2C2N-S8	♦ALP	288 - 36
MT3860H-P3C1I-S10	♦ALP	288 - 37
MT3860H-P3C1I-S11	♦ALP	288 - 38
MT3860H-P3C1I-S5	♦ALP	288 - 39
MT3860H-P3C1I-S6	♦ALP	288 - 40
MT3860H-P3C1I-S7	♦ALP	288 - 41
MT3860H-P3C1I-S8	♦ALP	288 - 42
MT3860H-P3C1N-S10	♦ALP	288 - 43
MT3860H-P3C1N-S11	♦ALP	288 - 44
MT3860H-P3C1N-S5	♦ALP	288 - 45
MT3860H-P3C1N-S6	♦ALP	288 - 46
MT3860H-P3C1N-S7	♦ALP	288 - 47
MT3860H-P3C1N-S8	♦ALP	288 - 48
MT3860H-P3C2I-S10	♦ALP	288 - 49
MT3860H-P3C2I-S11	♦ALP	288 - 50
MT3860H-P3C2I-S5	♦ALP	288 - 51
MT3860H-P3C2I-S6	♦ALP	288 - 52
MT3860H-P3C2I-S7	♦ALP	288 - 53
MT3860H-P3C2I-S8	♦ALP	288 - 54
MT3860H-P3C2N-S10	♦ALP	288 - 55
MT3860H-P3C2N-S11	♦ALP	289 - 1
MT3860H-P3C2N-S5	♦ALP	289 - 2
MT3860H-P3C2N-S6	♦ALP	289 - 3
MT3860H-P3C2N-S7	♦ALP	289 - 4
MT3860H-P3C2N-S8	♦ALP	289 - 5
MT3861A-P1C1I-S10	♦ALP	289 - 6
MT3861A-P1C1I-S11	♦ALP	289 - 7
MT3861A-P1C1I-S5	♦ALP	289 - 8
MT3861A-P1C1I-S6	♦ALP	289 - 9
MT3861A-P1C1I-S7	♦ALP	289 - 10
MT3861A-P1C1I-S8	♦ALP	289 - 11
MT3861A-P1C1N-S10	♦ALP	289 - 12
MT3861A-P1C1N-S11	♦ALP	289 - 13
MT3861A-P1C1N-S5	♦ALP	289 - 14
MT3861A-P1C1N-S6	♦ALP	289 - 15
MT3861A-P1C1N-S7	♦ALP	289 - 16
MT3861A-P1C1N-S8	♦ALP	289 - 17
MT3861A-P1C2I-S10	♦ALP	289 - 18
MT3861A-P1C2I-S11	♦ALP	289 - 19
MT3861A-P1C2I-S5	♦ALP	289 - 20
MT3861A-P1C2I-S6	♦ALP	289 - 21
MT3861A-P1C2I-S7	♦ALP	289 - 22
MT3861A-P1C2I-S8	♦ALP	289 - 23
MT3861A-P1C2N-S10	♦ALP	289 - 24
MT3861A-P1C2N-S11	♦ALP	289 - 25
MT3861A-P1C2N-S5	♦ALP	289 - 26
MT3861A-P1C2N-S6	♦ALP	289 - 27
MT3861A-P1C2N-S7	♦ALP	289 - 28
MT3861A-P1C2N-S8	♦ALP	289 - 29
MT3861A-P2C1I-S10	♦ALP	289 - 30
MT3861A-P2C1I-S11	♦ALP	289 - 31
MT3861A-P2C1I-S5	♦ALP	289 - 32
MT3861A-P2C1I-S6	♦ALP	289 - 33
MT3861A-P2C1I-S7	♦ALP	289 - 34
MT3861A-P2C1I-S8	♦ALP	289 - 35
MT3861A-P2C1N-S10	♦ALP	289 - 36
MT3861A-P2C1N-S11	♦ALP	289 - 37
MT3861A-P2C1N-S5	♦ALP	289 - 38
MT3861A-P2C1N-S6	♦ALP	289 - 39
MT3861A-P2C1N-S7	♦ALP	289 - 40
MT3861A-P2C1N-S8	♦ALP	289 - 41
MT3861A-P2C2I-S10	♦ALP	289 - 42
MT3861A-P2C2I-S11	♦ALP	289 - 43
MT3861A-P2C2I-S5	♦ALP	289 - 44
MT3861A-P2C2I-S6	♦ALP	289 - 45
MT3861A-P2C2I-S7	♦ALP	289 - 46
MT3861A-P2C2I-S8	♦ALP	289 - 47
MT3861A-P2C2N-S10	♦ALP	289 - 48
MT3861A-P2C2N-S11	♦ALP	289 - 49
MT3861A-P2C2N-S5	♦ALP	289 - 50
MT3861A-P2C2N-S6	♦ALP	289 - 51
MT3861A-P2C2N-S7	♦ALP	289 - 52
MT3861A-P2C2N-S8	♦ALP	289 - 53
MT3861A-P3C1I-S10	♦ALP	289 - 54
MT3861A-P3C1I-S11	♦ALP	289 - 55
MT3861A-P3C1I-S5	♦ALP	290 - 1
MT3861A-P3C1I-S6	♦ALP	290 - 2
MT3861A-P3C1I-S7	♦ALP	290 - 3
MT3861A-P3C1I-S8	♦ALP	290 - 4
MT3861A-P3C1N-S10	♦ALP	290 - 5
MT3861A-P3C1N-S11	♦ALP	290 - 6
MT3861A-P3C1N-S5	♦ALP	290 - 7
MT3861A-P3C1N-S6	♦ALP	290 - 8
MT3861A-P3C1N-S7	♦ALP	290 - 9
MT3861A-P3C1N-S8	♦ALP	290 - 10
MT3861A-P3C2I-S10	♦ALP	290 - 11
MT3861A-P3C2I-S11	♦ALP	290 - 12
MT3861A-P3C2I-S5	♦ALP	290 - 13
MT3861A-P3C2I-S6	♦ALP	290 - 14
MT3861A-P3C2I-S7	♦ALP	290 - 15
MT3861A-P3C2I-S8	♦ALP	290 - 16
MT3861A-P3C2N-S10	♦ALP	290 - 17
MT3861A-P3C2N-S11	♦ALP	290 - 18
MT3861A-P3C2N-S5	♦ALP	290 - 19
MT3861A-P3C2N-S6	♦ALP	290 - 20
MT3861A-P3C2N-S7	♦ALP	290 - 21
MT3861A-P3C2N-S8	♦ALP	290 - 22
MT3861D1P1C1I-S10	♦ALP	290 - 23
MT3861D1P1C1I-S11	♦ALP	290 - 24
MT3861D1P1C1I-S5	♦ALP	290 - 25
MT3861D1P1C1I-S6	♦ALP	290 - 26
MT3861D1P1C1I-S7	♦ALP	290 - 27
MT3861D1P1C1I-S8	♦ALP	290 - 28
MT3861D1P1C1N-S10	♦ALP	290 - 29
MT3861D1P1C1N-S11	♦ALP	290 - 30
MT3861D1P1C1N-S5	♦ALP	290 - 31
MT3861D1P1C1N-S6	♦ALP	290 - 32
MT3861D1P1C1N-S7	♦ALP	290 - 33
MT3861D1P1C1N-S8	♦ALP	290 - 34
MT3861D1P1C2I-S10	♦ALP	290 - 35
MT3861D1P1C2I-S11	♦ALP	290 - 36
MT3861D1P1C2I-S5	♦ALP	290 - 37
MT3861D1P1C2I-S6	♦ALP	290 - 38
MT3861D1P1C2I-S7	♦ALP	290 - 39
MT3861D1P1C2I-S8	♦ALP	290 - 40
MT3861D1P1C2N-S10	♦ALP	290 - 41
MT3861D1P1C2N-S11	♦ALP	290 - 42
MT3861D1P1C2N-S5	♦ALP	290 - 43
MT3861D1P1C2N-S6	♦ALP	290 - 44
MT3861D1P1C2N-S7	♦ALP	290 - 45
MT3861D1P1C2N-S8	♦ALP	290 - 46
MT3861D1P2C1I-S10	♦ALP	290 - 47
MT3861D1P2C1I-S11	♦ALP	290 - 48
MT3861D1P2C1I-S5	♦ALP	290 - 49
MT3861D1P2C1I-S6	♦ALP	290 - 50
MT3861D1P2C1I-S7	♦ALP	290 - 51
MT3861D1P2C1I-S8	♦ALP	290 - 52
MT3861D1P2C1N-S10	♦ALP	290 - 53
MT3861D1P2C1N-S11	♦ALP	290 - 54
MT3861D1P2C1N-S5	♦ALP	290 - 55
MT3861D1P2C1N-S6	♦ALP	291 - 1
MT3861D1P2C1N-S7	♦ALP	291 - 2
MT3861D1P2C1N-S8	♦ALP	291 - 3
MT3861D1P2C2I-S10	♦ALP	291 - 4
MT3861D1P2C2I-S11	♦ALP	291 - 5
MT3861D1P2C2I-S5	♦ALP	291 - 6
MT3861D1P2C2I-S6	♦ALP	291 - 7
MT3861D1P2C2I-S7	♦ALP	291 - 8
MT3861D1P2C2I-S8	♦ALP	291 - 9
MT3861D1P2C2N-S10	♦ALP	291 - 10
MT3861D1P2C2N-S11	♦ALP	291 - 11
MT3861D1P2C2N-S5	♦ALP	291 - 12
MT3861D1P2C2N-S6	♦ALP	291 - 13
MT3861D1P2C2N-S7	♦ALP	291 - 14
MT3861D1P2C2N-S8	♦ALP	291 - 15
MT3861D1P3C1I-S10	♦ALP	291 - 16
MT3861D1P3C1I-S11	♦ALP	291 - 17
MT3861D1P3C1I-S5	♦ALP	291 - 18
MT3861D1P3C1I-S6	♦ALP	291 - 19
MT3861D1P3C1I-S7	♦ALP	291 - 20
MT3861D1P3C1I-S8	♦ALP	291 - 21
MT3861D1P3C1N-S10	♦ALP	291 - 22
MT3861D1P3C1N-S11	♦ALP	291 - 23
MT3861D1P3C1N-S5	♦ALP	291 - 24
MT3861D1P3C1N-S6	♦ALP	291 - 25
MT3861D1P3C1N-S7	♦ALP	291 - 26
MT3861D1P3C1N-S8	♦ALP	291 - 27
MT3861D1P3C2I-S10	♦ALP	291 - 28
MT3861D1P3C2I-S11	♦ALP	291 - 29
MT3861D1P3C2I-S5	♦ALP	291 - 30
MT3861D1P3C2I-S6	♦ALP	291 - 31
MT3861D1P3C2I-S7	♦ALP	291 - 32
MT3861D1P3C2I-S8	♦ALP	291 - 33
MT3861D1P3C2N-S10	♦ALP	291 - 34
MT3861D1P3C2N-S11	♦ALP	291 - 35
MT3861D1P3C2N-S5	♦ALP	291 - 36
MT3861D1P3C2N-S6	♦ALP	291 - 37
MT3861D1P3C2N-S7	♦ALP	291 - 38
MT3861D1P3C2N-S8	♦ALP	291 - 39
MT3861E-P1C1I-S10	♦ALP	291 - 40
MT3861E-P1C1I-S11	♦ALP	291 - 41
MT3861E-P1C1I-S5	♦ALP	291 - 42
MT3861E-P1C1I-S6	♦ALP	291 - 43
MT3861E-P1C1I-S7	♦ALP	291 - 44
MT3861E-P1C1I-S8	♦ALP	291 - 45
MT3861E-P1C1N-S10	♦ALP	291 - 46
MT3861E-P1C1N-S11	♦ALP	291 - 47
MT3861E-P1C1N-S5	♦ALP	291 - 48
MT3861E-P1C1N-S6	♦ALP	291 - 49
MT3861E-P1C1N-S7	♦ALP	291 - 50
MT3861E-P1C1N-S8	♦ALP	291 - 51
MT3861E-P1C2I-S10	♦ALP	291 - 52
MT3861E-P1C2I-S11	♦ALP	291 - 53
MT3861E-P1C2I-S5	♦ALP	291 - 54
MT3861E-P1C2I-S6	♦ALP	291 - 55
MT3861E-P1C2I-S7	♦ALP	292 - 1
MT3861E-P1C2I-S8	♦ALP	292 - 2
MT3861E-P1C2N-S10	♦ALP	292 - 3
MT3861E-P1C2N-S11	♦ALP	292 - 4
MT3861E-P1C2N-S5	♦ALP	292 - 5
MT3861E-P1C2N-S6	♦ALP	292 - 6
MT3861E-P1C2N-S7	♦ALP	292 - 7
MT3861E-P1C2N-S8	♦ALP	292 - 8
MT3861E-P2C1I-S10	♦ALP	292 - 9
MT3861E-P2C1I-S11	♦ALP	292 - 10
MT3861E-P2C1I-S5	♦ALP	292 - 11
MT3861E-P2C1I-S6	♦ALP	292 - 12
MT3861E-P2C1I-S7	♦ALP	292 - 13
MT3861E-P2C1I-S8	♦ALP	292 - 14
MT3861E-P2C1N-S10	♦ALP	292 - 15
MT3861E-P2C1N-S11	♦ALP	292 - 16
MT3861E-P2C1N-S5	♦ALP	292 - 17
MT3861E-P2C1N-S6	♦ALP	292 - 18
MT3861E-P2C1N-S7	♦ALP	292 - 19
MT3861E-P2C1N-S8	♦ALP	292 - 20
MT3861E-P2C2I-S10	♦ALP	292 - 21
MT3861E-P2C2I-S11	♦ALP	292 - 22
MT3861E-P2C2I-S5	♦ALP	292 - 23
MT3861E-P2C2I-S6	♦ALP	292 - 24
MT3861E-P2C2I-S7	♦ALP	292 - 25
MT3861E-P2C2I-S8	♦ALP	292 - 26
MT3861E-P2C2N-S10	♦ALP	292 - 27
MT3861E-P2C2N-S11	♦ALP	292 - 28
MT3861E-P2C2N-S5	♦ALP	292 - 29
MT3861E-P2C2N-S6	♦ALP	292 - 30
MT3861E-P2C2N-S7	♦ALP	292 - 31
MT3861E-P2C2N-S8	♦ALP	292 - 32
MT3861E-P3C1I-S10	♦ALP	292 - 33
MT3861E-P3C1I-S11	♦ALP	292 - 34
MT3861E-P3C1I-S5	♦ALP	292 - 35
MT3861E-P3C1I-S6	♦ALP	292 - 36
MT3861E-P3C1I-S7	♦ALP	292 - 37

1. TYPE No. CROSS INDEX

IN TYPE NUMBER SEQUENCE

TYPE No.	MFRS	Pg&Line
MT3861E-P3C1I-S8	♦ALP	292 - 38
MT3861E-P3C1N-S10	♦ALP	292 - 39
MT3861E-P3C1N-S11	♦ALP	292 - 40
MT3861E-P3C1N-S5	♦ALP	292 - 41
MT3861E-P3C1N-S6	♦ALP	292 - 42
MT3861E-P3C1N-S7	♦ALP	292 - 43
MT3861E-P3C1N-S8	♦ALP	292 - 44
MT3861E-P3C2I-S10	♦ALP	292 - 45
MT3861E-P3C2I-S11	♦ALP	292 - 46
MT3861E-P3C2I-S5	♦ALP	292 - 47
MT3861E-P3C2I-S6	♦ALP	292 - 48
MT3861E-P3C2I-S7	♦ALP	292 - 49
MT3861E-P3C2I-S8	♦ALP	292 - 50
MT3861E-P3C2N-S10	♦ALP	292 - 51
MT3861E-P3C2N-S11	♦ALP	292 - 52
MT3861E-P3C2N-S5	♦ALP	292 - 53
MT3861E-P3C2N-S6	♦ALP	292 - 54
MT3861E-P3C2N-S7	♦ALP	292 - 55
MT3861E-P3C2N-S8	♦ALP	293 - 1
MT3861H3P1C1I-S10	♦ALP	293 - 2
MT3861H3P1C1I-S11	♦ALP	293 - 3
MT3861H3P1C1I-S5	♦ALP	293 - 4
MT3861H3P1C1I-S6	♦ALP	293 - 5
MT3861H3P1C1I-S7	♦ALP	293 - 6
MT3861H3P1C1I-S8	♦ALP	293 - 7
MT3861H3P1C1N-S10	♦ALP	293 - 8
MT3861H3P1C1N-S11	♦ALP	293 - 9
MT3861H3P1C1N-S5	♦ALP	293 - 10
MT3861H3P1C1N-S6	♦ALP	293 - 11
MT3861H3P1C1N-S7	♦ALP	293 - 12
MT3861H3P1C1N-S8	♦ALP	293 - 13
MT3861H3P1C2I-S10	♦ALP	293 - 14
MT3861H3P1C2I-S11	♦ALP	293 - 15
MT3861H3P1C2I-S5	♦ALP	293 - 16
MT3861H3P1C2I-S6	♦ALP	293 - 17
MT3861H3P1C2I-S7	♦ALP	293 - 18
MT3861H3P1C2I-S8	♦ALP	293 - 19
MT3861H3P1C2N-S10	♦ALP	293 - 20
MT3861H3P1C2N-S11	♦ALP	293 - 21
MT3861H3P1C2N-S5	♦ALP	293 - 22
MT3861H3P1C2N-S6	♦ALP	293 - 23
MT3861H3P1C2N-S7	♦ALP	293 - 24
MT3861H3P1C2N-S8	♦ALP	293 - 25
MT3861H3P2C1I-S10	♦ALP	293 - 26
MT3861H3P2C1I-S11	♦ALP	293 - 27
MT3861H3P2C1I-S5	♦ALP	293 - 28
MT3861H3P2C1I-S6	♦ALP	293 - 29
MT3861H3P2C1I-S7	♦ALP	293 - 30
MT3861H3P2C1I-S8	♦ALP	293 - 31
MT3861H3P2C1N-S10	♦ALP	293 - 32
MT3861H3P2C1N-S11	♦ALP	293 - 33
MT3861H3P2C1N-S5	♦ALP	293 - 34
MT3861H3P2C1N-S6	♦ALP	293 - 35
MT3861H3P2C1N-S7	♦ALP	293 - 36
MT3861H3P2C1N-S8	♦ALP	293 - 37
MT3861H3P2C2I-S10	♦ALP	293 - 38
MT3861H3P2C2I-S11	♦ALP	293 - 39
MT3861H3P2C2I-S5	♦ALP	293 - 40
MT3861H3P2C2I-S6	♦ALP	293 - 41
MT3861H3P2C2I-S7	♦ALP	293 - 42
MT3861H3P2C2I-S8	♦ALP	293 - 43
MT3861H3P2C2N-S10	♦ALP	293 - 44
MT3861H3P2C2N-S11	♦ALP	293 - 45
MT3861H3P2C2N-S5	♦ALP	293 - 46
MT3861H3P2C2N-S6	♦ALP	293 - 47
MT3861H3P2C2N-S7	♦ALP	293 - 48
MT3861H3P2C2N-S8	♦ALP	293 - 49
MT3861H3P3C1I-S10	♦ALP	293 - 50
MT3861H3P3C1I-S11	♦ALP	293 - 51
MT3861H3P3C1I-S5	♦ALP	293 - 52
MT3861H3P3C1I-S6	♦ALP	293 - 53
MT3861H3P3C1I-S7	♦ALP	293 - 54
MT3861H3P3C1I-S8	♦ALP	293 - 55
MT3861H3P3C1N-S10	♦ALP	294 - 1
MT3861H3P3C1N-S11	♦ALP	294 - 2
MT3861H3P3C1N-S5	♦ALP	294 - 3
MT3861H3P3C1N-S6	♦ALP	294 - 4
MT3861H3P3C1N-S7	♦ALP	294 - 5
MT3861H3P3C1N-S8	♦ALP	294 - 6
MT3861H3P3C2I-S10	♦ALP	294 - 7
MT3861H3P3C2I-S11	♦ALP	294 - 8
MT3861H3P3C2I-S5	♦ALP	294 - 9
MT3861H3P3C2I-S6	♦ALP	294 - 10
MT3861H3P3C2I-S7	♦ALP	294 - 11
MT3861H3P3C2I-S8	♦ALP	294 - 12
MT3861H3P3C2N-S10	♦ALP	294 - 13
MT3861H3P3C2N-S11	♦ALP	294 - 14
MT3861H3P3C2N-S5	♦ALP	294 - 15
MT3861H3P3C2N-S6	♦ALP	294 - 16
MT3861H3P3C2N-S7	♦ALP	294 - 17
MT3861H3P3C2N-S8	♦ALP	294 - 18
MT3861H-P1C1I-S10	♦ALP	294 - 19
MT3861H-P1C1I-S11	♦ALP	294 - 20
MT3861H-P1C1I-S5	♦ALP	294 - 21
MT3861H-P1C1I-S6	♦ALP	294 - 22
MT3861H-P1C1I-S7	♦ALP	294 - 23
MT3861H-P1C1I-S8	♦ALP	294 - 24
MT3861H-P1C1N-S10	♦ALP	294 - 25
MT3861H-P1C1N-S11	♦ALP	294 - 26
MT3861H-P1C1N-S5	♦ALP	294 - 27
MT3861H-P1C1N-S6	♦ALP	294 - 28
MT3861H-P1C1N-S7	♦ALP	294 - 29
MT3861H-P1C1N-S8	♦ALP	294 - 30
MT3861H-P1C2I-S10	♦ALP	294 - 31
MT3861H-P1C2I-S11	♦ALP	294 - 32
MT3861H-P1C2I-S5	♦ALP	294 - 33
MT3861H-P1C2I-S6	♦ALP	294 - 34
MT3861H-P1C2I-S7	♦ALP	294 - 35
MT3861H-P1C2I-S8	♦ALP	294 - 36
MT3861H-P1C2N-S10	♦ALP	294 - 37
MT3861H-P1C2N-S11	♦ALP	294 - 38
MT3861H-P1C2N-S5	♦ALP	294 - 39
MT3861H-P1C2N-S6	♦ALP	294 - 40
MT3861H-P1C2N-S7	♦ALP	294 - 41
MT3861H-P1C2N-S8	♦ALP	294 - 42
MT3861H-P2C1I-S10	♦ALP	294 - 43
MT3861H-P2C1I-S11	♦ALP	294 - 44
MT3861H-P2C1I-S5	♦ALP	294 - 45
MT3861H-P2C1I-S6	♦ALP	294 - 46
MT3861H-P2C1I-S7	♦ALP	294 - 47
MT3861H-P2C1I-S8	♦ALP	294 - 48
MT3861H-P2C1N-S10	♦ALP	294 - 49
MT3861H-P2C1N-S11	♦ALP	294 - 50
MT3861H-P2C1N-S5	♦ALP	294 - 51
MT3861H-P2C1N-S6	♦ALP	294 - 52
MT3861H-P2C1N-S7	♦ALP	294 - 53
MT3861H-P2C1N-S8	♦ALP	294 - 54
MT3861H-P2C2I-S10	♦ALP	294 - 55
MT3861H-P2C2I-S11	♦ALP	295 - 1
MT3861H-P2C2I-S5	♦ALP	295 - 2
MT3861H-P2C2I-S6	♦ALP	295 - 3
MT3861H-P2C2I-S7	♦ALP	295 - 4
MT3861H-P2C2I-S8	♦ALP	295 - 5
MT3861H-P2C2N-S10	♦ALP	295 - 6
MT3861H-P2C2N-S11	♦ALP	295 - 7
MT3861H-P2C2N-S5	♦ALP	295 - 8
MT3861H-P2C2N-S6	♦ALP	295 - 9
MT3861H-P2C2N-S7	♦ALP	295 - 10
MT3861H-P2C2N-S8	♦ALP	295 - 11
MT3861H-P3C1I-S10	♦ALP	295 - 12
MT3861H-P3C1I-S11	♦ALP	295 - 13
MT3861H-P3C1I-S5	♦ALP	295 - 14
MT3861H-P3C1I-S6	♦ALP	295 - 15
MT3861H-P3C1I-S7	♦ALP	295 - 16
MT3861H-P3C1I-S8	♦ALP	295 - 17
MT3861H-P3C1N-S10	♦ALP	295 - 18
MT3861H-P3C1N-S11	♦ALP	295 - 19
MT3861H-P3C1N-S5	♦ALP	295 - 20
MT3861H-P3C1N-S6	♦ALP	295 - 21
MT3861H-P3C1N-S7	♦ALP	295 - 22
MT3861H-P3C1N-S8	♦ALP	295 - 23
MT3861H-P3C2I-S10	♦ALP	295 - 24
MT3861H-P3C2I-S11	♦ALP	295 - 25
MT3861H-P3C2I-S5	♦ALP	295 - 26
MT3861H-P3C2I-S6	♦ALP	295 - 27
MT3861H-P3C2I-S7	♦ALP	295 - 28
MT3861H-P3C2I-S8	♦ALP	295 - 29
MT3861H-P3C2N-S10	♦ALP	295 - 30
MT3861H-P3C2N-S11	♦ALP	295 - 31
MT3861H-P3C2N-S5	♦ALP	295 - 32
MT3861H-P3C2N-S6	♦ALP	295 - 33
MT3861H-P3C2N-S7	♦ALP	295 - 34
MT3861H-P3C2N-S8	♦ALP	295 - 35
MT3883A	♦ALP	295 - 36
MT3883B2	♦ALP	295 - 37
MT3883E	♦ALP	295 - 38
MT3883H3	♦ALP	295 - 39
MT3883H	♦ALP	295 - 40
MT3884A	♦ALP	295 - 41
MT3884B2	♦ALP	295 - 42
MT3884E	♦ALP	295 - 43
MT3884H3	♦ALP	295 - 44
MT3884H	♦ALP	295 - 45
MT3885A	♦ALP	295 - 46
MT3885B2	♦ALP	295 - 47
MT3885E	♦ALP	295 - 48
MT3885H3	♦ALP	295 - 49
MT3885H	♦ALP	295 - 50
MT3886A	♦ALP	295 - 51
MT3886B2	♦ALP	295 - 52
MT3886E	♦ALP	295 - 53
MT3886H3	♦ALP	295 - 54
MT3886H	♦ALP	295 - 55
MT3887A	♦ALP	295 - 56
MT3887B2	♦ALP	295 - 57
MT3887E	♦ALP	295 - 58
MT3887H3	♦ALP	295 - 59
MT3887H	♦ALP	295 - 60
MT3888A	♦ALP	295 - 61
MT3888B2	♦ALP	295 - 62
MT3888E	♦ALP	295 - 63
MT3888H3	♦ALP	295 - 64
MT3888H	♦ALP	295 - 65
MT3893A	♦ALP	295 - 66
MT3893B2	♦ALP	295 - 67
MT3893E	♦ALP	295 - 68
MT3893H3	♦ALP	295 - 69
MT3893H	♦ALP	295 - 70
MT3894A	♦ALP	295 - 71
MT3894B2	♦ALP	295 - 72
MT3894E	♦ALP	295 - 73
MT3894H3	♦ALP	295 - 74
MT3894H	♦ALP	295 - 75
MT3895A	♦ALP	296 - 1
MT3895B2	♦ALP	296 - 2
MT3895E	♦ALP	296 - 3
MT3895H3	♦ALP	296 - 4
MT3895H	♦ALP	296 - 5
MT3896A	♦ALP	296 - 6
MT3896B2	♦ALP	296 - 7
MT3896E	♦ALP	296 - 8
MT3896H3	♦ALP	296 - 9
MT3896H	♦ALP	296 - 10
MT3897A	♦ALP	296 - 11
MT3897B2	♦ALP	296 - 12
MT3897E	♦ALP	296 - 13
MT3897H3	♦ALP	296 - 14
MT3897H	♦ALP	296 - 15
MT7643A	♦ALP	296 - 16
MT7643B2	♦ALP	296 - 17
MT7643E	♦ALP	296 - 18
MT7643H3	♦ALP	296 - 19
MT7643H	♦ALP	296 - 20
MT7644A	♦ALP	296 - 21
MT7644B2	♦ALP	296 - 22
MT7644E	♦ALP	296 - 23
MT7644H3	♦ALP	296 - 24
MT7644H	♦ALP	296 - 25
MT7645A	♦ALP	296 - 26
MT7645B2	♦ALP	296 - 27
MT7645E	♦ALP	296 - 28
MT7645H3	♦ALP	296 - 29
MT7645H	♦ALP	296 - 30
MT7646A	♦ALP	296 - 31
MT7646B2	♦ALP	296 - 32
MT7646E	♦ALP	296 - 33
MT7647A	♦ALP	296 - 34
MT7647B2	♦ALP	296 - 35
MT7647E	♦ALP	296 - 36
MT7693A	♦ALP	296 - 37
MT7693B2	♦ALP	296 - 38
MT7693E	♦ALP	296 - 39
MT7693H3	♦ALP	296 - 40
MT7693H	♦ALP	296 - 41
MT7694A	♦ALP	296 - 42
MT7694B2	♦ALP	296 - 43
MT7694E	♦ALP	296 - 44
MT7694H3	♦ALP	296 - 45
MT7694H	♦ALP	296 - 46
MT7695A	♦ALP	296 - 47
MT7695B2	♦ALP	296 - 48
MT7695E	♦ALP	296 - 49
MT7695H3	♦ALP	296 - 50
MT7695H	♦ALP	296 - 51
MT7696A	♦ALP	296 - 52
MT7696B2	♦ALP	296 - 53
MT7696E	♦ALP	296 - 54
MT7697A	♦ALP	296 - 55
MT7697B2	♦ALP	296 - 56
MT7697E	♦ALP	296 - 57
MT7820A	♦ALP	296 - 58
MT7820B2	♦ALP	296 - 59
MT7820E	♦ALP	296 - 60
MT7820H3	♦ALP	296 - 61
MT7820H	♦ALP	296 - 62
MT7821A	♦ALP	296 - 63
MT7821B2	♦ALP	296 - 64
MT7821E	♦ALP	296 - 65
MT7821H3	♦ALP	296 - 66
MT7821H	♦ALP	296 - 67
MT7823A	♦ALP	296 - 68
MT7823B2	♦ALP	296 - 69
MT7823E	♦ALP	296 - 70
MT7823H3	♦ALP	296 - 71
MT7823H	♦ALP	296 - 72
MT7824A	♦ALP	296 - 73
MT7824B2	♦ALP	296 - 74
MT7824E	♦ALP	296 - 75
MT7824H3	♦ALP	296 - 76
MT7824H	♦ALP	296 - 77
MT7825A	♦ALP	296 - 78
MT7825B2	♦ALP	296 - 79
MT7825E	♦ALP	296 - 80
MT7825H3	♦ALP	296 - 81
MT7825H	♦ALP	296 - 82
MT7826A	♦ALP	296 - 83
MT7826B2	♦ALP	296 - 84
MT7826E	♦ALP	296 - 85
MT7826H3	♦ALP	296 - 86
MT7826H	♦ALP	296 - 87
MT7827A	♦ALP	296 - 88
MT7827B2	♦ALP	296 - 89
MT7827E	♦ALP	296 - 90
MT7827H3	♦ALP	296 - 91
MT7827H	♦ALP	296 - 92
MT7828A	♦ALP	296 - 93
MT7828B2	♦ALP	296 - 94
MT7828E	♦ALP	296 - 95
MT7828H3	♦ALP	296 - 96
MT7828H	♦ALP	296 - 97
MT7829A	♦ALP	296 - 98
MT7829B2	♦ALP	296 - 99
MT7829E	♦ALP	296 -100
MT7829H3	♦ALP	296 -101
MT7829H	♦ALP	296 -102
MT7830A	♦ALP	296 -103
MT7830B2	♦ALP	296 -104
MT7830E	♦ALP	296 -105
MT7830H3	♦ALP	296 -106
MT7830H	♦ALP	296 -107
MT7831A	♦ALP	296 -108
MT7831B2	♦ALPM	296 -109
MT7831E	♦ALPM	296 -110
MT7831H3	♦ALPM	297 - 1
MT7831H	♦ALPM	297 - 2
MT7838A	♦ALP	297 - 3
MT7838B2	♦ALP	297 - 4
MT7838E	♦ALP	297 - 5
MT7838H3	♦ALP	297 - 6
MT7838H	♦ALP	297 - 7
MT7839A	♦ALP	297 - 8
MT7839B2	♦ALP	297 - 9
MT7839E	♦ALP	297 - 10
MT7839H3	♦ALP	297 - 11
MT7839H	♦ALP	297 - 12
MT8103A	♦ALP	297 - 13
MT8103B2	♦ALP	297 - 14
MT8103E	♦ALP	297 - 15
MT8103H3	♦ALP	297 - 16
MT8103H	♦ALP	297 - 17
MT8104A	♦ALP	297 - 18
MT8104B2	♦ALP	297 - 19
MT8104E	♦ALP	297 - 20
MT8104H3	♦ALP	297 - 21
MT8104H	♦ALP	297 - 22
MT8105A	♦ALP	297 - 23
MT8105B2	♦ALP	297 - 24
MT8105E	♦ALP	297 - 25
MT8105H3	♦ALP	297 - 26
MT8105H	♦ALP	297 - 27
MT8106A	♦ALP	297 - 28
MT8106B2	♦ALP	297 - 29
MT8106E	♦ALP	297 - 30
MT8106H3	♦ALP	297 - 31
MT8106H	♦ALP	297 - 32
MT8107A	♦ALP	297 - 33
MT8107B2	♦ALP	297 - 34
MT8107E	♦ALP	297 - 35
MT8107H3	♦ALP	297 - 36
MT8107H	♦ALP	297 - 37
MT8108A	♦ALP	297 - 38
MT8108B2	♦ALP	297 - 39
MT8108E	♦ALP	297 - 40
MT8108H3	♦ALP	297 - 41
MT8108H	♦ALP	297 - 42
MT8109A	♦ALP	297 - 43
MT8109B2	♦ALP	297 - 44
MT8109E	♦ALP	297 - 45
MT8109H3	♦ALP	297 - 46
MT8109H	♦ALP	297 - 47
MT8194A	♦ALP	297 - 48
MT8194F1	♦ALP	297 - 49
MT8194H1	♦ALP	297 - 50
MT8194H	♦ALP	297 - 51
MT8195A	♦ALP	297 - 52
MT8195F1	♦ALP	297 - 53
MT8195H1	♦ALP	297 - 54
MT8195H	♦ALP	297 - 55
MT8196A	♦ALP	297 - 56
MT8196F1	♦ALP	297 - 57
MT8196H1	♦ALP	297 - 58
MT8196H	♦ALP	297 - 59
MT8197A	♦ALP	297 - 60
MT8197F1	♦ALP	297 - 61
MT8197H1	♦ALP	297 - 62
MT8197H	♦ALP	297 - 63
MT8532A	♦ALP	297 - 64
MT8532F1	♦ALP	297 - 65
MT8532H1	♦ALP	297 - 66
MT8532H	♦ALP	297 - 67
MT8533A	♦ALP	297 - 68
MT8533F1	♦ALP	297 - 69
MT8533H1	♦ALP	297 - 70
MT8533H	♦ALP	297 - 71
MT8536A	♦ALP	297 - 72
MT8536F1	♦ALP	297 - 73
MT8536H1	♦ALP	297 - 74
MT8536H	♦ALP	297 - 75
MT8537A	♦ALP	297 - 76
MT8537F1	♦ALP	297 - 77
MT8537H1	♦ALP	297 - 78
MT8537H	♦ALP	297 - 79
MT8538A	♦ALP	297 - 80
MT8538F1	♦ALP	297 - 81
MT8538H1	♦ALP	297 - 82
MT8538H	♦ALP	297 - 83
MT8539A	♦ALP	297 - 84
MT8539F1	♦ALP	297 - 85
MT8539H1	♦ALP	297 - 86
MT8539H	♦ALP	297 - 87
MT8540A	♦ALP	297 - 88
MT8540F1	♦ALP	297 - 89
MT8540H1	♦ALP	297 - 90
MT8540H	♦ALP	297 - 91
MT8541A	♦ALP	297 - 92
MT8541F1	♦ALP	297 - 93
MT8541H1	♦ALP	297 - 94

Δ-Registered with JEDEC by this manufacturer

♦-Mfr's data sheet available in microfilm service

1. TYPE No. CROSS INDEX

IN TYPE NUMBER SEQUENCE

TYPE No.	MFRS	Pg&Line
MT8541H	♦ALP	297 - 95
MT8542A	♦ALP	297 - 96
MT8542F1	♦ALP	297 - 97
MT8542H1	♦ALP	297 - 98
MT8542H	♦ALP	297 - 99
MT8543A	♦ALP	297 -100
MT8543F1	♦ALP	297 -101
MT8543H1	♦ALP	297 -102
MT8543H	♦ALP	297 -103
MT8546A	♦ALP	297 -104
MT8546F1	♦ALP	297 -105
MT8546H1	♦ALP	297 -106
MT8546H	♦ALP	297 -107
MT8547A	♦ALP	297 -108
MT8547F1	♦ALP	297 -109
MT8547H1	♦ALP	297 -110
MT8547H	♦ALP	298 - 1
MT8548A	♦ALP	298 - 2
MT8548F1	♦ALP	298 - 3
MT8548H1	♦ALP	298 - 4
MT8548H	♦ALP	298 - 5
MT8549A	♦ALP	298 - 6
MT8549F1	♦ALP	298 - 7
MT8549H1	♦ALP	298 - 8
MT8549H	♦ALP	298 - 9
MT8612A	♦ALP	298 - 10
MT8612F1	♦ALP	298 - 11
MT8612H1	♦ALP	298 - 12
MT8612H	♦ALP	298 - 13
MT8613A	♦ALP	298 - 14
MT8613F1	♦ALP	298 - 15
MT8613H1	♦ALP	298 - 16
MT8613H	♦ALP	298 - 17
MT8614A	♦ALP	298 - 18
MT8614F1	♦ALP	298 - 19
MT8614H1	♦ALP	298 - 20
MT8614H	♦ALP	298 - 21
MT8615A	♦ALP	298 - 22
MT8615F1	♦ALP	298 - 23
MT8615H1	♦ALP	298 - 24
MT8615H	♦ALP	298 - 25
MT8616A	♦ALP	298 - 26
MT8616F1	♦ALP	298 - 27
MT8616H1	♦ALP	298 - 28
MT8616H	♦ALP	298 - 29
MT8617A	♦ALP	298 - 30
MT8617F1	♦ALP	298 - 31
MT8617H1	♦ALP	298 - 32
MT8617H	♦ALP	298 - 33
MT8624A	♦ALP	298 - 34
MT8624F1	♦ALP	298 - 35
MT8624H1	♦ALP	298 - 36
MT8624H	♦ALP	298 - 37
MT8625A	♦ALP	298 - 38
MT8625F1	♦ALP	298 - 39
MT8625H1	♦ALP	298 - 40
MT8625H	♦ALP	298 - 41
MT8626A	♦ALP	298 - 42
MT8626F1	♦ALP	298 - 43
MT8626H1	♦ALP	298 - 44
MT8626H	♦ALP	298 - 45
MT8627A	♦ALP	298 - 46
MT8627F1	♦ALP	298 - 47
MT8627H1	♦ALP	298 - 48
MT8627H	♦ALP	298 - 49
MT8634A	♦ALP	298 - 50
MT8634F1	♦ALP	298 - 51
MT8634H1	♦ALP	298 - 52
MT8634H	♦ALP	298 - 53
MT8635A	♦ALP	298 - 54
MT8635F1	♦ALP	298 - 55
MT8635H1	♦ALP	298 - 56
MT8635H	♦ALP	298 - 57
MT8636A	♦ALP	298 - 58
MT8636F1	♦ALP	298 - 59
MT8636H1	♦ALP	298 - 60
MT8636H	♦ALP	298 - 61
MT8637A	♦ALP	298 - 62
MT8637F1	♦ALP	298 - 63
MT8637H1	♦ALP	298 - 64
MT8637H	♦ALP	298 - 65
MT8644A	♦ALP	298 - 66
MT8644F1	♦ALP	298 - 67
MT8644H1	♦ALP	298 - 68
MT8644H	♦ALP	298 - 69
MT8645A	♦ALP	298 - 70
MT8645F1	♦ALP	298 - 71
MT8645H1	♦ALP	298 - 72
MT8645H	♦ALP	298 - 73
MT8646A	♦ALP	298 - 74
MT8646F1	♦ALP	298 - 75
MT8646H1	♦ALP	298 - 76
MT8646H	♦ALP	298 - 77
MT8647A	♦ALP	298 - 78
MT8647F1	♦ALP	298 - 79
MT8647H1	♦ALP	298 - 80
MT8647H	♦ALP	298 - 81
MT8654A	♦ALP	298 - 82
MT8654F1	♦ALP	298 - 83
MT8654H1	♦ALP	298 - 84
MT8654H	♦ALP	298 - 85
MT8655A	♦ALP	298 - 86
MT8655F1	♦ALP	298 - 87
MT8655H1	♦ALP	298 - 88
MT8655H	♦ALP	298 - 89
MT8656A	♦ALP	298 - 90
MT8656F1	♦ALP	298 - 91
MT8656H1	♦ALP	298 - 92
MT8656H	♦ALP	298 - 93
MT8657A	♦ALP	298 - 94
MT8657F1	♦ALP	298 - 95
MT8657H1	♦ALP	298 - 96
MT8657H	♦ALP	298 - 97
MT8674F1P1	♦ALP	298 - 98
MT8674F1P2	♦ALP	298 - 99
MT8674F1P3	♦ALP	298 -100
MT8674H1P1	♦ALP	298 -101
MT8674H1P2	♦ALP	298 -102
MT8674H1P3	♦ALP	298 -103
MT8674H-P1	♦ALP	298 -104
MT8674H-P2	♦ALP	298 -105
MT8674H-P3	♦ALP	298 -106
MT8675F1P1	♦ALP	298 -107
MT8675F1P2	♦ALP	298 -108
MT8675F1P3	♦ALP	298 -109
MT8675H1P1	♦ALP	298 -110
MT8675H1P2	♦ALP	299 - 1
MT8675H1P3	♦ALP	299 - 2
MT8675H-P1	♦ALP	299 - 3
MT8675H-P2	♦ALP	299 - 4
MT8675H-P3	♦ALP	299 - 5
MTO8060	♦AVA	256 - 11
MTO8090	♦AVA	256 - 12
MTO8240	♦AVA	256 - 13
MTO8360	♦AVA	256 - 14
MV102	MITJ	175 - 76
MV103	MITJ	175 - 77
MV104	♦MOTA	191 - 58
MV104#	MITJ	188 - 42
MV104G	♦MOTA	191 - 44
MV109	♦MOTA	188 - 43
MV201	MITJ	175 - 26
MV205A	♦MSI	154 - 41
MV205B	♦MSI	154 - 42
MV205D	♦MSI	154 - 43
MV205E	♦MSI	154 - 44
MV205H	♦MSI	154 - 45
MV206A	♦MSI	154 - 46
MV206B	♦MSI	154 - 47
MV206D	♦MSI	154 - 48
MV206E	♦MSI	154 - 49
MV206H	♦MSI	154 - 50
MV209	♦MOTA	188 - 44
MV306	MITJ	192 - 98
MV830	KSI	179 - 25
	♦MOTA	♦MSI
MV830B	KSI	179 - 26
	MSI	
MV830C	KSI	179 - 27
	MSI	
MV831	KSI	182 - 27
	♦MOTA	♦MSI
MV831B	KSI	182 - 28
	MSI	
MV831C	KSI	182 - 29
	MSI	
MV832	KSI	184 -100
	♦MOTA	♦MSI
MV832B	KSI	184 -101
	MSI	
MV832C	KSI	184 -102
	MSI	
MV833	KSI	187 - 52
	♦MOTA	♦MSI
MV833B	KSI	187 - 53
	MSI	
MV833C	KSI	187 - 54
	MSI	
MV834	KSI	189 - 90
	♦MOTA	♦MSI
MV834B	KSI	189 - 91
	MSI	
MV834C	KSI	189 - 92
	MSI	
MV835	KSI	192 - 15
	♦MOTA	♦MSI
MV835B	KSI	192 - 16
	MSI	
MV835C	KSI	192 - 17
	MSI	
MV836	KSI	193 - 78
	♦MOTA	♦MSI
MV836B	KSI	193 - 79
	MSI	
MV836C	KSI	193 - 80
	MSI	
MV837	KSI	195 -109
	♦MOTA	♦MSI
MV837B	KSI	195 -110
	MSI	
MV837C	KSI	196 - 1
	MSI	
MV838	KSI	197 - 17
	♦MOTA	♦MSI
MV838B	KSI	197 - 18
	MSI	
MV838C	KSI	197 - 19
	MSI	
MV839	KSI	198 - 35
	♦MOTA	♦MSI
MV839B	KSI	198 - 36
	MSI	
MV839C	KSI	198 - 37
	MSI	
MV840	KSI	199 - 23
	♦MOTA	♦MSI
MV840B	KSI	199 - 24
	MSI	
MV840C	KSI	199 - 25
	♦MSI	
MV1401	♦MOTA	202 - 99
MV1403	♦MOTA	200 - 94
	♦MSI	
MV1403A	♦MSI	200 - 95
MV1403B	♦MSI	200 - 96
MV1403H	♦MOTA	200 - 97
MV1404	♦MOTA	199 -106
	♦MSI	
MV1404A	♦MSI	199 -107
MV1404B	♦MSI	199 -108
MV1404H	♦MOTA	199 -109
MV1405	♦MOTA	201 - 60
	♦MSI	
MV1405A	♦MSI	201 - 61
MV1405B	♦MSI	201 - 62
MV1405H	♦MOTA	201 - 63
MV1406	♦MSI	198 - 81
MV1406A	♦MSI	198 - 82
MV1406B	♦MSI	198 - 83
MV1407	♦MSI	196 - 76
MV1407A	♦MSI	196 - 77
MV1407B	♦MSI	196 - 78
MV1408	♦MSI	193 - 13
MV1408A	♦MSI	193 - 14
MV1408B	♦MSI	193 - 15
MV1409	♦MSI	188 -102
MV1409A	♦MSI	188 -103
MV1409B	♦MSI	188 -104
MV1410	♦MSI	183 - 87
MV1410A	♦MSI	183 - 88
MV1410B	♦MSI	183 - 89
MV1411	♦MSI	203 - 84
MV1411A	♦MSI	203 - 85
MV1411B	♦MSI	203 - 86
MV1412	♦MSI	203 - 67
MV1412A	♦MSI	203 - 68
MV1412B	♦MSI	203 - 69
MV1620	KSI	168 - 28
	MOTA	♦MSI
MV1620B	KSI	168 - 29
	♦MSI	
MV1620C	KSI	168 - 30
	♦MSI	
MV1622	KSI	171 - 16
	♦MOTA	♦MSI
MV1622B	KSI	171 - 17
	♦MSI	
MV1622C	KSI	171 - 18
	♦MSI	
MV1624	KSI	173 - 51
	♦MOTA	♦MSI
MV1624B	KSI	173 - 52
	♦MSI	
MV1624C	KSI	173 - 53
	♦MSI	
MV1626	KSI	176 - 86
	♦MOTA	♦MSI
MV1626B	KSI	176 - 87
	♦MSI	
MV1626C	KSI	176 - 88
	♦MSI	
MV1628	KSI	179 - 28
	♦MOTA	♦MSI
MV1628B	KSI	179 - 29
	♦MSI	
MV1628C	KSI	179 - 30
	♦MSI	
MV1630	KSI	182 - 30
	♦MOTA	♦MSI
MV1630B	KSI	182 - 31
	♦MSI	
MV1630C	KSI	182 - 32
	♦MSI	
MV1632	KSI	183 - 14
	♦MOTA	♦MSI
MV1632B	KSI	183 - 15
	♦MSI	
MV1632C	KSI	183 - 16
	♦MSI	
MV1634	KSI	184 -103
	♦MOTA	♦MSI
MV1634B	KSI	184 -104
	♦MSI	
MV1634C	KSI	184 -105
	♦MSI	
MV1636	KSI	187 - 55
	♦MOTA	♦MSI
MV1636B	KSI	187 - 56
	♦MSI	
MV1636C	KSI	187 - 57
	♦MSI	
MV1638	KSI	189 - 93
	♦MOTA	♦MSI
MV1638B	KSI	189 - 94
	♦MSI	
MV1638C	KSI	189 - 95
	♦MSI	
MV1640	KSI	192 - 18
	♦MOTA	♦MSI
MV1640B	KSI	192 - 19
	♦MSI	
MV1640C	KSI	192 - 20
	♦MSI	
MV1642	KSI	193 - 81
	♦MOTA	♦MSI
MV1642B	KSI	193 - 82
	♦MSI	
MV1642C	KSI	193 - 83
	♦MSI	
MV1644	KSI	196 - 2
	♦MOTA	♦MSI
MV1644B	KSI	196 - 3
	♦MSI	
MV1644C	KSI	196 - 4
	♦MSI	
MV1646	KSI	197 - 20
	♦MOTA	♦MSI
MV1646B	KSI	197 - 21
	♦MSI	
MV1646C	KSI	197 - 22
	♦MSI	
MV1648	KSI	198 - 38
	♦MOTA	♦MSI
MV1648B	KSI	198 - 39
	♦MSI	
MV1648C	KSI	198 - 40
	♦MSI	
MV1650	KSI	199 - 26
	♦MOTA	♦MSI
MV1650B	KSI	199 - 27
	♦MSI	
MV1650C	KSI	199 - 28
	♦MSI	
MV1652	KSI	200 - 12
	♦MOTA	♦MSI
MV1652B	KSI	200 - 13
	♦MSI	
MV1652C	KSI	200 - 14
	♦MSI	
MV1654	KSI	200 - 46
	♦MOTA	♦MSI
MV1654B	KSI	200 - 47
	♦MSI	
MV1654C	KSI	200 - 48
	♦MSI	
MV1656	KSI	200 -103
	♦MOTA	♦MSI
MV1656B	KSI	200 -104
	♦MSI	
MV1656C	KSI	200 -105
	♦MSI	
MV1658	KSI	201 - 27
	♦MOTA	♦MSI
MV1658B	KSI	201 - 28
	♦MSI	
MV1658C	KSI	201 - 29
	♦MSI	
MV1660	KSI	201 - 47
	♦MOTA	♦MSI
MV1660B	KSI	201 - 48
	♦MSI	
MV1660C	KSI	201 - 49
	♦MSI	
MV1662	KSI	201 - 69
	♦MOTA	♦MSI
MV1662B	KSI	201 - 70
	♦MSI	
MV1662C	KSI	201 - 71
	♦MSI	
MV1664	KSI	201 - 96
	♦MOTA	♦MSI
MV1664B	KSI	201 - 97
	♦MSI	
MV1664C	KSI	201 - 98
	♦MSI	
MV1666	KSI	202 - 13
	♦MOTA	♦MSI
MV1666B	KSI	202 - 14
	♦MSI	
MV1666C	KSI	202 - 15
	♦MSI	
MV1716,A	KSI	158 - 2
	MSI	
MV1717,A	KSI	160 - 99
	MSI	
MV1718,A	KSI	162 - 95
	MSI	
MV1719,A	MSI	165 - 67
MV1720	KSI	197 - 23
	MSI	
MV1720A	KSI	168 - 31
	MSI	
MV1722	KSI	171 - 19
	MSI	
MV1722A	KSI	171 - 20
	MSI	
MV1724	KSI	173 - 54
	MSI	
MV1724A	KSI	173 - 55
	MSI	
MV1726	KSI	176 - 89
	MSI	
MV1726A	KSI	176 - 90
	MSI	
MV1728	KSI	179 - 31
	MSI	
MV1728A	KSI	179 - 32
	MSI	
MV1730	KSI	182 - 33
	MSI	
MV1730A	KSI	182 - 34
	MSI	
MV1732	KSI	183 - 17
	MSI	
MV1734	KSI	184 -106
	MSI	
MV1734A	KSI	184 -107
	MSI	
MV1736	KSI	187 - 58
	MSI	
MV1736A	MSI	187 - 59
MV1738	KSI	189 - 96
	MSI	
MV1738A	KSI	189 - 97
	MSI	
MV1740	KSI	192 - 21
	MSI	
MV1740A	KSI	192 - 22
	MSI	
MV1742	KSI	193 - 84
	MSI	
MV1742A	KSI	193 - 85
	MSI	
MV1744	KSI	196 - 5
	MSI	
MV1744A	MSI	196 - 6
MV1746	KSI	197 - 24
	MSI	
MV1746A	KSI	197 - 25
	MSI	
MV1748	KSI	198 - 41
	MSI	
MV1748A	KSI	198 - 42
	MSI	
MV1750	KSI	199 - 29
	MSI	
MV1750A	KSI	199 - 30
	MSI	
MV1858A	♦MSI	148 - 14
MV1858B	♦MSI	148 - 15
MV1858D	♦MSI	148 - 16
MV1858E	MSI	173 - 56
MV1858H	MSI	148 - 17
MV1860A	♦MSI	155 - 70
MV1860B	♦MSI	155 - 71
MV1860D	♦MSI	155 - 72
MV1860E	MSI	155 - 73
MV1860H	MSI	155 - 74
MV1862A	♦MSI	159 - 86
MV1862B	♦MSI	159 - 87
MV1862D	♦MSI	159 - 88
MV1862E	MSI	159 - 89
MV1862H	MSI	159 - 90
MV1863A	♦MSI	163 -108
MV1863B	♦MSI	163 -109
MV1863D	♦MSI	163 -110
MV1863E	MSI	164 - 1
MV1863H	MSI	164 - 2
MV1864A	♦MSI	168 - 32
MV1864B	♦MSI	168 - 33
MV1864D	♦MSI	168 - 34
MV1864E	MSI	168 - 35
MV1864H	MSI	168 - 36
MV1865A	♦MSI	171 - 21
MV1865B	♦MSI	171 - 22
MV1865D	♦MSI	171 - 23
MV1865E	MSI	171 - 24
MV1865H	MSI	171 - 25
MV1866	KSI	173 - 57
	♦MOTA	
MV1866A	♦MSI	173 - 58
MV1866B	♦MSI	173 - 59
MV1866D	♦MSI	173 - 60
MV1866E	MSI	173 - 61
MV1866H	MSI	173 - 62
MV1868	KSI	176 - 91
	♦MOTA	
MV1868A	♦MSI	176 - 92
MV1868B	♦MSI	176 - 93
MV1868D	♦MSI	176 - 94
MV1868E	MSI	176 - 95
MV1868H	MSI	176 - 96
MV1870	KSI	179 - 33
	♦MOTA	
MV1870A	♦MSI	179 - 34
MV1870B	♦MSI	179 - 35
MV1870D	♦MSI	179 - 36
MV1870E	MSI	179 - 37
MV1870H	MSI	179 - 38
MV1871	KSI	182 - 35
	♦MOTA	MSI
MV1872	KSI	184 -108
	♦MOTA	♦MSI
MV1874	KSI	187 - 60
	♦MOTA	MSI
MV1876	KSI	189 - 98
	♦MOTA	♦MSI
MV1877	KSI	192 - 23
	♦MOTA	MSI
MV1878	KSI	193 - 86
	♦MOTA	MSI
MV2101	♦MOTA	168 - 37
	♦MSI	
MV2102	♦MOTA	171 - 26
	♦MSI	
MV2103	♦MOTA	173 - 63
	♦MSI	
MV2104	♦MOTA	176 - 97
	♦MSI	
MV2105	♦MOTA	179 - 39
	♦MSI	
MV2106	♦MOTA	182 - 36
	♦MSI	
MV2107	♦MOTA	184 -109
	♦MSI	
MV2108	♦MOTA	187 - 61
	♦MSI	
MV2109	♦MOTA	189 - 99
	♦MSI	
MV2110	♦MOTA	192 - 24
	♦MSI	
MV2111	♦MOTA	193 - 87
	♦MSI	
MV2112	♦MOTA	196 - 7
	♦MSI	
MV2113	♦MOTA	197 - 26
	♦MSI	
MV2114	♦MOTA	198 - 43
	♦MSI	
MV2115	♦MOTA	199 - 31
	♦MSI	
MV2201	♦MOTA	168 - 38
	♦MSI	
MV2201B,C	♦MSI	168 - 39
MV2203	♦MOTA	173 - 64
	♦MSI	
MV2203B,C	♦MSI	173 - 65
MV2205	♦MOTA	179 - 40
	♦MSI	

Δ-Registered with JEDEC by this manufacturer

♦-Mfr's data sheet available in microfilm service

1. TYPE No. CROSS INDEX

IN TYPE NUMBER SEQUENCE

TYPE No.	MFRS	Pg&Line
MV2205B,C	♦MSI	179 - 41
MV2207	♦MOTA	184 -110
MV2209	♦MOTA	189 -100
	♦MSI	
MV2209B,C	♦MSI	192 - 25
MV2211	♦MOTA	193 - 88
MV2213	♦MOTA	197 - 27
MV2215	♦MOTA	199 - 32
MV2301	♦MOTA	200 - 15
	♦MSI	
MV2301B,C	♦MSI	200 - 16
MV2302	♦MOTA	200 - 49
	♦MSI	
MV2302B,C	♦MSI	200 - 50
MV2303	♦MOTA	200 -106
	♦MSI	
MV2303B,C	♦MSI	200 -107
MV2304	♦MOTA	201 - 30
	♦MSI	
MV2304B,C	♦MSI	201 - 31
MV2305	♦MOTA	201 - 50
	♦MSI	
MV2305B,C	♦MSI	201 - 51
MV2306	♦MOTA	201 - 72
	♦MSI	
MV2306B,C	♦MSI	201 - 73
MV2307	♦MOTA	201 - 99
	♦MSI	
MV2307B,C	♦MSI	201 -100
MV2308	♦MOTA	202 - 16
	♦MSI	
MV2308B,C	♦MSI	202 - 17
MVAM109	♦MOTA	202 - 50
MVAM115	♦MOTA	202 - 56
MVAM125	♦MOTA	202 - 57
MVI2097	♦MOTA	148 - 18
MVI2098	♦MOTA	155 - 75
MVI2099	♦MOTA	159 - 91
MVI2100	♦MOTA	164 - 3
MVI2101	♦MOTA	168 - 40
MVI2102	♦MOTA	171 - 27
MVI2103	♦MOTA	173 - 66
MVI2104	♦MOTA	176 - 98
MVI2105	♦MOTA	179 - 42
MVI2106	♦MOTA	182 - 37
MVI2107	♦MOTA	185 - 1
MVI2108	♦MOTA	187 - 62
MVI2109	♦MOTA	189 -101
MXC19	OWE	108 - 75
MXC20	OWE	108 - 83
MXC24	OWE	107 -109
MXC25	OWE	109 - 75
MXC32	OWE	109 - 94
MXC33	OWE	108 - 78
MXC35	OWE	109 - 97
MXC44#1	OWE	109 - 87
MXC44#2	OWE	108 - 6
MXK12	OWE	68 - 88
MXK22	OWE	69 - 34
MXK32	OWE	68 - 84
MXK33	OWE	69 - 36
MXK48	OWE	68 - 80
MXK54	OWE	69 - 78
MXK61	OWE	68 - 8
MXT27	OWE	109 - 76
MXT37	OWE	108 - 1
MXT46	OWE	108 - 38
MXT51	OWE	108 - 79
MXT78	OWE	108 - 80
MXT102	OWE	108 - 36
MXT109	OWE	109 - 69
MXT125	OWE	109 - 93
MXT133	OWE	108 - 81
MZ0912B75Y	PHIN	310 - 25
MZ0912B150Y	PHIN	310 - 37
	♦RTCF	
MZ0912B200Y(A)		310 - 38
	♦PHIN	
MZZ0912B300Y	PHIN	309 - 49
	♦RTCF	
N1010	EEVB	60 - 76
N1034	EEVB	60 - 51
N1065	♦EEVB	100 - 83
N1071	♦EEVB	97 - 35
N1072	♦EEVB	96 - 43
N1073	♦EEVB	93 - 49
N1077	♦EEVB	97 - 27
N1078	♦EEVB	97 - 13
N1080A	♦EEVB	98 - 88
N1081	♦EEVB	101 - 59
N1082	♦EEVB	101 - 17
N1083	♦EEVB	96 - 99
N1089	♦EEVB	99 - 94
N1089B	♦EEVB	99 - 95
N1094	♦EEVB	93 - 80
N1095	♦EEVB	101 - 5
N10011	♦EEVB	99 - 57
N10012	♦EEVB	100 - 57
N10018/1	♦EEVB	96 - 23
N10018/2	♦EEVB	96 - 75
N10018/3	♦EEVB	96 - 91
N10019/1	♦EEVB	96 - 24
N10019/2	♦EEVB	96 - 76
N10019/3	♦EEVB	96 - 92
N10021	♦EEVB	102 - 85
N10024	EEVB	101 -101
N10025	♦EEVB	97 -102
N10025#ai	EEVB	97 - 51
N10028	EEVB	102 - 18
N10030	EEVB	98 - 81
N10033	♦EEVB	102 - 17
N10036	♦EEVB	102 - 12
N10037	♦EEVB	103 - 74
N10041	♦EEVB	101 - 39
N10042	♦EEVB	101 - 38
N10500	♦EEVB	96 -109
N10501	♦EEVB	101 - 60
N10502	♦EEVB	99 -104
N10503	♦EEVB	98 -105
N10504	♦EEVB	96 - 94
N10508	♦EEVB	89 - 43
N10517	♦EEVB	103 - 72
N10520	♦EEVB	101 - 83
N10524	♦EEVB	93 -103
N10525	♦EEVB	101 - 82
N10528	♦EEVB	101 - 34
ND7D07-1R	♦NECJ	236 - 48
ND7D07-5F	♦NECJ	236 - 49
ND7D10-1R	♦NECJ	236 - 50
ND7D10-5F	♦NECJ	236 - 51
ND7D15-1R	♦NECJ	236 - 52
ND7D15-5F	♦NECJ	236 - 53
ND7D19-1R	♦NECJ	236 - 54
ND7D19-5F	♦NECJ	236 - 55
ND7F07-1R	♦NECJ	236 - 56
ND7F07-5F	♦NECJ	236 - 57
ND7F10-1R	♦NECJ	236 - 58
ND7F10-5F	♦NECJ	236 - 59
ND7F15-1R	♦NECJ	236 - 60
ND7F15-5F	♦NECJ	236 - 61
ND7F19-1R	♦NECJ	236 - 62
ND7F19-5F	♦NECJ	236 - 63
ND7G07-1R	♦NECJ	236 - 64
ND7G07-5F	♦NECJ	236 - 65
ND7G07-5G	NECJ	236 - 66
ND7G10-1R	♦NECJ	236 - 67
ND7G10-5F	♦NECJ	236 - 68
ND7G15-1R	♦NECJ	236 - 69
ND7G15-5F	♦NECJ	236 - 70
ND7G19-1R	♦NECJ	236 - 71
ND7G19-5F	♦NECJ	236 - 72
ND7G55-1T	♦NECJ	236 - 73
ND7G60-1T	♦NECJ	236 - 74
ND7H07-1R	♦NECJ	236 - 75
ND7H07-5F	♦NECJ	236 - 76
ND7H10-1R	♦NECJ	236 - 77
ND7H10-5F	♦NECJ	236 - 78
ND7H15-1R	♦NECJ	236 - 79
ND7H15-5F	♦NECJ	236 - 80
ND7H45-1T	♦NECJ	236 - 81
ND7H50-1T	♦NECJ	236 - 82
ND7I19-1R	♦NECJ	236 - 83
ND7I19-5F	♦NECJ	236 - 84
ND7J07-1R	♦NECJ	236 - 85
ND7J07-5F	♦NECJ	236 - 86
ND7J10-1R	♦NECJ	236 - 87
ND7J10-5F	♦NECJ	236 - 88
ND7J15-1R	♦NECJ	236 - 89
ND7J15-5F	♦NECJ	236 - 90
ND7J19-1R	♦NECJ	236 - 91
ND7J19-5F	♦NECJ	236 - 92
ND7K07-1R	♦NECJ	236 - 93
ND7K07-5F	♦NECJ	236 - 94
ND7K10-1R	♦NECJ	236 - 95
ND7K10-5F	♦NECJ	236 - 96
ND7K15-1R	♦NECJ	236 - 97
ND7K15-5F	♦NECJ	236 - 98
ND7N07-1K	♦NECJ	236 - 99
ND7N10-1K	♦NECJ	236 -100
ND8G96W-1T	NECJ	236 -101
ND8J80W-1T	NECJ	236 -102
ND8L60W-1T	NECJ	236 -103
ND8M20-5G	NECJ	236 -104
ND8M30-1N	NECJ	236 -105
ND8N15-5G	NECJ	236 -106
ND8N40W-1N	NECJ	236 -107
ND8O11-5G	♦NECJ	236 -108
ND8O20-5H	NECJ	236 -109
ND8P08-5G	♦NECJ	236 -110
ND8P15-5H	NECJ	237 - 1
ND8P20W-5H	NECJ	237 - 2
ND8R11-5H	♦NECJ	237 - 3
ND8S08-5H	♦NECJ	237 - 4
ND8S15-1N	NECJ	237 - 5
ND8S15-5H	NECJ	237 - 6
ND8T11W-54	NECJ	237 - 7
ND8U08W-5H	♦NECJ	237 - 8
ND487C1-3P	♦NECJ	237 - 9
ND487C1-3R	♦NECJ	237 - 10
ND487C2-3P	♦NECJ	237 - 11
ND487C2-3R	♦NECJ	237 - 12
ND487R1-3P	♦NECJ	237 - 13
ND487R1-3R	♦NECJ	237 - 14
ND487R2-3P	♦NECJ	237 - 15
ND487R2-3R	♦NECJ	237 - 16
ND1142-7F	♦NECJ	239 -105
ND1143-7F	♦NECJ	239 -106
ND1242-5	♦NECJ	239 -107
ND1243-5F	♦NECJ	239 -108
ND1363-1G	♦NECJ	239 -109
ND1451-5F	♦NECJ	239 -110
ND1551-7F	♦NECJ	240 - 1
ND1561-5F	♦NECJ	240 - 2
ND1571-5F	♦NECJ	240 - 3
ND3100-5K	♦NECJ	247 - 11
ND3101-5M	♦NECJ	247 - 12
ND4121	♦NECJ	245 - 27
ND4131	♦NECJ	245 - 28
ND4132	♦NECJ	245 - 29
ND4133	♦NECJ	245 - 30
ND4141	♦NECJ	245 - 31
ND4151	♦NECJ	245 - 32
ND4431	♦NECJ	245 - 33
ND4691	♦NECJ	245 - 34
ND4692	♦NECJ	245 - 35
ND4701	♦NECJ	245 - 36
ND4781	♦NECJ	245 - 37
ND4991	♦NECJ	245 - 38
ND6261-3F	NECJ	223 - 71
ND6271-5E	NECJ	223 - 72
ND6281-3G	NECJ	223 - 73
ND6341-7E	NECJ	223 - 74
ND6361-3F	NECJ	223 - 75
ND6371-5E	NECJ	223 - 76
ND6461-3G	NECJ	223 - 77
ND6471-5E	NECJ	223 - 78
ND6481-5E	NECJ	223 - 79
ND6651-3M	NECJ	223 - 80
ND6661-3M	NECJ	223 - 81
ND6801-7E	NECJ	223 - 82
ND7130-5F	♦NECJ	237 - 17
ND7131-5F	♦NECJ	237 - 18
ND7150-5F	♦NECJ	237 - 19
ND7160-5F	♦NECJ	237 - 20
ND7161-5F	♦NECJ	237 - 21
ND7170-5F	NECJ	237 - 22
ND7180-5F	♦NECJ	237 - 23
ND7182-5F	♦NECJ	237 - 24
ND7190-5F	♦NECJ	237 - 25
ND7250-5F	♦NECJ	237 - 26
ND7251-5F	♦NECJ	237 - 27
ND7260-5F	♦NECJ	237 - 28
ND7261-5F	♦NECJ	237 - 29
ND7270-5F	♦NECJ	237 - 30
ND7280-5F	♦NECJ	237 - 31
ND7290-5F	♦NECJ	237 - 32
ND7300-5F	♦NECJ	237 - 33
ND7301-5F	♦NECJ	237 - 34
ND80196-1T	NECJ	237 - 35
ND80535-1P	NECJ	237 - 36
ND81015-5H	NECJ	237 - 37
ND81510-5H	NECJ	237 - 38
ND84010-6K	NECJ	237 - 39
NE1005E	♦NECJ	308 - 60
NE1010E	♦NECJ	308 - 65
NE2001	♦NECJ	312 - 53
NE2003	♦NECJ	312 - 64
NE2005	♦NECJ	312 - 69
NE2010	♦NECJ	312 - 75
NE02103	NECJ	317 - 51
NE02107	NECJ	317 - 46
NE02108	NECJ	317 - 52
NE02112	NECJ	317 - 47
NE02132	NECJ	318 - 33
NE02132E	NECJ	317 - 38
NE02133	NECJ	317 - 25
NE02135	NECJ	317 - 43
NE02136	NECJ	317 - 39
NE02160	NECJ	317 - 53
NE3001	NECJ	314 - 76
NE3001B20	♦NECJ	314 - 79
NE3003	NECJ	314 - 84
NE3003B20	♦NECJ	314 - 86
NE3005B20	♦NECJ	314 - 91
NE4201	NECJ	316 - 83
NE4201B20	♦NECJ	316 - 86
NE4203	NECJ	316 - 97
NE4203B20	♦NECJ	316 -101
NE13783	NECJ	322 - 45
NE020214-07	NECJ	301 - 33
NE020214-12	NECJ	301 - 34
NE020320-12	NECJ	301 - 41
NE020320-28	NECJ	301 - 42
NE020390-12	NECJ	301 - 43
NE020391-12	NECJ	301 - 44
NE020620-07	NECJ	301 - 63
NE020790-07	NECJ	301 - 64
NE020791-07	NECJ	300 - 10
NE021020-12	NECJ	301 - 65
NE021020-28	NECJ	301 - 66
NE021090-12	NECJ	301 - 67
NE021091-12	NECJ	302 - 1
NE21889	NECJ	322 - 39
NE21903	NECJ	320 - 24
NE21907	NECJ	320 - 25
NE21908	NECJ	320 - 26
NE21912	NECJ	320 - 23
NE21932E	NECJ	320 - 16
NE21935	NECJ	320 - 21
NE21936	NECJ	320 - 17
NE21955	NECJ	320 - 27
NE21960	NECJ	320 - 28
NE022025-12	NECJ	302 - 15
NE022025-28	NECJ	302 - 16
NE022090-12	NECJ	302 - 17
NE022091-12	NECJ	302 - 18
NE22120	NECJ	315 - 10
NE22154	NECJ	315 - 6
NE023592-12	NECJ	302 - 28
NE024029-28	NECJ	302 - 29
NE24406	NECJ	322 - 37
NE24483	NECJ	322 - 36
NE028024-28	NECJ	302 - 40
NE32702	♦NECJ	314 - 48
NE32707	♦NECJ	314 - 41
NE32708	♦NECJ	314 - 49
NE32730	♦NECJ	314 - 38
NE32740A	♦NECJ	314 - 50
NE32740B	♦NECJ	314 - 51
NE33353B	NECJ	316 - 63
NE33353E	NECJ	317 - 61
NE33354	NECJ	317 - 62
NE33387	NECJ	317 - 63
NE38806	NECJ	322 - 47
NE38883	NECJ	322 - 46
NE41603	NECJ	315 - 36
NE41607	NECJ	315 - 37
NE41610	NECJ	315 - 56
NE41612	NECJ	314 - 5
NE41612-1	NECJ	300 - 11
NE41615	NECJ	315 - 57
NE41620	NECJ	315 - 58
NE41632	NECJ	315 - 41
NE41632E/B	NECJ	315 - 42
NE41635	NECJ	315 - 38
NE41654	NECJ	315 - 59
NE41660	NECJ	315 - 60
NE41741	♦NECJ	317 - 40
NE46385	NECJ	322 - 32
NE050290-07	NECJ	301 - 37
NE050291-07	NECJ	301 - 38
NE050320-12	NECJ	301 - 45
NE050320-28	NECJ	301 - 60
NE050390-12	NECJ	301 - 46
NE050391-12	NECJ	301 - 47
NE050490-07	NECJ	302 - 2
NE050491-07	NECJ	302 - 3
NE051020-28	NECJ	302 - 12
NE051025-12	NECJ	302 - 13
NE051090-12	NECJ	302 - 4
NE051091-12	NECJ	302 - 5
NE051525-12	NECJ	302 - 19
NE052025-28	NECJ	302 - 27
NE052090-12	NECJ	302 - 20
NE052091-12	NECJ	302 - 21
NE053592-12	NECJ	302 - 32
NE56708	NECJ	300 - 55
NE56755	NECJ	320 - 83
NE56854	NECJ	319 - 62
NE56855	NECJ	319 - 63
NE56953	NECJ	301 - 29
NE56953B	NECJ	301 - 30
NE56953E	NECJ	320 - 48
NE56963E	NECJ	319 - 64
NE56987	NECJ	312 - 30
NE57510	NECJ	312 - 27
NE57520	NECJ	312 - 57
NE57803	NECJ	318 -104
NE57807	NECJ	318 -105
NE57808	NECJ	318 -106
NE57835	NECJ	319 - 1
NE59312	♦NECJ	311 - 75
NE59333	♦NECJ	311 - 65
NE59335	♦NECJ	311 - 76
NE59503	NECJ	316 - 50
NE59560	NECJ	316 - 51
NE64310	NECJ	312 - 12
NE64320	NECJ	312 - 26
NE64360	NECJ	312 - 28
NE64408	NECJ	320 - 78
NE64480	NECJ	320 - 79
NE64508	NECJ	320 - 54
NE64535	NECJ	320 - 53
NE64580	NECJ	320 - 55
NE64587	NECJ	320 - 56
NE69406	NECJ	322 - 25
NE69489	NECJ	301 - 13
NE69506	NECJ	301 - 21
NE69589	NECJ	301 - 16
NE71111	♦NECJ	308 - 13
NE73412	♦NECJ	311 - 77
NE73416	♦NECJ	311 - 83
NE73432B	♦NECJ	311 - 78
NE73432E	♦NECJ	311 - 79
NE73433	♦NECJ	311 - 66
NE73435	♦NECJ	311 - 80
NE73440A	♦NECJ	311 - 84
NE73440B	♦NECJ	311 - 85
NE74003	NECJ	312 - 95
NE74014	NECJ	312 - 51
NE74020	NECJ	312 - 97
NE74054	NECJ	312 - 98
NE74113	NECJ	311 - 42
NE74114	NECJ	311 - 43
NE77310	NECJ	313 - 92
NE77320M	NECJ	313 - 95
NE77320T	NECJ	313 - 96
NE77360	NECJ	313 - 97
NE77362	NECJ	313 - 98
NE080190-12	NECJ	301 - 35
NE080191-12	NECJ	301 - 36
NE080490-12	NECJ	302 - 6
NE080491-12	NECJ	302 - 7
NE081090-12	NECJ	302 - 22
NE081091-12	NECJ	302 - 23
NE87112	NECJ	311 - 81
NE88902	♦NECJ	316 - 26
NE88912	♦NECJ	316 - 27
NE88935	♦NECJ	316 - 19
NE90120	♦NECJ	313 - 82
NE98108	♦NECJ	319 - 46
NE98141	♦NECJ	319 - 52
NE98203	♦NECJ	319 - 56
NE98208	♦NECJ	319 - 57
NE98241	♦NECJ	319 - 54
NE98243	♦NECJ	319 - 59
NE200153	NECJ	313 - 53
NE200157	NECJ	313 - 54
NE200353	NECJ	313 - 55
NE200357	NECJ	313 - 56
NE200553	NECJ	313 - 68
NE200557	NECJ	313 - 69
NE201053	NECJ	313 - 71
NE243187	NECJ	320 - 34
NE243287	NECJ	320 - 38
NE243496	NECJ	320 - 46
NE300153	NECJ	315 - 63
NE300157	NECJ	315 - 64
NE300353	NECJ	315 - 67
NE300357	NECJ	315 - 68
NE300553	NECJ	315 - 72
NE300557	NECJ	315 - 73
NE420153	NECJ	317 - 11
NE420157	NECJ	317 - 12
NE420353	NECJ	317 - 13
NE420357	NECJ	317 - 14
NE464199	NECJ	320 - 58
NE464299	NECJ	320 - 62
NE464499	NECJ	320 - 65
NE868199	NECJ	320 - 59
NE868299	NECJ	320 - 63
NE868495-X	NECJ	301 - 48
NE868898-X	NECJ	302 - 11
NE869177-14	NECJ	301 - 22
NE869177-X	NECJ	301 - 23
NE869277-14	NECJ	301 - 25
NE869277-X	NECJ	301 - 26
NE869477-14	NECJ	301 - 31
NE869477-X	NECJ	301 - 32
NEL230120	NECJ	313 - 57
NEL230153	NECJ	313 - 58
NEL230154	NECJ	313 - 59
NEL230163	NECJ	313 - 60
NEL230197	NECJ	313 - 61
NEL230220	NECJ	313 - 63
NEL230253	NECJ	313 - 64
NEL230257	NECJ	313 - 65
NEL230263	NECJ	313 - 66
NEL230297	NECJ	313 - 67
NEL230320	NECJ	313 - 72
NEL230353	NECJ	313 - 73
NEL230357	NECJ	313 - 74
NEL230363	NECJ	313 - 75
NEL230397	NECJ	313 - 76
NEM050C29-28	NECJ	302 - 42
NEM1020	♦NECJ	308 - 70
NEM1040	♦NECJ	308 - 77
NEM1706B20	♦NECJ	311 - 45
NEM1712B20	NECJ	311 - 46
NEM1725B20	♦NECJ	311 - 47
NEM2003B20	♦NECJ	311 - 56
NEM2010	♦NECJ	312 - 78
NEM2010B20	NECJ	311 - 57
NEM2015	♦NECJ	312 - 82
NEM2015B20	NECJ	302 - 24
NEM2020	♦NECJ	312 - 85
NEM2701B20	♦NECJ	314 - 11
NEM2703B20	♦NECJ	314 - 17
NEM2705B20	♦NECJ	314 - 18
NEM2708B20	♦NECJ	314 - 21
NEM3001B20	NECJ	314 - 80
NEM3003B20	NECJ	314 - 87
NEM3005	NECJ	314 - 90
NEM3005B20	NECJ	314 - 94
NEM3008	NECJ	314 - 92
NEM3008B20	NECJ	314 - 95
NEM3501B20	NECJ	315 - 65
NEM3503B20	NECJ	315 - 70
NEM3505B20	NECJ	315 - 75
NEM3508B20	NECJ	315 - 76
NEM4201	NECJ	316 - 84
NEM4201B20	NECJ	316 - 87
NEM4203	NECJ	316 - 98
NEM4203B20	NECJ	316 -102
NEM4205	NECJ	317 - 3
NEM4205B20	NECJ	317 - 5
NEM20194	NECJ	316 - 88
NEM054029-28	NECJ	302 - 33
NEM056029-28	NECJ	302 - 41
NEM69406	NECJ	301 - 14
NEM69489	NECJ	301 - 15
NEM69506	NECJ	301 - 24
NEM69589	NECJ	301 - 17
NEM200394	NECJ	312 - 65
NEM201094	NECJ	312 - 76
NEM201594	NECJ	312 - 83
NEM230394	NECJ	313 - 41
NEM231094	NECJ	313 - 50
NEM270194	NECJ	314 - 12
NEM270394	NECJ	314 - 14
NEM270594	NECJ	314 - 19
NEM270894	NECJ	314 - 22
NEM300194	NECJ	314 - 81
NEM300394	NECJ	314 - 85
NEM300594	NECJ	314 - 93
NEM300894	NECJ	314 - 96
NEM350194	NECJ	315 - 66
NEM350394	NECJ	315 - 69
NEM350594	NECJ	315 - 74
NEM350894	NECJ	315 - 77
NEM420194	NECJ	316 - 89
NEM420394	NECJ	316 - 99
NEM420594	NECJ	317 - 4
NEM464199	NECJ	320 - 60
NEM464299	NECJ	320 - 64
NEM464499	NECJ	320 - 66
NEX2301	NECJ	301 - 49
NEX2302	NECJ	302 - 10
NEX2303	NECJ	302 - 14
NF42	♦FERS	108 - 60
NF43	♦FERS	108 - 61
NJS3301A	CEI	237 - 40
NJS6918	CEI	223 - 83
NJS7901	CEI	237 - 41
NTM2369	NECE	305 - 51
	NECJ	
OMK7001/TK106	OWE	68 - 44
OMK7002/6116/TK62		
	OWE	68 - 45
OMK7003/TK140	OWE	68 - 51
OMK7004/6940/TK76		
	OWE	68 - 46
OMK7005/TK80	OWE	66 - 57
OMK7006/TK108	OWE	66 - 58
OML1003	OWE	105 - 4
OMX1001	OWE	109 - 63
ON586	APX	317 - 89
OV1	USSR	60 - 41
OV2	USSR	60 - 56
OV603	USSR	60 - 52

△-Registered with JEDEC by this manufacturer

♦-Mfr's data sheet available in microfilm service

1. TYPE No. CROSS INDEX

IN TYPE NUMBER SEQUENCE

TYPE No.	MFRS	Pg&Line
OV604	USSR	60 - 44
OV612	USSR	61 - 2
OV613	USSR	61 - 11
OV614	USSR	61 - 23
OV619	USSR	60 - 69
OV620	USSR	60 - 60
OVC5	USSR	60 - 77
P0221H	♦PII	114 - 85
P0223H	PII	119 - 75
P0612	PII	129 - 41
P0801	PII	114 - 86
P0801A	PII	114 - 87
P0801B	PII	114 - 88
P0801C	PII	114 - 89
P0804	PII	119 - 76
P0804A	PII	119 - 77
P0804B	PII	119 - 78
P0804C	PII	119 - 79
P0836	PII	129 - 42
P0891	♦PII	114 - 90
P0891A	♦PII	114 - 91
P0892	♦PII	119 - 80
P0892A	♦PII	119 - 81
P0892B	PII	119 - 82
P0893	PII	130 - 71
P0893A	PII	130 - 72
P1903	PII	114 - 92
P1903A	PII	114 - 93
P1903B	PII	114 - 94
P1903C	PII	114 - 95
P1906	PII	119 - 83
P1906A	PII	119 - 84
P1906B	PII	119 - 85
P1906C	PII	119 - 86
P1907	PII	125 -106
P1907A	PII	125 -107
P1907B	PII	125 -108
P1907C	PII	125 -109
P1909	PII	126 - 94
P1909A	PII	126 - 95
P1909B	PII	126 - 96
P1909C	PII	126 - 97
P1909D	PII	126 - 98
P1921C	♦PII	114 - 96
P1921E	♦PII	114 - 97
P1921F	♦PII	114 - 98
P1921G	♦PII	114 - 99
P1923C	♦PII	119 - 87
P1923E	♦PII	119 - 88
P1923F	♦PII	119 - 89
P1923G	♦PII	119 - 90
P1933	PII	130 - 73
P1936	PII	129 - 43
P1953B	♦PII	126 - 99
P1953C	♦PII	126 -100
P1953D	♦PII	126 -101
P1953E	♦PII	126 -102
P1978B	♦PII	125 -110
P1978C	♦PII	126 - 1
P1978D	♦PII	126 - 2
P4210	PII	114 -100
P4210A	PII	114 -101
P4210B	PII	114 -102
P4210C	PII	114 -103
P4215H	♦PII	119 - 91
P4216H	♦PII	114 -104
P4272	PII	129 - 44
P4272A	PII	129 - 45
P4272B	PII	129 - 46
P4280	PII	119 - 92
P4280A	PII	119 - 93
P4280B	PII	119 - 94
P4284	♦PII	113 - 53
P4284A	♦PII	113 - 54
P4284B	♦PII	113 - 55
P7892	♦PII	119 - 95
P7892A	♦PII	119 - 96
P7892B	♦PII	119 - 97
P015001D,E-H	PII	137 - 35
P015004D,E-H	PII	143 - 88
P024004D,E-H	PII	143 - 89
P024010C,D,E,F	PII	151 - 32
P030004C,D,E,F	PII	203 - 1
P030020B,C,D,E	PII	158 - 13
P045004C,D,E,F	PII	143 - 90
P060020A,B,C,D	PII	158 - 14
P090010A,B,C,D	PII	151 - 33
PA0100H,J-L,N	♦PII	135 - 56
PA0100P,Q,S-V	♦PII	135 - 57
PA0100W	♦PII	135 - 58
PA0101H,J-L,N	♦PII	136 - 42
PA0101P,Q,S-U	♦PII	136 - 43
PA0102H,J,K,L	♦PII	138 - 65
PA0102N,P,Q,S	♦PII	138 - 66
PA0103H,J,K,L	♦PII	140 - 7
PA0103N,P	♦PII	140 - 35
PA0104H,J,K,L	♦PII	142 -103
PA0105H,J,K	♦PII	147 - 8
PA0106H,J	♦PII	148 - 47
PA0200A	♦PII	162 - 2
PA0200B	♦PII	157 - 86
PA0200C	♦PII	154 - 78
PA0200D	♦PII	148 - 43
PA0200E,F-H,J	♦PII	148 - 77
PA0700H,J-L,N	♦PII	135 - 59
PA0700P,Q,S-U	♦PII	135 - 60
PA0700V,W	♦PII	135 - 61
PA0701H,J-L,N	♦PII	136 - 44
PA0701P,Q,S-U	♦PII	136 - 45
PA0702H,J,K,L	♦PII	138 - 67
PA0702N,P,Q,S	♦PII	138 - 68
PA0703H,J,K,L	♦PII	140 - 8
PA0703N,P	♦PII	140 - 36
PA0704H,J,K,L	♦PII	142 -104
PA0705H,J,K	♦PII	147 - 9
PA0706H,J	♦PII	148 - 48
PB0401-04	PII	205 - 67
PB0401-05	PII	205 - 68
PB0401-07	PII	205 - 69
PB0401-35	PII	205 - 70
PB0402-04	PII	205 - 71
PB0402-05	PII	205 - 72
PB0402-07	PII	205 - 73
PB0402-35	PII	205 - 74
PB0403-04	PII	205 -104
PB0403-05	PII	205 -105
PB0403-07	PII	205 -106
PB0403-35	PII	205 -107
PB0451	PII	212 - 87
PB0452	PII	212 - 88
PB0453	PII	212 - 89
PB0454	PII	212 - 90
PB0461	PII	212 - 91
PB0462	PII	212 - 92
PB0463	PII	212 - 93
PB0464	PII	212 - 94
PC1RP	STCE	223 - 84
PC1RP-B	STCE	223 - 85
PC107,A,B,C,D	♦MSI	168 - 41
PC107,A,B,C,D#	♦KSI	168 - 42
PC112,A,B,C,D	MSI	173 - 67
PC112,A,B,C,D#	♦KSI	173 - 68
PC113,A,B,C,D	MSI	185 - 2
PC113,A,B,C,D#	♦KSI	185 - 3
PC114,A,B,C,D	MSI	193 - 89
PC114,A,B,C,D#	♦KSI	193 - 90
PC115,A,B,C,D	♦KSI	173 - 69
PC115,A,B,C,D#	♦KSI	173 - 70
PC116,A,B,C,D	♦KSI	185 - 4
PC116,A,B,C,D#	♦KSI	185 - 5
PC117,A,B,C,D	♦KSI	193 - 91
PC117,A,B,C,D#	♦KSI	193 - 92
PC122,A,B,C,D	♦KSI	193 - 93
PC122,A,B,C,D#	♦KSI	193 - 94
PC123,A,B,C,D	♦MSI	179 - 43
PC123,A,B,C,D#	♦KSI	179 - 44
PC124,A,B,C,D	MSI	179 - 45
PC124,A,B,C,D#	♦KSI	179 - 46
PC125,A,B,C,D	♦KSI	179 - 47
PC125,A,B,C,D#	♦KSI	179 - 48
PC126,A,B,C,D	♦KSI	179 - 49
PC126,A,B,C,D#	♦KSI	179 - 50
PC127,A,B,C,D	♦MSI	189 -102
PC127,A,B,C,D#	♦KSI	189 -103
PC128,A,B,C,D	MSI	189 -104
PC128,A,B,C,D#	♦KSI	189 -105
PC129,A,B,C,D	♦KSI	189 -106
PC129,A,B,C,D#	♦KSI	189 -107
PC130,A,B,C,D	♦KSI	189 -108
PC130,A,B,C,D#	♦KSI	189 -109
PC132,A,B,C,D	♦KSI	173 - 71
PC132,A,B,C,D#	♦KSI	173 - 72
PC133,A,B,C,D	♦MSI	185 - 6
PC133,A,B,C,D#	♦KSI	185 - 7
PC134,A,B,C,D	♦MSI	193 - 95
PC134,A,B,C,D#	♦KSI	193 - 96
PC135,A,B,C,D	MSI	173 - 73
PC135,A,B,C,D#	♦KSI	173 - 74
PC136,A,B,C,D	MSI	185 - 8
PC136,A,B,C,D#	♦KSI	185 - 9
PC137,A,B,C,D	MSI	193 - 97
PC137,A,B,C,D#	♦KSI	193 - 98
PC138,A,B,C,D	♦MSI	168 - 43
PC138,A,B,C,D#	♦KSI	168 - 44
PC139,A,B,C,D	MSI	168 - 45
PC139,A,B,C,D#	♦KSI	168 - 46
PC140,A,B,C,D	MSI	168 - 47
PC140,A,B,C,D#	♦KSI	168 - 48
PC141,A,B,C,D	MSI	168 - 49
PC141,A,B,C,D#	♦KSI	168 - 50
PC0600A	♦PII	168 - 98
PC0600B	♦PII	168 - 99
PC0600C	♦PII	168 -100
PC0600D	♦PII	168 -101
PC0601A	♦PII	173 - 75
PC0601B	♦PII	173 - 76
PC0601C	♦PII	173 - 77
PC0601D	♦PII	173 - 78
PC0602A	♦PII	179 - 51
PC0602B	♦PII	179 - 52
PC0602C	♦PII	179 - 53
PC0602D	♦PII	179 - 54
PC0603A	♦PII	185 - 10
PC0603B	♦PII	185 - 11
PC0603C	♦PII	185 - 12
PC0604A	♦PII	189 -110
PC0604B	♦PII	190 - 1
PC0604C	♦PII	190 - 2
PC0605A	♦PII	193 - 99
PC0605B	♦PII	193 -100
PC0605C	♦PII	193 -101
PC0610A	♦PII	168 -102
PC0610B	♦PII	168 -103
PC0610C	♦PII	168 -104
PC0611A	♦PII	173 - 79
PC0611B	♦PII	173 - 80
PC0611C	♦PII	173 - 81
PC0612A	♦PII	179 - 55
PC0612B	♦PII	179 - 56
PC0612C	♦PII	179 - 57
PC0613A	♦PII	185 - 13
PC0613B	♦PII	185 - 14
PC0613C	♦PII	185 - 15
PC0614A	♦PII	190 - 3
PC0614B	♦PII	190 - 4
PC0614C	♦PII	190 - 5
PC0615A	♦PII	193 -102
PC0615B	♦PII	193 -103
PC0615C	♦PII	193 -104
PC0620A	♦PII	168 -105
PC0620B	♦PII	168 -106
PC0620C	♦PII	168 -107
PC0621A	♦PII	173 - 82
PC0621B	♦PII	173 - 83
PC0622A	♦PII	179 - 58
PC0622B	♦PII	179 - 59
PC0623A	♦PII	185 - 16
PC0623B	♦PII	185 - 17
PC0624A	♦PII	190 - 6
PC0624B	♦PII	190 - 7
PC0625A	♦PII	193 -105
PC0625B	♦PII	193 -106
PC0630A	♦PII	168 -108
PC0630B	♦PII	168 -109
PC0631A	♦PII	173 - 84
PC0632A	♦PII	179 - 60
PC0632B	♦PII	179 - 61
PC0633A	♦PII	185 - 18
PC0634A	♦PII	190 - 8
PC0635A	♦PII	193 -107
PC0640A	♦PII	168 -110
PC0641A	♦PII	173 - 85
PC0642A	♦PII	179 - 62
PC0643A	♦PII	185 - 19
PC0644A	♦PII	190 - 9
PC0645A	♦PII	193 -108
PC1400A	PII	169 - 1
PC1400B	PII	169 - 2
PC1400C	PII	169 - 3
PC1400D	PII	169 - 4
PC1401A	PII	173 - 86
PC1401B	PII	173 - 87
PC1401C	PII	173 - 88
PC1401D	PII	173 - 89
PC1402A	PII	179 - 63
PC1402B	PII	179 - 64
PC1402C	PII	179 - 65
PC1402D	PII	179 - 66
PC1403A	PII	185 - 20
PC1403B	PII	185 - 21
PC1403C	PII	185 - 22
PC1404A	PII	190 - 10
PC1404B	PII	190 - 11
PC1404C	PII	190 - 12
PC1405A	PII	164 - 4
PC1405B	PII	164 - 5
PC1405C	PII	164 - 6
PC1410A	PII	169 - 5
PC1410B	PII	169 - 6
PC1410C	PII	169 - 7
PC1411A	PII	173 - 90
PC1411B	PII	173 - 91
PC1411C	PII	173 - 92
PC1412A	PII	179 - 67
PC1412B	PII	179 - 68
PC1412C	PII	179 - 69
PC1413A	PII	185 - 23
PC1413B	PII	185 - 24
PC1413C	PII	185 - 25
PC1414A	PII	190 - 13
PC1414B	PII	190 - 14
PC1414C	PII	190 - 15
PC1415A	PII	164 - 7
PC1415B	PII	164 - 8
PC1415C	PII	164 - 9
PC1420A	PII	169 - 8
PC1420B	PII	169 - 9
PC1420C	PII	169 - 10
PC1421A	PII	173 - 93
PC1421B	PII	173 - 94
PC1422A	PII	179 - 70
PC1422B	PII	179 - 71
PC1423A	PII	185 - 26
PC1423B	PII	185 - 27
PC1424A	PII	190 - 16
PC1424B	PII	190 - 17
PC1425A	PII	164 - 10
PC1425B	PII	164 - 11
PC1430A	PII	169 - 11
PC1430B	PII	169 - 12
PC1431A	♦PII	173 - 95
PC1432A	♦PII	179 - 72
PC1433A	♦PII	185 - 28
PC1434A	♦PII	190 - 18
PC1435A	♦PII	164 - 12
PC1440A	PII	169 - 13
PC1441A	PII	173 - 96
PC1442A	PII	179 - 73
PC1443A	PII	185 - 29
PC1444A	PII	190 - 19
PC1445A	PII	164 - 13
PC2600A	PII	169 - 14
PC2600B	♦PII	169 - 15
PC2600C	♦PII	169 - 16
PC2600D	♦PII	169 - 17
PC2601A	♦PII	173 - 97
PC2601B	♦PII	173 - 98
PC2601C	♦PII	173 - 99
PC2601D	♦PII	173 -100
PC2602A	♦PII	179 - 74
PC2602B	♦PII	179 - 75
PC2602C	♦PII	179 - 76
PC2602D	♦PII	179 - 77
PC2603A	♦PII	185 - 30
PC2603B	♦PII	185 - 31
PC2603C	♦PII	185 - 32
PC2604A	♦PII	190 - 20
PC2604B	♦PII	190 - 21
PC2604C	♦PII	190 - 22
PC2605A	♦PII	193 -109
PC2605B	♦PII	193 -110
PC2605C	♦PII	194 - 1
PC2610A	♦PII	169 - 18
PC2610B	♦PII	169 - 19
PC2610C	♦PII	169 - 20
PC2610D	♦PII	169 - 21
PC2611A	♦PII	173 -101
PC2611B	♦PII	173 -102
PC2611C	♦PII	173 -103
PC2611D	♦PII	173 -104
PC2612A	♦PII	179 - 78
PC2612B	♦PII	179 - 79
PC2612C	♦PII	179 - 80
PC2612D	♦PII	179 - 81
PC2613A	♦PII	185 - 33
PC2613B	♦PII	185 - 34
PC2613C	♦PII	185 - 35
PC2614A	♦PII	190 - 23
PC2614B	♦PII	190 - 24
PC2614C	♦PII	190 - 25
PC2615A	♦PII	194 - 2
PC2615B	♦PII	194 - 3
PC2615C	♦PII	194 - 4
PC2620A	♦PII	169 - 22
PC2620B	♦PII	169 - 23
PC2620C	♦PII	169 - 24
PC2620D	♦PII	169 - 25
PC2621A	♦PII	173 -105
PC2621B	♦PII	173 -106
PC2621C	♦PII	173 -107
PC2621D	♦PII	173 -108
PC2622A	♦PII	179 - 82
PC2622B	♦PII	179 - 83
PC2622C	♦PII	179 - 84
PC2623A	♦PII	185 - 36
PC2623B	♦PII	185 - 37
PC2623C	♦PII	185 - 38
PC2624A	♦PII	190 - 26
PC2624B	♦PII	190 - 27
PC2624C	♦PII	190 - 28
PC2625A	♦PII	194 - 5
PC2625B	♦PII	194 - 6
PC2625C	♦PII	194 - 7
PC2630A	♦PII	169 - 26
PC2630B	♦PII	169 - 27
PC2630C	♦PII	169 - 28
PC2630D	♦PII	169 - 29
PC2631A	♦PII	173 -109
PC2631B	♦PII	173 -110
PC2631C	♦PII	174 - 1
PC2632A	♦PII	179 - 85
PC2632B	♦PII	179 - 86
PC2632C	♦PII	179 - 87
PC2633A	♦PII	185 - 39
PC2633B	♦PII	185 - 40
PC2633C	♦PII	185 - 41
PC2634A	♦PII	190 - 29
PC2634B	♦PII	190 - 30
PC2635A	♦PII	194 - 8
PC2635B	♦PII	194 - 9
PC2640A	♦PII	169 - 30
PC2640B	♦PII	169 - 31
PC2640C	♦PII	169 - 32
PC2641A	♦PII	174 - 2
PC2641B	♦PII	174 - 3
PC2641C	♦PII	174 - 4
PC2642A	♦PII	179 - 88
PC2642B	♦PII	179 - 89
PC2642C	♦PII	179 - 90
PC2643A	♦PII	185 - 42
PC2643B	♦PII	185 - 43
PC2644A	♦PII	190 - 31
PC2644B	♦PII	190 - 32
PC2645A	♦PII	194 - 10
PC2645B	♦PII	194 - 11
PD1RP	STCE	223 - 86
PD1RP-B	STCE	223 - 87
PD2RP	STCE	223 - 88
PD3RP	STCE	223 - 89
PD3RP-A	STCE	223 - 90
PD422	♦PII	132 - 31
PD0801	♦PII	130 - 74
PD0801A	♦PII	130 - 75
PD0801AL	♦PII	130 - 76
PD0801L	♦PII	130 - 77
PD0802	♦PII	130 - 78
PD0802L	♦PII	130 - 79
PD0803	♦PII	130 - 80
PD0803L	♦PII	130 - 81
PD0804	♦PII	128 - 72
PD0804L	♦PII	128 - 73
PD0805	♦PII	128 - 74
PD0805L	♦PII	128 - 75
PD0806	♦PII	128 - 76
PD0806L	♦PII	128 - 77
PD0807	♦PII	130 - 82
PD0807L	♦PII	130 - 83
PD0808	♦PII	130 - 84
PD0808L	♦PII	130 - 85
PDD100-02	♦PII	130 - 86
PDD100-06	♦PII	130 - 87
PDD100-08	♦PII	130 - 88
PDD100-19	♦PII	130 - 89
PDD100-42	♦PII	130 - 90
PDE1000U	♦APX	308 - 34
PDE1001T	MULB	308 - 43
PDE1001U	♦APX	308 - 47
	MULB	♦RTCF
PDE1003U	♦APX	308 - 52
	MULB	RTCF
PDE1005U	♦APX	308 - 79
	MULB	RTCF
PDE1010U	♦APX	308 - 63
	♦PHIN	RTCF
PEE1000U	♦APX	308 - 33
PEE1001T	MULB	308 - 44
	♦PHIN	♦RTCF
PEE1001U	♦APX	308 - 39
	MULB	♦PHIN
		♦RTCF
PEE1003U	♦APX	308 - 53
	MULB	♦PHIN
		♦RTCF
PEE1005U	♦APX	308 - 61
	MULB	♦PHIN
		♦RTCF
PEE1010U	♦APX	308 - 64
	MULB	♦PHIN
		♦RTCF
PFA100-01	PII	143 - 7
PFA100-05	PII	143 - 8
PFA100-45	PII	143 - 9
PFA100A01	PII	143 - 10
PFA100A05	PII	143 - 11
PFA100A45	PII	143 - 12
PFA100B01	PII	143 - 13
PFA100B05	PII	143 - 14
PFA100B45	PII	143 - 15
PFA100C01	PII	141 -100
PFA100C05	PII	141 -101
PFA100C45	PII	141 -102
PFA100D01	PII	141 - 34
PFA100D05	PII	141 - 35
PFA100D45	PII	141 - 36
PFA100E01	PII	140 - 67
PFA100E05	PII	140 - 68
PFA100E45	PII	140 - 69
PFA100F01	PII	139 - 64
PFA100F05	PII	139 - 65
PFA100F45	PII	139 - 66
PFA100G01	PII	139 - 67
PFA100G05	PII	139 - 68
PFA100G45	PII	139 - 69
PFA100H01	PII	139 - 70
PFA100H05	PII	139 - 71
PFA100H45	PII	139 - 72
PFG910A01	♦PII	241 - 89
PFG910A05	♦PII	241 - 90
PFG910A45	♦PII	241 - 91
PFG910B01	♦PII	241 - 92
PFG910B05	♦PII	241 - 93
PFG910B45	♦PII	241 - 94
PFG910C01	♦PII	241 - 95
PFG910C05	♦PII	241 - 96
PFG910C45	♦PII	241 - 97

Δ-Registered with JEDEC by this manufacturer

♦-Mfr's data sheet available in microfilm service

1. TYPE No. CROSS INDEX

IN TYPE NUMBER SEQUENCE

TYPE No.	MFRS	Pg&Line
PFG910D01	♦PII	241 - 98
PFG910D05	♦PII	241 - 99
PFG910D45	♦PII	241 -100
PFG910E01	♦PII	241 -101
PFG910E05	♦PII	241 -102
PFG910E45	♦PII	241 -103
PFG910F01	♦PII	241 -104
PFG910F05	♦PII	241 -105
PFG910F45	♦PII	241 -106
PFG910G01	♦PII	241 -107
PFG910G05	♦PII	241 -108
PFG910G45	♦PII	241 -109
PFG910H01	♦PII	241 -110
PFG910H05	♦PII	242 - 1
PFG910H45	♦PII	242 - 2
PFG911A01	♦PII	242 - 3
PFG911A05	♦PII	242 - 4
PFG911A45	♦PII	242 - 5
PFG911B01	♦PII	242 - 6
PFG911B05	♦PII	242 - 7
PFG911B45	♦PII	242 - 8
PFG911C01	♦PII	242 - 9
PFG911C05	♦PII	242 - 10
PFG911C45	♦PII	242 - 11
PFG911D01	♦PII	242 - 12
PFG911D05	♦PII	242 - 13
PFG911D45	♦PII	242 - 14
PFG920A01	♦PII	242 - 15
PFG920A05	♦PII	242 - 16
PFG920A45	♦PII	242 - 17
PFG920B01	♦PII	242 - 18
PFG920B05	♦PII	242 - 19
PFG920B45	♦PII	242 - 20
PFG920C01	♦PII	242 - 21
PFG920C05	♦PII	242 - 22
PFG920C45	♦PII	242 - 23
PFG920D01	♦PII	242 - 24
PFG920D05	♦PII	242 - 25
PFG920D45	♦PII	242 - 26
PFG920E01	♦PII	242 - 27
PFG920E05	♦PII	242 - 28
PFG920E45	♦PII	242 - 29
PFG920F01	♦PII	242 - 30
PFG920F05	♦PII	242 - 31
PFG920F45	♦PII	242 - 32
PFG920G01	♦PII	242 - 33
PFG920G05	♦PII	242 - 34
PFG920G45	♦PII	242 - 35
PFG921A01	♦PII	242 - 36
PFG921A05	♦PII	242 - 37
PFG921A45	♦PII	242 - 38
PFG921B01	♦PII	242 - 39
PFG921B05	♦PII	242 - 40
PFG921B45	♦PII	242 - 41
PFG921C01	♦PII	242 - 42
PFG921C05	♦PII	242 - 43
PFG921C45	♦PII	242 - 44
PFG930A01	♦PII	242 - 45
PFG930A05	♦PII	242 - 46
PFG930A45	♦PII	242 - 47
PFG930B01	♦PII	242 - 48
PFG930B45	♦PII	242 - 49
PFG930C01	♦PII	242 - 50
PFG930C05	♦PII	242 - 51
PFG930C45	♦PII	242 - 52
PFG930D01	♦PII	242 - 53
PFG930D05	♦PII	242 - 54
PFG930D45	♦PII	242 - 55
PFG930E01	♦PII	242 - 56
PFG930E05	♦PII	242 - 57
PFG930E45	♦PII	242 - 58
PFG931A01	♦PII	242 - 59
PFG931A05	♦PII	242 - 60
PFG931A45	♦PII	242 - 61
PFG931B01	♦PII	242 - 62
PFG931B05	♦PII	242 - 63
PFG931B45	♦PII	242 - 64
PFL100-01	PII	141 -103
PFL100-34	PII	141 -104
PFL100-44	PII	141 -105
PFL100A01	PII	141 -106
PFL100A34	PII	141 -107
PFL100A44	PII	141 -108
PFL100B01	PII	141 -109
PFL100B34	PII	141 -110
PFL100B44	PII	142 - 1
PFM190	♦PII	119 - 98
PFM191	♦PII	119 - 99
PFM192	♦PII	119 -100
PFM193	♦PII	126 - 3
PFM194	♦PII	126 - 4
PFM195	♦PII	126 - 5
PFM196	♦PII	126 - 6
PFM197	♦PII	126 -103
PFM198	♦PII	126 -104
PFM199	♦PII	126 -105
PFM199A	♦PII	126 -106
PFM200	♦PII	119 -101
PFM201	♦PII	119 -102
PFM202	♦PII	119 -103
PFM420	♦PII	119 -104
PFM421	♦PII	119 -105
PFM422	♦PII	119 -106
PFM800	♦PII	119 -107
PFM801	♦PII	119 -108
PFM802	♦PII	119 -109
PFS700-01	♦PII	223 - 91
PFS700-05	♦PII	223 - 92
PFS700-08	♦PII	223 - 93
PFS700-45	♦PII	223 - 94
PFS701-01	♦PII	223 - 95
PFS701-05	♦PII	223 - 96
PFS701-08	♦PII	223 - 97
PFS701-45	♦PII	223 - 98
PFS702-01	♦PII	223 - 99
PFS702-05	♦PII	223 -100
PFS702-08	♦PII	223 -101
PFS702-45	♦PII	223 -102
PFS703-01	♦PII	223 -103
PFS703-05	♦PII	223 -104
PFS703-08	♦PII	223 -105
PFS703-45	♦PII	223 -106
PFS704-01	♦PII	223 -107
PFS704-05	♦PII	223 -108
PFS704-08	♦PII	223 -109
PFS704-45	♦PII	223 -110
PFS705-01	♦PII	224 - 1
PFS705-05	♦PII	224 - 2
PFS705-08	♦PII	224 - 3
PFS705-45	♦PII	224 - 4
PFS706-01	♦PII	224 - 5
PFS706-05	♦PII	224 - 6
PFS706-08	♦PII	224 - 7
PFS706-45	♦PII	224 - 8
PFS707-01	♦PII	224 - 9
PFS707-05	♦PII	224 - 10
PFS707-08	♦PII	224 - 11
PFS707-45	♦PII	224 - 12
PFS708-01	♦PII	224 - 13
PFS708-05	♦PII	224 - 14
PFS708-08	♦PII	224 - 15
PFS708-45	♦PII	224 - 16
PFS709-01	♦PII	224 - 17
PFS709-05	♦PII	224 - 18
PFS709-08	♦PII	224 - 19
PFS709-45	♦PII	224 - 20
PFS710-01	♦PII	224 - 21
PFS710-05	♦PII	224 - 22
PFS710-08	♦PII	224 - 23
PFS710-45	♦PII	224 - 24
PFS711-01	♦PII	224 - 25
PFS711-05	♦PII	224 - 26
PFS711-08	♦PII	224 - 27
PFS711-45	♦PII	224 - 28
PFS712-01	♦PII	224 - 29
PFS712-05	♦PII	224 - 30
PFS712-08	♦PII	224 - 31
PFS712-45	♦PII	224 - 32
PFS713-01	♦PII	224 - 33
PFS713-05	♦PII	224 - 34
PFS713-08	♦PII	224 - 35
PFS713-45	♦PII	224 - 36
PFV100-01	♦PII	144 - 99
PFV100-05	♦PII	144 -100
PFV100-21	♦PII	144 -101
PFV100-31	♦PII	144 -102
PFV100-45	♦PII	144 -103
PFV101-01	♦PII	150 - 1
PFV101-05	♦PII	150 - 2
PFV101-21	♦PII	150 - 3
PFV101-31	♦PII	150 - 4
PFV101-45	♦PII	150 - 5
PFV102-01	♦PII	156 - 5
PFV102-05	♦PII	156 - 6
PFV102-21	♦PII	156 - 7
PFV102-31	♦PII	156 - 8
PFV102-45	♦PII	156 - 9
PFV103-01	♦PII	160 - 6
PFV103-05	♦PII	160 - 7
PFV103-21	♦PII	160 - 8
PFV103-31	♦PII	160 - 9
PFV103-45	♦PII	160 - 10
PFV104-01	♦PII	162 - 16
PFV104-05	♦PII	162 - 17
PFV104-21	♦PII	162 - 18
PFV104-31	♦PII	162 - 19
PFV104-45	♦PII	162 - 20
PFV105-01	♦PII	144 -104
PFV105-05	♦PII	144 -105
PFV105-21	♦PII	144 -106
PFV105-31	♦PII	144 -107
PFV105-45	♦PII	144 -108
PFV106-01	♦PII	150 - 6
PFV106-05	♦PII	150 - 7
PFV106-21	♦PII	150 - 8
PFV106-31	♦PII	150 - 9
PFV106-45	♦PII	150 - 10
PFV107-01	♦PII	156 - 10
PFV107-05	♦PII	156 - 11
PFV107-21	♦PII	156 - 12
PFV107-31	♦PII	156 - 13
PFV107-45	♦PII	156 - 14
PFV108-01	♦PII	160 - 11
PFV108-05	♦PII	160 - 12
PFV108-21	♦PII	160 - 13
PFV108-31	♦PII	160 - 14
PFV108-45	♦PII	160 - 15
PFV109-01	♦PII	162 - 21
PFV109-05	♦PII	162 - 22
PFV109-21	♦PII	162 - 23
PFV109-31	♦PII	162 - 24
PFV109-45	♦PII	162 - 25
PFV110-01	♦PII	144 -109
PFV110-05	♦PII	144 -110
PFV110-21	♦PII	145 - 1
PFV110-31	♦PII	145 - 2
PFV110-45	♦PII	145 - 3
PFV111-01	♦PII	150 - 11
PFV111-05	♦PII	150 - 12
PFV111-21	♦PII	150 - 13
PFV111-31	♦PII	150 - 14
PFV111-45	♦PII	150 - 15
PFV112-01	♦PII	156 - 15
PFV112-05	♦PII	156 - 16
PFV112-21	♦PII	156 - 17
PFV112-31	♦PII	156 - 18
PFV112-45	♦PII	156 - 19
PFV113-01	♦PII	160 - 16
PFV113-05	♦PII	160 - 17
PFV113-21	♦PII	160 - 18
PFV113-31	♦PII	160 - 19
PFV113-45	♦PII	160 - 20
PFV114-01	♦PII	162 - 26
PFV114-05	♦PII	162 - 27
PFV114-21	♦PII	162 - 28
PFV114-31	♦PII	162 - 29
PFV114-45	♦PII	162 - 30
PFV115-01	♦PII	145 - 4
PFV115-05	♦PII	145 - 5
PFV115-21	♦PII	145 - 6
PFV115-31	♦PII	145 - 7
PFV115-45	♦PII	145 - 8
PFV116-01	♦PII	150 - 16
PFV116-05	♦PII	150 - 17
PFV116-21	♦PII	150 - 18
PFV116-31	♦PII	150 - 19
PFV116-45	♦PII	150 - 20
PFV117-01	♦PII	156 - 20
PFV117-05	♦PII	156 - 21
PFV117-21	♦PII	156 - 22
PFV117-31	♦PII	156 - 23
PFV117-45	♦PII	156 - 24
PFV118-01	♦PII	160 - 21
PFV118-05	♦PII	160 - 22
PFV118-21	♦PII	160 - 23
PFV118-31	♦PII	160 - 24
PFV118-45	♦PII	160 - 25
PFV119-01	♦PII	162 - 31
PFV119-05	♦PII	162 - 32
PFV119-21	♦PII	162 - 33
PFV119-31	♦PII	162 - 34
PFV119-45	♦PII	162 - 35
PFV120-01	♦PII	145 - 9
PFV120-05	♦PII	145 - 10
PFV120-21	♦PII	145 - 11
PFV120-31	♦PII	145 - 12
PFV120-45	♦PII	145 - 13
PFV121-01	♦PII	150 - 21
PFV121-05	♦PII	150 - 22
PFV121-21	♦PII	150 - 23
PFV121-31	♦PII	150 - 24
PFV121-45	♦PII	150 - 25
PFV122-01	♦PII	156 - 25
PFV122-05	♦PII	156 - 26
PFV122-21	♦PII	156 - 27
PFV122-31	♦PII	156 - 28
PFV122-45	♦PII	156 - 29
PFV123-01	♦PII	160 - 26
PFV123-05	♦PII	160 - 27
PFV123-21	♦PII	160 - 28
PFV123-31	♦PII	160 - 29
PFV123-45	♦PII	160 - 30
PFV124-01	♦PII	162 - 36
PFV124-05	♦PII	162 - 37
PFV124-21	♦PII	162 - 38
PFV124-31	♦PII	162 - 39
PFV124-45	♦PII	162 - 40
PG107	♦KSI	168 - 51
PG107A	KSI	168 - 52
	♦MSI	
PG107B	KSI	168 - 53
	MSI	
PG107C	KSI	168 - 54
	♦MSI	
PG107D	KSI	168 - 55
	♦MSI	
PG0110D	PII	135 - 62
PG0110F	PII	135 - 63
PG0110H	PII	135 - 64
PG0110J	PII	135 - 65
PG0110K	PII	135 - 66
PG0110L	PII	135 - 67
PG0110N	PII	135 - 68
PG0110P	PII	135 - 69
PG0110Q	PII	135 - 70
PG0110S	PII	135 - 71
PG0110T	PII	135 - 72
PG110	♦KSI	174 - 5
PG110A	KSI	174 - 6
	♦MSI	
PG110B	KSI	174 - 7
	♦MSI	
PG110C	KSI	174 - 8
	♦MSI	
PG110D	KSI	174 - 9
	♦MSI	
PG0111D	PII	136 - 46
PG0111F	PII	136 - 47
PG0111H	PII	136 - 48
PG0111J	PII	136 - 49
PG0111K	PII	136 - 50
PG0111L	PII	136 - 51
PG0111N	PII	136 - 52
PG0111P	PII	136 - 53
PG0112D	PII	138 - 78
PG0112F	PII	138 - 79
PG0112H	PII	138 - 80
PG0112J	PII	138 - 81
PG0112K	PII	138 - 82
PG0112X	PII	237 - 42
PG0113X	PII	237 - 43
PG0114X	PII	237 - 44
PG0115X	PII	237 - 45
PG115	♦KSI	179 - 91
PG115A	KSI	179 - 92
	MSI	
PG115B	KSI	179 - 93
	MSI	
PG115C	KSI	179 - 94
	MSI	
PG115D	KSI	179 - 95
	MSI	
PG0122X	PII	237 - 46
PG122	♦KSI	185 - 44
PG122A	KSI	185 - 45
	♦MSI	
PG122B	KSI	185 - 46
	♦MSI	
PG122C	KSI	185 - 47
	♦MSI	
PG122D	KSI	185 - 48
	♦MSI	
PG0123X	PII	237 - 47
PG0124X	PII	237 - 48
PG0125X	PII	237 - 49
PG0132X	PII	237 - 50
PG0133X	PII	237 - 51
PG133	♦KSI	190 - 33
PG133A	KSI	190 - 34
	♦MSI	
PG133B	KSI	190 - 35
	♦MSI	
PG133C	KSI	190 - 36
	♦MSI	
PG133D	KSI	190 - 37
	♦MSI	
PG139B	KSI	192 - 28
	♦MSI	
PG139C	KSI	192 - 29
	♦MSI	
PG139D	KSI	192 - 30
	♦MSI	
PG0142X	PII	237 - 54
PG0143X	PII	237 - 55
PG0144X	PII	237 - 56
PG0145X	PII	237 - 57
PG147	♦KSI	194 - 12
PG147A	KSI	194 - 13
	♦MSI	
PG147B	KSI	194 - 14
	♦MSI	
PG147C	KSI	194 - 15
	♦MSI	
PG147D	KSI	194 - 16
	♦MSI	
PG0152X	PII	237 - 58
PG0153X	PII	237 - 59
PG0154X	PII	237 - 60
PG0155X	PII	237 - 61
PG207	♦KSI	168 - 56
PG207A	KSI	168 - 57
	♦MSI	
PG207B	KSI	168 - 58
	♦MSI	
PG207C	KSI	168 - 59
	♦MSI	
PG207D	KSI	168 - 60
	♦MSI	
PG210	♦KSI	174 - 10
PG210A	KSI	174 - 11
	♦MSI	
PG210B	KSI	174 - 12
	♦MSI	
PG210C	KSI	174 - 13
	♦MSI	
PG210D	KSI	174 - 14
	♦MSI	
PG215	♦KSI	179 - 96
PG215A	KSI	179 - 97
	♦MSI	
PG215B	KSI	179 - 98
	♦MSI	
PG215C	KSI	179 - 99
	♦MSI	
PG215D	KSI	179 -100
	♦MSI	
PG222	♦KSI	185 - 49
PG222A	KSI	185 - 50
	♦MSI	
PG222B	KSI	185 - 51
	♦MSI	
PG222C	KSI	185 - 52
	♦MSI	
PG222D	KSI	185 - 53
	♦MSI	
PG233	♦KSI	190 - 38
PG233A	KSI	190 - 39
	♦MSI	
PG233B	KSI	190 - 40
	♦MSI	
PG233C	KSI	190 - 41
	♦MSI	
PG233D	KSI	190 - 42
	♦MSI	
PG239	♦KSI	192 - 31
PG239A	KSI	192 - 32
	♦MSI	
PG239B	KSI	192 - 33
	♦MSI	
PG239C	KSI	192 - 34
	♦MSI	
PG239D	KSI	192 - 35
	♦MSI	
PG247	♦KSI	194 - 17
PG247A	KSI	194 - 18
	♦MSI	
PG247B	KSI	194 - 19
	♦MSI	
PG247C	KSI	194 - 20
	♦MSI	
PG247D	KSI	194 - 21
	♦MSI	
PG307	♦KSI	168 - 61
PG307A	KSI	168 - 62
	♦MSI	
PG307B	KSI	168 - 63
	♦MSI	
PG307C	KSI	168 - 64
	♦MSI	
PG307D	KSI	168 - 65
	♦MSI	
PG310	♦KSI	174 - 15
PG310A	KSI	174 - 16
	♦MSI	
PG310B	KSI	174 - 17
	♦MSI	
PG310C	KSI	174 - 18
	♦MSI	
PG310D	KSI	174 - 19
	♦MSI	
PG315	♦KSI	179 -101
PG315A	KSI	179 -102
	♦MSI	
PG315B	KSI	179 -103
	♦MSI	
PG315C	KSI	179 -104
	♦MSI	
PG315D	KSI	179 -105
	♦MSI	
PG322	♦KSI	185 - 54
PG322A	KSI	185 - 55
	MSI	
PG322B	KSI	185 - 56
	MSI	
PG322C	KSI	185 - 57
	MSI	
PG322D	KSI	185 - 58
	MSI	
PG333	♦KSI	190 - 43
PG333A	KSI	190 - 44
	♦MSI	
PG333B	KSI	190 - 45
	♦MSI	
PG333C	KSI	190 - 46
	♦MSI	
PG333D	KSI	190 - 47
	♦MSI	
PG339	♦KSI	192 - 36
PG339A	KSI	192 - 37
	♦MSI	
PG339B	KSI	192 - 38
	♦MSI	
PG339C	KSI	192 - 39
	♦MSI	
PG339D	KSI	192 - 40
	♦MSI	
PG347A	♦MSI	194 - 22
PG347B	♦MSI	194 - 23
PG347C	KSI	194 - 24
	♦MSI	
PG347D	KSI	194 - 25
	♦MSI	
PGB4001U	MULB	316 - 75
♦PHIN	♦RTCF	
PGB38001UT	PHIN	315 - 84
	RTCF	
PGB42001U	MULB	316 - 79
	RTCF	
PGB42002U	MULB	316 - 85
PGG200-01	♦PII	237 - 62
PGG200-34	♦PII	237 - 63
PGG200-82	♦PII	237 - 64
PGG200-83	♦PII	237 - 65
PGG201-01	♦PII	237 - 66
PGG201-34	♦PII	237 - 67
PGG201-82	♦PII	237 - 68
PGG201-83	♦PII	237 - 69
PGG202-01	♦PII	237 - 70
PGG202-34	♦PII	237 - 71
PGG202-82	♦PII	237 - 72
PGG202-83	♦PII	237 - 73
PGG203-01	♦PII	237 - 74
PGG203-34	♦PII	237 - 75
PGG203-82	♦PII	237 - 76
PGG203-83	♦PII	237 - 77
PGG204-01	♦PII	237 - 78
PGG204-34	♦PII	237 - 79
PGG204-82	♦PII	237 - 80
PGG204-83	♦PII	237 - 81
PGG205-01	♦PII	237 - 82
PGG205-34	♦PII	237 - 83
PGG205-82	♦PII	237 - 84
PGG205-83	♦PII	237 - 85
PGG206-01	♦PII	237 - 86
PGG206-34	♦PII	237 - 87
PGG206-82	♦PII	237 - 88
PGG206-83	♦PII	237 - 89
PGG207-01	♦PII	237 - 90
PGG207-34	♦PII	237 - 91
PGG207-82	♦PII	237 - 92
PGG207-83	♦PII	237 - 93
PGG208-01	♦PII	237 - 94
PGG208-34	♦PII	237 - 95
PGG208-82	♦PII	237 - 96
PGG208-83	♦PII	237 - 97
PGG209-01	♦PII	237 - 98
PGG209-34	♦PII	237 - 99
PGG209-82	♦PII	237 -100
PGG209-83	♦PII	237 -101
PGG210-01	♦PII	237 -102
PGG210-34	♦PII	237 -103
PGG210-82	♦PII	237 -104
PGG210-83	♦PII	237 -105
PGG211-01	♦PII	237 -106

Δ-Registered with JEDEC by this manufacturer

♦-Mfr's data sheet available in microfilm service

1. TYPE No. CROSS INDEX

IN TYPE NUMBER SEQUENCE

TYPE No.	MFRS	Pg&Line
PGG211-34	♦PII	237 -107
PGG211-82	♦PII	237 -108
PGG211-83	♦PII	237 -109
PGG212-01	♦PII	237 -110
PGG212-34	♦PII	238 - 1
PGG213-01	♦PII	238 - 2
PGG213-34	♦PII	238 - 3
PGG214-01	♦PII	238 - 4
PGG214-34	♦PII	238 - 5
PGG215-01	♦PII	238 - 6
PGG215-34	♦PII	238 - 7
PGG216-01	♦PII	238 - 8
PGG216-34	♦PII	238 - 9
PGG217-01	♦PII	238 - 10
PGG217-34	♦PII	238 - 11
PGG218-01	♦PII	238 - 12
PGG218-34	♦PII	238 - 13
PGG219-01	♦PII	238 - 14
PGG219-34	♦PII	238 - 15
PGG220-01	♦PII	238 - 16
PGG220-34	♦PII	238 - 17
PGG221-01	♦PII	238 - 18
PGG221-34	♦PII	238 - 19
PGG222-01	♦PII	238 - 20
PGG222-34	♦PII	238 - 21
PGG223-01	♦PII	238 - 22
PGG223-34	♦PII	238 - 23
PGG224-01	♦PII	238 - 24
PGG224-34	♦PII	238 - 25
PGG225-01	♦PII	238 - 26
PGG225-34	♦PII	238 - 27
PGS300-08	♦PII	224 - 37
PGS301-08	♦PII	224 - 38
PGS302-08	♦PII	224 - 39
PGS303-08	♦PII	224 - 40
PGS304-08	♦PII	224 - 41
PGS305-08	♦PII	224 - 42
PGS306-01	♦PII	224 - 43
PGS306-05	♦PII	224 - 44
PGS307-01	♦PII	224 - 45
PGS307-05	♦PII	224 - 46
PGS308-01	♦PII	224 - 47
PGS308-05	♦PII	224 - 48
PGS309-01	♦PII	224 - 49
PGS309-05	♦PII	224 - 50
PH0305	PII	197 - 77
PH0306	PII	194 - 99
PH0307	PII	188 - 51
PH0308	PII	197 - 78
PH0309	PII	194 -100
PH0310	PII	188 - 52
PH0311	PII	197 - 79
PH0312	PII	194 -101
PH0313	PII	188 - 53
PH1200-1,2,3,4	♦PII	137 - 36
PH1200A,B-F	♦PII	137 - 37
PH1200G,H,J-L	♦PII	137 - 38
PH1200N,P,Q	♦PII	137 - 39
PH1201-1,2,3,4	♦PII	143 - 91
PH1201A,B-F	♦PII	143 - 92
PH1201G,H,J-L	♦PII	143 - 93
PH1201N,P	♦PII	143 - 94
PH1202-1,2,3,4	♦PII	151 - 34
PH1202A,B-F	♦PII	151 - 35
PH1202G,H,J-L	♦PII	151 - 36
PH1202N	♦PII	151 - 37
PH1203-1,2,3,4	♦PII	158 - 15
PH1203A,B-F	♦PII	158 - 16
PH1203G,H	♦PII	158 - 17
PH1204-1,2,3,4	♦PII	165 -106
PH1204A,B-F	♦PII	165 -107
PH1205-1,2,3,4	♦PII	175 - 29
PH1205A,B,C	♦PII	175 - 30
PH1206-1,2,3,4	♦PII	180 - 87
PH1206A,B	♦PII	180 - 88
PH1207-1,2,3,4	♦PII	186 - 30
PH1207A,B	♦PII	186 - 31
PH1210-1,2,3,4	♦PII	137 - 40
PH1210A,B-F	♦PII	137 - 41
PH1210G,H,J-L	♦PII	137 - 42
PH1210N,P,Q	♦PII	137 - 43
PH1211-1,2,3,4	♦PII	143 - 95
PH1211A,B-F	♦PII	143 - 96
PH1211G,H,J-L	♦PII	143 - 97
PH1211N,P	♦PII	143 - 98
PH1212-1,2,3,4	♦PII	151 - 38
PH1212A,B-F	♦PII	151 - 39
PH1212G,H,J-L	♦PII	151 - 40
PH1212N	♦PII	151 - 41
PH1213-1,2,3,4	♦PII	158 - 18
PH1213A,B-F	♦PII	158 - 19
PH1213G,H	♦PII	158 - 20
PH1214-1,2,3,4	♦PII	165 -108
PH1214A,B-F	♦PII	165 -109
PH1215-1,2,3,4	♦PII	175 - 31
PH1215A,B,C	♦PII	175 - 32
PH1216-1,2,3,4	♦PII	180 - 89
PH1216A,B	♦PII	180 - 90
PH1217-1,2,3,4	♦PII	186 - 32
PH1217A,B	♦PII	186 - 33
PH1220-1,2,3,4	♦PII	137 - 44
PH1220A,B-F	♦PII	137 - 45
PH1220G,H,J-L	♦PII	137 - 46
PH1220N,P	♦PII	137 - 47
PH1221-1,2,3,4	♦PII	143 - 99
PH1221A,B-F	♦PII	143 -100
PH1221G,H,J-L	♦PII	143 -101
PH1222-1,2,3,4	♦PII	151 - 42
PH1222A,B-F	♦PII	151 - 43
PH1222G,H,J	♦PII	151 - 44
PH1223-1,2,3,4	♦PII	158 - 21
PH1223A,B-F	♦PII	158 - 22
PH1223G,H	♦PII	158 - 23
PH1224-1,2,3,4	♦PII	165 -110
PH1224A,B-F	♦PII	166 - 1
PH1225-1,2,3,4	♦PII	175 - 33
PH1225A,B,C	♦PII	175 - 34
PH1226-1,2,3,4	♦PII	180 - 91
PH1226A	♦PII	180 - 92
PH1227-1,2,3,4	♦PII	186 - 34
PH1227A	♦PII	186 - 35
PH1230-1,2,3,4	♦PII	137 - 48
PH1230A,B-F	♦PII	137 - 49
PH1230G,H,J-L	♦PII	137 - 50
PH1231-1,2,3,4	♦PII	143 -102
PH1231A,B-F	♦PII	143 -103
PH1231G,H,J	♦PII	143 -104
PH1232-1,2,3,4	♦PII	151 - 45
PH1232A,B-F	♦PII	151 - 46
PH1232G,H	♦PII	151 - 47
PH1233-1,2,3,4	♦PII	158 - 24
PH1233A,B-E	♦PII	158 - 25
PH1234-1,2,3,4	♦PII	166 - 2
PH1234A,B,C	♦PII	166 - 3
PH1235-1,2,3,4	♦PII	175 - 35
PH1235A	♦PII	175 - 36
PH1236-1,2,3	♦PII	180 - 93
PH1237-1,2	♦PII	186 - 36
PH1240-1,2,3,4	♦PII	137 - 51
PH1240A,B-F	♦PII	137 - 52
PH1240G,H,J,K	♦PII	137 - 53
PH1241-1,2,3,4	♦PII	143 -105
PH1241A,B-F	♦PII	143 -106
PH1241G,H,J	♦PII	143 -107
PH1242-1,2,3,4	♦PII	151 - 48
PH1242A,B-F	♦PII	151 - 49
PH1242G,H	♦PII	151 - 50
PH1243-1,2,3,4	♦PII	158 - 26
PH1243A,B-E	♦PII	158 - 27
PH1244-1,2,3,4	♦PII	166 - 4
PH1244A,B,C	♦PII	166 - 5
PH1245-1,2,3,4	♦PII	175 - 37
PH1245A	♦PII	175 - 38
PH1246-1,2,3	♦PII	180 - 94
PH1247-1,2	♦PII	186 - 37
PH1250-1,2,3,4	♦PII	137 - 54
PH1250A,B-F	♦PII	137 - 55
PH1250G,H,J	♦PII	137 - 56
PH1251-1,2,3,4	♦PII	143 -108
PH1251A,B-F	♦PII	143 -109
PH1251G,H	♦PII	143 -110
PH1252-1,2,3,4	♦PII	151 - 51
PH1252A,B-F	♦PII	151 - 52
PH1252G	♦PII	151 - 53
PH1253-1,2,3,4	♦PII	158 - 28
PH1253A,B-E	♦PII	158 - 29
PH1254-1,2,3,4	♦PII	166 - 6
PH1254A,B,C	♦PII	166 - 7
PH1255-1,2,3,4	♦PII	175 - 39
PH1255A	♦PII	175 - 40
PH1256-1,2,3	♦PII	180 - 95
PH1257-1,2	♦PII	186 - 38
PH1260-1,2,3,4	♦PII	137 - 57
PH1260A,B-F	♦PII	137 - 58
PH1260G,H	♦PII	137 - 59
PH1261-1,2,3,4	♦PII	144 - 1
PH1261A,B-F	♦PII	144 - 2
PH1261G	♦PII	144 - 3
PH1262-1,2,3,4	♦PII	151 - 54
PH1262A,B-E	♦PII	151 - 55
PH1263-1,2,3,4	♦PII	158 - 30
PH1263A,B-D	♦PII	158 - 31
PH1264-1,2,3,4	♦PII	166 - 8
PH1264A,B,C	♦PII	166 - 9
PH1265-1,2,3,4	♦PII	175 - 41
PH1266-1,2,3	♦PII	180 - 96
PH1267-1,2	♦PII	186 - 39
PH1270-1,2,3,4	♦PII	137 - 60
PH1270A,B-F	♦PII	137 - 61
PH1270G	♦PII	137 - 62
PH1271-1,2,3,4	♦PII	144 - 4
PH1271A,B-E	♦PII	144 - 5
PH1272-1,2,3,4	♦PII	151 - 56
PH1272A,B-D	♦PII	151 - 57
PH1273-1,2,3,4	♦PII	158 - 32
PH1273A,B,C	♦PII	158 - 33
PH1274-1,2,3,4	♦PII	166 - 10
PH1274A	♦PII	166 - 11
PH1275-1,2,3,4	♦PII	175 - 42
PH1276-1,2,3	♦PII	180 - 97
PH1277-1,2	♦PII	186 - 40
PH1280-1,2,3,4	♦PII	137 - 63
PH1280A,B-E	♦PII	137 - 64
PH1281-1,2,3,4	♦PII	144 - 6
PH1281A,B,C	♦PII	144 - 7
PH1282-1,2,3,4	♦PII	151 - 58
PH1282A,B	♦PII	151 - 59
PH1283-1,2,3,4	♦PII	158 - 34
PH1283A	♦PII	158 - 35
PH1284-1,2,3	♦PII	166 - 12
PH1285-1,2	♦PII	175 - 43
PH1286-1	♦PII	180 - 98
PH1287-1	♦PII	186 - 41
PH1290-1,2,3,4	♦PII	137 - 65
PH1290A,B	♦PII	137 - 66
PH1291-1,2,3,4	♦PII	144 - 8
PH1291A	♦PII	144 - 9
PH1292-1,2,3,4	♦PII	151 - 60
PH1293-1,2,3	♦PII	158 - 36
PH1294-1,2	♦PII	166 - 13
PH1295-1	♦PII	175 - 44
PH1296-1	♦PII	180 - 99
PH1297-1	♦PII	186 - 42
PH2222A	♦PHIN	302 - 65
PH2222AR	PHIN	302 - 66
PH2369	MULB PHIN	305 - 62
PHR900-03	PII	242 - 65
PHR900-12	♦PII	242 - 66
PHR900-22	♦PII	242 - 67
PHR900-82	♦PII	242 - 68
PHR901-03	♦PII	242 - 69
PHR901-12	♦PII	242 - 70
PHR901-22	♦PII	242 - 71
PHR901-82	♦PII	242 - 72
PHR902-03	♦PII	242 - 73
PHR902-12	♦PII	242 - 74
PHR902-22	♦PII	242 - 75
PHR902-82	♦PII	242 - 76
PHR903-03	♦PII	242 - 77
PHR903-12	♦PII	242 - 78
PHR903-22	♦PII	242 - 79
PHR903-82	♦PII	242 - 80
PHR904-03	♦PII	242 - 81
PHR904-12	♦PII	242 - 82
PHR904-22	♦PII	242 - 83
PHR904-82	♦PII	242 - 84
PHR904-83	♦PII	161 -108
PHR905-01	♦PII	242 - 85
PHR905-12	♦PII	242 - 86
PHR905-22	♦PII	242 - 87
PHR905-83	♦PII	242 - 88
PHR906-01	♦PII	242 - 89
PHR906-12	♦PII	242 - 90
PHR906-22	♦PII	242 - 91
PHR906-83	♦PII	242 - 92
PHR907-01	♦PII	242 - 93
PHR907-05	♦PII	242 - 94
PHR907-45	♦PII	242 - 95
PHR907-83	♦PII	242 - 96
PHR908-01	♦PII	242 - 97
PHR908-05	♦PII	242 - 98
PHR908-45	♦PII	242 - 99
PHR908-83	♦PII	242 -100
PHR909-01	♦PII	242 -101
PHR909-05	♦PII	242 -102
PHR909-45	♦PII	242 -103
PHR909-83	♦PII	242 -104
PHR910-01	♦PII	242 -105
PHR910-05	♦PII	242 -106
PHR910-45	♦PII	242 -107
PHR910-83	♦PII	242 -108
PHR1000-01	♦PII	242 -109
PHR1000-22	♦PII	242 -110
PHR1000-32	♦PII	243 - 1
PHR1000-83	♦PII	243 - 2
PHR1001-01	♦PII	243 - 3
PHR1001-22	♦PII	243 - 4
PHR1001-32	♦PII	243 - 5
PHR1001-83	♦PII	243 - 6
PHR1002-01	♦PII	243 - 7
PHR1002-22	♦PII	243 - 8
PHR1002-32	♦PII	243 - 9
PHR1002-83	♦PII	243 - 10
PHR1003-01	♦PII	243 - 11
PHR1003-22	♦PII	243 - 12
PHR1003-32	♦PII	243 - 13
PHR1003-83	♦PII	243 - 14
PHR1004-01	♦PII	243 - 15
PHR1004-83	♦PII	243 - 16
PHR1005-01	♦PII	243 - 17
PHR1005-83	♦PII	243 - 18
PHS700-01	♦PII	224 - 51
PHS700-82	♦PII	224 - 52
PHS700-83	♦PII	224 - 53
PHS701-01	♦PII	224 - 54
PHS701-82	♦PII	224 - 55
PHS701-83	♦PII	224 - 56
PHS702-01	♦PII	224 - 57
PHS702-82	♦PII	224 - 58
PHS702-83	♦PII	224 - 59
PHS703-01	♦PII	224 - 60
PHS703-82	♦PII	224 - 61
PHS703-83	♦PII	224 - 62
PHS704-01	♦PII	224 - 63
PHS704-82	♦PII	224 - 64
PHS704-83	♦PII	224 - 65
PHS705-01	♦PII	224 - 66
PHS705-82	♦PII	224 - 67
PHS705-83	♦PII	224 - 68
PHS706-01	♦PII	224 - 69
PHS706-82	♦PII	224 - 70
PHS706-83	♦PII	224 - 71
PHS707-01	♦PII	224 - 72
PHS707-82	♦PII	224 - 73
PHS707-83	♦PII	224 - 74
PHS708-01	♦PII	224 - 75
PHS708-82	♦PII	224 - 76
PHS708-83	♦PII	224 - 77
PHS709-01	♦PII	224 - 78
PHS709-82	♦PII	224 - 79
PHS709-83	♦PII	224 - 80
PHS710-01	♦PII	224 - 81
PHS710-82	♦PII	224 - 82
PHS710-83	♦PII	224 - 83
PHS711-01	♦PII	224 - 84
PHS711-82	♦PII	224 - 85
PHS711-83	♦PII	224 - 86
PHS712-01	♦PII	224 - 87
PHS712-82	♦PII	224 - 88
PHS712-83	♦PII	224 - 89
PHS713-01	♦PII	224 - 90
PHS713-82	♦PII	224 - 91
PHS713-83	♦PII	224 - 92
PHS714-01	♦PII	224 - 93
PHS714-82	♦PII	224 - 94
PHS714-83	♦PII	224 - 95
PHS715-01	♦PII	224 - 96
PHS715-82	♦PII	224 - 97
PHS715-83	♦PII	224 - 98
PHS716-01	♦PII	224 - 99
PHS716-82	♦PII	224 -100
PHS716-83	♦PII	224 -101
PHS717-01	♦PII	224 -102
PHS717-82	♦PII	224 -103
PHS717-83	♦PII	224 -104
PHS718-01	♦PII	224 -105
PHS718-82	♦PII	224 -106
PHS718-83	♦PII	224 -107
PHS719-01	♦PII	224 -108
PHS719-82	♦PII	224 -109
PHS719-83	♦PII	224 -110
PHS720-01	♦PII	225 - 1
PHS720-82	♦PII	225 - 2
PHS720-83	♦PII	225 - 3
PJB4001U	♦RTCF	316 - 62
PJC4001T	♦PHIN	317 - 10
PJC4003T	♦PHIN	315 - 87
PK0211	PII	130 - 91
PK0212	PII	130 - 92
PK0213	PII	130 - 93
PK0214	PII	130 - 94
PK0215	PII	130 - 95
PK0601	♦PII	114 -105
PK0601L	♦PII	114 -106
PK0602	♦PII	114 -107
PK0602L	♦PII	115 - 1
PK0603	♦PII	115 - 2
PK0603L	♦PII	115 - 3
PK0604	♦PII	115 - 4
PK0604L	♦PII	115 - 5
PK0605	♦PII	115 - 6
PK0605L	♦PII	115 - 7
PK0606	♦PII	119 -110
PK0606L	♦PII	120 - 1
PK0607	♦PII	120 - 2
PK0607L	♦PII	120 - 3
PK0608	♦PII	120 - 4
PK0608L	♦PII	120 - 5
PK0609	♦PII	120 - 6
PK0609L	♦PII	120 - 7
PK0610	♦PII	120 - 8
PK0610L	♦PII	120 - 9
PK0801	♦PII	115 - 8
PK0801L	♦PII	115 - 9
PK0802	♦PII	115 - 10
PK0802L	♦PII	115 - 11
PK0803	♦PII	115 - 12
PK0803L	♦PII	115 - 13
PK0804	♦PII	115 - 14
PK0804L	♦PII	115 - 15
PK0805	♦PII	115 - 16
PK0805L	♦PII	115 - 17
PK0806	♦PII	120 - 10
PK0806L	♦PII	120 - 11
PK0807	♦PII	120 - 12
PK0807L	♦PII	120 - 13
PK0808	♦PII	120 - 14
PK0808L	♦PII	120 - 15
PK0809	♦PII	120 - 16
PK0809L	♦PII	120 - 17
PK0810	♦PII	120 - 18
PK0810L	♦PII	120 - 19
PK0811	♦PII	130 - 96
PK0812	♦PII	130 - 97
PK0813	♦PII	130 - 98
PK0814	♦PII	130 - 99
PK0891	PII	132 - 41
PK0891A	PII	132 - 42
PK1911	PII	130 -100
PK1912	PII	130 -101
PK1913	PII	130 -102
PK1914	PII	130 -103
PK1933	PII	133 - 37
PK1954	PII	132 - 43
PK1954A	PII	132 - 44
PK4211	PII	130 -104
PK4212	PII	130 -105
PK4213	PII	130 -106
PK4214	PII	130 -107
PK5101	♦PII	115 - 18
PK5102	♦PII	115 - 19
PK5103	♦PII	115 - 20
PK5104	♦PII	115 - 21
PK5105	♦PII	115 - 22
PK5106	♦PII	120 - 20
PK5107	♦PII	120 - 21
PK5108	♦PII	120 - 22
PK5109	♦PII	120 - 23
PK5110	♦PII	120 - 24
PKB3000U	PHIN ♦RTCF	314 - 57
PKB3001U	PHIN	314 - 71
PKB3003U	PHIN ♦RTCF	314 - 82
PKB3005U	PHIN ♦RTCF	314 - 88
PKB12005U	PHIN ♦RTCF	302 - 43
PKB12010U	PHIN ♦RTCF	308 - 69
PKB20010U	PHIN ♦RTCF	312 - 73
PKB21004U	PHIN RTCF	312 - 88
PKB23001U	PHIN ♦RTCF	312 - 25
PKB23003U	PHIN ♦RTCF	312 - 58
PKB23005U	PHIN ♦RTCF	312 - 68
PKB23007T	PHIN ♦RTCF	313 - 42
PKB25006T	PHIN ♦RTCF	313 - 43
PKB27005U	PHIN ♦RTCF	314 - 15
PKB32000U	PHIN ♦RTCF	314 - 58
PKB32001U	PHIN ♦RTCF	314 - 69
PKB32003U	PHIN ♦RTCF	314 - 78
PKB32005U	PHIN ♦RTCF	314 - 83
PKB35002U	PHIN ♦RTCF	314 - 75
PKB38001U	PHIN ♦RTCF	315 - 85
PKB38002UC	PHIN ♦RTCF	314 - 27
PKD100-01	♦PII	130 -108
PKD100-02	♦PII	130 -109
PKD100-06	♦PII	130 -110
PKD100-08	♦PII	131 - 1
PKD100-19	♦PII	131 - 2
PKD100-41	♦PII	131 - 3
PKD100-42	♦PII	131 - 4
PKD100-51	♦PII	131 - 5
PKD101-01	♦PII	133 - 2
PKD101-08	♦PII	133 - 3
PKD101-19	♦PII	133 - 4
PKD101-51	♦PII	133 - 5
PKD102-01	♦PII	133 - 23
PKD102-19	♦PII	133 - 24
PKD102-51	♦PII	133 - 25
PKD103-19	♦PII	133 - 38
PKD900	PII	128 - 78
PKD901	PII	128 - 79
PKD902	PII	128 - 80
PKD903	PII	131 - 6
PKD904	PII	131 - 7
PKD905	PII	131 - 8
PKD906	PII	133 - 6
PKD907	PII	133 - 7
PKD908	PII	133 - 8
PKD909	PII	133 - 26

Δ-Registered with JEDEC by this manufacturer

♦-Mfr's data sheet available in microfilm service

1. TYPE No. CROSS INDEX

IN TYPE NUMBER SEQUENCE

TYPE No.	MFRS	Pg&Line
PKD910	PII	133 - 27
PKD911	PII	133 - 28
PKK500	PII	247 - 13
PKK501	PII	247 - 14
PKK502	PII	247 - 15
PKK503	PII	247 - 16
PKK504	PII	247 - 17
PKM900	PII	115 - 23
PKM901	PII	115 - 24
PKM902	PII	115 - 25
PKM903	PII	115 - 26
PKM904	PII	115 - 27
PKM905	PII	120 - 25
PKM906	PII	120 - 26
PKM907	PII	120 - 27
PKM908	PII	120 - 28
PKM909	PII	120 - 29
PKM910	PII	126 - 7
PKM911	PII	126 - 8
PKM912	PII	126 - 9
PKM913	PII	126 - 10
PKM914	PII	126 - 11
PKM915	PII	126 - 47
PKM916	PII	126 - 48
PKM917	PII	126 - 49
PKM918	PII	126 - 50
PKM919	PII	126 - 51
PL0100-1,2,3,4	♦PII	137 - 67
PL0100A,B-F	♦PII	137 - 68
PL0100G,H,J-L	♦PII	137 - 69
PL0100N,P,Q	♦PII	137 - 70
PL0101-1,2,3,4	♦PII	144 - 10
PL0101A,B-F	♦PII	144 - 11
PL0101G,H,J-L	♦PII	144 - 12
PL0101N,P	♦PII	144 - 13
PL0102-1,2,3,4	♦PII	151 - 61
PL0102A,B-F	♦PII	151 - 62
PL0102G,H,J-L	♦PII	151 - 63
PL0102N	♦PII	151 - 64
PL0103-1,2,3,4	♦PII	158 - 37
PL0103A,B-F	♦PII	158 - 38
PL0103G,H	♦PII	158 - 39
PL0104-1,2,3,4	♦PII	166 - 14
PL0104A,B-F	♦PII	166 - 15
PL0105-1,2,3,4	♦PII	175 - 45
PL0105A,B,C	♦PII	175 - 46
PL0106-1,2,3,4	♦PII	180 -100
PL0106A,B	♦PII	180 -101
PL0107-1,2,3,4	♦PII	186 - 43
PL0107A,B	♦PII	186 - 44
PL0110-1,2,3,4	♦PII	137 - 71
PL0110A,B-F	♦PII	137 - 72
PL0110G,H,J-L	♦PII	137 - 73
PL0110N,P,Q	♦PII	137 - 74
PL0111-1,2,3,4	♦PII	144 - 14
PL0111A,B-F	♦PII	144 - 15
PL0111G,H,J-L	♦PII	144 - 16
PL0111N,P	♦PII	144 - 17
PL0112-1,2,3,4	♦PII	151 - 65
PL0112A,B-F	♦PII	151 - 66
PL0112G,H,J-L	♦PII	151 - 67
PL0112N	♦PII	151 - 68
PL0113-1,2,3,4	♦PII	158 - 40
PL0113A,B-F	♦PII	158 - 41
PL0113G,H	♦PII	158 - 42
PL0114-1,2,3,4	♦PII	166 - 16
PL0114A,B-F	♦PII	166 - 17
PL0115-1,2,3,4	♦PII	175 - 47
PL0115A,B,C	♦PII	175 - 48
PL0116-1,2,3,4	♦PII	180 -102
PL0116A,B	♦PII	180 -103
PL0117-1,2,3,4	♦PII	186 - 45
PL0117A,B	♦PII	186 - 46
PL0120-1,2,3,4	♦PII	137 - 75
PL0120A,B-F	♦PII	137 - 76
PL0120G,H,J-L	♦PII	137 - 77
PL0120N,P	♦PII	137 - 78
PL0121-1,2,3,4	♦PII	144 - 18
PL0121A,B-F	♦PII	144 - 19
PL0121G,H,J-L	♦PII	144 - 20
PL0122-1,2,3,4	♦PII	151 - 69
PL0122A,B-F	♦PII	151 - 70
PL0122G,H,J	♦PII	151 - 71
PL0123-1,2,3,4	♦PII	158 - 43
PL0123A,B-F	♦PII	158 - 44
PL0123G,H	♦PII	158 - 45
PL0124-1,2,3,4	♦PII	166 - 18
PL0124A,B-F	♦PII	166 - 19
PL0125-1,2,3,4	♦PII	175 - 49
PL0125A,B,C	♦PII	175 - 50
PL0126-1,2,3,4	♦PII	180 -104
PL0126A	♦PII	180 -105
PL0127-1,2,3,4	♦PII	186 - 47
PL0127A	♦PII	186 - 48
PL0130-1,2,3,4	♦PII	137 - 79
PL0130A,B-F	♦PII	137 - 80
PL0130G,H,J-L	♦PII	137 - 81
PL0131-1,2,3,4	♦PII	144 - 21
PL0131A,B-F	♦PII	144 - 22
PL0131G,H,J	♦PII	144 - 23
PL0132-1,2,3,4	♦PII	151 - 72
PL0132A,B-F	♦PII	151 - 73
PL0132G,H	♦PII	151 - 74
PL0133-1,2,3,4	♦PII	158 - 46
PL0133A,B-E	♦PII	158 - 47
PL0134-1,2,3,4	♦PII	166 - 20
PL0134A,B,C	♦PII	166 - 21
PL0135-1,2,3,4	♦PII	175 - 51
PL0135A	♦PII	175 - 52
PL0136-1,2,3	♦PII	180 -106
PL0137-1,2	♦PII	186 - 49
PL0140-1,2,3,4	♦PII	137 - 82
PL0140A,B-F	♦PII	137 - 83
PL0140G,H,J,K	♦PII	137 - 84
PL0141-1,2,3,4	♦PII	144 - 24
PL0141A,B-F	♦PII	144 - 25
PL0141G,H,J	♦PII	144 - 26
PL0142-1,2,3,4	♦PII	151 - 75
PL0142A,B-F	♦PII	151 - 76
PL0142G,H	♦PII	151 - 77
PL0143-1,2,3,4	♦PII	158 - 48
PL0143A,B-E	♦PII	158 - 49
PL0144-1,2,3,4	♦PII	166 - 22
PL0144A,B,C	♦PII	166 - 23
PL0145-1,2,3,4	♦PII	175 - 53
PL0145A	♦PII	175 - 54
PL0146-1,2,3	♦PII	180 -107
PL0147-1,2	♦PII	186 - 50
PL0150-1,2,3,4	♦PII	137 - 85
PL0150A,B-F	♦PII	137 - 86
PL0150G,H,J	♦PII	137 - 87
PL0151-1,2,3,4	♦PII	144 - 27
PL0151A,B-F	♦PII	144 - 28
PL0151G,H	♦PII	144 - 29
PL0152-1,2,3,4	♦PII	151 - 78
PL0152A,B-F	♦PII	151 - 79
PL0152G	♦PII	151 - 80
PL0153-1,2,3,4	♦PII	158 - 50
PL0153A,B-E	♦PII	158 - 51
PL0154-1,2,3,4	♦PII	166 - 24
PL0154A,B,C	♦PII	166 - 25
PL0155-1,2,3,4	♦PII	175 - 55
PL0155A	♦PII	175 - 56
PL0156-1,2,3	♦PII	180 -108
PL0157-1,2	♦PII	186 - 51
PL0160-1,2,3,4	♦PII	137 - 88
PL0160A,B-F	♦PII	137 - 89
PL0160G,H	♦PII	137 - 90
PL0161-1,2,3,4	♦PII	144 - 30
PL0161A,B-F	♦PII	144 - 31
PL0161G	♦PII	144 - 32
PL0162-1,2,3,4	♦PII	151 - 81
PL0162A,B-E	♦PII	151 - 82
PL0163-1,2,3,4	♦PII	158 - 52
PL0163A,B-D	♦PII	158 - 53
PL0164-1,2,3,4	♦PII	166 - 26
PL0164A,B,C	♦PII	166 - 27
PL0165-1,2,3,4	♦PII	175 - 57
PL0166-1,2,3	♦PII	180 -109
PL0167-1,2	♦PII	186 - 52
PL0170-1,2,3,4	♦PII	137 - 91
PL0170A,B-F	♦PII	137 - 92
PL0170G	♦PII	137 - 93
PL0171-1,2,3,4	♦PII	144 - 33
PL0171A,B-E	♦PII	144 - 34
PL0172-1,2,3,4	♦PII	151 - 83
PL0172A,B-D	♦PII	151 - 84
PL0173-1,2,3,4	♦PII	158 - 54
PL0173A,B,C	♦PII	158 - 55
PL0174-1,2,3,4	♦PII	166 - 28
PL0174A	♦PII	166 - 29
PL0175-1,2,3,4	♦PII	175 - 58
PL0176-1,2,3	♦PII	180 -110
PL0177-1,2	♦PII	186 - 53
PL0180-1,2,3,4	♦PII	137 - 94
PL0180A,B-E	♦PII	137 - 95
PL0181-1,2,3,4	♦PII	144 - 35
PL0181A,B,C	♦PII	144 - 36
PL0182-1,2,3,4	♦PII	151 - 85
PL0182A,B	♦PII	151 - 86
PL0183-1,2,3,4	♦PII	158 - 56
PL0183A	♦PII	158 - 57
PL0184-1,2,3	♦PII	166 - 30
PL0185-1,2	♦PII	175 - 59
PL0186-1	♦PII	181 - 1
PL0187-1	♦PII	186 - 54
PL0190-1,2,3,4	PII	136 - 97
PL0190A,B	PII	136 - 98
PL0191-1,2,3,4	PII	143 - 57
PL0191A	PII	143 - 58
PL0192-1,2,3,4	PII	149 -103
PL0193-1,2,3	PII	157 - 81
PL0194-1,2	PII	165 - 72
PL0195-1	PII	174 - 94
PL0196-1	PII	180 - 80
PL0197-1	PII	156 - 1
PL0500-1,2,3,4	PII	137 - 96
PL0500A,B-F	PII	137 - 97
PL0500G,H,J-L	PII	137 - 98
PL0500N,P,Q	PII	137 - 99
PL0501-1,2,3,4	PII	144 - 37
PL0501A,B-F	PII	144 - 38
PL0501G,H,J-L	PII	144 - 39
PL0501N,P	PII	144 - 40
PL0502-1,2,3,4	PII	151 - 87
PL0502A,B-F	PII	151 - 88
PL0502G,H,J-L	PII	151 - 89
PL0502N	PII	151 - 90
PL0503-1,2,3,4	PII	158 - 58
PL0503A,B-F	PII	158 - 59
PL0503G,H	PII	158 - 60
PL0510-1,2,3,4	PII	137 -100
PL0510A,B-F	PII	137 -101
PL0510G,H,J-L	PII	137 -102
PL0510N,P,Q	PII	137 -103
PL0511-1,2,3,4	PII	144 - 41
PL0511A,B-F	PII	144 - 42
PL0511G,H,J-L	PII	144 - 43
PL0511N,P	PII	144 - 44
PL0512-1,2,3,4	PII	151 - 91
PL0512A,B-F	PII	151 - 92
PL0512G,H,J-L	PII	151 - 93
PL0512N	PII	151 - 94
PL0513-1,2,3,4	PII	158 - 61
PL0513A,B-F	PII	158 - 62
PL0513G,H	PII	158 - 63
PL0520-1,2,3,4	PII	136 - 99
PL0520A,B-F	PII	136 -100
PL0520G,H,J-L	PII	136 -101
PL0520N,P	PII	136 -102
PL0521-1,2,3,4	PII	144 - 45
PL0521A,B-F	PII	144 - 46
PL0521G,H,J-L	PII	144 - 47
PL0522-1,2,3,4	PII	151 - 95
PL0522A,B-F	PII	151 - 96
PL0522G,H,J	PII	151 - 97
PL0523-1,2,3,4	PII	158 - 64
PL0523A,B-F	PII	158 - 65
PL0523G,H	PII	158 - 66
PL0530-1,2,3,4	PII	137 -104
PL0530A,B-F	PII	137 -105
PL0530G,H,J-L	PII	137 -106
PL0531-1,2,3,4	PII	144 - 48
PL0531A,B-F	PII	144 - 49
PL0531G,H,J	PII	144 - 50
PL0532-1,2,3,4	PII	151 - 98
PL0532A,B-F	PII	151 - 99
PL0532G,H	PII	151 -100
PL0533-1,2,3,4	PII	158 - 67
PL0533A,B-E	PII	158 - 68
PL0540-1,2,3,4	PII	137 -107
PL0540A,B-F	PII	137 -108
PL0540G,H,J,K	PII	137 -109
PL0541-1,2,3,4	PII	144 - 51
PL0541A,B-F	PII	144 - 52
PL0541G,H,J	PII	144 - 53
PL0542-1,2,3,4	PII	151 -101
PL0542A,B-F	PII	151 -102
PL0542G,H	PII	151 -103
PL0543-1,2,3,4	PII	158 - 69
PL0543A,B-E	PII	158 - 70
PL0550-1,2,3,4	PII	137 -110
PL0550A,B-F	PII	138 - 1
PL0550G,H,J	PII	138 - 2
PL0551-1,2,3,4	PII	144 - 54
PL0551A,B-F	PII	144 - 55
PL0551G,H	PII	144 - 56
PL0552-1,2,3,4	PII	151 -104
PL0552A,B-F	PII	151 -105
PL0552G	PII	151 -106
PL0553-1,2,3,4	PII	158 - 71
PL0553A,B-E	PII	158 - 72
PL0560-1,2,3,4	PII	138 - 3
PL0560A,B-F	PII	138 - 4
PL0560G,H	PII	138 - 5
PL0561-1,2,3,4	PII	144 - 57
PL0561A,B-F	PII	144 - 58
PL0561G	PII	144 - 59
PL0562-1,2,3,4	PII	151 -107
PL0562A,B-E	PII	151 -108
PL0563-1,2,3,4	PII	158 - 73
PL0563A,B-D	PII	158 - 74
PL0570-1,2,3,4	PII	138 - 6
PL0570A,B-F	PII	138 - 7
PL0570G	PII	138 - 8
PL0571-1,2,3,4	PII	144 - 60
PL0571A,B-E	PII	144 - 61
PL0572-1,2,3,4	PII	151 -109
PL0572A,B-D	PII	151 -110
PL0573-1,2,3,4	PII	158 - 75
PL0573A,B,C	PII	158 - 76
PL0580-1,2,3,4	PII	138 - 9
PL0580A,B-E	PII	138 - 10
PL0581-1,2,3,4	PII	144 - 62
PL0581A,B,C	PII	144 - 63
PL0582-1,2,3,4	PII	152 - 1
PL0582A,B	PII	152 - 2
PL0583-1,2,3,4	PII	158 - 77
PL0583A	PII	158 - 78
PL0590-1,2,3,4	PII	138 - 11
PL0590A,B	PII	138 - 12
PL0591-1,2,3,4	PII	144 - 64
PL0591A	PII	144 - 65
PL0592-1,2,3,4	PII	152 - 3
PL0593-1,2,3	PII	158 - 79
PLL700-01	♦PII	225 - 4
PLL700-04	♦PII	225 - 5
PLL700-05	♦PII	225 - 6
PLL700-08	♦PII	225 - 7
PLL700-45	♦PII	225 - 8
PLL701-01	♦PII	225 - 9
PLL701-04	♦PII	225 - 10
PLL701-05	♦PII	225 - 11
PLL701-08	♦PII	225 - 12
PLL701-45	♦PII	225 - 13
PLL702-01	♦PII	225 - 14
PLL702-04	♦PII	225 - 15
PLL702-05	♦PII	225 - 16
PLL702-08	♦PII	225 - 17
PLL702-45	♦PII	225 - 18
PLL703-01	♦PII	225 - 19
PLL703-04	♦PII	225 - 20
PLL703-05	♦PII	225 - 21
PLL703-08	♦PII	225 - 22
PLL703-45	♦PII	225 - 23
PLL704-01	♦PII	225 - 24
PLL704-04	♦PII	225 - 25
PLL704-05	♦PII	225 - 26
PLL704-08	♦PII	225 - 27
PLL704-45	♦PII	225 - 28
PLL705-01	♦PII	225 - 29
PLL705-04	♦PII	225 - 30
PLL705-05	♦PII	225 - 31
PLL705-08	♦PII	225 - 32
PLL705-45	♦PII	225 - 33
PLL706-01	♦PII	225 - 34
PLL706-04	♦PII	225 - 35
PLL706-05	♦PII	225 - 36
PLL706-08	♦PII	225 - 37
PLL706-45	♦PII	225 - 38
PLL707-01	♦PII	225 - 39
PLL707-04	♦PII	225 - 40
PLL707-05	♦PII	225 - 41
PLL707-08	♦PII	225 - 42
PLL707-45	♦PII	225 - 43
PLL708-01	♦PII	225 - 44
PLL708-04	♦PII	225 - 45
PLL708-05	♦PII	225 - 46
PLL708-08	♦PII	225 - 47
PLL708-45	♦PII	225 - 48
PLR300-01	♦PII	243 - 19
PLR300-05	♦PII	243 - 20
PLR300-45	♦PII	243 - 21
PLR300-83	♦PII	243 - 22
PLR301-01	♦PII	243 - 23
PLR301-05	♦PII	243 - 24
PLR301-45	♦PII	243 - 25
PLR301-83	♦PII	243 - 26
PLR302-01	♦PII	243 - 27
PLR302-05	♦PII	243 - 28
PLR302-34	♦PII	243 - 29
PLR302-45	♦PII	243 - 30
PLR302-83	♦PII	243 - 31
PLR303-01	♦PII	243 - 32
PLR303-05	♦PII	243 - 33
PLR303-45	♦PII	243 - 34
PLR303-83	♦PII	243 - 35
PLR304-01	♦PII	243 - 36
PLR304-05	♦PII	243 - 37
PLR304-45	♦PII	243 - 38
PLR304-83	♦PII	243 - 39
PLR305-01	♦PII	243 - 40
PLR305-05	♦PII	243 - 41
PLR305-45	♦PII	243 - 42
PLR305-83	♦PII	243 - 43
PM0801	♦PII	115 - 28
PM0801L	PII	115 - 29
PM0802	♦PII	115 - 30
PM0802L	PII	115 - 31
PM0803	♦PII	115 - 32
PM0803L	PII	115 - 33
PM0804	♦PII	115 - 34
PM0804L	PII	115 - 35
PM0805	♦PII	115 - 36
PM0805L	PII	115 - 37
PM0806	♦PII	120 - 30
PM0806L	PII	120 - 31
PM0807	♦PII	120 - 32
PM0807L	PII	120 - 33
PM0808	♦PII	120 - 34
PM0808L	PII	120 - 35
PM0809	♦PII	120 - 36
PM0809L	PII	120 - 37
PM0810	♦PII	120 - 38
PM0810L	PII	120 - 39
PMS700-08	♦PII	225 - 49
PMS701-08	♦PII	225 - 50
PMS702-08	♦PII	225 - 51
PN100-01	♦PII	240 - 11
PN100-08	PII	240 - 12
PN100-11	PII	240 - 13
PN100-31	PII	240 - 14
PPC4001T	♦PHIN	317 - 59
PPC5001T	♦PHIN	318 - 44
PQC4001T	♦PHIN	317 - 60
PQC5001T	♦PHIN	318 - 45
PS0120	♦PII	225 - 52
PS0120A	♦PII	225 - 53
PS0120B	♦PII	225 - 54
PS0120C	♦PII	225 - 55
PS0120D	♦PII	225 - 56
PS0130	♦PII	225 - 57
PS0130A	♦PII	225 - 58
PS0130B	♦PII	225 - 59
PS0130C	♦PII	225 - 60
PS0130D	♦PII	225 - 61
PS0140	♦PII	225 - 62
PS0140A	♦PII	225 - 63
PS0140B	♦PII	225 - 64
PS0140C	♦PII	225 - 65
PS0140D	♦PII	225 - 66
PS0150	♦PII	225 - 67
PS0150A	♦PII	225 - 68
PS0150B	♦PII	225 - 69
PS0150C	♦PII	225 - 70
PS0150D	♦PII	225 - 71
PS0190	♦PII	225 - 72
PS0190A	♦PII	225 - 73
PS0503AX	♦PII	225 - 74
PS0503AY	♦PII	225 - 75
PS0503AZ	♦PII	225 - 76
PS0503BX	♦PII	225 - 77
PS0503BY	♦PII	225 - 78
PS0503BZ	♦PII	225 - 79
PS0503CX	♦PII	225 - 80
PS0503CY	♦PII	225 - 81
PS0503CZ	♦PII	225 - 82
PS0503DX	♦PII	225 - 83
PS0503DY	♦PII	225 - 84
PS0503DZ	♦PII	225 - 85
PS0503EX	♦PII	225 - 86
PS0503EY	♦PII	225 - 87
PS0503EZ	♦PII	225 - 88
PS0503X	♦PII	225 - 89
PS0503Y	♦PII	225 - 90
PS0503Z	♦PII	225 - 91
PS0505AX	♦PII	225 - 92
PS0505AY	♦PII	225 - 93
PS0505AZ	♦PII	225 - 94
PS0505BX	♦PII	225 - 95
PS0505BY	♦PII	225 - 96
PS0505BZ	♦PII	225 - 97
PS0505CX	♦PII	225 - 98
PS0505CY	♦PII	225 - 99
PS0505CZ	♦PII	225 -100
PS0505DX	♦PII	225 -101
PS0505DY	♦PII	225 -102
PS0505DZ	♦PII	225 -103
PS0505EX	♦PII	225 -104

Δ-Registered with JEDEC by this manufacturer

♦-Mfr's data sheet available in microfilm service

1. TYPE No. CROSS INDEX

IN TYPE NUMBER SEQUENCE

TYPE No.	MFRS	Pg&Line
PS0505EY	♦PII	225 -105
PS0505EZ	♦PII	225 -106
PS0505X	♦PII	225 -107
PS0505Y	♦PII	225 -108
PS0505Z	♦PII	225 -109
PS0510AX	♦PII	225 -110
PS0510AY	♦PII	226 - 1
PS0510AZ	♦PII	226 - 2
PS0510BX	♦PII	226 - 3
PS0510BY	♦PII	226 - 4
PS0510BZ	♦PII	226 - 5
PS0510CX	♦PII	226 - 6
PS0510CY	♦PII	226 - 7
PS0510CZ	♦PII	226 - 8
PS0510DX	♦PII	226 - 9
PS0510DY	♦PII	226 - 10
PS0510DZ	♦PII	226 - 11
PS0510EX	♦PII	226 - 12
PS0510EY	♦PII	226 - 13
PS0510EZ	♦PII	226 - 14
PS0510X	♦PII	226 - 15
PS0510Y	♦PII	226 - 16
PS0510Z	♦PII	226 - 17
PS0515AX	♦PII	226 - 18
PS0515AY	♦PII	226 - 19
PS0515AZ	♦PII	226 - 20
PS0515BX	♦PII	226 - 21
PS0515BY	♦PII	226 - 22
PS0515BZ	♦PII	226 - 23
PS0515CX	♦PII	226 - 24
PS0515CY	♦PII	226 - 25
PS0515CZ	♦PII	226 - 26
PS0515DX	♦PII	226 - 27
PS0515DY	♦PII	226 - 28
PS0515DZ	♦PII	226 - 29
PS0515EX	♦PII	226 - 30
PS0515EY	♦PII	226 - 31
PS0515EZ	♦PII	226 - 32
PS0515X	♦PII	226 - 33
PS0515Y	♦PII	226 - 34
PS0515Z	♦PII	226 - 35
PS0520AX	♦PII	226 - 36
PS0520AY	♦PII	226 - 37
PS0520AZ	♦PII	226 - 38
PS0520BX	♦PII	226 - 39
PS0520BY	♦PII	226 - 40
PS0520BZ	♦PII	226 - 41
PS0520CX	♦PII	226 - 42
PS0520CY	♦PII	226 - 43
PS0520CZ	♦PII	226 - 44
PS0520DX	♦PII	226 - 45
PS0520DY	♦PII	226 - 46
PS0520DZ	♦PII	226 - 47
PS0520EX	♦PII	226 - 48
PS0520EY	♦PII	226 - 49
PS0520EZ	♦PII	226 - 50
PS0520X	♦PII	226 - 51
PS0520Y	♦PII	226 - 52
PS0520Z	♦PII	226 - 53
PS0525AX	♦PII	226 - 54
PS0525AY	♦PII	226 - 55
PS0525AZ	♦PII	226 - 56
PS0525BX	♦PII	226 - 57
PS0525BY	♦PII	226 - 58
PS0525BZ	♦PII	226 - 59
PS0525CX	♦PII	226 - 60
PS0525CY	♦PII	226 - 61
PS0525CZ	♦PII	226 - 62
PS0525DX	♦PII	226 - 63
PS0525DY	♦PII	226 - 64
PS0525DZ	♦PII	226 - 65
PS0525EX	♦PII	226 - 66
PS0525EY	♦PII	226 - 67
PS0525EZ	♦PII	226 - 68
PS0525X	♦PII	226 - 69
PS0525Y	♦PII	226 - 70
PS0525Z	♦PII	226 - 71
PS0530AX	♦PII	226 - 72
PS0530AY	♦PII	226 - 73
PS0530AZ	♦PII	226 - 74
PS0530BX	♦PII	226 - 75
PS0530BY	♦PII	226 - 76
PS0530BZ	♦PII	226 - 77
PS0530CX	♦PII	226 - 78
PS0530CY	♦PII	226 - 79
PS0530CZ	♦PII	226 - 80
PS0530DX	♦PII	226 - 81
PS0530DY	♦PII	226 - 82
PS0530DZ	♦PII	226 - 83
PS0530EX	♦PII	226 - 84
PS0530EY	♦PII	226 - 85
PS0530EZ	♦PII	226 - 86
PS0530X	♦PII	226 - 87
PS0530Y	♦PII	226 - 88
PS0530Z	♦PII	226 - 89
PS0605AX	♦PII	226 - 90
PS0605AY	♦PII	226 - 91
PS0605AZ	♦PII	226 - 92
PS0605BX	♦PII	226 - 93
PS0605BY	♦PII	226 - 94
PS0605BZ	♦PII	226 - 95
PS0605CX	♦PII	226 - 96
PS0605CY	♦PII	226 - 97
PS0605CZ	♦PII	226 - 98
PS0605DX	♦PII	226 - 99
PS0605DY	♦PII	226 -100
PS0605DZ	♦PII	226 -101
PS0605X	♦PII	226 -102
PS0605Y	♦PII	226 -103
PS0605Z	♦PII	226 -104
PS0610AX	♦PII	226 -105
PS0610AY	♦PII	226 -106
PS0610AZ	♦PII	226 -107
PS0610BX	♦PII	226 -108
PS0610BY	♦PII	226 -109
PS0610BZ	♦PII	226 -110
PS0610CX	♦PII	227 - 1
PS0610CY	♦PII	227 - 2
PS0610CZ	♦PII	227 - 3
PS0610DX	♦PII	227 - 4
PS0610DY	♦PII	227 - 5
PS0610DZ	♦PII	227 - 6
PS0610X	♦PII	227 - 7
PS0610Y	♦PII	227 - 8
PS0610Z	♦PII	227 - 9
PS0620AX	♦PII	227 - 10
PS0620AY	♦PII	227 - 11
PS0620AZ	♦PII	227 - 12
PS0620BX	♦PII	227 - 13
PS0620BY	♦PII	227 - 14
PS0620BZ	♦PII	227 - 15
PS0620CX	♦PII	227 - 16
PS0620CY	♦PII	227 - 17
PS0620CZ	♦PII	227 - 18
PS0620DX	♦PII	227 - 19
PS0620DY	♦PII	227 - 20
PS0620DZ	♦PII	227 - 21
PS0620X	♦PII	227 - 22
PS0620Y	♦PII	227 - 23
PS0620Z	♦PII	227 - 24
PS0630AX	♦PII	227 - 25
PS0630AY	♦PII	227 - 26
PS0630AZ	♦PII	227 - 27
PS0630BX	♦PII	227 - 28
PS0630BY	♦PII	227 - 29
PS0630BZ	♦PII	227 - 30
PS0630CX	♦PII	227 - 31
PS0630CY	♦PII	227 - 32
PS0630DX	♦PII	227 - 33
PS0630DY	♦PII	227 - 34
PS0630DZ	♦PII	227 - 35
PS0630X	♦PII	227 - 36
PS0630Y	♦PII	227 - 37
PS0630Z	♦PII	227 - 38
PS0640AX	PII	227 - 39
PS0640AY	PII	227 - 40
PS0640AZ	PII	227 - 41
PS0640BX	PII	227 - 42
PS0640BY	PII	227 - 43
PS0640BZ	PII	227 - 44
PS0640CX	PII	227 - 45
PS0640CY	PII	227 - 46
PS0640CZ	PII	227 - 47
PS0640DX	PII	227 - 48
PS0640DY	PII	227 - 49
PS0640DZ	PII	227 - 50
PS0640X	PII	227 - 51
PS0640Y	PII	227 - 52
PS0640Z	PII	227 - 53
PS0650AX	PII	227 - 54
PS0650AY	PII	227 - 55
PS0650AZ	PII	227 - 56
PS0650BX	PII	227 - 57
PS0650BY	PII	227 - 58
PS0650BZ	PII	227 - 59
PS0650CX	PII	227 - 60
PS0650CY	PII	227 - 61
PS0650CZ	PII	227 - 62
PS0650DX	PII	227 - 63
PS0650DY	PII	227 - 64
PS0650DZ	PII	227 - 65
PS0650X	PII	227 - 66
PS0650Y	PII	227 - 67
PS0650Z	PII	227 - 68
PS0805AX	♦PII	227 - 69
PS0805AY	♦PII	227 - 70
PS0805AZ	♦PII	227 - 71
PS0805BX	♦PII	227 - 72
PS0805BY	♦PII	227 - 73
PS0805BZ	♦PII	227 - 74
PS0805CX	♦PII	227 - 75
PS0805CY	♦PII	227 - 76
PS0805CZ	♦PII	227 - 77
PS0805DX	♦PII	227 - 78
PS0805DY	♦PII	227 - 79
PS0805DZ	♦PII	227 - 80
PS0805X	♦PII	227 - 81
PS0805Y	♦PII	227 - 82
PS0805Z	♦PII	227 - 83
PS0810AX	♦PII	227 - 84
PS0810AY	♦PII	227 - 85
PS0810AZ	♦PII	227 - 86
PS0810BX	♦PII	227 - 87
PS0810BY	♦PII	227 - 88
PS0810BZ	♦PII	227 - 89
PS0810CX	♦PII	227 - 90
PS0810CY	♦PII	227 - 91
PS0810CZ	♦PII	227 - 92
PS0810DX	♦PII	227 - 93
PS0810DY	♦PII	227 - 94
PS0810DZ	♦PII	227 - 95
PS0810X	♦PII	227 - 96
PS0810Y	♦PII	227 - 97
PS0810Z	♦PII	227 - 98
PS0820AX	♦PII	227 - 99
PS0820AY	♦PII	227 -100
PS0820AZ	♦PII	227 -101
PS0820BX	♦PII	227 -102
PS0820BY	♦PII	227 -103
PS0820BZ	♦PII	227 -104
PS0820CX	♦PII	227 -105
PS0820CY	♦PII	227 -106
PS0820CZ	♦PII	227 -107
PS0820DX	♦PII	227 -108
PS0820DY	♦PII	227 -109
PS0820DZ	♦PII	227 -110
PS0820X	♦PII	228 - 1
PS0820Y	♦PII	228 - 2
PS0820Z	♦PII	228 - 3
PS0830AX	PII	228 - 4
PS0830AY	PII	228 - 5
PS0830AZ	PII	228 - 6
PS0830BX	PII	228 - 7
PS0830BY	PII	228 - 8
PS0830BZ	PII	228 - 9
PS0830CX	PII	228 - 10
PS0830CY	PII	228 - 11
PS0830CZ	PII	228 - 12
PS0830DX	PII	228 - 13
PS0830DY	PII	228 - 14
PS0830DZ	PII	228 - 15
PS0830X	PII	228 - 16
PS0830Y	PII	228 - 17
PS0830Z	PII	228 - 18
PS0840AX	PII	228 - 19
PS0840AY	PII	228 - 20
PS0840AZ	PII	228 - 21
PS0840BX	PII	228 - 22
PS0840BY	PII	228 - 23
PS0840BZ	PII	228 - 24
PS0840CX	PII	228 - 25
PS0840CY	PII	228 - 26
PS0840CZ	PII	228 - 27
PS0840DX	PII	228 - 28
PS0840DY	PII	228 - 29
PS0840DZ	PII	228 - 30
PS0840X	PII	228 - 31
PS0840Y	PII	228 - 32
PS0840Z	PII	228 - 33
PS0850AX	PII	228 - 34
PS0850AY	PII	228 - 35
PS0850AZ	PII	228 - 36
PS0850BX	PII	228 - 37
PS0850BY	PII	228 - 38
PS0850BZ	PII	228 - 39
PS0850CX	PII	228 - 40
PS0850CY	PII	228 - 41
PS0850CZ	PII	228 - 42
PS0850DX	PII	228 - 43
PS0850DY	PII	228 - 44
PS0850DZ	PII	228 - 45
PS0850X	PII	228 - 46
PS0850Y	PII	228 - 47
PS0850Z	PII	228 - 48
PSA100-01	PII	228 - 49
PSA100-05	PII	142 - 2
PSA100-11	PII	142 - 3
PSA100-45	PII	142 - 4
PSA100A01	PII	142 - 5
PSA100A05	PII	142 - 6
PSA100A11	PII	142 - 7
PSA100A45	PII	142 - 8
PSA100B01	PII	142 - 9
PSA100B05	PII	142 - 10
PSA100B11	PII	142 - 11
PSA100B45	PII	142 - 12
PSA100C01	PII	142 - 13
PSA100C05	PII	142 - 14
PSA100C11	PII	142 - 15
PSA100C45	PII	142 - 16
PSA100D01	PII	142 - 17
PSA100D05	PII	142 - 18
PSA100D11	PII	142 - 19
PSA100D45	PII	142 - 20
PSA100E01	PII	142 - 21
PSA100E05	PII	140 - 70
PSA100E11	PII	140 - 71
PSA100E45	PII	140 - 72
PSV100-01	PII	145 - 14
PSV100-05	PII	145 - 15
PSV100-08	PII	145 - 16
PSV100-14	PII	145 - 17
PSV100-16	PII	145 - 18
PSV100-21	PII	145 - 19
PSV100-31	PII	145 - 20
PSV100-45	PII	145 - 21
PSV101-01	PII	150 - 26
PSV101-05	PII	150 - 27
PSV101-08	PII	150 - 28
PSV101-14	PII	150 - 29
PSV101-16	PII	150 - 30
PSV101-21	PII	150 - 31
PSV101-31	PII	150 - 32
PSV101-45	PII	150 - 33
PSV102-01	PII	156 - 30
PSV102-05	PII	156 - 31
PSV102-08	PII	156 - 32
PSV102-14	PII	156 - 33
PSV102-16	PII	156 - 34
PSV102-21	PII	156 - 35
PSV102-31	PII	156 - 36
PSV102-45	PII	156 - 37
PSV103-01	PII	160 - 31
PSV103-05	PII	160 - 32
PSV103-08	PII	160 - 33
PSV103-14	PII	160 - 34
PSV103-16	PII	160 - 35
PSV103-21	PII	160 - 36
PSV103-31	PII	160 - 37
PSV103-45	PII	160 - 38
PSV104-01	PII	162 - 41
PSV104-05	PII	162 - 42
PSV104-08	PII	162 - 43
PSV104-14	PII	162 - 44
PSV104-16	PII	162 - 45
PSV104-21	PII	162 - 46
PSV104-31	PII	162 - 47
PSV104-45	PII	162 - 48
PSV105-01	PII	145 - 22
PSV105-05	PII	145 - 23
PSV105-08	PII	145 - 24
PSV105-14	PII	145 - 25
PSV105-16	PII	145 - 26
PSV105-21	PII	145 - 27
PSV105-31	PII	145 - 28
PSV105-45	PII	145 - 29
PSV106-01	PII	150 - 34
PSV106-05	PII	150 - 35
PSV106-08	PII	150 - 36
PSV106-14	PII	150 - 37
PSV106-16	PII	150 - 38
PSV106-21	PII	150 - 39
PSV106-31	PII	150 - 40
PSV106-45	PII	150 - 41
PSV107-01	PII	156 - 38
PSV107-05	PII	156 - 39
PSV107-08	PII	156 - 40
PSV107-14	PII	156 - 41
PSV107-16	PII	156 - 42
PSV107-21	PII	156 - 43
PSV107-31	PII	156 - 44
PSV107-45	PII	156 - 45
PSV108-01	PII	160 - 39
PSV108-05	PII	160 - 40
PSV108-08	PII	160 - 41
PSV108-14	PII	160 - 42
PSV108-16	PII	160 - 43
PSV108-21	PII	160 - 44
PSV108-31	PII	160 - 45
PSV108-45	PII	160 - 46
PSV109-01	PII	162 - 49
PSV109-05	PII	162 - 50
PSV109-08	PII	162 - 51
PSV109-14	PII	162 - 52
PSV109-16	PII	162 - 53
PSV109-21	PII	162 - 54
PSV109-31	PII	162 - 55
PSV109-45	PII	162 - 56
PSV110-01	PII	166 - 58
PSV110-05	PII	166 - 59
PSV110-08	PII	166 - 60
PSV110-14	PII	166 - 61
PSV110-16	PII	166 - 62
PSV110-21	PII	166 - 63
PSV110-31	PII	166 - 64
PSV110-45	PII	166 - 65
PSV111-01	PII	171 - 85
PSV111-05	PII	171 - 86
PSV111-08	PII	171 - 87
PSV111-14	PII	171 - 88
PSV111-16	PII	171 - 89
PSV111-21	PII	171 - 90
PSV111-31	PII	171 - 91
PSV111-45	PII	171 - 92
PSV112-01	PII	177 - 43
PSV112-05	PII	177 - 44
PSV112-08	PII	177 - 45
PSV112-14	PII	177 - 46
PSV112-16	PII	177 - 47
PSV112-21	PII	177 - 48
PSV112-31	PII	177 - 49
PSV112-45	PII	177 - 50
PSV113-01	PII	181 - 5
PSV113-05	PII	181 - 6
PSV113-08	PII	181 - 7
PSV113-14	PII	181 - 8
PSV113-16	PII	181 - 9
PSV113-21	PII	181 - 10
PSV113-31	PII	181 - 11
PSV113-45	PII	181 - 12
PSV114-01	PII	183 - 67
PSV114-06	PII	183 - 68
PSV114-14	PII	183 - 69
PSV114-21	PII	183 - 70
PSV114-31	PII	183 - 71
PSV115-01	PII	186 - 59
PSV115-06	PII	186 - 60
PSV115-14	PII	186 - 61
PSV115-21	PII	186 - 62
PSV115-31	PII	186 - 63
PSV116-01	PII	188 - 78
PSV116-06	PII	188 - 79
PSV116-14	PII	188 - 80
PSV116-21	PII	188 - 81
PSV116-31	PII	188 - 82
PSV117-01	PII	192 - 78
PSV117-06	PII	192 - 79
PSV117-14	PII	192 - 80
PSV117-21	PII	192 - 81
PSV117-31	PII	192 - 82
PSV118-01	PII	150 - 42
PSV118-05	PII	150 - 43
PSV118-08	PII	150 - 44
PSV118-14	PII	150 - 45
PSV118-16	PII	150 - 46
PSV118-21	PII	150 - 47
PSV118-31	PII	150 - 48
PSV118-45	PII	150 - 49
PSV119-01	PII	156 - 46
PSV119-05	PII	156 - 47
PSV119-08	PII	156 - 48
PSV119-14	PII	156 - 49
PSV119-16	PII	156 - 50
PSV119-21	PII	156 - 51
PSV119-31	PII	156 - 52
PSV119-45	PII	156 - 53
PSV120-01	PII	160 - 47
PSV120-05	PII	160 - 48
PSV120-08	PII	160 - 49
PSV120-14	PII	160 - 50
PSV120-16	PII	160 - 51
PSV120-21	PII	160 - 52
PSV120-31	PII	160 - 53
PSV120-45	PII	160 - 54
PSV121-01	PII	162 - 57
PSV121-05	PII	162 - 58
PSV121-08	PII	162 - 59
PSV121-14	PII	162 - 60
PSV121-16	PII	162 - 61
PSV121-21	PII	162 - 62
PSV121-31	♦PII	162 - 63
PSV121-45	PII	162 - 64
PSV122-01	PII	166 - 66
PSV122-05	PII	166 - 67
PSV122-08	PII	166 - 68
PSV122-14	PII	166 - 69
PSV122-16	PII	166 - 70
PSV122-21	PII	166 - 71
PSV122-31	PII	166 - 72
PSV122-45	PII	166 - 73
PSV123-01	PII	171 - 93
PSV123-05	PII	171 - 94
PSV123-08	PII	171 - 95
PSV123-14	PII	171 - 96
PSV123-16	PII	171 - 97
PSV123-21	PII	171 - 98
PSV123-31	PII	171 - 99
PSV123-45	PII	171 -100
PSV124-01	PII	177 - 51
PSV124-05	PII	177 - 52
PSV124-08	PII	177 - 53
PSV124-14	PII	177 - 54
PSV124-16	PII	177 - 55
PSV124-21	PII	177 - 56
PSV124-31	PII	177 - 57
PSV124-45	PII	177 - 58
PSV125-01	PII	181 - 13
PSV125-06	PII	181 - 14
PSV125-14	PII	181 - 15
PSV125-21	PII	181 - 16
PSV125-31	PII	181 - 17
PSV126-01	PII	183 - 72
PSV126-06	PII	183 - 73
PSV126-14	PII	183 - 74
PSV126-21	PII	183 - 75
PSV126-31	PII	183 - 76
PSV127-01	PII	187 -108
PSV127-06	PII	187 -109
PSV127-14	PII	187 -110
PSV127-21	PII	188 - 1
PSV127-31	PII	188 - 2
PSV128-01	PII	188 - 83
PSV128-06	PII	188 - 84
PSV128-14	PII	188 - 85
PSV128-21	PII	188 - 86
PSV128-31	PII	188 - 87
PSV129-01	PII	192 - 83
PSV129-06	PII	192 - 84
PSV129-14	PII	192 - 85
PSV129-21	PII	192 - 86
PSV129-31	PII	192 - 87
PSV130-01	♦PII	156 - 54
PSV130-05	♦PII	156 - 55
PSV130-08	♦PII	156 - 56
PSV130-14	♦PII	156 - 57
PSV130-16	♦PII	156 - 58
PSV130-21	♦PII	156 - 59
PSV130-31	♦PII	156 - 60
PSV130-45	♦PII	156 - 61
PSV131-01	♦PII	160 - 55
PSV131-05	♦PII	160 - 56
PSV131-08	♦PII	160 - 57
PSV131-14	♦PII	160 - 58
PSV131-16	♦PII	160 - 59
PSV131-21	♦PII	160 - 60
PSV131-31	♦PII	160 - 61
PSV131-45	♦PII	160 - 62
PSV132-01	♦PII	165 - 75
PSV132-05	♦PII	165 - 76
PSV132-08	♦PII	165 - 77
PSV132-14	♦PII	165 - 78
PSV132-16	♦PII	165 - 79
PSV132-21	♦PII	165 - 80
PSV132-31	♦PII	165 - 81
PSV132-45	♦PII	165 - 82
PSV133-01	♦PII	171 -101
PSV133-14	♦PII	171 -102
PSV133-16	♦PII	171 -103
PSV133-21	♦PII	171 -104
PSV133-31	♦PII	171 -105
PSV134-01	♦PII	177 - 59
PSV134-14	♦PII	177 - 60
PSV134-16	♦PII	177 - 61
PSV134-21	♦PII	177 - 62
PSV134-31	♦PII	177 - 63
PSV135-01	♦PII	181 - 18
PSV135-14	♦PII	181 - 19
PSV135-16	♦PII	181 - 20
PSV135-21	♦PII	181 - 21
PSV135-31	♦PII	181 - 22
PSV136-01	♦PII	183 - 77
PSV136-14	♦PII	183 - 78
PSV136-16	♦PII	183 - 79
PSV136-21	♦PII	183 - 80
PSV136-31	♦PII	183 - 81
PSV137-01	♦PII	186 - 64
PSV137-14	♦PII	186 - 65
PSV137-16	♦PII	186 - 66
PSV137-21	♦PII	186 - 67
PSV137-31	♦PII	186 - 68
PSV138-01	♦PII	188 - 88
PSV138-14	♦PII	188 - 89
PSV138-16	♦PII	188 - 90
PSV138-21	♦PII	188 - 91
PSV138-31	♦PII	188 - 92
PSV139-01	♦PII	192 - 88
PSV139-14	♦PII	192 - 89
PSV139-16	♦PII	192 - 90
PSV139-21	♦PII	192 - 91

Δ-Registered with JEDEC by this manufacturer

♦-Mfr's data sheet available in microfilm service

1. TYPE No. CROSS INDEX

IN TYPE NUMBER SEQUENCE

TYPE No.	MFRS	Pg&Line	TYPE No.	MFRS	Pg&Line	TYPE No.	MFRS	Pg&Line	TYPE No.	MFRS	Pg&Line	TYPE No.	MFRS	Pg&Line
PSV139-31	♦PII	192 - 92	PT6006	♦EMIB	62 - 85	QKH1162	RTN	81 - 8	QKK2051	RTN	63 - 43	QKW1938	RTN	102 - 1
PSV140-01	♦PII	162 - 65	PT6014	♦EMIB	63 - 19	QKH1199	RTN	80 - 94	QKK2055	RTN	63 - 60	QKW1939	RTN	102 - 37
PSV140-05	♦PII	162 - 66	PT6015	♦EMIB	63 - 20	QKH1214	♦RTN	81 - 41	QKK2057	RTN	63 - 53	QKW1940	RTN	102 - 92
PSV140-08	♦PII	162 - 67	PT6031	♦EMIB	82 - 63	QKH1302	♦RTN	88 - 83	QKL1066	RTN	75 - 29	QKW1941	RTN	93 - 78
PSV140-14	♦PII	162 - 68	PT6043	♦EMIB	101 - 85	QKH1325	♦RTN	88 - 51	QKL1219	RTN	73 - 48	QKW1943	RTN	100 - 94
PSV140-16	♦PII	162 - 69	PT6061	♦EMIB	99 - 3	QKH1374	RTN	82 -110	QKL1390	RTN	72 - 90	QKW1944	RTN	101 - 13
PSV140-21	♦PII	162 - 70	PT6145	♦EMIB	72 - 68	QKH1381	♦RTN	78 - 78	QKL1550	RTN	73 - 16	QKW1949	RTN	101 - 71
PSV140-31	♦PII	162 - 71	PT8054	♦EMIB	85 - 4	QKH1448	RTN	80 - 77	QKS506	♦RTN	62 - 14	QKW1950	RTN	98 - 72
PSV140-45	♦PII	162 - 72	PT8809	♦TRWS	304 - 39	QKH1495	♦RTN	87 - 31	QKS630	♦NJRC	61 - 53	QKW1952	RTN	93 - 88
PSV141-01	♦PII	166 - 74	PT8810	♦TRWS	304 - 40	QKH1512	RTN	87 - 71		♦RTN		QKW1953	RTN	93 - 89
PSV141-05	♦PII	166 - 75	PT8880	♦TRWS	305 - 89	QKH1516	RTN	88 - 85	QKS642	RTN	61 - 57	QKW1954	RTN	93 - 87
PSV141-08	♦PII	166 - 76	PT9701B	♦TRWS	303 - 1	QKH1527	RTN	85 - 67	QKS653	RTN	61 - 58	QKW1955	RTN	93 - 82
PSV141-14	♦PII	166 - 77	PT9702B	♦TRWS	303 - 2	QKH1528	RTN	79 -102	QKS783	RTN	61 - 61	QKW1960	RTN	101 - 57
PSV141-16	♦PII	166 - 78	PT9703B	♦TRWS	303 - 3	QKH1535	RTN	83 - 17	QKS807	RTN	61 -108	QKW1961	RTN	101 - 28
PSV141-21	♦PII	166 - 79	PT9704B	♦TRWS	303 - 4	QKH1553	RTN	87 - 78	QKS846	RTN	61 - 72	QKW1966	RTN	89 - 46
PSV141-31	♦PII	166 - 80	PT9784	♦TRWS	302 - 50	QKH1560	RTN	77 - 95	QKS973	RTN	61 - 63	QKW1967	RTN	89 - 47
PSV141-45	♦PII	166 - 81	PT9784A	TRWS	302 - 49	QKH1569	RTN	79 - 20	QKS1130	RTN	61 -105	QKW1968	RTN	89 - 44
PSV142-01	♦PII	171 -106	PT9785	♦TRWS	302 - 51	QKH1578	RTN	87 - 32	QKS1181	♦RTN	61 - 56	QKW1979	RTN	101 - 37
PSV142-05	♦PII	171 -107	PTB42001X	PHIN	316 - 94	QKH1579	RTN	77 - 81	QKS1194	♦RTN	61 - 79	QKW1980	RTN	99 -103
PSV142-08	♦PII	171 -108		♦RTCF		QKH1589	RTN	78 - 2	QKS1243	♦RTN	62 - 38	QKW1987	RTN	102 - 68
PSV142-14	♦PII	171 -109	PTB42002X	PHIN	316 - 95	QKH1592	RTN	87 -105	QKS1244	♦RTN	62 - 37	QKW1988	RTN	93 - 96
PSV142-16	♦PII	171 -110		♦RTCF		QKH1599	RTN	80 - 61	QKS1262	♦RTN	61 - 60	QKW1989	RTN	99 - 41
PSV142-21	♦PII	172 - 1	PTB42003X	PHIN	316 - 96	QKH1663	RTN	88 - 89	QKS1286	RTN	61 - 92	QKW1993	RTN	104 - 13
PSV142-31	♦PII	172 - 2		♦RTCF		QKH1665	RTN	87 - 91	QKS1319	RTN	61 - 55	QKW1995	RTN	104 - 3
PSV142-45	♦PII	172 - 3	PV1430	♦PII	169 - 33	QKH1666	RTN	87 - 86	QKS1343#1	♦RTN	62 - 4	QKW1997	RTN	101 - 74
PSV143-01	♦PII	177 - 64	PV1431	♦PII	174 - 20	QKH1667	RTN	86 - 95	QKS1343#2	♦RTN	62 - 10	QKW2011	RTN	101 - 81
PSV143-14	♦PII	177 - 65	PV1432	♦PII	179 -106	QKH1693	RTN	88 - 24	QKS1350	♦RTN	62 - 20	QKW2022	RTN	89 - 48
PSV143-16	♦PII	177 - 66	PV1433	♦PII	185 - 59	QKH1708	RTN	87 - 92	QKS1380	RTN	61 - 95	QKW2024	RTN	89 - 49
PSV143-21	♦PII	177 - 67	PV1434	♦PII	190 - 48	QKH1709	RTN	87 - 57	QKS1439	RTN	61 - 62	QKW2025	RTN	104 - 7
PSV143-31	♦PII	177 - 68	PV1435	♦PII	194 - 26	QKH1744	RTN	78 - 73	QKS1452	RTN	61 - 68	QKW2033	RTN	89 - 85
PSV144-01	♦PII	181 - 23	PV1500-15	♦PII	200 - 66	QKH1757	RTN	88 - 26	QKS1484	NJRC	61 - 97	QKW2035	RTN	100 - 82
PSV144-14	♦PII	181 - 24	PV1501-15	♦PII	200 - 67	QKH1763	RTN	87 - 85		♦RTN		QKW2038	RTN	99 - 66
PSV144-16	♦PII	181 - 25	PV1502-15	♦PII	200 - 68	QKH1777	RTN	78 - 79	QKS1539	RTN	62 - 39	QKW2041	RTN	100 - 89
PSV144-21	♦PII	181 - 26	PV1503-15	♦PII	201 - 86	QKH1793	RTN	86 - 96	QKS1540	RTN	61 - 77	QKW2043	RTN	60 - 75
PSV144-31	♦PII	181 - 27	PV1504-15	♦PII	201 - 87	QKH1811	RTN	87 - 37	QKS1541	RTN	61 - 87	QKW2048	RTN	104 - 6
PSV145-01	♦PII	183 - 82	PV1505-15	♦PII	201 - 88	QKH1817	RTN	86 -102	QKS1543	RTN	61 - 69	QKW2053	RTN	103 - 76
PSV145-14	♦PII	183 - 83	PV1506-15	♦PII	202 - 94	QKH1820	RTN	87 -104	QKS1544	RTN	61 - 70	QKW2056	RTN	104 - 12
PSV145-16	♦PII	183 - 84	PV1507-15	♦PII	202 - 95	QKH1832	RTN	86 -110	QKS1549	RTN	61 - 75	R9689/1	EMIB	67 - 81
PSV145-21	♦PII	183 - 85	PV1508-15	♦PII	202 - 96	QKH1833	RTN	87 - 35	QKS1552	RTN	61 - 93	RM101	♦LIT	77 - 67
PSV145-31	♦PII	183 - 86	PV1509-15	♦PII	203 - 10	QKH1850	RTN	88 - 52	QKS1558	RTN	61 - 71	RM103	♦LIT	87 -102
PSV146-01	♦PII	186 - 69	PV1510-15	♦PII	203 - 11	QKH1851	RTN	86 -109	QKS1559	RTN	61 - 73	RM106	♦LIT	88 - 36
PSV146-14	♦PII	186 - 70	PV1511-15	♦PII	203 - 40	QKH1865	RTN	87 - 34	QKS1584	RTN	61 -109	RM107	♦LIT	87 - 96
PSV146-16	♦PII	186 - 71	PV1512-15	♦PII	203 - 41	QKH1866	RTN	86 -101	QKS1591	♦RTN	61 - 89	RM108	♦LIT	88 - 43
PSV146-21	♦PII	186 - 72	PV3539B3X	PHIN	315 - 88	QKH1977	RTN	80 - 7	QKS1591#	NJRC	61 - 90	RM112	♦LIT	88 - 37
PSV146-31	♦PII	186 - 73		♦RTCF		QKH1978	RTN	80 - 9	QKS1606	RTN	61 -103	RM115	♦LIT	88 - 54
PSV147-01	♦PII	188 - 93	PV3742B4X	PHIN	316 -103	QKH1982	RTN	88 - 31	QKS1611	RTN	62 - 15	RM117	♦LIT	88 - 11
PSV147-14	♦PII	188 - 94		♦RTCF		QKH1990	RTN	79 - 88	QKS1646	RTN	61 - 96	RM121	♦LIT	87 - 99
PSV147-16	♦PII	188 - 95	PWB2001U	PHIN	312 - 31	QKH2039	RTN	83 - 56	QKS1648	RTN	62 - 30	RM126	♦LIT	87 - 98
PSV147-21	♦PII	188 - 96		♦RTCF		QKH2040	RTN	87 - 83	QKS1672	RTN	61 - 74	RM128	♦LIT	88 - 25
PSV147-31	♦PII	188 - 97	PWB2010U	PHIN	312 - 74	QKK404	RTN	63 - 33	QKS1697	RTN	62 - 19	RM130	♦LIT	88 - 12
PSV148-01	♦PII	192 - 93		♦RTCF		QKK412	RTN	63 - 25	QKS1705	RTN	62 - 41	RM134	♦LIT	88 - 3
PSV148-14	♦PII	192 - 94	PZ1418B15U	♦PHIN	311 - 51	QKK531	♦RTN	67 - 8	QKS1729	RTN	62 - 31	RM135	♦LIT	88 - 4
PSV148-16	♦PII	192 - 95	PZ1418B30U	♦PHIN	311 - 53	QKK532	♦RTN	67 - 27	QKS1846	RTN	61 - 86	RM137	♦LIT	88 - 20
PSV148-21	♦PII	192 - 96		♦RTCF		QKK549	RTN	66 - 77	QKS1849	♦RTN	61 - 81	RM142	♦LIT	87 -110
PSV148-31	♦PII	192 - 97	PZ1721B12U	♦PHIN	312 - 90	QKK623	♦RTN	67 - 48	QKS1874	RTN	62 - 16	RM143	♦LIT	88 - 46
PSV149-01	♦PII	194 -102		♦RTCF		QKK752	RTN	67 - 50	QKS1889	RTN	61 - 88	RM157	LIT	86 - 44
PSV149-14	♦PII	194 -103	PZ1721B25U	♦PHIN	312 - 92	QKK753	RTN	67 - 88	QKS1986	RTN	61 - 80	RM173	♦LIT	88 - 41
PSV149-16	♦PII	194 -104		♦RTCF		QKK754A	♦RTN	66 - 80	QKS1991	RTN	61 - 52	RM174A	♦LIT	86 - 91
PSV149-21	♦PII	194 -105	PZ2024B10U	♦PHIN	313 - 70	QKK755A	♦RTN	67 - 17	QKS1998	RTN	62 - 44	RM176	LIT	88 - 42
PSV149-31	♦PII	194 -106		♦RTCF		QKK756A	♦RTN	67 - 33	QKS2016	RTN	61 - 99	RM180	♦LIT	88 - 27
PT0400-04	PII	206 - 61	PZ2024B20U	♦PHIN	313 - 77	QKK758A	♦RTN	67 - 52	QKS2034	RTN	61 - 54	RM184	♦LIT	77 - 68
PT0400-05	PII	206 - 62		♦RTCF		QKK759A	♦RTN	67 - 91	QKW750C	RTN	91 - 98	RM188	♦LIT	88 - 32
PT0401-04	PII	208 - 8	PZB16035U	PHIN	311 - 21	QKK822	RTN	69 -108	QKW1013	RTN	89 - 96	RM227	♦LIT	86 - 92
PT0401-05	PII	208 - 9		♦RTCF		QKK826	RTN	69 - 73	QKW1132	♦RTN	98 - 78	RR305	USSR	60 - 12
PT0402-04	PII	208 - 25	QF38	♦FERS	107 - 27	QKK833A	RTN	69 -110	QKW1389	RTN	99 - 56	RR306	USSR	60 - 13
PT0402-05	PII	208 - 26	QF38A	♦FERS	107 - 28	QKK860	RTN	68 - 16	QKW1514	RTN	103 - 66	RR307	USSR	60 - 5
PT0403-04	PII	208 -105	QF50	♦FERS	109 - 23	QKK869	RTN	69 - 94	QKW1518	RTN	89 - 86	RR309	USSR	60 - 8
PT0403-05	PII	208 -106	QF401	♦FERS	108 - 87	QKK873	RTN	70 - 23	QKW1518SG	RTN	89 - 88	RR309A	USSR	60 - 9
PT0450	♦PII	207 - 63	QF451	♦FERS	108 - 95	QKK877	RTN	70 - 8	QKW1630	RTN	89 - 56	RR310	USSR	60 - 17
PT0451	♦PII	208 - 74	QF451LA	♦FERS	110 -107	QKK878	RTN	69 - 81	QKW1638	RTN	99 - 36	RR319	USSR	60 - 10
PT0452	♦PII	209 - 46	QF451M	♦FERS	108 - 58	QKK879	RTN	69 - 95	QKW1652	RTN	99 - 77	RT5108(A)	♦RTCF	311 - 39
PT0453	♦PII	210 - 17	QF451N	♦FERS	108 -103	QKK910	RTN	67 - 16	QKW1668	RTN	100 - 95	RV3135B5X	PHIN	315 - 71
PT0454	♦PII	210 - 69	QF451P	♦FERS	108 - 94	QKK965	RTN	66 - 79	QKW1671	RTN	89 - 87		♦RTCF	
PT0633	PII	211 - 12	QK221	RTN	83 - 8	QKK967	RTN	67 - 51	QKW1701	RTN	89 - 95	RW2	♦SIEG	90 - 51
PT0634	PII	207 - 20	QK235	RTN	81 - 18	QKK968	RTN	67 - 90	QKW1704	RTN	99 - 43	RW3	♦SIEG	92 - 51
PT0635	PII	208 - 12	QK324	RTN	85 - 66	QKK978	RTN	69 -109	QKW1723	RTN	89 - 94	RW21	♦SIEG	90 - 88
PT0636	PII	208 - 93	QK327	RTN	79 - 13	QKK1022	♦RTN	69 - 39	QKW1750	RTN	90 - 32	RW42	♦SIEG	92 - 88
PT0637	PII	209 - 66	QK338A	RTN	79 - 42	QKK1106	RTN	72 -104	QKW1751	RTN	100 - 97	RW45	♦SIEG	93 - 58
PT0638	PII	210 - 34	QK358	RTN	77 - 85	QKK1235	♦RTN	69 - 82	QKW1784	RTN	98 - 89	RW48	♦SIEG	92 - 84
PT0639	PII	210 - 92	QK381	♦RTN	66 - 27	QKK1237	RTN	72 -106	QKW1807	RTN	101 - 3	RW70	♦SIEG	97 - 37
PT0640	PII	211 - 3	QK427	RTN	85 - 36	QKK1288	♦RTN	66 - 17	QKW1815	RTN	89 -107	RW80	♦SIEG	96 - 35
PT1120	EMIB	90 - 98	QK437	RTN	80 - 73	QKK1289	♦RTN	66 - 43	QKW1830	RTN	100 - 96	RW81	♦SIEG	96 - 36
PT1152	♦EMIB	89 - 90	QK516	RTN	77 - 35	QKK1313	RTN	66 - 36	QKW1861	RTN	89 - 93	RW85	♦SIEG	96 - 52
PT3510	PII	211 - 6	QK662A	RTN	81 - 20	QKK1315	RTN	68 - 17	QKW1873	RTN	89 - 84	RW88C	♦SIEG	96 - 25
PT3511	PII	209 - 83	QK686	RTN	81 - 21	QKK1316	RTN	66 - 65	QKW1898	RTN	103 - 57	RW89	♦SIEG	96 - 39
PT3512	PII	209 - 84	QKA773A	RTN	60 - 39	QKK1333	RTN	67 - 56	QKW1899	RTN	103 - 13	RW89D	♦SIEG	96 - 40
PT3513	PII	210 - 96	QKA1250	RTN	60 - 22	QKK1376	♦RTN	63 - 71	QKW1901	RTN	90 - 47	RW90	♦SIEG	97 - 42
PT3514	PII	210 - 97	QKA1252	RTN	60 - 23	QKK1399	RTN	70 - 38	QKW1903	RTN	91 - 2	RW90D	♦SIEG	97 - 65
PT3515	PII	210 - 99	QKA1253	RTN	60 - 26	QKK1447	RTN	73 - 7	QKW1904	RTN	91 - 3	RW189	♦SIEG	96 - 37
PT3516	PII	210 - 53	QKA1257	RTN	60 - 37	QKK1459	RTN	68 - 47	QKW1905	RTN	93 -106	RW248	♦SIEG	92 - 77
PT3517	PII	210 - 54	QKA1782	RTN	60 - 35	QKK1466	RTN	72 -103	QKW1906	RTN	93 -107	RW289	♦SIEG	96 - 34
PT3518	PII	210 - 55	QKA1822	RTN	61 - 98	QKK1468	RTN	69 - 53	QKW1907	RTN	99 - 53	RW1121	♦SIEG	100 -106
PT3519	PII	210 - 47	QKA1823	RTN	61 -104	QKK1486	RTN	73 - 17	QKW1908	RTN	99 - 54	RW1125	♦SIEG	100 - 73
PT3520	PII	210 - 49	QKA1992	RTN	60 - 40	QKK1491	RTN	63 - 63	QKW1915	RTN	91 - 22	RW1125D	♦SIEG	100 - 87
PT3521	PII	210 - 51	QKA2043	RTN	60 - 78	QKK1515	RTN	69 - 59	QKW1916	RTN	94 - 35	RW1125F	♦SIEG	101 -110
PT3522	PII	209 - 85	QKH172	RTN	83 - 40	QKK1554	RTN	73 - 15	QKW1917	RTN	91 - 23	RW1125G	♦SIEG	101 - 29
PT3523	PII	209 - 86	QKH366	RTN	82 - 73	QKK1563	RTN	67 - 89	QKW1918	RTN	94 - 36	RW1127(A)	♦SIEG	101 - 63
PT3524	PII	209 - 87	QKH456	RTN	80 -102	QKK1565	RTN	66 - 94	QKW1919	RTN	101 - 7	RW1136(A)	♦SIEG	100 - 50
PT3525	PII	209 - 18	QKH470	RTN	78 - 1	QKK1571	RTN	67 - 9	QKW1920	RTN	101 - 12	RW2135	♦SIEG	100 - 77
PT3526	PII	209 - 27	QKH539	RTN	80 -106	QKK1583	RTN	69 - 63	QKW1921	RTN	100 - 58	RW4016	SIEG	104 - 11
PT3527	PII	209 - 47	QKH632	RTN	80 - 97	QKK1649	RTN	68 - 1	QKW1922	RTN	90 - 66	RW4028(A)	♦SIEG	104 - 8
PT3528	PII	208 - 96	QKH665	RTN	77 - 86	QKK1719	RTN	62 -103	QKW1923	RTN	93 - 37	RWO35	♦SIEG	60 -106
PT3529	PII	208 - 63	QKH666	RTN	78 - 24	QKK1720	RTN	63 - 12	QKW1924	RTN	89 - 81	RWO50	♦SIEG	61 - 1
PT3530	PII	208 - 92	QKH713	RTN	82 - 14	QKK1767	RTN	66 - 69	QKW1925	RTN	91 - 16	RWO60	♦SIEG	61 - 6
PT3531	PII	208 - 10	QKH729	RTN	79 - 62	QKK1768	RTN	68 - 10	QKW1926	RTN	93 - 92	RWO75	♦SIEG	61 - 9
PT3532	PII	208 - 11	QKH730A	RTN	79 - 49	QKK1769	RTN	68 - 11	QKW1927	RTN	93 - 93	RWO110S	♦SIEG	60 - 20
PT4579	♦TRWS	313 - 90	QKH731	RTN	79 - 24	QKK1789	RTN	68 -106	QKW1929	RTN	98 - 67	RWO170	♦SIEG	61 - 31
PT5017	♦EMIB	85 - 5	QKH732	RTN	79 - 8	QKK1802	RTN	72 - 89	QKW1930	RTN	92 - 95	RZ1214B60W	PHIN	310 - 84
PT5029	♦EMIB	84 - 96	QKH733	RTN	78 -110	QKK1803	RTN	72 - 91	QKW1931	RTN	94 - 67		♦RTCF	
PT5036	♦EMIB	82 - 67	QKH898	RTN	79 - 57	QKK1858	RTN	63 - 50	QKW1932	RTN	97 - 14	RZ1214B125W	PHIN	310 - 86
PT5042	♦EMIB	101 - 84	QKH942	RTN	78 - 3	QKK1882	RTN	63 - 59	QKW1934	RTN	97 - 48		♦RTCF	
PT5075	♦EMIB	62 - 64	QKH1042	RTN	78 - 4	QKK1891	RTN	63 - 61	QKW1935	RTN	101 - 23	RZ1214B150W(A)		310 - 87
PT5076	♦EMIB	62 - 74	QKH1121	RTN	83 - 34	QKK1892	RTN	75 - 28	QKW1936	RTN	101 - 24		♦PHIN	
PT6003	♦EMIB	99 -108	QKH1131	RTN	84 - 99	QKK1981	RTN	74 - 95	QKW1937	RTN	101 -104			

Δ-Registered with JEDEC by this manufacturer

♦-Mfr's data sheet available in microfilm service

1. TYPE No. CROSS INDEX

IN TYPE NUMBER SEQUENCE

TYPE No.	MFRS	Pg&Line	TYPE No.	MFRS	Pg&Line	TYPE No.	MFRS	Pg&Line	TYPE No.	MFRS	Pg&Line	TYPE No.	MFRS	Pg&Line
RZ3135B15U	PHIN	315 - 78	SD12-2	SCE	153 - 87	SD22BL60	SCE	140 -110	SD32G6	SCE	194 -110	SD1412	♦THEF	307 - 1
	♦RTCF		SD12-3	SCE	141 - 42	SD22C6	SCE	158 - 96	SD32G12	SCE	196 - 55	SD1412-3	♦THEF	307 - 2
RZ3135B25U	PHIN	315 - 79	SD12-4	SCE	141 - 43	SD22C12	SCE	161 - 91	SD32G18	SCE	197 - 99	SD1414	♦THEF	307 - 6
	♦RTCF		SD12-5,6,7	SCE	138 - 40	SD22C18	SCE	164 - 30	SD32G24	SCE	192 -105	SD1418	♦THEF	307 - 3
RZ3135B40U(A)		315 - 80	SD12A6	SCE	145 - 86	SD22C24	SCE	157 - 76	SD32G48	SCE	195 - 59	SD1421	♦THEF	307 - 4
	♦PHIN		SD12A12	SCE	147 - 38	SD22C48	SCE	160 - 83	SD42-1	SCE	153 -101	SD1422	♦THEF	305 - 25
S1420	♦TOSJ	302 - 54	SD12A18	SCE	148 - 80	SD22C60	SCE	160 -106	SD42-2	SCE	153 -102	SD1429	♦THEF	305 - 11
S2737	♦TOSJ	246 - 14	SD12A24	SCE	143 - 69	SD22C90	SCE	153 - 94	SD42-3	SCE	141 - 57	SD1429-3	♦THEF	305 - 12
S2740	♦TOSJ	246 - 15	SD12A48	SCE	146 - 81	SD22C100	SCE	153 - 95	SD42-4	SCE	141 - 58	SD1433	♦THEF	305 - 22
S2741	♦TOSJ	246 - 16	SD12A60	SCE	147 - 24	SD22C120	SCE	155 - 98	SD42-5,6,7	SCE	138 - 49	SD1434	♦THEF	305 - 35
S3006D	♦TOSJ	120 - 40	SD12A90	SCE	141 - 44	SD22CL12	SCE	141 - 51	SD42A6	SCE	145 - 89	SD1444	♦THEF	304 - 52
S3006E	♦TOSJ	120 - 41	SD12A100	SCE	141 - 45	SD22CL18	SCE	142 - 55	SD42A12	SCE	147 - 47	SD1468	♦THEF	303 - 76
S3006S	♦TOSJ	120 - 42	SD12A120	SCE	142 - 52	SD22D6	SCE	165 - 85	SD42A18	SCE	148 - 86	SD1482	♦THEF	304 - 71
S3015A	♦TOSJ	243 - 44	SD12AL6	SCE	136 - 36	SD22D12	SCE	169 - 83	SD42A24	SCE	143 - 72	SD1484-10	♦THEF	243 - 47
S3015B	♦TOSJ	243 - 45	SD12AL12	SCE	135 - 91	SD22D18	SCE	171 - 58	SD42A48	SCE	146 - 84	SD1495-1	THEF	246 - 21
S3023	♦TOSJ	228 - 50	SD12AL18	SCE	135 -104	SD22D24	SCE	164 - 82	SD42A60	SCE	147 - 27	SD1499-1	♦THEF	305 - 36
S3028	♦TOSJ	154 - 27	SD12AL24	SCE	136 - 9	SD22D48	SCE	169 - 71	SD42A90	SCE	141 - 59	SD1500	♦THEF	246 - 22
S3028A	♦TOSJ	154 - 28	SD12AL48	SCE	136 - 86	SD22D60	SCE	169 - 91	SD42A100	SCE	141 - 60	SD1501	♦THEF	246 - 23
S3041B	♦TOSJ	139 - 81	SD12AL60	SCE	136 - 92	SD22D90	SCE	161 - 92	SD42A120	SCE	142 - 58	SD1502	♦THEF	246 - 24
S3046	♦TOSJ	243 - 46	SD12AL90	SCE	136 -110	SD22D100	SCE	161 - 93	SD42AL6	SCE	136 - 39	SD1503	♦THEF	246 - 25
S3060D	♦TOSJ	120 - 43	SD12AL100	SCE	137 - 1	SD22D120	SCE	164 - 31	SD42AL12	SCE	135 - 94	SD1504	♦THEF	246 - 26
S3060E	♦TOSJ	120 - 44	SD12AL120	SCE	138 - 41	SD22E6	SCE	175 - 63	SD42AL18	SCE	135 -107	SD1505	♦THEF	246 - 27
S3060S	♦TOSJ	120 - 45	SD12B6	SCE	152 - 32	SD22E12	SCE	177 -101	SD42AL24	SCE	136 - 12	SD1506	THEF	246 - 28
S3066	♦TOSJ	228 - 51	SD12B12	SCE	153 - 88	SD22E18	SCE	181 - 30	SD42AL48	SCE	136 - 89	SD1507	THEF	246 - 29
S3076	♦TOSJ	150 - 50	SD12B18	SCE	155 - 95	SD22E24	SCE	172 - 6	SD42AL60	SCE	136 - 95	SD1512	THEF	246 - 30
S4019	♦TOSJ	148 - 55	SD12B24	SCE	149 - 95	SD22E48	SCE	177 - 73	SD42AL90	SCE	137 - 9	SD1513	THEF	246 - 31
S8201A	TOSJ	238 - 28	SD12B48	SCE	152 - 78	SD22E60	SCE	177 - 74	SD42AL100	SCE	137 - 10	SD1514	THEF	246 - 32
S8202A	TOSJ	238 - 29	SD12B60	SCE	153 - 60	SD22E90	SCE	169 -100	SD42AL120	SCE	138 - 50	SD1515	THEF	246 - 33
S8803	♦TOSJ	320 - 39	SD12B90	SCE	147 - 39	SD22E100	SCE	169 -101	SD42B6	SCE	152 - 35	SD1520	♦THEF	308 - 49
S8812	♦TOSJ	320 - 37	SD12B100	SCE	147 - 40	SD22E120	SCE	171 - 74	SD42B12	SCE	153 -103	SD1520-1	♦THEF	309 - 54
S8814	♦TOSJ	319 - 29	SD12B120	SCE	148 - 81	SD22F6	SCE	186 - 19	SD42B18	SCE	155 -101	SD1520-8	♦THEF	309 - 55
S8815	♦TOSJ	319 - 66	SD12BL6	SCE	139 - 90	SD22F12	SCE	188 - 56	SD42B24	SCE	149 - 98	SD1522	♦THEF	309 - 35
S8816	♦TOSJ	319 - 87	SD12BL12	SCE	137 - 2	SD22F18	SCE	191 - 39	SD42B48	SCE	152 - 81	SD1522-1	♦THEF	309 - 36
SAL89	LMTF	73 - 33	SD12BL18	SCE	138 - 42	SD22F24	SCE	183 - 58	SD42B60	SCE	153 - 63	SD1522-2	♦THEF	309 - 67
SCA0005	♦SCA	316 - 52	SD12BL24	SCE	139 - 23	SD22F48	SCE	186 - 76	SD42B90	SCE	147 - 48	SD1522-3	♦THEF	309 - 68
SD11-1	SCE	153 - 81	SD12BL48	SCE	140 - 74	SD22F60	SCE	188 - 5	SD42B100	SCE	147 - 49	SD1522-8	♦THEF	309 - 37
SD11-2	SCE	153 - 82	SD12BL60	SCE	140 -101	SD22G6	SCE	194 -109	SD42B120	SCE	148 - 87	SD1522-9	♦THEF	309 - 38
SD11-3	SCE	141 - 37	SD12C6	SCE	158 - 95	SD22G12	SCE	196 - 54	SD42BL6	SCE	139 - 93	SD1524	♦THEF	309 - 74
SD11-4	SCE	141 - 38	SD12C12	SCE	161 - 88	SD22G18	SCE	197 - 98	SD42BL12	SCE	137 - 11	SD1524-1	♦THEF	309 - 75
SD11-5,6,7	SCE	138 - 37	SD12C18	SCE	164 - 28	SD22G24	SCE	192 -104	SD42BL18	SCE	138 - 51	SD1526	♦THEF	309 - 83
SD11A6	SCE	145 - 85	SD12C24	SCE	157 - 75	SD22G48	SCE	195 - 58	SD42BL24	SCE	139 - 26	SD1526-1	♦THEF	309 - 84
SD11A12	SCE	147 - 35	SD12C48	SCE	160 - 82	SD32-1	SCE	153 - 96	SD42BL48	SCE	140 - 77	SD1526-8	♦THEF	309 - 85
SD11A18	SCE	148 - 78	SD12C60	SCE	160 -105	SD32-2	SCE	153 - 97	SD42BL60	SCE	140 -104	SD1528	♦THEF	309 - 95
SD11A24	SCE	143 - 68	SD12C90	SCE	153 - 89	SD32-3	SCE	141 - 52	SD42C6	SCE	158 - 98	SD1528-1	♦THEF	310 - 1
SD11A48	SCE	146 - 80	SD12C100	SCE	153 - 90	SD32-4	SCE	141 - 53	SD42C12	SCE	161 - 97	SD1528-8	♦THEF	310 - 2
SD11A60	SCE	147 - 23	SD12C120	SCE	155 - 96	SD32-5,6,7	SCE	138 - 46	SD42C18	SCE	164 - 34	SD1530	♦THEF	310 - 3
SD11A90	SCE	141 - 39	SD12CL12	SCE	141 - 46	SD32A6	SCE	145 - 88	SD42C24	SCE	157 - 78	SD1530-1	♦THEF	310 - 4
SD11A100	SCE	141 - 40	SD12CL18	SCE	142 - 53	SD32A12	SCE	147 - 44	SD42C48	SCE	160 - 85	SD1530-8	♦THEF	310 - 5
SD11A120	SCE	142 - 50	SD12D6	SCE	165 - 84	SD32A18	SCE	148 - 84	SD42C60	SCE	160 -108	SD1532	♦THEF	310 - 10
SD11AL6	SCE	136 - 35	SD12D12	SCE	169 - 82	SD32A24	SCE	143 - 71	SD42C90	SCE	153 -104	SD1532-1	♦THEF	310 - 11
SD11AL12	SCE	135 - 90	SD12D18	SCE	171 - 57	SD32A48	SCE	146 - 83	SD42C100	SCE	153 -105	SD1532-8	♦THEF	310 - 12
SD11AL18	SCE	135 -103	SD12D24	SCE	164 - 81	SD32A60	SCE	147 - 26	SD42C120	SCE	155 -102	SD1534	♦THEF	310 - 13
SD11AL24	SCE	136 - 8	SD12D48	SCE	169 - 70	SD32A90	SCE	141 - 54	SD42CL12	SCE	141 - 61	SD1534-1	♦THEF	310 - 14
SD11AL48	SCE	136 - 85	SD12D60	SCE	169 - 90	SD32A100	SCE	141 - 55	SD42CL18	SCE	142 - 59	SD1534-8	♦THEF	310 - 15
SD11AL60	SCE	136 - 91	SD12D90	SCE	161 - 89	SD32A120	SCE	142 - 56	SD42D6	SCE	165 - 87	SD1536	♦THEF	310 - 22
SD11AL90	SCE	136 -107	SD12D100	SCE	161 - 90	SD32AL6	SCE	136 - 38	SD42D12	SCE	169 - 85	SD1536-1	♦THEF	310 - 23
SD11AL100	SCE	136 -108	SD12D120	SCE	164 - 29	SD32AL12	SCE	135 - 93	SD42D18	SCE	171 - 60	SD1536-8	♦THEF	310 - 24
SD11AL120	SCE	138 - 38	SD12E6	SCE	175 - 62	SD32AL18	SCE	135 -106	SD42D24	SCE	164 - 84	SD1538	♦THEF	310 - 33
SD11B6	SCE	152 - 31	SD12E12	SCE	177 -100	SD32AL24	SCE	136 - 11	SD42D48	SCE	169 - 73	SD1538-1	♦THEF	310 - 34
SD11B12	SCE	153 - 83	SD12E18	SCE	181 - 29	SD32AL48	SCE	136 - 88	SD42D60	SCE	169 - 93	SD1538-3	♦THEF	309 - 39
SD11B18	SCE	155 - 93	SD12E24	SCE	172 - 5	SD32AL60	SCE	136 - 94	SD42D90	SCE	161 - 98	SD1538-8	♦THEF	310 - 35
SD11B24	SCE	149 - 94	SD12E48	SCE	177 - 71	SD32AL90	SCE	137 - 6	SD42D100	SCE	161 - 99	SD1538#	♦THEF	309 - 40
SD11B48	SCE	152 - 77	SD12E60	SCE	177 - 72	SD32AL100	SCE	137 - 7	SD42D120	SCE	164 - 35	SD1540	♦THEF	309 - 41
SD11B60	SCE	153 - 59	SD12E90	SCE	169 - 98	SD32AL120	SCE	138 - 47	SD42E6	SCE	175 - 65	SD1540-1	♦THEF	309 - 42
SD11B90	SCE	147 - 36	SD12E100	SCE	169 - 99	SD32B6	SCE	152 - 34	SD42E12	SCE	177 -103	SD1540-3	♦THEF	310 - 42
SD11B100	SCE	147 - 37	SD12E120	SCE	171 - 73	SD32B12	SCE	153 - 98	SD42E18	SCE	181 - 32	SD1540-8	♦THEF	310 - 43
SD11B120	SCE	148 - 79	SD12F6	SCE	186 - 18	SD32B18	SCE	155 - 99	SD42E24	SCE	172 - 8	SD1541	♦THEF	308 - 85
SD11BL6	SCE	139 - 89	SD12F12	SCE	188 - 55	SD32B24	SCE	149 - 97	SD42E48	SCE	177 - 77	SD1541-1	♦THEF	309 - 25
SD11BL12	SCE	136 -109	SD12F18	SCE	191 - 38	SD32B48	SCE	152 - 80	SD42E60	SCE	177 - 78	SD1542	♦THEF	309 - 24
SD11BL18	SCE	138 - 39	SD12F24	SCE	183 - 57	SD32B60	SCE	153 - 62	SD42E90	SCE	169 -104	SD1543	♦THEF	309 - 32
SD11BL24	SCE	139 - 22	SD12F48	SCE	186 - 75	SD32B90	SCE	147 - 45	SD42E100	SCE	169 -105	SD1544	♦THEF	312 - 52
SD11BL48	SCE	140 - 73	SD12F60	SCE	188 - 4	SD32B100	SCE	147 - 46	SD42E120	SCE	171 - 76	SD1545	♦THEF	312 - 66
SD11BL60	SCE	140 -100	SD12G6	SCE	194 -108	SD32B120	SCE	148 - 85	SD42F6	SCE	186 - 21	SD1546	♦THEF	249 - 30
SD11C6	SCE	158 - 94	SD12G12	SCE	196 - 53	SD32BL6	SCE	139 - 92	SD42F12	SCE	188 - 58			307 - 91
SD11C12	SCE	161 - 85	SD12G18	SCE	197 - 97	SD32BL12	SCE	137 - 8	SD42F18	SCE	191 - 41	SD1546-1	♦THEF	307 - 92
SD11C18	SCE	164 - 26	SD12G24	SCE	192 -103	SD32BL18	SCE	138 - 48	SD42F24	SCE	183 - 60	SD1546-2	♦THEF	307 - 93
SD11C24	SCE	157 - 74	SD12G48	SCE	195 - 57	SD32BL24	SCE	139 - 25	SD42F48	SCE	186 - 78	SD1547	♦THEF	307 - 94
SD11C48	SCE	160 - 81	SD22-1	SCE	153 - 91	SD32BL48	SCE	140 - 76	SD42F60	SCE	188 - 7	SD1547-1	♦THEF	307 - 95
SD11C60	SCE	160 -104	SD22-2	SCE	153 - 92	SD32BL60	SCE	140 -103	SD42G6	SCE	195 - 1	SD1552	THEF	246 - 34
SD11C90	SCE	153 - 84	SD22-3	SCE	141 - 47	SD32C6	SCE	158 - 97	SD42G12	SCE	196 - 56	SD1560	♦THEF	306 - 85
SD11C100	SCE	153 - 85	SD22-4	SCE	141 - 48	SD32C12	SCE	161 - 94	SD42G18	SCE	197 -100	SD1560-1	♦THEF	307 - 85
SD11C120	SCE	155 - 94	SD22-5,6,7	SCE	138 - 43	SD32C18	SCE	164 - 32	SD42G24	SCE	192 -106	SD1561	♦THEF	306 - 86
SD11CL12	SCE	141 - 41	SD22A6	SCE	145 - 87	SD32C24	SCE	157 - 77	SD42G48	SCE	195 - 60	SD1561-1	♦THEF	307 - 86
SD11CL18	SCE	142 - 51	SD22A12	SCE	147 - 41	SD32C48	SCE	160 - 84	SD1005	♦THEF	311 - 19	SD1562	♦THEF	246 - 35
SD11D6	SCE	165 - 83	SD22A18	SCE	148 - 82	SD32C60	SCE	160 -107	SD1006	♦THEF	311 - 17			306 - 87
SD11D12	SCE	169 - 81	SD22A24	SCE	143 - 70	SD32C90	SCE	153 - 99	SD1007-1	♦THEF	309 - 70	SD1562-1	♦THEF	307 - 87
SD11D18	SCE	171 - 56	SD22A48	SCE	146 - 82	SD32C100	SCE	153 -100	SD1080-2	♦THEF	246 - 17	SD1562-6	♦THEF	246 - 36
SD11D24	SCE	164 - 80	SD22A60	SCE	147 - 25	SD32C120	SCE	155 -100	SD1080-6	♦THEF	246 - 18			306 - 88
SD11D48	SCE	169 - 69	SD22A90	SCE	141 - 49	SD32CL12	SCE	141 - 56	SD1080-7	♦THEF	306 - 42	SD1562-7	♦THEF	307 - 88
SD11D60	SCE	169 - 89	SD22A100	SCE	141 - 50	SD32CL18	SCE	142 - 57	SD1098	♦THEF	307 - 5	SD1563	♦THEF	246 - 37
SD11D90	SCE	161 - 86	SD22A120	SCE	142 - 54	SD32D6	SCE	165 - 86	SD1132-4	♦THEF	304 - 45			303 - 94
SD11D100	SCE	161 - 87	SD22AL6	SCE	136 - 37	SD32D12	SCE	169 - 84	SD1134	♦THEF	304 - 50	SD1564	♦THEF	304 - 37
SD11D120	SCE	164 - 27	SD22AL12	SCE	135 - 92	SD32D18	SCE	171 - 59	SD1135	♦THEF	304 - 70	SD1565	♦THEF	304 - 38
SD11E6	SCE	175 - 61	SD22AL18	SCE	135 -105	SD32D24	SCE	164 - 83	SD1135-3	THEF	246 - 19	SD1565-1	THEF	246 - 38
SD11E12	SCE	177 - 99	SD22AL24	SCE	136 - 10	SD32D48	SCE	169 - 72	SD1136	♦THEF	305 - 10	SD1840	♦THEF	249 - 31
SD11E18	SCE	181 - 28	SD22AL48	SCE	136 - 87	SD32D60	SCE	169 - 92	SD1234	♦THEF	304 - 51	SD1845	THEF	249 - 32
SD11E24	SCE	172 - 4	SD22AL60	SCE	136 - 93	SD32D90	SCE	161 - 95	SD1303	♦THEF	314 - 39	SD1846	THEF	249 - 33
SD11E48	SCE	177 - 69	SD22AL90	SCE	137 - 3	SD32D100	SCE	161 - 96	SD1303#	THEF	313 - 80	SD1847	THEF	249 - 34
SD11E60	SCE	177 - 70	SD22AL100	SCE	137 - 4	SD32D120	SCE	164 - 33	SD1309	♦THEF	314 - 40	SDGPA6	SCE	145 - 90
SD11E90	SCE	169 - 96	SD22AL120	SCE	138 - 44	SD32E6	SCE	175 - 64	SD1316	♦THEF	312 - 24	SDGPA12	SCE	147 - 50
SD11E100	SCE	169 - 97	SD22B6	SCE	152 - 33	SD32E12	SCE	177 -102	SD1330	♦THEF	247 - 18	SDGPA18	SCE	148 - 88
SD11E120	SCE	171 - 72	SD22B12	SCE	153 - 93	SD32E18	SCE	181 - 31	SD1331	♦THEF	249 - 21	SDGPA24	SCE	143 - 73
SD11F6	SCE	186 - 17	SD22B18	SCE	155 - 97	SD32E24	SCE	172 - 7	SD1332	♦THEF	249 - 22	SDGPA48	SCE	146 - 85
SD11F12	SCE	188 - 54	SD22B24	SCE	149 - 96	SD32E48	SCE	177 - 75	SD1333	♦THEF	249 - 23	SDGPA60	SCE	147 - 28
SD11F18	SCE	191 - 37	SD22B48	SCE	152 - 79	SD32E60	SCE	177 - 76	SD1334	♦THEF	249 - 24	SDGPA90	SCE	141 - 62
SD11F24	SCE	183 - 56	SD22B60	SCE	153 - 61	SD32E90	SCE	169 -102	SD1375	♦THEF	311 - 7	SDGPA100	SCE	141 - 63
SD11F48	SCE	186 - 74	SD22B90	SCE	147 - 42	SD32E100	SCE	169 -103	SD1375#	THEF	309 - 46	SDGPA120	SCE	142 - 60
SD11F60	SCE	188 - 3	SD22B100	SCE	147 - 43	SD32E120	SCE	171 - 75	SD1400-2	♦THEF	246 - 20	SDGPAL6	SCE	136 - 40
SD11G6	SCE	194 -107	SD22B120	SCE	148 - 83	SD32F6	SCE	186 - 20	SD1401	♦THEF	307 - 57	SDGPAL12	SCE	135 - 95
SD11G12	SCE	196 - 52	SD22BL6	SCE	139 - 91	SD32F12	SCE	188 - 57	SD1402	♦THEF	307 - 44	SDGPAL18	SCE	135 -108
SD11G18	SCE	197 - 96	SD22BL12	SCE	137 - 5	SD32F18	SCE	191 - 40	SD1409	♦THEF	307 - 45	SDGPAL24	SCE	136 - 13
SD11G24	SCE	192 -102	SD22BL18	SCE	138 - 45	SD32F24	SCE	183 - 59	SD1410	♦THEF	306 -106	SDGPAL48	SCE	136 - 90
SD11G48	SCE	195 - 56	SD22BL24	SCE	139 - 24	SD32F48	SCE	186 - 77	SD1410-1	♦THEF	305 - 96	SDGPAL60	SCE	136 - 96
SD12-1	SCE	153 - 86	SD22BL48	SCE	140 - 75	SD32F60	SCE	188 - 6	SD1410-3	♦THEF	306 -107	SDGPAL90	SCE	137 - 12

Δ-Registered with JEDEC by this manufacturer

♦-Mfr's data sheet available in microfilm service

1. TYPE No. CROSS INDEX

IN TYPE NUMBER SEQUENCE

TYPE No.	MFRS	Pg&Line	TYPE No.	MFRS	Pg&Line	TYPE No.	MFRS	Pg&Line	TYPE No.	MFRS	Pg&Line	TYPE No.	MFRS	Pg&Line
SDGPAL100	SCE	137 - 13	SFD367	♦VET	87 - 53	SQ5470C	♦MSI	190 - 54	TCC2023-10	THEF	246 - 56	TH2429	THC	74 - 49
SDGPAL120	SCE	138 - 52	SFD370	VET	87 - 79	SQ5471A	♦MSI	192 - 42	TCC2023-16	THEF	246 - 57	TH2432	THC	74 - 50
SDGPB6	SCE	152 - 36	SFD372	♦VET	86 - 99	SQ5471B	♦MSI	192 - 43	TCC2023-18	THEF	246 - 58	TH2436	THC	74 - 77
SDGPB12	SCE	153 -106	SFD373	♦VET	87 - 15	SQ5471C	♦MSI	192 - 44	TCC2327-10	THEF	246 - 59	TH2437	THC	74 - 33
SDGPB18	SCE	155 -103	SFD373E	♦VET	87 - 11	SQ5472A	♦MSI	194 - 28	TCC2327-15	THEF	246 - 60	TH2442	THC	62 - 50
SDGPB24	SCE	149 - 99	SFD375	♦VET	87 - 66	SQ5472B	♦MSI	194 - 29	TCC82001	THEF	246 - 61	TH2445	THC	75 - 34
SDGPB48	SCE	152 - 82	SFD377A	EMIB	88 - 14	SQ5472C	♦MSI	194 - 30	TCC82003	THEF	246 - 62	TH2446	THC	76 - 75
SDGPB60	SCE	153 - 64		♦VET		SQ5473A	♦MSI	196 - 9	TCC82005	THEF	246 - 63	TH2602	THC	107 -100
SDGPB90	SCE	147 - 51	SFD380	♦VET	87 - 87	SQ5473B	♦MSI	196 - 10	TCC82010	THEF	246 - 64	TH2605	THC	108 - 55
SDGPB100	SCE	147 - 52	SFD380A	♦VET	87 - 88	SQ5473C	♦MSI	196 - 11	TCC82302	THEF	246 - 65	TH2607	THC	108 - 53
SDGPB120	SCE	148 - 89	SFD380F	♦VET	88 - 15	SQ5474A	♦MSI	197 - 29	TCC82304	THEF	246 - 66	TH2608	THC	108 - 52
SDGPBL6	SCE	139 - 94	SFD381	♦VET	87 - 54	SQ5474B	♦MSI	197 - 30	TCC82307	THEF	246 - 67	TH2610	THC	107 - 19
SDGPBL12	SCE	137 - 14	SFD382	♦VET	87 - 63	SQ5474C	♦MSI	197 - 31	TCC83001	THEF	246 - 68	TH2611	THC	105 -101
SDGPBL18	SCE	138 - 53	SFD383	♦VET	87 - 9	SQ5475A	♦MSI	198 - 45	TCC83003	THEF	246 - 69	TH2612	THC	107 - 17
SDGPBL24	SCE	139 - 27	SFD386	♦VET	87 - 55	SQ5475B	♦MSI	198 - 46	TCC83005	THEF	246 - 70	TH2613	THC	110 - 67
SDGPBL48	SCE	140 - 78	SFD422D,E,G	THEF	148 - 32	SQ5475C	♦MSI	198 - 47	TCC0105100	THEF	246 - 71	TH2614	THC	110 - 29
SDGPBL60	SCE	140 -105	SFD423C,E,F	THEF	148 - 33	SQ5476A	♦MSI	199 - 34	TCC0204130	THEF	246 - 72	TH2615A	THC	110 - 27
SDGPC6	SCE	158 - 99	SFD511	VET	62 - 45	SQ5476B	♦MSI	199 - 35	TD9	♦GESY	206 - 4	TH2615B	THC	110 - 36
SDGPC12	SCE	161 -100	SFD605	♦VET	61 - 66	SQ5476C	♦MSI	199 - 36	TD261	♦GESY	207 - 82	TH2618	THC	109 - 88
SDGPC18	SCE	164 - 36	SFD612	VET	61 - 64	SV14B	♦NECJ	243 - 48	TD261A	♦GESY	207 - 81	TH2619	THC	108 - 51
SDGPC24	SCE	157 - 79	SH5A	NECJ	116 - 45	SV55A	♦NECJ	142 - 98	TD262	♦GESY	208 - 31	TH2622	THC	110 - 66
SDGPC48	SCE	160 - 86	SLX4B	CEI	228 - 52	SV55B	NECJ	149 - 84	TD262A	♦GESY	208 - 30	TH2626	THC	110 - 13
SDGPC60	SCE	160 -109	SM153A,AM	NECJ	120 - 46	SV55C	NECJ	155 - 91	TD263	♦GESY	209 - 51	TH2631	THC	109 - 55
SDGPC90	SCE	153 -107	SM153B,BM	NECJ	120 - 47	SV55D	♦NECJ	162 -104	TD263A	♦GESY	209 - 45	TH3000	♦THEF	246 - 93
SDGPC100	SCE	153 -108	SM153C,CM	NECJ	120 - 48	SV56A	♦NECJ	145 - 32	TD263B	♦GESY	209 - 21	TH3001	♦THEF	246 - 94
SDGPC120	SCE	155 -104	SMR32B	NECJ	115 - 38	SV56B	♦NECJ	152 - 4	TD264	♦GESY	210 - 38	TH3003	♦THEF	246 - 95
SDGPCL12	SCE	141 - 64	SMR33B	NECJ	120 - 49	SV56C	♦NECJ	158 - 80	TD264A	♦GESY	210 - 37	TH3005	♦THEF	246 - 96
SDGPCL18	SCE	142 - 61	SMR133B	NECJ	120 - 50	SV56D	♦NECJ	166 - 31	TD265	♦GESY	210 - 78	TH3039	THC	82 -107
SDGPD6	SCE	165 - 88	SMR133C	NECJ	120 - 51	SV66B8	♦NECJ	149 -104	TD265A	♦GESY	210 - 62	TH3041A	THC	82 - 5
SDGPD12	SCE	169 - 86	SQ1213A,B,C	♦MSI	153 - 50	SV66B	♦NECJ	152 - 5	TD266	♦GESY	210 -102	TH3041B	THC	82 - 44
SDGPD18	SCE	171 - 61	SQ1214A,B,C	♦MSI	155 - 76	SV66C	♦NECJ	157 - 82	TD266A	♦GESY	210 -101	TH3042	THC	78 - 32
SDGPD24	SCE	164 - 85	SQ1215A,B,C	♦MSI	157 - 65	SV66D	♦NECJ	168 - 88	TEC9016	♦TOSJ	303 - 26	TH3043	THC	87 - 56
SDGPD48	SCE	169 - 74	SQ1216A,B,C	♦MSI	159 - 92	SV67C	♦NECJ	157 - 83	TED1502	♦TOSJ	306 - 13	TH3049	THC	82 - 27
SDGPD60	SCE	169 - 94	SQ1217A,B,C	♦MSI	161 - 81	SV67D	♦NECJ	165 - 73	TH064	♦THEF	249 - 25	TH3057	THC	77 -106
SDGPD90	SCE	161 -101	SQ1218A,B,C	♦MSI	164 - 14	SV77D	♦NECJ	174 - 27	TH195	♦THEF	249 - 26	TH3061	THC	77 - 98
SDGPD100	SCE	161 -102	SQ1219A,B,C	♦MSI	165 - 68	SV77E	♦NECJ	180 - 3	TH196	♦THEF	249 - 27	TH3062	THC	79 - 78
SDGPD120	SCE	164 - 37	SQ1220A,B,C	♦MSI	168 - 66	SV77F	♦NECJ	185 - 66	TH197	♦THEF	249 - 28	TH3063	THC	80 - 54
SDGPE6	SCE	175 - 66	SQ1222A,B,C	♦MSI	171 - 28	SV77G	♦NECJ	190 - 55	TH264	♦THEF	249 - 29	TH3064	THC	83 - 20
SDGPE12	SCE	177 -104	SQ1224A,B,C	♦MSI	174 - 21	SV77H	♦NECJ	194 - 31	TH416	THEF	247 - 21	TH3068	THC	87 - 89
SDGPE18	SCE	181 - 33	SQ1226A,B,C	♦MSI	176 - 99	SV87A	♦NECJ	169 - 87	TH417	THEF	247 - 22	TH3077	THC	86 - 43
SDGPE24	SCE	172 - 9	SQ1228A,B,C	♦MSI	179 -107	SV87B	♦NECJ	177 -105	TH430	THEF	247 - 23	TH3078	THC	88 - 57
SDGPE48	SCE	177 - 79	SQ1230A,B,C	♦MSI	182 - 38	SV87C	♦NECJ	188 - 60	TH476	♦THEF	246 - 73	TH3084	THC	79 -106
SDGPE60	SCE	177 - 80	SQ1232A,B,C	♦MSI	183 - 18	SV87D	♦NECJ	196 - 48	TH478	♦THEF	246 - 74	TH3085	THC	79 - 30
SDGPE90	SCE	169 -106	SQ1234A,B,C	♦MSI	185 - 60	SV88A	♦NECJ	169 - 88	TH480	♦THEF	246 - 75	TH3086	THC	82 - 28
SDGPE100	SCE	169 -107	SQ1236A,B,C	♦MSI	187 - 63	SV88B	♦NECJ	177 -106	TH518	THEF	246 - 76	TH3087	THC	78 - 14
SDGPE120	SCE	171 - 77	SQ1238A,B,C	♦MSI	190 - 49	SV88C	♦NECJ	188 - 61	TH519	♦THEF	246 - 77	TH3088	THC	78 - 25
SDGPF6	SCE	186 - 22	SQ1263A,B,C	♦MSI	153 - 51	SV88D	♦NECJ	196 - 49	TH525	♦THEF	246 - 78	TH3089	THC	78 - 28
SDGPF12	SCE	188 - 59	SQ1264A,B,C	♦MSI	155 - 77	SV89D	♦NECJ	166 - 32	TH526	♦THEF	246 - 79	TH3091	THC	77 - 89
SDGPF18	SCE	191 - 42	SQ1265A,B,C	♦MSI	157 - 66	SV89E	♦NECJ	174 - 92	TH531	♦THEF	303 - 66	TH3094	THC	86 - 63
SDGPF24	SCE	183 - 61	SQ1266A,B,C	♦MSI	159 - 93	SV213C	NECJ	140 - 79	TH532	♦THEF	303 - 67	TH3095	THC	77 -110
SDGPF48	SCE	186 - 79	SQ1267A,B,C	♦MSI	161 - 82	SV214C	NECJ	146 - 86	TH550	♦THEF	303 - 38	TH3096	THC	82 - 21
SDGPF60	SCE	188 - 8	SQ1268A,B,C	♦MSI	164 - 15	SV264B	NECJ	154 - 29	TH552	♦THEF	303 - 42	TH3099	THC	82 - 84
SDGPG6	SCE	195 - 2	SQ1269A,B,C	♦MSI	165 - 69	SV264B-4	♦NECJ	154 - 30	TH553	♦THEF	303 - 47	TH3103	THC	81 - 5
SDGPG12	SCE	196 - 57	SQ1270A,B,C	♦MSI	168 - 67	SV264B-6	♦NECJ	154 - 31	TH562	THEF	246 - 80	TH3106	THC	82 - 2
SDGPG18	SCE	197 -101	SQ1272A,B,C	♦MSI	171 - 29	SV264B-8	♦NECJ	154 - 32	TH596	♦THEF	246 - 81	TH3113	THC	79 - 31
SDGPG24	SCE	192 -107	SQ1274A,B,C	♦MSI	174 - 22	SV534C	♦NECJ	146 - 87	TH597	♦THEF	246 - 82	TH3116	THC	82 - 35
SFD217	♦VET	62 - 34	SQ1276A,B,C	♦MSI	176 -100	SV534D	♦NECJ	146 - 88	TH598	♦THEF	246 - 83	TH3501	THC	98 -101
SFD218	♦VET	62 - 28	SQ1278A,B,C	♦MSI	179 -108	SV543C	♦NECJ	141 - 65	TH1002	♦THEF	246 - 84	TH3505	THC	89 - 39
SFD218A	VET	62 - 23	SQ1280A,B,C	♦MSI	182 - 39	SV543D	♦NECJ	141 - 66	TH1005	♦THEF	246 - 85	TH3507	THC	95 - 37
SFD222	♦VET	62 - 6	SQ1282A,B,C	♦MSI	183 - 19	SV544C	♦NECJ	146 - 89	TH1010	♦THEF	246 - 86	TH3508B	THC	96 - 30
SFD222A	VET	62 - 7	SQ1284A,B,C	♦MSI	185 - 61	SV544C-1	♦NECJ	142 - 62	TH1725B	THC	83 - 99	TH3509	THC	98 - 87
SFD223	VET	62 - 33	SQ1286A,B,C	♦MSI	187 - 64	SV544D	NECJ	146 - 90	TH2001	♦THEF	246 - 87	TH3511	THC	99 - 35
SFD225	♦VET	61 - 51	SQ1288A,B,C	♦MSI	190 - 50	SV566D	NECJ	162 -105	TH2003	♦THEF	246 - 88	TH3517	THC	102 - 74
SFD227	VET	62 - 22	SQ1714,B,C	MSI	155 - 78	SVC201SP	TSAJ	191 - 55	TH2005	♦THEF	246 - 89	TH3517B	THC	102 - 79
SFD231	♦VET	61 -107	SQ1715,B,C	MSI	157 - 67	SVC201Y	♦TSAJ	204 - 20	TH2046	THC	62 - 97	TH3517E	THC	102 - 75
SFD232	♦VET	62 - 24	SQ1716,B,C	♦MSI	159 - 94	SVC202	♦TSAJ	191 - 46	TH2047	THC	63 - 4	TH3518	THC	90 - 28
SFD233	♦VET	62 - 26	SQ1717,B,C	♦MSI	161 - 83	SVC203	♦TSAJ	193 - 1	TH2047P	THC	63 - 18	TH3522	♦THC	96 - 50
SFD236	♦VET	62 - 43	SQ1718,B,C	♦MSI	164 - 16	SVC211	♦TSAJ	192 -109	TH2047W	THC	74 - 78	TH3523	♦THC	102 - 51
SFD237	VET	62 - 8	SQ1719,B,C	♦MSI	165 - 70	SVC211SP	♦TSAJ	192 -110	TH2048A	THC	73 - 5	TH3524	THC	98 - 37
SFD238	VET	61 -100	SQ1720,B,C	♦MSI	168 - 68	SVC251SP	TSAJ	186 - 13	TH2050	THC	62 - 62	TH3525	THC	100 - 80
SFD240	VET	62 - 32	SQ1722,B,C	♦MSI	171 - 30	SVC251Y	TSAJ	186 - 14	TH2051	THC	62 - 72	TH3538	THC	92 - 11
SFD241	VET	62 - 27	SQ1724,B,C	♦MSI	174 - 23	SVC303Y	♦TSAJ	204 - 52	TH2052	THC	62 - 79	TH3541	THC	100 - 70
SFD242	VET	62 - 29	SQ1726,B,C	♦MSI	176 -101	SVC311	♦TSAJ	204 - 51	TH2054	♦THC	62 -101	TH3542	THC	96 - 56
SFD243	VET	61 -101	SQ1728,B,C	♦MSI	179 -109	SVC321	♦TSAJ	202 - 48	TH2056	THC	63 - 8	TH3543	♦THC	95 - 44
SFD244	VET	61 -110	SQ1730,B,C	♦MSI	182 - 40	SVC321SP	♦TSAJ	202 - 49	TH2062	THC	62 - 61	TH3544B	THC	102 - 56
SFD244A	♦VET	62 - 1	SQ1732,B,C	♦MSI	183 - 20	SVC333	♦TSAJ	202 - 44	TH2063	THC	62 - 71	TH3545	♦THC	96 - 80
SFD246	VET	61 - 65	SQ1734,B,C	♦MSI	185 - 62	SY41	♦FERS	75 - 17	TH2064	THC	62 - 78	TH3546	THC	93 - 68
SFD249	VET	62 - 5	SQ1736,B,C	♦MSI	187 - 65	SZ31	♦FERS	72 - 86	TH2066	THC	63 - 7	TH3551	THC	91 -108
SFD250	VET	62 - 2	SQ1738,B,C	♦MSI	190 - 51	T2H/60JA	STCE	247 - 19	TH2067	THC	63 - 32	TH3553	THC	95 - 16
SFD252	VET	62 - 11	SQ1740,B,C	♦MSI	192 - 41	T2H/60JB	STCE	247 - 20	TH2068	THC	75 -101	TH3559	THC	100 - 78
SFD254	VET	61 -102	SQ1742,B,C	♦MSI	194 - 27	T340	NJRC	108 - 84	TH2069	THC	77 - 10	TH3560	THC	90 - 76
SFD257	♦VET	62 - 9	SQ1744,B,C	♦MSI	196 - 8	T341	NJRC	108 - 86	TH2070	THC	62 - 63	TH3568	THC	99 - 7
SFD303	♦VET	88 - 19	SQ1746,B,C	♦MSI	197 - 28	T342	NJRC	108 - 85	TH2071	THC	62 - 73	TH3569	THC	101 - 50
SFD303B	VALG	87 - 93	SQ1748,B,C	♦MSI	198 - 44	T343	NJRC	105 - 75	TH2072	THC	62 - 80	TH3574	THC	99 - 21
	♦VET		SQ1750,B,C	♦MSI	199 - 33	T347	NJRC	105 - 5	TH2074	THC	76 - 23	TH3576	THC	96 - 31
SFD304	♦VET	87 - 62	SQ5461A	♦MSI	168 - 69	T350	NJRC	106 - 1	TH2075	THC	76 - 13	TH3579	THC	101 - 51
SFD305	♦VET	87 -100	SQ5461B	♦MSI	168 - 70	T351	NJRC	109 - 77	TH2080	THC	75 - 51	TH3580	THC	96 - 26
SFD313A	♦VET	87 - 21	SQ5461C	♦MSI	168 - 71	T352	NJRC	109 - 92	TH2081	THC	75 - 70	TH3588	THC	93 - 67
SFD313B	♦VET	87 - 22	SQ5462A	♦MSI	171 - 31	T353	NJRC	109 - 86	TH2082	THC	75 - 76	TH3591	THC	102 - 69
SFD319	VET	88 - 92	SQ5462B	♦MSI	171 - 32	T356	NJRC	107 - 25	TH2086	THC	75 - 99	TH3593	THC	100 - 79
SFD325	♦VET	88 - 60	SQ5462C	♦MSI	171 - 33	T357	NJRC	108 - 98	TH2089	THC	77 - 3	TH3594	THC	90 - 77
SFD325A	♦VET	88 - 61	SQ5463A	♦MSI	174 - 24	T364	NJRC	109 - 14	TH2090	THC	76 - 24	TH3598	THC	101 - 72
SFD327W	VET	88 - 91	SQ5463B	♦MSI	174 - 25	T365	NJRC	109 -107	TH2094	THC	60 - 4	TH3600	THC	96 - 41
SFD332	♦VET	88 - 96	SQ5463C	♦MSI	174 - 26	T370	NJRC	105 - 20	TH2210C	THC	69 - 35	TH3606	THC	97 - 33
SFD333	♦VET	87 - 69	SQ5464A	♦MSI	176 -102	T373	NJRC	108 - 42	TH2230	THC	68 - 24	TH3609	THC	98 - 33
SFD333T	VET	87 - 72	SQ5464B	♦MSI	176 -103	TAN150	♦CTR	310 - 36	TH2231	THC	68 - 25	TH3610	THC	100 - 59
SFD333TM	VET	82 - 88	SQ5464C	♦MSI	176 -104	TAN250A	♦CTR	310 - 44	TH2232	THC	68 - 52	TH3612	THC	104 - 17
SFD341	♦VET	87 - 14	SQ5465A	♦MSI	179 -110	TCC20L08	THEF	246 - 39	TH2234	THC	68 - 26	TH3614	THC	102 - 48
SFD342	♦VET	88 - 67	SQ5465B	♦MSI	180 - 1	TCC20L15	THEF	246 - 40	TH2235	THC	69 - 9	TH3619	THC	101 - 53
SFD344	VET	87 - 10	SQ5465C	♦MSI	180 - 2	TCC20L25	THEF	246 - 41	TH2240	THC	70 - 28	TH3626	THC	101 - 88
SFD345	♦VET	88 - 82	SQ5466A	♦MSI	182 - 41	TCC20L35	THEF	246 - 42	TH2302	♦THEF	246 - 90	TH3628	THC	97 - 7
SFD347	VET	87 - 17	SQ5466B	♦MSI	182 - 42	TCC1417-6	THEF	246 - 43	TH2304	♦THEF	246 - 91	TH3629	THC	92 - 52
SFD349	EMIB	87 - 50	SQ5466C	♦MSI	182 - 43	TCC1417-12	THEF	246 - 44	TH2307	♦THEF	246 - 92	TH3631	THC	100 - 71
	♦VET		SQ5467A	♦MSI	183 - 21	TCC1417-20	THEF	246 - 45	TH2404	THC	62 -102	TH3637	THC	94 - 14
SFD349F	VET	87 - 59	SQ5467B	♦MSI	183 - 22	TCC1618-40	THEF	246 - 46	TH2406	THC	62 - 98	TH3639	THC	102 - 59
SFD349FL	♦VET	87 - 60	SQ5467C	♦MSI	183 - 23	TCC1720-3	THEF	246 - 47	TH2407	THC	63 - 24	TH3640	THC	96 - 8
SFD349H0-1	♦VET	87 - 43	SQ5468A	♦MSI	185 - 63	TCC1720-6	THEF	246 - 48	TH2408	THC	73 - 6	TH3641	THC	95 - 87
SFD349N	VET	88 - 17	SQ5468B	♦MSI	185 - 64	TCC1720-12	THEF	246 - 49	TH2409	THC	63 - 31	TH3642	THC	95 - 95
SFD352	VET	87 - 51	SQ5468C	♦MSI	185 - 65	TCC1720-20	THEF	246 - 50	TH2415	THC	63 - 35	TH3643	THC	89 - 45
SFD354A	♦VET	87 - 52	SQ5469A	♦MSI	187 - 66	TCC1922-18	THEF	246 - 51	TH2416	THC	63 - 36	TH3660	THC	101 - 76
SFD354G	♦VET	87 - 81	SQ5469B	♦MSI	187 - 67	TCC2023-3	THEF	246 - 52	TH2417	THC	63 - 37	TH3661	THC	100 - 67
SFD354H	VET	87 - 36	SQ5469C	♦MSI	187 - 68	TCC2023-3L	THEF	246 - 53	TH2418	THC	76 - 98	TH3662	THC	103 - 80
SFD356	♦VET	86 -103	SQ5470A	♦MSI	190 - 52	TCC2023-6	THEF	246 - 54	TH2420	THC	76 - 36	TH3671	THC	93 - 65
SFD363	♦VET	88 - 7	SQ5470B	♦MSI	190 - 53	TCC2023-6L	THEF	246 - 55	TH2427A	THC	74 - 87	TH3672	THC	97 -105

Δ-Registered with JEDEC by this manufacturer

♦-Mfr's data sheet available in microfilm service

1. TYPE No. CROSS INDEX

IN TYPE NUMBER SEQUENCE

TYPE No.	MFRS	Pg&Line	TYPE No.	MFRS	Pg&Line	TYPE No.	MFRS	Pg&Line	TYPE No.	MFRS	Pg&Line	TYPE No.	MFRS	Pg&Line
TH3673	THC	96 - 55	TRW53001	♦TRWS	247 - 44	TV2246X	THC	69 - 87	UM6010C	♦UNI	229 - 19	UM9401	♦UNI	230 - 23
TH4011A	THC	61 - 83	TRW53101	♦TRWS	247 - 45	TV2350	♦THC	72 - 88	UM6010E	♦UNI	229 - 20	UM9402	♦UNI	230 - 24
TH4013	THC	61 - 84	TRW53201	♦TRWS	247 - 46	TV2412M	THC	66 - 55	UM6200	♦UNI	229 - 21	UM9415	♦UNI	230 - 25
TH4200	THC	61 - 36	TRW53501	♦TRWS	247 - 47	TV3301	THC	108 - 68	UM6201A	♦UNI	229 - 22	UM9441	♦UNI	245 - 39
	THEF		TRW53502	♦TRWS	247 - 48	TV3304	THC	107 - 18	UM6201B	♦UNI	229 - 23	UM9601	♦UNI	230 - 26
TH4201	THC	61 - 37	TRW53601	♦TRWS	247 - 49	TV3308	THC	109 - 15	UM6201C	♦UNI	229 - 24	UM9602	♦UNI	230 - 27
	THEF		TRW53602	♦TRWS	247 - 50	TV3309	THC	109 -108	UM6201E	♦UNI	229 - 25	UM9603	♦UNI	230 - 28
TH4202	THC	61 - 38	TRW54001	♦TRWS	247 - 51	TV3340	THC	108 - 39	UM6202A	♦UNI	229 - 26	UM9604	♦UNI	230 - 29
TH4203	THC	61 - 32	TRW54101	♦TRWS	247 - 52	TV3340A	THC	108 - 40	UM6202B	♦UNI	229 - 27	UM9605	♦UNI	230 - 30
TH4204	THC	61 - 39	TRW54201	♦TRWS	247 - 53	TV3340B	THC	108 - 66	UM6202C	♦UNI	229 - 28	UM9606	♦UNI	230 - 31
TH4206	THC	61 - 27	TRW54501	♦TRWS	247 - 54	TV9140	THC	91 - 8	UM6202E	♦UNI	229 - 29	UM9607	♦UNI	230 - 32
TH4208	THC	61 - 47	TRW54601	♦TRWS	247 - 55	TV19111	THC	108 - 35	UM6204A	♦UNI	229 - 30	UM9608	♦UNI	230 - 33
TH4211	THC	61 - 50	TRW62601	♦TRWS	246 -110	TV19112C	THC	109 - 5	UM6204B	♦UNI	229 - 31	UM9701	♦UNI	230 - 34
TH4212	THC	61 - 40	TRW62602	♦TRWS	247 - 1	TV19114	THC	108 -106	UM6204C	♦UNI	229 - 32	UMIL3	♦CTR	303 - 40
TH4213	THC	61 - 46	TRW63601	♦TRWS	247 - 2	TVO8370	♦AVA	255 - 36	UM6204E	♦UNI	229 - 33	UMIL10	♦CTR	303 - 51
TH4214	THC	61 - 49	TRW63602	♦TRWS	247 - 3	TWC5	♦MOVB	95 - 39	UM6600	♦UNI	229 - 34	UMIL25	♦CTR	305 - 77
TH4215	THC	61 - 33	TRW64601	♦TRWS	247 - 4	TWC5A	♦MOVB	97 - 29	UM6601A	♦UNI	229 - 35	UMIL60	♦CTR	303 - 77
TH4216	THC	61 - 41	TRW64602	♦TRWS	247 - 5	TWC5B	♦MOVB	96 - 90	UM6601B	♦UNI	229 - 36	UMIL70	♦CTR	303 - 78
TH4217	THC	61 - 42	TSP150	♦CTR	309 - 11	TWC5C	♦MOVB	96 - 60	UM6601C	♦UNI	229 - 37	UMIL100	♦CTR	303 - 87
TH4218	THC	61 - 48	TSP400	♦CTR	309 - 26	TWC14	♦MOVB	95 - 41	UM6601E	♦UNI	229 - 38	UMIL100A	♦CTR	303 - 88
TH4310	THC	60 - 50	TSP1000A	♦CTR	309 - 33	TWC14A	♦MOVB	97 - 30	UM6601H	♦UNI	229 - 39	UMOB55	♦CTR	306 - 1
TH4315	THC	60 - 59	TSP1000B	♦CTR	309 - 34	TWC14B	♦MOVB	96 - 93	UM6602A	♦UNI	229 - 40	UMX520	♦AVA	112 - 80
TH9021	♦THEF	249 - 35	TU1B	SIEG	212 - 95	TWC14C	♦MOVB	96 - 57	UM6602B	♦UNI	229 - 41	UMX570	♦AVA	112 - 81
TH9023	♦THEF	249 - 36	TU10/1	SIEG	206 - 47	TWC18	♦MOVB	94 - 31	UM6602C	♦UNI	229 - 42	UMX2020	♦AVA	112 - 82
TH9030	♦THEF	249 - 37	TU10/2	SIEG	206 - 48	TWJ30	♦MOVB	102 -102	UM6602E	♦UNI	229 - 43			212 - 24
TH9031	♦THEF	249 - 38	TU11/1	SIEG	207 - 74	TWS6	♦MOVB	92 - 27	UM6602H	♦UNI	229 - 44	UMX4220	♦AVA	255 -110
TH9033	♦THEF	249 - 39	TU11/2	SIEG	207 - 75	TWS7	♦MOVB	91 - 7	UM6606A	♦UNI	229 - 45	USAF304	♦VET	87 - 64
TH9121A	THC	91 - 65	TU12/1	SIEG	208 - 99	TWS10/7642	MOVB	90 - 48	UM6606B	♦UNI	229 - 46	USAF377A	RTN	88 - 9
THB598	♦THEF	246 - 97	TU12/2	SIEG	208 -100	TWS12	♦MOVB	90 - 67	UM6606C	♦UNI	229 - 47		VET	
THX98	♦THEF	246 - 98	TU13/1	SIEG	209 - 70	TWS17	♦MOVB	92 - 2	UM6606E	♦UNI	229 - 48	UTD1000	♦AVA	245 - 40
TIV306	TII	169 - 34	TU13/2	SIEG	209 - 71	TWS36	♦MOVB	90 - 49	UM6606H	♦UNI	229 - 49	UTD1001	♦AVA	245 - 41
TIV307	TII	171 - 62	TU14/1	SIEG	210 - 35	TWX8	♦MOVB	99 - 17	UM6610A	♦UNI	229 - 50	UTL1001	♦AVA	247 - 26
TIV308	TII	175 - 28	TU14/2	SIEG	210 - 36	TWX16	♦MOVB	98 - 54	UM6610B	♦UNI	229 - 51	UTL1002	♦AVA	247 - 27
TK6	♦ALGG	67 - 35	TU101	SIEG	206 - 53	TWX19	♦MOVB	99 - 29	UM6610C	♦UNI	229 - 52	UTM1053	♦AVA	255 - 2
TK8	♦ALGG	66 - 19	TU102	SIEG	207 - 77	TWX22	♦MOVB	97 - 56	UM6610D	♦UNI	229 - 53	UTM1055(A)	♦AVA	255 - 3
TK61	♦ALGG	67 - 36	TU105	SIEG	208 -101	TWX34	♦MOVB	97 - 57	UM6610E	♦UNI	229 - 54	UTM1056(A)	♦AVA	255 - 4
TK76	♦ALGG	66 - 15	TU110	SIEG	209 - 72	TXVP4001	♦HPA	228 - 53	UM7000	♦UNI	229 - 55	UTM1057(A)	♦AVA	255 - 5
TL4	♦ALGG	90 - 63	TV55	THC	69 - 27	TXVP4005	♦HPA	228 - 54	UM7001A	♦UNI	229 - 56	UTO221	♦AVA	255 - 6
TL6	♦ALGG	92 - 80	TV55E	THC	69 - 23	TXVP4050	♦HPA	228 - 55	UM7001B	♦UNI	229 - 57	UTO222	♦AVA	255 - 7
TL368A	♦NJRC	110 -102	TV55F	THC	67 -107	U964	♦ALP	247 - 25	UM7001C	♦UNI	229 - 58	UTO1021	♦AVA	255 - 8
TL369	♦NJRC	111 - 15	TV58	THC	68 - 86	U9400	♦ALP	238 - 30	UM7001D	♦UNI	229 - 59	UTO2024	♦AVA	255 - 9
TL371	NJRC	111 - 16	TV210B	THC	69 - 37	UM4000	♦UNI	228 - 56	UM7001E	♦UNI	229 - 60	UTV005	♦CTR	307 - 18
TL375	♦NJRC	110 - 38	TV217C	THC	68 - 27	UM4001A	♦UNI	228 - 57	UM7002A	♦UNI	229 - 61	UTV010	♦CTR	307 - 21
TL378	♦NJRC	110 - 30	TV217CH	THC	68 - 32	UM4001B	♦UNI	228 - 58	UM7002B	♦UNI	229 - 62	UTV020	♦CTR	307 - 22
TL379	NJRC	107 - 87	TV220A	THC	67 - 65	UM4001C	♦UNI	228 - 59	UM7002C	♦UNI	229 - 63	UTV040	♦CTR	307 - 24
TL382	NJRC	110 - 14	TV220B	THC	66 - 97	UM4001D	♦UNI	228 - 60	UM7006A	♦UNI	229 - 64	UV5	USSR	93 - 35
TL3400	ALGG	92 - 29	TV220C	THC	66 - 98	UM4001E	♦UNI	228 - 61	UM7006B	♦UNI	229 - 65	UV7-1	USSR	92 - 49
TL4003	ALGG	93 - 24	TV220D	THC	66 - 99	UM4002A	♦UNI	228 - 62	UM7006C	♦UNI	229 - 66	UV13	USSR	92 - 57
TL4010	ALGG	93 - 22	TV220E	THC	66 -100	UM4002B	♦UNI	228 - 63	UM7006D	♦UNI	229 - 67	UV13-1	USSR	92 - 58
TL5080	ALGG	93 -100	TV220F	THC	66 -101	UM4002C	♦UNI	228 - 64	UM7006E	♦UNI	229 - 68	UV14	USSR	92 - 59
TL12016	ALGG	100 - 98	TV220G	THC	66 -102	UM4002D	♦UNI	228 - 65	UM7010A	♦UNI	229 - 69	UV78	USSR	92 - 3
TL12022	ALGG	100 - 81	TV220J	THC	66 - 46	UM4002E	♦UNI	228 - 66	UM7010B	♦UNI	229 - 70	UV79	USSR	93 - 36
TL12024	ALGG	100 -107	TV221A	THC	67 - 72	UM4006A	♦UNI	228 - 67	UM7010C	♦UNI	229 - 71	UV95M	USSR	99 - 51
TL12025	ALGG	100 -109	TV221B	THC	67 - 1	UM4006B	♦UNI	228 - 68	UM7010D	♦UNI	229 - 72	UV204	USSR	92 - 48
TL12026	ALGG	100 -108	TV221C	THC	67 - 2	UM4006C	♦UNI	228 - 69	UM7010E	♦UNI	229 - 73	UV205	USSR	92 - 60
TL12030	ALGG	101 - 89	TV221D	THC	67 - 3	UM4006D	♦UNI	228 - 70	UM7100	♦UNI	229 - 74	UV229-1	USSR	104 - 1
TL12200	ALGG	101 - 52	TV221E	THC	67 - 4	UM4006E	♦UNI	228 - 71	UM7101A	♦UNI	229 - 75	UV1001	USSR	98 - 58
TL12260	♦ALGG	101 - 40	TV221F	THC	67 - 5	UM4010A	♦UNI	228 - 72	UM7101B	♦UNI	229 - 76	UV1002	USSR	104 - 19
TL12450	ALGG	101 - 54	TV221G	THC	67 - 6	UM4010B	♦UNI	228 - 73	UM7101C	♦UNI	229 - 77	UV1003	USSR	93 - 52
TL12800	ALGG	101 - 55	TV221H	THC	66 - 50	UM4010C	♦UNI	228 - 74	UM7101D	♦UNI	229 - 78	UV1004	USSR	92 - 7
TL16000	♦ALGG	103 - 69	TV221K	THC	67 - 7	UM4010D	♦UNI	228 - 75	UM7101E	♦UNI	229 - 79	UV1005	USSR	90 - 43
TL16010	ALGG	103 - 58	TV222A	THC	67 - 66	UM4010E	♦UNI	228 - 76	UM7102A	♦UNI	229 - 80	UV1010	USSR	92 - 8
TL20030	ALGG	103 - 84	TV222B	THC	66 -103	UM4300	♦UNI	228 - 77	UM7102B	♦UNI	229 - 81	UV1011	USSR	89 - 54
TOP1203	THC	94 - 60	TV222C	THC	66 -104	UM4301A	♦UNI	228 - 78	UM7102C	♦UNI	229 - 82	V7,A,B,C,D%	♦KSI	169 - 35
TOP1222	THC	97 - 53	TV222D	THC	66 -105	UM4301B	♦UNI	228 - 79	UM7102D	♦UNI	229 - 83		TCY	
TOP1226	THC	103 - 15	TV222E	THC	66 -106	UM4301C	♦UNI	228 - 80	UM7102E	♦UNI	229 - 84	V7,A,B,C,D#	♦KSI	169 - 36
TOP1289	THC	91 - 39	TV222F	THC	66 -107	UM4301D	♦UNI	228 - 81	UM7104A	♦UNI	229 - 85		MSI	
TOP1293	♦THC	92 - 15	TV222G	THC	66 -108	UM4301E	♦UNI	228 - 82	UM7104B	♦UNI	229 - 86	V7E,A,B,C,D	♦KSI	169 - 37
TOP1294	THC	90 - 33	TV222Z	THC	67 - 77	UM4302A	♦UNI	228 - 83	UM7104C	♦UNI	229 - 87	V7E,A,B,C,D#	♦KSI	169 - 38
TOP1304B	THC	91 - 6	TV225A	THC	67 - 82	UM4302B	♦UNI	228 - 84	UM7104E	♦UNI	229 - 88		TCY	
TOP1334	THC	98 - 90	TV232	THC	69 - 13	UM4302C	♦UNI	228 - 85	UM7108A	♦UNI	229 - 89	V10,A,B,C,D%	♦KSI	174 - 28
TOP1401	♦THC	96 - 27	TV242	♦THC	69 - 22	UM4302D	♦UNI	228 - 86	UM7108C	♦UNI	229 - 90		TCY	
TOP1407	THC	97 - 8	TV244	THC	67 - 18	UM4302E	♦UNI	228 - 87	UM7108D	♦UNI	229 - 91	V10,A,B,C,D#	♦KSI	174 - 29
TOP1487	THC	95 - 29	TV259	THC	67 - 40	UM4306A	♦UNI	228 - 88	UM7108E	♦UNI	229 - 92		MSI	
TPM4040	♦TRWS	303 - 61	TV262	THC	68 - 75	UM4306B	♦UNI	228 - 89	UM7200	♦UNI	229 - 93	V10E,A,B,C,D	♦KSI	174 - 30
TPM4100	♦TRWS	303 - 79	TV313	THC	87 - 16	UM4306C	♦UNI	228 - 90	UM7201A	♦UNI	229 - 94	V10E,A,B,C,D#		174 - 31
TPM4130	♦TRWS	303 - 80	TV514	♦THC	72 - 95	UM4306D	♦UNI	228 - 91	UM7201B	♦UNI	229 - 95	♦KSI	TCY	
TPR175	♦CTR	309 - 8	TV848	♦THC	63 - 55	UM4306E	♦UNI	228 - 92	UM7201C	♦UNI	229 - 96	V12,A,B,C,D%	♦KSI	176 -105
TPR400	♦CTR	309 - 15	TV851	♦THC	63 - 57	UM4310A	♦UNI	228 - 93	UM7201D	♦UNI	229 - 97		TCY	
TPR400A	♦CTR	309 - 16	TV1255B	THC	81 - 99	UM4310B	♦UNI	228 - 94	UM7201E	♦UNI	229 - 98	V12,A,B,C,D#	♦KSI	176 -106
TPR500A	♦CTR	309 - 28	TV1505	THC	80 -104	UM4310C	♦UNI	228 - 95	UM7202A	♦UNI	229 - 99		MSI	
TPV376	♦TRWS	302 - 61	TV1546	THC	81 - 13	UM4310D	♦UNI	228 - 96	UM7202B	♦UNI	229 -100	V12E,A,B,C,D	♦KSI	176 -107
TPV385	♦TRWS	302 - 59	TV1547	THC	88 - 62	UM4310E	♦UNI	228 - 97	UM7202C	♦UNI	229 -101	V12E,A,B,C,D#		176 -108
TPV386	♦TRWS	302 - 60	TV2001W	THC	75 -109	UM4900	♦UNI	228 - 98	UM7202D	♦UNI	229 -102	♦KSI	TCY	
TPV508	♦TRWS	300 - 12	TV2002	♦THC	63 - 1	UM4901A	♦UNI	228 - 99	UM7202E	♦UNI	229 -103	V15,A,B,C,D%	♦KSI	180 - 4
TPV590	♦TRWS	314 - 30	TV2011	♦THC	62 -110	UM4901B	♦UNI	228 -100	UM7204A	♦UNI	229 -104		TCY	
TPV591	♦TRWS	314 - 31	TV2013	♦THC	62 -106	UM4901C	♦UNI	228 -101	UM7204B	♦UNI	229 -105	V15,A,B,C,D#	♦KSI	180 - 5
TPV593	♦TRWS	307 - 12	TV2015	♦THC	63 - 2	UM4901D	♦UNI	228 -102	UM7204C	♦UNI	229 -106		MSI	
TPV596	♦TRWS	314 - 1	TV2017	THC	62 -107	UM4901E	♦UNI	228 -103	UM7204D	♦UNI	229 -107	V15E,A,B,C,D	♦KSI	180 - 6
TPV597	♦TRWS	314 - 2	TV2018	♦THC	62 -108	UM4902A	♦UNI	228 -104	UM7204E	♦UNI	229 -108	V15E,A,B,C,D#		180 - 7
TPV598	♦TRWS	311 - 59	TV2019W	THC	62 -109	UM4902B	♦UNI	228 -105	UM7206A	♦UNI	229 -109	♦KSI	TCY	
TPV5051	♦TRWS	300 - 13	TV2022	♦THC	62 - 95	UM4902C	♦UNI	228 -106	UM7300	♦UNI	229 -110	V20,A,B,C,D%	♦KSI	183 - 24
TRF559	THEF	247 - 24	TV2028	♦THC	63 - 3	UM4906A	♦UNI	228 -107	UM7301A	♦UNI	230 - 1		TCY	
TRW2001	♦TRWS	246 - 99	TV2030	THC	62 - 53	UM4906B	♦UNI	228 -108	UM7301B	♦UNI	230 - 2	V20,A,B,C,D#	♦KSI	183 - 25
TRW2003	♦TRWS	246 -100	TV2032	THC	63 - 58	UM4906C	♦UNI	228 -109	UM7301C	♦UNI	230 - 3		MSI	
TRW2005	♦TRWS	246 -101	TV2042	THC	62 - 54	UM4906D	♦UNI	228 -110	UM7301D	♦UNI	230 - 4	V20E,A,B,C,D	♦KSI	183 - 26
TRW2010	♦TRWS	246 -102	TV2053	♦THC	62 - 51	UM4906E	♦UNI	229 - 1	UM7301E	♦UNI	230 - 5	V20E,A,B,C,D#		183 - 27
TRW2015	♦TRWS	246 -103	TV2091	THC	62 - 55	UM6000	♦UNI	229 - 2	UM7302A	♦UNI	230 - 6	♦KSI	TCY	
TRW2020	♦TRWS	246 -104	TV2092	THC	62 - 52	UM6001A	♦UNI	229 - 3	UM7302B	♦UNI	230 - 7	V20EG	TCY	183 - 28
TRW2301	♦TRWS	246 -105	TV2125CBA	THC	66 - 41	UM6001B	♦UNI	229 - 4	UM7302C	♦UNI	230 - 8	V20G	♦TCY	183 - 29
TRW2304	♦TRWS	246 -106	TV2125CBB	THC	66 - 45	UM6001C	♦UNI	229 - 5	UM7302D	♦UNI	230 - 9	V23	♦VAR	72 -100
TRW2307	♦TRWS	314 - 97	TV2126	♦THC	66 - 37	UM6001E	♦UNI	229 - 6	UM7302E	♦UNI	230 - 10	V24E	♦VAR	76 - 92
TRW3001	♦TRWS	246 -107	TV2211A	THC	69 - 90	UM6001H	♦UNI	229 - 7	UM7306A	♦UNI	230 - 11	V27,A,B,C,D%	♦KSI	187 - 69
TRW3003	♦TRWS	246 -108	TV2211B	THC	69 - 91	UM6002A	♦UNI	229 - 8	UM7306B	♦UNI	230 - 12		TCY	
TRW3005	♦TRWS	246 -109	TV2211C	THC	69 - 92	UM6002B	♦UNI	229 - 9	UM7306C	♦UNI	230 - 13	V27,A,B,C,D#	♦KSI	187 - 70
TRW52001	♦TRWS	247 - 35	TV2211D	THC	69 - 93	UM6002C	♦UNI	229 - 10	UM7306D	♦UNI	230 - 14		♦MSI	
TRW52101	♦TRWS	247 - 36	TV2215A	THC	69 - 61	UM6002E	♦UNI	229 - 11	UM7306E	♦UNI	230 - 15	V27E,A,B,C,D	♦KSI	187 - 71
TRW52201	♦TRWS	247 - 37	TV2216A	THC	69 -103	UM6002H	♦UNI	229 - 12	UM7310A	♦UNI	230 - 16	V27E,A,B,C,D#		187 - 72
TRW52501	♦TRWS	247 - 38	TV2216B	THC	69 -104	UM6006A	♦UNI	229 - 13	UM7310B	♦UNI	230 - 17	♦KSI	TCY	
TRW52502	♦TRWS	247 - 39	TV2216C	THC	69 -105	UM6006B	♦UNI	229 - 14	UM7310C	♦UNI	230 - 18	V27EG	TCY	187 - 73
TRW52504	♦TRWS	247 - 40	TV2217H	♦THC	68 - 28	UM6006C	♦UNI	229 - 15	UM7310D	♦UNI	230 - 19	V27G	♦TCY	187 - 74
TRW52601	♦TRWS	247 - 41	TV2226	THC	70 - 12	UM6006E	♦UNI	229 - 16	UM7310E	♦UNI	230 - 20	V33,A,B,C,D%	♦KSI	190 - 56
TRW52602	♦TRWS	247 - 42	TV2246A	THC	69 - 79	UM6010A	♦UNI	229 - 17	UM9301	♦UNI	230 - 21		TCY	
TRW52604	♦TRWS	247 - 43	TV2246B	THC	69 - 89	UM6010B	♦UNI	229 - 18	UM9302	♦UNI	230 - 22			

Δ-Registered with JEDEC by this manufacturer

♦-Mfr's data sheet available in microfilm service

1. TYPE No. CROSS INDEX

IN TYPE NUMBER SEQUENCE

TYPE No.	MFRS	Pg&Line
V33,A,B,C,D#	♦KSI	190 - 57
	♦MSI	
V33E,A,B,C,D	♦KSI	190 - 58
V33E,A,B,C,D#		190 - 59
	♦KSI	
V33EG	TCY	190 - 60
V33G	♦TCY	190 - 61
V39,A,B,C,D%	♦KSI	192 - 45
	TCY	
V39,A,B,C,D#	♦KSI	192 - 46
	♦MSI	
V39B	KSI	70 - 3
	NECJ	
V39B/C	♦VAR	70 - 4
V39E,A,B,C,D	♦KSI	192 - 47
V39E,A,B,C,D#		192 - 48
♦KSI	TCY	
V39EG	TCY	192 - 49
V39G	♦TCY	192 - 50
V40B/C	♦VAR	70 - 65
V47,A,B,C,D%	♦KSI	194 - 32
	TCY	
V47,A,B,C,D#	♦KSI	194 - 33
	♦MSI	
V47E,A,B,C,D	♦KSI	194 - 34
V47E,A,B,C,D#		194 - 35
♦KSI	TCY	
V47EG	TCY	194 - 36
V47G	♦TCY	194 - 37
V53B/C	VAR	69 - 72
V55B	VAR	69 - 28
V55D	VARC	69 - 21
V55E	VARC	69 - 24
V55F	VARC	67 -108
V56,A,B,C,D%	♦KSI	196 - 12
	TCY	
V56,A,B,C,D#	♦KSI	196 - 13
	♦MSI	
V56E,A,B,C,D	♦KSI	196 - 14
V56E,A,B,C,D#		196 - 15
♦KSI	TCY	
V56EG	TCY	196 - 16
V56G	♦TCY	196 - 17
V58C	♦VAR	68 - 92
V68,A,B,C,D%	♦KSI	197 - 32
	MSI	
V68,A,B,C,D#	♦KSI	197 - 33
	TCY	
V68E,A,B,C,D	♦KSI	197 - 34
V68E,A,B,C,D#		197 - 35
♦KSI	TCY	
V68G	TCY	197 - 36
V82,A,B,C,D%	♦KSI	198 - 48
	MSI	
V82,A,B,C,D#	♦KSI	198 - 49
	TCY	
V82E,A,B,C,D	♦KSI	198 - 50
V82E,A,B,C,D#		198 - 51
♦KSI	TCY	
V82G	♦TCY	198 - 52
V100,A,B,C,D%		199 - 37
♦KSI	MSI	
V100,A,B,C,D#		199 - 38
♦KSI	TCY	
V100E,A,B,C,D		199 - 39
♦KSI		
V100E,A,B,C,D#		199 - 40
♦KSI	TCY	
V100G	♦TCY	199 - 41
V154	♦VAR	69 - 86
V157	♦VAR	68 - 83
V262	♦VAR	68 - 76
	VARC	
V270	VAR	68 - 60
V270/6312	VAR	68 - 67
	VET	
V290/6314	VAR	69 - 7
	VET	
V900,A,B,C,D%		199 - 42
♦KSI	MSI	
V900,A,B,C,D#		199 - 43
♦KSI	♦TCY	
V900E,A,B,C,D		199 - 44
♦KSI		
V900E,A,B,C,D%		198 - 77
♦KSI		
V900E,A,B,C,D#		199 - 45
♦TCY		
V907,A,B,C,D%		169 - 39
♦KSI	♦MSI	
V907,A,B,C,D#		169 - 40
♦KSI	♦TCY	
V907E,A,B,C,D		169 - 41
♦KSI		
V907E,A,B,C,D%		168 - 89
♦KSI		
V907E,A,B,C,D#		169 - 42
♦TCY		
V910,A,B,C,D%		174 - 32
♦KSI	♦MSI	
V910,A,B,C,D#		174 - 33
♦KSI	♦TCY	
V910E,A,B,C,D		174 - 34
♦KSI		
V910E,A,B,C,D%		171 - 83
♦KSI		
V910E,A,B,C,D#		174 - 35
♦TCY		
V912,A,B,C,D%		176 -109
♦KSI	♦MSI	
V912,A,B,C,D#		176 -110
♦KSI	♦TCY	
V912E,A,B,C,D		177 - 1
♦KSI		
V912E,A,B,C,D%		175 - 60
♦KSI		
V912E,A,B,C,D#		177 - 2
♦TCY		
V913B	NECJ	319 - 2
V913C	NECJ	319 - 3
V915,A,B,C,D%		180 - 8
♦KSI	♦MSI	
V915,A,B,C,D#		180 - 9
♦KSI	♦TCY	
V915E,A,B,C,D		180 - 10
♦KSI		
V915E,A,B,C,D%		177 - 89
♦KSI		
V915E,A,B,C,D#		180 - 11
♦TCY		
V920,A,B,C,D%		183 - 30
♦KSI	♦MSI	
V920,A,B,C,D#		183 - 31
♦KSI	♦TCY	
V920E,A,B,C,D		183 - 32
♦KSI		
V920E,A,B,C,D%		182 - 60
♦KSI		
V920E,A,B,C,D#		183 - 33
♦TCY		
V921	♦ALP	255 - 37
V927,A,B,C,D%		187 - 75
♦KSI	♦MSI	
V927,A,B,C,D#		187 - 76
♦KSI	♦TCY	
V927E,A,B,C,D		187 - 77
♦KSI		
V927E,A,B,C,D%		186 - 58
♦KSI		
V927E,A,B,C,D#		187 - 78
♦TCY		
V933,A,B,C,D%		190 - 62
♦KSI	♦MSI	
V933,A,B,C,D#		190 - 63
♦KSI	♦TCY	
V933E,A,B,C,D		190 - 64
♦KSI		
V933E,A,B,C,D%		188 -101
♦KSI		
V933E,A,B,C,D#		190 - 65
♦TCY		
V939,A,B,C,D%		192 - 51
♦KSI	♦MSI	
V939,A,B,C,D#		192 - 52
♦KSI	♦TCY	
V939E,A,B,C,D		192 - 53
♦KSI		
V939E,A,B,C,D%		191 - 54
♦KSI		
V939E,A,B,C,D#		192 - 54
♦TCY		
V947,A,B,C,D%		194 - 38
♦KSI	♦MSI	
V947,A,B,C,D#		194 - 39
♦TCY	♦TCY	
V947E,A,B,C,D		194 - 40
♦KSI		
V947E,A,B,C,D%		193 - 9
♦KSI		
V947E,A,B,C,D#		194 - 41
♦TCY		
V956,A,B,C,D%		196 - 18
♦KSI	♦MSI	
V956,A,B,C,D#		196 - 19
♦KSI	♦TCY	
V956E,A,B,C,D		196 - 20
♦KSI		
V956E,A,B,C,D%		195 - 62
♦KSI		
V956E,A,B,C,D#		196 - 21
♦TCY		
V964	♦ALP	247 - 28
V968,A,B,C,D%		197 - 37
♦KSI	MSI	
V968,A,B,C,D#		197 - 38
♦KSI	♦TCY	
V968E,A,B,C,D		197 - 39
♦KSI		
V968E,A,B,C,D%		196 - 72
♦KSI		
V968E,A,B,C,D#		197 - 40
♦TCY		
V982,A,B,C,D%		198 - 53
♦KSI	MSI	
V982,A,B,C,D#		198 - 54
♦KSI	♦TCY	
V982E,A,B,C,D		198 - 55
♦KSI		
V982E,A,B,C,D%		197 -105
♦KSI		
V982E,A,B,C,D#		198 - 56
♦TCY		
V9400	♦ALP	238 - 31
VA87E	VAR	77 - 12
VA92	VAR	70 - 46
VA92B	VAR	70 - 33
VA92H	VAR	70 - 5
VA94	♦VAR	70 - 55
VA94B	♦VAR	70 - 48
VA97	♦VAR	70 - 99
VA97B	VAR	70 - 95
VA98	♦VAR	70 - 78
VA98J	VARC	70 - 77
VA98M	VARC	70 - 79
VA107	♦KSI	166 - 85
♦TCY	VARC	
VA107A	♦KSI	203 - 52
	VARC	
VA107B	♦KSI	203 - 53
	VARC	
VA112	♦KSI	174 - 36
♦TCY	VARC	
VA112A	♦KSI	203 - 70
	VARC	
VA112B	♦KSI	203 - 71
	VARC	
VA113	♦KSI	185 - 67
♦TCY	♦VAR	
VA113A	♦KSI	203 -101
	VARC	
VA113B	♦KSI	203 -102
	VARC	
VA114	KSI	194 - 42
♦TCY	♦VAR	
VA114A	♦KSI	204 - 21
VA114B	KSI	204 - 22
VA115	KSI	174 - 37
♦TCY	♦VAR	
VA115A	KSI	203 - 72
VA115B	KSI	203 - 73
VA116	KSI	185 - 68
	♦TCY	
VA116A	KSI	203 -103
VA116B	KSI	203 -104
VA117	KSI	194 - 43
	♦TCY	
VA117A	KSI	204 - 23
VA117B	KSI	204 - 24
VA118A	VAR	66 - 59
VA122	KSI	194 - 44
	♦TCY	
VA122A	KSI	204 - 25
VA122B	KSI	204 - 26
VA123	♦KSI	180 - 12
♦TCY	VARC	
VA123A	♦KSI	203 - 87
	VARC	
VA123B	♦KSI	203 - 88
	VARC	
VA124	♦KSI	180 - 13
♦TCY	VARC	
VA124A	♦KSI	203 - 89
	VARC	
VA124B	♦KSI	203 - 90
	VARC	
VA125	♦KSI	180 - 14
♦TCY	VARC	
VA125A	♦KSI	203 - 91
	VARC	
VA125B	♦KSI	203 - 92
	VARC	
VA126	KSI	180 - 15
	♦TCY	
VA126A	KSI	203 - 93
VA126B	KSI	203 - 94
VA127	♦KSI	190 - 66
♦TCY	VARC	
VA127A	♦KSI	204 - 6
	VARC	
VA127B	♦KSI	204 - 7
	VARC	
VA128	♦KSI	190 - 67
♦TCY	VARC	
VA128A	♦KSI	204 - 8
	VARC	
VA128B	♦KSI	204 - 9
	VARC	
VA129	♦KSI	190 - 68
♦TCY	VARC	
VA129A	♦KSI	204 - 10
	VARC	
VA129B	♦KSI	204 - 11
	VARC	
VA130	KSI	190 - 69
	♦TCY	
VA130A	KSI	204 - 12
VA130B	KSI	204 - 13
VA132	♦KSI	174 - 38
♦TCY	VARC	
VA132A	♦KSI	203 - 74
	VARC	
VA132B	♦KSI	203 - 75
	VARC	
VA133	♦KSI	185 - 69
♦TCY	VARC	
VA133A	♦KSI	203 -105
	VARC	
VA133B	♦KSI	203 -106
	VARC	
VA134	♦KSI	194 - 45
♦TCY	VARC	
VA134A	♦KSI	204 - 27
	VARC	
VA134B	♦KSI	89 - 60
	VARC	204 - 28
VA135	♦KSI	174 - 39
♦TCY	VARC	
VA135A	♦KSI	203 - 76
	VARC	
VA135B	♦KSI	203 - 77
	VARC	
VA136	♦KSI	185 - 70
♦TCY	VARC	
VA136A	♦KSI	203 -107
	VARC	
VA136B	♦KSI	203 -108
	VARC	
VA137	♦KSI	194 - 46
♦TCY	VARC	
VA137A	♦KSI	204 - 29
	VARC	
VA137B	♦KSI	204 - 30
	VARC	
VA138	♦KSI	166 - 86
♦TCY	VARC	
VA138A	♦KSI	203 - 54
	VARC	
VA138B	♦KSI	203 - 55
	VARC	
VA139	♦KSI	166 - 87
♦TCY	VARC	
VA139A	♦KSI	203 - 56
	VARC	
VA139B	♦KSI	203 - 57
	VARC	
VA140	♦KSI	166 - 88
♦TCY	VARC	
VA140A	♦KSI	203 - 58
	VARC	
VA140B	♦KSI	203 - 59
	VARC	
VA141	KSI	166 - 89
	♦TCY	
VA141A	KSI	203 - 60
VA141B	KSI	203 - 61
VA145B	VAR	72 - 72
VA145D	VAR	72 - 70
VA145E	VAR	72 - 73
VA145F	VAR	72 - 76
VA145H	VAR	72 - 69
VA145J	VAR	72 - 75
VA145UH	VAR	72 - 74
VA145UL	VAR	72 - 71
VA146	♦VAR	72 - 81
VA146C	VAR	72 - 78
VA146M	VAR	72 - 79
VA146N	VAR	72 - 80
VA150	♦KSI	166 - 90
♦TCY	VARC	
VA150A	♦KSI	203 - 62
	VARC	
VA150B	♦KSI	203 - 63
	VARC	
VA151	♦KSI	174 - 40
♦TCY	VARC	
VA151A	♦KSI	203 - 78
	VARC	
VA151B	♦KSI	203 - 79
	VARC	
VA152	♦KSI	180 - 16
♦TCY	VARC	
VA152A	♦KSI	203 - 95
	VARC	
VA152B	♦KSI	203 - 96
	VARC	
VA153	♦KSI	185 - 71
♦TCY	VARC	
VA153A	♦KSI	203 -109
	VARC	
VA153B	♦KSI	203 -110
	VARC	
VA154	♦KSI	190 - 70
♦TCY	VARC	
VA154A	♦KSI	204 - 14
	VARC	
VA154B	♦KSI	204 - 15
	VARC	
VA155	♦KSI	194 - 47
♦TCY	VARC	
VA155A	♦KSI	204 - 31
VA155B	♦KSI	204 - 32
VA156	♦KSI	166 - 91
♦TCY	VARC	
VA156A	♦KSI	166 -100
	VARC	
VA156B	♦KSI	166 -101
	VARC	
VA157	♦KSI	174 - 41
♦TCY	VARC	
VA157A	♦KSI	203 - 80
	VARC	
VA157B	♦KSI	203 - 81
	VARC	
VA158	♦KSI	180 - 17
♦TCY	VARC	
VA158A	♦KSI	203 - 97
	VARC	
VA158B	♦KSI	203 - 98
	VARC	
VA159	♦KSI	185 - 72
♦TCY	VARC	
VA159A	♦KSI	204 - 1
	VARC	
VA159B	♦KSI	204 - 2
	VARC	
VA160	♦KSI	190 - 71
♦TCY	VARC	
VA160A	♦KSI	204 - 16
	VARC	
VA160B	♦KSI	204 - 17
	VARC	
VA160E	VAR	60 - 55
VA160M	♦VAR	60 - 65
VA160N	VAR	60 - 58
VA161	♦KSI	194 - 48
♦TCY	VARC	
VA161A	♦KSI	204 - 33
	VARC	
VA161B	♦KSI	204 - 34
	VARC	
VA161F	♦VAR	60 - 82
VA161M	♦VAR	60 - 89
VA162	♦KSI	166 - 92
	♦TCY	
VA162A	♦KSI	203 - 64
VA162B	♦KSI	203 - 65
VA162F	♦VAR	60 - 97
VA162M	♦VAR	60 -100
VA163	♦KSI	174 - 42
	♦TCY	
VA163A	♦KSI	203 - 82
VA163B	♦KSI	203 - 83
VA163M	♦VAR	60 -105
VA164M	♦VAR	60 -108
VA165	♦KSI	180 - 18
	♦TCY	
VA165A	♦KSI	203 - 99
VA165B	♦KSI	203 -100
VA166	♦KSI	185 - 73
	♦TCY	
VA166A	♦KSI	204 - 3
VA166B	♦KSI	204 - 4
VA167	♦KSI	190 - 72
	♦TCY	
VA167A	♦KSI	204 - 18
VA167B	♦KSI	204 - 19
VA168	♦KSI	197 - 41
	♦TCY	
VA168A	♦KSI	204 - 35
VA168B	♦KSI	204 - 36
VA169	♦KSI	197 - 42
♦TCY	VARC	
VA169A	♦KSI	204 - 37
	VARC	
VA169B	♦KSI	204 - 38
	VARC	
VA170	♦KSI	197 - 43
	♦TCY	
VA170A	♦KSI	204 - 39
VA170B	♦KSI	204 - 40
VA171	♦KSI	197 - 44
♦TCY	VARC	
VA171A	♦KSI	204 - 41
	VARC	
VA171B	♦KSI	204 - 42
	VARC	
VA172	♦KSI	197 - 45
♦TCY	VARC	
VA172A	♦KSI	204 - 43
	VARC	
VA172B	♦KSI	204 - 44
	VARC	
VA173	♦KSI	197 - 46
♦TCY	VARC	
VA173A	♦KSI	204 - 45
	VARC	
VA173B	♦KSI	204 - 46
	VARC	
VA173M	♦VAR	60 - 80
VA173T	VAR	60 - 85
VA173TA	VAR	60 - 87
VA175M	♦VAR	60 - 86
VA175T	VAR	60 - 88
VA177M	♦VAR	60 - 95
VA178M	♦VAR	60 -103
VA183G	♦VAR	60 - 42
VA183GA	VAR	60 - 43
VA184F	♦VAR	60 - 45
VA184M	♦VAR	60 - 46
VA184T	♦VAR	60 - 48
VA185F	VAR	60 - 66
VA185M	♦VAR	60 - 68
VA187M	♦VAR	60 - 54
VA200	♦TCY	197 - 47
VA201	♦TCY	197 - 48
VA201B	♦VAR	68 - 36
VA202	♦TCY	194 - 49
VA203	♦TCY	194 - 50
VA203B	NECJ	68 - 37
VA203B/6975	♦VARC	68 - 38
VA203C,G,H,J	VARC	68 - 29
VA203H	NECJ	68 -102
	VAR	
VA203K	VARC	69 - 41
VA203L	VAR	68 -101
	VARC	
VA204	♦TCY	190 - 73
VA205	♦TCY	190 - 74
VA206	♦TCY	185 - 74
VA207	♦TCY	185 - 75
VA208	♦TCY	180 - 19
VA209	♦TCY	180 - 20
VA210	♦TCY	174 - 43
VA210B	VAR	69 - 38
VA210M	VAR	69 - 42
VA211	♦TCY	174 - 44
VA212	♦TCY	166 - 93
VA213	♦TCY	166 - 94
VA215H	VAR	67 - 83
VA217C	♦VAR	68 - 39
VA217HL	VAR	68 - 9
VA218	VARC	69 - 54
VA218B	♦VAR	69 - 55
	VARC	
VA220A	♦VAR	67 - 68
VA220B	♦VAR	67 - 42
JANVA220B	VAR	67 - 43
VA220C	♦VAR	67 - 29
VA220D	♦VAR	67 - 10
VA220E	♦VAR	66 - 83
VA220F	♦VAR	66 - 71
VA220G	♦VAR	66 - 93
VA220J	♦VAR	66 - 47
VA220Z	♦VAR	67 - 79
VA221B	♦VAR	67 - 49
VA221C	♦VAR	67 - 39
VA221D	♦VAR	67 - 22
VA221E	♦VAR	66 - 89
VA221F	♦VAR	66 - 75

Δ-Registered with JEDEC by this manufacturer

♦-Mfr's data sheet available in microfilm service

1. TYPE No. CROSS INDEX

IN TYPE NUMBER SEQUENCE

TYPE No.	MFRS	Pg&Line
VA221G	VAR	66 -109
VA221H	♦VAR	66 - 49
VA222A	♦VAR	67 - 63
VA222B8821	♦VAR	67 - 46
VA222C	♦VAR	67 - 30
VA222D	♦VAR	67 - 11
VA222E	♦VAR	66 - 84
VA222F	♦VAR	66 - 72
VA222G	♦VAR	66 - 91
VA222Z	VAR	67 - 80
VA225	VAR	67 - 73
VA232	♦VAR	69 - 14
VA237A	♦VAR	69 -106
VA237B	VAR	69 - 83
VA237C	VAR	70 - 15
VA237D	VAR	69 -101
VA237E	VAR	69 - 76
VA237F	VAR	70 - 13
VA240	VAR	70 - 37
VA240C	VAR	70 - 14
VA241	♦VAR	70 - 72
VA242	VAR	69 - 29
	VARC	
VA244	♦VAR	66 - 90
VA244K	♦VAR	66 - 60
VA246	VAR	70 - 18
	VARC	
VA249	♦VAR	69 - 20
VA253	VAR	70 - 68
VA259	♦VAR	66 - 87
VA259A	♦VAR	66 - 81
VA259AT	VAR	66 - 78
VA259B	♦VAR	67 - 21
VA259BT	VAR	66 - 95
VA259C	♦VAR	67 - 57
VA259CT	VAR	67 - 53
VA259DT	VAR	67 - 32
VA259E	♦VAR	67 - 85
VA259ET	VAR	67 - 92
VA259F	♦VAR	67 - 93
VA259FT	VAR	67 - 94
VA259J	VAR	66 - 38
VA259N	♦VAR	67 - 15
VA259P	VAR	67 - 87
VA259R	VAR	67 - 54
VA259T	♦VAR	66 - 39
VA264	VAR	67 - 74
VA265	VAR	68 - 41
VA266A	VAR	69 - 49
VA270VP6915	VARC	68 - 81
VA272	VAR	69 - 15
VA273B	VAR	69 - 47
VA273D	VAR	67 -110
VA273G	VAR	68 - 56
VA273H	VAR	68 -103
VA275A	VAR	70 - 64
VA275B/C	VAR	70 - 53
VA275D	VAR	70 - 61
VA282	VAR	70 - 75
VA282AD	VAR	70 - 67
VA282D	VAR	70 - 66
VA282E	VAR	70 - 83
VA283	♦VAR	70 - 90
VA286	VAR	70 - 30
VA287	♦VAR	69 - 96
VA287A	VAR	69 - 84
VA287B	VAR	69 - 97
VA287C	VAR	70 - 1
VA287D	VAR	70 - 7
VA288A	VAR	69 - 58
VA297	♦VAR	68 - 57
VA297T	VAR	67 - 84
VA297U	VAR	67 -100
VA297V	VAR	68 - 18
VA297W	VAR	69 - 10
VA297X	VAR	69 - 30
VA297Y	VAR	69 - 31
VA297Z	VAR	69 - 51
VA300	♦TCY	197 - 49
VA301	♦TCY	197 - 50
VA302	♦TCY	70 -109
	VAR	194 - 51
VA303	♦TCY	70 - 92
	VAR	194 - 52
VA304	♦TCY	190 - 75
VA305	♦TCY	190 - 76
VA306	♦TCY	185 - 76
VA307	♦TCY	185 - 77
VA308	♦TCY	70 - 50
	VAR	180 - 21
VA309	♦TCY	70 - 49
	VAR	180 - 22
VA310	♦TCY	70 - 2
	VAR	174 - 45
VA311	♦TCY	70 - 52
	VAR	174 - 46
VA312	♦TCY	70 - 89
	VAR	166 - 95
VA313	♦TCY	70 - 91
	VAR	166 - 96
VA318	VAR	68 - 94
VA322	♦VAR	70 - 94
VA326	VAR	67 - 24
VA327	VAR	66 - 11
VA329	VAR	70 - 40
VA435M	♦VAR	60 - 47
VA436M	VAR	60 - 53
VA440M	VAR	60 - 61
VA440N	VAR	60 - 57
VA441F	VAR	60 - 62
VA441M	♦VAR	60 - 67
VA450C	VAR	60 - 83
VA450M	♦VAR	60 - 79
VA450N	VAR	60 - 73
VA451M	VAR	60 - 81
VA451N	VAR	60 - 70
VA460M	♦VAR	60 - 84
VA460N	♦VAR	60 - 74
VA461M	VAR	60 - 90
VA461N	♦VAR	60 - 71
VA462N	♦VAR	60 - 72
VA470M	♦VAR	60 - 98
VA470N	VAR	60 -101
VA472M	VAR	60 - 94
VA480M	♦VAR	60 -104
VA482M	VAR	60 -102
VA490M	♦VAR	60 -107
VA490N	VAR	60 -109
VA503B	♦VAR	73 - 1
VA503C	♦VAR	72 -107
VA504B	NECJ	72 -110
	VAR	
VA506	NECJ	72 -109
VA508	♦VAR	72 - 87
VA510B	VAR	63 - 65
VA510D	VAR	72 -108
VA513	VAR	73 - 9
VA514	♦VAR	72 - 96
VA515B	VAR	73 - 2
VA516	VAR	72 -102
VA517	♦VAR	72 -101
VA518	VAR	72 - 97
VA519	VAR	72 - 98
VA520	♦VAR	72 - 99
VA521	♦TCY	72 - 85
	♦VAR	202 - 18
VA522	♦TCY	202 - 19
VA523	♦TCY	72 - 93
	♦VAR	202 - 20
VA524	♦TCY	72 - 94
		202 - 21
VA531	♦VAR	73 - 13
VA531A	VAR	73 - 14
VA532	VAR	73 - 10
VA533	♦VAR	73 - 3
VA534	♦VAR	73 - 19
VA535	♦VAR	73 - 20
VA536	♦VAR	72 -105
VA537	VAR	73 - 12
VA620A	VAR	103 - 12
VA621	♦TCY	202 -105
VA622	♦TCY	202 -106
VA623	♦TCY	202 -107
VA624	♦TCY	202 -108
VA625L	VAR	92 - 50
VA645G	VAR	92 - 31
VA651	VAR	89 - 68
VA664A	VAR	90 - 42
VA723	♦TCY	203 - 14
VA724	♦TCY	203 - 15
VA800E	VAR	74 - 54
VA800H	VAR	74 - 42
VA802B	NECJ	74 - 51
VA804	♦VARC	74 -102
VA808	♦VAR	75 - 2
VA811	♦VAR	63 - 13
VA811B	♦VAR	63 - 14
VA811C	♦VAR	63 - 15
VA812D	VAR	65 - 85
VA812E	♦VAR	75 - 35
VA816J	♦VAR	63 - 21
VA820	♦VAR	74 - 71
VA820C	♦VAR	74 - 72
VA820D	VAR	74 - 73
VA820E	VAR	74 - 74
VA820F	VAR	74 - 75
VA823	♦TCY	75 - 19
		203 - 42
VA824	♦TCY	203 - 43
VA834B	♦VAR	74 - 88
	♦VARC	
VA838	VAR	75 - 97
VA838A	VAR	64 - 94
VA838B	EMIB	89 - 89
	♦VAR	
VA839	♦VAR	77 - 11
VA842	♦VAR	73 - 51
VA845	♦VAR	75 - 22
VA846	♦VARC	74 -103
VA853	VAR	75 - 94
VA853M	VAR	75 - 91
VA861	VAR	75 - 9
VA862A	VAR	75 - 92
VA862B	VAR	64 - 92
VA862C	VAR	64 - 96
VA864M	♦VAR	75 - 7
VA866	VAR	75 - 20
VA866S	EMIB	89 - 40
VA869A	♦VAR	75 - 25
VA870	VAR	75 - 21
VA874B	♦VAR	76 - 90
VA874E	VAR	76 - 86
VA876	EMIB	76 - 65
	♦VAR	
VA876A#	EMIB	97 - 81
VA879	VAR	76 - 66
VA879G	VAR	63 - 40
VA882	VAR	76 -108
VA883	♦VAR	76 - 64
VA884B	VAR	76 - 46
VA884C	VAR	76 - 47
VA884D	♦VAR	76 - 45
VA888	VAR	74 - 89
	♦VARC	
VA888B	♦VAR	74 - 90
	♦VARC	
VA888D	♦VAR	74 - 92
	VARC	
VA888E	♦VAR	74 - 94
	VARC	
VA888H	VAR	74 - 91
	VARC	
VA890A	VAR	73 - 60
VA890H	♦VAR	73 - 61
VA891A	VAR	73 - 86
VA891H	♦VAR	75 - 60
VA892A	VAR	74 - 15
VA892H	VAR	74 - 5
VA896	♦VAR	75 - 27
VA896F	VAR	75 - 23
VA903	VAR	75 - 18
VA908	VAR	76 - 28
VA909	♦VAR	75 - 24
VA911	♦VAR	76 - 99
VA913A	VAR	72 - 82
VA914	VAR	76 - 71
VA914B	VAR	76 - 68
VA915A	VAR	72 - 77
VA917B	VAR	74 - 29
VA920A	VAR	74 - 26
VA920B	♦VAR	74 - 24
VA921	VAR	76 -110
VA922	VAR	76 - 97
VA925	♦VAR	76 - 81
VA925B	VAR	76 - 82
VA925B#	EMIB	97 - 80
VA925C	VAR	76 - 84
VA925E	EMIB	98 - 14
VA926	VAR	63 - 62
VA927	VAR	76 - 91
VA928A	VAR	77 - 2
VA930	♦VAR	75 - 32
VA932	VAR	76 - 95
VA932B	VAR	76 - 96
VA934	VAR	76 -109
VA935	VAR	75 - 31
VA936A	VAR	76 - 44
VA936B	VAR	76 - 43
VA936E	VAR	76 - 40
VA936G	VAR	76 - 41
VA936J	VAR	76 - 38
VA936K	VAR	76 - 39
VA936L	VAR	76 - 42
VA936N	VAR	76 - 37
VA938A	VAR	76 - 17
VA938C	VAR	62 -105
VA938D	VAR	64 -100
VA943A	♦VAR	75 - 38
VA943B	EMIB	75 - 50
VA944A	♦VAR	75 - 57
VA944B	EMIB	75 - 71
VA945A	♦VAR	75 - 75
VA945B	EMIB	75 - 80
VA946A	EMIB	75 - 39
VA946A/B	VAR	75 - 40
VA946C	VAR	75 - 42
VA946H	♦VAR	75 - 41
VA946HA	♦EMIB	62 - 58
VA947A	EMIB	75 - 58
VA947A/B	VAR	75 - 59
VA947C	♦VAR	75 - 62
VA947H	♦VAR	75 - 61
VA947HA	♦EMIB	62 - 68
VA948A	EMIB	75 - 81
VA948A/B	VAR	75 - 82
VA948C	♦VAR	75 - 84
VA948H	♦VAR	75 - 72
VA948HA	♦EMIB	62 - 81
VA949BM	VAR	76 - 67
VA949Series	VAR	64 -107
VA950A	EMIB	75 - 45
VA950G	VAR	75 - 47
VA950HA	♦EMIB	62 - 59
VA951A	EMIB	75 - 65
	VAR	
VA951G	VAR	75 - 67
VA951HA	♦EMIB	62 - 69
VA952A	EMIB	75 - 83
	VAR	
VA952G	VAR	75 - 73
VA952HA	♦EMIB	62 - 82
VA953A/B	EMIB	75 - 49
VA953A/B/G/H	VAR	75 - 48
VA953HA	♦EMIB	62 - 60
VA954A/B	EMIB	75 - 69
VA954A/B/G/H	VAR	75 - 68
VA954HA	♦EMIB	62 - 70
VA955A/B	EMIB	75 - 85
VA955A/B/G	VAR	75 - 74
VA955HA	♦EMIB	62 - 83
VA956	VAR	76 - 88
VA958A	VAR	73 - 81
VA961	VAR	77 - 22
VA962	VAR	76 - 78
VA963A	NECJ	75 -102
	♦VAR	
VA963D	VAR	64 - 97
VA988	VAR	74 -107
VA988A	VAR	74 - 84
VA988B	VAR	76 - 26
VA988C	VAR	74 -106
VA5139	KSI	168 - 72
	♦TCY	
VA5139A	KSI	168 - 73
	♦TCY	
VA5140	KSI	174 - 47
	♦TCY	
VA5140A	KSI	174 - 48
	♦TCY	
VA5141	KSI	177 - 3
	♦TCY	
VA5141A	KSI	177 - 4
	♦TCY	
VA5142	KSI	180 - 23
	♦TCY	
VA5142A	KSI	180 - 24
	♦TCY	
VA5143	KSI	182 - 44
	♦TCY	
VA5143A	KSI	182 - 45
	♦TCY	
VAB814A3N44	MIC	154 - 38
VAB1610AN28	MIC	243 - 49
VAP81BN19	MIC	135 -110
VAP81CN9	MIC	136 - 1
VAP81CN15	MIC	136 - 2
VAP81CN20	MIC	136 - 3
VAP81FN19	MIC	136 - 4
VAP83AN9	MIC	140 - 4
VAT11N16,N18,N20		166 - 82
	MIC	
VAT13AN9,N11	MIC	164 - 69
VAT52N16,N18,N20		172 - 10
	MIC	
VAT1002N9	MIC	166 - 83
VBC89C	STCE	186 - 23
VBC89J	STCE	188 - 33
VBC99J	STCE	191 - 36
VBC119J	STCE	195 - 45
VBC7506M	VAR	60 - 63
VBE77M	STCE	177 - 29
VBX7504M	VAR	60 - 92
VBX7505M	VAR	60 - 96
VBX7521B	VAR	60 - 91
VC7,A,B	♦EAS	169 - 43
	KSI	
VC10,A,B	♦EAS	174 - 49
	KSI	
VC12,A,B	♦EAS	177 - 5
	KSI	
VC15,A,B	♦EAS	180 - 25
	KSI	
VC20,A,B	♦EAS	183 - 34
	KSI	
VC27,A,B	♦EAS	187 - 79
VC33,A,B	♦EAS	190 - 77
	KSI	
VC39,A,B	♦EAS	192 - 55
VC47,A,B	♦EAS	194 - 53
	KSI	
VC56,A,B	♦EAS	196 - 22
	KSI	
VC68,A,B	♦EAS	197 - 51
	KSI	
VC82,A,B	♦EAS	198 - 57
	KSI	
VC99,A,B	EAS	199 - 46
	KSI	
VC102	♦VARC	69 - 46
VC103A	VARC	70 - 25
VC103B	VARC	70 - 6
VC103C	VARC	70 - 26
VC103D	VARC	70 - 24
VC103E	VARC	70 - 27
VC112,A,B	♦EAS	200 - 17
	KSI	
VC115,A,B	♦EAS	200 - 51
	KSI	
VC118,A,B	♦EAS	200 -108
	KSI	
VC122,A,B	♦EAS	201 - 52
	KSI	
VC127,A,B	♦EAS	201 -101
	KSI	
VC133,A,B	♦EAS	202 - 22
	KSI	
VC207,A,B	♦EAS	169 - 44
	KSI	
VC210,A,B	♦EAS	174 - 50
	KSI	
VC212,A,B	♦EAS	177 - 6
	KSI	
VC215,A,B	♦EAS	180 - 26
	KSI	
VC220,A,B	♦EAS	183 - 35
	KSI	
VC227,A,B	♦EAS	187 - 80
	KSI	
VC233,A,B	♦EAS	190 - 78
	KSI	
VC239,A,B	♦EAS	192 - 56
	KSI	
VC247,A,B	♦EAS	194 - 54
	KSI	
VC256,A,B	♦EAS	196 - 23
	KSI	
VC268,A,B	♦EAS	197 - 52
	KSI	
VC282,A,B	♦EAS	198 - 58
	KSI	
VC299,A,B	♦EAS	199 - 47
	KSI	
VC306,A,B	♦EAS	169 - 45
	KSI	
VC307,A,B	♦EAS	169 - 46
	KSI	
VC309,A,B	♦EAS	174 - 51
	KSI	
VC310,A,B	♦EAS	174 - 52
	KSI	
VC314,A,B	♦EAS	180 - 27
	KSI	
VC315,A,B	♦EAS	180 - 28
	KSI	
VC321,A,B	♦EAS	185 - 78
	KSI	
VC322,A,B	♦EAS	185 - 79
	KSI	
VC332,A,B	♦EAS	190 - 79
	KSI	
VC333,A,B	♦EAS	190 - 80
	KSI	
VC346,A,B	♦EAS	194 - 55
	KSI	
VC347,A,B	♦EAS	194 - 56
	KSI	
VC367,A,B	♦EAS	197 - 53
	KSI	
VC399,A,B	♦EAS	199 - 48
	KSI	
VC406,A,B	♦EAS	169 - 47
	KSI	
VC407,A,B	♦EAS	169 - 48
	KSI	
VC408,A,B	♦EAS	169 - 49
	KSI	
VC409,A,B	♦EAS	174 - 53
	KSI	
VC410,A,B	♦EAS	174 - 54
	KSI	
VC411,A,B	♦EAS	174 - 55
	KSI	
VC414,A,B	♦EAS	180 - 29
	KSI	
VC415,A,B	♦EAS	180 - 30
	KSI	
VC416,A,B	♦EAS	180 - 31
	KSI	
VC421,A,B	♦EAS	185 - 80
	KSI	
VC422,A,B	♦EAS	185 - 81
	KSI	
VC423,A,B	♦EAS	185 - 82
	KSI	
VC432,A,B	♦EAS	190 - 81
	KSI	
VC433,A,B	♦EAS	190 - 82
	KSI	
VC434,A,B	♦EAS	190 - 83
	KSI	
VC446,A,B	♦EAS	194 - 57
	KSI	
VC447,A,B	♦EAS	194 - 58
	KSI	
VC448,A,B	♦EAS	194 - 59
	KSI	
VC467,A,B	♦EAS	197 - 54
	KSI	
VC533,B,C,D	♦EAS	202 - 23
VC539,B,C,D	♦EAS	202 - 34
VC547,B,C,D	♦EAS	202 - 51
VC556,B,C,D	♦EAS	202 -100
VC568,B,C,D	♦EAS	202 -109
VC582,B,C,D	♦EAS	203 - 12
VC599,B,C,D	♦EAS	203 - 16
VC605,A,B	♦EAS	164 - 54
	KSI	
VC606,A,B	♦EAS	164 - 55
	KSI	
VC607,A,B	♦EAS	169 - 50
VC608,A,B	♦EAS	169 - 51
	KSI	
VC610,A,B	♦EAS	174 - 56
	KSI	
VC611,A,B	♦EAS	174 - 57
	KSI	
VC612,A,B	♦EAS	177 - 7
	KSI	
VC613,A,B	♦EAS	177 - 8
	KSI	
VC615,A,B	♦EAS	180 - 32
	KSI	
VC616,A,B	♦EAS	180 - 33
	KSI	
VC618,A,B	♦EAS	182 - 46
	KSI	
VC619,A,B	♦EAS	182 - 47
	KSI	
VC622,A,B	♦EAS	185 - 83
VC623,A,B	♦EAS	185 - 84
	KSI	
VC627,A,B	♦EAS	187 - 81
	KSI	
VC628,A,B	♦EAS	187 - 82
	KSI	
VC633,A,B	♦EAS	190 - 84
	KSI	
VC634,A,B	♦EAS	190 - 85
	KSI	
VC639,A,B	♦EAS	192 - 57
	KSI	
VC641,A,B	♦EAS	192 - 58
	KSI	
VC647,A,B	♦EAS	194 - 60
	KSI	
VC648,A,B	♦EAS	194 - 61
	KSI	
VC720	♦EAS	168 - 74
	KSI	
VC722	♦EAS	171 - 34
	KSI	
VC722A	VARC	67 -109
VC724	♦EAS	174 - 58
	KSI	
VC726	♦EAS	177 - 9
	KSI	
VC728	♦EAS	180 - 34
	KSI	

△-Registered with JEDEC by this manufacturer

♦-Mfr's data sheet available in microfilm service

1. TYPE No. CROSS INDEX

IN TYPE NUMBER SEQUENCE

TYPE No.	MFRS	Pg&Line
VC730	♦EAS	182 - 48
	KSI	
VC732	♦EAS	183 - 36
	KSI	
VC734	♦EAS	185 - 85
	KSI	
VC736	♦EAS	187 - 83
	KSI	
VC740	♦EAS	192 - 59
	KSI	
VC742	♦EAS	194 - 62
	KSI	
VC744	♦EAS	196 - 24
	KSI	
VC746	♦EAS	197 - 55
	KSI	
VC748	♦EAS	198 - 59
	KSI	
VC752	♦EAS	200 - 18
	KSI	
VC821,A,B	♦EAS	169 - 52
VC822,A,B	♦EAS	174 - 59
VC823,A,B	♦EAS	177 - 10
VC824,A,B	♦EAS	180 - 35
VC825,A,B	♦EAS	183 - 37
VC826,A,B	♦EAS	187 - 84
VC827,A,B	♦EAS	190 - 86
VC828,A,B	♦EAS	192 - 60
VC829,A,B	♦EAS	194 - 63
VC831,A,B	♦EAS	196 - 25
VC832,A,B	♦EAS	197 - 56
VC833,A,B	♦EAS	198 - 60
VC834,A,B	♦EAS	199 - 49
VC841,A,B	♦EAS	169 - 53
VC842,A,B	♦EAS	174 - 60
VC843,A,B	♦EAS	177 - 11
VC844,A,B	♦EAS	180 - 36
VC845,A,B	♦EAS	183 - 38
VC846,A,B	♦EAS	187 - 85
VC847,A,B	♦EAS	190 - 87
VC848,A,B	♦EAS	192 - 61
VC849,A,B	♦EAS	194 - 64
VC851,A,B	♦EAS	196 - 26
VC852,A,B	♦EAS	197 - 57
VC853,A,B	♦EAS	198 - 61
VC854,A,B	♦EAS	199 - 50
VC6204	♦EAS	161 -103
VC6233	♦EAS	190 - 88
VC6256	♦EAS	196 - 27
VC6299	♦EAS	199 - 51
VC6607	♦EAS	169 - 54
VC6615	♦EAS	180 - 37
VC6633	♦EAS	190 - 89
VDC1006	VET	110 - 41
VDC1008	VET	110 - 46
VDC1020	VET	110 - 42
VDC1025	VET	110 - 43
VDC1026	VET	110 - 40
VDC1029	VET	110 - 47
VDC1032	VET	110 - 44
VDK1000	VET	111 - 17
VDS1006	VET	110 - 19
VDS1007	VET	110 - 15
VDS1011	VET	110 - 18
VDS1013	VET	110 - 31
VDS1014	VET	110 - 22
VDS1015	VET	110 - 25
VDS1018	VET	110 - 35
VDS1019	VET	110 - 12
VDS1020	VET	110 - 33
VDS1021	VET	110 - 34
VDS1022	VET	110 - 21
VDS1023	VET	110 - 16
VDS1028	VET	110 - 26
VDS1032	VET	110 - 17
VDU1001	VET	111 - 14
VDU1002	VET	111 - 12
VDU1014	VET	111 - 10
VDU1015	VET	111 - 11
VDU1046	VET	111 - 13
VDX1001A	VET	110 - 58
VDX1006	VET	110 - 60
VDX1025	VET	110 - 62
VDX1036	VET	110 - 59
VDX1047	VET	110 - 83
VDX1051	VET	110 - 63
VDX1052	VET	110 - 57
VDX1071	VET	110 -110
VDX1085	VET	110 - 61
VDX1086	VET	110 - 56
VDX1099	VET	110 - 81
VEC87M	STCE	177 - 30
VEE77M	STCE	177 - 31
VF15	FERS	77 - 25
VFX9500	VET	111 - 3
VFX9507	VET	110 - 37
VGA919S	STCE	181 - 3
VJE55W	STCE	158 - 81
VJE66M	STCE	166 - 51
VJE66W	STCE	166 - 33
VJE77M	STCE	177 - 32
VJSE74W	STCE	152 - 6
VJSE96W	STCE	166 - 57
VKA7010	♦VAR	73 - 18
VKB2400T	♦VARC	72 - 83
VKB2414L	♦VARC	63 -102
VKB2414M	♦VARC	63 -103
VKB2414N	♦VARC	63 -104
VKB2414P	♦VARC	63 -105
VKB2415L	♦VARC	65 - 40
VKB2415M	♦VARC	65 - 41
VKB2415N	♦VARC	65 - 38
VKB2415P	♦VARC	65 - 39
VKB2423E	♦VARC	65 - 46
VKB2423F	♦VARC	65 - 47
VKB2423G	♦VARC	64 - 10
VKB2423H	♦VARC	65 - 48
VKB2426G	♦VARC	63 -106
VKB2426H	♦VARC	63 -107
VKB2426L	♦VARC	65 - 36
VKB2426M	♦VARC	65 - 37
VKB2426N	♦VARC	65 - 34
VKB2426P	♦VARC	65 - 35
VKB2437L	♦VARC	65 - 44
VKB2437M	♦VARC	65 - 45
VKB2437N	♦VARC	65 - 42
VKB2437P	♦VARC	65 - 43
VKB2443L	♦VARC	65 - 49
VKB2443M	♦VARC	65 - 50
VKB2443N	♦VARC	65 - 51
VKB2443P	♦VARC	65 - 52
VKB2443R	♦VARC	63 -108
VKB2443S	♦VARC	63 -109
VKB2443T1	♦VAR	60 - 18
VKB2443T2	♦VAR	60 - 19
VKB2443T	♦VARC	63 -110
VKB2443U	♦VARC	64 - 1
VKB2445L	♦VARC	64 - 2
VKB2445M	♦VARC	64 - 3
VKB2445N	♦VARC	64 - 4
VKB2445P	♦VARC	64 - 5
VKB2445R	♦VARC	64 - 6
VKB2445S	♦VARC	64 - 7
VKB2445T	♦VARC	64 - 8
VKB2445U	♦VARC	64 - 9
VKB2449T	VARC	72 - 84
VKC2403A1	VARC	74 - 79
VKC2403A2	VARC	74 - 81
VKC2403A3	VARC	74 - 96
VKC2403A4	VARC	74 - 98
VKC2403A5	VARC	74 -100
VKC2403A6	VARC	74 -104
VKC2403A7	VARC	74 -108
VKC2403A8	VARC	74 -110
VKC2403A9	VARC	75 - 3
VKC2403A10	VARC	75 - 6
VKC2404A1	VARC	74 - 80
VKC2404A2	VARC	74 - 82
VKC2404A3	VARC	74 - 97
VKC2404A4	VARC	74 - 99
VKC2404A5	VARC	74 -101
VKC2404A6	VARC	74 -105
VKC2404A7	VARC	74 -109
VKC2404A8	VARC	75 - 1
VKC2404A9	VARC	75 - 4
VKC2404A10	VARC	75 - 5
VKC2404A11	VARC	75 - 8
VKC7762	VAR	65 - 88
VKC7777B	VAR	76 - 35
VKC7777C	VAR	76 - 34
VKC7790C	VAR	76 - 29
VKC7807	VAR	76 - 25
VKC7810B	VAR	76 - 63
VKC7819B	VAR	76 - 27
VKC8342/8956	♦VAR	63 - 29
VKD2441E	VARC	64 - 76
VKD2441F	VARC	64 - 77
VKE2401L	♦VARC	65 - 24
VKE2401M	♦VARC	65 - 25
VKE2401N	♦VARC	65 - 22
VKE2401P	♦VARC	65 - 23
VKE2409L	♦VARC	65 - 20
VKE2409M	♦VARC	65 - 21
VKE2409N	♦VARC	65 - 18
VKE2409P	♦VARC	65 - 19
VKE2421L	♦VARC	65 - 30
VKE2421M	♦VARC	65 - 31
VKE2421N	♦VARC	65 - 32
VKE2421P	♦VARC	65 - 33
VKE2425E	♦VARC	63 - 92
VKE2425F	♦VARC	63 - 93
VKE2425G	♦VARC	63 - 90
VKE2425H	♦VARC	63 - 91
VKE2435G	♦VARC	63 - 41
VKE2436L	♦VARC	65 - 28
VKE2436M	♦VARC	65 - 29
VKE2436N	♦VARC	65 - 26
VKE2436P	♦VARC	65 - 27
VKE2457L(A)	♦VARC	63 - 94
VKE2457M(A)	♦VARC	63 - 95
VKE2457N(A)	♦VARC	63 - 96
VKE2457P(A)	♦VARC	63 - 97
VKE2457R(A)	♦VARC	63 - 98
VKE2457S(A)	♦VARC	63 - 99
VKE2457T(A)	♦VARC	63 -100
VKE2457U(A)	♦VARC	63 -101
VKG2431E	VARC	64 - 54
VKG2431F	VARC	64 - 55
VKG2431G	VARC	64 - 52
VKG2431H	VARC	64 - 53
VKG2439E	VARC	64 - 58
VKG2439F	VARC	64 - 59
VKG2439G	VARC	64 - 56
VKG2439H	VARC	64 - 57
VKG2440E	VARC	64 - 34
VKG2440F	VARC	64 - 35
VKG2440G	VARC	64 - 32
VKG2440H	VARC	64 - 33
VKG7815	VAR	64 -106
VKH2405A1	♦VARC	76 - 83
VKJ2450A1	VARC	75 - 10
VKJ2450A2	VARC	75 - 11
VKJ2450A11	VARC	75 - 12
VKJ2450A21	VARC	75 - 15
VKJ2450B13	VARC	75 - 13
VKJ2450B14	VARC	75 - 14
VKK7009	♦VAR	73 - 11
VKK7808A	VAR	77 - 1
VKL7755	VAR	75 - 98
VKL7759	VAR	75 -107
VKL7760	VAR	77 - 16
VKL7774	VAR	62 - 94
VKL7783	VAR	77 - 7
VKL7796	♦VAR	75 -106
VKL7800	♦VAR	77 - 6
VKL7811	VAR	64 - 85
VKL7829A	VAR	64 - 81
VKP7758	♦VAR	75 - 96
VKP8259	VAR	64 - 91
VKP8264	VAR	64 - 89
VKQ2420L	♦VARC	65 - 9
VKQ2420M	♦VARC	65 - 10
VKQ2420N	♦VARC	65 - 7
VKQ2420P	♦VARC	65 - 8
VKQ2422E	♦VARC	65 - 15
VKQ2422F	♦VARC	65 - 16
VKQ2422G	♦VARC	63 - 89
VKQ2422H	♦VARC	65 - 17
VKQ2424F	♦VARC	63 - 72
VKQ2424L	♦VARC	65 - 13
VKQ2424M	♦VARC	65 - 14
VKQ2424N	♦VARC	65 - 11
VKQ2424P	♦VARC	65 - 12
VKQ2433L	♦VARC	65 - 5
VKQ2433M	♦VARC	65 - 6
VKQ2433N	♦VARC	65 - 3
VKQ2433P	♦VARC	65 - 4
VKQ2434E	♦VARC	63 - 75
VKQ2434F	♦VARC	63 - 76
VKQ2434G	♦VARC	63 - 73
VKQ2434H	♦VARC	63 - 74
VKQ2435E	♦VARC	63 - 79
VKQ2435F	♦VARC	63 - 80
VKQ2435G	♦VARC	63 - 77
VKQ2435H	♦VARC	63 - 78
VKQ2456L(A)	♦VARC	63 - 81
VKQ2456M(A)	♦VARC	63 - 82
VKQ2456N(A)	♦VARC	63 - 83
VKQ2456P(A)	♦VARC	63 - 84
VKQ2456R(A)	♦VARC	63 - 85
VKQ2456S(A)	♦VARC	63 - 86
VKQ2456T(A)	♦VARC	63 - 87
VKQ2456U(A)	♦VARC	63 - 88
VKS7756	VAR	64 - 82
VKS7761	VAR	77 - 17
VKS7770	♦VAR	74 - 56
VKS7787	VAR	64 -105
VKS7793	♦VAR	74 - 61
VKS7795	VAR	62 - 96
VKS8260	VAR	62 - 99
VKS8262A	VAR	64 -101
VKS8262B	VAR	64 -103
VKS8262C	VAR	64 -102
VKS8262D	VAR	64 -104
VKT2411E	♦VARC	64 - 13
VKT2411F	♦VARC	64 - 14
VKT2411G	♦VARC	64 - 11
VKT2411H	♦VARC	64 - 12
VKT2411L	♦VARC	65 - 55
VKT2411M	♦VARC	65 - 56
VKT2411N	♦VARC	65 - 53
VKT2411P	♦VARC	65 - 54
VKT2419G	♦VARC	64 - 19
VKT2419L	♦VARC	65 - 65
VKT2419M	♦VARC	65 - 66
VKT2419N	♦VARC	65 - 67
VKT2419P	♦VARC	65 - 68
VKT2419R	♦VARC	64 - 20
VKT2419S	♦VARC	64 - 21
VKT2419T	♦VARC	64 - 22
VKT2419U	♦VARC	64 - 23
VKT2427E	♦VARC	64 - 17
VKT2427F	♦VARC	64 - 18
VKT2427G	♦VARC	64 - 15
VKT2427H	♦VARC	64 - 16
VKT2427L	♦VARC	65 - 59
VKT2427M	♦VARC	65 - 60
VKT2427N	♦VARC	65 - 57
VKT2427P	♦VARC	65 - 58
VKT2430E	VARC	64 - 79
VKT2431L	♦VARC	65 - 71
VKT2431M	♦VARC	65 - 72
VKT2431N	♦VARC	65 - 69
VKT2431P	♦VARC	65 - 70
VKT2438L	♦VARC	65 - 63
VKT2438M	♦VARC	65 - 64
VKT2438N	♦VARC	65 - 61
VKT2438P	♦VARC	65 - 62
VKT2439L	♦VARC	65 - 75
VKT2439M	♦VARC	65 - 76
VKT2439N	♦VARC	65 - 73
VKT2439P	♦VARC	65 - 74
VKT2440L	♦VARC	65 - 79
VKT2440M	♦VARC	65 - 80
VKT2440N	♦VARC	65 - 77
VKT2440P	♦VARC	65 - 78
VKT2444L	♦VARC	64 - 36
VKT2444M	♦VARC	64 - 37
VKT2444N	♦VARC	64 - 38
VKT2444P	♦VARC	64 - 39
VKT2444R	♦VARC	64 - 40
VKT2444S	♦VARC	64 - 41
VKT2444T	♦VARC	64 - 42
VKT2444U	♦VARC	64 - 43
VKT2458L(A)	VARC	64 - 24
VKT2458M(A)	VARC	64 - 25
VKT2458N(A)	VARC	64 - 26
VKT2458P(A)	VARC	64 - 27
VKT2458R(A)	VARC	64 - 28
VKT2458S(A)	VARC	64 - 29
VKT2458T(A)	VARC	64 - 30
VKT2458U(A)	VARC	64 - 31
VKT2459L(A)	♦VARC	64 - 44
VKT2459M(A)	♦VARC	64 - 45
VKT2459N(A)	♦VARC	64 - 46
VKT2459P	♦VARC	64 - 47
VKT2459R(A)	♦VARC	64 - 48
VKT2459S(A)	♦VARC	64 - 49
VKT2459T(A)	♦VARC	64 - 50
VKT2459U(A)	♦VARC	64 - 51
VKTA208H	STCE	141 - 89
VKTA210H	STCE	146 - 57
VKTA308H	STCE	141 - 72
VKTA309H	STCE	143 - 79
VKTA310H	STCE	146 - 97
VKTA311H	STCE	149 - 67
VKTA312H	STCE	152 - 59
VKTA408H	STCE	141 - 73
VKTA409H	STCE	143 - 80
VKTA410H	STCE	146 - 98
VKTA411H	STCE	149 - 68
VKTA412H	STCE	152 - 60
VKTA413H	STCE	155 -105
VKTE32W	STCE	139 - 13
VKTE42W	STCE	139 - 14
VKTE43W	STCE	145 - 33
VKTE44W	STCE	152 - 7
VKTE53W	STCE	145 - 34
VKTE54W	STCE	152 - 8
VKU2428E	♦VARC	65 - 1
VKU2428F	♦VARC	65 - 2
VKU2428G	♦VARC	64 -109
VKU2428H	♦VARC	64 -110
VKU7008	♦VAR	73 - 4
VKU7763	VAR	75 - 33
VKU7791	VAR	76 -107
VKU7791C	VAR	76 -106
VKU7791M	VAR	76 -105
VKU7791N	♦VAR	76 -104
VKU7792	VAR	76 -101
VKU7812	VAR	77 - 13
VKU7816A	VAR	64 - 88
VKX2402A1	VARC	72 - 92
VKX7006	VAR	73 - 47
VKX7750	♦VAR	76 - 93
VKX7751	♦VAR	76 - 94
VKX7752	VAR	64 - 84
VKX7753	♦VAR	76 - 85
VKX7765	VAR	75 - 26
VKX7765A	VAR	63 - 56
VKX7765D	VAR	75 - 30
VKX7769	VAR	76 - 89
VKX7780B	VAR	76 - 74
VKX7780C	VAR	76 - 76
VKX7780D	VAR	76 - 72
VKX7780H/M	VAR	76 - 80
VKX7780J	VAR	76 - 79
VKX7780S	VAR	76 - 70
VKX7780V	VAR	76 - 69
VKX7799	♦VAR	63 - 46
VKX7803	VAR	64 - 83
VKX7809	♦VAR	76 -100
VKX7817	VAR	64 - 87
VKX7820A	VAR	73 - 46
VKY2429L	♦VARC	64 - 68
VKY2429M	♦VARC	64 - 69
VKY2429N	♦VARC	64 - 70
VKY2429P	♦VARC	64 - 71
VKY2429R	♦VARC	64 - 72
VKY2429S	♦VARC	64 - 73
VKY2429T	♦VARC	64 - 74
VKY2429U	♦VARC	64 - 75
VKY2430L	♦VARC	64 - 78
VKY2432L	♦VARC	65 - 83
VKY2432M	♦VARC	65 - 84
VKY2441L	♦VARC	65 - 81
VKY2441M	♦VARC	65 - 82
VKY2460L(A)	♦VARC	64 - 60
VKY2460M(A)	♦VARC	64 - 61
VKY2460N(A)	♦VARC	64 - 62
VKY2460P(A)	♦VARC	64 - 63
VKY2460R(A)	♦VARC	64 - 64
VKY2460S(A)	♦VARC	64 - 65
VKY2460T(A)	♦VARC	64 - 66
VKY2460U(A)	♦VARC	64 - 67
VLA422	STCE	197 - 58
VLA423	STCE	199 - 52
VLA521	STCE	194 - 65
VLA522	STCE	197 - 59
VLA522Q	♦STCE	196 - 40
VLA522T	♦STCE	196 - 41
VLA722S	STCE	197 - 60
VLL1000	♦VET	110 - 9
VLU1000	VET	111 - 8
VLU1002	VET	111 - 9
VLX1001	VET	110 - 65
VLX1004	♦VET	110 - 54
VLX1006	VET	110 - 55
VLX1009	VET	110 - 69
VMA1043	♦VET	88 - 97
VMC1005	VET	87 - 23
VMC1078	VET	87 - 18
VMC1103	VET	87 - 19
VMC1150	VET	87 - 20
VMC1220	VET	87 - 25
VMC1223	VET	87 - 2
VMC1351	♦VAR	87 - 3
VMC1353A	♦VAR	87 - 24
VMS1056	♦VET	86 -105
VMS1104	VET	87 - 1
VMS1143B	♦VAR	86 -100
VMS1177	VET	86 - 94
VMS1178	VET	86 -108
VMS1193	VET	88 - 28
VMS1365	♦VAR	86 - 98
VMS1366	♦VAR	86 -106
VMU1000	♦VET	88 - 63
VMU1018	VET	85 - 60
VMU1021	VET	85 -105
VMU1032	VET	85 - 98
VMU1102	♦VET	88 - 64
VMU1123	VET	88 - 75
VMU1222	VET	86 - 93
VMU1315	♦VAR	88 - 29
VMU1357/8982	♦VAR	88 - 73
VMX1003	VET	82 - 86
VMX1004	♦VET	88 - 18
VMX1024	VET	83 - 15
VMX1025	♦VET	87 -103
VMX1026	VET	87 - 94
VMX1027	♦VET	87 -101
VMX1028	VET	82 - 55
VMX1031	VET	85 - 10
VMX1058	VET	87 -107
VMX1065	VET	87 - 74
VMX1073	VET	87 - 84
VMX1077	VET	87 - 65
VMX1090	♦VET	87 - 90
VMX1118	VET	87 - 26
VMX1122	VET	87 - 77
VMX1131	VALG	87 - 67
	♦VET	
VMX1132	VET	87 - 30
VMX1160	VET	87 - 80
VMX1221	VET	87 - 28
VMX1236	VET	87 - 27
VMX1241	VET	88 - 5
VMX1259	♦VAR	87 - 82
VMX1292	VET	87 - 41
VMX1297	VET	88 - 21
VMX1330	VET	87 - 58
VMX1430	♦VAR	87 - 73
VNA208H	STCE	141 - 90
VNA210H	STCE	146 - 58
VNA308H	STCE	141 - 74
VNA309H	STCE	143 - 81
VNA310H	STCE	146 - 99
VNA311H	STCE	149 - 69
VNA312H	STCE	152 - 61
VNA313H	STCE	156 - 63
VNA314H	STCE	160 - 63
VNA315H	STCE	164 - 38
VNA316H	STCE	166 - 40
VNA408H	STCE	141 - 75
VNA409H	STCE	143 - 82
VNA410H	STCE	146 -100
VNA411H	STCE	149 - 70
VNA412H	STCE	152 - 62
VNA413H	STCE	155 -106
VNA414H	STCE	160 - 64
VNA415H	STCE	164 - 39
VNA416H	STCE	166 - 41
VNA417H	STCE	171 - 79
VNA418H	STCE	180 - 38
VQA415	STCE	164 - 17
VQA415C	STCE	247 - 29
VQA416	STCE	168 - 75
VQA417	STCE	174 - 61
VQA418	STCE	180 - 39
VQA418C	STCE	247 - 30
VQA419	STCE	185 - 86
VQA419C	STCE	247 - 31
VQA420	STCE	190 - 90
VQA420C	STCE	247 - 32
VQA421	STCE	194 - 66
VQA515	STCE	164 - 18
VQA516	STCE	168 - 76
VQA517	STCE	174 - 62
VQA518	STCE	180 - 40
VQA519	STCE	185 - 87
VQA520	STCE	190 - 91
VQE66W	STCE	166 - 34
VRB2111A	♦VARC	71 - 79
VRB2112A1	VARC	71 - 60
VRB2112A2	♦VARC	71 - 64
VRB2112A3	VARC	71 - 65
VRB2112A4	VARC	71 - 66
VRB2112A5	VARC	71 - 70
VRB2112A6	VARC	71 - 73
VRB2112A7	VARC	71 - 74
VRB2112A8	VARC	71 - 78
VRB2112A9	VARC	71 - 80
VRB2112A10	VARC	71 - 81
VRB2112A11	VARC	71 - 87
VRB2112A12	VARC	71 - 88
VRB2112A13	VARC	71 - 90
VRB2112A14	VARC	71 - 94
VRB2112A15	VARC	71 - 95
VRB2113A1	♦VARC	71 - 62
VRB2113A2	VARC	71 - 68
VRB2113A3	VARC	71 - 76
VRB2113A4	VARC	71 - 85
VRB2113A5	VARC	71 - 92
VRB2113B1	♦VARC	71 - 63
VRB2113B2	VARC	71 - 69
VRB2113B3	VARC	71 - 77
VRB2113B4	VARC	71 - 86
VRB2113B5	VARC	71 - 93
VRB2115A1	♦VARC	71 - 61
VRB2115A2	VARC	71 - 67
VRB2115A3	VARC	71 - 75
VRB2115A4	VARC	71 - 84
VRB2115A5	VARC	71 - 91
VRE2101A	♦VARC	71 - 32
VRE2102A1	♦VARC	71 - 8
VRE2102A2	VARC	71 - 12
VRE2102A3	VARC	71 - 15
VRE2102A4	VARC	71 - 17
VRE2102A5	VARC	71 - 21
VRE2102A6	VARC	71 - 25

△-Registered with JEDEC by this manufacturer

♦-Mfr's data sheet available in microfilm service

1. TYPE No. CROSS INDEX

IN TYPE NUMBER SEQUENCE

TYPE No.	MFRS	Pg&Line	TYPE No.	MFRS	Pg&Line	TYPE No.	MFRS	Pg&Line	TYPE No.	MFRS	Pg&Line	TYPE No.	MFRS	Pg&Line
VRE2102A7	VARC	71 - 28	VSA309H	STCE	143 - 83	VTC6161H4	♦VAR	95 - 89	VTJ2609A4	♦VARC	95 - 48	VTS5351A1	VAR	90 -107
VRE2102A8	VARC	71 - 31	VSA310H	STCE	146 -101	VTC6260A1	VAR	94 - 93	VTJ2609A11	♦VARC	96 - 69	VTS5352B1	♦VAR	90 - 99
VRE2102A9	VARC	71 - 34	VSA311H	STCE	149 - 71	VTC6260C1	♦VAR	94 - 94	VTJ2618A1	VARC	95 - 51	VTS5352H1	VAR	90 -100
VRE2102A10	VARC	71 - 39	VSA312H	STCE	152 - 63	VTC6260E2	♦VAR	95 - 91	VTJ2628A1	VARC	95 - 33	VTS5353A1	VAR	92 - 34
VRE2102A11	VARC	71 - 46	VSA313H	STCE	156 - 64	VTC6260F1	♦VAR	94 - 95	VTJ2632A1	VARC	95 - 73	VTS5355A1	♦VAR	90 -101
VRE2102A12	VARC	71 - 50	VSA314H	STCE	160 - 65	VTC6260H1	♦VAR	94 - 96	VTJ2642A1	VARC	95 - 74	VTS5355A2	♦VAR	90 -108
VRE2102A13	VARC	71 - 51	VSA315H	STCE	164 - 40	VTC6260H2	♦VAR	96 - 28	VTJ2646A5	VARC	95 - 58	VTS5355B2	♦VAR	92 - 30
VRE2102A14	VARC	71 - 56	VSA316H	STCE	166 - 42	VTC6260J1	♦VAR	94 - 97	VTJ2677A1	VAR	95 - 52	VTS5555A3	♦VAR	90 -109
VRE2102A15	VARC	71 - 57	VSA408H	STCE	141 - 77	VTC6262F1	EMIB	94 -104		VARC		VTS5555B3	♦VAR	92 - 35
VRE2102A16	VARC	71 - 43	VSA409H	STCE	143 - 84		♦VAR		VTJ2677A2	VAR	96 - 68	VTS5650A1	♦VAR	92 - 17
VRE2103A1	VARC	71 - 10	VSA410H	STCE	146 -102	VTC6264C6	♦VAR	94 -105		VARC		VTS5651A1	VAR	92 - 39
VRE2103A2	♦VARC	71 - 20	VSA411H	STCE	149 - 72	VTC6360A1	♦VAR	95 - 23	VTJ6264C4	♦VAR	96 - 29	VTS5751A1	VAR	92 - 38
VRE2103A3	VARC	71 - 30	VSA412H	STCE	152 - 64	VTC6360B1	♦VAR	95 - 97	VTJ6264F1	♦VAR	96 -100	VTS5753A1	♦VAR	92 - 41
VRE2103A4	VARC	71 - 45	VSA413H	STCE	155 -107	VTC6360E1	♦VAR	95 - 22	VTJ6370A1	♦VAR	96 -104	VTS5754A1	♦VAR	92 - 1
VRE2103A5	VARC	71 - 54	VSA414H	STCE	160 - 66	VTC6361A1	♦VAR	95 -104	VTJ6379A1	♦VAR	96 -103	VTS5754G1	VAR	92 - 42
VRE2103A6	VARC	71 - 42	VSA415H	STCE	164 - 41	VTC6361B3	♦VAR	95 -105	VTK4926H1	VAR	103 - 88	VTS6050A2	♦VAR	91 - 28
VRE2103B1	VARC	71 - 11	VSA416H	STCE	166 - 43	VTC6361B4	♦VAR	95 -108	VTK4926P8	VAR	103 - 90	VTS6050H5	♦VAR	91 - 33
VRE2103B2	VARC	71 - 19	VSA417H	STCE	171 - 80	VTC6361H1	♦VAR	95 -102	VTK4926P9	VAR	103 - 91	VTS6055A1	♦VAR	91 - 46
VRE2103B3	VARC	71 - 27	VSA418H	STCE	180 - 41	VTC6362A1	♦VAR	96 - 7	VTK4926S1	VAR	103 - 86	VTS6150A1	♦VAR	91 - 53
VRE2103B4	VARC	71 - 36	VSD211AN9	MIC	230 - 35	VTC6363A1	♦VAR	96 - 32	VTL5240H1	VAR	89 -104	VTS6150B1	♦VAR	91 - 54
VRE2103B5	VARC	71 - 49	VSE32W	STCE	138 - 69	VTC6363C1	VAR	96 - 10	VTL5241A1	♦VAR	89 -105	VTS6150H1	♦VAR	91 - 55
VRE2103B6	VARC	71 - 55	VSE42W	STCE	138 - 70	VTC6364A1	VAR	96 - 4	VTL5245A1	♦VAR	89 - 98	VTS6150J1	♦VAR	91 - 56
VRE2105A1	♦VARC	71 - 9	VSE43M	STCE	142 - 63	VTC6660A1	♦VAR	95 - 28	VTL5245A2	♦VAR	89 -100	VTS6250A1	♦VAR	91 - 68
VRE2105A2	VARC	71 - 18	VSE43W	STCE	145 - 35	VTC6660A2	VAR	96 - 17	VTL5341H1	VAR	89 -106	VTS6250A3	♦VAR	91 - 76
VRE2105A3	VARC	71 - 26	VSE44M	STCE	154 - 33	VTC6660A4	VAR	96 - 14	VTL5341K1	♦VAR	89 - 97	VTS6250C1	♦VAR	91 - 69
VRE2105A4	VARC	71 - 35	VSE44W	STCE	152 - 9	VTC6660C1	♦VAR	96 - 22	VTL5345A1	♦VAR	89 - 99	VTS6250F1	♦VAR	91 - 70
VRE2105A5	VARC	71 - 40	VSE53M	STCE	145 - 36	VTC6660C2	VAR	96 - 21	VTL5345A2	♦VAR	89 -101	VTS6250H1	♦VAR	91 - 71
VRE2105A6	VARC	71 - 48	VSE53W	STCE	145 - 37	VTC6663A1	VAR	93 - 98	VTL5740A1	VAR	89 - 83	VTS6250H2	♦VAR	90 - 75
VRE2105A7	VARC	71 - 53	VSE54W	STCE	152 - 10	VTD600	♦AVA	256 - 15	VTL5741A1	VAR	89 -108	VTS6250J1	♦VAR	91 - 72
VRJ7203A	♦VAR	66 - 76	VSE55M	STCE	158 - 82	VTD2000	♦AVA	256 - 16	VTL6040H1	♦VAR	89 -110	VTS6252C1	♦VAR	91 - 77
VRK7212	VAR	70 - 76	VSE55W	STCE	158 - 83	VTD2800	♦AVA	256 - 17	VTL6140A1	♦VAR	90 - 11	VTS6252F1	♦VAR	91 - 78
VRQ2100A1	♦VARC	70 -104	VSE66M	STCE	166 - 52	VTD3800	♦AVA	256 - 18	VTL6140B1	♦VAR	90 - 12	VTS6353A1	♦VAR	90 - 71
VRT2121A1	♦VARC	71 - 96	VSE66W	STCE	166 - 35	VTD4900	♦AVA	256 - 19	VTL6140B2	♦VAR	90 - 60	VTU2614A1	♦VARC	102 - 99
VRT2121A2	VARC	71 - 99	VSSE63W	STCE	145 - 38	VTE32W	STCE	138 - 71	VTL6240A1	VAR	90 - 17	VTU2614B2	VARC	102 - 41
VRT2121A3	VARC	71 -104	VSSE74W	STCE	152 - 11	VTE42W	STCE	138 - 72	VTL6240C1	♦VAR	90 - 18	VTU4390H1	VAR	102 - 82
VRT2121A4	VARC	71 -105	VSSE75W	STCE	161 -109	VTE43M	STCE	142 - 64	VTL6240F1	♦VAR	90 - 19	VTU4390P1	VAR	102 -105
VRT2121A5	VARC	71 -106	VTA208H	STCE	141 - 91	VTE43W	STCE	145 - 39	VTL6242C1	♦VAR	90 - 23	VTU4390P2	VAR	102 -106
VRT2121A6	VARC	71 -107	VTA210H	STCE	146 - 60	VTE44M	STCE	154 - 34	VTL6242F1	♦VAR	90 - 24	VTU4390P3	VAR	102 - 83
VRT2121A7	VARC	72 - 1	VTA308H	STCE	141 - 78	VTE44W	STCE	152 - 12	VTL6640A1	VAR	90 - 39	VTU4404H9	VAR	103 - 5
VRT2121A8	VARC	72 - 3	VTA309H	STCE	143 - 85	VTE53M	STCE	145 - 40	VTM2613A1	♦VARC	101 - 77	VTU4490A9	VAR	103 - 4
VRT2121A9	VARC	72 - 7	VTA310H	STCE	146 -103	VTE53W	STCE	145 - 41	VTM4386A1	VAR	101 - 8	VTU4490E3	VAR	103 - 2
VRT2121A10	VARC	72 - 8	VTA311H	STCE	149 - 73	VTE54W	STCE	152 - 13	VTM4386H1	VAR	101 - 11	VTU4490E4	VAR	103 - 3
VRT2121A11	VARC	72 - 12	VTA312H	STCE	152 - 65	VTE55W	STCE	158 - 84	VTM4481E9	VAR	101 - 68	VTU4490H1	VAR	102 -107
VRT2121A12	VARC	72 - 14	VTA313H	STCE	156 - 65	VTE66M	STCE	166 - 53	VTM4486E1	VAR	101 - 62	VTU4490H5	VAR	102 -108
VRT2121A13	VARC	72 - 15	VTA314H	STCE	160 - 67	VTE66W	STCE	166 - 36	VTM4486H1	VAR	101 - 6	VTU4490J1	VAR	102 - 31
VRT2121A14	VARC	72 - 16	VTA315H	STCE	164 - 42	VTG2605A1	VARC	92 - 91	VTM4488J2	VAR	101 - 92	VTU4490J4	VAR	102 -101
VRT2121A15	VARC	72 - 21	VTA316H	STCE	166 - 44	VTG2605C4	VARC	92 - 92	VTM4886D9	VAR	101 - 91	VTU4490P1	♦VAR	102 -110
VRT2121A16	VARC	72 - 22	VTA408H	STCE	141 - 79	VTG2630A1	♦VARC	92 - 54	VTM6094B1	VAR	101 - 96	VTU4890D9	VAR	102 -103
VRT2122A1	♦VARC	72 - 23	VTA409H	STCE	143 - 86	VTG2630A5	VARC	93 - 60	VTM6192A1	♦VAR	102 - 4	VTU5191A1	♦VAR	102 - 21
VRT2122A2	VARC	72 - 25	VTA410H	STCE	146 -104	VTG2645	VAR	93 - 59	VTM6192H1	♦VAR	102 - 5	VTU5191F1	♦VAR	101 - 44
VRT2122A3	VARC	72 - 28	VTA411H	STCE	149 - 74		VARC		VTM6194A1	♦VAR	101 -105	VTU5195A1	♦VAR	102 - 87
VRT2122A4	VARC	72 - 32	VTA412H	STCE	152 - 66	VTG2647	VAR	93 - 63	VTM6194H1	♦VAR	101 -106	VTU5195A2	♦VAR	103 - 60
VRT2122A5	VARC	72 - 34	VTA413H	STCE	155 -108		VARC		VTM6196A1	VAR	102 - 6	VTU5390A1	♦VAR	103 - 52
VRT2122A6	VARC	72 - 37	VTA414H	STCE	160 - 68	VTG4028E2	VAR	93 - 74	VTM6196A5	VAR	101 - 30	VTU5391A1	VAR	103 - 53
VRT2122A7	VARC	72 - 39	VTA415H	STCE	164 - 43	VTG4320P1	VAR	92 - 61	VTM6196F1	VAR	102 - 7	VTU6090A1	♦VAR	103 - 16
VRT2122A8	VARC	72 - 43	VTA416H	STCE	166 - 45	VTG4320P2	VAR	92 - 62	VTM6294F1	VAR	101 - 61	VTU6090A5	VAR	102 - 39
VRT2122A9	VARC	72 - 46	VTA417H	STCE	171 - 81	VTG4321H1	VAR	92 - 65	VTO8040	♦AVA	256 - 20	VTU6090H1	♦VAR	103 - 17
VRT2122A10	VARC	72 - 48	VTA418H	STCE	180 - 42	VTG4420P1	♦VAR	92 - 63	VTO8060	♦AVA	256 - 21	VTU6091A1	♦VAR	103 - 28
VRT2122A11	VARC	72 - 50	VTA4940B1	VAR	103 -108	VTG4421H1	VAR	92 - 66	VTO8090	♦AVA	256 - 22	VTU6091H1	♦VAR	103 - 29
VRT2122A12	VARC	72 - 55	VTA4940P8	VAR	103 -106	VTG5120A1	VAR	93 - 34	VTO8150	♦AVA	256 - 23	VTU6091H7	♦VAR	102 - 44
VRT2122A13	VARC	72 - 57	VTA4940P9	VAR	103 -107	VTG5120F1	♦VAR	92 -106	VTO8240	♦AVA	256 - 24	VTU6190A1	♦VAR	103 - 30
VRT2122A14	VARC	72 - 61	VTA4940S1	VAR	103 -105	VTG5121F1	♦VAR	93 - 86	VTO8360	♦AVA	256 - 25	VTU6190H1	♦VAR	103 - 31
VRT2122A15	VARC	72 - 64	VTC4360P1	♦VAR	94 - 42	VTG6020A1	♦VAR	90 - 78	VTO8370	♦AVA	256 - 26	VTU6191A1	♦VAR	103 - 39
VRT2122B1	♦VARC	72 - 24	VTC4360P2	♦VAR	94 - 37	VTG6025A1	♦VAR	92 - 70	VTO8420	♦AVA	256 - 27	VTU6191H1	♦VAR	103 - 40
VRT2122B2	VARC	72 - 26	VTC4361H1	VAR	94 - 43	VTG6025A2	♦VAR	92 - 71	VTO8490	♦AVA	256 - 28	VTU6191H8	♦VAR	102 - 53
VRT2122B3	VARC	72 - 29	VTC4402F1	VAR	94 - 38	VTG6025B1	VAR	93 - 75	VTO8580	♦AVA	256 - 29	VTU6196A7	VAR	103 - 11
VRT2122B4	VARC	72 - 33	VTC4402P1	VAR	94 - 32	VTG6028A1	VAR	96 - 54	VTO8850	♦AVA	256 - 30	VTU6196A8	VAR	102 - 96
VRT2122B5	VARC	72 - 35	VTC4402P2	VAR	94 - 26	VTG6126A1	VAR	92 - 93	VTP2619A1	VARC	89 - 71	VTU6290B1	VAR	102 - 57
VRT2122B6	VARC	72 - 38	VTC4414A4	VAR	95 - 15	VTG6230A1	♦VAR	92 -100	VTP2620A1	VARC	89 - 73	VTU6290B2	VAR	103 - 75
VRT2122B7	VARC	72 - 40	VTC4414P1	VAR	94 - 39	VTG6232F1	♦VAR	92 -101	VTP2621A1	VARC	89 - 72	VTU6290B4	VAR	102 - 60
VRT2122B8	VARC	72 - 44	VTC4414P2	VAR	94 - 41	VTG6260A1	♦VAR	94 - 98	VTP5231B1	VAR	89 - 55	VTU6290C1	♦VAR	103 - 46
VRT2122B9	VARC	72 - 47	VTC4414P3	VAR	93 -109	VTG6329A1	♦VAR	92 -104	VTP6330A1	♦VAR	89 - 69	VTU6290C2	♦VAR	103 - 48
VRT2122B10	VARC	72 - 49	VTC4414S2	VAR	93 - 53	VTH2601A1	VARC	98 - 69	VTP6331A1	♦VAR	89 - 78	VTU6290F1	VAR	103 - 56
VRT2122B11	VARC	72 - 51	VTC4414S6	VAR	96 - 49	VTH2610A1	VARC	97 - 3	VTP6331A2	VAR	89 - 79	VTU6295B1	VAR	101 - 2
VRT2122B12	VARC	72 - 56	VTC4451H1	VAR	94 - 28	VTH2610A2	♦VARC	97 - 78	VTP6332A1	♦VAR	89 - 57	VTU6295F1	VAR	102 - 13
VRT2122B13	VARC	72 - 58	VTC4460P1	VAR	93 - 71	VTH2611	VAR	97 - 43	VTP6333A1	♦VAR	89 - 62	VTU6390A1	♦VAR	103 - 61
VRT2122B14	VARC	72 - 62	VTC4460P7	VAR	93 -108		VARC		VTP6334A1	♦VAR	89 - 75	VTU6391A1	VAR	102 - 24
VRT2122B15	VARC	72 - 65	VTC4461P1	VAR	94 - 29	VTH2648	VAR	97 - 44	VTS2600A1	VARC	90 - 46	VTU6690A1	♦VAR	103 - 54
VRT2123A1	♦VARC	71 -101	VTC4461P6	VAR	96 - 33		VARC		VTS2600A2	VARC	90 - 44	VTU6691A2	VAR	102 - 76
VRT2123A2	VARC	71 -109	VTC4860C9	VAR	94 - 33	VTH2678A1	VAR	97 - 64	VTS2602A1	♦VARC	90 - 53	VTX2612A1	♦VARC	100 - 60
VRT2123A3	VARC	72 - 10	VTC4860D9	VAR	94 - 40		VARC		VTS2602B2	VARC	90 - 50	VTX2612B1	VARC	100 - 66
VRT2123A4	VARC	72 - 18	VTC5160A1	VAR	93 - 95	VTH4370H3	VAR	96 - 97	VTS4350P1	♦VAR	91 - 17	VTX2679A1	VAR	100 - 52
VRT2123B1	♦VARC	71 -102	VTC5161A1	VAR	95 - 4	VTH4371H1	VAR	96 - 98	VTS4350P3	♦VAR	91 - 18		VARC	
VRT2123B2	VARC	71 -110	VTC5170A1	VAR	95 - 5	VTH4470A1	VAR	97 - 52	VTS4351H1	VAR	91 - 20	VTX4380P1	VAR	98 - 64
VRT2123B3	VARC	72 - 11	VTC5260H1	VAR	94 - 11	VTH4471H1	VAR	96 - 96	VTS4407P1	VAR	90 - 96	VTX4380P2	VAR	98 - 65
VRT2123B4	VARC	72 - 19	VTC5261H1	♦VAR	94 - 5	VTH4471P1	VAR	98 - 34	VTS4407P2	VAR	91 - 12	VTX4380P5	VAR	99 - 80
VRT2124A1	♦VARC	72 - 30	VTC5261J1	♦VAR	94 - 6	VTH6070A1	♦VAR	98 - 17	VTS4407P3	VAR	90 - 92	VTX4380P6	VAR	99 - 81
VRT2124A2	VARC	72 - 41	VTC5262A1	♦VAR	94 - 15	VTH6070A2	♦VAR	98 - 18	VTS4407P4	VAR	92 - 25	VTX4381H1	VAR	99 - 85
VRT2124A3	VARC	72 - 52	VTC5262B1	VAR	94 - 12	VTH6071A1	♦VAR	98 - 31	VTS4407P6	VAR	91 - 13	VTX4403C4	VAR	97 - 9
VRT2124A4	VARC	72 - 59	VTC5264A2	♦VAR	93 - 97	VTH6074A2	♦VAR	97 - 60	VTS4413H1	VAR	93 - 2	VTX4403J1	VAR	97 - 83
VRT2124B1	♦VARC	72 - 31	VTC5265A2	♦VAR	94 - 13	VTH6074B1	♦VAR	98 - 24	VTS4413H2	VAR	93 - 42	VTX4403P9	VAR	99 - 10
VRT2124B2	VARC	72 - 42	VTC5265A3	♦VAR	94 - 16	VTH6074H2	♦VAR	97 - 61	VTS4413H9	VAR	93 - 41	VTX4403S9	VAR	98 - 59
VRT2124B3	VARC	72 - 53	VTC5360A1	VAR	94 - 7	VTH6074J1	♦VAR	98 - 25	VTS4413P1	VAR	91 - 15	VTX4412P1	VAR	98 - 56
VRT2124B4	VARC	72 - 60	VTC5360A2	VAR	93 - 81	VTH6077A1	♦VAR	96 - 83	VTS4413P2	VAR	91 - 19	VTX4415H1	VAR	98 - 66
VRT2125A1	♦VARC	71 -100	VTC5360H1	♦VAR	93 - 90	VTH6079A1	♦VAR	96 - 84	VTS4413P3	VAR	90 - 97	VTX4415P1	VAR	98 - 62
VRT2125A2	VARC	71 -108	VTC5361A1	VAR	94 - 9	VTH6079H1	♦VAR	96 - 85	VTS4413P5	VAR	91 - 14	VTX4415P2	VAR	99 - 82
VRT2125A3	VARC	72 - 9	VTC5365A1	♦VAR	94 - 8	VTH6170A1	♦VAR	98 - 40	VTS4413P9	VAR	93 - 40	VTX4415P3	♦VAR	99 - 84
VRT2125A4	VARC	72 - 17	VTC5660A1	VAR	94 - 22	VTH6170B1	♦VAR	98 - 41	VTS4450P2	VAR	90 - 95	VTX4415P4	♦VAR	98 -108
VRT2411A	VARC	72 - 5	VTC5661A2	♦VAR	94 - 19	VTH6170H1	♦VAR	98 - 42	VTS4450P7	VAR	92 - 23	VTX4480P1	VAR	98 -107
VRT2411B	VARC	72 - 6	VTC5760A1	VAR	93 -102	VTH6170J1	♦VAR	98 - 43	VTS4451H1	VAR	91 - 9	VTX4481H1	VAR	100 - 1
VRT2411C	VARC	72 - 4	VTC5761A1	♦VAR	93 -101	VTH6176A1	VAR	97 - 46	VTS4451P1	VAR	91 - 10	VTX4481P5	VAR	99 -110
VRU7208	VAR	70 - 42	VTC6060A1	♦VAR	94 - 52	VTH6176A3	VAR	95 - 57	VTS4451P2	VAR	92 - 13	VTX4481P6	VAR	100 - 46
VRX2200A1	♦VARC	69 - 26	VTC6060H1	♦VAR	94 - 53	VTH6176A4	VAR	97 - 49	VTS5150A1	VAR	91 - 67	VTX4880C9	VAR	99 - 79
VRX7204A	♦VAR	69 - 74	VTC6061A1	VAR	95 - 31	VTH6176A5	VAR	98 - 79	VTS5152A1	VAR	91 -100	VTX4880D9	VAR	99 - 83
VRX7204B	♦VAR	69 - 80	VTC6061B1	♦VAR	93 - 54	VTH6176A6	VAR	97 - 90	VTS5250A1	♦VAR	90 -102	VTX4890C9	VAR	102 -104
VRX7204B/445A#1	VAR	71 - 98	VTC6069A1	♦VAR	94 - 68	VTH6270C1	♦VAR	98 - 82	VTS5251A1	VAR	92 - 12	VTX5170F1	♦VAR	98 - 99
			VTC6069F1	♦VAR	94 - 69	VTH6270F1	♦VAR	98 - 83	VTS5252A1	♦VAR	90 -106	VTX5180A1	VAR	99 -102
VRX7204B/445A#2	VAR	71 - 97	VTC6077C1	VAR	96 - 82	VTH6272A1	♦VAR	98 - 91	VTS5252C2	♦VAR	92 - 32	VTX5185A2	♦VAR	98 -102
			VTC6160A1	♦VAR	94 - 79	VTH6272F1	VAR	98 - 92	VTS5253A2	VAR	90 -103	VTX5380B1	VAR	99 - 2
VRX7207	VAR	69 - 40	VTC6160B1	♦VAR	94 - 80	VTJ2607A1	VARC	96 - 53	VTS5255A1	♦VAR	90 -104	VTX5383A1	VAR	99 - 37
VRY2131A	♦VARC	72 - 67	VTC6160H1	♦VAR	94 - 81	VTJ2608A1	VARC	95 - 63	VTS5255A2	♦VAR	90 -105	VTX5580A1	♦VAR	100 - 47
VSA208H	STCE	141 - 88	VTC6160J1	♦VAR	94 - 82	VTJ2608A2	VARC	96 - 65	VTS5255A3	♦VAR	90 -110	VTX5585H2	♦VAR	99 - 4
VSA210H	STCE	146 - 59	VTC6160J5	VAR	95 - 65	VTJ2609A2	♦VARC	95 - 66	VTS5255B3	♦VAR	92 - 33	VTX5585H3	VAR	98 - 60
VSA308H	STCE	141 - 76	VTC6161H2	VAR	95 - 82	VTJ2609A3	VARC	95 - 67	VTS5350A1	VAR	92 - 10	VTX5585H5	VAR	99 -106

Δ-Registered with JEDEC by this manufacturer

♦-Mfr's data sheet available in microfilm service

1. TYPE No. CROSS INDEX

IN TYPE NUMBER SEQUENCE

TYPE No.	MFRS	Pg&Line
VTX5680A1	♦VAR	99 - 76
VTX5681A1	♦VAR	99 -105
VTX5682A2	♦VAR	99 - 8
VTX5780D1	VAR	99 - 6
VTX5781A1	♦VAR	99 - 23
VTX5782A1	♦VAR	99 - 26
VTX5782B1	♦VAR	99 - 27
VTX5783A1	♦VAR	99 - 13
VTX5783A2	EMIB	99 - 12
VTX5784A1	♦VAR	99 - 50
VTX5786A1	♦VAR	99 - 74
VTX5786A2	♦VAR	99 - 75
VTX5788A1	♦VAR	99 - 59
VTX6081A1	♦VAR	97 - 86
VTX6081B1	♦VAR	97 - 87
VTX6084A1	♦VAR	100 - 2
VTX6084A5	VAR	97 - 84
VTX6084H1	♦VAR	100 - 3
VTX6089H2	♦VAR	98 - 73
VTX6089H3	♦VAR	100 - 14
VTX6180A1	♦VAR	100 - 20
VTX6180B1	♦VAR	100 - 21
VTX6180H1	♦VAR	100 - 22
VTX6180J1	♦VAR	100 - 23
VTX6181A1	VAR	97 - 95
VTX6181A	VAR	97 - 96
VTX6181D3	♦VAR	99 - 34
VTX6181E2	♦VAR	99 - 33
VTX6181H1	♦VAR	100 - 43
VTX6186A1	VAR	99 - 97
VTX6186A2	VAR	100 - 42
VTX6272F3	VAR	98 - 95
VTX6280C1	♦VAR	100 - 31
VTX6280F1	VAR	100 - 32
VTX6280J1	♦VAR	100 - 33
VTX6281B2	VAR	97 -106
VTX6281H2	VAR	97 -108
VTX6281H3	VAR	97 -110
VTX6281H4	VAR	98 - 3
VTX6281H7	VAR	97 -103
VTX6282F1	VAR	100 - 36
VTX6380A1	♦VAR	99 - 11
VTX6383A1	♦VAR	100 - 48
VTX6384	♦VAR	98 - 15
VTX6384A1	VAR	98 - 16
VTX6625	♦VAR	98 - 10
VTX6625A1	VAR	98 - 11
VUE32W	STCE	139 - 15
VUE42W	STCE	139 - 16
VUE43M	STCE	142 - 65
VUE43W	STCE	145 - 42
VUE44M	STCE	154 - 35
VUE44W	STCE	152 - 14
VUE53M	STCE	145 - 43
VUE53W	STCE	145 - 44
VUE54W	STCE	152 - 15
VUE55W	STCE	158 - 85
VUE66M	STCE	166 - 54
VUE66W	STCE	166 - 37
VVC201,A,B,C,D ♦CODI	KSI	169 - 55
VVC202,A,B,C,D ♦CODI	KSI	169 - 56
VVC203,A,B,C,D ♦CODI	KSI	174 - 63
VVC204,A,B,C,D ♦CODI	KSI	174 - 64
VVC205,A,B,C,D ♦CODI	KSI	177 - 12
VVC206,A,B,C,D ♦CODI	KSI	177 - 13
VVC207,A,B,C,D ♦CODI	KSI	180 - 43
VVC208,A,B,C,D ♦CODI	KSI	180 - 44
VVC209,A,B,C,D ♦CODI	KSI	183 - 39
VVC210,A,B,C,D ♦CODI	KSI	183 - 40
VVC211,A,B,C,D ♦CODI	KSI	187 - 86
VVC212,A,B,C,D ♦CODI	KSI	187 - 87
VVC213,A,B,C,D ♦CODI	KSI	190 - 92
VVC214,A,B,C,D ♦CODI	KSI	190 - 93
VVC215,A,B,C,D ♦CODI	KSI	192 - 62
VVC216,A,B,C,D ♦CODI	KSI	192 - 63
VVC217,A,B,C,D ♦CODI	KSI	194 - 67
VVC218,A,B,C,D ♦CODI	KSI	194 - 68
VVC219,A,B,C,D ♦CODI	KSI	196 - 28
VVC220,A,B,C,D ♦CODI	KSI	196 - 29
VVC221,A,B,C,D ♦CODI	KSI	197 - 61
VVC222,A,B,C,D ♦CODI	KSI	198 - 62
VVC223,A,B,C,D ♦CODI	KSI	199 - 53
VVC401,A,B,C,D ♦CODI	KSI	174 - 65
VVC402,A,B,C,D ♦CODI	KSI	185 - 88
VVC403,A,B,C,D ♦CODI	KSI	174 - 66
VVC404,A,B,C,D ♦CODI	KSI	185 - 89
VVC405,A,B,C,D ♦CODI	KSI	180 - 45
VVC406,A,B,C,D ♦CODI	KSI	180 - 46
VVC407,A,B,C,D ♦CODI	KSI	180 - 47
VVC408,A,B,C,D ♦CODI	KSI	180 - 48
VVC409,A,B,C,D ♦CODI	KSI	190 - 94
VVC410,A,B,C,D ♦CODI	KSI	190 - 95
VVC411,A,B,C,D ♦CODI	KSI	190 - 96
VVC412,A,B,C,D ♦CODI	KSI	174 - 67
VVC413,A,B,C,D ♦CODI	KSI	185 - 90
VVC414,A,B,C,D ♦CODI	KSI	194 - 69
VVC415,A,B,C,D ♦CODI	KSI	185 - 91
VVC416,A,B,C,D ♦CODI	KSI	194 - 70
VVC417,A,B,C,D ♦CODI	KSI	166 - 97
VVC418,A,B,C,D ♦CODI	KSI	166 - 98
VVC419,A,B,C,D ♦CODI	KSI	166 - 99
VVC700,A,B,C,D CODI	KSI	168 - 77
VVC701,A,B,C,D ♦CODI	KSI	168 - 78
VVC702,A,B,C,D ♦CODI	KSI	168 - 79
VVC703,A,B,C,D ♦CODI	KSI	168 - 80
VVC704,A,B,C,D ♦CODI	KSI	169 - 57
VVC705,A,B,C,D ♦CODI	KSI	174 - 68
VVC706,A,B,C,D ♦CODI	KSI	174 - 69
VVC707,A,B,C,D ♦CODI	KSI	180 - 49
VVC708,A,B,C,D ♦CODI	KSI	183 - 41
VVC709,A,B,C,D ♦CODI	KSI	183 - 42
VVC710,A,B,C,D ♦CODI	KSI	185 - 92
VVC711,A,B,C,D CODI	KSI	187 - 88
VVC712,A,B,C,D CODI	KSI	190 - 97
VVC713,A,B,C,D ♦CODI	KSI	190 - 98
VVC714,A,B,C,D ♦CODI	KSI	192 - 64
VVC715,A,B,C,D ♦CODI	KSI	194 - 71
VVC716,A,B,C,D CODI	KSI	194 - 72
VVC717,A,B,C,D ♦CODI	KSI	197 - 62
VVC718,A,B,C,D ♦CODI	KSI	198 - 63
VVC719,A,B,C,D ♦CODI	KSI	198 - 64
VVC720,A,B,C,D ♦CODI	KSI	199 - 54
VVC721,A,B,C,D ♦CODI	KSI	168 - 81
VVC722,A,B,C,D ♦CODI	KSI	169 - 58
VVC723,A,B,C,D ♦CODI	KSI	190 - 99
VVC724,A,B,C,D CODI	KSI	194 - 73
VVC725,A,B,C,D CODI	KSI	194 - 74
VVC726,A,B,C,D ♦CODI	KSI	168 - 82
VVC727,A,B,C,D ♦CODI	KSI	171 - 35
VVC728,A,B,C,D ♦CODI	KSI	171 - 36
VVC729,A,B,C,D ♦CODI	KSI	174 - 70
VVC730,A,B,C,D ♦CODI	KSI	174 - 71
VVC731,A,B,C,D ♦CODI	KSI	177 - 14
VVC732,A,B,C,D ♦CODI	KSI	177 - 15
VVC733,A,B,C,D ♦CODI	KSI	180 - 50
VVC734,A,B,C,D ♦CODI	KSI	180 - 51
VVC735,A,B,C,D ♦CODI	KSI	180 - 52
VVC736,A,B,C,D ♦CODI	KSI	182 - 49
VVC737,A,B,C,D ♦CODI	KSI	182 - 50
VVC738,A,B,C,D ♦CODI	KSI	182 - 51
VVC739,A,B,C,D ♦CODI	KSI	183 - 43
VVC740,A,B,C,D ♦CODI	KSI	183 - 44
VVC741,A,B,C,D ♦CODI	KSI	185 - 93
VVC742,A,B,C,D ♦CODI	KSI	185 - 94
VVC743,A,B,C,D ♦CODI	KSI	185 - 95
VVC744,A,B,C,D ♦CODI	KSI	187 - 89
VVC745,A,B,C,D CODI	KSI	187 - 90
VVC746,A,B,C,D ♦CODI	KSI	187 - 91
VVC747,A,B,C,D ♦CODI	KSI	190 -100
VVC748,A,B,C,D ♦CODI	KSI	190 -101
VVC749,A,B,C,D CODI	KSI	190 -102
VVC750,A,B,C,D ♦CODI	KSI	192 - 65
VVC751,A,B,C,D ♦CODI	KSI	192 - 66
VVC752,A,B,C,D ♦CODI	KSI	192 - 67
VVC753,A,B,C,D CODI	KSI	194 - 75
VVC754,A,B,C,D CODI	KSI	194 - 76
VVC755,A,B,C,D CODI	KSI	194 - 77
VVC756,A,B,C,D CODI	KSI	196 - 30
VVC757,A,B,C,D CODI	KSI	196 - 31
VVC758,A,B,C,D CODI	KSI	196 - 32
VVC759,A,B,C,D ♦CODI	KSI	197 - 63
VVC760,A,B,C,D ♦CODI	KSI	197 - 64
VVC761,A,B,C,D CODI	KSI	197 - 65
VVC762,A,B,C,D ♦CODI	KSI	197 - 66
VVC763,A,B,C,D ♦CODI	KSI	198 - 65
VVC764,A,B,C,D ♦CODI	KSI	198 - 66
VVC765,A,B,C,D ♦CODI	KSI	198 - 67
VVC766,A,B,C,D ♦CODI	KSI	199 - 55
VVC767,A,B,C,D CODI	KSI	199 - 56
VVC768,A,B,C,D ♦CODI	KSI	199 - 57
VVC769,A,B,C,D ♦CODI	KSI	148 - 19
VVC770,A,B,C,D ♦CODI	KSI	148 - 20
VVC771,A,B,C,D ♦CODI	KSI	148 - 21
VVC772,A,B,C,D ♦CODI	KSI	148 - 22
VVC773,A,B,C,D ♦CODI	KSI	151 - 16
VVC774,A,B,C,D ♦CODI	KSI	151 - 17
VVC775,A,B,C,D ♦CODI	KSI	151 - 18
VVC776,A,B,C,D ♦CODI	KSI	151 - 19
VVC777,A,B,C,D ♦CODI	KSI	155 - 79
VVC778,A,B,C,D ♦CODI	KSI	155 - 80
VVC779,A,B,C,D ♦CODI	KSI	155 - 81
VVC780,A,B,C,D ♦CODI	KSI	159 - 95
VVC781,A,B,C,D ♦CODI	KSI	159 - 96
VVC782,A,B,C,D ♦CODI		159 - 97
VVC783,A,B,C,D ♦CODI	KSI	164 - 56
VVC784,A,B,C,D ♦CODI	KSI	164 - 57
VVC785,A,B,C,D ♦CODI	KSI	164 - 58
VVC786,A,B,C,D ♦CODI	KSI	164 - 59
VVC788,A,B,C,D CODI	KSI	155 - 82
VVC789,A,B,C,D ♦CODI	KSI	169 - 59
VVC790,A,B,C,D ♦CODI	KSI	169 - 60
VVC791,A,B,C,D ♦CODI	KSI	169 - 61
VVC792,A,B,C,D CODI	KSI	169 - 62
VVC793,A,B,C,D CODI	KSI	169 - 63
VVC794,A,B,C,D CODI	KSI	171 - 63
VVC795,A,B,C,D CODI	KSI	174 - 72
VVC796,A,B,C,D ♦CODI	KSI	174 - 73
VVC797,A,B,C,D ♦CODI	KSI	174 - 74
VVC798,A,B,C,D ♦CODI	KSI	174 - 75
VVC799,A,B,C,D ♦CODI	KSI	174 - 76
VVC810,A,B,C,D ♦CODI	KSI	177 - 16
VVC811,A,B,C,D ♦CODI	KSI	177 - 17
VVC812,A,B,C,D ♦CODI	KSI	177 - 83
VVC813,A,B,C,D ♦CODI	KSI	180 - 53
VVC814,A,B,C,D ♦CODI	KSI	180 - 54
VVC815,A,B,C,D CODI	KSI	183 - 65
VVC816,A,B,C,D ♦CODI	KSI	185 - 96
VVC817,A,B,C,D ♦CODI	KSI	185 - 97
VVC818,A,B,C,D ♦CODI	KSI	186 - 56
VVC819,A,B,C,D ♦CODI	KSI	186 - 57
VVC820,A,B,C,D ♦CODI	KSI	187 - 92
VVC821,A,B,C,D ♦CODI	KSI	187 - 93
VVC822,A,B,C,D ♦CODI	KSI	190 -103
VVC823,A,B,C,D ♦CODI	KSI	190 -104
VVC824,A,B,C,D ♦CODI	KSI	190 -105
VVC825,A,B,C,D ♦CODI	KSI	190 -106
VVC826,A,B,C,D ♦CODI	KSI	192 - 68
VVC827,A,B,C,D ♦CODI	KSI	192 - 69
VVC828,A,B,C,D ♦CODI	KSI	193 - 7
VVC829,A,B,C,D ♦CODI	KSI	194 - 78
VVC830,A,B,C,D ♦CODI	KSI	194 - 79
VVC831,A,B,C,D ♦CODI	KSI	196 - 33
VVC832,A,B,C,D ♦CODI	KSI	196 - 34
VVC833,A,B,C,D CODI	KSI	197 - 67
VVC834,A,B,C,D ♦CODI	KSI	197 - 68
VVC835,A,B,C,D ♦CODI	KSI	197 - 69
VVC836,A,B,C,D ♦CODI	KSI	198 - 68
VVC837,A,B,C,D ♦CODI	KSI	198 - 69
VVC838,A,B,C,D ♦CODI	KSI	198 - 76
VVC839,A,B,C,D ♦CODI	KSI	199 - 58
VVC840,A,B,C,D ♦CODI	KSI	200 - 19
VVC841,A,B,C,D ♦CODI	KSI	200 - 52
VVC842,A,B,C,D CODI	KSI	200 -109
VVC843,A,B,C,D ♦CODI	KSI	201 - 53
VVC844,A,B,C,D ♦CODI	KSI	201 -102
VVC845,A,B,C,D ♦CODI	KSI	202 - 24
VVC846,A,B,C,D ♦CODI	KSI	169 - 64
VVC847,A,B,C,D ♦CODI	KSI	169 - 65
VVC848,A,B,C,D ♦CODI	KSI	169 - 66
VVC849,A,B,C,D ♦CODI	KSI	169 - 67
VVC850,A,B,C,D ♦CODI	KSI	174 - 77
VVC851,A,B,C,D ♦CODI	KSI	174 - 78
VVC852,A,B,C,D ♦CODI	KSI	174 - 79
VVC853,A,B,C,D ♦CODI	KSI	174 - 80
VVC854,A,B,C,D ♦CODI	KSI	161 -104
VVC855,A,B,C,D ♦CODI	KSI	180 - 55
VVC856,A,B,C,D ♦CODI	KSI	180 - 56
VVC857,A,B,C,D ♦CODI	KSI	180 - 57
VVC858,A,B,C,D ♦CODI	KSI	180 - 58
VVC859,A,B,C,D ♦CODI	KSI	180 - 59
VVC861,A,B,C,D ♦CODI	KSI	182 - 52
VVC862,A,B,C,D ♦CODI	KSI	185 - 98
VVC863,A,B,C,D ♦CODI	KSI	185 - 99
VVC864,A,B,C,D ♦CODI	KSI	185 -100
VVC865,A,B,C,D ♦CODI	KSI	185 -101
VVC866,A,B,C,D ♦CODI	KSI	185 -102
VVC868,A,B,C,D CODI	KSI	187 - 94
VVC869,A,B,C,D ♦CODI	KSI	190 -107
VVC870,A,B,C,D ♦CODI	KSI	190 -108
VVC871,A,B,C,D ♦CODI	KSI	190 -109
VVC872,A,B,C,D CODI	KSI	190 -110
VVC873,A,B,C,D ♦CODI	KSI	191 - 1
VVC874,A,B,C,D ♦CODI	KSI	192 - 70
VVC875,A,B,C,D ♦CODI	KSI	194 - 80
VVC876,A,B,C,D ♦CODI	KSI	194 - 81
VVC877,A,B,C,D ♦CODI	KSI	194 - 82
VVC878,A,B,C,D ♦CODI	KSI	194 - 83
VVC879,A,B,C,D ♦CODI	KSI	197 - 70
VVC880,A,B,C,D ♦CODI	KSI	199 - 59
VVC881,A,B,C,D ♦CODI	KSI	199 - 60
VVC882,A,B,C,D ♦CODI	KSI	202 - 25
VVC883,A,B,C,D ♦CODI	KSI	202 - 35
VVC884,A,B,C,D ♦CODI	KSI	202 - 52
VVC885,A,B,C,D ♦CODI	KSI	202 -101
VVC886,A,B,C,D ♦CODI	KSI	202 -110
VVC887,A,B,C,D ♦CODI	KSI	203 - 13
VVC888,A,B,C,D ♦CODI	KSI	203 - 17
VVC889,A,B,C,D ♦CODI	KSI	196 - 60
VVC890,A,B,C,D ♦CODI	KSI	196 - 61
VVC891,A,B,C,D ♦CODI	KSI	196 - 62
VVC892,A,B,C,D ♦CODI	KSI	196 - 63
VVC893,A,B,C,D ♦CODI	KSI	196 - 64
VVC894,A,B,C,D ♦CODI	KSI	196 - 65
VVC895,A,B,C,D ♦CODI	KSI	196 - 66
VVC896,A,B,C,D ♦CODI	KSI	196 - 67
VVC897,A,B,C,D ♦CODI	KSI	196 - 68
VVC898,A,B,C,D ♦CODI	KSI	196 - 69
VVC899,A,B,C,D ♦CODI	KSI	199 - 61
VVC900,A,B,C,D ♦CODI	KSI	199 - 62
VVC901,A,B,C,D ♦CODI	KSI	200 - 53
VVC902,A,B,C,D ♦CODI	KSI	200 - 54
VVC903,A,B,C,D CODI	KSI	201 - 74
VVC904,A,B,C,D CODI	KSI	201 - 75
VVC905,A,B,C,D CODI	KSI	202 - 32
VVC906,A,B,C,D CODI	KSI	202 - 33
VVC907,A,B,C,D CODI	KSI	202 - 76
VVC908,A,B,C,D CODI	KSI	202 - 77
VVC909,A,B,C,D CODI	KSI	203 - 18
VVC910,A,B,C,D ♦CODI	KSI	174 - 81
VVC911,A,B,C,D ♦CODI	KSI	174 - 82
VVC912,A,B,C,D ♦CODI	KSI	174 - 83
VVC913,A,B,C,D ♦CODI	KSI	174 - 84
VVC914,A,B,C,D ♦CODI	KSI	174 - 85
VVC915,A,B,C,D ♦CODI	KSI	174 - 86
VVC916,A,B,C,D CODI	KSI	180 - 60
VVC917,A,B,C,D ♦CODI	KSI	180 - 61
VVC918,A,B,C,D ♦CODI	KSI	180 - 62
VVC919,A,B,C,D ♦CODI	KSI	180 - 63
VVC920,A,B,C,D ♦CODI	KSI	180 - 64
VVC921,A,B,C,D ♦CODI	KSI	180 - 65
VVC922,A,B,C,D ♦CODI	KSI	183 - 45
VVC923,A,B,C,D ♦CODI	KSI	183 - 46
VVC924,A,B,C,D ♦CODI	KSI	185 -103
VVC925,A,B,C,D ♦CODI	KSI	185 -104

Δ-Registered with JEDEC by this manufacturer

♦-Mfr's data sheet available in microfilm service

1. TYPE No. CROSS INDEX

IN TYPE NUMBER SEQUENCE

TYPE No.	MFRS	Pg&Line
VVC926,A,B,C,D		185 -105
♦CODI	KSI	
VVC927,A,B,C,D		185 -106
♦CODI	KSI	
VVC928,A,B,C,D		185 -107
♦CODI	KSI	
VVC929,A,B,C,D		185 -108
♦CODI	KSI	
VVC930,A,B,C,D		187 - 95
♦CODI	KSI	
VVC931,A,B,C,D		187 - 96
♦CODI	KSI	
VVC932,A,B,C,D		191 - 2
♦CODI	KSI	
VVC933,A,B,C,D		191 - 3
♦CODI	KSI	
VVC934,A,B,C,D		191 - 4
♦CODI	KSI	
VVC935,A,B,C,D		191 - 5
♦CODI	KSI	
VVC936,A,B,C,D		191 - 6
♦CODI	KSI	
VVC937,A,B,C,D		191 - 7
♦CODI	KSI	
VVC938,A,B,C,D		191 - 8
♦CODI	KSI	
VVC939,A,B,C,D		191 - 9
♦CODI	KSI	
VVC940,A,B,C,D		191 - 10
♦CODI	KSI	
VVC941,A,B,C,D		192 - 71
♦CODI	KSI	
VVC942,A,B,C,D		192 - 72
♦CODI	KSI	
VVC943,A,B,C,D		194 - 84
♦CODI	KSI	
VVC944,A,B,C,D		194 - 85
♦CODI	KSI	
VVC945,A,B,C,D		194 - 86
♦CODI	KSI	
VVC946,A,B,C,D		194 - 87
♦CODI	KSI	
VVC947,A,B,C,D		194 - 88
♦CODI	KSI	
VVC948,A,B,C,D		194 - 89
CODI	KSI	
VVC949,A,B,C,D		194 - 90
♦CODI	KSI	
VVC950,A,B,C,D		194 - 91
♦CODI	KSI	
VVC951,A,B,C,D		196 - 35
♦CODI	KSI	
VVC952,A,B,C,D		197 - 71
♦CODI	KSI	
VVC953,A,B,C,D		198 - 70
♦CODI	KSI	
VVC954,A,B,C,D		199 - 63
♦CODI	KSI	
VVC955,A,B,C,D		180 - 66
♦CODI	KSI	
VVC957,A,B,C,D		180 - 67
♦CODI	KSI	
VVC958,A,B,C,D		183 - 47
♦CODI	KSI	
VVC1001,A,B,C,D		180 - 68
♦CODI		
VVC1002,A,B,C,D		180 - 69
♦CODI		
VVC1003,A,B,C,D		183 - 48
♦CODI		
VVC1004,A,B,C,D		183 - 49
♦CODI		
VVC1005,A,B,C,D		187 - 97
♦CODI		
VVC1006,A,B,C,D		187 - 98
♦CODI		
VVC1007,A,B,C,D		191 - 11
♦CODI		
VVC1008,A,B,C,D		191 - 12
♦CODI		
VVC1009,A,B,C,D		185 -109
♦CODI		
VVC1010,A,B,C,D		187 - 99
♦CODI		
VVC1011,A,B,C,D		185 -110
♦CODI		
VVC1012,A,B,C,D		186 - 1
♦CODI		
VVC1013,A,B,C,D		186 - 2
♦CODI		
VVC1014,A,B,C,D		187 -100
♦CODI		
VVC1015,A,B,C,D		187 -101
♦CODI		
VVC1016,A,B,C,D		187 -102
♦CODI		
VVC1017,A,B,C,D		191 - 13
♦CODI		
VVC1018,A,B,C,D		191 - 14
♦CODI		
VVC1019,A,B,C,D		191 - 15
♦CODI		
VVC1020,A,B,C,D		203 - 19
♦CODI		
VVC1021,A,B,C,D		202 - 26
CODI		
VVC1022,A,B,C,D		202 - 27
CODI		
VVC1023,A,B,C,D		202 - 28
CODI		
VVC1024,A,B,C,D		202 - 29
CODI		
VVC1025,A,B,C,D		202 - 78
CODI		

TYPE No.	MFRS	Pg&Line
VVC1026,A,B,C,D		202 - 79
CODI		
VVC1027,A,B,C,D		202 - 80
CODI		
VVC1028,A,B,C,D		202 - 81
CODI		
VVC1029,A,B,C,D		203 - 20
CODI		
VVC1030,A,B,C,D		203 - 21
CODI		
VVC1031,A,B,C,D		203 - 22
CODI		
VVC1032,A,B,C,D		203 - 23
CODI		
VVC1041,A,B,C,D		183 - 50
CODI		
VVC1042,A,B,C,D		183 - 51
CODI		
VVC1043,A,B,C,D		183 - 52
CODI		
VVC1044,A,B,C,D		188 - 69
CODI		
VVC1045,A,B,C,D		188 - 70
CODI		
VVC1046,A,B,C,D		188 - 71
CODI		
VVC1047,A,B,C,D		192 - 99
CODI		
VVC1048,A,B,C,D		192 -100
CODI		
VVC1049,A,B,C,D		192 -101
CODI		
VVC1050,A,B,C,D		195 - 41
CODI		
VVC1051,A,B,C,D		195 - 42
CODI		
VVC1052,A,B,C,D		195 - 43
CODI		
VVC1620,A,B,C	CODI	168 - 83
	KSI	
VVC1622,A,B,C	CODI	171 - 37
	KSI	
VVC1624,A,B,C	CODI	174 - 87
	KSI	
VVC1626,A,B,C	CODI	177 - 18
	KSI	
VVC1628,A,B,C	CODI	180 - 70
	KSI	
VVC1630,A,B,C	CODI	182 - 53
	KSI	
VVC1632,A,B,C	CODI	183 - 53
	KSI	
VVC1634,A,B,C	CODI	186 - 3
	KSI	
VVC1636,A,B,C	CODI	187 -103
	KSI	
VVC1638,A,B,C	CODI	191 - 16
	KSI	
VVC1640,A,B,C	CODI	192 - 73
	KSI	
VVC1642,A,B,C	CODI	194 - 92
	KSI	
VVC1644,A,B,C	CODI	196 - 36
	KSI	
VVC1646,A,B,C	CODI	197 - 72
	KSI	
VVC1648,A,B,C	CODI	198 - 71
	KSI	
VVC1650,A,B,C	CODI	199 - 64
	KSI	
VVC8000,A,B,C	CODI	203 - 24
VVC8010,A,B,C	CODI	203 - 25
VVC8020,A,B,C	CODI	203 - 26
VVC8030,A,B,C	CODI	203 - 27
VVC8040,A,B,C	CODI	203 - 28
VVC8050,A,B,C	CODI	203 - 29
VWE32W	STCE	138 - 73
VWE42W	STCE	138 - 74
VWE43M	STCE	142 - 66
VWE43W	STCE	145 - 45
VWE44M	STCE	154 - 36
VWE44W	STCE	152 - 16
VWE53M	STCE	145 - 46
VWE53W	STCE	145 - 47
VWE54W	STCE	152 - 17
VWE55W	STCE	158 - 86
VWE66M	STCE	166 - 55
VWE66W	STCE	166 - 38
VXC1060	VET	62 - 3
VXE32W	STCE	138 - 75
VXE42W	STCE	138 - 76
VXE43M	STCE	142 - 67
VXE43W	STCE	145 - 48
VXE44M	STCE	154 - 37
VXE44W	STCE	152 - 18
VXE53M	STCE	145 - 49
VXE53W	STCE	145 - 50
VXE54W	STCE	152 - 19
VXE55W	STCE	158 - 87
VXE66M	STCE	166 - 56
VXE66W	STCE	166 - 39
VXS1059	VET	61 - 91
VXSE63W	STCE	145 - 51
VXSE74W	STCE	152 - 20
VXSE75W	STCE	161 -110
VXX1062	VET	62 - 17
VXX1063	VET	62 - 25
VXX1064	VET	62 - 42
VXX1341	VET	62 - 18
VYA208H	STCE	141 - 92
VYA210H	STCE	146 - 61
VYA310H	STCE	146 -105
VYA311H	STCE	149 - 75
VYA312H	STCE	152 - 67

TYPE No.	MFRS	Pg&Line
VYA313H	STCE	156 - 66
VYA314H	STCE	160 - 69
VYA315H	STCE	164 - 44
VYA316H	STCE	166 - 46
VYA410H	STCE	146 -106
VYA411H	STCE	149 - 76
VYA412H	STCE	152 - 68
VYA413H	STCE	155 -109
VYA414H	STCE	160 - 70
VYA415H	STCE	164 - 45
VYA416H	STCE	166 - 47
VYA417H	STCE	171 - 82
VYA418H	STCE	180 - 71
VYA518EA	STCE	177 - 85
VYG2630A1	VARC	92 - 55
VYH2610A2	VARC	97 - 79
VYJ2609A1	VARC	95 - 61
VYJ2609A4	VARC	95 - 49
VYJ2609A11	VARC	96 - 70
VYS2602A1	VARC	90 - 54
VYS2603A1	VARC	90 - 45
VYS2604A1	VARC	90 - 86
VZC6060C1	VAR	94 - 54
VZC6060D1	VAR	94 - 55
VZC6061C1	VAR	93 - 55
VZC6061D1	VAR	93 - 56
VZC6960D2	VAR	95 - 32
VZC6960E2	VAR	94 - 70
VZC6960F1	VAR	94 - 71
VZC6960G1	VAR	94 - 72
VZC6961D6	VAR	95 - 83
VZC6961D7	VAR	95 - 88
VZC6961D8	VAR	95 - 68
VZC6961D9	VAR	95 - 59
VZC6961E1	VAR	94 - 83
VZC6961F1	VAR	94 - 84
VZC6961F2	VAR	94 - 85
VZC6961G1	VAR	94 - 86
VZC6961G2	VAR	94 - 87
VZC6962D2	VAR	95 - 92
VZC6962D6	VAR	95 - 94
VZC6962E1	VAR	94 - 99
VZC6962G1	VAR	94 -100
VZC6963C1	VAR	93 - 66
VZC6963G1	VAR	94 -106
VZC6965A2	VAR	96 - 5
VZC6965D2	VAR	95 -103
VZC6965E2	VAR	95 -106
VZC6965E3	VAR	95 -109
VZC6965J2	VAR	96 - 11
VZC6968F1	VAR	94 - 56
VZC6968F2	VAR	94 - 57
VZC6968G1	VAR	94 - 58
VZG6020C1	VAR	90 - 79
VZG6020D1	VAR	90 - 80
VZG6025C1	VAR	92 - 72
VZG6025D1	VAR	92 - 73
VZG6949F1	VAR	90 - 81
VZG6949G1	VAR	90 - 82
VZG6953G2	VAR	92 -102
VZG6958F4	VAR	92 - 74
VZH6070C1	VAR	98 - 19
VZH6070D1	VAR	98 - 20
VZH6074C1	VAR	98 - 26
VZH6074D1	VAR	98 - 27
VZH6970F1	VAR	96 - 86
VZH6971E1	VAR	98 - 44
VZH6971F1	VAR	98 - 45
VZH6971F2	VAR	98 - 46
VZH6971G1	VAR	98 - 47
VZH6971G2	VAR	98 - 48
VZH6972G1	VAR	98 - 84
VZH6973G1	VAR	98 - 93
VZH6978F2	VAR	98 - 28
VZH6978F3	VAR	98 - 29
VZH6979F1	VAR	98 - 21
VZH6979G1	VAR	98 - 22
VZJ2656A1	VAR	95 - 60
VZJ2656M11	VAR	95 - 75
VZJ2663A1	VAR	102 - 42
VZJ2700D1	VAR	63 - 38
VZJ2700D3	VAR	63 - 39
VZJ6963G2	VAR	96 -101
VZL6040C1	VAR	90 - 1
VZL6040D1	VAR	90 - 2
VZL6941E1	VAR	90 - 13
VZL6941F1	VAR	90 - 14
VZL6941G1	VAR	90 - 15
VZL6942E1	VAR	90 - 20
VZL6942G1	VAR	90 - 21
VZL6943G1	VAR	90 - 25
VZL6948F1	VAR	90 - 3
VZM6989F1	VAR	101 - 20
VZM6990B2	VAR	101 - 25
VZM6990B5	VAR	101 -107
VZM6990G3	VAR	101 - 26
VZM6990G4	VAR	101 -108
VZM6991B1	VAR	102 - 8
VZM6991G3	VAR	102 - 9
VZM6999F1	VAR	101 - 97
VZM6999G1	VAR	101 - 98
VZS6050C1	VAR	91 - 29
VZS6050C2	VAR	91 - 34
VZS6050D1	VAR	91 - 30
VZS6050D2	VAR	91 - 35
VZS6950E2	VAR	91 - 47
VZS6950F1	VAR	91 - 48
VZS6950G1	VAR	91 - 49
VZS6951E1	VAR	91 - 57
VZS6951F1	VAR	91 - 58
VZS6951F2	VAR	91 - 59
VZS6951G1	VAR	91 - 60
VZS6951G2	VAR	91 - 61
VZS6952E1	VAR	91 - 73

TYPE No.	MFRS	Pg&Line
VZS6952G1	VAR	91 - 74
VZS6953G1	VAR	91 - 79
VZS6958F1	VAR	91 - 31
VZS6958F3	VAR	91 - 36
VZS6958G1	VAR	91 - 80
VZU2701C1	VAR	63 - 66
VZU2701C3	VAR	63 - 67
VZU2701C5	VAR	63 - 68
VZU2701C6	VAR	63 - 69
VZU6090C1	VAR	103 - 18
VZU6090D1	VAR	103 - 19
VZU6990D2	VAR	102 - 45
VZU6990E1	VAR	103 - 32
VZU6990F1	VAR	103 - 33
VZU6990F2	VAR	103 - 34
VZU6990G1	VAR	103 - 35
VZU6990G2	VAR	103 - 36
VZU6991D2	VAR	102 - 54
VZU6991F1	VAR	103 - 41
VZU6991G1	VAR	103 - 42
VZU6991G2	VAR	103 - 43
VZU6992C1	VAR	103 - 47
VZU6992D2	VAR	102 - 58
VZU6992E1	VAR	103 - 49
VZU6992G1	VAR	103 - 50
VZU6992G2	VAR	102 - 14
VZU6993D2#1	VAR	102 - 61
VZU6993D2#2	VAR	102 - 65
VZU6995A1	VAR	102 - 67
VZU6995J2	VAR	102 - 77
VZU6998D1	VAR	102 - 40
VZU6998F1	VAR	103 - 20
VZU6998F2	VAR	103 - 21
VZU6998G1	VAR	103 - 22
VZV6921D1	VAR	90 - 83
VZV6922D1	VAR	92 - 75
VZV6946A1	VAR	90 - 16
VZV6947A1	VAR	90 - 22
VZV6948A1	VAR	90 - 26
VZV6949B1P	VAR	90 - 27
VZV6952D1	VAR	91 - 32
VZV6954D2	VAR	91 - 37
VZV6956A1	VAR	91 - 62
VZV6956A2	VAR	91 - 63
VZV6957A1	VAR	91 - 75
VZV6958A1	VAR	91 - 81
VZV6958A2	VAR	92 -103
VZV6959B1P	VAR	91 - 94
VZV6959B2P	VAR	92 -107
VZV6961D1	VAR	93 - 76
VZV6962D1/D2	VAR	94 - 59
VZV6966A1	VAR	94 - 88
VZV6966A2	VAR	94 - 89
VZV6966A4	VAR	95 - 84
VZV6967A1	VAR	94 -101
VZV6968A1	VAR	94 -107
VZV6968A3	VAR	96 -102
VZV6969B3P	VAR	98 - 52
VZV6970G1	VAR	96 - 87
VZV6971D1	VAR	98 - 23
VZV6972D1/D2	VAR	98 - 53
VZV6975A1	VAR	97 - 75
VZV6976A1	VAR	98 - 49
VZV6976A2	VAR	98 - 50
VZV6976A3	VAR	97 - 47
VZV6977A1	VAR	98 - 85
VZV6978A1	VAR	98 - 94
VZV6979B1P	VAR	96 -105
VZV6979B2P	VAR	98 -100
VZV6982D1/D2	VAR	100 - 4
VZV6982D3	VAR	98 -109
VZV6985A1	VAR	97 - 88
VZV6986A1	VAR	100 - 24
VZV6986A2	VAR	100 - 25
VZV6986A3	VAR	97 - 97
VZV6986A4	VAR	99 - 63
VZV6986A6	VAR	99 - 64
VZV6987A1	VAR	100 - 44
VZV6988A1	VAR	100 - 45
VZV6989B1P	VAR	100 - 38
VZV6991D1/D2	VAR	101 - 99
VZV6992D1/D2	VAR	101 - 21
VZV6992D3/D4	VAR	103 - 23
VZV6995A1	VAR	103 - 37
VZV6995A4	VAR	103 - 38
VZV6995A6	VAR	102 - 46
VZV6996A1	VAR	103 - 44
VZV6996A2	VAR	103 - 45
VZV6996A3	VAR	102 - 10
VZV6996A4	VAR	102 - 11
VZV6997A1	VAR	103 - 51
VZV6997A3	VAR	102 - 15
VZV6999B1P	VAR	102 - 95
VZV6999B2P	VAR	102 - 19
VZX2780D1	VAR	63 - 42
VZX2780D3	VAR	63 - 44
VZX2780D5	VAR	63 - 45
VZX2780E3	VAR	63 - 47
VZX2780E5	VAR	63 - 48
VZX6084C1	VAR	100 - 5
VZX6084D1	VAR	100 - 6
VZX6980D2	VAR	97 - 89
VZX6980D4	VAR	97 - 91
VZX6980E1	VAR	100 - 15
VZX6980E3	VAR	98 - 74
VZX6980F1	VAR	100 - 16
VZX6980F3	VAR	98 - 75
VZX6980G1	VAR	98 - 76
VZX6980G2	VAR	100 - 17
VZX6981D2	VAR	97 - 98
VZX6981E1	VAR	100 - 26
VZX6981F1	VAR	100 - 27
VZX6981F2	VAR	100 - 28
VZX6981G1	VAR	100 - 29

TYPE No.	MFRS	Pg&Line
VZX6981G2	VAR	100 - 30
VZX6981S3	VAR	97 - 32
VZX6981S4	VAR	97 - 94
VZX6982D2	VAR	97 -107
VZX6982D6	VAR	97 -104
VZX6982E1	VAR	100 - 34
VZX6982G1	VAR	100 - 35
VZX6983D2	VAR	97 -109
VZX6983G1	VAR	100 - 37
VZX6985A1	VAR	98 - 5
VZX6985A2	VAR	98 - 8
VZX6985D2	VAR	98 - 1
VZX6985E2	VAR	98 - 4
VZX6988F1	VAR	100 - 7
VZX6988F2	VAR	100 - 8
W2MC11M	STCE	102 - 52
W2MT/1A	♦STCE	103 - 1
W2MT/3A	♦STCE	102 -109
W2PA1M	STCE	101 - 94
W2PA2W	STCE	89 - 29
W3/2G	♦STCE	101 - 4
W3/5G	♦STCE	101 - 67
W3MC19R	STCE	101 - 70
W3MC20D	STCE	89 - 51
W3MC21E	STCE	101 -109
W3MC/3A	♦STCE	100 - 68
W3MC/3F	STCE	100 - 69
W3MC/11A	♦STCE	100 - 61
W3MC/12D	♦STCE	100 - 74
W3MC/14D	♦STCE	100 - 63
W3MC/15C	STCE	100 - 62
W3MC/16R	STCE	100 - 84
W3MQ/5A	STCE	99 - 28
W3MT/4A	♦STCE	99 - 61
W3MW1B	STCE	99 - 18
W3PA1W	STCE	99 -107
W3PL3D	STCE	101 - 9
W4/2G	♦STCE	97 - 34
W4MC13F	STCE	97 - 28
W4MC14A	STCE	97 - 85
W4MC/11S	STCE	97 - 76
W4MC/12C	STCE	97 - 40
W4PC16E	STCE	97 - 92
W4PL2D	STCE	98 - 36
W5/1G	STCE	96 - 45
W5/2G	STCE	96 - 44
W5/2GD	STCE	95 - 11
W5/2GF	STCE	96 -108
W5/4GC	STCE	96 - 47
W5/4GF	STCE	96 - 48
W5MC14M	STCE	95 - 45
W5MC19C	STCE	95 - 79
W5MC20M	STCE	95 - 80
W5MC/1A	♦STCE	95 - 42
W5MC/2A	♦STCE	96 - 81
W5MC/11C	♦STCE	96 - 46
W5MC/13B	STCE	96 - 59
W5MC/15D	STCE	95 - 9
W5MC/16B	STCE	95 - 46
W5MC/17D	♦STCE	96 - 38
W5MC/18M	STCE	95 - 53
W5MW11M	STCE	94 - 73
W5PA1M	STCE	94 - 45
W6MM11P	STCE	89 - 50
W6MT/2A	♦STCE	94 - 24
W7/3G	STCE	92 - 81
W7/4G	♦STCE	93 - 48
W7/5GA	STCE	92 - 97
W7/5GC	STCE	93 - 50
W7/6GA	STCE	93 - 32
W7/6GC	STCE	93 - 51
W7/6GZ	STCE	92 - 99
W7MC/2R	STCE	92 - 82
W7MC/11C	STCE	92 - 83
W7MC/13B	STCE	93 - 23
W9/2E	STCE	92 - 26
W9/3E	♦STCE	92 - 24
W10/3E	♦STCE	92 - 14
W45B/5E	STCE	89 - 74
W46D/2T	STCE	89 - 61
W48D/1T	♦STCE	89 - 65
W208FS	TRWM	245 - 42
W208FSTZS-1	TRWM	245 - 43
W812BS	♦TRWM	245 - 44
W812BSTZS	TRWM	245 - 45
W921	♦ALP	255 - 38
W964	♦ALP	247 - 33
W9400	♦ALP	238 - 32
WF60	♦FERS	109 - 22
WF63L	♦FERS	111 - 20
WF409LC	♦FERS	110 -103
WF414L	FERS	111 - 31
WF424	FERS	108 -104
WF461	FERS	108 - 8
WF471	FERS	108 - 7
X12	♦VAR	70 - 43
X13	THC	69 - 45
♦VAR	VARC	
	VET	
X13B	THC	68 - 82
♦VAR	VARC	
X13C	VAR	67 - 99
X26	♦VAR	66 - 88
X61P2	THEF	115 - 39
X602K	♦VAR	73 - 53
X780	VAR	74 - 35
X841D	♦VAR	77 - 4
X922A	♦ALP	255 - 39
X922B	♦ALP	255 - 40
X922E	♦ALP	255 - 41
X922F	♦ALP	255 - 42
X922U	♦ALP	255 - 43
X922V	♦ALP	255 - 44
X922W	♦ALP	255 - 45

Δ-Registered with JEDEC by this manufacturer

♦-Mfr's data sheet available in microfilm service

1. TYPE No. CROSS INDEX

IN TYPE NUMBER SEQUENCE

TYPE No.	MFRS	Pg&Line
X936	♦ALP	243 - 50
X3002	VAR	73 - 42
X3002A	VAR	73 - 40
X3030	VAR	75 - 16
X3033	♦VAR	77 - 20
X3060	VAR	64 - 80
X3066	VAR	77 - 21
X3068	♦VAR	75 - 93
X3070	♦VAR	77 - 19
X3070A	VAR	65 - 86
X3075	VAR	77 - 18
X3076	VAR	77 - 5
XD500	♦TII	147 - 14
XD501	TII	147 - 15
XD502	TII	147 - 16
XD503	♦TII	147 - 17
YG1101	♦RTCF	238 - 33
YG1103	♦RTCF	238 - 34
YG1104	♦RTCF	238 - 35
YG1105	♦RTCF	238 - 36
YH1000	♦ALGG	90 - 52
YH1010	♦SIEG	89 - 67
YH1014	♦SIEG	89 - 80
YH1020	♦SIEG	89 - 66
YH1041	♦SIEG	96 - 12
YH1042	♦SIEG	96 - 13
YH1043	♦SIEG	96 - 6
YH1045	♦SIEG	96 - 18
YH1047A1	♦SIEG	95 - 24
YH1047A2	♦SIEG	95 - 25
YH1049	♦SIEG	95 - 14
YH1050	♦ALGG	93 - 57
YH1120	♦ALGG	96 - 95
YH1150	♦ALGG	90 - 58
YH1160	♦ALGG	92 - 86
YH1162	ALGG	92 - 53
YH1181	♦ALGG	93 - 69
YH1190	ALGG	101 - 56
YH1191	♦ALGG	100 - 72
YH1193	♦ALGG	100 - 75
YH1194	ALGG	101 - 90
YH1196	♦ALGG	102 - 47
YH1197	♦ALGG	101 - 49
YH1202	♦ALGG	95 - 10
YH1203	♦ALGG	96 - 71
YH1204	♦ALGG	97 - 82
YH1205	♦ALGG	96 - 42
YH1206	ALGG	97 - 77
YH1207	ALGG	95 - 20
YH1208	ALGG	96 - 58
YH1209	ALGG	97 - 2
YH1300	ALGG	95 - 8
YH1301	ALGG	97 - 50
YH1420	♦SIEG	102 - 78
YH1421	♦SIEG	102 - 71
YH1422	♦SIEG	102 - 66
YH3020	♦SIEG	103 - 99
YH3025	♦SIEG	103 - 96
YJ1060	APX	83 - 81
YJ1071	APX	84 - 44
YJ1071#	EMIB	84 - 42
YJ1110	APX	83 - 82
YJ1110#	♦EMIB	83 - 83
YJ1120	APX	84 - 60
YJ1121	APX	84 - 93
YJ1150	APX	78 - 7
YJ1160	♦APX	78 - 92
	♦PHIN	♦RTCF
YJ1162	♦APX	78 - 93
	♦PHIN	♦RTCF
YJ1180	APX	82 - 41
	♦PHIN	♦RTCF
YJ1180H	APX	82 - 57
	♦PHIN	RTCF
YJ1180L	APX	81 -103
	♦PHIN	RTCF
YJ1181	APX	82 - 42
	♦PHIN	♦RTCF
YJ1181H	APX	82 - 58
	♦PHIN	RTCF
YJ1181L	APX	81 -104
	♦PHIN	RTCF
YJ1185	APX	82 - 22
	RTCF	
YJ1185H	APX	82 - 56
	RTCF	
YJ1185L	APX	81 -102
	RTCF	
YJ1191	♦APX	78 - 99
YJ1193	APX	86 - 88
	♦RTCF	
YJ1194	♦RTCF	86 - 85
YJ1210	ALGG	87 - 33
YJ1230	ALGG	78 - 5
YJ1320	APX	85 - 93
	♦PHIN	RTCF
YJ1321	♦PHIN	85 - 94
	RTCF	
YJ1400	♦ALGG	88 - 74
YJ1420	APX	78 - 81
YJ1440	♦APX	78 - 94
YJ1441	APX	78 - 95
	♦RTCF	
YJ1442	APX	86 - 86
	♦RTCF	
YJ1443	♦RTCF	86 - 84
YJ1463	♦ALGG	87 - 76
YJ1464	♦ALGG	87 - 42
YJ1480	APX	78 - 89
YJ1481	APX	78 - 90
	♦RTCF	
YJ1490	♦APX	78 - 88
YJ1500	APX	78 - 85
	RTCF	
YJ1510	♦MULB	78 - 72
YK1000	♦PHIN	73 -109
	RTCF	
YK1001	♦APX	73 - 84
	♦PHIN	RTCF
YK1002	♦APX	73 - 82
	♦PHIN	RTCF
YK1003	RTCF	73 - 83
YK1004	♦PHIN	74 - 1
	RTCF	
YK1005	♦PHIN	73 -107
	RTCF	
YK1010	APX	67 - 28
YK1020	♦ALGG	67 - 75
YK1021	♦ALGG	67 - 26
YK1023	♦ALGG	67 - 76
YK1030	♦ALGG	66 -110
YK1050	♦ALGG	67 - 69
YK1081	♦ALGG	69 - 18
YK1082	ALGG	69 - 1
YK1100	♦ALGG	67 - 62
YK1110	MULB	73 - 44
	♦PHIN	RTCF
YK1120	ALGG	73 - 8
YK1151	APX	73 -106
	MULB	♦PHIN
		RTCF
YK1190	APX	73 - 77
	MULB	♦PHIN
		RTCF
YK1191	APX	73 -102
	MULB	♦PHIN
		RTCF
YK1192	APX	74 - 11
	MULB	♦PHIN
		RTCF
YK1195	MULB	65 - 89
	♦PHIN	
YK1196	MULB	65 - 90
	♦PHIN	
YK1197	MULB	65 - 92
	♦PHIN	
YK1200	APX	76 - 22
	RTCF	
YK1210	APX	63 - 64
	♦MULB	♦PHIN
		RTCF
YK1220	♦MULB	65 - 91
	♦PHIN	
YK1230	MULB	73 -104
	♦PHIN	
YK1300	♦MULB	64 - 90
	♦PHIN	
Z211/1G	STCE	73 - 29
ZC111	♦FERB	188 - 77
ZC700	♦FERB	168 - 84
	KSI	♦MSI
ZC700B	KSI	168 - 87
	♦MSI	
ZC700C	KSI	168 - 85
	♦MSI	
ZC701	♦FERB	171 - 38
	KSI	♦MSI
ZC701B	KSI	171 - 39
	♦MSI	
ZC701C	KSI	171 - 40
	♦MSI	
ZC702	♦FERB	174 - 88
	KSI	♦MSI
ZC702B	KSI	174 - 89
	♦MSI	
ZC702C	KSI	174 - 90
	♦MSI	
ZC703	♦FERB	177 - 19
	KSI	♦MSI
ZC703B	KSI	177 - 20
	♦MSI	
ZC703C	KSI	177 - 21
	♦MSI	
ZC704	♦FERB	180 - 72
	KSI	♦MSI
ZC704B	KSI	180 - 73
	♦MSI	
ZC704C	KSI	180 - 74
	♦MSI	
ZC705	♦FERB	182 - 54
	KSI	♦MSI
ZC705B	KSI	182 - 55
	♦MSI	
ZC705C	KSI	182 - 56
	♦MSI	
ZC706	♦FERB	186 - 4
	KSI	♦MSI
ZC706B	KSI	186 - 5
	♦MSI	
ZC706C	KSI	186 - 6
	♦MSI	
ZC707	♦FERB	187 -104
	KSI	♦MSI
ZC707B	KSI	186 - 7
	♦MSI	
ZC707C	KSI	187 -105
	♦MSI	
ZC708Ø	♦FERB	191 - 17
	KSI	♦MSI
ZC708B	KSI	191 - 18
	♦MSI	
ZC708C	KSI	191 - 19
	♦MSI	
ZC709Ø	♦FERB	192 - 74
	KSI	♦MSI
ZC709B	KSI	192 - 75
	♦MSI	
ZC709C	KSI	192 - 76
	♦MSI	
ZC710Ø	♦FERB	194 - 93
	KSI	♦MSI
ZC710B	KSI	194 - 94
	♦MSI	
ZC710C	KSI	194 - 95
	♦MSI	
ZC711Ø	♦FERB	196 - 37
	KSI	♦MSI
ZC711B	KSI	196 - 38
	♦MSI	
ZC711C	KSI	196 - 39
	♦MSI	
ZC712Ø	♦FERB	197 - 73
	KSI	♦MSI
ZC712B	KSI	197 - 74
	♦MSI	
ZC712C	KSI	197 - 75
	♦MSI	
ZC713Ø	♦FERB	198 - 72
	KSI	♦MSI
ZC713B	KSI	198 - 73
	♦MSI	
ZC713C	KSI	198 - 74
	♦MSI	
ZC714	♦FERB	199 - 65
	KSI	♦MSI
ZC714B	KSI	199 - 66
	♦MSI	
ZC714C	KSI	199 - 67
	♦MSI	
ZC740	♦FERB	168 - 86
ZC741	♦FERB	171 - 41
ZC742	♦FERB	174 - 91
ZC743	♦FERB	177 - 22
ZC744	♦FERB	180 - 75
ZC745	♦FERB	182 - 57
ZC746	♦FERB	186 - 8
ZC747	♦FERB	187 -106
ZC748	♦FERB	191 - 20
ZC749	♦FERB	192 - 77
ZC753	FERB	197 - 76
ZC754	FERB	198 - 75
ZC800	♦FERB	172 - 12
	♦MSI	
ZC800A	♦MSI	172 - 13
ZC800B	♦MSI	172 - 14
ZC801	♦FERB	177 -108
	♦MSI	
ZC801A	♦MSI	177 -109
ZC801B	♦MSI	177 -110
ZC802	♦FERB	183 - 90
	♦MSI	
ZC802A	♦MSI	183 - 91
ZC802B	♦MSI	183 - 92
ZC803	♦FERB	188 -105
	♦MSI	
ZC803A	♦MSI	188 -106
ZC803B	♦MSI	188 -107
ZC804	♦FERB	193 - 16
	♦MSI	
ZC804A	♦MSI	193 - 17
ZC804B	♦MSI	193 - 18
ZC805	♦FERB	196 - 79
	♦MSI	
ZC805A	♦MSI	196 - 80
ZC805B	♦MSI	196 - 81
ZC806	♦FERB	198 - 84
	♦MSI	
ZC806A	♦MSI	198 - 85
ZC806B	♦MSI	198 - 86
ZC807	♦MSI	199 -110
ZC807A	♦MSI	200 - 1
ZC807B	♦MSI	200 - 2
ZC808	♦MSI	200 - 98
ZC808A	♦MSI	200 - 99
ZC808B	♦MSI	200 -100
ZC809	♦MSI	201 - 64
ZC809A	♦MSI	201 - 65
ZC809B	♦MSI	201 - 66
ZC820	♦FERB	172 - 15
ZC821	♦FERB	178 - 1
ZC822	♦FERB	183 - 93
ZC823	♦FERB	188 -108
ZC824	♦FERB	193 - 19
ZC825	♦FERB	196 - 82
ZC826	♦FERB	198 - 87
ZC830A,B	♦FERB	172 - 16
ZC831A,B	♦FERB	178 - 2
ZC832A,B	♦FERB	183 - 94
ZC833A,B	♦FERB	188 -109
ZC834A,B	♦FERB	193 - 20
ZC835A,B	♦FERB	196 - 83
ZC836A,B	♦FERB	198 - 88
ZC898	♦MSI	162 - 7
ZC899	♦MSI	203 - 66
ZT2708	♦FERB	302 - 47
ZT2938	♦FERB	306 - 52
ZTX326AK	FERB	311 - 8
ZTX326AL	FERB	311 - 9
ZTX326AM	FERB	311 - 10
ZTX326K	♦FERB	311 - 11
ZTX326L	♦FERB	311 - 12
ZTX326M	♦FERB	311 - 13
ZTX327M	♦FERB	306 -100

Δ-Registered with JEDEC by this manufacturer

♦-Mfr's data sheet available in microfilm service

2. SOURCE,AMPLIFIER,OUTPUT TUBES

IN ORDER OF (1)TUBE TYPE (2)CENTER FREQUENCY (3)POWER OUTPUT (4)TYPE No.

LINE No.	[4] TYPE No.	[2] CENTER FREQ. (Hz)	[3] POWER OUTPUT (W)	FREQUENCY RANGE (Hz)	MAX. DUTY CYCLE	MAX. BEAM VOLTAGE (Note 1) (V)	MAX. CATH-ODE CUR. (A)	GAIN (dB)	NF (dB)	DESCRIPTION [1] TUBE TYPE	FUNC-TION	TUN-ING	OUT PUT	WEIGHT (lb)
1	LD4171	1300M	4.5	12.700G-13.300G	CW	21 §Ø		41					WA	11.02
2	L5716-00	1.3G	2.5k	.20G	80m	8.500	1.5	40	40		AM			
3	L5714-50	2.4G	20k	.60G	4.0m	24k	6.0	55			AM		CO	
4	TH2094	2998M	35MΔ	2998M							AM	FF	WA	
5	RR307	3001M		2941-3061M									WA	.77
6	L5713-50	3.3G	11k	.40G	15m	15.5k	32	40	40		AM			
7	LD4130	6775M	6.8	6.425G-7.125G	CW	28 §Ø		40					CO	7.716
8	RR309	8974.5M		8572-9377M									WA	.55
9	RR309A	8974.5M		8572-9377M									WA	.55
10	RR319	8990.5M		8272-9709M									WA	.33
11	L5715-50	9.25G	5.3k	.50G	30m	13.5k	2.5	70	40		AM		WA	
12	RR305	9384M		9091-9677M									WA	.51
13	RR306	10285M		8150-12420M									WA	.33
14	LD4157	10600M	6.5	10.500G-10.700G	CW	21 §Ø		43					WA	11.02
15	LD4187	10600M	6.5	10.500G-10.700G	CW	21 §Ø		43					WA	11.02
16	LD4131	13000M	4.5	12.700G-13.300G	CW	21 §Ø		36					WA	11.02
17	RR310	36940M		36280-37600M									WA	.187
18	VKB2443T1	90G	1.0	80G-90G	1.0m	21k	10mΔ				OS	MT	WA	6.0
19	VKB2443T2	90G	5.0	80G-90G	5.0m	21k	10mΔ				OS	MT	WA	6.0
20	RWO110S	92G	20m	75G-110G	100	2500	10m						WA	15
21	L3721	1200M	200 †	1.000G - 1.400G	CW	5200	500m			BWM*#	OS	VT	WA	27 Δ
22	QKA1250	1200M	200	1.000G-1.400G	CW	4000	300m			BWM	OS	VT	CO	28
23	QKA1252	2025M	200k	1.80G-2.55G	CW	4000	300m			BWM	OS	VT	CO	28
24	BWS1	2800M	150 †	2.500G - 3.100G*	CW	5100	350m			BWM†	OS	VT	CO	42
25	L3724	3025M	180 †	2.500G - 3.550G	CW	5200	350m			BWM*#	OS	VT	WA	16 Δ
26	QKA1253	3025M	180	2.500G-3.550G	CW	4000	300m			BWM	OS	VT	CO	26
27	L3724A	3025M	235 †	2.500G - 3.550G	CW	5200	350m			BWM*#	OS	VT	WA	16 Δ
28	L5316	3050M	100	2.600G-3.500G	CW	3440	210m			BWM	OS	VT	CO	7.0
29	BWS2	3500M	150 †	3.000G - 4.000G*	CW	5100	350m			BWM*†	OS	VT	CO	42
30	L3729A	5135M	220 †	4.360G - 5.910G	CW	5200	350m			BWM*#	OS	VT	WA	16.5 Δ
31	L5317	5450M	100	4.700G-6.200G	CW	3440	210m			BWM	OS	VT	CO	7.0
32	L3726	5675M	165 †	4.800G - 6.550G	CW	5200	350m			BWM*#	OS	VT	WA	16.5 Δ
33	BWX5	8950M	100 †	7.500G - 10.40G	CW	5000	375m			BWM†	OS	VT	WA	20 Δ
34	L5318	9000M	100	8.500G-9.500G	CW	2675	180m			BWM	OS	VT	CO	7.0
35	QKA1782	9000M	400	8.00G-10.00G	1.0	8000	500m			BWM	OS	VT	WA	35
36	L3234	9050M	125 †	8.500G - 9.600G	CW	4000	300m			BWM*#	OS	VT	WA	16 Δ
37	QKA1257	9600M	150	8.00G-10.20G	CW	5200	275m			BWM	OS	VT	WA	20
38	L3728	9750M	125 †	8.500G - 11.00G	CW	5200	300m			BWM*#	OS	VT	WA	16 Δ
39	QKA773A	9750M	150	8.500G-11.000G	CW	5200	275m			BWM	OS	VT	WA	
40	QKA1992	425M	700	350M-500M		5000				BWT	OS	VT		
41	OV1	1275M	15m	500-2050M			22			BWT	AM		CO	
42	VA183G	1500M	50m†	1.000G - 2.000G	CW	1200	25mØ			BWT*†	OS	VT	CO	13
43	VA183GA	1500M	100m	1.000G-2.000G		100	10m			BWT	OS	VT	CO	16
44	OV604	2250M	100m	1500-3000M						BWT	OS		CO	
45	VA184F	2950M	40m†	1.700G - 4.200G	CW	1200	25m			BWT†	OS	VT	CO	10
46	VA184M	3000M	50m†	2.000G - 4.000G	CW	1200	25mØ			BWT†	OS	VT	CO	10 Δ
47	VA435M	3000M	50m†	2.000G - 4.000G	CW	1200	25mØ			BWT*†	OS	VT	CO	5.0
48	VA184T	3000M	100m†	2.000G - 4.000G	CW	1200	25m			BWT	OS	VT	CO	10
49	F4029E	3000M	700m*	2.000G-4.000G	CW	1700	55m			BWT	OS			11.6
50	TH4310	3.0G	660k	2.9-3.1G	.016	50k	20			BWT	AM	FF	WA	110
51	N1034	3450M	70m	2.400G - 4.500G	CW	1500	70m			BWT	OS	VT	CO	11 *
52	OV603	3517.5M	40m	2345-4690M						BWT	OS		CO	
53	VA436M	3900M	50m	2.600G - 5.200G		1500	35m			BWT	OS		CO	4.5
54	VA187M	3900M	70m†	2.600G - 5.200G	CW	1500	25mØ			BWT	OS	VT	CO	10
55	VA160E	5400M	20m†	3.600G - 7.200G	CW	1500	41m			BWT†*	OS	VT	CO	8.5
56	OV2	5646M	20m	4412-6880M			25			BWT	AM		CO	
57	VA440N	5650M	100m	5.4G-5.9G	CW	600				BWT	OS	VT	CO	4.0
58	VA160N	5650M	400m†	5.400G - 5.900G	CW	800	41m			BWT†*	OS	VT	CO	8.5
59	TH4315	5.65G	70k	5.4-5.9G	.022	11k	18			BWT	AM	FF	WA	24
60	OV620	5700M	45m	4420-6980M						BWT	OS		CO	5.51
61	VA440M	6000M	20m†	4.000G - 8.000G	CW	1500	35m			BWT*†	OS	VT	CO	3.5
62	VA441F	6000M	20m†	3.700G - 8.300G		1600	32m			BWT	OS		CO	4.5
63	VBC7506M	6000M	20m	4.00G-8.00G		1500	25			BWT	OS		CO	9.0
64	F4084	6000M	30m†	4.000G-8.000G		1500	25mØ			BWT†	OS		WA	7.71
65	VA160M	6000M	50m†	4.000G - 8.000G	CW	1500	25mØ			BWT*†	OS	VT	CO	9.0
66	VA185F	6000M	50m†	3.700G - 8.300G	CW	1600	35m			BWT*†	OS	VT	CO	9.0
67	VA441M	6000M	50m†	4.000G - 8.000G	CW	1500	25mØ			BWT*†	OS	VT	CO	4.5
68	VA185M	6000M	100m†	4.000G - 8.000G	CW	1500	25m			BWT	OS	VT	CO	9.0
69	OV619	8350M	25m	6530-10170M						BWT	OS		CO	5.51
70	VA451N	9050M	30m†	8.500G - 9.600G	CW	280	35m			BWT†*	OS	VT	CO	3.0
71	VA461N	9050M	30m†	8.500G - 9.600G	CW	1000	30m			BWT†	OS	VT	WA	4.0
72	VA462N	9050M	40m†	8.500G - 9.600G	CW	310	25mØ			BWT†*	OS	VT	WA	4.5
73	VA450N	9050M	50m†	8.500G - 9.600G	CW	600	35m			BWT†*	OS	VT	CO	3.0
74	VA460N	9050M	70m†	8.500G - 9.600G	CW	1600	30m			BWT†	OS	VT	WA	4.0
75	QKW2043	9.150G	150	8.0G-10.3G	1.0	4.8k	275m			BWT	OS	VT		25
76	N1010	9250M	30m	7.000G - 11.50G	CW	1700	50m			BWT	OS	VT	CO	11 *
77	OVC5	9384M	30m	9091-9677M						BWT	AM		WA	.72
78	QKA2043	9.650G	150000	8000G-10300G	100	4.8k	275m			BWT	OS	VT		25.0
79	VA450M	9700M	20m†	7.000G - 12.40G	CW	1500	25mØ			BWT*†	OS	VT	CO	4.5
80	VA173M	9700M	40m†	7.000G - 12.40G	CW	1500	25mØ			BWT*#	OS	VT	CO	8.0
81	VA451M	10200M	15m†	8.000G - 12.40G	CW	650	35m			BWT*†	OS	VT	CO	3.0
82	VA161F	10200M	20m†	8.000G - 12.40G	CW	650	35m			BWT*†	OS	VT	WA	7.5
83	VA450C	10200M	40m†	8.000G - 12.40G	CW	1500	38m			BWT*†	OS	VT	CO	3.0
84	VA460M	10200M	50m†	8.000G - 12.40G	CW	1500	25mØ			BWT*†	OS	VT	WA	4.5
85	VA173T	10200M	80m†	8.000G - 12.40G	CW	1500	38m			BWT*†	OS	VT	CO	7.5
86	VA175M	10200M	80m†	8.000G - 12.40G	CW	1500	25mØ			BWT*†	OS	VT	WA	8.0
87	VA173TA	10200M	100m†	8.000G - 12.40G	CW	1500	25m			BWT	OS	VT	CO	8.0
88	VA175T	10200M	100m†	8.000G - 12.40G	CW	1500	38m			BWT*#	OS	VT	WA	7.5
89	VA161M	10300M	20m†	8.200G - 12.40G	CW	650	35m			BWT*#	OS	VT	WA	9.0
90	VA461M	10300M	20m†	8.200G - 12.40G	CW	650	35m			BWT*†	OS	VT	WA	3.0
91	VBX7521B	10600M	40m	10.00G-11.20G	CW	550	16			BWT†	OS		CO	5.0
92	VBX7504M	11500M	20m	7.00G-16.0G		1700	18			BWT	OS		CO	8.0
93	F4032B	12000M	15m†	8.000G-16.000G		1900	20mØ			BWT†	OS		WA	5.51
94	VA472M	12500M	20m†	10.00G - 15.00G	CW	1300	27m			BWT*†	OS	VT	WA	3.0
95	VA177M	12500M	50m†	10.00G - 15.00G	CW	1300	18mØ			BWT*†	OS	VT	WA	8.0
96	VBX7505M	13250M	15m†	8.50G-18.0G	CW	1700	18mØ			BWT	OS	VT	CO	8.0
97	VA162F	15000M	5.0m†	10.00G - 20.00G	CW	1500	25m			BWT*†	OS	VT	WA	8.0
98	VA470M	15200M	20m†	12.40G - 18.00G	CW	1000	18mØ			BWT*#	OS	VT	WA	4.5
99	F4171A	15200M	25m†	12.400G-18.000G		1500	20mØ			BWT†	OS		WA	5.51
100	VA162M	15200M	50m†	12.40G - 18.00G	CW	1000	18mØ			BWT*†	OS	VT	WA	8.0
101	VA470N	15500M	50m†	14.00G - 17.00G	CW	900	25m			BWT*†	OS	VT	WA	3.0
102	VA482M	18500M	10m†	15.00G - 22.00G		1300	20m			BWT	OS		CO	4.0
103	VA178M	18500M	20m†	15.00G - 22.00G	CW	1200	12mØ			BWT	OS	VT	WA	8.0
104	VA480M	22250M	10m†	18.00G - 26.50G	CW	1000	10mØ			BWT*	OS	VT	WA	4.5
105	VA163M	22250M	25m†	18.00G - 26.50G	CW	1000	10mØ			BWT*†	OS	VT	WA	8.0
106	RWO35	28500M	150m	22.000G-35.000G	CW	2700	15m			BWT	OS	VT	WA	17 *
107	VA490M	33250M	5.0m†	26.50G - 40.00G	CW	1500	10mØ			BWT*	OS	VT	WA	4.5
108	VA164M	33250M	10m†	26.50G - 40.00G	CW	1500	10mØ			BWT*†	OS	VT	WA	8.0
109	VA490N	35000M	20m†	34.00G - 36.00G	CW	1100	17m			BWT†*	OS	VT	WA	2.5
110	CO80	40000M	10 †	39.500G-40.500G		6000	80mØ			BWT†	OS		WA	35.27

SYMBOLS AND CODES EXPLAINED IN INTERPRETER

2. SOURCE,AMPLIFIER,OUTPUT TUBES

IN ORDER OF (1)TUBE TYPE (2)CENTER FREQUENCY (3)POWER OUTPUT (4)TYPE No.

LINE No.	[4] TYPE No.	[2] CENTER FREQ. (Hz)	[3] POWER OUTPUT (W)	FREQUENCY RANGE (Hz)	MAX. DUTY CYCLE	MAX. BEAM VOLTAGE (Note 1) (V)	MAX. CATH-ODE CUR. (A)	GAIN (dB)	NF (dB)	DESCRIPTION [1] TUBE TYPE	FUNC-TION	TUN-ING	OUT PUT	WEIGHT (lb)
1	RWO50	41500M	100m	33.00G-50.00G	CW	2700	15m			BWT	OS	VT	WA	17 *
2	OV612	45535M	8.0m	37500-53570			10mΔ			BWT	AM		WA	11.02
3	BA47F	47000M	150m	43.00G-51.00G	CW	3600	33m			BWT	OS	VT	WA	15.4
4	BW050	50000M	2.0m†	40.000G-60.000G		3000	10m			BWT	OS	VT	WA	15.43
5	BA50G	50000M	150m	46.00G-54.00G	CW	3600	33m			BWT	OS	VT	WA	15.4
6	RWO60	52500M	50m	40.00G-65.00G	CW	2800	16m			BWT	OS	VT	WA	17 *
7	BA55B	55000M	120m	51.00G-59.00G	CW	3600	38m			BWT	OS	VT	WA	15.4
8	BA60C	60000M	120m	55.00G-65.00G	CW	3600	33m			BWT	OS	VT	WA	15.4
9	RWO75	62500M	40m	50.00G-75.00G	CW	2700	15m			BWT	OS	VT	WA	17 *
10	BA65A	65000M	100m	60.00G-70.00G	CW	3600	33m			BWT	OS	VT	WA	15.4
11	OV613	67215M	5.0m	52630-81800M			10mΔ			BWT	AM		WA	11.02
12	BA70X	67500M	80m	60.000G-75.000G	CW	3600	33m			BWT	OS	VT	WA	15.43
13	BA70C	70000M	80m	65000M-75000M	CW	3600	33m			BWT	OS	VT	WA	15.4
14	CO40B	70000M	5.0 †	69.000G-71.000G		6000	60mØ			BWT†	OS		WA	35.27
15	F4076	70000M	5.0 †	69.000G-71.000G		6000	60mØ			BWT†	OS		WA	35.27
16	CO40A	74500M	3.0 †	73.000G-76.000G		6000	60mØ			BWT†	OS		WA	35.27
17	F4150	74500M	3.0 †	73.000G-76.000G		6000	60mØ			BWT†	OS		WA	35.27
18	BW080	75000M	1.0m†	60.000G-90.000G		3000	10m			BWT	OS	VT	WA	15.43
19	BA75C	75000M	80m	70000M-80000M	CW	3600	33m			BWT	OS	VT	WA	15.4
20	BA80A	80000M	80m	75.00G-85.00G	CW	3600	33m			BWT	OS	VT	WA	15.4
21	BA85A	85000M	80m	80000M-90000M	CW	3600	33m			BWT	OS	VT	WA	15.4
22	BA85X	85000M	80m	75.000G-90.000G	CW	3600	33m			BWT	OS	VT	WA	15.4
23	OV614	89475M	5.0m	78950-100000M			10mΔ			BWT	AM		WA	11.02
24	BA90A	90000M	80m	85.00G-95.00G	CW	3600	33m			BWT	OS	VT	WA	15.4
25	BA95A	95000M	60m	90000M-100G	CW	3600	33m			BWT	OS	VT	WA	15.4
26	BA100C	100000M	50m	95000M-105G	CW	3600	33m			BWT	OS	VT	WA	15.4
27	TH4206	102500M	20m	90.000G-115.00G	CW					BWT	OS	VT	WA	
28	BA120A	117000M	50m	110.0G-124.0G	CW	3600	33m			BWT	OS	VT	WA	15.4
29	CO20B	132000M	200m†	128.00G-136.00G		6000	60mØ			BWT†	OS		WA	35.27
30	F4075	132000M	200m†	128.00G-136.00G		6000	60mØ			BWT†	OS		WA	35.27
31	RWO170	140000M	15m	110.00G-170.00G	CW	2700	15m			BWT	OS	VT	WA	8.7 *
32	TH4203	140000M	50m	135.00G-145.00G	CW					BWT	OS	VT	WA	
33	TH4215	145G	10m	120G-170G		9k				BWT	OS	VT	WA	35
34	CO20A	153000M	200m†	150.00G-156.00G		6000	60mØ			BWT†	OS		WA	35.27
35	F4146	153000M	200m†	150.00G-156.00G		6000	60mØ			BWT†	OS		WA	35.27
36	TH4200	180000M	100m	170.00G-190.00G	CW					BWT	OS	VT	WA	
37	TH4201	212000M	50m	192.00G-232.00G	CW					BWT	OS	VT	WA	
38	TH4202	225000M	10m	200.00G-250.00G	CW					BWT	OS	VT	WA	
39	TH4204	225000M	50m	220.00G-230.00G	CW					BWT	OS	VT	WA	
40	TH4212	245G	10m	220G-265G		9k				BWT	OS	VT	WA	35
41	TH4216	282.5G	0.2	275G-290G		12k				BWT	OS	VT	WA	35
42	TH4217	295G	0.2	290G-300G		12k				BWT	OS	VT	WA	35
43	CO10	300000M	10m†	290.00G-310.00G		6000	60mØ			BWT†	OS		WA	35.27
44	F4074	300000M	10m†	290.00G-310.00G		6000	60mØ			BWT†	OS		WA	35.27
45	CO09	335000M	10m†	320.00G-350.00G		6000	60mØ			BWT†	OS		WA	35.27
46	TH4213	337G	10m	312G-362G		9k				BWT	OS	VT	WA	35
47	TH4208	346.5G	10m	329G-364G						BWT	OS	VT	WA	35
48	TH4218	360G	10m	320G-400G		9k				BWT	OS	VT	WA	35
49	TH4214	386G	30m	381G-391G		9k				BWT	OS	VT	WA	35
50	TH4211	450G	10m	400G-500G						BWT	OS	VT	WA	35
51	SFD225	428M	250k†	405M-450M	20m	15000	30	10		CFA	AM		CO	200 Δ
52	QKS1991	1275M	3.85k	1.250G-1.300G		85000				CFA	AM			
53	QKS630	1300M	1.32k	1.250G-1.350G	2.4m	38000	37			CFA	OS	MT	WA	16
54	QKS2034	1.3G	1500	1.2G-1.35G	15m	10k	22	13		CFA	AM		CO	55
55	QKS1319	1300M	3.0k	1.250G-1.350G	30m	10000	20	13		CFA	AM		CO	50
56	QKS1181	1300M	3.85k	1.250G-1.350G	800u	85000	130	11		CFA	AM		WA	120
57	QKS642	1305M	8.0k	1.280G-1.350G	1.6m	88000	125	9.0		CFA	AM		WA	180
58	QKS653	1315M	3.6k	1.280G-1.350G	700u	105k	98	11.2		CFA	AM		WA	120
59	7577	1315M	5.3M	1.28G-1.35G	7.0m	105k	98	11.2		CFA	AM		WA	120
60	QKS1262	2450M		2.425G-2.475G	CW	18000	4.0			CFA	OS	FF	WA	150
61	QKS783	2800M	7.5k	2.700G-2.900G	5.0m	53000	40	7.0		CFA	AM		WA	110
62	QKS1439	2850M	1.0k	2.200G-3.500G	500m	8500	400m	16		CFA	AM		CO	27
63	QKS973	2860M	3.0k	2.840G-2.880G	1.0m	52000	72	8.0		CFA	AM	FF	WA	110
64	SFD612	2900M	5.0k†	2.6G-3.2G	2.0m	5000				CFA#	AM		CO	12 Δ
65	SFD246	2900M	10k†	2.7G-3.1G	10m	5000 Ø	5.0	13		CFA#	AM		WA	12 Δ
66	SFD605	2950M	1.0k	2.600G - 3.300G	CW	6000	3.0	10		CFA§	AM		WA	13
67	8900	2995M	1.32k	2.905G-3.085G	22m	29	3.8	14		CFA#	AM	FF	WA	50
68	QKS1452	2998M	4.2k	2.994G-3.002G	1.4m	52000	72	8.0		CFA	AM	FF	WA	110
69	QKS1543	3000M	498	2.900G-3.100G	8.3m	27000	3.7	14		CFA	AM		WA	55
70	QKS1544	3000M	1.4k	2.900G-3.100G	2.0m	54000	21	12		CFA	AM		WA	110
71	QKS1558	3000M	1.76k	2.900G-3.100G	1.1m	56000	42	8.0		CFA	AM		WA	110
72	QKS846	3000M	3.0k	2.900G-3.100G	1.0m	54000	72	7.0		CFA	AM		WA	130
73	QKS1559	3000M	3.0k	2.900G-3.100G	1.0m	56000	72	8.0		CFA	AM		WA	110
74	QKS1672	3000M	3.0k	2.990G-3.010G	1.0m	54000	72	7.0		CFA	AM		WA	110
75	QKS1549	3000M	4.8k	2.900G-3.100G	1.6m	56000	72	8.0		CFA	AM		WA	130
76	8898	3000M	6.660k	2.900G-3.100G	10m	55	20			CFA#	AM	FF	WA	130 Δ
77	QKS1540	3000M	8.3k	2.900G-3.100G	12.4m	55000	20	11.4		CFA	AM		WA	110
78	8899	3000M	12.760k	2.900G-3.100G	5.0m	56	54			CFA#	AM	FF	WA	130 Δ
79	QKS1194	3000M	15k	2.800G-3.200G	20m	56000	23	12		CFA	AM		WA	115
80	QKS1986	3000M	15k	2.900G-3.100G	20m	55000	20	11.4		CFA	AM	BB	WA	45
81	QKS1849	3000M	40k	2.900G-3.100G	40m	55000	33	9.2		CFA	AM		WA	160
82	8934	3000M	60k	2.90G-3.10G	28m	27000	3.7 Δ	16		CFA#	AM		WA	55
83	TH4011A	3000M	60k†	2.900G-3.100G	20m	8000	20	14		CFA†	AM		WA	39.6
84	TH4013	3000M	60kΔ	2.900G-3.100G	20m	9000	25 Δ	14		CFA†	AM		WA	39
85	JAN8129D	3000M	666k	2.90G-3.10G	14.8m	60000	23.5			CFA#	AM		WA	130 Δ
86	QKS1846	3000M	800k	2.900G-3.100G	10m	36000	45	10		CFA	AM		WA	175
87	QKS1541	3000M	2.6M	2.90G-3.10G	5.7m	56000	66	7.0		CFA	AM		WA	110
88	QKS1889	3000M	2.6M	2.900G-3.100G	4.0m	50000	19	10		CFA	AM	BB	WA	34
89	QKS1591	3050M	5.3k	3.000G-3.100G	8.0m	53000	20	11.4		CFA	AM		WA	130
90	QKS1591#	3050M	5.6k	3000-3100		55k	20			CFA				130
91	VXS1059	3050M	60k†	3.00G-3.10G	20m	7500	20 Δ			CFA#	AM			40
92	QKS1286	3100M	1.9k	3.000G-3.200G	12m	56000	42	9.0		CFA	AM		WA	130
93	QKS1552	3100M	25k	2.990G-3.250G	25m	49000	30	10		CFA	AM		WA	160
94	L5373	3100M	500k	2.700G-3.500G	10m	23000	70	13		CFA	AM		WA	150
95	QKS1380	3120M	2.16k	2.990G-3.250G	1.8m	56000	33	10		CFA	AM		WA	130
96	QKS1646	3200M	1.2k	3.100G-3.500G	60m	18000	20	11		CFA	AM		WA	
97	QKS1484	3215M	7.2k	3.170G-3.260G	12m	29000	3.7	14		CFA	AM		WA	55
98	QKA1822	3300M	800	2.500G-4.000G	CW	4500	500m			CFA	OS	VT	CO	27
99	QKS2016	3.3G	37500	3.1G-3.5G	30m	39k	65	24		CFA	AM	BB	WA	175
100	SFD238	3300M	125k†	3.1G-3.5G	8.0m	15000 §Ø	20	12		CFA#	AM		WA	40 Δ
101	SFD243	3300M	125k†	3.1G-3.5G	8.0m	14000	21	11.5		CFA#	AM		WA	40 Δ
102	SFD254	3300M	500k†	3.1G-3.5G	10m	28000	40	14		CFA#	AM		WA	65 Δ
103	QKS1606	3300M	750k	3.100G-3.500G	60m	29000	45	10		CFA	AM		CO	200
104	QKA1823	4850M	800	3.900G-5.800G	CW	4500	500m			CFA	OS	VT	WA	27
105	QKS1130	5500M	3.2k	5.000G-6.000G	5.2m	43000	21	16		CFA	AM	FF	WA	55
106	L5408	5600M	500k	5.300G-5.900	2.0m	22000	750	13		CFA	AM		WA	85
107	SFD231	5638M	1.0M†	5.45G-5.825G	3.5m	40000	60	14†		CFA#	AM		WA	60 Δ
108	QKS807	5650M	5.0k	5.500G-5.800G	2.0m	52000	63	7.0		CFA	AM		WA	55
109	QKS1584	5650M	6.0k	5.400G-5.900G	1.0m	54000	25	18		CFA	AM		WA	70
110	SFD244	5650M	50k†	5.4G-5.9G	1.6m	10000	14	12		CFA	AM		WA	28 Δ

SYMBOLS AND CODES EXPLAINED IN INTERPRETER

2. SOURCE,AMPLIFIER,OUTPUT TUBES

IN ORDER OF (1)TUBE TYPE (2)CENTER FREQUENCY (3)POWER OUTPUT (4)TYPE No.

LINE No.	4 TYPE No.	2 CENTER FREQ. (Hz)	3 POWER OUTPUT (W)	FREQUENCY RANGE (Hz)	MAX. DUTY CYCLE	MAX. BEAM VOLTAGE (Note 1) (V)	MAX. CATHODE CUR. (A)	GAIN (dB)	NF (dB)	DESCRIPTION 1 TUBE TYPE	FUNCTION	TUNING	OUTPUT	WEIGHT (lb)
1	SFD244A	5650M	65k†	5.400G-5.900G	1.2m	10000	18	12†		CFA†	AM		WA	28 Δ
2	SFD250	5650M	500k†	5.4G-5.9G	10m	30000	50	10		CFA#	AM		WA	75 Δ
3	VXC1060	5650M	500k†	5.40G-5.90G	10m	25000	45 Δ			CFA#	AM			210
4	QKS1343#1	5650M	600k	5.400G-5.900G	9.8m	53000	25 Δ	10		CFA#	AM		WA	75
5	SFD249	5650M	800k†	5.4G-5.9G	10m	40000	55	13		CFA#	AM		WA	60 Δ
6	SFD222	5650M	1.0M†	5.400G-5.900G	1.4m	40000	60	17†		CFA†	AM		WA	57 Δ
7	SFD222A	5650M	1.0M	5.40G-5.90G	1.4m	38000	55			CFA	OS		WA	60
8	SFD237	5.65G	1.0M†	5.4G-5.9G	10m	30k§Ø	80	13		CFA	AM		WA	160 Δ
9	SFD257	5650M	1.0M†	5.400G-5.900G	1.0m	30k	85	13†		CFA†	AM		WA	205 Δ
10	QKS1343#2	5650M	1.2M	5.400G-5.900G	5.6m	55k	41 Δ	7.0		CFA#	AM		WA	75
11	SFD252	5650M	2.0M†	5.4G-5.9G	10m	35k	120	13		CFA#	AΔ		WA	
12	CMP1115	6175M	500 †	5.925G-6.425G		3800	375m	16†		CFA†	AM		WA	12.56
13	L5334	9000M	500k	8.500G-9.600G	1.0m	24000	75	17		CFA	AM		WA	25
14	QKS506	9100M	1.0k	9.000G-9.200G	1.0m	37000	58	10		CFA	AM		WA	35
15	QKS1611	9100M	1.2k	9.000G-9.200G	4.0m	36000	19	14.8		CFA	AM		WA	35
16	QKS1874	9100M	300k	9.000G-9.200G	12m	32000	68	14		CFA	AM	BB	WA	34
17	VXX1062	9125M	300k†	9.00G-9.25G	4.0m	32000	24 Δ			CFA	AM			28
18	VXX1341	9200M	310k	9.000G-9.400G	4.0m	27500	25	12		CFA	AM	MT	WA	25
19	QKS1697	9215M	480k	9.10G-9.33G	2.5m	38000		17		CFA	AM		WA	
20	QKS1350	9250M	120	8.900G-9.600G	12m	16000	2.0	8.0		CFA	AM		WA	9.5
21	L5347	9250M	200k	9.000G-9.500G	3.5m	20000	34	18		CFA	AM		WA	25
22	SFD227	9250M	250k†	9.0G-9.5G	1.0m	30000	22	13		CFA	AM		WA	28 Δ
23	SFD218A	9250M	500k†	9.0G-9.5G	1.0m	35000	35	12		CFA	AM		WA	28 Δ
24	SFD232	9250M	500k†	9.000G-9.500G	5.0m	34000	40	12†		CFA†	AM		WA	35 Δ
25	VXX1063	9250M	500k†	9.00G-9.50G	1.0m	35000	35 Δ			CFA#	AM			28
26	SFD233	9250M	1.0M†	9.000G-9.500G	1.0m	40000	65	11.5†		CFA†	AM		WA	35 Δ
27	SFD241	9300M	400k†	9.0G-9.6G	2.5m	33000	30	15		CFA	AM		WA	32 Δ
28	SFD218	9300M	500k†	9.0G-9.6G	2.5m	34000	35	13		CFA	AM		WA	30 Δ
29	SFD242	9300M	1.0M†	9.0G-9.6G	2.5m	40000	60	14		CFA	AM		WA	37 Δ
30	QKS1648	9330M	1.2k	9.200G-9.460G	4.8m	36000	20	14		CFA	AM		WA	35
31	QKS1729	9330M	250k	9.20G-9.46G	8.0m	36000	20	14		CFA	AM		WA	110
32	SFD240	9400M	250k†	9.2G-9.6G	10m	2000	28	15.5		CFA	AM		WA	30 Δ
33	SFD223	9400M	300k†	9.2G-9.6G	2.0m	32000	24	15		CFA	AM		WA	28 Δ
34	SFD217	9400M	750k†	9.2G-9.6G	300u	38000 Ø	43	17		CFA	AM		WA	45 Δ
35	L5371	9500M	60k	9.000G-10.000G	1.0m	9000	30	13		CFA	AM		WA	25
36	L5372	9500M	500k	9.000G-10.000G	1.0m	23000	75	13		CFA	AM		WA	35
37	QKS1244	9600M	5.1k	9.500G-9.700G	1.7m	18000	3.6	14		CFA	AM		WA	8.5
38	QKS1243	9600M	7.0k	9.500G-9.700G	1.4m	36000	28	13		CFA	AM		WA	35
39	QKS1539	9650M	4.0k	9.350G-9.850G	20m	20000	2.2	13		CFA	AM		WA	17
40	L5346	9750M	150k	9.500G-10.500G	3.0m	18000	28	18		CFA	AM		WA	28
41	QKS1705	9750M	500k	9.500G-10.000G	1.0m	34000	45	12		CFA	AM		WA	28
42	VXX1064	9750M	500k†	9.50G-10.00G	1.0m	35000	35 Δ			CFA#	AM			28
43	SFD236	16500M	100k†	16.000G-17.000G	1.2m	16000	27	17†		CFA†	AM		WA	15 Δ
44	QKS1998	33000M	40k	3.100G-3.500G	60m	36000	57	10		CFA	AM	BB	WA	180
45	SFD511	3000M	150	2.800G - 3.200G	CW	6000	100m			CFGØ	OS			
46▼	919H-XX	60.0G	200k	50.0G-70.0G *	20 m	80.0k	8.0			GYT	OS		WA	300
47▼	916H	93.0G	5.0k	91.0G-95.0G	CW	30.0k	1.3	20		GYT	AM		WA	25
48▼	931H-XX	95.0G	1.0k	90.0G-100.0G *	CW	30.0k	1.3			GYT	OS		WA	25
49♦	934H-XX	100.0G	500.0k	100.0G *	1.0 m	90.0k	14.0			GYT	OS		WA	30
50	TH2442		300	5.2G-10.9G	CW					KL	AM			
51	TV2053		5.0M†			135k	105 Ø			KL	AM		WA	121
52	TV2092		7.5M†		24.6m	160k	115 Ø	45†		KL	AM		WA	264
53	TV2030		20M†		1.0m	240k	235 Ø	43†		KL	AM		WA	143
54	TV2042		20M†		1.0m	240k	235 Ø	40†		KL	AM		WA	143
55	TV2091		20M†		1.0m	240k	235 Ø	43†		KL	AM		WA	176
56	L3403	425M	1.25MΔ	400.0M-450.0M	60m	120k	37	35		KL Ø		WA		2400 *
57	L3694	425M	1.25MΔ	400.0M-450.0M	60m	120k	37	35		KL Ø		WA		2300 *
58▼	VA946HA	518M	32k	470M-566M		18k	4.5	49		KL Ø#	AM		CO	343.9
59▼	VA950HA	518M	45k	470M-566M		20k	5.8	51		KL Ø#	AM		CO	390.2
60▼	VA953HA	518M	65k	470M-566M		22k	6.4	51		KL Ø#	AM		CO	390.2
61	TH2062	525M	10k†	470M-580M	CW	12000	2.1 Ø	42†		KL	AM	MT	WA	220
62	TH2050	525M	25k†	470M-580M	CW	16500	3.3 Ø	47†		KL	AM	MT	WA	220
63	TH2070	525M	40k	470M-580M		21000	5.0	44		KL	AM			220
64▼	PT5075	533M	45k	470M-596M		21.5k	5.2	39.5		KL	AM		CO	209
65	F2008	555M	30k†	470M-640M	CW	18000	4.25 Ø	40†		KL	AM	MT	WA	198
66	KAP1151	560M	55k†	470M-650M	CW	24000	6.0 Ø	46†		KL	AM	MT	WA	198
67	4KMP10000LF	600M	466k	570.0M-630.0M	10m	65000	16.5	57		KL	AM			140
68▼	VA947HA	632M	32k	566M-698M		18k	4.5	49		KL Ø#	AM		CO	297.6
69▼	VA951HA	632M	45k	566M-698M		20k	5.8	51		KL Ø#	AM		CO	348.3
70▼	VA954HA	632M	65k	566M-698M		22k	6.4	51		KL Ø#	AM		CO	348.3
71	TH2063	635M	10k†	570M-700M	CW	12000	2.1 Ø	42†		KL	AM	MT	WA	198
72	TH2051	635M	25k†	570M-700M	CW	16000	3.3 Ø	46†		KL	AM	MT	WA	198
73	TH2071	635M	40k	570M-700M		21000	5.0	44		KL	AM			198
74▼	PT5076	653M	45k	596M-710M		21.5k	5.2	39.5		KL	AM		CO	209
75	K3270BCD	665M	15	470M-860M	CW	19k		30		KL	AM	BB	CO	55
76	KAP1152	675M	55k†	590M-860M	CW	24000	6.0 Ø	46†		KL	AM	MT	WA	198
77	F2009	710M	30k†	590M-830M	CWQ	18000	4.0 Ø	40†		KL	AM	MT	WA	198
78	TH2064	775M	10k†	690M-860M	CW	12000	2.3 Ø	42†		KL	AM	MT	WA	165
79	TH2052	775M	25k†	690M-860M	CW	16500	3.3 Ø	46†		KL	AM	MT	WA	165
80	TH2072	775M	40k	690M-860M		21000	5.0	44		KL	AM			165
81▼	VA948HA	792M	32k	694M-890M		18k	4.5	49		KL Ø#	AM		CO	211.6
82▼	VA952HA	792M	45k	694M-890M		20k	5.8	51		KL Ø#	AM		CO	257.9
83▼	VA955HA	792M	65k	694M-890M		22k	6.4	51		KL Ø#	AM		CO	257.9
84	JAN8493	1088M	600 *	960M-1215M	25m	20000	10			KL *		MT	CO	30
85▼	PT6006	1.29G	100k	1.24G-1.34G	75 m	33k	13.2	25		KL #	AM	FF	CO	187
86	L3943	1300M	10k	1.290G-1.310G	2.0m	215.0k	200	33		KL Ø		FF	WA	667 *
87	L3035	1300M	2.2M	1.240G-1.360G	3.0m	125.0k	87	36		KL Ø#		MT	WA	435 *
88	L3250	1300M	10MΔ	1.250G-1.350G	1.5m	185k	163	36		KL Ø			WA	667 *
89	L3660	1300M	10MΔ	1.250G-1.350G	2.0m	190k	185	33		KL #			WA	780 *
90	L3944	1300M	10MΔ	1.290G-1.310G	1.5m	250k	175	36		KL Ø		FF	WA	667 *
91	L3661	1300M	20MΔ	1.300G	1.5m	230k	270	45		KL #		FF	WA	1.21k*
92	L5235	1350M	300k	1.300G-1.400G	15m	60000	15	47		KL Δ		MT	WA	124
93	L5237	1350M	300k	1.300G-1.400G	7.0m	60000	15	47		KL Δ		MT	WA	145
94	VKL7774	1650M	2.0k	1.650G		6200	980m	33		KL	#	FF	WA	150 *
95	TV2022	1800M	20M†	1.200G-2.400G	2.5m	235k	215 Ø	50†		KL	AM		WA	220
96	VKS7795	2030M	2.0k	2.030G	CW	6500	1.1	33		KL †		FF	CO	
97	TH2046	2050M	1.0k†	1.700G-2.400G	CW	6000	550mØ	40†		KL †	AM	MT	WA	83
98	TH2406	2050M	1.0k†	1.700G-2.400G	CW	6000	550mØ	37†		KL †	AM	MT	WA	83
99	VKS8260	2250M	2.0M	2.100G-2.400G	1.7m	90000	53	50		KL	AM			130
100	L3910	2287M	20	2.287G	CW	1500		40	27	KL Δ		FF	CO	3.0
101	TH2054	2450M	50k†	2.425G-2.475G	CW	25000	3.25 Ø	50†		KL	AM	MT	WA	143
102	TH2404	2550M	1.0k†	2.400G-2.700G	CW	6500	580mØ	40†		KL †	AM	MT	WA	83
103	QKK1719	2775M	100m	2.65G-2.90G	CW	300	30m			KL	OS	MT	CO	
104	L3989	2856M	19k		900u	250k	250	50		KL †#		FF	WA	400
105	VA938C	2860M	4000k	2.820G-2.900G	30m	120k	81	43		KL Ø#	AM	FF	WA	580
106	TV2013	2900M	4.0M†	2.700G-3.100G	20m	120k	85 Ø	47†		KL	AM		WA	189
107	TV2017	2900M	5.0M†	2.700G-3.100G	2.0m	135k	105 Ø	35†		KL	AM	MT	WA	132
108	TV2018	2900M	5.0M†	2.700G-3.100G	2.0m	135k	105 Ø	37†		KL	AM		WA	132
109	TV2019W	2900M	10M†	2.700G-3.100G	1.8m	170k	140 Ø	47†		KL	AM		WA	132
110	TV2011	2900M	20M†	2.700G-3.100G	1.0m	255k	225 Ø	50†		KL	AM		WA	143

2. SOURCE,AMPLIFIER,OUTPUT TUBES

IN ORDER OF (1)TUBE TYPE (2)CENTER FREQUENCY (3)POWER OUTPUT (4)TYPE No.

LINE No.	[4] TYPE No.	[2] CENTER FREQ. (Hz)	[3] POWER OUTPUT (W)	FREQUENCY RANGE (Hz)	MAX. DUTY CYCLE	MAX. BEAM VOLTAGE (Note 1) (V)	MAX. CATH-ODE CUR. (A)	GAIN (dB)	NF (dB)	DESCRIPTION [1] TUBE TYPE	FUNC-TION	TUN-ING	OUT PUT	WEIGHT (lb)
1	TV2002	2900M	25M†	2.700G-3.100G	840u	245k	240 Ø	50†		KL	AM		WA	154
2	TV2015	2900M	25M†	2.700G-3.100G	1.0m	250k	250 Ø	50†		KL	AM		WA	143
3	TV2028	2900M	25M†	2.700G-3.100G	1.6m	275k	203 Ø	50†		KL	AM		WA	176
4	TH2047	2925M	1.0k†	2.800G-3.050G	CW	6500	500mØ	40†		KL †	AM	MT	WA	83
5	JAN2K41	2985M	50m	2.660G-3.310G	CW	1250	60m			KL	OS	MT	CO	
6	JAN417C	2985M	50m†	2.660G-3.310G	CW	750				KL	OS	MT	CO	
7	TH2066	2998M	5.5m		1.0m	150k	110	47		KL	AM			
8	TH2056	2998M	5.0M†		1.0m	145k	100 Ø	47†		KL	AM		WA	132
9	F2043	2998M	20M†		250u	260k	250 Ø	40†		KL	AM		WA	176
10	F2040	2998M	25M†		600u	250k	245 Ø	50†		KL	AM		WA	220
11	F2042	2998M	30M†		1.0m	275k	280 Ø	50†		KL	AM		WA	330
12	QKK1720	3025M	100m	2.90G-3.15G	CW	300	30m			KL	OS	MT	CO	
13	VA811	3030M	1.0M	2.960G-3.100G	4.0m	90000	52	38		KL Ø#	AM	MT	WA	110 §
14	VA811B	3030M	1.0M†	2.960G-3.100G	1.6m	90000	54	40		KL Ø#	AM	FF	WA	110 Δ
15	VA811C	3030M	1.0M†	2.960G-3.100G	4.0m	90000	54	40		KL Ø#	AM	FF	WA	110 Δ
16	L3742	3040M	1.0M	2.980G - 3.100G	4.0m	105.0k	68	35†		KL	AM		WA	410 *
17	L3975	3080M	100k	3.082G	5.0m	85000	28	30		KL Δ#		FF	WA	60
18	TH2047P	3150M	8.0k†	2.800G-3.500G	CW	15000	1.7 Ø	45†		KL †	AM	MT	WA	83
19♦	PT6014	3.174G	2.5k	3.1G-3.4G	120 m	12.5k	900m	46		KL $	AM		WA	30.2
20♦	PT6015	3.330G	2.5k	3.1G-3.4G	120 m	12.5k	900m	46		KL $	AM		WA	30.2
21	VA816J	3500M	2.7M†	3.430G-3.570G	3.7m	115kØ	78mØ	34		KL Ø#	AM	BB	WA	85
22	JAN6133	3525M	95m†	3.458G-3.592G	CW	300	45m			KL		VT	WA	
23	F2006	4700M	1.2k†	4.400G-5.000G	CW	7500	470mØ	45†		KL	AM	MT	WA	66
24	TH2407	4700M	12k	4.400G-5.000G	CW	6700	600mØ	38†		KL	AM	MT	WA	46
25	QKK412	5500M	90m	5.10G-5.90G	CW					KL	OS	MT		
26	JAN8406	5525M	35kΔ	5.395G-5.655G	7.35m	30000	55			KL #		MT	WA	135
27	JAN8315	5642M	300 †	5.385G - 5.900G	2.0m	9000	950m	30†		KL	AM	MT	CO	3.25
28	JAN8405	5642M	25k	5.385G-5.9G	1.65m	20000	9.4			KL	AM	MT	WA	
29	VKC8342/8956	5650M	3.15m	5.400G-5.900G	1.8m	128k	104	30		KL Ø#		MT	WA	140
30	8956	5650M	3.3m*	5.400G-5.900G	2.0m	135k	111	30		KL Ø		MT	WA	140 Δ
31	TH2409	5710M	500 †		CW	7500	470mØ	40†		KL †	AM	MT	WA	66
32	TH2067	5710M	5.0M†		200u	130k	95 Ø	50†		KL	AM		WA	110
33	QKK404	6137M	120m	5.92G-6.45G	CW	300	32m			KL	OS	MT	CO	
34	KU103	6174.5M	3.0	5964-6385M			145m	7.8		KL	AM		WA	2.65
35	TH2415	6175M	1.5	5.925G-6.425G	CW	6500	650m	37		KL		MT		7.04
36	TH2416	6175M	3.0	5.925G-6.425G	CW	8000	1.05	35†		KL		MT		7.04
37	TH2417	6175M	3.35	5.925G-6.425G	CW	8300	1.1	40		KL		MT		7.04
38	VZJ2700D1	6175M	400	5.925G-6.425GΔ	CW	208 *Δ§		36		KL	AM	MT	WA	
39	VZJ2700D3	6175M	3.0k	5.925G-6.425GΔ	CW	208 *Δ§		40		KL	AM	MT	WA	
40	VA879G	7800M	100k	7.100G-8.500G	CW	43000	7.0	51		KL Ø#	AM	MT	WA	160 §
41	VKE2435G	8000M	650 †	70.00G-90.00G	50m	22	450m			KL †$	OS	MT	WA	17
42	VZX2780D1	8150M	1.5k*	7.900G-8.400GΔ	CW	208 *Δ§		45		KL	AM	MT	WA	
43	QKK2051	8.15G	1630	7.9G-8.4G	1.0	7.2k	0.6	45		KL	AM		WA	43
44	VZX2780D3	8150M	2.5k*	7.900G-8.400GΔ	CW	208 *Δ§		45		KL	AM	MT	WA	
45	VZX2780D5	8150M	3.0k	7.900G-8.400G	CW	208 *Δ§		45		KL	AM	MT	WA	
46	VKX7799	8150M	8.0k	7.900G-8.400G*	CW	13500 Ø	2.0 Ø	40		KL Ø#	AM	MT	WA	90 *
47	VZX2780E3	8150M	10k	7.900G-8.400G	CW	208 *Δ§		57		KL	AM	MT	WA	
48	VZX2780E5	8150M	18k	7.900G-8.400G	CW	208 *Δ§		35		KL	AM	MT	WA	
49	JAN2K45	9050M	20m†	8.500G-9.660G	CW	350	30m			KL	OS	TT	CO	
50	QKK1858	9050M	20m	8.500G-9.600G	CW	300	32m			KL	OS	MT	CO	
51	JAN2K25	9080M	20m†	8.500G-9.660G		400	37m			KL		MT	CO	
52	JAN6312	9250M	25m†	8.500G - 10.00G	CW	350	42m			KL	OS	MT	WA	500m
53	QKK2057	9.375G		9.365G-9.384G	CW	4.35k	31.0m			KL	OS	FF		5.0
54	8332	9800M	10	9.790G - 9.810G	CW	1000	180m			KL	AM		WA	.50
55	TV848	9900M	2.0k†	9.000G-10.800G	CW	10000	900mØ	56†		KL †	AM	MT	WA	37
56	VKX7765A	10000M	1.5k	9.000G-11.000G		8000	700m	45		KL †		MT	WA	25
57	TV851	10050M	2.5k†	9.500G-10.600G	CW	10000	900mØ	30†		KL †	AM	MT	WA	30
58	TV2032	10050M	5.0k†	9.500G-10.600G	CW	14500	1.4 Ø	55†		KL †	AM	MT	WA	9.9
59	QKK1882	10125M	500	10.000G-10.250G	CW	5000	400m	40		KL	AM	MT	WA	12
60	QKK2055	10.125G	500	10.0G-10.250G	CW	5.35k	325m	40		KL	AM	MT		15.0
61	QKK1891	10125M	640	10.000G-10.250G	CW	6400	450m	48		KL	AM	MT	WA	12
62	VA926	10500M	100k	8.500G-11.00G	15m	41000 Ø	7.0 Ø	55		KL Ø#		MT	WA	60 *
63	QKK1491	11000M	50m	11.00G-11.00G	CW	300	32m			KL	OS	MT	WA	
64	YK1210	12000M	1150	11.80G-12.20G	CW	10500	400m	43		KL	AM	MT	CO	
65	VA510B	13300M	2.0	13.30G	CW	2200				KL	OS	FF	CO	.44
66	VZU2701C1	14250M	500	14.00G-14.50G	CW	208 *Δ§		37		KL	AM	MT	WA	
67	VZU2701C3	14250M	1.5k	14.00G-14.50G	CW	208 *Δ§		37		KL	AM	MT	WA	
68	VZU2701C5	14250M	2.0k	14.00G-14.50G	CW	208 *Δ§		33		KL	AM	MT	WA	
69	VZU2701C6	14250M	2.0k	14.00G-14.50G	CW	208 *Δ§		32		KL	AM	MT	WA	
70	L5341	17750M	200	17.500G-18.000G	134m	8000	500m	40		KL Δ		MT	CO	9.0
71	QKK1376	24500M	90m	23.00G-26.00G	CW	425	35m			KL	OS	MT	WA	
72	VKQ2424F	40000M	200 †	30.00G-50.00G	CW	10000	250m			KL †$	OS	MT	WA	17
73	VKQ2434G	40000M	250 †	30.00G-50.00G	CW	8000	750m			KL †$	OS	MT	WA	32
74	VKQ2434H	40000M	250 †	30.00G-50.00G	CW	8000	750m			KL †$	OS	MTM	WA	32
75	VKQ2434E	40000M	500 †	30.00G-50.00G	CW	8000	750m			KL †$	OS	FF	WA	29
76	VKQ2434F	40000M	500 †	30.00G-50.00G	CW	8000	750m			KL †$	OS	MT	WA	29
77	VKQ2435G	40000M	500 †	30.00G-40.00G	CW	12000	1.2			KL †$	OS	MT	WA	32
78	VKQ2435H	40000M	500 †	30.00G-40.00G	CW	12000	1.2			KL †$	OS	MTM	WA	32
79	VKQ2435E	40000M	1.0k†	30.00G-40.00G	CW	12000	1.2			KL †$	OS	FF	WA	29
80	VKQ2435F	40000M	1.0k†	30.00G-40.00G	CW	12000	1.2			KL †$	OS	MT	WA	29
81	VKQ2456L(A)	40G	1.0k	30G-50G	.005	21k	700m			KL	OS	FF	WA	9.0
82	VKQ2456M(A)	40G	1.0k	30G-50G	.005	21k	700m			KL	OS	MT	WA	9.0
83	VKQ2456N(A)	40G	1.0k	30G-50G	.005	21k	700m			KL	OS	MT	WA	9.0
84	VKQ2456P(A)	40G	1.0k	30G-50G	.005	21k	700m			KL	OS	MTM	WA	9.0
85	VKQ2456R(A)	40G	1.0k	30G-50G	.005	21k	700m			KL	OS	FF	WA	9.0
86	VKQ2456S(A)	40G	1.0k	30G-50G	.005	21k	700m			KL	OS	MT	WA	9.0
87	VKQ2456T(A)	40G	1.0k	30G-50G	.005	21k	700m			KL	OS	MT	WA	9.0
88	VKQ2456U(A)	40G	1.0k	30G-50G	.005	21k	700m			KL	OS	MTM	WA	9.0
89	VKQ2422G	40000M	2.0k†	30.00G-50.00G	100m	22	1.2			KL †$	OS	MT	WA	17
90	VKE2425G	65000M	75 †	50.00G-80.00G	CW	10000	230m			KL †$	OS	MT	WA	20
91	VKE2425H	65000M	75 †	50.00G-80.00G	CW	10000	230m			KL †$	OS	MTM	WA	20
92	VKE2425E	65000M	150 †	50.00G-80.00G	CW	10000	230m			KL †$	OS	FF	WA	17
93	VKE2425F	65000M	150 †	50.00G-80.00G	CW	10000	230m			KL †$	OS	MT	WA	17
94	VKE2457L(A)	65G	1.0k	50G-80G	.005	21k	700m			KL	OS	FF	WA	9.0
95	VKE2457M(A)	65G	1.0k	50G-80G	.005	21k	700m			KL	OS	MT	WA	9.0
96	VKE2457N(A)	65G	1.0k	50G-80G	.005	21k	700m			KL	OS	MT	WA	9.0
97	VKE2457P(A)	65G	1.0k	50G-80G	.005	21k	700m			KL	OS	MTM	WA	9.0
98	VKE2457R(A)	65G	1.0k	50G-80G	.005	21k	700m			KL	OS	FF	WA	9.0
99	VKE2457S(A)	65G	1.0k	50G-80G	.005	21k	700m			KL	OS	MT	WA	9.0
100	VKE2457T(A)	65G	1.0k	50G-80G	.005	21k	700m			KL	OS	MT	WA	9.0
101	VKE2457U(A)	65G	1.0k	50G-80G	.005	21k	700m			KL	OS	MTM	WA	9.0
102	VKB2414L	95G	10	80G-110G	.02	8.0k	150m			KL	OS	FF	WA	9.0
103	VKB2414M	95G	10	80G-110G	.02	8.0k	150m			KL	OS	MT	WA	9.0
104	VKB2414N	95G	10	80G-110G	.02	8.0k	150m			KL	OS	MT	WA	9.0
105	VKB2414P	95G	10	80G-110G	.02	8.0k	150m			KL	OS	MTM	WA	9.0
106	VKB2426G	95000M	25 †	80.00G-110.00G	CW	10000	175m			KL †$	OS	MT	WA	20
107	VKB2426H	95000M	25 †	80.00G-110.00G	CW	10000	175m			KL †$	OS	MTM	WA	20
108	VKB2443R	95G	1.0k	80G-110G	.005	8.0k	650m			KL	OS	FF	WA	6.3
109	VKB2443S	95G	1.0k	80G-110G	.005	8.0k	650m			KL	OS	MT	WA	6.3
110	VKB2443T	95G	1.0k	80G-110G	.005	8.0k	650m			KL	OS	MT	WA	6.3

2. SOURCE,AMPLIFIER,OUTPUT TUBES

IN ORDER OF (1)TUBE TYPE (2)CENTER FREQUENCY (3)POWER OUTPUT (4)TYPE No.

LINE No.	4 TYPE No.	2 CENTER FREQ. (Hz)	3 POWER OUTPUT (W)	FREQUENCY RANGE (Hz)	MAX. DUTY CYCLE	MAX. BEAM VOLTAGE (Note 1) (V)	MAX. CATH-ODE CUR. (A)	GAIN (dB)	NF (dB)	DESCRIPTION 1 TUBE TYPE	FUNC-TION	TUN-ING	OUT PUT	WEIGHT (lb)
1	VKB2443U	95G	1.0k	80G-110G	.005	8.0k	650m			KL	OS	MTM	WA	6.3
2	VKB2445L	95G	1.0k	80G-110G	.005	21k	700m			KL	OS	FF	WA	4.5
3	VKB2445M	95G	1.0k	80G-110G	.005	21k	700m			KL	OS	MT	WA	4.5
4	VKB2445N	95G	1.0k	80G-110G	.005	21k	700m			KL	OS	MT	WA	4.5
5	VKB2445P	95G	1.0k	80G-110G	.005	21k	700m			KL	OS	MTM	WA	4.5
6	VKB2445R	95G	1.0k	80G-110G	.005	21k	700m			KL	OS	FF	WA	4.5
7	VKB2445S	95G	1.0k	80G-110G	.005	21k	700m			KL	OS	MT	WA	4.5
8	VKB2445T	95G	1.0k	80G-110G	.005	21k	700m			KL	OS	MT	WA	4.5
9	VKB2445U	95G	1.0k	80G-110G	.005	21k	700m			KL	OS	MTM	WA	4.5
10	VKB2423G	100000M	500 †	90.00G-110.00G	40m	22	450m			KL †$	OS	MT	WA	29
11	VKT2411G	125000M	1.0 †	110.00G-140.00G	CW	9900	95m			KL †$	OS	MT	WA	20
12	VKT2411H	125000M	1.0 †	110.00G-140.00G	CW	9900	95m			KL †$	OS	MTM	WA	20
13	VKT2411E	125000M	3.0 †	110.00G-140.00G	CW	9900	95m			KL †$	OS	FF	WA	17
14	VKT2411F	125000M	3.0 †	110.00G-140.00G	CW	9900	95m			KL †$	OS	MT	WA	17
15	VKT2427G	125000M	5.0 †	110.00G-140.00G	CW	9900	115m			KL †$	OS	MT	WA	20
16	VKT2427H	125000M	5.0 †	110.00G-140.00G	CW	9900	115m			KL †$	OS	MTM	WA	20
17	VKT2427E	125000M	10 †	110.00G-140.00G	CW	9900	115m			KL †$	OS	FF	WA	17
18	VKT2427F	125000M	10 †	110.00G-140.00G	CW	9900	115m			KL †$	OS	MT	WA	17
19	VKT2419G	125000M	200 †	110.00G-140.00G	80m	22	450m			KL †$	OS	MT	WA	17
20	VKT2419R	125G	200	110G-140G	.005	11k	250m			KL	OS	FF	WA	6.3
21	VKT2419S	125G	200	110G-140G	.005	11k	250m			KL	OS	MT	WA	6.3
22	VKT2419T	125G	200	110G-140G	.005	11k	250m			KL	OS	MT	WA	6.3
23	VKT2419U	125G	200	110G-140G	.005	11k	250m			KL	OS	MTM	WA	6.3
24	VKT2458L(A)	125G	200	110G-140G	.005	21k	250m			KL	OS	FF	WA	9.0
25	VKT2458M(A)	125G	200	110G-140G	.005	21k	250m			KL	OS	MT	WA	9.0
26	VKT2458N(A)	125G	200	110G-140G	.005	21k	250m			KL	OS	MT	WA	9.0
27	VKT2458P(A)	125G	200	110G-140G	.005	21k	250m			KL	OS	MTM	WA	9.0
28	VKT2458R(A)	125G	200	110G-140G	.005	21k	250m			KL	OS	FF	WA	9.0
29	VKT2458S(A)	125G	200	110G-140G	.005	21k	250m			KL	OS	MT	WA	9.0
30	VKT2458T(A)	125G	200	110G-140G	.005	21k	250m			KL	OS	MT	WA	9.0
31	VKT2458U(A)	125G	200	110G-140G	.005	21k	250m			KL	OS	MTM	WA	9.0
32	VKG2440G	150000M	5.0 †	140.00G-160.00G	CW	10000	130m			KL †$	OS	MT	WA	20
33	VKG2440H	150000M	5.0 †	140.00G-160.00G	CW	10000	130m			KL †$	OS	MTM	WA	20
34	VKG2440E	150000M	10 †	140.00G-160.00G	CW	10000	130m			KL †$	OS	FF	WA	17
35	VKG2440F	150000M	10 †	140.00G-160.00G	CW	10000	130m			KL †$	OS	MT	WA	17
36	VKT2444L	155G	100	140G-170G	.005	12k	400m			KL	OS	FF	WA	6.3
37	VKT2444M	155G	100	140G-170G	.005	12k	400m			KL	OS	MT	WA	6.3
38	VKT2444N	155G	100	140G-170G	.005	12k	400m			KL	OS	MT	WA	6.3
39	VKT2444P	155G	100	140G-170G	.005	12k	400m			KL	OS	MTM	WA	9.6
40	VKT2444R	155G	100	140G-170G	.005	12k	400m			KL	OS	FF	WA	6.3
41	VKT2444S	155G	100	140G-170G	.005	12k	400m			KL	OS	MT	WA	6.3
42	VKT2444T	155G	100	140G-170G	.005	12k	400m			KL	OS	MT	WA	6.3
43	VKT2444U	155G	100	140G-170G	.005	12k	400m			KL	OS	MTM	WA	9.6
44	VKT2459L(A)	155G	100	140G-170G	.005	21k	250m			KL	OS	FF	WA	9.0
45	VKT2459M(A)	155G	100	140G-170G	.005	21k	250m			KL	OS	MT	WA	9.0
46	VKT2459N(A)	155G	100	140G-170G	.005	21k	250m			KL	OS	MT	WA	9.0
47	VKT2459P	155G	100	140G-170G	.005	21k	250m			KL	OS	MTM	WA	9.0
48	VKT2459R(A)	155G	100	140G-170G	.005	21k	250m			KL	OS	FF	WA	9.0
49	VKT2459S(A)	155G	100	140G-170G	.005	21k	250m			KL	OS	MT	WA	9.0
50	VKT2459T(A)	155G	100	140G-170G	.005	21k	250m			KL	OS	MT	WA	9.0
51	VKT2459U(A)	155G	100	140G-170G	.005	21k	250m			KL	OS	MTM	WA	9.0
52	VKG2431G	160000M	1.0 †	140.00G-180.00G	CW	10000	110m			KL †$	OS	MT	WA	20
53	VKG2431H	160000M	1.0 †	140.00G-180.00G	CW	10000	110m			KL †$	OS	MTM	WA	20
54	VKG2431E	160000M	2.0 †	140.00G-180.00G	CW	10000	110m			KL †$	OS	FF	WA	17
55	VKG2431F	160000M	2.0 †	140.00G-180.00G	CW	10000	110m			KL †$	OS	MT	WA	17
56	VKG2439G	160000M	2.0 †	140.00G-180.00G	CW	10000	120m			KL †$	OS	MT	WA	20
57	VKG2439H	160000M	2.0 †	140.00G-180.00G	CW	10000	120m			KL †$	OS	MTM	WA	20
58	VKG2439E	160000M	5.0 †	140.00G-180.00G	CW	10000	120m			KL †$	OS	FF	WA	17
59	VKG2439F	160000M	5.0 †	140.00G-180.00G	CW	10000	120m			KL †$	OS	MT	WA	17
60	VKY2460L(A)	195G	60	170G-220G	.005	21k	150m			KL	OS	FF	WA	9.0
61	VKY2460M(A)	195G	60	170G-220G	.005	21k	150m			KL	OS	MT	WA	9.0
62	VKY2460N(A)	195G	60	170G-220G	.005	21k	150m			KL	OS	MT	WA	9.0
63	VKY2460P(A)	195G	60	170G-220G	.005	21k	150m			KL	OS	MTM	WA	9.0
64	VKY2460R(A)	195G	60	170G-220G	.005	21k	150m			KL	OS	FF	WA	9.0
65	VKY2460S(A)	195G	60	170G-220G	.005	21k	150m			KL	OS	MT	WA	9.0
66	VKY2460T(A)	195G	60	170G-220G	.005	21k	150m			KL	OS	MT	WA	9.0
67	VKY2460U(A)	195G	60	170G-220G	.005	21k	150m			KL	OS	MTM	WA	9.0
68	VKY2429L	200G	60	170G-220G	.005	21k	150m			KL	OS	FF	WA	6.3
69	VKY2429M	200G	60	170G-220G	.005	21k	150m			KL	OS	MT	WA	6.3
70	VKY2429N	200G	60	170G-220G	.005	21k	150m			KL	OS	MT	WA	6.3
71	VKY2429P	200G	60	170G-220G	.005	21k	150m			KL	OS	MTM	WA	6.3
72	VKY2429R	200G	60	170G-220G	.005	21k	150m			KL	OS	FF	WA	6.3
73	VKY2429S	200G	60	170G-220G	.005	21k	150m			KL	OS	MT	WA	6.3
74	VKY2429T	200G	60	170G-220G	.005	21k	150m			KL	OS	MT	WA	6.3
75	VKY2429U	200G	60	170G-220G	.005	21k	150m			KL	OS	MTM	WA	6.3
76	VKD2441E	205000M	1.0 †	180.00G-230.00G	CW	10000	100m			KL †$	OS	FF	WA	17
77	VKD2441F	205000M	1.0 †	180.00G-230.00G	CW	10000	100m			KL †$	OS	MTM	WA	17
78	VKY2430L	272.5G	10	220G-325G	0.1	14k	300m			KL	OS	FF	WA3	6.3
79	VKT2430E	280000M	10 †		100m	22	250m			KL †$	OS	MT	WA	17
80	X3060	2250M	100k	2.100G-2.400G		35000	7.2	55		KL$	AM			235
81	VKL7829A	1400M	50k	1.300G-1.500G	8.0m	20000	11	54		KL§	AM			45 *
82	VKS7756	1850M	1500	1.800G-1.900G	150m	8500	700m	40		KL§	AM			13.5 *
83	VKX7803	10000M	50k	9.000G-11.000G	8.0m	35000	6.0	60		KL§	AM			11 *
84	VKX7752	10000M	120k	9.000G-11.00G	3.0m	45000	12	50		KL§#		MT	WA	10 *
85	VKL7811	1600M	2000	1.500G-1.700G	CW	6600	1.1	33		KL†	AM			95 *
86	4KP3SN	2925M	7500	2.800G - 3.050G	2.0m	15000	1.8	45		KL†	AM	MT	CO	85
87	VKX7817	10000M	2000	9.500G-10.500G	500m	10500	450m	47		KL†#	AM			20 *
88	VKU7816A	14000M	25k	13.000G-15.000G	50m	26000	3.5	60		KL†#	AM			60 *
89	VKP8264	224M	3000k	224M	125m	110k	70	35		KL#	AM			2200
90	YK1300	499.7M	550k		CW	-60k	18.6			KL#		FF	WA	875 §
91	VKP8259	500M	250k	500M	CW	44000	15	37		KL#	AM			600
92	VA862B	714M	1200k	714M	140m	86000	23	45		KL#	AM			800
93	KU304A	822.1M	12.0k	8108-833.3M		14k#	3.2	36		KL#	AM		CO	88.2
94	VA838A	902.5M	350k	845M-960M	50m	45000	19	50		KL#	AM			130
95	KU308	910M	4.0k	820-1000M		10k#	1.3	35		KL#	AM		CO	88.2
96	VA862C	933M	2000k	933M	125m	110k	48	40		KL#	AM			650
97	VA963D	1300M	5000k	1.250G-1.350G	50u	132k	95	40		KL#	AM			150
98	KIU12AM	2756.5M	20000k	2709-2804M		3.0k#		33		KL#	AM		WA	132.3
99	KIU12BM	2765M	20000k	2772-2758M		3.0k#		33		KL#	AM		WA	132.3
100	VA938D	2856M	4000k	2.856G	25m	128k	81	50		KL#	AM			580
101	VKS8262A	2856M	5000k	2.856G	1.0m	120k	86	50		KL#	AM			100
102	VKS8262C	2999M	2000k	2.999G	5.0m	100k	62	50		KL#	AM			150
103	VKS8262B	2999M	5000k	2.999G	1.0m	120k	86	50		KL#	AM			100
104	VKS8262D	2999M	5500k	2.999G	1.0m	125k	88	50		KL#	AM			150
105	VKS7787	3300M	1000k	3.250G-3.350G	20m	83000	35	38		KL#	AM			120
106	VKG7815	4100M	40k	3.800G-4.400G	35m	27000	6.0	40		KL#	AM			135 *
107	VA949Series	7800M	200k	7.100G-8.500G	CW	50000	10	50		KL#	AM			200
108	173H	8050M	100	5.200G-10.900G	CW	3000	164m	30		KL#†	AM	FF	WA	4.25
109	VKU2428G	19G	500	15G-23G		11 #	1.2			KL#	OS	MT	WA	30
110	VKU2428H	19G	500	15G-23G		11 #	1.2			KL#	OS	MTM	WA	30

SYMBOLS AND CODES EXPLAINED IN INTERPRETER

2. SOURCE,AMPLIFIER,OUTPUT TUBES

IN ORDER OF (1)TUBE TYPE (2)CENTER FREQUENCY (3)POWER OUTPUT (4)TYPE No.

LINE No.	4 TYPE No.	2 CENTER FREQ. (Hz)	3 POWER OUTPUT (W)	FREQUENCY RANGE (Hz)	MAX. DUTY CYCLE	MAX. BEAM VOLTAGE (Note 1) (V)	MAX. CATH-ODE CUR. (A)	GAIN (dB)	NF (dB)	DESCRIPTION 1 TUBE TYPE	FUNC-TION	TUN-ING	OUT PUT	WEIGHT (lb)
1	VKU2428E	19G	1.0k	15G-23G		11 #	1.2			KL#	OS	FF	WA	30
2	VKU2428F	19G	1.0k	15G-23G		11 #	1.2			KL#	OS	MT	WA	30
3	VKQ2433N	40G	5.0	30G-50G		6.0 #	95m			KL#	OS	MT	WA	10
4	VKQ2433P	40G	5.0	30G-50G		6.0 #	95m			KL#	OS	MTM	WA	10
5	VKQ2433L	40G	10	30G-50G		6.0 #	95m			KL#	OS	FF	WA	10
6	VKQ2433M	40G	10	30G-50G		6.0 #	95m			KL#	OS	MT	WA	10
7	VKQ2420N	40G	35	30G-50G		6.0 #	180m			KL#	OS	MT	WA	10
8	VKQ2420P	40G	35	30G-50G		6.0 #	180m			KL#	OS	MTM	WA	10
9	VKQ2420L	40G	75	30G-50G		6.0 #	180m			KL#	OS	FF	WA	10
10	VKQ2420M	40G	75	30G-50G		6.0 #	180m			KL#	OS	MT	WA	10
11	VKQ2424N	40G	100	30G-50G		7.4 #	250m			KL#	OS	MT	WA	18
12	VKQ2424P	40G	100	30G-50G		7.4 #	250m			KL#	OS	MTM	WA	18
13	VKQ2424L	40G	200	30G-50G		7.4 #	250m			KL#	OS	FF	WA	18
14	VKQ2424M	40G	200	30G-50G		7.4 #	250m			KL#	OS	MT	WA	18
15	VKQ2422E	40G	2.0k	30G-50G	0.1	14k	1.0			KL#	OS	FF	WA	29
16	VKQ2422F	40G	2.0k	30G-50G	0.1	14k	1.0			KL#	OS	MT	WA	29
17	VKQ2422H	40G	2.0k	30G-50G	0.1	14k	1.0			KL#	OS	MTM	WA	29
18	VKE2409N	65G	5.0	50G-80G		6.0 #	100m			KL#	OS	MT	WA	10
19	VKE2409P	65G	5.0	50G-80G		6.0 #	100m			KL#	OS	MTM	WA	10
20	VKE2409L	65G	10	50G-80G		6.0 #	100m			KL#	OS	FF	WA	10
21	VKE2409M	65G	10	50G-80G		6.0 #	100m			KL#	OS	MT	WA	10
22	VKE2401N	65G	15	50G-80G		7.5 #	130m			KL#	OS	MT	WA	10
23	VKE2401P	65G	15	50G-80G		7.5 #	130m			KL#	OS	MTM	WA	10
24	VKE2401L	65G	35	50G-80G		7.5 #	130m			KL#	OS	FF	WA	10
25	VKE2401M	65G	35	50G-80G		7.5 #	130m			KL#	OS	MT	WA	10
26	VKE2436N	65G	35	50G-80G		9.0 #	180m			KL#	OS	MT	WA	10
27	VKE2436P	65G	35	50G-80G		9.0 #	180m			KL#	OS	MTM	WA	10
28	VKE2436L	65G	70	50G-80G		9.0 #	180m			KL#	OS	FF	WA	10
29	VKE2436M	65G	70	50G-80G		9.0 #	180m			KL#	OS	MT	WA	10
30	VKE2421L	65G	1.0k	50G-80G	0.1	15k	700m			KL#	OS	FF	WA	13.5
31	VKE2421M	65G	1.0k	50G-80G	0.1	15k	700m			KL#	OS	MT	WA	13.5
32	VKE2421N	65G	1.0k	50G-80G	0.1	15k	700m			KL#	OS	MT	WA	13.5
33	VKE2421P	65G	1.0k	50G-80G	0.1	15k	700m			KL#	OS	MTM	WA	13.5
34	VKB2426N	90G	25	80G-100G		9.0 #	175m			KL#	OS	MT	WA	10
35	VKB2426P	90G	25	80G-100G		9.0 #	175m			KL#	OS	MTM	WA	10
36	VKB2426L	90G	50	80G-100G		9.0 #	175m			KL#	OS	FF	WA	10
37	VKB2426M	90G	50	80G-100G		9.0 #	175m			KL#	OS	MT	WA	10
38	VKB2415N	95G	3.0	80G-110G		7.5 #	95m			KL#	OS	MT	WA	10
39	VKB2415P	95G	3.0	80G-110G		7.5 #	95m			KL#	OS	MTM	WA	10
40	VKB2415L	95G	5.0	80G-110G		7.5 #	95m			KL#	OS	FF	WA	10
41	VKB2415M	95G	5.0	80G-110G		7.5 #	95m			KL#	OS	MT	WA	10
42	VKB2437N	95G	10	80G-110G		8.5 #	160m			KL#	OS	MT	WA	10
43	VKB2437P	95G	10	80G-110G		8.5 #	160m			KL#	OS	MTM	WA	10
44	VKB2437L	95G	20	80G-110G		8.5 #	160m			KL#	OS	FF	WA	10
45	VKB2437M	95G	20	80G-110G		8.5 #	160m			KL#	OS	MT	WA	10
46	VKB2423E	95G	500	80G-110G	.04	11k	450m			KL#	OS	FF	WA	18
47	VKB2423F	95G	500	80G-110G	.04	11k	450m			KL#	OS	MT	WA	18
48	VKB2423H	95G	500	80G-110G	.04	11k	450m			KL#	OS	MTM	WA	18
49	VKB2443L	95G	1.0k	80G-110G	.04	8.0k	650m			KL#	OS	FF	WA	6.3
50	VKB2443M	95G	1.0k	80G-110G	.04	8.0k	650m			KL#	OS	MT	WA	6.3
51	VKB2443N	95G	1.0k	80G-110G	.04	8.0k	650m			KL#	OS	MT	WA	6.3
52	VKB2443P	95G	1.0k	80G-110G	.04	8.0k	650m			KL#	OS	MTM	WA	6.3
53	VKT2411N	125G	1.0			7.5 #	95m			KL#	OS	MT	WA	10
54	VKT2411P	125G	1.0			7.5 #	95m			KL#	OS	MTM	WA	10
55	VKT2411L	125G	3.0	110G-140		7.5 #	95m			KL#	OS	FF	WA	10
56	VKT2411M	125G	3.0	110G-140		7.5 #	95m			KL#	OS	MT	WA	10
57	VKT2427N	125G	5.0	110G-140		8.0 #	115m			KL#	OS	MT	WA	10
58	VKT2427P	125G	5.0	110G-140		8.0 #	115m			KL#	OS	MTM	WA	10
59	VKT2427L	125G	10	110G-140G		8.0 #	115m			KL#	OS	FF	WA	10
60	VKT2427M	125G	10	110G-140G		8.0 #	115m			KL#	OS	MT	WA	10
61	VKT2438N	125G	10	110G-140G		8.5 #	130m			KL#	OS	MT	WA	10
62	VKT2438P	125G	10	110G-140G		8.5 #	130m			KL#	OS	MTM	WA	10
63	VKT2438L	125G	20	110G-140G		8.5 #	130m			KL#	OS	FF	WA	10
64	VKT2438M	125G	20	110G-140G		8.5 #	130m			KL#	OS	MT	WA	10
65	VKT2419L	125G	200	110G-140G	.10	11k	450m			KL#	OS	FF	WA	9.0
66	VKT2419M	125G	200	110G-140G	.10	11k	450m			KL#	OS	MT	WA	9.0
67	VKT2419N	125G	200	110G-140G	0.1	11k	450m			KL#	OS	MT	WA	9.0
68	VKT2419P	125G	200	110G-140G	0.1	11k	450m			KL#	OS	MTM	WA	9.0
69	VKT2431N	155G	1.0	140G-170G		8.0 #	110m			KL#	OS	MT	WA	10
70	VKT2431P	155G	1.0	140G-170G		8.0 #	110m			KL#	OS	MTM	WA	10
71	VKT2431L	155G	2.0	140G-170G		8.0 #	110m			KL#	OS	FF	WA	10
72	VKT2431M	155G	2.0	140G-170G		8.0 #	110m			KL#	OS	MT	WA	10
73	VKT2439N	155G	2.0	140G-170G		9.0 #	120m			KL#	OS	MT	WA	10
74	VKT2439P	155G	2.0	140G-170G		9.0 #	120m			KL#	OS	MTM	WA	10
75	VKT2439L	155G	5.0	140G-170G		9.0 #	120m			KL#	OS	FF	WA	10
76	VKT2439M	155G	5.0	140G-170G		9.0 #	120m			KL#	OS	MT	WA	10
77	VKT2440N	155G	5.0	140G-170G		7.0 #	130m			KL#	OS	MT	WA	10
78	VKT2440P	155G	5.0	140G-170G		7.0 #	130m			KL#	OS	MTM	WA	10
79	VKT2440L	155G	10	140G-170G		7.0 #	130m			KL#	OS	FF	WA	10
80	VKT2440M	155G	10	140G-170G		7.0 #	130m			KL#	OS	MT	WA	10
81	VKY2441L	200G	1.0	170G-220G		8.0 #	120m			KL#	OS	FF	WA	10
82	VKY2441M	200G	1.0	170G-220G		8.0 #	120m			KL#	OS	MT	WA	10
83	VKY2432L	260G	1.0	220G-300G		8.0 #	120m			KL#	OS	FF	WA	10
84	VKY2432M	260G	1.0	220G-300G		8.0 #	120m			KL#	OS	MT	WA	10
85	VA812D	425M	15M	400M-450M	50m	190k	222	40		KLØ#	AM	FF	WA	1500
86	X3070A	2388M	450k	2.378G-2.398G	CW	62000 Ø	15 Ø	53		KLØ#	AM	FF	WA	450 §
87	E3776	2856M	20M	2856M	125m	250	200	49		KLØ#	AM	FF	WA	150
88	VKC7762	5525M	1300k	5.395G-5.655G*	6.9m	90000 Ø	55 Ø	50		KLØ#	AM	FF	WA	135
89	YK1195	540M	58k	470M-610M		-28k				KLF	AM			1881 *
90	YK1196	630M	58k	590M-720M		-28k				KLF	AM			1881 *
91	YK1220	690M	11k	470M-860M		20k				KLF	AM			484 *
92	YK1197	790M	58k	710M-860M		-28k				KLF	AM			1881 *
93	K26	583.5M	100m	500-667M			85m			KLR	OS			
94	JAN5837#1	800M	50m†	800M,8.0MØ	CW	70	29m			KLR	OS	SR		
95	JAN5837#3	1130M	10m†	1130M,8.0MØ	CW	60	29m			KLR	OS	SR		
96	K42	1204.6M	64m	9091-1500M			60m			KLR	OS			
97	JAN5981	1353M	40m	1.245G - 1.460G	CW	350	50m			KLR		MT		
98	5981	1353M	175m	1.245G-1.460G	CW	225	46m			KLR	OS	MT	CO	
99	6BM6	1780M	10m†	550M-3.000G	CW	325	29m			KLR	OS	MT	CO	
100	5837	1780M	10m†	550M-3.000G	CW	325	29m			KLR	OS	MT	CO	
101	JAN6BM6	1803M	50m†	785M-2.820GØ	CW	700	32m			KLR	OS	SR	CC	
102	JAN6BM6A	1807M	50m†	795M-2.820GØ		700	29m			KLR	OS	SR	CC	
103	KRA1080	1850M	170m†	1.700G-2.000G		300	32mØ			KLR	OS	MT	WA	
104	K41	1932M	64m	1364-2500M			60m			KLR	OS			
105	JAN5837#2	2113M	50m†	2113M,8.0MØ	CW	550	29m			KLR	OS	SR		
106	6BM6A	2175M	50m	550.0M-3.800G	CW	325	24m			KLR	OS	MT	CO	70m
107	KRA1081	2200M	35m†	1.700G-2.700G		320	22mØ			KLR	OS	MT	WA	
108	JAN5837#4	2569M	20m†	2569M,8.0MØ	CW	365	29m			KLR	OS	SR		
109	2K28A	2625M	140m	1.500G-3.750G	CW	300	40m			KLR	OS	MT	CO	
110	6133	2625M	140m	1.500G-3.750G	CW	300	40m			KLR	OS	MT	CO	

SYMBOLS AND CODES EXPLAINED IN INTERPRETER

2. SOURCE,AMPLIFIER,OUTPUT TUBES

IN ORDER OF (1)TUBE TYPE (2)CENTER FREQUENCY (3)POWER OUTPUT (4)TYPE No.

LINE No.	4 TYPE No.	2 CENTER FREQ. (Hz)	3 POWER OUTPUT (W)	FREQUENCY RANGE (Hz)	MAX. DUTY CYCLE	MAX. BEAM VOLTAGE (Note 1) (V)	MAX. CATH-ODE CUR. (A)	GAIN (dB)	NF (dB)	DESCRIPTION 1 TUBE TYPE	FUNC-TION	TUN-ING	OUT PUT	WEIGHT (lb)
1	K805	2670.5M	80m	2400-2941M						KLR	OS		WA	
2	JAN726C	2830M	85m*	2.700G-2.960G	CW	330	35m			KLR	OS	MT	CO	
3	726C	2880M	100m	2.700G-2.960G	CW	300	30m			KLR	OS	MT	CO	90m
4	2K28	2900M	100m	1.800G-4.000G	CW	300	40m			KLR	OS	MT	CO	
5	JAN726B	3028M	110m†	2.883G-3.173G		330	35m			KLR	OS	MT	WC	
6	726B	3028M	150m	2.883G-3.173G	CW	300	30m			KLR	OS	MT	CO	
7	K11	3068M		2500-3636M			40m			KLR	OW		WA	
8	6043	3113M	150m	2.950G-3.275G	CW	300	40m			KLR	OS	MT	CO	
9	JAN6BL6	3233M	25m†	2.110G - 4.355GØ	CW	700	35m			KLR		SR		
10	JAN5836	3233M	25m†	2.110G - 4.355GØ	CW	700	30m			KLR	OS	SR	CO	
11	VA327	3350M	2.0 †	2.700G - 4.000G	CW	750	85m			KLR	OS	FF	CO	2.0
12	JAN2K28	3498M	80m†	3.315G-3.680G	CW	300	45m			KLR	OS	VT		
13	2K29	3680M	100m	3.400G-3.960G	1.0	300	32m			KLR	OS	MT	CO	90m
14	K48	3704.5M	28m	3409-4000M			120m			KLR	OS			
15	TK76	3800M	900m	3.5G-4.3G	CW	600	70m			KLR	OS	MT	CO	.817
16	EM1137L	3950M	150m†	3.600G-4.300G	CW	500	50m			KLR	OS	MT		
17	QKK1288	3950M	2.5	3.700G-4.200G	CW	750	85m			KLR	OS	MT	CO	
18	5836	4000M	50m	1.800G-6.000G	CW	300	30m			KLR	OS	MT	CO	
19	TK8	4000M	250m	3.700G - 4.300G	CW	330	35m			KLR	OS	MT	CO	.110
20	6BL6	4050M	100m	1.600G-6.500G	CW	300	30m			KLR	OS	MT	CO	2.0
21	4V27	4050M	120m	3.600G - 4.300G	CW	350	35m			KLR	OS	SR	WC	.07
22	1K125CA	4050M	1.25 †	3.700G - 4.400G	CW	1200	110m			KLR	OS	MT	WA	1.19
23	2K56	4150M	100m	3.840G-4.460G	CW	300	32m			KLR	OS	MT	CO	
24	1K75CH	4250M	1.0 *	4.200G - 4.300G	CW	850	60m			KLR	OS	FF	CO	.53
25	1K75CK	4250M	1.0 *	4.200G - 4.300G	CW	850	60m			KLR	OS	FF	WA	.50
26	JANDOD002	4275M	4.0m	4.100G-4.450G	CW	330	35m			KLR	OS	MT	CO	
27	QK381	4275M	4.0m	4.100G - 4.450G	CW	250				KLR	OS	MT	CO	
28	1K75CK8199	4300M	250m†	4250M-4350M	CW	900	35mØ			KLR	OS	FF	WA	500m
29	8199	4300M	250m†	4.250G-4.350G	CW	900	35mØ			KLR	OS	FF	WA	.50
30	1K75CS	4300M	300m†	4.250G - 4.350G	CW	700	65m			KLR	OS	VT	WA	1.5 Δ
31	BLK003	4300M	300m†	4.250G - 4.350G	CW	700	85			KLR	OS	FF	WA	.50
32	1K75CLA	4350M	240m	4.300G - 4.375G	CW	900	85m			KLR	OS	MT	WA	.63
33	K15	4375M		3090-5660M			40m			KLR	OS		WA	
34	JAN2K22	4575M	100m	4.240G - 4.910G		350	37m			KLR	OS	MT	CO	.11 Δ
35	2K22	4575M	115m	4.240G-4.910G	CW	300	32m			KLR	OS	MT	CO	
36	QKK1313	4650M	70m	4.300G-5.000G	CW	300	32m			KLR	OS	MT	CO	
37	TV2126	4700M	1.1 †	4.330G-5.070G		1000	105mØ			KLR	OS	MT	WA	
38	VA259J	4700M	1.5 †	4.400G - 5.000G	CW	750	80m			KLR	OS	MT	WA	1.38
39	VA259T	4700M	1.5 †	4.400G - 5.000G	CW	750	80m			KLR	OS	MT	WA	1.38
40	1K125CB	4700M	1.8 †	4.400G - 5.000G	CW	1100	110m			KLR	OS	MT	WA	1.12
41	TV2125CBA	4700M	1.8 †	4.400G-5.000G		1000	105mØ			KLR	OS	MT	WA	
42	1K125CD	4700M	2.0 †	4.330G - 5.070G	CW	1000	105m			KLR		MT		1.12
43	QKK1289	4700M	2.5	4.400G-5.000G	CW	750	85m			KLR	OS	MT	CO	
44	1K125CB-B	4900M	1.8 †	4.800G - 5.000G	CW	1000	105m			KLR		MT		1.12
45	TV2125CBB	4900M	1.8 †	4.800G-5.000G		1000	105mØ			KLR	OS	MT	WA	
46	TV220J	5050M	600m†	4.900G-5.200G		750	80mØ			KLR	OS	MT	WA	
47	VA220J	5050M	1.0	4.900G - 5.200G	CW	750	80m			KLR	OS	MT	WA	.50
48	K352	5329M	30m	3158-7500M			40m			KLR	OS		WA	
49	VA221H	5400M	20m†	5.250G-5.560G	CW	250	40m			KLR	OS	MT	WA	.44
50	TV221H	5405M	20m†	5.250G-5.560G		250	35mØ			KLR	OS	MT	WA	
51	JAN6115A	5500M	70m†	5.100G-5.900G		330	35m			KLR	OS	MT	WA	90m
52	6584/OMK7000/TK69	5500M	80m	5.100G-5.900G	CW	330	35m			KLR		MT	CO	
53	6115A	5500M	100m	5.100G-5.900G	CW	300	32m			KLR	OS	MT	CO	90m
54	JAN6584	5500M	135m	5.100G-5.900G	CW	330	35m			KLR	OS	MT	CO	
55	TV2412M	5550M	55m†	5.225G-5.875G		300	30mØ			KLR	OS	MT	WA	
56	JAN7471	5650M	30m†	5.500G - 5.800G	CW	350	63m			KLR	OS	SR	WA	
57	OMK7005/TK80	5650M	85m	5.350G-5.950G	CW	330	35m			KLR		MT	CO	
58	OMK7006/TK108	5650M	120m	5.350G-5.950G	CW	330	35m			KLR		MT	CO	
59	VA118A	5650M	125m	5.400G - 5.900G	CW	775	45m			KLR	OS	MT	WA	
60	VA244K	5650M	1.0	5.400G-5.900G		750	80m			KLR	OS	MT	WA	1.38
61	JAN8316	5680M	1.2 †	5.430G-5.930G		900	110m			KLR	OS	MT	WA	
62	BT1316	5700M	100m	3.800G - 7.600G	CW	1000	26m			KLR	OS	MT	CO	.12
63	6236	5700M	125m	3.800G-7.600G	CW	1000	20m			KLR	OS	MT	CO	120m
64	BT6236A	5700M	125m	3.800G - 7.600G	CW	1000	26m			KLR	OS	MT	CO	.12
65	QKK1316	5900M	125m	3.800G-8.000G	CW	1000	26m			KLR	OS	MT	CO	
66	K806	5929.5M	400m	5725-6134M						KLR	OS		WA	
67	JAN6236	5938M	100m†	4.190G - 7.685GØ		600	22m			KLR	OS	SR		.12
68	JAN6460	5950M	700m†	5.300G - 6.600G	CW	775	80m			KLR	OS	VT	WA	
69	QKK1767	6000M	10m	3.800G-8.200G	CW	1000	23m			KLR	OS	MT	CO	120m
70	6V23	6075M	500m	6.025G - 6.125G	CW	800	80m			KLR	OS	MT	WA	
71	VA220F	6075M	1.0	5.925G - 6.225G	CW	750	80m			KLR	OS	MT	WA	.50
72	VA222F	6075M	1.0	5.925G - 6.225G	CW	750	80m			KLR	OS	MT	WA	.75
73	6V221	6075M	1.2	5.925G - 6.225G	CW	775	80m			KLR	OS	MT	WA	
74	6V211	6135M	35m	5.985G - 6.285G	CW	330	35m			KLR	OS	MT	WA	
75	VA221F	6135M	40m	5.985G - 6.285G	CW	330	35m			KLR	OS	MT	WA	.50
76	VRJ7203A	6175M	100m	5.925G-6.425G	CW	400	48m			KLR	OS	MT	WA	1.7
77	QKK549	6175M	130m	5.925G-6.425G	CW	300	32m			KLR	OS	MT	CO	
78	VA259AT	6175M	1.5 †	5.925G - 6.425G	CW	750	80m			KLR	OS	MT	WA	1.38
79	QKK965	6175M	2.0	5.925G-6.425G	CW	750	85m			KLR	OS	MT	CO	
80	QKK754A	6175M	2.5	5.925G-6.425G	CW	750	85m			KLR	OS	MT	CO	
81	VA259A	6200M	1.0 †	5.900G - 6.500G	CW	750	85m			KLR	OS	MT	WA	1.38
82	6V200	6275M	400m	6.225G - 6.325G	CW	775	80m			KLR	OS	MT	WA	
83	VA220E	6275M	1.0	6.125G - 6.425G	CW	750	80m			KLR	OS	MT	WA	.50
84	VA222E	6275M	1.0	6.125G - 6.425G	CW	750	80m			KLR	OS	MT	WA	.75
85	EM1095	6300M	370m†	5.900G - 6.700G*		600	65m			KLR		FF		
86	K32	6349.5M	15m	5556-7143M			50m			KLR	OS			
87	VA259	6400M	1.0	4.400G-8.400G	CW	750	80m			KLR	OS	MT	WA	1.37
88	X26	6400M	1.65	5.3G-7.5G†	CW	775	80m			KLR	OS	MT	WA	1.19
89	VA221E	6435M	40m	6.285G - 6.585G	CW	330	35m			KLR	OS	MT	WA	.50
90	VA244	6450M	1.0	4.400G - 8.500G†	CW	750	80m			KLR	OS	MT	WA	1.37
91	VA222G	6500M	1.0	6.425G - 6.575G	CW	750	80m			KLR	OS	MT	WA	.75
92	6V203	6500M	1.2	6.425G - 6.575G	CW	775	80m			KLR	OS	MT	WA	
93	VA220G	6550M	1.0	6.425G-6.575G	CW	750	80m			KLR	OS	MT	WA	500m
94	QKK1565	6650M	1.5	6.425G-6.875G	CW	750	85m			KLR	OS	MT	CO	
95	VA259BT	6650M	1.5 †	6.425G - 6.875G	CW	750	80m			KLR	OS	MT	WA	1.38
96	2K26	6660M	120m	6.250G-7.060G	CW	300	30m			KLR	OS	MT	CO	90m
97	TV220B	6675M	1.0 †	5.925G-7.425G		750	80mØ			KLR	OS	MT	WA	
98	TV220C	6675M	1.0 †	5.925G-7.425G		750	80mØ			KLR	OS	MT	WA	
99	TV220D	6675M	1.0 †	5.925G-7.425G		750	80mØ			KLR	OS	MT	WA	
100	TV220E	6675M	1.0 †	5.925G-7.425G		750	80mØ			KLR	OS	MT	WA	
101	TV220F	6675M	1.0 †	5.925G-7.425G		750	80mØ			KLR	OS	MT	WA	
102	TV220G	6675M	1.0 †	5.925G-7.425G		750	80mØ			KLR	OS	MT	WA	
103	TV222B	6675M	1.0 †	5.925G-7.425G		750	80mØ			KLR	OS	MT	WA	
104	TV222C	6675M	1.0 †	5.925G-7.425G		750	80mØ			KLR	OS	MT	WA	
105	TV222D	6675M	1.0 †	5.925G-7.425G		750	80mØ			KLR	OS	MT	WA	
106	TV222E	6675M	1.0 †	5.925G-7.425G		750	80mØ			KLR	OS	MT	WA	
107	TV222F	6675M	1.0 †	5.925G-7.425G		750	80mØ			KLR	OS	MT	WA	
108	TV222G	6675M	1.0 †	5.925G-7.425G		750	80mØ			KLR	OS	MT	WA	
109	VA221G	6695M	40m	6.585G-6.705G	CW	330	35m			KLR	OS	MT	WA	
110	YK1030	6700M	1.8	6.200G-7.200G	CW	750	85m			KLR	OS	MT	WA	926m

2. SOURCE,AMPLIFIER,OUTPUT TUBES

IN ORDER OF (1)TUBE TYPE (2)CENTER FREQUENCY (3)POWER OUTPUT (4)TYPE No.

LINE No.	4 TYPE No.	2 CENTER FREQ. (Hz)	3 POWER OUTPUT (W)	FREQUENCY RANGE (Hz)	MAX. DUTY CYCLE	MAX. BEAM VOLTAGE (Note 1) (V)	MAX. CATH-ODE CUR. (A)	GAIN (dB)	NF (dB)	DESCRIPTION 1 TUBE TYPE	FUNC-TION	TUN-ING	OUT PUT	WEIGHT (lb)
1	TV221B	6705M	25m†	5.860G-7.550G		300	32mØ			KLR	OS	MT	WA	
2	TV221C	6705M	25m†	5.860G-7.550G		300	32mØ			KLR	OS	MT	WA	
3	TV221D	6705M	25m†	5.860G-7.550G		300	32mØ			KLR	OS	MT	WA	
4	TV221E	6705M	25m†	5.860G-7.550G		300	32mØ			KLR	OS	MT	WA	
5	TV221F	6705M	25m†	5.860G-7.550G		300	32mØ			KLR	OS	MT	WA	
6	TV221G	6705M	25m†	5.860G-7.550G		300	32mØ			KLR	OS	MT	WA	
7	TV221K	6705M	25m†	5.860G-7.550G		300	32mØ			KLR	OS	MT	WA	
8	QKK531	6725M	130m	6.575G-6.875G	CW	300	32m			KLR	OS	MT	CO	
9	QKK1571	6725M	130m	6.575G-6.875G	CW	300	32m			KLR	OS	MT	CO	
10	VA220D	6725M	1.0	6.575G - 6.875G	CW	750	80m			KLR	OS	MT	WA	.50
11	VA222D	6725M	1.0	6.575G - 6.875G	CW	750	80m			KLR	OS	MT	WA	.75
12	7V204	6725M	1.2	6.575G - 6.875G	CW	775	80m			KLR	OS	MT	WA	
13	7V224	6725M	1.2	6.575G - 6.875G	CW	775	80m			KLR	OS	MT	WA	
14	7V254	6725M	1.2	6.575G - 6.875G	CW	800	80m			KLR	OS	MT	WA	
15	VA259N	6725M	1.5 †	6.575G - 6.875G	CW	750	80m			KLR	OS	MT	WA	1.38
16	QKK910	6725M	2.0	6.575G-6.875G	CW	750	85m			KLR	OS	MT	CO	
17	QKK755A	6725M	2.5	6.575G-6.875G	CW	750	85m			KLR	OS	MT	CO	
18	TV244	6800M	700m†	5.100G-8.500G		750	80mØ			KLR	OS	MT	WA	
19	7V272	6800M	1.3	6.400G - 7.200G	CW	800	90m			KLR	OS	MT	WA	
20	5976	6812M	110m	6.200G-7.425G	CW	300	32m			KLR	OS	MT	CO	90m
21	VA259B	6813M	1.0 †	6.500G - 7.125G	CW	750	85m			KLR	OS	MT	WA	1.38
22	VA221D	6855M	40m	6.705G - 7.005G	CW	330	35m			KLR	OS	MT	WA	.50
23	7V242	6900M	1.3	6.500G - 7.300G	CW	800	90m			KLR	OS	MT	WA	
24	VA326	6900M	3.5 †	5.900G - 7.800G	CW	750	150m			KLR	OS	MT	WA	1.5
25	5721	7000M	100m	2.000G-12.000G	CW	1250	26m			KLR	OS	MT	CO	
26	YK1021	7000M	100m	6.500G - 7.500G	CW	330	40m			KLR	OS	MT	WA	.552
27	QKK532	7000M	130m	6.875G-7.125G	CW	300	32m			KLR	OS	MT	CO	
28	YK1010	7000M	130m	6.700G - 7.400G	CW	2600	20m			KLR	OS	MT	WA	2.21
29	VA220C	7000M	1.0	6.875G - 7.125G	CW	750	80m			KLR	OS	MT	WA	.50
30	VA222C	7000M	1.0	6.875G-7.125G	CW	750	80m			KLR	OS	MT	WA	750m
31	7V205	7000M	1.2	6.875G - 7.125G	CW	775	80m			KLR	OS	MT	WA	
32	VA259DT	7000M	1.5 †	6.875G - 7.125G	CW	750	80m			KLR	OS	MT	WA	1.38
33	QKK756A	7000M	2.5	6.875G-7.125G	CW	750	85m			KLR	OS	MT	CO	
34	7V312	7020M	1.1	6.575G-7.455G	CW	800	110m			KLR	OS	MT	WA	
35	TK6	7100M	200m	6.500G-7.700G	CW	330	35m			KLR	OS	MT	CO	110m
36	TK61	7100M	200m	6.500G-7.700G	CW	330	35m			KLR	OS	MT	CO	110m
37	K314A	7100M	500m	7000-7200M			90m			KLR	OS		WA	
38	K314	7100M	800m	7000-7200M			90m			KLR	OS		WA	
39	VA221C	7105M	40m	6.955G-7.255G	CW	330	35m			KLR	OS	MT	WA	500m
40	TV259	7200M	1.0 †	5.900G-8.500G		750	80mØ			KLR	OS	MT	WA	
41	JAN8821	7275M	1.0 †	7.125G-7.425G		775	80m			KLR	OS	MT	WA	
42	VA220B	7275M	1.0	7.125G-7.425G	CW	750	80m			KLR	OS	MT	WA	500m
43	JANVA220B	7275M	1.0 †	7.125G-7.425G		775	80m			KLR		MT	WA	
44	LD857	7275M	1.2	7.125G - 7.425G	CW	800	80m			KLR	OS	MT	WA	
45	8821	7275M	1.7	7.125G-7.425G	CW	775	70m			KLR	OS	MT	WA	750m
46	VA222B8821	7275M	1.70	7.125G-7.425G		750	70m			KLR	OS	MT	WA	750m
47	JAN5721	7310M	100m†	3.555G-11.065G		1250	26m			KLR	OS	SR	CO	
48	QKK623	7388M	130m	7.125G-7.650G	CW	300	32m			KLR	OS	MT	CO	
49	VA221B	7405M	40m	7.255G-7.555G	CW	330	35m			KLR	OS	MT	WA	500m
50	QKK752	7438M	100m	7.125G-7.770G	CW	300	32m			KLR	OS	MT	CO	
51	QKK967	7438M	2.0	7.125G-7.770G	CW	750	85m			KLR	OS	MT	CO	
52	QKK758A	7438M	2.5	7.125G-7.750G	CW	750	85m			KLR	OS	MT	CO	
53	VA259CT	7440M	1.5 †	7.125G - 7.750G	CW	750	80m			KLR	OS	MT	WA	1.38
54	VA259R	7440M	1.5 †	7.125G - 7.750G	CW	750	80m			KLR	OS	MT	WA	1.38
55	JANDOD001	7447M	90m†	7.050G-7.845G		330	36m			KLR		MT	CO	
56	QKK1333	7447M	100m	7.050G-7.845G	CW	300	32m			KLR	OS	MT	CO	
57	VA259C	7450M	1.0 †	7.100G - 7.800G	CW	750	80m			KLR	OS	MT	WA	1.38
58	7V273	7450M	1.3	7.100G - 7.800G	CW	800	90m			KLR	OS	MT	WA	
59	K31	7542.5M	15m	6977-8108M			50m			KLR	OS			
60	JAN2K48	7575M	5.0m†	4.300G - 10.85GØ	CW	1500	15m			KLR	OS	SR	CO	
61	8849	7575M	700m†	7.425G-7.750G	CW	760	70m			KLR	OS	VT	WA	750m
62	YK1100	7575M	1.2	7.425G - 7.725G	CW	900	110m			KLR	OS	MT	WA	.928
63	VA222A	7577M	1.0	7.425G-7.75G	CW	750	80m			KLR	OS	MT	WA	750m
64	JAN8849	7587M	700m†	7.425G-7.750G		775	80m			KLR	OS	MT	WA	
65	TV220A	7587M	700m†	7.425G-7.750G		750	80mØ			KLR	OS	MT	WA	
66	TV222A	7587M	700m†	7.425G-7.750G		750	80mØ			KLR	OS	MT	WA	
67	8V257	7588M	1.0	7.425G - 7.750G	CW	800	80m			KLR	OS	MT	WA	
68	VA220A	7588M	1.0	7.425G-7.75G	CW	750	80m			KLR	OS	MT	WA	500m
69	YK1050	7600M	110m	7.000G-8.200G	CW	300	32m			KLR	OS	MT	CO	110m
70	K315A	7650M	500m	7550-7750M			90m			KLR	OS		WA	
71	K315	7650M	800m	7550-77550M			90m			KLR	OS		WA	
72	TV221A	7700M	20mt	7.550G-7.850G		300	32mØ			KLR	OS	MT	WA	
73	VA225	7750M	700m	7.000G - 8.500G†	CW	785	85m			KLR	OS	MT	WA	.63
74	VA264	7800M	100m	7.100G - 8.500G	CW	500	50m			KLR	OS	MT	WA	.41
75	YK1020	7900M	100m	7.600G-8.200G	CW	300	35m			KLR	OS	MT	WA	551m
76	YK1023	7900M	100m	7.600G-8.200G	CW	300	35m			KLR	OS	TT	WA	551m
77	TV222Z	7900M	600m†	7.750G-8.100G	CW	750	80m			KLR	OS	MT	WA	
78	8V228	7925M	1.0	7.750G - 8.100G	CW	775	180m			KLR	OS	MT	WA	
79	VA220Z	7925M	1.0	7.75G-8.1G	CW					KLR	OS	MT	WA	500m
80	VA222Z	7925M	1.0	7.75G-8.1G	CW	750	80m			KLR	OS	MT	WA	750m
81	R9689/1	8.0G	60m	3.0G-12G		300	40m			KLR	AM	MT	WA	
82	TV225A	8000M	700m	7.500G-8.500G	CW	750	80m			KLR	OS	MT	WA	
83	VA215H	8000M	750m†	7.500G - 8.500G	CW	550	85m			KLR	OS	MT	WA	.63
84	VA297T	8000M	1.0 †	7.500G - 8.500G	CW	800	85m			KLR	OS	MT	WA	.75
85	VA259E	8050M	1.0 †	7.700G - 8.400G	CW	750	80m			KLR	OS	MT	WA	1.38
86	8V274	8050M	1.3	7.700G - 8.400G	CW	800	90m			KLR	OS	MT	WA	
87	VA259P	8050M	1.5 †	7.700G - 8.400G	CW	750	80m			KLR	OS	MT	WA	1.38
88	QKK753	8075M	100m	7.740G-8.400G	CW	300	32m			KLR	OS	MT	CO	
89	QKK1563	8075M	100m	7.750G-8.400G	CW	300	32m			KLR	OS	MT	CO	
90	QKK968	8075M	2.0	7.740G-8.400G	CW	750	85m			KLR	OS	MT	CO	
91	QKK759A	8075M	2.5	7.750G-8.400G	CW	750	85m			KLR	OS	MT	CO	
92	VA259ET	8080M	1.5 †	7.750G - 8.400G	CW	750	80m			KLR	OS	MT	WA	1.38
93	VA259F	8130M	1.0 †	7.750G - 8.500G	CW	750	80m			KLR	OS	MT	WA	1.38
94	VA259FT	8250M	1.5 †	8.000G - 8.500G	CW	750	80m			KLR	OS	MT	WA	1.38
95	K30	8391.5M	12m	7692-9091M			50m			KLR	OS		CO	
96	K30M	8391.5M	12m	7692-9091M			50m			KLR	OS	MT	CO	
97	K359	8425M	90m	8.100G - 8.750G	CW	380	60m			KLR	OS	MT	WA	.40
98	K3079	8425M	90m	8.05G-8.80G	CW	380	50m			KLR	OS	MT	WA	.375
99	X13C	8500M	50m	7.000G - 10.00G	CW	500	60m			KLR	OS	MT	WA	.37
100	VA297U	8500M	1.0 †	8.200G - 8.800G	CW	800	85m			KLR	OS	MT	WA	.75
101	K316A	8600M	500m	8500-8700M			90m			KLR	OS		WA	
102	K316	8600M	800m	8500-8700M			90m			KLR	OS		WA	
103	BL843	8750M	15m†	8.000G - 9.500G†		210	23			KLR		FF	WA	.44
104	BL829	8750M	400m†	8.000G - 9.500G†		500	70			KLR		FF	WA	.37
105	BLK829	8800M	450m†	8.780G-8.820G	CW	550	75m			KLR	OS	FF	WA	370mΔ
106	F2922	8800M	450m	8.780G-8.820G	CW	500	60m			KLR	OS	MT	WA	375m
107	TV55F	8800M	450m†			500	60 Ø			KLR	OS	MT	WA	
108	V55F	8800M	450m†	8.780G-8.820G	CW	500	60m			KLR	OS	MT	WA	500m
109	VC722A	8800M	500m†	8.800G	CW	500	70m			KLR	OS	FF	WA	370m
110	VA273D	8800M	1.0 †	8.500G - 9.100G	CW	750	80m			KLR	OS	MT	WA	

SYMBOLS AND CODES EXPLAINED IN INTERPRETER

2. SOURCE,AMPLIFIER,OUTPUT TUBES

IN ORDER OF (1)TUBE TYPE (2)CENTER FREQUENCY (3)POWER OUTPUT (4)TYPE No.

LINE No.	4 TYPE No.	2 CENTER FREQ. (Hz)	3 POWER OUTPUT (W)	FREQUENCY RANGE (Hz)	MAX. DUTY CYCLE	MAX. BEAM VOLTAGE (Note 1) (V)	MAX. CATH-ODE CUR. (A)	GAIN (dB)	NF (dB)	DESCRIPTION 1 TUBE TYPE	FUNC-TION	TUN-ING	OUT PUT	WEIGHT (lb)
1	QKK1649	8825M	35m	8.625G-9.025G	CW	300	32m			KLR	OS	MT	CO	
2	K3098	8840M	60m	8.800G-8.885G	CW	375	45m			KLR	OS	MT	WA	.30
3	K308	8850M	.04	8.800G - 8.900G	CW	400	.05			KLR	OS	MT	WA	.50
4	K391A	8850M	60m	8.800G - 8.900G	CW	400	50m			KLR	OS	MT	WA	.30
5	6390	8875M	60m	6.700G-11.050G	CW	1250	20m			KLR	OS	MT	CO	120m
6	JAN6390	8882M	45m†	6.700G-11.065GØ		700	21m			KLR	OS	SR	CC	
7	9V54	8900M	350m	8.200G - 9.600G	CW	500	70m			KLR	OS	MT	WA	
8	MXK61	8950M	500m	8.750G - 9.150G	CW	490	70m			KLR	OS	MT	CO	
9	VA217HL	8970M	500m†	8.570G-9.370G	CW	500	70m			KLR	OS	MT		
10	QKK1768	8975M	10m	6.950G-11.000G	CW	1250	23m			KLR	OS	MT	CO	120m
11	QKK1769	8975M	30m	6.950G-11.000G	CW	1250	23m			KLR	OS	MT	CO	120m
12	BT860	9000M	40m	7.000G - 11.00G	CW	1250	26m			KLR	OS	MT	CO	.12
13	BT1315	9000M	40m	7.000G - 11.00G	CW	1000	26m			KLR	OS	MT	CO	.12
14	K3097	9000M	50m	8740M-9260M	CW	350	28m			KLR	OS	MT	WA	341m
15	BT6390A	9000M	60m	7.000G - 11.00G	CW	1250	26m			KLR	OS	MT	CO	
16	QKK860	9000M	60m	7.000G-11.000G	CW	1250	26m			KLR	OS	MT	CO	
17	QKK1315	9000M	60m	7.000G-11.055G	CW	1250	26m			KLR	OS	MT	CO	
18	VA297V	9000M	1.0 †	8.500G - 9.500G	CW	800	.085			KLR	OS	MT	WA	.75
19	BLK024	9000M	20	8.500G - 9.600G	CW	300	450m			KLR	OS	MT	WA	.25
20	BT6390B	9032M	35m	7315M-10750M		1250	21m			KLR	OS	MT	CO	
21	203B	9050M	20m†	8.500G - 9.600G		300	37			KLR			WA	.25
22	203J	9050M	20m†	8.500G - 9.600G		300	37			KLR			WA	.25
23	JAN6975	9050M	20m	8.500G - 9.600G	CW	350	52m			KLR	OS	MT	WA	.25
24	TH2230	9050M	20m	8.500G-9.600G	CW	350	32m			KLR	OS	VT	CC	.22
25	TH2231	9050M	20m	8.500G-9.600G		300	45m			KLR		MT		
26	TH2234	9050M	20m	8.500G-9.660G	CW	300	22m			KLR	OS	TT	WA	.22
27	TV217C	9050M	20m†	8.500G-9.600G		250	30			KLR	OS	MT	WA	
28	TV2217H	9050M	20m†	8.500G-9.600G		250	30			KLR	OS	MT	WA	
29	VA203C,G,H,J	9050M	20m†	8.500G - 9.600G†	CW	350	37m			KLR	OS	MT	WA	.19
30	6780/MXK47	9050M	25m†	8.500G-10.000G		200				KLR		MT	WA	
31	6975/MXK21	9050M	30m†	8.500G-9.600G		300				KLR	OS	MT	WA	
32	TV217CH	9050M	30m†	8.500G-9.600G		250	30mØ			KLR	OS	MT	WA	
33	K3078-6975	9050M	35m	8.500G-9.600G	CW	350	45m			KLR	OS	MT	WA	.20
34	K3111	9050M	35m	8.500G-9.600G	CW	350				KLR	OS	MT	WA	262m
35	6975	9050M	40m	8.500G-9.600G	CW	350	450m			KLR	OS	MT	WA	.31
36	VA201B	9050M	40m†	8.500G - 9.600G	CW	350	55m			KLR	OS	MT	WA	.37
37	VA203B	9050M	45m	8.500G - 9.600G	CW	350	52m			KLR	OS	MT	WA	.19
38	VA203B/6975	9050M	45m	8.500G - 9.600G	CW	350	45m			KLR	OS	MT	WA	.19
39	VA217C	9050M	54m	8.500G - 9.600G	CW	350	45m			KLR	OS	MT	WA	.37
40	K351	9050M	80m	8.500G - 9.600G	CW	350	55m			KLR	OS	MT	WA	.40
41	VA265	9050M	600m	8.500G - 9.600G	CW	500	70m			KLR	OS		WA	.37
42	K20	9077.5M		8571-9584M			32m			KLR	OS		CO	
43	2K25A	9080M	20m†	8.500G-9.660G		300	32			KLR	OS	MT	WA	
44	OMK7001/TK106	9080M	20m	8.500G-9.660G	CW	330	35m			KLR		MT	CO	
45	OMK7002/6116/TK62	9080M	20m	8.500G-9.660G	CW	350	32m			KLR		HT	CO	
46	OMK7004/6940/TK76	9080M	20m	8.500G-9.660G	CW	350	32m			KLR		HT	CO	
47	QKK1459	9080M	25m	8.500G-9.660G	CW	300	32m			KLR	OS	MT	CO	
48	2K45	9080M	32m	8.500G-9.660G	CW	300	30m			KLR	OS	TT	CO	180m
49	6116	9080M	32m	8.500G-9.660G	CW	300	32m			KLR	OS	TT	CO	
50	6845	9080M	32m	8.500G-9.660G	CW	300	32m			KLR	OS	TT	CO	
51	OMK7003/TK140	9080M	40m	8.500G-9.600G	CW	350	32m			KLR		HT	CO	
52	TH2232	9080M	40m†	8.500G-9.660G	CW	350	32m			KLR	OS	VT	WA	220m
53	2K25	9080M	45m	8.50G-9.66G	CW	330	37m			KLR	OS	MT	WA	143m
54	K27	9088.5M	17m	8500-9677M			30m			KLR	OS		CO	
55	K700-1	9100M	35m*	8500-9700M			50m			KLR	OS		WA	
56	VA273G	9100M	750m	9.000G - 9.200G	CW	750	80m			KLR	OS	MT	WA	.75
57	VA297	9100M	1.0	7.500G - 10.70G†	CW	750	80m			KLR	OS	MT	WA	.75
58	723A/B	9125M	30m	8.702G - 9.548G	CW	330	37m			KLR	OS	M T	CO	
59	K3118	9200M	80m	9.0G-9.4G,32MØ	CW	400	50m			KLR	OS	MT	WA	352m
60	V270	9225M	25m	8.500G-10.000G		300	32m			KLR	OS	MT	WA	500m
61	6310/MXK14	9250M	15m†	8.500G-10.000G		200				KLR	OS	MT		
62	6312/MXK15	9250M	15m†	8.500G-10.000G		200				KLR	OS	MT	WA	
63	6314/MXK16	9250M	15m†	8.500G-10.000G		200				KLR	OS	MT	WA	
64	6781/MXK11	9250M	15m†	8.500G-10.000G		200				KLR	OS	MT		
65	JAN6310	9250M	25m†	8.500G - 10.00G	CW	300	42m			KLR	OS	MT	WA	
66	6316	9250M	25m	8.500G-10.000G	CW	350	1.2			KLR	OS	MT	WA	.44
67	V270/6312	9250M	25m†	8.5G-10G*;60MØ	CW	350	42m			KLR	OS	MT	WA	496m
68	JAN6315	9250M	30m†	8.500G-10.00G		385	74m			KLR	OS	MT	WA	370m
69	JAN6781	9250M	40m†	8.500G - 10.00G		350	42m			KLR	OS	MT	WA	.50
70	BL803	9250M	40m†	8.500G - 10.00G		300	23			KLR			WA	.50
71	K391	9250M	40m	9.160G - 9.340G	CW	325	45m			KLR	OS	MT	WA	.25
72	6315	9250M	48m	8.500G-10.000G	CW	385	1.2			KLR	OS	MT	WA	.37
73	BL847	9250M	50m†	8.500G - 10.00G		300	32			KLR		MT	WA	.44
74	8848	9250M	65m†	8.450G-10.05G	CW	400	1.2			KLR	OS	VT	WA	375m
75	TV262	9250M	65m†	8.450G-10.050G		350	42			KLR	OS	MT	WA	
76	V262	9250M	65m	8.450G-10.050G		350	42m			KLR	OS	MT	WA	380m
77	6310	9250M	70m	8.500G-10.000G	CW	6300	1.2			KLR	OS	MT	WA	.37
78	6312	9250M	70m	8.500G-10.000G	CW	300	32m			KLR	OS	MT	WA	440m
79	6915	9250M	70m	8.5G-10.0G	CW	350	42m			KLR	OS	MT	WA	500m
80	MXK48	9250M	70m	8.500G - 10.00G	CW	350	42m			KLR	OS	MT	WA	
81	VA270VP6915	9250M	70m	8.5G-10.0G	CW	350	42m			KLR	OS	MT	WA	500m
82	X13B	9250M	100m†	7.500G-11.000G		500	60 Ø			KLR	OS	MT	WA	
83	V157	9250M	200m	8.500G - 10.00G	CW	400	60m			KLR	OS	MT	WA	.37
84	MXK32	9250M	320m†	8.500G - 10.00G	CW	500				KLR	OS		WA	
85	BL825	9250M	500m†	8.50G-10.00G*	CW	500	65			KLR	OS	FF	CO	500m
86	TV58	9250M	500m†	8.500G-10.000G		500	70			KLR	OS	MT	WA	
87	9V58	9250M	750m	8.500G - 10.00G	CW	525	75m			KLR	OS	MT	WA	.33
88	MXK12	9250M	40 †	8.500G - 10.00G	CW	300				KLR	OS	MT	WA	
89	BL800A	9250M	1500	8.500G - 10.00G	CW	200	42m			KLR	OS		WA	.44
90	6781	9275M	35m	8.500G - 10.00G	CW	300				KLR	OS			.44
91	6780	9275M	100m	8.500G - 10.00G	CW	300				KLR	OS	MT		
92	V58C	9300M	500m†	8.5G-10G	CW	500	60m			KLR	OS	MT		
93	BLK002	9300M	1.0 †	9.300G	CW	600	700m			KLR	OS	FF	WA	.50
94	VA318	9300M	150 †	9.0G-9.6G	5.0m	3500	800m			KLR	OS	MT	WA	1.0
95	K3007	9345M	40m	9.295G - 9.395G	CW	375	45m			KLR	OS	MT	WA	.30
96	K3094	9345M	40m	9295M-9395M	CW	375	45m			KLR	OS	MT	WA	341m
97	K19	9349M		9174-9524M			32m			KLR	OS		CO	
98	K27A	9349M	17m	9174-9524M			30m			KLR	OS		CO	
99	K728	9384M	16m	9091-9677M			50m			KLR	OS		CO	
100	K728T	9384M	16m	9091-9677M			50m			KLR	OS		CO	
101	VA203L	9400M	12m†	9.250G - 9.550G†	CW	350	37m			KLR	OS	MT	WA	.25
102	VA203H	9400M	14m†	9.250G-9.550G	CW	300	35m			KLR	OS	MT	CO	
103	VA273H	9400M	1.0	9.1G-9.7G	CW	750	80m			KLR	OS	MT	WA	750m
104	BLK022	9405M	20m†	9.365G-9.445G	CW	350	52m			KLR	OS	MT	WA	500m
105	KS9-20D	9412M	45m	9.325G-9.50G	CW	330	37m			KLR	OS	MT	CO	143m
106	QKK1789	9430M	30m	9.320G-9.540G	CW	300	25m			KLR	OS	MT	CO	
107	KS9-20B	9435M	45m	9.32G-9.55G	CW	330	37m			KLR	OS	MT	CO	143m
108	K3077	9450M	50m	9.35G-9.55G	CW	350	30m			KLR	OS	MT	WA	.310
109	K3091	9450M	50m	9350M-9550M	CW	350	28m			KLR	OS	MT	WA	341m
110	K3081	9450M	55m	9350M-9550M	CW	350	28m			KLR	OS	MT	WA	341m

SYMBOLS AND CODES EXPLAINED IN INTERPRETER

2. SOURCE,AMPLIFIER,OUTPUT TUBES

IN ORDER OF (1)TUBE TYPE (2)CENTER FREQUENCY (3)POWER OUTPUT (4)TYPE No.

LINE No.	4 TYPE No.	2 CENTER FREQ. (Hz)	3 POWER OUTPUT (W)	FREQUENCY RANGE (Hz)	MAX. DUTY CYCLE	MAX. BEAM VOLTAGE (Note 1) (V)	MAX. CATH-ODE CUR. (A)	GAIN (dB)	NF (dB)	DESCRIPTION 1 TUBE TYPE	FUNC-TION	TUN-ING	OUT PUT	WEIGHT (lb)
1	YK1082	9450M	60m	9.300G-9.600G	CW	320	30m			KLR	OS	MT	WA	353m
2	8979	9500M	20m†	8.500G-10.500G	CW	330	37m			KLR	OS	MT	WA	500mΔ*
3	JAN8979	9500M	20m†	8.500G-10.500G	CW	330	37m			KLR	OS	MT	WA	500mΔ*
4	BLK011	9500M	20m†	8.500G - 10.50G	CW	300	32			KLR	OS	MT	WA	.50
5	BLK001	9500M	25m†	8.500G - 10.50G		300	32			KLR		MT	WA	.50
6	BL807	9500M	50m†	8.500G - 10.50G	CW	350	60			KLR	OS	MT	WA	.50
7	V290/6314	9500M	90m	8.5G-10.5G*;60MØ	CW	385	74m			KLR	OS	MT	WA	496m
8	6314	9500M	120m	8.500G-10.500G	CW	385	1.2			KLR	OS	MT	WA	.44
9	TH2235	9500M	200m†	9.100G-9.900G	CW	375	45m			KLR	OS	MT	WA	.44
10	VA297W	9500M	1.0 †	9.200G - 9.800G	CW	800	85m			KLR	OS	MT	WA	.75
11	K29	9584.5M	12m	8824-10345M			50m			KLR	OS			
12	K29M	9584.5M	12m	8824-10345M			50m			KLR	OS	MT		
13	TV232	9600M	155m†	9.200G-10.000G		350	45			KLR	OS	MT	WA	
14	VA232	9600M	265m	9.200G - 10.00G	CW	375	40m			KLR	OS	MT	WA	.44
15	VA272	9600M	500m†	8.200G-11.00G	CW	600	70m			KLR	OS	MT	WA	.50
16	K335	9620M	25m	9.555G - 9.685G	CW	400	50m			KLR	OS	MT	WA	.50
17	KS9-20G	9695M	25m	9.650G - 9.740G	CW	300	22m			KLR	OS	MT	CO	
18	YK1081	9700M	20m	9.4G-10G	CW	330	35m			KLR	OS		WA	350m
19	BLK005	9750M	500m†	9.000G - 10.50G	CW	500	70			KLR	OS	MT	WA	.50
20	VA249	9750M	107	8.500G - 11.00G	CW	350	26m			KLR	OS	MT	WA	.31
21	V55D	9790M	450m†	9.76G-9.82G	CW	500	66m			KLR	OS	MT	WA	500m
22	TV242	9800M	500m†	8.500G-11.10G	CW	500	66m			KLR	OS	MT	WA	
23	TV55E	9830M	450m†			500	60 Ø			KLR	OS	MT	WA	
24	V55E	9830M	700m	9.81G-9.85G	CW	500	60m			KLR	OS	MT	WA	500m
25	8895	9830M	710m	9.810G-9.850G	CW	500	1.2 Ø			KLR	OS	FF	WA	.50
26	VRX2200A1	9830M	450M	9.800G-9.860G	CW	510	60m			KLR	OS	MT	WA	500m
27	TV55	9850M	200m†	8.200G-11.500G		500	70 Ø			KLR	OS	MT	WA	
28	V55B	9850M	600m	8.2G-11.5G	CW	500	70m			KLR	OS	MT	WA	500m
29	VA242	10000M	500m†	8.5G-11.5GΔ	CW	525	66m			KLR	OS	MT	WA	500m
30	VA297X	10000M	1.0 †	9.500G - 10.10G	CW	800	85m			KLR	OS	MT	WA	.75
31	VA297Y	10000M	1.0 †	96.75G - 10.25G	CW	800	85m			KLR	OS	MT	WA	.75
32	BLK008	10100M	150m†	10.00G - 10.20G	CW	400	60			KLR	OS	FF	WA	.50
33	BLK007	10100M	1.0 †	10.00G - 10.20G	CW	600	80			KLR	OS	MT	WA	.50
34	MXK22	10125M	100m†	10.00G - 10.25G	CW	500	50m			KLR	OS	MT	WA	
35	TH2210C	10155M	20m†	10.030G-10.280G		250	37			KLR	OS	MT	WA	
36	MXK33	10200M	30m†	9.600G - 10.80G	CW	300				KLR	OS		WA	
37	TV210B	10200M	30m†	9.600G-10.800G		300	35			KLR	OS	MT	WA	
38	VA210B	10200M	30m†	9.600G - 10.80G	CW	300	35m			KLR	OS	MT	WA	.37
39	QKK1022	10200M	125m	9.500G-10.900G	CW	350	45m			KLR	OS	MT	WA	
40	VRX7207	10200M	150	8.000G-12.40G	5.0m	4500	1.5			KLR		M	WA	
41	VA203K	10250M	30m	10.13G - 10.36G	CW	300	37m			KLR	OS	MT	WA	.19
42	VA210M	10250M	30m	10.050G-10.450G	CW	300	32m			KLR	OS	MT	WA	380m
43	K3073	10250M	60m	10.10G-10.40G	CW	400	50m			KLR	OS	MT	WA	.375
44	JANDOD003	10250M	100m†	8.100G-12.400G	CW	550	60m			KLR	OS	MT	WA	
45	X13	10250M	100m†	8.100G-12.400G		500	60 Ø			KLR	OS	MT	WA	
46	VC102	10250M	500m†	9.500G - 11.00G	CW	500	70m			KLR	OS	MT	WA	.37
47	VA273B	10250M	1.0	10.00G - 10.50G	CW	750	80m			KLR	OS	MT	WA	.75
48	10V13	10300M	110m	8.200G - 12.40G		500	500m			KLR	OS	MT	WA	
49	VA266A	10350M	230m	9.500G - 11.20G	CW	500	70m			KLR	OS	MT	WA	.37
50	BLK012	10370M	25m†	10.20G - 10.55G	CW	300	32			KLR	OS	MT	WA	
51	VA297Z	10450M	1.0 †	10.20G - 10.70G	CW	800	85m			KLR	OS	MT	WA	.75
52	BLK004	10500M	500m†	9.800G - 11.20G	CW	600	70			KLR	OS	MT	WA	.50
53	QKK1468	10525M	20m	10.500G-10.550G	CW	300	32m			KLR	OS	FF	CO	
54	VA218	10525M	55m†	10.51G - 10.53G	CW	300	37m			KLR	OS	FF	WA	.22
55	VA218B	10525M	55m†	10.519G-10.531G	CW	300	37m			KLR	OS	FF	WA	.22
56	K3069	10525M	100m	10513M-10537M	CW	350	45m			KLR	OS	FF	WA	210m
57	K3076	10600M	60m	10.50G-10.70G	CW	350	50m			KLR	OS	MT	WA	.310
58	VA288A	10600M	150m†	10.57G - 10.62G	CW	400	70m			KLR	OS	MT	WA	
59	QKK1515	10687M	25m	10.677G-10.697G	CW	300	32m			KLR	OS	FF	CO	
60	BLK006	10850M	500m†	10.00G - 11.70G	CW	600	70			KLR	OS	MT	WA	.50
61	TV2215A	10885M	120m†	10.840G-10.930G		350	40			KLR	OS	MT	WA	
62	BLK020	10925M	40m†	10.923G-10.927G	CW	450	70m			KLR	OS	FF	WA	500m
63	QKK1583	10925M	50m	10.915G-10.935G	CW	300	32m			KLR	OS	FF	WA	
64	11V651	10950M	550m	10.70G - 11.20G	CW	600	70m			KLR	OS	MT	WA	
65	BLK010	11000M	50m†	9.000G - 13.00G		300	50			KLR		MT	WA	.44
66	7829A	11000M	60m†	10.95G - 11.05G	CW	350	35mØ			KLR	AM		WA	.31
67	JAN7829A	11000M	60m†	10.95G - 11.05G		350	35m			KLR	OS	MT	WA	
68	BL849	11000M	70m†	10.50G - 11.50G		400	68			KLR		MT	WA	.44
69	K35-1	11050M	8.0m	10000-12100M			50m			KLR	OS			
70	K35M	11050M	8.0m	10000-12100M			50m			KLR	OS	MT		
71	11V54	11100M	70m	10.450G-11.800G	CW	300	27m			KLR	OS	MT	WA	450m
72	V53B/C	11200M	40m	10.700G-11.700G		500	66m			KLR	OS	MT	WA	380m
73	QKK826	11200M	100m	10.700G-11.700G	CW	400	45m			KLR	OS	MT	CO	
74	VRX7204A	11200M	100m	10.700G-11.700G	CW	400	48m			KLR	OS	MT	WA	1.0
75	11V53A	11200M	250m	10.70G - 11.70G	CW	500	70m			KLR	OS	MT	WA	
76	VA237E	11200M	250m†	10.70G - 11.70G	CW	800	40m			KLR	OS	MT	WA	1.0
77	11V64	11200M	300m	10.70G - 11.70G	CW	527	70m			KLR	OS	MT	WA	
78	MXK54	11200M	400m	10.70G - 11.70G	CW	550	75m			KLR	OS	MT	WA	
79	TV2246A	11200M	400m†	11.20G	CW	500	66mØ			KLR	OS	MT	WA	
80	VRX7204B	11200M	400m	10.700G-11.700G	CW	600	77m			KLR	OS	MT	WA	1.1
81	QKK878	11200M	500m	10.700G-11.700G	CW	750	85m			KLR	OS	MT	CO	
82	QKK1235	11200M	1.0	10.700G-11.700G	CW	750	85m			KLR	OS	MT	CO	
83	VA237B	11200M	1.0 †	10.70G - 11.70G	CW	1250	70m			KLR	OS	MT	WA	1.0
84	VA287A	11200M	1.0 †	10.70G - 11.70G		800	90m			KLR	OS	VT	WA	1.0
85	BL814	11350M	150m†	10.40G - 12.30G	CW	400	70			KLR	OS			.44
86	V154	11350M	150m	10.50G - 12.20G	CW	400	70m			KLR	OS	MT	WA	.37
87	TV2246X	11400M	400m†	11.40G	CW	500	66mØ			KLR	OS	MT	WA	
88	11V652	11450M	550m	11.20G - 11.70G	CW	600	70m			KLR	OS	MT	WA	
89	TV2246B	11600M	400m†	11.60G	CW	500	66mØ			KLR	OS	MT	WA	
90	TV2211A	11925M	750m†	10.500G-13.350G		750	80mØ			KLR	OS	MT	WA	
91	TV2211B	11925M	750m†	10.500G-13.350G		750	80mØ			KLR	OS	MT	WA	
92	TV2211C	11925M	750m†	10.500G-13.350G		750	80mØ			KLR	OS	MT	WA	
93	TV2211D	11925M	750m†	10.500G-13.350G		750	80mØ			KLR	OS	MT	WA	
94	QKK869	11950M	100m	11.700G-12.200G	CW	400	45m			KLR	OS	MT	CO	
95	QKK879	11950M	650m	11.700G-12.200G	CW	750	85m			KLR	OS	MT	CO	
96	VA287	11950M	1.0 †	10.70G-13.20G	CW	750	85m			KLR	OS	MT	WA	1.0 Δ
97	VA287B	11950M	1.0 †	11.70G - 12.20G		800	90m			KLR	OS	VT	WA	1.0
98	LD561	12070M	150m	11.70G - 12.44G	CW	500	70m			KLR	OS	MT	WA	
99	12V66	12100M	550m	11.70G - 12.50G	CW	600	70m			KLR	OS	MT	WA	
100	FAA237D	12200M	200m†	11.70G-12.70G	CW	750	30m			KLR	OS	MT	WA	1.0
101	VA237D	12200M	200m†	11.70G - 12.70G	CW	750	30m			KLR	OS	MT	WA	1.0
102	BT237D	12200M	250m	11700M-12700M		800	40m			KLR	OS	MT	WA	
103	TV2216A	12200M	1.0 †	10.700G-13.700G		750	80mØ			KLR	OS	MT	WA	
104	TV2216B	12200M	1.0 †	10.700G-13.700G		750	80mØ			KLR	OS	MT	WA	
105	TV2216C	12200M	1.0 †	10.700G-13.700G		750	80mØ			KLR	OS	MT	WA	
106	VA237A	12200M	1.0 †	11.70G - 12.70G	CW	1250	70m			KLR	OS	MT	WA	1.0
107	LD656	12350M	200m	12.00G - 12.70G	CW	525	70m			KLR	OS	MT	WA	
108	QKK822	12450M	100m	12.200G-12.700G	CW	400	45m			KLR	OS	MT	CO	
109	QKK978	12450M	500m	12.200G-12.700G	CW	750	85m			KLR	OS	MT	CO	
110	QKK833A	12450M	1.0	12.20G-12.70G	CW	750	85m			KLR	OS	MT	CO	

SYMBOLS AND CODES EXPLAINED IN INTERPRETER

2. SOURCE,AMPLIFIER,OUTPUT TUBES

IN ORDER OF (1)TUBE TYPE (2)CENTER FREQUENCY (3)POWER OUTPUT (4)TYPE No.

LINE No.	4 TYPE No.	2 CENTER FREQ. (Hz)	3 POWER OUTPUT (W)	FREQUENCY RANGE (Hz)	MAX. DUTY CYCLE	MAX. BEAM VOLTAGE (Note 1) (V)	MAX. CATH-ODE CUR. (A)	GAIN (dB)	NF (dB)	DESCRIPTION 1 TUBE TYPE	FUNC-TION	TUN-ING	OUT PUT	WEIGHT (lb)
1	VA287C	12450M	1.0 †	12.20G - 12.70G		800	90m			KLR	OS	VT	WA	1.0
2	VA310	12500M	1.2	10.00G - 15.00G†	CW	800	100m			KLR	OS	MT	WA	.44
3	V39B	12750M	20m†	10.00G-15.50G	CW	750	34m			KLR	OS	MT	WA	120m
4	V39B/C	12750M	20m	10.00G-15.50G	CW	700	34m			KLR	OS	MT	WA	120m
5	VA92H	12800M	175m	12.00G - 13.60G	CW	600	66m			KLR	OS	MT	WA	
6	VC103B	12900M	300m†	12.89G-12.91G	CW	525	66m			KLR	OS	MT	WA	500m
7	VA287D	12950M	1.0 †	12.70G - 13.20G	CW	750	85m			KLR	OS	MT	WA	1.0
8	QKK877	12963M	100m	12.700G-13.220G	CW	400	45m			KLR	OS	MT	CO	
9	EM1114A,C	13000M	200m†	12.98G-13.02G	CW	400	50m			KLR	OS	FF	WA	370m
10	13V64	13000M	300m	12.50G - 13.50G	CW	550	70m			KLR	OS	MT	WA	
11	13V66/LD932	13000M	550m	12.50G - 13.50G	CW	600	70m			KLR	OS	MT	WA	.46
12	TV2226	13000M	900m†	12.800G-13.200G		750	90mØ			KLR	OS	MT	WA	
13	VA237F	13200M	250m†	12.70G - 13.70G	CW	800	40m			KLR	OS	MT	WA	1.0
14	VA240C	13200M	500m	12.40G - 14.00G	CW	800	30m			KLR	OS	MT	WA	.25
15	VA237C	13200M	1.0 †	12.70G - 13.70G	CW	1250	70m			KLR	OS	MT	WA	1.0
16	K34	13210M	8.0m	12000-14420M			50m			KLR	OS		CO	
17	K34M	13210M	8.0m	12000-14420M			50m			KLR	OS	MT	CO	
18	VA246	13250M	450m	11.00G - 15.50G†	CW	500	65m			KLR	OS	MT	WA	.37
19	MKK12	13300M	15m	13.30G	CW	500				KLR	AML			
20	MKK37	13300M	1.0	13.30G	CW	1650	32m			KLR	OS	FF	WA	
21	MKK22	13300M	2.0	13.30G	CW	2200				KLR	OS	FF	CO	
22	MKK16	13300M	5.0 †	8.300G-18.300G	CW	2250	50m			KLR#	AML			
23	QKK873	13313M	100m	13.225G-14.400G	CW	400	45m			KLR	OS	MT	CO	
24	VC103D	13325M	90m†	13.275G-13.375G	CW	350	30m			KLR	OS	MT	WA	500m
25	VC103A	13325M	290m†	13.275G-13.375G	CW	500	70m			KLR	OS	MT	WA	500m
26	VC103C	13325M	300m†	13.315G-13.335G	CW	525	66m			KLR	OS	MT	WA	500m
27	VC103E	13325M	300m†	13.27G - 13.37G	CW	500	70m			KLR	OS	MT	WA	.50
28	TH2240	13325M	400m†	13.320G-13.330G	CW	1000	66m			KLR	OS	MT	WA	0.37
29	BL844	13325M	500m†	13.32G - 13.33G	CW	550	70			KLR	OS	FF	WA	.44
30	VA286	13400M	300m†	12.40G - 14.40GØ	CW	500	66m			KLR	OS	MT	WA	.31
31	8467	13450M	140m†	12.40G - 14.50G	CW	625				KLR	OS	MT	WA	.44
32	JAN8467	13450M	140m†	12.40G - 14.50G	CW	625	66m			KLR		MT	WA	
33	VA92B	13450M	140m†	12.4G-14.5G	CW	600	65m			KLR	OS	MT	WA	440m
34	MKK29	13500M	40m	13.00G - 14.00G	CW	300	45m			KLR	OS	MT	WA	
35	13V92	13500M	350m	12.40G - 14.50G	CW	625	70m			KLR	OS	MT	WA	
36	EM1114,B	13900M	200m†	13.88G-13.92G	CW	400	50m			KLR	OS	FF	WA	370m
37	VA240	14450M	275m	12.40G - 18.50G†	CW	750	28m			KLR	OS	FF	WA	.25
38	QKK1399	14760M	25m	14.330G-15.190G	CW	400	32m			KLR	OS	MT	CO	
39	15V66	14900M	450m	14.40G - 15.40G	CW	680	75m			KLR	OS	MT	WA	.309
40	VA329	14900M	1.5 †	14.40G - 15.40G	CW	750	85m			KLR	OS	MT	WA	.75
41	EM1149	15000M	1.0 †	12.00G - 18.00G†	CW	800	100m			KLR	OS	MT	WA	.44
42	VRU7208	15000M	100	12.30G-18.00G	5.0m	4500	1.2			KLR		M	WA	
43	X12	15200M	100m	12.4G-18G	CW	600	65m			KLR	OS	MT	WA	370m
44	K33	15478M	8.0m	14288-16667M			50m			KLR	OS			
45	K33M	15478M	8.0m	14288-16667M			50m			KLR	OS	MT		
46	VA92	15750M	70m†	14.00G - 17.50G	CW	600	60m			KLR	OS	MT	WA	.44
47	MKK25	15750M	100m	14.00G - 17.50G	CW	600	60m			KLR	OS	MT	WA	
48	VA94B	16000M	35m	15.80G - 16.20G	CW	300	45m			KLR	OS	MT	WA	.56
49	VA309	16000M	300m*	14.00G - 18.00G†	CW	550	40m			KLR	OS	MT	WA	.25
50	VA308	16000M	800m†	14.00G - 18.00G†	CW	800	60m			KLR	OS	MT	WA	.25
51	JAN6995	16500M	20m	16.00G-17.00G	CW	350	45m			KLR	OS	MT	WA	
52	VA311	16500M	20m†	15.00G-18.00G	CW	300	30m			KLR	OS	MT	WA	.22
53	VA275B/C	16500M	25m	16.00G-17.00G		400	16m			KLR	OS	MT	WA	380m
54	MKK26	16500M	40m	16.00G - 17.00G	CW	300	45m			KLR	OS	MT	WA	
55	VA94	16500M	40m	16G-17G	CW	300	45m			KLR	OS	MT	WA	250m
56	MKK26A	16530M	15m†	16.000G-17.060G		300				KLR	AM		WA	
57	F2924	16550M	50m	16.400G-16.700G	CW	300	45m			KLR	OS	MT	WA	375m
58	F2934	16550M	50m	16.40G-16.70G	CW	300	45m			KLR	OS	MT	WA	375mΔ
59	F2923	16850M	50m	16.500G-17.200G	CW	300	30m			KLR	OS	MT	WA	375m
60	F2946	16850M	50m	16.500G-17.200G	CW	300	30			KLR	OS	MT	WA	375m
61	VA275D	17000M	20m†	16.00G - 18.00G	CW	300	16m			KLR	OS	MT	WA	.37
62	K3080	17000M	65m	16.500G-17.500G	CW	350				KLR	OS	MT	WA	250m
63	17V10	17000M	100m	15.50G - 18.50G	CW	2200	14m			KLR	OS	MT	WA	1.10
64	VA275A	17500M	200m†	17.00G - 18.00G	CW	750	35m			KLR	OS	MT	WA	.37
65	V40B/C	18000M	20m	15.000G-21.000G		750	40m			KLR	OS	MT	WA	120m
66	VA282D	18000M	100m	18.00G	CW	600	19m			KLR	OS	FF	WA	.34
67	VA282AD	18000M	500m†	18.00G	CW	800	30m			KLR	OS	FF	WA	.34
68	VA253	18500M	150m	15.00G - 22.00G†	CW	750	28m			KLR	OS	MT	WA	.22
69	20V10	20000M	150m	18.00G - 22.00G	CW	2200	14m			KLR	OS	MT	WA	1.10
70	K746	20914M	10.0m	18750-23077M			22m			KLR	OS		WA	
71	22V10	22000M	150m	20.00G - 24.00G	CW	2200	14m			KLR	OS	MT	WA	1.10
72	VA241	22250M	150m	18.000G-26.500G		850	34m			KLR	OS	MT	WA	250m
73	EM1138	22250M	240m*	18.00G - 26.50G†	CW	550	36m			KLR	OS	MT	WA	.25
74	EM1188	22250M	700m	18.00G - 26.50GØ		900	60m			KLR	OS	MT	WA	.25
75	VA282	22500M	450m†	18.00G - 26.50G†	CW	900	35m			KLR	OS	FF	WA	.34
76	VRK7212	22500M	40	18.00G-26.50G	5.0m	4000	400m			KLR		M	WA	
77	VA98J	23850M	100m†	23.60G - 24.00G	CW	400	40m			KLR	OS	MT	WA	.25
78	VA98	24000M	100m	23.600G-24.400G		375	40m			KLR	OS	MT	WA	250m
79	VA98M	24000M	100m†	23.60G - 24.40G	CW	400	40m			KLR	OS	MT	WA	.25
80	24V10A	24000M	200m	22.00G - 26.00G	CW	2200	14m			KLR	OS	MT	WA	1.10
81	24V11	24000M	600m	22.00G - 26.00G	CW	2000	40m			KLR	OS	MT	WA	1.23
82	K745	25175M	10.0m	23077-27272M			22m			KLR	OS		WA	
83	VA282E	25600M	30m	25.60G	CW	500	16m			KLR	OS	FF	WA	.34
84	28V12	28000M	600m	26G-30G	CW	2400	38m			KLR	OS	MT	WA	1.23
85	30V10	30000M	90m	28G-32G	CW	2200	14m			KLR	OS	MT	WA	1.10
86	30V11	30000M	200m	28.00G - 32.00G	CW	2200	30m			KLR	OS	MT	WA	1.23
87	30V12	30000M	600m	28G-32G	CW	2400	38m			KLR	OS	MT	WA	1.23
88	K744	30303M	10.0m	27272-33333M			22m			KLR	OS		WA	
89	VA312	30750M	100m†	26.50G - 35.00G†	CW	550	40m			KLR	OS	MT	WA	.25
90	VA283	30750M	200m†	26.50G - 35.00GØ	CW	900	60m			KLR	OS	MT	WA	.40
91	VA313	30750M	550m*	26.50G - 35.00G†	CW	800	45m			KLR	OS	MT	WA	.25
92	VA303	30750M	15 †	26.50G - 33.00G		3000				KLR	OS	MT	WA	.38
93	33V10	33000M	70m	31.00G-35.00G	CW	2000	12m			KLR	OS	MT	WA	1.1
94	VA322	33250M	500m†	26.50G-40.00G	CW	900	55m			KLR	OS	MT	WA	.44
95	VA97B	33300M	10m†	32.60G - 34.00G	CW	400	50m			KLR	OS	MT	WA	.18
96	34V12	34000M	650m	32G-36G	CW	2400	40m			KLR	OS	MT	WA	1.23
97	35V10	34500M	70m	32.00G - 37.00G	CW	2200	14m			KLR	OS	MT	WA	1.10
98	35V11	34500M	250m	32G-37G	CW	2200	30m			KLR	OS	MT	WA	1.23
99	VA97	34800M	10m†	34.00G - 35.60G	CW	400	50m			KLR	OS	MT	WA	.19
100	EM1138M	34800M	20m	34.500G-35.100G		350	30m			KLR	OS	MT	WA	
101	35V12	35000M	650m	33G-37G	CW	2400	40m			KLR	OS	MT	WA	1.23
102	K743B	35417M	10.0m	33333-37500M			22m			KLR	OS		WA	
103	36V12	36000M	600m	34G-38G	CW	2400	40m			KLR	OS	MT	WA	1.23
104	VRQ2100A1	38000M	150m	33.00G-43.00G	CW	2550	27m			KLR	OS	MT	WA	.86
105	K771	39500M	4.0m	36140-42860M						KLR	OS		WA	
106	40V10	39500M	80m	37.00G - 42.00G	CW	2300	30m			KLR	OS	MT	WA	1.23
107	40V12	40000M	530m	37G-42G	CW	2400	40m			KLR	OS	MT	WA	1.23
108	K743A	40179M	5.0m	37500-42857M			22m			KLR	OS		WA	
109	VA302	42500M	400m†	40.00G-45.00G	CW	900	60m			KLR	OS	MT	WA	.34
110	45V10	45000M	80m	42.00G - 48.00G	CW	2500	30m			KLR	OS	MT	WA	1.23

SYMBOLS AND CODES EXPLAINED IN INTERPRETER

2. SOURCE,AMPLIFIER,OUTPUT TUBES

IN ORDER OF (1)TUBE TYPE (2)CENTER FREQUENCY (3)POWER OUTPUT (4)TYPE No.

LINE No.	4 TYPE No.	2 CENTER FREQ. (Hz)	3 POWER OUTPUT (W)	FREQUENCY RANGE (Hz)	MAX. DUTY CYCLE	MAX. BEAM VOLTAGE (Note 1) (V)	MAX. CATH-ODE CUR. (A)	GAIN (dB)	NF (dB)	DESCRIPTION 1 TUBE TYPE	FUNC-TION	TUN-ING	OUT PUT	WEIGHT (lb)
1	45V12	45000M	275m	42G-48G	CW	2600	35m			KLR	OS	MT	WA	1.23
2	47V10	47000M	70m	43.00G - 51.00G	CW	2500	30m			KLR	OS	MT	WA	1.23
3	47V11	47000M	150m	43.00G - 51.00G	CW	2500	30m			KLR	OS	MT	WA	1.23
4	47V12	47000M	250m	43G-51G	CW	2600	35m			KLR	OS	MT	WA	1.23
5	K770	47745M	4.0m	42860-52630M						KLR	OS		WA	
6	50V10	50000M	50m	46G-54G	CW	2700	30m			KLR	OS	MT	WA	1.23
7	50V11	50000M	150m	46000M-54000M	CW	2700	30m			KLR	OS	MT	WA	1.23
8	VRE2102A1	51000M	350m†	50G-52G	CW	2550	27m			KLR	OS	MT	WA	630m
9	VRE2105A1	53000M	10m†	50G-56G	CW	1450	11m			KLR	OS	MT	WA	630m
10	VRE2103A1	53000M	150m†	50G-56G	CW	2550	27m			KLR	OS	MT	WA	630m
11	VRE2103B1	53000M	150m†	50G-56G	CW	2550	27m			KLR	OS	MT	WA	810m
12	VRE2102A2	53000M	350m†	52G-54G	CW	2550	27m			KLR	OS	MT	WA	630m
13	55V10	55000M	60m	52.00G - 58.00G	CW	2700	30m			KLR	OS	MT	WA	1.23
14	55V11	55000M	120m	52.00G - 58.00G	CW	2700	30m			KLR	OS	MT	WA	1.23
15	VRE2102A3	55000M	350m†	54G-56G	CW	2550	27m			KLR	OS	MT	WA	630m
16	K769	55160M	4.0m	52630-57690M			22m			KLR	OS		WA	
17	VRE2102A4	57000M	350m†	56G-58G	CW	2550	27m			KLR	OS	MT	WA	630m
18	VRE2105A2	58000M	10m†	55G-61G	CW	1450	11m			KLR	OS	MT	WA	630m
19	VRE2103B2	58000M	150m†	55G-61G	CW	2550	27m			KLR	OS	MT	WA	810m
20	VRE2103A2	59000M	150m†	56G-62G	CW	2550	27m			KLR	OS	MT	WA	630m
21	VRE2102A5	59000M	350m†	58G-60G	CW	2550	27m			KLR	OS	MT	WA	630m
22	60V10	60000M	60m	57.00G - 63.00G	CW	2500	30m			KLR	OS	MT	WA	1.23
23	60V12	60000M	150m	57G-63G	CW	2600	30m			KLR	OS	MT	WA	1.23
24	K768	60760M	4.0m	57690-63830M			22m			KLR	OS		WA	
25	VRE2102A6	61000M	350m†	60G-62G	CW	2550	27m			KLR	OS	MT	WA	630m
26	VRE2105A3	63000M	10m†	60G-66G	CW	1450	11m			KLR	OS	MT	WA	630m
27	VRE2103B3	63000M	150m†	60G-66G	CW	2550	27m			KLR	OS	MT	WA	810m
28	VRE2102A7	63000M	350m†	62G-64G	CW	2550	27m			KLR	OS	MT	WA	630m
29	KA651	63500M	250m	60.000G-67.000G	CW	2700	30m			KLR	OS	MT	WA	1.23
30	VRE2103A3	65000M	150m†	62G-68G	CW	2550	27m			KLR	OS	MT	WA	630m
31	VRE2102A8	65000M	350m†	64G-66G	CW	2550	27m			KLR	OS	MT	WA	630m
32	VRE2101A	65000M	500m†	50G-80GΔ	CW	2550	27m			KLR	OS	MT	WA	630m
33	K767	66800M	4.0m	63830-69770M			22m			KLR	OS		WA	
34	VRE2102A9	67000M	350m†	66G-68G	CW	2550	27m			KLR	OS	MT	WA	630m
35	VRE2105A4	68000M	10m†	65G-71G	CW	1450	11m			KLR	OS	MT	WA	630m
36	VRE2103B4	68000M	150m†	65G-71G	CW	2550	27m			KLR	OS	MT	WA	810m
37	70V10	69000M	60m	65.00G - 73.00G	CW	2800	30m			KLR	OS	MT	WA	
38	70V10A	69000M	60m	65.00G-73.00G	CW	2700	30m			KLR	OS	MT	WA	1.23
39	VRE2102A10	69000M	350m†	68G-70G	CW	2550	27m			KLR	OS	MT	WA	630m
40	VRE2105A5	70000M	10m†	67G-73G	CW	1450	11m			KLR	OS	MT	WA	630m
41	70V11A	70000M	125m	65.00G - 75.00G	CW	2700	30m			KLR	OS	MT	WA	1.23
42	VRE2103A6	70000M	150m†	67G-73G	CW	2550	27m			KLR	OS	MT	WA	630m
43	VRE2102A16	70000M	350m†	69G-71G	CW	2550	27m			KLR	OS	MT	WA	630m
44	KA701A	70000M	400m	68.000G-72.000G	CW	2700	30m			KLR	OS	MT	WA	1.23
45	VRE2103A4	71000M	150m†	68G-74G	CW	2550	27m			KLR	OS	MT	WA	630m
46	VRE2102A11	71000M	350m†	70G-72G	CW	2550	27m			KLR	OS	MT	WA	630m
47	K766	72385M	4.0m	69770-75000M			22m			KLR	OS		WA	
48	VRE2105A6	73000M	10m†	70G-76G	CW	1450	11m			KLR	OS	MT	WA	630m
49	VRE2103B5	73000M	150m†	70G-76G	CW	2550	27m			KLR	OS	MT	WA	810m
50	VRE2102A12	73000M	350m†	72G-74G	CW	2550	27m			KLR	OS	MT	WA	630m
51	VRE2102A13	75000M	350m†	74G-76G	CW	2550	27m			KLR	OS	MT	WA	630m
52	K765	76975M	4.0m	75000-78950M			22m			KLR	OS		WA	
53	VRE2105A7	77000M	10m†	74G-80G	CW	1450	11m			KLR	OS	MT	WA	630m
54	VRE2103A5	77000M	150m†	74G-80G	CW	2550	27m			KLR	OS	MT	WA	630m
55	VRE2103B6	77000M	150m†	74G-80G	CW	2550	27m			KLR	OS	MT	WA	810m
56	VRE2102A14	77000M	350m†	76G-78G	CW	2550	27m			KLR	OS	MT	WA	630m
57	VRE2102A15	79000M	350m†	78G-80G	CW	2550	27m			KLR	OS	MT	WA	630m
58	80V10A	80000M	40m	75.00G - 85.00G	CW	2700	30m			KLR	OS	MT	WA	1.23
59	80V11	80000M	155m	75000M-85000M	CW	2700	30m			KLR	OS	MT	WA	1.23
60	VRB2112A1	81000M	200m†	80G-82G	CW	2550	27m			KLR	OS	MT	WA	630m
61	VRB2115A1	83000M	10m†	80G-86G	CW	1650	15m			KLR	OS	MT	WA	630m
62	VRB2113A1	83000M	75m†	80G-86G	CW	2550	27m			KLR	OS	MT	WA	630m
63	VRB2113B1	83000M	75m†	80G-86G	CW	2550	27m			KLR	OS	MT	WA	1.0
64	VRB2112A2	83000M	200m†	82G-84G	CW	2550	27m			KLR	OS	MT	WA	630m
65	VRB2112A3	85000M	200m†	84G-86G	CW	2550	27m			KLR	OS	MT	WA	630m
66	VRB2112A4	87000M	200m†	86G-88G	CW	2550	27m			KLR	OS	MT	WA	630m
67	VRB2115A2	89000M	10m†	86G-92G	CW	1650	15m			KLR	OS	MT	WA	630m
68	VRB2113A2	89000M	75m†	86G-92G	CW	2550	27m			KLR	OS	MT	WA	630m
69	VRB2113B2	89000M	75m†	86G-92G	CW	2550	27m			KLR	OS	MT	WA	1.0
70	VRB2112A5	89000M	200m†	88G-90G	CW	2550	27m			KLR	OS	MT	WA	630m
71	90V10A	90000M	30m	85.00G - 95.00G	CW	2700	30m			KLR	OS	MT	WA	1.23
72	90V11	90000M	100m	85G-95G	CW	2700	30m			KLR	OS	MT	WA	1.23
73	VRB2112A6	91000M	200m†	90G-92G	CW	2550	27m			KLR	OS	MT	WA	630m
74	VRB2112A7	93000M	200m†	92G-94G	CW	2550	27m			KLR	OS	MT	WA	630m
75	VRB2115A3	95000M	10m†	92G-98G	CW	1650	15m			KLR	OS	MT	WA	630m
76	VRB2113A3	95000M	75m†	92G-98G	CW	2550	27m			KLR	OS	MT	WA	630m
77	VRB2113B3	95000M	75m†	92G-98G	CW	2550	27m			KLR	OS	MT	WA	1.0
78	VRB2112A8	95000M	200m†	94G-96G	CW	2550	27m			KLR	OS	MT	WA	630m
79	VRB2111A	95000M	300m†	80G-110GΔ	CW	2550	27m			KLR	OS	MT	WA	630m
80	VRB2112A9	97000M	200m†	96G-98G	CW	2550	27m			KLR	OS	MT	WA	630m
81	VRB2112A10	99000M	200m†	98G-100G	CW	2550	27m			KLR	OS	MT	WA	630m
82	100V10A	100000M	20m	95.00G - 105.0G	CW	2700	30m			KLR	OS	MT	WA	1.23
83	100V11	100000M	80m	95000M-105G	CW	2700	30m			KLR	OS	MT	WA	1.23
84	VRB2115A4	101000M	10m†	98G-104G	CW	1650	15m			KLR	OS	MT	WA	630m
85	VRB2113A4	101000M	75m†	98G-104G	CW	2550	27m			KLR	OS	MT	WA	630m
86	VRB2113B4	101000M	75m†	98G-104G	CW	2550	27m			KLR	OS	MT	WA	1.0
87	VRB2112A11	101000M	200m†	100G-102G	CW	2550	27m			KLR	OS	MT	WA	630m
88	VRB2112A12	103000M	200m†	102G-104G	CW	2550	27m			KLR	OS	MT	WA	630m
89	105V10	105000M	30m	100G-110G	CW	2700	30m			KLR	OS	MT	WA	1.23
90	VRB2112A13	105000M	200m†	104G-106G	CW	2550	27m			KLR	OS	MT	WA	630m
91	VRB2115A5	107000M	10m†	104G-110G	CW	1650	15m			KLR	OS	MT	WA	630m
92	VRB2113A5	107000M	75m†	104G-110G	CW	2550	27m			KLR	OS	MT	WA	630m
93	VRB2113B5	107000M	75m†	104G-110G	CW	2550	27m			KLR	OS	MT	WA	1.0
94	VRB2112A14	107000M	200m†	106G-108G	CW	2550	27m			KLR	OS	MT	WA	630m
95	VRB2112A15	109000M	200m†	108G-110G	CW	2550	27m			KLR	OS	MT	WA	630m
96	VRT2121A1	111000M	100m†	110G-112G	CW	2550	27m			KLR	OS	MT	WA	630m
97	VRX7204B/445A#2	112000M	50m†	10.700G-11.700G	CW	400	27mØ			KLR	OS	MT	WA	1.0
98	VRX7204B/445A#1	112000M	400m†	10.700G-11.700G	CW	600	55mØ			KLR	AM	MT	WA	1.0
99	VRT2121A2	113000M	100m†	112G-114G	CW	2550	27m			KLR	OS	MT	WA	630m
100	VRT2125A1	114000M	10m†	110G-118G	CW	1850	16m			KLR	OS	MT	WA	630m
101	VRT2123A1	114000M	50m†	110G-118G	CW	2550	27m			KLR	OS	MT	WA	630m
102	VRT2123B1	114000M	50m†	110G-118G	CW	2550	27m			KLR	OS	MT	WA	1.0
103	120V10	115000M	25m	107.0G - 122.0M	CW	2700	25m			KLR	OS	MT	WA	1.23
104	VRT2121A3	115000M	100m†	114G-116G	CW	2550	27m			KLR	OS	MT	WA	630m
105	VRT2121A4	117000M	100m†	116G-118G	CW	2550	27m			KLR	OS	MT	WA	630m
106	VRT2121A5	119000M	100m†	118G-120G	CW	2550	27m			KLR	OS	MT	WA	630m
107	VRT2121A6	121000M	100m†	120G-122G	CW	2550	27m			KLR	OS	MT	WA	630m
108	VRT2125A2	122000M	10m†	118G-126G	CW	1850	16m			KLR	OS	MT	WA	630m
109	VRT2123A2	122000M	50m†	118G-126G	CW	2550	27m			KLR	OS	MT	WA	630m
110	VRT2123B2	122000M	50m†	118G-126G	CW	2550	27m			KLR	OS	MT	WA	1.0

SYMBOLS AND CODES EXPLAINED IN INTERPRETER

2. SOURCE,AMPLIFIER,OUTPUT TUBES

IN ORDER OF (1)TUBE TYPE (2)CENTER FREQUENCY (3)POWER OUTPUT (4)TYPE No.

LINE No.	4 TYPE No.	2 CENTER FREQ. (Hz)	3 POWER OUTPUT (W)	FREQUENCY RANGE (Hz)	MAX. DUTY CYCLE	MAX. BEAM VOLTAGE (Note 1) (V)	MAX. CATHODE CUR. (A)	GAIN (dB)	NF (dB)	DESCRIPTION 1 TUBE TYPE	FUNCTION	TUNING	OUTPUT	WEIGHT (lb)
1	VRT2121A7	123000M	100m†	122G-124G	CW	2550	27m			KLR	OS	MT	WA	630m
2	125V10	125000M	20m	120G-130G	CW	2700	30m			KLR	OS	MT	WA	1.23
3	VRT2121A8	125000M	100m†	124G-126G	CW	2550	27m			KLR	OS	MT	WA	630m
4	VRT2411C	125000M	500m†	110.0G-140.0G	CW	9500	50m			KLR	OS	MT		10
5	VRT2411A	125000M	1.0 †	110.0G-140.0G	CW	9500	50m			KLR	OS	FF		10
6	VRT2411B	125000M	1.0 †	110.0G-140.0G	CW	9500	50m			KLR	OS	FF		10
7	VRT2121A9	127000M	100m†	126G-128G	CW	2550	27m			KLR	OS	MT	WA	630m
8	VRT2121A10	129000M	100m†	128G-130G	CW	2550	27m			KLR	OS	MT	WA	630m
9	VRT2125A3	130000M	10m†	126G-134G	CW	1850	16m			KLR	OS	MT	WA	630m
10	VRT2123A3	130000M	50m†	126G-134G	CW	2550	27m			KLR	OS	MT	WA	630m
11	VRT2123B3	130000M	50m†	126G-134G	CW	2550	27m			KLR	OS	MT	WA	1.0
12	VRT2121A11	131000M	100m†	130G-132G	CW	2550	27m			KLR	OS	MT	WA	630m
13	KA1330	133000M	20m	130.00G-136.00G	CW	2700	25m			KLR	OS	MT	WA	1.23
14	VRT2121A12	133000M	100m†	132G-134G	CW	2550	27m			KLR	OS	MT	WA	630m
15	VRT2121A13	135000M	100m†	134G-136G	CW	2550	27m			KLR	OS	MT	WA	630m
16	VRT2121A14	137000M	100m†	136G-138G	CW	2550	27m			KLR	OS	MT	WA	630m
17	VRT2125A4	138000M	10m†	134G-142G	CW	1850	16m			KLR	OS	MT	WA	630m
18	VRT2123A4	138000M	50m†	134G-142G	CW	2550	27m			KLR	OS	MT	WA	630m
19	VRT2123B4	138000M	50m†	134G-142G	CW	2550	27m			KLR	OS	MT	WA	1.0
20	KA1390	139000M	20m	136.00G-142.00G	CW	2700	25m			KLR	OS	MT	WA	1.23
21	VRT2121A15	139000M	100m†	138G-140G	CW	2550	27m			KLR	OS	MT	WA	630m
22	VRT2121A16	140000M	100m†	139G-141G	CW	2550	27m			KLR	OS	MT	WA	630m
23	VRT2122A1	141000M	50m†	140G-142G	CW	2550	27m			KLR	OS	MT	WA	630m
24	VRT2122B1	141000M	50m†	140G-142G	CW	2550	27m			KLR	OS	MT	WA	1.0
25	VRT2122A2	143000M	50m†	142G-144G	CW	2550	27m			KLR	OS	MT	WA	630m
26	VRT2122B2	143000M	50m†	142G-144G	CW	2550	27m			KLR	OS	MT	WA	1.0
27	KA1450	145000M	20m	142.00G-148.00G	CW	2700	25m			KLR	OS	MT	WA	1.23
28	VRT2122A3	145000M	50m†	144G-146G	CW	2550	27m			KLR	OS	MT	WA	630m
29	VRT2122B3	145000M	50m†	144G-146G	CW	2550	27m			KLR	OS	MT	WA	1.0
30	VRT2124A1	146000M	25m†	142G-150G	CW	2550	27m			KLR	OS	MT	WA	630m
31	VRT2124B1	146000M	25m†	142G-150G	CW	2550	27m			KLR	OS	MT	WA	1.0
32	VRT2122A4	147000M	50m†	146G-148G	CW	2550	27m			KLR	OS	MT	WA	630m
33	VRT2122B4	147000M	50m†	146G-148G	CW	2550	27m			KLR	OS	MT	WA	1.0
34	VRT2122A5	149000M	50m†	148G-150G	CW	2550	27m			KLR	OS	MT	WA	630m
35	VRT2122B5	149000M	50m†	148G-150G	CW	2550	27m			KLR	OS	MT	WA	1.0
36	KA1510	151000M	20m	148.00G-154.00G	CW	2700	25m			KLR	OS	MT	WA	1.23
37	VRT2122A6	151000M	50m†	150G-152G	CW	2550	27m			KLR	OS	MT	WA	630m
38	VRT2122B6	151000M	50m†	150G-152G	CW	2550	27m			KLR	OS	MT	WA	1.0
39	VRT2122A7	153000M	50m†	152G-154G	CW	2550	27m			KLR	OS	MT	WA	630m
40	VRT2122B7	153000M	50m†	152G-154G	CW	2550	27m			KLR	OS	MT	WA	1.0
41	VRT2124A2	154000M	25m†	150G-158G	CW	2550	27m			KLR	OS	MT	WA	630m
42	VRT2124B2	154000M	25m†	150G-158G	CW	2550	27m			KLR	OS	MT	WA	1.0
43	VRT2122A8	155000M	50m†	154G-156G	CW	2550	27m			KLR	OS	MT	WA	630m
44	VRT2122B8	155000M	50m†	154G-156G	CW	2550	27m			KLR	OS	MT	WA	1.0
45	KA1570	157000M	15m	154.0G-160.0G	CW	2700	25m			KLR	OS	MT	WA	1.23
46	VRT2122A9	157000M	50m†	156G-158G	CW	2550	27m			KLR	OS	MT	WA	630m
47	VRT2122B9	157000M	50m†	156G-158G	CW	2550	27m			KLR	OS	MT	WA	1.0
48	VRT2122A10	159000M	50m†	158G-160G	CW	2550	27m			KLR	OS	MT	WA	630m
49	VRT2122B10	159000M	50m†	158G-160G	CW	2550	27m			KLR	OS	MT	WA	1.0
50	VRT2122A11	161000M	50m†	160G-162G	CW	2550	27m			KLR	OS	MT	WA	630m
51	VRT2122B11	161000M	50m†	160G-162G	CW	2550	27m			KLR	OS	MT	WA	1.0
52	VRT2124A3	162000M	25m†	158G-166G	CW	2550	27m			KLR	OS	MT	WA	630m
53	VRT2124B3	162000M	25m†	158G-166G	CW	2550	27m			KLR	OS	MT	WA	1.0
54	KA1630	163000M	15m	160.0G-166.0G	CW	2700	25m			KLR	OS	MT	WA	1.23
55	VRT2122A12	163000M	50m†	162G-164G	CW	2550	27m			KLR	OS	MT	WA	630m
56	VRT2122B12	163000M	50m†	162G-164G	CW	2550	27m			KLR	OS	MT	WA	1.0
57	VRT2122A13	165000M	50m†	164G-166G	CW	2550	27m			KLR	OS	MT	WA	630m
58	VRT2122B13	165000M	50m†	164G-166G	CW	2550	27m			KLR	OS	MT	WA	1.0
59	VRT2124A4	166000M	25m†	162G-170G	CW	2550	27m			KLR	OS	MT	WA	630m
60	VRT2124B4	166000M	25m†	162G-170G	CW	2550	27m			KLR	OS	MT	WA	1.0
61	VRT2122A14	167000M	50m†	166G-168G	CW	2550	27m			KLR	OS	MT	WA	630m
62	VRT2122B14	167000M	50m†	166G-168G	CW	2550	27m			KLR	OS	MT	WA	1.0
63	KA1690	169000M	10m	166.0G-172.0G	CW	2700	25m			KLR	OS	MT	WA	1.23
64	VRT2122A15	169000M	50m†	168G-170G	CW	2550	27m			KLR	OS	MT	WA	630m
65	VRT2122B15	169000M	50m†	168G-170G	CW	2550	27m			KLR	OS	MT	WA	1.0
66	KA1750	175000M	10m	172.0G-178.0G	CW	2700	25m			KLR	OS	MT	WA	1.23
67	VRY2131A	195000M	10m†	170G-220G	CW	2550	27m			KLR	OS	MT	WA	1.0
68▼	PT6145	1.3G	3.0M	1.25G-1.35G	3.3 m	145k	125	30		KLT#	AM		WA	661
69	VA145H	2800M	2.5M	2.700G - 2.900G	2.0m	117kØ	80 Ø	37		KLTØ	AM	FF	WA	140
70	VA145D	2800M	5.0M	2.700G-2.900G	2.0m	117k	84	38		KLTØ	AM		WA	120
71	VA145UL	2815M	3.0M	2.715G-2.915G	2.5m	126kØ	82 Ø	39		KLTØ	AM	FF	WA	140
72	VA145B	2850M	5.0M	2.750G-2.950G	2.5m	125k	92	40		KLTØ	AM	FF	WA	120
73	VA145E	3000M	2.5M	2.900G-3.100G	2.0m	117kØ	80 Ø	37		KLTØ	AM	FF	WA	140
74	VA145UH	3115M	3.0M	3.015G-3.215G	2.5m	126kØ	82 Ø	42		KLTØ	AM	FF	WA	140
75	VA145J	3115M	4.50M	3.015G-3.215G	2.5m	117k	90	40		KLTØ	AM		WA	125
76	VA145F	3300M	8.0M	3.100G-3.500G	2.0m	155k	125	36		KLTØ	AM		WA	110
77	VA915A	3350M	8.0M	3.100G-3.600G	3.0m	175k	145	53		KLTØ	AM		WA	275
78	VA146C	5625M	3.2M	5.400G-5.900G	2.0m	137k	92	36		KLT	AM	FF	WA	100
79	VA146M	5625M	5.0M	5.400G-5.900G	2.0m	139k	102	36		KLT	AM	FF	WA	100
80	VA146N	5650M	2.5M	5.400G-5.900G	4.0m	135kØ	93 Ø	36		KLTØ#	AM		WA	128 §
81	VA146	5650M	3.0M†	5.400G - 5.900G	4.0m	165k	94	35		KLTØ	AM		WA	135
82	VA913A	5650M	3.0M	5.400G-5.900G	2.0m	135k	98	36		KLTØ	AM	FF	WA	128
83	VKB2400T	95.0M	1000	1.0G	1.0	21000	650m	30.0		KLY	AM	MT	WA	131
84	VKB2449T	95.0M	1000	1.0G	1.0	21000	650m	30.0		KLY	AM	MT	WA	131
85	VA521	6250M	2.0	5.500G - 7.000G†		4000	33m			KL2	OS			
86	SZ31	8500M	20	8.000G - 9.000G*	CW	8000	40m			KL2	OS	FF	WA	3.63
87	VA508	8950M	5.0 *	8.000G-9.900G	CW	1375	125m			KL2	OS	FF	WA	.50
88	TV2350	9250M	600m†	8.500G-10.000G		1100	70mØ			KL2	OS	MT	WA	551m
89	QKK1802	9300M	250m	9.200G-9.400G	CW	4000	30m			KL2	OS		WA	10
90	QKL1390	9770M	3.0	9.770G-9.770G	CW	5000	35m			KL2	OS		WA	
91	QKK1803	9800M	500m	9.750G-9.850G	CW	4400	30m			KL2	OS		WA	10
92	VKX2402A1	9800M	2.0 †	9.78G-9.82G	CW	750	60m	10		KL2	AM	MT	WA	570m
93	VA523	10050M	200m	9.500G - 10.60G*	CW	2200	10m			KL2	OS	FF	WA	
94	VA524	10050M	.20	9.500G - 10.60G†	CW	2200	.01			KL2	OS	MT	WA	
95	TV514	10050M	2.0 †	9.500G-10.600G		4200	40mØ			KL2	OS	MT	WA	992m
96	VA514	10050M	2.0 †	9.500G - 10.60G*	CW	4200	40m			KL2	OS	FF	WA	1.0
97	VA518	10050M	2.0 †	9.500G - 10.60G*	CW	4000	30m			KL2	OS	MT	WA	
98	VA519	10050M	2.0 †	9.500G - 10.60G*	CW	4000	30m			KL2	OS	FF	WA	
99	VA520	10050M	2.0 †	9.500G - 10.60G*	CW	4200	40m			KL2	OS	MT	WA	
100	V23	10050M	5.0	9.100G - 11.00G	CW	1350	125m			KL2	OS	MT	WA	.37
101	VA517	10050M	50 †	9.500G - 10.60G†	CW	10000	80m			KL2Δ	OS	MT	WA	3.5
102	VA516	10050M	200	9.500G - 10.60G†	CW	13500	140m			KL2#	OS	FF	WA	2.5
103	QKK1466	10125M	180	10.00G-10.25G	CW	13000	140m			KL2	OS	MT	WA	10
104	QKK1106	10250M	2.0	10.000G-10.500G	CW	4.0k	35m			KL2	OS	FF	WA	
105	VA536	10300M	10 *	8.2G-12.4G†	CW	1250	120m			KL2	OS	FF	WA	500m
106	QKK1237	12975M	500m	12.700G-13.250G	CW	750	85m			KL2	OS	MT	CO	
107	VA503C	13300M	1.0 †	13.30G	CW	1600	26m			KL2	OS	FF	WA	.34
108	VA510D	13300M	2.0 †	13.30G	CW	2500	20m			KL2Δ	OS	FF	WA	.44
109	VA506	13300M	5.0	13.30G	CW	2200	50m			KL2	OS	FF	WA	
110	VA504B	13300M	15 †	13.30G	CW	3000	77m			KL2	OS	FF	WA	.56

SYMBOLS AND CODES EXPLAINED IN INTERPRETER

2. SOURCE,AMPLIFIER,OUTPUT TUBES

IN ORDER OF (1)TUBE TYPE (2)CENTER FREQUENCY (3)POWER OUTPUT (4)TYPE No.

LINE No.	4 TYPE No.	2 CENTER FREQ. (Hz)	3 POWER OUTPUT (W)	FREQUENCY RANGE (Hz)	MAX. DUTY CYCLE	MAX. BEAM VOLTAGE (Note 1) (V)	MAX. CATH-ODE CUR. (A)	GAIN (dB)	NF (dB)	DESCRIPTION 1 TUBE TYPE	FUNC-TION	TUN-ING	OUT PUT	WEIGHT (lb)
1	VA503B	13500M	1.0 †	13.50G	CW	1600	26m			KL2	OS	FF	WA	.34
2	VA515B	13500M	7.5	13.50G	CW	2200	60m			KL2	OS	FF	WA	.63
3	VA533	15200M	1.0 †	12.40G - 18.00G*	CW	800	60m			KL2Δ	OS	FF	WA	.50
4	VKU7008	15200M	10 †	12.400G-18.000G	CW	3500	120m			KL2Δ#	OS	FF	WA	1.5
5	TH2048A	15600M	200m†	Ku-Band		700	45mØ			KL2	OS	MT	WA	705m
6	TH2408	15600M	200m†	Ku-Band		700	45mØ			KL2	OS	MT	WA	705m
7	QKK1447	15650M	250m	15.55G-15.75G	CW	3250	20m			KL2	OS	MT	WA	5.0
8	YK1120	16500M	4.0 †	16.00G - 17.00G	CW	2200	65m			KL2	OS	FF	CO	.94
9	VA513	17750M	1.0 †	17.75G	CW	1500	32m			KL2	OS	FF	WA	.56
10	VA532	21000M	4.0 †	18.00G - 24.00G	CW	1300	95m			KL2Δ	OS	FF	WA	.56
11	VKK7009	22250M	7.0 †	18.000G-26.500G	CW	3500	120m			KL2Δ	OS	FF	WA	1.5
12	VA537	26000M	1.0	24G-28G†	CW	950	60m			KL2	OS	FF	WA	
13	VA531	29750M	1.5 †	26.50G - 33.00G	CW	1300	80m			KL2	OS	FF	WA	.60
14	VA531A	31000M	200m	31.00G	CW	1475	80m			KL2Δ	OS	FF	WA	.56
15	QKK1554	31000M	1.0	30.900G-31.200G	CW	6000	35m			KL2	OS	FF	WA	
16	QKL1550	31500M	30	31.500G-31.500G	500m	5250	120m			KL2	AM	FF	WA	
17	QKK1486	31500M	35	31.50G-31.50G	500m	13000	130m			KL2	OS	FT	WA	2.0
18	VKA7010	33250M	7.0 †	26.500G-40.000G	CW	3500	120m			KL2Δ	OS	FF	WA	800m
19	VA534	36500M	1.5 †	33.00G - 40.00G*	CW	1550	80m			KL2Δ	OS	FF	WA	.56
20	VA535	42000M	1.0 †	40.00G - 44.00G	CW	1425	80m			KL2	OS	FF	WA	
21	F2917/8315	5642	300	5.385G-5.900G	.002	950M	30			KL3	AM	MT	CO	3.25
22	3KM50000PA2	312.5M	23.1k	225M-400M	CW	23000	2.6	36		KL3#	AM			2103 *
23	3KM300LA	400M	105k	345.0M - 455.0M	CW	30000	9.0 Ø	13.2		KL3Ø#	AM	MT	CO	1202 *
24	3KM3LB	413M	2.3k*	350.0M - 475.0M	CW	9000	590mØ	23		KL3Ø	AM	MT	CO	616 *
25	3KM3000LA	485M	2.3k*	385M-585M	CW	9000 Ø	59m	30		KL3Ø$	AM	MT	CO	584 *
26	K347A	598M	600k	580M-615M	2.4m	80000	23	33		KL3	AM	MT	CO	65 §
27	3K3000LQ	853M	2.0k	720.0M - 985.0M	CW	9000	.75	30		KL3	AM	MT	CO	32
28	3K210000LQ	870M	76k	755.0M - 985.0M	CW	26000 Ø	6.3 Ø	13		KL3Ø#	AM	MT	WA	970 *
29	Z211/1G	1081M	7.0k†	950M-1.213G	30m	15000	2.0	34		KL3	AM	SR	CO	
30	F2910	1087M	5.5k†	960M-1.215G	25m	12500	2.0	24		KL3*Δ	AM	MT	CO	35
31	8493/F2913	1087M	11.5k†	960M-1.215G	25m	12500	4.5	25		KL3Δ*	AM	MT	CO	31
32	F2911	1087M	11.5k†	960M-1.215G	25m	12500	4.5	25†		KL3*Δ	AM	MT	CO	31
33	SAL89	1087M	11.5k†	960M-1215M	25M	12500	4.5	25†		KL3*Δ	AM	MT	CO	33
34	F2947	1087M	13k†	1.215G-1.365G	20m	14500	4.8	26		KL3*Δ	AM	MT	CO	43
35	F2914	1087M	15k†	960M-1.215G	25m	20000	4.0	24		KL3*Δ	AM	MT	CO	50
36	F2919	1087M	18k†	960M-1.215G	25m	20000	4.0	24		KL3*Δ	AM	MT	CO	45
37	F2912	1087M	37k†	960M-1.215G	25m	24000	8.0	27†		KL3*Δ	AM	MT	CO	45
38	F2909	1290M	13k†	1.215G-1.365G	20m	14500	4.8	26		KL3*Δ	AM	MT	CO	43
39	F2932	1290M	32k†	1.215G-1.365G	35m	24000	8.0	28		KL3*Δ	AM	MT	CO	450m
40	X3002A	1300M	1.0k	1.235G - 1.365G	CW	9000	650m	27		KL3	AM	MT	CO	155
41	4KMP300LU	1300M	2.0k	1.235G-1.365G	50m	110k	63	35		KL3Ø	AM	MT	CO	400
42	X3002	1300M	4.0k	1.235G - 1.365G	30m	10300 Ø	750mØ	23		KL3Ø$	AM	MT	CO	25 *
43	7504	1300M	2.2M	1.240G - 1.360G	3.0m	125.0k	87	36		KL3	AM	MT	WA	110
44	YK1110	2998M	6.0M	2.993G-3.003G	2.0m	220k	120	30		KL3Ø#	AM	FF	WA	220
45	F2920	3950M	8.0	3.700G-4.200G	CW	900	300m	25		KL3Δ	AM	MT	WA	5.0
46	VKX7820A	9900M	50	9.200G-10.600G	CW	2800	100m	40		KL3†#	AM			4.0 *
47	VKX7006	10200M	25	8.000G-12.400G	CW	2000 Ø	100mØ			KL3§	OS	FF	WA	8.0
48	QKL1219	10200M	2.5k	10.000G-10.400G	CW	11000	800m	25		KL3	AM	MT	WA	31
49	4KM50LC	400M	10k*	345.0M - 455.0M	CW	17000	1.9	32		KL4Ø$	AM	MT		861 *
50	4KM50LB	413M	10k	350.0M - 475.0M	CW	17000	2.2	32		KL4Ø$	AM	MT	CO	861 *
51	VA842	425M	1.25M	400.0M - 450.0M	60m	100kØ	31 Ø	41		KL4Ø	AM	MT	CO	840
52	4KM150LB	430M	50kΔ	429.8M - 433.8M	500m	22000	6.3	40		KL4Ø#	AM			165
53	X602K	438M	150k†	375.0M - 500.0M	220m	50000	5.0	45		KL4Ø	AM		CO	196
54	F2055	500M	500k	5M§	0.5	55k	30	37		KL4	AM	FF	WA	660 §
55	4KM50000LA5	505M	10k	400.0M - 610.0M	CW	17000	2.0	43		KL4	AM	MT		849 *
56	4KM50000LA3	505M	12k*	400.0M - 610.0M	CW	17000 Ø	1.8 Ø	54		KL4Ø$#	AM	MT	CO	831 *
57	1AV30	518M	6.0k	470M-566M	CW	12000	2.0	36		KL4Ø	AM	MT	CO	240
58	1AV50	518M	12.5k	470M-566M	CW	17000	3.0	40		KL4Ø	AM	MT	CO	220
59	8824	518M	30k	470M-566M	CW	6.0	16.4	40		KL4†	AM	FF	WA	200
60	VA890A	518M	30k	470.0M - 566.0M	CW	19000	5.25	33		KL4Ø	AM	MT	CO	200
61	VA890H	518M	30k	470.0M-566.0M	CW	18500 Ø	4.5 Ø	35		KL4Ø#	AM	MT	CO	620 *
62	1AV60	518M	32k	470M-566M	CW	20000	5.5	38		KL4Ø	AM	MT	CO	290
63	K3382	518M	58000	470M-566M	CW	2200	7.0	44		KL4#	AM	EM	CO	160 §
64	1AV57	524M	12k	470M-578M	CW	18500	2.2	30.7		KL4Ø	AM	MT	CO	286
65	K3217H	530M	45k	470M-590M	CW	21000	5.7	40		KL4Ø#	AM	MT	CO	
66	K3276H	530M	55k	470M-596M	CW	23000	7.0	40		KL4Ø#	AM	MT	CO	120 §
67	K3382BCD	530M	58k	470-590M		23.5k	7.0	41		KL4#$§♦	AM	BB	CO	210
68	E3753	530M	80k	460M-600M	CW	33000	15	40		KL4Ø	AM	MT	WA	396
69▼	K3230BCD	533M	32k	470M-596M		24kØ	46	38		KL4#$	AM		CC	250
70	4KM150LA	533M	55k	470.0M-596.0M	CW	24000 Ø	7.5 Ø	40		KL4Ø#	AM	MT	CO	1791 *
71▼	K3276HBCD	533M	58k	470M-596M		24kØ	46	40		KL4#$	AM		CC	120
72	K370W	539M	12.5k	470M-608M	CW	13k	150m			KL4	AM		CO	65
73	K370	540M	12k	470.0M - 610.0M	CW	14000	3.5	40		KL4Ø	AM	MT	CO	946 *
74	K376L	540M	28k	470M-610M	CW	18k	4.6	42		KL4	AM		CO	90
75	4KM100LA	540M	30k	470.0M-596.0M	CW	19000 Ø	5.3 Ø	40		KL4Ø#	AM	MT	CO	1791 *
76	K3282	540M	45k	470M-610M	CW	22000	6.5	47		KL4Ø#	AM	MT	CO	160
77	YK1190	540M	45k	470M-610M	CW	23000	7.0	44		KL4Ø	AM	MT	CO	176
78	1AV35	549.25M	7.0k	470M-566M	CW	17000	30	35		KL4Ø	AM	MT	CO	253
79	1AV56	575M	17k	460M-690M	CW	20000	3.0	44		KL4Ø	AM	MT	CO	210
80	1AV48	575M	33k	460M-690M	CW	20000	6.0	47		KL4Ø	AM	MT	CO	260
81	VA958A	615M	12.5k	590.0M - 640.0M	CW	14500	2.7	40		KL4Ø	AM	MT	CO	220
82	YK1002	630M	2.2k	470M-790M	CW	18500	2.0			KL4†#	AM	MT	CO	99
83	YK1003	630M	4.4k	470M-790M	CW	18500	2.0			KL4†	AM	MT	GO	121
84	YK1001	630M	11k	470.0M - 790.0M	CW	18000	2.0			KL4†	AM	MT	CO	121
85	8825	632M	30k	566M-698M	CW	6.0	16.4	40		KL4	AM	FF	WA	200
86	VA891A	632M	30k	566.0M - 698.0M	CW	19000	5.25	33		KL4Ø	AM	MT	CO	200
87	1AV61	632M	32k	566M-698M	CW	20000	5.5	38		KL4Ø	AM	MT	CO	270
88	K3383	632M	58000	566M-698M	CW	2200	7.0	44		KL4#	AM	EM	CO	160 §
89	1AV58	636M	12k	574M-698M	CW	18500	2.2	30.7		KL4Ø	AM	MT	CO	264
90	K3272BCD	638M	58k	470-806M		25.5k	5.5	40		KL4#$§♦	AM	BB	CO	155
91	K3272WBCD	638M	58k	470-806M		26k	7.0	40		KL4#$§	AM	BB	CO	80
92	K3218H	645M	45k	590M-702M	CW	21000	5.7	44		KL4Ø#	AM	MT	CO	
93▼	K3231BCD	647M	32k	590M-704M		24kØ	46	38		KL4#$	AM		CC	220
94	K3271BCD	650M	30k	470-860M		26k	4.0	30		KL4#$♦§	AM	BB		66
95	K3277H	650M	58k	590M-704M	CW	24k		40		KL4	AM	BB	CO	120 §
96	K3383BCD	650M	58k	590-702M		23.5k	7.0	41		KL4#$§♦	AM	BB	CO	210
97	4KM100LF	653M	30k	596.0M-710.0M	CW	18500 Ø	4.5 Ø	40		KL4Ø#	AM	MT	CO	1777 *
98	4KM150LF	653M	55k	596.0M-710.0M	CW	24000 Ø	7.5 Ø	40		KL4Ø#	AM	MT	CO	1777 *
99	K371	655M	12k	590.0M - 720.0M	CW	14000	3.5	40		KL4Ø	AM	MT	CO	922 *
100	K377L	655M	28k	590M-720M		18k	4.6	44		KL4	AM		CO	90
101	K3283	655M	45k	590M-720M	CW	22000	6.5	47		KL4Ø#	AM	MT	CO	160
102	YK1191	655M	45k	590M-720M	CW	23000	7.0	44		KL4Ø	AM	MT	CO	176
103	K3270	665M	15.0k	470M-860M		21.0k	5.0m	30		KL4§$#♦	AM	MT	CO	55
104	YK1230	665M	22k	470M-860M		24k				KL4				100 *
105	K3271	665M	25.0k	470M-860M		26.0k	5.0m	30		KL4§$#♦	AM	MT	CO	66
106	YK1151	665M	25k*	470M-860M	CW	28000	4.0	40†		KL4†	AM	MT	CO	220 *
107	YK1005	670M	11k	470.0M - 860.0M	CW	22000				KL4	AM	MT	CO	132
108	K371W	674M	12.5k	606M-742M	CW	13k	150m			KL4	AM		CO	60
109	YK1000	680M	10k	400.0M - 960.0M	CW	20000	2.5	57		KL4	AM	SR		
110	1AV51	682M	12.5k	566M-698M	CW	17000	3.0	40		KL4Ø	AM	MT	CO	200

2. SOURCE,AMPLIFIER,OUTPUT TUBES

IN ORDER OF (1)TUBE TYPE (2)CENTER FREQUENCY (3)POWER OUTPUT (4)TYPE No.

LINE No.	4 TYPE No.	2 CENTER FREQ. (Hz)	3 POWER OUTPUT (W)	FREQUENCY RANGE (Hz)	MAX. DUTY CYCLE	MAX. BEAM VOLTAGE (Note 1) (V)	MAX. CATHODE CUR. (A)	GAIN (dB)	NF (dB)	DESCRIPTION 1 TUBE TYPE	FUNCTION	TUNING	OUTPUT	WEIGHT (lb)
1	YK1004	700M	11k	610.0M - 790.0M	CW	20000				KL4	AM	MT	CO	88
2	4KMV150LH1	715M	190kΔ	714.5M - 715.5M	260m	38000	14.8	40		KL4Ø#	AM			250
3	K3278H	740M	58k	702M-860M	CW	24k		40		KL4	AM	BB	CO	80 §
4	4KM70LH	770M	15k	710.0M-850.0M	CW	16000 Ø	4.0 Ø	33		KL4Ø#	AM	MT	CO	1805 *
5	VA892H	774M	30k	698M-850M	CW	18500	5.0	35		KL4#	AM			357 *
6	1AV59	780M	12k	698M-860M	CW	18500	2.2	30.7		KL4Ø	AM	MT	CO	264
7	K372	780M	12k	700.0M - 860.0M	CW	14000	3.5	40		KL4Ø	AM	MT	CO	903 *
8	4KM100LH	780M	30k	710.0M-850.0M	CW	19000 Ø	5.3 Ø	35		KL4Ø#	AM	MT	CO	1810 *
9	K3219H	780M	45k	702M-860M	CW	21000	5.7	46		KL4Ø#	AM	MT	CO	
10	K3284	780M	45k	700M-860M	CW	22000	6.5	47		KL4Ø#	AM	MT	CO	155
11	YK1192	780M	45k	700M-860M	CW	23000	7.0	42		KL4	AM	MT	CO	150
12	4KM150LH	780M	55k	710.0M-850.0M	CW	24000 Ø	7.5 Ø	35		KL4Ø#	AM	MT	CO	1810 *
13	K3384BCD	780M	58k	702-854M		24	7.0	40		KL4#$§♦	AM	BB	CO	155
14	8826	789M	30k	698.0M-890.0M	CW	19000	5.25	33		KL4Ø	AM	MT	CO	186
15	VA892A	789M	30k	698.0M - 890.0M	CW	19000	5.25	33		KL4Ø	AM	MT	CO	186
16	K3384	792M	58000	694M-890M	CW	2200	7.0	44		KL4#	AM	EM	CO	155 §
17	1AV62	794M	32k	698M-890M	CW	20000	5.5	37		KL4Ø	AM	MT	CO	250
18	4KM3000LR	798M	2000 †	610.0M - 985.0M	CW	10000	750m	45†		KL4Ø	AM	MT	CO	363 *
19	4KM70LH2	805M	100kΔ	800.0M - 810.0M	60m	30000	10	40		KL4Ø#	AM	MT		205 *
20	4KM150LH1	805M	150kΔ	800.0M - 810.0M		35000	13	40		KL4	AM			210
21	K372W	815M	12.5k	740M-890M	CW	13k	150m			KL4	AM		CO	60
22	4KM50000LQ	830M	10k	670.0M-985.0M	CW	20000	2.5	30*		KL4*	AM	FM		404 *
23	K3286	835M	11.0k	750M-920M		14.0k	3.0 Ø			KL4§#♦	AM	MT	CO	55
24	VA920B	850M	1.0k	800M-900M		9000	825m	36		KL4	AM	MT	CO	310 *
25	K3287	850M	4.5k	750M-950M		12.0k	2.0 Ø			KL4§#♦	AM	MT	CO	55
26	VA920A	870M	2.0k	755.0M - 985.0M	CW	8000	800m	36		KL4Ø	AM	MT	CO	315 *
27	K387	870M	2.5k†	755-985M	CW	10k				KL4Ø	AM	MT	CO	55 §
28	4KM50000LR	870M	10k	755.0M - 985.0M	CW	17000 Ø	1.9 Ø	30†		KL4Ø	AM	MT	CO	404 *
29	VA917B	870M	10k	755.0M - 985.0M	CW	13000	3.0	33		KL4Ø#	AM	MT	CO	300 *
30	K386W	870M	11k	755M-985M	CW	14k				KL4	AM	BB	CO	55 §
31	K386	870M	12k	755.0M - 985.0M	CW	14000	3.5	40		KL4Ø	AM	MT	CO	839 *
32	4K200LW	1175M	55k	1.000G - 1.235G	CW	25000 Ø	8.0 Ø	35		KL4Ø#	AM	MT	WA	
33	TH2437	1300M	1000	1298M-1302M	CW	6500		45		KL4	AM	FF	CO	84
34	4K200LX	1300M	60k	1.235G - 1.365G	CW	26000	8.5	34.9		KL4#Ø	AM	MT	WA	450 *
35	X780	1300M	2.5M	1.235G-1.365G	30m	115kØ	58.6 Ø	35		KL4Ø$#	AM	FF	WA	400
36	LD919	1475M	1.0k	1425M-1525M	CW	7000	600m	38		KL4†	AM	MT	CO	90
37	LD4404	1477M	1.0k	1429M-1525M	CW	7000	600m	40		KL4	AM	MT	WA	66.0
38	LD659	1775M	20k	1.700G-1.850G	CW	20000	3.2	47		KL4	AM	MT	WG	65
39	LD4331	1780M	250	1.700G-1.860G	CW	3600	300m	33		KL4†	AM	MT	CO	73
40	LD952A	1800M	2.2k	1.700G-1.900G	CW	8500	850m	36		KL4†	AM	MT	CO	97 *
41	4K5SL2	1800M	2.5k	1.750G-1.850G	CW	9000	900m	41		KL4	AM	MT	CO	85
42	VA800H	1800M	13k†	1.750G-1.850G	CW	20000	2.5	41.1†		KL4	AM	MT	WA	50
43	LD585A	1850M	1.0k	1700M-2000M	CW	7000	590m	34		KL4†	AM	MT	CO	85
44	LD4384	1850M	1.0k	1.7-2.0G	CW	7.0k	700m	43		KL4†	AM	MT	CO	66
45	LD4412	1850M	2.2k	1.7-2.0G	CW	9.0k	900m	38.7		KL4†	AM	MT	WA	74.8
46	4K3SJ	2050M	1.0k†	1.700G - 2.400G	CW	7000	600m	40†		KL4†	AM	MT	CO	85 *
47	4K3SL3	2050M	1.0k	1.700G-2.400G	CW	6200	570m	35†		KL4	AM			85 *
48	LD4410	2050M	1.0k	1700M-2400M	CW	7.0k	700m	40		KL4†	AM	MT	WA	66
49	TH2429	2050M	1.0k	1.700G-2.400G	CW	6200	600m	37†		KL4	AM	MT	WA	85
50	TH2432	2.05G	1.0k	1.7-2.4G*	CW	6.5k	550m	34		KL4	AM	FF	CO	85
51	VA802B	2050M	1.0k	1.700G - 2.400G	CW	6000	600m	40		KL4†	AM	MT	CO	85
52	4K5SL1	2050M	2.0k†	1.700G - 2.400G	CW	8600	800m	40†		KL4†	AM	MT	WA	95 *
53	4K5SL3	2050M	2.0k	1.700G-2.400G*	CW	9000	900m	40		KL4†	AM	MT	WA	85 *
54	VA800E	2050M	10k	1.700G - 2.400G	CW	18000 Ø	2.0 Ø	40		KL4Ø#	AM	MT	WA	250 *
55	4KM50SJ	2050M	12k	1.700G - 2.400G	CW	18000 Ø	1.8 Ø	40†		KL4Ø#	AM	MT	WA	260 *
56	VKS7770	2050M	12.1k	1.7G-2.4G	CW	19000	1.85	40.8		KL4Ø#$	AM	MT	WA	260
57	4KM70SJ	2050M	22.2k	1.700G - 2.400G	CW	20000 Ø	2.8 Ø	40†		KL4Ø$#	AM	MT	WA	280 *
58	4KM50SI	2115M	10k	2.100G-2.130G	CW	18000 Ø	1.8 Ø	40		KL4Ø$#	AM	MT	WA	260 *
59	LD4233	2200M	1.1k	2.000G-2.400G	CW	7000	700m	36		KL4Ø	AM	MT	CO	110
60	LD4413	2200M	2.0k	2.06-2.4G	CW	9.0k	900m	38.7		KL4†	AM	MT	WA	74.8
61	VKS7793	2475M	11k	2.40G-2.55G	CW	20000	3.0	43		KL4Ø#	AM	MT	WA	90
62	4K3SK	2550M	1.0k†	2.400G - 2.700G	CW	7000	600m	40†		KL4†	AM	MT	CO	85 *
63	LD4036	2550M	1.0k	2400M-2700M	CW	8000	550m	38		KL4†	AM	MT	CO	85
64	LD4411	2.55G	1.0k	2.4-2.7G	CW	7.0k	0.7	41		KL4†	AM	MT	WA	66
65	4KM50SK	2625M	10k	2.550G - 2.700G	CW	18000 Ø	1.8 Ø	40		KL4Ø$#	AM	MT	WA	260 *
66	4KM70SK	2625M	20k	2.550G - 2.700G	CW	21000	4.0	43.5		KL4	AM	MT	WA	90
67	7662	2750M	1.3M	2.700G - 2.800G	3.0m	110.0k	60	56		KL4	AM	MT	WA	65
68	L3668H	2800M	20k	2.700G - 2.900G		25000 Ø	2.8 Ø			KL4	OS		WA	35 Δ
69	M4634	2830M	4.0M	2.800G-2.860G	2.4m	150k	116	42		KL4Ø#	AM	MT	WA	99
70	7663	2850M	1.3M	2.800G - 2.900G	3.0m	110.0k	60	56		KL4	AM	MT	WA	65
71	VA820	2850M	8.0M	2.800G - 2.900G	1.0m	160k	128	47		KL4Ø#	AM	FF	WA	65
72	VA820C	2850M	8.0M	2.80G-2.90G	2.0m	140k	115	47		KL4Ø#	AM	FF	WA	65 §
73	VA820D	2850M	8.0M	2.80G-2.90G	2.0m	140k	115	47		KL4Ø#	AM	FF	WA	65 §
74	VA820E	2850M	8.0M	2.80G-2.90G	2.0m	140k	115	47		KL4Ø#	AM	FF	WA	65 §
75	VA820F	2850M	8.0M	2.80G-2.90M	2.0m	140k	115	47		KL4Ø#	AM	FF	WA	65 §
76	4K3SN	2925M	1000	2.800G - 3.050G	CW	6500 Ø	460mØ	40		KL4†	AM	MT	CO	85 *
77	TH2436	2925M	10000 †	2800M-3050M		16000	1.1	45		KL4	AM	MT	CO	84
78	TH2047W	3150M	1000 †	2.800G-3.500G	CW	6500	500m	40		KL4	AM	MT	CO	83.6
79	VKC2403A1	4475M	2.0k	4.4G-4.55G	CW	10000	1.0	50		KL4	AM	MT	WA	13 §
80	VKC2404A1	4475M	5.8k	4.4G-4.55G	CW	14000	1.4	45		KL4Ø	AM	MT	WA	20
81	VKC2403A2	4625M	2.0k	4.55G-4.7G	CW	10000	1.0	50		KL4	AM	MT	WA	13 §
82	VKC2404A2	4625M	5.8k	4.55G-4.7G	CW	14000	1.4	45		KL4Ø	AM	MT	WA	20
83	4K3CB	4700M	1.0k	4.400G - 5.000G	CW	7900	510m	45		KL4	AM	MT	WA	60 *
84	VA988A	4700M	1.0k	4.400G-5.000G	CW	7800	650m	38		KL4Ø	AM	MT	WA	46
85	4K3CC	4700M	1.2k	4.400G-5.000G*	CW	7500 Ø	470mØ	41		KL4†	AM	MT	WA	52 *
86	F2945	4700M	1.2k	4.400G-5000G	CW	7500	500m	45		KL4	AM	MT	WA	38
87	TH2427A	4700M	1.2k†	4.400G-5.000G	CW	6700	600m	38		KL4	AM	MT	WA	55
88	VA834B	4700M	1.2k	4.400G-5.000G*	CW	7500 Ø	470mØ	41		KL4†	AM	MT	WA	52 *
89	VA888	4700M	1.2k	4.400G - 5.000G†	CW	7500	500m	41		KL4†	AM	MT	WA	38
90	VA888B	4700M	1.2k†	4.400G-5.000G	CW	8500	600m	43.8		KL4	AM	MT	WA	38
91	VA888H	4700M	1.2k	4.400G-5.000G	CW	8000	565m	40		KL4†	AM			38 *
92	VA888D	4700M	1.3k	4.400G-5.000G	CW	7500	500m	51		KL4†	AM			38 *
93	F2951	4700M	1.4k	4.400-5.000G	CW	7500	500m	51		KL4†	AM	MT	WA	38
94	VA888E	4700M	1.4k	4.400G-5.000G	CW	7500	500m	51		KL4†	AM			38 *
95	QKK1981	4700M	2.4k	4.400G-5.000G	CW	8000	750m	45		KL4	AM	MT	WA	70
96	VKC2403A3	4775M	2.0k	4.7G-4.85G	CW	10000	1.0	50		KL4	AM	MT	WA	13 §
97	VKC2404A3	4775M	5.8k	4.7G-4.85G	CW	14000	1.4	45		KL4Ø	AM	MT	WA	20
98	VKC2403A4	4925M	2.0k	4.85G-5.0G	CW	10000	1.0	50		KL4	AM	MT	WA	13 §
99	VKC2404A4	4925M	5.8k	4.85G-5.0G	CW	14000	1.4	45		KL4Ø	AM	MT	WA	20
100	VKC2403A5	5075M	2.0k	5.0G-5.15G	CW	10000	1.0	50		KL4	AM	MT	WA	13 §
101	VKC2404A5	5075M	5.8k	5.0G-5.15G	CW	14000	1.4	45		KL4Ø	AM	MT	WA	20
102	VA804	5137.5M	2.2k	4.400G - 5.875G	CW	10000	1.0	50		KL4	AM	MT	WA	14
103	VA846	5200M	3.0k	4.40G-6.00GΔ	CW	12500	1.3	55		KL4#Ø	AM	MT	WA	20
104	VKC2403A6	5225M	2.0k	5.15G-5.3G	CW	10000	1.0	50		KL4	AM	MT	WA	13 §
105	VKC2404A6	5225M	5.8k	5.15G-5.3G	CW	14000	1.4	45		KL4Ø	AM	MT	WA	20
106	VA988C	5300M	1.0k	5.250G-5.350G	CW	7800	650m	44		KL4Ø	AM	MT	WA	40
107	VA988	5300M	1.2k	5.300G	500m	7800 Ø	650mØ	44		KL4†	AM	FF	WA	46 *
108	VKC2403A7	5375M	2.0k	5.3G-5.45G	CW	10000	1.0	50		KL4	AM	MT	WA	13 §
109	VKC2404A7	5375M	5.8k	5.3G-5.45G	CW	14000	1.4	45		KL4Ø	AM	MT	WA	20
110	VKC2403A8	5525M	2.0k	5.45G-5.6G	CW	10000	1.0	50		KL4	AM	MT	WA	13 §

SYMBOLS AND CODES EXPLAINED IN INTERPRETER

2. SOURCE,AMPLIFIER,OUTPUT TUBES

IN ORDER OF (1)TUBE TYPE (2)CENTER FREQUENCY (3)POWER OUTPUT (4)TYPE No.

LINE No.	4 TYPE No.	2 CENTER FREQ. (Hz)	3 POWER OUTPUT (W)	FREQUENCY RANGE (Hz)	MAX. DUTY CYCLE	MAX. BEAM VOLTAGE (Note 1) (V)	MAX. CATH-ODE CUR. (A)	GAIN (dB)	NF (dB)	DESCRIPTION 1 TUBE TYPE	FUNC-TION	TUN-ING	OUT PUT	WEIGHT (lb)
1	VKC2404A8	5525M	5.8k	5.45G-5.6G	CW	14000	1.4	45		KL4Ø	AM	MT	WA	20
2	VA808	5600M	20k	5.3G-5.9G†	15m	22000	2.9 Ø	53		KL4†	AM	MT	WA	28 *
3	VKC2403A9	5675M	2.0k	5.6G-5.75G	CW	10000	1.0	50		KL4	AM	MT	WA	13 §
4	VKC2404A9	5675M	5.8k	5.6G-5.75G	CW	14000	1.4	45		KL4Ø	AM	MT	WA	20
5	VKC2404A10	5812.5M	5.8k	5.75G-5.875G	CW	14000	1.4	45		KL4Ø	AM	MT	WA	20
6	VKC2403A10	5813M	2.0k	5.75G-5.875G	CW	10000	1.0	50		KL4	AM	MT	WA	13 §
7	VA864M	5895M	10k	5.860G-5.930G		15000	2.5	50		KL4Ø#	AM	MT	WA	105 *
8	VKC2404A11	5925M	5.8k	5.85G-6.0G	CW	14000	1.4	45		KL4Ø	AM	MT	WA	20
9	VA861	6150M	1.1k	5.900G - 6.400G†	CW	7000	500m	48		KL4†	AM	MT	WA	45
10	VKJ2450A1	6175M	1.5k	5.925G-6.425G	CW	7500	875m	37		KL4	AM	MT	WA	70 *
11	VKJ2450A2	6175M	1.5k	5.925G-6.425G	CW	8000	900m	40		KL4	AM	MT	WA	70 *
12	VKJ2450A11	6175M	3.0k	5.925G-6.425G	CW	10000	1.25	40		KL4	AM	MT	WA	70 *
13	VKJ2450B13	6175M	3.0k	5.925G-6.425G	CW	10000	1.25	40		KL4	AM	MT	WA	70 *
14	VKJ2450B14	6175M	3.0k	5.925G-6.425G	CW	8200	1.2	40		KL4	AM	MT	WA	70 *
15	VKJ2450A21	6175M	3.35k	5.925G-6.425G	CW	10000	1.25	40		KL4	AM	MT	WA	70 *
16	X3030	8000M	250k	8.000G	CW	110.0k	9.6	40		KL4	AM		WA	
17	SY41	8500M	3.0k	8.000G - 9.000G*	CW	13000	700m	40		KL4	AM	FF	WA	90
18	VA903	8550M	2.7k	7.100G-10.00G	CW	10000	800m	45		KL4†	AM	MT	WA	60 *
19	VA823	8550M	6000	7.100G - 10.00GØ	CW	14500	1.5	47.8		KL4#Ø	AM	MT	WA	8.0
20	VA866	9550M	1.0k	7.100G-12.00G	CW	8000 Ø	500m	44†		KL4†	AM	MT	WA	45 *
21	VA870	9600M	1.5k	9.200G-10.00G	400m	11000	640m	54		KL4#†	AM	MT	WA	23 *
22	VA845	9750M	5.0k	9G-10.5GØ,±50MØ	200m	14000 Ø	1.4 Ø	60.3		KL4†#	AM	MT	WA	17 *
23	VA896F	9900M	300	9.200G-10.60G*	CW	4650 Ø	280mØ	45		KL4†#	AM	MT	WA	5.5 *
24	VA909	9900M	300	9.200G - 10.60G†	CW	4650 Ø	280mØ	45		KL4†#	AM	MT	WA	5.5 *
25	VA869A	9900M	500	9.200G-10.60G	400m	6000	375m	43		KL4†	AM	MT	WA	5.0 *
26	VKX7765	10000M	1.5k	9.000G-11.00G	CW	8000 Ø	700mØ	45		KL4†#	AM	MT	WA	25
27	VA896	10050M	300	9.200G - 10.60G†	CW	5350 Ø	350mØ	40		KL4†	AM	MT	WA	10 *
28	QKK1892	10125M	2.0k	10.000G-10.250G	CW	10000	1.0	54		KL4	AM	MT	WA	37
29	QKL1066	10400M	2.0k	10.200G-10.600G	CW	10400	1.1	65		KL4	AM	MT	WA	35
30	VKX7765D	10500M	2.5k	10.000G-11.000G	CW	10500	900m	43		KL4†#	AM			35 *
31	VA935	13500M	2.0k	13.50G	CW	9500	700m	60		KL4#†	AM	MT	WA	40
32	VA930	16500M	500 †	15.00G - 18.00GØ	CW	5800 Ø	360mØ	42		KL4†	AM	MT	WA	12.5 *
33	VKU7763	16500M	1.0M	15.000G-18.000G	500m	8500 Ø	600mØ	42		KL4†	AM	MT	WA	15 *
34	TH2445		1.5k	17.3-18.1G	CW	13k	600m	42		KL5	AM	FF	WA	65
35	VA812E	425M	20M†	400M-450M	150m	240k	320	36		KL5Ø#	AM	FF	WA	1500
36	1AV85	500M	55k	470M-566M	CW	27000	6.0	42		KL5Ø	AM	MT	CO	309
37	E3774	500M	200k	498-502M	CW	50k	10	45		KL5Ø#	AM	MT	WA	450
38	VA943A	518M	12.5k	470.0M-566.0M	CW	13500 Ø	3.0 Ø	43		KL5Ø♦	AM	MT	CO	810 *
39	VA946A	518M	25k	470M-566M	CW	18000	5.1	46		KL5Ø	AM	MT	CO	240
40	VA946A/B	518M	25k	470M-566M	CW	21000	6.2	46		KL5Ø	AM	MT	CO	240
41	VA946H	518M	30k	470.0M-566.0M	CW	18500 Ø	4.5 Ø	46		KL5Ø♦	AM	MT	CO	990 *
42	VA946C	518M	32.5k	470M-566M	CW	19500	5.4	48		KL5Ø#	AM	MT	CO	350
43	1AV67	518M	34k	470M-566M	CW	24k	4.0	35		KL5Ø♦	AM	MT	CO	363
44	1AV97A	518M	40.0k	470M-566M		27.0k	5.5	36.0		KL5♦§	AM	MT	WA	330.7
45	VA950A	518M	40k	470M-566M	CW	24000	8.0	48.8		KL5Ø	AM	MT	CO	240
46	1AV97	518M	45k	470M-566M	CW	27000	5.5	36		KL5Ø♦	AM	MT	CO	374
47	VA950G	518M	45k	470M-566M	CW	23000	6.8	48		KL5♦	AM			990
48	VA953A/B/G/H	518M	57k	470M-566M	CW	24000	7.5	49	49	KL5♦	AM			1080
49	VA953A/B	518M	58k	470M-566M	CW	25000	8.3	49.2		KL5Ø#	AM	MT	CO	590 Δ
50	VA943B	522M	10k	470M-574M	CW	13500	3.5	41		KL5Ø	AM	MT	CO	250
51	TH2080	525M	50000 †	470M-580M	CW	23000	6.0	45†		KL5	AM	MT	CO	220
52	1AV81	600M	11k	470M-692M	CW	16000	3.0	44		KL5Ø	AM	MT	CO	175
53	1AV95	600M	11k	470M-692M	CW	17000	3.0	44		KL5Ø	AM	MT	CO	220
54	1AV88	600M	21k	470M-692M	CW	20000	4.0	45		KL5Ø	AM	MT	CO	265
55	1AV83	600M	33k	470M-692M	CW	21000	6.0	45		KL5Ø	AM	MT	CO	240
56	1AV86	600M	55k	566M-698M	CW	27000	6.0	42		KL5Ø	AM	MT	CO	287
57	VA944A	632M	12.5k	566.0M-698.0M	CW	13500 Ø	3.0 Ø	43		KL5Ø♦	AM	MT	CO	810 *
58	VA947A	632M	25k	566M-698M	CW	18000	5.1	46		KL5Ø	AM	MT	CO	240
59	VA947A/B	632M	25k	566M-698M	CW	21000	6.2	46		KL5Ø	AM	MT	CO	240
60	VA891H	632M	30k	566.0M-698.0M	CW	18500 Ø	4.5 Ø	35		KL5Ø#	AM	MT	CO	555 *
61	VA947H	632M	30k	566.0M-698.0M	CW	18500 Ø	4.5 Ø	46		KL5Ø♦	AM	MT	CO	847 *
62	VA947C	632M	32.5k	566M-698M	CW	19500	5.4	48		KL5Ø#	AM	MT	CO	350
63	1AV68	632M	34k	566M-698M	CW	24k	4.0	35		KL5Ø♦	AM	MT	CO	308
64	1AV98A	632M	40.0k	566M-698M		27.0k	5.5	36.0		KL5♦§	AM	MT	WA	297.6
65	VA951A	632M	40k	566M-698M	CW	24000	8.0	48.8		KL5Ø	AM	MT	CO	240
66	1AV98	632M	45k	566M-698M	CW	27000	5.5	36		KL5Ø♦	AM	MT	CO	330
67	VA951G	632M	45k	566M-698M	CW	23000	6.8	48		KL5♦	AM			847
68	VA954A/B/G/H	632M	57k	566M-698M	CW	24000	7.5	49		KL5♦	AM			990
69	VA954A/B	632M	58k	566M-698M	CW	25000	8.3	49.2		KL5Ø#	AM	MT	CO	590 Δ
70	TH2081	635M	50000 †	570M-700M	CW	23000	6.0	45†		KL5	AM	MT	CO	198
71	VA944B	638M	10k	572M-704M	CW	13500	3.5	41		KL5Ø	AM	MT	CO	225
72	VA948H	772M	30k	694.0M-850.0M	CW	18500 Ø	5.0 Ø	46		KL5Ø♦	AM	MT		625 *
73	VA952G	772M	45k	694M-850M	CW	23000	6.8	48		KL5♦	AM			625
74	VA955A/B/G	772M	55k	694.0M-850.0M	CW	24000 Ø	7.5 Ø	48		KL5Ø♦	AM	MT	CO	625 *
75	VA945A	774M	12.5k	698.0M-850.0M	CW	13500 Ø	3.0 Ø	43		KL5Ø♦	AM	MT	CO	810 *
76	TH2082	775M	50000 †	690M-860M	CW	23000	6.0	45†		KL5	AM	MT	CO	165
77	1AV69	779M	23k	698M-860M	CW	22000	3.0	35		KL5♦ØØ	AM	MT	CO	242
78	1AV99A	779M	40.0k	698M-860M		27.0k	5.5	36.0		KL5♦§	AM	MT	WA	308.6
79	1AV99	779M	45k	698M-860M	CW	27000	4.15	36		KL5♦ØØ	AM	MT	CO	286
80	VA945B	781M	10k	702M-860M	CW	13500	3.5	41		KL5Ø	AM	MT	CO	215
81	VA948A	789M	25k	698M-890M	CW	18000	5.1	46		KL5Ø	AM	MT	CO	240
82	VA948A/B	789M	25k	694M-890M	CW	21000	6.2	46		KL5Ø	AM	MT	CO	240
83	VA952A	789M	40k	698M-890M	CW	24000	8.0	48.8		KL5Ø	AM	MT	CO	240
84	VA948C	792M	32.5k	694M-890M	CW	19500	5.4	48		KL5Ø#	AM	MT	CO	350
85	VA955A/B	792M	58k	694M-890M	CW	25000	8.3	49.2		KL5Ø#	AM	MT	CO	590 Δ
86	1AV82	800M	11k	692M-890M	CW	16000	3.0	44		KL5Ø	AM	MT	CO	155
87	1AV96	800M	11k	692M-890M	CW	17000	3.0	44		KL5Ø	AM	MT	CO	200
88	1AV89	800M	21k	692M-890M	CW	20000	4.0	45		KL5Ø	AM	MT	CO	240
89	1AV84	800M	33k	692M-890M	CW	21000	6.0	45		KL5Ø	AM	MT	CO	220
90	1AV87	800M	55k	698M-890M	CW	27000	6.0	42		KL5Ø	AM	MT	CO	265
91	VA853M	805M	100k	790M-820M	CW	33000	6.0	50		KL5Ø#	AM	MT	WA	250 §
92	VA862A	805M	1.25M	805M	132m	86000 Ø	33	47†		KL5Ø	AM	FF	WA	800 §
93	X3068	850M	2.5k†	800.0M - 900.0M	CW	12000	950m	35†		KL5Δ	AM	MT	CO	90
94	VA853	870M	76k	755.0M - 985.0M	CW	26000 Ø	7.5 Ø	50		KL5Ø#	AM	MT	WA	850 *
95▼	E3780	915M	200k	915M	CW	50k	15	50		KL5Ø#	AM	FF	WA	65
96	VKP7758	920M	10.2k	755M-985M	CW	17500 Ø	1.63 Ø	33		KL5ØΔ	AM	MT	CO	250 *
97	VA838	1053M	300k	845M-1.36G†	40m	45000	19	50		KL5Ø	AM	MT	CO	
98	VKL7755	1270M	10M	1.235G-1.305G	5.0m	170k	182	38		KL5Ø	AM	FF	WA	400
99	TH2086	1.29G	1.5mΔ	1.23-1.35G		80k	50	43		KL5	AM	MT	WA	250
100	L5548	1300M	300k	1.250G-1.350G	6.0m	60000	15	36		KL5	AM	MT	WA	150
101	TH2068	1300M	3500k†	1.250G-1.350G		115k	82.5	50		KL5	AM	MT	WA	220
102	VA963A	1300M	5000k	1.25G-1.35G	1.2m	130kØ	101 Ø	50		KL5Ø#	AM	MT	WA	150
103	1AV65	1300M	5250k	1.250G-1.350G	1.5m	140k	115	50		KL5Ø#	AM	MT	WA	200
104	E3775A	1300M	5500k	1.25G-1.35G	.002	140k	125	53		KL5Ø	AM	MT	WA	220
105	L5081	1300M	30M	1.300G	2.0m	280k	325	45		KL5	AM	FF	WA	700 Δ
106	VKL7796	1325M	4000k	1.290G-1.360G	150m	112kØ	85 Ø	45		KL5Ø#	AM	FF	WA	600
107	VKL7759	1470M	60k	1.365G-1.578G	CW	24000 Ø	7.8 Ø	40		KL5Ø#	AM	MT		200
108	5K50SE	1800M	12.5k	1.775G - 1.825G	CW	17500	2.1	53		KL5	AM			100
109	TV2001W	1800M	20M†	1.200G-2.400G	1.0m	235k	215 Ø	50†		KL5	AM		WA	418
110	LD4218	1850M	10k	1.700G-2.000G	CW	15000	2.1	43		KL5Ø	AM	MT	WA	154.4

SYMBOLS AND CODES EXPLAINED IN INTERPRETER

2. SOURCE,AMPLIFIER,OUTPUT TUBES

IN ORDER OF (1)TUBE TYPE (2)CENTER FREQUENCY (3)POWER OUTPUT (4)TYPE No.

LINE No.	[4] TYPE No.	[2] CENTER FREQ. (Hz)	[3] POWER OUTPUT (W)	FREQUENCY RANGE (Hz)	MAX. DUTY CYCLE	MAX. BEAM VOLTAGE (Note 1) (V)	MAX. CATH-ODE CUR. (A)	GAIN (dB)	NF (dB)	DESCRIPTION [1] TUBE TYPE	FUNC-TION	TUN-ING	OUT PUT	WEIGHT (lb)
1	5KM50SJ	1950M	11k	1.700G - 2.400G	CW	18000	1.75	40		KL5Ø$#	AM	MT	WA	300 *
2	5KM70SJ	1950M	21.5k	1.700G - 2.400G	CW	22000 Ø	3.0	43		KL5Ø$#	AM	MT	WA	300 *
3	2AV41	2050M	2.8k	1.850G-2.300G	CW	9000	1.1	37		KL5Ø	AM	MT	CO	72.75
4	5K70SG	2105M	25k	2.090G - 2.120G	CW	23000	3.0	50		KL5Ø	AM	MT	WA	286 *
5	5K70SG-WB	2105M	27k	2.090G-2.120G	CW	22000	2.45	52		KL5#	AM			286 *
6	5KM70SI	2115M	20k	2.100G-2.130G	CW	20000 Ø	2.65 Ø	50		KL5Ø$#	AM	MT	WA	295 *
7	LD4193	2200M	12k	2.000G-2.400G	CW	14000	1.9	43		KL5Ø	AM	MT	WA	120
8	5KM300SI	2250M	100k	2.100G - 2.400G	CW	38000	7.9	55†		KL5Ø#	AM	MT	WA	415 *
9	5K50SG	2275M	12.5k	2.250G - 2.300G	CW	22000 Ø	2.1 Ø	53		KL5Ø#	AM	MT		286 *
10	5KM1000SG	2388M	450k†	2.320G - 2.456G	CW	65000	16.5	55		KL5#Ø	AM	MT	WA	1050 *
11	5K70SH1	2450M	30k	2450M	CW	22500 Ø	2.7 Ø	50		KL5Ø#	AM	FF	WA	286 *
12	2AV30	2450M	33k	2.440G-2.460G	CW	22000	3.3	50		KL5	AM	FF	WA	100
13	TH2075	2450M	50k†	2.449G-2.451G	CW	25000	3.25	50†		KL5	AM	FF	WA	143
14	5K300SK	2542M	55k	2.385G-2.7G	CW	28000 Ø	4.7 Ø	50		KL5Ø#	AM	MT	WA	235
15	LD4416	2550M	10k	2400M-2700M	CW	15k	2.0	43		KL5	AM	MT	WA	132
16	LD4223	2550M	12k	2.400G-2.700G	CW	14000	1.8	43		KL5Ø	AM	MT	WA	130
17	VA938A	2856M	4.0M	2.856G	20m	130k	91	50		KL5Ø	AM	FF	WA	
18	M4628A	2856M	10M	2.800G-2.860G	2.4m	180k	160	42		KL5Ø#	AM	MT	WA	99
19	8568	2856M	21MΔ	2.856G	900u	260k	270	50		KL5#	AM	FF	WA	150 §
20	8840	2856M	28M		900u	270k	298	53		KL5#Ø	AM	FF	WA	150
21	2936	2856M	33M	2856M	90	270k	300	51		KL5Ø#	AM	FF	WA	175
22	YK1200	2998M	25M	2993M-3003M		280k	250	50		KL5	AM	FF	WA	209 §
23	TH2074	2998.5M	5000kΔ	2.9985G	1.0m	133k	90	45†		KL5	AM	FF	WA	132 §
24	TH2090	3.0G	15m	3.0G	.002	200k	178	50		KL5	AM	FF	WA	175
25	VKC7807	4600M	400	4.400G-4.800G	CW	4500	280m	40		KL5†	AM			30 *
26	VA988B	4700M	1.0k	4.400G-5.000G	CW	7800	650m	35		KL5Ø	AM	MT	WA	46
27	VKC7819B	4700M	2.6k	4.400G-5.000G	CW	6700	600m	40		KL5†	AM			70 *
28	VA908	4700M	10k	4.400G - 5.000G†	CW	16000 Ø	2.2 Ø	57		KL5Ø#	AM	MT	WA	135 *
29	VKC7790C	4700M	10k	4.400G-5.000G	CW	14000	1.7	57		KL5#	AM			400 *
30	LD4423L	6140M	1.7k	5855M-6425M	CW	8000	630m	37		KL5	AM	MT	WA	75.0
31	LD4396L	6140M	3300	5855M-6425M		10000	1.1	40.0		KL5	AM		WA	75.0
32	LD4453A	6140M	3300	5855M-6425M	CW	10500	1.4	36.0		KL5	AM	MT	WA	75.0
33	LD4453B	6140M	3300	5855M-6425M	CW	10500	1.4	36.0		KL5	AM	MT	WA	75.0
34	VKC7777C	6150M	125	5.900G-6.400G	CW	3000	310m	30		KL5†	AM			49 *
35	VKC7777B	6150M	400	5.900G-6.400G	CW	3800	460m	36		KL5†	AM			49 *
36	TH2420	6150M	750	5.900G-6.400G	CW	55000		50		KL5	AM	MT		
37	VA936N	6150M	750	5.90G-6.40G	CW	5000	500m	37		KL5†	AM	MT	WA	45 *
38	VA936J	6150M	1500	5.900G-6.400G	CW	6000 Ø	660mØ	37		KL5Ø	AM	MT	WA	70 *
39	VA936K	6150M	2.0k	5.90G-6.40G		6000	650m	37		KL5†	AM	MT	WA	70
40	VA936E	6150M	3.0k	5.900G-6.400G	CW	10000	1.1	35		KL5Ø	AM	MT	WA	20
41	VA936G	6150M	3.0k	5.90G-6.40G	CW	8000 Ø	1.05	40		KL5†	AM	MT	WA	70 *
42	VA936L	6150M	3.35k	5.900G-6.400G	CW	8300 Ø	1.1 Ø	40		KL5†	AM	MT	WA	70 *
43	VA936B	6150M	3.500k	5.900G-6.400G	CW	9000	900m	50		KL5#Ø	AM	MT	WA	120
44	VA936A	6150M	5.000k	5.900G-6.400G	CW	10000	1.3	50		KL5#Ø	AM	MT	WA	120
45	VA884D	6150M	14k	5.900G-6.400G	CW	16500	2.4	52		KL5Ø#	AM	MT	WA	200 *
46	VA884B	6150M	14.5k	5.900G - 6.400G	CW	16500	2.4	52		KL5Ø	AM	MT	WA	200
47	VA884C	6150M	14.5k	5.900G - 6.400G	CW	16500	2.4	52		KL5Ø	AM	MT	WA	200
48	LD4235A/B	6175M	300	5.925G-6.425G	CW	5000	400m	42		KL5†	AM	MT	WA	50.7
49	LD4184A/B	6175M	400	5.925G-6.425G	CW	4500	500m	36		KL5†	AM	MT	WA	50.7
50	LD4184J	6175M	400	5925M-6425M	CW	4200	500m	36		KL5	AM	MT	WA	50.6
51	LD4184K	6175M	400	5925M-6425M	CW	4200	500m	36		KL5	AM	MTM	WA	50.6
52	LD4184L	6175M	400	5925M-6425M	CW	4200	410m	36		KL5	AM	MT	WA	51.0
53	LD4274A/B	6175M	400	5.925G-6.425G	CW	5000	400m	42		KL5†	AM	MT	WA	50.7
54	LD4117C/D	6175M	1.7k	5.925G-6.425G	CW	7000	600m	39		KL5†	AM	MT	WA	66.13 *
55	LD4117J	6175M	1.7k	5925M-6425M	CW	7000	770m	39		KL5	AM	MT	WA	75.0
56	LD4117K	6175M	1.7k	5925M-6425M	CW	7000	770m	39		KL5	AM	MTM	WA	75.0
57	LD4117L	6175M	1.7k	5925M-6425M	CW	7000	615m	39		KL5	AM	MTM	WA	75.0
58	LD4134A/B	6175M	3.0k	5.925G-6.425G	CW	8500	840m	42		KL5†	AM	MT	WA	99.20 *
59	LD4134C/D	6175M	3.4k	5.925G-6.425G	CW	10k	1.1	40		KL5†	AM	MT	WA	110.2 *
60	LD4134J	6175M	3.4k	5925M-6425M	CW	8800	1.1	40		KL5	AM	MT	WA	74.8
61	LD4134K	6175M	3.4k	5925M-6425M	6W	8800	1.1	40		KL5	AM	MTM	WA	75.0
62	LD4134L	6175M	3.4k	5925M-6425M	CW	8800	1.1	40		KL5†	AM	MTM	WA	75.0
63	VKC7810B	6750M	2.5k	6.500G-7.000G	CW	8500	1.2	43		KL5†	AM			70 *
64	VA883	7800M	5.0k	7.100G-8.500G	CW	13000 Ø	1.2 Ø	50		KL5†	AM	MT	WA	77 *
65	VA876	7800M	20k†	7.100G - 8.500G	CW	21000 Ø	3.5	50		KL5#Ø	AM	MT	WA	200 *
66	VA879	7800M	100k	7.100G - 8.500G†	CW	39000	6.0	55*		KL5Ø#	AM	MT	WA	460 *
67	VA949BM	7800M	200k	7.100G-8.500G		50000	10	60		KL5Ø#	AM	FF	WA	165
68	VA914B	8100M	650	7.800G-8.400G	CW	4600	270m	50		KL5†	AM	MT	WA	15 *
69	VKX7780V	8150M	160	7.900G-8.400G		3300	250m	40		KL5†	AM	M	WA	20
70	VKX7780S	8150M	500	7.900G-8.400G	CW	4300	310m	45		KL5†	AM	MT	WA	55 *
71	VA914	8150M	530	7.900G - 8.400G†	CW	4600	270m	50		KL5†	AM	MT	WA	15
72	VKX7780D	8150M	750	7.900G-8.400G	CW	5200	420m	45		KL5†	AM	MT	WA	36 *
73	F2948	8150M	830	7.900G-8.400G	CW	5600	475m	45	33	KL5	AM	MT	WA	36
74	VKX7780B	8150M	1.0k	7.900G-8.400G	CW	6300 Ø	600mØ	50	35	KL5†	AM	MT	WA	55 *
75	TH2446	8.15G	1.5k	7.9-8.4G	CW	8.0k	0.63	44	35	KL5	AM	MT	WA	66
76	VKX7780C	8150M	1.5k	7.900G-8.400G	CW	6500	580m	45		KL5†	AM	MT	WA	55 *
77	F2953	8150M	1630	7.900-8.400G	CW	7100	620m	45	35	KL5†	AM	MT	WA	43
78	VA962	8150M	1.8k	7.900G-8.400G	CW	17000 Ø	2.8 Ø	35		KL5†#	AM	MT	WA	140 §
79	VKX7780J	8150M	2.5k	7.900G-8.400G	CW	8000	780m	45		KL5†	AM	MT	WA	55 *
80	VKX7780H/M	8150M	3.0k*	7.900G-8.400G	CW	8500	860m	45		KL5†	AM	MT	WA	55 *
81	VA925	8150M	8.0k	7.900G - 8.400G†	CW	13000	1.65	52		KL5Ø#	AM	MT	WA	100 *
82	VA925B	8150M	8.0k	7.90G-8.40G		13000	1.65	52		KL5Ø#	AM	MT	WA	100
83	VKH2405A1	8150M	8.5k†	7.90G-8.40G	CW	13500	1.8	53		KL5	AM	MT	WA	90 *
84	VA925C	8150M	10k	7.90G-8.40G	CW	14000	1.95	57		KL5Ø#	AM	MT	WA	100 *
85	VKX7753	8150M	12k	7.90G-8.40G♦	CW	14000 Ø	3.2 Ø	43.5		KL5Ø#	AM	MT	WA	170 *
86	VA874E	9150M	100k	9.10G-9.20G	6.0m	43000	8.1	55		KL5†	AM	MT	WA	35 *
87	F2933/DOD034	9200M	1.6k	9.155G-9.245G	6.3m	9000	770m	63		KL5*	AM	MT	WA	9.0 *Δ
88	VA956	9250M	7.5k	8.500G - 10.00G	200m	13500 Ø	1.6 Ø	45		KL5†	AM	MT	WA	50 *
89	VKX7769	9250M	7.5k	8.500G-10.000G	100m	14000 Ø	1.7 Ø	60		KL5†	AM	MT	WA	35 *
90	VA874B	9300M	100k	9.0G-9.6GØ,±50MØ	6.0m	40000 Ø	7.9 Ø	54		KL5†	AM	MT	WA	35 *
91	VA927	9500M	40k	9.0G-10G†	15m	28000	4.2	60		KL5†#	AM	MT	WA	45
92	V24E	9500M	50k	9.000G - 10.00G	8.0m	36000 Ø	6.6 Ø	55		KL5†	AM	MT	WA	25 *
93	VKX7750	9500M	50k	9.000G - 10.00G	7.0m	36000 Ø	5.4 Ø	42		KL5†	AM	MT	WA	35 *
94	VKX7751	9500M	100k	9.000G - 10.00G	6.0m	40000 Ø	7.8 Ø	41		KL5†	AM	FF	WA	35 *
95	VA932	9800M	1.5k	9.000G-10.60G	30m	9000	700m	60		KL5†	AM	MT	WA	9.0 *
96	VA932B	9800M	1.5k	9.00G-10.60G	30m	9000	700m	60		KL5†	AM	MT	WA	9.0
97	VA922	9850M	1000	8.700G-11.10G	CW	8200	600m	50		KL5†#	AM	MT	WA	50 *
98	TH2418	9900M	1.5kΔ	9.200G-10.600G	70m	9000	700m	60		KL5	AM	MT	WA	10
99	VA911	10500M	10k†	10.00G-11.00G	CW	15000 Ø	2.0 Ø	50†		KL5#Ø	AM	MT	WA	85 *
100	VKX7809	11200M	2.0k†	10.00G-12.40G	CW	9000	1.0	40		KL5†	AM	MT	WA	55 *
101	VKU7792	13200M	36	12.400G-14.000G	CW	2000	100m	37		KL5†	AM			10 *
102	LD4215	14200M	2.2k	14.000G-14.500G	CW	10000		43		KL5	AM	FF	CO	110
103	LD4511	14.25G	3.0	14.0G-14.5G	CW	11	0.95	34		KL5†	AM	MT	WA	110 *
104	VKU7791N	14250M	1.5k†	14.000G-14.500G	CW	8500 Ø	860mØ	37		KL5†	AM	MT	WA	55 *
105	VKU7791M	14250M	2.0k	14.000G-14.500G	CW	9000	1.1	33		KL5†	AM			55 *
106	VKU7791C	15200M	500	12.400G-18.000G	CW	6000	385m	37		KL5†	AM			55 *
107	VKU7791	15200M	1.2k	12.40G-18.00G		7500	500m	40		KL5†	AM	M	WA	55
108	VA882	15200M	2.0k	12.40G-18.00G*	CW	9500 Ø	750mØ	60		KL5†#	AM	MT	WA	40 *
109	VA934	15200M	15k	12.40G-18.00G	CW	23000 Ø	3.5	50		KL5#Ø	AM	MT	WA	92 *
110	VA921	18000M	10k	18.00G	CW	19000	2.85	50		KL5#Ø	AM	MT	WA	12

2. SOURCE,AMPLIFIER,OUTPUT TUBES

IN ORDER OF (1)TUBE TYPE (2)CENTER FREQUENCY (3)POWER OUTPUT (4)TYPE No.

LINE No.	[4] TYPE No.	[2] CENTER FREQ. (Hz)	[3] POWER OUTPUT (W)	FREQUENCY RANGE (Hz)	MAX. DUTY CYCLE	MAX. BEAM VOLTAGE (Note 1) (V)	MAX. CATH-ODE CUR. (A)	GAIN (dB)	NF (dB)	DESCRIPTION [1] TUBE TYPE	FUNC-TION	TUN-ING	OUT PUT	WEIGHT (lb)
1	VKK7808A	22000M	1.0k	18.000G-26.000G	CW	10000	900m	50		KL5#	AM			80 *
2	VA928A	31000M	1.0k	26.00G-36.00G		12000	1.0	50		KL5Ø#	AM	MT	WA	80 *
3	TH2089	353M	1.0k	353M	CW	82k	18	40		KL6	AM	FF	WA	2650
4	X841D	425M	2.5M	400.0M - 450.0M	6.0m	115.0k	66.6	33		KL6	AM	MT	WA	2800 *
5	X3076	805M	100k	805M	CW	28000	4.8	42		KL6Ø	AM			
6	VKL7800	1300M	10.0M	1.300G	7.0m	170k	170	36.6		KL6Ø#	AM	FF	WA	700
7	VKL7783	1325M	4000k	1.290G-1.360G	40m	120k	62.5	35		KL6Ø	AM			400
8▾	E3778	2.0G	1.1M	1.7G-2.3G	.066	100k	35	43		KL6Ø#	AM	MT	WA	305
9	3AV85	2800M	1500k	2.7G-2.9G	4.4m	85kØ	50	53		KL6Ø	AM	MT	WA	135
10	TH2069	2.8G	2MΔ	2.7G-2.9G	.001	85	45	50†		KL6	AM	MT	WA	90
11	VA839	2800M	5.0M	2.700G-2.900G	2.0m	150k	125	39		KL6Ø#	AM	BB	WA	70
12	VA87E	2800M	15M	2.7G-2.9G		77000 Ø	45 Ø	50		KL6Ø	AM	MT	WA	90
13	VKU7812	14250M	2.0k	14.00G-14.50G	CW	9000 Ø	1.1 Ø	30		KL6†	AM	MT	WA	70 *
14	LD4405	28.50G	500	27.550G-30.050G	CW	12000	550m	43		KL6	AM	MTM	WA	110 *
15	LD4406	29.50G	500	27.550G-30.050G	CW	12000	550m	43		KL6	AM	MTM	WA	110 *
16	VKL7760	1700M	60k	1.578G-1.820G	CW	24000 Ø	7.8 Ø	40		KL7Ø#	AM	MT		200
17	VKS7761	1960M	60k	1.820G-2.100G	CW	24000 Ø	7.8 Ø	40		KL7Ø#	AM	MT		180
18	X3075	2110M	500k	2.110G	CW	64500	15.2	55		KL7Ø#	AM	FF		450
19	X3070	2380M	450k	2.320G-2.456G	CW	63000	14.8	55		KL7Ø#	AM	MT		450
20	X3033	3000M	53.5k		250m	42000	18	50†		KL7	AM	FF	WA	620 *
21	X3066	8000M	100k	8.000G	CW	39000	6.7	40		KL7Ø	AM	MT		
22	VA961	8150M	8.0k	7.900G - 8.400G	CW	13000	1.75	35		KL7Ø	AM	MT	WA	20
23	DX453B		700 †	2450M-2455M		4.5k	350mΔ			MG				3.64
24	JP2-22D		25k	9.17G	.001	8.3k	8.0 Δ			MG	OS	FF	WA	
25	VF15	9.325M	400k	9.0-9.65M						MG			WA	26.4
26	.5P.2-.4	300M	300m	200.0M - 400.0M	CW	1600	3.0m			MG	OS	VT	CO	1.5
27	.5P.2-.4S	300M	300m	200.0M - 400.0M	CW	1600	3.0m			MG	OS	VT	CO	1.5
28	.5P.25-.5	375M	500m	250M-500M	CW	2100	3.0m			MG	OS	VT	CO	1.5
29	.5P.25-.5S	375M	500m	250.0M - 500.0M	CW	2100	3.0m			MG	OS	VT	CO	1.5 *
30	1P.25-.5	375M	1.0	250.0M - 500.0M	CW	2200	5.0m			MG	OS	VT	CO	1.5 *
31	1P.25-.5S	375M	1.0	250M-500M	CW	2200	5.0m			MG	OS	VT	CO	1.5 *
32	5P.35-.5	425M	5.0	350.0M - 500.0M	CW	2300	10m			MG	OS	VT	CO	1.5 *
33	5P.35-.5S	425M	5.0	350.0M - 500.0M	CW	2300	10m			MG	OS	VT	CO	1.5 *
34	7547	428M	3.6k	406.0M-450.0M	1.8m	55000	97			MG	OS	MT	CO	220
35	QK516	428M	2.0M	406M-450M	1.8m	55000	97			MG	OS	MT	CO	220
36	L3456	470M	165 †	350.0M - 590.0M	CW	3000	150m			MG	OS	MT	CO	500
37	.25P.25-.75	500M	250m	250.0M - 750.0M	CW	2400	5.0m			MG	OS	VT	CO	1.5 *
38	.25P.25-.75S	500M	250m	250.0M - 750.0M	CW	2400	5.0m			MG	OS	VT	CO	1.5 *
39	1P.375-.75	562M	1.0	375.0M - 750.0M	CW	2200	8.0m			MG	OS	VT	CO	1.5 *
40	1P.375-.75S	562M	1.0	375.0M - 750.0M	CW	2200	8.0m			MG	OS	VT	CO	1.5 *
41	5P.4-.8	600M	5.0	400.0M - 800.0M	CW	2900	15m			MG	OS	VT	CO	1.5 *
42	5P.4-.8S	600M	5.0	400.0M - 800.0M	CW	2900	15m			MG	OS	VT	CO	1.5 *
43	10P.5-.75	625M	8.0	500.0M - 750.0M	CW	2700	15m			MG	OS	VT	CO	1.5 *
44	10P.5-.75S	625M	10	500.0M - 750.0M	CW	2700	15m			MG	OS	VT	CO	1.5 *
45	.1P.35-1	675M	100m†	350.0M - 1.000G	CW	1500	3.0m			MG	OS	VT	CO	1.0 *
46	.25P.35-1	675M	250m	350.0M - 1.000G	CW	2400	5.0m			MG	OS	VT	CO	1.5 *
47	.25P.35-1S	675M	250m	350.0M - 1.000G	CW	2400	5.0m			MG	OS	VT	CO	1.5 *
48	.1P.5-1	750M	100m†	500.0M - 1.000G	CW	500	2.0m			MG	OS	VT		1.0 *
49	.5P.5-1	750M	500m†	500.0M - 1.000G	CW	1400	10m			MG	OS	VT	CO	1.5 *
50	1P.5-1	750M	1.0	500.0M - 1.000G	CW	2200	8.0m			MG	OS	VT	CO	1.5
51	1P.5-1R	750M	1.0 †	500.0M - 1.000G	CW	2000	10m			MG	OS	VT	CO	1.0 *
52	1P.5-1S	750M	1.0	500.0M - 1.000G	CW	2200	8.0m			MG	OS	VT	CO	1.5 *
53	2P.5-1	750M	2.0	500.0M - 1.000G	CW	2200	10m			MG	OS	VT	CO	1.5 *
54	2P.5-1S	750M	2.0	500M-1.0G	CW	2200	10m			MG	OS	VT	CO	1.5 *
55	DX343	750M	100k	735.0M - 775.0M	5.0m	20000	15			MG	OS	MT	CO	25
56	L3459	782M	165 †	590.0M - 975.0M	CW	3000	150m			MG	OS	MT	CO	500
57	.25PL.4-1.2	800M	250m	400.0M - 1.200G	CW	2400	5.0m			MG	OS	VT	CO	1.5
58	.25PL.4-1.2S	800M	250m	400.0M - 1.200G	CW	2400	5.0m			MG	OS	VT	CO	1.5 *
59	DX342	850M	500k	815.0M - 890.0M	2.0m	26000	60			MG	OS	MT	CO	25
60	10P.75-1	875M	10	750.0M - 1.000G	CW	2400	15m			MG	OS	VT	CO	1.5
61	10P.75-1S	875M	10	750.0M - 1.000G	CW	2400	15m			MG	OS	VT	CO	1.5 *
62	5PL.6-1.2	900M	5.0	600.0M - 1.200G	CW	2800	25m			MG	OS	VT	CO	1.5 *
63	5PL.6-1.2S	900M	5.0	600.0M - 1.200G	CW	2800	25m			MG	OS	VT	CO	1.5 *
64	LD945	915M	25k	900M-930M	CW	12000	3.0			MG	OS	FF	WC	22
65	1M70A	915M	30k	905M-925M	CW	12500	2.8			MG	OS	FF	CO	16
66	1M99	915M	30k	890M-940M	CW	12500	2.8			MG	OS	FF	CO	22.1
67	RM101	915M	30.0k	900M-930M	CW	14.0k	3.0 Δ			MG	OS	FF	WA	16.0
68	RM184	915M	50k	910-920M	CW	14500	4.5			MG	OS	FF	WA	16.0
69	M1359	915M	100.0k	890M-940M	CW	30.0k	5.5			MG	OS	FF	CO	95.0
70	.5P.5-1.5	1000M	500m†	500M-1.5G	CW	2500	15m			MG	OS	VT	CO	1.5 *
71	.5PL.5-1.5	1000M	5.0	500.0M - 1.500G	CW	2400	10m			MG	OS	VT	CO	1.5 *
72	.5PL.5-1.5S	1000M	5.0	500.0M - 1.500G	CW	2400	10m			MG	OS	VT	CO	1.5 *
73	DX450	1050M	300k	1000M-1100M	2.0m	25000	30			MG	OS	MT	CO	25
74	100L1-1.2	1100M	100 †	1.00G-1.20G	CW	4000	70mΔ			MG	OS	VT	CO	4.5 *
75	2PL.75-1.5	1125M	2.0	750.0M - 1.500G	CW	2200	15m			MG	OS	VT	CO	1.5
76	2PL.75-1.5S	1125M	2.0	750.0M - 1.500G	CW	2200	15m			MG	OS	VT	CO	1.5 *
77	100L1.05-1.25	1150M	100 †	1.05G-1.25G	CW	4100	70mΔ			MG	OS	VT	CO	4.5 *
78	100L1.05-2.5	1150M	100 †	1.05G-1.25G	CW	4100				MG	OSC	VT		
79	MCF1329	1220M	2.4M†	1.217G-1.223G	1.25m	40000	152 Ø			MG †	OS	MT	WA	
80	M5169	1230M	2.6M	1295M-1365M	.15u	42k	150 Δ			MG	OS	BB		29 §
81	QKH1579	1235M	360	1.220G-1.350G	1.0m	28000	46			MG	OS	MT	CO	20
82	L3465	1237M	1800 †	975.0M-1.500G	250m	5500	900m			MG #		MT	WA	18 Δ
83	10L1-1.5	1250M	10	1.000G - 1.500G	CW	2500	25m			MG	OS	VT	CO	1.5
84	10L1-1.5S	1250M	10	1.000G - 1.500G	CW	2500	25m			MG	OS	VT	CO	1.5 *
85	QK358	1250M	1000k	1.25G-1.35G	1.3m	53000	50			MG	OS	MT	WA	90
86	QKH665	1267M	5000k	1.25G-1.285G	1.8m	72000	150			MG	OS	FF	CO	125
87	MCF1330	1272M	2.4M†	1.269G-1.275G	1.25m	40000	152 Ø			MG †	OS	MT	WA	
88	F1088	1275M	2.4M†	1.270G-1.280G	1.25m	40000	152 Ø			MG †	OS	MT	WA	
89	TH3091	1280M	500k†	1.220G-1.350G	1.2m	29000	56			MG	OS	MT	WA	
90▾	MG5263	1280M	1.1M	1250M-1310M		32k#	90 Δ			MG	OS	MT	WA	60 §
91	M5051	1280M	2.0M†Δ	1.25G-1.31G	1.5m	45000	150 Ø			MG	OS	MT	WA	190 *
92	M5084	1280M	2.3M	1250M-1310M	1.5m	45000	160			MG	OS	MT	WA	190 *
93	M5086	1280M	2.3M	1250M-1310M	1.5m	45000	160			MG	OS	MT	WA	190 *
94	M586	1280M	2.6M	1.26G-1.3G	1.5m	42000	150			MG	OS	FF	WA	22 §
95	QKH1560	1285M	7.0k	1.250G-1.320G	1.8m	71000	150			MG	OS	MT	WA	140
96	5J26	1285M	400k	1.220G-1.350G	2.0m	31000	60			MG	OS	MT	CO	20
97	JAN5J26	1285M	400k†	1.220G-1.350G	2.5m	34000	55			MG	OS	MT	CO	20
98	TH3061	1285M	500000 Δ	1220M-1350M	1.0m	33000	68m			MG	OS	MT	CO	18
99	DX267	1285M	550k	1.22G-1.35G	2.5m	34000	60			MG	OS	MT	CO	22
100	DX286	1285M	750k	1220M-1350M	1.0m	32000	70			MG	OS	MT	CO	25
101	F1119	1285M	2.4M†	1.282G-1.288G	1.25m	40000	152 Ø			MG †	OS	MT	WA	
102	F1089	1287M	2.4M†	1.280G-1.295G	1.25m	40000	152 Ø			MG †	OS	MT	WA	
103	M565	1290M	5.0M	1.215G-1.365G	2.5m	52000 Ø	260			MG	OS	FF	WA	72 §
104	MCV1352	1295M	2.2M†	1.270G-1.320G	1.25m	40000	155 Ø			MG †	OS	MT	WA	
105	MC567	1295M	2.4M†	1.220G-1.370G	1.25m	40000	152 Ø			MG †	OS	MT	WA	
106	TH3057	1296M	2.4M†	1.293G-1.299G	1.25m	40000	152 Ø			MG †	OS	MT	WA	
107	MCF1492	1298M	2.4M†	1.296G-1.300G	1.25m	40000	152 Ø			MG †	OS	MT	WA	
108	6517	1300M	1.25k	1.250G-1.350G	1.3m	70000	60			MG	OS	MT	WA	90
109	7484A	1300M	2.0k	1.125G-1.350G	1.2m	60000	90			MG	OS	MT	WA	90
110	TH3095	1.3G	2.2k	1305-1365M	.001	42k	155			MG	OS	MT	WA	33

2. SOURCE,AMPLIFIER,OUTPUT TUBES

IN ORDER OF (1)TUBE TYPE (2)CENTER FREQUENCY (3)POWER OUTPUT (4)TYPE No.

LINE No.	[4] TYPE No.	[2] CENTER FREQ. (Hz)	[3] POWER OUTPUT (W)	FREQUENCY RANGE (Hz)	MAX. DUTY CYCLE	MAX. BEAM VOLTAGE (Note 1) (V)	MAX. CATH-ODE CUR. (A)	GAIN (dB)	NF (dB)	DESCRIPTION [1] TUBE TYPE	FUNC-TION	TUN-ING	OUT PUT	WEIGHT (lb)
1	QKH470	1300M	2.4k	1.250G-1.350G	1.2m	75000	100			MG	OS	MT	WA	90
2	QKH1589	1300M	8.1k	1.250G-1.350G	1.8m	71000	150			MG	OS	MT	WA	140
3	QKH942	1300M	9.0k	1.250G-1.350G	1.8m	71000	150			MG	OS	HT	WA	140
4	QKH1042	1300M	9.0k	1.250G-1.350G	1.8m	71000	150			MG	OS	MT	WA	140
5	YJ1230	1300M	9.0k	1.25G-1.35G	1.8m	75000	160 Δ			MG	OS	MT	WA	120
6	M193	1300M	450.0k	1255M-1345M	1.0m	29.0k	46.0			MG	OS	ST	CO	84.0
7	YJ1150	1300M	750k	1.22G-1.35G	2.5m	29000	79			MG	OS	MT	WA	
8	F1090	1300M	2.4M†	1.295G-1.305G	1.25m	40000	152 Ø			MG †	OS	MT	WA	
9	MG5216	1305M	850k	1250-1365M	.003	35k#	100 Δ			MG		MT	WA	60
10	F1127	1305M	2.4M†	1.302G-1.308G	1.25m	40000	152 Ø			MG †	OS	MT	WA	
11▼	MG5283	1307.5M	1.1M	1250M-1365M	.001	30k#	90 Δ			MG	OS	MT	WA	60
12	MG5201	1307.5M	2.3M	1250M-1365M	.003	45k#	150 Δ			MG	OS	MT	WA	190 *
13	F1091	1310M	2.4M†	1.305G-1.315G	1.25m	40000	152 Ø			MG †	OS	MT	WA	
14	TH3087	1311M	2.4M†		1.25m	40000	152 Ø			MG	OS	FF	WA	22
15	MCF1331	1312M	2.4M†	1.309G-1.315G	1.25m	40000	152 Ø			MG †	OS	MT	WA	
16	F1120	1315M	2.4M†	1.312G-1.318G	1.25m	40000	152 Ø			MG †	OS	MT	WA	
17	F1092	1320M	2.4M†	1.315G-1.325G	1.25m	40000	152 Ø			MG †	OS	MT	WA	
18	F1121	1325M	2.4M†	1.322G-1.328G	1.25m	40000	152 Ø			MG †	OS	MT	WA	
19	M554	1330M	2.6M*	1.295M-1.365M	1.25m	42000	150 Δ			MG	OS	FF	WA	22 §
20	F1093	1332M	2.4M†	1.325G-1.340G	1.25m	40000	152 Ø			MG †	OS	MT	WA	
21	M5052	1335M	2.0M†Δ	1.305G-1.365G	1.5m	45000	150 Ø			MG	OS	MT	WA	190 *
22	M5085	1335M	2.3M	1305M-1365M	1.5m	45000	160			MG	OS	MT	WA	190 *
23	M5087	1335M	2.3M	1305M-1365M	1.5m	45000	160			MG	OS	MT	WA	190 *
24	QKH666	1335M	5.0M	1.32G-1.35G	1.8m	72000	150			MG	OS	FF	CO	125
25	TH3088	1338M	2.4M†		1.25m	40000	152 Ø			MG	OS	FF	WA	22
26	MCV1353	1342M	2.2M†	1.315G-1.370G	1.25m	40000	155 Ø			MG †	OS	MT	WA	
27	F1094	1345M	2.4M†	1.340G-1.350G	1.25m	40000	152 Ø			MG †	OS	MT	WA	
28	TH3089	1346M	2.4M†		1.25m	40000	152 Ø			MG	OS	FF	WA	22
29	MCF1493	1348M	2.4M†	1.346G-1.350G	1.25m	40000	152 Ø			MG †	OS	MT	WA	
30	F1128	1350M	2.4M†	1.347G-1.353G	1.25m	40000	152 Ø			MG †	OS	MT	WA	
31	F1095	1355M	2.4M†	1.350G-1.360G	1.25m	40000	152 Ø			MG †	OS	MT	WA	
32	TH3042	1360M	2.4M†	1.355G-1.365G	1.25m	40000	152 Ø			MG †	OS	MT	WA	
33	F1096	1365M	2.4M†	1.360G-1.370G	1.25m	40000	152 Ø			MG †	OS	MT	WA	
34	100L1.25-1.5	1375M	100 †	1.25G-1.50G	CW	3600	70mΔ			MG	OS	VT	CO	4.5 *
35	.5L1-2	1500M	500m†	1.000G - 2.000G	CW	1400	10m			MG	OS	VT	CO	1.5 *
36	1L1-2R	1500M	1.0 †	1.000G - 2.000G	CW	2000	10m			MG	OS	VT	CO	1.0 *
37	2L1-2	1500M	2.0	1.000G - 2.000G	CW	2200	15m			MG	OS	VT	CO	1.5
38	2L1-2S	1500M	2.0	1.000G - 2.000G	CW	2200	15m			MG	OS	VT	CO	1.5 *
39	3L1.4-1.6	1500M	3.0 †	1.400G - 1.600G	CW	1100	15m			MG	OS	VT	CO	1.0 *
40	5L1-2	1500M	5.0	1.000G - 2.000G	CW	2400	20m			MG	OS	VT	CO	1.5 *
41	5L1-2S	1500M	5.0	1.000G - 2.000G	CW	2400	20m			MG	OS	VT	CO	1.5 *
42	10L1.5-2	1500M	10	1.500G - 2.000G	CW	2200	25m			MG	OS	VT	CO	1.5
43	10L1.5-2S	1500M	10	1.5G-2.0G	CW	2200	25m			MG	OS	VT	CO	1.5 *
44	.5PL8-2.4	1600M	5.0	800.0M - 2.400G	CW	2400	10m			MG	OS	VT	CO	1.5 *
45	.5PL8-2.4S	1600M	5.0	800.0M - 2.400G	CW	2400	10m			MG	OS	VT	CO	1.5 *
46	7452A	1600M	70k	1.44G-1.76G	2.15m	24000	12.6			MG	OS	MT	WA	1.6
47	100L1.5-1.8	1650M	100 †	1.50G-1.80G	CW	3500	75mΔ			MG	OS	VT	CO	4.5 *
48	BLM148	1650M	10k	1.64G-1.66G	300m	9000	5.2			MG	OS	MT	WA	1.5
49	BLM154	1650M	10k	1.6G-1.7G	500m	20000	20			MG	OS	MT	WA	480m
50	MI137	1782.5M		1765-1800M		25.0k#	25mΔ			MG	AM		CO	4.19
51	100L1.6-2	1800M	100 †	1.60G-2.00G	CW	4000	70mΔ			MG	OS	VT	CO	4.5 *
52	L3464	1925M	1800 †	1.500G-2.350G	250m	5500	900m			MG #		MT	WA	18 Δ
53	3L1.8-2.1	1950M	3.0 †	1.800G - 2.100G	CW	1100	15m			MG	OS	VT	CO	1.0 *
54	.5LS1-3	2000M	5.0	1.000G - 3.000G	CW	2400	10m			MG	OS	VT	CO	1.5
55	.5LS1-3S	2000M	5.0	1.000G - 3.000G	CW	2400	10m			MG	OS	VT	CO	1.5 *
56	8512	2100M	500m†	1.05G-3.15G	CW	2500	20m			MG	OS	VT	WA	1.5 Δ
57	.5LS1.5-3	2250M	500m†	1.500G - 3.000G	CW	1400	10m			MG	OS	VT	CO	1.5 *
58	2LS1.5-3	2250M	2.0	1.500G - 3.000G	CW	2200	15m			MG	OS	VT	CO	1.5
59	2LS1.5-3S	2250M	2.0	1.5G-3.0G	CW	2200	15m			MG	OS	VT	CO	1.5
60	100S2-2.6	2300M	100 †	2.00G-2.60G	CW	3600	80mΔ			MG	OS	VT	CO	4.5 *
61	400S2-2.6	2300M	400 †	2.000G-2.600G	CW	8000	125m			MG	OS	VT	CO	7.0
62	150S2-2.65	2325M	150 †	2.000G-2.650G	CW	4500	85m			MG	OS	VT	CO	5.0
63	200S2-2.65	2325M	200 †	2.000G-2.650G	CW	5300	80m			MG	OS	VT	CO	5.0
64	M62	2370M	150	2315-2425M	CW	1.95k#	175mΔ			MG	AM		CO	1.54
65	M89	2375M	1.0k	2325-2425M	CW	3.53k#	.55 Δ			MG	AM		WC	15.43
66	.5LS1.2-3.6	2400M	5.0	1.200G - 3.600G	CW	2400	10m			MG	OS	VT	CO	1.5 *
67	.5LS1.2-3.6S	2400M	5.0	1.200G - 3.600G	CW	2400	10m			MG	OS	VT	CO	1.5 *
68	M81	2400M	5.0k	2375-2425M	CW	6.0k#	2.0 Δ			MG	AM		WA	15.43
69	5609	2450M	80	2.425G-2.475G	CW	1450	125m			MG	OS	FF	CO	3.31
70	5609A	2450M	80	2.425G-2.475G	CW	1600	150m			MG	OS	FF	CO	3.3
71	7090	2450M	200	2.425G-2.475G	CW	1700	230 Δ			MG	OS	FF	WA	5.3
72	YJ1510	2450M	300			3000	150mΔ			MG				
73	QKH1744	2450M	500	2.44G-2.46G	CW	2800	280m			MG	OS	FF	WA	3.0
74	L5261A	2450M	625	2.440G-2.460G	CW	3500	380m			MG †		FF		3.0
75	2M66	2450M	750	2.425G - 2.475G	CW	4000	300m			MG	OS	FF	CO	2.9 §
76	L5201	2450M	750	2.42G-2.48G	CW	3600	575m			MG †		FF		5.0
77	L5260A	2450M	750	2.440G-2.460G	CW	3550	400m			MG †		FF		3.0
78	QKH1381	2450M	750	2.435G-2.465G	CW	4500	1.2			MG	OS	FF	WA	1.5
79	QKH1777	2450M	750	2.44G-2.46G	1.0	4000	300m			MG	OS	FF	WA	3.5
80	DX453	2450M	800	2430M-2470M	CW	4000	320m			MG	OS	FF	WA	5.0
81	YJ1420	2450M	900	2430M-2470M	CW	4000	350m			MG	OS	FF	WA	7.5
82	DX332	2450M	1.0k	2.440G-2.470G	CW	3600	750m			MG	OS	FF	WA	4.2
83	L3189	2450M	1.0k†	2.420G-2.475G	CW	7000	325m			MG †		FF		7.0
84	L5001	2450M	1.0k	2.440G-2.470G	CW	3600	750m			MG †		FF		4.3
85	YJ1500	2450M	1.1k	2.435G-2.465G	CW	4000	380m			MG	OS	FF	WA	2.2
86	DX206	2450M	1.2k	2.425G - 2.475G	CW	5600 Ø	380mØ			MG	OS	FF	WC	9.25
87	DX260	2450M	1.2k	2.425G - 2.475G	CW	5600 Ø	380mØ			MG	OS	FF	WC	9.25
88	YJ1490	2450M	1.2k	2.43G-2.47G	CW	4000	570m			MG	OS	FF	WA	3.5
89	YJ1480	2450M	1.4k	2.43G-2.47G	CW	5900	370m			MG	OS	FF	WA	4.0
90	YJ1481	2450M	1.5k	2.425G-2.475G	CW	6000	370mØ			MG	OS	FF	WA	4.8
91	L3858	2450M	2.5k	2.420G-2.470G	CW	7200	600m			MG †		FF	WA	2.12
92	YJ1160	2450M	2.5k	2.425G-2.475G	CW	5000	800mΔ			MG #	OS	FF	CO	11.2
93	YJ1162	2450M	2.5k	2.425G-2.475G	CW	5000	800mΔ			MG	OS	FF	CO	17.4
94	YJ1440	2450M	2.5k	2.43G-2.47G	CW	5600	680m			MG	OS	FF	WA	4.0
95	YJ1441	2450M	2.5k	2.425G-2.475G	CW	5700	680mØ			MG	OS	FF	WA	4.8
96	2M60A	2450M	5.0k†	2.42G-2.48G	CW	7000	1.6			MG Ø#		FF	CO	
97	F1123	2450M	5.0k†	2.425G-2.475G	CW	5200	1.6 Ø			MG †	OS		WA	
98	MCF1327	2450M	5.0k†	2.425G-2.475G	CW	5200	1.6 Ø			MG †	OS		WA	
99	YJ1191	2450M	5.0k	2.425G - 2.475G	CW	7500	1.25			MG	OS	FF	CO	25
100	2M68	2450M	5.5k	2.420G-2.480G	CW	7500	1.4			MG	OS	FF	CO	2.2
101	2M125	2455M	540	2.445G-2.465G	CW	3000	350			MG	OS	FF	CO	2.2
102	2M156	2.455G	540	2.455GHZ	CW	2.5k#	1.2			MG	MWO	FF	AT	3.3
103	2M140A	2455M	560	2445G-2465G	CW	4500	250m			MG	OS	FF		2.2
104	2M107A	2455M	850	2445G-2465G	CW	4500	3500m			MG	OS	FF		2.3
105	10S2-3	2500M	10	2.000G - 3.000G	CW	2300	25m			MG	OS	VT	CO	1.5
106	10S2-3S	2500M	10	2.000G - 3.000G	CW	2300	25m			MG	OS	VT	CO	1.5 *
107	MI22	2709.5M	400	2695-2724M		29.0 #	28mΔ			MG	AM		CO	3.53
108	JAN2J34	2720M	35k†	2.700G-2.740G	2.0m	22000	30			MG	OS	FF	CO	2.25
109	2J34	2720M	240k	2.70G-2.74G	2.0m	20000	30			MG	OS	FF	CO	2.30
110	QKH733	2720M	400k	2.70G-2.74G	700u	26000	50			MG	OS	FF	CO	5.00

SYMBOLS AND CODES EXPLAINED IN INTERPRETER

2. SOURCE,AMPLIFIER,OUTPUT TUBES

IN ORDER OF (1)TUBE TYPE (2)CENTER FREQUENCY (3)POWER OUTPUT (4)TYPE No.

LINE No.	[4] TYPE No.	[2] CENTER FREQ. (Hz)	[3] POWER OUTPUT (W)	FREQUENCY RANGE (Hz)	MAX. DUTY CYCLE	MAX. BEAM VOLTAGE (Note 1) (V)	MAX. CATH-ODE CUR. (A)	GAIN (dB)	NF (dB)	DESCRIPTION [1] TUBE TYPE	FUNC-TION	TUN-ING	OUT PUT	WEIGHT (lb)
1	4J35	2720M	800k	2.700G - 2.740G	1.0m	30000	70			MG	OS	FF	CO	5.0
2	M1227	2730M	500k†	2.71G-2.75G	1.0m	30000	70			MG	OS	FF	CO	5.3 △
3	MI23	2740M	400	2725-2755M		29.0 #	28m△			MG	AM		CO	3.53
4	10S2.5-3R	2750M	10 †	2.5G-3.0G	CW	1800	25m			MG	OS	VT	CO	1.0 *
5	100S2.5-3	2750M	100	2.500G - 3.000G	CW	3600	80m			MG	OS	VT	CO	4.0 *
6	JAN2J33	2760M	35k†	2.740G-2.780G	2.0m	22000	30			MG	OS	FF	CO	2.25
7	2J33	2760M	240k	2.74G-2.78G	2.0m	20000	30			MG	OS	FF	CO	2.30
8	QKH732	2760M	480k	2.74G-2.78G	700u	26000	50			MG	OS	FF	CO	5.00
9	M1222	2760M	500k†	2.740G-2.780G	1.0m	30000	70			MG	OS	FF	CO	
10	4J34	2760M	800k	2.740G - 2.780G	1.0m	30000	70			MG	OS	FF	CO	5.0
11	5S2.7-2.85	2775M	5.0 †	2.700G - 2.850G	CW	1000	25m			MG	OS	VT	CO	1.5 *
12	7529	2775M	2.52k	2.700G-2.850G	800u	62000	115			MG	OS	MT	WA	66
13	QK327	2775M	3500k	2.70G-2.85G	800u	62000	115			MG	OS	MT	WA	66
14	MI120	2800M		2770-2830M		6.0k#	3.8m△			MG	AM		CO	1.76
15	MI202	2800M		2790-2810M		50k#	700m△			MG	AM		CO	11.02
16	JAN5586	2800M	400 †	2.700G-2.900G	1.0m	32500	70			MG	OS	MT	CO	
17	8798	2800M	450	2.700G-2.900G	1.0m	30000	40			MG	OS	MT	CO	6.25
18	M5083A	2800M	500 †	2.700G-2.900G	1.2m	32000	70 △			MG	OS	MT	CO	6.5
19	M5162	2800M	500	2.700G-2.900G	1.0m	32000	70 △			MG	OS	MT	CO	6.5
20	QKH1569	2800M	1.0k	2.700G-2.900G	1.0m	50000	50			MG	OS	MT	WA	65
21	JAN2J32	2800M	35k†	2.780G-2.820G	2.0m	22000	30			MG	OS	FF	CO	2.25
22	2J32	2800M	240k	2.78G-2.82G	2.0m	20000	30			MG	OS	FF	CO	2.30
23	DX276	2800M	450k	2.7G-2.9G	1.0m	32000	50			MG	OS	MT	CO	5.5
24	QKH731	2800M	480k	2.78G-2.82G	700u	26000	50			MG	OS	FF	CO	5.00
25	M5094	2800M	750k	2.70G-2.90G		30000	64			MG	OS	FF	CO	
26	4J33	2800M	800k	2.780G - 2.820G	1.0m	30000	70			MG	OS	FF	CO	5.0
27	5586	2800M	800k	2.70G-2.90G	500u	30000	70			MG		MT		
28	JAN8798	2800M	800k△	2.700G-2.900G	1.1m	32000	70			MG	OS	MT	CO	6.5
29	DX481	2800M	800k	2.70G-2.90G	1.0m	32000	70			MG	OS	MT	CO	5.5
30	TH3085	2800M	800k	2.700G-2.900G	1.0m	30000	70			MG	OS	MT	CO	6.2
31	TH3113	2.8G	800k	2.7-2.9G		30k	65			MG	OS	MT	CO	6.6
32	M5114B	2800M	1000k	2.700G-2.900G	7001	32000	70 △			MG	OS	MT	CO	5.5
33	MG5236	2800M	1.0M	2700-2900M	.001	32k#	70 △			MG	OS	MT	CO	6.5
34▼	MG5282	2800M	1.0M	2700M-2900M	.001	35k#	70 △			MG	OS	MT	CO	99
35	3M95	2800M	4.7M	2.750G - 2.850G	1.0m	75000	135			MG	OS	MT	WA	
36	4J53	2803M	800k	2.793G - 2.813G	1.0m	30000	70			MG	OS	FF	CO	6.0 §
37	6410A	2805M	3.6k	2.750G-2.860G	1.0m	71000	130			MG	OS	FF	WA	57
38	JAN6410A	2805M	4.5k†	2.750G-2.860G	1.0m	75000	135			MG #		FF	WA	58
39	7182	2805M	2.5M	2.75G-2.86G	1.5m	36000	185			MG	OS	FF	WA	9.75 §
40	M566	2805M	2.5M	2.75G-2.86G	1.5m	41500	176			MG	OS	FF	WA	9.75 §
41	M5133	2805M	2.5M	2.750G-2.860G	1.5m	38500	145			MG	OS	FF	WA	12.5
42	QK338A	2805M	4500k	2.75G-2.86G	1.0m	71000	130			MG	OS	FF	WA	57
43	M1223	2810M	500k†	2.790G-2.830G	1.0m	30000	70			MG	OS	FF	CO	
44	MI16	2820M	80	2790-2850M		15.0k#	18 △			MG	AM		CO	2.76
45	M159A	2825M	1.5M	2.750G-2.900G	700u	55000	86			MG #		MT	WA	66.2
46	MI24	2830M	400	2815-2845M		29.0k#	28m△			MG	AM		CO	3.53
47	JAN2J31	2840M	35k†	2.820G-2.860G	2.0m	22000	30			MG	OS	FF	CO	2.25
48	2J31	2840M	240k	2.82G-2.86G	2.0m	20000	30			MG	OS	FF	CO	2.30
49	QKH730A	2840M	480k	2.82G-2.86G	700u	26000	50			MG	OS	FF	CO	5.00
50	4J32	2840M	800k	2.820G - 2.860G	1.0m	30000	70			MG	OS	FF	CO	5.0
51▼	E3479T	2850M	400 †	2.2G-3.5G	20 m	1.5k	1.5			MG	OS	MT	CO	280m
52♦	E3479	2850M	500	2.2G-3.5G	20 m	1500	1.5			MG	OS	FF	CO	250m
53▼	E3574	2850M	500	2.2G-3.5G	10 m	24 §Ø	1.0			MG	OS	FF	CO	1.3
54	M1224	2850M	500k†	2.830G-2.870G	1.0m	30000	70			MG	OS	FF	CO	
55▼	MG5298	2.85G	1.0M	2.700G-2.900G	.001	35k#	70 △			MG	OS	MT	CO	99
56	M4543	2855M	4800k	2.840G-2.870G	1.0m	75000	135			MG †		MT	WA	67
57	QKH898	2856M	3.6k	2.851G-2.861G	800u	48000	240			MG	OS	MT	WA	110
58	MI15	2880M	80	2850-2910M		15.0k#	18 △			MG	AM		CO	2.76
59	6406A	2880M	1.05k	2.850G-2.910G	700u	52000	85			MG	OS	FF	WA	40
60	JAN2J30	2880M	35k†	2.860G-2.900G	2.0m	22000	30			MG	OS	FF	CO	2.25
61	2J30	2880M	240k	2.86G-2.90G	2.0m	20000	30			MG	OS	FF	CO	2.30
62	QKH729	2880M	480k	2.86G-2.90G	700u	26000	50			MG	OS	FF	CO	5.00
63	4J31	2880M	800k	2.86G-2.9G	1.0m	30000	70			MG	OS	FF	CO	5.0
64	M595B	2880M	1.0M	2.860G - 2.900G	1.0m	30000	70			MG	OS	FF	CO	6.0
65	M1225	2890M	500k†	2.870G-2.910G	1.0m	30000	70			MG	OS	FF	CO	
66	100S2.6-3.2	2900M	100 †	2.60G-3.20G	CW	3500	75m△			MG	OS	VT	CO	3.5 *
67	M569	2905M	2.5M	2.85G-2.96G	1.5m	43000	170			MG	OS	FF	WA	9.75 §
68	M573	2905M	2.5M	2.85G-2.96G	1.5m	41000	170			MG	OS	FF	WA	9.75 §
69	M5134	2905M	2.5M	2.850G-2.960G	1.5m	40000	140			MG	OS	FF	WA	12.5
70	M1226	2930M	500k†	2.910G-2.950G	1.0m	30000	70			MG	OS	FF	CO	
71	MI14	2940M	80	2910-2970M		15.0k#	18 △			MG	AM		CO	2.76
72	3S2.8-3.1	2950M	3.0 †	2.800G - 3.100G	CW	1100	15m			MG	OS	VT	CO	1.0 *
73	M5048	2950M	1.2M△	2.9G-3.0G	1.5m	36000	75			MG	OS	MT	WA	60 *
74	F1054	2957M	1.0M†	2.900G-3.015G	1.0m	30000	60 Ø			MG †	OS	MT	WA	
75	MCV1055E	2957M	1.0M†	2.900G-3.015G	1.0m	30000	60 Ø			MG †	OS	MT	WA	
76	L3460	2962M	2000 †	2.350G-3.575G	250m	5500	900m			MG #		MT	WA	18 △
77	M5030A	2975M	1.0M	2900M-3050M	2.0m	36000	80			MG	OS	MT	WA	67
78	TH3062	2975M	1000k	2.900G-3.050G	2.0m	36000	75			MG				
79	4J44	2978M	900k	2.965G - 2.992G	1.0m	30000	70			MG	OS	FF	CO	6.0
80	MI25	2979.5M	400	2965-2994M		29.0k#	28m△			MG	AM		CO	3.53
81	M5167	2996M	2600k	2.992G-3.001G	840u	4700	110 △			MG	OS	MT	WA	16 *
82	M5193	2996M	2.6M	2992M-3001M		48k	110 △			MG	OS	BB		16 §
83▼	MG5249	2996.5M	2.9M	2992M-3001M		47k#	120 △			MG #	OS	MT	CO	16
84	M5125	2997M	1950 *	2.992G-3.001G	1.0m	47000	100 △			MG #	OS	MT	WA	16
85	M190B	2997M	2000k	2.993G-3.001G	1.0m	47000	100			MG	OS	MT	WA	16
86	M7366	2997M	2.2M	2993M-3001M	1.0m	47.0k	100			MG	OS	MT	WA	16.0
87▼	MG5260	2997M	2.6M	2992M-3002M		48k#	110 △			MG #	OS	MT	CC	16
88	QKH1990	2998M	6000	2.993G-3.003G	600u	70000	170			MG	OS	MT	WA	140
89	3M90	2998M	2.0M	2.994G-3.002G	1.5m	43000	80			MG	OS	MT	WA	18
90	M190	2998M	2000k	2.994G-3.002G	1.5m	47000	100			MG	OS	MT	WA	16
91	MG5262	2.998G	5.5M	2.992G-3.001G	3m	55k#	265 △			MG	AM	FF	WA	18
92	2S2-4	3000M	2.0	2.000G - 4.000G	CW	2200	15m			MG	OS	VT	CO	1.5
93	2S2-4S	3000M	2.0	2.000G - 4.000G	CW	2200	15m			MG	OS	VT	CO	1.5 *
94	10S2.5-3.5	3000M	10	2.500G - 3.500G	CW	2200	25m			MG	OS	VT	CO	1.5
95	10S2.5-3.5S	3000M	10	2.500 - 3.500G	CW	2200	25m			MG	OS	VT	CO	1.5 *
96	50S2.5-3.5	3000M	50	2.500G - 3.500G	CW	4100	45m			MG	OS	VT	CO	4.0 *
97	MI13	3000M	80	2970-3030M		15.0k#	18 △			MG	AM		CO	2.76
98	JAN5657	3000M	400 †	2.900G-3.100G	1.0m	32500	70			MG	OS	MT	CO	
99	500S2.8-3.2	3000M	500 †	2.800G-3.200G	CW	7300	115m			MG	OS	VT	CO	7.0
100	M5091A	3000M	500 †	2.900G-3.100G	1.0m	32500	70 △			MG	OS	MT	CO	6.5
101	M5170	3000M	500	2.900G-3.100G	1.0m	32500	70 △			MG	OS	MT	CO	6.5
102	QKH1528	3000M	1.0k	2.900G-3.100G	1.0m	44000	45			MG	OS	MT	WA	66.5
103▼	MG5284	3.0G	600k	2.900G-3.100G	.003	34k#	60 △			MG	OS	MT	CO	99
104	5657	3000M	800k	2.90G-3.10G	500u	30000	70			MG		MT		
105	DX482	3000M	800k	2.90G-3.10G	1.0m	32000	70			MG	OS	MT	CO	5.5
106	TH3084	3000M	800k	2.900G-3.100G	1.0m	30000	70			MG	OS	MT	CO	6.2
107	M5113	3000M	900k	2.90G-3.10G	1.0m	32500	70 △			MG	OS	MT	CO	5.5
108	M5035	3000M	1.0M△	2.900G-3.100G	1.0m	32500	70			MG	OS	FF	CO	5.5 §
109	MG5237	3000M	1.0M	2900-3100M	.001	32.5k#	70 △			MG	OS	MT	CO	6.5
110	M5135	3005M	3750	2.95G-3.060G	1.5m	43000	170 △			MG #	OS	FF	WA	12.5 §

SYMBOLS AND CODES EXPLAINED IN INTERPRETER

2. SOURCE,AMPLIFIER,OUTPUT TUBES

IN ORDER OF (1)TUBE TYPE (2)CENTER FREQUENCY (3)POWER OUTPUT (4)TYPE No.

LINE No.	4 TYPE No.	2 CENTER FREQ. (Hz)	3 POWER OUTPUT (W)	FREQUENCY RANGE (Hz)	MAX. DUTY CYCLE	MAX. BEAM VOLTAGE (Note 1) (V)	MAX. CATH-ODE CUR. (A)	GAIN (dB)	NF (dB)	DESCRIPTION 1 TUBE TYPE	FUNC-TION	TUN-ING	OUT PUT	WEIGHT (lb)
1	4J43	3005M	900k	2.992G - 3.019G	1.0m	30000	70			MG	OS	FF		6.0 §
2	M570	3005M	2.5M	2.95G-3.06G	1.5m	43000	170			MG	OS	FF	WA	9.75 §
3	M574	3005M	2.5M	2.95G-3.06G	1.5m	44000	155			MG	OS	FF	WA	9.75 §
4	M577B	3020M	900k	3.0G-3.04G	1.0m	30000	70			MG	OS	FF	CO	6.0
5	MI26	3040M	400	2995-3085M		29.0k#	28mΔ			MG	AM		CO	3.53
6	2J70A	3050M	20	3.025G-3.075G	1.0m	7000	8.0			MG	OS	FF	CO	3.75
7	QKH1977	3050M	20	3.025G-3.075G	1.0m	7000	16			MG	OS	FF	WA	2.0
8	2J70B	3050M	50	3.025G-3.075G	1.0m	9000	16			MG	OS	FF	CO	3.75
9	QKH1978	3050M	50	3.025G-3.075G	1.0m	9000	16			MG	OS	FF	WA	2.0
10	MG5252	3050M	12k	3040-3060M	.001	6.0k#	8.0 Δ			MG	OS	FF	WA	4.6
11▼	B3RH1000	3.050G	25k	3.040G-3.050G	.001	8.0k#	8.0 Δ		9.0	MG		FF	CO	5.25
12▼	MG5289	3050M	26k	3025M-3075M	.001	7.0k#Ø	8.0 Δ			MG	OS	FF	WA	3.75
13	M1302	3050M	30k	3.040G-3.060G	1.0m	8250	18			MG	OS	FF	WA	5.0
14	MG5223	3050M	30k	3040M-3060M	.001	8.5k#	12 Δ			MG	OS		WA	4.6
15	M5063-2J70B	3050M	50kΔ	3.025G-3.075G	1.0m	9500	16			MG	OS	FF	WA	3.75
16	MG5240	3050M	55k	3025M-3075M	.001	9.5k#	16 Δ			MG	OS		WA	4.6
17	MG5267	3050M	56k	3025-3075M	.001	9.5k#	16 Δ			MG	OS	FF	WA	3.75
18	F1055	3050M	1.0M†	2.985G-3.115G	1.0m	30000	60 Ø			MG †	OS	MT	WA	
19	MCV1055F	3050M	1.0M†	2.985G-3.115G	1.0m	30000	60 Ø			MG †	OS	MT	WA	
20	MI12	3060M	80	3030-3090M		15.0k#	18 Δ			MG	AM		CO	2.76
21	F1030	3065M	1.1M†	2.900G-3.230G	1.0m	31000	65 Ø			MG †	OS	MT	WA	
22	F1031	3065M	1.1M†	2.900G-3.230G	1.0m	31000	65 Ø			MG †	OS	MT	WA	
23	F1032	3065M	1.1M†	2.900G-3.230G	1.0m	31000	65 Ø			MG †	OS	MT	WA	
24	F1033	3065M	1.1M†	2.900G-3.230G	1.0m	31000	65 Ø			MG †	OS	MT	WA	
25	F1034	3065M	1.1M†	2.900G-3.230G	1.0m	31000	65 Ø			MG †	OS	MT	WA	
26	F1035	3065M	1.1M†	2.900G-3.230G	1.0m	31000	65 Ø			MG	OS	MT	WA	
27	F1036	3065M	1.1M†	2.900G-3.230G	1.0m	31000	65 Ø			MG	OS	MT	WA	
28	F1037	3065M	1.1M†	2.900G-3.230G	1.0m	31000	65 Ø			MG	OS	MT	WA	
29	F1038	3065M	1.1M†	2.900G-3.230G	1.0m	31000	65 Ø			MG	OS	MT	WA	
30	F1039	3065M	1.1M†	2.900G-3.230G	1.0m	31000	65 Ø			MG	OS	MT	WA	
31	F1040	3065M	1.1M†	2.900G-3.230G	1.0m	31000	65 Ø			MG	OS	MT	WA	
32	F1041	3065M	1.1M†	2.900G-3.230G	1.0m	31000	65 Ø			MG †	OS	MT	WA	
33	F1042	3065M	1.1M†	2.900G-3.230G	1.0m	31000	65 Ø			MG †	OS	MT	WA	
34	F1043	3065M	1.1M†	2.900G-3.230G	1.0m	31000	65 Ø			MG †	OS	MT	WA	
35	F1044	3065M	1.1M†	2.900G-3.230G	1.0m	31000	65 Ø			MG †	OS	MT	WA	
36	MC1055B	3065M	1.1M†	2.900G-3.230G	1.0m	31000	65 Ø			MG †	OS	MT	WA	
37	MC1055C	3065M	1.1M†	2.900G-3.230G	1.0m	31000	65 Ø			MG †	OS	MT	WA	
38	MC1055D	3065M	1.1M†	2.900G-3.230G	1.0m	31000	65 Ø			MG †	OS	MT	WA	
39	MC1055E	3065M	1.1M†	2.900G-3.230G	1.0m	31000	65 Ø			MG †	OS	MT	WA	
40	MC1055F	3065M	1.1M†	2.900G-3.230G	1.0m	31000	65 Ø			MG †	OS	MT	WA	
41	MC1055G	3065M	1.1M†	2.900G-3.230G	1.0m	31000	65 Ø			MG †	OS	MT	WA	
42	MC1055H	3065M	1.1M†	2.900G-3.230G	1.0m	31000	65 Ø			MG †	OS	MT	WA	
43	MC1055I	3065M	1.1M†	2.900G-3.230G	1.0m	31000	65 Ø			MG †	OS	MT	WA	
44	MC1055J	3065M	1.1M†	2.900G-3.230G	1.0m	31000	65 Ø			MG †	OS	MT	WA	
45	MC1055K	3065M	1.1M†	2.900G-3.230G	1.0m	31000	65 Ø			MG †	OS	MT	WA	
46	MC1055L	3065M	1.1M†	2.900G-3.230G	1.0m	31000	65 Ø			MG †	OS	MT	WA	
47	MC1055M	3065M	1.1M†	2.900G-3.230G	1.0m	31000	65 Ø			MG †	OS	MT	WA	
48	MC1055N	3065M	1.1M†	2.900G-3.230G	1.0m	31000	65 Ø			MG †	OS	MT	WA	
49	M578B	3080M	900k	3.06G-3.1G	1.0m	30000	70			MG	OS	FF	CO	6.0
50	MI89	3100M	380	3085-3115M		29.0k#	28mΔ			MG	AM		CO	3.53
51	M5136	3105M	3.75k	3.050G-3.160G	1.5m	41500	176 Δ			MG #	OS	FF	WA	12.5 §
52	M579	3105M	2.5M	3.05G-3.16G	1.5m	43000	170			MG	OS	FF	WA	9.75 §
53	M5034A	3125M	1.0M	3050M-3200M	2.0m	36000	80			MG	OS	MT	WA	67
54	TH3063	3125M	1.0M	3.050G-3.200G	2.0m	36000	75			MG				
55	F1056	3142M	1.0M†	3.085G-3.200G	1.0m	30000	60 Ø			MG †	OS	MT	WA	
56	MCV1055G	3142M	1.0M†	3.085G-3.200G	1.0m	30000	60 Ø			MG †	OS	MT	WA	
57	M5079A	3200M	230 †	3.100G-3.300G	1.0m	34000	70 Δ			MG	OS	MT	CO	5.5
58	M5126A	3200M	450 †	3.100G-3.300G	1.0m	34000	70 Δ			MG	OS	MT	CO	6.5
59	E3274A	3200M	25.0k	2.9G-3.5G	2.5m	7500	12.0			MG	OS	FF	CC	4.41 *
60	E3274B	3200M	25.0k	2.9G-3.5GØ	2.5m	7500	12.0			MG	OS	MT	CC	4.41 *
61	QKH1599	3225M	450	3.100G-3.350G	1.0m	30000	40			MG	OS	MT	CO	5.0
62	MI90	3248.5M	380	3233-3264M		13.0k#	16mΔ			MG	AM		WC	1.32
63	10S3.5R	3250M	10 †	3.000G - 3.500G	CW	2200	25m			MG	OS	VT	CO	1.0 *
64	100S3-3.5	3250M	100	2.800G - 3.500G	CW	3500	70m			MG	OS	VT	CO	4.0 *
65	5795	3300M	1.0m	3.100G-3.500G	2.2m	45000	45			MG	OS		WA	66.13
66	JAN5795	3300M	1.0MΔ	3.1G-3.5G	2.2m	47000	50			MG	OS	MT	WA	65.5 *
67	6589	3425M	500k	3.350G - 3.500G	1.0m	30000	50			MG	OS	MT	WA	8.50
68	JAN6402	3500M	1.0m	3.430G-3.570G	1.6m	57000	55			MG †#		MT		65
69	10S3-4	3500M	10	3.000G - 4.000G	CW	2300	25m			MG	OS	VT	CO	1.5
70	10S3-4S	3500M	10	3.000G - 4.000G	CW	2300	25m			MG	OS	VT	CO	1.5 *
71	50S3-4	3500M	50	3.000G - 4.000G	CW	3800	45m			MG	OS	VT	CO	4.0 *
72	100S3.2-3.8	3500M	100 †	3.20G-3.80G	CW	4000	70m			MG	OS	VT	CO	3.5 *
73	QK437	3500M	1000k	3.43G-3.57G	1.6m	57000	55			MG	OS	MT	WA	65
74	5S3.4-3.7	3550M	5.0 †	3.400G - 3.700G	CW	1200	20m			MG	OS	VT	CO	1.5 *
75	JAN4J38	3575M	700k	3.550G-3.600G	1.0m	30000	70 Δ			MG	OS	FF	WA	
76	4J37	3625M	350	3.600G-3.650G	1.0m	30000	70			MG	OS	FF	WA	5.0
77	QKH1448	3645M	1.0k	3.590G-3.700G	1.0m	46000	50			MG	OS	MT	WA	70
78	8764	3645M	1.2k	3.590G-3.700G	1.2m	54000	50			MG	OS	MT	WA	65
79	4J36	3675M	700k	3.650G - 3.700G	1.0m	30000	70			MG	OS	FF		
80	10SC3.5-3.5S	4000M	10	3.5G-4.5G	CW	2500	25m			MG	OS	VT	CO	
81	10SC3.5-4.5	4000M	10	3.500G - 4.500G	CW	2500	25m			MG	OS	VT	CO	1.5
82	100C3.8-4.4	4100M	100 †	3.80G-4.40G	CW	3800	70m			MG	OS	VT	CO	3.5 *
83	L3461	4275M	1.5k†	3.575G-4.975G	250m	5500	900m			MG #		MT	WA	18 Δ
84	6177A	4309M	1.0	4.268G-4.350G	1.0	350	35m			MG	OS	EM	CO	1.0
85	JAN6177A	4309M	1.0 †	4.268G - 4.350G	CW	350	35m			MG	OS	EM	CO	1.0
86	5C4-5S	4500M	5.0	4.000G - 5.000G	CW	2100	20m			MG	OS	VT	CO	1.5 *
87	10C4-5	4500M	10 †	4.00G-5.00G	CW	2500	25mΔ			MG	OS	VT	CO	1.7 *
88	100C4.4-5	4700M	100 †	4.40G-5.00G	CW	3600	70m			MG	OS	VT	CO	4.5 *
89	2C4-6S	5000M	2.0 †	4.000G - 6.000G	CW	2400	20m			MG	OS	VT	CO	1.5 *
90	5C4.5-5.5S	5000M	5.0	4.500G - 5.500G	CW	2100	15m			MG	OS	VT	CO	1.5 *
91	10C4.5-5.5	5000M	10 †	4.50G-5.50G	CW	2500	25mΔ			MG	OS	VT	CO	1.7 *
92	150C4.7-5.3	5000M	150 †	4.700G-5.300G	CW	4500	85m			MG	OS	VT	CO	5.0
93	200C4.7-5.3	5000M	200 †	4.700G-5.300G	CW	5300	85m			MG	OS	VT	CO	5.0
94	QKH1199	5000M	250	4.900G-5.100G	1.0m	24000	24			MG	OS	MT	WA	35
95	100C4.8-5.4	5100M	100 †	4.80G-5.40G	CW	3600	70m			MG	OS	VT	CO	4.5 *
96	L3897	5200M	175k	4.950G - 5.450G	1.0m	22000	22			MG	OS	MT	WA	25
97	QKH632	5280M	1.0k	5.250G-5.310G	1.0m	35000	60			MG	OS	FF	WA	50
98	M1230	5.3G	200	5200-5400M	.50m	22k	26 Δ			MG		MT	WA	24.5
99	5M20	5300M	320k†	5.250G-5.350G	1.0m	25000	50			MG	OS	MT	WA	
100	M4508B	5300M	350k	5.290G-5.310G	700u	23000	40			MG Ø		MT	WA	
101	M5032	5300M	840k	5.25G-5.35G	1.5m	34000	60			MG	OS	FF	WA	3.8
102	QKH456	5400M	85	5.380G-5.420G	1.0m	16000	20			MG	OS	FF	WA	7.7
103	6521S	5400M	85k	5.389G-5.410G	1.0m	16000	16			MG	OS	FF	WA	11
104	TV1505	5425M	250k†	5.350G-5.500G	1.0m	25000	24 Ø			MG †	OS	MT	WA	
105	BLM167	5450M	900 †	5.200G - 5.700G	2.0m	2800 Ø	1.5			MG	OS	MT	CO	.63
106	QKH539	5480M	1.0k	5.450G-5.510G	1.0m	35000	60			MG	OS	FF	WA	50
107	M5033	5480M	840k	5.43G-5.53G	1.5m	34000	60			MG	OS	FF	WA	3.8
108	5C5-6S	5500M	5.0	5.000G - 6.000G	CW	2300	20m			MG	OS	VT	CO	1.5 *
109	10C5-6	5500M	10 †	5.00G-6.00G	CW	2600	25mΔ			MG	OS	VT	CO	1.7 *
110	6M70	5540M	50k	5.510G - 5.570G	1.0m	13000	16			MG	OS	FF	WA	

2. SOURCE,AMPLIFIER,OUTPUT TUBES

IN ORDER OF (1)TUBE TYPE (2)CENTER FREQUENCY (3)POWER OUTPUT (4)TYPE No.

LINE No.	4 TYPE No.	2 CENTER FREQ. (Hz)	3 POWER OUTPUT (W)	FREQUENCY RANGE (Hz)	MAX. DUTY CYCLE	MAX. BEAM VOLTAGE (Note 1) (V)	MAX. CATH-ODE CUR. (A)	GAIN (dB)	NF (dB)	DESCRIPTION 1 TUBE TYPE	FUNC-TION	TUN-ING	OUT PUT	WEIGHT (lb)
1	6M72	5540M	85k	5.510G-5.570G	1.0m	15000	13.5			MG	OS	FF	WA	11
2	JAN7417	5550M	10k†	5.500G - 5.600G	1.0m	8200	8.0			MG	OS	FF	WA	8.0
3	BL244	5550M	10k†	5.500G-5.600G	1.0m	8200	8.0			MG	OS	FF	WA	9.0 △
4	L3467	5575M	1.8k†	4.975G-6.175G	.25	6000	900m			MG #		MT	WA	18 △
5	TH3103	5.6G	250k	5450-5825M	.001	26k	30			MG	OS	MT	WA	37.5
6	JAN6344A	5637M	43 †	5.450G-5.825G	1.0m	24000	30			MG †		MT	WA	25 △
7	JAN7156A	5637M	157 †	5.45G-5.825G	1.2m	28000	30			MG	OS	MT	WA	35
8	QKH1162	5637M	250	5.450G-5.825G	1.0m	24000	24			MG	OS	MT	WA	35
9	MCV1421	5637M	50k†	5.450G-5.825G	1.0m	15000	12 Ø			MG †	OS	MT	WA	
10	6344-QKH235	5637M	175k	5.450G-5.825G	1.0m	21500	22			MG	OS	MT	WA	24.3
11	JAN7460	5637M	250k†	5.45G-5.825G	1.2m	28000	30			MG	OS	MT	WA	35
12	F1050	5637M	250k†	5.450G-5.825G	1.0m	25000	24 Ø			MG †	OS	MT	WA	
13	TV1546	5637M	250k†	5.450G-5.825G	1.0m	25000	24 Ø			MG †	OS	MT	WA	
14	7460	5638M	87	5.450G-5.825G	1.2m	24500	25			MG	OS	MT	WA	35
15	6344A	5638M	150	5.450G-5.825G	1.0m	24000	30			MG	OS	MT	WA	25
16	7156	5638M	250	5.450G-5.825G	1.0m	24500	24			MG	OS	MT	WA	35
17	6344	5638M	175k†	5.450G - 5.825G	1.0m	24000	30			MG	OS	MT	WA	24
18	QK235	5638M	175k	5.45G-5.825G	1.0m	22000	22			MG	OS	MT	WA	25
19	L5080	5638M	250k†	5.45G-5.825G	1.2m	28000	30			MG	OS	MT	WA	35
20	QK662A	5638M	250k	5.45G-5.82G	1.0m	26000	24			MG	OS	MT	WA	35
21	QK686	5638M	250k	5.45G-5.82G	1.2m	24500	25			MG	OS	MT	WA	35
22	5C5.4-5.9S	5650M	5.0	5.400G - 5.900G	CW	2100	15m			MG	OS	VT	CO	1.5 *
23	100C5.4-5.9	5650M	100 †	5.40G-5.90G	CW	3800	70m			MG	OS	VT	CO	4.5 *
24	7088	5650M	100 †	5.400G - 5.900G	2.0m	1450	800m			MG	OS	MT	CO	.40
25	7443	5650M	400 †△	5.400G - 5.900G	2.0m	2100	1.1			MG	OS	MT	CO	.63
26	BLM205	5650M	450 †	5.4G-5.9G	1.3m	2300	1.1			MG	OS	MT	CO	630m
27	BLM086	5650M	500 †	5.400G - 5.900G	2.0m	2150 Ø	1.1			MG	OS	MT	CO	.44
28	BLM017	5650M	550 △	5.400G - 5.900G	2.0m	2500	1.4			MG	OS	MT	CO	.63
29	BLM213	5650M	550	5.400G-5.900G	2.0m	2400	1.3			MG	OS	MT	CO	630m△
30	BLM093	5650M	600 †	5.400G - 5.900G	2.0m	2200 Ø	2.0			MG	OS	MT	CO	.44
31	BLM196	5650M	600	5.400G-5.900G	2.0m	2300	1.3			MG	OS	MT	WA	440m
32	BLM149A	5650M	700	5.400G-5.900G	2.0m	2400	1.3			MG	OS	MT	CO	690m△
33	BLM155	5650M	700 †	5.4G-5.9G	1.2m	2550 Ø	1.2			MG	OS	MT	CO	370m
34	BLM190	5650M	750	5.400G-5.900G	2.0m	2500	1.3			MG	OS	MT	CO	440m△
35	BL245	5650M	900 †	5.400G - 5.900G	2.0m	2650 Ø	1.5			MG	OS	MT	CO	.63
36	BLM095	5650M	1.0k†△	5.400G - 5.900G	2.0m	3100	1.9			MG	OS	MT	CO	.44
37	BLM201	5650M	1.2k	5.400G-5.900G	2.0m	2800	1.9			MG	OS	MT	CO	440m△
38	BLM116	5650M	1.4k†	5.4G-5.9G	1.5m	3050 Ø	1.9			MG	OS	MT	CO	500m
39	BLM179	5650M	1.5k†	5.400G - 5.900G	2.0m	3200 Ø	2.2			MG	OS	MT	CO	.50
40	BLM127	5650M	3.5k†	5.400G - 5.900G	1.0m	5000 Ø	3.2			MG	OS	MT	CO	.75
41	QKH1214	5670M	1000k	5.665G-5.715G	1.0m	35000	65			MG	OS	MT	WA	50
42	BLM186	5700M	50 †	5.405G-5.995G	400u	1100	800m			MG	OS	MT	CO	690m
43	BLM153	5750M	5.0k†△	5.700G - 5.800G	1.0m	5800	6.0			MG	OS	MT	CO	1.25
44	5C5.5-6.5S	6000M	5.0	5.500G - 6.500G	CW	2400	20m			MG	OS	VT	CO	1.5 *
45	10C5.5-6.5	6000M	10 †	5.50G-6.50G	CW	2600	25m△			MG	OS	VT	CO	1.7 *
46	100C5.9-6.4	6150M	100 †	5.90G-6.40G	CW	3600	70m			MG	OS	VT	CO	4.5 *
47	4J59	6325M	180	6.275G-6.375G	1.0m	25000	35			MG	OS	FF	WA	11.5
48	JAN4J59	6325M	600k	6.275G - 6.375G	1.0m	25000	35			MG		FF	WA	
49	4J58	6425M	180	6.375G-6.475G	1.0m	25000	35			MG	OS	FF	WA	11.5
50	JAN4J58	6425M	600k	6.375G - 6.475G	1.0m	25000	35			MG		FF	WA	
51	2C6-7S	6500M	2.0	6.000G - 7.000G	CW	2600	15m			MG	OS	VT	CO	1.5 *
52	5C6-7S	6500M	5.0 †	6.000G - 7.000G	CW	2500	20m			MG	OS	VT	CO	1.5 *
53	10C6-7	6500M	10 †	6.00G-7.00G	CW	2500	25m△			MG	OS	VT	CO	1.7 *
54	50C6-7	6500M	50 †	6.00G-7.00G	CW	3900	60m△			MG	OS	VT	CO	4.5 *
55	100C6.2-6.8	6500M	85 †	6.20G-6.80G	CW	3600	80m△			MG	OS	VT	CO	4.5 *
56	100C6-7	6500M	100 †	6.000G-7.000G	CW	4500	60m			MG	OS	VT	CO	5.0
57	150C6.2-6.8	6500M	150 †	6.200G-6.800G	CW	4500	85m			MG	OS	VT	CO	5.0
58	4J57	6525M	180	6.475G-6.575G	1.0m	25000	35			MG	OS	FF	WA	11.5
59	JAN4J57	6525M	600k	6.475G - 6.575G	1.0m	25000	35			MG		FF	WA	
60	L3468	6725M	1.5k†	6.175G-7.275G	.25	5500	.90			MG #		MT	WA	18 △
61	10C6.5-7.5	7000M	10 †	6.50G-7.50G	CW	2600	25m△			MG	OS	VT	CO	1.7 *
62	50C6.5-7.5	7000M	50 †	6.50G-7.50G	CW	4000	60m△			MG	OS	VT	CO	4.5 *
63	100C6.8-7.4	7100M	85 †	6.80G-7.40G	CW	3800	80m△			MG	OS	VT	CO	4.5 *
64	MA259	7150M	1.0k	7.000G - 7.300G	5.0m	2000	2.0			MG	OS	FF	WA	1.31
65	MA2813	7250M	1.0k	7.000G-7.500G	1.0m	2100	2.0			MG	OS	FF	WA	1.25
66	10X7-8	7500M	10 †	7.00G-8.00G	CW	2700	25m△			MG	OS	VT	CO	1.7 *
67	50X7-8	7500M	50 †	7.00G-8.00G	CW	3700	65m△			MG	OS	VT	CO	4.5 *
68	100X7-8	7500M	100 †	7.000G-8.000G	CW	4500	70m			MG	OS	VT	CO	5.0
69	100X7.4-8.0	7700M	85 †	7.40G-8.00G	CW	3600	80m△			MG	OS	VT	CO	4.5 *
70	MA217	8000M	1.0 †	7.5G-8.5G	CW	430	15m			MG	OS	MT		1.0
71	MA217B	8000M	1.0 †	7.500G - 8.500G	CW	470	20m			MG	OS	MT	WA	
72	10X7.5-8.5	8000M	10 †	7.50G-8.50G	CW	2700	25m△			MG	OS	VT	CO	1.7 *
73	MA217A	8000M	10 †	7.500G - 8.500G	5.0m	530	150m			MG	OS	MT	WA	
74	MA217C	8000M	20 †	7.500G - 8.500G	5.0m	560	300m			MG	OS	MT	WA	
75	50X7.5-8.5	8000M	50 †	7.50G-8.50G	CW	3700	65m△			MG	OS	VT	CO	4.5 *
76	MA221B	8150M	1.5 †	7.500G - 8.800G	CW	450	15m			MG	OS	FF	WA	
77	MA221A	8150M	10 †	7.500G - 8.800G	10m	500	150m			MG	OS	FF	WA	
78	MA221C	8150M	10 †	7.500G - 8.800G	10m	500	150m			MG	OS	FF	WA	
79	MA221D	8150M	20 †	7.500G - 8.800G	5.0m	530	300m			MG	OS	FF	WA	
80	MA231B	8150M	20 †	7.500G - 8.800G	CW	930	55m			MG	OS	FF	WA	.69
81	MA231A	8150M	200 †	7.500G - 8.800G	50m	1000	750m			MG	OS	FF	WA	.69
82	DX368	8150M	50k	8.125G-8.175G	1.6m	15000	15			MG	OS	FF	WA	6.0
83	80X8-8.5	8250M	80 †	8.00G-8.50G	CW	3800	70m△			MG	OS	VT	CO	4.5 *
84	MA293	8300M	50 †	8.00G-8.60G	2.0m	750	400m			MG		FF	CO	750m
85	MA262	8400M	200	8.0G-8.8G	5.0m	1050	750m			MG	OS	FF	WA	
86	10X8-9	8500M	10 †	8.00G-9.00G	CW	2600	25m△			MG	OS	VT	CO	1.7 *
87	50X8-9	8500M	50 †	8.00G-9.00G	CW	3800	60m△			MG	OS	VT	CO	4.5 *
88	100X8-9	8500M	100 †	8.000G-9.000G	CW	4700	80m			MG	OS	VT	CO	5.0
89	M549	8583M	225k	8.500G - 8.665G	1.0m	23000	27.5			MG	OS	FF	WA	10.5 *
90	M539	8748M	225k	8.665G - 8.830G	1.0m	23000	27.5			MG	OS	FF	WA	10.5 *
91	80X8.5-9	8750M	80 †	8.50G-9.00G	CW	3900	70m△			MG	OS	VT	CO	4.5 *
92	BLM014	8750M	150 †	8.500G - 9.000G	2.0m	1320 Ø	900m			MG	OS	MT	CO	.37
93	L3039A	8757M	225k†	8.732G-8.782G*	2.0m	23000	27.5			MG	OS	FF	WA	10
94	BM1039	8775M	60k	8.5G-9.05G	300u	15500	12			MG	OS	MT	WA	11.5 *
95	L3039R	8790M	225k†	8.700G - 8.880G	01	22000	28			MG	OS	FF	WA	10 △
96	L3089B	8800M	40 †	8.775G-8.825G*	250m	900	200m			MG	OS	FF	WA	1.31 △
97	L3039D	8800M	225k†	8.78G-8.82G*	2.0m	23000	27.5			MG	OS	FF	WA	10
98	JP8-02B	8802M	25	8.770G-8.835G	500m	850	180m△			MG	OS	FF	WA	1.17
99	TV1255B	8820M	40k†	8.790G-8.850G	1.0m	12000	12 Ø			MG †	OS	MT	WA	
100	2J50	8825M	40	8.750G-8.900G	1.2m	16000	16			MG	OS	FF	WA	1.3
101	JAN2J50	8825M	50k△	8.75G-8.9G	1.2m	16000	16			MG	OS	FF	WA	1.44
102	YJ1185L	8850M	100k	8.400G-9.300G	1.1m	16000	25			MG	OS		WA	
103	YJ1180L	8850M	200k	8.400G-9.300G	1.1m	24000	27.5			MG	OS		WA	
104	YJ1181L	8850M	200k	8.400G-9.300G	1.1m	24000	27.5			MG	OS		WA	
105	L3039E	8860M	225k†	8.84G-8.88G*	2.0m	23000	27.5			MG	OS	FF	WA	10
106	MI522	8900M		8675-9125M		15.5k#	40m△			MG	AM		WA	14.33
107	L3956	8900M	4.5k	8.88G-8.92G	1.2m	3800	3.75			MG	OS	FF		1.4 △
108	M529	8913M	225k	8.830G - 8.995G	1.0m	23000	27			MG	OS	FF	WA	10.5 *
109	L3039F	8920M	225k†	8.9G-8.94G*	2.0m	23000	27.5			MG	OS	FF	WA	10
110	L3039G	8980M	225k†	8.96G-9.0G*	2.0m	23000	27.5			MG	OS	FF	WA	10

SYMBOLS AND CODES EXPLAINED IN INTERPRETER

2. SOURCE,AMPLIFIER,OUTPUT TUBES

IN ORDER OF (1)TUBE TYPE (2)CENTER FREQUENCY (3)POWER OUTPUT (4)TYPE No.

LINE No.	4 TYPE No.	2 CENTER FREQ. (Hz)	3 POWER OUTPUT (W)	FREQUENCY RANGE (Hz)	MAX. DUTY CYCLE	MAX. BEAM VOLTAGE (Note 1) (V)	MAX. CATH-ODE CUR. (A)	GAIN (dB)	NF (dB)	DESCRIPTION 1 TUBE TYPE	FUNC-TION	TUN-ING	OUT PUT	WEIGHT (lb)
1	50X8.5-9.5	9000M	50 †	8.50G-9.50G	CW	4500	55mΔ			MG	OS	VT	CO	4.5 *
2	TH3106	9.0G	75k	8500-9600M	.001	16k	15			MG	OS	MT	WA	6.2
3	M1233	9000M	220.0k	8500M-9500M	2.0m	20.0k	27.5			MG	OS	FF	WA	13.0
4	L3030B	9000M	300k†	8.97G-9.03G*	1.0m	29000	27.5			MG	OS	FF	WA	14 Δ
5	TH3041A	9030M	200k†	9.005G-9.055G	1.0m	22000	27.5 Ø			MG †	OS	MT	WA	
6	L3039H	9040M	225k†	9.02G-9.06G*	2.0m	23000	27.5			MG	OS	FF	WA	10
7	10X8.5-9.6	9050M	10 †	8.50G-9.60G	CW	2700	25mΔ			MG	OS	VT	CO	1.7 *
8	2J51A	9050M	40	8.500G-9.600G	1.1m	16000	15.5			MG	OS	MT	WA	4.8
9	7256	9050M	40	8.500G-9.600G	1.0m	14000	14			MG	OS	MT	WA	5.0
10	MA261	9050M	50	8.500G - 9.600G	3.0m	850	450m			MG	OS	MT	WA	
11	MA272	9050M	7.0k	8.6G-9.5G	2.0m	5000	5.5			MG	OS	FF	WA	
12	L3103	9050M	30k†	8.500G - 9.600G	2.0m	12500	10			MG	OS	MT	WA	6.0 Δ
13	2J51	9050M	40k	8.5G-9.6G	1.2m	16000	16			MG	OS	MT		
14	QKH713	9050M	40k	8.50G-9.60G	1.0m	14000	14			MG	OS	MT	WA	5.0
15	JAN2J51A	9050M	45kΔ	8.5G-9.6G	1.1m	11000	15.5			MG †	OS	MT	WA	5.0
16	6543	9050M	65k	8.500G - 9.600G	1.0m	15000	15			MG	OS	MT	WA	6.12
17	6543A	9050M	65k†	8.500G - 9.600G	1.0m	16500	15			MG	OS	MT	WA	6.12
18	F1025	9050M	70k†	8.500G-9.600G	1.0m	15000	15 Ø			MG †	OS	MT	WA	
19	L4193C	9050M	90k†	8.5G-9.6G	2.1m	23000	13.8			MG	OS	MT	WA	11 Δ
20	L5273	9050M	95k	8.500G-9.600G	1.1m	17000	16			MG	OS	MT	WA	10
21	TH3096	9050M	100k†	8.500G-9.600G	1.0m	22000	27.5			MG	OS	MT	WA	
22	YJ1185	9050M	100k	8.600G-9.500G	1.1m	16000	25			MG	OS		WA	
23	4J50TO	9050M	200k†	8.500G-9.600G	1.0m	22500	27.5 Ø			MG †§	OS	MT	WA	
24	4J50TR	9050M	200k†	8.500G-9.600G	1.0m	22500	27.5 Ø			MG †	OS	MT	WA	
25	7111	9050M	200k†	8.5G-9.6G	1.3m	23000	27.5			MG	OS	MT	WA	10 Δ
26	L4502	9050M	200k†	8.7G-9.4G	1.3m	23000	30			MG	OS	MT	WA	12
27	TH3049	9050M	200k†	8.500G-9.600G	1.0m	22000	27.5			MG	OS	MT	WA	10.3
28	TH3086	9050M	200k	8.500G-9.600G	1.1m	23000	30			MG	OS	MT	WA	11
29	7950	9050M	208k	8.5G-9.6G	1.3m	33000	24			MG	OS	MT	WA	16
30	7008	9050M	220k	8.500G - 9.600G	1.0m	23000	27.5			MG	OS	MT	WA	13
31	JAN7111	9050M	220kΔ	8.5G-9.6G	1.1m	23000	27.5			MG	OS	MT	WA	12
32	5780	9050M	250k†	8.500G - 9.600G	1.0m	38000	36			MG	OS	MT	WA	16 Δ
33	JAN5780	9050M	250k	8.500G - 9.600G	1.0m	38000	36			MG	OS	MT	WA	16
34	L4396A	9050M	300k	8.5G-9.6G	1.1m	26000	32			MG	OS	MT	WA	12 Δ
35	TH3116	9054M	40	8829M-9280M	.001	14	14			MG	OS	MT	WA	5.5
36	DX285	9075M	200k	8.8G-9.6G	1.2m	24000	27.5			MG	OS	MT	WA	15
37	L3030	9078M	300k	9.0G-9.375G†	1.0m	29000	28			MG	OS	FF	WA	14 Δ
38	MA294	9080M	50 †	9.05G-9.11G	2.0m	750	400m			MG		FF	CO	750m
39	JAN7256	9080M	40k	9.0G-9.16G	1.1m	16000	15.5			MG	OS	MT	WA	5.0
40	JAN2J49	9080M	50kΔ	9.0G-9.16G	1.2m	16000	16			MG	OS	FF	WA	1.44
41	YJ1180	9100M	205k	8.700G-9.500G	1.1m	24000	27.5			MG	OS	ST	WA	15
42	YJ1181	9100M	205k	8.700G-9.500G	1.1m	24000	27.5			MG	OS	ST	WA	15
43	L3039I	9100M	225k†	9.08G-9.12G*	2.0m	23000	27.5			MG	OS	FF	WA	10
44	TH3041B	9130M	200k†	9.105G-9.155G	1.0m	22000	27.5 Ø			MG †	OS	MT	WA	
45	6229	9150M	400	8.900G - 9.400G	3.0m	5000	1.0			MG	OS	MT		1.63
46	BLM138	9150M	400 †	8.800G - 9.500G	2.0m	2150 Ø	1.1			MG	OS	MT	CO	.44
47	BLM204	9150M	400 †	8.800G - 9.500G	1.0m	2300	1.2			MG	OS	MT	CO	.63
48	BLM211	9150M	500	8.800G-9.500G	2.0m	2400	1.6			MG	OS	MT	CO	630mΔ
49	BLM256	9150M	500	8.800G-9.500G	2.0m	2400	1.3			MG	OS	MT	CO	440mΔ
50	MA265	9150M	900	8.9G-9.4G	2.0m	4300	800m			MG	OS	MT	WA	
51	6230	9150M	910	8.900G - 9.400G	3.0m	5000	1.0			MG	OS	MT		1.63
52	7521	9150M	950 †	8.900G - 8.400G	1.0m	4300	950m			MG	OS	MT	WA	
53	BLM136	9150M	1.0k†	8.8G-9.5G	1.5m	2800	2.0			MG	OS	MT	CO	370m
54	MA277	9150M	3.0k	8900M-9400M	500u	5200	2.5			MG	OS	MT	WA	1.5
55	VMX1028	9150M	7.0k	8.80G-9.50G	2.0m	2700	1.4 Δ			MG	OS	MT		7.0
56	YJ1185H	9150M	100k	8.700G-9.600G	1.1m	16000	25			MG	OS		WA	
57	YJ1180H	9150M	200k	8.700G-9.600G	1.1m	24000	27.5			MG	OS		WA	
58	YJ1181H	9150M	200k	8.700G-9.600G	1.1m	24000	27.5			MG	OS		WA	
59	BLM203	9150M	400k†Δ	8.8G-9.5G	800u	2300	1.4			MG	OS	MT	CO	630m
60	L3039J	9160M	225k†	9.14G-9.18G*	2.0m	23000	27.5			MG	OS	FF	WA	10
61	MG5230	9.17G	25k	9.14G-9.2G	1.5m	8.5k#	10 Δ			MG	AM	FF	WA	3.25
62	MI509E	9190M		9160-9220M		26.0k#	23.5mΔ			MG	AM		WA	35.94
63♦	PT6031	9.2G	200k	8.9G-9.5G	1.1 m	27k#	27.5			MG	OS	ST	WA	15.4
64	L3030C	9200M	300k†	9.17G-9.23G*	1.0m	29000	27.5			MG	OS	FF	WA	14 Δ
65	L3039K	9220M	225k†	9.2G-9.24G*	2.0m	23000	27.5			MG	OS	FF	WA	10
66▼	MG5274	9240M	4.0k	9210M-9270M	.001	3.7k#	3.0 Δ			MG	OS	FF	WA	1.54
67	PT5036	9.240G	22k	9.210G-9.270G	.001	7.7k	9.0 Δ			MG	OS	FF	WA	2.9
68	M5080	9240M	80k	9.21G-9.27G	1.2m	15500	15 Δ			MG	OS	FF	WA	5.0
69	M538A	9240M	225k	9.210G - 9.270G	1.0m	23000	27.5			MG	OS	FF	WA	10.5 *
70	L3036F	9245M	65k†	9.215G-9.275G*	1.0m	16000	15			MG	OS	FF	WA	6.0
71	L3036G	9245M	65k	9.245G	1.0m	15000	15			MG	OS	FF	WA	6.0 Δ
72	6967A	9245M	75k†	9.205G-9.285G	1.0m	15000	13.5			MG	OS	FF		
73	QKH366	9245M	75k	9.205G-9.285G	1.0m	15000	13.5			MG	OS	FF	WA	7.50
74	MI95	9249.5M	65	9220-9279M		13.0k#	16mΔ			MG	AM		WC	1.32
75	MI509D	9250M		9220-9280M		26.0k#	23.5mΔ			MG	AM		WA	35.94
76	MI521D2	9250M		9220-9280M		13.0k#	16mΔ			MG	AM		WA	7.72
77	80X9-9.5	9250M	80 †	9.00G-9.50G	CW	4200	70mΔ			MG	OS	VT	CO	4.5 *
78	BLM003	9250M	150 †Δ	9.000G - 9.500G	2.0m	1600	1.2			MG	OS	MT	CO	.44
79	BLM129	9250M	150	9.000G-9.500G	2.0m	1500	1.2			MG	OS	MT	CO	370mΔ
80	MA241	9250M	150 †	9.100G - 9.400G	1.0m	2750	1.0			MG	OS	MT		
81	MA270	9250M	150	9.0G-9.5G	2.0m	1400	900m			MG	OS	MT	CO	
82	MA252	9250M	250 †	8.500G - 10.00G	5.0m	1150	650m			MG	OS	FF	WA	.810
83	MA250	9250M	4.0k	8.500G - 10.00G	5.0m	3750	4.0			MG	OS	FF	WA	1.31
84	TH3099	9250M	30k†	8.900G-9.600G	1.0m	22500	27.5			MG	OS	MT	WA	
85	MCF1145	9250M	65k	9.225G-9.275G	1.0m	17000	15			MG		FF		
86	VMX1003	9250M	200k†	8.75G-9.750GØ	1.0m	22000	27.5 Δ			MG	OS	MT	CO	15
87	L3039	9250M	225k	8.757G-9.4G†	2.0m	23000	28			MG	OS	FF	WA	10
88	SFD333TM	9250M	375k	8.900G-9.600G	1.2m	33000	30			MG	OS	MT	WA	19
89	L3029A	9267M	7.0k†	9.235G - 9.300G	3.0m	7000	5.0			MG	OS	MT	WA	4.13 Δ
90	BM1038	9275M	60k	9.050G - 9.600G	1.0m	16000	14			MG	OS	MT	WA	11.5 *
91	L3036B	9275M	65k†	9.26G-9.29G*	1.0m	16000	15			MG	OS	FF	WA	6.0
92	L3039L	9280M	225k†	9.26G-9.3G*	2.0m	23000	27.5			MG	OS	FF	WA	10
93	L5145	9285M	1.0k	9.275G - 9.295G	3.0m	2800	1.3			MG	OS	MT	WA	1.0
94	L3029B	9287M	7.0k†	9.250G - 9.315G	3.0m	7000	5.0			MG	OS	MT	WA	4.13 Δ
95▼	MG5286	9290M	22.5k	9265M-9315M	.001	8.2k#Ø	8.0 Δ			MG	OS	VT	WA	4.4
96	L3029D	9297M	7.0k†	9.265G - 9.330G	3.0m	7000	5.0			MG	OS	MT	WA	4.13 Δ
97	MA219G	9300M	1.0 †	9.00G-9.60G	CW	480	20m			MG		MT	WA	800m
98	MA271	9300M	50	9.15G-9.45G	1.0m	750	400m			MG	OS	FF	WA	
99	MA285	9300M	50 †	9.15G-9.45G	2.0m	750	400m			MG		FF	CO	750m
100	MA2803	9300M	50 †	9.15G-9.45G	2.0m	750	400m			MG		FF	WA	750m
101	MA266	9300M	400	9.2G-9.4G	1.0m	1250	1.3			MG	OS	FF	WA	
102	L5104	9300M	1.2k	9.290G-9.310G	2.7m	800	550m			MG	OS	MT	WA	1.0
103	L3268	9300M	4.0k†	9.270G - 9.330G	1.0m	3900	4.0			MG	OS	FF	WA	1.37 Δ
104	L5224	9300M	75k	9.100G-9.500G	1.5m	16000	18			MG	OS	DT	WA	11
105	7006	9300M	190k†	9.0G-9.6G	1.3m	23000	30			MG	OS	MT	WA	11 Δ
106	MCV1125	9300M	200k†	9.200G-9.400G	1.0m	22000	27.5 Ø			MG †§	OS	MT	WA	
107	TH3039	9300M	200k†	9.000G-9.600G	1.0m	22500	27.5 Ø			MG †§	OS	MT	WA	
108	MI54	9309.5M	65	9280-9339M		13.0k#	16mΔ			MG	AM		WC	1.32
109	MI509G	9310M		9280-9340M		26.0k#	23.5mΔ			MG	AM		WA	35.94
110	QKH1374	9310M	14	9.300G-9.320G	2.0m	5500	4.5			MG	OS	FF	WA	3.0

SYMBOLS AND CODES EXPLAINED IN INTERPRETER

2. SOURCE,AMPLIFIER,OUTPUT TUBES

IN ORDER OF (1)TUBE TYPE (2)CENTER FREQUENCY (3)POWER OUTPUT (4)TYPE No.

LINE No.	4 TYPE No.	2 CENTER FREQ. (Hz)	3 POWER OUTPUT (W)	FREQUENCY RANGE (Hz)	MAX. DUTY CYCLE	MAX. BEAM VOLTAGE (Note 1) (V)	MAX. CATH-ODE CUR. (A)	GAIN (dB)	NF (dB)	DESCRIPTION 1 TUBE TYPE	FUNC-TION	TUN-ING	OUT PUT	WEIGHT (lb)
1	6233	9310M	21	9.290G - 9.335G	3.0m	6000	4.0			MG	OS	MT	WA	4.13
2	BLM207	9310M	550 †	9.300G - 9.320G	2.0m	2400	1.2			MG	OS	MT	CO	.47
3	BLM184	9310M	2.0k	9.300G-9.320G	2.0m	3000	2.5			MG	OS	FF	WA	630m
4	MI521G2	9310.5M		9281-9340M		13.0k#	16mΔ			MG	AM		WA	7.72
5	L3028D	9315M	120 †	9.280G - 9.330G	27m	860	600m			MG	OS		WA	1.0 Δ
6	JAN6002	9317M	225 †	9.230G-9.404G	2.0m	30000	40			MG †		FF	WA	
7	6002	9317M	450	9.320G-9.404G	2.0m	30000	40			MG	OS	FF	WA	24
8	QK221	9317M	250k	9.23G-9.404G	1.0m	28000	30			MG	OS	FF	WA	24
9	M575A	9320M	80k	9300M-9340M	100u	16k	15mΔ			MG	OS	BB		5.0 §
10	L3601	9327M	120 †	9.315G - 9.340G	27m	860	600m			MG	OS	MT	WA	1.0 Δ
11	L3029C	9327M	7.0k†	9.295G - 9.360G	3.0m	7000	5.0			MG	OS	MT	WA	4.13 Δ
12	L3225	9330M	1.0k†	9.31G-9.35G	3.3m	2950	1.5			MG	OS	MT	WA	1.0 Δ
13	BLM176	9340M	50 †	9.275G-9.405G	400u	1100	800m			MG	OS	MT	CO	690m
14	L3058	9340M	1.0k†	9.32G-9.36G	3.5m	2900	1.5			MG	OS	MT	WA	1.0 Δ
15	VMX1024	9340M	28k†	9.31G-9.37G	1.5m	8500	8.5 Δ			MG	OS	FF	CO	7.0
16	L3039M	9340M	225k†	9.32G-9.36G*	2.0m	23000	27.5			MG	OS	FF	WA	10
17	QKH1535	9345M	20	9.315G-9.375G	1.0m	7500	8.0			MG	OS	FF	WA	6.0
18	L5274	9345M	7.5k	9.325G-9.365G	1.3m	4500	6.0			MG	OS	FF	WA	2.5
19	L5365	9345M	28k	9.315G-9.375G	1.5m	9000				MG	OS	FF	WA	4.5
20	TH3064	9345M	70kΔ	9.330G-9.360G	1.2m	15000	17			MG	OS	FF	WA	5.5
21	L5191	9345M	75k	9.325G-9.365G	1.3m	15000	16			MG	OS	FF	WA	7.0
22♦	M5042S	9.345G	100k	9.315G-9.375G	1.5m	16k#	20 Δ			MG	OS	FF	WA	4.6
23	MA249	9350M	17 †	9.25G-9.45G	CW	1100	50m			MG		MT	WA	800m
24	MI53	9369.5M	65	9340-9399M		13.0k#	16mΔ			MG	AM		WC	1.32
25	MI509V	9370M		9340-9400M		26.0k#	23.5mΔ			MG	AM		WA	35.94
26	MG5213	9370M	25k	9330M-9410M	1.5m	8500	10 Δ			MG	OS	MT	WA	3.25
27	MI521V2	9370.5M		9341-9400M		13.0k#	16mΔ			MG	AM		WA	7.72
28	MI589V	9370.5M	95	9341-9400M		14.0k#				MG	AM		WA	7.72
29	MI158-1	9375M		9330-9420M		6.0k#	2.0mΔ			MG	AM		WA	2.65
30	MI268	9375M		9373-9377M		7.5k#				MG	AM			3.52
31	JAN2J42H	9375M	2.5 †	9.345G - 9.405G	2.0m	6000	5.5			MG	OS	FF	WA	3.0
32	2J42H	9375M	4.0	9.345G-9.405G	2.0m	6000	5.5			MG	OS	FF	WA	3.0
33	2J42	9375M	14	9.345G-9.405G	2.5m	6000	5.5			MG	OS	FF	WA	3.0
34	QKH1121	9375M	14	9.175G-9.575G	2.0m	5500	4.5			MG	OS	FF	WA	3.0
35	725A	9375M	40	9.345G-9.405G	1.0m	16000	16			MG	OS	FF	WA	1.5
36	M5005A	9375M	85	9.345G-9.405G	1.0m	13500	12 Δ			MG	OS	FF	WA	3.9
37	150X9-9.75	9375M	150 †	9.000G-9.750G	CW	5000	80m			MG	OS	VT	CO	6.0
38	7692	9375M	220	9.200G - 9.550G	1.0m	22500	27m			MG	OS	MT	WA	12
39	6959	9375M	450	9.330G-9.420G	1.1m	34000	38			MG	OS	FF	WA	45
40	QKH172	9375M	450	9.330G-9.420G	1.1m	30000	50			MG	OS	FF	WA	45
41	BLM188	9375M	600	9.250G-9.500G	2.0m	2500	1.5			MG	OS	MT	CO	440mΔ
42	BLM195	9375M	700	9.200G-9.550G	2.0m	2500	1.3			MG	OS	MT	CO	440mΔ
43	7446	9375M	800	9.345G-9.405G	1.5m	2900	1.5			MG	OS		WA	
44	E3513L	9375M	3.0k	9.345G-9.405G	1.0m	3800	3.5			MG	OS	FF	WA	2.0
45	MA2822	9375M	3.5k	9.300G-9.500G	1.0m	3500	3.0			MG	OS	FF	WA	1.0
46	JP9-2.5H	9375M	4.0k	9.345G-9.405G	1.0m	3800	3.5 Δ			MG	OS	FF	WA	2.24
47	L4497	9375M	4.0k	9.345G-9.405G	2.0m	4000	3.0			MG	OS	FF	WA	2.5
48	M1323	9375M	4.0k	9.345G-9.405G	1.3m	3800	3.0			MG	OS	FF	WA	2.25
49	9M62A	9375M	5.0k	9.345G-9.405G	2.5m	5000	5.0			MG	OS	FF	WA	2.2
50	9M501	9375M	5.0k	9.345G-9.405G	2.5m	5000	5.0			MG	OS	FF	WA	2.2
51	MA2823	9375M	5.0k	9.300G-9.500G	1.0m	4500	4.5			MG	OS	FF	WA	1.0
52	MG5259	9.375G	6k	9.345G-9.405G	2.5m	5.0k#	6 Δ			MG	AM	FF	WA	1.54
53	JAN2J42	9375M	7.0k	9.345G-9.405G	2.5m	5700	5.5			MG	OS	FF	WA	3.0
54	L4644	9375M	7.0k	9375M±30M§	1.0m	5200	4.5			MG	OS	FF	WA	3.0
55	M1347	9375M	7.0k	9.345G-9.405G	2.5m	6000	5.5			MG	OS	FF	WA	3.0
56	QKH2039	9.375G	7000	3.375G	.001	5.5k	450m			MG	OS	FF		3.0
57	L4495	9375M	8.0k	9.345G-9.405G	2.0m	5500	5.0			MG	OS	FF	WA	3.0
58	9M601	9375M	9.0k	9.345G-9.405G	2.5m	6000	5.5			MG	OS	FF	WA	3.1
59	9M611	9375M	9.0k	9345-9405	.002	5.5k	4.5 Δ			MG		FF	WA	3.25
60	L4601B	9375M	9.0k	9375M±30M§	1.0m	5500	4.5			MG	OS	FF	WA	3.0
61	M1300	9375M	9.0k	9.345G-9.405G	2.5m	6000	5.5			MG	OS	FF	WA	3.25
62	M1316	9375M	9.0k	9345M-9405M	1.0m	4.6k	6.0			MG	OS	FF	WA	2.5
63	M1355	9375M	9.0k	9345M-9405M	0.6m	5.5k	4.5			MG	OS	FF	WA	2.5
64	M1308	9375M	9.5k	9.345G-9.405G	2.5m	6200	5.5			MG	OS	FF	WA	3.25
65	L3635	9375M	10k	9375M±30M§	2.0m	6000	6.0			MG	OS	FF	WA	3.75
66	MA2824	9375M	10k	9.300G-9.500G	1.0m	6000	6.0			MG	OS	FF	WA	1.0
67	MG5253	9375M	10k	9345-9405M	.002	6.2k#	6.0 Δ			MG	OS	FF	WA	1.25
68	M1310	9375M	10.5k	9.345G-9.405G	2.5m	6200	5.5			MG	OS	FF	WA	3.25
69	MG5254	9375M	12k	9355-9395M	.002	6.2k#	6.0 Δ			MG		FF	WA	1.25
70	MG5244	9.375G	12.5k	9.345G-9.405G	2.5m	6.4k#	7 Δ			MG	AM	FF	WA	1.54
71	MG5245	9.375G	12.5k	9.345G-9.405G	2.5m	6.4k#	7 Δ			MG	AM	FF	WA	1.54
72	MG5256	9.375G	12.5k	9.345G-9.405G	2.5m	6.2k#	6 Δ			MG	AM	FF	WA	1.54
73	2J42A	9375M	17.5k	9.345G-9.405G	2.5m	8000	7.5			MG †			WA	5.0 Δ
74	2J42A-6027	9375M	18k	9.345G-9.405G	2.0m	6900	7.5			MG	OS	FF	WA	3.09
75	6027	9375M	18k†	9.345G-9.405G*	2.5m	8000	8.0			MG	OS	FF	WA	5.0 Δ
76	L3431A	9375M	18k†	9.345G - 9.405G	1.0m	8000	8.0			MG	OS	FF	WA	3.75 Δ
77	9M40	9375M	20k	9.345G-9.405G	2.5m	8000	8.0			MG	OS	FF	WA	3.5
78	6027H	9375M	20k	9.345G-9.405G	2.5m	8000	8.0			MG	OS	FF	WA	5.0
79	8356	9375M	20k	9.345G-9.405G	2.5m	8.0k#	8.0 Δ			MG	OS	FF	WA	3.25 *
80	M1313	9375M	20k	9.345G-9.405G	2.5m	8000	8.0			MG	OS	FF	WA	3.25
81	YJ1060	9375M	20k	9.345G-9.405G	2.0m	7200 Ø	7.5			MG	OS	FF	WA	3.3
82	YJ1110	9375M	20k	9.345G-9.405G	1.5m	8200	9.0			MG	OS	FF	WA	3.3
83	YJ1110#	9.375G	20k	9.345G-9.405G	.001	8.4k	7.5 Δ			MG	OS	FF	WA	3.3
84	M1304	9375M	22k	9.345G-9.405G	2.5m	8000	8.5			MG	OS	FF	WA	3.25
85	L3654A	9375M	24k†	9.345G - 9.405G	1.0m	9000	9.25			MG	OS	FF	WA	3.75 Δ
86	L3890A	9375M	24k†	9.345G - 9.405G	1.0m	8000	8.25			MG	OS			3.75 Δ
87	L3990	9375M	24k	9.345G-9.405G	2.2m	8000	8.25			MG	OS	FF	WA	4.5
88	9M751	9375M	25k	9.345G-9.405G	1.5m	8300	10			MG	OS	FF	WA	3.5
89	E3509L	9375M	25k	9.345G-9.405G	2.0m	8500	10			MG	OS	FF	WA	3.5
90	M1311	9375M	25k	9.345G-9.405G	1.5m	8500	10			MG	OS	FF	WA	3.25
91	M1327	9375M	25k	9.345G-9.405G	1.5m	8500	10			MG	OS	FF	WA	3.5
92	MG5222	9375M	25k	9345-9405M	1.5m	8.5k	10 Δ			MG	OS	FF	WA	3.25
93	MG5239#ai	9375M	25.0k	9350M-9400M	.002	8.5k#	10.0 Δ			MG	AM	FF	WA	3.25
94	L3168	9375M	30k	9375M±30M§	2.0m	12500	10			MG	OS	FF	WA	6.0
95	2J53	9375M	40k	9.345G-9.405G	1.0m	12000	12			MG	OS	FF	WA	1.50
96	2J55	9375M	40k		2.5m	12000	12			MG	OS		WA	3.968
97	JAN2J55	9375M	40kΔ	9.345G - 9.405G	1.0m	16000	16			MG	OS	FF	WA	4.0
98	9M73	9375M	40k	9.345G-9.405G	1.0m	16000	16			MG	OS	FF	WA	5.6
99	TH1725B	9375M	40k†	9.275G-9.475G	1.0m	12000	12 Ø			MG †	OS	MT	WA	
100	JP9-50A	9375M	50000	9.345G - 9.405G	.001	13500	15			MG	OS	FF	WA	3.7
101	M1348	9375M	50k	9.345G-9.405G	2.5m	12000	12			MG	OS	FF	WA	4.0
102	M5005	9375M	53kΔ	9.345G - 9.405G	1.0m	13500	12			MG	OS	FF	WA	3.75 *
103	L3036E	9375M	65k	9.375G	1.0m	15000	15			MG	OS	FF	WA	6.0 Δ
104	4J52A	9375M	70k†	9.345G-9.405G*	1.0m	16000	15			MG	OS	FF	WA	6.0
105	JAN4J52A	9375M	70kΔ	9.345G-9.405G	1.0m	16000	15			MG †		FF	WA	6.0
106	6510	9375M	70k†	9.345G-9.405G*	1.0m	16000	15			MG	OS	FF	WA	6.0 Δ
107	JAN6510	9375M	80kΔ	9.345G - 9.405G	1.0m	16000	16.5			MG	OS	FF	WA	
108	CV5018	9375M	80000	9.345G - 9.405G	.001	16000	15			MG	OS	FF	WA	5.95
109	M575	9375M	80k	9.345G - 9.405G	2.0m	16500	18			MG	OS	FF	WA	5.0 Δ
110	M5081	9375M	80k	9.345G-9.405G	1.2m	15500	15 Δ			MG	OS	FF	WA	5.0

SYMBOLS AND CODES EXPLAINED IN INTERPRETER

2. SOURCE,AMPLIFIER,OUTPUT TUBES

IN ORDER OF (1)TUBE TYPE (2)CENTER FREQUENCY (3)POWER OUTPUT (4)TYPE No.

LINE No.	4 TYPE No.	2 CENTER FREQ. (Hz)	3 POWER OUTPUT (W)	FREQUENCY RANGE (Hz)	MAX. DUTY CYCLE	MAX. BEAM VOLTAGE (Note 1) (V)	MAX. CATH-ODE CUR. (A)	GAIN (dB)	NF (dB)	DESCRIPTION 1 TUBE TYPE	FUNC-TION	TUN-ING	OUT PUT	WEIGHT (lb)
1	L3156	9375M	112k†	9.345G-9.405G*	2.0m	21000	16			MG	OS	FF	WA	10 Δ
2	4J50A	9375M	225k	9.345G-9.405G	1.0m	21500	27.5 Δ			MG †	OS	MT	WA	10.5 *
3	L3039P	9375M	225k	9.345G - 9.405G	1.0m	22000	28			MG	OS	FF	WA	10 Δ
4	MCF1510	9375M	225k†	9.345G-9.405G	1.0m	21500	27.5 Ø			MG †	OS	MT	WA	
5	4J50	9375M	280k	9.345G - 9.405G	2.0m	24000	30			MG	OS	FF		10 Δ
6	L3030D	9375M	300k†	9.345G-9.405G*	1.0m	29000	27.5			MG	OS	FF	WA	14 Δ
7	M504	9375M	750k	9.325G-9.425G	600u	38000	50			MG	OS	FF	WA	5.5 §
8▼	MG5271	9375M	25M	9345M-9405M	.001	8.4k#	8.0 Δ			MG	OS	FF	WA	1.54
9	MI505	9380.5M		9146-9615M		26.0k#	35mΔ			MG	AM			26.46
10	M5187	9390M	25k	9380M-9440M	.15u	8.5k	10 Δ			MG	OS	BB		2.25 §
11	MA212B	9400M	1.5 †	8.80G-10.00G	CW	460	20mΔ			MG	OS	FF	WA	690m
12	MA212A	9400M	10 †	8.800G - 10.00G	10m	520	150m			MG	OS	FF	WA	
13	MA212C	9400M	10 †	8.800G - 10.00G	10m	520	150m			MG	OS	FF	WA	
14	MA212D	9400M	20 †	8.800G - 10.00G	5.0m	560	300m			MG	OS	FF	WA	
15	MA232B	9400M	20 †	8.800G - 10.00G	CW	930	55m			MG	OS	FF	WA	.69
16	7503	9400M	100 †	9.300G - 9.500G	2.0m	2000	1.15			MG	OS		CO	.37
17	MA232A	9400M	200 †	8.800G - 10.00G	50m	1000	750m			MG	OS	FF	WA	.69
18	MA2807	9400M	1.2k†	9.35G-9.45G	3.0m	4500	1.2			MG	OS	MT	WA	1.5
19▼	B3RH1600	9.4G	25k	9.3G-9.5G	.001	8.0k#	8.0 Δ		9.0	MG		FF	WA	2.8
20	DX373	9400M	70k	9.385G - 9.415G	1.0m	16000	15			MG	OS	FF	WA	6.0
21	M596	9400M	80k	9.370G - 9.430G	1.0m	16000	15			MG	OS	FF	WA	5.25 *
22	L3039N	9400M	225k†	9.38G-9.42G*	2.0m	23000	27.5			MG	OS	FF	WA	10
23	E3513	9410M	3.0k	9.380G-9.440G	1.0m	3800	3.5			MG	OS	FF	WA	2.0
24	JP9-2.5	9410M	3.0k	9.345G - 9.475G	1.0m	3800	3.5			MG	OS	FT	WA	2.2
25	M5196F	9410M	4.0k	9380M-9440M	.001	3.8k#	3.5 Δ			MG	AM	FF	WA	1.95
26	MG5248	9.41G	4k	9.38G-9.44G	2.5m	3.9k#	4 Δ			MG	AM	FF	WA	1.54
27	MG5251	9.41G	4k	9.38G-9.44G	2.5m	3.9k#	4 Δ			MG	AM	FF	WA	1.54
28	9M64A	9410M	5.0k	9.380G-9.440G	2.5m	5000	5.0			MG	OS	FF	WA	2.2
29	9M80	9410M	5.0k	9.380G-9.440G	2.5m	5000	4.5			MG	OS	FF	WA	3.1
30	9M502	9410M	5.0k	9.380G-9.440G	2.5m	5000	5.0			MG	OS	FF	WA	2.2
31	M1361	9410M	6.0k	9380-9440M	.002	4.8k	9.0			MG	OS	FF	WA	2.2
32	MG5232	9.41G	6k	9.38G-9.44G	2.5m	5.0k#	6 Δ			MG	AM	FF	WA	1.54
33	MG5255	9.41G	6k	9.38G-9.44G	2.5m	5k#	6 Δ			MG	AM	FF	WA	1.54
34	MG5273	9410M	6.0k	9380-9440M	.002	5.0k#	6.0 Δ			MG	OS	FF	WA	1.54
35	M1353	9410M	7.5k	9380M-9440M	1.0m	4.3k	5.0			MG	OS	FF	WA	2.5
36	9M80A	9410M	8.0k	9.380G-9.440G	1.5m	5000	7.0			MG	OS	FF	WA	3.1
37	MG5233	9.41G	8k	9.38G-9.44G	2.5m	5.0k#	6 Δ			MG	AM	FF	WA	1.54
38	9M61	9410M	9.0k	9.380G-9.440G	2.5m	6000	5.5			MG †		MT	WA	
39	9M602	9410M	9.0k	9.380G-9.440G	2.5m	6000	5.5			MG	OS	FF	WA	3.1
40	9M612	9410M	9.0k	9380-9440	.002	5.5k	4.5 Δ			MG		FF	WA	2.65
41	M1369	9410M	9.0k	9380M-9440M	1.0m	5.5k	4.5			MG	OS	FF	WA	2.5
42	YJ1071#	9.41G	10k	9.38G-9.44G	.001	5.8k	6.0 Δ			MG	OS	FF	WA	
43	M1305	9410M	10.5k	9.380G-9.440G	2.5m	6200	5.5			MG	OS	FF	WA	3.25
44	YJ1071	9410M	10.5k	9.380G - 9.440G	2.0m	5900	7.0			MG	OS	FF	WA	3.09
45	MG5241	9.41G	12.5k	9.38G-9.44G	2.5m	6.4k#	7 Δ			MG	AM	FF	WA	1.54
46	MG5257	9.41G	12.5k	9.38G-9.44G	2.5m	6.4k#	7 Δ			MG	AM	FF	WA	1.54
47	MG5258	9.41G	12.5k	9.38G-9.44G	2.5m	6.4k#	7 Δ			MG	AM	FF	WA	1.54
48	9M90	9410M	20k	9.380G-9.440G	2.5m	8000	8.0			MG	OS	FF	WA	3.5
49	M1326	9410M	20k	9.380G-9.440G	2.5m	8000	8.0			MG	OS	FF	WA	3.0
50	M1312	9410M	22k	9.380G-9.440G	2.5m	8000	8.5			MG	OS	FF	WA	3.25
51	M5155	9410M	22.5k	9.340G-9.480G	500u	8200	8.0 Δ			MG	OS	VT	WA	3.5 *
52	9M72	9410M	25k	9.380G-9.440G	2.0m	8500	10			MG	OS	FF	WA	3.5
53	9M752	9410M	25k	9.380G-9.440G	1.5m	8300	10			MG	OS	FF	WA	3.5
54	E3509A	9410M	25k	9.380G-9.440G	2.0m	8500	10			MG	OS	FF	WA	3.5
55	M1306	9410M	25k	9.380G-9.440G	1.5m	8500	10			MG	OS	FF	WA	3.25
56	M1325	9410M	25k	9.380G-9.440G	1.5m	8500	10			MG	OS	FF	WA	3.0
57	MG5218	9410M	25k	9380-9440M	.002	8.6k#	10 Δ			MG		FF	WA	1.54
58	MG5242	9410M	25k	9380-9440M	.001	8.5k#	10 Δ			MG	OS	FF	WA	3.25
59	MG5264	9410M	25k	9380-9440M	.001	8.5k#	10 Δ			MG	OS	FF	WA	3.25
60	YJ1120	9.410G	25k	9.38G-9.44G	1.5m	8500	10 Δ			MG	OS	FF	WA	3.0
61	9M31	9410M	40k	9.380G-9.440G	1.0m	16000	16			MG	OS	FF	WA	4.0
62	M4505E	9410M	40k†	9.370G - 9.440G	1.0m	16000	16			MG	†	FF	WA	5.6
63	M5156	9410M	50k	9.340G-9.480G	400u	13000	12 Δ			MG	OS	VT	WA	4.0 *
64	L3036A	9410M	65k†	9.405G-9.415G*	1.0m	16000	15			MG	OS	FF	WA	6.0 Δ
65	M1321	9420M	25.0k	9413M-9427M	1.0m	8.0k	8.0			MG	OS	MT	WA	3.3
66	M5149	9420M	25k	9.400G-9.440G	1.5m	8500	10 Δ			MG	OS	MT	WA	3.25 *
67	MI52	9429.5M	65	9400-9459M		13.0k#	16mΔ			MG	AM		WC	1.32
68	MI501M	9430M		9400-9460M		6.5k#	13.8mΔ			MG	AM		WA	5.07
69	MI507	9430M		9400-9460M		6.5k#	2.0mΔ			MG	AM		WA	2.65
70	MI509B	9430M		9400-9460M		26.0k#	23.5mΔ			MG	AM		WA	35.94
71	MI521B2	9430.5M		9401-9460M		13.0k#	16mΔ			MG	AM		WA	7.72
72	MI589B	9430.5M	95	9401-9460M		14.0k#				MG	AM		WA	7.72
73	M5089	9438M	30k	9.415G-9.46G	1.5m	8300	9.0 Δ			MG	OS	FF	WA	3.25
74	E3513H	9445M	3.0k	9.415G-9.475G	1.0m	3800	3.5			MG	OS	FF	WA	2.0
75	JP9-2.5D	9.445G	4.0k	9.415G-9.475G	1.0m	3800	3.5 Δ			MG	OS	FF	WA	2.24
76	JP9-2.5E	9.445G	4.0k	9.415G-9.475G	1.0m	3800	3.5 Δ			MG	OS	FF	WA	2.24
77	JP9-2.5F	9445M	4.0k	9.415G-9.475G	1.0m	3800	3.5 Δ			MG	OS	FF	WA	2.24
78	M1315	9445M	4.0k	9.415G-9.475G	1.0m	3800	3.5			MG	OS	FF	WA	2.25
79	M1350	9445M	4.0k	9.415G-9.4575G	1.0m	3800	3.5			MG	OS	FF	WA	2.25
80	MG5238A	9.445G	4k	9.415G-9.475G	2.5m	3.9k#	4 Δ			MG	AM	FF	WA	1.54
81	MG5238B	9.445G	4k	9.415G-9.475G	2.5m	3.9k#	4 Δ			MG	AM	FF	WA	1.54
82	MG5243	9.445G	4k	9.415G-9.475G	2.5m	3.9k#	4 Δ			MG	AM	FF	WA	1.54
83	9M65	9445M	5.0k	9.415G-9.475G	2.5m	5000	5.0			MG	OS	FF	WA	2.2
84	9M503	9445M	5.0k	9.415G-9.475G	2.5m	5000	5.0			MG	OS	FF	WA	2.2
85	9M65A	9445M	6.0k	9.415G-9.475G	2.5m	5000	5.0			MG	OS	FF	WA	2.2
86	M1354	9445M	7.5k	9415M-9475M	1.0m	4.3k	5.0			MG	OS	FF	WA	2.5
87	MG5234	9.445G	8k	9.415G-9.475G	2.5m	5.0k#	6 Δ			MG	AM	FF	WA	1.54
88	9M66	9445M	9.0k	9.415G-9.475G	2.5m	6000	5.5			MG	OS	FF	WA	3.0
89	9M603	9445M	9.0k	9.415G-9.475G	2.5m	6000	5.5			MG	OS	FF	WA	3.1
90	9M613	9445M	9.0k	9415-9475	.002	5.5k	4.5 Δ			MG		FF	WA	3.3
91	9M753	9445M	25k	9.415G-9.475G	1.5m	8300	10			MG	OS	FF	WA	3.5
92	E3509H	9445M	25k	9.415G-9.475G	2.0m	8500	10			MG	OS	FF	WA	3.5
93	YJ1121	9.445G	28k	9.415G-9.475G	1.5m	8500	10 Δ			MG	OS	FF	WA	3.09
94	M1328	9445M	30k	9.415G-9.475G	1.5m	8500	10			MG	OS	FF	WA	3.5
95	M5199	9445M	30k	9415-9475M	1.5m	8.5k	10 Δ			MG	OS	FF	WA	3.25
96▼	PT5029	9.450G	100k	9.225-9.675G	.001	15k#	25 Δ			MG	OS	ST	WA	8.8
97	M575B	9460M	80k	9440M-9480M	100u	16k	15mΔ			MG	OS	BB		5.0 §
98	MG5265	9475M	30k	9455-9495M	.001	8.5k#	10 Δ			MG		FF	WA	3.25
99	QKH1131	9476M	60	9.446G-9.506G	1.0m	16000	14.5			MG	OS	FF	WA	7.5
100	MI509A	9490M		9460-9520M		26.0k#	23.5mΔ			MG	AM		WA	35.94
101	MI51	9490M	65	9460-9520M		13.0k#	16mΔ			MG	AM		WC	1.32
102	MG5231	9.49G	25k	9.46G-9.52G	1.5m	8.5k#	10 Δ			MG	AM	FF	WA	3.25
103	MI521A2	9490.5M		9461-9520M		13.0k#	16mΔ			MG	AM		WA	7.72
104	MI589A	9490.5M	95	9461-9520M		14.0k#				MG	AM		WA	7.72
105	MA214	9500M	500m†	9.0G-10G	CW	430	15m			MG	OS	MT		1.0
106	MA214B	9500M	1.0 †	9.000G - 10.00G	CW	470	.02			MG	OS	MT	WA	
107	MA214C	9500M	8.0 †	9.0G-10G	5.0m	540	150m			MG	OS	MT	WA	
108	10X9-10	9500M	10 †	9.00G-10.00G	CW	2800	25mΔ			MG	OS	VT	CO	1.7 *
109	MA214D	9500M	16 †	9.0G-10G	5.0m	570	300m			MG	OS	MT	WA	
110	50X9-10	9500M	50 †	9.00G-10.00G	CW	4500	55mΔ			MG	OS	VT	CO	4.5 *

SYMBOLS AND CODES EXPLAINED IN INTERPRETER

2. SOURCE,AMPLIFIER,OUTPUT TUBES

IN ORDER OF (1)TUBE TYPE (2)CENTER FREQUENCY (3)POWER OUTPUT (4)TYPE No.

LINE No.	[4] TYPE No.	[2] CENTER FREQ. (Hz)	[3] POWER OUTPUT (W)	FREQUENCY RANGE (Hz)	MAX. DUTY CYCLE	MAX. BEAM VOLTAGE (Note 1) (V)	MAX. CATH-ODE CUR. (A)	GAIN (dB)	NF (dB)	DESCRIPTION [1] TUBE TYPE	FUNC-TION	TUN-ING	OUT PUT	WEIGHT (lb)
1	100X9-10	9500M	100 †	9.000G-10.000G	CW	4650	70m			MG	OS	VT	CO	5.0
2	MAG15	9500M	8.0k	9.00G-10.00G	1.5m	6100	6.5 △			MG	OS	FF	WA	4.0
3	L5209	9500M	10k	9.200G-9.800G	3.5m	6500	6.0			MG	OS	MT	WA	5.0
4	PT8054	9.5G	45k	8.5-10.6G	.002	12.5k	13 △			MG		FF	WA	2.7
5	PT5017	9.5G	100k	9.1G-9.5G	.001	16k	18 △			MG	OS	FF	CO	8.5
6	MAG21A	9545M	100k	9.5G-9.59G	1.0m	18000	20			MG	OS		WA	7.5 *
7	MG91T2	9550M	3.0k†	9.3G-9.8G	1.5M	3800	3.5			MG	OS	MT	WG	4.4
8	M5157A	9550M	80k	9.510G-9.590G	2.0m	15000	15 △			MG	OS	FF	WA	5.0 *
9	M5157C	9550M	80k	9.510G-9.590G	2.0m	15000	15 △			MG	OS	MT	WA	5.0 *
10	VMX1031	9560M	11	9.400G-9.720G	2.0m	6000	7.0			MG	OS	MT	WA	4.4 △
11	MA212	9600M	1.0 †	8.8G-10G	CW	420	15m			MG	OS	FF		
12	MG60T1	9600M	8.0k†	9.3G-9.9G	2	6000	8			MG	OS	MT	WG	4.4
13	MAG21B	9600M	100k	9.555G-9.645G	1.0m	18000	20			MG	OS		WA	7.5 *
14	L3463	9625M	1.5k†	8.775G-10.470G	250m	6000	900m			MG #		MT	WA	18 △
15	MAG23A	9637M	2.5k	9.600G-9.675G	1.0m	2400	8.5			MG	OS	FF	WA	1.4 *
16	M523	9643M	225k	9.580G - 9.705G	2.0m	23000	27.5			MG	OS	FF	WA	10.5 *
17	M5068	9650M	25k	9.620G-9.680G	1.5m	8500	10			MG	OS	FF	WA	3.25
18	M5157B	9650M	80k	9.610G-9.690G	2.0m	15000	15 △			MG	OS	FF	WA	5.0 *
19	M5157D	9650M	80k	9.610G-9.690G	2.0m	15000	15 △			MG	OS	MT	WA	5.0 *
20	MAG21C	9655M	100k	9.61G-9.7G	1.0m	18000	20			MG	OS		WA	7.5 *
21	MA278	9700M	1.0k†	9.60G-9.80G	10m	2900	1.3 △			MG	OS	FF	WA	1.31
22	MA279	9700M	1.0k†	9600M-9800M	5.0	2800	1.3			MG	OS	MT	WA	1.5
23	MAG23B	9713M	2.5k	9.676G-9.750G	1.0m	2400	8.5			MG	OS	FF	WA	1.4 *
24	80X9.5-10	9750M	80 †	9.50G-10.0G	CW	4200	70m△			MG	OS	VT	CO	4.5 *
25	M1337	9750M	50.0k	9720M-9780M	2.5m	12.0k	12.0			MG	OS	FF	WA	4.0
26	MAG23C	9788M	2.5k	9.751G-9.825G	1.0m	2400	8.5			MG	OS	FF	WA	1.4 *
27	MAG23D	9863M	2.5k	9.826G-9.900G	1.0m	2400	8.5			MG	OS	FF	WA	1.4 *
28	90X9.5-10.5	10000M	90 †	9.500G-10.500G	CW	4650	70m			MG	OS	VT	CO	5.0
29	MAG17	10000M	180 △	9.00G-11.00G	10m	900	2.0			MG	OS	FF	CO	530m*
30♦	E3494	10000M	200	9.0G-11.0G	1.5 m	24 §Ø	0.3			MG	OS	FF	CO	450m
31	MAG20	10000M	250	9.00G-11.00G	1.4m	900	2.0 △			MG	OS	MT	CO	606m*
32▼	MAG25T	10G	350 †	9.0G-11.0G	25 m	900	3.0			MG	OS	MM	CO	145m
33	MAG24	10G	400 △	9.0G-11.0G	10m	900	3.0			MG	0S	FF	CO	120m
34♦	MAG25	10G	400 △	9.0G-11.0G	25 m	900	3.0			MG	0S	FF	CO	120m
35	M5191	10.0G	22.0k	X-Band	.001	12.0k#	10.0 △			MG	AM	MT	WA	12.1
36	QK427	10150M	10	10.05G-10.25G	CW	1400	150m			MG	OS	FF	WA	3.6
37	MA2810	13000M	50	12.500G-13.500G	2.0m	750	400m			MG	OS	FF	WC	1.5
38	MA2820	13000M	1.0k	12.000G-14.000G	2.0m	2300	1.8			MG	OS	FF	WA	1.0
39	MA239B	13300M	10 †	13.00G - 13.60G	CW	800	60m			MG	OS	FF	WA	1.0
40	MA239A	13300M	100 †	13.00G - 13.60G	100m	900	550m			MG	OS	FF	WA	1.0
41	MA2805	13325M	20	13.29G-13.35G	500m	850	140m			MG	OS	FF	WA	1.0
42	MA239	13325M	40 †	13.29G - 13.35G	250m	850	220m			MG	OS	FF	WA	1.0
43	MA2808	13325M	40	13.29G-13.35G	250m	850	240m			MG	OS	FF	WA	1.0
44	BLM304	13325M	52	13.235G-13.415G	250m	1000	260m			MG	OS	FF	WA	1.57 △
45	MA281	13335M	28 †	13.30G-13.37G	500m	850	140m△			MG	OS	FF	WA	1.4
46	MA264	13415M	28	13.28G-13.37G	500m	950	140m			MG	OS	FF	WA	
47	13M85	13850M	45k	13.80G-13.90G	500u	15000	20			MG	OS	FF	WA	9.7
48	MA240	14150M	500 †	13.70G - 14.60G	13m	1700	1.4			MG	OS	FF	WA	1.0
49	MA240A	14150M	700 †	13.70G - 14.60G	13m	1750	1.8			MG	OS	FF	WA	1.0
50	MA240C	14150M	1.0k†	13.70G-14.60G	5.0m	2100	2.0			MG		FF	WA	1.1
51	L4625	14200M	24k	14.100G-14.300G	1.0m	15000	18			MG	OS	MT	WA	5.0
52	MA2811	15000M	50	14.500G-15.500G	2.0m	750	400m			MG	OS	FF	WC	1.5
53	E3389	15000M	250	13.0G-17.0G*	10m	900	2.0			MG	OS	FF	WA	770m*
54	E3474	15460M	3.0k	15.46G±15M	2.0m	3400	5.0			MG	OS	MT	CO	1.7 *
55	MA240B	15500M	20 †	15.45G-15.55G	500m	1100	60m			MG		FF	WA	1.5
56	MA245	15500M	20 †	15.40G - 15.60G	500m	1000	140m			MG	OS	FF		
57	L3958	15500M	10k		2.0m	5000	5.0			MG	OS	FF	WA	3.0 △
58	MA2801	15500M	15500M	1500G-16.00G	2.0m	750	400m			MG		FF	CO	1.5
59	MA258	15550M	2.2k	15.40G - 15.70G	1.0m	3600	3.1			MG	OS	MT	WA	1.44
60	VMU1018	15550M	2.5k	15.400G-15.700G	1.0m	6300	2.0			MG	OS	MT	WA	3.25
61	MA273	15725M	800 †	15.70G-15.75G	2.0m	2400	2.0			MG		MT	WA	1.2
62	MA274	15725M	1.0k	15.9G-15.95G	1.0m	2400	2.0			MG	OS	MT	WA	
63	L5013	16000M	5.0k†	15.50G - 16.50G	10m	4500 Ø	3.5			MG	OS	MT	WA	3.0 △
64	M4537	16000M	75k	15.84G-16.16G	2.8m	26000	14			MG	OS	FF	WA	25
65	BLM071	16000M	100k△	15.90G - 16.10G	1.0m					MG	OS	FF		8.0
66	QK324	16005M	70k	15.85G-16.16G	2.8m	25000	12			MG	OS	FF	WA	
67	QKH1527	16200M	100	16.000G-16.400G	1.0m	16000	16			MG	OS	DT	WA	13
68	L3645	16200M	4.0k†	16.1G-16.3G*	1.0m	4300	3.75			MG	OS	FF	WA	1.31 △
69	BLM198	16250M	70	16.00G-16.50G	1.0m	20000	17			MG	OS	MT	WA	6.0 △
70	MA287	16250M	500	16000M-16500M	2.0m	2150	1.4			MG	OS	FF	WA	750m
71	BLM143A	16250M	1.0k†△	16G-16.5G	1.5m	3100	2.0			MG	OS	MT	WA	1.4
72	BLM310	16250M	1.0k	16.20G-16.30G	4.8m	3100	2.0			MG	OS	MT	WA	1.44 △
73	L3496A	16250M	1.0k†	16G-16.5G	1.5m	3100	2.0			MG	OS	MT	WA	1.31 △
74	MA257	16250M	1.0k	16.00G - 16.50G	2.0m	2200	1.8			MG	OS	FF	WA	1.0
75	MA257T	16250M	1.0k†	16.00G-16.50G	2.0m	2500	2.0			MG		MT	WA	750m
76	MA260	16250M	1.0k	16.00G - 16.50G	2.0m	2600	1.6			MG	OS	MT	WA	
77	L3359	16250M	2.0k†	16.00G - 16.50G	3.0m	3700	3.0			MG	OS	MT	WA	1.28 △
78	MA2812	16250M	4.0k	16.000G-16.500G	1.0m	3800	4.0			MG	OS	FF	WA	1.0
79	L3978	16250M	70k†	16.00G - 16.50G	1.0m	18000	16			MG	OS	MT	WA	5.5 △
80	L3915	16280M	2.2k†	16.26G - 16.30G	3.0m	3700	2.75			MG	OS	MT	WA	1.44 △
81	MA2802	16300M	500 †	16.10G-16.50G	2.0m	2400	1.4			MG	OS	MT	WA	810m△
82	8468	16500M	75	16.00G - 17.00G	1.0m	18000	16m			MG	OS	MT	WA	8.0
83	E3480	16500M	200	15.0G-18.0G	20.0m	950	1.0			MG	OS	FF	CO	0.133 *
84	BLM162	16500M	10k†	16.40G - 16.60G	1.0m	9000 Ø	5.25			MG	OS	FF	WA	1.25
85	E3456	16500M	15.0k	16.35G-16.65G	1.0m	9500	9.0			MG	OS	FF	WA	2.43 *
86	MAG19	16500M	35k	16.35G-16.65G	1.0m	11500	12			MG	OS	FF	WA	6.6 *
87	L3738	16500M	40k†	16.35G - 16.65G	1.0m	14000	14			MG	OS	FF	WA	5.5 △
88▼	MG5272	16.5G	50k	15G-18G	.002	14k#	11 △			MG	OS	FM	CS	7.7
89	L3083	16500M	60k†	16.00G - 17.00G	1.0m	18000	18			MG	OS	MT	WA	6.0
90	L3083A	16500M	60k	16.000G-17.000G	1.0m	17000	18			MG	OS	MT	WA	6.0
91	L3101A	16500M	60k†	16G-17G*	1.0m	17000	16			MG	OS	MT	WA	5.5 △
92	L5330	16500M	60k	16.00G-17.00G	1.2	17000	20			MG	OS	DT	WA	8.0
93	YJ1320	16500M	60k	15.900G-17.100G	1.0m	16500	15			MG	OS	ST	WA	7.0
94	YJ1321	16500M	60k	15.900G-17.100G	1.0m	16500	15			MG	OS	ST	WA	7.0
95	DX290	16500M	65k	15.9G-17.1G	1.1m	18000	17			MG	OS	MT	WA	7.0
96	L4419	16500M	65k†	16.475G-16.525G*	1.0m	18000	18			MG	OS	FF	WA	5.0 △
97	L4472	16500M	65k†	16.00G - 17.00G	1.0m	18000	18			MG	OS	MT	WA	6.05 △
98	VMU1032	16500M	65k†	16.45G-16.55G	800u	15000	15 △			MG	OS	FF	CO	7.0
99	L3987	16500M	75k†	16G-17G	1.2m	18000	16			MG	OS	MT	WA	7.5 △
100	M1274	16500M	75k	16000-17000M	.001	16.5k	16			MG	OS	MT	WA	7.0
101	L5115	16500M	100k	16.4G-16.6G	800u	18000	18			MG	OS	MT	WA	7.0
102	JAN7208B	16500M	135k	15.50G - 17.50G	1.0m	20000	20			MG	OS	MT	WA	14 △*
103	JAN8827	16512M	50k△	16.41G-16.625G	1.1m	16500	20			MG	OS	MT	WC	300m
104	BLM199	16517M	50k	16.410G-16.625G	1.0m	16000	1.35			MG	OS	FF	WA	5.5
105	VMU1021	16575M	50k†	16.30G-16.85G	1.5m	14000	12 △			MG	OS	MT	CO	4.0
106	MA246	16600M	100 †	16.50G - 16.70G	5.0m	1150	450m			MG	OS	FF		
107	MA246A	16650M	150 △	16.50G - 16.80G	5.0m	1100	450m			MG	OS	FF	WA	1.0
108	L4451	16950M	35k†	16.60G - 17.10G	1.0m	14000	13			MG	OS	MT	WA	5.0 △
109	6551	24000M	40k							MG	OS	FF	WA	7.5
110	7449A	24000M	65k†	23.90G - 24.10G	1.0m	17000	25			MG	OS	FF	WA	7.3 △

SYMBOLS AND CODES EXPLAINED IN INTERPRETER

2. SOURCE,AMPLIFIER,OUTPUT TUBES

IN ORDER OF (1)TUBE TYPE (2)CENTER FREQUENCY (3)POWER OUTPUT (4)TYPE No.

LINE No.	[4] TYPE No.	[2] CENTER FREQ. (Hz)	[3] POWER OUTPUT (W)	FREQUENCY RANGE (Hz)	MAX. DUTY CYCLE	MAX. BEAM VOLTAGE (Note 1) (V)	MAX. CATH-ODE CUR. (A)	GAIN (dB)	NF (dB)	DESCRIPTION [1] TUBE TYPE	FUNC-TION	TUN-ING	OUT PUT	WEIGHT (lb)
1	BLM006	24035M	40k†	23.8G-24.27G						MG	OS	FF	WA	470m
2	25M10	24500M	40k	24.255G-24.745G	700u	15000	18			MG	OS	FF	WA	
3	M5028	28565M	5.0M	2.852-2.861G		55k	265 Δ			MG	OS	MT	WA	18 §
4	33M10	32600M	35k	32.274G-32.926G	500u	15000	20			MG	OS	FF	WA	13.2
5	L4564	33000M	50k	32.850G-33.150G	1.0m	18000	13			MG	OS	MT	WA	9.5
6	8366	33200M	50k†	33.00G - 33.40G	1.0m	13000	25			MG	OS	FF	WA	10.5
7	E3470A	33.5G	500 Δ	32.0G-35.0G	5.0m	5000	2.0			MG	0S	FF	WA	200m
8	E3470B	33500M	500	32.0G-35.0G	10.0m	2500	2.0			MG	OS	FF	WA	0.22 *
9	M5054	34800M	35k	34.3G-35.3G	500u	15000	16			MG	OS	FF	WA	10
10♦	M5053	34800M	50k†	34.3G-35.3G	500u	15k#	15 Δ			MG	OS	FF	WA	10
11	L4516	34815M	110k†	34.70G - 34.93G	1.0m	21000	30			MG	OS	MT	WA	9.05 Δ
12	L4064A	34850M	125k†	34.7G-35G*	1.0m	21000	30			MG	OS	FF	WA	9.0 Δ
13	35M10	34860M	35k	34.512G-35.208G	500u	15000	20			MG	OS	FF	WA	13.2
14	5789	34860M	40k†	34.512G-35.208G	600u	13000	20			MG	OS	FF	WA	13
15	7619	34860M	40k†	34.51G - 35.20G	1.0m	13000	25			MG	OS	FF	WA	9.0 Δ
16♦	M5055	34900M	18k	34.4G-35.4G	500u	12.5k#	9.0 Δ			MG	OS	FF	WA	4.5 *
17♦	M5123	34.95G	20k	34.700G-35.200G	400 u	12.5k#	9.0 Δ			MG	OS	MT	WA	4.5
18	BLM076A	35000M	1.0k	34.000G-36.000G	500	3500	4.0	32		MG	OS	MT	WA	1.4
19♦	M5154	35G	1.3k	33.00G-37.00G	.002	4.5k#	1.5 Δ			MG	OS	FF	WA	1.0
20	MG5280	35G	1.3k	33-37G	.002	4.5k#	1.5 Δ			MG		FF	WA	1.0
21♦	M5127	35G	20k	34.9G-35.1G	.002	12.5k#	10.5 Δ	25		MG	OS	MT	WA	4.5
22♦	M5168	35G	40k	34.75G-35.25G	600 u	14.5k#	17.5 Δ			MG	OS	MT	WA	7.7 §
23♦	MG5301	35.0G	46k	34.5G-35.5G	.001	15k#	15 Δ			MG	OS	FF	WA	3.3
24▼	MG5302	35.0G	46M	34.85G-35.15G	.001	15k#	15 Δ			MG	OS	MT	WA	3.63
25▼	MG5303	35.0G	46M	34.85G-35.15G	.002	15k#	15 Δ			MG	OS	MT	WA	4.1
26▼	MG5304	35.0G	46M	34.85G-35.15G	1.2 m	15k#	15 Δ			MG	OS	MT	WA	3.63
27	M82	35395M	4.0	35270-35520M	CW	1.5k#	85mΔ			MG	AM		WA	4.41
28	M5059	35500M	50k	34.50G-38.00G	500u	15000	5.5 Δ			MG	OS	EM	WA	10.5
29	MA2804	35700M	1.0k†	35.40G-36.0G	2.0m	3600	1.75			MG		FF	WA	1.0
30	MA286	36000M	1.0k†	35.70G-36.25G	2.0m	3600	1.75			MG	OS	MT	WA	1.0 Δ
31	MI508	36413M		36275-36550M		17.5k#				MG	AM		WA	13.67
32	MI588M	36783M		36415-37150M		15.0k#	8.0mΔ			MG	AM		WA	16.53
33	BL246	69750M	8.0k	68G-71.5G	500u	15000	9.0			MG	OS	FF	WA	7.25
34	BL221	69750M	10k†	69G-70.5G	550u					MG	OS	FF	WA	470m
35	BL234C	70500M	400 †	69.50G - 71.50G	1.0m	3500	3.5			MG	OS	FF	WA	1.12
36	BL246A	70500M	10k	68.00G-71.50G	500u	14000	9.0			MG	OS	FF	WA	7.5
37	M5137	80000M	4.0k	79.000G-81.000G	200u	13000	5.0 Δ			MG	OS	MT	WA	5.5
38	M5057	80000M	6.0k	78.00G-82.00G	200u	13000	10			MG	OS	FF	WA	4.5
39	M5124	81000M	1.0	80.5G-81.5G,1GØ	200u	13000	5.0 Δ			MG	OS	DT	WA	5.0
40▼	MG5295	93.85G	2.5k	93.5G-94.2G	500 u	12k#	9.0 Δ			MG	OS	FF	WA	2.0
41	DX423	95000M	8.0k	93.00G-97.00G	200u	10000	30			MG	OS	FF	WA	7.5
42▼	MG5294	95.1G	2.5k	94.2G-96.0G	0.5 m	12k#	9.0 Δ			MG	OS	FF	WA	2.0
43	TH3077	16200G	40kΔ	15.700G-16.700G	1.1m	16000	18			MG	OS	MTM	WA	6.6
44	RM157	915M	30k	910-920M	CW	14000	3.0 Δ			MG†	OS	FF	WA	16.0
45	2M142	2450M	450	2.435G-2.465G	CW	4000	250m			MG†	OS	FF	CO	2.2
46	2M142G	2450M	450	2.435G-2.465G	CW	4000	250m			MG†	OS	FF	CO	2.2
47	2M142H	2450M	450	2.435G-2.465G	CW	4000	250m			MG†	OS	FF	CO	2.2
48	2M142J	2450M	450	2.435G-2.465G	CW	4000	250m			MG†	OS	FF	CO	2.2
49	2M162	2450M	660	2.435G-2.465G	CW	4000	350m			MG†	OS	FF	CO	2.6
50	2M162G	2450M	660	2.435G-2.465G	CW	4000	350m			MG†	OS	FF	CO	2.6
51	2M162H	2450M	660	2.435G-2.465G	CW	4000	350m			MG†	OS	FF	CO	2.6
52	2M162J	2450M	660	2.435G-2.465G	CW	4000	350m			MG†	OS	FF	CO	2.6
53	2M53	2450M	800	2.420G-2.480G	CW	4500	350m			MG†	OS	FF	CO	3.74
54	2M53A	2450M	830	2.440G-2.460G	CW	4500	350m			MG†	OS	FF	CO	4.0
55	2M172	2450M	830	2.435G-2.465G	CW	4500	350m			MG†	OS	FF	CO	2.9
56	2M172G	2450M	830	2.435G-2.465G	CW	4500	350m			MG†	OS	FF	CO	2.9
57	2M172H	2450M	830	2.435G-2.465G	CW	4500	350m			MG†	OS	FF	CO	2.9
58	2M172J	2450M	830	2.435G-2.465G	CW	4500	350m			MG†	OS	FF	CO	2.9
59	2M182	2450M	1.2k	2.435G-2.465G	CW	4500	500m			MG†	OS	FF	CO	4.0
60	2M164	2450M	1.6k	2.440G-2.460G	CW	4000	750m			MG†	OS	FF	CO	5.5
61	MCF1165	2450M	1.6k†	2.425G-2.475G	CW	3650	800m			MG†	OS	FF	WA	5.1
62	MCF1166	2450M	1.6k†	2.425G-2.475G	CW	3360	800m			MG†	OS	FF	WA	3.7
63	TH3094	2450M	5.0k†	2.425G-2.475G	CW	5200	1.6 Ø			MG†	OS	FF	WA	14
64	2M125H	2455M	560	2.445G-2.465G	CW	3.1k	370m			MG†	OS	FF	CO	2.2
65	2M125J	2455M	560	2.445G-2.465G	CW	3.1k	370m			MG†	OS	FF	CO	2.2
66	2M140	2455M	560	2.445G-2.465G	CW	4500	250mΔ			MG†	OS	FF		2.6
67	2M158	2455M	570	2.445G-2.465G	CW	4500	250m			MG†	OS	FF	CO	2.2
68	2M158H	2455M	570	2.445G-2.465G	CW	4.5k	250m			MG†	OS	FF	CO	2.2
69	2M158J	2455M	570	2.445G-2.465G	CW	4.5k	250m			MG†	OS	FF	CO	2.2
70	2M53G	2455M	840	2.445G-2.465G	CW	4.5k	350m			MG†	OS	FF	CO	2.5
71	2M132A	2455M	850	2.445G-2.465G	CW	4.2k	370m			MG†	OS	FF	CO	2.2
72	2M120	2455M	1.4k	2.440G-2.470G	CW	4800	550mΔ			MG†	OS	FF		4.1
73	2M131	2455M	1.6k	2.440G-2.470G	CW	4000	750mΔ			MG†	OS	FF		4.2
74	2M130	2455M	1.7k	2.440G-2.470G	CW	4000	750mΔ			MG†	OS	FF		2.1
75	MC1055A	3065M	1100k†	2.900G-3.230G	1.0m	31000	65 Ø			MG†	OS	MT	WA	
76	MC1055O	3065M	1100k†	2.900G-3.230G	1.0m	31000	65 Ø			MG†	OS	MT	WA	
77	JAN6543	9050M	65kΔ	8.500G - 9.600G		16500	16			MG†	OS	MT	WA	6.12 *
78	F1005	9050M	200k†	8.500G-9.600G	1.0m	22500	27.5 Ø			MG†§	OS	MT	WA	
79	F1103	9050M	200k†	8.500G-9.600G	1.0m	22500	27.5 Ø			MG†	OS	MT	WA	
80	9M301	9375M	4.0k	9.345G-9.405G	1.0m	3800	3.5			MG†	OS	FF	WA	2.2
81	9M302	9410M	4.0k	9.380G-9.440G	1.0m	3800	3.5			MG†	OS	FF	WA	2.2
82	9M303	9445M	4.0k	9.415G-9.475G	1.0m	3800	3.5			MG†	OS	FF	WA	2.2
83	BM25LE	915M	30k	905M-925M	CW	14500	3.0 Δ			MG#	OS	FF	WA	22 §
84	YJ1443	2375M	3.0k	2.350G-2.400G	CW	6000	800mØ			MG#	OS	FF	WA	3.9
85	YJ1194	2375M	6.0k	2.350G-2.400G	CW	7300	1.25 Δ			MG#	OS	FF	CO	10.3
86	YJ1442	2450M	3.0k	2.425G-2.475G	CW	6000	800mØ			MG#	OS	FF	WA	3.9
87	2M13	2450M	5.0k	2420-2480	CW	7.0k	1100m			MG#		FF		2.25
88	YJ1193	2450M	6.0k	2.430G-2.470G	CW	7300	1.25 Δ			MG#	OS	FF	CO	10.3
89	JAN7529	2775M	3500k	2.700G-2.850G	1.0m	70000	130			MG#	OS	MT	WA	66
90	M5125X	29965M	2460	2992-3001M	1.25m	k	100 Δ			MG#	OS	MT	WA	16
91	RM174A	896M	30k	886-906M	CW	14000	3.0 Δ			MGØ#	OS	FF	WA	16
92	RM227	896M	30k	891-901M	CW	14000	3.0 Δ			MGØ#	OS	FF	WA	16
93	VMU1222	1495M	65k	1.450G-1.540G	2.0m	19000	17			MGC	OS	MT	WA	15
94	VMS1177	2800M	1.0m	2.700G-2.900G	1.0m	30000	60			MGC	OS			
95	QKH1667	2800M	800k	2.700G-2.900G	1.1m	29000	70			MGC	OS	MT	WA	60
96	QKH1793	2800M	800k	2.70G-2.90G	1.0m	30000	650m			MGC	OS	MT	WA	90
97	MG5202	2.8G	1M	2.7G-2.9G	1.5m	35k#	90 Δ			MGC	AM	MT	WA	99
98	VMS1365	2.8G	1.0M†	2.7G-2.9G	1.3m	40.5k	75 Δ			MGC	AM	MT	WA	105
99	SFD372	2800M	2200k	2.70G-2.90G	1.2m	52000	90			MGC	OS	MT	WA	105 Δ
100	VMS1143B	2.8G	3.0M†	2.7G-2.9G	800u	63000	100 Δ			MGC	AM	MT	WA	135
101	QKH1866	2850M	5.5k	2.850G	1.0m	68000	140			MGC	OS	FF	WA	140
102	QKH1817	2856M	500k	2.851G-2.861G	600u	67000	131			MGC	OS	MT	WA	140
103	SFD356	2880M	2.0M†	2.85G-2.91G	1.1m	58000	90 Δ			MGC	OS	FF	WA	85
104	MG5204	3.0G	1M	2.9G-3.1G	1.5m	35k#	90 Δ			MGC	AM	MT	WA	99
105	VMS1056	3000M	1.0M†	2.89G-3.11G	1.1m	40500	90 Δ			MGC	OS	MT	WA	115
106	VMS1366	3.0G	1.0M†	2.9G-3.1G	1.3m	40.5k	75 Δ			MGC	AM	MT	WA	115
107	MG5206	3.2G	1M	3.1G-3.3G	1.5m	35k#	90 Δ			MGC	AM	MT	WA	99
108	VMS1178	3300M	1.0m	3.100G-3.500G	2.0m	44000	45			MGC	OS			
109	QKH1851	3300M	665	3.100G-3.500G	600u	43000	45			MGC	OS	MT	WA	130
110	QKH1832	3550M	900	3.400G-3.700G	3.0m	30000	20			MGC	OS	MT	WA	85

SYMBOLS AND CODES EXPLAINED IN INTERPRETER

2. SOURCE,AMPLIFIER,OUTPUT TUBES

IN ORDER OF (1)TUBE TYPE (2)CENTER FREQUENCY (3)POWER OUTPUT (4)TYPE No.

LINE No.	[4] TYPE No.	[2] CENTER FREQ. (Hz)	[3] POWER OUTPUT (W)	FREQUENCY RANGE (Hz)	MAX. DUTY CYCLE	MAX. BEAM VOLTAGE (Note 1) (V)	MAX. CATH-ODE CUR. (A)	GAIN (dB)	NF (dB)	DESCRIPTION [1] TUBE TYPE	FUNC-TION	TUN-ING	OUT PUT	WEIGHT (lb)
1	VMS1104	3645M	1000	3.590G-3.700G	1.0m	33000	65			MGC	OS	MT	WA	50
2	VMC1223	5000M	900k	4.900G-5.100G	1.1m	39500	30			MGC	OS	MT	WA	75
3	VMC1351	5070M	800k†	4.965G-5.175G	1.25m	38k	55 △			MGC#	AM	MT	WA	60
4	M1373	5300M	180.0k	5250M-5400M	1.1m	22.0k	18.0			MGC	OS	MT	WA	58.0
5	M1341	5300M	300.0k	5250M-5400M	1.1m	25.0k	30.0			MGC	OS	MT	WA	58.0
6	5M81	5320M	150k	5.25G-5.40G	1.1m	28500	25			MGC†	OS	MT	WA	57
7	5M80/E3517	5320M	300k	5.250G-5.400G	1.1m	28500	35 △			MGC†	OS	MT	WA	57
8	5M80	5325M	300	5250-5400M	.001	25k	30 △			MGC		MT	WA	58
9	SFD383	5325M	1.0M†	5.25G-5.40G	1.1m	38000	65 △			MGC	OS	MT	WA	57
10	SFD344	5600M	1.0M†	5.58G-5.62G	1.1m	35000	65			MGC	OS	FF	WA	56 △
11	SFD373E	5637M	230k	5.450G-5.825G	1.8m	28000	35			MGC	OS	MT	WA	33 △
12	8763	5637M	250k†	5.45G-5.825G	1.2m	28000	35 △	12		MGC	OS	MT	WA	33
13	MCV1420	5637M	250k†	5.450G-5.825G	1.0m	25000	24 Ø			MGC†	OS	MT	WA	
14	SFD341	5637M	250k†	5.45G-5.825G	1.2m	28000	35 △	12		MGC	OS	MT	WA	33
15	SFD373	5637M	270k	5.450G-5.825G	1.2m	28000	35			MGC	OS	MT	WA	33 △
16	TV313	5637M	1.0M†	5.450G-5.825G	1.0m	36000	60 Ø			MGC†	OS	MT	WA	
17	SFD347	5650M	120	5.400G-5.900G	6.3m	38000	65			MGC	OS	MT	WA	57 △
18	VMC1078	5650M	830	5.400G-5.900G	2.0m	2700	1.6 △			MGC	OS	MT	CO	500m
19	VMC1103	5650M	1.5k	5.400G-5.900G	2.0m	2800	800m			MGC	OS	MT	CO	437m
20	VMC1150	5650M	1.5k	5.400G-5.900G	2.0m	3200	2.0			MGC	OS	MT	CO	625m
21	SFD313A	5650M	1.0M†	5.4G-5.9G	1.1m	38000	65			MGC	OS	MT	WA	57 △
22	SFD313B	5650M	1.0M†	5.4G-5.9G	1.1m	38000	65 △			MGC	OS	MT	WA	57
23	VMC1005	5700M	1.4M†	5.4G-5.9G	750u	39000	80			MGC	OS	MT	WA	57 △
24	VMC1353A	6428M	450k†	6.148G-6.709G	1.25m	36k	50 △			MGC	AM	MT	WA	60
25	VMC1220	6450M	100k	6.250G-6.650G	1.0m	24000	12			MGC	OS	FF	WA	30
26	VMX1118	8000M	15k	7.800G-8.200G	1.0m	21000	24			MGC	OS			
27	VMX1236	8000M	100k	7.800G-8.200G	1.0m	21000	5.3			MGC	OS	MT	WA	15
28	VMX1221	8125M	320k	7.750G-8.500G	1.0m	30000	14.9			MGC	OS	MT	WA	20
29	JANDOD031	8150M	87 †	7.800G-8.500G	1.25m	19500	20			MGC	OS	MT	WA	14.5
30	VMX1132	8150M	325k	7.800G-8.500G	1.0m	27000	30			MGC	OS			
31	QKH1495	9050M	200	8.500G-9.600G	1.0m	23000	27.5			MGC	OS	MT	WA	14
32	QKH1578	9050M	200	8.500G-9.600G	1.0m	22000	27.5			MGC	OS	MT	WA	14
33	YJ1210	9050M	200 †	8.50G-9.60G	1.0m	23000	27.5 △			MGC	OS	MT	WA	13.6
34	QKH1865	9050M	220	8.500G-9.600G	1.0m	22000	27.5			MGC	OS		WA	13
35	QKH1833	9050M	250	8.500G-9.600G	1.0m	25000	23			MGC	OS	MT	WA	20
36	SFD354H	9050M	460	8.850G-9.250G	2.1m	23000	30			MGC	OS	DT	WA	15.5
37	QKH1811	9050M	35k	9.000G-9.100G	900u	15000	12			MGC	OS	MT	WA	7.0
38	8947	9050M	65k	8.500G-9.600G	1.1m	15000	15			MGC	OS	MT	WA	7.5
39	L4571/8947	9050M	65k	8.500G-9.600G	1.0m	15000	15			MGC	OS	MT	WA	7.0
40	L5462	9050M	95k	8.500G-9.600G	1.0m	17000	15			MGC	OS	MT	WA	10
41	VMX1292	9050M	100k	8.500G-9.600G	1.0m	21000	3.3			MGC	OS	MT	WA	15
42	YJ1464	9050M	100k	8.500G-9.600G	1.5m	20000	15			MGC	OS	MT	WA	13.7
43	SFD349H0-1	9050M	115k	8.500G-9.600G	2.1m	22000	30			MGC	OS	MT	WA	13.5 △
44	8855	9050M	200k	8.500G-9.600G	1.1m	24000	30			MGC	OS	MT	WA	13
45	JAN8855	9050M	200k	8.500G-9.600G	1.1m	24000	30			MGC	OS	MT	WA	13
46	8945	9050M	200k	8.70G-9.40G	1.3m	24000	30			MGC	AM	MT	WA	13
47	L4575	9050M	200k	8.500G-9.600G	1.5m	23000	21.0			MGC	OS	MT	WA	13.0
48	L4581	9050M	200k	8.500G-9.600G	1.5m	23000	21.0			MGC	OS	MT	WA	13.0
49	MCV1300	9050M	200k†	8.500G-9.600G	1.0m	22000	27.5 Ø			MGC†	OS	MT	WA	
50	SFD349	9.05G	200k†	8.50G-9.60G	.001	22k	27 △			MGC	OS	MT	WA	17
51	SFD352	9050M	200k†	8.5G-9.6G	1.1m	24000	30			MGC	OS	MT	WA	12.5 △
52	SFD354A	9050M	200k†	8.5G-9.6G	1.1m	24000	30			MGC	OS	DT	WA	16 △
53	SFD367	9050M	200k†	8.5G-9.6G	1.1m	24000	30			MGC	OS	DT	WA	15.5 △
54	SFD381	9050M	200k	8.700G-9.400G	1.1m	22000	27.5			MGC	OS		WA	13.44
55	SFD386	9050M	200k†	8.50G-9.60G	1.1m	24000	30 △			MGC	OS	MT	WA	13.5
56	TH3043	9050M	200k†	8.500G-9.600G	1.0m	22000	27.5			MGC	OS	MT	WA	
57	QKH1709	9050M	220k	8.500G-9.600G	1.1m	22000	3.60			MGC	OS	MT	WA	15
58	VMX1330	9050M	220k	8.500G-9.600G	1.0m	22000	27.5			MGC	OS	MT	WA	15
59	SFD349F	9050M	230k	8.500G-9.600G	1.1m	22000	30			MGC	OS	MT	WA	13.5 △
60	SFD349FL	9050M	230k	8.500G-9.600G	1.1m	22000	30			MGC	OS	MT	WA	13.5 △
61	JAN8939	9050M	250k	8.500G-9.600G	1.0m	28000	30			MGC	OS	MT	WA	17
62	SFD304	9050M	250k†	8.500G - 9.600G	1.0m	28000 Ø	25 Ø			MGC	OS	MT	WA	19 △
63	SFD382	9050M	250k†	8.50G-9.60G	1.0m	27000	30 △			MGC	OS	MT	WA	17
64	USAF304	9050M	250k†	8.5G-9.6G	1.1m	30000	32			MGC	OS	MT	WA	18 △
65	VMX1077	9050M	250k	8.500G-9.600G	1.0m	26000	24			MGC	OS	MT	WA	17
66	SFD375	9050M	325k†	8.5G-9.6G	1.1m	30000	35			MGC	OS	MT	WA	18 △
67	VMX1131	9050M	325k	8.500G-9.600G	1.0m	27000	30			MGC	OS			
68	L4593	9050M	350k	8.500G-9.600G	1.0m	28000	30			MGC	OS	MT	WA	13
69	SFD333	9050M	350k†	8.50G-9.60G	2.1m	33000	35 △	12		MGC	OS	MT	WA	18
70	8896	9065M	200k	8.50G-9.63G	1.1m	27700	32			MGC	OS	MT	WA	19 △
71	QKH1512	9100M	200	8.600G-9.600G	1.1m	26000	32			MGC	OS	MT	WA	19
72	SFD333T	9100M	520	8.600G-9.600G	1.3m	34000	35			MGC	OS	MT	WA	22 △
73	VMX1430	9.1G	80k†	8.55G-9.65G	1.3m	16k	20 △			MGC	AM	MT	WA	13.5
74	VMX1065	9100M	100k	9.000G-9.200G	1.1m	21500	25			MGC	OS		WA	13.2
75	L4583A	9100M	200k	8.600G-9.600G	1.0m	23000	27.5			MGC	OS	MT	WA	13.5
76	YJ1463	9100M	270k	8.600G-9.600G	1.0m	15000	15 △			MGC	OS	MT	WA	6.6
77	VMX1122	9150M	400	8.800G-9.500G	2.0m	2300	750m			MGC	OS	MT	CO	
78	QKH1553	9245M	75	9.205G-9.285G	1.0m	16000	14.5			MGC	OS	FF	WA	7.5
79	SFD370	9245M	75k†	9.205G - 9.285G	1.0m	15000 Ø	13.5 Ø			MGC	OS	FF	WA	8.5 △
80	VMX1160	9250M	65k	9.200G-9.300G	1.1m					MGC	OS		WA	
81	SFD354G	9250M	200k†	9.00G-9.50G	2.1m	24000	30 △			MGC	OS	DT	WA	15.5
82	VMX1259	9250M	400k†	8.9G-9.6G	1.1m	34k	35 △			MGC	AM	MT	WA	22
83	QKH2040	9.3G	75	9.1G-9.5G	1.0m	15k	15			MGC	OS	MT	WA	13
84	VMX1073	9300M	550	9.100G-9.500G	2.0m	2600	1.3			MGC	OS	MT	CO	437m
85	QKH1763	9300M	65k	9.10G-9.50G	1.0m	15000	15			MGC	OS	DT	WA	13
86	QKH1666	9300M	75k	9.100G-9.500G	1.0m	16000	2.5			MGC	OS	DT	WA	13
87	SFD380	9300M	90k	9.100G-9.500G	1.2m	16000	18			MGC	OS	MT	WA	10.5 △
88	SFD380A	9300M	95k	9.100G-9.500G	1.2m	16000	18			MGC	OS	DT	WA	10.5 △
89	TH3068	9300M	200k†	9.000G-9.600G	1.0m	22000	27.5			MGC	OS	MT	WA	
90	VMX1090	9300M	200k	9.000G-9.600G	1.1m	22000	30			MGC	OS	MT	WA	13.5
91	QKH1665	9300M	220k	9.000G-9.600G	1.0m	23000	3.3			MGC	OS	DT	WA	17
92	QKH1708	9300M	220k	9.000G-9.600G	1.3m	22000	3.75			MGC	OS	MT	WA	11
93	SFD303B	9330M	1.0k	9.300G-9.360G	1.0m	35	85			MGC	OS	FF	WA	46
94	VMX1026	9345M	7.0	9.330G-9.360G	1.3m	4500	6.0			MGC	OS	FF	WA	4.5 △
95	BLM313	9345M	2.5k	9.330G-9.360G	1.3m	8250	10			MGC	OS	FF	WA	7.0 △
96	RM107	9345M	8.0k	9325-9365M	1.2m	5000	5.0			MGC†	OS	FF	WA	3.0
97	BLM312	9345M	8.75k	9.330G-9.360G	1.3m	8750	10			MGC	OS	FF	WA	7.0 △
98	RM126	9345M	9.0k	9325M-9365M	.001	5.25k	5.0 △			MGC	AM	BB	CO	3.0 §
99	RM121	9345M	10.0k	9325M-9365M	.001	5.25k	5.0 △			MGC	AM	BB	CO	3.0 §
100	SFD305	9345M	28k†	9.315G-9.375G	1.5m	8.750	12 △	12		MGC	OS	FF	WC	7.0
101	VMX1027	9345M	65k†	9.325G-9.365G	1.3m	13500	12.5 △			MGC	OS	FF	WA	8.0
102	RM103	9345M	75.0k	9325M-9365M	.12u	13.0k	12.0			MGC	AM	BB	CO	7.0 §
103	VMX1025	9375M	30	9.345G-9.405G	1.5m	8250	9.25			MGC	OS	FF	WA	6.0
104	QKH1820	9375M	40		1.0m	12000	12			MGC	OS	FF	WA	7.0
105	QKH1592	9375M	70	9.345G-9.405G	1.0m	15000	15			MGC	OS	FF	WA	6.2
106	BLM311	9375M	75	9.345G-9.405G	1.3m	13500	12.5			MGC	OS	FF	WA	8.0 △
107	VMX1058	9375M	75	9.355G-9.395G	1.1m	16500	20			MGC	OS	FF	WA	7.5 △
108	L5359	9375M	6.5k†	9370M-9380M	1.3m	4500	1.7			MGC	OS	FF	WA	2.5 △
109	L4642	9375M	8.5k†	9.370G-9.380G	500u	5250	6.0			MGC	OS	FF	WA	3.5
110	RM142	9375M	11.0k	X-Band	.15u	5.25k	6.0 △			MGC	AM	BB	CO	3.0 §

2. SOURCE,AMPLIFIER,OUTPUT TUBES

IN ORDER OF (1)TUBE TYPE (2)CENTER FREQUENCY (3)POWER OUTPUT (4)TYPE No.

LINE No.	4 TYPE No.	2 CENTER FREQ. (Hz)	3 POWER OUTPUT (W)	FREQUENCY RANGE (Hz)	MAX. DUTY CYCLE	MAX. BEAM VOLTAGE (Note 1) (V)	MAX. CATH-ODE CUR. (A)	GAIN (dB)	NF (dB)	DESCRIPTION 1 TUBE TYPE	FUNC-TION	TUN-ING	OUT PUT	WEIGHT (lb)
1	L5196	9375M	24k	9375M±30M§	1.25m	8000	8.25			MGC	OS	FF	WA	4.5
2	L5211	9375M	24k†	9.345G-9.405G	1.5m	8250	8.25			MGC	OS	FF	WA	4.5
3	RM134	9375M	24k	9355-9395M	1.5m	9000	9.25			MGC†	OS	FF	WA	5.5
4	RM135	9375M	24k	9355-9395M	1.5m	9000	9.25			MGC†	OS	FF	WA	5.5
5	VMX1241	9375M	24k	9.345G-9.405G	700u	8250	1.3			MGC	OS	FF	WA	5.5
6	L5543	9375M	45k	9.355G-9.395G§	1.0m	13500	8.0			MGC	OS	FF	WA	7.5
7	SFD363	9375M	60k†	9.10G-9.65G	1.2m	16000	18 Δ			MGC	OS	MT	WA	10.5
8	L5536	9375M	65k	9.370G-9.380G§	1.0m	13500	12.5			MGC	OS	FF	WA	7.0
9	USAF377A	9375M	70k†	9.355G-9.395G	1.1m	16000	17			MGC	OS	FF	WA	7 Δ
10	L5047	9375M	75k		1.2m	13000	15			MGC	OS	FF	WA	6.0
11	RM117	9375M	75.0k	9350M-9400M	.001	13.5k	15.0 Δ			MGC	AM	BB	CO	7.0 §
12	RM130	9375M	75k	9370M-9380M	1.3m	13.5k	12.5 Δ			MGC	OS	FF	WA	7.0
13	M1379	9375M	80.0k	9175M-9575M	0.75m	15.0k	16.0			MGC	OS	MT	WA	8.4
14	SFD377A	9375M	90k	9.355G-9.395G	1.0m	16000	17			MGC	OS	FF	WA	7.0
15	SFD380F	9375M	90k†	9.30G-9.45G	1.2m	16000	22 Δ			MGC	OS	MT	WA	9.1
16	L4648	9375M	100k	9.360G-9.390G	1.0m	15500	16			MGC	OS	DT	WA	10.5
17	SFD349N	9375M	230k	9.200G-9.550G	1.1m	22000	30			MGC	OS	MT	WA	13.5 Δ
18	VMX1004	9375M	230k	9.250G-9.500G	1.1m	24000	30			MGC	OS	DT	WA	15.5 Δ
19	SFD303	9375M	1.0M†	9.335G-9.405G	1.1m	34500	65			MGC	OS	FF	WA	46 Δ
20	RM137	9385M	24.0k	9345M-9405M	.15u	9.0k	5.0 Δ			MGC	AM	BB	CO	5.5 §
21	VMX1297	9400M	70k	9.300G-9.500G	800u	16000	2.4			MGC	OS	MT	WA	10.8
22	M1406	9410M	5.0k	9380M-9440M	1.0m	4.5k	3.5			MGC	OS	FF	WA	2.5
23	JANDOD032	9500M	70 †	8.480G-9.620G	1.25m	19500	20			MGC	OS	MT	WA	13.5
24	QKH1693	9500M	135k	9.000G-10.00G	1.0m	19000	2.5			MGC	OS	MT	WA	13
25	RM128	9525M	10.0k	9250M-9800M	3.5m	5.25k	6.0 Δ			MGC	OS	MT	WA	4.5
26	QKH1757	9525M	200k	9.05G-10.00G	1.0m	19000	18			MGC	OS	MT	CO	13
27	RM180	13050M	40k	12800-13300M	1.5m	15000	12.0			MGC†	OS	MT	WA	6.0
28	VMS1193	13250M	40	13.200G-13.300G	250m	800	250m			MGC	OS	FF	WA	1.56
29	VMU1315	14.5G	135k†	14G-15G	1.3m	24k	24 Δ			MGC#	AM		WA	17.3
30	JANDOD033	14600M	87 †	13.980G-15.220G	1.25m	19500	20			MGC	OS	MT	WA	16
31	QKH1982	14620M	30	14.500G-14.750G	1.0m		8.0			MGC	OS	FF	WA	5.5
32	RM188	14850M	50k	14800-14900M	1.5m	9000	8.2			MGC†	OS	FF	WA	5.5
33	L3958A	15000M	10k†	14.91G - 15.08G	2.0m	5000	5.0			MGC	OS	FF	WA	3.0 Δ
34	L5328	15550M	2.5k	15.400G-15.700G	2.0m	3600	3.5			MGC	OS	MT	WA	3.0
35	BLM306	15550M	2.8k	15.40G-15.70G	5.0m	3800	3.1			MGC	OS	MT	WA	4.0 Δ
36	RM106	15.55G	3.0k	15.4G-15.7G	3.1m	3.8k	3.5 Δ			MGC	OS	MT	WA	3.0
37	RM112	15.55G	3.5k	15.4G-15.7G	5.0m	3.8k	3.1			MGC	OS	MT	WA	3.0
38	M1243	16G	125	15500-17500M	.001	17.3k	19 Δ			MGC		MT	WA	14.5
39	L5329	16100M	8.0k	16.000G-16.200G	4.0m	4750	6.0			MGC	OS	MT	WA	3.0
40	MCV1170	16100M	8.0k†	16.000G-16.200G	2.0m	5000	6.0 Ø			MGC†	OS	MT	WA	
41	RM173	16.1G	10.0k	16.0G-16.2G	.25u	5.5k	6.0 Δ			MGC	AM	BB	CO	3.0 §
42	RM176	16100M	40k	16000-16200M	2.0m	14500	12.0			MGC†	OS	MT	WA	6.0
43	RM108	16.2G	1.2k	16.0G-16.5G	.001	3.3k	1.8 Δ			MGC	AM	BB	CO	1.5 §
44	L5035	16200M	8.0k†	15.90G - 16.50G	40m	5000	6.0			MGC	OS	MT	WA	3.0 Δ
45	L5271	16250M	800	16.200G-16.300G	500u	3000	750m			MGC	OS	MT	WA	1.5
46	RM143	16.25G	800	16.2G-16.3G	1.0m	3.0k	2.0 Δ			MGC	OS	MT	WA	1.25
47	L5042	16250M	80k	16.00G - 16.50G	1.0m	18000	16			MGC	OS	MT	WA	5.0 Δ
48	8955	16250M	90k†	16G-16.5G	1.0m	17000	18			MGC	OS	MT	WA	12.5 Δ
49	16M10	16350M	55k†	16.00G-16.70G	1.0m	18000	18			MGC	OS	MT	WA	6.85 Δ
50	L5049	16475M	50k†	16.12G - 16.82G	1.0m	13000	16			MGC	OS	MT	WA	3.05
51	QKH1325	16500M	65	16.500G-16.500G	1.0m	14000	14			MGC	OS	FF	WA	4.75
52	QKH1850	16500M	70	16.400G-16.600G	1.0m	14500	14.5			MGC	OS	MT	WA	8.0
53	7208B	16500M	125	15.500G-17.500G	1.0m	20000	20			MGC	OS	MT	WA	14
54	RM115	16.5G	8.0k	16.0G-17.0G	1.25m	5.5k	6.0			MGC	OS	MT	WA	3.0
55	L5079	16500M	30k	16.000G-17.000G	3.0m	12500	11			MGC	OS	MT	WA	3.25
56	L5200	16500M	35k	16.0G-17.0G	1.5m	13000	15.0			MGC	OS	MT	WA	4.5
57	TH3078	16500M	40k†	16.00G-17.00G	2.0m	13000	11			MGC	OS	MT	WA	
58	BLM181	16500M	60k†	16G-17G	1.1m	15000	15			MGC	OS	DT	WA	7.75
59	L3950	16500M	60k	16.500G±100M§	1.0m	16000	16			MGC	OS	FF	WA	6.0
60	SFD325	16500M	60k†	16.00G-17.00G	1.0m	17000	18 Δ			MGC	OS	MT	WA	7.0
61	SFD325A	16500M	60k†	16.00G-17.00G	1.0m	17000	18	12		MGC	OS	MT	WA	7.0
62	TV1547	16500M	60k†	16.000G-17.000G	1.0m	16000	16 Ø			MGC†	OS	MT	WA	
63	VMU1000	16500M	60k†	16.00G-17.00G	2.2m	15500	18 Δ			MGC	OS	MT	WA	9.0
64	VMU1102	16500M	60k	16.400G-16.600G	720u	14500	15			MGC	OS	DT	WA	
65	8948	16500M	65k	16.100G-16.900G	1.0m	14000	14			MGC	OS	MT	WA	7.5
66	L4527	16500M	65k	16.2G-16.8G	1.5m	16000	17			MGCØ	OS		WA	7.0
67	SFD342	16500M	65k†	16.465G-16.535G	865u	18000	17 Δ			MGC	OS	FF	WA	5.75 Δ
68	BLM192	16500M	70k	16.0G-17.0G	1.2m	16000	18			MGC	OS	MT	WA	7.0 Δ
69	8949	16500M	95k†	15.50G-17.50G	1.0m	16000	16			MGC	AM	MT	WA	13
70	7208	16500M	100k†	15.80G - 17.20G	1.0m	20000	20			MGC	OS	MT	WA	14 Δ
71	L3976	16500M	100k	16.500G±150M§	1.0m	16000	16			MGC	OS	FF	WA	6.0
72	JAN8982	16500M	125kΔ	15.50G-17.50G	1.0m	18000	24			MGC	OS	MT	WA	14
73	VMU1357/8982	16.5G	125k†	15.5G-17.5G	1.1m	20k	20 Δ			MGC	AM	MT	WA	14
74	YJ1400	16575M	57	16.30G-16.85G	1.2m	13000	13 Δ			MGC	OS		WA	3.7
75	VMU1123	16575M	50k	16.300G-16.850G	1.5m	15000	13			MGC	OS	MT	WA	3.7
76	16M11	16700M	55k	16.650G-16.750G	1.0m	18000	18			MGC	OS	MT	WA	6.85
77	L5223	16750M	35k	16.750G-125.00G	400u	14200	4.4			MGC	OS	DT	WA	4.5
78	L5436	16750M	35k	16.6G-16.9G	1.5m	13000	15.0			MGC	OS	MT	WA	4.5
79	16M12	16750M	55k	16.600G-16.900G	1.0m	18000	18			MGC	OS	MT	WA	7.0
80	BLM309	16750M	55k	16.40G-17.10G	1.0m	12500	15			MGC	OS	MT	WA	3.7 Δ
81	L4649	16800M	35k	16.780G-16.820G	600u	13500	9.5			MGC	OS	DT	WA	5.0
82	SFD345	16800M	38k	16.60G-17.00G	1.0m	14000	11			MGC	OS	DT	WA	5.2 Δ
83	QKH1302	16850M	35	16.600G-17.100G	1.0m	12000	9.5			MGC	OS	MT	WA	4.3
84	BLM183	16850M	35k†	16.6G-17.1G	800u	13000 Ø	9.5			MGC	OS	MT	WA	5.0
85	QKH1516	16850M	35k	16.60G-17.10G	800u	12000	9.5			MGC	OS	MT	WA	4.30
86	M1320	16850M	40k	16.600G-17.100G	1.0m	14000	11			MGC	OS	MT	WA	4.5
87	MG5261	30.5G	1M	2.9G-3.1G	1.5m	44k#	70 Δ			MGC	AM	MT	WA	99
88	L4555-8902	32600M	60k	32.100G-33.100G	1.0m	18000	20			MGC	OS	MT	WA	10
89	QKH1663	32600M	70k	32.10G-33.10G	800u	18000	3.6			MGC	OS	MT	WA	13
90	8902	32600M	75k	32.100G-33.100G	1.0m	18000	10			MGC	OS	MT	WA	10
91	SFD327W	34815M	105	34.700G-34.930G	700u	22500	32			MGC	OS	MT	WA	18 Δ
92	SFD319	34860M	50	34.512G-35.208G	550u	24000	25			MGC	OS	FF	WA	24
93	L4547	70000M	10k†	68.0G-72.0G	550u	13000	10.0			MGC	OS	MT	WA	9.0
94	8682	33200M	50k†	32.9G-33.5G	500u	19000	8.0mΔ	10		MGI	OS	MT	WA	17.5
95	JAN8682	33200M	50k	32.9G-33.5G	500u	20000	20			MGI	OS	MT	WA	17.5
96	SFD332	33200M	50k†	32.9G-33.5G	500u	19000	8.0mΔ	10		MGI	OS	MT	WA	17.5
97	VMA1043	34500M	56k	34.000G-35.000G	650u	16000	20			MGI	OS	DT	WA	9.2 Δ
98	BS344	1400M		1.120G-1.700G		120	200mΔ		15§	NS			WA	650m
99	GW3	2500M		1667-3333M			150mΔ			NS			WA	
100	BS644	2500M	100 Ø	1.000G-4.000G	10m	21	20m		27§	NS Ø			CO	286m
101	BS776	2950M	100 Ø	2.700G-3.200G		28 §Ø			25§	NS			CO	77m
102	BS762	3100M	100 Ø	2.700G-3.500G	5.0m	21	10m			NS Ø			CO	286m
103	BS698	3250M	100 Ø	3.000G-3.500G	10m	21	20m		27§	NS Ø			CO	286m
104	BS676	3300M	5.0kØ	3.100G-3.500G	1.0m	23	40m		16§	NS Ø			WA	1.1
105	BS648	3450M		33G-36G,1.0GΔ	CW	34	40m		25§	NS Ø			WA	617m
106♦	B3NG9890	3.5G	250 Ø	1.0G-6.0G		28 Ø	30m		16§	NS Ø			CO	
107	GW1	4375M		3400-5350M			150mΔ			NS			WA	
108	GW10	5471M		2609-8333M			155mΔ			NS			WA	
109	BS646	5500M	100 Ø	1.000G-10.000G	10m	22	25m		16§	NS Ø			CO	286m
110♦	B3NG9800	6.7G	500 Ø	1.0G-12.4G		30	40m		30§	NS Ø			CO	

2. SOURCE,AMPLIFIER,OUTPUT TUBES

IN ORDER OF (1)TUBE TYPE (2)CENTER FREQUENCY (3)POWER OUTPUT (4)TYPE No.

LINE No.	4 TYPE No.	2 CENTER FREQ. (Hz)	3 POWER OUTPUT (W)	FREQUENCY RANGE (Hz)	MAX. DUTY CYCLE	MAX. BEAM VOLTAGE (Note 1) (V)	MAX. CATH-ODE CUR. (A)	GAIN (dB)	NF (dB)	DESCRIPTION 1 TUBE TYPE	FUNC-TION	TUN-ING	OUT PUT	WEIGHT (lb)
1♦	B3NG9850	6.7G	500 Ø	1.0G-12.4G		28 Ø	30m		26§	NS Ø			CO	
2♦	B3NG9860	6.7G	500 Ø	1.0G-12.4G		28 Ø	30m		16§	NS Ø			CO	
3	BS384	7500M		3.000G-12.00G		55	250mΔ		15.5§	NS				44m
4	BS660	8800M	5.0kØ	8.500G-9.100G	1.0m	21	40m		16§	NS Ø			WA	308m
5	GW2	8925M		7500-10350M			150mΔ			NS			WA	
6	BS658	9000M	5.0kØ	8.800G-9.200G	1.0m	21	40m		16§	NS Ø			WA	308m
7	BS750	9300M		9.000G-9.600G		23	40m		20§	NS Ø			WA	
8	BS662	9300M	5.0kØ	9.000G-9.600G	1.0m	21	40m		16§	NS Ø			WA	308m
9♦	B3NG1601	9.415G	60kØ	9.330G-9.500G		30	30m		15§	NS Ø		FF	WA	
10♦	B3NG1605	9.415G	60kØ	9.330G-9.500G		30	20m		15§	NS Ø		FF	WA	
11♦	B3NG9830	9.5G	500 Ø	1.0G-18G		28 Ø	30m		26§	NS Ø			CO	
12♦	B3NG9840	9.5G	500 Ø	1.0G-18G		28 Ø	30m		16§	NS Ø			CO	
13	BS640	9500M	5.0k*	9.300G-9.700G	1.0m	21	40m		16§	NS Ø			WA	308m
14	BS678	9550M	25kØ	9.400G-9.700G	1.0m	23	40m		13.2§	NS Ø			WA	418m
15	BS752	9750M	100 Ø	9.500G-10.000G	20m	22	30m			NS Ø			CO	385m
16♦	BS764	9750M	100 Ø	9.500G-10.000G		30	40m		15.5§	NS Ø			WA	396m
17	GW11	9936M		8333-11539M			155mΔ			NS			WA	
18	BS342	12500M		7.00G-18.00G		79	150mΔ		15.9*§	NS		BB	WA	440m
19	BS674	13700M	5.0kØ	13.40G-14.00G	1.0m	23	40m		16§	NS Ø			WA	264m
20	GW5	18000M		10140-25860M			80mΔ			NS			WA	
21	BS620	34500M		33.00G-36.00G		48	100mΔ		16§	NS			WA	2.1
22	BS386	35000M		33.00G-36.00G		48	125mΔ		16.4§	NS			WA	101m
23	BS758	35000M		34.75G-35.25G		35	35mØ		25§	NS Ø			WA	617m
24	BS774	2900M	1.0 Ø	2.700G-3.100G		240 §Δ†			9.0§	NSØ			WA	5.5
25	BS760	5000M	100 Ø	4.500G-5.500G	10m	28	15m		25§	NSØ			CO	77m
26	BS784	9410M	60kØ	9.335G-9.485G	750u	24	20m		15§	NSØ			WA	
27	BS778	9900M	5.0 Ø	9.800G-10.00G	200m	28	30m		36§	NSØ			CO	77m
28	1276H		8.5	3700M-4200M	CW	28 §Ø		55		TWT	AM			
29	W2PA2W		23.0 †	J-Band 600M B/W	CW	28 §		40.0	27.0	TWT§	AM		CO	7.15
30	913H		100	36440M-38440M	CW	16000	80m	45		TWT	AM		WA	
31	944H		100	42000M-42500M	CW	14500	46m	44		TWT	AM		WA	
32	982H		100	93000M-95000M	500m	22000	91m	50		TWT	AM		WA	
33	914H		200	30000M-31000M	CW	18000	80m	35		TWT	AM		WA	
34	981H		200	93250M-94750M	300m	15500	180m	50		TWT	AM		WA	
35	985H		200	84000M-86000M	CW	25000	160m	47		TWT	AM		WA	
36	915H		250	43000M-45000M	CW	22000	90m	45		TWT	AM		WA	
37	759H		500	X Band,2% BW	CW	16000	260m	40		TWT§#	AM		WA	7.5
38	980H		1.0k	93250M-94750M	100m	40000	400m	50		TWT	AM		WA	
39	TH3505		1.25k†		10m	10500	1.2m	35†		TWT§	AM		CO	
40	VA866S		1.4k	8.0G	CW	7.4k	.65	46		TWT†	AM		WA	75
41	910H		2.0k	26500M-40000M	50m	35000	1.2	40		TWT	AM		WA	
42	983H		6.0k	95000M-96000M	200m	75000	940m	47		TWT	AM		WA	
43	N10508		425k	S-Band	0.02		16.0 §	25		TWT§#	AM	BB	WA	264 *
44	QKW1968	3.9	24	2.6-5.2	1.0	2.1	.120	40		TWT	AM			1.00
45	TH3643	9.1	30k	9.0-9.2G	.008	26k	7.5	60		TWT	AM	FF	WA	17.5
46	QKW1966	12	25	7-17	1.0	3.9	.100	30		TWT	AM			.80
47	QKW1967	12	25	7-17	1.0	3.9	.100	60		TWT	AM			.80
48	QKW2022	12	100	8.0-12	.01	21	3.0	45		TWT	AM		W	9.0
49	QKW2024	12.750	60	12.5-13	.005	21	3.0	50		TWT	AM		WC	9.0
50	W6MM11P	5060	25	5.03-5.09G	CW	2700	65mØ	38	25	TWT§	AM		CO	2.5
51	W3MC20D	11200	35	10.7-11.7G	CW	4200	90mØ	46	24.5	TWT§	AM		CO	1.74
52	F2194	8.500M	100	6.000G-11.000G	CW	5000	.160	45	30	TWT§	AM		CO	1.0
53	F2184	16.050M	30	14.400G-17.700G	CW	4200	.110	50	30	TWT§	AM		CO	.70
54	UV1011	199.5M	0.6	1515-2480M				28	30	TWT			CO	4.41
55	VTP5231B1	425M	5.0k	400M-450M	60m	11500	2.5 Ø	37		TWT§	AM			60
56	QKW1630	450M	16k	400.0M-500.0M		41000	16	40		TWT	AM		CO	350
57	VTP6332A1	525M	250 †	350.0M - 700.0M	CW	1750	700m	30†	35	TWT§	AM			55
58	LD4065	550M	400	470M-640M	CW	3300	650m	38		TWT§	AM		CO	41.88
59	LD4065A	550M	500	470M-640M	CW	3300	700m	38		TWT§	AM		CO	41.88 *
60	VA134B	550M	5000	500.0M - 600.0M	.06	12000	2.5	33†		TWT*§	AM		CO	100
61	W46D/2T	600M	1.0k	400M-800M	20m	3800	1.6	30		TWTØ	AM		CO	15
62	VTP6333A1	650M	250	600M-700M		3100	350m	27		TWT§	AM			15
63	1W50	650M	400	400.0M - 900.0M	CW	4000	900m	37		TWT§	AM		CO	
64	1W80	650M	2.0k	590M-770M	CW	7000	2.5	35		TWTØ	AM		CO	187.4 *
65	W48D/1T	665M	225	470M-860M	CW	3900	1.35	35		TWTØ	AM		CO	137 *
66	YH1020	670M	50	470M-860M	CW	3500	750m	25		TWT†	AM		CO	5.6
67	YH1010	670M	200	470M-860M	CW	3800	1.1	34		TWT†	AM		CO	6.0
68	VA651	675M	275 †	450.0M - 900.0M	CW	2100 Ø	800m	27†		TWT	AM			55
69	VTP6330A1	675M	300 †	450.0M - 900.0M	CW	2150	650m	30†	35	TWT§	AM			55
70	1W20A	700M	500	660M-770M	CW	3300	700m	38		TWT§	AM		CO	35.27
71	VTP2619A1	715M	30	660M-770M	CW	25000	180m	25		TWT§	AM		CO	22 *
72	VTP2621A1	715M	50	660M-770M	CW	25000	180m	27		TWT§	AM		CO	14.3 *
73	VTP2620A1	715M	200	660M-770M	CW	4000	65m	37		TWT§	AM		CO	35.2 *
74	W45B/5E	715M	500 *	470.0M - 960.0M	CW	3300	750m	33		TWT†	AM		CO	95
75	VTP6334A1	725M	200	500M-1.000G		2100	650m	27		TWTØ	AM			55
76	1W20	750M	300	500.0M - 1.000G	CW	3300	800m	33		TWT§	AM		CO	
77	L2107	750M	300	500M-1.000G	CW	2300	700m	28		TWTØ	AM		CO	35
78	VTP6331A1	775M	500	650M-900M	CW	2400	800m	30		TWTØ	AM			55 *
79	VTP6331A2	775M	500	650M-900M	CW	2500	1.0	27		TWT	AM		CO	55 *
80	YH1014	870M	1000	755M-985M	CW	3900	1.05	26		TWT†	AM		CO	6.0
81	QKW1924	875M	20	750M-1.000G	CW	1650	600m	30		TWT	AM		CO	5.0
82	L2102	1050M	1.8k	700M-1.400G	CW	4800	2.0	26		TWT	AM		CO	35
83	VTL5740A1	1075M	25k†Δ	950.0M - 1.200G	10m	22500 Ø	7.0 Ø	37†		TWT§	AM		CO	90
84	QKW1873	1100M	1.5k	800M-1.400G	600m	45000		40		TWT	AM		CO	250
85	QKW2033	1.17G	10000	850M-1.4G	60m	40k	14	37.5		TWT	AM	BB	CO	250
86	QKW1518	1275M	9.0k	1.150G-1.400G	60m	40000	13	50		TWT	AM		WA	110
87	QKW1671	1275M	9.0k	1.150G-1.400G	60m	40000	13	50		TWT	AM		CO	175
88	QKW1518SG	1275M	160kΔ	1.15G-1.40G	60m	40000	13	50		TWT*#	AM		WC	110 §
89	VA838B	1.3G	300 †	1.23G-1.345G	.036	47k	20	40		TWTØ#	AM	MT	CO	130
90	PT1152	1.3G	6.0k	1.23G-1.34G	50m	30k	10	46		TWTØ#	AM	MT	CO	130
91	L5570	1300M	7.0k	1.200G-1.400G	40m	10800	2.7	50		TWT§	AM		CO	10
92	L5619	1300M	7.0k	1.250G-1.350G	10m	11200	3.0	60		TWT	AM		CO	12
93	QKW1861	1300M	10k	1.200G-1.400G	66m	40000	13	50		TWT	AM			110
94	QKW1723	1300M	175k	1.175G-1.425G	67m	42000	14	45		TWT	AM		WA	190
95	QKW1701	1300M	300k	1.200G-1.400G	33m	48000	13	50		TWT	AM		WA	200
96	QKW1013	1308M	400	1.215G-1.400G	80m	12000	2.5	50		TWT	AM		CO	25
97	VTL5341K1	1320M	5.0k	1.250G-1.400G	60m	10500	2.0 Ø	47		TWT§	AM			23
98	VTL5245A1	1325M	5.0kΔ†	1.200G-1.450G	40m	10000 Ø	2.0	50		TWT	AM			20
99	VTL5345A1	1325M	5.0kΔ†	1.200G-1.450G	40m	10000 Ø	2.0	50		TWT	AM			20
100	VTL5245A2	1325M	10kΔ†	1.200G-1.450G	10m	13000 Ø	3.5	50		TWT	AM			25
101	VTL5345A2	1325M	10kΔ†	1.200G-1.450G	10m	13000 Ø	3.5	50		TWT	AM			25
102	L5585	1350M	1.0k	700M-2000M	20m	7600	1.8	30		TWT§	AM		CO	11
103	L5585-50	1350M	1.0k	700M-2000M	10m	8000	1.8	30		TWT§	AM		CO	10
104	VTL5240H1	1350M	5.0kΔ†	1.200G - 1.500G	30m	10500 Ø	7.0 Ø	50†		TWT§	AM		CO	20
105	VTL5241A1	1350M	5.0kΔ†	1.250G - 1.450G	2.0m	11000	3.5	33†		TWT§	AM		CO	10 Δ
106	VTL5341H1	1350M	5.0kΔ†	1.200G - 1.500G	30m	10500 Ø	2.0 Ø	50†		TWT§	AM		CO	20
107	QKW1815	1350M	7.0k	1.250G-1.450G	34m	43000	16	45		TWT	AM		WA	260
108	VTL5741A1	1400M	30k†Δ	1.200G - 1.600G	5.0m	25000 Ø	8.0 Ø	37†		TWT§#	AM		CO	90
109	F4123A	1500M	40m†	1.000G-2.000G	CW	250	2.0mØ	35†	9.0	TWT	AM		CO	2.20
110	VTL6040H1	1500M	1.0 †	1.000G - 2.000G	CW	650	30m	50†		TWT§*	AM		CO	1.63

SYMBOLS AND CODES EXPLAINED IN INTERPRETER

2. SOURCE,AMPLIFIER,OUTPUT TUBES

IN ORDER OF (1)TUBE TYPE (2)CENTER FREQUENCY (3)POWER OUTPUT (4)TYPE No.

LINE No.	[4] TYPE No.	[2] CENTER FREQ. (Hz)	[3] POWER OUTPUT (W)	FREQUENCY RANGE (Hz)	MAX. DUTY CYCLE	MAX. BEAM VOLTAGE (Note 1) (V)	MAX. CATH-ODE CUR. (A)	GAIN (dB)	NF (dB)	DESCRIPTION [1] TUBE TYPE	FUNC-TION	TUN-ING	OUT PUT	WEIGHT (lb)
1	VZL6040C1	1500M	2.0	1.000G-2.000G		115 △§				TWT	AM			
2	VZL6040D1	1500M	2.0	1.000G-2.000G		28 ☑§				TWT	AM			
3	VZL6948F1	1500M	2.0	1.000G-2.000G	CW	230 §†△		35	30*	TWT	AM		CO	55 △
4	417HD	1500M	10 †	1.00G-2.00G	CW	1850	110m	30	35*	TWT§	AM		CO	7.0 △
5	1177H09	1500M	10	1.000G-2.000G	CW	120 §*△		30†	35*	TWT	AM		CO	20 △
6	L5573	1500M	10	1.000G-2.000G	CW	1500	120m	35		TWT§	AM		CO	3.0
7	L5573-02	1.5G	10 †	1.0G-2.0G	CW	-1275	90m	30†		TWT§§	AM		WA	3.5
8	418H	1500M	20 †	1.000G-2.000G	CW	1700 Ø	150mØ	30		TWT§	AM	FF	CO	6.0
9	L5560	1500M	20	1.00G-2.00G	CW	1500	160m	35	35	TWT§	AM		CO	3.5
10	L5560-02	1.5G	20 †	1.0G-2.0G	CW	-1400	135m	33†		TWT§§	AM		WA	3.5
11	VTL6140A1	1500M	20 †	1.000G - 2.000G	CW	1550	100m	35†	30	TWT§	AM		CO	6.5
12	VTL6140B1	1500M	20 †	1.000G - 2.000G	CW	1550	100m	35†	30	TWT§	AM		CO	5.3
13	VZL6941E1	1500M	20	1.000G-2.000G		115 △§				TWT	AM			
14	VZL6941F1	1500M	20	1.000G-2.000G	CW	230 §†△		35	35*	TWT	AM		CO	55 △
15	VZL6941G1	1500M	20	1.000G-2.000G	CW	230 §†△		35		TWT	AM		CO	
16	VZV6946A1	1500M	20	1.000G-2.000G	CW	115 ☑§		35		TWT	AM		CO	
17	VTL6240A1	1500M	100 †	1.000G - 2.000G	CW	2900	290m	30†	35	TWT§	AM			7.75
18	VTL6240C1	1500M	100 †	1.000G - 2.000G	CW	2900	290m	30†	35	TWT§	AM			9.5
19	VTL6240F1	1500M	100 †	1.000G-2.000G	CW	3000 Ø	330m§	30		TWT§	AM			16
20	VZL6942E1	1500M	100	1.000G-2.000G		115 △§				TWT	AM			
21	VZL6942G1	1500M	100	1.000G-2.000G	CW	230 §†△		30		TWT	AM		CO	
22	VZV6947A1	1500M	100	1.000G-2.000G	CW	230 §†△		30		TWT	AM		CO	
23	VTL6242C1	1500M	200	1.000G-2.000G		3600	470m	30		TWT§	AM		CO	14
24	VTL6242F1	1500M	200 †	1.000G-2.000G	CW	3500 Ø	450m§	30		TWT§	AM			16
25	VZL6943G1	1500M	200	1.000G-2.000G	CW	230 §†△		30		TWT	AM		CO	
26	VZV6948A1	1500M	200	1.000G-2.000G	CW	230 §†△		30		TWT	AM		CO	
27	VZV6949B1P	1500M	910	1.000G-2.000G	CW	230 §†△		30		TWT	AM		CO	
28	TH3518	1525M	9.5 †	1.350G-1.700G	CW	1200	50mØ	28†	20	TWT	AM		CO	1.8
29	291H#1	1550M	7.0	1.500G-1.600G	CW	2630	14m	23		TWT	AM		CO	
30	291H#2	1550M	26	1.500G-1.600G	CW	2630	27m	33		TWT	AM		CO	
31	291H#3	1550M	60	1.500G-1.600G	CW	2630	57m	47		TWT	AM		CO	
32	QKW1750	1580M	1250	1.00G-2.50G	CW	6800	1.4	30		TWT	AM		CO	35
33	TOP1294	1600M	200 †	1.000G-2.200G	CW	4300	320 Ø	30†	30	TWT	AM		CO	11.02
34	L2063-50	1750M	5.0 †	1.000G-2.500G	CW	1200 Ø	75mØ	33†		TWT§*	AM		CO	4.0
35	414H	1750M	12	1.500G-2.000G	CW	1200 Ø	50mØ	28		TWT§	AM		CO	1.37
36	L2055	1750M	2.0k	1.000G-2.500G	CW	6100 Ø	1.45	26		TWT	AM		CO	33 *
37	LD837	1775M	21	1.700G - 1.850G	CW	3000	55m	32		TWT§	AM		CO	11
38	LD4067A	1800M	140	1.700G-1.900G	CW	3400	300m	35		TWT§	AM		CO	13.22 *
39	VTL6640A1	1800M	12.5k	1.750G - 1.850G	CW	20000	4.7	39†	45	TWTØ#	AM		CC	175
40	L5620-50	1850M	2.0k	1.800G-1.900G	100m	7200	1.5	35		TWT	AM		CO	6.5
41	419H	1900M	20	1.400G-2.400G	CW	1750	110m	30	35*	TWT§	AM		CO	3.0 △
42	VA664A	1925M	13k	1.750G - 2.120G	CW	19500	4.9	45		TWTØ	AM			175
43	UV1005	1997M		1515-2479M				25	10	TWT			CO	.84
44	VTS2600A2	2000M	10 †	1.7G-2.3G	CW	2600	50m	40†		TWT§	AM		WA	3.0 §
45	VYS2603A1	2000M	10	1.70G-2.30G	CW	2000	65m	30†	24	TWT§	AM		CO	11
46	VTS2600A1	2000M	15 †	1.7G-2.3G	CW	3000	45m	26		TWT	AM		WA	3.0 §
47	QKW1901	2000M	18	1.700G-2.300G	CW	2250	700m☑	28		TWT§	AM		CO	6.5
48	TWS10/7642	2000M	18	1.700G-2.300G	CW	2300	75m	30†	28	TWT§	AM		CO	6.75 *
49	TWS36	2000M	18	1.700G-2.300G	CW	2300	75m	30†	28	TWT§	AM		CO	7.0 *
50	VTS2602B2	2000M	18	1.7G-2.3G	CW	2400	65m	34	29	TWT§	AM		CO	7.6 *
51	RW2	2000M	20	1.700G-2.300G	CW	1900	100m	40	26	TWT§	AM		CO	27 *
52	YH1000	2000M	22 †	1.700G-2.300G	CW	1200	80m	45†	28	TWTØ	AM		CO	17.6
53	VTS2602A1	2000M	23	1.70G-2.30G	CW	2000	65m	39.5	23	TWT	AM		CO	7.6
54	VYS2602A1	2000M	23	1.70G-2.30G	CW	2000	65m	39.5	23	TWT§	AM		CO	7.6
55	LD821	2000M	25	1.700G - 2.300G	CW	2400	65m	39	29	TWT§	AM		CO	
56	LD824	2000M	25	1.700G - 2.300G	CW	2400	65m	39	29	TWT§	AM		CO	
57	LD853	2000M	27	1.700G - 2.300G	CW	2900	65m	35	24	TWT§	AM		CO	
58	YH1150	2000M	1.15k†	1.700G-2.300G	CW	10000	1.25	25†	35*	TWT	AM		CO	24.3
59	412H	2050M	7.0	1.700G-2.400G	CW	900	45m	33		TWT	AM		CO	
60	VTL6140B2	2050M	20 †	1.700G-2.400G	CW	1650	120m	30†	35*	TWT§	AM		CO	5.0
61	278H	2072M	26	2.025G-2.120G	CW	2750	49m	43		TWT§	AM		CO	5.0
62	1266H	2072M	26	2.025G-2.120G	CW	28 Ø§		43	32	TWT	AM		CO	7.5
63	TL4	2075M	12	1.650G - 2.500G	CW	1300	70m	30		TWTØ	AM		CO	.508
64	8281H	2150M	300	18.00G-26.50G	CW	4675	167m	40		TWT§	AM		CO	18.5
65	F4017D	2200M	8.0 †	1.700G-2.700G	CW	1700	45mØ	30†	25	TWT	AM		CO	3.74
66	QKW1922	2200M	17	1.700G-2.700G	CW	2250	70m	29		TWT	AM		CO	6.5
67	TWS12	2225M	20	1.750G-2.700G	CW	2400	75m	33†	28	TWT§	AM		CO	6.75 *
68	242H	2250M	10	2.200G-2.300G	CW	1285	37.5m	24		TWT	AM		CO	1.25
69	1190H	2250M	10 †	2.200G-2.300G	CW	32 §Ø		30		TWT	AM		CO	8.5 △
70	1226H	2250M	20	2.200G-2.300G	CW	65 §Ø		27		TWT	AM		CO	7.0
71	VTS6353A1	2250M	500 †	1.500G-3.000G	CW	6000 Ø	800m§	30		TWT§	AM			12
72	L5671-50	2250M	22k	2.100G-2.400G	3.0m	20000	5.4	54		TWT§	AM		CO	30 △
73	214H	2300M	8.0	2.200G - 2.400G	CW	930	40m	27		TWT§	AM		CO	1.0
74	283H	2400M	100	2.200G-2.600G	CW	3300	99m	40		TWT	AM		CO	4.2
75	VTS6250H2	2400M	100	1.600G-3.200G		2700	300m	40		TWT§	AM		CO	7.0
76	TH3560	2450M	5.0k△	2.350G-2.550G	CW	11000		33		TWT	AM			
77	TH3594	2.45G	10k	2.3-2.6G	.03	15k	3.5	37		TWT	AM	FF	CO	9.0
78	VTG6020A1	2500M	1.0 †	1.000G - 4.000G	CW	670 Ø	40mØ	30†		TWT§*	AM		CO	1.13
79	VZG6020C1	2500M	1.0	1.000G-4.000G		115 ☑§				TWT	AM			
80	VZG6020D1	2500M	1.0	1.000G-4.000G		28 Ø§				TWT	AM			
81	VZG6949F1	2500M	1.0	1.000G-4.000G	CW	230 §†△		30	30*	TWT	AM		CO	55 △
82	VZG6949G1	2500M	1.0	1.000G-4.000G	CW	230 §†△		30		TWT	AM		CO	
83	VZV6921D1	2500M	1.0	1.000G-4.000G	CW	28 Ø§		30		TWT	AM		CO	
84	L5584	2500M	3.0k	2.400G-2.600G	40m	8000	1.7	30		TWT§	AM		CO	6.0
85	L5604	2500M	5.0k	2.400G-2.600G	22m	10500	2.4	33		TWT§	AM		CO	6.0
86	VYS2604A1	2550M	10	2.40G-2.70G	CW	2000	65m	40	23	TWT§	AM		CO	11
87▼	CGB252710-01	2.59G	38.5	2.48G-2.70G		15 §Ø	7.0	40.8	10	TWT☑	AM		CO	16.9
88	RW21	2600M	20	2.400G-2.800G	CW	1900	100m	40	25	TWT§	AM		CO	27 *
89	297H	2600M	50	2.500G-2.700G	CW	2400	62m	40		TWT	AM		CO	4.2
90	1272H	2600M	50	2.500G-2.700G	CW	28 §Ø		46		TWT	AM		CO	
91	L2086-50	2700M	500 †	1.800G-3.600G	CW	5700 Ø	600mØ	30†		TWT§*	AM		CO	10
92	VTS4407P3	2800M	3.0m	2.700G-2.900G				25	4.5	TWT§	AML		CO	15
93	F2107	2850M	1.8k†	2.6G-3.1G	6.0m	7700	2.0	35.5†		TWT§	AM		CO	6.25
94	L5600-50	2850M	10k	2.700G-3.000G	25m	14500	3.0	43		TWT§	AM		CO	15
95	VTS4450P2	2900M		2.700G-3.100G				23	5.0	TWT§	AML		CO	11
96	VTS4407P1	2900M	3.0m	2.700G-3.100G				23	5.0	TWT§	AML		CO	15
97	VTS4413P3	2900M	16m	2.70G-3.10G		115 §△☑		28	5.1	TWT§	AML		CO	7.5
98	PT1120	2.90G	1.0k	2.70G-3.20G	10m	75k	40	30		TWTØ#	AM	MT	WA	176
99	VTS5352B1	2900M	2.0k†	2.700G-3.100G	10m	9500	1.8	40†		TWT§*	AM		CO	10
100	VTS5352H1	2900M	2.0k†△	2.700G - 3.100G	10m	8500 Ø	1.4 Ø	60†		TWT§	AM		CO	12
101	VTS5355A1	2900M	2.0k	2.700G-3.100G	10m	8500 Ø	1.7 Ø	40		TWT§*	AM			10
102	VTS5250A1	2900M	3.0k†△	2.700G - 3.100G	20m	10000	2.2	44		TWT§#	AM		CO	11 △
103	VTS5253A2	2900M	3.0k	2.7G-3.1G	5.0m	9000	1.6	40		TWT	AM		CO	10
104	VTS5255A1	2900M	3.0k	2.700G-3.100G	30m	9500 Ø	2.0 Ø	37		TWT§#	AM			10
105	VTS5255A2	2900M	3.0k	2.700G-3.100G	30m	9500 Ø	2.0 Ø	37		TWT§	AM			10
106	VTS5252A1	2900M	5.0k△†	2.700G - 3.100G	10m	12500	3.5	37†		TWT§	AM		CO	10
107	VTS5351A1	2900M	5.0k△†	2.700G - 3.100G	5.0m	13000 Ø	2.5 Ø	37†		TWT§	AM		CO	10
108	VTS5355A2	2900M	5.0k	2.700G-3.100G	5.0m	13000 Ø	2.7 Ø	37		TWT§$	AM			10
109	VTS5555A3	2900M	8.0k	2.700G-3.100G	20m	15000 Ø	3.4 Ø	40		TWT§*	AM			20
110	VTS5255A3	2900M	10k	2.700G-3.100G	20m	15000 Ø	3.3 Ø	33		TWT§§#	AM			11

SYMBOLS AND CODES EXPLAINED IN INTERPRETER

2. SOURCE,AMPLIFIER,OUTPUT TUBES

IN ORDER OF (1)TUBE TYPE (2)CENTER FREQUENCY (3)POWER OUTPUT (4)TYPE No.

LINE No.	4 TYPE No.	2 CENTER FREQ. (Hz)	3 POWER OUTPUT (W)	FREQUENCY RANGE (Hz)	MAX. DUTY CYCLE	MAX. BEAM VOLTAGE (Note 1) (V)	MAX. CATH-ODE CUR. (A)	GAIN (dB)	NF (dB)	DESCRIPTION 1 TUBE TYPE	FUNC-TION	TUN-ING	OUT PUT	WEIGHT (lb)
1	589H	2900M	125k	2.700G-3.100G	25m	45000	17	50		TWT	AM		WA	205
2	QKW1903	2925M	20m	2.000G-3.850G	CW	400	4.0m	35		TWT	AM		CO	2.0
3	QKW1904	2925M	1.0	2.000G-3.850G	CW	1000	34m	37		TWT	AM		CO	3.0
4	LY61	2950M	2.0k	2.800G-3.100G	10m	12000	1.5	53	35	TWT§	AM		CO	25 *
5	LY71	2950M	10k	2.7-3.2G	.04	16.7k	3.5	46	35	TWT	AM	BB	CO	19
6	TOP1304B	2950M	240k†	2.850G-31.50G	12.5m	10000	2.4	33		TWTØ	AM		WA	77
7	TWS7	2975M	3.0 †	2.700G-3.250G	CW	2400	22mØ	20†	23*	TWTØ	AM		CO	44 *
8	TV9140	2975M	6.0k	2.800G-3.150G	2.0m	14500	3.0	33		TWT§	AM		WA	
9	VTS4451H1	3000M		2.000G-4.000G		115 ☑△§		35	15	TWT§	AML		CO	8.0
10	VTS4451P1	3000M		2.000G-4.000G				20	15	TWT§	AML		CO	8.0
11	F4129	3000M	1.5m†	2.900G-3.100G	CW	450		30†	6.0	TWT†	AM		CO	16.09
12	VTS4407P2	3000M	3.0m	2.900G-3.100G				25	4.5	TWT§	AML		CO	15
13	VTS4407P6	3000M	3.0m	2.700G-3.300G				23	5.5	TWT§	AML		CO	15
14	VTS4413P5	3000M	5.0m†	2.9G-3.1G	CW	§		27†	5.5*	TWT§	AML		CO	8.0
15	VTS4413P1	3000M	6.0m†	2.0G-4.0G	CW	§		25†	8.0*	TWT§	AML		CO	8.0
16	QKW1925	3000M	10m	2.000G-4.000G	CW	500	1.0m	30		TWT	AM		CO	3.0
17	VTS4350P1	3000M	10m	2.000G-4.000G		115 §△☑		27	7.8	TWT§	AML		CO	5.0
18	VTS4350P3	3000M	10m	2.000G-4.000G		115 §△☑		38	7.8	TWT§	AML		CO	5.0
19	VTS4413P2	3000M	25m	2.00G-4.00G		115 §△☑		29	8.0	TWT§	AML		CO	7.5
20	VTS4351H1	3000M	100m	2.000G-4.000G		115 ☑△§		35	15	TWT§	AML		CO	5.0
21	L2379	3000M	1.0	2.00G-4.00G	CW	1000	25m	30	27	TWT§	AM		CO	3.0
22	QKW1915	3000M	1.0	2.000G-4.000G	CW	1000	34m	35		TWT	AM		CO	3.0
23	QKW1917	3000M	1.0	2.000G-4.000G	CW	1000	4.0mØ	35		TWT§	AM		CO	3.0
24	543H	3000M	1.5	2.900G-3.100G	CW	500	27m	38		TWT§	AM		CO	1.56
25	L3971-51	3.0G	2.0 †	2.0G-4.0G	CW	-850	30m	50†		TWT§*	AM		CO	1.75
26	L5007	3000M	2.0 †	2.000G - 4.000G	CW	1000	40m	36†		TWT*§	AM		CO	1.05
27	L5007-00	3.0G	2.0 †	2.0G-4.0G	CW	-900	30m	36†		TWT§*	AM		CO	1.5
28	VTS6050A2	3000M	2.0 †	2.000G - 4.000G	CW	1100 Ø	40m	30†		TWT§*	AM		CO	1.13
29	VZS6050C1	3000M	2.0	2.000G-4.000G		115 ☑§				TWT	AM			
30	VZS6050D1	3000M	2.0	2.000G-4.000G		28 Ø§				TWT	AM			
31	VZS6958F1	3000M	2.0	2.000G-4.000G	CW	230 §†△		30	30*	TWT	AM		CO	55 △
32	VZV6952D1	3000M	2.0	2.000G-4.000G	CW	28 Ø§		30		TWT	AM		CO	
33	VTS6050H5	3000M	5.0 †	2.000G - 4.000G	CW	1100 Ø	60mØ	50†		TWT§*	AM		CO	1.13
34	VZS6050C2	3000M	5.0	2.000G-4.000G		115 ☑§				TWT	AM			
35	VZS6050D2	3000M	5.0	2.000G-4.000G		28 Ø§				TWT	AM			
36	VZS6958F3	3000M	5.0	2.000G-4.000G	CW	230 §†△		50	30*	TWT	AM		CO	55 △
37	VZV6954D2	3000M	5.0	2.000G-4.000G	CW	28 Ø§		50		TWT	AM		CO	
38	1233H	3000M	8.0 †	2.00G-4.00G	CW	115 §☑		35†	35*	TWT§	AM		CO	18.5 ☑
39	TOP1289	3000M	8.0 †	2.000G-4.000G	CW	1900	50mØ	35†	26	TWT	AM		CO	1.54
40	564HD	3000M	10 †	2.000G-4.000G	CW	1600	80m	30	35*	TWT§	AM		CO	3.0 △
41	1177H01	3000M	10	2.000G-4.000G	CW	120 §*△		30†	35*	TWT	AM		CO	20 △
42	L5010	3000M	10 †	2.000G - 4.000G	CW	1750	100m	33†		TWT*§	AM		CO	2.05
43	L5010-01	3.0G	10 †	2.0G-4.0G	CW	-1.6k	80m	33†		TWT§	AM		CO	2.5
44	L5574	3000M	10	2.000G-4.000G	CW	2200	90m	35		TWT§	AM		CO	3.0
45	L5574-02	3.0G	10 †	2.0G-4.0G	CW	-1950	80m	33†		TWT§$	AM		WA	3.0
46	VTS6055A1	3000M	10 †	2.000G-4.000G	CW	1750 Ø	85mØ	30†	30*	TWT§*	AM		CO	2.0
47	VZS6950E2	3000M	10	2.000G-4.000G		115 △§				TWT	AM			
48	VZS6950F1	3000M	10	2.000G-4.000G	CW	230 §†△		35	30*	TWT	AM		CO	55 △
49	VZS6950G1	3000M	10	2.000G-4.000G	CW	230 §†△		35		TWT	AM		CO	
50	568H	3000M	20 †	2.000G-4.000G	CW	2050	120m	30		TWT§	AM		CO	3.0 △
51	L5561	3000M	20	2.00G-4.00G	CW	2000	110m	35	35	TWT§	AM		CO	3.0
52	L5561-02	3.0G	20 †	2.0G-4.0G	CW	-2000	110m	36†		TWT§$	AM		WA	3.0
53	VTS6150A1	3000M	20 †	2.000G - 4.000G	CW	1800	120m	35†	35	TWT§	AM		CO	3.0
54	VTS6150B1	3000M	20 †	2.000G - 4.000G	CW	1800	120m	35†	35	TWT§	AM		CO	3.0
55	VTS6150H1	3000M	20 †	2.000G - 4.000G	CW	1800	120m	54†	35	TWT§	AM		CO	3.5
56	VTS6150J1	3000M	20 †	2.000G - 4.000G	CW	1800	120m	54†	35	TWT§	AM		CO	3.5
57	VZS6951E1	3000M	20	2.000G-4.000G		115 △§				TWT	AM			
58	VZS6951F1	3000M	20	2.000G-4.000G	CW	230 §†△		35	35*	TWT	AM		CO	55 △
59	VZS6951F2	3000M	20	2.000G-4.000G	CW	230 §†△		54	35*	TWT	AM		CO	55 △
60	VZS6951G1	3000M	20	2.000G-4.000G	CW	230 §†△		35		TWT	AM		CO	
61	VZS6951G2	3000M	20	2.000G-4.000G	CW	230 §†△		54		TWT	AM		CO	
62	VZV6956A1	3000M	20	2.000G-4.000G	CW	115 ☑§		35		TWT	AM		CO	
63	VZV6956A2	3000M	20	2.000G-4.000G	CW	115 ☑§		54		TWT	AM		CO	
64▼	CGB204001-14	3.0G	28	2.0G-4.0G		15 §Ø	1.8	30	10	TWT☑	AM		CO	2.20
65	TH9121A	3000M	30 †	2.700G-3.300G	10m	2300	160m	30†		TWTØ	AM		CO	
66▼	CGB204002-02	3.0G	31	2.0G-4.0G		15 §Ø	3.6	34	10	TWT☑	AM		CO	2.86
67	VTS5150A1	3000M	100 †△	2.000G - 4.000G	20m	4700 Ø	1.0 Ø	36†		TWT§	AM		CO	7.5
68	VTS6250A1	3000M	100 †	2.000G - 4.000G	CW	3100	300m	30†	35	TWT§	AM			6.0
69	VTS6250C1	3000M	100 †	2.000G - 4.000G	CW	3100	300m	30†	35	TWT§	AM			6.0
70	VTS6250F1	3000M	100 †	2.000G-4.000G	CW	3000 Ø	320m§	40		TWT§	AM			6.0
71	VTS6250H1	3000M	100 †	2.000G - 4.000G	CW	3100	300m	50†	40	TWT§	AM			6.5
72	VTS6250J1	3000M	100 †	2.000G - 4.000G	CW	3100	300m	50†	40	TWT§	AM			6.5
73	VZS6952E1	3000M	100	2.000G-4.000G		115 △§				TWT	AM			
74	VZS6952G1	3000M	100	2.000G-4.000G	CW	230 §†△		40		TWT	AM		CO	
75	VZV6957A1	3000M	100	2.000G-4.000G	CW	230 §†△		40		TWT	AM		CO	
76	VTS6250A3	3000M	200	2.000G-4.000G		3200	390m	30		TWT§	AM		CO	7.0
77	VTS6252C1	3000M	200	2.000G-4.000G		3200	410m	35		TWT§	AM		CO	7.0
78	VTS6252F1	3000M	200 †	2.000G-4.000G	CW	3800 Ø	420m§	37		TWT§	AM			7.0
79	VZS6953G1	3000M	200	2.000G-4.000G	CW	230 §†△		37		TWT	AM		CO	
80	VZS6958G1	3000M	200	2.000G-4.000G	CW	230 §†△		37		TWT	AM		CO	
81	VZV6958A1	3000M	200	2.000G-4.000G	CW	230 §†△		37		TWT	AM		CO	
82	551H	3000M	1.0k†	2.000G - 4.000G	CW	8000	1.5 Ø	30		TWTØ#	AM		WA	22 *
83	2108	3000M	1.0k†	2.000G-4.000G	40m	8000	1.8	35†		TWT§	AM		CO	7.5
84	7640	3000M	1.0k†	2.000G - 4.000G	10m	8000	2.0	30		TWT§	AM		CO	17.5
85	JAN7640	3000M	1.0k△	2.900G - 3.100G	6.0m	8000	2.0	33†		TWT§	AM		CO	17.5 △
86	F2125	3000M	1.0k†	2.000G-4.000G	10m	7800	1.59	30†		TWT§	AM		CO	11.0
87	F2153	3000M	1.0k	2.000G-4.000G	40m	8000	1.8	35		TWT§	AM		CO	8.0
88	F2213	3.0G	1000	2-4G	.03	8000	2.1	35†	35	TWT§	AM		CO	7.5
89	F2577	3000M	1.0k	2.000G - 4.000G	25m	9000	1.8	35†		TWT§*	AM		CO	8.5
90	F2578	3000M	1.0k	2.000G-4.000G	50m	8000	1.8	35†		TWT§*	AM		CO	6.0
91	L2098-50	3000M	1.0k†	2.000G-4.000G	CW	7000 Ø	950mØ	33†		TWT§*	AM		CO	16
92	L5283	3000M	1.0k	2.000G-4.000G	10m	9000	2.1	50		TWT§	AM		CO	7.5
93	L5336	3000M	1.0k	2.000G-4.000G	20m	9000	2.1	35		TWT§	AM		CO	6.0
94	VZV6959B1P	3000M	1.06k	2.000G-4.000G	CW	230 §†△		32		TWT	AM		CO	
95	555H	3000M	1.25k†	2.000G-4.000G	60m	7800 Ø	1.8 Ø	33		TWT§	AM		CO	10
96	L5550	3000M	1.25k	2.80G-3.20G	20m	7000	1.5	65	40	TWT§	AM		CO	7.0
97	8128	3000M	1.26k	2.900G-3.100G	21m	37000	14	20		TWT	AM		WA	28
98	QKW750C	3000M	1.26k	2.800G-3.200G	21m	37000	14	20		TWT	AM		WA	28
99	570H	3000M	1.5k	2.000G-4.000G	40m	9600	2.5	30		TWT§	AM		CO	11
100	VTS5152A1	3000M	1.5k△†	2.500G - 3.500G	20m	8000 Ø	1.8 Ø	35†		TWT§	AM		CO	7.5
101	F2120	3000M	1.6k†	2.900G-3.100G	20m	7800	1.59	33†		TWT§	AM		CO	11
102	1160H	3000M	2.5k	2.900G-3.100G	2.5m	115 §☑		70		TWT	AM		CO	28
103	F2128	3000M	2.8k	2.900G-3.100G	30m	9500	2.1	36†		TWT§	AM		CO	9.0
104	544H	3000M	3.0k	2.900G-3.100G	10m	8000	1.8	30		TWT§	AM		CO	8.0
105	JAN8742	3000M	4.0k†	2.900G-3.100G	30m	9500	2.1	37†		TWT§#	AM		WA	11 △
106	JANDOD039	3000M	4.0k†	2.90G-3.10G	30m	9500	2.1			TWT§#	AM		WA	11 △
107	F2124	3000M	4.0k	2.900G-3.100G	30m	10000	2.2	39		TWT§	AM		CO	9.0
108	TH3551	3000M	6.0k△	2.900G-3.100G				47		TWT	AM			
109	L5512	3000M	120k	2.900G-3.100G	50m	40000	18	48		TWT§	AM		WA	185
110	L5512-50	3000M	120k	2.900G-3.100G	50m	42000 Ø	17.5	50		TWT§*	AM		CC	185

SYMBOLS AND CODES EXPLAINED IN INTERPRETER

2. SOURCE,AMPLIFIER,OUTPUT TUBES

IN ORDER OF (1)TUBE TYPE (2)CENTER FREQUENCY (3)POWER OUTPUT (4)TYPE No.

LINE No.	4 TYPE No.	2 CENTER FREQ. (Hz)	3 POWER OUTPUT (W)	FREQUENCY RANGE (Hz)	MAX. DUTY CYCLE	MAX. BEAM VOLTAGE (Note 1) (V)	MAX. CATH-ODE CUR. (A)	GAIN (dB)	NF (dB)	DESCRIPTION 1 TUBE TYPE	FUNC-TION	TUN-ING	OUT PUT	WEIGHT (lb)
1	VTS5754A1	3000M	125k	2.900G-3.100G	60m	32000 Ø	16 Ø	47		TWT§#*	AM		CC	125
2	TWS17	3050M	5.0m	2.000G-4.100G	CW	700	800u	35†	11*	TWT§	AM		CO	5.0
3	UV78	3050M	0.5	2500-3600M				27	30	TWT			CO	3.97
4	2153	3050M	1.25k	2.100G-4.000G	40m	7500	1.8	30	40	TWT§	AM		CO	7.5
5	JAN8880	3075M	10m	2.100G-4.050G		100	50m§	10†	20*	TWT†			WA	4.5
6	L5605-50	3075M	11k	2.900G-3.250G	30m	15750	3.7	43		TWT	AM		CO	15
7	UV1004	3104.5M		2459-3750M				25	10	TWT			CO	.99
8	UV1010	3105M	0.6	2460-3750M				28	30	TWT			CO	3.97
9	8232	3150M	5.0k	2.700G - 3.600G	3.0m	15000	4.0	25†		TWT§	AM	VT	CO	13.2
10	VTS5350A1	3150M	5.0k†Δ	2.800G-3.500G	3.0m	14500 Ø	3.0 Ø	30†		TWT§	AM		CO	15
11	TH3538	3150M	6.0k†	2.850G-3.450G	30m	12000	2.6	47		TWT§	AM		CO	9.9
12	VTS5251A1	3150M	7.0kΔ†	2.800G - 3.500G	25m	14000 Ø	3.5 Ø	30†		TWT#Ø	AM		CO	75 *
13	VTS4451P2	3170M	120m	2.050G-4.300G				30	17	TWT§	AML		CO	8.0
14	W10/3E	3200M	3.0m*	2.700G-3.300G	CW	550	400u	20†	6.8	TWTØ	AML		WC	.137
15	TOP1293	3200M	320 †	2.900G-3.500G	33m	5000	600m	43†		TWT§	AM		CO	
16	LY70	3.2G	10k†	2.7-3.7G	.025			46*		TWT	AM		CO	66
17	VTS5650A1	3200M	100kΔ	2.85G-3.35G	50m	40000	18	40		TWTØ	AM		NA	60 Δ
18	560H	3200M	250k	3.100G-3.300G	20m	53000	21m	53		TWT§	AM			180
19	F4024B	3225M	40m†	2.150G-4.300G	CW	650	10mØ	35†	10	TWT	AM		CO	2.20
20	564HDS	3250M	20	2.500G-4.000G	CW	1500	110m	30	35*	TWT§	AM		CO	3.0 Δ
21	8502H	3250M	1.5k	2.5G-4.0G	CW	95k	600m	40		TWT§§	AM		CO	17
22	L5366-50	3.25G	3.0k†	3.0G-3.5G	30m	-8.5k	1.5	63†		TWT§*	AM		CO	8.0
23	VTS4450P7	3300M		3.100G-3.500G				25	5.0	TWT§	AML		CO	11
24	W9/3E	3300M	100u*	2.500G - 4.100G	CW	230	125u	11†	18*	TWTØ	LIM		CO	
25	VTS4407P4	3300M	3.0m	3.100G-3.500G				25	5.0	TWT§	AML		CO	15
26	W9/2E	3300M	10m	2.500G - 4.100G	CW	450	400u	38†	7.5	TWTØ	AML		CO	.12
27	TWS6	3300M	500m†	2.500G-4.100G	CW	2400	15m	20†	25*	TWTØ	AM		CO	44 *
28	F2246	3.3G	1000	2.0-4.6G	.04	8000	2.1	35†	35	TWT§	AM		CO	7.5
29	TL3400	3300M	1.3k	3.000G-3.600G	CW	13000	700m	28		TWT§	AM		WA	44.1
30	VTS5355B2	3300M	5.0k	3.100G-3.500G	5.0m	13000 Ø	2.7 Ø	37		TWT§*	AM			10
31	VA645G	3300M	9.0k	3.100G - 3.500G	20m	13500 Ø	3.3 Ø	33		TWTØ#	AM		CO	
32	VTS5252C2	3300M	10k†	3.10G-3.50G	10m	15500	4.0	33†		TWT#§	AM		CO	11
33	VTS5255B3	3300M	10k	3.100G-3.500G	20m	16000 Ø	3.3 Ø	33		TWT§§#	AM			11
34	VTS5353A1	3300M	10k	3.100G-3.500G	20m	15500	3.1 Ø	40		TWT§	AM			25
35	VTS5555B3	3300M	10k	3.100G-3.500G	20m	15000 Ø	3.4 Ø	40		TWT§*#	AM			20
36	L5590	3300M	11k	3.100G-3.500G	15m	15500	2.85	40		TWT§	AM		CO	12
37	L5590-50	3300M	11k	3.100G-3.500G	15m	15700	3.2	40		TWT§	AM		CO	10
38	VTS5751A1	3300M	100k	3.100G-3.500G	10m	38000	17	40		TWT*#Ø	AM		WG	270 *
39	VTS5651A1	3300M	120k	3.100G-3.500G	50m	36000	13	48		TWT	AM			56 §
40	559H	3300M	125k	3.100G-3.500G	60m	43000	17	50†		TWT§#	AM		WA	170
41	VTS5753A1	3300M	125k	3.100G-3.500G	120m	32000 Ø	15 Ø	47		TWTØ#*	AM		CC	285
42	VTS5754G1	3300M	125k	3.100G-3.500G	60m	32000 Ø	16 Ø	47		TWT§#*	AM		CC	120
43	598H	3350M	250k	3.100G-3.600G	100m	52500	24	50		TWT	AM		WA	200
44	L5679-50	3450M	10k	3.200G-3.700G	25m	16000	3.75	47		TWT§	AM		CO	15
45	LY73	3450M	10k	3.2-3.7G	.025	16.7k	3.5	46	35	TWT	AM	BB	CO	19
46	8111	3500M	1.5k	3.350G - 3.650G	5.0m	7500	1.5	32		TWT§	AM			
47	LD4103	3600M	26	3.500G-3.620G	CW	3050	45m	49		TWT§	AM		WA	8.157 *
48	UV204	3650M	22	3400-3900M				20		TWT			WA	.66
49	UV7-1	3652.5M		3409-3896M				35	35	TWT			WA	.33
50	VA625L	3750M	150	3.500G - 4.000G	100m	3300	325m	43		TWT§	AM		CO	6.0
51	RW3	3800M	5.0	3.300G-4.300G	CW	1550	50m	35.5†	30	TWT§	AM		CO	47 *
52	TH3629	3.8G	16	3.4G-4.2G	CW	1.8	49m	42†	30	TWT	AM	FF	CO	1.75
53	YH1162	3800M	22	3.400G-4.200G	CW	2500	65m	39	26	TWT§	AM		CO	3.7
54	VTG2630A1	3870M	20	3.54G-4.20G	CW	3000	45m	40	22	TWT	AM	FF	WA	13.2
55	VYG2630A1	3870M	20	3.54G-4.20G	CW	3000	45m	40	22	TWT§	AM	FF	WA	13.2
56	LD4322	3875M	10	3.550G-4.200G	CW	3000	40m	38	24	TWT§	AM	BB	WA	8.8
57	UV13	3900M		3400-4400M				20	9.01	TWT			WA	.13
58	UV13-1	3900M		3400-4400M				20	9.01	TWT			WA	.121
59	UV14	3900M		3400-4400M				35	25	TWT			WA	5.51
60	UV205	3900M		3400-4400M				30	45	TWT			WA	.33
61	VTG4320P1	3900M	10m	2.600G-5.200G		115 ØΔ§		25	8.5	TWT§	AML		CO	5.0
62	VTG4320P2	3900M	10m	2.600G-5.200G		115 ØΔ§		40	9.5	TWT§	AML		CO	5.5
63	VTG4420P1	3900M	10m	2.600G-5.200G		115 ØΔ§		25	7.5	TWT§	AML		CO	7.5
64	L2369	3900M	100m	2.60G-5.20G	CW	700	5.0m	30	12	TWT§	AM		CO	2.0
65	VTG4321H1	3900M	100m	2.600G-5.200G		115 ØΔ§		35	15	TWT§	AML		CO	5.0
66	VTG4421H1	3900M	100m	2.600G-5.200G		115 ØΔ§		35	15	TWT§	AML		CO	8.0
67	L2370	3900M	1.0	2.60G-5.20G	CW	1300	25m	35	16	TWT§	AM		CO	2.5
68	L2387	3900M	2.0	2.600G-5.200G	CW	1200	30m	43		TWT§	AM		CO	2.0
69	L5597	3900M	2.0	2.600G-5.200G	CW	1200	50m	51		TWT§	AM		CO	2.0
70	VTG6025A1	3900M	2.0 †	2.600G-5.200G	CW	1300	60m	35†	30*	TWT§*	AM		CO	1.0
71	VTG6025A2	3900M	2.0 †	2.600G-5.200G	CW	1300 Ø	50m	35†	30*	TWT§*	AM		CO	1.0
72	VZG6025C1	3900M	2.0	2.600G-5.200G		115 Ø§				TWT	AM			
73	VZG6025D1	3900M	2.0	2.600G-5.200G		28 Ø§				TWT	AM			
74	VZG6958F4	3900M	2.0	2.600G-5.200G	CW	230 §†Δ		30	30*	TWT	AM		CO	55 Δ
75	VZV6922D1	3900M	2.0	2.600G-5.200G	CW	28 Ø§		35		TWT	AM		CO	
76	L5598	3900M	5.0	2.600G-5.200G	CW	1500	70m	55		TWT§	AM		CO	2.0
77	RW248	3.9G	5.0	3.6G-4.2G	100	5000	130m	45	25	TWT		BB	CO	4.0
78	4W70	3900M	5.5	3.600G-4.200G	CW	2000	21m	44	24	TWT§	AM		WA	5.5
79	LD4007	3900M	6.1	3600M-4200M	CW	2000	26m	47	23	TWT§	AM		CO	2.5
80	TL6	3900M	8.0	3.600G-4.200G	CW	1450	30mØ	30†	36	TWTØ	AM		WA	17.6
81	W7/3G	3900M	10	3.600G - 4.200G	CW	3000	43m	25†	27	TWT†	AM		WA	
82	W7MC/2R	3900M	10	3.600G-4.200G	CW	2500	38 Ø	40	22	TWT	AM		CO	2.2
83	W7MC/11C	3900M	10	3.600G-4.200G	CW	2500	39mØ	38	25	TWT	AM		CO	1.65
84	RW48	3900M	11	3.600G-4.200G	CW	2000	47m	39	22	TWT§	AM		CO	7.1 *
85	LD597A	3900M	14	3.600G - 4.200G	CW	3000	36m	33	25	TWT§	AM		WA	
86	YH1160	3900M	14	3.600G-4.200G	CW	2100	35m	36	25	TWT§	AM		CO	1.76
87	4W81	3900M	15	3.600G - 4.200G	CW	3000	38m	37	25	TWT§	AM		WA	
88	RW42	3900M	16	3.600G-4.200G	CW	2400	75m	39	20	TWT§	AM		WA	20 *
89	LD4417	3.9G	17	3.6-4.2G			50m	42		TWT§			CO	1.98
90	F2129	3900M	20 †	2.600G-5.200G	CW	2400	125m	35†	35*	TWT§	AM		CO	1.0
91	VTG2605A1	3900M	20	3.6G-4.2G	CW	3300	45m	40	26*	TWT§	AM		WA	13.2 *
92	VTG2605C4	3900M	20	3.6G-4.2G	CW	3300	45m	40	25	TWT§	AM		WA	13.2 *
93	VTG6126A1	3900M	20 †	2.600G-5.200G	CW	1900	115m	40		TWT	AM		CO	625m
94	LD4034	3900M	23	3600M-4200M	CW	3000	47m	46	22	TWT§	AM		WA	8.2
95	QKW1930	3900M	24	2.600G-5.200G	CW	2100	120m	40		TWT	AM		CO	1.0
96	LD4100	3900M	25	3.600G-4.200G	CW	3100	47m	47	23	TWT§	AM	BB	WA	8.2 *
97	W7/5GA	3900M	30 *	3.600G - 4.200G	CW	3000	100m	41†	31*	TWT§	AM		WA	20
98	4W82	3900M	36	3.600G-4.200G	CW	3600	75m	47	24	TWT§	AM	BB	WA	8.4
99	W7/6GZ	3900M	40 *	3.600G-4.200G	CW	2680	80m	41†	27	TWT§	AM		WA	24
100	VTG6230A1	3900M	200	2.600G-5.200G		4400	420m	33		TWT§	AM		CO	8.0
101	VTG6232F1	3900M	200 †	2.600G-5.200G	CW	4400 Ø	400m§	45		TWT§	AM			7.0
102	VZG6953G2	3900M	200	2.600G-5.200G	CW	230 §†Δ		45		TWT	AM		CO	
103	VZV6958A2	3900M	200	2.600G-5.200G	CW	230 §†Δ		45		TWT	AM		CO	
104	VTG6329A1	3900M	400 †	2.600G-5.200G	CW	6600 Ø	150m§	30		TWT§	AM			9.0
105	554H	3900M	1.0k†	2.600G-5.200G	40m	9000	2.0	30		TWT§	AM		CO	9.0
106	VTG5120F1	3900M	1.0kΔ†	2.600G-5.200G	20m	7700 Ø	1.5	50		TWT	AM			6.0
107	VZV6959B2P	3900M	2.4k	2.600G-5.200G	CW	230 §†Δ		37		TWT	AM		CO	
108	272H	3925M	1.7	3.700G-4.200G	CW	-1630	9.0m	35		TWT†	AM		CO	1.312
109	296H	3925M	5.0 †	3.700G-4.200G	CW	-1280	21m	55		TWT†	AM		CO	1.375
110	277H	3925M	5.5	3.700G-4.200G	CW	-1350	25m	55		TWT†	AM		CO	1.437

SYMBOLS AND CODES EXPLAINED IN INTERPRETER

2. SOURCE,AMPLIFIER,OUTPUT TUBES

IN ORDER OF (1)TUBE TYPE (2)CENTER FREQUENCY (3)POWER OUTPUT (4)TYPE No.

LINE No.	4 TYPE No.	2 CENTER FREQ. (Hz)	3 POWER OUTPUT (W)	FREQUENCY RANGE (Hz)	MAX. DUTY CYCLE	MAX. BEAM VOLTAGE (Note 1) (V)	MAX. CATH-ODE CUR. (A)	GAIN (dB)	NF (dB)	DESCRIPTION 1 TUBE TYPE	FUNC-TION	TUN-ING	OUT PUT	WEIGHT (lb)
1	271H	3925M	6.0	3.700G-4.200G	CW	-1550	26m	58		TWT†	AM		CO	1.75
2	VTS4413H1	3950M	10m	3.700G-4.200G				40	8.0	TWT§	AML		CO	7.5
3	244H	3950M	4.5	3.700G-4.200G	CW	1225 Ø	21m	54	29	TWT§	AM		CO	1.4
4	1243H	3950M	4.5 †	3.700G-4.200G	CW	-28 §Ø		56	30*	TWT	AM		CO	3.1
5♦	275H	3950M	5.0	3.700G-4.200G	CW	1300	10uΔ	55		TWT§	AM		CO	1.44
6	299H	3950M	5.0	3.700G-4.200G	CW	1500	25m	56		TWT	AM		CO	
7♦	1288H	3.95G	5.0	3.700G-4.200G	CW	36 †		53†	28*	TWT	AM		WA	3.75
8	230H	3950M	5.5	3.700G-4.200G	CW	1340 Ø	23.5m	55		TWT§	AM		CO	1.6
9	1264H	3950M	5.5	3.700G-4.200G	CW	40 §Ø		55	28*	TWT	AM		CO	3
10	8513H	3950M	5.5	3.700G-4.200G	CW	1220	24m	54		TWT	AM		CO	1.4
11	LD927	3950M	5.5	3.700G - 4.200G	CW	2000	20m	44	25	TWT§	AM		WA	6.6
12	8510H	3950M	7.5	3.700G-4.200G	CW	1400	30m	58		TWT	AM		CO	1.8
13	8520H	3.950G	8.2	3.700G-4.200G	CW	1420		55.0		TWT	AM		CO	2.1
14	249H	3950M	8.5	3.700G-4.200G	CW	1575	29m	57	28	TWT§	AM		CO	1.4
15	249HA	3950M	8.5	3.700G-4.200G	CW	1600	30m	57		TWT	AM		CO	1.7
16♦	1244H	3950M	8.5	3.700G-4.200G	CW	42.5 †		55	30	TWT	AM		CO	3.3
17	1253H	3950M	8.5	3.700G-4.200G	CW	50 §Ø		57		TWT	AM		CO	3.1
18♦	8514H	3.95G	9.0	3.7G-4.2G	CW	1480	34m	56		TWT	AM		CO	2.0
19	8511H	3950M	9.5	3.700G-4.200G	CW	1600	35m	58		TWT	AM		CO	1.8
20	246H	3950M	10	3.700G-4.200G	CW	1800	35m	55		TWT	AM		CO	1.8
21♦	8524H	3.95G	10	3.7G-4.2G	CW	1560	36m	46.7		TWT	AM		CO	1.9
22	TL4010	3950M	10	3.700G-4.200G	CW	1550	37m	54*		TWT	AM		CO	
23	W7MC/13B	3950M	11	3700-4200M	CW	2500	40mØ	38.6†	26*	TWT§	AM		CO	1.65 *
24	TL4003	3950M	13	3.700G-4.200G	CW	1750	37m	46	27	TWT§	AM		CO	1.4
25♦	8525H	3.95G	13.5	3.7G-4.2G	CW	1760	44m	48.7		TWT	AM		CO	2.0
26♦	1652H	3.9500G	16 †	3.700G-4.200G	CW	36 †		63.0	28*	TWT	AM		CO	4.5
27	8515H	3.950G	16.0	3.700G-4.200G	CW	1880		63.0		TWT	AM		CO	2.5
28♦	8526H	3.95G	16.0	3.7G-4.2G	CW	1880	46m	49		TWT	AM		CO	2.1
29▼	CGB374202-01	3.95G	30.5	3.7G-4.2G		15 §Ø	1.7	32	10	TWTℤ	AM		CO	2.20
30▼	CGB374203-02	3.95G	33.5	3.7G-4.2G		15 §Ø	3.3	33	10	TWTℤ	AM		CO	2.86
31▼	CGB374205-01	3.95G	33.5	3.7G-4.2G		15 §Ø	5.4	37	10	TWTℤ	AM		CO	3.96
32	W7/6GA	3950M	40 *	3.700G - 4.200G	CW	2680	80m	40†	27	TWT§	AM		WA	20
33	L5320	3975M	1.0k	2.650G-5.300G	20m	9000	2.3	50		TWT§	AM		CO	7.5
34	VTG5120A1	3975M	1.2kΔ†	2.650G - 5.300G	20m	8400 Ø	1.8 Ø	30†		TWT§	AM		CO	8.0
35	UV5	4000M		3800-4200M				20	80	TWT			WA	.24
36	UV79	4000M	0.25	3000-5000M				30	30	TWT			CO	3.97
37	QKW1923	4000M	3.0	2.000G-6.000G	CW	1600	45m	40		TWT	AM		CO	3.0
38	235H	4000M	10	3.000G - 5.000G	CW	1800	40m	43		TWT§	AM		CO	1.2 Δ
39	4W80	4000M	20	3.600G-4.200G	CW	3200	45m	33		TWT§	AM		WA	10.58 *
40	VTS4413P9	4050M	7.95m	3.700G-4.200G		115 §ΔØ		28	6.5	TWT§	AML		CO	7.5
41	VTS4413H9	4050M	10m	3.700G-4.200G				28	6.5	TWT§	AML		CO	7.5
42	VTS4413H2	4050M	120m	3.700G-4.200G				40	9.0	TWT§	AML		CO	7.5
43	L2089-50	4050M	300 †	2.700G-5.400G	CW	5800 Ø	450mØ	33†		TWT§	AM		CO	8.5
44	L2067	4050M	450	2.700G-5.400G	CW	6500		30		TWT	AM	BB		
45	L2082-50	4050M	450 †	2.700G-5.400G	CW	6500 Ø	550mØ	36†		TWT§*	AM		CO	12
46	1224H	4150M	200m	4.100G-4.200G	CW	28 §Ø		51		TWT	AM		CO	2.7
47	276H	4250M	500m	3.500G-5.000G	CW	1050	5.0m	35		TWT§	AM		CO	1.2
48	W7/4G	4300M	12 *	3.600G - 5.000G	CW	3500	50m	35†	27	TWT*	AM		WA	.27
49	N1073	4300M	20	3.600G-5.000G	CW	4000	50m	42	23	TWT§	AM		WA	500m§
50	W7/5GC	4300M	25 *	3.700G - 5.000G	CW	3000	100m	37†	31*	TWT§	AM		WA	20
51	W7/6GC	4350M	28 *	3.700G-5.000G	CW	2700	65m	38†	27	TWT§	AM		WA	24
52	UV1003	4443M		3529-5357M				25	11	TWT			WA	1.1
53	VTC4414S2	4700M	10m	4.400G-5.000G				25	6.5	TWT§	AML		CO	7.0
54	VTC6061B1	4700M	2.0	4.400G-5.000G		1500	18m	35		TWT§	AM		CO	1.0
55	VZC6061C1	4700M	2.0	4.400G-5.000G		115 Øß				TWT	AM			
56	VZC6061D1	4700M	2.0	4.400G-5.000G		28 Ø§				TWT	AM			
57	YH1050	4700M	2.0	4.400G-5.000G	CW	1200	20mØ	30	25	TWT†	AM		WA	198m
58	RW45	4700M	7.0	4.400G-5.000G	CW	2000	70m	41	20*	TWT§	AM		WA	20 *
59	VTG2645	4700M	18	4.400G-4.500G	CW	2000 Ø	45mØ	40	25	TWT§	AM			13
60	VTG2630A5	4700M	20	4.400G-5.000G	CW	2000	45m	40	26	TWT§	AM		WA	13.2
61	5W71	4700M	31.5	4.400G-5.000G	CW	4000	70m	35	23	TWT§	AM		WA	9.0
62	5W70	4700M	35	4.400G-5.000G	CW	3800	58m	39	21	TWT§	AM		WG	9.4
63	VTG2647	4700M	35	4.400G-4.500G	CW	2000 Ø	55mØ	43		TWT§	AM			9.0
64▼	CGB445005-01	4.7G	35.5	4.4G-5.0G		15 §Ø	5.4	39	10	TWTℤ	AM		CO	3.96
65	TH3671	4.7G	160	4.4G-5.0G	CW					TWT	AM	FF		
66	VZC6963C1	4700M	200	4.400G-5.000G		115 Øß				TWT	AM			
67	TH3588	4700M	1.0k	4.400G-5.000G	CW	12000	1.0	36†		TWT†	AM		WA	66
68	TH3546	4700M	1100 †	4.400G-5.000G	CW	7000	700m	36†		TWT†	AM	FF	WA	2.2
69	YH1181	4700M	1.1k†	4.400G-5.000G	CW	13500	600mØ	36		TWT§	AM		WA	44.1
70	636H	4700M	10k	4.40G-5.00G	CW	13500		11		TWTØ	AM		WA	
71	VTC4460P1	4820M	5.0m	4.400G-5.250G				25	5.0	TWT§	AML		CO	11
72	M5508K	4900M	100 †	2.60G-5.20G	CW	4000	330m	30†	35*	TWT§	AM		CO	7.5 Δ
73	L5579	4950M	1.0k	3.700G-7.000G	20m	10900	1.6	52		TWT§	AM		CO	5.0
74	VTG4028E2	5000M	1.0m†	2.000G-8.000G	CW	115 §*ℤ		40†	12*	TWT	AM		CO	15
75	VTG6025B1	5000M	1.0 †	2.500G-7.500G	CW	1150	45m	35†		TWT	AM		CO	1.25
76	VZV6961D1	5000M	1.0	2.500G-7.500G	CW	28 Ø§		30		TWT	AM		CO	
77	F2147	5000M	12 †	2.500G-7.500G	CW	2200	95m	45†	32*	TWT§	AM		CO	1.0
78	QKW1941	5000M	45	4.600G-5.400G	CW	2450	110m	45		TWT	AM		CO	1.0
79▼	CGB505110-02	5.06G	38	5.03G-5.09G		15 §Ø	7.5	26	12	TWTℤ	AM		CO	10.36
80	N1094	5125M	250 †	5.000G-5.250G	50m	5400	350m	40†		TWT	AM		CO	2.5 Δ
81	VTC5360A2	5200M	1.0k	5.000G-5.400G	10m	8500	1.0 Ø	40		TWT§	AM			5.0
82	QKW1955	5250M	10	2.500G-8.000G	CW	2300	80m	50		TWT	AM		CO	2.0
83	8507H	5.25G	200	2.5G-8.0G	CW	-6.2k	420m	42		TWT	AM	BB	CO	10.0
84	658H	5250M	1.0k	2.500G-8.000G	100m	10000	2.5	30		TWT	AM		CO	8.0
85	8508H	5.25G	1.0k†	2.5G-8.0G	.11m	-9.6k	1.6	45		TWT	AM	BB	CO	10.5
86	VTG5121F1	5250M	1000 Δ†	2.500G-8.000G	100m	9000 Ø	1.5	30		TWT	AM			8.0
87	QKW1954	5350M	10m	2.500G-8.200G	CW	600	2.0m	38		TWT	AM		CO	2.0
88	QKW1952	5350M	2.0	2.500G-8.200G	CW	2000	30m	38		TWT	AM		CO	2.0
89	QKW1953	5350M	2.0	2.500G-8.200G	CW	2000	30m	38		TWT	AM		CO	2.0
90	VTC5360H1	5400M	1.0k†	5.200G-5.600G	30m	9000	900m	60		TWT*§	AM		CO	6.0
91	F4025B	5500M	30m†	4.000G-7.000G	CW	850	6.0mØ	35†	11	TWT	AM		CO	2.20
92	QKW1926	5500M	2.0	3.000G-8.000G	CW	2000	45m	35		TWT	AM		CO	3.0
93	QKW1927	5500M	2.0	2.500G-8.500G	CW	2100	30m	38		TWT	AM		CO	3.3
94	646H	5500M	10 †	3.000G-8.000G	CW	2900	80m	30	35*	TWT§	AM		CO	3.0 Δ
95	VTC5160A1	5500M	100 †Δ	4.500G - 6.500G	60m	5000 Ø	350mØ	36†		TWT§	AM		CO	5.0
96	QKW1988	5500M	240	5.000G-6.000G	360m	15000	2.4	50		TWT	AM		WA	15.0
97	VTC5264A2	5500M	1.5k	5.00G-6.00G	7.5m	7000	1.3	35		TWT§	AM		CO	1.5
98	VTC6663A1	5500M	3.0k	5.250G-5.750G	CW	13000 Ø	1.7 Ø	40		TWT#	AM			30
99	657H	5500M	65k	5.300G-5.700G	40m	37000	11	47		TWT	AM		WA	58
100	TL5080	5500M	90k	5.250G-5.750G	10m	46000	12.5	40†		TWT§#	AM		WA	50
101	VTC5761A1	5550M	25k	5.400G-5.700G	5.0m	28000 Ø	6.0 Ø	57		TWT§	AM			20
102	VTC5760A1	5575M	50k	5400M-5750M	20M	32000	8.0	48		TWT§#	AM		WA	40
103	N10524	5.6G	50k	5.4-5.9G	.023		12	50		TWT§				44
104	634H	5600M	75k	5.400G-5.800G	40m	37000 Ø	10.8 Ø	43		TWTØ#	AM		WA	60 *
105	635H	5600M	165k†	5.400G-5.800G	40m	48000 Ø	16.5 Ø	46		TWTØ#	AM		WA	60 *
106	QKW1905	5625M	3.0m	3.850G-7.400G	CW	470	3.0m	30		TWT	AM		CO	1.6
107	QKW1906	5625M	100m	3.850G-7.400G	CW	830	8.0m	38		TWT	AM		CO	1.6
108	VTC4460P7	5650M		5.400G-5.900G				25	5.0	TWT§	AML		CO	11
109	VTC4414P3	5650M	17m	5.40G-5.90G				25	6.0	TWT§	AM		CO	6.5
110	JAN8364	5650M	200m	5.400G - 5.900G		1350	15m		35*	TWT*§	AM	MT	CO	3.0 Δ

2. SOURCE,AMPLIFIER,OUTPUT TUBES

IN ORDER OF (1)TUBE TYPE (2)CENTER FREQUENCY (3)POWER OUTPUT (4)TYPE No.

LINE No.	4 TYPE No.	2 CENTER FREQ. (Hz)	3 POWER OUTPUT (W)	FREQUENCY RANGE (Hz)	MAX. DUTY CYCLE	MAX. BEAM VOLTAGE (Note 1) (V)	MAX. CATH-ODE CUR. (A)	GAIN (dB)	NF (dB)	DESCRIPTION 1 TUBE TYPE	FUNC-TION	TUN-ING	OUT PUT	WEIGHT (lb)
1	L2390	5650M	200m	5.400G-5.900G	CW	1200	10m	33	30	TWT	AM		CO	3.0
2	JAN8362	5650M	50	5.400G - 5.900G	12m	5750	225m			TWT*§	AM	MT	CO	7.0 △
3	F2106	5650M	200 †	5.400G-5.900G	10m	7000	750m	33†		TWT§*	AM		CO	3.0
4	F2576	5650M	200	5.400G - 5.900G	3.0m	6500	450m	50†		TWT§*	AM		CO	
5	VTC5261H1	5650M	1.0k△†	5.400G - 5.900G	10m	7000 Ø	1.1 Ø	60†		TWT§	AM		CO	4.0
6	VTC5261J1	5650M	1.0k	5.400G-5.900G	80m	7000	1.0 Ø	54		TWT§	AM			5.0
7	VTC5360A1	5650M	1.0k△†	5.400G - 5.900G	10m	8000 Ø	1.0 Ø	40†		TWT§	AM		CO	5.0
8	VTC5365A1	5650M	1.0k△†	5.400G-5.900G	10m	8500	1.3 Ø	40		TWT	AM			5.0
9	VTC5361A1	5650M	4.0k△†	5.400G - 5.900G	5.0m	13000 Ø	2.2 Ø	36†		TWT§	AM		CO	7.0
10	L5420	5650M	5.0k	5.400G-5.900G	20m	12000	2.3	60		TWT§	AM		CO	8.0
11	VTC5260H1	5650M	5.0k△†	5.400G - 5.900G	2.0m	15000 Ø	3.3 Ø	51†		TWT§	AM		CO	13
12	VTC5262B1	5650M	5.0k	5.400G-5.900G	4.0m	14500	3.0 Ø	45		TWT§	AM			10
13	VTC5265A2	5650M	5.0k△†	5.400G-5.900G	2.0m	15000 Ø	3.0 Ø	50		TWT	AM			13
14	TH3637	5.65G	8.0k	5.4-5.9G	.03	14.5k	2.5	50		TWT	AM	FF	CO	11
15	VTC5262A1	5650M	8.0k	5.400G-5.900G	2.0m	14500	3.0 Ø	47		TWT§	AM			10
16	VTC5265A3	5650M	8.0k△†	5.400G-5.900G	2.0m	15000 Ø	3.5 Ø	45		TWT	AM			9.0
17	676H	5650M	12k	5.4G-5.9G	30m	23k	4.0	45		TWT§*	AM		WA	50
18	621H	5650M	50k†	5.400G-5.900G	20m	36000	10	50		TWT§#	AM		WA	40 *
19	VTC5661A2	5650M	75k	5.450G-5.850G	15m	37000 Ø	10 Ø	53		TWT§#	AM			40
20	622H	5650M	80k	5.400G-5.900G	25m	37000 Ø	9.0	53		TWT§#	AM	BB	WA	40 *
21	L2377	5700M	10m	3.90G-7.50G	CW	800	4.0m	36	20	TWT§	AM		CO	3.0
22	VTC5660A1	5700M	75k	5.4G-5.9G	50m	38000	12	40		TWT	AM		WA	
23	JAN8881	5725M	10m	3.950G-7.500G		810		10†	20*	TWT†	AM		CO	4.5
24	W6MT/2A	5750M	16m	4.000G-7.500G	CW	472 §Ø		31†	9.5	TWT	AM		CO	11.5
25	JANM5058A	5825M	10m†	4.300G-7.350G	CW	1500	1.0m	35†	10*	TWT§	AML		CO	5.0 △
26	VTC4402P2	5825M	10m	4.3G-7.35G	CW	§		30†	7.0*	TWT§	AM		CO	16.5
27	LD4035A	5900M	22	5.670G-6.170G	CW	2850	45m	45		TWT§	AM		WA	5.511
28	VTC4451H1	6000M		4.000G-8.000G		115 ☑△§		35	15	TWT§	AML		CO	8.0
29	VTC4461P1	6000M		4.000G-8.000G				20	15	TWT§	AML		CO	8.0
30	7393	6000M	5.0m	4.000G - 8.000G	CW	550	1.0m	25†	10*	TWT	AML		CO	11.5
31	TWC18	6000M	5.0m	4.000G-8.000G	CW	1050	1.0m	35†	11*	TWT§	AM		CO	4.6
32	VTC4402P1	6000M	5.0m†	4.0G-8.0G	CW	§		25†	7.5*	TWT§	AML		CO	16.5
33	VTC4860C9	6000M	6.3m*	4.000G-8.000G	CW	115 §*☑		60†	10*	TWT	LIM		CO	7.5
34	L2303	6000M	10m	4.000G-8.000G				30	24	TWT			CO	
35	QKW1916	6000M	10m	4.000G-8.000G	CW	670	1.0m	35		TWT	AM		CO	2.0
36	QKW1918	6000M	10m	4.000G-8.000G	CW	720	100u☑	35	15	TWT§	AM		CO	2.0
37	VTC4360P2	6000M	10m†	4.00G-8.00G	CW	115 §△☑		40†	9.0*	TWT§	AML		CO	5.5
38	VTC4402F1	6000M	10m†	4.000G-8.000G	CW	115 §*☑		25†	7.0*	TWT	AM		CO	15
39	VTC4414P1	6000M	10m	4.00G-8.00G				25	7.5	TWT§	AM		CO	7.0
40	VTC4860D9	6000M	10m†	4.000G-8.000G	CW	115 §*☑		33†	10*	TWT	AM△		CO	17
41	VTC4414P2	6000M	15m	4.00G-8.00G				35	9.0	TWT§	AM		CO	7.0
42	VTC4360P1	6000M	16m	4.00G-8.00G		115 §△☑		30	7.8	TWT§	AML		CO	5.0
43	VTC4361H1	6000M	100m	4.000G-8.000G	CW	115 ☑△§		35†	15*	TWT§	AML		CO	5.5
44	L2396	6000M	300m	4.000G-8.000G	CW	1300	10m	30	14	TWT§	AML		CO	2.0
45	W5PA1M	6.0G	300m†	4.0G-8.0G	CW	115 §☑		25†	20*	TWT	AM		CO	2.5
46	L2381	6000M	1.0	4.00G-8.00G	CW	2000	20m	30	30	TWT§	AM		CO	3.0
47	641H	6000M	1.5 †	4.000G-8.000G	60m	9750	1.8	30		TWT§#	AM		CO	10
48	L5009	6000M	2.0 †	4.000G - 8.000G	CW	2000	40m	50†		TWT*§	AM		CO	1.05
49	L5009-00	6.0G	2.0 †	4.0G-8.0G	CW	-1.9k	30m	50†		TWT§*	AM		CO	1.5
50	L5137	6000M	2.0 †	4.000G - 8.000G	CW	2000	40m	30†		TWT*§	AM		CO	1.5
51	L5137-00	6.0G	2.0 †	4.0G-8.0G	CW	-1.9k	38m	33†		TWT§*	AM		CO	1.2
52	VTC6060A1	6000M	2.0 †	4.000G - 8.000G	CW	1500 Ø	20m	30†		TWT§	AM		CO	.87
53	VTC6060H1	6000M	2.0	2.000G-8.000G		1500	20m	60		TWT§	AM		CO	1.25
54	VZC6060C1	6000M	2.0	4.000G-8.000G		115 ☑§				TWT	AM			
55	VZC6060D1	6000M	2.0	4.000G-8.000G		28 Ø§				TWT	AM			
56	VZC6968F1	6000M	2.0	4.000G-8.000G	CW	230 §†△		30	30*	TWT	AM		CO	55 △
57	VZC6968F2	6000M	2.0	4.000G-8.000G	CW	230 §†△		60	30*	TWT	AM		CO	55 △
58	VZC6968G1	6000M	2.0	4.000G-8.000G	CW	230 §†△		30		TWT	AM		CO	
59	VZV6962D1/D2	6000M	2.0	4.000G-8.000G	CW	28 Ø§		30†		TWT	AM		CO	
60	TOP1203	6000M	7.0 †	4.000G-8.000G	CW	2700	25mØ	35†	28	TWT	AM		CO	1.32
61	648HD	6000M	10 †	4.000G-8.000G	CW	3800	65m	30	35*	TWT§	AM		CO	3.0 △
62	1177H02	6000M	10	4.000G-8.000G	CW	120 §*△		30†	35*	TWT	AM		CO	20 △
63	L5011	6000M	10 †	4.000G - 8.000G	CW	2700	70m	33†		TWT*§	AM		CO	2.05
64	L5011-02	6.0G	10 †	4.0G-8.0G	CW	-1650	80m	33†		TWT§	AM		CO	2.5
65	L5575	6000M	10	4.000G-8.000G	CW	3300	80m	35		TWT§	AM		CO	3.0
66	L5575-02	6.0G	10 †	4.0G-8.0G	CW	-3000	70m	33†		TWT§§	AM		WA	2.5
67	QKW1931	6000M	10	4.000G-8.000G	CW	2100	60m	40		TWT	AM		CO	800m
68	VTC6069A1	6000M	10 †	4.000G-8.000G	CW	2800 Ø	75mØ	50†		TWT§	AM		CO	3.0
69	VTC6069F1	6000M	10 †	4.000G - 8.000G	CW	2900	75m	42†	27	TWT§	SEA		CO	3.0
70	VZC6960E2	6000M	10	4.000G-8.000G		115 △§				TWT	AM			
71	VZC6960F1	6000M	10	4.000G-8.000G	CW	230 §†△		40	30*	TWT	AM		CO	55 △
72	VZC6960G1	6000M	10	4.000G-8.000G	CW	230 §†△		40		TWT	AM		CO	
73	W5MW11M	6000M	10.0 †	4000M-8000M	CW	2400	40MØ	41	25	TWT§	AM		CO	1.65
74	640H	6000M	20 †	4.000G-8.000G	CW	3650	100m			TWT§	AM		CO	3.0 △
75	1234H	6000M	20 †	4.00G-8.00G	CW	115 §☑		38†	35*	TWT§	AM		CO	18.5 ☑
76	L5559	6000M	20	4.00G-8.00G	CW	3400	85m	35	35	TWT§	AM		CO	3.0
77	L5559-02	6.0G	20 †	4.0G-8.0G	CW	-3100	100m	36†		TWT§§	AM		WA	2.5
78	L5579-51	6000M	20	4.000G-8.000G	CW	10000		55		TWT	AM	BB		
79	VTC6160A1	6000M	20 †	4.000G - 8.000G	CW	2500	10m	35†		TWT§	AM		CO	2.75
80	VTC6160B1	6000M	20 †	4.000G - 8.000G	CW	2400 Ø	90mØ	35†		TWT§	AM		CO	2.75
81	VTC6160H1	6000M	20 †	4.000G - 8.000G	CW	2500	10m	54†		TWT§	AM		CO	3.0
82	VTC6160J1	6000M	20 †	4.000G - 8.000G	CW	2400 Ø	90mØ	54†	35	TWT§	AM		CO	3.0
83	VZC6961E1	6000M	20	4.000G-8.000G		115 △§				TWT	AM			
84	VZC6961F1	6000M	20	4.000G-8.000G	CW	230 §†△		35	35*	TWT	AM		CO	55 △
85	VZC6961F2	6000M	20	4.000G-8.000G	CW	230 §†△		54	35*	TWT	AM		CO	55 △
86	VZC6961G1	6000M	20	4.000G-8.000G	CW	230 §†△		35		TWT	AM		CO	
87	VZC6961G2	6000M	20	4.000G-8.000G	CW	230 §†△		54		TWT	AM		CO	
88	VZV6966A1	6000M	20	4.000G-8.000G	CW	115 ☑§		35		TWT	AM		CO	
89	VZV6966A2	6000M	20	4.000G-8.000G	CW	115 ☑§		54		TWT	AM		CO	
90▼	CGB408001-16	6.0G	27	4.0G-8.0G		15 §Ø	2.6	28	10	TWT☑	AM		CO	2.86
91▼	CGB408002-03	6.0G	31	4.0G-8.0G		15 §Ø	4.6	30	10	TWT☑	AM		CO	3.74
92	580H#1	6000M	100	4.000G-8.000G	CW	9500	300m	23		TWT	AM		CO	10
93	VTC6260A1	6000M	100 †	4.000G - 8.000G	CW	4500	240m	30†	35	TWT§	AM			5.0
94	VTC6260C1	6000M	100 †	4.000G - 8.000G	CW	4500	240m	30†	35	TWT§	AM			5.0
95	VTC6260F1	6000M	100 †	4.000G-8.000G	CW	4500 Ø	260m§	40		TWT§§	AM			6.0
96	VTC6260H1	6000M	100 †	4.000G - 8.000G	CW	4500	240m	50†	40	TWT§	AM			5.5
97	VTC6260J1	6000M	100 †	4.000G - 8.000G	CW	4500	240m	50†	40	TWT§	AM			5.5
98	VTG6260A1	6000M	100	4.000G-8.000G		4500	250m	30		TWT§	AM		CO	5.0
99	VZC6962E1	6000M	100	4.000G-8.000G		115 △§				TWT	AM			
100	VZC6962G1	6000M	100	4.000G-8.000G	CW	230 §†△		35		TWT	AM		CO	
101	VZV6967A1	6000M	100	4.000G-8.000G	CW	230 §†△		40		TWT	AM		CO	
102	LD4415A	6000M	150	5925M-6425M	CW	7000	200m	40		TWT	AM		WA	8.8
103	F2098	6000M	200	4.000G - 8.000G	5.0m	6500	600m	45†		TWT§*	AM		CO	
104	VTC6262F1	6000M	200 †	4.000G-8.000G	CW	8500 Ø	300m§	37		TWT§	AM			6.0
105	VTC6264C6	6000M	200	4.000G-8.000G		8500	280m	35		TWT§	AM		CO	6.0
106	VZC6963G1	6000M	200	4.000G-8.000G	CW	230 §†△		37		TWT	AM		CO	
107	VZV6968A1	6000M	200	4.000G-8.000G	CW	230 §†△		37		TWT	AM		CO	
108	580H#2	6000M	1.0k	4.000G-8.000G	50m	9500	1.2	40		TWT	AM		CO	10
109	F2099	6000M	1.0k	4.0G-8.0G	40m	9800	1.8	28†		TWT§*	AM		CO	10.0
110	F2154	6000M	1.0k	4.000G-8.000G	40m	9750	1.8	28		TWT§	AM		CO	10

2. SOURCE,AMPLIFIER,OUTPUT TUBES

IN ORDER OF (1)TUBE TYPE (2)CENTER FREQUENCY (3)POWER OUTPUT (4)TYPE No.

LINE No.	[4] TYPE No.	[2] CENTER FREQ. (Hz)	[3] POWER OUTPUT (W)	FREQUENCY RANGE (Hz)	MAX. DUTY CYCLE	MAX. BEAM VOLTAGE (Note 1) (V)	MAX. CATH-ODE CUR. (A)	GAIN (dB)	NF (dB)	DESCRIPTION [1] TUBE TYPE	FUNC-TION	TUN-ING	OUT PUT	WEIGHT (lb)
1	F2214	6.0G	1000	4-8G	.03	9750	1.8	28†	35	TWT§	AM		CO	10
2	L5596-50	6000M	1.0k	4.000G-8.000G	50m	11300	1.7	32		TWT§	AM		CO	5.0
3	L5624-50	6000M	1.0k	4.000G-8.000G	20m	12500	2.5	3.5		TWT§	AM		CO	6.0
4	VTC5161A1	6000M	1.0k	4.000G-8.000G	20m	10500	1.5 Ø	40		TWT*§	AM			6.0
5	VTC5170A1	6000M	1.0k†Δ	4.000G - 8.000G	20m	8500 Ø	1.0 Ø	30†		TWT§	AM		CO	7.5
6	2154	6000M	1.25k	4.000G-8.000G	40m	9800	1.0	29	40	TWT§	AM		CO	10
7	639H	6000M	2.5k	4.000G-8.000G	22m	10000	2.5	30		TWT§	AM			10
8	YH1300	6100M	200 †	5.800G-6.400G	CW			43		TWT§	AM		WA	9.5
9	W5MC/15D	6115M	11	5.80G-6.425G	CW	2500	42mØ	39	25	TWT	AM		CO	1.65
10	YH1202	6115M	11	5.80G-6.425G		2650	42m	39	25	TWT	AM		CO	1.76
11	W5/2GD	6125M	25 *	5.850G-6.400G	CW	3700	50m	40†	28	TWT§	AM		WA	18 *
12	279H	6125M	100	5.900G-6.400G	CW	3600	85m	33		TWT§	AM		CO	3.0
13	LD4281C	6.1375G	3.0	5.85G-6.425G	CW	13.5	1.8	42		TWT	AM	BB	WA	55 §
14	YH1049	6.138G	3000	5.85G-6.425G	100	14000	1.5	50	32	TWT				
15	VTC4414A4	6150M	100m	5.900G-6.400G				35	10	TWT§	AML		CO	8.0
16	TH3553	6150M	11 †	5.900G-6.400G	CW	2500	40m	39	24*	TWT§	AM		CO	1.5
17	6W411	6150M	18	5.800G - 6.500G	CW	2000	47m	40		TWT§	AM		WA	
18	6W411V	6150M	18	5.800G-6.500G	CW	2000	47m	40		TWT§	AM		WA	
19	6W52	6150M	20	5.925G-6.425G	CW	3600	40m	36	26	TWT§	AM		WA	
20	YH1207	6150M	22	5.900G-6.400G	CW	3000	61m	43	24	TWT	AM		CO	3.5
21	1222H	6150M	100	5.900G-6.400G	CW	32 §Ø		33		TWT	AM		CO	28
22	VTC6360E1	6150M	225 †	5.900G - 6.400G	CW	4300	400m	33†	35	TWT§	AM			8.0
23	VTC6360A1	6150M	300 †	5.900G - 6.400G	CW	4700	420m	33†	35	TWT§	AM			8.0
24	YH1047A1	6.15G	600	5.9G-6.4G	100	11300	445m	43	32	TWT				
25	YH1047A2	6.15G	700	5.9G-6.4G	100	11300	445m	43	32	TWT				
26	LD4070	6150M	3.0k	5925M-6425M	CW	13500	1.8	33		TWTØ	AM		WA	45
27	614H	6150M	8.0k†	5.900G-6.400G	CW	18500	3.25	40		TWTØ#	AM		WA	95 *
28	VTC6660A1	6150M	8.0k†	5.900G - 6.400G	CW	16500	2.65	34†	40	TWTØ#	AM			30
29	TOP1487	6175M	1.5 †	5.925G-6.425G	CW	10500	750 Ø	40†		TWTØ	AM		CO	66.13
30	LD4128	6175M	2.0	5.925G-6.425G	CW	21 Ø	15m	43	25	TWT§	AM		WA	15.4
31	VTC6061A1	6175M	2.0	5.925G-6.425G	CW	1500 Ø	22mØ	35		TWT§	AM		CO	14
32	VZC6960D2	6175M	2.0	5.925G-6.425G	CW	230 §†Δ		35		TWT	AM		CO	
33	VTJ2628A1	6175M	3.0	5.925G-6.425G	CW	1200	20m	43		TWT§	AM		WA	6.0
34	6W70	6175M	4.0	5.925G-6.425G	CW	2000	17m	43	24	TWT§	AM		WA	5.5
35	LD4010	6175M	4.0	5925M-6425M	CW	2000	17	43	24	TWT§	AM	VT	WA	5.5
36	LD4116A	6175M	4.0	5.925G-6.425G	CW	21 §Ø		40	24	TWT§	AM		CO	8.5
37	TH3507	6175M	4.0 †	5.925G-6.425G	CW	3000	18mØ	27†	26	TWT	AM		CO	1.43
38	LD4001	6175M	4.4	5.925G-6.425G	CW	1800	16m	50		TWT§	AM		WA	5.511
39	TWC5	6175M	5.0	5.925G-6.425G	CW	3500	2.0mØ	36	28*	TWT§	AM		WA	10.75 *
40	LD958	6175M	7.8	5925M-6425M	CW	2000	26m	45	23	TWT§	AM		CO	2.2
41	TWC14	6175M	10	5.925G-6.425G	CW	3600	45m	36†	28*	TWT§	AM		WA	10.75 *
42	W5MC/1A	6175M	10	5.925G-6.425G	CW	3350	31m	36.5†	25	TWT§	AM		CO	6.0 Δ
43	LD892	6175M	11	5.925G - 6.425G	CW	2850	43m	35	25	TWT§	AM		WA	9.3
44	TH3543	6175M	11 †	5.925G-6.425G	CW	2800	3.0mØ		24*	TWT§	AM		CO	1.54
45	W5MC14M	6175M	11.0	5925M-6425M	CW	2600	54.0mØ	40.0	24.0	TWT§	AM		CO	1.65
46	W5MC/16B	6175M	11	5.925G-6.425G	CW	2500	37mØ	39	24	TWT	AM		CO	1.65
47	LD4236	6175M	11.5	5.925G-6.425G	CW	3600	32m	45	24	TWT§	AM		WA	6.7
48	VTJ2609A4	6175M	13	5.925G-6.425G	CW	1900	50m	43	23	TWT	AM		WA	8.3
49	VYJ2609A4	6175M	13	5.925G-6.425G	CW	1900	50m	43	23	TWT§	AM		WA	8.3
50	LD4353	6175M	15	5.925G-6.425G	CW		35m	44	26.8	TWT			CO	5.72
51	VTJ2618A1	6175M	15	5.925G-6.425G	CW	2800	40m	35	25	TWT§	AM		WA	10.5 *
52	VTJ2677A1	6175M	15	5.925G-6.425G	CW	1600 Ø	27mØ	45	22.5	TWT	AM			6.75
53	W5MC/18M	6175M	15	5925-6425M	CW	3000	47mØ	38.8†	26*	TWT§	AM		CO	1.65 *
54	6W73	6175M	19	5.925G-6.425G	CW	3600	50m	33	23	TWT§	AM		WA	7.7
55	LD747	6175M	20	5.925G - 6.425G	CW	3604	40m	42	25	TWT§	AM		WA	
56	LD4035	6175M	20	5925M-6425M	CW	3000	47m	47	23	TWT§	AM		WA	6.7
57	VTH6176A3	6175M	20 †	5.925G-6.425G	CW	2550	115m	40		TWT	AM		CO	500m
58	VTJ2646A5	6175M	20	5.900G-6.450G	CW	2000	50m	45*	24	TWT	AM		WA	17
59	VZC6961D9	6175M	20	5.925G-6.425G	CW	230 §†Δ		40		TWT	AM			
60	VZJ2656A1	6175M	20	5.925G-6.425G	CW	230 Δ†§		41		TWT	AM		WA	
61	VYJ2609A1	6175M	21	5.925G-6.425G	CW	1900	45m	43	23	TWT§	AM	FF	WA	8.3
62	LD700	6175M	22	5.925G - 6.425G	CW	3600	46m	43	25	TWT§	AM		WA	
63	VTJ2608A1	6175M	22	5.925G-6.425G	CW	3600	45m	40	23	TWT§	AM		WA	9.24 *
64	LD920	6175M	25	5.925G - 6.425G	CW	3800	47m	43	24	TWT§	AM		WA	7.5
65	VTC6160J5	6175M	25 †	5.925G-6.425G	CW	2400 Ø	100mØ	50†	35*	TWT§	AM		CO	3.1
66	VTJ2609A2	6175M	25	5.925G-6.425G	CW	3600	50m	43	24	TWT§	AM		WA	8.3 *
67	VTJ2609A3	6175M	25	5.925G-6.425G	CW	3600	50m			TWT§	AM		WA	8.3 *
68	VZC6961D8	6175M	25	5.925G-6.425G	CW	230 §†Δ		50		TWT	AM		CO	
69▼	CGB596402-06	6.175G	30.5	5.925G-6.425G		15 §Ø	1.7	40	10	TWTØ	AM		CO	2.86
70▼	CGB596402-07	6.175G	30.5	5.925G-6.425G		15 §Ø	1.7	31	10	TWTØ	AM		CO	2.20
71▼	CGB596403-10	6.175G	33.5	5.925G-6.425G		15 §Ø	3.3	43	10	TWTØ	AM		CO	2.86
72▼	CGB596403-11	6.175G	33.5	5.925G-6.425G		15 §Ø	3.3	34	10	TWTØ	AM		CO	2.86
73	VTJ2632A1	6175M	35	5.925G-6.425G	CW	4000	75m	40†	30*	TWT	AM		WA	15
74	VTJ2642A1	6175M	35	5.900G-6.450G	CW	2500	65m	43§	25	TWT	AM		WA	17
75	VZJ2656M11	6175M	35	5.925G-6.425G	CW	230 Δ†§		53		TWT	AM		WA	
76▼	CGB596405-09	6.175G	35.5	5.925G-6.425G		15 §Ø	5.4	37	10	TWTØ	AM		CO	3.96
77▼	CGB596405-10	6.175G	35.5	5.925G-6.425G		15 §Ø	5.6	47	10	TWTØ	AM		CO	3.96
78▼	CGB596410-10	6.175G	38.5	5.925G-6.425G		15 §Ø	8.0	52	10	TWTØ	AM		CO	3.96
79	W5MC19C	6175M	40.0	5925M-6425M	CW	3470	100mØ	40.0	24.5	TWT§	AM		CO	2.5
80	W5MC20M	6175M	40.0 †	5925M-6425M	CW	3850	85.0mØ	42.0	25.0	TWT§	AM		CO	2.5
81♦	670HA	6.175G	50 †	5.925G-6.425G	CW	3.75k	105m	46†	35*	TWT§§	AM		CO	7.5
82	VTC6161H2	6175M	50 †	5.925G-6.425G	CW	3200 Ø	120mØ	50†	35*	TWT§	AM		CO	3.1
83	VZC6961D6	6175M	50	5.925G-6.425G	CW	230 §†Δ		50		TWT	AM		CO	
84	VZV6966A4	6175M	50	5.925G-6.425G	CW	115 Ø§		50		TWT	AM		CO	
85	2195	6175M	75	5.925G-6.425G	CW	4900	130M	50	30	TWT	AM		CO	6
86	F2195	6.175G	75 †	5.925G-6.425G	CW	5000	135m	50	32	TWT§	AM		CO	6.0
87	TH3641	6175M	75	5925-6425M	CW	4.5k	150m	50	30	TWT	AM	FF	CO	3.3
88	VZC6961D7	6175M	75	5.925G-6.425G	CW	230 §†Δ		50		TWT	AM			
89	VTC6161H4	6.175G	90	5.925G-6.425G	CW	4.75k	130m	50	32	TWT	AM			7.0
90	9210H-02	6175M	100	5.925G-6.425G	CW	240 §Δ		70	20	TWT	AM		WA	50
91	VTC6260E2	6175M	100 †	5.925G-6.425G	CW	5700 Ø	160m§	53		TWT§	AM			16
92	VZC6962D2	6175M	100	5.925G-6.425G	CW	208 *Δ§		50		TWT	AM			
93	677H	6175M	125	5.925G-6.425G	CW	6.4k	170m	42		TWT	AM		WA	7.5
94	VZC6962D6	6175M	125	5.925G-6.425G	CW	208 *Δ§		50		TWT	AM			
95	TH3642	6175M	150	5925-6425M	CW	5.5k	220m	50	30	TWT	AM	FF	CO	3.3
96	LD4025A	6175M	300	5.925G-6.425G	CW	6800	330m	40		TWT§	AM		WA	13.22 *
97	VTC6360B1	6175M	300 †	5.925G-6.425G	CW	4900 Ø	400m§	40		TWT§	AM			9.0
98	9240H02	6175M	350	5.925G-6.425G	CW	240 †§Δ		70	15	TWT	AM		WA	170
99♦	662HA	6.175G	400 †	5.925G-6.425G	CW	8.3k	420m	40†	35*	TWT§§	AM		WA	10
100	LD4255	6175M	400	5.925G-6.425G	CW	8500	500m	43	38	TWT§	AM		WA	33
101	LD4255C	6175M	400	5925M-6425M	CW	1.8k§	30mØ	43		TWT§	AM		WA	33
102	VTC6361H1	6175M	400	5.925G-6.425G	CW	9100 Ø	300mØ	53		TWT§	AM			16
103	VZC6965D2	6175M	400	5.925G-6.425G	CW	208 *Δ§		50		TWT	AM			
104	VTC6361A1	6175M	600 †	5.925G - 6.425G	CW	6200	500m	33†	35	TWT§	AM			10
105	VTC6361B3	6175M	600 †	5.925G-6.425G	CW	11000 Ø	400m§	43		TWT§§	AM			16.5
106	VZC6965E2	6175M	600	5.925G-6.425G	CW	208 *Δ§		43		TWT	AM			
107	9740H02	6175M	650	5.925G-6.425G	CW	230 †§Δ		64	15	TWT	AM		WA	380
108	VTC6361B4	6175M	700	5.925G-6.425G	CW	6000 Ø	220mØ	43		TWT§§	AM			16.5
109	VZC6965E3	6175M	700	5.925G-6.425G	CW	208 *Δ§		43		TWT	AM			
110	LD4225A	6175M	720	5.925G-6.425G	CW	10000	650m	43	38	TWT§	AM		WA	33

SYMBOLS AND CODES EXPLAINED IN INTERPRETER

2. SOURCE,AMPLIFIER,OUTPUT TUBES

IN ORDER OF (1)TUBE TYPE (2)CENTER FREQUENCY (3)POWER OUTPUT (4)TYPE No.

LINE No.	[4] TYPE No.	[2] CENTER FREQ. (Hz)	[3] POWER OUTPUT (W)	FREQUENCY RANGE (Hz)	MAX. DUTY CYCLE	MAX. BEAM VOLTAGE (Note 1) (V)	MAX. CATH-ODE CUR. (A)	GAIN (dB)	NF (dB)	DESCRIPTION [1] TUBE TYPE	FUNC-TION	TUN-ING	OUT PUT	WEIGHT (lb)
1	LD4225C	6175M	720	5925-6425M	CW	18k#	30mØ	43		TWT§	AM	BB	WA	33
2	LD4228A	6175M	750	5.925G-6.425G	CW	13000	850m	41	38	TWT§	AM		WA	40
3	LD4228C	6175M	750	5925-6425M		10k#	20mØ	45		TWT§	AM		WA	41.9
4	VTC6364A1	6175M	1.0k	5.925G-6.425G	CW	12500	1.0	30		TWTØ	AM		WG	150 *
5	VZC6965A2	6175M	1.2k	5.925G-6.425G	CW	208 *Δ§		40		TWT	AM			
6	YH1043	6175M	1.2k	5.925G-6.425G	CW	9800	850m	33		TWTØ	AM		WA	22
7	VTC6362A1	6175M	1.5k	5.925G-6.425G		10000	1.0	40		TWTØ	AM		CO	13
8	TH3640	6175M	2.0k	5925-6425M	CW	12.5k	1.4	50		TWT	AM	FF	WA	
9	LD4281	6175M	3.0k	5.925G-6.425G	CW	13500	1.8	47		TWTØ	AM		WA	55
10	VTC6363C1	6175M	3.0k	5.925G-6.425G	CW	12500	1.9	26		TWT$	AM			50
11	VZC6965J2	6175M	3.0k	5.925G-6.425G	CW	208 *Δ§		26		TWT	AM			
12	YH1041	6175M	3.0k	5.925G-6.425G	CW	18000	1.5	33		TWT$#	AM		WA	18
13	YH1042	6175M	3.0k	5.925G-6.425G	CW	18000	1.5	33		TWT§	AM		WA	21
14	VTC6660A4	6175M	7.0k	5.925G-6.425G	CW	16500 Ø	2.9 Ø	34		TWT$#	AM			30
15	LD793B	6175M	8.0k	5925M-6425M	CW	18k	3.0	38†		TWT§	AM		WA	31 §
16	M7880B	6175M	8.0k	5.925G-6.425G	CW	19000	3.0	38		TWTØ#	AM		WA	17.6
17	VTC6660A2	6175M	8.0k	5.925G-6.425G	CW	17000	2.9	34		TWT$#	AM			30
18	YH1045	6175M	8.0k	5.925G-6.425G	CW	21000	3.2	33		TWTØ#	AM		WA	78
19	M7880	6175M	10k†	5.925G - 6.425G	CW	22000	3.5	37†		TWTØ#	AM		WA	17.6
20	LD4337	6175M	12k	5925M-6425M	CW	24k	3.8	40		TWTØ	AM		WA	66 §
21	VTC6660C2	6175M	12k	5.925G-6.425G	CW	19500 Ø	3.8 Ø	34		TWT$#	AM			30
22	VTC6660C1	6175M	12.5k	5.925G-6.425G	CW	21000	3.8	37.5		TWTØ#	AM		WA	30
23	N10018/1	6200M	10	5.925G-6.425G	CW	4000	40m§	39	26	TWT	AM		WA	7.25
24	N10019/1	6200M	10	5.925G-6.425G	CW	4000	40m§	39	26	TWT	AM		CO	7.5
25	RW88C	6200M	11	5.900G-6.425G	CW	2375	32m	39	24	TWT§	AM		CO	3.1 *
26	TH3580	6200M	11 †	5.925G-6.425G	CW	2500	40m	43	24*	TWT§	AM		CO	1.5
27	TOP1401	6200M	25 †	5.900G-6.500G	CW	3900	50mØ	37†	25	TWT	AM		CO	17.63
28	VTC6260H2	6200M	100	4.800G-9.600G		5000	250m	40		TWT§	AM		CO	7.0
29	VTJ6264C4	6200M	200	4.800G-9.600G		8500	280m	30		TWT§	AM		CO	6.0
30	TH3508B	6200M	250 †	5.925G-6.425G	CW	9700	620m	38		TWT§	AM		WA	26.4
31	TH3576	6200M	750 †	5.925G-6.425G	CW	7750	470m	43		TWT§	AM			14.3
32	VTC6363A1	6200M	3.0k	5.925G-6.425G	CW	13500	1.8	26	45	TWT	AM		WA	35
33	VTC4461P6	6220M	120m	4.050G-8.400G				30	17	TWT§	AML		CO	8.0
34	RW289	6.4G	5.0	5.9G-7.1G	100	5000	130m	45	25	TWT		BB	CO	4.0
35	RW80	6400M	15	5.800G-7.000G	CW	2800	55m	40	22	TWT§	AM		WA	18 *
36	RW81	6400M	20	5.800G-7.000G	CW	2850	70m	41	22	TWT§	AM		WA	18 *
37	RW189	6500M	5.0	5.900G-7.125G	CW	2700	100m	40†	21	TWT§	AM		CO	3.1 *
38	W5MC/17D	6500M	10	5925-7125M	CW	2500	38mØ	38	26*	TWT§	AM		CO	1.65 *
39	RW89	6500M	15	5.900G-7.125G	CW	2550	60m	40	25	TWT§	AM		CO	3.3 *
40	RW89D	6.5G	15.0	5.9G-7.1G	100	2550	55m	40	23	TWT				3.0
41	TH3600	6500M	15	5.900G-7.200G	CW			40	24*	TWT§	AM		CO	1.5
42	YH1205	6500M	15	5.900G-7.100G	CW	2700	42m	39	24	TWT§	AM		CO	1.8
43	N1072	6500M	20	5.800G-7.200G	CW	4000	50m	42	23	TWT§	AM		WA	500m§
44	W5/2G	6500M	25 *	5.850G - 7.200G	CW	3700	50m	36†	28	TWT§	AM		WA	18.5 *
45	W5/1G	6525M	10 *	5.850G - 7.200G	CW	3500	50m	37	26	TWT†	AM		WA	79
46	W5MC/11C	6525M	10	5.925G-7.125G	CW	2940	38mØ	38	24	TWT	AM		CO	1.65
47	W5/4GC	6525M	25 *	5.850G-7.200G	CW	3400	50m	35†	24	TWT§	AM			
48	W5/4GF	6525M	25 *	5.850G-7.900G	CW	3300	50m	34†	24	TWT§	AM			
49	VTC4414S6	6550M	20m	5.850G-7.250G				30	6.5	TWT§	AML		CO	7.5
50	TH3522	6550M	7.0 †	5.900G-7.200G	CW	3000	25mØ	32†	26	TWT	AM		CO	1.43
51	LD812B	6700M	18	6.430G-7.110G	CW	3300	40m	40		TWT§	AM		WA	8.818
52	RW85	6700M	22	6.425G-7.125G	CW	3250	67m	39†	24	TWT§	AM		CO	7.3 *
53	VTJ2607A1	6725M	10 †	6.575G-6.875G	CW	3000	35m	30	27	TWT§	AM		WA	10.63
54	VTG6028A1	6750M	500m†	2.500G - 11.00G	CW	3000	25m	30†		TWT§	AM		CO	4.5
55	TH3673	6.75G	3	6.4G-7.1G	CW	2.5	40m	46	25	TWT	AM	FF	CO	1.75
56	TH3542	6750M	7.0 †	6.400G-7.110G	CW	3000	25m	32	24*	TWT§	AM		CO	1.5
57	TWC14C	6750M	10	6.400G-7.100G	CW	3600	45m	36†	28*	TWT§	AM		WA	10.75 *
58	YH1208	6750M	12	6.400G-7.100G	CW	2520	45m	45	25	TWT	AM		CO	1.8
59	W5MC/13B	6767M	22	6.425G-7.110G	CW	3050	56mØ	39	26*	TWT	AM		CO	1.65
60	TWC5C	6768M	5.0	6.425G-7.110G	CW	3500	2.0mØ	36	28*	TWT§	AM		WA	10.75 *
61	LD928	6770M	3.5	6.430G - 7.110G	CW	2000	18m	43	25	TWT§	AM		WA	6.0
62	LD4246	6770M	11.5	6.430G-7.110G	CW	3600	32m	47	24	TWT§	AM		WA	6.7
63	LD863	6770M	18	6.430G-7.110G	CW	3300	40m	43		TWT§	AM		WA	9.038
64	LD800	6770M	22	6.425G - 7.125G	CW	3600	46m	44	25	TWT§	AM		WA	
65	VTJ2608A2	6770M	22	6.425G-7.125G	CW	3600	45m	42	24	TWT§	AM		WA	9.24 *
66	LD4086	6770M	30	6.430G-7.110G	CW	3900	58	38	22	TWT§	AM		WA	10
67	LD4088	6775M	5.5 †	6425M-7125M	CW	21 §Ø		34†	22	TWT§	AM	VT	CO	8.5
68	VTJ2677A2	6775M	15	6.425G-7.125G	CW	1600 Ø	27mØ	45	22.5	TWT	AM			6.75
69	VTJ2609A11	6775M	20 †	6.425G-7.125G	CW	1900	45m	36	26	TWT	AM		WA	8.3
70	VYJ2609A11	6775M	20 †	6.425G-7.125G	CW	1900	45m	36	26	TWT§	AM		WA	8.3
71	YH1203	6775M	22	6.425G-7.125G	CW	3300	67m	39		TWT	AM		CO	4.2
72▼	CGB647101-09	6.775G	30	6.425G-7.125G		15 §Ø	1.7	29.5	10	TWTØ	AM		CO	2.20
73▼	CGB647103-08	6.775G	33	6.425G-7.125G		15 §Ø	3.3	32.5	10	TWTØ	AM		CO	2.86
74▼	CGB647105-04	6.775G	35	6.425G-7.125G		15 §Ø	7.0	35.5	10	TWTØ	AM		CO	3.96
75	N10018/2	6800M	10	6.425G-7.110G	CW	4000	40m§	37.5	26	TWT	AM		WA	7.25
76	N10019/2	6800M	10	6.425G-7.110G	CW	4000	40m§	37.5	26	TWT	AM		CO	7.5
77	LD550	6800M	14	5.800G-8.200G	CW	3200	35m	33		TWT§	AM		WA	11.02
78	7W412	6800M	18	6.400G - 7.200G	CW	2000	47m	40		TWT§	AM		WA	
79	7W412V	6800M	18	6.400G-7.200G	CW	2000	47m	40		TWT§	AM		WA	
80	TH3545	6800M	20 †	6.400G-7.200G	CW	3850	3.0mØ	33†	24*	TWT§	AM		CO	1.54
81	W5MC/2A	6812M	10	6.425G-7.200G	CW	3300	32m	36.5†	25	TWT§	AM		CO	
82	VTC6077C1	7000M	10 †	4.000G-10.000G	CW	2750 Ø	80mØ	40†		TWT*	AM		CO	3.0
83	VTH6077A1	7000M	10	4.000G-10.00G		2900	75m	48		TWT*§	AM		CO	2.5
84	VTH6079A1	7000M	10 †	4.000G - 10.00G	CW	2900	75m	37†	27	TWT§	SEA		CO	3.0
85	VTH6079H1	7000M	10 †	4.000G-10.000G	CW	2900	10mØ			TWT§	AM		CO	3.0
86	VZH6970F1	7000M	10	4.000G-10.00G	CW	230 §†Δ		35	30*	TWT	AM		CO	55 Δ
87	VZV6970G1	7000M	10	4.000G-10.00G	CW	230 §†Δ		35		TWT	AM		CO	
88	L5684-01	7000M	200	6.000G-8.000G	CW	9000		45		TWT	AM	BB		
89	LD812	7100M	18	6.500G - 7.700G	CW	3800	41m	41	25	TWT§	AM		WA	
90	TWC5B	7150M	5.0	6.900G-7.400G	CW	3500	2.0mØ	36	28*	TWT§	AM		WA	10.75 *
91	N10018/3	7150M	10	6.900G-7.400G	CW	4000	40m§			TWT	AM		WA	7.25
92	N10019/3	7150M	10	6.900G-7.400G	CW	4000	40m§			TWT	AM		CO	7.5
93	TWC14B	7150M	10	6.900G-7.400G	CW	3600	45m	33†	28*	TWT§	AM		WA	10.75 *
94♦	N10504	7.15G	15	5.8G-8.5G	CW	3.2k	3.5mØ	41*	22	TWT	AM		CO	220m
95	YH1120	7150M	20 †	5.800G-8.500G	CW	3500	55m	36	25	TWT§	AM		WA	10.4
96	VTH4471H1	7200M		4.800G-9.600G				35	17	TWT§	AML		CO	8.0
97	VTH4370H3	7200M	10m	4.800G-9.600G	CW	115 ØΔ§		40†	9.5*	TWT§	AML		CO	5.5
98	VTH4371H1	7200M	100m	4.800G-9.600G		115 ØΔ§		35	17	TWT§	AML		CO	5.0
99	N1083	7200M	25 †	4.800G-9.600G	CW	5000	100m§	43†	30*	TWT§	AM		CO	3.75
100	VTJ6264F1	7200M	200 †	4.800G-9.600G	CW	8500 Ø	300m§	40		TWT§	AM			6.0
101	VZJ6963G2	7200M	200	4.800G-9.600G	CW	230 §†Δ		40		TWT	AM		WA	
102	VZV6968A3	7200M	200	4.800G-9.600G	CW	230 §†Δ		40		TWT	AM		CO	
103	VTJ6379A1	7200M	300	4.800G-9.600G	CW	9500 Ø	200mØ	30		TWT§	AM			9.0
104	VTJ6370A1	7200M	450 †	4.800G-9.600G	CW	9500	390m§	37		TWT	AM			9.5
105	VZV6979B1P	7200M	2125	4.800G-9.600G	CW	230 §†Δ		35		TWT	AM		WA	
106	L2385	7250M	2.0	4.50G-10.00G	CW	2000	25m	35	30	TWT§	AM		CO	3.0
107	648HDS	7250M	10 †	4.000G-10.500G	CW	2800	65m	30	35*	TWT§	AM		CO	3.0 Δ
108	W5/2GF	7250M	25 *	6.600G-7.900G	CW	3300	50m	34†	28	TWT§	AM		WA	18
109♦	N10500	7.25G	100	4.5G-10G	C.W.	5.8k	3.5mØ			TWT	AM		CO	11
110	L2371	7300M	300m	4.80G-9.80G	CW	1300	10m	38	17	TWT§	AM		CO	2.0

SYMBOLS AND CODES EXPLAINED IN INTERPRETER

2. SOURCE,AMPLIFIER,OUTPUT TUBES

IN ORDER OF (1)TUBE TYPE (2)CENTER FREQUENCY (3)POWER OUTPUT (4)TYPE No.

LINE No.	4 TYPE No.	2 CENTER FREQ. (Hz)	3 POWER OUTPUT (W)	FREQUENCY RANGE (Hz)	MAX. DUTY CYCLE	MAX. BEAM VOLTAGE (Note 1) (V)	MAX. CATH-ODE CUR. (A)	GAIN (dB)	NF (dB)	DESCRIPTION 1 TUBE TYPE	FUNC-TION	TUN-ING	OUT PUT	WEIGHT (lb)
1	L2372	7300M	1.0	4.80G-9.80G	CW	1800	20m	38	17	TWT§	AM		CO	2.0
2	YH1209	7400M	11	7.100G-7.700G	CW	2520	45m	43	25	TWT	AM		CO	1.8
3	VTH2610A1	7400M	22	7.125G-7.75G	CW	3700	45m	43	25	TWT§	AM		WA	9.24 *
4▼	CGB717701-04	7.425G	29.5	7.125G-7.725G		15 §Ø	1.8	30	10	TWTØ	AM		CO	2.86
5▼	CGB717702-03	7.425G	31.5	7.125G-7.725G		15 §Ø	3.5	33	10	TWTØ	AM		CO	2.86
6▼	CGB717704-01	7.425G	34.5	7.125G-7.725G		15 §Ø	7.0	36	10	TWTØ	AM		CO	3.96
7	TH3628	7.44G	20	7.25G-7.375G		3k		42	30	TWT	AM	FF		
8	TOP1407	7450M	7.0 †	7.100G-7.800G	CW	3000	25mØ	35†	28	TWT	AM		CO	1.43
9	VTX4403C4	7500M	40m	7.250G-7.750G		115 ØΔ§		30	8.0	TWT§	AML		WA	16
10	263H	7500M	500m†	7.000G-8.000G	CW	1750 Ø	5.0mØ	32		TWT§	AM		CO	1.0
11	1200H	7500M	500m	7.000G-8.000G	CW	33 §Ø		32		TWT§	AM		CO	4.5
12	L2382	7500M	1.0	5.00G-10.00G	CW	2000	20m	30	30	TWT§	AM		CO	3.0
13	N1078	7500M	4.0	5.00G-10.00G	CW	2500	35m	45		TWT	AM		CO	2.0 *
14	QKW1932	7500M	5.0	5.000G-10.000G	CW	2200	50m	35		TWT	AM		CO	1.0
15	298H	7500M	10 †	7.000G-8.000G	CW	2600	26m	50†		TWT§	AM		CO	1.5
16	746H	7500M	10 †	5.000G-10.000G	CW	3500	55m	30	35*	TWT§	AM		CO	3.0 Δ
17♦	1248H	7500M	10 †	7.250G-7.750G	CW	33 †		50	30*	TWT	AM		CO	6.5
18♦	1656H	7.5G	10	7.25G-7.75G	CW	28 §Ø		50		TWT	AM		CO	6.5
19	M4826F	7500M	12	7.100G-7.900G	CW	3300	47m	40		TWT§	AM		WA	
20	8W413	7500M	15	7.100G - 7.900G	CW	2000	47m	40		TWT§	AM		WA	
21	8W413V	7500M	15	7.100G-7.900G	CW	2000	47m	40		TWT§	AM		WA	
22	240H	7500M	20	6.000G-9.000G	CW	3400 Ø	42mØ	40		TWT§	AM		CO	2.75
23	293H	7500M	40 †	7.000G-8.000G	CW	4000	53m	53*		TWT§	AM		CO	3.6
24	1238H	7500M	40 †	7.000G-8.000G	CW	28 Ø§		53	33*	TWT	AM		CO	3.6
25	1241H	7500M	40	7.250G-7.750G	CW	28 Ø§		45		TWT	AM		CO	16.5
26	1255H	7500M	40	7.250G-7.750G	CW	28 Ø§		45		TWT	AM		CO	15
27	N1077	7500M	140	5.0G-10.0G	CW	3250	1.5mΔ	35		TWT§	AM		CO	6.25 *
28	W4MC13F	7550M	10.0 †	7200M-7900M	CW	2900	33.0mØ	38.2	25.0	TWT§	AM		CO	1.65
29	TWC5A	7600M	5.0	7.400G-7.800G	CW	3500	2.0mØ	36	28*	TWT§	AM		WA	10.75 *
30	TWC14A	7600M	10	7.400G-7.800G	CW	3600	45m	33†	28*	TWT§	AM		WA	10.75 *
31	LD812A	7700M	16	7.400G-7.800G	CW	3200	40m	40		TWT§	AM		WA	8.818
32	VZX6981S3	7750M	10	7.100G-8.400G		115 Δ§				TWT	AM			
33	TH3606	7750M	12	7.100G-8.400G	CW	2500	30m	39.5		TWT	AM	FF	WA	1.5
34	W4/2G	7750M	15 *	7.000G - 8.500G	CW	3700	50m	36†	28	TWT§	AM		WA	
35	N1071	7750M	20	7.000G-8.500G	CW	4000	50m	43	24	TWT§	AM		WA	500m§
36	L5663	7800M	2.0	5.200G-10.400G	CW	16000	3.75	51	30	TWT§	AM		CO	15
37	RW70	7800M	4.0	7.100G-8.500G	CW	1900	40m	37		TWT†	AM		WA	22 *
38	L5664	7800M	5.0	5.200G-10.400G	CW	2600	85m	55	30	TWT§	AM		CO	2.0
39	664H	7800M	10 †	3.900G-11.700G	CW	3500	55m	30	35*	TWT§	AM		CO	3.0 Δ
40	W4MC/12C	7800M	10	7.125G-8.500G	CW	2500	33mØ	38	25	TWT	AM		CO	1.65
41	LD4359	7.8G	13.7	7.1-8.5G			50m	44	22.7	TWT§			CO	1.98
42	RW90	7800M	15	7.100G-8.500G	CW	2550	48m	40	25	TWT§	AM		CO	3.3 *
43	VTH2611	7800M	16	7.125G-8.400G†	CW	2000 Ø	45mØ	40	26	TWT§	AM			17.5
44	VTH2648	7800M	17	7.125G-8.400G†	CW	2000 Ø	45mØ	44	23.5	TWT§	AM			17.5
45	F2130	7800M	20 †	5.200G-10.400G	CW	2600	130m	38†	35*	TWT§	AM		CO	0.5
46	VTH6176A1	7800M	20 †	5.200G-10.400G	CW	2550	115m	40		TWT	AM		CO	500m
47	VZV6976A3	7800M	20	5.200G-10.40G	CW	115 Ø§		40		TWT	AM		CO	
48	QKW1934	7800M	26	5.200G-10.400G	CW	2500	100m	40		TWT	AM		CO	600m
49	VTH6176A4	7800M	30 †	6.800G-8.800G	CW	2550	115m	45		TWT	AM		CO	500m
50	YH1301	7850M	200	7.700G-8.000G	CW	7100	220m	34†		TWT§	AM		WA	9.5
51	N10025#ai	7.9G	63	7.9G-8.4G			120n	35	28	TWT§	AM		CO	4.2
52	VTH4470A1	8000M	1.0m†	4.000G-12.000G	CW	115 §*Ø		30†	10*	TWT	AM		CO	15
53	TOP1222	8000M	10m†	5.000G-11.000G	CW	1200	3.0mØ	35†	12	TWT	AM		CO	2.20
54	8198	8000M	1.0	5.000G - 11.00G	CW	2900	23m	60		TWT	AM		CO	4.5 *
55	L3972-50	8.0G	1.0 †	5.4G-10.7G	CW	-2.0k	33m	55†		TWT§*	AM		CO	1.5
56	TWX22	8000M	1.0	7.900G-8.100G	CW	2600	8.0m	35†	30	TWT§	AM		WA	6.27 *
57	TWX34	8000M	1.0	7.900G-8.100G	CW	2600	8.0m	35†	30	TWT§	AM		WA	4.5 *
58	F4186	8000M	2.0 †	5.000G-11.000G	CW	2100	25mØ	55†	30	TWT	AM		CO	1.59
59	L3957-00	8.0G	2.0 †	5.4G-10.7G	CW	-2.15k	32m	60†		TWT§	AM		CO	1.5
60	VTH6074A2	8000M	2.0 †	5.000G - 11.00G	CW	2100 Ø	25m	30†		TWT§	AM		CO	.87
61	VTH6074H2	8000M	2.0 †	5.000G - 11.00G	CW	2200	25m	60†		TWT§	AM		CO	1.25
62	LD4180	8000M	5.0	7.800G-8.200G	CW	2000	26m	45	23	TWT§	AM		CO	2.5
63	LD4200	8000M	11.5	7.725G-8.275G	CW	3600	32m	51	24	TWT§	AM		WA	6.7
64	VTH2678A1	8000M	14	7.725G-8.275G	CW	1600	27m	50	22.5	TWT§	AM			6.75
65	RW90D	8.0G	15.0	7.1G-8.5G	100	2550	55m	40	23	TWT				3.0
66	1240H	8000M	20	6.000G-10.000G	CW	28 §Ø		48	30	TWT	AM		CO	9.6
67	265H	8000M	22	7.000G-9.000G	CW	3800 Ø	50mØ	46		TWT§	AM		CO	2.2
68	1202H	8000M	22	7.000G-9.000G	CW	33 §Ø		46		TWT§	AM		CO	9.5
69	L5555	8000M	1.0k	6.00G-10.00G	20m	11000	2.0	60	40	TWT§	AM		CO	6.0
70	L5655-50	8000M	1.0k	6.000G-10.000G	20m	12000	2.2	40	40	TWT§	AM		CO	6.0
71	756H	8000M	8.0k†	X Band,10% B.W.	250m	18000	2.2	50		TWTØ#	AM		WA	40
72	LY50	8000M	20k	7.750G-8.250G	20m	34000	6.0	45		TWT§	AM		WA	12 *
73	L3972	8050M	1.0 †	5.400G - 10.70G	CW	2100	40m	55†		TWT*§	AM		CO	1.5 Δ
74	LD4018	8075M	17	7.750G-8.400G	CW	3300	45m	43		TWT§	AM		WA	12.56
75	VZV6975A1	8100M	10	7.000G-12.40G	CW	115 Ø§		40		TWT	AM		CO	
76	W4MC/11S	8100M	11	7.700G-8.500G	CW	2500	41 Ø	39	25	TWT	AM		CO	2.6
77	YH1206	8100M	12	7.70G-8.50G	CW	2550	43m	43	24	TWT	AM		CO	1.8
78	VTH2610A2	8100M	17	7.75G-8.40G	CW	3410	45m	42	25	TWT	AM	FF	WA	9.24
79	VYH2610A2	8100M	17	7.75G-8.40G	CW	3410	45m	42	25	TWT§	AM	FF	WA	9.24
80	VA925B#	8.1G	8.0k	7.9G-8.4G	CW	14k	2.0	47		TWTØ	AM		WA	20
81	VA876A#	8.1G	20.5k	7.9G-8.4G	CW	25k	4.0	54		TWTØ	AM		WA	20
82	YH1204	8112M	11	7.725G-8.500G	CW	2900	41m	39	25	TWT§	AM		CO	1.8
83	VTX4403J1	8150M	40m	7.900G-8.400G		115 Δ§		30	8.0	TWT§	AML		CO	16
84	VTX6084A5	8150M	2.0	7.900G-8.400G	CW	2100 Ø	20mØ	35		TWT§	AM		CO	14
85	W4MC14A	8150M	10.0 †	7900M-8400M	CW	2600	35.0mØ	37.0	24.5	TWT§	AM		CO	1.65
86	VTX6081A1	8150M	15 †	7.900G-8.400G	CW	2200 Ø	50mØ	35†	27	TWT§	AM		CO	2.5
87	VTX6081B1	8150M	15 †	7.900G - 8.400G	CW	2400	50m	27†	27	TWT§	AM		CO	2.5
88	VZV6985A1	8150M	15	7.900G-8.400G	CW	115 Ø§		35		TWT	AM		CO	
89	VZX6980D2	8150M	15	7.900G-8.400G	CW	230 §†Δ		35		TWT	AM			
90	VTH6176A6	8150M	30 †	7.900G-8.400G	CW	2550	115m	40		TWT	AM		CO	500m
91	VZX6980D4	8150M	30	7.900G-8.400G	CW	230 §†Δ		40		TWT	AM			
92	W4PC16E	8.15G	30	7.9G-8.4G	CW	28 §Ø		40	25	TWT§	AM		CO	7.5
93▼	CGB798404-01	8.15G	34	7.9G-8.4G		15 §Ø	8.0	39	10	TWTØ	AM		CO	3.96
94	VZX6981S4	8150M	35	7.900G-8.400G		115 Δ§				TWT	AM			
95	VTX6181A1	8150M	40 †	7.900G-8.400G	CW	3500 Ø	85mØ	40		TWT§	AM		CO	2.5
96	VTX6181A	8150M	40	7.90G-8.40G		3500	850m	40		TWT	AM		CO	2.5
97	VZV6986A3	8150M	40	7.900G-8.400G	CW	115 Ø§		40		TWT	AM		CO	
98	VZX6981D2	8150M	40	7.900G-8.400G	CW	230 §†Δ		40		TWT	AM			
99	287H	8150M	50	7.900G-8.400G	CW	4250	57mØ	33†		TWT§	AM		CO	2.25
100	8736H	8150M	50	7.900G-8.400G	CW	3800	110m	44		TWT	AM		CO	3.0
101	9040H-03	8150M	50	7.900G-8.400G	CW	120 §*Δ		44		TWT	AM		WA	25
102	N10025	8.15G	63.0	7.9G-8.4G	CW	5.0k	120m	37	28	TWT	AM		CO	4.19
103	VTX6281H7	8150M	100	7.900G-8.400G	CW	6000 Ø	190mØ	50		TWT§$	AM			7.0
104	VZX6982D6	8150M	100	7.900G-8.400G	CW	208 *Δ§		40		TWT	AM			
105	TH3672	8.15G	150	7.9G-8.4G						TWT	AM	FF		
106	VTX6281B2	8150M	180	7.900G-8.400G	CW	7500 Ø	230mØ	40		TWT§$	AM			7.0
107	VZX6982D2	8150M	180	7.900G-8.400G	CW	208 *Δ§		40		TWT	AM			
108	VTX6281H2	8150M	250	7.900G-8.400G	CW	8600 Ø	290mØ	40		TWT§$	AM			7.0
109	VZX6983D2	8150M	250	7.900G-8.400G	CW	208 *Δ§		40		TWT	AM			
110	VTX6281H3	8150M	500	7.900G-8.400G	CW	10000 Ø	400mØ	37		TWT§$	AM			16

2. SOURCE,AMPLIFIER,OUTPUT TUBES

IN ORDER OF (1)TUBE TYPE (2)CENTER FREQUENCY (3)POWER OUTPUT (4)TYPE No.

LINE No.	[4] TYPE No.	[2] CENTER FREQ. (Hz)	[3] POWER OUTPUT (W)	FREQUENCY RANGE (Hz)	MAX. DUTY CYCLE	MAX. BEAM VOLTAGE (Note 1) (V)	MAX. CATH-ODE CUR. (A)	GAIN (dB)	NF (dB)	DESCRIPTION [1] TUBE TYPE	FUNC-TION	TUN-ING	OUT PUT	WEIGHT (lb)
1	VZX6985D2	8150M	500	7.900G-8.400G	CW	230 §†Δ		37		TWT	AM		WA	
2♦	8760H#2	8.15G	600	7.9G-8.4G	CW	13.0k	520m	38		TWT§	AM		WA	30
3	VTX6281H4	8150M	600	7.900G-8.400G	CW	11000 Ø	440mØ	50		TWT§$	AM			16
4	VZX6985E2	8150M	600	7.900G-8.400G	CW	230 §†Δ		45		TWT	AM		WA	
5	VZX6985A1	8150M	1.0k	7.900G-8.400G	CW	208 *Δ§		37		TWT	AM			
6	745H	8150M	1.2k†	7.900G-8.400G	CW	9900	850m	30		TWTØ#	AM		WA	42 *
7♦	8760H#1	8.15G	1.2k	7.9G-8.4G	CW	12.9k	720m	30		TWT§	AM		WA	30
8	VZX6985A2	8150M	1.2k	7.900G-8.400G	CW	208 *Δ§		45		TWT	AM			
9	767H	8150M	3.0k†	7.900G-8.400G	CW	13000	1.4	36		TWTØ#	AM		WA	71
10	VTX6625	8150M	5.0k†	7.90G-8.40G	CW	13500	2.1	35†		TWTØ#	AM		WA	25
11	VTX6625A1	8150M	5.0k	7.900G-8.400G	CW	13500	2.1	35		TWT#	AM			25
12	792H	8150M	5.4k	7.900G-8.400G	CW	13700	2.2 §	37		TWTØ	AM		WA	68 *
13	784H	8150M	6.0k	7.900G-8.400G	CW	16000	1.8	40		TWTØ#	AM		WA	80
14	VA925E	8150M	8.0k	8.0G	CW	14k	2.0	47		TWTØ	AM	FF	WA	20
15	VTX6384	8150M	8.0k	7.90G-8.40G	CW	19500	3.0	35		TWTØ#	AM		WA	30
16	VTX6384A1	8150M	8.0k	7.900G-8.400G		17000	2.8	35		TWTØ	AM			35 §
17	VTH6070A1	8200M	1.0 †	4.000G - 12.40G	CW	2150 Ø	30mØ	30†		TWT§	AM		CO	.87
18	VTH6070A2	8200M	1.0 †	4.000G-12.400G	CW	2300	35m	30†	30*	TWT§*	AM		CO	1.0
19	VZH6070C1	8200M	1.0	4.000G-12.40G		115 Ø§				TWT	AM			
20	VZH6070D1	8200M	1.0	4.000G-12.40G		28 Ø§				TWT	AM			
21	VZH6979F1	8200M	1.0	4.000G-12.40G	CW	230 §†Δ		30	30*	TWT	AM		CO	55 Δ
22	VZH6979G1	8200M	1.0	4.000G-12.40G	CW	230 §†Δ		30		TWT	AM		CO	
23	VZV6971D1	8200M	1.0	4.000G-12.40G	CW	28 Ø§		30		TWT	AM		CO	
24	VTH6074B1	8200M	2.0 †	5.400G-11.000G	CW	2300	30m	30†	30*	TWT§*	AM		CO	1.0
25	VTH6074J1	8200M	2.0 †	5.400G-11.000G	CW	2300	30m	60†	30*	TWT§*	AM		CO	1.25
26	VZH6074C1	8200M	2.0	5.400G-11.00G		115 Ø§				TWT	AM			
27	VZH6074D1	8200M	2.0	5.400G-11.00G		28 Ø§				TWT	AM			
28	VZH6978F2	8200M	2.0	5.400G-11.00G	CW	230 §†Δ		30	30*	TWT	AM		CO	55 Δ
29	VZH6978F3	8200M	2.0	5.400G-11.00G	CW	230 §†Δ		60	30*	TWT	AM		CO	55 Δ
30	F2084	8200M	10	5.400G - 11.00G	CW	3200	70m	65		TWT§	AM		CO	
31	VTH6071A1	8200M	10 †	5.400G - 11.00G	CW	3600	90m	42†	27	TWT§	AM		CO	3.0
32	F2548	8200M	20	5.4G-11.0G	CW	3600	75m	58	35	TWT§	AM		CO	3.2
33	TH3609	8212M	20	8025-8400M	CW	3.2k	37m	40	26	TWT	AM	FF	CO	1.55
34	VTH4471P1	8300M	100m	4.300G-12.30G	CW	115 §ØΔ		30†	17*	TWT§	AML		CO	8.0
35	285H	8450M	24	8.400G-8.500G	CW	3400	36mØ	37†		TWT§	AM		CO	2.25
36	W4PL2D	8.5G	10m	5.0G-12GΔ	CW	115 §Ø				TWT	LIM		CO	7.7
37	TH3524	8500M	1.0 †	7.000G-10.000G	CW			24†		TWT	AM		CO	
38	L5602	8500M	10	6.000G-11.000G	CW	3000	95m	34		TWT§	AM		CO	600m
39	219H	8500M	20	8.000G-9.000G	CW	3400 Ø	40mØ	40		TWT§	AM		CO	1.5
40	VTH6170A1	8500M	20 †	6.000G - 11.00G	CW	3200	90m	35†	30	TWT§	AM		CO	2.5
41	VTH6170B1	8500M	20 †	6.000G - 11.00G	CW	3200	90m	35†	30	TWT§	AM		CO	2.5
42	VTH6170H1	8500M	20 †	6.000G - 11.00G	CW	3200	90m	54†	30	TWT§	AM		CO	3.0
43	VTH6170J1	8500M	20 †	6.000G - 11.00G	CW	3200	90m	54†	30	TWT§	AM		CO	3.0
44	VZH6971E1	8500M	20	6.000G-11.00G		115 Δ§				TWT	AM			
45	VZH6971F1	8500M	20	6.000G-11.00G	CW	230 §†Δ		35	35*	TWT	AM		CO	55 Δ
46	VZH6971F2	8500M	20	6.000G-11.00G	CW	230 §†Δ		54	35*	TWT	AM		CO	55 Δ
47	VZH6971G1	8500M	20	6.000G-11.00G	CW	230 §†Δ		35		TWT	AM		CO	
48	VZH6971G2	8500M	20	6.000G-11.00G	CW	230 §†Δ		54		TWT	AM		CO	
49	VZV6976A1	8500M	20	6.000G-11.00G	CW	115 Ø§		35		TWT	AM		CO	
50	VZV6976A2	8500M	20	6.000G-11.00G	CW	115 Ø§		54		TWT	AM		CO	
51	2152	8500M	100	6.000G-11.00G	CW	7200	195m	40	30	TWT§	AM		CO	5.5
52	VZV6969B3P	8500M	1060	6.000G-11.00G	CW	230 §†Δ		32		TWT	AM		CO	
53	VZV6972D1/D2	8550M	2.0	5.400G-11.00G	CW	28 Ø§		30†		TWT	AM		CO	
54	TWX16	8650M	5.0kΔ	8.000G - 9.300G	6.0m	25000	50m	40†		TWT*Ø	AM		WA	79.2 *
55	L5632-52	8.7G	10k†	8.4G-9.0G	.08	-20.8k	3.03			TWT§#*	AM		CC	24
56	VTX4412P1	8750M	10m†	7.15G-10.35G	CW	§		27†	10*	TWT§	AML		CO	16.5
57♦	8713H	8.75G	1.5k†	7.5G-10.0G	CW	10kØ	1.28 Ø	40		TWT#	AM		CC	54
58	UV1001	8789M		7408-10170M				25	10	TWT			WA	.26
59	VTX4403S9	8800M	40m	7.250G-8.400G		115 Δ§		30	8.0	TWT§	AML		CO	16
60	VTX5585H3	8950M	6.0k	8.500G-9.400G	50m	16000 Ø	3.0 Ø	50		TWT§*	AM			10
61	8154	9000M	5.0m†	7.000G - 11.00G	CW	850	1.0m	25†	10*	TWT†	AML		CO	11.5
62	VTX4415P1	9000M	5.0m†	7.0G-11G	CW	§		25†	8.0*	TWT§	AML		CO	7.0
63	F4026B	9000M	10m†	6.900G-11.100G	CW	1200	3.0mØ	35†	13	TWT	AM		CO	2.20
64	VTX4380P1	9000M	10m	7.000G-11.00G		115 ØΔ§		25	9.5	TWT§	AML		CO	5.0
65	VTX4380P2	9000M	10m	7.000G-11.00G		115 ØΔ§		40	9.5	TWT§	AML		CO	5.5
66	VTX4415H1	9000M	20m	7.000G-11.00G	CW	115 ØΔ§		35†	8.0*	TWT§	AML		CO	7.0
67	QKW1929	9000M	30m	7.000G-11.000G	CW	1200	3.0m	30		TWT	AM		WA	5.0
68	L2378	9000M	2.0	8.00G-10.00G	CW	2500	15m	60	18	TWT§	AM		CO	2.5
69	VTH2601A1	9000M	4.0	7.0G-11G	CW	3300	15m	46	30	TWT§	AM		WG	5.0 *
70	L3928	9000M	10 †	7.000G - 11.00G	CW	3050	75m	40†		TWT*§	AM		CO	2.5
71	L5566	9000M	10	7.00G-11.00G	CW	3200	80m	60	35	TWT§	AM		CO	3.0
72	QKW1950	9000M	10	7.000G-11.000G	CW	1350	80m	30		TWT	AM			600m
73	VTX6089H2	9000M	10 †	7.000G-11.000G	CW	3400 Ø	80mØ	40†	30*	TWT§*	AM		CO	3.0
74	VZX6980E3	9000M	10	7.000G-11.00G		115 Δ§				TWT	AM			
75	VZX6980F3	9000M	10	7.000G-11.00G	CW	230 §†Δ		45	30*	TWT	AM		CO	55 Δ
76	VZX6980G1	9000M	10	7.000G-11.00G	CW	230 §†Δ		45		TWT	AM		CO	
77	8609	9000M	12.5	7.000G-11.000G	10m	12000	2.0	40		TWT	AM		CO	4.75
78	QKW1132	9000M	15	7.000G-11.000G	10m	11000	2.0	40		TWT	AM		CO	4.75
79	VTH6176A5	9000M	20 †	7.000G-11.000G	CW	3900	110m	40		TWT	AM		CO	625m
80▼	CGC081001-01	9.0G	30	8.0G-10.0G		15 §Ø	2.7	30	12	TWTØ	AM		CO	4.40
81	N10030	9.0G	30	6.0G-12.0G						TWT§	AM		CO	3.3
82	VTH6270C1	9000M	100 †	7.000G-11.00G	CW	5500	210m	30†	32	TWT§#	AM		CO	5.0
83	VTH6270F1	9000M	100 †	7.000G-11.000G	CW	5300 Ø	240m§	40		TWT§$	AM			5.0
84	VZH6972G1	9000M	100	7.000G-11.00G	CW	230 §†Δ		40		TWT	AM		CO	
85	VZV6977A1	9000M	100	7.000G-11.00G	CW	230 §†Δ		40		TWT	AM		CO	
86	F2137	9000M	150 †	7.000G-11.000G	CW	7200	220m	36†	35*	TWT§	AM		WA	5.5
87	TH3509	9000M	150 †	7.000G-11.000G	CW	6500	200 Ø	30†		TWT	AM		CO	3.85
88	N1080A	9000M	200	7.000G-11.00G	CW	8500	300m§	35		TWT§	AM		CO	11
89	QKW1784	9000M	200	7.000G-11.000G	4.0m	11000	2.3	40		TWT	AM		CO	
90	TOP1334	9000M	200 †	7.000G-11.000G	CW	6200	250 Ø	30†	30	TWT	AM		CO	4.40
91	VTH6272A1	9000M	200	7.000G-11.00G		9000	310m	33		TWT§	AM		CO	9.0
92	VTH6272F1	9000M	200 †	7.000G-11.000G	CW	9000	320m§	35		TWT	AM			7.0
93	VZH6973G1	9000M	200	7.000G-11.00G	CW	230 §†Δ		35		TWT	AM		WA	
94	VZV6978A1	9000M	200	7.000G-11.00G	CW	230 §†Δ		35		TWT	AM		CO	
95	VTX6272F3	9000M	400	8.000G-10.00G	CW	8800 Ø	340mØ	30		TWT§	AM			7.0
96	F2085	9000M	1.0k	7.000G - 11.00G	10m	12000	1.6	33†		TWT§	AM		CO	60 Δ
97	L5022	9000M	1.0k	7.00G-11.00G	10m	11400	2.0	35		TWT§	AM		CO	3.5
98	L5089	9000M	1.0k	7.000G - 11.00G	10m	11400	2.0	35		TWT§*	AM		CO	5.05
99	VTX5170F1	9000M	1.0k	7.000G-11.00G	40m	10500 Ø	1.8 Ø	50		TWT§*	AM			7.0
100	VZV6979B2P	9000M	1.06k	7.000G-11.00G	CW	230 §†Δ		30		TWT	AM		WA	
101	TH3501	9000M	1.25k†	7.000G-11.000G	15m	10500	1.2m	35†		TWT§	AM		CO	
102	VTX5185A2	9000M	2.0k	8.000G-10.00G	20m	11000 Ø	1.5 Ø	40		TWT§*	AM			5.5
103	LY30	9000M	15k	8.700G-9.300G	20m	30000	5.0	40		TWT	AM		WA	12 §
104	L5634-50	9.0G	20k†	8.5G-9.5G	.01	-25.9k	7.0			TWT§*	AM		CC	17
105	N10503	9000M	25k	8.600G-9.500G	10m	26000	7.0	46†		TWT§	AM		WA	22
106	307H	9000M	50k	8.500G-9.500G	10m	36000	10.3	50		TWT§	AM		WA	25 *
107	VTX4480P1	9050M		8.500G-9.600G				25	6.0	TWT§	AML		CO	11
108	VTX4415P4	9050M	10.3m	8.50G-9.60G		115 §ΔØ		35	6.5	TWT§	AML		CO	7.0
109	VZV6982D3	9050M	2.0	8.500G-9.600G	CW	28 Ø§		30		TWT	AM		CO	
110	L5567	9050M	10	8.50G-9.60G	CW	2900	60m	40	35	TWT§	AM		CO	0.5

SYMBOLS AND CODES EXPLAINED IN INTERPRETER

2. SOURCE,AMPLIFIER,OUTPUT TUBES

IN ORDER OF (1)TUBE TYPE (2)CENTER FREQUENCY (3)POWER OUTPUT (4)TYPE No.

LINE No.	4 TYPE No.	2 CENTER FREQ. (Hz)	3 POWER OUTPUT (W)	FREQUENCY RANGE (Hz)	MAX. DUTY CYCLE	MAX. BEAM VOLTAGE (Note 1) (V)	MAX. CATH-ODE CUR. (A)	GAIN (dB)	NF (dB)	DESCRIPTION 1 TUBE TYPE	FUNC-TION	TUN-ING	OUT PUT	WEIGHT (lb)
1	725H	9050M	2.0k	8.500G - 9.600G	50m	11200	2.0	40		TWT§#	AM		WA	25 △
2	VTX5380B1	9050M	2.0k	8.500G-9.600G	10m	12000	1.0	50		TWT*§	AM			4.0
3♦	PT6061	9.05G	3.0k	8.5G-9.6G	70 m	14k	2.0	60		TWT§	AM		WA	13.2
4	VTX5585H2	9050M	3.0k	8.500G-9.600G	100m	14000 Ø	2.0 Ø	57		TWT§*	AM			8.8
5	L5660	9050M	4.0k	8.500G-9.600G	45m	12500	2.2	50		TWT§	AM		WA	5.5
6	VTX5780D1	9050M	20k	8500M-9600M	10m	27000	5.0	40		TWT§	AM		WA	17
7	TH3568	9.05G	30k	8.6-9.5G	.008	27k	7.5	58		TWT†	AM	FF	WA	17.5
8	VTX5682A2	9050M	30k	8.600G-9.500G	10m	26000 Ø	6.0 Ø	50		TWT§*	AM		CC	15
9	8753H	9050M	150k	8.500G-9.600G	35m	50000	17	53		TWT	AM		WA	65
10	VTX4403P9	9100M		8.500G-9.600G				25	6.0	TWT§	AML		CO	15
11	VTX6380A1	9100M	1.0k†	8.4G-9.8G	CW	10000 Ø	1.0 Ø	26		TWT§#Ø	AM		CC	20 *
12	VTX5783A2	9.1G	30k†	8.6G-9.6G	.01	32k	8.5	49		TWT§*	AM		CC	29
13	VTX5783A1	9100M	50k	8.600G-9.600G	10m	32000 Ø	8.5 Ø	50		TWT§*	AM		CC	50
14	L5591-50	9200M	6.0k	8.900G-9.500G	20m	13500	2.2	65		TWT§	AM		CO	5.5
15	308H	9200M	20k†	8.700G-9.700G	10m	25000 Ø	6.4 Ø	50		TWT§	AM		WA	25
16	JAN8882	9225M	10m	7.450G-11.00G		1150		10†	20*	TWT†	AM		CO	4.5
17	TWX8	9250M	1.0	7.000G-11.500G	CW	2700	8.0m	35†	30*	TWT§	AM		WA	5.0 *
18	W3MW1B	9300M	10.0 †	7900M-10700M	CW	2940	40.0mØ	4.0*	27.0*	TWT§	AM		CO	1.65
19	L5665-50	9300M	2.0k	9.100G-9.500G	30m	10000	1.5	66		TWT§	AM		WA	8.0
20♦	751H	9300M	50k†	8.8G-9.7G	10m	-33k	8.1	52		TWT§#	AM		WA	25
21	TH3574	9.35G	120	9.2G-9.5G	.006	45	15	45†		TWT	AM	FF	WA	2.2
22	F2208	9.375G	20	8.5-10.25G	CW	2950	75m	40†	30	TWT§	AM		CO	.60
23	VTX5781A1	9400M	9.0k	9.000G-9.800G	50m	18000 Ø	12 Ø	53		TWTØ#*	AM		CC	50
24	719H	9400M	40k	9.300G-9.500G	5.0m	26000	6.8	45		TWT§	AM		WA	15
25	760H	9400M	40k†	8.900G-9.900G	10m	30000	8.0	42		TWT§#	AM		CO	23
26	VTX5782A1	9400M	50k	9.00G-9.80G	100m	38000	9.0	59		TWTØ*	AM		WA	25
27	VTX5782B1	9400M	50k	9.000G-9.800G	100m	36000 Ø	24 Ø	53		TWTØ#*	AM		CC	60
28	W3MQ/5A	9475M	31m*	9.100G-9.850G	CW	1200	700u	24	6.7	TWT†	AM			
29	TWX19	9500M	10m	7.000G-12.000G	CW	1500	1.0m	30†	12*	TWT§	AM		CO	5.5
30▼	CGC091001-02	9.5G	30	9.0G-10.0G		15 §Ø	2.5	30	12	TWTØ	AM		CO	3.96
31	L5704-50	9500M	40	7.000G-12.000G	CW	11000		60		TWT	AM	BB		
32	2176	9500M	50 †	9.000G-10.000G	CW	4000	120m	30†	32*	TWT§	AM		CO	1.5
33	VTX6181E2	9500M	50 †	9.000G-10.000G	CW	3600 Ø	95mØ	55†	35*	TWT§	AM		CO	2.5
34	VTX6181D3	9500M	70 †	9.000G-10.000G	CW	4200 Ø	120mØ	55†	35*	TWT§	AM		CO	2.5
35	TH3511	9500M	150 †	8.500G-10.500G	CW					TWT	AM		CO	
36	QKW1638	9500M	1.7k	7.000G-12.000G	20m	10500	2.0	42		TWT	AM		CO	5.0
37	VTX5383A1	9500M	3.0k	9200M-9800M	500m	15000	1.6	50		TWTØ#	AM		WA	40
38	750H	9500M	25k	9.000G-10.000G	10m	24000	5.5	47		TWT§	AM		WA	25
39	781H	9550M	4.0k*	9.550G-9.850G	400m	12200	1.3	50†		TWT#	AM		WA	37
40	796H	9550M	40k†	9.200G-9.900G	50m	32000	8.0	54		TWT§#	AM		WA	28
41	QKW1989	9600M	240	9.500G-4.600G	100m	10000	1.5	53		TWT	AM		WA	8.0
42	L5509-50	9600M	500	9.500G-9.700G	CW	25000		25†		TWT	AM	BB		
43	QKW1704	9600M	2.5k	9.400G-9.800G	100m	11000	1.7	57		TWT	AM		CO	3.0
44	8757H	9600M	10k	9.300G-9.900G	100m	20000	3.8	47		TWT	AM		WA	18
45	786H	9600M	50k†	9.300G-9.900G	120m	35000	9.2	47		TWT	AM		WA	45
46	8715H	9600M	50k	9.300G-9.900G	40m	35000	8.0	56		TWT	AM		WA	30
47▼	8740H	9.6G	50k	9.3G-9.9G	20 m	33.0k	8.0	50		TWT	AM		WA	32.5
48	L5514	9600M	50k	9.300G-9.900G	20m	53000	8.6	53		TWT§	AM		WA	15
49	L5514-50	9600M	50k	9.300G-9.900G	1.5m	32500	7.6	56		TWT§*	AM		CC	14
50	VTX5784A1	9600M	50k	9.300G-9.900G	20m	20000 Ø	8.0 Ø	55		TWT§#*	AM		CC	15
51	UV95M	9605.5M		9375-9836M				28	6	TWT				22.05
52	L5391-51	9650M	100k	9.300G-10.000G	10m	44000	13.5	55		TWT§	AM		WA	30
53	QKW1907	9700M	5.0m	7.400G-12.000G	CW	900	4.0m	33		TWT	AM		CO	1.6
54	QKW1908	9700M	200m	7.400G-12.000G	CW	1800	12m	40		TWT	AM		CO	1.6
55	L2383	9700M	1.0	7.00G-12.40G	CW	2500	15m	30	30	TWT§	AM		CO	3.0
56	QKW1389	9700M	100	7.400G-12.000G	40m	11000	1.8	10		TWT	AM		CO	
57	N10011	9.7G	800	9.0G-10.5G	.50	5.5k	500m	49		TWT	AM	BB	CO	12.8 §
58	790H	9700M	1.0k	9.600G-9.800G	200m	10000	800m	50		TWT	AM		WA	13
59	VTX5788A1	9700M	1.0k	9.600G-9.800G	200m	14000 Ø	2.5 Ø	30		TWT§#*	AM		CC	15
60	L5563	9700M	2.0k	9.50G-9.90G	40m	11500	1.7	53	40	TWT§	AM		CO	6.0
61	W3MT/4A	9750M	17.5m	12.000G-18.000G	CW	1200 §Ø		30†	9.5	TWT	AM		CO	11.5
62	F2197	9.75G	50 †	9.5G-10G	CW	3600	130m	55	32	TWT§	AM		CO	1.0
63	VZV6986A4	9750M	50	9.500G-10.00G	CW	115 Ø§		50		TWT	AM		CO	
64	VZV6986A6	9750M	70	9.500G-10.00G	CW	115 Ø§		55		TWT	AM		CO	
65	L5390-01	9750M	400	9.500G-10.000G	CW	26000		45		TWT	AM	BB		
66	QKW2038	9.75G	2.75k	9.5G-10.0G	0.5	10k	1.5	45		TWT	AM	BB	WA	7
67♦	8774H	9.750G	3.5k	9.5G-10.0G	60m	12.0k	2.1	45		TWT	AM		WA	6.5
68	L5571	9750M	4.0k	9.500G-10.000G	40m	11400	1.7	60		TWT§	AM		WA	5.0
69	L5581	9750M	8.0k	9.600G-9.900G	20m	14700	2.5	57		TWT§	AM		WA	7.0
70	L5601-50	9750M	8.0k	9.500G-10.000G	20m	14500	3.0	60		TWT§	AM		WA	4.5
71	L5617-50	9750M	8.0k	9.500G-10.000G	20m	14800	2.7	45		TWT	AM		WA	6.0
72	L5519	9750M	15k	9.500G-10.000G	13m	21000	4.5	53		TWT§	AM		WA	12.5
73	L5519-55	9750M	15k	9.500G-10.000G	12m	23600	4.8	56†		TWT§*	AM		CC	10
74	VTX5786A1	9750M	15k	9.600G-9.900G	20m	14000 Ø	3.2 Ø	57		TWT§*	AM		CC	10
75	VTX5786A2	9750M	25k	9.600G-9.900G	10m	14000 Ø	4.4 Ø	57		TWT§*	AM		CC	10
76	VTX5680A1	9750M	45k	9500M-10000M	2.0m	30000	6.0	50		TWT§	AM		WA	14
77	QKW1652	9800M	25k		10m	10800	1.7	57		TWT	AM		CO	3.0
78	7394	10000M	5.0m†	8.000G - 12.00G	CW	850	1.0m	25†	10*	TWT†	AML		WA	11.5
79	VTX4880C9	10000M	8.0m*	8.000G-12.00G	CW	115 *Ø§		60	9.0	TWT§	LIM		CO	7.5
80	VTX4380P5	10000M	10m	8.000G-12.00G		115 Ø△§		25	10	TWT§	AML		CO	5.0
81	VTX4380P6	10000M	10m	8.000G-12.00G	CW	115 Ø△§		40†	10*	TWT§	AML		CO	5.5
82	VTX4415P2	10000M	10m†	8.0G-12G	CW	115 §Ø△		25†	8.0*	TWT§	AML		CO	7.0
83	VTX4880D9	10000M	10m	8.000G-12.00G	CW	115 *Ø§		35	9.0	TWT§	AM△		CO	17
84	VTX4415P3	10000M	25m	8.00G-12.00G		115 §△Ø		33	7.5	TWT§	AML		CO	6.5
85	VTX4381H1	10000M	100m	8.000G-12.00G	CW	115 Ø△§		35†	15*	TWT§	AML		CO	5.0
86	L2397	10000M	300m	8.000G-12.000G	CW	2400	10m	30	15	TWT§	AML		CO	2.0
87	L5008	10000M	2.0 †	8.000G - 12.00G	CW	2100	40m	36	30	TWT§	AM		CO	1.02
88	L5008-00	10G	2.0 †	8.0G-12G	CW	-2.0k	30m	36†		TWT§*	AM		CO	1.2
89	771HDS	10000M	10 †	6.500G-13.500G	CW	3400	55m	30	35*	TWT§	AM		CO	3.0 △
90	L5576-03	10.G	10 †	8.0G-12.4G	CW	-3600	60m	33†		TWT§$	AM		WA	2.5
91	2177	10000M	20 †	8.000G-18.000G	CW	4000	120m	39Ø	32*	TWT§	△		CO	1.7
92	L5558-02	10G	20 †	8.0G-12.4G	CW	-3700	85m	36†		TWT§$	AM		WA	2.5
93	F2161	10000M	25	7.000G-13.000G	CW	3600	95m	45	30	TWT§	AM		CO	750m
94	N1089	10G	25	8-12G	CW		10MØ			TWT§		BB	CO	6.0
95	N1089B	10G	25	8-12G	CW		10MØ			TWT§		BB	CO	6.0
96▼	CGC081201-10	10.0G	29	8.0G-12.0G		15 §Ø	2.7	30	12	TWTØ	AM		CO	4.40
97	VTX6186A1	10000M	30 †	8.000G-12.40G	CW	3900 Ø	110mØ	47		TWT	AM		CO	625m
98	F2209	10G	50	9.6-10.4G	CW	3600	100m	55†	30	TWT§	AM		CO	1.5
99	F2191	10000M	70	9.400G-10.600G	CW	4200	.130m	55	30	TWT§	AM		CO	.90
100	F2223	10G	70	9.45-10.55G	CW	4350	130m	55†	30	TWT§	AM		CO	1.5
101	L5546	10000M	1.0k	8.00G-12.00G	50m	10500	1.5	35	40	TWT§	AM		CO	6.0
102	VTX5180A1	10000M	1.0k	8.000G-12.00G	20m	10500	1.5 Ø	40		TWT*§	AM			5.0
103	QKW1980	10000M	5.0k	8.000G-12.000G	20m	13000	2.3	55		TWT	AM			5.0
104	N10502	10000M	50k	8.200G-12.40G	15m	33000	8.5	40†		TWT§	AM		WA	22
105	VTX5681A1	10000M	100k	9.500G-10.50G	500m	42000 Ø	10 Ø	50		TWTØ#*	AM		CC	375 *
106	VTX5585H5	10050M	3.0k	9.600G-10.50G	100m	13000 Ø	2.0 Ø	57		TWT§*	AM			8.0
107	W3PA1W	10.1G	25	10G-10.2G	CW	28 §Ø		41†	28*	TWT	AM		CO	7.15
108▼	PT6003	10.14G	3.0k	9.6G-10.5G	0.07	13.75k	2.0	60		TWT	AM		WA	9.0
109	8741H	10150M	4.0k	10.000G-10.300G	200m	20500	700m	33		TWT	AM		WA	17
110	VTX4481P5	10200M		8.000G-12.40G				20	15	TWT§	AML		CO	8.0

2. SOURCE,AMPLIFIER,OUTPUT TUBES

IN ORDER OF (1)TUBE TYPE (2)CENTER FREQUENCY (3)POWER OUTPUT (4)TYPE No.

LINE No.	4 TYPE No.	2 CENTER FREQ. (Hz)	3 POWER OUTPUT (W)	FREQUENCY RANGE (Hz)	MAX. DUTY CYCLE	MAX. BEAM VOLTAGE (Note 1) (V)	MAX. CATH-ODE CUR. (A)	GAIN (dB)	NF (dB)	DESCRIPTION 1 TUBE TYPE	FUNC-TION	TUN-ING	OUT PUT	WEIGHT (lb)
1	VTX4481H1	10200M	3.0m	8.000G-12.40G		115 ⊠Δ§		35	17	TWT§	AML		CO	8.0
2	VTX6084A1	10200M	2.0 †	8.000G-12.400G	CW	2350 Ø	23mØ	30†	30*	TWT§*	AM		CO	.87
3	VTX6084H1	10200M	2.0 †	8.000G-12.400G	CW	2450	25m	60†	30*	TWT§*	AM		CO	1.25
4	VZV6982D1/D2	10200M	2.0	8.000G-12.40G	CW	28 Ø§		30†		TWT	AM		CO	
5	VZX6084C1	10200M	2.0	8.000G-12.40G		115 ⊠§				TWT	AM			
6	VZX6084D1	10200M	2.0	8.000G-12.40G		28 Ø§				TWT	AM			
7	VZX6988F1	10200M	2.0	8.000G-12.40G	CW	230 §†Δ		30	30*	TWT	AM		CO	55 Δ
8	VZX6988F2	10200M	2.0	8.000G-12.40G	CW	230 §†Δ		60	30*	TWT	AM		CO	55 Δ
9	1235H	10200M	4.0 †	8.00G-12.40G	CW	115 §⊠		33†	35*	TWT§	AM		CO	18.5 ⊠
10	F4185	10200M	4.0 †	8.000G-12.400G	CW	2700	25mØ	40†	28	TWT	AM		CO	1.43
11	771HD	10200M	10 †	8.000G-12.400G	CW	3500	50m	30	35*	TWT§	AM		CO	3.0 Δ
12	1177H03	10200M	10	8.000G-12.400G	CW	120 §*Δ		30†	35*	TWT	AM		CO	20 Δ
13	L5576	10200M	10 †	8.000G-12.400G	CW	3600	60m	36†		TWT§$	AM		CO	2.5
14	VTX6089H3	10200M	10 †	8.000G-12.400G	CW	3600	90m	40†	30*	TWT§*	AM		CO	3.0
15	VZX6980E1	10200M	10	8.000G-12.40G		115 Δ§				TWT	AM			
16	VZX6980F1	10200M	10	8.000G-12.40G	CW	230 §†Δ		40	30*	TWT	AM		CO	55 Δ
17	VZX6980G2	10200M	10	8.000G-12.40G	CW	230 §†Δ		40		TWT	AM		CO	
18	783H	10200M	20 †	8.000G-12.400G		4100	60m	30		TWT§	AM		CO	3.0 Δ
19	L5558	10200M	20	8.00G-12.40G	CW	3800	80m	35	35	TWT§	AM		CO	3.0
20	VTX6180A1	10200M	20 †	8.000G - 12.40G	CW	3300	95m	35†	35†	TWT§	AM		CO	2.75
21	VTX6180B1	10200M	20 †	8.000G - 12.40G	CW	3300	95m	35†	35†	TWT§	AM		CO	2.75
22	VTX6180H1	10200M	20 †	8.000G - 12.40G	CW	3300	95m	54†	35†	TWT§	AM		CO	3.0
23	VTX6180J1	10200M	20 †	8.000G - 12.40G	CW	3300	95m	54†	35†	TWT§	AM		CO	3.0
24	VZV6986A1	10200M	20	8.000G-12.40G	CW	115 ⊠§		35		TWT	AM		CO	
25	VZV6986A2	10200M	20	8.000G-12.40G	CW	115 ⊠§		54		TWT	AM		CO	
26	VZX6981E1	10200M	20	8.000G-12.40G		115 Δ§				TWT	AM			
27	VZX6981F1	10200M	20	8.000G-12.40G	CW	230 §†Δ		35	35*	TWT	AM		CO	55 Δ
28	VZX6981F2	10200M	20	8.000G-12.40G	CW	230 §†Δ		54	35*	TWT	AM		CO	55 Δ
29	VZX6981G1	10200M	20	8.000G-12.40G	CW	230 §†Δ		35		TWT	AM		CO	
30	VZX6981G2	10200M	20	8.000G-12.40G	CW	230 §†Δ		54		TWT	AM		CO	
31	VTX6280C1	10200M	100 †	8.000G - 12.40G	CW	4950	225m	30†	35	TWT§	AM			5.0
32	VTX6280F1	10200M	100	8.000G-12.40G	CW	5300 Ø	240mØ	40		TWT§$	AM			5.0
33	VTX6280J1	10200M	100 †	8.000G - 12.40G	CW	4950	225m	50†	40	TWT§	AM			5.5
34	VZX6982E1	10200M	100	8.000G-12.40G		115 Δ§				TWT	AM			
35	VZX6982G1	10200M	100	8.000G-12.40G	CW	230 §†Δ		40		TWT	AM		WA	
36	VTX6282F1	10200M	200	8.000G-12.40G	CW	9000 Ø	320mØ	35		TWT§	AM			7.0
37	VZX6983G1	10200M	200	8.000G-12.40G	CW	230 §†Δ		35		TWT	AM		WA	
38	VZV6989B1P	10200M	1.06k	8.000G-12.40G	CW	230 §†Δ		30		TWT	AM		WA	
39	L5588	10200M	2.0k	9.900G-10.500G	50m	9000	1.3	60		TWT§	AM		CO	6.0
40	L5588-50	10200M	2.0k	9.900G-10.500G	50m	8800	1.3	60		TWT§	AM		CO	8.0
41	2169	10250M	22 †	7.000G-17.500G	CW	4000	120m	56Ø	32*	TWT§	Δ		CO	1.7
42	VTX6186A2	10250M	40	9.500G-12.00G	CW	3900 Ø	110mØ	50		TWT§	AM		CO	10
43	VTX6181H1	10300M	20	8.20G-12.40G		3400	80m	60		TWT§	AM		CO	3.0
44	VZV6987A1	10300M	100	8.200G-12.40G	CW	230 §†Δ		40		TWT	AM		WA	
45	VZV6988A1	10300M	200	8.200G-12.40G	CW	230 §†Δ		35		TWT	AM		WA	
46	VTX4481P6	10500M	120m	8.050G-12.70G				30		TWT§	AML		CO	8.0
47	VTX5580A1	10500M	450	10.00G-11.00G	300m	9300 Ø	400mØ	57		TWT§*	AM			6.5
48	VTX6383A1	10500M	10k	10.20G-10.70G	CW	20000	3.5	50		TWT#	AM		CC	25 *
49	LD4107	10600M	6.0	10.50G-10.70G	CW	21 §Ø		38		TWT§	AM		WA	11
50	RW1136(A)	11.2G	5.0	10.7-11.7G			80m	47	25	TWT				
51	LD4136	11200M	8.0	10.700G-11.700G	CW	3600	25m	51		TWT§	AM		WA	7.495
52	VTX2679A1	11200M	9.0	10.70G-11.70G	CW	1700 Ø	27mØ	47	25.5	TWT§	AM			6.75
53	11W72	11200M	10	10.70G-11.70G	CW	4000	28m	34	23	TWT§	AM		WA	5.0
54	LD910	11200M	10	10.70G - 11.70G	CW	4400	35m	40	26	TWT§	AM		WA	7.8
55	LD4294	11200M	10	10.700G-11.700G	CW	4400	35m	40	26	TWT§	AM		WA	6.46
56	LD4297	11200M	10	10.700G-11.700G	CW	4400	35m	40	26	TWT§	AM		WA	6.46
57	N10012	11.2G	10	10.7G-11.7G		5.0k	4.0 ⊠	41		TWT	AM	BB	CO	3.3 §
58	QKW1921	11200M	10	10.700G-11.700G	CW	3700	45m	41		TWT	AM		CO	9.2
59	TH3610	11200M	10	10.700G-11.700G	CW			40		TWT§	AM	FF	CO	1.4
60	VTX2612A1	11200M	10	10.70G-11.70G	CW	1900	30m	40†	25.5	TWT§	AM		WA	6.7
61	W3MC/11A	11200M	10	10.700G-11.700G	CW	3300	38mØ	42.5	26*	TWT	AM		CO	1.65
62	W3MC/15C	11.2G	10	10.7-12.7G	CW	2940	36mØ	38	26*	TWT§	AM		CO	1.65
63	W3MC/14D	11200M	11	10.700G-11.700G	CW	3380	38 Ø	37.5	25	TWT	AM		CO	1.65
64	11W71	11200M	12	10.70G - 11.70G	CW	4200	30m	38	24	TWT§	AM		WA	8.2
65	LD914	11200M	12	10.70G - 11.70G	CW	4500	35m	44	26	TWT§	AM		WA	
66	VTX2612B1	11200M	12	10.7G-11.7G	CW	4400	30m	42.1	25.5	TWT§	AM		WA	7.8 *
67	TH3661	11.2G	16	10.7-11.7G	XW	3.75k	30m	55	29	TWT	AM	FF	CO	2.2
68	W3MC/3A	11200M	17 *	10.700G-11.700G	CW	4600	36m	40†	25	TWT§	AM		WA	11 *
69	W3MC/3F	11200M	17 *	10.700G-11.700G	CW	4300	36m	40†	25	TWT§	AM			
70	TH3541	11200M	20 †	10.70G-11.70G	CW	3750	35m	40	27*	TWT§	AM		CO	1.5
71	TH3631	11.2G	20	10.7G-11.7G		3.75k	42m	40	27	TWT§	AM	FF	CO	1.5
72	YH1191	11200M	20	10.70G-11.70G		3600	2.7m	40	25	TWT*	AM		CO	
73	RW1125	11200M	22	10.700G-11.700G	CW	3250	60m	4.05†	25	TWT§	AM		CO	2.9 *
74	W3MC/12D	11200M	22	10.700G-11.700G	CW	3380	49mØ	40	27*	TWT	AM		CO	1.65
75	YH1193	11200M	22	10.700G-11.700G	CW	3380	53m	40	25	TWT§	AM		CO	2.7
76▼	CGC101201-07	11.2G	30	10.7G-11.7G		15 §Ø	2.5	33	12	TWT⊠	AM		CO	4.40
77	RW2135	11.3G	5.0	10.7G-11.7G	100	5000	130m	45	25	TWT		BB	CO	4.0
78	TH3559	11300M	10 †	10.95G-11.70G	CW	2750	25m	55	27*	TWT§	AM		WA	1.5
79	TH3593	11300M	20 †	10.95G-11.70G	CW	3700	35m	55	27	TWT§	AM			
80	TH3525	11325M	20 †	10.950G-11.700G	CW			55	27*	TWT§	AM	FF	CO	1.43
81	TL12022	11375M	20	10.950G-11.800G	CW	3400	48m	56	27	TWT§	AM		CO	1.3
82	QKW2035	11.4G	20	4.8G-18G	CW	3.9k	125m	45		TWT	AM			
83	N1065	11450M	35 †	10.5G-12.4G	CW	3200	1.5mΔ	42		TWT§	AM		CO	5.75 *
84	W3MC/16R	11.5G	22	10.7-12.2G	CW	3300	51mØ	40	27*	TWT§	AM		CO	1.65 *
85	2156	11500M	30	6.500G-16.50G	CW	4000	115M	53	30	TWT§	AM		CO	1.0
86	LD850	11700M	12	10.70G - 12.70G	CW	4300	30m	43	26	TWT§	AM		WA	
87	RW1125D	11700M	15	10.700G-12.700G	CW	3200	48m	40	25	TWT§	AM		CO	2.9 *
88	LD4362	11.7G	23	10.7-12.7G	CW	4000	50m	50	24	TWT§	AM	BB	CO	2.0 *
89	QKW2041	11.7G	100	6.7G-16.7G	0.5	10k	0.2	36		TWT	AM	BB	WA	6
90	280H	11750M	10	10.500G-13.000G	CW	3000	29m	54*	30	TWT§	AM		CO	1.25
91	286H	11750M	10	11.000G-12.500G	CW	3000	34m	55	33	TWT	AM		CO	1.6
92	785H	11750M	10 †	7.000G-16.500G	CW	3800	55m	30	35*	TWT§	AM		CO	3.0 Δ
93	L5521	11750M	1.0k	7.50G-16.00G	40m	11400	1.60	60		TWT§	AM		CO	5.5
94	QKW1943	11800M	3.0m	7.600G-16.000G	CW	1000	500u	35		TWT	AM			1.6
95	QKW1668	11800M	60	7.600G-16.000G	40m	11000	2.0	50		TWT	AM		CO	5.5
96	QKW1830	11800M	80	7.600G-16.000G		11000	1.9	50		TWT	AM	FF	CO	5.0
97	QKW1751	11800M	2.0k	7.60G-16.00G	40m	11000	2.0	50		TWT	AM		CO	6.0
98	TL12016	11950M	15	11.700G-12.200G	CW	2950	42m	56		TWT§	AM		WA	1.3
99♦	1653H	11.950G	16 †	11.700G-12.200G	CW	36 †		55.0	32*	TWT	AM		WA	6.1
100	8516H	11.950G	16.0	11.700G-12.200G	CW	3680		55.0		TWT	AM		WA	1.8
101	289H	11950M	20	11.700G-12.200G	CW	3500	40m	57		TWT	AM		CO	1.7
102♦	1654H	11.950G	20 †	11.700G-12.200G	CW	35.5 †		56	32*	TWT	AM		WA	5.8
103	8517H	11.950G	20.0	11.700G-12.200G	CW	4000		59.0		TWT	AM		WA	1.8
104	8517HA	11.950G	20.0	11.700G-12.200G	CW	4250		55.0		TWT	AM		WA	1.8
105	LD4212	11950M	20	11.700G-12.200G	CW	4200	53m	43	23	TWT§	AM		WA	6.6
106	RW1121	11950M	20	10.700G-13.200G	CW	4200	75m	42	26	TWT§	AM		WA	8.7 *
107	TL12024	11950M	20	11.700G-12.200G	CW	3500	45m	52		TWT	AM		WA	1.5
108	TL12026	11950M	20	11.700G-12.200G	CW	3350	47m	55		TWT§	AM		WA	1.3
109	TL12025	11950M	21	11.700G-12.200G	CW	3360	48m	57		TWT§	AM		WA	1.3
110♦	1655H	11.950G	27 †	11.700G-12.200G	CW	35.5 †		56	32*	TWT	AM		WA	6.9

2. SOURCE,AMPLIFIER,OUTPUT TUBES

IN ORDER OF (1)TUBE TYPE (2)CENTER FREQUENCY (3)POWER OUTPUT (4)TYPE No.

LINE No.	4 TYPE No.	2 CENTER FREQ. (Hz)	3 POWER OUTPUT (W)	FREQUENCY RANGE (Hz)	MAX. DUTY CYCLE	MAX. BEAM VOLTAGE (Note 1) (V)	MAX. CATH-ODE CUR. (A)	GAIN (dB)	NF (dB)	DESCRIPTION 1 TUBE TYPE	FUNC-TION	TUN-ING	OUT PUT	WEIGHT (lb)
1	8518H	11.950G	30.0	11.700G-12.200G	CW	5000		59.0		TWT	AM		WA	2.0
2	VTU6295B1	11950M	125	10.70G-13.20G	CW	8900 Ø	200mØ	45		TWT§	AM			6.0
3	QKW1807	11950M	4.5k	7.900G-16.000G	40m	11000	2.0			TWT	AM		CO	5.5
4	W3/2G	11975M	12 *	10.700G-13.250G	CW	4000	30m	40†	30*	TWT§	AM		WA	
5	N1095	11980M	16	10.70G-13.25G	CW	5000	70m	40†	25	TWT	AM		WA	8.5
6	VTM4486H1	12000M		8.000G-16.00G		115 ØΔ§		35	17	TWT§	AML		CO	8.0
7	QKW1919	12000M	3.0m	8.000G-16.000G	CW	1050	5.0m	35		TWT	AM		CO	1.6
8	VTM4386A1	12000M	10m	8.000G-16.00G		115 ØΔ§		40	11	TWT§	AML		CO	5.5
9	W3PL3D	12G	10m	7.0G-17GΔ	CW	115 §Ø				TWT	LIM		CO	7.7
10	L2365	12000M	40m	8.0G-16G	CW	1700	2.0	35	25	TWT	AM		CO	2.0
11	VTM4386H1	12000M	50m	8.000G-12.00G		115 ØΔ§		35	17	TWT§	AML		CO	5.0
12	QKW1920	12000M	500m	8.000G-16.000G	CW	2300	12m	55		TWT	AM		CO	1.6
13	QKW1944	12000M	500m	8.000G-16.000G	CW	2300	12m	55		TWT	AM			1.6
14	1292H	12000M	1.0	11.900G-12.100G	CW	28 Ø§		45	28	TWT	AM		WA	4.4
15	L2364	12000M	1.0	8.0G-16G	CW	3300	15	35	25	TWT	AM		CO	2.5
16	L2384	12000M	1.0	8.00G-16.00G	CW	3000	15m	30	30	TWT§	AM		CO	3.0
17	N1082	12000M	1.0	7.0-18G	CW	2500	30m	45		TWT§	AM		CO	1.5
18	286HP	12000M	1.3	11.90G-12.10G	CW	1880	38m	45		TWT	AM		CO	2.0
19	L2392	12000M	2.0	8.000G-16.000G	CW	3000	20m	40	22	TWT	AM		CO	3.0
20	VZM6989F1	12000M	2.0	8.000G-16.00G	CW	230 §†Δ		30	30*	TWT	AM		CO	55 Δ
21	VZV6992D1/D2	12000M	2.0	8.000G-16.00G	CW	28 §Ø		30†		TWT	AM		CO	
22	L5577	12000M	10	8.000G-16.000G	CW	3300	68m	30		TWT§	AM		CO	2.0
23	QKW1935	12000M	10	7.000G-17.000G	CW	3000	70m	50		TWT	AM		CO	1.0
24	QKW1936	12000M	10	8.000G-16.000G	CW	3800	60m	30		TWT	AM		CO	1.0
25	VZM6990B2	12000M	10	8.000G-16.00G	CW	230 §†Δ		30	30*	TWT	AM		CO	55 Δ
26	VZM6990G3	12000M	10	8.000G-16.00G	CW	230 §†Δ		30		TWT	AM		CO	
27	F2131	12000M	20 †	7.000G-17.000G	CW	4000	130m	45†	32*	TWT§	AM		CO	0.75
28	QKW1961	12000M	20	7.000G-17.000G	CW	2900	78m	40		TWT	AM			750m
29	RW1125G	12000M	20	10.700G-13.250G	CW	3200	60m	41†	25	TWT§	AM		CO	2.9 *
30	VTM6196A5	12000M	25 †	8.000G-16.00G	CW	3900 Ø	110mØ	50		TWT	AM		CO	625m
31♦	1661H	12.0G	40	11.7G-12.2G	CW	28 §Ø		52		TWT	AM		WA	7.1
32♦	8533H	12.0G	40	11.7G-12.2G	CW	5900	57m	52		TWT	AM		WA	2.2
33	L5444-50	12000M	40	8.000G-16.000G	CW	11000		55		TWT	AM	BB		
34▼	N10528	12G	60	6.0G-18G	CW	7.1k	5.0mØ			TWT	AM		CS	11
35	869H#1	12000M	100	8.000G-16.000G	CW	11000	300m	20		TWT	AM		CO	10
36	E3822B	12000M	120	11700M-12200M	CW	6.5k	.11	40		TWT	AM		WA	6.6
37	QKW1979	12000M	150	8.000G-16.000G	CW	9000	200m	45		TWT	AM	BB	WA	6
38▼	N10042	12G	160	6.0G-18G	CW	9.0k	10mØ	30†		TWT§	AM		WA	10.6
39▼	N10041	12G	200	6.0G-18G	CW	9.8k	10mØ	30†		TWT§	AM		WA	10.6
40	TL12260	12G	260	11.7G-12.5G		7600	260m	46		TWT	FQ			9.9
41	869H#2	12000M	1.0k	8.000G-16.000G	50m	11000	1.2	40		TWT	AM		CO	10
42	L5444	12000M	1.0k	8.000G-16.000G	40m	11400	2.3	57		TWT§	AM		CO	4.5
43	L5599-50	12000M	1.0k	7.500G-16.500G	40m	11400	2.0	60		TWT§	AM		CO	6.5
44	VTU5191F1	12000M	1.0k	8.000G-16.00G	20m	11000 Ø	1.4 Ø	55		TWT§*	AM		CO	6.0
45	774H	12000M	1.25k†	8.000G-16.000G	40m	11000	2.1	50		TWT§	AM		CO	4.0
46	294H	12040M	100 †	11.950G-12.130G	CW	8400	63m	40†		TWT§	AM		WA	15
47	284H	12050M	200	11.900G-12.200G	CW	8000	70m	36		TWT	AM		WA	28
48	L2391	12100M	1.0	7.700G-16.500G	CW	3000	18m	40	24	TWT§	AM		CO	3.0
49	YH1197	12100M	22	11.70G-12.50G	CW	3290	53m	35	25	TWT	AM		CO	2.6
50	TH3569	12100M	150 †	11.70G-12.50G	CW	5800	120m	55	32*	TWT§	AM		WA	5.5
51	TH3579	12100M	150 †	11.70G-12.50G	CW	5800	120m	55	32*	TWT§	AM		WA	6.6
52	TL12200	12100M	200	11.700G-12.500G	CW	7200	220m	45		TWT§	AM		WA	10
53	TH3619	12.1G	230	11.7G-12.5G		7k	156m	50	37	TWT§	AM	FF	WA	5.7
54	TL12450	12100M	450	11.700G-12.500G	CW	9500	420m	50		TWT§	AM		WA	14.5
55	TL12800	12100M	700	11.700G-12.500G	CW	13500	500m	50†	28	TWT§	AM		WA	9.9
56	YH1190	12200M	70	11.700G-12.700G	CW	6500	100mØ	40		TWT§	AM		WA	6.62
57	QKW1960	12250M	20	7.000G-17.50G	CW	3400	100m	40		TWT	AM		CO	1.0
58	F2169	12.25G	45	7.0G-17.5G	CW	4000	125m	47	32	TWT§	AM		CO	1.4
59	N1081	12250M	100 †	8.00G-16.500G	CW	7500	250m§	30†		TWT§	AM		WA	7.5
60♦	N10501	12.25G	100	8.0G-16.5G	C.W.	7.5k	7.0mØ			TWT	AM		CO	9.9
61	VTM6294F1	12250M	100	7.500G-18.00G	CW	9000 Ø	300mØ	40		TWT§	AM			7.0
62	VTM4486E1	12350M	10m	6.700G-18.00G	CW	115 *Ø§		40	12	TWT§	AML		CO	6.0
63	RW1127(A)	12.4G	5.0	11.7-13.25G			125m	40	27	TWT			CO	
64	LD4327	12450M	10	12.200G-12.700G	CW	4400	35m	40	26	TWT§	AM		WA	6.46
65	8522H	12.450G	12.5	12.200G-12.700G	CW	3180		55.0		TWT	AM		WA	1.8
66	8523H	12.450G	30.0	12.200G-12.700G	CW	4900		55.0		TWT	AM		WA	2.0
67	W3/5G	12475M	13	11.700G-13.250G	CW	4600	40m	38†	25	TWT§	AM		WA	15
68	VTM4481E9	12500M	100m	7.000G-18.00G	CW	115 *Ø§		30	15	TWT§	AML		CO	7.0
69	837H	12500M	1.0	10.000G-15.000G	CW	1860 Ø	9.0mØ	45		TWT§	AM		WA	1.2
70	W3MC19R	12.5G	15	12.2G-13.25G	CW	3350	51m	40	25	TWT	AM		CO	1.7
71	QKW1949	12500M	25	7.000G-18.000G	CW	3000	100m	40		TWT	AM			800m
72	TH3598	12500M	50	9.000G-16.00G	CW					TWT§	AM			
73	F2196	12.5G	80	7.0G-18.0G	CW	5250	160m	50	32	TWT§	AM		CO	1.5
74	QKW1997	12500M	100	7.000G-18.000G	1.0m		150m	50		TWT	AM		CO	2.0
75	8722H	12500M	1500	8.000G-17.000G	40m	11500	2.1	35		TWT	AM		CO	5.0
76	TH3660	12.62G	30	12.5G-12.75G	CW	1.38k	48m	52†	30	TWT	AM	FF	WA	1.75
77	VTM2613A1	12700M	13	12.2G-13.25G	CW	4300	30m	42	25.5	TWT§	AM		WA	7.8 *
78	LD929	12725M	10	12.200G-13.250G	CW	4400	35m	40	25	TWT§	AM		WA	7.8
79▼	CGC121301-02	12.725G	29	12.20G-13.25G		15 §Ø	2.7	32	12	TWTØ	AM		CO	4.40
80	L2388	12750M	1.0	8.500G-17.000G	CW	2700	20m	48		TWT§	AM		CO	2.0
81	QKW2011	12750M	120	8.500G-17.000G	CW	9500	210m	50		TWT	AM	BB	WA	6
82	N10525	12.75G	160 †	7.5G-18.0G	CW	-500	0.1mΔ			TWT	AM	BB	WA	13.2
83	N10520	12.75G	200	7.5G-18.0G	CW		22.0m			TWT	AM		CS	13.22
84▼	PT5042	12.75G	1.25k	7.5G-18.0G	0.05	11.5k	2.0	45		TWT†	AM		WA	7.0
85♦	PT6043	12.75G	1.25k	7.5G-18.0G	50 m	11.5k	2.0	55		TWT§	AM		WA	7.0
86	845H	12825M	1.5 †	11.850G-13.800G	CW	2050	10m	43	28	TWT§	AM		WA	1.4
87	1268H	12825M	1.5	11.850G-13.800G	CW	40 §Ø		46*	28*	TWT	AM		WA	4.5
88	TH3626	12.87G	20	12.5G-12.75G		3.9k		55	30	TWT	AM	FF		
89	TL12030	12875M	30	11.700G-14.050G	CW	4250	54m	52		TWT§	AM		WA	1.5
90	YH1194	12950M	22	12.700G-13.200G	CW	3290	53m	45	25	TWT	AM		CO	2.2
91	VTM4886D9	13000M	8.0m	8.000G-18.00G	CW	115 *Ø§		35	13	TWT§	AMLΔ		CO	17
92	VTM4488J2	13000M	10m	8.000G-18.00G	CW	115 *Ø§		30	11	TWT§	AML		CO	7.0
93	L2389	13000M	200m	8.000G-18.000G	CW	2800	15m	30		TWT§	AM		CO	3.0
94	W2PA1M	13G	500m†	8.0G-18G	CW	115 §Ø		27†	23*	TWT	AM		CO	2.5
95	L2374	13000M	1.0	8.00G-18.00G	CW	3000	15m	30	25	TWT§	AM		CO	2.5
96	VTM6094B1	13000M	1.0	8.000G-18.00G	CW	2700 Ø	20mØ	30		TWT§	AM		CO	14
97	VZM6999F1	13000M	1.0	8.000G-18.00G	CW	230 §†Δ		30	30*	TWT	AM		CO	55 Δ
98	VZM6999G1	13000M	1.0	8.000G-18.00G	CW	230 §†Δ		30		TWT	AM		CO	
99	VZV6991D1/D2	13000M	1.0	8.000G-18.00G	CW	28 §Ø		30†		TWT	AM		CO	
100	L5396	13000M	2.0	8.000G-18.00G	CW	3000	50m	35		TWT§	AM		CO	1.5
101	N10024	13.0G	3.0	8.0G-18.0G			30m	47		TWT§	AM		CO	1.5
102	LD4170	13000M	6.0	12.70G-13.30G	CW	21 Ø	23m	40	26	TWT§	AM		WA	11
103	846H	13000M	10 †	8.000G-18.000G	CW	3900	55m	30	35*	TWT§	AM		CO	3.0 Δ
104	QKW1937	13000M	10	8.000G-18.000G	CW	3300	60m	45		TWT	AM		CO	750m
105	VTM6194A1	13000M	10 †	8.000G-18.000G	CW	3300 Ø	60mØ	30†	30*	TWT§	AM		CO	2.6
106	VTM6194H1	13000M	10 †	8.000G-18.000G	CW	3300 Ø	60mØ	45†	30*	TWT§	AM		CO	3.0
107	VZM6990B5	13000M	10	8.000G-18.00G	CW	230 §†Δ		45	35*	TWT	AM		CO	55 Δ
108	VZM6990G4	13000M	10	8.000G-18.00G	CW	230 §†Δ		45		TWT	AM		CO	
109	W3MC21E	13G	10	12.75G-13.25G	CW			40	26	TWT§	AM		CO	1.65
110	RW1125F	13000M	15	12.700G-13.250G	CW	3200	48m	36	25	TWT§	AM		CO	2.9 *

SYMBOLS AND CODES EXPLAINED IN INTERPRETER

2. SOURCE,AMPLIFIER,OUTPUT TUBES

IN ORDER OF (1)TUBE TYPE (2)CENTER FREQUENCY (3)POWER OUTPUT (4)TYPE No.

LINE No.	4 TYPE No.	2 CENTER FREQ. (Hz)	3 POWER OUTPUT (W)	FREQUENCY RANGE (Hz)	MAX. DUTY CYCLE	MAX. BEAM VOLTAGE (Note 1) (V)	MAX. CATH-ODE CUR. (A)	GAIN (dB)	NF (dB)	DESCRIPTION 1 TUBE TYPE	FUNC-TION	TUN-ING	OUT PUT	WEIGHT (lb)
1	QKW1938	13000M	16	8.000G-18.000G	CW	3000	75m	40		TWT	AM		CO	600m
2	856H	13000M	20	12.000G-14.000G	CW	4800	70m	30		TWT§	AM		WA	3.0 Δ
3	F2268	13G	20	8-18G	CW	4100	130m	37†	30	TWT§	AM		CO	.90
4	VTM6192A1	13000M	20 †	8.000G-18.000G	CW	4000 Ø	100mØ	30†	35*	TWT§	AM		CO	2.6
5	VTM6192H1	13000M	20 †	8.000G-18.000G	CW	4000 Ø	100mØ	45†	35*	TWT§	AM		CO	3.0
6	VTM6196A1	13000M	20	8.000G-18.00G	CW	3900 Ø	110mØ	40		TWT§	AM		CO	10
7	VTM6196F1	13000M	20	8.000G-18.00G	CW	3900 Ø	110mØ	30		TWT§	AM		CO	10
8	VZM6991B1	13000M	20	8.000G-18.00G	CW	230 §†Δ		45	35*	TWT	AM		CO	55 Δ
9	VZM6991G3	13000M	20	8.000G-18.00G	CW	230 §†Δ		45		TWT	AM		CO	
10	VZV6996A3	13000M	20	8.000G-18.00G	CW	115 Ø§		30		TWT	AM		CO	
11	VZV6996A4	13000M	20	8.000G-18.00G	CW	115 Ø§		40		TWT	AM		CO	
12▾	N10036	13G	100	8.0G-18G	CW	7.5k	3.5 Ø	30†		TWT§	AM		WA	7.5
13	VTU6295F1	13000M	100	9.000G-17.00G	CW	8700 Ø	220mØ	37		TWT§	AM			6.0
14	VZU6992G2	13000M	100	9.000G-17.00G	CW	230 §†Δ		37		TWT	AM		WA	
15	VZV6997A3	13000M	100	9.000G-17.00G	CW	230 §†Δ		37		TWT	AM		WA	
16	L5711-00	13G	150 †	8.0G-18G	CW	-9.5k	210m	40†		TWT§	AM		WA	5.5
17	N10033	13.0G	160 †	8.0G-18.0G	CW	9k	1.5mΔ	30	40*	TWT	AM	BB	WA	10.6
18	N10028	13.0G	200	8.0G-18G				30	40	TWT§	AM		WA	10.6
19	VZV6999B2P	13000M	600	9.000G-17.00G	CW	230 §†Δ		32		TWT	AM		WA	
20	L5592-50	13000M	1.0k	8.000G-18.000G	40m	11200	1.8	30		TWT§	AM		CO	5.5
21	VTU5191A1	13000M	1.0k	8.000G-18.00G	40m	11000 Ø	1.8 Ø	50		TWT§*	AM		CO	6.0
22	L5495	13000M	1.25k	8.00G-18.00G	20m	11200	1.65	50		TWT§	AM		WA	5.5
23	8754H	13G	1.5k	8.0-18G		11.5kØ	1.7 Ø	45		TWT§			WA	5.0
24	VTU6391A1	13000M	2.0k	12.75G-13.25G		13000	1.0	34		TWTØ	AM		WA	19 *
25	LD845	13100M	11	12.20G - 14.00G	CW	4300	33m	43	26	TWT§	AM		WA	
26	295H	13500M	20	13.400G-13.600G	CW	3500	42m	45		TWT	AM		WA	2.2
27	8730H	13500M	200	9.000G-18.000G	CW	9500	300m	30		TWT	AM		CO	8.0
28	LY100	13500M	1.2k	13.00G - 14.00G	CW	26000	700m	30		TWTØ	AM	VT	WA	
29	1256H	13500M	2.5k	13.250G-13.750G	330m	28 §Ø		44		TWT	AM		WC	30
30	1247H	13600M	20 †	11.700G-15.500G†	CW	35 §Ø		60	32	TWT	AM		WA	7.5
31	VTU4490J1	13850M	10m	10.70G-18.00G	CW	115 *Ø§		46	12	TWT§	AML		CO	7.5
32	1218H	14000M	1.5	13.500G-14.500G	CW	30 §Ø		40		TWT	AM		WA	6.0 Δ
33	L5577-01	14G	10 †	8.0G-16G	CW	-3200	60m	36		TWT$$	AM		WA	2.5
34	851H	14000M	20	13.500G-14.500G	CW	3550 Ø	47mØ	53		TWT§	AM		WA	2.0
35	1220H	14000M	20	13.500G-14.500G	CW	30 §Ø		53		TWT	AM		WA	9.25
36	F2180	14000M	20	10,000G-18,000G	CW	4000	115m	40	30	TWT	AM		CO	1.0
37	QKW1939	14200M	26	10.400G-18.000G	CW	3400	95m	40		TWT	AM		CO	600m
38	LD4240	14250M	500m	14.000G-14.500G	CW	4500	25m	45		TWT§	AM		WA	6.8
39	VTU6090A5	14250M	2.0	14.000G-14.50G	CW	2900 Ø	16mØ	30		TWT§	AM		CO	14
40	VZU6998D1	14250M	2.0	14.00G-14.50G	CW	230 §†Δ		30		TWT	AM		CO	
41	VTU2614B2	14250M	5.0	14.00G-14.50G	CW	2000 Ø	22mØ	40	26	TWT§	AM			6.0
42	VZJ2663A1	14250M	5.0	14.00G-14.50G	CW	230 Δ†§		40		TWT	AM		WA	
43	848HDS	14250M	10 †	10.500G-18.000G	CW	3600	60m	30	35*	TWT§	AM		CO	3.0 Δ
44	VTU6091H7	14250M	10 †	14.000G-14.500G	CW	4000 Ø	55mØ	45†	30*	TWT§	AM			3.3
45	VZU6990D2	14250M	10	14.00G-14.50G	CW	230 §†Δ		45		TWT	AM		WA	
46	VZV6995A6	14250M	10	14.00G-14.50G	CW	115 §Ø		45		TWT	AM		WA	
47	YH1196	14250M	16	14.000G-14.500G	CW	3450	53m	50	25	TWT§	AM		CO	2.4
48	TH3614	14250M	18	14.000G-14.500G	CW			40		TWT§	AM	FF	CO	1.4
49	848HA	14250M	20	14.000G-14.500G	CW	4000	60m	50		TWT	AM		CO	3.0
50▾	9020H04	14.250G	20	14.000G-14.500G	CW	230 †		70		TWT	AM		WA	30
51	TH3523	14250M	20 †	14.000G-14.500G	CW	4100	2.0mØ	52	28*	TWT	AM		WA	1.8
52	W2MC11M	14250M	20.0 †	14000M-14500M	CW	3900	60.0mØ	40.0	27.0	TWT§	AM		CO	1.65
53	VTU6191H8	14250M	25 †	14.000G-14.500G	CW	4000 Ø	100mØ	50†	35*	TWT§	AM			3.3
54	VZU6991D2	14250M	25	14.00G-14.50G	CW	230 §†Δ		50		TWT	AM		WA	
55▾	CGC141501-04	14.25G	29	14.0G-14.5G		15 §Ø	3.0	42	12	TWTØ	AM		CO	4.40
56	TH3544B	14250M	125 †	14.00G-14.50G	CW	5900	135m	60		TWT§	AM		WA	3.1
57	VTU6290B1	14250M	150	14.00G-14.50G	CW	8500 Ø	200mØ	45		TWT§	AM			6.0
58	VZU6992D2	14250M	150	14.00G-14.50G	CW	230 §†Δ		45		TWT	AM		WA	
59	TH3639	14.25G	160	14-14.5GGG	CW	7.0k	200m	45	35	TWT	AM	FF	WA	
60	VTU6290B4	14250M	200	14.00G-14.50G	CW	8500 Ø	220mØ	53		TWT§	AM			6.0
61	VZU6993D2#1	14250M	200	14.00G-14.50G	CW	230 §†Δ		53		TWT	AM		WA	
62	9225H-04	14250M	225 †	14.000G-14.500G	CW	240 §*Δ		60†	20*	TWT	AM		WA	165
63	881H	14.25G	250 †	14.0-14.5G	CW		300m	45	37*	TWT§			WA	11.0
64	LD4325	14250M	250	14.0G-14.5G	CW	5.5k#		55*		TWT§			CO	12
65	VZU6993D2#2	14250M	250	14.00G-14.50G	CW	230 §†Δ		53		TWT	AM		WA	
66	YH1422	14.25G	300	14.0G-14.5G	100	10000	320m	50	32	TWT				
67	VZU6995A1	14250M	400	14.00G-14.50G	CW	230 §†Δ		50		TWT	AM		WA	
68	QKW1987	14250M	550	14.000G-14.500G	1.0m	10000	375m	44		TWT	AM		WA	
69	TH3591	14250M	600	14.00G-14.50G	CW	11500	400m	45	38	TWT§	AM		WA	17.6
70	876H	14250M	700 †	14.000G-14.500G	CW	16000	400m	40†		TWT	AM		WA	28
71	YH1421	14.25G	750	14.0G-14.5G	100	11300	540m	50	32	TWT				
72	LD4219A	14.25G	1.0k	14-14.5G	CW	16k	630m§	38		TWT§	AM		CO	33
73	E3825	14250M	2.0k†	14.000G-14.500G	CW	19000	900m	40†		TWTØ	AM		WA	380 *
74	TH3517	14250M	2.0k	14.000G-14.500G	CW	13500	20m	29	20	TWT				88
75	TH3517E	14250M	2.0k†	14.00G-14.50G	CW	13500	850m	31		TWTØ	AM	FF	WA	88
76	VTU6691A2	14250M	2.0k	14.000G-14.500G	CW	12500 Ø	1.15 Ø	33		TWT$	AM			35
77	VZU6995J2	14250M	2.0k	14.00G-14.50G	CW	230 §†Δ		33		TWT	AM		WA	
78	YH1420	14250M	2000	14.000G-14.500G	CW	21000	700m	50		TWT§	AM		WA	33 *
79	TH3517B	14250M	2.5k†	14.00G-14.50G	CW	13500	850m	30		TWTØ	AM	FF	WA	88
80	LD4346	14.25G	3.0k	14-14.5G	CW	11.5k	1.3 §	49		TWTØ	AM		CO	26.4
81	870H	14250M	5.0k	14.000G-14.500G	CW	19500	1.8	43		TWTØ#	AM		WA	65
82	VTU4390H1	14300M	10m	10.70G-18.00G		115 ØΔ§		40	13	TWT§	AML		CO	5.5
83	VTU4390P3	14300M	10m	10.70G-18.00G		115 ØΔ§		25	12	TWT§	AML		CO	5.0
84	LD4418	14.3G	14	13.3G-15.3G	CW	3.5k	32m	41		TWT	AM		WA	2.0
85	N10021	14.3G	140	14.0G-14.5G	CW	7.5k	10mØ	30		TWT	AM	BB	CO	7.5 §
86	M2797-02/L2376-01	14350M	10M	10.700G-18.000G	CW			30		TWT	AM	BB		
87	VTU5195A1	14400M	1.0k	12.40G-16.50G	20m	11000 Ø	1.5 Ø	55		TWT§*	AM			6.0
88	874H	14425M	50	13.750G-15.100G	CW	7050	75m	42	35	TWT	AM		WA	
89	L2376	14500M	5.0m	11.00G-18.00G	CW	1600	2.0m	37	13	TWT§	AM		CO	2.0
90	F4156	14500M	60m†	11.000G-18.000G	CW	1500	3.0mØ	35†	14	TWT	AM		CO	2.20
91	264H	14500M	16	14.00G-15.00G	CW	3450	41m	46		TWT	AM		WA	2.5
92	QKW1940	14500M	20	11.000G-18.000G	CW	3200	75m	40		TWT	AM		CO	600m
93	L5606-50	14500M	3.0k	12.500G-16.500G	20m	13500	2.2	60		TWT§	AM		CO	5.0
94▾	8294H	14.595G	100	14.545G-14.645G	200 m	8.0k	56.0m	48		TWT	AM		WA	15
95	VZV6999B1P	14700M	760	11.40G-18.00G	CW	230 §†Δ		32		TWT	AM		WA	
96	VTU6196A8	14750M	25	14.00G-15.50G	CW	3900 Ø	115mØ	50		TWT§	AM		CO	10
97	288H	14800M	16	14.300G-15.300G	CW	3450	42mØ	46	30	TWT§	AM		WA	2.37
98	15W71	14825M	5.0	14.40G-15.25G	CW	3600	20m	33	25	TWT§	AM		WA	3.8
99	VTU2614A1	14825M	6.5	14.4G-15.25G	CW	4100	22m	37	26	TWT§	AM		WA	6.0 *
100	F2233	14.95G	70	14.35-15.55G	CW	4700	135m	55†	30	TWT§	AM		CO	1.0
101	VTU4490J4	15000M	1.0m	12.00G-18.00G	CW	115 *Ø§		45	12	TWT§	AML		CO	7.5
102	TWJ30	15000M	2.0m	12.000G-18.000G	CW	1500	600u	30†	13.5*	TWT§	AM		WA	5.25
103	VTU4890D9	15000M	8.0m	12.00G-18.00G	CW	115 *Ø§		35	11	TWT§	AMΔ		CO	17
104	VTX4890C9	15000M	8.0m*	12.00G-18.00G	CW	115 *Ø§		60	11	TWT§	LIM		CO	7.5
105	VTU4390P1	15000M	10m	12.00G-18.00G		115 ØΔ§		25	11	TWT§	AML		CO	5.0
106	VTU4390P2	15000M	10m	12.00G-18.00G		115 ØΔ§		40	12	TWT§	AML		CO	5.5
107	VTU4490H1	15000M	10m	12.00G-18.00G		115 ØΔ§		35	11	TWT§	AML		WA	7.25
108	VTU4490H5	15000M	10m	10.70G-18.00G				35	11	TWT§	AML		WA	7.25
109	W2MT/3A	15000M	15m*	12.000G-18.000G	CW	1500 §Ø		29.5†	11.5	TWT	AM		CO	15.62
110	VTU4490P1	15000M	16m	12.00G-18.00G		115 §ΔØ		30	8.5	TWT§	AML		WA	6.5

SYMBOLS AND CODES EXPLAINED IN INTERPRETER

2. SOURCE,AMPLIFIER,OUTPUT TUBES

IN ORDER OF (1)TUBE TYPE (2)CENTER FREQUENCY (3)POWER OUTPUT (4)TYPE No.

LINE No.	[4] TYPE No.	[2] CENTER FREQ. (Hz)	[3] POWER OUTPUT (W)	FREQUENCY RANGE (Hz)	MAX. DUTY CYCLE	MAX. BEAM VOLTAGE (Note 1) (V)	MAX. CATH-ODE CUR. (A)	GAIN (dB)	NF (dB)	DESCRIPTION [1] TUBE TYPE	FUNC-TION	TUN-ING	OUT PUT	WEIGHT (lb)
1	W2MT/1A	15000M	18.5m*	12.000G-18.000G	CW	1500 §Ø		30†	11	TWT	AM		CO	15.0
2	VTU4490E3	15000M	50m	12.00G-18.00G	CW	115 *Ø§		40	13	TWT§	AML		CO	7.0
3	VTU4490E4	15000M	50m	12.00G-18.00G	CW	115 *Ø§		25	9.5	TWT§	AML		CO	7.0
4	VTU4490A9	15000M	75m	10.00G-20.00G	CW	115 *Ø§		38	12	TWT§	AML		CO	10
5	VTU4404H9	15000M	100m	12.00G-18.00G	CW	115 *Ø§		45	15	TWT§	AML		CO	15
6	L2398	15000M	500m	12.000G-18.000G	CW	3000	12m	30	20	TWT§	AML		CO	2.0
7	L5557	15000M	10 †	12.000G-18.000G	CW	3800	70m	40†		TWT§$	AM		CO	2.5
8	1245H	15000M	15	14.850G-15.150G	CW	28 Ø§		45		TWT	AM		WA	7.7
9	286HM	15000M	18	14.000G-16.000G	CW	4200	35m	50		TWT	AM		CO	
10	8519H	15.000G	20.0	14.875G-15.125G	CW	4325		53.0		TWT	AM		WA	2.1
11	VTU6196A7	15000M	20	12.00G-18.00G	CW	3900 Ø	115mØ	40		TWT§	AM		CO	10
12	VA620A	15000M	100 †	12.00G - 18.00G	CW	6000	200m	35		TWT§	AM		CO	
13	QKW1899	15000M	3.0k	12.000G-18.000G	40m	11000	1.8	65		TWT	AM		CO	4.75
14	L5227	15200M	2.0	12.400G-18.000G	CW	3200	60m	40		TWT§	AM		CO	2.0
15	TOP1226	15200M	2.0 †	12.400G-18.000G	CW	2500	20mØ	40†	30	TWT	AM		CO	1.43
16	VTU6090A1	15200M	2.0 †	12.400G-18.000G	CW	2900 Ø	16mØ	30†	30*	TWT§*	AM		CO	.87
17	VTU6090H1	15200M	2.0 †	12.400G-18.000G	CW	3000	20m	60†	30*	TWT§*	AM		CO	1.25
18	VZU6090C1	15200M	2.0	12.40G-18.00G		115 Ø§				TWT	AM			
19	VZU6090D1	15200M	2.0	12.40G-18.00G		28 Ø§				TWT	AM			
20	VZU6998F1	15200M	2.0	12.40G-18.00G	CW	230 §†Δ		30	30*	TWT	AM		CO	55 Δ
21	VZU6998F2	15200M	2.0	12.40G-18.00G	CW	230 §†Δ		60	30*	TWT	AM		CO	55 Δ
22	VZU6998G1	15200M	2.0	12.40G-18.00G	CW	230 §†Δ		30		TWT	AM		CO	
23	VZV6992D3/D4	15200M	2.0	12.40G-18.00G	CW	28 §Ø		30†		TWT	AM		CO	
24	L5117	15200M	3.0	12.40G - 18.00G	100m	3600	100m	60	30	TWT§*	AM		WA	2.0
25	1236H	15200M	5.0 †	12.40G-18.00G	CW	115 §Ø		37†	35*	TWT§	AM		CO	18.5 Ø
26	848HD	15200M	10 †	12.400G-18.000G	CW	3800	60m	30	35*	TWT§	AM		CO	3.0 Δ
27	1177H04	15200M	10	12.400G-18.000G	CW	120 §*Δ		30†	35*	TWT	AM		WA	20 Δ
28	VTU6091A1	15200M	10 †	12.40G-18.00G		4050	60m	30†	35*	TWT§	AM		WA	3.1
29	VTU6091H1	15200M	10 †	12.40G-18.00G		4050	60m	45†	35*	TWT§	AM		WA	3.6
30	VTU6190A1	15200M	10 †	12.40G - 18.00G	CW	3900	50m	30†	30	TWT§	AM		WA	2.5
31	VTU6190H1	15200M	10 †	12.40G - 18.00G	CW	3900	50m	45†	30	TWT§	AM		WA	3.0
32	VZU6990E1	15200M	10	12.40G-18.00G		115 Δ§				TWT	AM			
33	VZU6990F1	15200M	10	12.40G-18.00G	CW	230 §†Δ		30	30*	TWT	AM		WA	55 Δ
34	VZU6990F2	15200M	10	12.40G-18.00G	CW	230 §†Δ		45	30*	TWT	AM		WA	55 Δ
35	VZU6990G1	15200M	10	12.40G-18.00G	CW	230 §†Δ		30		TWT	AM		WA	
36	VZU6990G2	15200M	10	12.40G-18.00G	CW	230 §†Δ		45		TWT	AM		WA	
37	VZV6995A1	15200M	10	12.40G-18.00G	CW	115 §Ø		30		TWT	AM		WA	
38	VZV6995A4	15200M	10	12.40G-18.00G	CW	115 §Ø		45		TWT	AM		WA	
39	VTU6191A1	15200M	20 †	12.400G-18.000G	CW	4000 Ø	100mØ	30†	35*	TWT§	AM			2.9
40	VTU6191H1	15200M	20 †	12.400G-18.000G	CW	4000 Ø	100mØ	45†	35*	TWT§	AM			3.3
41	VZU6991F1	15200M	20	12.40G-18.00G	CW	230 §†Δ		30	35*	TWT	AM		WA	55 Δ
42	VZU6991G1	15200M	20	12.40G-18.00G	CW	230 §†Δ		30		TWT	AM		WA	
43	VZU6991G2	15200M	20	12.40G-18.00G	CW	230 §†Δ		45		TWT	AM		WA	
44	VZV6996A1	15200M	20	12.40G-18.00G	CW	115 Ø§		30		TWT	AM		WA	
45	VZV6996A2	15200M	20	12.40G-18.00G	CW	115 Ø§		45		TWT	AM		WA	
46	VTU6290C1	15200M	50 †	12.40G - 18.00G	CW	6350	200m	30†	35	TWT§	AM			6.0
47	VZU6992C1	15200M	50	12.40G-18.00G		115 Ø§				TWT	AM			
48	VTU6290C2	15200M	75	12.40G-18.00G		6800	190m	25		TWT§	AM		WA	5.0
49	VZU6992E1	15200M	75	12.40G-18.00G		115 Δ§				TWT	AM			
50	VZU6992G1	15200M	100	12.40G-18.00G	CW	230 §†Δ		37		TWT	AM		WA	
51	VZV6997A1	15200M	100	12.40G-18.00G	CW	230 §†Δ		37		TWT	AM		WA	
52	VTU5390A1	15250M	1.0k†Δ	14.50G - 16.00G	5.0m	11000	1.5	25†		TWT§*	AM		WA	3.0
53	VTU5391A1	15750M	1.0k†Δ	15.00G - 16.50G	5.0m	10500 Ø	900mØ	25†		TWT§	AM		WA	4.0
54	VTU6690A1	15750M	8.0k	15.50G-16.00G		21000	2.4	35		TWTØ	AM			25 §
55	839H	15750M	100k	15.000G-16.500G	5.0m	62000	7.8	50		TWT§#	AM			19
56	VTU6290F1	15800M	100	12.40G-18.00G	CW	8800 Ø	230mØ	37		TWT§	AM			6.0
57	QKW1898	15950M	10	15.700G-16.200G	1.0m	20000		57		TWT	AM	EM	WA	6.0
58	TL16010	16000M	2.0	14.000G-18.000G	CW	3000	14m	42	27	TWT§	AM		CO	1.5
59	L5557-01	16G	10 †	12G-18G	CW	-3600	70m	36†		TWT§$	AM		WA	2.5
60	VTU5195A2	16000M	1.5k	14.00G-18.00G	20m	11000 Ø	1.5 Ø	55		TWT§*	AM			6.0
61	VTU6390A1	16100M	750	15000M-17200M	CW	11000 Ø	1.0 Ø	26		TWTØ$#	AM		CC	19 *
62	835H	16150M	200k	15.900G-16.400G	10m	85000	13	60		TWT§#	AM		WA	30
63	838H	16250M	100k	16.000G-16.500G	5.0m	63000	7.7	53		TWT§#	AM		WA	18
64	854H	16250M	100k†	16.000G-16.500G	30m	67000	8.5	53		TWTØ#	AM		WA	43 *
65	830H	16450M	3.0k	16.200G-16.700G	40m	22000	1.3	37		TWT§#	AM		WA	14
66	QKW1514	16500M	175	15.670G-17.320G	140m	16000	800m	30		TWT	AM		WA	
67	832H	16500M	1.0k	15.500G-17.500G	CW	14500	450m	30		TWTØ#	AM		WA	65 Δ
68	L5611	16500M	2.0k	16.000G-17.000G	30m	11500	1.8	56		TWT	AM		WA	4.5
69	TL16000	16500M	4.5kΔ	16.00G-17.00G	45m	20000	1.45	37†		TWT	AM		WA	12
70	820H	16500M	5.0k	16.000G-17.000G	10m	24000	1.5	36		TWT§#	AM		WA	15
71	866H	16700M	10k†	15.700G-17.700G	500m	30500	3.5	33		TWT#$	AM		WA	70
72	N10517	16.75G	12k	16.5G-17.0G	2.5		2.1	45		TWT§	AM		CO	12
73	861H	16750M	13.5k	16.500G-17.000G	25m	30500	2.1	47		TWT§#	AM	BB	WA	11.3
74	N10037	17.5G	.25	5-26.5G	CW		30M			TWT§		BB	CO	1.5
75	VTU6290B2	17500M	100	17.00G-18.00G	CW	8300 Ø	200mØ	37		TWT§	AM			6.0
76	QKW2053	17.8G	80000	7.5G-18.2G	CW		160m			TWT	AM			1.25
77	288HC	19000M	4.0	17.75G-20.25G	CW	4500	40m	50		TWT	AM		WA	2.4
78	292H	19000M	4.0	17.000G-21.000G	CW	4500	17m	52		TWT	AM		WA	1.63
79♦	1294H	19.0G	4.0	17.750G-20.250G	CW	32 †		50	30	TWT	AM		WA	4.8
80	TH3662	19.45G	25	17.7G-21.2G	CW	4.06		50†	30	TWT	AM	FF	WA	1.45
81	918H-1	19500M	25	17.000G-22.000G	CW	11000	75m	20		TWT	AM		WA	6
82	918H-2	19500M	75	17.000G-22.000G	CW	11000	75m	50		TWT	AM		WA	6
83	268H	20000M	2.0 †	18.000G-22.000G	CW	3900 Ø	13mØ	42		TWT§	AM		WA	1.2
84	TL20030	20G	22	18.5G-21.5G	CW	4100	50	50		TWT	AM		WA	2.0
85	250H	21000M	30	19.000G-23.000G	CW	6750	49m	55		TWT	AM		WA	2.0
86	VTK4926S1	22000M	20m†	18.000G-26.000G	CW	115 §*Ø		25†	14*	TWT	AM		CO	7.5
87	911H	22000M	1.0	18.000G-26.000G	CW	3900	20m	35†	35*	TWT§	AM		WA	3.0 Δ
88	VTK4926H1	22000M	13 †	18.000G-26.000G	CW	115 §*Ø		40†	14*	TWT	AM			7.0
89	1077H11	22025M		18.00G-26.50G	CW			30†	35	TWT§	AM		WA	20
90	VTK4926P8	22250M	10 †	18.000G-26.500G	CW	115 §*Ø		35†	14*	TWT	AM			15
91	VTK4926P9	22250M	10 †	18.000G-26.500G	CW	115 §*Ø		25†	13*	TWT	AM			15
92	950HA-1	23050M	10	22.550G-23.550G	CW	6700	28m	45		TWT	AM		WA	2.5
93	950H	23500M	10	21.000G-26.000G	CW	6700	23m	50		TWT	AM		WA	
94▼	E3839	28.3G	20	27.5G-29.1G	CW	9.0k	50m	37		TWT†	AM	VT	WA	7.7
95▼	E3840	28.3G	300 †	27.5G-29.1G	CW	26k†	220m	40		TWT†	AM	VT	WA	31
96	YH3025	28.5G	250	27.5G-29.5G	100	18k†	140m	45Ø		TWT		BB	WA	17
97	E3832	28750M	400 †	27.5G-30.0G	CW	23000	250m	37		TWT§	AM		WA	44
98	LD4369	28800M	700	27.550G-30.050G	CW	18500	700m	47		TWTØ	AM	BB	WA	436 *
99	YH3020	29G	1.0k	28G-30G	100	26.5k†	450m	43†	35*	TWT		BB	WA	20
100	E3824A	29250M	450 †	27.5G-31.0G	CW	17000	330m	40		TWTØ	AM		WA	440 *
101	254H	30000M	2.0 †	29.000G-31.000G	CW	5500 Ø	7.0mØ	42		TWT§	AM		WA	1.2
102	251H	31600M	2.8	31.590G-31.610G	CW	5500	13.5m	45	35	TWT	AM		WA	1.8
103	1254H	31650M	3.0	30.650G-32.650G	CW	-29 §Ø		43		TWT	AM		WA	5.5
104	950HA-2	32500M	10	32.000G-33.000G	CW	6300	28m	45		TWT	AM		WA	2.5
105	VTA4940S1	33000M	1.0m†	26.000G-40.000G	CW	115 §*Ø		25†	17*	TWT	AM			7.5
106	VTA4940P8	33000M	3.1m†	26.000G-40.000G	CW	115 §*Ø		35†	17*	TWT	AM			15
107	VTA4940P9	33000M	3.1m†	26.000G-40.000G	CW	115 §*Ø		25†	16*	TWT	AM			15
108	VTA4940B1	33000M	4.0m†	26.000G-40.000G	CW	115 §*Ø		35†	17*	TWT	AM			7.5
109	1077H12	33025M		26.50G-40.00G	CW			30†	35	TWT§	AM		WA	20
110	912H#	33.25G	1.0	26.5G-40G	CW	6000	25m	30		TWT§	AM		WA	3.0 Δ

2. SOURCE,AMPLIFIER,OUTPUT TUBES

IN ORDER OF (1)TUBE TYPE (2)CENTER FREQUENCY (3)POWER OUTPUT (4)TYPE No.

LINE No.	[4] TYPE No.	[2] CENTER FREQ. (Hz)	[3] POWER OUTPUT (W)	FREQUENCY RANGE (Hz)	MAX. DUTY CYCLE	MAX. BEAM VOLTAGE (Note 1) (V)	MAX. CATH-ODE CUR. (A)	GAIN (dB)	NF (dB)	DESCRIPTION [1] TUBE TYPE	FUNC-TION	TUN-ING	OUT PUT	WEIGHT (lb)
1	UV229-1	33800M	10	3400-4200M						TWT			WA	.88
2	924H	34.25G	75	34G-34.5G	200m	13k	90m	45		TWT	AM		WA	5.5
3	QKW1995	37000M	1000	36.000G-38.000G	1.0m	25000	400m	37.5		TWT	AM		WA	5.8
4	1228H	37450M	1.0	36.800G-38.100G	CW	28 §Ø		25		TWT	AM		WA	
5	863H	37450M	2.0	36.800G-38.100G	CW	6000	13m	35		TWT	AM		WA	1.44
6	QKW2048	44G	80	43G-45G	CW	10k	120m	40		TWT	AM		WA	10
7	QKW2025	44250M	500	43.500G-45.000G	CW	25000	300m	40		TWT	AM	BB	WA	6
8	RW4028(A)	44.5G		43.5-45.5G		24k	170m	52		TWT				29
9	932H	44.5G	25	43.5G-45.5G	CW	14k	37m	40		TWT	AM		WA	5.5
10	926H	44.5G	150	43.5G-45.5G	CW	22k	200m	30		TWT	AM		WA	5.0
11	RW4016	44500M	170	43.5G-45.5G	CW	19500	135m	50Ø	35	TWT§	AM		WA	15
12	QKW2056	44.5G	1000	40.0G-55.0G	0.10	30.0k	700m	40		TWT	AM	EM		5.0
13	QKW1993	51000M	500	46.000G-56.000G	1.0m	25000	300m	40		TWT	AM		WA	15
14	812H	53750M	150 †	49.500G-58.000G	CW	20000	120m	12		TWT§#	AM		WA	17
15	813H	55000M	1.0k	54.500G-55.500G	CW	25000	400m	25		TWTØ#	AM		WA	50
16	819H	55000M	5.0k	54.500G-55.500G	CW	15000	900m	20		TWTØ#	AM		WA	60
17	TH3612	61.5G	500	5.9G-6.4G		7.7k	460m	45	35	TWT	AM	FF	WA	15.5
18	814H	93500M	100	91.000G-96.000G	CW	15000	170m	25		TWTØ#	AM		WA	40
19	UV1002	6381-5M		5263-7500M				25	9.5	TWT			WA	.22

3. DUPLEXER TUBES

IN ORDER OF (1)TUBE TYPE (2)CENTER FREQUENCY (3)INCIDENT POWER (4)TYPE No.

LINE No.	4 TYPE No.	2 CENTER FREQ. (Hz)	3 INCIDENT POWER (W)	FREQUENCY RANGE (Hz)	MAX. DUTY CYCLE	MAX. PULSE WIDTH (s)	RECOVERY TIME (s)	MAX. VSWR	LEAKAGE SPIKE (ergs)	LEAKAGE FLAT (W)	MAX. INSERTION LOSS (dB)	DESCRIPTION 1 TUBE TYPE	DESCRIPTION FEATURES	DESCRIPTION OUTPUT	DESCRIPTION LIFE (hr)
1	BS234	900M	200k	8.600G-9.500G			3.0u	1.4	5.0nØ	50m	1.2		BP	WA	
2	6962/BL665	1285M	2.0M	1.285G	1.0m	4.0u		1.3Ø				ATR			1.0k
3	BL640	1300M	2.0M	1.300G	2.0m	4.0u		1.3Ø				ATR			1.0k
4	OML1003	1300M	2.0M	1.250G-1.350G	2.0m	4.0u						ATR	Ø		1.0k
5	T347	1300M	2.0M	1.250G-1.350G			15u*	1.15			300m$	ATR			
6	1B44	2750M	20k†	1.250G-1.350G								ATR	BP	WA	
7	1B44/MSA12	2750M	750k	S Band	1.0m							ATR		BP	
8	JAN6024	2800M	20k†	2.800G	1.0m	1.0u		1.15				ATR		WA	1.0k†
9	6024	2800M	750k	2.800G	1.0m	1.0u		1.3Ø				ATR		WA	1.0k
10	6024/ATR387	2800M	750k*	2.650G-2.950G				1.15			800m$	ATR			
11	6024/MSA20	2800M	750k	S Band	1.0m							ATR		BP	
12	BLA019	2800M	1.0M	2.800G	1.0m	1.0u		1.3Ø				ATR		WA	1.0k
13	1B56	2850M	20k†									ATR	BP	WA	
14	1B56/MSA11	2850M	750k	S Band	1.0m							ATR		BP	
15	5792	2950M	750k	2.950G	1.0m	1.0u		1.3Ø				ATR		WA	1.0k
16	5792/MSA16	2950M	750k	S Band	1.0m							ATR		BP	
17	BLA011	2950M	1.0M	2.950G	1.0m	1.0u		1.3Ø				ATR		WA	1.0k
18	8835	3000M				30u	20u					ATR		WA	15
19	8836	3000M	10k	2.900G-3.100G		33u	20u					ATR			
20	T370	3050M	100k*	2.950G-3.150G				1.15			800m$	ATR			
21	5793	3050M	750k	3.050G	1.0m	1.0u		1.3Ø				ATR		WA	1.0k
22	5793/MSA17	3050M	750k	S Band	1.0m							ATR		BP	
23	5921	3200M	750k	3.200G	1.0m	1.0u		1.3Ø				ATR		WA	1.0k
24	5921/MSA18	3200M	750k	S Band	1.0m							ATR		BP	
25	JAN5921	3312M	1.0M*	3.200G-3.425G	1.0m	1.1u		1.15			800m$	ATR		WA	1.0k†
26	5922	3400M	750k	3.400G	1.0m	1.0u		1.3Ø				ATR		WA	1.0k
27	5922/MSA19	3400M	750k	S Band	1.0m							ATR		BP	
28	JAN5922	3412M	1.0M*	3.400G-3.425G	1.0m	1.1u		1.15			800m$	ATR		WA	1.0k†
29	1B53/MSA15	3479M	750k	S Band	1.0m							ATR		BP	
30	BLA012	3500M	1.0M	3.500G	1.0m	1.0u		1.3Ø				ATR		WA	1.0k
31	1B52/MSA21	3625M	750k	S Band	1.0m							ATR		BP	
32	6022	5365M	1.0M	5.365G	1.0m	1.0u	60u	1.3Ø				ATR			1.0k
33	6022/MCA13	5365M	1.0M	C Band	1.0m							ATR		BP	
34	6591/MCA10	5400M	150k	C Band	1.0m							ATR		BP	
35	JAN6081	5640M	10k†	5.640G	1.0m	1.0u		1.1			800m$	ATR			500 †
36	6081	5640M	300k	5.640G	1.0m	1.0u		1.3Ø				ATR			500
37	6081/ATR408	5640M	300k*	5.450G-3.830G				1.1			800m$	ATR			
38	6081/MCA11	5640M	300k	C Band	1.0m							ATR		BP	
39	6455	5640M	300k*	5.340G-5.940G			25u*				800m$	ATR	BP	WA	
40	6455/MCA12	5640M	300k	C Band	1.0m							ATR		BP	
41	1B37A	8750M	250k	8.750G	1.0m	1.0u	10u	1.3Ø				ATR		WA	1.0k
42	JAN1B37A	8750M	250k	8.750G	1.0m	1.0u	10u*	1.1			800m$	ATR		WA	500 †
43	1B37A/MXA19	8750M	250k	X Band	1.0m							ATR	BP	WA	
44	6034	8750M	250k	8.750G	1.0m	1.0u	8.0u	1.3Ø				ATR		WA	500
45	6631	8750M	250k*	8.500G-9.000G							800m$	ATR	BP	WA	
46	BS118	8775M	4.0k†	X-Band	1.0m	1.0u§		1.1			800m$	ATR		WA	
47	5883	8800M	250k	8.800G	1.0m	1.0u		1.3Ø				ATR		WA	1.0k
48	6629	8800M	250k	8.650G-8.950G			8.0u*				800m$	ATR	BP	WA	
49	BS248	9025M	4.0k†	X-Band	CW			1.1			800m$	ATR		WA	
50	6163	9050M	250k	9.050G	1.0m	1.0u		1.3Ø				ATR		WA	500
51	BS82	9080M	4.0k†	X-Band	1.0m	1.0u§		1.1			800m$	ATR		WA	
52	JAN6162	9080M	250k*	9.080M	1.0m	1.0u	10u*	1.1			800m$	ATR		WA	500 †
53	6162/ATR388	9080M	250k	9.080G	1.0m	1.0u	8.0u	1.3Ø				ATR		WA	500
54	BS84	9240M	4.0k†	X-Band	1.0m	1.0u§		1.1			800m$	ATR		WA	
55	BS412	9300M	4.0k†	X-Band	CW			1.1			800m$	ATR		WA	
56	6276	9300M	5.0k†	9.300G			10u*	1.10			800m	ATR		WA	1.0k
57	6393	9300M	5.0k†	9.000G-9.600G			8.0u*	12			800m	ATR		WA	
58	6890	9300M	30k	9.000G-9.600G			8.0u*				1.6 $	ATR	BP	WA	
59	6890/BL650	9300M	30k	9.300G	1.0m	1.0u	8.0u	1.3Ø				ATR		WA	500
60	1B35A	9300M	250k		1.0m	1.0u	10u	1.3				ATR	AT		1.0k
61	JAN1B35A	9300M	250k*	9.300G	1.0m	1.0u	10u*	1.1			800m$	ATR		WA	500 †
62	1B35A/MXA14	9300M	250k	X Band	1.0m							ATR	BP	WA	
63	6033	9300M	250k	9.300G	1.0m	1.0u	8.0u	1.3Ø				ATR		WA	500
64	6304	9300M	250k*	9.000G-9.600G			8.0u*				800m$	ATR	BP	WA	
65	6304/BL43	9300M	250k	9.300G	1.0m	1.0u	8.0u	1.3Ø				ATR		WA	500
66	BLA009	9300M	250k	9.300G	1.0m	1.0u	10u	1.3Ø				ATR		WA	500
67	BS116	9325M	4.0k†	X-Band	1.0m	1.0u§		1.1			800m$	ATR		WA	
68	BS92	9375M	4.0k†	X-Band	1.0m	1.0u§		1.1			800m$	ATR		WA	
69	BS310	9375M	4.0k†	X-Band	CW			1.1			800m$	ATR		WA	
70	8481/BLT032	9375M	150k	9.375G	1.0m	5.0u	10u	1.3Ø				ATR		WA	500
71	5864/ATR321	9375M	200k	9.375G	1.0m	1.0u		1.3Ø				ATR		WA	1.0k
72	JAN5864	9375M	250k*	9.375G	1.0m	1.0u	10u*	1.1			800m$	ATR		WA	1.0k†
73	6214	9375M	250k	9.375G	1.0m	1.0u		1.3Ø				ATR		WA	500
74	6630	9375M	250k*	9.000G-9.600G			8.0u*				800m$	ATR	BP	WA	
75	T343	9375M	250k*	9.000G-9.600G			8.0u*	1.1			800m$	ATR			
76	BS48	9410M	4.0k†	X-Band	1.0m	1.0u§		1.1			800m$	ATR		WA	
77	BS114	9600M	4.0k†	X-Band	1.0m	1.0u§		1.1			800m$	ATR		WA	
78	BS148	9850M	4.0k†	X-Band	1.0m	1.0u§		1.1			800m$	ATR		WA	
79	BS624A	1290M	2.0M	1.215G-1.365G	1.0m		12u*	1.3	1.0 *	200m*	500m	DPBA	BP	WA	
80	BS624B	1290M	2.0M	1.215G-1.365G	1.0m		12u*	1.3	1.0 *	200m*	500m	DPBA	BP	WA	
81	BS624C	1290M	2.0M	1.215G-1.365G	1.0m		12u*	1.3	1.0 *	200m*	500m	DPBA	BP	WA	
82	BS624D	1290M	2.0M	1.215G-1.365G	1.0m		12u*	1.3	1.0 *	200m*	500m	DPBA	BP	WA	
83	BS624E	1290M	2.0M	1.215G-1.365G	1.0m		12u*	1.3	1.0 *	200m*	500m	DPBA	BP	WA	
84	BS624K	1290M	6.0M	1.215G-1.365G	1.6m		20u*	1.3	50 *	400 *	500m	DPBA	BP	WA	
85	BS624L	1290M	6.0M	1.215G-1.365G	1.6m		20u*	1.3	50 *	400 *	500m	DPBA	BP	WA	
86	BS624M	1290M	6.0M	1.215G-1.365G	1.6m		20u*	1.3	50 *	400 *	500m	DPBA	BP	WA	
87	BS624N	1290M	6.0M	1.215G-1.365G	1.6m		20u*	1.3	50 *	400 *	500m	DPBA	BP	WA	
88	BS624P	1290M	6.0M	1.215G-1.365G	1.6m		20u*	1.3	50 *	400 *	500m	DPBA	BP	WA	
89	BLP149D	1290M	50M	1.215G-1.365G	1.2m	100u	300u	1.3Ø	350m	100m	400mØ	DPBA		WA	500
90	BS608A	2900M	2.0M*	2.700G-3.100G	1.5m		20u*	1.25	100m*	20m*	400m	DPBA	BP	WA	
91	BS608B	2900M	2.0M*	2.700G-3.100G	1.5m		20u*	1.25	100m*	20m*	400m	DPBA	BP	WA	
92	BS630	5480M	1.0M*	5.250G-5.710G			15u*	1.3	250m*	50m*	700m	DPBA	BP	WA	
93	BS616A	9250M	200k*	8.500G-10.000G			2.0u*	1.4	50m*	20m*	800m	DPBA	BP	WA	
94	BS616B	9250M	200k*	8.500G-10.000G			2.0u*	1.4	50m*	20m*	800m	DPBA	BP	WA	
95	BLP017D	70500M	15k	69.500G-71.500G	2.0m	1.0u	1.0u	1.3Ø	50m	20m	1.5 Ø	DPBA		WA	500
96	BLP136D	70500M	15k	69.500G-71.500G	2.0m	1.0u	1.0u	1.3Ø	50m	20m	1.5 Ø	DPBA		WA	500
97	BLP005D	1290M	2.0M	1.250G-1.350G	1.0m	4.0u	35u	1.3Ø	250m	100m	700mØ	DPBR		WA	500
98	BS748	3050M	100k	3000-3100M				1.3			0.1	DPBR			
99	BLP027D	24000M	40k	23.500G-24.500G	100u	20n	1.5u	1.3Ø			1.2 Ø	DPBR		WA	500
100	BLP215	24000M	55k	23.500G-24.500G	100u	20n	200n	1.3Ø	50m	50m	1.2 Ø	DPBR		WA	2.0k
101	TH2611	1280M	4.0M*	1.215G-1.350G	1.0m		50u*				600m	PTR			
102	6260	1285M	3.0M	1.285G	1.0m	4.0u	36u	1.3Ø		260	300mØ	PTR	CM		500
103	5939A	1286M	575k	1.286G	1.0m	4.6u	36u	1.3Ø		26m	600mØ	PTR	QR	WA	500
104	6605	1300M	2.0M*	1.250G-1.350G			45u*	1.4		50m*	400m	PTR		WA	
105	6605/MLT23	1300M	2.0M	1.250G-1.350G	1.0m							PTR		BP	
106	7152/MLT16B	1300M	2.0M	1.250G-1.350G	1.0m							PTR	BP		1.0k
107	7152	1300M	3.0M*	1.250G-1.350G			30u*					PTR			
108	7152/BL612	1300M	3.0M	1.250G-1.350G	2.0m	6.0u	40u	1.3Ø		500m	300mØ	PTR	CM		2.0k
109	AP433	1300M	3.0M†	1.200G-1.400G	1.0m		50u*				600m	PTR	BP	WA	
110	AP623	1300M	8.0M†	1.200G-1.400G	750u		75u*				600m	PTR	BP	WA	

SYMBOLS AND CODES EXPLAINED IN INTERPRETER

3. DUPLEXER TUBES

IN ORDER OF (1)TUBE TYPE (2)CENTER FREQUENCY (3)INCIDENT POWER (4)TYPE No.

LINE No.	[4] TYPE No.	[2] CENTER FREQ. (Hz)	[3] INCIDENT POWER (W)	FREQUENCY RANGE (Hz)	MAX. DUTY CYCLE	MAX. PULSE WIDTH (s)	RECOVERY TIME (s)	MAX. VSWR	LEAKAGE SPIKE (ergs)	LEAKAGE FLAT (W)	MAX. INSERTION LOSS (dB)	[1] DESCRIPTION TUBE TYPE	DESCRIPTION FEATURES	DESCRIPTION OUTPUT	DESCRIPTION LIFE (hr)
1	T350	1680M	700k*	1.660G-1.695G			36u*					PTR			
2	1B38	2800M	750k*	2.700G-2.900G	1.0m		15u*	1.05			200m	PTR	BP	WA	
3	1B38/MST26	2800M	750k	2.690G-2.910G	1.0m							PTR			
4	BS833	3000M	250k	2700M-3300M			15u	1.25	600nØ		0.4	PTR	BP	WA	
5	8622/MST52	3000M	300k	2.900G-3.100G	1.0m							PTR			
6	BS710	3000M	2.0M*	2.000G-4.000G			10u*					PTR			
7	BS702	3000M	2.5M	2.000G-4.000G		2.0u§	30u*				500m$	PTR			
8	AP414	3065M	30k†	2.900G-3.230G	1.0m		40u*				900m	PTR		WA	
9	F3004	3065M	30k†	2.900G-3.230G	1.0m		40u*				900m	PTR		WA	
10	AP413	3065M	1.2M†	2.900G-3.230G	1.0m		90u*				400m	PTR	BP	WA	
11	F3003	3065M	1.2M†	2.900G-3.230G	1.0m		90u*				400m	PTR	BP	WA	
12	BS716	3275M	500k*	2.600G-3.950G	1.0m		15u*	1.08	1.5k*	150 *	200m	PTR	PL	WA	
13	1B54	3550M	750k	3.400G-3.700G	1.0m	1.0u	15u	1.3Ø	2.5	1.5	200mØ	PTR	Ø	WA	500
14	JAN1B54	3550M	750k*	3.400G-3.700G		1.0u	15u*	1.2	15k*		200m	PTR	BP	WA	500 †
15	1B54/MST27	3550M	750k	3.400G-3.700G	1.0m							PTR		BP	
16	BS940	3750M	1.25M*	2.000G-5.500G	1.2m	2.5u	100u*				1.0	PTR	BPPL	WA	
17	BS986	3750M	2.0M*	2.000G-5.500G	750u		150u*	1.2			1.0	PTR	BPPL	WA	
18	BS220	5650M	250k	5.450G-5.850G			15u	1.25	4.0		500m	PTR	PS	WA	
19	MCT18	5650M	1.0M	5.395G-5.905G	1.0m							PTR		BP	
20	BS836	7000M	250k*	2.000G-12.000G	1.0m		8.0u*					PTR	BPPL	WA	
21	BS838	7000M	500k*	2.000G-12.000G	1.0m		8.0u*					PTR	BPPL	WA	
22	BS138	7000M	1.0M*	2.000G-12.000G	1.0m		25u*					PTR	BPPI	WA	
23	BS834	7000M	2.5M*	2.000G-12.000G	1.2m	2.5u	25u*					PTR	BPPL	WA	
24	BS880	7000M	3.0M*	2.000G-12.000G	1.0m	2.5u	25u*					PTR	BPPL	WA	
25	BLA013	16500M	75k	16.000G-17.000G	1.0m	200n	2.0u	1.3Ø			500mØ	PTR	Ø	WA	200
26	BLA007-1	16500M	150k	16.000G-17.000G	1.0m	3.0u	2.0u	1.3Ø			500mØ	PTR	Ø	WA	2.0k
27	BS910	1300M	2.5M*	1.250G-1.350G	1.0m		20u*	2.0	1.0 *	200m*	500m	PTRD	BPPS	WA	
28	BS912	1300M	5.0M*	1.250G-1.350G	2.0m		20u*	1.3	50 *	200m*	500m	PTRD	BPPS	WA	
29	BS916	2900M	2.0M*	2.700G-3.100G	1.5m		20u*	1.25	100m*	20m*	400m	PTRD	BPPS	WA	
30	BS990	3065M	1.3M*	2.900G-3.230G	1.5m		90u*			10	600m	PTRD	BPPS	WA	
31	BS858	5480M	250k	5.300G-5.700G			15u*	1.3	250m*	50m*	500m	PTRD	BPPS	WA	
32	BL982	5575M	40k	5.395G-5.755G	1.0m	1.0u	60u	1.3Ø		2.0m	500mØ	PTRD	Ø	WA	500
33	MCT12	5650M	500k	5.395G-5.905G	1.0m							PTRD	BP		
34	BS224	5650M	1.0M	5.450G-5.850G			15u	1.3	250m		500m	PTRD	PS	WA	
35	BL962	9050M	250k	8.500G-9.600G	1.0m	1.0u		1.3Ø		25m	600mØ	PTRDL	Ø	WA	500
36	BS970	9250M	150k	8.500G-10.000G			2.0u	1.4	50m		800m	PTRD		WA	
37	BS930	9250M	200k	8.500G-10.000G			2.0u*	1.4	50m*	20m*	800m	PTRDL	BPPS	WA	
38	MPT33	220M	60k		1.0m							TR	BPPL		
39	MPT34	305M	15k	100M-600M	33m							TR		BP	
40	MPT35	305M	15k	100M-600M	33m							TR		BP	
41	MPT22	400M	15k	200M-600M	33m							TR		BP	
42	MPT29	400M	15k	200M-600M	33m							TR	BPPL		
43	7821/MPT12	400M	200k	200M-600M	50m							TR		BP	
44	MPT14	400M	200k	200M-600M	5.0m							TR	BPPL		
45	MPT21	400M	200k	200M-600M	5.0m							TR	BPPL		
46	MPT40	400M	3.0M	200M-600M	1.6m							TR	BPCM		
47	MPT41	400M	3.0M	200M-600M	1.6m							TR	BPCM		
48	MPT27	425M	20k	400M-450M	1.0m							TR		BP	
49	MPT45	425M	300k	350M-500M	1.6m							TR		BP	
50	MPT47	425M	300k	400M-450M	13m							TR	BPPL		
51	MPT18	425M	2.0M	420M-430M	1.0m							TR		BP	
52	MPT20	425M	2.0M	400M-450M	1.0m							TR	BPPL		
53	7309/BL693	430M	2.0M	425M-435M	1.8m	6.0u	100u			40	2.0 Ø	TR	CM	CC	1.0k
54	MPT15	450M	15k	300M-600M	8.0m							TR	BPPL		
55	7901/MPT13	450M	20k	300M-600M	2.0m							TR	BPPL		
56	MPT15A	450M	30k	300M-600M	2.0m							TR	BPPL		
57	MPT37	450M	34k	300M-600M								TR	BPPL		
58	8313/MPT16	450M	500k	300M-600M	2.0u							TR	BPPL		
59	MPT16A	450M	500k	300M-600M	2.0u							TR	BPPL		
60	MPT28	450M	1.0M	300M-600M	1.0m							TR	BPPL		
61	7300/MPT26	450M	2.0M	300M-600M	2.5m							TR		BP	
62	7324/MPT11	450M	2.0M	300M-600M	2.0m							TR	BPPL		
63	MPT25	450M	2.0M	300M-600M	2.5m							TR	BPPL		
64	7902/MPT17	450M	3.0M	300M-600M	1.6m							TR	BPPL		
65	MPT10	600M	2.0M	575M-625M	2.0m							TR	CMMT		
66	MPT31	750M	2.0M	600M-900M	2.0m							TR	CMMT		
67	JAN1B23	946M	10k	936.5M-955.5M							1.6	TR	CM	CC	500 †
68	1B23	950M	10k	950M	1.0m	4.0u		1.3Ø	500m	100m	1.6 Ø	TR	CM		500
69	BLT074	1280M	10k	1.210G-1.350G	5.0m	30u	20u	1.3Ø	350m	90m	350mØ	TR		WA	1.0k
70	6322/BL25	1280M	450k	1.210G-1.350G	1.0m	4.0u	25u	1.3Ø	250m	75m	800mØ	TR	CM	WA	500
71	7166/MLT10	1282M	2.0M	1.200G-1.365G	1.0m							TR		BP	
72	6322	1285M	450k*	1.215G-1.355G			25u*		350m*	90m*	800m	TR	CMMT	CC	
73	JAN6322	1285M	450k*	1.215G-1.355G*Ø		4.0u	25u*		350m*	90m*	800m	TR	CMMT		500 †
74	6322/MLT11	1285M	450k	1.215G-1.355G	1.0m							TR	MTPL		
75	MPT42	1285M	450k	1.215G-1.355G	1.0m							TR		MT	
76	6632	1285M	2.0M*	1.215G-1.355G			45u*		400m*	75m*	700m	TR	CMMT	WA	
77	6632/MLT24	1285M	2.0M	1.215G-1.355G	1.0m							TR	BPMT		
78	BS874	1290M	1.0M†	1.215G-1.370G			5.0u*	1.25	7.0	10 Ø*	400m	TR	BPPS	WA	
79	7166/BL933	1290M	2.0M	1.220G-1.360G	1.0m	4.0u	20u	1.3Ø		1.0	500mØ	TR	CM		1.0k
80	6633	1292M	2.0M*	1.220G-1.365G			45u*	1.4	400m*	75m*	700m	TR	BPCM	WA	
81	6633/MLT17	1292M	2.0M	1.220G-1.365G	1.0m							TR		BP	
82	7166	1292M	2.0M*	1.220G-1.365G			25u*					TR	BP		
83	BTR647	1295M	50k	1.230G-1.360G	40m	70u	10u	1.3Ø		900m	400mØ	TR	CM		500
84	BS876	1297M	10k*	1.230G-1.365G			10u*	1.25	230 *		700m	TR	BPPS	CO	
85	7823/MLT13	1300M	50k	1.250G-1.350G	1.0m							TR	BPCP		
86	BTR633	1300M	50k	1.250G-1.350G	1.0m	4.0u	15u	1.3Ø		900m	300mØ	TR	CM		1.0k
87	MLT29	1300M	50k	1.250G-1.350G	1.0m							TR	BPCP		
88	MLT33	1300M	100k	1.250G-1.350G	1.0m							TR	BPCP		1.0k
89	MLT40	1300M	100k	1.250G-1.350G	1.0m							TR	BPCP	WA	
90	MLT47	1300M	200k	1.250G-1.350G	1.0m							TR		BP	
91	8272/MLT41	1300M	500k	1.250G-1.350G	1.0m							TR		BPØ	
92	BTR632A	1300M	500k	1.250G-1.350G		6.0u	10u	1.3Ø		50m	500mØ	TR	CM		1.0k
93	MLT49	1300M	800k	1.250G-1.350G	1.0m							TR		BP	
94	BS128	1300M	2.5M*	1.250G-1.350G			20u*	1.25	2.0 *	20m*	400m	TR	BPPS	WA	
95♦	BS872	1302M	10k*	1.240G-1.365G			20u*	1.25	700nØ	1.0 *	0.3	TR	BPPS	WA	
96♦	BS870	1305M	2.5M*	1.240G-1.370G			20u*	1.25			0.4	TR	BPPS	WA	
97♦	BS854	1308M	15k	1.200G-1.415G	40m	70u	20u*	1.4	1.0mØ	10 Ø	0.4	TR	BPPS	WA	
98	6635	2550M	40k*	2.390G-2.710G			2.0u*		300m*	50m*	2.0	TR	CMMT	WA	
99	6635/MST18	2700M	50k	2.690G-2.710G	1.0m							TR		MT	
100	8099/MST38	2775M	100k	2.625G-2.925G	1.0m							TR		BP	
101	BTR136	2800M	50k	2.600G-3.000G	1.0m	1.0u	5.0u	1.3Ø	300m	25m	700mØ	TR	CM	CC	500
102	BTR583	2800M	50k	2.700G-2.900G	1.0m	1.0u	15u	1.3Ø	300m	50m	500mØ	TR	§	WA	500
103	1B27	2800M	100k	2.600G-3.000G	500u	500n	20u	1.3Ø	300m	25m	700mØ	TR	CM	CC	500
104	6637	2800M	100k*	2.600G-3.000G			5.0u*			25m*		TR	CMMT	CC	
105	MST16	2800M	100k	2.700G-2.900G	1.0m							TR	MT	CO	
106	MST45	2800M	1.2M	2.600G-3.000G	1.0m							TR		BP	
107♦	BS324	2800M	1.25M*	2.700G-2.900G			25u*	1.2	25nØ	500mØ	1.0	TR	BP	WA	
108	6117	2802M	750	2.659G-2.969G			15u*	1.65	300m	40m	500m	TR	BP	WA	
109	BS104	2805M	1.25M*	2.750G-2.860G			25u*	1.2	250m*	100m*	1.0	TR	BP	WA	
110	1B58A	2814M	750k	2.664G-2.964G	1.0m	1.0u	15u	1.3Ø	300m	40m	500mØ	TR	§	WA	500

SYMBOLS AND CODES EXPLAINED IN INTERPRETER

3. DUPLEXER TUBES

IN ORDER OF (1)TUBE TYPE (2)CENTER FREQUENCY (3)INCIDENT POWER (4)TYPE No.

LINE No.	[4] TYPE No.	[2] CENTER FREQ. (Hz)	[3] INCIDENT POWER (W)	FREQUENCY RANGE (Hz)	MAX. DUTY CYCLE	MAX. PULSE WIDTH (s)	RECOVERY TIME (s)	MAX. VSWR	LEAKAGE SPIKE (ergs)	LEAKAGE FLAT (W)	MAX. INSERTION LOSS (dB)	DESCRIPTION [1] TUBE TYPE	DESCRIPTION FEATURES	DESCRIPTION OUTPUT	DESCRIPTION LIFE (hr)
1	JAN1B58A	2814M	750k	2.664G-2.964G	1.0m	1.0u	15u*	1.15	300m*	40m*	500m	TR	BP	WA	500 †
2	1B58A/MST12	2814M	750k	2.664G-2.964G	800u							TR		BP	
3	6117/MST11	2814M	750k	2.664G-2.964G	800u							TR	BP	WA	
4	MST48	2814M	750k	2.664G-2.964G	1.0m							TR		BP	
5	BS58	2815M	500k*	2.670G-2.960G			15u*	1.3	300m*	100m*	800m	TR	BP	WA	
6	BS720	2835M	3.0 *	2.755G-2.915G			25u*					TR	BPPL		
7	BS718	2835M	5.0k*	2.755G-2.915G	1.25m		25u*	1.82	30 *	3.0 *	200m	TR	PLPS	WA	
8	BS904	2900M	10k*	2.700G-3.100G			10u*	1.25	40 *		700m	TR	BPPS	CO	
9♦	BS824	2900M	250k*	2.700G-3.100G			15u*	1.25	600nØ	900mØ	0.4	TR	BPPS	WA	
10♦	BS832	2900M	250k*	2.700G-3.100G			15u*	1.25	600nØ	900mØ	0.4	TR	BPPS	WA	
11	BS846	2900M	250k*	2.700G-3.100G			15u*	1.25	6.0 *	900m*	400m	TR	BPPS	WA	
12	BTR641	2900M	750k	2.825G-2.975G	1.0m	1.0u	15u	1.3Ø	300m	60m	300mØ	TR	§	WA	500
13♦	BS172	2950M	250k*	2.700G-3.200G	CW		15u*	1.25	600nØ	10 Ø	400m	TR	BP	WA	
14	BS848	2950M	250k*	2.700G-3.200G			15u*	1.25	6.0 *	900m*	400m	TR	BPPS	WA	
15	BS868	2950M	250k*	2.700G-3.200G			15u*	1.25	6.0	10 Ø*	400m	TR	BPPS	WA	
16♦	BS800	2970M	1.25M*	2.840G-3.100G			15u*	1.2	25nØ	750mØ	0.8	TR	BP	WA	
17	TH2612	2975M	30k	2.825G-3.125G	1.0m		15u					TR			
18	TV3304	2975M	750k†	2.825G-3.125G	1.0m		15u*				1.0	TR		WA	
19	TH2610	3000M	30k	2.900G-3.100G	1.0m		15u					TR			
20	JAN721B	3000M	100k*	2.700G-3.300G			7.0u*					TR	CM	CC	750 †
21	BLT119	3000M	750k	2.900G-3.100G	1.0m	1.0u	30u	1.3Ø	300m	65m	700mØ	TR	§	WA	500
22♦	BS390	3000M	1.25M*	2.925G-3.075G			25u*	1.33	25nØ	500mØ	1.0	TR	BP	WA	
23	BS204	3025M	1.25M*	3.000G-3.050G			25u*	1.2	250m*	100m*	1.0	TR	BP	WA	
24	5866/MST15	3050M	4.0k	2.900G-3.200G	1.0m							TR	BPCP		
25	T356	3050M	60k	2.900G-3.200G			1.5u*					TR	BP		
26	BS110	3050M	100k*	2.900G-3.200G			5.0u*	1.25	300m*	100m*	1.0	TR	BP	WA	
27	QF38	3050M	100k*	2.6G-3.5GØ,±30MØ			10u*	1.3	150m	60m*	800m	TR		WA	
28	QF38A	3050M	100k*	2.6-3.5G ±30MØ			10u*	1.3	200m	60m*	800m	TR	PS	WA	
29	BTR541	3050M	500k	2.900G-3.200G	2.0m	4.0u	15u	1.3Ø	300m	60m	300mØ	TR	§	WA	1.0k
30	5853	3050M	750k	2.900G-3.200G	1.0m	1.0u	15u	1.3Ø	300m	40m	700mØ	TR	§	WA	500
31	5853/MST23	3050M	750k	2.900G-3.200G	800u							TR		BP	
32	BES050	3050M	1.0M	2.900G-3.200G	1.0m	1.0u	15u	1.3Ø	300m	40m	700mØ	TR	$	WA	500
33	BS894	3050M	1.0M*	3.020G-3.080G*	2.0m		10u*	1.2	150m*	60m*	500m	TR	MTPS	WA	
34	BS994	3050M	1.0M*	3.020G-3.080G			10u*	1.2	100m*	150mØ*	800m	TR	MTPS	WA	
35	BS286	3080M	1.25M*	3.055G-3.105G			25u*	1.2	250m*	100m*	1.0	TR	BP	WA	
36	BL696	3090M	50k	3.090G	1.0m	1.0u	5.0u	1.3Ø	300m	100m	700mØ	TR	§	CO	1.0k
37	JAN1B27	3150M	50k	2.600G-3.700G*	500u	500n	20u*			40m*		TR	CMMT	CC	500 †
38	BS714	3275M	5.0k*	2.600G-3.950G	1.0m		30u*	1.12	10 *	3.6 *	200m	TR	PLPS	WA	
39	BS732	3275M	5.0k*	2.600G-3.950G			16u*	1.12	16 *	3.5 *	200m	TR	PLPS	WA	
40	BS902	3300M	100k*	2.600G-3.950GØ			5.0u*		50m	100mØ*	1.0	TR	MT	WA	
41	5927/MST21	3300M	750k	3.100G-3.500G	1.0m							TR		BP	
42	6602	3300M	750k*	3.070G-3.530G			15u*	1.9	300m*	50m*	700m	TR	BPCM$	WA	
43	MSC13	3300M	750k	3.100G-3.500G	53u							TR		BP	
44	MSC15	3300M	750k	3.100G-3.500G	60u							TR		BP	
45	5927	3300M	825k	3.100G-3.500G	1.0m	1.0u	15u	1.3Ø	300m	40m	700mØ	TR	§	WA	500
46	JAN5927	3300M	825k	3.100G-3.500G	1.0m	1.1u	15u*	1.9	300m*	50m*	700m	TR	BP	WA	500 †
47	BES046	3300M	1.0M	3.100G-3.500G	1.0m	1.0u	15u	1.3Ø	300m	50m	700mØ	TR	$	WA	500
48♦	BS430	3305M	1.25M	3.230G-3.380G			25u*	1.33	25nØ	500mØ	1.0	TR	BP	WA	
49	BS724	3350M	15 *	2.600G-4.100G	1.0m		70u*			300m*	4.3	TR	*	WA	
50	BS726	3350M	15 *	2.600G-4.100G	1.0m		70u*			300m*	4.3	TR	*	WA	
51	BS728	3350M	15 *	2.600G-4.100G	1.0m		70u*			300m*	4.3	TR	*	WA	
52	BS946	3535M	1.25M	3.450G-3.620G			25u*	1.33	250m*	100m*	1.0	TR	BP	WA	
53	1B55/MST18	3552M	750k	3.365G-3.740G	800u							TR		BP	
54	BS932	3630M	30k*	3.490G-3.770G	1.5m		10u*	1.2	250m*	150mØ	800m	TR	BP	WA	
55♦	BS426	3690M	1.25M*	3.600G-3.780G			25u*	1.33	25nØ	500mØ	1.0	TR	BP	WA	
56	MCT36	4455M	1.75k	4.445G-4.465G	1.0m							TR	BPCP		1.0k
57	MCT24	5300M	300k	5.250G-5.350G	1.0m							TR		BP	
58	6592/MCC10	5365M	100k	5.200G-5.530G	10m							TR		BP	
59	5925	5365M	1.0M*	5.200G-5.530G			9.0u*					TR	BP		
60	6592	5365M	1.0M*	5.200G-5.530G			9.0u*	1.9	300m*	70m*	800m	TR	BP$	WA	
61	MCT45	5400M	4.0k	5.350G-5.450G	1.0m							TR			2.0k
62	6624	5400M	85k	5.350G-5.450G	1.0m	1.0u	10u	1.3Ø	700m	50m	700mØ	TR	§	WA	500
63	6624/MCT18	5400M	85k	5.350G-5.450G	1.0m							TR		BP	
64	BTR547	5400M	85k	5.350G-5.450G	1.0m	1.0u	7.0u	1.3Ø	300m	60m	300mØ	TR	§	WA	500
65	MCT29	5400M	85k	5.350G-5.450G	1.0m							TR	BPCP		
66	5X10	5400M	100k	5.230G-5.675G	1.0m	1.0u	5.0u	1.4	100m	30m	900m	TR	BP	WA	
67	BLS032	5445M	300k	5.240G-5.650G	1.0m	1.0u	10u	1.3Ø	300m	80m	800mØ	TR	$	WA	500
68	BS856	5500M	250000	5.30G-5.70G			15u*	1.25	4.0 *	600m*	500m	TR	BPPS	WA	
69	BS966	5500M	500k*	5.250G-5.750G			10u*	1.25	300m*	80m*	800m	TR	BP	WA	
70	MCT15	5550M	1.0k	5.540G-5.560G	1.0m							TR		MT	
71	6639	5550M	20k*	5.450G-5.650G			1.5u*			60m*	1.2	TR	CMMT	WA	
72	6639/BL46	5550M	20k	5.450G-5.650G	3.0m	1.0u	1.5u	1.3Ø	1.2	60m	1.2 Ø	TR	§	WA	500
73	6639/MCT14	5550M	20k	5.450G-5.650G	1.0m							TR		MT	
74	MCT37	5550M	250k	5.450G-5.650G	1.0m							TR	BPCP		
75	BL973	5575M	10k	5.395G-5.755G	1.0m	1.0u	6.0u	1.3Ø	1.0	25m	1.0 Ø	TR	§	WA	500
76	MCC21	5575M	100k	5.395G-5.755G	400u							TR		BP	
77	8770/BTR546	5637M	250k	5.450G-5.825G	1.0m	1.0u	12u	1.3Ø	250m	40m	700mØ	TR	$	WA	1.0k
78	MCC17	5637M	250k	5.450G-5.825G	1.0m							TR		BP	
79	5865/TR361	5645M	300k*	5.390G-5.900G			10u*					TR	BP		
80	MCT19	5650M	4.0k	5.395G-5.905G	1.0m							TR		BP	
81	MCT28	5650M	4.0k	5.395G-5.905G	1.0m							TR	BP	CO	
82	6906	5650M	5.0k*	5.395G-5.905G			7.0u*	2.0	400m*	85m*	400m	TR	BPCM	WA	
83	6906/BL643	5650M	5.0k	5.400G-5.900G	1.0m	1.0u	7.0u	1.3Ø	400m	85m	400mØ	TR	§	WA	500
84	6906/MCT26	5650M	5.0k	5.395G-5.905G	1.0m							TR		BP	
85	BTR614	5650M	8.0k	5.395G-5.905G	2.5m	20u	8.0u	1.3Ø	200m	75m	200mØ	TR	§	WA	500
86	BLS526	5650M	10k	5.400G-5.900G	1.0m	1.0u	7.0u	1.3Ø	600m	70m	600mØ	TR	§	WA	500
87	TL379	5650M	70.0k	5395M-5905M	1.0m	1.0u	2.0u	1.5	250m	80m	0.8	TR	BP	WA	500 †
88	MCC16	5650M	100k	5.400G-5.900G	1.0m							TR		BP	
89	MCC20	5650M	250k	5.400G-5.900G	160u							TR		BP	
90	MCT27	5650M	250k	5.395G-5.905G	1.0m							TR	BPCP		
91	5865	5650M	300k	5.400G-5.900G	1.0m	1.0u	10u	1.3Ø	800m	70m	800mØ	TR	§	WA	500
92	JAN5865	5650M	300k*	5.395G-5.905G		1.0u	10u*	1.9	250m*	50m*	800m	TR	BP	WA	500 †
93	5865/MCT32	5650M	300k	5.395G-5.905G	1.0m							TR		BP	
94	6594	5650M	300k*	5.395G-5.905G			10u*	1.9	300m*	70m*	800m	TR	BP$	WA	
95	6594/MCC1	5650M	300k	5.395G-5.905G	1.0m							TR		BP	
96	BL350	5650M	300k	5.395G-5.905G	1.0m	1.0u	10u	1.3Ø	300m	70m	800mØ	TR	$	WA	500
97	BL366	5650M	300k	5.395G-5.905G	1.0m	1.0u	10u	1.3Ø	300m	70m	800mØ	TR	$	WA	500
98	MCC19	5650M	300k	5.395G-5.905G	133u							TR		BP	
99	MCT40	5650M	300k	5.395G-5.905G	1.0m							TR			
100	TH2602	5650M	300k†	5.400G-5.900G	1.0m		10u*				800m	TR		WA	
101	7849/BTR140	5650M	500k	5.395G-5.905G	4.4m	4.5u	8.0u	1.3Ø	700m	50m	700mØ	TR	§	WA	1.0k
102	7849/MCT23	5650M	500k	5.395G-5.905G	1.0m							TR	BPCP		
103	MCT21	5650M	500k	5.395G-5.905G	1.0m							TR		BP	
104	MCT46	5650M	500k	5.395G-5.905G	1.0m							TR			
105	MCT11	5650M	1.0M	5.395G-5.905G	1.0m							TR		BP	
106	6568/MCT17	5650M	3.0M	5.395G-5.905G	1.0m							TR		BP	
107	8574/MXT132	7700M	20k	5.800G-9.600G	1.0m							TR		BP	
108	MCT43	8090M	100k	5.380G-5.420G	1.0m							TR			
109	MXC24	8400M	1.0k	8.200G-8.600G	1.0m							TR		BP	
110	BLT072	8800M	125	8.700G-8.900G	40m	1.0u	500n	1.3Ø	250m	150m	900mØ	TR	§	WA	500

3. DUPLEXER TUBES

IN ORDER OF (1)TUBE TYPE (2)CENTER FREQUENCY (3)INCIDENT POWER (4)TYPE No.

LINE No.	[4] TYPE No.	[2] CENTER FREQ. (Hz)	[3] INCIDENT POWER (W)	FREQUENCY RANGE (Hz)	MAX. DUTY CYCLE	MAX. PULSE WIDTH (s)	RECOVERY TIME (s)	MAX. VSWR	LEAKAGE SPIKE (ergs)	LEAKAGE FLAT (W)	MAX. INSERTION LOSS (dB)	DESCRIPTION [1] TUBE TYPE	DESCRIPTION FEATURES	DESCRIPTION OUTPUT	LIFE (hr)
1	MXT37	8800M	20k	8.700G-8.900G	10u							TR		BP	
2	BS158	8800M	200k*	8.500G-9.100G			3.0u*	1.2	200m*	100m*	800m	TR	BP	WA	
3	BS440	8800M	200k*	8.500G-9.100G			2.0u*	1.2	200m*	100m*	800m	TR	BP	WA	
4	BS202	8900M	200k*	8.500G-9.300G			3.0u*	1.3	300m*	100m*	800m	TR	BP	WA	
5	6593/MXC11	8989M	250k	8.490G-9.578G	1.0m							TR		BP	
6	MXC44#2	8989M	250k	8.490G-9.578G	80u							TR		BP	
7	WF471	9.0G	50	8.5-9.5G			0.5u	1.4			1.0	TR	BP	WA	
8	WF461	9.0G	200	8.5-9.5G			1.5u	1.3	2.0nØ		1.0	TR	BP	WA	
9	1B63A	9000M	200k	8.490G-9.575G			4.0u	1.9	100m	30m		TR	BP	WA	
10	BS860	9025M	100k*	8.825G-9.225G	1.0m		1.4u*	1.3	150m*	100m*	800m	TR	BPPS	WA	
11	JAN5863	9034M	1.0k*	8.490G-9.578G			8.0u*	1.9	150m*	30m*	700m	TR	BP	WA	500 †
12	6644	9034M	100k*	8.490G-9.578G			1.5u*	1.9	200m*	60m*	700m	TR	BPCM	WA	
13	6645	9034M	100k*	8.490G-9.578G			1.5u*	1.9	200m*	60m*	700m	TR	BPCM	WA	
14	6645/MXT61	9034M	100k	8.490G-9.578G	1.0m							TR		BP	
15	6646/MXT70	9034M	100k	8.490G-9.578G	1.0m							TR		BP	
16	JAN1B63A	9034M	200k*	8.490G-9.578G	1.0m	1.0u	10u*	1.9	200m*	40m*	700m	TR	BP	WA	500 †
17	1B63A/MXT15	9034M	200k	8.490G-9.578G	1.0m							TR		BP	
18	BS914	9034M	200k*	8.490G-9.578G			4.0u*	1.4	200m*	50m*	700m	TR	BP	WA	
19	6334	9034M	250k*	8.490G-9.578G		500n	10u*	1.4	100m*	20m*	1.2	TR	BP	WA	
20	6597	9034M	250k*	8.490G-9.578G			10u	1.9	300m*	40m*	700m	TR	BPCM$	WA	
21	6615	9034M	250k*	8.490G-9.578G			10u*	1.9	300m*	40m*	700m	TR	BP	WA	
22	6616	9034M	250k*	8.490G-9.578G			10u*	1.9	300m*	40m*	700m	TR	BP	WA	
23	6593	9034M	1.0M*	8.490G-9.578G			8.0u*	1.9	300m*	30m*	700m	TR	BP$	WA	
24	1B24A	9045M		8.490G-9.600G			4.0u				1.5	TR	CM	WA	
25	JAN1B24A	9045M	30k*	8.490G-9.600G*			4.0u*			30m*	2.0	TR	MT	WA	500 †
26	JAN6378	9045M	30k*	8.490G-9.600G*	1.0m	1.0u	4.0u*			30m*	1.5	TR	MT	WA	500 †
27	6378/BL62	9045M	30k	8.490G-9.600G	1.0m	1.0u	4.0u	1.3Ø		30m	1.5 Ø	TR	§	WA	500
28	BTR570A	9045M	30k	8.490G-9.600G	1.0m	1.0u	4.0u	1.3Ø		30m	2.0 Ø	TR	§	WA	500
29	1B24A/MXT14	9045M	100k	8.490G-9.600G	1.0m							TR		MT	
30	6378/MXT20	9045M	100k	8.490G-9.600G	1.0m							TR		MT	
31	6595	9045M	100k*	8.490G-9.600G			4.0u*			30m*	1.5	TR	MT$	WA	
32	6644/BL95	9045M	100k	8.490G-9.600G	1.0m	1.0u	1.5u	1.3Ø	200m	60m	700mØ	TR	§	WA	500
33	6645/BL95H	9045M	100k	8.490G-9.600G	1.0m	1.0u	1.5u	1.3Ø	200m	60m	700mØ	TR	§	WA	500
34	1B63B	9045M	200k	8.490G-9.600G	1.0m	1.0u	10u	1.3Ø	200m	40m	700mØ	TR	§	WA	1.0k
35	TV19111	9050M		8.500G-9.600G							150m	TR	$	WA	
36	MXT102	9050M	2.0k	8.500G-9.600G	1.0m							TR	BPCP		
37	BL965	9050M	10k	8.500G-9.600G	1.0m	1.0u	7.0u	1.3Ø	250m	75m	500mØ	TR	§	WA	500
38	MXT46	9050M	10k	8.500G-9.600G	1.0m							TR	BPCP		
39	TV3340	9050M	10k*	8.500G-9.600G	1.0m		5.0u*				700m	TR	BP	WA	
40	TV3340A	9050M	10k*	8.500G-9.600G	1.0m		5.0u*				700m	TR		WA	
41	BLT114A	9050M	20k	8.500G-9.600G	1.0m	1.0u	1.0u	1.3Ø	300m	75m	500mØ	TR	§	WA	1.5k
42	T373	9050M	30k	8.500G-9.600G	1.0m	400n	1.0u	1.4	200m	60m	400m	TR	BP	WA	1.0k
43	BLT028	9050M	40k	8.500G-9.600G	1.0m	500n	5.0u	1.3Ø	200m	40m	500mØ	TR	§	WA	500
44	BS314	9050M	250k	8.500G-9.600G			2.0u*	1.4	200m*		1.0	TR			
45	BTR171	9050M	250k	8.500G-9.600G	1.0m	300n	3.0u	1.3Ø	150m	15m	1.1 Ø	TR	$	WA	2.0k
46	BTR174	9050M	250k	8.500G-9.600G	1.0m	1.0u	750n	1.3Ø	50m	15m	1.1 Ø	TR	$	WA	750
47	BTR666	9050M	250k	8.500G-9.600G	1.0m	1.0u	1.5u	1.3Ø	100m	15m	1.0 Ø	TR	$	WA	500
48	F3012	9050M	250k*	8.500G-9.600G	1.0m		7.0u*				1.1	TR		WA	
49	BL970	9050M	300k	8.500G-9.600G	1.0m	1.0u	7.0u	1.3Ø	150m	10m	1.0 Ø	TR	$	WA	500
50	6564	9050M	500k*	8.500G-9.600G			7.0u*	1.2	100m*	20m*	1.0	TR	BP	WA	
51	TH2619	9050M	20M*	8.600G-9.500G	1.0m		3.0u*				200m	TR	PS	WA	
52	TH2608	9080M	10k*	8.980G-9.180G	1.0m		3.0u*				1.0	TR	CP	WA	
53	TH2607	9080M	40k*	8.980G-9.180G	1.0m		3.0u*				800m	TR		WA	
54	BS842	9100M	4.0k†	8.400G-9.800G	CW		4.0u*	1.5	200m	250mØ	1.0	TR	BPPS	WA	
55	TH2605	9150M	20k*	9.000G-9.300G	1.0m		3.0u*				500m	TR	CP	WA	
56	BS462	9150M	75k*	9.000G-9.300G*			6.0u*	1.4	80m*	30m*	1.0	TR	MT	WA	
57	BS228	9150M	250k*	8.950G-9.350G			2.0u*	1.4	6.0 *	1.0 *	500m	TR	BPPS	WA	
58	QF451M	9180M	1.0k†	9.000G-9.300G*			1.0u*	1.4	80m*		800m	TR		WA	
59	6795A/MXT12	9200M	40k	9.000G-9.400G	1.0m							TR	BPCP		
60	NF42	9250M		7.000G-11.500G			50u*				2.7	TR		WA	
61	NF43	9250M		7.000G-11.500G			50u*				2.7	TR		WA	
62	BS956	9250M	100 *	7.000G-11.500G	1.0m		70u*			300m*	500m	TR	BP	WA	
63	BS928	9250M	200k*	8.500G-10.000G			2.0u*	1.4	6.0 *	1.0 *	800m	TR	BPPS	WA	
64	BL325	9270M	1.0k	8.940G-9.600G	1.0m	1.0u		1.3Ø			700mØ	TR	$	WA	50kØ
65	6615/BL312	9270M	250k	8.940G-9.600G	1.0m	1.0u	10u	1.3Ø	300m	40m	700mØ	TR	$	WA	500
66	TV3340B	9300M	10k*	9.000G-9.600G	1.0m		5.0u*				700m	TR		WA	
67	BS156	9300M	200k*	9.000G-9.600G			3.0u*	1.2	200m*	100m*	800m	TR	BP	WA	
68	TV3301	9300M	250k*	9.000G-9.600G	1.0m		3.0u*				1.1	TR		WA	
69	BLT088	9375M	2.0k	9.335G-9.415G	1.0m	2.0u	10u	1.3Ø	250m	50m	700mØ	TR	§	WA	1.0k
70	BTR639	9375M	2.0k	9.335G-9.415G	1.0m	2.0u	10u	1.3Ø	250m	50m	700mØ	TR	§	WA	750
71	6378	9375M	10k†	8.49G-9.60G			4.0u*			30m		TR	BP	WA	
72	6795	9375M	20k	9.325G-9.425G	1.0m	1.0u	10u	1.3Ø	250m	40m	700mØ	TR	§	WA	500
73	BTR545A	9375M	35k	9.325G-9.425G	1.0m	1.0u	2.0u	1.3Ø	250m	40m	500mØ	TR	§	WA	500
74	BLT101	9375M	40k	9.325G-9.425G	1.0m	1.0u	10u	1.3Ø	250m	60m	700mØ	TR	§	WA	500
75	MXC19	9375M	40k	9.300G-9.450G	1.0m							TR		BP	
76	6565	9375M	100k*	8.490G-9.600G			4.0u*			30m*	1.5	TR	MT	WA	
77	BL367A	9375M	100k	9.250G-9.500G	1.0m	1.0u	1.5u	1.3Ø	300m	40m	700mØ	TR	$	WA	500
78	MXC33	9375M	100k	9.250G-9.500G	1.0m							TR		BP	
79	MXT51	9375M	100k	9.325G-9.425G	1.0m							TR		BP	
80	MXT78	9375M	100k	9.325G-9.425G	1.0m							TR		WA	
81	MXT133	9375M	100k	9.325G-9.425G	1.0m							TR			
82	BL397A	9375M	250k	9.250G-9.500G	1.0m	1.0u	1.5u	1.3Ø	300m	40m	700mØ	TR	$	WA	500
83	MXC20	9375M	250k	9.250G-9.500G	1.0m							TR		BP	
84	T340	9380M	10k*	9.250G-9.500G			1.5u*					TR	BP$		
85	T342	9380M	10k*	9.250G-9.500G			1.5u*					TR	BP$		
86	T341	9380M	250k*	9.250G-9.500G			3.0u*					TR	BP$		
87	QF401	9.40G	100	9.25-9.55G			4.0u	1.4	3.0nØ		1.3	TR	CM	WA	
88	BS206	9400M	1.0k*	9.300G-9.500G	CW		3.0u	1.4	100m	120mØ	1.0	TR	PS	WA	
89	BS466	9400M	75k*	9.200G-9.600G*			6.0u*	1.4	80m*	30m*	1.0	TR	MT	WA	
90	9X64	9400M	100k	9.300G-9.500G			3.0u					TR		BP	
91	BS450	9400M	100k*	9.300G-9.500G			3.0u*	1.3	150m*	100m*	800m	TR	BP	WA	
92	BS192	9400M	200k	9.300G-9.500G			3.0u*	1.3			700m	TR			
93	BS196	9400M	200k*	9.300G-9.500G			4.0u*	1.4	200m*	50m*	700m	TR	BP	WA	
94	QF451P	9.41G	100	9.31-9.51G			1.4u	1.4	15nØ		0.8	TR		WA	
95	QF451	9410M	1.0k†	9.250G-9.550G*			1.0u*	1.4	80m*		800m	TR		WA	
96	BS810	9410M	75k*	9.245G-9.575G*			1.5u	1.4	80m*	30m*	800m	TR	MT	WA	
97	BS452	9410M	100k*	9.310G-9.510G	1.0m		1.4u*	1.3	150m*	85m*	800m	TR	BP	WA	
98	T357	9410M	100k	9.310G-9.510G	1.0m		1.4u*	1.3	150m	85m	800m	TR	BP	WA	
99	BS52	9410M	200k*	9.320G-9.500G			3.0u*	1.2	250m*	100m*	700m	TR	BP	WA	
100	BES051	9450M	1.0k	9.200G-9.700G	1.0m	1.0u		1.3Ø			100mØ	TR	$	WA	50kØ
101	BTR629A	9450M	5.0k	9.400G-9.500G	1.0m	1.0u	1.5u	1.3Ø	200m	40m	600mØ	TR	§	WA	500
102	BS822	9547M	75k*	9.405G-9.690G*			1.5u*	1.4	80m*	30m*	800m	TR	MT	WA	
103	QF451N	9650M	1.0k†	9.500G-9.800G*			1.0u*	1.4	80m*		800m	TR		WA	
104	WF424	9750M	100k	9.500G-10.000G	1.0m	5.0u	1.0u	1.2	300m	300m	350m	TR	BP§	WA	1.0k†
105	BL364	9800M	1.0k	9.600G-10.000G	1.0m	1.0u		1.3Ø			700mØ	TR	$	WA	50kØ
106	TV19114	9900M		9.300G-10.500G							150m	TR	$	WA	
107	MKT34	15500M	10k	15.300G-15.700G	1.0m							TR		BP	
108	MKT35	16000M	10k	15.900G-16.100G	1.0m							TR	BPCP		
109	6649	16000M	100k*	15.000G-17.000G			10u*	1.9	300m*		700m	TR	BP	WA	
110	BES043	16400M	1.0k	15.800G-17.000G	1.0m	3.0u		1.3Ø			20 Ø	TR	$	WA	

SYMBOLS AND CODES EXPLAINED IN INTERPRETER

3. DUPLEXER TUBES

IN ORDER OF (1)TUBE TYPE (2)CENTER FREQUENCY (3)INCIDENT POWER (4)TYPE No.

LINE No.	4 TYPE No.	2 CENTER FREQ. (Hz)	3 INCIDENT POWER (W)	FREQUENCY RANGE (Hz)	MAX. DUTY CYCLE	MAX. PULSE WIDTH (s)	RECO-VERY TIME (s)	MAX. VSWR	LEAKAGE SPIKE (ergs)	LEAKAGE FLAT (W)	MAX. INSER-TION LOSS (dB)	DESCRIPTION 1 TUBE TYPE	FEAT-URES	OUT PUT	LIFE (hr)
1	BTR537	16400M	10k	15.800G-17.000G	1.0m	1.0u	1.0u	1.3Ø	250m	50m	600mØ	TR	$	WA	1.6k
2	BTR554	16400M	10k	15.800G-17.000G	1.0m	1.0u	700n	1.3Ø	150m	65m	500mØ	TR	$	WA	2.0k
3	JANDOD005	16400M	10k*	15.800G-17.000G	1.0m	500n	1.0u*	1.4	250m*	50m*	600m	TR	BP$	WA	1.6k†
4	BLS530	16467M	12.5k	16.410G-16.525G	1.0m	1.0u	1.8u	1.3Ø	200m	75m	600mØ	TR	$	WA	1.0k
5	TV19112C	16500M		16.000G-17.000G							200m	TR	$	WA	
6	BTR608	16500M	5.0k	16.000G-17.000G	8.0m	2.0u	1.0u	1.3Ø	150m	50m	600mØ	TR	§	WA	2.0k
7	BTR630	16500M	5.0k	16.250G-16.750G	1.0m	2.0u	800n	1.3Ø	120m	75m	600mØ	TR	§	WA	2.0k
8	MKT27	16500M	5.0k	16.000G-17.000G	1.0m							TR	BPCP		
9	BL967A	16500M	10k	16.000G-17.000G	1.5m	500n	8.0u	1.3Ø	300m	75m	800mØ	TR	§	WA	500
10	BTR574	16500M	10k	15.900G-17.100G	1.0m	1.0u	700n	1.3Ø	200m	85m	700mØ	TR	§	WA	2.0k
11	MKT25	16500M	10k	16.000G-17.000G	1.0m							TR	BPCP		
12	MKT32	16500M	10k	15.000G-17.000G	1.0m							TR		BP	
13	MKT37	16500M	10k	16.000G-17.000G	1.0m							TR	BPCP		
14	T364	16500M	10k*	16.000G-17.000G			1.0u*					TR	BP		
15	TV3308	16500M	10k*	16.000G-17.000G	1.0m		8.0u*				800m	TR	CP	WA	
16	8599/MKT39	16500M	50k	15.500G-17.500G	1.0m							TR	BPCP		
17	BTR540	16850M	10k	16.600G-17.100G	1.5m	300n	1.0u	1.3Ø	200m	50m	600mØ	TR	§	WA	500
18	MKT42	23500M	100k	15.000G-17.000G	1.0m							TR		BP	
19	6650	24105M	24k*	23.630G-24.580G			4.0u*			25m*	1.7	TR	CMMT	WA	
20	BTR576	32100M	10k	31.100G-33.100G	1.0m	240n	1.1u	1.3Ø	200m	30m	700mØ	TR	§	WA	1.0k
21	BS80	34500M	75k	33.000G-36.000G			6.0u	1.3	200m		1.0	TR		WA	
22	WF60	34850M	20k*	34.100G-35.600G			2.0u*	1.6	40m*	20m*	1.2	TR	BP	WA	
23	QF50	34875M	50k*	34.060G-35.690G			2.0u*	2.0	30m*	25m*	2.0	TR		WA	
24	BTR640	34900M	10k	34.550G-35.250G	1.0m	250n	1.1u	1.3Ø	150m	30m	700mØ	TR	§	WA	1.0k
25	BS76	34900M	50k*	34.550G-35.250G			300n	1.3	20m*	100mØ*	1.0	TR	BP	WA	
26	BES063	35000M	1.0k	34.000G-36.000G	1.0m	1.0u		1.3Ø				TR	$	WA	
27	BES044	70000M	1.0k	65.000G-75.000G	1.0m	500n		1.3Ø				TR	$		
28	7821	441M	2.0M*	432M-450M	1.8u	6.0u	300u*				1.2	TRDL	BPCM	WA	
29	6634/MLT25	1300M	5.0M	1.250G-1.350G	1.0m							TRDL	BP		
30	6602/MSC10	1885M	750k	3.100G-3.500G	1.0m							TRDL	BP		
31	6636	2800M	750k*	2.700G-2.900G			15u	1.2	100m*	20m*	900m	TRDL	BPCM	WA	
32	6636/BL87	2800M	750k	2.700G-2.900G	1.0m	1.0u	15u	1.3Ø	100m	20m	600mØ	TRDL	§	WA	500
33	6636/MST24	2800M	750k	2.700G-2.900G	1.0m							TRDL	BP		
34	8578/MST60	2800M	1.0M	2.700G-2.900G	1.0m							TRDL		WA	
35	BLT033	2800M	1.0M	2.700G-2.900G	1.0m	1.0u	20u	1.3Ø	100m	20m	900mØ	TRDL	§	WA	500
36	MST22	2800M	1.0M	2.700G-2.900G	750u							TRDL	BP		
37	6637/MST29	3300M	50k	3.135G-3.465G	1.0m							TRDL	BP		
38	6638/MST30	3300M	50k	3.135G-3.465G	1.0m							TRDL			
39	MSC11	3550M	750k	3.400G-3.700G	1.0m							TRDL	BP		
40	6641/BL86	5270M	1.0M	5.200G-5.340G	1.0m	1.0u	12u	1.3Ø	100m	10	800mØ	TRDL	§	WA	500
41	6641	5280M	1.0M*	5.150G-5.410G			12u*	1.3	100m*	10m*	1.0	TRDL	BPCM	WA	
42	BL644	5280M	1.0M	5.250G-5.310G	1.0m	1.0u	12u	1.3Ø	100m	10m	600mØ	TRDL	§	WA	500
43	MCT20	5280M	1.0M	5.220G-5.340G	1.0m							TRDL	BP		
44	MCT44	5480M	10k	5.250G-5.710G	1.0m							TRDL	BP		
45	BTR123	5480M	500k	5.250G-5.710G	1.0m	5.0u	8.0u	1.3Ø	250m	50m	500mØ	TRDL	§	WA	1.0k
46	MCT41	5480M	1.0M	5.250G-5.710G	1.0m							TRDL	BP		
47	6640	5650M	700k*	5.400G-5.900G			12u*	1.3	100m*	10m*	1.2	TRDL	BPCM	WA	
48	6640/BL60	5650M	700k	5.400G-5.900G	1.2m	1.0u	12u	1.3Ø	100m	10m	800mØ	TRDL	§	WA	500
49	6640/MCT16	5650M	700k	5.395G-5.905G	1.0m							TRDL	BP		
50	7447/BL325A	5650M	700k	5.400G-5.900G	1.2m	1.0u	5.0u	1.3Ø	150m	25m	800mØ	TRDL	$	WA	500
51	7447/MCT30	5650M	700000	5.400G-5.900G	1.0m							TRDL	BP		
52	BL336	5650M	700k	5.400G-5.900G	1.2m	1.0u	12u	1.3Ø	100m	10m	800mØ	TRDL	$	WA	500
53	BL362	5650M	700k	5.400G-5.900G	1.0m	1.0u	12u	1.3Ø	100m	10m	800mØ	TRDL	$	WA	500
54	MCC15	5650M	700000	5.400G-5.900G	1.0m							TRDL	BP		
55	TH2631	5.65G	700k	5.4-5.9G	.001		12u		0.1	10m	1.0	TRDL	BP	WA	
56	BES048	5650M	1.0M	5.400G-5.900G	1.0m	1.0u	12u	1.3Ø	100m	10m	800mØ	TRDL	$	WA	500
57	BTR162	5650M	1.0M	5.400G-5.900G	2.0m	2.0u	7.0u	1.3Ø	100m	10m	1.0 Ø	TRDL	§	WA	500
58	MCC12	5650M	1.0M	5.400G-5.900G	1.0m							TRDL	BP		
59	6905	5650M	3.0M*	5.400G-5.900G			10u*	1.3	100m*	10m*	1.2	TRDL	BPCM	WA	
60	6905/BL613	5650M	3.0M	5.395G-5.905G	1.5m	3.0u	7.0u	1.3Ø	100m	10m	1.0 Ø	TRDL	§	WA	500
61	6905/MCT10	5650M	3.0M	5.395G-5.905G	1.0m							TRDL	BP		
62	MCT38	5925M	1.0M	5.875G-5.975G	1.0m							TRDL	BPCP		
63	OMX1001	9000M	600k	8.500G-9.400G	1.0m	2.0u	3.0	1.2	100m	20m	800m	TRDL	Ø		2.0k
64	6599	9034M		8.490G-9.578G			7.0u*	1.4	100m*	20m*	1.2	TRDL	BPCM$	WA	
65	6648	9034M		8.490G-9.578G			10u*	1.9	300m*	40m*	700m	TRDL	BPCM	WA	
66	6646	9034M	100k*	8.490G-9.578G			1.5u*	1.4	100m*	20m*	1.2	TRDL	BPCM	WA	
67	6647	9034M	100k*	8.490G-9.578G			1.5u*	1.4	100m*	20m*	1.2	TRDL	BPCM	WA	
68	6805	9034M	200k*	8.490G-9.578G			10u	1.9	300m*	40m*	700m	TRDL	BP	WA	
69	MXT109	9034M	200k	8.490G-9.578G	1.0m							TRDL	BP		
70	6596	9034M	250k*	8.490G-9.578G			7.0u*	1.4	100m*	20m	1.2	TRDL	BP$	WA	
71	6601	9034M	250k*	8.490G-9.578G			7.0u*	1.4	100m*	20m*	1.1	TRDL	BPCM$	WA	
72	6604	9034M	250k*	8.490G-9.578G			7.0u*	1.4	100m*	20m*	1.2	TRDL	BPCM$	WA	
73	6642	9034M	250k*	8.490G-9.578G			7.0u*	1.4	100m*	20m*	1.1	TRDL	BPCM	WA	
74	6904	9034M	250000 *	8.490G-9.578G			7.0u*	1.4	100m*	20m*	1.2	TRDL	BPCM$	WA	
75	MXC25	9034M	250k	8.490G-9.578G	1.0m							TRDL	BP		
76	MXT27	9034M	250k	8.490G-9.578G	1.0m							TRDL	BP		
77	T351	9034M	250k*	8.490G-9.578G			5.0u*					TRDL	BP		
78	6646/BL604	9045M	100k	8.490G-9.600G	1.0m	1.0u	1.5u	1.3Ø	100m	20m	1.0 Ø	TRDL	§	WA	500
79	6334/BL27	9045M	200k	8.490G-9.600G	1.0m	1.0u	7.0u	1.3Ø	150m	15m	1.1 Ø	TRDL	§	WA	500
80	BTR209	9045M	250k	8.490G-9.600G	1.0m	1.0u	3.0u	1.3Ø	200m	60m	1.0 Ø	TRDL	§	WA	1.0k
81	JAN7381	9050M	200k*	8.490G-9.610G			3.0u*	1.2	300m*	80m*	800m$	TRDL	BP	WA	
82	7381/BL979	9050M	200k	8.490G-9.610G	1.0m	1.0u	3.0u	1.3Ø	100m	10m	1.0 Ø	TRDL	§	WA	500
83	6564/BL71	9050M	250k	8.500G-9.600G	1.0m	1.0u	7.0u	1.3Ø	100m	20m	1.0 Ø	TRDL	§	WA	500
84♦	BS316	9050M	250k*	8.500G-9.600G			3.0u*	1.3	10nØ	500mØ	1.0	TRDL	BP	WA	
85	BS918	9050M	250k*	8.500G-9.600G			3.0u*	1.3	100m*	15m*	1.0	TRDL	BP	WA	
86	T353	9050M	250k*	8.500G-9.600G			2.0u*					TRDL	BP		
87	MXC44#1	9050M	500k	8.500G-9.600G	80u							TRDL	BP		
88	TH2618	9100M	250k*	8.600G-9.600G	1.0m		3.0u*				1.1	TRDL			
89	6596/BL317	9270M	250k	8.940G-9.600G	1.0m	1.0u	7.0u	1.3Ø	100m	20m	1.0 Ø	TRDL	$	WA	500
90	6613/BL324	9270M	250k	8.940G-9.600G	1.0m	1.0u	7.0u	1.3Ø	100m	20m	1.0 Ø	TRDL	$	WA	500
91	BTR198A	9270M	250k	8.940G-9.600G	1.0m	1.0u	3.0u	1.3Ø	100m	10m	900mØ	TRDL	$	WA	2.0k
92	T352	9350M	250k*	9.200G-9.500G			7.0u*					TRDL	BP$		
93	MXT125	9375M	20k	9.325G-9.425G	1.0m							TRDL	BPCP		
94	MXC32	9375M	250k	9.250G-9.500G	1.0m							TRDL	BP		
95	BS320	9400M	250k*	9.200G-9.600G			3.0u*	1.3	100m*	500mØ*	1.0	TRDL	BP	WA	
96	BS200	9590M	200k*	9.180G-10.000G			3.0u*	1.3	300m*	100m*	800m	TRDL	BP	WA	
97	MXC35	9900M	1.0k	9.800G-10.000G	1.0m							TRDL	BP		
98	MKT33	15550M	100k	15.300G-15.800G	1.0m							TRDL	BP		
99	JAN6560	16000M	100k*	15.000G-17.000G	1.5m	500n	10u*	1.4	100m*	20m*	800m$	TRDL	BP	WA	500 †
100	BES042	16400M	1.0k	15.800G-17.000G	1.0m	3.0u		1.3Ø			20 Ø	TRDL	$	WA	
101	BTR141	16400M	60k	15.800G-17.000G	1.0m	400n	1.0u	1.3Ø	100m	20m	600mØ	TRDL	$	WA	1.0k
102	JANDOD004	16400M	60k*	15.800G-17.000G		1.1u	1.0u*	1.4	500m*	100m*	600m	TRDL	BP$	WA	1.0k†
103	BLS531	16467M	12.5k	16.410G-16.525G	10m	1.0u	1.8u	1.3Ø	100m	20m	600mØ	TRDL	$	WA	500
104	MKT36	16500M	4.0k	16.000G-17.000G	1.0m							TRDL	BPCP		
105	BL934A	16500M	100k	16.000G-17.000G	1.5m	500n	10u	1.3Ø	100m	20m	1.2 Ø	TRDL	§	WA	500
106	BTR156	16500M	100k	16.000G-17.000G	1.0m	2.0u	800n	1.3Ø	100m	20m	800mØ	TRDL	$	WA	1.0k
107	T365	16500M	100k*	16.000G-17.000G			1.5u*					TRDL	BP		
108	TV3309	16500M	100k*	16.000G-17.000G	1.0m		10u*				1.2	TRDL		WA	
109	BTR202	16500M	125k	16.250G-16.750G	1.0m	2.0u	800n	1.3Ø	100m	20m	800mØ	TRDL	§	WA	1.0k
110	BTR147	16850M	60k	16.600G-17.100G	1.2m	300n	2.0u	1.3Ø	200m	50m	600mØ	TRDL	§	WA	500

SYMBOLS AND CODES EXPLAINED IN INTERPRETER

3. DUPLEXER TUBES

IN ORDER OF (1)TUBE TYPE (2)CENTER FREQUENCY (3)INCIDENT POWER (4)TYPE No.

LINE No.	[4] TYPE No.	[2] CENTER FREQ. (Hz)	[3] INCIDENT POWER (W)	FREQUENCY RANGE (Hz)	MAX. DUTY CYCLE	MAX. PULSE WIDTH (s)	RECO-VERY TIME (s)	MAX. VSWR	LEAKAGE SPIKE (ergs)	LEAKAGE FLAT (W)	MAX. INSER-TION LOSS (dB)	[1] DESCRIPTION TUBE TYPE	FEAT-URES	OUT PUT	LIFE (hr)
1	BLT036	24000M	40k	23.500G-24.500G	100u	20n	1.5u	1.3Ø	100m	20m	1.0 Ø	TRDL	§	WA	500
2	6685	34875M	20k*	33.500G-36.250G			5.0u*	1.3	100m*	20m*	1.4	TRDL	BPCM	WA	
3	BS217	100M	100	9325M-9425M			3.0u	1.4	5.0nØ	100m	.80	TRL		WA	
4	BS219	100M	100k	9.600G-9.700G			3.0u	1.4	5.0mØ	100m	.80	TRL		WA	
5	BS277	500M	200k	900M-9500M			3.0u	1.4	5.0nØ	120m	.80	TRL	B	WA	
6	101LLS	600M		400-800M				1.6			0.4	TRL		WC	
7	103LLS	1300M		1200-1400M				1.4			0.5	TRL		WC	
8	106LLS	1300M		1200-1400M				1.4			0.3	TRL		WC	
9	VLL1000	1305M	1000	1.250G-1.360G	1.0m	4.0u	20u	1.3Ø	100m	20m	400mØ	TRL	SSPS	CO	2.0k
10	109LLS	1810M		1792-1828M				1.4			0.3	TRL		WC	
11	110LLS	2114M		2099-2130M				1.4			0.3	TRL		WC	
12	VDS1019	2750M	1.0M	2.600G-2.900G	590u	600n	5.0u	1.3Ø	150m	40m	500mØ	TRL	PS	WA	2.0k
13	TH2626	2.8G	100k	2.7-2.9G	600u		8.0u		1.0	30m	500m	TRL	PS	WA	
14	TL382	2800M	100.0k	2700M-2900M	1.0m	2.0u	2.0u	1.5	0.2	20m	0.6	TRL	BPPS	WA	2.0k†
15	VDS1007	2800M	100k	2.700G-2.900G	375u	1.0u	3.0u	1.3Ø	100m	50m	500mØ	TRL	PS	WA	2.0k
16	VDS1023	2800M	250k	2.700G-2.900G	1.0m	2.0u	5.0u	1.4	50m	50m	500m	TRL		WA	2.0k
17	VDS1032	2800M	250k	2.700G-2.900G	1.0m	2.0u	2.5u	1.4	50m	50m	500m	TRL		WA	5.0k
18	VDS1011	2800M	500k	2.700G-2.900G	640u	4.0u	15u	1.3Ø	50m	20m	800mØ	TRL	PS	WA	2.0k
19	VDS1006	2800M	750k	2.780G-2.820G	800u	500n	20u	1.3Ø	50m	40m	500mØ	TRL	PS	WA	2.0k
20	BS102	2805M	1.25M*	2.750G-2.860G			15u	1.2	60m*	500mØ*	800m	TRL	BP	WA	
21	VDS1022	2814M	10k	2.664G-2.964G	1.0m	1.0u	5.0u	1.3Ø	100m	30m	700mØ	TRL	PS	WA	2.0k
22	VDS1014	2816M	750k	2.664G-2.969G	1.0m	1.0u	5.0u	1.3Ø	150m	40m	500mØ	TRL	PS	WA	2.0k
23	10SL101	2900M		2700-3100M				1.3			0.3	TRL		WC	
24	109SLS	2900M		2700-3100M				1.4			0.6	TRL		WC	
25	VDS1015	3000M	15k	2.900G-3.100G	3.3m	20u	12u	1.3Ø	100m	50m	500mØ	TRL	PS	WA	2.0k
26	VDS1028	3000M	70k	2.900G-3.100G	1.0m	2.0u	1.5u	1.4	50m	50m	500m	TRL		WA	4.0k
27	TH2615A	3000M	30M*	2.900G-3.100G	1.5m		15u*				1.0	TRL	PS	WA	
28	BS168	3050M	50 *	3.020G-3.080G	CW		6.0u	1.2	40m	50mØ	400m	TRL	BP	WA	
29	TH2614	3050M	30k	2.900G-3.200G			15u				1.0	TRL			
30	TL378	3050M	60.0k	3000M-3100M	1.0m	1.0u	2.0u	1.4	0.2	20m	0.6	TRL	BPPS	WA	2.0k†
31	VDS1013	3050M	750k	2.900G-3.200G	1.0m	1.0u	15u	1.3Ø	100m	20m	800mØ	TRL	PS	WA	2.0k
32	BS194	3050M	1.0M	3.030G-3.070G			10u*	1.3	20m*	20m*	800m	TRL	PS		
33	VDS1020	3110M	15k	2.960G-3.260G	20m	110u	20u	1.3Ø	200m	15m	700mØ	TRL	PS	WA	2.0k
34	VDS1021	3250M	75k	3.100G-3.400G	13m	6.5u	16u	1.3Ø	100m	50m	600mØ	TRL	PS	WA	2.0k
35	VDS1018	3300M	10k	3.100G-3.500G	140m	6.0u	8.0u	1.3Ø	100m	50m	600mØ	TRL	PS	WA	2.0k
36	TH2615B	3300M	30M*	3.200G-3.450G	1.5m		15u*				1.0	TRL	PS	WA	
37	VFX9507	4692M	80k	9.305G-9.385G	1.3m	5.5u	200m	1.3Ø	100m	50m	800mØ	TRL	FP	WA	
38	TL375	5300M	300.0k	5200M-5400M	1.0m	2.0u	9.0u	1.5	0.1	20m	1.2	TRL	BP	WA	1.0k†
39	BS190	5425M	250k	5.350G-5.500G			15u*	1.2	400m*	60m*	600m	TRL	BPPS	WA	
40	VDC1026	5445M	300k	5.240G-5.650G	1.0m	1.0u	10u	1.3Ø	100m	60m	800mØ	TRL	PS	WA	2.0k
41	VDC1006	5480M	500k	5.250G-5.710G	1.0m	5.0u	8.0u	1.3Ø	100m	50m	600mØ	TRL	PS	WA	1.0k
42	VDC1020	5500M	50k	5.250G-5.750G	6.0m	1.0u	6.0u	1.3Ø	100m	50m	600mØ	TRL	PS	WA	2.0k
43	VDC1025	5650M	15k	5.400G-5.900G	2.0m	20u	20u	1.3Ø	100m	100m	350mØ	TRL	PS	WA	2.0k
44	VDC1032	5650M	20k	5.400G-5.900G	30m	7.5u	2.0u	1.3Ø	100m	50m	1.0 Ø	TRL	PS	WA	2.0k
45	BS226	5650M	250k*	5.450G-5.825G	1.0m	2.0u	8.0u	1.4	50m*	50m*	1.2	TRL	PS	WA	
46	VDC1008	5650M	300k	5.400G-5.900G	1.0m	1.0u	8.0u	1.3Ø	100m	60m	700mØ	TRL	PS	WA	2.0k
47	VDC1029	5650M	300k	5.400G-5.900G	1.0m	1.0u	5.0u	1.3Ø	100m	70m	800mØ	TRL	PS	WA	2.0k
48	BS806F	8800M	50 *	8.500G-9.100G	CW			1.2			500m	TRL	BF	WA	
49	BS816	8800M	200k*	8.500G-9.100G			3.0u*	1.3	20m*	30m*	800m	TRL	BP	WA	
50	BS960	8800M	200k*	8.750G-8.850G	CW		250n*	1.2	100m	50mØ	800m	TRL	BPPS	WA	
51	BS950	8875M	50k*	8.600G-9.150G			6.0u*	1.4	20m	30m*	1.0	TRL			
52	BS162	9000M	40k*	8.900G-9.100G			3.0u*	1.4	50m*	30m*	800m	TRL	PS	WA	
53	BS828	9000M	200k*	8.500G-9.500G			1.0u*	1.3	20m*	30m*	1.0	TRL	BP	WA	
54	VLX1004	9050M	800	8.500G-9.600G	1.2m	1.0u	500n	1.3Ø	50m	50m	600mØ	TRL	§	WA	
55	VLX1006	9050M	800	8.490G-9.610G	1.2m	1.0u	500n	1.3Ø	50m	50m	600mØ	TRL	PS	WA	
56	VDX1086	9050M	25k	8.500G-9.600G	1.0m	2.5u	1.5u	1.3Ø	100m	50m	800mØ	TRL	PS	WA	2.5k
57	VDX1052	9050M	40k	8.500G-9.600G	1.0m	2.4u	2.0u	1.3Ø	10m	40m	1.0 Ø	TRL	PS	WA	2.0k
58	VDX1001A	9050M	50k	8.500G-9.600G	1.0m	4.4u	3.0u	1.3Ø	100m	50m	800mØ	TRL	PS	WA	2.0k
59	VDX1036	9050M	50k	8.500G-9.600G	1.0m	1.0u	1.5u	1.3Ø	30m	25m	900mØ	TRL	PS	WA	2.0k
60	VDX1006	9050M	100k	8.500G-9.600G	1.0m	4.2u	3.0u	1.3Ø	100m	50m	800mØ	TRL	PS	WA	2.0k
61	VDX1085	9050M	250k	8.500G-9.600G	1.0m	2.5u	3.0u	1.3Ø	50m	10m	1.1 Ø	TRL	PS	WA	2.5k
62	VDX1025	9050M	300k	8.500G-9.600G	333u	250n	1.5u	1.3Ø	30m	25m	900mØ	TRL	PS	WA	2.0k
63	VDX1051	9050M	300k	8.500G-9.600G	1.0m	2.4u	2.0u	1.3Ø	50m	10m	1.0 Ø	TRL	PS	WA	2.0k
64	BS500	9080M	100k*	8.980G-9.180G	CW		3.0u	1.4	50m	50mØ	1.0	TRL	BPPS	WA	
65	VLX1001	9100M	50	9.000G-9.200G	100m	1.0u	500n	1.3Ø	50m	30m	600mØ	TRL	§	WA	
66	TH2622	9.1G	5.0k	9.0-9.2G	.002		3.0u		1.0	30m	1.2	TRL	PS	WA	
67	TH2613	9100M	15M*	8.825G-9.400G	1.0m		3.0u*				1.2	TRL	PS		
68	BS806H	9170M	50 *	9.160G-9.180G	CW						500m	TRL	BP,DP	WA	
69	VLX1009	9200M	1.5k	9.150G-9.250G	6.6m	500n	800n	1.3Ø	120m	80m	900mØ	TRL	§	WA	
70	BS969	9250M		9000M-9500M	CW			1.3	3.0nØ	50mØ	1.0	TRL	BP	WA	
71	BS968	9250M	50k*	9.000G-9.500G			3.0u*	1.3	50m*	30m*	1.0	TRL	BPPS	WA	
72	BS974	9250M	150k*	9.000G-9.500G			3.0u*	1.3	50m*	30m*	1.0	TRL	BPPS	WA	
73	BS276	9250M	200k*	9.000G-9.500G			3.0	1.4	100m*	120mØ*	800m$	TRL	PS	WA	
74	BS806B	9300M	50 *	9.200G-9.400G	CW						500m	TRL	BP	WA	
75	BS806E	9300M	50 *	9.000G-9.600G	CW						500m	TRL	BP	WA	
76	BS258	9300M	100k*	9.000G-9.600G			3.0u	1.4	50m*	30m*	1.0	TRL	PS	WA	
77	BS264	9300M	100k*	9.000G-9.600G	CW		3.0u	1.4	50m	50mØ	1.0	TRL	BPPS	WA	
78	BS882	9345M	20k*	9.300G-9.390G			4.0u*	1.4	50m	50m*	800m	TRL		WA	
79	BS814	9350M	200k*	9.000G-9.700G			3.0u*	1.3	20m*	30m*	800m	TRL	BP	WA	
80	BS952	9355M	60k*	9.305G-9.405G			3.0u*	1.3	100m	50m*	700m	TRL	PS	WA	
81	VDX1099	9375M	50k*	9.275G-9.475G	1.0m	1.5u	1.0u	1.4	50m	50m	800m	TRL		WA	2.0k
82	BS962	9375M	200k*	9.345G-9.405G			3.0u*	1.3	20m	50mØ*	800m	TRL	BP	WA	
83	VDX1047	9387M	75k	9.325G-9.450G	1.0m	1.0u	1.5u	1.3Ø	50m	40m	800mØ	TRL	PS	WA	2.0k
84	16SL107	9400M		9300-9500M				1.2			0.4	TRL		WC	
85	16SL108	9400M		9200-9600M				1.2			0.4	TRL	BP	WC	
86	BS806A	9400M	50 *	9.300G-9.500G	CW		3.0u*	1.3	20m	50mØ	800m	TRL	BP	WA	
87	BS806G	9400M	50 *	9.300G-9.500G	CW		3.0u*	1.3	20m	50mØ	800m	TRL	BP	WA	
88	JF444L	9.4G	100	9.3-9.5G			3.0u	1.4	5.0nØ		1.0	TRL	PS	WA	
89	JF447L	9.4G	100	9.3-9.5G			3.0u	1.4	1.0nØ		1.2	TRL	PS	WA	
90	BS178	9400M	40k	9.275G-9.525G			3.0u	1.3	50m		800m	TRL	PS	WA	
91	BS216	9400M	40k*	9.300G-9.700G	1.0m	1.0u	3.0u	1.4	50m*	100mØ*	800m	TRL	BPPS	WA	
92	BS256	9400M	40k*	9.300G-9.500G			3.0u	1.4	50m*	30m*	800m	TRL	PS	WA	
93	BS958	9400M	40k*	9.300G-9.500G			3.0u*	1.4	50m*	30m*	800m	TRL	PS	WA	
94	BS958D	9400M	40kΔ	9300-9500M		1.0u	3.0u	1.4	5.0nØ	30m	1.2	TRL		WA	
95	BS959	9400M	40k	9.300G-9.500G	1.0m	1.0u	3.0u	1.4	60m	100m	800m	TRL		WA	
96	BS908	9400M	75k*	9.250G-9.550G*			6.0u*	1.4	80m*	20m*	1.0	TRL	MT	WA	
97	E3902	9400M	75k	9.300G-9.400G	1.0m	1.0u	2.0u	1.4	80m	30m	900mØ	TRL	PS	WA	
98	BS188	9400M	100k*	9.300G-9.500G			3.0u	1.3	50m*	60mØ*	800m	TRL	MTPS	WA	
99	BS260	9400M	100k*	9.300G-9.500G			3.0	1.4	50m*	75mØ*	800m	TRL	PS	WA	
100	BS262	9400M	100k*	9.300G-9.500G			3.0	1.4	50m*	50mØ*	800m	TRL	PS	WA	
101	BS280	9400M	100k*	9.300G-9.500G			3.0	1.4	50m*	60mØ*	800m	TRL	PS	WA	
102	TL368A	9400M	100k	9.300G-9.500G			2.0u*	1.3	100m	25m	1.0	TRL	BPPS	WA	
103	WF409LC	9400M	100k*	9.300G-9.500G			3.0u*	1.4	50m*	30m*	800m	TRL	PS	WA	
104	BS830	9400M	200k*	9.300G-9.500G			3.0u*	1.3	20m*	30m*	700m	TRL	BP	WA	
105	BS806C	9410M	50 *	9.310G-9.510G	CW		4.0u*	1.3	20m	50mØ	800m	TRL	BP	WA	
106	BS806D	9410M	50 *	9.245G-9.575G	CW		4.0u*	1.4	20m	50mØ	1.0	TRL	BP	WA	
107	QF451LA	9410M	1.0k†	9.260G-9.560G*			4.0u*	1.4	50m*		1.2	TRL		WA	
108	BS454	9410M	40k	9.310G-9.510G	1.0m	1.0u	3.0u*	1.3	20m*	50mØ*	800m	TRL	BP	WA	
109	BS844	9410M	100k*	9.310G-9.510G	1.0m			1.3	20m*	30m*	1.0	TRL		WA	
110	VDX1071	9450M	10k	9.325G-9.575G	1.0m	1.0u	1.5u	1.3Ø	50m	50m	800mØ	TRL	PS	WA	1.0k

SYMBOLS AND CODES EXPLAINED IN INTERPRETER

3. DUPLEXER TUBES

IN ORDER OF (1)TUBE TYPE (2)CENTER FREQUENCY (3)INCIDENT POWER (4)TYPE No.

LINE No.	[4] TYPE No.	[2] CENTER FREQ. (Hz)	[3] INCIDENT POWER (W)	FREQUENCY RANGE (Hz)	MAX. DUTY CYCLE	MAX. PULSE WIDTH (s)	RECOVERY TIME (s)	MAX. VSWR	LEAKAGE SPIKE (ergs)	LEAKAGE FLAT (W)	MAX. INSERTION LOSS (dB)	DESCRIPTION [1] TUBE TYPE	FEATURES	OUTPUT	LIFE (hr)
1	BS232	9550M	40k*	9.400G-9.700G	1.0m	1.0u	3.0u	1.4	50m*	100mØ*	800m	TRL	PS	WA	
2	BS826	9600M	200k*	9.300G-9.900G			3.0u*	1.3	20m*	30m*	800m	TRL	BP	WA	
3	VFX9500	9640M	2.5k	9.280G-10.000G	12m	1.0u	500n	1.3Ø	20m	20m	800mØ	TRL	FP	WA	
4	BS818	9700M	200k*	9.400G-10.000G			3.0u*	1.3	20m*	30m*	800m	TRL	BP	WA	
5	101XLS	9750M		9500-10,000M				1.4			1.0	TRL		WC	
6	BS166	9750M	130	9.600G-9.900G	1.0m	1.0u		1.3	50m	200m	750m	TRL		WA	
7	JF421L	9750M	450	300M	500m	40u	1.0u	1.3	300m*	200m*	800m	TRL	BP	WA	
8	VLU1000	16150M	1.6k	15.900G-16.400G	1.0m	300n	1.0u	1.3Ø	100m	75m	1.5 Ø	TRL	SSPS	WA	2.0k
9	VLU1002	16300M	100k	16.300G	20u	500n	300n	1.3Ø	100m	50m	500mØ	TRL	SSPS	WA	2.0k
10	VDU1014	16400M	10k	15.800G-17.000G	1.0m	1.0u	700n	1.3Ø	100m	40m	1.0 Ø	TRL	PS	WA	2.0k
11	VDU1015	16400M	60k	15.800G-17.000G	1.0m	1.0u	700n	1.3Ø	50m	20m	1.0 Ø	TRL	PS	WA	2.0k
12	VDU1002	16500M	12.5k	16.200G-16.800G	1.0m	2.5u	1.0u	1.3Ø	150m	50m	1.0 Ø	TRL	PS	WA	2.0k
13	VDU1046	16500M	100k	15.500G-17.500G	1.0m	220n	1.0u	1.3Ø	50m	20m	1.2 Ø	TRL	PS	WA	2.0k
14	VDU1001	16500M	125k	16.200G-16.800G	1.0m	2.5u	1.0u	1.3Ø	100m	20m	1.0 Ø	TRL	PS	WA	1.0k
15	TL369	16.7G	100.0k	16.6G-16.8G	1.0m	2.0u	2.0u	1.4	0.1	60m	1.2	TRL	BP	WA	500 †
16	TL371	16.83G	100.0k	16.73G-16.93G	1.0m	1.0u	3.0u	1.5	0.1	60m	1.2	TRL	BP	WA	500 †
17	VDK1000	24000M	5.0k	23.500G-24.500G	100u	20n	200n	1.3Ø	50m	50m	700m	TRL	PS	WA	2.0k
18	BS60	33000M	75k	30.000G-36.000G			6.0u	1.3	20m		1.5	TRL		WA	
19	BS70	33000M	75k	30.000G-36.000G			6.0u	1.3	20m		1.5	TRL		WA	
20	WF63L	34200M	20k*	33.200G-35.200G			1.0u*	1.5	20m*		1.5	TRL	BP	WA	
21▼	BS71	34.45G	50k	34.34G-34.55G			300n*	1.3	1.0nØ	100mØ	1.3	TRL	BP	WA	
22	BS63	34.90G		34.55G-35.25G			6.0u	1.5			1.4	TRL		WA	
23	BS68	34.90G		34.55G-35.25G				1.5		1.0m	2.4	TRL		WA	
24	BS246	34.90G		34.55G-35.25G			6.0u	1.5			1.4	TRL		WA	
25	BS72	34900M	50k*	34.550G-35.250G			300n	1.3	20m*	100mØ*	1.3	TRL	BP	WA	
26▼	BS73	35G	50k	34.50G-35.50G			300n*	1.3	2.0nØ	100mØ	1.3	TRL	BP	WA	
27	BS976	9250M	50k*	9.000G-9.500G	1.0m	1.0u	3.0u*	1.3	50m	400mØ*	1.0	TRL*	BPPS	WA	
28	BS798	1400M	14k	1.1G-1.7GØ±25MØ	50m		3.0u*	1.3	50 §	1.0 *	1.0	TRL#		WA	
29	BS898	1400M	14k	1.1G-1.7GØ±50MØ	50m		3.0u*	1.3	50 §	1.0 *	1.0	TRL#		WA	
30	BS975	9250M		9000M-9500M	CW			1.3	3.0nØ	50mØ	1.0	TRLD	BP	WA	
31	WF414L	9250M	150k	9.000G-9.500G	1.0m	5.0u	3.0u	1.3	300m	30m	1.0	TRLD	BP§	WA	1.0k†

4. MICROWAVE MIXER DIODES

IN ORDER OF (1) TEST FREQ (OR AVG FREQ WHEN TEST FREQ NOT AVAILABLE) and (2) TYPE No.

LINE No.	[2] TYPE No.	BAND	[1] TEST FREQ. (Hz)	FREQUENCY RANGE MIN - MAX (Hz)	NOISE MAX RATIO NR times	NOISE MAX REC. NF (dB)	TEST COND. FOR- Pin (W)	RL (Ω)	Zm (Ω)	MAX. CONV. LOSS (dB)	MAX. VSWR	IF IMPEDANCE RANGE MIN - MAX (Ω)	ABSOLUTE MAX RATING BURN-OUT (Erg)	MAX. TEMP (°C)	DESCRIPTION MAT.	DWG. No.
1	1SS154			200M-3.0G		9.0							2.0	125J		TO236
2▼	1SS239	UHF		10M-1000M		9.0†							2.0	125J		W349
3▼	1SS242	UHF		10M-1000M		7.0†							2.0	125J		W349
4	CMK7701	Kr-Qb		26.5G-40.0G		5.5	1m	100			1.6	280-400		150	GA♦	M1139
5	CMK7702	Qb-W		40.0G-100.0G		6.9	1m	100			1.6	280-400		150	GA♦	M1139
6	CMK7703	Xr-Kp		8.2G-12.4G		5.0	1m	100			1.6	Z80-400		150	GA♦	u54
7	CMK7703A	Xr-Kp		8.2G-12.4G		4.5	1m	100			1.6	Z80-400		150	GA♦	u54
8	CMK7704	Kp-Ku		12.4G-18.0G		5.3	1m	100			1.6	Z80-400		150	GA♦	u54
9	CMK7704A	Kp-Ku		12.4G-18.0G		4.8	1m	100			1.6	Z80-400		150	GA♦	u54
10	CMK7705	Kr-Qb		26.5G-40.0G		5.5	1m	100			1.6	280-400		150	GA♦	u54
11	CMK7705A	Kr-Qb		26.5G-40.0G		5.0	1m	100			1.6	280-400		150	GA♦	u54
12	D5632AM	S-X		3000M-12000M		8.0	1.0m				2.0	100-200	1.0	150		F149
13	D5632AMR	S-X		3000M-12000M		8.0	1.0m				2.0	100-200	1.0	150		F149
14	D5632M	S-X		3000M-12000M		9.0	1.0m				2.0	100-200	1.0	150		F149
15	D5632MR	S-X		3000M-12000M		9.0	1.0m				2.0	100-200	1.0	150		F149
16▼	DME3027	L		1.0G-2.0G		1.5	1.0m								Si♦	C243 *
17▼	DME3042	L		1.0G-2.0G		1.5	1.0m								Si♦	C251 *
18▼	DME3045	L		1.0G-2.0G		1.5	1.0m								Si♦	M983 *
19▼	DME6549	L		1.0G-2.0G		1.5	1.0m								Si♦	C251 *
20▼	DMF3059	L		1.0G-2.0G		1.5	1.0m								Si♦	C251 *
21	DMF4520	L		1.0G-2.0G										85	♦	M983
22	DMF4540	L		1.0G-2.0G										85	♦	M983a
23	DMK4058	Kr-Qb		26.5G-40.0G		6.0	1m	100			1.6	280-400		150	GA♦	M790b
24	DMK4058A	Kr-Qb		26.5G-40.0G		5.5	1m	100			1.6	Z80-400		150	GA♦	M7906
25	DMK4784	Qb-W		40.0G-100.0G			1m	100			1.6	280-400		150	GA♦	F157
26	DMK6591	Kp-Ku		12.4G-18.0G			1m	100			1.6	280-400		150	GA♦	M1137
27	DMK6592	Kp-Ku		12.4G-18.0G			1m	100			1.6	280-400		150	GA♦	M1138
28	DMK6600	Xr-Kp		8.2G-12.4G		5.0	1m	100			1.6	Z80-400		150	GA♦	A421
29	DMK6600A	Xr-Kp		8.2G-12.4G		4.5	1m	100			1.6	Z80-400		150	GA♦	A421
30	DMK6601	Xr-Kp		8.2G-12.4G		5.0	1m	100			1.6	Z80-400		150	GA♦	M790b
31	DMK6601A	Xr-Kp		8.2G-12.4G		4.5	1m	100			1.6	Z80-400		150	GA♦	M790b
32	DMK6602	Kp-Ku		12.4G-18.0G		5.3	1m	100			1.6	Z80-400		150	GA♦	A421
33	DMK6602A	Kp-Ku		12.4G-18.0G		4.8	1m	100			1.6	Z80-400		150	GA♦	A421
34	DMK6603	Kr-Qb		26.5G-40.0G		6.0	1m	100			1.6	Z80-400		150	GA♦	A421
35	DMK6603A	Kr-Qb		26.5G-40.0G		5.5	1m	100			1.6	Z80-400		150	GA♦	A421
36	DMK6604	Xr-Kp		8.2G-12.4G		5.5	1m	100			1.6	280-400		150	GA♦	M577b
37	DMK6604A	Xr-Kp		8.2G-12.4G		5.0	1m	100			1.6	280-400		150	GA♦	M577b
38	DMK6605	Kp-Ku		12.4G-18.0G		5.8	1m	100			1.6	Z80-400		150	GA♦	M577b
39	DMK6605A	Kp-Ku		12.4G-18.0G		5.3	1m	100			1.6	Z80-400		150	GA♦	M577b
40	DMK6606	Kr-Qb		26.5G-40.0G		6.5	1m	100			1.6	Z80-400		150	GA♦	M577b
41	DMK6606A	Kr-Qb		26.5G-40.0G		6.0	1m	100			1.6	Z80-400		150	GA♦	M577b
42	MA4E200	HF-S		10M-4.0G		6.0								150S	Si	M989
43	MA4E201	HF-S		10M-4.0G		6.0								150S	Si	M990
44	MA4E202	HF-S		10M-4.0G		6.0								150S	Si	M991
45	MA4E203	C		4.0G-8.0G		6.5								150S	Si	M989
46	MA4E204	C		4.0G-8.0G		6.5								150S	Si	M990
47	MA4E205	C		4.0G-8.0G		6.5								150S	Si	M991
48	MA4E206	X		8.0G-12G		6.5								150S	Si	M990
49	MA4E207	X		8.0G-12G		6.5								150S	Si	M991
50	MA4E208	X-Ku		8.0G-18G		7.5								150S	Si	M990
51	MA40167	X		8.2G-12.4G		6.5								150S	♦#	M912
52	MA40168	Ku		12.4G-18G		6.5								150S	♦#	M912
53	MA40430	HF-S		10M-4.0G		6.0								150S	Si♦	M993
54	MA40431	HF-S		10M-4.0G		6.0								150S	Si♦	M994
55	MA40432	HF-S		10M-4.0G		6.0								150S	Si♦	M995
56	MA40433	C		4.0G-8.0G		6.5								150S	Si♦	M993
57	MA40434	C		4.0G-8.0G		6.5								150S	Si♦	M994
58	MA40435	X		8.0G-12G		6.5								150S	Si♦	M994
59	MA40436	Ku		12G-18G		7.5								150S	Si♦	M994
60	MA40439	HF-S		10M-4.0G		6.0								150S	Si♦	M995
61	MA40440			10M-4.0G		6.0								150S	Si♦	M993
62	MA40441	HF-S		10M-4.0G		6.0								150S	Si♦	M994
63	MA40442	HF-S		10M-4.0G		6.0								150S	Si♦	M995
64	MA40443	C		4.0G-8.0G		6.5								150S	Si♦	M993
65	MA40444	C		4.0G-8.0G		6.5								150S	Si♦	M994
66	MA40445	C		4.0G-8.0G		6.5								150S	Si♦	M995
67	MA40446	X		8.0G-12G		6.5								150S	Si♦	M994
68	MA40447	Ku		12G-18G		7.5								150S	Si♦	M994
69	MA40449	HF-S		10M-4.0G		6.0								150S	Si♦	M995
70	MA40480	S		.001-2.0G		6.0								150	Si	W169
71	MA40490	HF-S		10M-4.0G		6.0								150S	Si♦	M993
72	MA40491	HF-S		10M-4.0G		6.0								150S	Si♦	M994
73	MA40492	HF-S		10M-4.0G		6.0								150S	Si♦	M995
74	MA40493-226	C		4.0G-8.0G		6.5								150S	Si♦	M993
75	MA40494-227	C		4.0G-8.0G		6.5								150S	Si♦	M994
76	MA40495-228	C		4.0G-8.0G		6.5								150S	Si♦	M995
77	MA40496-227	X		8.0G-12G		6.5								150S	Si♦	M994
78	MA40497-227	Ku		12G-18G		7.5								150S	Si♦	M994
79	MA40499	HF-S		10M-4.0G		6.5								150S	Si♦	M995
80	UMX520	UHF		1M-500M		7.0		50		7.0				85J		TO8
81	UMX570	UHF		1M-500M		7.0		50		7.0				85J		TO8
82	UMX2020	VHFL		10M-2.0G		9.0		50		9.0				85J		TO8
83	DMC5501B	St-Sh	3.1	2.0G-4.0G		6.0	1m	100			1.8	250-450		150	Si♦	A423
84	DMC5501BM	St-Sh	3.1	2.0G-4.0G		6.0	1m	100			1.8	250-450		150	Si♦	A423
85	DMC5501C	St-Sh	3.1	2.0G-4.0G		5.5	1m	100			1.7	250-450		150	Si♦	A423
86	DMC5501CM	St-Sh	3.1	2.0G-4.0G		5.5	1m	100			1.7	250-450		150	Si♦	A423
87	DMC5503B	St-Sh	3.1	2.0G-4.0G		6.0	1m	100			1.8	150-350		150	Si♦	F146
88	DMC5503BM	St-Sh	3.1	2.0G-4.0G		6.0	1m	100			1.8	150-350		150	Si♦	F146
89	DMC5503C	St-Sh	3.1	2.0G-4.0G		5.5	1m	100			1.7	150-350		150	Si♦	
90	DMC5503CM	St-Sh	3.1	2.0G-4.0G		5.5	1m	100			1.7	150-350		150	Si♦	
91	DMC5910B	St-Sh	3.1	2.0G-4.0G		6.0	0.5m	100			1.3	350-450		150	Si♦	P22
92	DMC5910BM	St-Sh	3.1	2.0G-4.0G		6.0	0.5m	100			1.3	350-450		150	Si♦	P22
93	DMC5910BMR	St-Sh	3.1	2.0G-4.0G		6.0	0.5m	100			1.3	350-450		150	Si♦	P22
94	DMC5910C	St-Sh	3.1	2.0G-4.0G		5.5	0.5m	100			1.3	350-450		150	Si♦	P22
95	DMC5910CM	St-Sh	3.1	2.0G-4.0G		5.5	0.5m	100			1.3	350-450		150	Si♦	P22
96	DMC5910CMR	St-Sh	3.1	2.0G-4.0G		5.5	0.5m	100			1.3	350-450		150	Si♦	P22
97	DMF4365	St-Sh	3.1	2.0G-4.0G		6.5	1m							150	Si♦	A424
98	DMF4365A	St-Sh	3.1	2.0G-4.0G		6.0	1m							150	Si♦	A424
99	DMF5817	St-Sh	3.1	2.0G-4.0G		6.5	1m							150	Si♦	M5776
100	DMF5817A	St-Sh	3.1	2.0G-4.0G		6.0	1m							150	Si♦	M5776
101	DMF5845	St-Sh	3.1	2.0G-4.0G		6.5	1m							150	Si♦	A427
102	DMF5845A	St-Sh	3.1	2.0G-4.0G		6.0	1m							150	Si♦	A427
103	DMF6887B	St-Sh	3.1	2.0G-4.0G		6.0	1m	100			1.8	100-300		150	Si♦	A421
104	DMF6887BM	St-Sh	3.1	2.0G-4.0G		6.0	1m	100			1.8	100-300		150	Si♦	A421
105	DMF6887CM	St-Sh	3.1	2.0G-4.0G		5.5	1m	100			1.7	100-300		150	Si♦	A421
106	DMF6898B	St-Sh	3.1	2.0G-4.0G		6.0	1m	100						150	Si♦	M790b
107	DMF6898BM	St-Sh	3.1	2.0G-4.0G		6.0	1m	100						150	Si♦	M790b
108	DMF6898C	St-Sh	3.1	2.0G-4.0G		5.5	1m	100						150	Si♦	M790b
109	DMF6898CM	St-Sh	3.1	2.0G-4.0G		5.5	1m	100						150	Si♦	M790b
110	DMB3000	Xr-Kp	9.4	8.2G-12.4G		7.0	1m							150	Si♦	C252

SYMBOLS AND CODES EXPLAINED IN INTERPRETER

4. MICROWAVE MIXER DIODES

IN ORDER OF (1) TEST FREQ (OR AVG FREQ WHEN TEST FREQ NOT AVAILABLE) and (2) TYPE No.

LINE No.	[2] TYPE No.	BAND	[1] TEST FREQ. (Hz)	FREQUENCY RANGE MIN - MAX (Hz)	NOISE MAX RATIO NR times	NOISE MAX REC. NF (dB)	TEST COND. FOR- Pin (W)	RL (Ω)	Zm (Ω)	MAX. CONV. LOSS (dB)	MAX. VSWR	IF IMPEDANCE RANGE MIN - MAX (Ω)	ABSOLUTE MAX RATING BURN-OUT (Erg)	MAX. TEMP (°C)	MAT.	DESCRIPTION DWG. No.
1	DMB3000A	Xr-Kp	9.4	8.2G-12.4G		6.5	1m							150	Si♦	C252
2	DMB3002	Xr-Kp	9.4	8.2G-12.4G		7.0	1m							150	Si♦	A422
3	DMB3002A	Xr-Kp	9.4	8.2G-12.4G		6.5	1m							150	Si♦	A422
4	DMB3003	Xr-Kp	9.4	8.2G-12.4G		7.0	1m							150	Si♦	A424
5	DMB3003A	Xr-Kp	9.4	8.2G-12.4G		6.5	1m							150	Si♦	A424
6	DMF5827A	Xr-Kp	9.4	8.2G-12.4G		6.5	1m							150	Si♦	A427
7	DMB3001	Kp-Ku	16.0	12.4G-18.0G		8.0	1m							150	Si♦	A425
8	DMB3001A	Kp-Ku	16.0	12.4G-18.0G		7.5	1m							150	Si♦	A425
9	DMB3004	Kp-Ku	16.0	12.4G-18.0G		8.0	1m							150	Si♦	A424
10	DMB3004A	Kp-Ku	16.0	12.4G-18.0G		7.5	1m							150	Si♦	A424
11	DMB6984	Kp-Ku	16.0	12.4G-18.0G		8.0	1m							150	Si♦	A426
12	DMB6984A	Kp-Ku	16.0	12.4G-18.0G		7.5	1m							150	Si♦	A426
13	DMJ3123	Kp-Ku	16.0	12.4G-18.0G		8.0	1m							150	Si♦	C255
14	ML40100	X	10k	9.375G		6.5		25		4.3	1.5	150-400		150	♦	F82
15	ML40101	X	10k	9.375G		7.0		25		4.8	1.5	150-400		150	♦	F82
16	ML40102	X	10k	9.375G		7.5		25		5.3	2.0	150-400		150	♦	F82
17	ML40105	X	10k	9.375G		6.5		25		4.3	2.0	150-400		150	♦	M277e
18	ML40106	X	10k	9.375G		7.0		25		4.8	2.0	150-400		150	♦	M277e
19	ML40107	X	10k	9.375G		7.5		25		5.3	2.0	150-400		150	♦	M277e
20	ML40110	K	10k	16G		7.0		25		4.8	1.5	150-400		150	♦	F82
21♦	ML40111	K	10k	16G		7.5		25		5.3	2.0	150-400		150	♦	F82
22♦	ML40115	K	10k	16G		7.0		25		4.8	1.5	150-400		150	♦	M277e
23♦	ML40116	K	10k	16G		7.5		25		5.3	2.0	150-400		150	♦	M277e
24	ML40121	X	10k	9.375G		7.5		25		5.3	2.0	150-400		150	♦	M789
25♦	ML40150	X	10k	9.375G		6.5		25		4.3	1.5	150-400		150	♦	F82
26♦	ML40151	X	10k	9.375G		7.0		25		4.8	1.5	150-400		150	♦	F82
27♦	ML40152	X	10k	9.375G		7.5		25		5.3	2.0	150-400		150	♦	F82
28	ML40155	X	10k	9.375G		6.5		25		4.3	2.0	150-400		150	♦	M277e
29	ML40156	X	10k	9.375G		7.0		25		4.8	2.0	150-400		150	♦	M277e
30	ML40157	X	10k	9.375G		7.5		25		5.3	2.0	150-400		150	♦	M277e
31	ML40160	K	10k	16G		7.0		25		4.8	1.5	150-400		150	♦	F82
32	ML40161	K	10k	16G		7.5		25		5.3	2.0	150-400		150	♦	F82
33	ML40162	K	10k	16G		7.0		25		4.8	1.5	150-400		150	♦	M277e
34	ML40163	K	10k	16G		7.5		25		5.3	2.0	150-400		150	♦	M277e
35	ML40171	X	10k	9.375G		7.5		25		5.3	2.0	150-400		150	♦	M789
36	HSCH5315	K	1.0M	1-18G		7.2					1.5	200-400		175	♦	M1128
37	HSCH5318	K	1.0M	1-18G		6.2					1.5	200-400		175	♦	M1128
38	ML40597	X	30M	9.375G		8.5		10			1.7	200-400		150	♦	A416
39	ML40597M	X	30M	9.375G		8.5		10			1.7	200-400		150	♦	A416
40	K3A		700M		13											A32c
41	K3F		700M		10											DO7
42	BA481	L	900M			8.0								125	Si$	DO34
43	1N25	L	1.0G		2.5		1.2m	100	200	8.0		100-400	750 §	70A	Si	P3Ø
44	JAN1N25	L	1.0G			10	1.0m	100	200	8.0	2.0	100-400		70A	Si	P3
45	1N25A	L	1.0G		2.0		1.2m	100	200	6.5		100-300	750 §	70A	Si	P3Ø
46	1N25B	L	1000M		1.5	8.0	1.2m	100	200	5.5		100-300		70A	Si☑	P3Ø
47	JAN1N25WA	L	1000M		1.5	8.7	1.0m	100	200	6.0	2.0	100-300		70A	Si	P3d
48	1N26B	L	1.0G		1.5	8.3	1.2m	100	200	5.5		100-300	750 §	70A	Si	P3Ø
49	DC1503	L	1000M	1.0G-2.0G	1.0	6.0				4.5	2.0	350Ø	600m$	150A	Si♦	u7dØ
50♦	DMF4792	L	1.0G	1.0G-2.0G		7.0	1.0m	100						150	Si♦$	C243
51	K25A	L	1.0G		2.0					6.5		100-400	6.5k§	125	Si	P3Ø
52	K25B	L	1.0G		1.5					5.5		100-400	6.5k§	150	Si	P3Ø
53	P4284	L	1000M		2.0	12.6				8.0		100-400	6.5		☑	F88Ø
54	P4284A	L	1000M		2.0	10.3				6.5		100-300	6.5		☑	F88Ø
55	P4284B	L	1000M		1.5	8.3				5.5		100-300	6.5		☑	F88Ø
56	A2S270	S	2.0G			7.0					1.6	150-350		150	%♦	A416
57	A2S271	S	2.0G			7.0					1.6	150-350		150	%♦	A416
58♦	A2S350	S	2.0G	2.0-4.0G		7.0	1.0m	10			1.5	150-250	125 §	125	Si♦	A416
59♦	A2S400	S	2.0G	2.0-4.0G		6.0	1.0m	10			1.5	150-250	125 §	125	Si♦	A416
60▼	A2S401	S	2.0G	2.0G-4.0G		6.0	1.0m	10			1.5	150-250		125	Si♦	A416
61♦	A2S817	S	2.0G	2.0G-4.0G		6.0	1.0m	10			1.8	250-400	250m§	200A	Si#♦	A416
62▼	A2S818	S	2.0G	2.0G-4.0G		6.0	1.0m	10			1.8	250-400		200	Si♦	A416
63▼	A2S819	S	2.0G	2.0G-4.0G		6.0	1.0m	10			1.8	250-400		200	Si♦	A416
64♦	A2S821	S	2000M			5.5	1.0m	10			1.8	100-250	250m§	150	Si§♦	A416
65▼	A2S822	S	2.0G			5.5	1.0m	10			1.8	100-250		150	Si♦	A416
66▼	A2S823	S	2.0G			5.5	1.0m	10			1.8	100-250		150	Si♦	A416
67	HP5082-2350	L	2000M	1.0G-3.0G		7.0Ø	1.0m				1.5	150-250	15 $	125J	Si♦	A1ahØ
68	HP5082-2400	L	2000M	1.0G-3.0G		6.0Ø	1.0m				1.5	150-250	15 $	125J	Si♦	A1ahØ
69	HP5082-2817	L	2000M	1.0G-2.0G		6.0	1.0m	100			1.8	250-400	1.0 $	150J	Si#$	A1ah
70	A2S130	S	3.0G	2.0-4.0G		5.5	1.0m	10			1.5Ø	300Ø		150A	Si♦	A416
71♦	A2S520	S	3.0G	2.0G-4.0G		7.0	1.0m	10			1.5	100-250	125 §	125	Si♦	A416
72♦	A2S565	S	3.0G	2.0-4.0G		6.0	1.0m	10			1.5	100-250	125 §	125	Si♦	A416
73▼	A2S566	S	3.0G	2.0G-4.0G		6.0	1.0m	10			1.5	100-250		125	Si♦	A416
74	CS12B	S	3.0G	2.0G-4.0G		7.5					1.5	350Ø		100A	Si☑	P2fØ
75	CS12BR	S	3.0G	2.0G-4.0G		7.5					1.5	350Ø		100A	Si☑	P2fØ
76	CV7771	S	3.0G	2.0G-4.0G		7.5					1.5	350Ø		100A	Si☑	P2f
77	CV7772	S	3.0G	2.0G-4.0G		7.5					1.5	350Ø		100A	Si☑	P2f
78	DC1505F	S	3.0G	2.0G-4.0G	1.0	7.0				5.5	2.0	400Ø	500m$	150A	Si♦	P3Ø
79	DC1505G	S	3.0G	2.0G-4.0G	1.0	6.5				5.0	1.5	350Ø	500m$	150A	Si♦	P3Ø
80	DC1507F	S	3.0G	2.0G-4.0G	1.0	7.0				5.5	2.0		500m$	150A	Si♦	P2fØ
81	DC1507G	S	3.0G	2.0G-4.0G	1.0	6.5				5.0	1.5	350Ø	500m$	150A	Si♦	P2fØ
82	DC1507H	S	3.0G	2.0G-4.0G	1.0	6.0				4.5	1.5	350Ø	500m$	150A	Si♦	P2fØ
83	DC1508F	S	3.0G	2.0G-4.0G	1.0	7.0				5.5	2.0		500m$	150A	Si	u7DØ
84	DC1508G	S	3.0G	2.0G-4.0G	1.0	6.5				5.0	2.0	350Ø	500m$	150A	Si♦	u7dØ
85	DC1508H	S	3.0G	2.0G-4.0G	1.0	6.0				4.5	2.0	350Ø	500m$	150A	Si♦	u7dØ
86	DC1511F	S	3.0G	2.0G-4.0G	1.0	7.0				5.5	2.0	350Ø	500m$	150A	Si♦	A316Ø
87	DC1511G	S	3.0G	2.0G-4.0G	1.0	6.5				5.0	2.0	350Ø	500m$	150A	Si♦	A316Ø
88	DC1511H	S	3.0G	2.0G-4.0G	1.0	6.0				4.5	2.0	350Ø	500m$	150A	Si♦	A316Ø
89	DC1519	S	3.0G	2.0G-4.0G	1.0	6.5				5.0	2.0	350Ø	500m$	150A	Si♦	A317bØ
90	DC1570E	S	3.0G	2.0G-4.0G		7.5					1.5	400Ø		70	Si♦	P2fØ
91	DC1570F	S	3.0G	2.0G-4.0G		7.0					1.5	400Ø		70	Si♦	P2fØ
92	DC1570G	S	3.0G	2.0G-4.0G		6.5					1.5	400Ø		70	Si♦	P2fØ
93	DC1571E	S	3.0G	2.0G-4.0G		7.5					1.5	400Ø		70	Si♦	u7dØ
94	DC1571F	S	3.0G	2.0G-4.0G		7.0					1.5	400Ø		70	Si♦	u7dØ
95	DC1571G	S	3.0G	2.0G-4.0G		6.5					1.5	400Ø		70	Si♦	u7dØ
96	DC1572E	S	3.0G	2.0G-4.0G		7.5					1.5	400Ø		70	Si♦	u7dØ
97	DC1572F	S	3.0G	2.0G-4.0G		7.0					1.5	400Ø		70	Si♦	u7dØ
98	DC1572G	S	3.0G	2.0G-4.0G		6.5					1.5	400Ø		70	Si♦	u7dØ
99	DC1573E	S	3.0G	2.0G-4.0G		7.5					1.5	400Ø		70	Si♦	A316Ø
100	DC1573F	S	3.0G	2.0G-4.0G		7.0					1.5	400Ø		70	Si♦	A316Ø
101	DC1573G	S	3.0G	2.0G-4.0G		6.5					1.5	400Ø		70	Si♦	A316Ø
102	DC1597		3.0G			9.0					2.5	400		100		
103	HP5082-2520	S	3000M	2.0G-6.0G		7.0Ø	1.0m				2.0	100-250	4.0 $	125J	Si♦	A1ahØ
104	HP5082-2565	S	3000M	2.0G-6.0G		6.0Ø	1.0m				1.5	100-250	4.0 $	125J	Si♦	A1ahØ
105	MA40000	S	3000M			7.0						150-450			♦	P9a
106	MA40001	S	3.0G	2.6G-3.95G		6.5		16			1.8	200-400	10	150A	Si♦	F107Ø
107	MA40002	S	3.0G	2.6G-3.95G		6.0		16			1.6	200-400	10	150A	Si♦	F107Ø
108	MA40003	S	3.0G	2.6G-3.95G		5.5		16			1.6	200-400	10	150A	Si♦	F107Ø
109	1N21B	S	3060M		2.0		.50m	100	400	6.5		300- 700	2.0	150A	Si	P3Ø
110	1N21C	S	3060M		1.5		.50m	100	400	5.5		300- 700	2.0	150A	Si	P3Ø

SYMBOLS AND CODES EXPLAINED IN INTERPRETER

4. MICROWAVE MIXER DIODES

IN ORDER OF (1) TEST FREQ (OR AVG FREQ WHEN TEST FREQ NOT AVAILABLE) and (2) TYPE No.

LINE No.	[2] TYPE No.	BAND	[1] TEST FREQ. (Hz)	FREQUENCY RANGE MIN - MAX (Hz)	NOISE MAX RATIO NR times	NOISE MAX REC. NF (dB)	TEST COND. Pin (W)	TEST COND. RL (Ω)	TEST COND. Zm (Ω)	MAX. CONV. LOSS (dB)	MAX. VSWR	IF IMPEDANCE RANGE MIN - MAX (Ω)	ABSOLUTE MAX RATING BURN-OUT (Erg)	ABSOLUTE MAX RATING MAX. TEMP (°C)	DESCRIPTION MAT.	DESCRIPTION DWG. No.
1	1N21D	S	3060M		1.3		.50m	100	400	5.0	1.5	325- 475	2.0	150A	Si	P3Ø
2	1N21E	S	3060M			7.0	.50m	100	400		1.3	350- 450	5.0	150A	Si	P3Ø
3	1N21F	S	3060M			6.0	.50m	100	400		1.3	350- 450	5.0	150A	Si	P3Ø
4	1N21G	S	3060M			5.5	.50m	100	400		1.3	350- 450	5.0	150S	SiØ	DO22
5	JAN1N21WE,WEM,WEMR S		3060M		1.5	7.0	500u	100	400	5.5	1.3	350-450	2.0	150A	Si	P3d
6	JAN1N21WG,WGM,WGMR S		3060M		1.5	5.5	500u	100	400	5.5	1.3	350-450	2.0	150A	Si	P3d
7	1N416B	S	3060M		2.0		.50m	100	400	6.5		300- 700	2.0	150A	Si	P3Ø
8	1N416C	S	3060M		1.5		.50m	100	400	5.5		300- 700	2.0	150A	Si	P3Ø
9	1N416D	S	3060M		1.3		.50m	100	400	5.0	1.5	325- 475	2.0	150A	Si	P3Ø
10	1N416E	S	3060M			7.0	.50m	100	400		1.3	350- 450	5.0	150A	Si	P3Ø
11	1N416F	S	3060M			6.0	.50m	100	400		1.3	350- 450	5.0	150S	SiØ	DO23
12	1N416G	S	3060M			5.5	.50m	100	400		1.3	350- 450	5.0	150S	SiØ	DO23
13	1N831	S	3060M		1.5		500m	100	400	5.5				150A	Si	A196b
14	1N831A	S	3060M			7.0	5.0m	100	400					150A	Si	A196b
15	JAN1N831A	S	3060M	3.05G - 3.06G	1.5	7.0	5.0m	100	400	5.5	1.3	350- 450		100	Si	A1sk
16	1N831B	S	3060M	1.55G - 5.2G	1.5	6.5		100	400	5.5				150S	Si	DO7
17	1N831C	S	3.06G	1.55G-5.2G	1.5	6.0	500u	100	400	5.5				150S	Si	DO7
18	1N3655	S	3060M		1.5	8.3				5.5		200- 800			Si	P3Ø
19	1N3655A	S	3060M		1.5	7.0				5.5	1.3	350- 950			Si	P3Ø
20	JAN1N3655A,AM,AMR S		3060M	3.055G-3.065G	1.5	7.0	500u	100	400	5.5	1.3	350-450	10	150A	Si	P3dØ
21	1N3655B		3060M		1.5	6.0		100	400	5.5	1.5	350- 450	10	150S	Si	DO23
22	1N3733	S	3060M		1.5					5.5					Si	P3Ø
23	1N4294	S	3060M		1.5			100	400	5.5			10	150A	Si	P3
24	D5091AM	S	3060M			6.5	0.5m					300-500	5.0	150		F148
25	D5091M	S	3060M			7.0	0.5m					300-500	5.0	150		F148
26	D5221CM	S	3060M			8.3	0.5m				2.3	300-600	5.0	150		F146
27	D5221EM	S	3060M			7.0	0.5m				1.8	300-600	5.0	150		F146
28	D5221FM	S	3060M			6.0	0.5m				1.6	300-600	5.0	150		F146
29	D5221GM	S	3060M			5.5	0.5m				1.6	300-600	5.0	150		F146
30	D5817	S	3060M	2.0G-4.0G		6.5	1.0m	10						150	Si♦$	M577
31	D5817A	S	3060M	2.0G-4.0G		6.0	1.0m	10						150	Si♦$	M577
32	D5841	S	3060M	2.0G-4.0G		6.5	1.0m	10						150	Si♦$	M578
33	D5841A	S	3060M	2.0G-4.0G		6.0	1.0m	10						150	Si♦$	M578
34	D5842	S	3060M	2.0G-4.0G		6.5	1.0m	10						150	Si♦$	M578aØ
35	D5842A	S	3060M	2.0G-4.0G		6.0								150	Si♦$	M578aØ
36	D5843	S	3060M	2.0G-4.0G		6.5	1.0m	10						150	Si♦$	M578b*
37	D5843A	S	3060M	2.0G-4.0G		6.0								150	Si△$	M578b*
38	D5844	S	3060M	2.0G-4.0G		6.5	1.0m	10						150	Si♦$	M578b
39	D5844A	S	3060M	2.0G-4.0G		6.0	1.0m	7.0						150	Si♦$	M578b
40	D5845	S	3060M	2.0G-4.0G		6.5	1.0m	10						150	Si♦$	M491b
41	D5845A	S	3060M	2.0G-4.0G		6.0	1.0m	10						150	Si♦$	M491b
42	D5846	S	3060M	2.0G-4.0G		7.0	1.0m	10						150	Si♦$	M491cØ
43	D5846A	S	3060M	2.0G-4.0G		6.0								150	Si♦$	M491cØ
44	D5847	S	3060M	2.0G-4.0G		6.5	1.0m	10						150	Si♦$	M491e*
45	D5847A	S	3060M	2.0G-4.0G		6.0	1.0m	10						150	Si♦$	M491e*
46	D5848	S	3060M	2.0G-4.0G		6.5	1.0m	10						150	Si♦$	M491e*
47	D5848A	S	3060M	2.0G-4.0G		6.0	1.0m	7.0						150	Si♦$	M491e*
48♦	DMA4148G	S	3060M	2.0G-4.0G		5.5	0.5m				1.3	350-450	10	150A	Si$Ø	F147
49	DMA4148GM	S	3060M			5.5	0.5m				1.3	350-450	10	150		F147
50♦	DMA4148GMR	S	3060M	2.0G-4.0G		5.5	0.5m				1.3	350-450	10	150	Si	F147
51	DMF4000	S	3060M	2.0G-4.0G		7.0								150	Si♦$	M491e*
52	DMG6412	S	3060M			7.0	1.0m	100						150	Si♦$	
53	MA421A	S	3060M	500M - 4.00G		6.5					1.3	350- 450			Si	P3Ø
54	MA421B	S	3060M	500M - 4.00G		6.0					1.3	350- 450			Si	P3Ø
55	MA449B	S	3060M		2.0					6.5					Si	P3Ø
56	MA449C	S	3060M		1.5					5.5					Si	P3Ø
57	MA449D	S	3060M		1.3					5.0	1.5	325- 475			Si	P3Ø
58	MA449E	S	3060M		1.5	7.0				5.5	1.3	350- 450			Si	P3Ø
59	MA449F	S	3060M			6.0					1.3	350- 450			Si	P3Ø
60	MA459B	S	3060M		2.0	10.3	.50m	100	400	6.5				150A	SiØ	P3a§
61	MA459C	S	3060M		1.5	8.3	.50m	100	400	5.5				150A	SiØ	P3a§
62	MA459D	S	3060M		1.3	7.3	.50m	100	400	5.0	1.5	325- 475		150A	SiØ	P3a§
63	MA459F	S	3060M			6.0	.50m	100	400		1.3	350- 450		150A	SiØ	P3a§
64	MA4126	S	3060M		20					5.5					Si	P3Ø
65	MA4126A	S	3060M		10					5.5		200- 800			Si	P3Ø
66	MA4127	S	3060M		1.5	8.3				5.5	1.6	300- 500	10		Si	P3
67	MA4127A	S	3060M	1.0M - 4.00G		7.0	.50m	100	400		1.6	350- 500	10	150A	SiØ	P3Ø
68	MA4131	S	3060M	1.00G - 4.00G	20	18	.50m	100	400	5.5				150A	SiØ	P3a§
69	MA4131A	S	3060M	1.00G - 4.00G	10	15	.50m	100	400	5.5		200- 800		150A	SiØ	P3a§
70	MA4136	S	3060M		20					5.5					Si	P3Ø
71	MA4136A	S	3060M	1.00G - 4.00G	10		.50m	100	400	5.5				150A	SiØ	DO7
72	MA4137	S	3060M		1.5					5.5					Si	DO7
73	MA4171	S	3060M			7.0						350- 450			Si	DO7Ø
74	MA4172	S	3060M		1.5	7.0				5.5	1.3	350- 450			Si	P3a§Ø
75	MA40051D	S	3060M		1.5	7.3	500m	100	400	5.5	1.5	350-450	10	150A	♦Ø	P3aØ
76	MA40051E	S	3060M	2.6G-3.95G	1.8	7.0	500m	100	400	5.5	2.0	300-500	2.0 $	150A	Si♦	P3dØ
77	MA40051F	S	3060M	2.6G-3.95G	1.5	6.0	500m	100	400	5.5	1.5	350-450	2.0 $	150A	Si♦	P3dØ
78	MA40051G	S	3060M	2.6G-3.95G	1.5	5.5	500m	100	400	5.0	1.5	350-450	2.0 $	150A	Si♦	P3dØ
79	MA40051H	S	3060M	2.6G-3.95G	1.5	5.0	500m	100	400	5.0	1.5	350-450	2.0 $	150A	Si♦	P3dØ
80	MA41500	S	3060M	2.6G-3.95G		8.3	500m			6.5Ø		200-500	5.0 $	150A	SiØ	A1adØ
81	MA41501	S	3060M	2.6G-3.95G		7.0	500m			5.0Ø		250-450	5.0 $	150A	SiØ	A1adØ
82	MA41502	S	3060M	2.6G-3.95G		6.5	500m			4.5Ø		250-450	5.0 $	150A	SiØ	A1adØ
83	MA41503	S	3060M	2.6G-3.95G		6.0	500m			4.0Ø		250-450	5.0 $	150A	SiØ	A1adØ
84	MA41504	S	3060M	2.6G-3.95G		5.5	500m			4.0Ø		250-450	5.0 $	150A	SiØ	A1adØ
85	P0221H	S	3060M			5.0					1.3	350-450	2.0		Ø	P3dØ
86	P0801	S	3060M			7.0					2.3	250-450			♦	A1vdØ
87	P0801A	S	3060M			6.5					2.0	250-450			♦	A1vd
88	P0801B	S	3060M			6.0					1.8	250-450			♦	A1vd
89	P0801C	S	3060M			5.5					1.7	250-450			♦	A1vd
90	P0891	S	3060M			7.0						300-500	2.0		Ø	A1vdØ
91	P0891A	S	3060M			6.5						300-500	2.0		Ø	A1vdØ
92	P1903	S	3060M			7.0					2.3	150-350			♦	F85
93	P1903A	S	3060M			6.5					2.0	150-350			♦	F85
94	P1903B	S	3060M			6.0					1.8	150-350			♦	F85
95	P1903C	S	3060M			5.5					1.7	150-350			♦	F85
96	P1921C	S	3060M		1.3	8.3					2.3	300-600	2.0		Ø	F85Ø
97	P1921E	S	3060M			7.0					1.8	300-600	2.0		Ø	F85Ø
98	P1921F	S	3060M			6.0					1.6	300-600	2.0		Ø	F85Ø
99	P1921G	S	3060M			5.5					1.6	300-600	2.0		Ø	F85Ø
100	P4210	S	3060M			7.0					1.3	350-450			♦	F88
101	P4210A	S	3060M			6.5					1.3	350-450			♦	F88
102	P4210B	S	3060M			6.0					1.3	350-450			♦	F88
103	P4210C	S	3060M			5.5					1.3	350-450			♦	F88
104	P4216H	S	3060M			5.0					1.3	350-450	2.0		Ø	F88Ø
105	PK0601	S	3060M	2.00G - 4.00G		8.3	.50m	100	400		1.5	400- 600	15	150A	Si♦	DO7Ø
106	PK0601L	S	3.060G	2.0G-4.0G		8.3	500u	100	400		1.5	400-600	15	150A	Si♦	M86cØ
107	PK0602	S	3060M	2.00G - 4.00G		7.0	.50m	100	400		1.5	400- 600	15	150A	Si♦	DO7Ø

SYMBOLS AND CODES EXPLAINED IN INTERPRETER

4. MICROWAVE MIXER DIODES

IN ORDER OF (1) TEST FREQ (OR AVG FREQ WHEN TEST FREQ NOT AVAILABLE) and (2) TYPE No.

LINE No.	[2] TYPE No.	BAND	[1] TEST FREQ. (Hz)	FREQUENCY RANGE MIN - MAX (Hz)	NOISE MAX RATIO NR times	NOISE MAX REC. NF (dB)	TEST COND. FOR- Pin (W)	RL (Ω)	Zm (Ω)	MAX. CONV. LOSS (dB)	MAX. VSWR	IF IMPEDANCE RANGE MIN - MAX (Ω)	ABSOLUTE MAX RATING BURN-OUT (Erg)	MAX. TEMP (°C)	MAT.	DESCRIPTION DWG. No.
1	PK0602L	S	3060M	2.00G - 4.00G		7.0	.50m	100	400		1.5	400- 600	15	150A	Si♦	M86cØ
2	PK0603	S	3060M	2.00G - 4.00G		6.5	.50m	100	400		1.5	400- 600	15	150A	Si♦	DO7Ø
3	PK0603L	S	3060M	2.00G - 4.00G		6.5	.50m	100	400		1.5	400- 600	15	150A	Si♦	M86cØ
4	PK0604	S	3060M	2.00G - 4.00G		6.0	.50m	100	400		1.5	400- 600	10	150A	Si♦	DO7Ø
5	PK0604L	S	3060M	2.00G - 4.00G		6.0	.50m	100	400		1.5	400- 600	10	150A	Si♦	M86cØ
6	PK0605	S	3060M	2.00G - 4.00G		5.5	.50m	100	400		1.5	400- 600	10	150A	Si♦	DO7Ø
7	PK0605L	S	3060M	2.00G - 4.00G		5.5	.50m	100	400		1.5	400- 600	10	150A	Si♦	M86cØ
8	PK0801	S	3060M	2.00G - 4.00G		8.3	.50m	100	400		1.5	400- 600	15	150A	Si♦	A1adØ
9	PK0801L	S	3060M	2.00G - 4.00G		8.3	.50m	100	400		1.5	400- 600	15	150A	Si♦	M86cØ
10	PK0802	S	3060M	2.00G - 4.00G		7.0	.50m	100	400		1.5	400- 600	15	150A	Si♦	A1adØ
11	PK0802L	S	3060M	2.00G - 4.00G		7.0	.50m	100	400		1.5	400- 600	15	150A	Si♦	M86cØ
12	PK0803	S	3060M	2.00G - 4.00G		6.5	.50m	100	400		1.5	400- 600	15	150A	Si♦	A1adØ
13	PK0803L	S	3060M	2.00G - 4.00G		6.5	.50m	100	400		1.5	400- 600	15	150A	Si♦	M86cØ
14	PK0804	S	3060M	2.00G - 4.00G		6.0	.50m	100	400		1.5	400- 600	10	150A	Si♦	A1adØ
15	PK0804L	S	3060M	2.00G - 4.00G		6.0	.50m	100	400		1.5	400- 600	10	150A	Si♦	M86cØ
16	PK0805	S	3060M	2.00G - 4.00G		5.5	.50m	100	400		1.5	400- 600	10	150A	Si♦	A1adØ
17	PK0805L	S	3060M	2.00G - 4.00G		5.5	.50m	100	400		1.5	400- 600	10	150A	Si♦	M86cØ
18	PK5101	S	3060M	2.00G - 4.00G		8.3	.50m	100	400		1.5	400- 600	15	150A	Si♦	F54aØ
19	PK5102	S	3060M	2.00G - 4.00G		7.0	.50m	100	400		1.5	400- 600	15	150A	Si♦	F54aØ
20	PK5103	S	3060M	2.00G - 4.00G		6.5	.50m	100	400		1.5	400- 600	15	150A	Si♦	F54aØ
21	PK5104	S	3060M	2.00G - 4.00G		6.0	.50m	100	400		1.5	400- 600	15	150A	Si♦	F54aØ
22	PK5105	S	3060M	2.00G - 4.00G		5.5	.50m	100	400		1.5	400- 450	10	150A	Si♦	F54aØ
23	PKM900	S	3060M	2.0G-4.0G		7.0	500m	100	400		1.5	150-350	5.0	150	Si	A298t
24	PKM901	S	3060M	2.0G-4.0G		6.5	500m	100	400		1.5	150-350	5.0	150	Si	A298t
25	PKM902	S	3060M	2.0G-4.0G		6.0	500m	100	400		1.5	150-350	5.0	150	Si	A298t
26	PKM903	S	3060M	2.0G-4.0G		5.5	500m	100	400		1.5	150-350	5.0	150	Si	A298t
27	PKM904	S	3060M	2.0G-4.0G		5.0	500m	100	400		1.5	150-350	5.0	150	Si	A298t
28	PM0801	S	3060M	2.00G - 4.00G		8.3	.50m	100	400		1.5	350- 450	5.0	150A	SiØ	A1adØ
29	PM0801L	S	3060M	2.00G - 4.00G		8.3	.50m	100	400		1.5	350- 450	5.0	150A	SiØ	M86cØ
30	PM0802	S	3060M	2.00G - 4.00G		7.0	.50m	100	400		1.5	350- 450	5.0	150A	SiØ	A1adØ
31	PM0802L	S	3060M	2.00G - 4.00G		7.0	.50m	100	400		1.5	350- 450	5.0	150A	SiØ	M86cØ
32	PM0803	S	3060M	2.00G - 4.00G		6.5	.50m	100	400		1.5	350- 550	5.0	150A	SiØ	A1adØ
33	PM0803L	S	3060M	2.00G - 4.00G		6.5	.50m	100	400		1.5	350- 550	5.0	150A	SiØ	M86cØ
34	PM0804	S	3060M	2.00G - 4.00G		6.0	.50m	100	400		1.5	350- 550	5.0	150A	SiØ	A1adØ
35	PM0804L	S	3060M	2.00G - 4.00G		6.0	.50m	100	400		1.5	350- 550	5.0	150A	SiØ	M86cØ
36	PM0805	S	3060M	2.00G - 4.00G		5.5	.50m	100	400		1.5	350- 550	5.0	150A	SiØ	A1adØ
37	PM0805L	S	3060M	2.00G - 4.00G		5.5	.50m	100	400		1.5	350- 550	5.0	150A	SiØ	M86cØ
38	SMR32B	S	3060M	1.00G-6.00G		5.5	1.0m	100	400				1.0	150S	Si	M709
39	X61P2	S	3060M			6.0	1.0m	10	400		2.0	300-400			Si♦	F27d
40	DMA5091	St-Sh	3.1G	2.0G-4.0G		7.0	0.5m	100				300-500	5.0	150	SiØ	A423
41	DMA5091A	St-Sh	3.1G	2.0G-4.0G		6.5	0.5m	100				300-500	5.0	150	SiØ	A423
42	DMA5091AM	St-Sh	3.1G	2.0G-4.0G		6.5	0.5m	100				300-500	5.0	150	SiØ	A423
43	DMA5091M	St-Sh	3.1G	2.0G-4.0G		7.0	0.5m	100				300-500	5.0	150	SiØ	A423
44	DMA5221C	St-Sh	3.1G	2.0G-4.0G		8.3	0.5m	100			2.3	300-600	5.0	150	SiØ	F146
45	DMA5221CM	St-Sh	3.1G	2.0G-4.0G		8.3	0.5m	100			2.3	300-600	5.0	150	SiØ	F146
46	DMA5221E	St-Sh	3.1G	2.0G-4.0G		7.0	0.5m	100			1.8	300-600	5.0	150	SiØ	F146
47	DMA5221EM	St-Sh	3.1G	2.0G-4.0G		7.0	0.5m	100			1.8	300-600	5.0	150	SiØ	F146
48	DMA5221F	St-Sh	3.1G	2.0G-4.0G		6.0	0.5m	100			1.6	300-600	5.0	150	SiØ	F146
49	DMA5221FM	St-Sh	3.1G	2.0G-4.0G		6.0	0.5m	100			1.6	300-600	5.0	150	SiØ	F146
50	DMA5221G	St-Sh	3.1G	2.0G-4.0G		5.5	0.5m	100			1.6	300-600	5.0	150	SiØ	F146
51	DMA5221GM	St-Sh	3.1G	2.0G-4.0G		5.5	0.5m	100			1.6	300-600	5.0	150	SiØ	F146
52	DMC5501	St-Sh	3.1G	2.0G-4.0G		7.0	1m	100			2.3	250-450		150	Si♦	A423
53	DMC5501A	St-Sh	3.1G	2.0G-4.0G		6.5	1m	100			2.0	250-450		150	Si♦	A423
54	DMC5501AM	St-Sh	3.1G	2.0G-4.0G		6.5	1m	100				250-450		150	Si♦	A423
55	DMC5501M	St-Sh	3.1G	2.0G-4.0G		7.0	1m	100			2.3	250-450		150	Si♦	A423
56	DMC5503	St-Sh	3.1G	2.0G-4.0G		7.0	1m	100			2.3	150-350		150	Si♦	F146
57	DMC5503A	St-Sh	3.1G	2.0G-4.0G		6.5	1m	100				150-350		150	Si♦	F146
58	DMC5503AM	St-Sh	3.1G	2.0G-4.0G		6.5	1m	100				150-350		150	Si♦	F146
59	DMC5503M	St-Sh	3.1G	2.0G-4.0G		7.0	1m	100			2.3	150-350		150	Si♦	F146
60	DMC5910	St-Sh	3.1G	2.0G-4.0G		7.0	0.5m	100			1.3	350-450		150	Si♦	P22
61	DMC5910A	St-Sh	3.1G	2.0G-4.0G		6.5	0.5m	100			1.3	350-450		150	Si♦	P22
62	DMC5910AM	St-Sh	3.1G	2.0G-4.0G		6.5	0.5m	100			1.3	350-450		150	Si♦	P22
63	DMC5910AMR	St-Sh	3.1G	2.0G-4.0G		6.5	0.5m	100			1.3	350-450		150	Si♦	P22
64	DMC5910M	St-Sh	3.1G	2.0G-4.0G		7.0	0.5m	100			1.3	350-450		150	Si♦	P22
65	DMC5910MR	St-Sh	3.1G	2.0G-4.0G		7.0	0.5m	100			1.3	350-450		150	Si♦	P22
66	DMD6829	St-Sh	3.1G	2.0G-4.0G		6.5								150	Si♦$	M905*
67	DMD6829A	St-Sh	3.1G	2.0G-4.0G		6.0								150	Si♦$	M905*
68	DME3006	St-Sh	3.1G	2.0G-4.0G		6.0	1m							150	Si♦	A428
69	DME3009	St-Sh	3.1G	2.0G-4.0G		6.0	1m							150	Si♦	C231
70	DME3012	St-Sh	3.1G	2.0G-4.0G		6.0	1m							150	Si♦	C228
71	DME3019	St-Sh	3.1G	2.0G-4.0G		6.0	1m							150	Si♦	C229
72	DME3021	St-Sh	3.1G	2.0G-4.0G		6.0	1m							150	Si♦	C230
73	DME3028	St-Sh	3.1G	2.0G-4.0G		6.0	1m							150	Si♦	C244
74	DME3029	St-Sh	3.1G	2.0G-4.0G		6.0	1m							150	Si♦	M1141
75	DME3032	St-Sh	3.1G	2.0G-4.0G		6.0	1m							150	Si♦	C253
76	DME3038	St-Sh	3.1G	2.0G-4.0G		6.0	1m							150	Si♦	C238
77	DME3040	St-Sh	3.1G	2.0G-4.0G		6.0	1m							150	Si♦	C251
78	DME3043	St-Sh	3.1G	2.0G-4.0G		6.0	1m							150	Si♦	C239
79	DME3044	St-Sh	3.1G	2.0G-4.0G		6.0	1m							150	Si♦	C241
80	DME3050	St-Sh	3.1G	2.0G-4.0G		6.0	1m							150	Si♦	M1137
81	DME3052	St-Sh	3.1G	2.0G-4.0G		6.0	1m							150	Si♦	C252
82	DME3124	St-Sh	3.1G	2.0G-4.0G		6.0	1m							150	Si♦	A424
83	DME3127	St-Sh	3.1G	2.0G-4.0G		6.0	1m							150	Si♦	A577b
84	DME3128	St-Sh	3.1G	2.0G-4.0G		6.0	1m							150	Si♦	A427
85▼	DME3191	S	3.1G	2.0G-4.0G		6.0	1.0m				1.6	300-680		150	Si♦	W304
86	DMF3063	St-Sh	3.1G	2.0G-4.0G		6.5	1m							150	Si♦	C253
87	DMF3063A	St-Sh	3.1G	2.0G-4.0G		6.0	1m							150	Si♦	C253
88	DMF3067	St-Sh	3.1G	2.0G-4.0G		6.5	1m							150	Si♦	C252
89	DMF3067A	St-Sh	3.1G	2.0G-4.0G		6.0	1m							150	Si♦	C252
90	DMF3070	St-Sh	3.1G	2.0G-4.0G		6.5	1m							150	Si♦	C229
91	DMF3070A	St-Sh	3.1G	2.0G-4.0G		6.0	1m							150	Si♦	C229
92	DMF3076	St-Sh	3.1G	2.0G-4.0G		6.5	1m							150	Si♦	M1141
93	DMF3076A	St-Sh	3.1G	2.0G-4.0G		6.0	1m							150	Si♦	M1141
94▼	DMF3185	S	3.1G	2.0G-4.0G		6.0	1.0m				1.6	300-680		150	Si♦	W302
95▼	DMF3188	S	3.1G	2.0G-4.0G		6.0	1.0m				1.6	300-680		150	Si♦	W304
96	DMF4040	St-Sh	3.1G	2.0G-4.0G		6.0								150	Si♦$	M491d
97♦	DMF4040A	S	3.1G	2.0G-4.0G		6.0	1.0m							150	Si♦$	M491d
98♦	DMF4059	S	3.1G	2.0G-4.0G		6.5	1.0m							150	Si♦$	C241
99♦	DMF4059A	S	3.1G	2.0G-4.0G		6.0	1.0m							150	Si♦$	C241
100	DMF4384	St-Sh	3.1G	2.0G-4.0G		6.5	1m							150	Si♦	C244
101	DMF4384A	St-Sh	3.1G	2.0G-4.0G		6.0	1m							150	Si♦	C244
102	DMF4549	St-Sh	3.1G	2.0G-4.0G		6.5	1m							150	Si♦	C239
103	DMF4549A	St-Sh	3.1G	2.0G-4.0G		6.0	1m							150	Si♦	C239
104	DMF5079	St-Sh	3.1G	2.0G-4.0G		6.5								150	Si♦$	A367
105	DMF5079A	St-Sh	3.1G	2.0G-4.0G		6.0								150	Si♦$	A367
106	DMF5835	St-Sh	3.1G	2.0G-4.0G		6.5	1m							150	Si♦	M1137
107	DMF5835A	St-Sh	3.1G	2.0G-4.0G		6.0	1m							150	Si♦	M1137
108	DMF5846	St-Sh	3.1G	2.0G-4.0G		6.5	1m							150	Si♦	C228
109	DMF5846A	St-Sh	3.1G	2.0G-4.0G		6.0	1m							150	Si♦	C228
110	DMF5847	St-Sh	3.1G	2.0G-4.0G		6.5	1.m							150	Si♦	C238

SYMBOLS AND CODES EXPLAINED IN INTERPRETER

4. MICROWAVE MIXER DIODES

IN ORDER OF (1) TEST FREQ (OR AVG FREQ WHEN TEST FREQ NOT AVAILABLE) and (2) TYPE No.

LINE No.	[2] TYPE No.	BAND	[1] TEST FREQ. (Hz)	FREQUENCY RANGE MIN - MAX (Hz)	NOISE MAX RATIO NR times	NOISE MAX REC. NF (dB)	TEST COND. Pin (W)	TEST COND. RL (Ω)	TEST COND. FOR- Zm (Ω)	MAX. CONV. LOSS (dB)	MAX. VSWR	IF IMPEDANCE RANGE MIN - MAX (Ω)	ABSOLUTE MAX RATING BURN-OUT (Erg)	ABSOLUTE MAX RATING MAX. TEMP (°C)	DESCRIPTION MAT.	DESCRIPTION DWG. No.
1	DMF5847A	St-Sh	3.1G	2.0G-4.0G		6.0	1m							150	Si♦	C238
2	DMF5848	St-Sh	3.1G	2.0G-4.0G		6.5	1m							150	Si♦	C251
3	DMF5848A	St-Sh	3.1G	2.0G-4.0G		6.0	1m							150	Si♦	C251
4	DMF6426	St-Sh	3.1G	2.0G-4.0G		6.5								150	Si♦$	M907*
5	DMF6426A	St-Sh	3.1G	2.0G-4.0G		6.0								150	Si♦$	M907*
6	DMF6576	St-Sh	3.1G	2.0G-4.0G		6.5	1m							150	Si♦	C230
7	DMF6576A	St-Sh	3.1G	2.0G-4.0G		6.0	1m							150	Si♦	C230
8	DMF6829	St-Sh	3.1G	2.0G-4.0G		6.5	1m							150	Si♦	M1138
9	DMF6829A	St-Sh	3.1G	2.0G-4.0G		6.0	1m							150	Si♦	M1138
10	DMF6887	St-Sh	3.1G	2.0G-4.0G		7.0	1m	100			2.3	100-300		150	Si♦	A421
11	DMF6887A	St-Sh	3.1G	2.0G-4.0G		6.5	1m	100				100-300		150	Si♦	A421
12	DMF6887AM	St-Sh	3.1G	2.0G-4.0G		6.5	1m	100				100-300		150	Si♦	A421
13	DMF6887C	S	3.1G	2.0G-4.0G		5.5					1.7	100-300		150	Si♦$	F105aØ
14	DMF6887M	St-Sh	3.1G	2.0G-4.0G		7.0	1m	100			2.3	100-300		150	Si♦	A421
15	DMF6898	St-Sh	3.1G	2.0G-4.0G		7.0	1m	100						150	Si♦	M790b
16	DMF6898A	St-Sh	3.1G	2.0G-4.0G		6.5	1m	100						150	Si♦	M790b
17	DMF6898AM	St-Sh	3.1G	2.0G-4.0G		6.5	1m	100						150	Si♦	M790b
18	DMF6898M	St-Sh	3.1G	2.0G-4.0G		7.0	1m	100						150	Si♦	M790b
19	DMG6412A	St-Sh	3.1G	2.0G-4.0G		6.0								150	Si♦$	u28a
20	DMJ3086	St-Sh	3.1G	2.0G-4.0G		6.5	1m							150	Si♦	C239
21	DMJ3092	St-Sh	3.1G	2.0G-4.0G		6.5	1m							150	Si♦	M1137
22	DMJ3095	St-Sh	3.1G	2.0G-4.0G		6.5	1m							150	Si♦	C231
23	DMJ3098	St-Sh	3.1G	2.0G-4.0G		6.5	1m							150	Si♦	C229
24	DMJ3114	St-Sh	3.1G	2.0G-4.0G		6.5	1m							150	Si♦	C252
25	DMJ3117	St-Sh	3.1G	2.0G-4.0G		6.5	1m							150	Si♦	C254
26	DMJ3120	St-Sh	3.1G	2.0G-4.0G		6.5	1m							150	Si♦	C253
27	DMJ3153	St-Sh	3.1G	2.0G-4.0G		6.5	1m							150	Si♦	A424
28▼	DMJ3193	S	3.1G	2.0G-4.0G		6.5	1.0m				1.6	300-680		150	Si♦	W304
29	DMJ4007	St-Sh	3.1G	2.0G-4.0G		6.5								150	Si♦$	M491e*
30	DMJ4014	St-Sh	3.1G	2.0G-4.0G		6.5								150	Si♦$	M906*
31	DMJ4015	St-Sh	3.1G	2.0G-4.0G		6.5								150	Si♦$	M907*
32	DMJ4312	St-Sh	3.1G	2.0G-4.0G		6.5	1m							150	Si♦	M1141
33	DMJ4502	St-Sh	3.1G	2.0G-4.0G		6.5								150	Si♦$	M905*
34	DMJ4783	St-Sh	3.1G	2.0G-4.0G		6.5	1m							150	Si♦	C230
35	DMJ5034	St-Sh	3.1G	2.0G-4.0G		6.5								150	Si♦$	M557b
36	DMJ5099	St-Sh	3.1G	2.0G-4.0G		6.5	1m							150	Si♦	C240
37	DMJ6531	St-Sh	3.1G	2.0G-4.0G		6.5	1m							150	Si♦	C228
38	DMJ6575	St-Sh	3.1G	2.0G-4.0G		6.5	1m							150	Si♦	C251
39	DMJ6668	St-Sh	3.1G	2.0G-4.0G		6.5								150	Si♦$	M908*
40	DMJ6784	St-Sh	3.1G	2.0G-4.0G		6.5								150	Si♦$	M491b
41	DMJ6785	St-Sh	3.1G	2.0G-4.0G		6.5								150	Si♦$	A367
42	MA40423	L-C	3.1G	1.0G-6.0G		4.5								150S	Si♦	V13
43	BAV71	Ka	3486M	26G-40G	1.4	10				5.9Ø	1.8	900-1200	40m	150A	Si♦	F79
44	1N28J		4000M		2.7		1.0m			8.0				90S	Si	P3
45	SH5A	S	4000M	3.00G - 6.00G						8.0					Si	P3
46	DC1529	C	5.15G			6.0				5.0	1.6	175Ø	300 §	150	Si♦	u7dØ
47	MA40033	C	6000M			5.5					1.5	200-500	2.0 $	125	Si♦	A320Ø
48	MA40034	C	6000M			6.0					1.5	200-500	2.0 $	125	Si♦	A320Ø
49	MA40035	C	6000M			7.0					2.0	200-500	2.0 $	125	Si♦	A320Ø
50	MA40061	C	6000M							9.0	1.5			125A	♦#Ø	A320
51	MA40062	C	6000M							10	2.0			125A	♦#Ø	A320
52	MA40081	C	6000M							9.0	1.5			125A	♦#Ø	A320
53	MA40082	C	6000M							10	2.0			125A	♦#Ø	A320
54	DC1528	C	6150M	4.0G-8.0G	1.0	6.5				5.0	1.6	350Ø	500m$	150A	Si♦	u7dØ
55	1N150	C	6750M	6.00G - 7.00G	2.0	9.8	1.0m	100	400	6.0	1.5	250- 500	1.0	150A	SiØ	P3Ø
56	1N160	C	6750M	6.00G - 7.00G	2.7	11.4	1.0m	100	400	6.5		200- 500	1.0	150A	SiØ	P3Ø
57	JAN1N1132,R	S-X	6.75G	2.0G-12.4G		9.5	1.0m	100	150		2.0	100-200		70A	Si	P1cØ
58	DC1523	C	6750M	4.0G-8.0G	1.0	6.5				5.0	1.6	350Ø	500m$	150A	Si♦	u7dØ
59	MA419	C	6750M	6.00G - 7.00G	2.7	11.4	1.0m	100	400	6.5		200- 500	1.0	150A	SiØ	P3a§
60	MA419A	C	6750M	6.00G - 7.00G	2.0	9.8	1.0m	100	400	6.0	1.5	250- 500	1.0	150A	SiØ	P3a§
61	1N1132	S-X	7.5G	3.0G-12.4G		9.5	1.0m	100	150		2.0	100-200		70A	Si	P1cØ
62	D5632	S-X	7500M	2.0G-12.4G		9.0	1.0m	100			2.0	100- 200	1.0	150A	Si$Ø	P1cØ
63	D5632A	S-X	7500M	2.0G-12.4G		8.0	1.0m	100			2.0	100- 200	1.0	150A	Si$Ø	P1cØ
64	MA4623	X	8800M			15					2.0	50- 150		150A	Si	P1b
65	MA4623A	X	8800M			12					2.0	50- 150		150A	Si	P1b
66	1N2509	C	9000M	4.00G - 10.0G		10	1.0m	10			1.5	200- 450		150S	SiØ	F3b§
67	MA40006	X	9.3G	8.2G-12.4G		8.0		16			1.8	200-500	5.0	150A	Si♦	F107Ø
68	MA40007	X	9.3G	8.2G-12.4G		7.0		16			1.6	200-500	5.0	150A	Si♦	F107Ø
69	MA40008	X	9.3G	8.2G-12.4G		6.5		16			1.6	200-500	5.0	150A	Si♦	F107Ø
70	MA40009	X	9.3G	8.2G-12.4G		6.0		16			1.6	200-500	5.0	150A	Si♦	F107Ø
71	1N23B	X	9375M		2.7		1.0m	100	400	6.5		250- 550	1.0	150A	Si	P3Ø
72	1N23C		9375M	9.370G-9.380G	2.0	9.5	1.0m	100	400	6.0	1.5	325-475		150A	SiØ	P3Ø
73	1N23D	X	9375M		1.7	8.5	1.0m	100	400	5.0	1.3	350- 450	1.0	150A	Si	P3Ø
74	1N23E	X	9375M			7.5	1.0m	100	400	5.0	1.3	335- 465	1.0	150A	Si	P3Ø
75	1N23F	X	9375M			7.0	1.0m	100	400	5.0	1.3	335- 465	2.0	150A	Si	P3Ø
76	1N23G	X	9375M			6.5	1.0m	100	400		1.3	335- 465	2.0	150S	SiØ	DO22
77	1N23H	X	9375M			6.0	1.0m	100	400		1.3	335-465	5.0	150S	SiØ	DO22
78	JAN1N23WE,WEM,WEMR	X	9375M		1.4	7.5	1.0m	100	400	6.0	1.3	335-465		150A	Si	P3dØØ
79	JAN1N23WG,WGM,WGMR	X	9375M			6.5	1.0m	100	400	6.0	1.3	335-465		150A	Si	P3dØØ
80	1N149	X	9375M		1.5		1.0m	100	400	5.5	1.5	325- 475	1.0	150A	Si	P3Ø
81	1N263	X	9.375G	8.6G-9.6G	1.4	7.5			190	6.0	1.3	140-210	1.3	90A	Ge	P3aØ
82	JAN1N263	X	9375M		1.4	7.5	1.0m	100	190	6.0	1.3	140- 210		100A	Ge	P3a
83	1N415B	X	9375M		2.7		1.0m	100	400	6.5		250- 550	1.0	150A	Si	P3a§
84	1N415C	X	9375M		2.0	10	1.0m	100	400	6.0	1.5	325- 475	1.0	150A	Si	P3a§
85	1N415D	X	9375M		1.7	8.5	1.0m	100	400	5.0	1.3	350- 450	1.0	150A	Si	P3a§
86	1N415E	X	9375M			7.5	1.0m	100	400		1.3	335- 465	1.0	150A	Si	P3a§
87	1N415F	X	9375M			7.0	1.0m	100	400		1.3	335- 465	2.0	150S	SiØ	DO23
88	1N415G	X	9375M			6.5	1.0m	100	400		1.3	335- 465	2.0	150S	SiØ	DO23
89	1N415H	X	9375M			6.0	1.0m	100	400		1.3	335-465	5.0	150S	SiØ	DO23
90	1N832	X	9375M		2.0	10	1.0m	100	400	6.0				150A	Si	A196b
91	1N832A	X	9375M		2.0	8.5				6.0		350- 450			Si	DO7Ø
92	1N832B		9375M	4.00G - 10.0G		7.0	1.0m	100	400					150S	Si	DO7
93	JAN1N832B	X	9375M	8.20G - 12.4G	1.4	7.5	5.0m	100	400	6.0	1.3	335- 465		100A	Si	A1dd
94	1N832C		9375M	4.00G-12.0G		6.5								150S	Si	DO7
95	1N2802	X	9375M			7.5	1.0m	100	400		1.3			150A	Si	F3mØ
96	1N3745	X	9375M			9.5					1.5	325- 475			SiØ	P3
97	1N3746	X	9375M			8.5					1.3	335- 465			SiØ	P3
98	1N3747	X	9375M			7.5					1.3	335- 465			SiØ	P3
99	1N3747W	X	9375M	8.2G-12.4G		7.5	1.0m	100			1.3	335-465	5.0	150	Si$Ø	F99bØ
100	2BAS22	Ls-Ku	9.375G	1.0G-18.0G		5.7						200-400		150J	Si♦	F159
101	2BAS23	Ls-Ku	9.375G	1.0G-18.0G		5.7						200-400		150J	Si♦	F159
102	2BAS24	Ls-Ku	9.375G	1.0G-18.0G		5.7						200-400		150J	Si♦	F159
103	2BAS25	Ls-Ku	9.375G	1.0G-18.0G		5.7						200-400		150J	Si♦	F159
104♦	A2S014	X	9.375G	8.20G-12.4G		6.3†	1.0m	10			1.5	150-350		150	%♦	C224
105♦	A2S029	X	9.375G	8.20G-12.4G		6.0†	1.0m	10			1.5Ø	300Ø		150	Si♦	C224
106	A2S101	X	9.375G	8.20G-12.4G		6.0	1.0m	10			1.5	200-400		150A	Si♦	M790c
107	A2S103	X	9.375G	8.20G-12.4G		7.0	1.0m	10			2.0	200-400		150A	Si♦	M790c
108	A2S106	X	9.375G	8.20G-12.4G		6.0	1.0m	10			1.5	200-400		150A	Si♦	F105

SYMBOLS AND CODES EXPLAINED IN INTERPRETER

4. MICROWAVE MIXER DIODES

IN ORDER OF (1) TEST FREQ (OR AVG FREQ WHEN TEST FREQ NOT AVAILABLE) and (2) TYPE No.

LINE No.	[2] TYPE No.	BAND	[1] TEST FREQ. (Hz)	FREQUENCY RANGE MIN - MAX (Hz)	NOISE MAX RATIO NR times	NOISE MAX REC. NF (dB)	TEST COND. FOR- Pin (W)	RL (Ω)	Zm (Ω)	MAX. CONV. LOSS (dB)	MAX. VSWR	IF IMPEDANCE RANGE MIN - MAX (Ω)	ABSOLUTE MAX RATING BURN-OUT (Erg)	MAX. TEMP (°C)	DESCRIPTION MAT.	DWG. No.
1	A2S108	X	9.375G	8.20G-12.4G		7.0	1.0m	10			2.0	200-400		150A	Si♦	F105
2♦	A2S120	X	9.375G	8.20G-12.4G		6.0†	1.0m	10			1.5Ø	300Ø		150	Si♦	C210
3♦	A2S272	X	9.375G	8.20G-12.4G		8.5					1.5	150-350		150	%♦	M790d
4♦	A2S273	X	9.375G	8.20G-12.4G		9.0					2.0	150-350		150	%♦	M790d
5♦	A2S274	X	9.375G	8.20G-12.4G		8.5					1.5	150-350		150	%♦	F105
6♦	A2S275	X	9.375G	8.20G-12.4G		9.0					2.0	150-350		150	%♦	F105
7♦	A2S276	X	9.375G	8.20G-12.4G		8.0†					2.0Ø	150-350		150	%♦	C210
8	A2S611	X	9375M	8.20G-12.4G		6.0	1.0m	10			1.5	150-350		150	Si♦%	M790c
9	A2S612	X	9375M	8.20G-12.4G		6.5	1.0m	10			2.0	150-350		150	Si♦%	M790c
10	A2S613	X	9375M	8.20G-12.4G		7.0	1.0m	10			2.0	150-350		150	Si♦%	M790c
11	A2S621	X	9375M	8.20G-12.4G		6.0	1.0m	10			1.5	150-350		150	Si♦%	F105
12	A2S622	X	9375M	8.20G-12.4G		6.5	1.0m	10			2.0	150-350		150	Si♦%	F105
13	A2S623	X	9375M	8.20G-12.4G		7.0	1.0m	10			2.0	150-350		150	Si♦%	F105
14	A2S701	X	9.375G	8.20G-12.4G		6.0	1.0m	10			1.5	200-400	200m§	150A	Si%♦	M790c
15	A2S702	X	9.375G	8.20G-12.4G		6.5	1.0m	10			2.0	200-400	200m§	150A	Si%♦	M790c
16	A2S703	X	9.375G	8.20G-12.4G		7.0	1.0m	10			2.0	200-400	200m§	150A	Si%♦	M790c
17	A2S711	X	9.375G	8.20G-12.4G		6.0	1.0m	10			1.5	200-400	200m§	150A	Si%♦	F105
18	A2S713	X	9.375G	8.20G-12.4G		6.5	1.0m	10			2.0	200-400	200m§	150A	Si%♦	F105
19	A2S714	X	9.375G	8.20G-12.4G		7.0	1.0m	10			2.0	200-400	200m§	150A	Si%♦	F105
20♦	A2S740	UHF-Ka	9.375G	100M-40G		6.0	1.0m	10			1.5	200-500	200m§	150A	Si♦	W314
21♦	A2S741	UHF-Ka	9.375G	100M-40G		6.5	1.0m	10			2.0	200-500	200m§	150A	Si♦	W314
22♦	A2S742	UHF-Ka	9.375G	100M-40G		6.0	1.0m	10			1.5	200-500	200m§	150A	Si♦	W315
23♦	A2S743	UHF-Ka	9.375G	100M-40G		6.5	1.0m	10			2.0	200-500	200m§	150A	Si♦	W315
24♦	A2S744	UHF-Ka	9.375G	100M-40G		6.0	1.0m	10			1.5	200-500	200m§	150A	Si♦	W316
25♦	A2S745	UHF-Ka	9.375G	100M-40G		6.5	1.0m	10			2.0	200-500	200m§	150A	Si♦	W316
26♦	A2S783	UHF-Ka	9375M	100M-40G		5.7†								150A	Si	A329a
27	AA111A	X	9375M			7.5				6.0	1.5	300-560	50 §	100A	#$	F27au
28	AA112A	X	9375M			7.0				6.0		440-640	20 §	100A	#$	A344n
29	AA112B	X	9375M			7.0				6.0	1.8	440-640	20 §	100A	#$	A344n
30	AAY39	X	9.375G	1.0G-18G	1.1	6.5		15		4.2	1.43	250-450	1.0	150A	GeØ	F36b
31	AAY39A	X	9.375G	1.0G-18G	1.2	7.5		15		5.0	1.43	250-450	1.0	150A	GeØ	F36b
32	BAS22	Ls-Ku	9.375G	1.0G-18.0G		5.7						200-400		150J	Si♦	F159
33	BAS23	Ls-Ku	9.375G	1.0G-18.0G		5.7						200-400		150J	Si♦	F159
34	BAS24	Ls-Ku	9.375G	1.0G-18.0G		5.7						200-400		150J	Si♦	F159
35	BAS25	Ls-Ku	9.375G	1.0G-18.0G		5.7						200-400		150J	Si♦	F159
36	BAT10	X	9375M			7.5						250-500			Si♦	A381
37	BAT11	X	9375M	-12G		7.0						280-380	200m	150A	Si	u7c
38	BAT39	X	9.375G	1.0G-18G	1.1	6.5		15		4.2Ø	1.43	250-450	100m	100A	Si♦	F79Ø
39	BAT39A	X	9.375G	1.0G-18G	1.2	7.5		15		5.0	1.43	250-450	1.0	150A	Si♦	F36b
40	BAT50	X	9.375G	-12G	1.1	6.8		15		4.4Ø	1.43	300-500	200m	100A	Si♦	P2cØØ
41	BAV22	S-X	9375M	-12G		7.5		15			1.43	300-550	200m	100A	SiØ♦	P2cØØ
42	BAV96A	X	9375M	-12G		7.5					1.43	250-450	150m	150A	Si♦	F82
43	BAV96B	X	9375M	-12G		7.0					1.43	250-450	150m	150A	Si♦	F82
44	BAV96C	X	9375M	-12G		6.5					1.43	250-450	150m	150A	Si♦	F82
45	BAV96D	X	9375M	-12G		6.0					1.43	250-450	150m	150A	Si♦	F82
46	BAW95D	X	9375M	12G		8.2		15			1.3	250-500	200m	150A	Si♦	DO23§
47	BAW95E	X	9375M	12G		7.5		15			1.3	250-500	200m	150A	Si♦	DO23§
48	BAW95F	X	9375M	12G		7.0		15			1.3	250-500	200m	150A	Si♦	DO23§
49	BAW95G	X	9375M	-12G		6.5		15			1.3	250-500	200m	150A	Si♦	DO23§
50	C096509	X	9.375G			6.5†					1.5	200-450		150	Si♦	u3
51	C106009	X	9.375G			6.0					1.5	200-450		150	Si♦	F10p
52	C106509	X	9.375G			6.5					1.5	200-450		150	Si♦	F10p
53	C107009	X	9.375G			7.0					1.8	200-450		150	Si♦	F10p
54	C107509	X	9.375G			7.5					2.0	200-450		150	Si♦	F10p
55	C136009	X	9.375G			6.0					1.5	200-450		150	Si♦	F59b
56	C136509	X	9.375G			6.5					1.5	200-450		150	Si♦	F59b
57	C137009	X	9.375G			7.0					1.8	200-450		150	Si♦	F59b
58	C137509	X	9.375G			7.5					2.0	200-450		150	Si♦	F59b
59	C206009	X	9.375G			6.0					1.5	200-450		150	Si♦	F107
60	C206509	X	9.375G			6.5					1.5	200-450		150	Si♦	F107
61	C207009	X	9.375G			7.0					1.8	200-450		150	Si♦	F107
62	C207509	X	9.375G			7.5					2.0	200-450		150	Si♦	F107
63	C216509	X	9.375G			6.5†					1.5	200-450		150	Si♦	M913
64	CS9B	X	9375M	8.2G-12.4G		10					1.5	350Ø		100A	SiØ	P2fØ
65	CS9BR	X	9.375G	8.2G-12.4G		10.0					1.5	350Ø		100A	SiØ	P2fØ
66	CS10B	X	9375M	8.2G-12.4G		8.5					1.5	350Ø		100A	SiØ	P2fØ
67	CS10BR	X	9.375G	8.2G-12.4G		8.5					1.5	350Ø		100A	SiØ	P2fØ
68	CV1844	X	9375M	8.2G-12.4G		10					2.0	400Ø		100A	SiØ	P2e
69	CV2154	S-X	9375M	2.0G-12.4G		10					1.5	350Ø		100A	SiØ	P2f
70	CV2155	S-X	9375M	2.0G-12.4G		10					1.5	350Ø		100A	SiØ	P2f
71	CV7108	S-X	9375M	2.0G-12.4G		8.5					1.5	350Ø		100A	SiØ	P2f
72	CV7109	S-X	9375M	2.0G-12.4G		8.5					1.5	350Ø		100A	SiØ	P2f
73	CV7377	X	9375M	8.2G-12.4G		8.5	500u				1.5	350Ø		100A	Si♦	P2f
74	CV7378	X	9375M	8.2G-12.4G		8.5	500u				1.5	350Ø		100A	Si♦	P2f
75	CV8163	X	9375M	8.2G-12.4G		8.5					1.5	350Ø		100A	Si♦	P2f
76	CV8164	X	9375M	8.2G-12.4G		8.5					1.5	350Ø		100A	Si♦	P2f
77	D405	X	9375M							7.0	2.0	250-550	20 §	100A	Ø	F99a
78	D5092AM	X	9375M			7.5	1.0m					250-550	2.0	150		F148
79	D5092BM	X	9375M			7.0	1.0m					250-550	2.0	150		F148
80	D5092M	X	9375M			9.5	1.0m					250-550	2.0	150		F148
81	D5223CM	X	9375M			9.5	1.0m				2.3	250-500	2.0	150		F146
82	D5223EM	X	9375M			7.5	1.0m				1.8	250-500	2.0	150		F146
83	D5223F	X	9375M	8.0G-12.4G		7.0	1.0m	100			1.6	250-500	2.0	150	Si$Ø	F85Ø
84	D5223FM	X	9375M			7.0	1.0m				1.6	250-550	2.0	150	F	F146
85	D5223FM#	X	9375M			7.0	1.0m				1.6	250-550	2.0	150		F146
86	D5223G	X	9375M	8.0G-12.4G		6.5	1.0m	100			1.5	250-500	2.0	150	SiØ$	F85Ø
87	D5392	X	9375M	8.2G-12.4G		8.5	1.0m	100				200-350	2.0	150A	Si$Ø	P1bØ
88	D5392A	X	9375M	8.2G-12.4G		7.5	1.0m	100			1.8	200- 350	2.0	150A	Si$Ø	P1bØ
89	D5392AM	X	9375M			7.5	1.0m				1.8	200-350	2.0	150		M1093
90	D5392AMR	X	9375M			7.5	1.0m				1.8	200-350	2.0	150		M1093
91	D5392B	X	9375M	8.2G-12.4G		7.0	1.0m	100			1.7	200- 350	2.0	150A	Si$Ø	P1bØ
92	D5392BM	X	9375M			7.0	1.0m				1.7	200-350	2.0	150		M1093
93	D5392BMR	X	9375M			7.0	1.0m				1.7	200-350	2.0	150		M1093
94	D5392M	X	9375M			8.5	1.0m					200-350	2.0	150		M1093
95	D5392MR	X	9375M			8.5	1.0m					200-350	2.0	150		M1093
96	D5818	X	9375M	8.2G-12.4G		7.0	1.0m	100						150	Si♦$	M577
97	D5818A	X	9375M	8.2G-12.4G		6.5	1.0m	100						150	Si♦$	M577
98	D5827	X	9375M	8.2G-12.4G		7.0	1.0m	100						150	Si♦$	M491b
99	D5827A	X	9375M	8.2G-12.4G		6.5	1.0m	100						150	Si♦$	M491b
100	D5828	X	9375M	8.2G-12.4G		7.0	1.0m	100						150	Si♦$	M491d
101	D5828A	X	9375M	8.2G-12.4G		6.5	1.0m	100						150	Si♦$	M491d
102	D5829	X	9375M	8.2G-12.4G		7.0	1.0m	100						150	Si♦$	M491e*
103	D5829A	X	9375M	8.2G-12.4G		6.5	1.0m	100						150	Si♦$	M491e*
104	DC1301	X	9375M	8.2G-12.4G	1.0	6.0				4.5	2.0	400Ø	250m$	150A	GA♦	u7dØ
105	DC1301C	X	9375M	8.2G-12.4G	1.0	5.5				4.0	2.0	400Ø	250m$	150A	GA♦	u7dØ
106	DC1302	X	9375M	8.2G-12.4G	1.0	6.0				4.5	1.5	500Ø	250m$	150A	GA♦	P3Ø
107	DC1304	X	9375M	8.2G-12.4G	1.0	6.0				4.5	2.0	500Ø	250m$	150A	GA♦	F51cØ
108	DC1304/3	X	9375M	8.2G-12.4G	1.0	5.8				4.0	1.5	500Ø	250m$	150A	GA♦	F51cØ
109	DC1304C	X	9375M	8.2G-12.4G	1.0	5.5				4.0	1.5	500Ø	250m$	150A	GA♦	F51cØ
110	DC1330	X	9375M	8.2G-12.4G	1.0	6.0				4.5	2.0	400Ø	250m$	150A	GA♦	P2fØ

SYMBOLS AND CODES EXPLAINED IN INTERPRETER

4. MICROWAVE MIXER DIODES

IN ORDER OF (1) TEST FREQ (OR AVG FREQ WHEN TEST FREQ NOT AVAILABLE) and (2) TYPE No.

LINE No.	[2] TYPE No.	BAND	[1] TEST FREQ. (Hz)	FREQUENCY RANGE MIN - MAX (Hz)	NOISE MAX RATIO NR times	NOISE MAX REC. NF (dB)	TEST COND. Pin (W)	TEST COND. RL (Ω)	TEST COND. Zm (Ω)	MAX. CONV. LOSS (dB)	MAX. VSWR	IF IMPEDANCE RANGE MIN - MAX (Ω)	ABSOLUTE MAX RATING BURN-OUT (Erg)	ABSOLUTE MAX RATING MAX. TEMP (°C)	DESCRIPTION MAT.	DESCRIPTION DWG. No.
1	DC1331	X	9.375G			8.0					2.5	400		150	GA	F146
2	DC1332	X	9375M	8.2G-12.4G	1.0	6.0				4.5	2.0	400Ø	250m$	150A	GA♦	A316Ø
3	DC1333	X	9375M	8.2G-12.4G	1.0	6.0	1.0m	100		4.5	2.0	400Ø	250m$	150A	GA♦	A317bØ
4	DC1501E	X	9375M	8.2G-12.4G	1.0	7.5				6.0	2.0	450Ø	500m$	150A	Si♦	F51cØ
5	DC1501F	X	9375M	8.2G-12.4G	1.0	7.0				5.5	2.0	450Ø	500m$	150A	Si♦	F51cØ
6	DC1501G	X	9375M	8.2G-12.4G	1.0	6.5				5.0	2.0	450Ø	500m$	150A	Si♦	F51cØ
7	DC1502E	X	9375M	8.2G-12.4G	1.0	7.5				6.0	1.5	450Ø	500m$	150A	Si♦	P2fØ
8	DC1502F	X	9375M	8.2G-12.4G	1.0	7.0				5.5	1.5	450Ø	500m$	150A	Si♦	P2fØ
9	DC1504E	X	9375M	8.2G-12.4G	1.0	7.5				6.0	1.5	450Ø	500m$	150A	Si♦	P3Ø
10	DC1504F	X	9375M	8.2G-12.4G	1.0	7.0				5.5	1.5	450Ø	500m$	150A	Si♦	P3Ø
11	DC1506E	X	9375M	8.2G-12.4G	1.0	7.5				6.0	2.0	300Ø	500m$	150A	Si♦	u7dØ
12	DC1506F	X	9375M	8.2G-12.4G	1.0	7.0				5.5	2.0	300Ø	500m$	150A	Si♦	u7dØ
13	DC1506G	X	9375M	8.2G-12.4G	1.0	6.5				5.0	2.0	300Ø	500m$	150A	Si♦	u7dØ
14	DC1518	X	9375M	8.2G-12.4G	1.0	7.5				6.0	2.0	450Ø	500m$	150A	Si♦	P2eØ
15	DC1533E	X	9375M	8.2G-12.4G	1.0	7.5				6.0	2.0	350Ø	500m$	150A	Si♦	A316Ø
16	DC1533F	X	9375M	8.2G-12.4G	1.0	7.0				5.5	2.0	350Ø	500m$	150A	Si♦	A316Ø
17	DC1533G	X	9375M	8.2G-12.4G	1.0	6.5				5.0	2.0	350Ø	500m$	150A	Si♦	A316Ø
18	DC1534E	X	9375M	8.2G-12.4G	1.0	7.5				6.0	2.0	350Ø	500m$	150A	Si♦	A317bØ
19	DC1534F	X	9375M	8.2G-12.4G	1.0	7.0				5.5	2.0	350Ø	500m$	150A	Si♦	A317bØ
20	DC1536F	X	9.375G	8.2G-12.4G		7.0				5.5	2.5	450Ø	300 §	150	Si♦	u7dØ
21	DC1536G	X	9.375G	8.2G-12.4G		6.5				5.0	2.5	450Ø	300 §	150	Si♦	
22	DC1590/1	X	9.375G	8.2G-12.4G		9.0					2.5	400Ø		100	Si♦	P3Ø
23	DC1590/2	X	9.375G	8.2G-12.4G		9.0					2.5	400Ø		100	Si♦	P3Ø
24	DC1590/3	X	9.375G	8.2G-12.4G		9.0					2.5	400Ø		100	Si♦	P3Ø
25	DC1591	X	9.375G	8.2G-12.4G		9.0						400Ø		100	Si♦	A316Ø
26	DC1593	X	9.375G	8.2G-12.4G		9.0						400Ø		100	Si♦	F51cØ
27	DC1595	X	9.375G	8.2G-12.4G		9.0						400Ø		100	Si♦	P2fØ
28	DC1596	X	9.375G	8.2G-12.4G		9.0						400Ø		100	Si♦	u7dØ
29	DDB6224	X	9375M			7.5	1.0m	100						150	Si♦$	DO23
30♦	DMA6497	X	9375M	8.0G-12.4G		7.5	1.0m	22			1.3	335-465	20 §	150A	Si♦$	F147
31♦	DMA6497A	X	9375M	8.0G-12.4G		7.0	1.0m	22			1.3	335-465	20 §	150A	Si♦$	F147
32♦	DMA6497AM	X	9375M	8.0G-12.4G		7.0	1.0m	22			1.3	335-465	20 §	150		F147
33♦	DMA6497AMR	X	9375M	8.0G-12.4G		7.0	1.0m	22			1.3	335-465	20 §	150		F147
34♦	DMA6497AR	X	9375M	8.0G-12.4G		7.0	1m	22				335-465	20 §	150	SiØ	F147
35♦	DMA6497B	X	9375M	8.0G-12.4G		6.5	1.0m	22			1.3	335-465	20 §	150A	Si$Ø	F99
36♦	DMA6497BM	X	9375M	8.0G-12.4G		6.5	1.0m	22			1.3	335-465	20 §	150		F147
37♦	DMA6497BMR	X	9375M	8.0G-12.4G		6.5	1.0m	22			1.3	335-465	20 §	150		F147
38♦	DMA6497BR	X	9375M	8.0G-12.4G		6.5	1m	22			1.3	335-465	20 §	150	SiØ	F147
39♦	DMA6497C	X	9375M	8.0G-12.4G		6.0	1.0m	22			1.3	335-465	20 §	150	Si$	F99Ø
40♦	DMA6497CM	X	9375M	8.0G-12.4G		6.0	1.0m	22			1.3	335-465	20 §	150		F147
41♦	DMA6497CMR	X	9375M	8.0G-12.4G		6.0	1.0m	22			1.3	335-465	20 §	150		F147
42♦	DMA6497CR	X	9375M	8.0G-12.4G		6.0	1m	22			1.3	335-465	20 §	150	SiØ	F147
43♦	DMA6497M	X	9375M	8.0G-12.4G		7.5	1.0m	22			1.3	335-465	20 §	150		F147
44♦	DMA6497MR	X	9375M	8.0G-12.4G		7.5	1.0m	22			1.3	335-465	20 §	150		F147
45♦	DMA6497R	X	9375M	8.0G-12.4G		7.5	1m	22				335-465	20 §	150	SiØ	F147
46♦	DMA6498A	X	9375M	8.0G-12.4G		7.0	1.0m	22			1.3	335-465	20 §	150A	Si♦$	DO23Ø
47♦	DMA6498AM	X	9375M	8.0G-12.4G		7.0	1.0m	22			1.3	335-465	20 §	150		F147
48♦	DMA6498AMR	X	9375M	8.0G-12.4G		7.0	1.0m	22			1.3	335-465	20 §	150		F147
49♦	DMA6498C	X	9375M	8.0G-12.4G		6.0	1.0m	22			1.3	335-465	20 §	150	Si$	F99Ø
50♦	DMA6498CM	X	9375M	8.0G-12.4G		6.0	1.0m	22			1.3	335-465	20 §	150		F147
51♦	DMA6498CMR	X	9375M	8.0G-12.4G		6.0	1.0m	22			1.3	335-465	20 §	150		F147
52	DMF6106	X	9375M			7.0	1.0m	100			1.6	200-500		150	Si♦$	F85
53	DMF6106A	X	9375M			6.5	1.0m	100			1.6	200-500		150	Si♦$	F85
54♦	DMF6106AM	X	9375M	8.2G-12.4G		6.5	1.0m				1.6	200-500		150	♦	A421§
55	DMF6106B	X	9375M			6.0	1.0m	100			1.6	200-500		150	Si♦$	F85
56♦	DMF6106CM	X	9375M	8.2G-12.4G		5.5	1.0m				1.6	200-500		150	♦	A421§
57♦	DMF6106M	X	9375M	8.2G-12.4G		7.0	1.0m				1.6	200-500		150	♦	A421§
58	DMF6130	Xr-Kp	9375M			7.0	1.0m	100			1.6	200-500		150	Si♦$	F85
59	DMF6130A	X	9375M			6.5	1.0m	100			1.6	200-500		150	Si♦$	A1am
60	DMF6130B	X	9375M			6.0	1.0m	100			1.6	200-500		150	Si♦$	A1am
61	DMG6413	X	9375M			7.5	1.0m	100						150	Si♦$	
62	HP5082-2200	L-Ku	9.375G	1.0G-18G		6.0	1.0m	10			1.5	200-400		150J	Si♦	A345
63	HP5082-2201	L-Ku	9.375G	1.0G-18G		6.0	1.0m	10			1.5	200-400		150J	Si♦	A345$
64	HP5082-2202	L-Ku	9.375G	1.0G-18G		6.5	1.0m	10			2.0	200-400		150J	Si♦	A345
65	HP5082-2203	L-Ku	9.375G	1.0G-18G		6.5	1.0m	10			2.0	200-400		150J	Si♦	A345$
66	HP5082-2207	L-Ku	9.375G	1.0G-18G		6.0	1.0m	10			1.5	250-500		125J	Si♦	A332
67	HP5082-2208	L-Ku	9.375G	1.0G-18G		6.0	1.0m	10			1.5	250-500		125J	Si♦	A332$
68	HP5082-2209	L-Ku	9.375G	1.0G-18G		6.5	1.0m	10			2.0	250-500		125J	Si♦	A332
69	HP5082-2210	L-Ku	9.375G	1.0G-18G		6.5	1.0m	10			2.0	250-500		125J	Si♦	A332$
70	HP5082-2295	X	9.375G			6.0	1.0m				1.5	100-250	1.0 $	150J	Si#♦	F82
71	HP5082-2297	X	9.375G			6.5	1.0m				2.0	100-250	1.0 $	150J	Si#♦	F82
72	HP5082-2701	X	9375M	6.0G-12.0G		6.0	1.0m	1.0			1.5	200-400	1.0 $	150J	Si#♦	M277eØ
73	HP5082-2702	X	9375M	6.0G-12.0G		6.5	1.0m	1.0			2.0	200-400	1.0 $	150J	Si#♦	M277eØ
74	HP5082-2711	X	9375M	6.0G-12.0G		6.5	1.0m	1.0			2.0	200-400	1.0 $	150J	Si#♦	F82Ø
75	HP5082-2713	X	9375M	6.0G-12.0G		6.0	1.0m	1.0			1.5	200-400	1.0 $	150J	Si#♦	F82Ø
76	HP5082-2765	X	9.375G	1.0G-12G		6.0	1.0m	10			1.5	100-250		150J	Si♦	A345
77	HP5082-2766	X	9.375G	1.0G-12G		6.0	1.0m	10			1.5	100-250		150J	Si♦	A345$
78	HP5082-2774	L-Ku	9.375G	1.0G-18G		6.0	1.0m	10			1.5	200-400		125J	Si♦	A332
79	HP5082-2775	L-Ku	9.375G	1.0G-18G		6.0	1.0m	10			1.5	200-400		125J	Si♦	A332$
80	HP5082-2785	X	9.375G	1.0G-12G		6.5	1.0m	10			2.0	100-250		150J	Si♦	A345
81	HP5082-2786	X	9.375G	1.0G-12G		6.5	1.0m	10			2.0	100-250		150J	Si♦	A345$
82	HP5082-2794	L-Ku	9.375G	1.0G-18G		6.5	1.0m	10			2.0	200-400		125J	Si♦	A332
83	HP5082-2795	L-Ku	9.375G	1.0G-18G		6.5	1.0m	10			2.0	200-400		125J	Si♦	A332$
84	HSCH-5319	Ku Band	9.375G	1.0G-18.0G		6.2		0.0				200-400		175	♦	M1128
85	HSCH-5338	Ku Band	9.375G	1.0G-18.0G		6.2		0.0				200-400		175	♦	M1128
86	HSCH-5339	Ku Band	9.375G	1.0G-18.0G		6.2		0.0				200-400		175	♦	M1128
87	MA4E180	X	9.375G			6.0					1.5	250-450		150S	Si#$	F82
88	MA4E181	X	9.375G			6.5					1.5	250-450		150S	Si#$	F82
89	MA4E182	X	9.375G			7.0					2.0	250-450		150S	Si#$	F82
90	MA4E183	X	9.375G			6.5					1.5	250-450		150S	Si#$	A1uuØ
91	MA4E184	X	9.375G			7.0					2.0	250-450		150S	Si#$	A1uuØ
92	MA4E185	X	9.375G			6.0					1.5	250-450		150S	Si#$	M790Ø
93	MA4E186	X	9.375G			6.5					1.5	250-450		150S	Si#$	M790Ø
94	MA4E187	X	9.375G			7.0					2.0	250-450		150S	Si#$	M790Ø
95	MA414	X	9375M		1.5		1.0m	100	400	5.5	1.5	325- 475		150A	SiØ	P3Ø
96	MA423A	X	9375M	4.00G - 10.0G		7.0	1.0m	100	400		1.3	335- 465		150A	Si	P3Ø
97	MA451A	X	9375M		2.7					8.0					Si	P3Ø
98	MA451B	X	9375M		2.7					6.5					Si	P3Ø
99	MA451C	X	9375M		2.0	10				6.0	1.5	325- 475			Si	P3Ø
100	MA451D	X	9375M		1.7	8.5				5.0	1.3	350- 450			Si	P3Ø
101	MA451E	X	9375M			7.5					1.3	335- 465			Si	P3Ø
102	MA451F	X	9375M			7.0					1.3	335- 465			Si	P3Ø
103	MA458B	X	9375M		2.7		1.0m	100	400	6.5				150A	SiØ	P3a§
104	MA458C	X	9375M		2.0	10	1.0m	100	400	6.0	1.5	325- 475		150A	SiØ	P3a§
105	MA458D	X	9375M		1.7	8.5	1.0m	100	400	5.0	1.3	350- 450		150A	SiØ	P3a§
106	MA458E	X	9375M		1.4	7.5				6.0	1.3	335- 465	2.0		Si	P3a
107	MA458F	X	9375M			7.0	1.0m	100	400		1.3	335- 465		150A	SiØ	P3a§
108	MA492C	X	9375M			9.5					1.7	250-450	2.0	150	SiØ	P1dØ
109	MA492D	X	9375M			8.5	1.0m	100	400		1.7	250-450	2.0	150	SiØ	P1dØ
110	MA492E	X	9375M			7.5	1.0m	100	400		1.3	250-450	2.0	150	SiØ	P1dØ

4. MICROWAVE MIXER DIODES

IN ORDER OF (1) TEST FREQ (OR AVG FREQ WHEN TEST FREQ NOT AVAILABLE) and (2) TYPE No.

LINE No.	[2] TYPE No.	BAND	[1] TEST FREQ. (Hz)	FREQUENCY RANGE MIN - MAX (Hz)	NOISE MAX RATIO NR times	NOISE MAX REC. NF (dB)	TEST COND. Pin (W)	TEST COND. RL (Ω)	TEST COND. FOR- Zm (Ω)	MAX. CONV. LOSS (dB)	MAX. VSWR	IF IMPEDANCE RANGE MIN - MAX (Ω)	ABSOLUTE MAX RATING BURN-OUT (Erg)	ABSOLUTE MAX RATING MAX. TEMP (°C)	DESCRIPTION MAT.	DESCRIPTION DWG. No.
1	MA492F	X	9375M			7.0	1.0m	100	400		1.3	250-450	2.0	150	Si⊠	P1dØ
2	MA492G	X	9375M			6.5					1.7	250-450	2.0		⊠	P1d
3	MA4101	S-X	9.375G	3.0G-12.4G		8.5	1.0m	100	150		2.0	100-200		70	Si	P1c
4	MA4125	X	9375M	8.00G - 12.0G	20	23	1.0m	100	400	6.0	1.5	300- 600		150A	Si⊠	P3Ø
5	MA4125A	X	9375M	8.00G - 12.0G	10	20	1.0m	100	400	6.0	1.5	300- 600		150A	Si⊠	P3Ø
6	MA4130	X	9375M	8.00G - 12.0G	20	23	1.0m	100	400	6.0	1.5	300- 600		150A	Si⊠	P3a§
7	MA4130A	X	9375M	8.00G - 12.0G	10	20	1.0m	100	400	6.0	1.5	300- 600		150A	Si⊠	P3a§
8	MA4133	X	9375M		2.0	10	1.0m	100	400	6.0		325- 475	5.0	150A	Si	P3
9	MA4173	X	9375M			7.5					1.5	335- 465			Si	DO7Ø
10	MA4174	X	9375M		1.4	7.5				6.0	1.3	335- 465			Si	P3a
11	MA4400	S-X	9.375G	3.0G-12.4G		9.5	1.0m	100	150		2.0	100-200		100	Si	P1c
12	MA4400A	S-X	9.375G	3.0G-12.4G		8.5	1.0m	100	150		2.0	100-200		100	Si	P1c
13	MA40071-I	X	9375M		1.4	5.5	1.0	100	400	4.5	1.5	325-475	10	150A	♦⊠	P3aØ
14	MA40071D	X	9375M		1.5	8.0	1.0	100	400	6.5	1.5	335-465	10	150A	♦⊠	P3aØ
15	MA40071E	X	9375M		1.4	7.5	1.0	100	400	6.0	2.0	300-500	10	150A	♦⊠	P3aØ
16	MA40071F	X	9375M		1.4	7.0	1.0	100	400	6.0	1.5	325-475	10	150A	♦⊠	P3aØ
17	MA40071G	X	9375M		1.4	6.5	1.0	100	400	5.5	1.5	325-475	10	150A	♦⊠	P3aØ
18	MA40071H	X	9375M		1.4	6.0	1.0	100	400	5.0	1.5	325-475	10	150A	♦⊠	P3aØ
19	MA40100	L-X	9375M			6.0					1.5	250-450		150A	♦	F82Ø
20	MA40101	L-X	9375M			6.5					1.5	250-450		150A	♦	F82Ø
21	MA40102	L-X	9375M			7.0					2.0	250-450		150A	♦	F82Ø
22	MA40103	L-X	9375M			6.5					1.5	250-450		150A	♦	A1uuØ
23	MA40104	L-X	9375M			7.0					2.0	250-450		150A	♦	A1uuØ
24	MA40105	L-X	9375M			6.0					1.5	250-450		150A	♦	M790Ø
25	MA40106	L-X	9375M			6.5					1.5	250-450		150A	♦	M790Ø
26	MA40107	L-X	9375M			7.0					2.0	250-450		150A	♦	M790Ø
27	MA40120	X	9375M			6.5								150A	♦	M788Ø
28	MA40121	X	9375M			6.5								150A	♦	M789Ø
29	MA40122	X	9375M			6.5								150A	♦	M791Ø
30	MA40123	X	9375M			6.5	1.0m						2.0 $	150A	Si♦	M912Ø
31	MA40124	X	9375M			6.5	1.0m						2.0 $	150A	Si♦	M912Ø
32	MA40126	X	9375M			6.5	1.0m						2.0 $	150A	Si♦	M913Ø
33	MA40127	X	9375M			6.5	1.0m						2.0 $	150A	Si♦	M913Ø
34	MA40128	X	9375M			7.0	1.0m						2.0 $	150A	Si♦	M913Ø
35	MA40140	X	9375M			6.5	1.0m						2.0 $	150A	Si♦	u14Ø
36	MA40150	X	9375M			6.0						250-450			♦	F85
37	MA40151	X	9375M			6.5						250-450			♦	F85
38	MA40152	X	9375M			7.0						250-450			♦	F85
39	MA40153	X	9375M			6.5						250-450			♦	A1ac
40	MA40154	X	9375M			7.0						250-450			♦	A1ac
41	MA40155	X	9375M			6.0						250-450			♦	M790
42	MA40156	X	9375M			6.5						250-450			♦	M790
43	MA40157	X	9375M			7.0						250-450			♦	M790
44	MA40170	X	9375M			6.5									♦	u14
45	MA40171	X	9375M			6.5	1.0m						2.0 $	150A	Si♦	M789Ø
46	MA40172	X	9375M			6.5									♦	M791
47	MA40173	X	9375M			6.5	1.0m						2.0 $	150A	Si♦	M912Ø
48	MA40174	X	9375M			6.5	1.0m						2.0 $	150A	Si♦	M912Ø
49	MA40176	X	9375M			6.0	1.0m						2.0 $	150A	Si♦	M913Ø
50	MA40177	X	9375M			6.5	1.0m						2.0 $	150A	Si♦	M913Ø
51	MA40178	X	9375M			7.0	1.0m						2.0 $	150A	Si♦	M913Ø
52	MA41202C		9375M			9.8		100		6.5Ø	1.5	335-465	10 §	150A	⊠	P3a
53	MA41202D		9375M			8.2		100		6.0Ø	1.5	335-465	10 §	150A	⊠	P3a
54	MA41202E	X	9375M			7.5	1.0m	100	400	5.0Ø	1.3	335-465	20 $	150A	Si⊠	P3dØ
55	MA41202F	X	9375M			7.0	1.0m	100	400	5.0Ø	1.3	335-465	20 $	150A	Si⊠	P3dØ
56	MA41202G	X	9375M			6.5					1.3	335-465	20 $		⊠	F3a
57	MA41220C	X	9375M	8.2G-12.4G		9.0	1.0m				2.0	250-500	2.0 $	150	Si⊠	F107Ø
58	MA41220E	X	9375M	8.2G-12.4G		7.5	1.0m				1.8	250-500	2.0 $	150	Si⊠	F107Ø
59	MA41220F	X	9375M	8.2G-12.4G		7.0	1.0m				1.6	250-500	2.0 $	150	Si⊠	F107Ø
60	MA41220G	X	9375M	8.2G-12.4G		6.5	1.0m				1.5	250-500	2.0 $	150	Si⊠	F107Ø
61	MA41505	X	9375M	8.2G-12.4G		9.5		100		7.0Ø		200-400	5.0 $	150	Si⊠	A1adØ
62	MA41506	X	9375M	8.2G-12.4G		7.5		100		6.0Ø		200-400	5.0 $	150	Si⊠	A1adØ
63	MA41507	X	9375M	8.2G-12.4G		7.0		100		5.0Ø		200-400	5.0 $	150	Si⊠	A1adØ
64	MA41508	X	9375M	8.2G-12.4G		6.5		100		4.5Ø		200-400	5.0 $	150	Si⊠	A1adØ
65	MA41509	X	9375M	8.2G-12.4G		6.0		100		4.0Ø		200-400	5.0 $	150	Si⊠	A1adØ
66	MA41807	X	9375M			14						250Ø		150S		F49
67	MA41808	X	9375M			12						250Ø		150S		F49
68	MA41816	Ku	9375M			10	100u	10		7.0Ø	2.0	300Ø	500m§	150A	Ge	F126†
69	MD189	X	9375M			6.0	7.0m				1.5	130-230	10	150S	Si	F27am
70	MD189F	X	9375M			6.0	7.0m				1.5	130-230	10	150S	Si	F82
71	MD190	X	9375M			6.5	7.0m				1.5	130-230	10	150S	Si	F27am
72	MD190F	X	9375M			6.5	7.0m				1.5	130-230	10	150S	Si	F82
73	MD191	X	9375M			7.0	7.0m				1.5	130-230	10	150S	Si	F27am
74	MD191F	X	9375M			7.0	7.0m				1.5	130-230	10	150S	Si	F82
75	P0223H	X	9375M			6.0					1.3	335-465	2.0		⊠	P3dØ
76	P0804	X	9375M			9.5					2.3	300-600			♦	A1vd
77	P0804A	X	9375M			7.5					2.0	300-600			♦	A1vd
78	P0804B	X	9375M			7.0					1.6	300-600			♦	A1vd
79	P0804C	X	9375M			6.5					1.6	300-600			♦	A1vd
80	P0892	X	9375M			9.5						250-550			⊠	A1vdØ
81	P0892A	X	9375M			7.5						250-550	2.0		⊠	A1vdØ
82	P0892B	X	9375M			7.0						250-550	2.0		⊠	A1vdØ
83	P1906	X	9375M			8.5					2.3	300-600			♦	F85
84	P1906A	X	9375M			7.5					2.0	300-600			♦	F85
85	P1906B	X	9375M			7.0					1.6	300-600			♦	F85
86	P1906C	X	9375M			6.5					1.6	300-600			♦	F85
87	P1923C	X	9375M			9.5					2.3	250-550	2.0		⊠	F85Ø
88	P1923E	X	9375M			7.5					1.8	250-500	2.0		⊠	F85Ø
89	P1923F	X	9375M			7.0					1.6	250-500	2.0		⊠	F85Ø
90	P1923G	X	9375M			6.5					1.5	250-500	2.0		⊠	F85Ø
91	P4215H	X	9375M			6.0					1.3	335-465	2.0		⊠	F88Ø
92	P4280	X	9375M			7.5					1.3	335-465			♦	F88
93	P4280A	X	9375M			7.0					1.3	335-465			♦	F88
94	P4280B	X	9375M			6.5					1.3	335-465			♦	F88
95	P7892	X	9375M		1.7	8.5						200-350	2.0		⊠	P1bØ
96	P7892A	X	9375M			7.5					1.3	335-465	2.0		⊠	P1bØ
97	P7892B	X	9375M			7.0					1.7	200-350	2.0		⊠	P1bØ
98	PFM190	X	9375M			6.5					1.6	200-500	10		GA♦	F82
99	PFM191	X	9375M			6.0					1.6	200-500	10		GA♦	F82
100	PFM192	X	9375M			5.5					1.6	200-500	10		GA♦	F82
101	PFM200	X	9375M			6.5					1.6	200-500	10		GA♦	P3d
102	PFM201	X	9375M			6.0					1.6	200-500	10		GA♦	P3d
103	PFM202	X	9375M			5.5					1.6	200-500	10		GA♦	P3d
104	PFM420	X	9375M			6.5					1.6	200-500	10		GA♦	F3s
105	PFM421	X	9375M			6.0					1.6	200-500	10		GA♦	F3s
106	PFM422	X	9375M			5.5					1.6	200-500	10		GA♦	F3s
107	PFM800	X	9375M			6.5					1.6	200-500	10		GA♦	A1vd
108	PFM801	X	9375M			6.0					1.6	200-500	10		GA♦	A1vd
109	PFM802	X	9375M			5.5					1.6	200-500	10		GA♦	A1vd
110	PK0606	X	9375M	8.20G - 12.4G		10	1.0m	100	400		1.5	150- 450	10	150A	Si♦	DO7Ø

SYMBOLS AND CODES EXPLAINED IN INTERPRETER

4. MICROWAVE MIXER DIODES

IN ORDER OF (1) TEST FREQ (OR AVG FREQ WHEN TEST FREQ NOT AVAILABLE) and (2) TYPE No.

LINE No.	[2] TYPE No.	BAND	[1] TEST FREQ. (Hz)	FREQUENCY RANGE MIN - MAX (Hz)	NOISE MAX RATIO NR times	NOISE MAX REC. NF (dB)	TEST COND. Pin (W)	TEST COND. RL (Ω)	TEST COND. Zm (Ω)	FOR- MAX. CONV. LOSS (dB)	MAX. VSWR	IF IMPEDANCE RANGE MIN - MAX (Ω)	ABSOLUTE MAX RATING BURN-OUT (Erg)	ABSOLUTE MAX RATING MAX. TEMP (°C)	DESCRIPTION MAT.	DESCRIPTION DWG. No.
1	PK0606L	X	9375M	8.20G - 12.4G		10	1.0m	100	400		1.5	150- 450	10	150A	Si♦	M86cØ
2	PK0607	X	9375M	8.20G - 12.4G		7.5	1.0m	100	400		1.5	150- 450	10	150A	Si♦	DO7Ø
3	PK0607L	X	9375M	8.20G - 12.4G		7.5	1.0m	100	400		1.5	150- 450	10	150A	Si♦	M86cØ
4	PK0608	X	9375M	8.20G - 12.4G		7.0	1.0m	100	400		1.5	150- 450	10	150A	Si♦	DO7Ø
5	PK0608L	X	9375M	8.20G - 12.4G		7.0	1.0m	100	400		1.5	150- 450	10	150A	Si♦	M86cØ
6	PK0609	X	9375M	8.20G - 12.4G		6.5	1.0m	100	400		1.5	150- 450	10	150A	Si♦	DO7Ø
7	PK0609L	X	9375M	8.20G - 12.4G		6.5	1.0m	100	400		1.5	150- 450	10	150A	Si♦	M86cØ
8	PK0610	X	9375M	8.20G - 12.4G		6.0	1.0m	100	400		1.5	150- 450	10	150A	Si♦	DO7Ø
9	PK0610L	X	9375M	8.20G - 12.4G		6.0	1.0m	100	400		1.5	150- 450	10	150A	Si♦	M86cØ
10	PK0806	X	9375M	8.20G - 12.4G		10	1.0m	100	400		1.5	150- 450	10	150A	Si♦	A1adØ
11	PK0806L	X	9375M	8.20G - 12.4G		10	1.0m	100	400		1.5	150- 450	10	150A	Si♦	M86cØ
12	PK0807	X	9375M	8.20G - 12.4G		7.5	1.0m	100	400		1.5	150- 450	10	150A	Si♦	A1adØ
13	PK0807L	X	9375M	8.20G - 12.4G		7.5	1.0m	100	400		1.5	150- 450	10	150A	Si♦	M86cØ
14	PK0808	X	9375M	8.20G - 12.4G		7.0	1.0m	100	400		1.5	150- 450	10	150A	Si♦	A1adØ
15	PK0808L	X	9375M	8.20G - 12.4G		7.0	1.0m	100	400		1.5	150- 450	10	150A	Si♦	M86cØ
16	PK0809	X	9375M	8.20G - 12.4G		6.5	1.0m	100	400		1.5	150- 450	10	150A	Si♦	A1adØ
17	PK0809L	X	9375M	8.20G - 12.4G		6.5	1.0m	100	400		1.5	150- 450	10	150A	Si♦	M86cØ
18	PK0810	X	9375M	8.20G - 12.4G		6.0	1.0m	100	400		1.5	150- 450	10	150A	Si♦	A1adØ
19	PK0810L	X	9375M	8.20G - 12.4G		6.0	1.0m	100	400		1.5	150- 450	10	150A	Si♦	M86cØ
20	PK5106	X	9375M	8.20G - 12.4G		10	1.0m	100	400		1.5	150- 450	10	150A	Si♦	F54aØ
21	PK5107	X	9375M	8.20G - 12.4G		7.5	1.0m	100	400		1.5	150- 450	10	150A	Si♦	F54aØ
22	PK5108	X	9375M	8.20G - 12.4G		7.0	1.0m	100	400		1.5	150- 450	10	150A	Si♦	F54aØ
23	PK5109	X	9375M	8.20G - 12.4G		6.5	1.0m	100	400		1.5	150- 450	10	150A	Si♦	F54aØ
24	PK5110	X	9375M	8.20G - 12.4G		6.0	1.0m	100	400		1.5	150- 450	10	150A	Si♦	F54aØ
25	PKM905	X	9375M	8.0G-12.4G		7.0	1.0	100	400		1.5	150-350	5.0	150	Si	A298t
26	PKM906	X	9375M	8.0G-12.4G		6.5	1.0	100	400		1.5	150-350	5.0	150	Si	A298t
27	PKM907	X	9375M	8.0G-12.4G		6.0	1.0	100	400		1.5	150-350	5.0	150	Si	A298t
28	PKM908	X	9375M	8.0G-12.4G		5.5	1.0	100	400		1.5	150-350	5.0	150	Si	A298t
29	PKM909	X	9375M	8.0G-12.4G		5.0	1.0	100	400		1.5	150-350	5.0	150	Si	A298t
30	PM0806	X	9375M	8.20G - 12.4G		10	1.0m	100	400		1.5	325- 475	5.0	150A	SiØ	A1adØ
31	PM0806L	X	9375M	8.20G - 12.4G		10	1.0m	100	400		1.5	325- 475	5.0	150A	SiØ	M86cØ
32	PM0807	X	9375M	8.20G - 12.4G		7.5	1.0m	100	400		1.5	335- 465	5.0	150A	SiØ	A1adØ
33	PM0807L	X	9375M	8.20G - 12.4G		7.5	1.0m	100	400		1.5	335- 465	5.0	150A	SiØ	M86cØ
34	PM0808	X	9375M	8.20G - 12.4G		7.0	1.0m	100	400		1.5	335- 465	5.0	150A	SiØ	A1adØ
35	PM0808L	X	9375M	8.20G - 12.4G		7.0	1.0m	100	400		1.5	335- 465	5.0	150A	SiØ	M86cØ
36	PM0809	X	9375M	8.20G - 12.4G		6.5	1.0m	100	400		1.5	350- 550	5.0	150A	SiØ	A1adØ
37	PM0809L	X	9375M	8.20G - 12.4G		6.5	1.0m	100	400		1.5	350- 550	5.0	150A	SiØ	M86cØ
38	PM0810	X	9375M	8.20G - 12.4G		6.0	1.0m	100	400		1.5	350- 550	5.0	150A	SiØ	A1adØ
39	PM0810L	X	9375M	8.20G - 12.4G		6.0	1.0m	100	400		1.5	350- 550	5.0	150A	SiØ	M86cØ
40	S3006D	C-X	9375M	4.0G-12.4G		6.0	4.0m	200	200			50-250	10	150	GA♦$	F121
41	S3006E	C-X	9375M	4.0G-12.4G		5.5	4.0m	200	200			50-250	10	150	GA♦$	F121
42	S3006S	C-X	9375M	4.0G-12.4G		5.0	4.0m	200	200			50-250	5.0	150	GA♦$	F121
43	S3060D	C-X	9375M	4.0G-12.4G		6.0	4.0m	200	200			50-250	5.0	150	GA♦$	A338
44	S3060E	C-X	9375M	4.0G-12.4G		5.5	4.0m	200	200			50-250	5.0	150	GA♦$	A338
45	S3060S	C-X	9375M	4.0G-12.4G		5.0	4.0m	200	200			50-250	5.0	150	GA♦$	A338
46	SM153A,AM	S-X	9.375G	3.0G		6.0	2.0m	100	400				2.0	150	GA♦	F27a
47	SM153B,BM	S-X	9.375G	3.0G		5.5	2.0m	100	400				2.0	150	GA♦	F27a
48	SM153C,CM	S-X	9.375G	3.0G		5.0	2.0m	100	400				2.0	150	GA♦	F27a
49	SMR33B	X	9375M	6.00G-12.0G		6.5	1.0m	100	400				1.0	150S	Si	M709
50	SMR133B	X-Ku	9375M	6.00G-25.0G		5.5	2.0m	100	400				300m	150S	GA	M709
51	SMR133C	X-Ku	9375M	6.00G-25.0G		5.0	2.0m	100	400				300m	150S	GA	M709
52	CMB7602	Xr-Kp	9.4G	8.2G-12.0G		7.0	1m					380Ø		150	Si♦$	u28
53	CMB7602A	Xr-Kp	9.4G	8.2G-12.0G		6.5	1m					380Ø		150	Si♦$	u28
54	DC1574E	X	9.4G	8.2G-12.4G		7.5					1.5	400Ø		70		P2fØ
55	DC1574F	X	9.4G	8.2G-12.4G		7.0					1.5	400Ø		70		P2fØ
56	DC1574G	X	9.4G	8.2G-12.4G		6.5					1.5	400Ø		70		P2fØ
57	DC1575E	X	9.4G	8.2G-12.4G		7.5					1.5	400Ø		70		
58	DC1575F	X	9.4G	8.2G-12.4G		7.0					1.5	400Ø		70		
59	DC1575G	X	9.4G	8.2G-12.4G		6.5					1.5	400Ø		70		
60	DC1576E	X	9.4G	8.2G-12.4G		7.5					1.5	400Ø		70		P3Ø
61	DC1576F	X	9.4G	8.2G-12.4G		7.0					1.5	400Ø				A316Ø
62	DC1576G	X	9.4G	8.2G-12.4G		6.5					1.5	400Ø		70		P3Ø
63	DC1577E	X	9.4G	8.2G-12.4G		7.5					1.5	400Ø				F51cØ
64	DC1577F	X	9.4G	8.2G-12.4G		7.0					1.5	400Ø				F51cØ
65	DC1577G	X	9.4G	8.2G-12.4G		6.5					1.5	400Ø				F51cØ
66	DC1578E	X	9.4G	8.2G-12.4G		7.5					1.5	400Ø				A316Ø
67	DC1578F	X	9.4G	8.2G-12.4G		7.0					1.5	400Ø				A316Ø
68	DC1578G	X	9.4G	8.2G-12.4G		6.5					1.5	400Ø				A316Ø
69	DDB4037	Xr-Kp	9.4G	8.2G-12.0G		7.5	1m	100			1.7	300-680				A1akØ
70	DMA5092	Xr-Kp	9.4G	8.2G-12.4G		9.5	1m	100				250-550	2.0	150	SiØ	A423
71	DMA5092A	Xr-Kp	9.4G	8.2G-12.4G		7.5	1m	100				250-550	2.0	150	SiØ	A423
72	DMA5092AM	Xr-Kp	9.4G	8.2G-12.4G		7.5	1m	100				250-550	2.0	150	SiØ	A423
73	DMA5092B	Xr-Kp	9.4G	8.2G-12.4G		7.0	1m	100				250-550	2.0	150	SiØ	A423
74	DMA5092BM	Xr-Kp	9.4G	8.2G-12.4G		7.0	1m	100				250-550	2.0	150	SiØ	A423
75	DMA5092C	Xr-Kp	9.4G	8.2G-12.4G		6.5	1m	100				250-550	2.0	150	SiØ	A423
76	DMA5092CM	Xr-Kp	9.4G	8.2G-12.4G		6.5	1m	100				250-550	2.0	150	SiØ	A423
77	DMA5092M	Xr-Kp	9.4G	8.2G-12.4G		9.5	1m	100				250-550	2.0	150	SiØ	A423
78	DMA5223C	Xr-Kp	9.4G	8.2G-12.4G		9.5	1m	100				250-500	2.0	150	SiØ	F146
79	DMA5223CM	Xr-Kp	9.4G	8.2G-12.4G		9.5	1m	100				250-500	2.0	150	SiØ	F146
80	DMA5223E	Xr-Kp	9.4G	8.2G-12.4G		7.5	1m	100				250-500	2.0	150	SiØ	F146
81	DMA5223EM	Xr-Kp	9.4G	8.2G-12.4G		7.5	1m	100				250-500	2.0	150	SiØ	F146
82	DMA5223F	Xr-Kp	9.4G	8.2G-12.4G		7.0	1m	100				250-500	2.0	150	SiØ	F146
83	DMA5223FM	Xr-Kp	9.4G	8.2G-12.4G		7.0	1m	100				250-500	2.0	150	SiØ	F146
84	DMA5223G	Xr-Kp	9.4G	8.2G-12.4G		6.5	1m	100				250-500	2.0	150	SiØ	F146
85	DMA5223GM	Xr-Kp	9.4G	8.2G-12.4G		6.5	1m	100				250-500	2.0	150	SiØ	F146
86	DMA5392	Xr-Kp	9.4G	8.2G-12.4G		8.5	1M	100				200-350		150	Si♦	M1143
87	DMA5392A	Xr-Kp	9.4G	8.2G-12.4G		7.5	1m	100				200-350	2.0	150	SiØ	M1143
88	DMA5392AM	Xr-Kp	9.4G	8.2G-12.4G		7.5	1m	100				200-350	2.0	150	SiØ	M1143
89	DMA5392AMR	Xr-Kp	9.4G	8.2G-12.4G		7.5	1m	100				200-350	2.0	150	SiØ	M1143
90	DMA5392AR	Xr-Kp	9.4G	8.2G-12.4G		7.5	1m	100				200-350	2.0	150	SiØ	M1143
91	DMA5392B	Xr-Kp	9.4G	8.2G-12.4G		7.0	1m	100				200-350	2.0	150	SiØ	M1143
92	DMA5392BM	Xr-Kp	9.4G	8.2G-12.4G		7.0	1m	100				200-350	2.0	150	SiØ	M1143
93	DMA5392BMR	Xr-Kp	9.4G	8.2G-12.4G		7.0	1m	100				200-350	2.0	150	SiØ	M1143
94	DMA5392BR	Xr-Kp	9.4G	8.2G-12.4G		7.0	1m	100				200-350	2.0	150	SiØ	M1143
95	DMA5392M	Xr-Kp	9.4G	8.2G-12.4G		8.5	1M	100				200-350	1.0	150	SiØ	M1143
96	DMA5392MR	Xr-Kp	9.4G	8.2G-12.4G		8.5	1M	100				200-350	1.0	150	SiØ	M1143
97	DMA5392R	Xr-Kp	9.4G	8.2G-12.4G		8.5	1M	100				200-350	1.0	150	SiØ	M1143
98	DMB4009	Xr-Kp	9.4G	8.2G-12.4G			1M	100						150	Si♦	A421
99	DMB4500	Xr-Kp	9.4G	8.2G-12.0G		7.0	1m	100				380Ø		150	Si♦$	M491b
100	DMB4500A	Xr-Kp	9.4G	8.2G-12.0G		6.5	1m	100				380Ø		150	Si♦$	M491b
101	DMB5880	Xr-Kp	9.4G	8.2G-12.4G		7.5	1M	100			1.3	335-465		150	Si♦	P22
102	DMB5880A	Xr-Kp	9.4G	8.2G-12.4G		7.0	1M	100			1.3	335-465		150	Si♦	P22
103	DMB5880AM	Xr-Kp	9.4G	8.2G-12.4G		7.0	1M	100			1.3	335-465		150	Si♦	P22
104	DMB5880AMR	Xr-Kp	9.4G	8.2G-12.4G		7.0	1M	100			1.3	335-465		150	Si♦	P22
105	DMB5880B	Xr-Kp	9.4G	8.2G-12.4G		6.5	1m	100			1.3	335-465		150	Si♦	P22
106	DMB5880BM	Xr-Kp	9.4G	8.2G-12.4G		6.5	1m	100			1.3	335-465		150	Si♦	P22
107	DMB5880BMR	Xr-Kp	9.4G	8.2G-12.4G		6.5	1m	100			1.3	335-465		150	Si♦	P22
108	DMB5880C	Xr-Kp	9.4G	8.2G-12.4G		6.0	1m	100			1.3	335-465		150	Si♦	P22
109	DMB5880CM	Xr-Kp	9.4G	8.2G-12.4G		6.0	1m	100			1.3	335-465		150	Si♦	P22
110	DMB5880CMR	Xr-Kp	9.4G	8.2G-12.4G		6.0	1m	100			1.3	335-465		150	Si♦	P22

SYMBOLS AND CODES EXPLAINED IN INTERPRETER

4. MICROWAVE MIXER DIODES

IN ORDER OF (1) TEST FREQ (OR AVG FREQ WHEN TEST FREQ NOT AVAILABLE) and (2) TYPE No.

LINE No.	[2] TYPE No.	BAND	[1] TEST FREQ. (Hz)	FREQUENCY RANGE MIN - MAX (Hz)	NOISE MAX RATIO NR times	NOISE MAX REC. NF (dB)	TEST COND. FOR- Pin (W)	RL (Ω)	Zm (Ω)	MAX. CONV. LOSS (dB)	MAX. VSWR	IF IMPEDANCE RANGE MIN - MAX (Ω)	ABSOLUTE MAX RATING BURN-OUT (Erg)	MAX. TEMP (°C)	DESCRIPTION MAT.	DWG. No.
1	DMB5880M	Xr-Xp	9.4G	8.2G-12.4G		7.5	1m	100			1.3	335-465		150	Si♦	P22
2	DMB5880MR	Xr-Kp	9.4G	8.2G-12.4G		7.5	1M	100			1.3	335-465		150	Si♦	P22
3	DMB6411	X	9.4G	8.0G-12G		7.5					1.5	335-465		150	Si♦$	F63bØ
4♦	DMB6411A	X	9.4G	8.0G-12G		7.0	1.0m				1.5	335-465		150	Si♦$	F63bØ
5	DMB6411AM	Xr-Kp	9.4G	8.2G-12.4G		7.0	1M	100			1.5	335-465		150	Si♦	P22
6	DMB6411AMR	Xr-Kp	9.4G	8.2G-12.4G		7.0	1M	100			1.5	335-465		150	Si♦	P23
7♦	DMB6411B	X	9.4G	8.0G-12G		6.5	1.0m				1.5	335-465		150	Si♦$	F63bØ
8	DMB6411BM	Xr-Kp	9.4G	8.2G-12.4G		6.5	1m	100			1.5	335-465		150	Si♦	P22
9	DMB6411BMR	Xr-Kp	9.4G	8.2G-12.4G		6.5	1m	100			1.5	335-465		150	Si♦	P22
10♦	DMB6411C	X	9.4G	8.0G-12G		6.0	1.0m				1.5	335-465		150	Si♦$	F63bØ
11	DMB6411CM	Xr-Kp	9.4G	8.2G-12.4G		6.0	1m	100			1.5	335-465		150	Si♦	P22
12	DMB6411CMR	Xr-Kp	9.4G	8.2G-12.4G		6.0	1m	100			1.5	335-465		150	Si♦	P22
13	DMB6411M	Xr-Kp	9.4G	8.2G-12.4G		7.5	1M	100			1.5	335-465		150	Si♦	P22
14	DMB6411MR	Xr-Kp	9.4G	8.2G-12.4G		7.5	1M	100			1.5	335-465		150	Si♦	P22
15	DMB6780	Xr-Kp	9.4G	8.2G-12.4G		7.0	1m					380Ø		150	Si♦$	M491b
16	DMB6780A	Xr-Kp	9.4G	8.2G-12.4GH		6.5	1m					380Ø		150	Si♦$	M491b
17	DMB6781	Xr-Kp	9.4G	8.2G-12.4G		7.0	1m					380Ø		150	Si♦$	A367
18	DMB6781A	Xr-Kp	9.4G	8.2G-12.4G		6.5	1m					380Ø		150	Si♦$	A367
19	DMC4037	Xr-Kp	9.4G	8.2G-12.4G			1M	100						150	Si♦	A423
20	DMC5504A	Xr-Kp	9.4G	8.2G-12.4G		8.0	1G	100			2.0	300-600		150	Si♦	A423
21	DMC5504AM	Xr-Kp	9.4G	8.2G-12.4G		8.0	1G	100			2.0	300-600		150	Si♦	A423
22	DMC5504B	Xr-Kp	9.4G	8.2G-12.4G		7.0	1M	100			1.6	300-600		150	Si♦	A423
23	DMC5504BM	Xr-Kp	9.4G	8.2G-12.4G		7.0	1M	100			1.6	300-600		150	Si♦	A423
24	DMC5504C	Xr-Kp	9.4G	8.2G-12.4G		6.5	1m	100			1.6	300-600		150	Si♦	A423
25	DMC5504CM	Xr-Kp	9.4G	8.2G-12.4G		6.5	1m	100			1.6	300-600		150	Si♦	A423
26	DMC5506	Xr-Kp	9.4G	8.2G-12.4G		6.5	1m	100			1.6	300-600		150	Si♦	F146
27	DMC5506A	Xr-Kp	9.4G	8.2G-12.4G		8.0	1M	100			2.0	300-600		150	Si♦	F146
28	DMC5506AM	Xr-Kp	9.4G	8.2G-12.4G		8.0	1G	100			2.0	300-600		150	Si♦	F146
29	DMC5506B	Xr-Kp	9.4G	8.2G-12.4G		7.0	1m	100			1.6	300-600		150	Si♦	F146
30	DMC5506BM	Xr-Kp	9.4G	8.2G-12.4G		7.0	1M	100			1.6	300-600		150	Si♦	F146
31	DMC5506CM	Xr-Kp	9.4G	8.2G-12.4G		6.5	1m	100			1.6	300-600		150	Si♦	F146
32	DMC6224	Xr-Kp	9.4G	8.2G-12.4G			1M	100			1.5	335-465		150	Si♦	P22
33	DMD6288	Xr-Kp	9.4G	8.2G-12.4G		6.0	1m	18						150	Si♦$	M491e*
34	DMD6288A	Xr-Kp	9.4G	8.2G-12.4G		6.5	1m	12						150	Si♦$	M491e*
35	DMD6460	Kr-Kp	9.4G	8.2G-12.4G		7.0	1m					380Ø		150	Si♦$	M491c*
36	DMD6460A	Kr-Kp	9.4G	8.2G-12.4G		6.5	1m					380Ø		150	Si♦$	M491c*
37	DME3005	Xr-Kp	9.4G	8.2G-12.4G		6.5	1m							150	Si♦	A428
38	DME3007	Xr-Kp	9.4G	8.2G-12.4G		6.5	1m							150	Si♦	A426
39	DME3010	Xr-Kp	9.4G	8.2G-12.4G		6.5	1m							150	Si♦	C231
40	DME3013	Xr-Kp	9.4G	8.2G-12.4G		6.5	1m							150	Si♦	C228
41	DME3015	Xr-Kp	9.4G	8.2G-12.4G		6.5	1m							150	Si♦	C232
42	DME3017	Xr-Kp	9.4G	8.2G-12.4G		6.5	1m							150	Si♦	C235
43	DME3020	Xr-Kp	9.4G	8.2G-12.4G		6.5	1m							150	Si♦	C229
44	DME3022	Xr-Kp	9.4G	8.2G-12.4G		6.5	1m							150	Si♦	C230
45	DME3023	Xr-Kp	9.4G	8.2G-12.4G		6.5	1m							150	Si♦	C236
46	DME3025	Xr-Kp	9.4G	8.2G-12.4G		6.5	1m							150	Si♦	C237
47	DME3030	Xr-Kp	9.4G	8.2G-12.4G		6.5	1m							150	Si♦	M1141
48	DME3033	Xr-Kp	9.4G	8.2G-12.4G		6.5	1m							150	Si♦	C253
49	DME3034	Xr-Kp	9.4G	8.2G-12.4G		6.5	1m							150	Si♦	C254
50	DME3036	Xr-Kp	9.4G	8.2G-12.4G		6.5	1m							150	Si♦	C255
51	DME3048	Xr-Kp	9.4G	8.2G-12.4G		6.5	1m							150	Si♦	C240
52	DME3051	Xr-Kp	9.4G	8.2G-12.4G		6.5	1m							150	Si♦	M1137
53	DME3055	Xr-Kp	9.4G	8.2G-12.4G		6.5	1m							150	Si♦	A427
54	DME3057	Xr-Kp	9.4G	8.2G-12.4G		6.5	1m							150	Si♦	A425
55	DME3125	Xr-Kp	9.4G	8.2G-12.4G		6.5	1m							150	Si♦	A424
56▼	DME3192	X	9.4G	8.2G-12.4G		6.5	1.0m				1.6	300-680		150	Si♦	W304
57	DME4370	Xr-Kp	9.4G	8.2G-12.4G		6.5	1m							150	Si♦	C251
58	DME4750	Xr-Kp	9.4G	8.2G-12.4G		6.5	1m							150	Si♦	C239
59	DME4756	Xr-Kp	9.4G	8.2G-12.4G		6.5	1m							150	Si♦	C238
60	DME4765	Xr-Kp	9.4G	8.2G-12.4G		6.5	1m							150	Si♦	C234
61	DME4790	Xr-Kp	9.4G	8.2G-12.4G		6.5	1m							150	Si♦	C242
62	DME6557	Xr-Kp	9.4G	8.2G-12.4G		6.5	1m							150	Si♦	C241
63	DME6567	Xr-Kp	9.4G	8.2G-12.4G		6.5	1m							150	Si♦	C252
64	DME6569	Xr-Kp	9.4G	8.2G-12.4G		6.5	1m							150	Si♦	C233
65	DME6957	X	9.4G	8.0G-12G		6.5									Si♦$	M577a
66	DMF3061	Xr-Kp	9.4G	8.2G-12.4G		7.0	1m							150	Si♦	C234
67	DMF3061A	Xr-Kp	9.4G	8.2G-12.4G		6.5	1m							150	Si♦	C234
68	DMF3064	Xr-Kp	9.4G	8.2G-12.4G		7.0	1m							150	Si♦	A424
69	DMF3064A	Xr-Kp	9.4G	8.2G-12.4G		6.5	1m							150	Si♦	A424
70	DMF3066	Xr-Kp	9.4G	8.2G-12.4G		7.0	1m							150	Si♦	C233
71	DMF3066A	Xr-Kp	9.4G	8.2G-12.4G		6.5	1m							150	Si♦	C233
72	DMF3068	Xr-Kp	9.4G	8.2G-12.4G		7.0	1m							150	Si♦	A425
73	DMF3068A	Xr-Kp	9.4G	8.2G-12.4G		6.5	1m							150	Si♦	A425
74	DMF3071	Xr-Kp	9.4G	8.2G-12.4G		7.0	1m							150	Si♦	C229
75	DMF3071A	Xr-Kp	9.4G	8.2G-12.4G		6.5	1m							150	Si♦	C229
76	DMF3072	Xr-Kp	9.4G	8.2G-12.4G		7.0	1m							150	Si♦	C232
77	DMF3072A	Xr-Kp	9.4G	8.2G-12.4G		6.5	1m							150	Si♦	C232
78	DMF3074	Xr-Kp	9.4G	8.2G-12.4G		7.0	1m							150	Si♦	C242
79	DMF3074A	Xr-Kp	9.4G	8.2G-12.4G		6.5	1m							150	Si♦	C242
80	DMF3077	Xr-Kp	9.4G	8.2G-12.4G			1m							150	Si♦	
81	DMF3077A	Xr-Kp	9.4G	8.2G-12.4G			1m							150	Si♦	
82	DMF3079	Xr-Kp	9.4G	8.2G-12.4G		7.0	1m							150	Si♦	C255
83	DMF3079A	Xr-Kp	9.4G	8.2G-12.4G		6.5	1m							150	Si♦	C255
84▼	DMF3186	X	9.4G	8.2G-12.4G		6.5	1.0m				1.6	300-680		150	Si♦	W302
85▼	DMF3189	X	9.4G	8.2G-12.4G		6.5	1.0m				1.6	300-680		150	Si♦	W304
86	DMF4011	Kr-Kp	9.4G	8.2G-12.4G		7.0	1m	18						150	Si♦$	M905
87	DMF4011A	Kr-Kp	9.4G	8.2G-12.4G		6.5	1m	12						150	Si♦$	M905
88	DMF4018	Xr-Kp	9.4G	8.2G-12.4G		7.0	1M	100						150	Si♦	M790b
89	DMF4018A	Xr-Kp	9.4G	8.2G-12.4G		6.5	1M	100						150	Si♦	M790b
90	DMF4018AM	Xr-Kp	9.4G	8.2G-12.4G		6.5	1M	100						150	Si♦	M790b
91	DMF4018B	Xr-Kp	9.4G	8.2G-12.4G		6.0	1m	100						150	Si♦	M790b
92	DMF4018BM	Xr-Kp	9.4G	8.2G-12.4G		6.0	1m	100						150	Si♦	M790b
93	DMF4018C	Xr-Kp	9.4G	8.2G-12.4G		5.5	1m	100						150	Si♦	M790b
94▼	DMF4018CM	X	9.4G	8.2G-12.4G		5.5	1.0m							150	Si♦	M790b
95	DMF4018M	Xr-Kp	9.4G	8.2G-12.4G		7.0	1M	100						150	Si♦	M790b
96	DMF4035	Kr-Kp	9.4G	8.2G-12.4G		6.5	1m					380Ø		150	Si♦$	A367
97	DMF4035A	Kr-Kp	9.4G	8.2G-12.4G		6.5	1m					380Ø		150	Si♦$	A367
98	DMF4352	Xr-Kp	9.4G	8.2G-12.4G		7.0	1m							150	Si♦	C253
99	DMF4352A	Xr-Kp	9.4G	8.2G-12.4G		6.5	1m							150	Si♦	C253
100	DMF4513	Xr-Kp	9.4G	8.2G-12.4G		7.0	1m							150	Si♦	C235
101	DMF4513A	Xr-Kp	9.4G	8.2G-12.4G		6.5	1m							150	Si♦	C235
102	DMF4518	Xr-Kp	9.4G	8.2G-12.4G		7.0	1m							150	Si♦	C240
103	DMF4518A	Xr-Kp	9.4G	8.2G-12.4G		6.5	1m							150	Si♦	C240
104	DMF4526	Xr-Kp	9.4G	8.2G-12.4G		7.0	1m							150	Si♦	C237
105	DMF4526A	Xr-Kp	9.4G	8.2G-12.4G		6.5	1m							150	Si♦	C237
106	DMF4713	Xr-Kp	9.4G	8.2G-12.4G		7.0	1m							150	Si♦	C236
107	DMF4713A	Xr-Kp	9.4G	8.2G-12.4G		6.5	1m							150	Si♦	C236
108	DMF4745	Xr-Kp	9.4G	8.2G-12.4G		7.0	1m							150	Si♦	C239
109	DMF4745A	Xr-Kp	9.4G	8.2G-12.4G		6.5	1m							150	Si♦	C239
110	DMF5078Y	Xr-Kp	9.4G	8.2G-12.4G			1M	100				300-600		150	Si♦	A421

SYMBOLS AND CODES EXPLAINED IN INTERPRETER

4. MICROWAVE MIXER DIODES

IN ORDER OF (1) TEST FREQ (OR AVG FREQ WHEN TEST FREQ NOT AVAILABLE) and (2) TYPE No.

LINE No.	[2] TYPE No.	BAND	[1] TEST FREQ. (Hz)	FREQUENCY RANGE MIN - MAX (Hz)	NOISE MAX RATIO NR times	NOISE MAX REC. NF (dB)	TEST COND. FOR- Pin (W)	RL (Ω)	Zm (Ω)	MAX. CONV. LOSS (dB)	MAX. VSWR	IF IMPEDANCE RANGE MIN - MAX (Ω)	ABSOLUTE MAX RATING BURN-OUT (Erg)	MAX. TEMP (°C)	MAT.	DESCRIPTION DWG. No.
1	DMF5080	Xr-Kp	9.4G	8.2G-12.4G		7.0	1m				350Ø			150	Si♦$	M908*
2	DMF5080A	Xr-Kp	9.4G	8.2G-12.4G		6.5								150	Si♦$	M908*
3	DMF5818	Xr-Kp	9.4G	8.2G-12.4G		7.0	1m							150	Si♦	M577b
4	DMF5818A	Xr-Kp	9.4G	8.2G-12.4G		6.5	1m							150	Si♦	M577b
5	DMF5819	Xr-Kp	9.4G	8.2G-12.4G		7.0	1m							150	Si♦	M1137
6	DMF5819A	Xr-Kp	9.4G	8.2G-12.4G		6.5	1m							150	Si♦	M1137
7	DMF5827	Xr-Kp	9.4G	8.2G-12.4G		7.0	1m							150	Si♦	A427
8	DMF5828	Xr-Kp	9.4G	8.2G-12.4G		7.0	1m							150	Si♦	C231
9	DMF5828A	Xr-Kp	9.4G	8.2G-12.4G		6.5	1m							150	Si♦	C231
10	DMF5829	Xr-Kp	9.4G	8.2G-12.4G		7.0	1m							150	Si♦	C238
11	DMF5829A	Xr-Kp	9.4G	8.2G-12.4G		6.5	1m							150	Si♦	C238
12♦	DMF6106BM	X	9.4G	8.2G-12.4G		6.0	1m				1.6	200-500		150	Si♦	A421
13	DMF6106C	Xr-Kp	9.4G	8.2G-12.4G		5.5	1m	100			1.6	200-500		150	Si♦	A421
14	DMF6130AM	Xr-Kp	9.4G	8.2G-12.4G		6.5	1m	100			1.6	200-500		150	Si♦	A423
15	DMF6130BM	Xr-Kp	9.4G	8.2G-12.4G		6.0	1m	100			1.6	200-500		150	Si♦	A423
16	DMF6130M	Xr-Kp	9.4G	8.2G-12.4G		7.0	1M	100			1.6	200-500		150	Si♦	A423
17▼	DMF6288	X	9.4G	8.2G-12.4G		1.5	1.0m								Si♦	C251 *
18	DMF6288A	Xr-Kp	9.4G	8.2G-12.4G		6.5	1m							150	Si♦	C251
19	DMF6460	Xr-Kp	9.4G	8.2G-12.4G		7.0	1m							150	Si♦	C228
20	DMF6460A	Xr-Kp	9.4G	8.2G-12.4G		6.5	1m							150	Si♦	C228
21	DMF6544	Xr-Kp	9.4G	8.2G-12.4G		7.0	1m							150	Si♦	C254
22	DMF6544A	Xr-Kp	9.4G	8.2G-12.4G		6.5	1m							150	Si♦	C254
23	DMF6558	Xr-Kp	9.4G	8.2G-12.4G		7.0	1m							150	Si♦	C252
24	DMF6558A	Xr-Kp	9.4G	8.2G-12.4G		6.5	1m							150	Si♦	C252
25	DMF6607	Xr-Kp	9.4G	8.2G-12.4G		7.0	1m							150	Si♦	A426
26	DMF6607A	Xr-Kp	9.4G	8.2G-12.4G		6.5	1m							150	Si♦	A426
27	DMF6704	Xr-Kp	9.4G	8.2G-12.4G		7.0	1m							150	Si♦	C230
28	DMF6704A	Xr-Kp	9.4G	8.2G-12.4G		6.5	1m							150	Si♦	C230
29	DMF6724	Xr-Kp	9.4G	8.2G-12.4G			1M	100			1.5	335-465		150	Si♦	P22
30♦	DMG6413A	X	9.4G	8.2G-12.4G		6.5	1m	18				380Ø		150	Si♦$	u28a
31	DMJ3084	Xr-Kp	9.4G	8.2G-12.4G		7.0	1m							150	Si♦	C234
32	DMJ3087	Xr-Kp	9.4G	8.2G-12.4G		7.0	1m							150	Si♦	C239
33	DMJ3088	Xr-Kp	9.4G	8.2G-12.4G		7.0	1m							150	Si♦	M1141
34	DMJ3090	Xr-Kp	9.4G	8.2G-12.4G		7.0	1m							150	Si♦	C230
35	DMJ3093	Xr-Kp	9.4G	8.2G-12.4G		7.0	1m							150	Si♦	M1137
36	DMJ3094	Xr-Kp	9.4G	8.2G-12.4G			1m							150	Si♦	C246
37	DMJ3096	Xr-Kp	9.4G	8.2G-12.4G		7.0	1m							150	Si♦	C231
38	DMJ3099	Xr-Kp	9.4G	8.2G-12.4G		7.0	1m							150	Si♦	C232
39	DMJ3101	Xr-Kp	9.4G	8.2G-12.4G		7.0	1m							150	Si♦	C233
40	DMJ3103	Xr-Kp	9.4G	8.2G-12.4G		7.0	1m							150	Si♦	C235
41	DMJ3105	Xr-Kp	9.4G	8.2G-12.4G		7.0	1m							150	Si♦	C229
42	DMJ3106	Xr-Kp	9.4G	8.2G-12.4G		7.0	1m							150	Si♦	C236
43	DMJ3108	Xr-Kp	9.4G	8.2G-12.4G		7.0	1m							150	Si♦	C242
44	DMJ3110	Xr-Kp	9.4G	8.2G-12.4G			1m							150	Si♦	C247
45	DMJ3112	Xr-Kp	9.4G	8.2G-12.4G			1m							150	Si♦	C249
46	DMJ3115	Xr-Kp	9.4G	8.2G-12.4G		7.0	1m							150	Si♦	C252
47	DMJ3118	Xr-Kp	9.4G	8.2G-12.4G		7.0	1m							150	Si♦	C254
48	DMJ3121	Xr-Kp	9.4G	8.2G-12.4G		7.0	1m							150	Si♦	C253
49	DMJ3122	Xr-Kp	9.4G	8.2G-12.4G		7.0	1m							150	Si♦	C255
50	DMJ3129	Xr-Kp	9.4G	8.2G-12.4G		7.0	1m							150	Si♦	A426
51	DMJ3151	Xr-Kp	9.4G	8.2G-12.4G		7.0	1m							150	Si♦	A425
52	DMJ3154	Xr-Kp	9.4G	8.2G-12.4G		7.0	1m							150	Si♦	A424
53▼	DMJ3194	X	9.4G	8.2G-12.4G		7.0	1.0m				1.6	300-680		150	Si♦	W304
54	DMJ4313	Xr-Kp	9.4G	8.2G-12.4G		7.0	1m							150	Si♦	C251
55	DMJ4317	Xr-Kp	9.4G	8.2G-12.4G		7.0	1m							150	Si♦	C228
56	DMJ4394	Xr-Kp	9.4G	8.2G-12.4G			1m							150	Si♦	C248
57	DMJ4546	Xr-Kp	9.4G	8.2G-12.4G		7.0	1m							150	Si♦	C240
58	DMJ4708	Xr-Kp	9.4G	8.2G-12.4G			1m							150	Si♦	C245
59	DMJ4760	Xr-Kp	9.4G	8.2G-12.4G		7.0	1m							150	Si♦	C237
60	DMJ6669	Kr-Kp	9.4G	8.2G-12.4G		7.0	1m					380Ø		150	Si♦$	M908*
61	DMJ6777	Kr-Kp	9.4G	8.2G-12.4G		7.0	1m					380Ø		150	Si♦$	M577b
62	DMJ6786	Kr-Kp	9.4G	8.2G-12.4G		7.0	1m					380Ø		150	Si♦$	M491b
63	DMJ6788	Kr-Kp	9.4G	8.2G-12.4G		7.0	1m					380Ø		150	Si♦$	M491e
64	DMJ6789	Kr-Kp	9.4G	8.2G-12.4G		7.0	1m					380Ø		150	Si♦$	A367
65♦	DMJ6990	X	9.4G	8.2G-12.4G		7.0	1m	12						150	Si♦$	M1138
66	MA40426	C-Ku	9.4G	6.0G-12.4G		5.0								150S	Si♦	V13
67	DDB4009	Xr-Kp	9.44G	8.2G-12.0G		7.5	1m	100			1.7	300-680				F105aØ
68	1N23A	X	10000M		2.7		1.0m	100	400	8.0		300- 600	.30	90S	Si	P3Ø
69	1N2510	X	10000M		1.5		1.0m	100	400	6.0		300- 500	1.0	70A	Si	P1bØØ
70	MA40190	X	10000M	8.2G-12.4G		12	100u	10		8.0	1.2Ø	150-400	2.0 $	150	Si♦	M790†
71	MA40191	X	10000M	8.2G-12.4G		12	100u	10		8.0	1.2Ø	150-400	2.0 $	150	Si♦	F82†
72	MA40192	X	10000M	8.2G-12.4G		12	100u	10		8.0	1.2Ø	150-400	2.0 $	150	Si♦	A1act
73	MA40193	X	10000M	8.2G-12.4G		12	100u	10		8.0	1.2Ø	150-400	2.0 $	150	Si♦	u14†
74	MA40194	X	10000M	8.2G-12.4G		12	100u	10		8.0	1.2Ø	150-400	2.0 $	150	Si♦	P21†
75	MA40195	X	10000M	8.2G-12.4G		12	100u	10		8.0	1.2Ø	150-400	2.0 $	150	Si♦	F126†
76	MA40054	X	10.525G	1.0-10k						5.0	2.00			150S		P12
77	MA40075		10525M	10.27G-10.77G			2.0m	100		5.0Ø	2.0			150A	♦Ø	P3a
78	MA40543		10525M	10.27G-10.77G		6.5	500m	100		5.0Ø	2.0	250-650		150A	♦	DO23
79	MA40995	X	10525M			20						300Ø			♦	F88c
80	MA40996	X	10525M			14						300Ø			♦	P9a
81	MA40997	X	10525M			17						300Ø			♦	P9a
82	MA40998	X	10525M			14						300Ø			♦	F27r
83	MA40999	X	10525M			17						300Ø			♦	F27r
84	DMA5632	St-Kp	12.0G	2.0G-12.4G		9.0		1M	100		2.0	100-200	1.0	150	SiØ	M1142
85	DMA5632A	St-Kp	12.0G	2.0G-12.4G		8.0		1M	100		2.0	100-200	1.0	150	SiØ	M1142
86	DMA5632AM	St-Kp	12.0G	2.0G-12.4G		8.0		1M	100		2.0	100-200	1.0	150	SiØ	M1142
87	DMA5632AMR	St-Kp	12.0G	2.0G-12.4G		8.0		1M	100		2.0	100-200	1.0	150	SiØ	M1142
88	DMA5632AR	St-Kp	12.0G	2.0G-12.4G		8.0		1M	100		2.0	100-200	1.0	150	SiØ	M1142
89	DMA5632M	St-Kp	12.0G	2.0G-12.4G		9.0		1M	100		2.0	100-200	1.0	150	SiØ	M1142
90	DMA5632MR	St-Kp	12.0G	2.0G-12.4G		9.0		1M	100		2.0	100-200	1.0	150	SiØ	M1142
91	DMA5632R	St-Kp	12.0G	2.0G-12.4G		9.0		1M	100		2.0	100-200	1.0	150	SiØ	M1142
92	JAN1N1838	Ku	13300M	12.4G - 18.0G		32	.50m	680	680		3.0	450- 750		90A	Ge	P9
93	1N4600		13300M	10.0G - 16.0G		9.5	1.0m	100	500		1.5	400- 565	1.0	150S	SiØ	P1b
94	1N4601		13300M	10.0G - 16.0G		8.8	1.0m	100	500		1.5	400- 565	1.0	150S	SiØ	P1b
95	1N4602		13300M	10.0G - 16.0G		8.0	1.0m	100	500		1.5	400- 565	1.0	150S	SiØ	P1b
96	JAN1N5764,M,MR	Ku	13300M	12.4G-18.0G	1.6	7.0	1.0m	100	500	5.0	1.5	400-600		150A	GA♦	P1d
97	MA491A	X-Ku	13.3G	10G-16G		11	1.0m	100	500	7.0	1.6	365-565	1.0	150A	SiØ	P1b
98	MA491B	X-Ku	13.3G	10G-16G		10	1.0m	100	500	6.5	1.6	365-565	1.0	150A	SiØ	P1b
99	MA491C	Ku	13300M			9.5					1.5	400-565	1.0		Ø	P1d
100	MA491D	Ku	13300M			8.8					1.5	400-565	1.0		Ø	P1d
101	MA491E	Ku	13300M			8.0					1.5	400-565	1.0		Ø	P1d
102	MA491F	Ku	13300M			7.5					1.5	400-565	1.0		Ø	P1d
103	MA491G	Ku	13300M			7.0					1.5	400-565	1.0		Ø	P1d
104	MA491H	Ku	13300M			6.5					1.5	400-565	1.0		Ø	P1d
105	MA41801	Ku	13300M			15						75Ø		100S		F49
106	MA41802	Ku	13300M			12						75Ø		100S		F49
107	MA41803	Ku	13300M			15						75Ø		100S		F27r
108	MA41804	Ku	13300M			12						75Ø		100S		F27r
109	MA41805	Ku	13300M			15						75Ø		100S		F59p
110	MA41806	Ku	13300M			12						75Ø		100S		F59p

SYMBOLS AND CODES EXPLAINED IN INTERPRETER

4. MICROWAVE MIXER DIODES

IN ORDER OF (1) TEST FREQ (OR AVG FREQ WHEN TEST FREQ NOT AVAILABLE) and (2) TYPE No.

LINE No.	[2] TYPE No.	BAND	[1] TEST FREQ. (Hz)	FREQUENCY RANGE MIN - MAX (Hz)	NOISE MAX RATIO NR times	NOISE MAX REC. NF (dB)	TEST COND. FOR- Pin (W)	RL (Ω)	Zm (Ω)	MAX. CONV. LOSS (dB)	MAX. VSWR	IF IMPEDANCE RANGE MIN - MAX (Ω)	ABSOLUTE MAX RATING BURN-OUT (Erg)	MAX. TEMP (°C)	DESCRIPTION MAT.	DWG. No.
1	MA41809	Ku	13300M			14						250Ø		150S		F27r
2	MA41810	Ku	13300M			12						250Ø		150S		F27r
3	MA41811	Ku	13300M			14						250Ø		150S		F59p
4	MA41812	Ku	13300M			12						250Ø		150S		F59p
5	MA41817	Ku	13300M			10	100u	10		8.0Ø	2.0	300Ø	500m§	150A	Ge	V7
6	1N1838	X-Ku	13.5G	-14G		32	500u				3.0	450-750	1.3	90S	Ge	F3q
7	AAY51	J	13500M	12.0G - 18.0G	1.1	7.5				5.2	1.5	220- 320	.10	100	GeØ	P1bØØ
8	AAY52	J	13500M	12.0G - 18.0G		8.5					1.5	220- 320	.10	100	GeØ	P1bØØ
9	BAT51	J	13.5G	12G-18G	1.1	7.5				5.2Ø	1.5	250-450	50m	100	Si♦	P1bØØ
10	BAT52	J	13.5G	12G-18G	1.1	8.5				5.2Ø	1.5	250-450	50m	100	Si♦	P1bØØ
11	DC1579E	J	15G			7.5					1.5	400Ø				P1eØ
12	MA41201C	Ku	15000M	12.50G-17.50G		9.5				7.0Ø	3.0	300-565		150A	Ø	Ø
13	DC1323	Ku	15200M	12.4G-18.0G	1.0	6.5				5.0	2.0	500Ø	250m$	150A	GA♦	u7dØ
14	DC1325	Ku	15200M	12.4G-18.0G	1.0	6.5				5.0	2.0	500Ø	250m$	150A	GA♦	F51cØ
15	DC1334	Ku	15200M	12.4G-18.0G	1.0	6.5				5.0	2.0	500Ø	250m$	150A	GA♦	A316Ø
16	1N78	Ku	16000M		2.5		1.0m	100	500	7.5		325- 625	1.0	70A	Si	P1bØØ
17	1N78A	Ku	16000M		1.5		1.0m	100	500	7.0	1.6	365- 565	1.0	70A	Si	P1bØØ
18	1N78B	Ku	16000M			10	1.0m	100	500	6.5	1.6	365- 565	1.0	70A	Si	P1bØØ
19	1N78C	Ku	16000M				1.0m	100	500	6.0	1.5	400- 565	1.0	150A	Si	P1bØØ
20	JAN1N78C,CM,CMR,CR	Ku	16000M		1.9	9.5	1.0m	100	500	6.0	1.5	400-565		150A	Si	P1dØØ
21	1N78D	Ku	16000M			8.8	1.0m	100	500	6.0	1.5	400- 565	1.0	150A	Si	P1bØØ
22	1N78E	X-KU	16.0G	8.0G-18.0G	1.9	8.0	1.0m	100	500	6.0	1.5	400-565		150A	SiØ	P1bØØ
23	1N78F		16000M	8.00G - 18.0G	1.9	7.5	1.0m	100	500	6.0	1.5	400- 565	1.0	150S	Si	P1a
24	JAN1N78F,FM,FMR,FR	Ku	16000M		1.9	7.5	1.0m	100	500	6.0	1.5	400-565		150A	Si	P1dØØ
25	1N78G	C-KU	16.0G	8.0G-18.0G	1.9	7.0	1.0m	100	500	6.0	1.5	400-565	1.0	150S	Si	P1b
26	1N286A	X-K	16.0G	10G-22G	2.0		1.0m	100	400	7.5	3.0	250-450	.10	70A	Si	P1bØ
27	1N3205	Ku	16000M			9.75	1.0m	100	500	6.3	1.6	365- 565	1.0	150A	Si	P1bØØ
28	1N4603		16000M	12.5G - 17.5G		9.5	1.0m	100	500		1.5	400- 565	1.0	150S	SiØ	P1b
29	1N4604		16000M	12.5G - 17.5G		8.8	1.0m	100	500		1.5	400- 565	1.0	150S	SiØ	P1b
30	1N4605		16000M	12.5G - 17.5G		8.0	1.0m	100	500		1.5	400- 565	1.0	150S	SiØ	P1b
31	1N5436		16000M	12.0G-18.0G		7.5	1.0	100	500	1.5	2.5	400-600	10	150S	Si♦	DO37Ø
32	1N5437		16000M	12.0G-18.0G		7.0	1.0	100	500	1.5	2.5	400-600	10	150S	Si♦	DO37Ø
33	1N5438		16000M	12.0G-18.0G		6.5	1.0	100	500	1.5	2.5	400-600	10	150S	Si♦	DO37Ø
34	1N5764	Ku	16000M	15.0G-17.0G		7.0	1.0m	100			1.5	400-600		150S	GA	DO37
35	1N5906	Ku	16G	15.00G-17.00G	1.5	7.0		100	500	5.0	1.6		250m	150S	Si♦	DO37
36	A2S121	Ku	16000M	12.4G-18.0G		6.5	1.0m	10			1.5	175-350		150A	Si♦	M790c
37	A2S122	Ku	16000M	12.4G-18.0G		6.5	1.0m	10			1.5	175-350		150A	Si♦	F105
38	A2S123	Ku	16000M	12.4G-18.0G		7.0	1.0m	10			2.0	175-350		150A	Si♦	F105
39	A2S124	Ku	16000M	12.4G-18.0G		7.0	1.0m	10			2.0	175-350		150A	Si♦	M790c
40	A2S614	Ku	16000M	12.4G-18.0G		6.5	1.0m	10			1.5	150-350		150	Si♦%	M790c
41	A2S615	Ku	16000M	12.4G-18.0G		7.0	1.0m	10			2.0	150-350		150	Si♦%	M790c
42	A2S624	Ku	16000M	12.4G-18.0G		6.5	1.0m	10			1.5	150-350		150	Si♦%	F105
43	A2S625	Ku	16000M	12.4G-18.0G		7.0	1.0m	10			2.0	150-350		150	Si♦%	F105
44	A2S720	Ku	16G	12.4G-18.0G		6.5	1.0m	10			1.5	200-400	200m§	150A	Si%♦	M790c
45	A2S721	Ku	16G	12.4G-18.0G		7.0	1.0m	10			2.0	200-400	200m§	150A	Si%♦	F105
46♦	A2S722	Ku	16G	12.4G-18.0G		7.0	1.0m	10			2.0	200-400	200m§	150A	Si%♦	M790c
47♦	A2S723	Ku	16G	12.4G-18.0G		6.5	1.0m	10			1.5	200-400	200m§	150A	Si%♦	F105
48♦	A2S781	UHF-Ka	16000M	100M-40G		6.5								150A	Si	A329a
49♦	A2S782	UHF-Ka	16000M	100M-40G		7.0†								150A	Si	A329a
50	C106516	Ku	16G			6.5					1.5	200-450		150	Si♦	F10p
51	C107016	Ku	16G			7.0					1.8	200-450		150	Si♦	F10p
52	C107516	Ku	16G			7.5					2.0	200-450		150	Si♦	F10p
53	C108016	Ku	16G			8.0					2.0	200-450		150	Si♦	F10p
54	C206516	Ku	16G			6.5					1.5	200-450		150	Si♦	F107
55	C207016	Ku	16G			7.0					1.8	200-450		150	Si♦	F107
56	C207516	Ku	16G			7.5					2.0	200-450		150	Si♦	F107
57	C208016	Ku	16G			8.0					2.0	200-450		150	Si♦	F107
58	CMB7601	Kp-Ku	16G	12.4G-18.0G		7.5								150	Si♦$	u28
59	CMB7601A	Kp-Ku	16G	12.4G-18.0G		7.0								150	Si♦$	u28
60	D5278B	Ku	16000M	12.4G - 18.0G		10	1.0m	100	500				1.0	150	Si$Ø	F85Ø
61	D5278BM	Ku	16G			10.0							1.0	150		F146
62	D5278C	Ku	16000M	F85Ø		9.5	1.0m	100	500				1.0	150S	Si$Ø	F85§
63	D5278CM	Ku	16G			9.5	1.0m						1.0	150		F146
64	D5278D	Ku	16000M	F85Ø		8.8	1.0m	100	500				1.0	150S	Si$Ø	F85§
65	D5278DM	Ku	16G			8.8	1.0m						1.0	150		F146
66	D5278E	Ku	16000M			8.0	1.0m	100					1.0	150	Si$Ø	F85Ø
67	D5278EM	Ku	16G			8.0	1.0m						1.0	150		F146
68	D5282F	Ku	16000M	P1bØ		7.5	1.0m	100	500		1.5	400- 565	1.0	150S	SiØ	P1b
69	D5282FM	Ku	16G			7.5	1.0m				1.5	400-565	1.0	150		M1093
70	D5282FMR	Ku	16G			7.5	1.0m				1.5	400-565	1.0	150		M1093
71	D5282G	Ku	16000M	12.4G-18.0G		7.0	1.0m	100			1.5	400-565	1.0	150S	SiØ	P1bØ
72	D5282GM	Ku	16G			7.0	1.0m				1.5	400-565	1.0	150		M1093
73	D5282GMR	Ku	16G			7.0	1.0m				1.5	400-565	1.0	150		M1093
74	D5600	Ku	16G	12.4G-18.0G		8.0	1.0m	100						150	Si♦$	M577
75	D5600A	Ku	16G	12.4G-18.0G		7.5	1.0m	100						150	Si♦$	M577
76	DMA5278B	Kp-Ku	16.0G	12.4G-18.0G		10.0	1m	100					1.0	150	SiØ	F146
77	DMA5278BM	Kp-Ku	16.0G	12.4G-18.0G		10.0	1m	100					1.0	150	SiØ	F146
78	DMA5278C	Kp-Ku	16.0G	12.4G-18.0G		9.5	1m	100					1.0	150	SiØ	F146
79	DMA5278CM	Kp-Ku	16.0G	12.4G-18.0G		9.5	1m	100					1.0	150	SiØ	F146
80	DMA5278D	Kp-Ku	16.0G	12.4G-18.0G		8.8	1m	100					2.0	150	SiØ	F146
81	DMA5278DM	Kp-Ku	16.0G	12.4G-18.0G		8.8	1m	100					2.0	150	SiØ	F146
82	DMA5278E	Kp-Ku	16.0G	12.4G-18.0G		8.0	1m	100					2.0	150	SiØ	F146
83	DMA5278EM	Kp-Ku	16.0G	12.4G-18.0G		8.0	1m	100					2.0	150	SiØ	F146
84	DMA5282F	Kp-Ku	16.0G	12.4G-18.0G		7.5	1m	100				400-565	2.0	150	SiØ	M1143
85	DMA5282FM	Kp-Ku	16.0G	12.4G-18.0G		7.5	1m	100				400-565	2.0	150	SiØ	M1143
86	DMA5282FMR	Kp-Ku	16.0G	12.4G-18.0G		7.5	1m	100				400-565	2.0	150	SiØ	M1143
87	DMA5282FR	Kp-Ku	16.0G	12.4G-18.0G		7.5	1m	100				400-565	2.0	150	SiØ	M1143
88	DMA5282G	Kp-Ku	16.0G	12.4G-18.0G		7.0	1m	100				400-565	2.0	150	SiØ	M1143
89	DMA5282GM	Kp-Ku	16.0G	12.4G-18.0G		7.0	1m	100				400-565	2.0	150	SiØ	M1143
90	DMA5282GMR	Kp-Ku	16.0G	12.4G-18.0G		7.0	1m	100				400-565	2.0	150	SiØ	M1143
91	DMA5282GR	Kp-Ku	16.0G	12.4G-18.0G		7.0	1m	100				400-565	2.0	150	SiØ	M1143
92	DMA6499	Ku	16G	12.4G-18G		8.8	1.0m	100			1.5	400-565	10 $	150A	Si♦$	DO37Ø
93♦	DMA6499A	Ku	16.0G	12.4G-18.0G		8.0	1.0m	100			1.5	400-565	10	150A	Si♦$	M1093
94	DMA6499AM	Kp-Ku	16.0G	12.4G-18.0G		8.0	1m	100				400-565	2.0	150	SiØ	M1143
95♦	DMA6499AMR	Ku	16.0G	12.4G-18.0G		8.0	1.0m				1.5	400-565	10	150		M1093
96	DMA6499AR	Kp-Ku	16.0G	12.4G-18.0G		8.0	1m	100				400-565	2.0	150	SiØ	M1143
97♦	DMA6499B	Ku	16G	12.4G-18.0G		7.5	1.0m	100			1.5	400-565	10	150A	Si♦$	M1093
98♦	DMA6499BM	Ku	16G	12.4G-18.0G		7.5	1.0m				1.5	400-565	10	150		M1093
99♦	DMA6499BMR	Ku	16G	12.4G-18.0G		7.5	1.0m				1.5	400-565	10	150		M1093
100	DMA6499BR	Kp-Ku	16.0G	12.4G-18.0G		7.5	1m	100				400-565	2.0	150	SiØ	M1143
101	DMA6499M	Kp-Ku	16.0G	12.4G-18.0G		8.8	1m	100				400-565	1.0	150	SiØ	M1143
102♦	DMA6499MR	Ku	16.0G	12.4G-18.0G		8.8	1.0m				1.5	400-565	10	150		M1093
103	DMA6499R	Kp-Ku	16.0G	12.4G-18.0G		8.8	1m	100				400-565	2.0	150	SiØ	M1143
104	DMB4501	Kp-Ku	16.0G	12.4G-18.0G		8.0	1m					380		150	Si♦$	M577a
105	DMB4501A	Kp-Ku	16.0G	12.4G-18.0G		7.5								150	Si♦$	M577a
106	DMB6782	Kp-Ku	16G	12.4G-18.0G		8.0								150	Si♦$	M491b
107	DMB6782A	Kp-Ku	16G	12.4G-18.0G		7.5								150	Si♦$	M491b
108	DMC5507B	Kp-Ku	16.0G	12.4G-18.0G		7.5	1G	100			1.8	300-600		150	Si♦	F146

SYMBOLS AND CODES EXPLAINED IN INTERPRETER

4. MICROWAVE MIXER DIODES

IN ORDER OF (1) TEST FREQ (OR AVG FREQ WHEN TEST FREQ NOT AVAILABLE) and (2) TYPE No.

LINE No.	[2] TYPE No.	BAND	[1] TEST FREQ. (Hz)	FREQUENCY RANGE MIN - MAX (Hz)	NOISE MAX RATIO NR times	NOISE MAX REC. NF (dB)	TEST COND. Pin (W)	TEST COND. RL (Ω)	FOR- Zm (Ω)	MAX. CONV. LOSS (dB)	MAX. VSWR	IF IMPEDANCE RANGE MIN - MAX (Ω)	ABSOLUTE MAX RATING BURN-OUT (Erg)	ABSOLUTE MAX RATING MAX. TEMP (°C)	DESCRIPTION MAT.	DESCRIPTION DWG. No.
1	DMC5507BM	Kp-Ku	16.0G	12.4G-18.0G		7.5	1G	100			1.8	300-600		150	Si♦	F146
2	DMC5507C	Kp-Ku	16.0G	12.4G-18.0G		7.0	1G	100			1.6	300-600		150	Si♦	F146
3	DMC5507CM	Kp-Ku	16.0G	12.4G-18.0G		7.0	1G	100			1.6	300-600		150	Si♦	F146
4	DMD6022	Ku	16G			8.5	1.0m	100						150	Si♦$	M491b
5	DMD6022A	Ku	16G			7.5	1.0m	100						150	Si♦$	M491b
6	DMD6023	Ku	16G			8.5	1.0m	100						150	Si♦$	M491d
7	DMD6023A	Ku	16G			7.5	1.0m	100						150	Si♦$	M491d
8	DMD6459	Ku	16G	12.4G-18G		8.0	1.0m	100						150	Si♦$	M491c
9	DMD6459A	Ku	16G	12.4G-18G		7.5	1.0m	100						150	Si♦$	M491c
10	DMD6884	Kp-Ku	16.0G	12.4G-18.0G		8.0								150	Si♦$	A366
11	DMD6884A	Kp-Ku	16.0G	12.4G-18.0G		7.5								150	Si♦$	A366
12	DMD6885	Kp-Ku	16.0G	12.4G-18.0G		8.0								150	Si♦$	M909Ø
13	DMD6885A	Kp-Ku	16.0G	12.4G-18.0G		7.5								150	Si♦§	M909Ø
14	DMD6886	Kp-Ku	16.0G	12.4G-18.0G		8.0								150	Si♦$	M910*
15	DMD6886A	Kp-Ku	16.0G	12.4G-18.0G		7.5								150	Si♦$	M910*
16	DME3008	Kp-Ku	16.0G	12.4G-18.0G		7.5	1m							150	Si♦	A426
17	DME3011	Kp-Ku	16.0G	12.4G-18.0G		7.5	1m							150	Si♦	C231
18	DME3014	Kp-Ku	16.0G	12.4G-18.0G		7.5	1m							150	Si♦	C228
19	DME3016	Kp-Ku	16.0G	12.4G-18.0G		7.5	1m							150	Si♦	C232
20	DME3018	Kp-Ku	16.0G	12.4G-18.0G		7.5	1m							150	Si♦	C235
21	DME3024	Kp-Ku	16.0G	12.4G-18.0G		7.5	1m							150	Si♦	C236
22	DME3026	Kp-Ku	16.0G	12.4G-18.0G		7.5	1m							150	Si♦	C237
23	DME3031	Kp-Ku	16.0G	12.4G-18.0G		7.5	1m							150	Si♦	M1141
24	DME3035	Kp-Ku	16.0G	12.4G-18.0G		7.5	1m							150	Si♦	C254
25	DME3037	Kp-Ku	16.0G	12.4G-18.0G		7.5	1m							150	Si♦	C255
26	DME3039	Kp-Ku	16.0G	12.4G-18.0G		7.5	1m							150	Si♦	C238
27	DME3041	Kp-Ku	16.0G	12.4G-18.0G		7.5	1m							150	Si♦	C251
28	DME3046	Kp-Ku	16.0G	12.4G-18.0G		7.5	1m							150	Si♦	C234
29	DME3047	Kp-Ku	16.0G	12.4G-18.0G		7.5	1m							150	Si♦	C242
30	DME3049	Kp-Ku	16.0G	12.4G-18.0G		7.5	1m							150	Si♦	C240
31	DME3053	Kp-Ku	16.0G	12.4G-18.0G		7.5	1m							150	Si♦	C252
32	DME3054	Kp-Ku	16.0G	12.4G-18.0G		7.5	1m							150	Si♦	C233
33	DME3056	Kp-Ku	16.0G	12.4G-18.0G		7.5	1m							150	Si♦	A427
34	DME3058	Kp-Ku	16.0G	12.4G-18.0G		7.5	1m							150	Si♦	A425
35	DME3126	Kp-Ku	16.0G	12.4G-18.0G		7.5	1m							150	Si♦	A424
36▼	DME3178	Ku	16.0G	12.4G-18.0G		7.5	1.0m				1.6	300-680		150	Si♦	W304
37	DME4541	Ku	16G	12.4G-18G		8.0	1.0m	100						150	Si♦$	C222
38	DME6507	Ku	16G	12G-18G		7.5									Si♦$	M577a
39	DME6553	Kp-Ku	16.0G	12.4G-18.0G		7.5	1m							150	Si♦	M1137
40	DMF3062	Kp-Ku	16.0G	12.4G-18.0G		8.0	1m							150	Si♦	C236
41	DMF3062A	Kp-Ku	16.0G	12.4G-18.0G		7.5	1m							150	Si♦	C236
42	DMF3065	Kp-Ku	16.0G	12.4G-18.0G		8.0	1m							150	Si♦	A424
43	DMF3065A	Kp-Ku	16.0G	12.4G-18.0G		7.5	1m							150	Si♦	A424
44	DMF3069	Kp-Ku	16.0G	12.4G-18.0G		8.0	1m							150	Si♦	A425
45	DMF3069A	Kp-Ku	16.0G	12.4G-18.0G		7.5	1m							150	Si♦	A425
46	DMF3073	Kp-Ku	16.0G	12.4G-18.0G		8.0	1m							150	Si♦	C232
47	DMF3073A	Kp-Ku	16.0G	12.4G-18.0G		7.5	1m							150	Si♦	C232
48	DMF3075	Kp-Ku	16.0G	12.4G-18.0G		8.0	1m							150	Si♦	C242
49	DMF3075A	Kp-Ku	16.0G	12.4G-18.0G		7.5	1m							150	Si♦	C242
50	DMF3078	Kp-Ku	16.0G	12.4G-18.0G		8.0	1m							150	Si♦	M1141
51	DMF3078A	Kp-Ku	16.0G	12.4G-18.0G		7.5	1m							150	Si♦	M1141
52	DMF3080	Kp-Ku	16.0G	12.4G-18.0G		8.0	1m							150	Si♦	C255
53	DMF3080A	Kp-Ku	16.0G	12.4G-18.0G		7.5	1m							150	Si♦	C255
54▼	DMF3187	Ku	16.0G	12.4G-18.0G		7.5	1.0m				1.6	300-680		150	Si♦	W302
55▼	DMF3190	Ku	16.0G	12.4G-18.0G		7.5	1.0m				1.6	300-680		150	Si♦	W304
56	DMF4012	Kp-Ku	16.0G	12.4G-18.0G		8.0								150	Si♦$	M905*
57	DMF4012A	Kp-Ku	16.0G	12.4G-18.0G		7.5								150	Si♦$	M905*
58	DMF4019	Kp-Ku	16.0G	12.4G-18.0G		7.5	1G	100						150	Si♦	M790b
59	DMF4019A	Kp-Ku	16.0G	12.4G-18.0G		7.0	1G	100						150	Si♦	A421
60	DMF4019AM	Kp-Ku	16.0G	12.4G-18.0G		7.0	1G	100						150	Si♦	A421
61	DMF4019B	Kp-Ku	16.0G	12.4G-18.0G		6.5	1G	100						150	Si♦	M790b
62	DMF4019BM	Kp-Ku	16.0G	12.4G-18.0G		6.5	1G	100						150	Si♦	M790b
63	DMF4019C	Kp-Ku	16.0G	12.4G-18.0G		6.0	1G	100						150	Si♦	M790b
64	DMF4019CM	Kp-Ku	16.0G	12.4G-18.0G		6.0	1G	100						150	Si♦	M790b
65	DMF4019M	Kp-Ku	16.0G	12.4G-18.0G		7.5	1G	100						150	Si♦	M790b
66♦	DMF4052	Ku	16.0G	12.4G-18.0G		8.0	1m	25						150	Si♦$	M910
67♦	DMF4052A	Ku	16.0G	12.4G-18.0G		7.5	1m	16						150	Si♦$	M910
68	DMF4574	Ku	16G	12.4G-18G		8.0	1.0m	100						150	Si♦$	C222
69	DMF4574A	Ku	16G	12.4G-18G		7.5	1.0m	100						150	Si♦$	C222
70	DMF4593	Kp-Ku	16.0G	12.4G-18.0G		8.0	1m							150	Si♦	C235
71	DMF4593A	Kp-Ku	16.0G	12.4G-18.0G		7.5	1m							150	Si♦	C235
72	DMF4734	Kp-Ku	16.0G	12.4G-18.0G		8.0	1m							150	Si♦	C237
73	DMF4734A	Kp-Ku	16.0G	12.4G-18.0G		7.5	1m							150	Si♦	C237
74	DMF4788	Ku	16G	12.4G-18G		8.0	1.0m	100						150	Si♦$	M579
75	DMF4788A	Ku	16G	12.4G-18G		7.5	1.0m	100						150	Si♦$	M579
76	DMF5600	Kp-Ku	16.0G	12.4G-18.0G		8.0	1m							150	Si♦	M577b
77	DMF5600A	Kp-Ku	16.0G	12.4G-18.0G		7.5	1m							150	Si♦	M577b
78	DMF6022	Kp-Ku	16.0G	12.4G-18.0G		8.0	1m							150	Si♦	A427
79	DMF6022A	Kp-Ku	16.0G	12.4G-18.0G		7.5	1m							150	Si♦	A427
80	DMF6023	Kp-Ku	16.0G	12.4G-18.0G		8.0	1m							150	Si♦	C231
81	DMF6023A	Kp-Ku	16.0G	12.4G-18.0G		7.5	1m							150	Si♦	C231
82	DMF6107	Ku	16G			7.5	1.0m	100			1.8	200-500		150	Si♦$	F85
83	DMF6107A	Ku	16G			7.5	1.0m	100			1.6	200-500		150	Si♦$	F85
84♦	DMF6107AM	Ku	16G	12.4G-18.0G		7.0	1.0m				1.6	200-500		150	♦	A421§
85	DMF6107B	Ku	16G			6.5	1.0m	100			1.6	200-500		150	Si♦$	F85
86♦	DMF6107BM	Ku	16G	12.4G-18.0G		6.5	1.0m				1.6	200-500		150	♦	A421§
87	DMF6107C	Kp-Ku	16.0G	12.4G-18.0G		6.0	1G	100			1.6	200-500		150	Si♦	A421
88♦	DMF6107CM	Ku	16G	12.4G-18.0G		6.0	1.0m				1.6	200-500		150	♦	A421§
89♦	DMF6107M	Ku	16G	12.4G-18.0G		7.5	1.0m				1.8	200-500		150	♦	A421§
90	DMF6298	Kp-Ku	16.0G	12.4G-18.0G		8.0	1m							150	Si♦	C251
91	DMF6298A	Kp-Ku	16.0G	12.4G-18.0G		7.5	1m							150	Si♦	C251
92	DMF6395	Kp-Ku	16.0G	12.4G-18.0G		8.0	1m							150	Si♦	C238
93	DMF6395A	Kp-Ku	16.0G	12.4G-18.0G		7.5	1m							150	Si♦	C238
94	DMF6459	Kp-Ku	16.0G	12.4G-18.0G		8.0	1m							150	Si♦	C228
95	DMF6459A	Kp-Ku	16.0G	12.4G-18.0G		7.5	1m							150	Si♦	C228
96	DMF6554	Kp-Ku	16.0G	12.4G-18.0G		8.0	1m							150	Si♦	C233
97	DMF6554A	Kp-Ku	16.0G	12.4G-18.0G		7.5	1m							150	Si♦	C233
98	DMF6574	Kp-Ku	16.0G	12.4G-18.0G		8.0	1m							150	Si♦	C252
99	DMF6574A	Kp-Ku	16.0G	12.4G-18.0G		7.5	1m							150	Si♦	C252
100	DMF6884	Kp-Ku	16.0G	12.4G-18.0G		8.0	1m							150	Si♦	A422
101	DMF6884A	Kp-Ku	16.0G	12.4G-18.0G		7.5	1m							150	Si♦	A422
102	DMF6885	Kp-Ku	16.0G	12.4G-18.0G		8.0	1m							150	Si♦	C234
103	DMF6885A	Kp-Ku	16.0G	12.4G-18.0G		7.5	1m							150	Si♦	C234
104	DMF6886	Kp-Ku	16.0G	12.4G-18.0G		8.0	1m							150	Si♦	C239
105	DMF6886A	Kp-Ku	16.0G	12.4G-18.0G		7.5	1m							150	Si♦	C240
106♦	DMG6414	Ku	16G	12.4G-18.0G		7.5	1.0m	25						150	Si♦$	u28a
107	DMG6414A	Kp-Ku	16.0G	12.4G-18.0G		7.0	1m	100						150	Si♦$	u28a
108	DMH3156	Kp-Ku	16.0G	12.4G-18.0G			1m							150	Si♦	C240
109	DMH3157	Kp-Ku	16.0G	12.4G-18.0G			1m							150	Si♦	C241
110	DMH3158	Kp-Ku	16.0G	12.4G-18.0G			1m							150	Si♦	C242

SYMBOLS AND CODES EXPLAINED IN INTERPRETER

4. MICROWAVE MIXER DIODES

IN ORDER OF (1) TEST FREQ (OR AVG FREQ WHEN TEST FREQ NOT AVAILABLE) and (2) TYPE No.

LINE No.	[2] TYPE No.	BAND	[1] TEST FREQ. (Hz)	FREQUENCY RANGE MIN - MAX (Hz)	NOISE MAX RATIO NR times	NOISE MAX REC. NF (dB)	TEST COND. Pin (W)	TEST COND. RL (Ω)	TEST COND. Zm (Ω)	MAX. CONV. LOSS (dB)	MAX. VSWR	IF IMPEDANCE RANGE MIN - MAX (Ω)	ABSOLUTE MAX RATING BURN-OUT (Erg)	ABSOLUTE MAX RATING MAX. TEMP (°C)	DESCRIPTION MAT.	DESCRIPTION DWG. No.
1	DMH3159	Kp-Ku	16.0G	12.4G-18.0G			1m							150	Si♦	M1140
2	DMH4383	Kp-Ku	16.0G	12.4G-18.0G			1m							150	Si♦	C238
3	DMH6570	Kp-Ku	16.0G	12.4G-18.0G			1m							150	Si♦	C239
4	DMJ3081	Kp-Ku	16.0G	12.4G-18.0G		8.0	1m							150	Si♦	C228
5	DMJ3082	Kp-Ku	16.0G	12.4G-18.0G		8.0	1m							150	Si♦	C238
6	DMJ3083	Kp-Ku	16.0G	12.4G-18.0G		8.0	1m							150	Si♦	C251
7	DMJ3085	Kp-Ku	16.0G	12.4G-18.0G		8.0	1m							150	Si♦	C234
8	DMJ3089	Kp-Ku	16.0G	12.4G-18.0G		8.0	1m							150	Si♦	C237
9	DMJ3091	Kp-Ku	16.0G	12.4G-18.0G			1m							150	Si♦	C245
10	DMJ3097	Kp-Ku	16.0G	12.4G-18.0G		8.0	1m							150	Si♦	C231
11	DMJ3100	Kp-Ku	16.0G	12.4G-18.0G		8.0	1m							150	Si♦	C232
12	DMJ3102	Kp-Ku	16.0G	12.4G-18.0G		8.0	1m							150	Si♦	C233
13	DMJ3104	Kp-Ku	16.0G	12.4G-18.0G		8.0	1m							150	Si♦	C235
14	DMJ3107	Kp-Ku	16.0G	12.4G-18.0G		8.0	1m							150	Si♦	C236
15	DMJ3109	Kp-Ku	16.0G	12.4G-18.0G		8.0	1m							150	Si♦	C242
16	DMJ3111	Kp-Ku	16.0G	12.4G-18.0G			1m							150	Si♦	C247
17	DMJ3113	Kp-Ku	16.0G	12.4G-18.0G			1m							150	Si♦	C249
18	DMJ3116	Kp-Ku	16.0G	12.4G-18.0G		8.0	1m							150	Si♦	C252
19	DMJ3119	Kp-Ku	16.0G	12.4G-18.0G		8.0	1m							150	Si♦	C254
20	DMJ3152	Kp-Ku	16.0G	12.4G-18.0G		8.0	1m							150	Si♦	A425
21	DMJ3155	Kp-Ku	16.0G	12.4G-18.0G		8.0	1m							150	Si♦	A424
22▼	DMJ3195	Ku	16.0G	12.4G-18.0G		8.0	1.0m				1.6	300-680		150	Si♦	W304
23	DMJ4397	Kp-Ku	16.0G	12.4G-18.0G		8.0	1m							150	Si♦	C239
24	DMJ4705	Kp-Ku	16.0G	12.4G-18.0G		8.0	1m							150	Si♦	M1137
25	DMJ4747	Kp-Ku	16.0G	12.4G-18.0G			1m							150	Si♦	C246
26	DMJ4766	Kp-Ku	16.0G	12.4G-18.0G			1m							150	Si♦	C250
27	DMJ4768	Kp-Ku	16.0G	12.4G-18.0G		8.0	1m							150	Si♦	M1141
28	DMJ6665	Kp-Ku	16.0G	12.4G-18.0G		8.0	1m							150	Si♦$	A366
29	DMJ6666	Kp-Ku	16.0G	12.4G-18.0G		8.0	1m							150	Si♦$	M910*
30	DMJ6667	Kp-Ku	16.0G	12.4G-18.0G		8.0	1m							150	Si♦	M1138
31	DMJ6670	Kp-Ku	16.0G	12.4G-18.0G		8.0	1m	16						150	Si♦$	A412
32	DMJ6778	Kp-Ku	16G	12.4G-18.0G		8.0	1m							150	Si♦$	M577b
33	DMK5068	Kp-Ku	16.0G	12.4G-10.0G		5.3	1m	100			1.6	280-400		150	GA♦	M790bØ
34	DMK5068A	Kp-Ku	16.0G	12.4G-10.0G		4.8	1m	100			1.6	280-400		150	GA♦	M790bØ
35	HP5082-2273	Ku	16000M	12.0G-18.0G		6.5	1.0m				2.0	200-400	1.0 $	150J	Si♦	M277e
36	HP5082-2723	Ku	16000M	12.0G-18.0G		6.5	1.0m	1.0			1.5	200-400	1.0 $	150J	Si#♦	F82Ø
37	HSCH5510	K	16G			7.0					1.5	200-400		175	♦	M1195
38	HSCH5530	K	16G			7.0					1.5	200-400		175	♦	M1195
39	HSCH-5314	Ku Band	16.0G	1.0G-18.0G		7.2		0.0				200-400		175	♦	M1128
40	HSCH-5334	Ku Band	16.0G	1.0G-18.0G		7.2		0.0				200-400		175	♦	M1128
41	HSCH-5335	Ku Band	16.0G	1.0G-18.0G		7.2		0.0				200-400		175	♦	M1128
42	MA4E188	Ku	16G			6.5					1.5	250-450		150S	Si#$	F82
43	MA4E189	Ku	16G			7.0					2.0	250-450		150S	Si#$	F82
44	MA4E190	Ku	16G			6.5					1.5	250-450		150S	Si#$	M790Ø
45	MA4E191	Ku	16G			7.0					2.0	250-450		150S	Si#$	M790Ø
46	MA443	Ku	16000M	10.0G - 18.0G	2.5		1.0m	100	500	7.5		325- 625	.60	150A	SiØ	P1bØØ
47	MA443A	Ku	16000M	10.0G - 18.0G	1.5		1.0m	100	500	7.0	1.6	365- 565	.60	150A	SiØ	P1bØØ
48	MA443B	Ku	16000M	10.0G - 18.0G			1.0m	100	500		1.6	365- 565	.60	150A	SiØ	P1bØØ
49	MA444	Ku	16000M	10.0G - 18.0G	2.5	12	1.0m	100	500	7.5		325- 625	.60	70A	SiØ	P1bØØ
50	MA444A	Ku	16.0G	10G-18G	1.5	9.8	1.0m	100	500	7.0	1.6	365-565	.60	70A	SiØ	P1bØØ
51	MA444B	Ku	16000M	10.0G - 18.0G		8.8	1.0m	100	500	6.5	1.6	365- 565	.60	70A	SiØ	P1bØØ
52	MA444C	Ku	16000M		1.3	8.3	1.0m	100	500	6.0	1.5	400- 565	1.0	70A	Si	P1bØØ
53	MA444D	Ku	16000M		1.3	7.8				5.7	1.6	400- 565			Si	P1bØØ
54	MA445	Ku	16000M	10.0G - 18.0G	2.5		1.0m	100	500	7.5		325- 625	1.0	150A	SiØ	P1bØØ
55	MA445A	Ku	16000M	10.0G - 18.0G	1.5	9.8	1.0m	100	500	7.0	1.6	365- 565	1.0	150A	SiØ	P1bØØ
56	MA445B	Ku	16000M	10.0G - 18.0G	1.3	8.8	1.0m	100	500	6.5	1.6	365- 565	1.0	150A	SiØ	P1bØØ
57	MA490	Ku	16000M	12.5G - 17.5G	2.5		1.0m	100	500	7.5	2.0	325- 625	1.0	150A	SiØ	P1bØØ
58	MA490A	Ku	16000M	12.5G - 17.5G	1.5		1.0m	100	500	7.0	1.6	365- 565	1.0	150A	SiØ	P1bØØ
59	MA490B	Ku	16000M	12.5G - 17.5G	1.5	10	1.0m	100	400	6.5	1.6	365- 565	1.0	150	SiØ	P1dØ
60	MA490C	Ku	16000M			9.5	1.0m	100	400		1.5	400-565	1.0	150	SiØ	P1dØ
61	MA490D	Ku	16000M			8.8	1.0m	100	400		1.5	400-565	1.0	150	SiØ	P1dØ
62	MA490E	Ku	16000M			8.0	1.0m	100	400		1.5	400-565	1.0	150	SiØ	P1dØ
63	MA490F	Ku	16000M			7.5	1.0m	100	400		1.5	400-565	1.0	150	SiØ	P1dØ
64	MA490G	Ku	16000M			7.0	1.0m	100	400		1.5	400-565	1.0	150	SiØ	P1dØ
65	MA490H	Ku	16000M			6.5					1.5	400-565	1.0		Ø	P1d
66	MA491	X-Ku	16.0G	10G-16G		13	1.0m	100	500	7.5	2.5	325-625	1.0	150A	SiØ	P1b
67	MA4124	Ku	16000M	10.0G - 18.0G		27	1.0m	100	500	7.5		325- 625	1.0	70A	SiØ	P1bØØ
68	MA4124A	Ku	16000M	10.0G - 18.0G		24	1.0m	100	500	7.5		325- 625	1.0	70A	SiØ	P1bØØ
69	MA4861C	Ku	16000M	12.5G - 17.5G	1.9	9.5	1.0m	22		6.0	2.0	400- 565	10	150A	♦	DO37
70	MA4861D	Ku	16000M	12.5G - 17.5G	1.9	8.8	1.0m	22		6.0	2.0	400- 565	10	150A	♦	DO37
71	MA4861E	Ku	16000M	12.5G - 17.5G	1.9	8.0	1.0m	22		6.0	2.5	250-500	2.0 $	150A	Si♦	DO37Ø
72	MA4861F	Ku	16000M	12.5G - 17.5G	1.9	7.5	1.0m	22		6.0	2.0	300-550	2.0 $	150A	Si♦	DO37Ø
73	MA4861G	Ku	16000M	12.5G - 17.5G	1.9	7.0	1.0m	22		6.0	2.0	300-550	2.0 $	150A	Si♦	DO37Ø
74	MA4861H	Ku	16000M	12.5G - 17.5G	1.9	6.5	1.0m	22		6.0	2.0	300-550	2.0 $	150A	Si♦	DO37Ø
75	MA40012	Ku	16G	12.4G-18.0G		8.0		16			1.8	200-500	5.0	150A	Si♦	F107Ø
76	MA40013	Ku	16G	12.4G-18.0G		7.5		16			1.6	200-500	5.0	150A	Si♦	F107Ø
77	MA40014	Ku	16G	12.4G-18.0G		7.0		16			1.6	200-500	5.0	150A	Si♦	F107Ø
78	MA40015	Ku	16G	12.4G-18.0G		6.5		16			1.6	200-500	5.0	150A	Si♦	F107Ø
79	MA40110	Ku	16000M			6.5					1.5	200-450		150A	♦	F82Ø
80	MA40111	Ku	16000M			7.0					2.0	200-450		150A	♦	F82Ø
81	MA40115	Ku	16000M			6.5					1.5	200-450		150A	♦	M790Ø
82	MA40116	Ku	16000M			7.0					2.0	200-450		150A	♦	M790Ø
83	MA40160	Ku	16000M			6.5	1.0m				1.5	200-450	2.0 $	150A	Si♦	F85Ø
84	MA40161	Ku	16000M			7.0	1.0m				2.0	200-450	2.0 $	150A	Si♦	F85Ø
85	MA40162	Ku	16000M			6.5	1.0m				1.5	200-450	2.0 $	150A	Si♦	M790Ø
86	MA40163	Ku	16000M			7.0	1.0m				2.0	200-450	2.0 $	150A	Si♦	M790Ø
87	MA40165	Ku	16G			6.5					1.5	250-450		150S	Si#$	M790Ø
88	MA40166	Ku	16G			7.0					2.0	250-450		150S	Si#$	M790Ø
89	MA40182	Ku	16000M	12.4G-18G		12	100u	10		8.0	1.2Ø	150-400	2.0 $	150	Si♦	M790†
90	MA40183	Ku	16000M	12.4G-18G		12	100u	10		8.0	1.2Ø	150-400	2.0 $	150	Si♦	F82†
91	MA40184	Ku	16000M	12.4G-18G		12	100u	10		8.0	1.2Ø	150-400	2.0 $	150	Si♦	u14†
92	MA40427	Ku	16G	12.4G-18G		5.5								150S	Si♦	V13
93	MA41201D	Ku	16000M	12.4G-18.0G		8.8	1.0m	100		6.5Ø	1.5	400-565	10 $	150A	SiØ	P1dØ
94	MA41201E	Ku	16000M	12.4G-18.0G		8.0	1.0m	100		6.0Ø	1.5	400-565	10 $	150A	SiØ	P1dØ
95	MA41201F	Ku	16000M	12.4G-18.0G		7.5	1.0m	100		6.0Ø	1.5	400-565	10 $	150A	SiØ	P1dØ
96	MA41201G	Ku	16000M	12.4G-18.0G		7.0	1.0m	100		5.5Ø	1.5	400-565	10 $	150A	SiØ	P1dØ
97	MA41221D	X-Ku	16000M	12.4G-18.0G		9.0	1.0m						2.0 $	150	SiØ	F107Ø
98	MA41221E	X-Ku	16000M	12.4G-18.0G		8.0	1.0m						2.0 $	150	SiØ	F107Ø
99	MA41221F	X-Ku	16000M	12.4G-18.0G		7.5	1.0m						2.0 $	150	SiØ	F107Ø
100	MD219	Ku	16000M			7.0	7.0m				1.5	75-150	10	150S	Si	F27am
101	MD219F	Ku	16000M			7.0	7.0m				1.5	75-150	10	150S	Si	F82
102	MD220	Ku	16000M			7.5	7.0m				1.5	75-150	10	150S	Si	F27am
103	MD220F	Ku	16000M			7.5	7.0m				1.5	75-150	10	150S	Si	F82
104	MD221	Ku	16000M			8.0	7.0m				1.5	75-150	10	150S	Si	F27am
105	MD221F	Ku	16000M			8.0	7.0m				1.5	75-150	10	150S	Si	F82
106	P1907	Ku	16000M			9.0					1.8	300-600			♦	F85
107	P1907A	Ku	16000M			8.0					1.8	300-600			♦	F85
108	P1907B	Ku	16000M			7.5					1.8	350-600			♦	F85
109	P1907C	Ku	16000M			7.0					1.6	300-600			♦	F85
110	P1978B	Ku	16000M			10							1.0		Ø	F85Ø

SYMBOLS AND CODES EXPLAINED IN INTERPRETER

4. MICROWAVE MIXER DIODES

IN ORDER OF (1) TEST FREQ (OR AVG FREQ WHEN TEST FREQ NOT AVAILABLE) and (2) TYPE No.

LINE No.	[2] TYPE No.	BAND	[1] TEST FREQ. (Hz)	FREQUENCY RANGE MIN - MAX (Hz)	NOISE MAX RATIO NR times	NOISE MAX REC. NF (dB)	TEST COND. FOR- Pin (W)	RL (Ω)	Zm (Ω)	MAX. CONV. LOSS (dB)	MAX. VSWR	IF IMPEDANCE RANGE MIN - MAX (Ω)	ABSOLUTE MAX RATING BURN-OUT (Erg)	MAX. TEMP (°C)	DESCRIPTION MAT.	DWG. No.
1	P1978C	Ku	16000M			9.5							1.0		Ø	F85Ø
2	P1978D	Ku	16000M			9.5							1.0		Ø	F85Ø
3	PFM193		16000M			7.5					1.6	200-500	10		GA♦	F82
4	PFM194		16000M			7.0					1.8	200-500	10		GA♦	F82
5	PFM195		16000M			6.5					1.8	200-500	10		GA♦	F82
6	PFM196		16000M			6.0					1.6	200-500	10		GA♦	F82
7	PKM910	Ku	16000M	12.4G-18.0G		8.0	1.0	100	400		1.6	150-350	5.0	150	Si	A298t
8	PKM911	Ku	16000M	12.4G-18.0G		7.5	1.0	100	400		1.6	150-350	5.0	150	Si	A298t
9	PKM912	Ku	16000M	12.4G-18.0G		7.0	1.0	100	400		1.6	150-350	5.0	150	Si	A298t
10	PKM913	Ku	16000M	12.4G-18.0G		6.5	1.0	100	400		1.6	150-350	5.0	150	Si	A298t
11	PKM914	Ku	16000M	12.4G-18.0G		6.0	1.0	100	400		1.6	150-350	5.0	150	Si	A298t
12	DC1306	Ku	16.5G	12.4G-18G	1.0	7.5	1.0m	100		6.0	2.0	350Ø	250m$	150A	GA♦	M792aØ
13	DC1542	Ku	16500M	12.4G-18G		7.5				6.0	2.5	450Ø	400m$	150A	Si♦	P1eØ
14	DC1546	J	16.5G							6.0	2.5	450	200 §	150		F51cØ
15	DC1585		16.5G			8.0				6.5	2.0	400				
16	1N26	K	23984M		2.5		1.0m	100	500	8.5		300- 600	.10	70A	Si	P1bØØ
17	1N26A	K	23984M		2.0		1.0m	100	500	7.5	1.6	300- 600	.10	70A	Si	P1bØØ
18	1N26C	K	23984M		1.5	9.5	1.0m	100	500	7.5	1.5	400- 600	.30	150A	Si	P1bØØ
19	D5326	K	23984M			11	1.0m	100			1.5	400-600	300m	150	SiØ$	P1bØ
20	D5326A	K	23984M			10	1.0m	100			1.5	400-600	300m	150	SiØ$	P1bØ
21	D5326AM	K	23.984G			10.0	1.0m				1.5	400-600	0.3	150		M1093
22	D5326AMR	K	23.984G			10.0	1.0m				1.5	400-600	0.3	150		M1093
23	D5326B	K	23984M			9.0	1.0m	100			1.5	400-600	300m	150	SiØ$	P1bØ
24	D5326BM	K	23.984G			9.0	1.0m				1.5	400-600	0.3	150		M1093
25	D5326BMR	K	23.984G			9.0	1.0m				1.5	400-600	0.3	150		M1093
26	D5326M	K	23.984G			11.0	1.0m				1.5	400-600	0.3	150		M1093
27	D5326MR	K	23.984G			11.0	1.0m				1.5	400-600	0.3	150		M1093
28	MA493B	K	23984M			11.0	1.0m	100	400		1.5	400-600	300m	150	SiØ	P1dØ
29	MA493C	K	23984M			9.5	1.0m	100	400		1.5	400-600	300m	150	SiØ	P1dØ
30	JAN1N26B,BM,BMR,BR	K	24000M		2.0	11	1.0m	100	500	7.5	1.5	400- 600		150A	Si	P1bØ
31	DMA5326	Ku-Kr	24.0G	18.0G-26.5G		11.0	1m	100				400-600	0.3	150	SiØ	M1143
32	DMA5326A	Ku-Kr	24.0G	18.0G-26.5G		10.0	1m	100				400-600	0.3	150	SiØ	M1143
33	DMA5326AM	Ku-Kr	24.0G	18.0G-26.5G		10.0	1m	100				400-600	0.3	150	SiØ	M1143
34	DMA5326AMR	Ku-Kr	24.0G	18.0G-26.5G		10.0	1m	100				400-600	0.3	150	SiØ	M1143
35	DMA5326AR	Ku-Kr	24.0G	18.0G-26.5G		10.0	1m	100				400-600	0.3	150	SiØ	M1143
36	DMA5326B	Ku-Kr	24.0G	18.0G-26.5G		9.0	1m	100				400-600	0.3	150	SiØ	M1143
37	DMA5326BM	Ku-Kr	24.0G	18.0G-26.5G		9.0	1m	100				400-600	0.3	150	SiØ	M1143
38	DMA5326BMR	Ku-Kr	24.0G	18.0G-26.5G		9.0	1m	100				400-600	0.3	150	SiØ	M1143
39	DMA5326BR	Ku-Kr	24.0G	18.0G-26.5G		9.0	1m	100				400-600	0.3	150	SiØ	M1143
40	DMA5326M	Ku-Kr	24.0G	18.0G-26.5G		11.0	1m	100				400-600	0.3	150	SiØ	M1143
41	DMA5326MR	Ku-Kr	24.0G	18.0G-26.5G		11.0	1m	100				400-600	0.3	150	SiØ	M1143
42	DMA5326R	Ku-Kr	24.0G	18.0G-26.5G		11.0	1m	100				400-600	0.3	150	SiØ	M1143
43	DMD6298	Ky-Kr	24.0G	18.0G-26.5G		8.0	1m	25						150	Si♦$	M491e*
44	DMD6298A	Ku-Kr	24.0G	18.0G-26.5G		7.5	1m	16						150	Si♦$	M491e
45	DMD6395	Ky-Kr	24.0G	18.0G-26.5G		8.0								150	Si♦$	M491e*
46	DMD6395A	Ky-Kr	24.0G	18.0G-26.5G		7.5								150	Si♦$	M491e*
47	PKM915	K	24000M	18.0G-26.0G		9.0	1.0	100	400		1.6	150-350	5.0	150	Si	A298t
48	PKM916	K	24000M	18.0G-26.0G		8.0	1.0	100	400		1.6	150-350	5.0	150	Si	A298t
49	PKM917	K	24000M	18.0G-26.0G		7.5	1.0	100	400		1.6	150-350	5.0	150	Si	A298t
50	PKM918	K	24000M	18.0G-26.0G		7.0	1.0	100	400		1.6	150-350	5.0	150	Si	A298t
51	PKM919	K	24000M	18.0G-26.0G		6.5	1.0	100	400		1.6	150-350	5.0	150	Si	A298t
52	MDX653	KA	32G	25-40G				4.5		4.5		50-200		100C	Ga♦	M787
53	MDX654	KA	32G	25-40G				4.5		5.0		50-200		100C	Ga♦	M787
54	MDX655	KA	32G	25-40G				4.5		5.5		50-200		100C	Ga♦	M787
55	D5253BM	Ka	34.680G			10.0	1.0m						0.1	150		F146
56	D5253CM	Ka	34.680G			9.0	1.0m						0.1	150		F146
57	D5253DM	Ka	34.680G			8.0	1.0m						0.1	150		F146
58	D5353BM	Ka	34.680G			10.0	1.0m				1.6	400-800	0.1	150		M1094
59	D5353BMR	Ka	34.680G			10.0	1.0m				1.6	400-800	0.1	150		M1094
60	D5353CM	Ka	34.680G			9.0	1.0m				1.6	400-800	0.1	150		M1094
61	D5353CMR	Ka	34.680G			9.0	1.0m				1.6	400-800	0.1	150		M1094
62	D5353DM	Ka	34.680G			8.0	1.0m				1.6	400-800	0.1	150		F146
63	D5353DMR	Ka	34.680G			8.0	1.0m				1.6	400-800	0.1	150		F146
64	D5353EMR	Ka	34.680G			7.5	1.0m				1.6	400-800	0.1	150		M1094
65	MA494B	Ka	34.8G		2.0	10	1.0m	100	400	6.5	1.6	400-800	.30	150	SiØ	P1Ø
66	1N53	Ka	34850M		2.5		1.0m	100	500	8.5	1.6	400- 800	.30	70A	Si	P1ØØ
67	JAN1N53	Ka	34850M		2.5		1.0m	100	500	8.5	1.6	400- 800		70A	Si	P1
68	1N53A	Ka	34860M		2.5		1.0m	100	500	6.5	1.6	400- 800	.30	70A	Si	P1ØØ
69	1N53B	Ka	34860M		2.0	10	1.0m	100	500	6.5	1.6	400- 800	.30	70A	Si	P1ØØ
70	JAN1N53B,BM,BMR,BR	Ka	34860M		2.0	10	1.0m	100	500	6.5	1.6	500- 700		150A	Si	P1Ø
71	1N53C	Ka	34860M		2.0	9.0	1.0m	100	500	6.5	1.6	400- 800	.30	70A	Si	P1ØØ
72	1N53D	Ka	34860M		2.0	9.0	1.0m	100	500	6.5	1.6	400- 800	.30	150A	Si	P1ØØ
73	AAY59	Q-Ka	34860M	26G-40G	1.6	10				5.5Ø	1.8	700-1400	30m	100A	GeØ	F79
74	BAT38	Ka	34860M	26.0G-40.0G	1.6	10.0		15		5.5Ø	1.8	700-1100	40m	100A	Si♦	F79Ø
75	BAT59	Ka	34.86G	26G-40G	1.6	10				5.5Ø	1.8	700-1400	30m	100A	Si♦	F79
76	BAV72	Q	34860M	26G-40G	1.4	10		15		5.9Ø	1.8	700-1100	40m	150A	Si♦	F107bØ
77	D5253B	Ka	34860M	26.5G-40.0G		10	1.0m	100					300m	150S	SiØ	F85Ø
78	D5253C	Ka	34860M	26.5G-40.0G		9.0	1.0m	100					300m	150S	SiØ	F85Ø
79	D5253D	Ka	34860M	26.5G-40.0G		8.0	1.0m	100					300m	150S	SiØ	F85Ø
80	D5253E	Ka	34860M	26.5G-40.0G		7.0	1.0m	100					300m	150S	SiØ	F85Ø
81	D5253EM	Ka	34.860G			7.0	1.0m						0.1	150		F146
82	D5353B	Ka	34860M		2.0	10	1.0m			6.5	1.6	400-800	100m	150A	Ø	P1Ø
83	D5353C	Ka	34860M		2.0	9.0	1.0m			6.5	1.6	400-800	100m	150A	Ø	P1Ø
84	D5353D	Ka	34860M		2.0	8.0	1.0m			6.5	1.6	400-800	100m	150A	Ø	P1Ø
85	D5353E	Ka	34860M		2.0	7.5	1.0m			6.0	1.6	400-800	100m	150A	Ø	P1Ø
86	D5353EM	Ka	34.860G			7.5	1.0m				1.6	400-800	0.1	150		M1094
87	D5353F	Ka	34860M		2.0	7.0	1.0m			5.5	1.6	400-800	100m	150A	Ø	P1Ø
88	D5353FM	Ka	34.860G			7.0	1.0m				1.6	400-800	0.1	150		M1094
89	D5353MR	Ka	34.860G			7.0	1.0m				1.6	400-800	0.1	150		M1094
90	MA494	Ka	34860M			13.1	1.0m	100	400		1.6	400-800	300m	150	SiØ	P1Ø
91	MA494A	Ka	34860M			11.1	1.0m	100	400		1.6	400-800	300m	150	SiØ	P1Ø
92	MA494C	Ka	34860M			9.0	1.0m	100	400		1.6	400-800	300m	150	SiØ	P1Ø
93	MA494D	Ka	34860M			9.0	1.0m	100	400		1.6	400-800	300m	150	SiØ	P1Ø
94	P1909	Ka	34860M			10.0						300-700			♦	F85
95	P1909A	Ka	34860M			9.0						300-700			♦	F85
96	P1909B	Ka	34860M			8.0						300-700			♦	F85
97	P1909C	Ka	34860M			7.5						300-700			♦	F85
98	P1909D	Ka	34860M			7.0						300-700			♦	F85
99	P1953B	Ka	34860M			10							100m		Ø	F85Ø
100	P1953C	Ka	34860M			9.0							100m		Ø	F85Ø
101	P1953D	Ka	34860M			8.0							100m		Ø	F85Ø
102	P1953E	Ka	34860M			7.0							100m		Ø	F85Ø
103	PFM197		34860M			8.0					1.6	200-500	10		GA♦	F82
104	PFM198		34860M			7.5						200-500			GA♦	F82
105	PFM199		34860M			7.0						200-500			GA♦	F82
106	PFM199A		34860M			6.5						200-500			GA♦	F82
107	DMA5253B	Kr-Qb	34.9G	26.5G-40.0G		10.0	1m	100					0.1	150	SiØ	F146
108	DMA5253BM	Kr-Qb	34.9G	26.5G-40.0G		10.0	1m	100					0.1	150	SiØ	F146

SYMBOLS AND CODES EXPLAINED IN INTERPRETER

4. MICROWAVE MIXER DIODES

IN ORDER OF (1) TEST FREQ (OR AVG FREQ WHEN TEST FREQ NOT AVAILABLE) and (2) TYPE No.

LINE No.	[2] TYPE No.	BAND	[1] TEST FREQ. (Hz)	FREQUENCY RANGE MIN - MAX (Hz)	NOISE MAX RATIO NR times	NOISE MAX REC. NF (dB)	TEST COND. FOR- Pin (W)	RL (Ω)	Zm (Ω)	MAX. CONV. LOSS (dB)	MAX. VSWR	IF IMPEDANCE RANGE MIN - MAX (Ω)	ABSOLUTE MAX RATING BURN-OUT (Erg)	MAX. TEMP (°C)	DESCRIPTION MAT.	DWG. No.
1	DMA5253C	Kr-Qb	34.9G	26.5G-40.0G		9.0	1m	100					0.1	150	SiⒹ	M1143
2	DMA5253CM	Kr-Qb	34.9G	26.5G-40.0G		9.0	1m	100					0.1	150	SiⒹ	M1143
3	DMA5253D	Kr-Qb	34.9G	26.5G-40.0G		8.0	1m	100					0.1	150	SiⒹ	F146
4	DMA5253DM	Kr-Qb	34.9G	26.5G-40.0G		8.0	1m	100					0.1	150	SiⒹ	F146
5	DMA5253E	Kr-Qb	34.9G	26.5G-40.0G		7.0	1m	100					0.1	150	SiⒹ	F146
6	DMA5253EM	Kr-Qb	34.9G	26.5G-40.0G		7.0	1m	100					0.1	150	SiⒹ	F146
7	DMA5353B	Kr-Qb	34.9G	26.5G-40.0G		10.0	1m	100				400-800	0.1	150	SiⒹ	M1143
8	DMA5353BM	Kr-Qb	34.9G	26.5G-40.0G		10.0	1m	100				400-800	0.1	150	SiⒹ	M1143
9	DMA5353BMR	Kr-Qb	34.9G	26.5G-40.0G		10.0	1m	100				400-800	0.1	150	SiⒹ	M1143
10	DMA5353BR	Kr-Qb	34.9G	26.5G-40.0G		10.0	1m	100				400-800	0.1	150	SiⒹ	M1143
11	DMA5353C	Kr-Qb	34.9G	26.5G-40.0G		9.0	1m	100				400-800	0.1	150	SiⒹ	M1143
12	DMA5353CM	Kr-Qb	34.9G	26.5G-40.0G		9.0	1m	100				400-800	0.1	150	SiⒹ	M1143
13	DMA5353CMR	Kr-Qb	34.9G	26.5G-40.0G		9.0	1m	100				400-800	0.1	150	SiⒹ	M1143
14	DMA5353CR	Kr-Qb	34.9G	26.5G-40.0G		9.0	1m	100				400-800	0.1	150	SiⒹ	M1143
15	DMA5353D	Kr-Qb	34.9G	26.5G-40.0G		8.0	1m	100				400-800	0.1	150	SiⒹ	M1143
16	DMA5353DM	Kr-Qb	34.9G	26.5G-40.0G		8.0	1m	100				400-800	0.1	150	SiⒹ	M1143
17	DMA5353DMR	Kr-Qb	34.9G	26.5G-40.0G		8.0	1m	100				400-800	0.1	150	SiⒹ	M1143
18	DMA5353DR	Kr-Qb	34.9G	26.5G-40.0G		8.0	1m	100				400-800	0.1	150	SiⒹ	M1143
19	DMA5353E	Kr-Qb	34.9G	26.5G-40.0G		7.5	1m	100				400-800	0.1	150	SiⒹ	M1143
20	DMA5353EM	Kr-Qb	34.9G	26.5G-40.0G		7.5	1m	100				400-800	0.1	150	SiⒹ	M1143
21	DMA5353EMR	Kr-Qb	34.9G	26.5G-40.0G		7.5	1m	100				400-800	0.1	150	SiⒹ	M1143
22	DMA5353ER	Kr-Qb	34.9G	26.5G-40.0G		7.5	1m	100				400-800	0.1	150	SiⒹ	M1143
23	DMA5353F	Kr-Qb	34.9G	26.5G-40.0G		7.0	1m	100				400-800	0.1	150	SiⒹ	M1143
24	DMA5353FM	Kr-Qb	34.9G	26.5G-40.0G		7.0	1m	100				400-800	0.1	150	SiⒹ	M1143
25	DMA5353FMR	Kr-Qb	34.9G	26.5G-40.0G		7.0	1m	100				400-800	0.1	150	SiⒹ	M1143
26	DMA5353FR	Kr-Qb	34.9G	26.5G-40.0G		7.0	1m	100				400-800	0.1	150	SiⒹ	M1143
27	DMF4039	Kr-Qb	34.9G	26.5G-40.0G		10.0	1m	100						150	Si♦	M790b
28	DMF4039A	Kr-Qb	34.9G	26.5G-40.0G		9.0	1m	100						150	Si♦	M790b
29	DMF4039AM	Kr-Qb	34.9G	26.5G-40.0G		9.0	1m	100						150	Si♦	M790b
30	DMF4039B	Kr-Qb	34.9G	26.5G-40.0G		8.0	1m	100						150	Si♦	M790b
31	DMF4039BM	Kr-Qb	34.9G	26.5G-40.0G		8.0	1m	100						150	Si♦	M790b
32	DMF4039C	Kr-Qb	34.9G	26.5G-40.0G		7.5	1m	100						150	Si♦	M790b
33	DMF4039CM	Kr-Qb	34.9G	26.5G-40.0G		7.5	1m	100						150	Si♦	M790b
34	DMF4039D	Kr-Qb	34.9G	26.5G-40.0G		7.0	1G	100						150	Si♦	M790b
35	DMF4039DM	Kr-Qb	34.9G	26.5G-40.0G		7.0	1G	100						150	Si♦	M790b
36	DMF4039M	Kr-Qb	34.9G	26.5G-40.0G		10.0	1m	100						150	Si♦	M790b
37	DMF5078	Kr-Qb	34.9G	26.5G-40.0G		10.0	1m	100				300-700		150	Si♦	A421
38	DMF5078A	Kr-Qb	34.9G	26.5G-40.0G		9.0	1m	100				300-700		150	Si♦	A421
39	DMF5078AM	Kr-Qb	34.9G	26.5G-40.0G		9.0	1m	100				300-700		150	Si♦	A421
40	DMF5078B	Kr-Qb	34.9G	26.5G-40.0G		8.0	1m	100				300-700		150	Si♦	A421
41	DMF5078BM	Kr-Qb	34.9G	26.5G-40.0G		8.0	1m	100				300-700		150	Si♦	A421
42	DMF5078C	Kr-Qb	34.9G	26.5G-40.0G		7.5	1m	100				300-700		150	Si♦	A421
43	DMF5078CM	Kr-Qb	34.9G	26.5G-40.0G		7.5	1m	100				300-700		150	Si♦	A421
44	DMF5078D	Kr-Qb	34.9G	26.5G-40.0G		7.0	1G	100				300-700		150	Si♦	A421
45	DMF5078DM	Kr-Qb	34.9G	26.5G-40.0G		7.0	1G	100				300-700		150	Si♦	A421
46	DMF5078M	Kr-Qb	34.9G	26.5G-40.0G		10.0	1m	100				300-700		150	Si♦	A421
47	DMG6415	Kr-Qb	34.9G	26.5G-40.0G		9.0								150	Si♦$	u28a
48	DC1338	K	35G			10				8.5	3.0	300		150	GA	M1192
49	DC1339	K	35G			10				8.5	3.0	300		150	GA	M1192
50♦	M432A	Ka	35G	31-39G		6.0					1.6	100-300	1	100	GA♦	M1129a
51♦	M434A	Ka	35G	31-39G		8.0					2.0	100-300	1	100	GA♦	M1129a
52♦	M441A	Ka	35G	31-39G		5.0					1.6	100-300	1	100	Si♦	M1129a
53♦	M443A	Ka	35G	31-39G		7.0					2.0	100-300	1	100	Si♦	M1129a
54▼	M541A	Ka	35.0G	10M-2.0G		5.0	1.0m				1.6	100-300		100	Si♦	C261
55▼	M543A	Ka	35.0G	10M-2.0G		7.0	1.0m				2.0	100-300		100	Si♦	C261
56	MA40428		36G			7.5								150S	Si♦	V13
57▼	MA40185		40G	18G-40G		8.3	2.0m	22						150A	Si♦#	W311
58♦	M433B	Q	45G	41-49G		7.0					1.6	100-300			GA♦	M1129b
59♦	M435B	Q	45G	41-49G		9.0					2.0	100-300			GA♦	M1129b
60♦	M442B	Q	45G	41-49G		6.0					1.6	100-300	1	100	Si♦	M1129b
61♦	M444B	Q	45G	41-49G		8.0					2.0	100-300	1	100	Si♦	M1129b
62♦	M433U	V	50G	46-54G		7.0					1.8	100-300			GA♦	M1129b
63♦	M435U	V	50G	46-54G		9.0					2.0	100-300			GA♦	M1129b
64♦	M442U	V	50G	46-54G		6.0					1.8	100-300			Si♦	M1129b
65♦	M433V	W	60G	56-64G		7.0					1.8	100-300	1	100	GA♦	M1129c
66♦	M435V	W	60G	56-64G		9.0					2.4	100-300	1	100	GA♦	M1129c
67♦	M442V	W	60G	56-64G		6.0					1.8	100-300	1	100	Si♦	M1129c
68♦	M444V	W	60G	56-64G		8.0					2.4	100-300	1	100	Si♦	M1129c
69▼	M542V	W	60.0G	10M-2.0G		6.0	1.0m				1.8	100-300		100	Si♦	C261
70▼	M544V	W	60.0G	10M-2.0G		8.0	1.0m				2.4	100-300		100	Si♦	C261
71	MA40417		60G			8.5								150S	Si♦	V13
72	MDX623	Ka	60G	25-85G			5.0m	5.0		5.0		100-200		125	GA♦	M787a
73	MDX624	Ka	60G	25-85G			5.0m	5.0		5.5		100-200		125	GA♦	M787a
74	MDX625	Ka	60G	25-85G			5.0m	5.0		6.0		100-200		125	GA♦	M787a
75♦	M434E	W	75G	71-79G		8.0					1.8	100-300			GA♦	M1129d
76♦	M436E	W	75G	71-79G		10.0					2.4	100-300			GA♦	M1129d
77♦	DMK4791	mm	90G	40-100G		6.0	1.0m	100						150	GA♦	M577b
78♦	M436W	W	94G	89-99G		10.0					1.8	100-300	1	100	GA♦	M1129e
79♦	M438W	W	94G	89-99G		12.0					2.4	100-300	1	100	GA♦	M1129e
80♦	M437F	mm	140G	135-145G		11.0					1.8	100-300			GA♦	M1129e
81♦	M439F	mm	140G	135-145G		13.0					2.4	100-300			GA♦	M1129e

SYMBOLS AND CODES EXPLAINED IN INTERPRETER

5. MICROWAVE VIDEO DETECTOR DIODES

IN ORDER OF (1) TEST FREQ (OR AVG FREQ WHEN TEST FREQ NOT AVAILABLE) and (2) TYPE No.

LINE No.	[2] TYPE No.	BAND	[1] TEST FREQ. (Hz)	FREQUENCY RANGE MIN - MAX (Hz)	MIN FIG OF MERIT FIGURE of MERIT	at PWR. LVL. (W)	at R (Ω)	MIN OUTPT Vo (V)	at PWR. LVL. -dBm	MIN TANG. SENS. -dBm	VIDEO IMPEDANCE RANGE MIN - MAX (Ω)	at MAX. VOLT. (V)	ABSOLUTE MAX RATING BURN-OUT (W)	MAX. TEMP (°C)	MAT.	DWG. No.
1	DC1549	K		.50-18G							280	150u*	400m	100		M658c
2	DDA5365	Qb-W		40.0-60.0						55						M1144
3	DDA5365R	Qb-W		40.0-60.0						55						M1144
4	DDA5366	Qb-W		40.0-60.0						55						F146
5	DDA5367	Qb-W		40.0-60.0						45						M1144
6	DDA5367R	Qb-W		40.0-60.0						45						M1144
7	DDA5368	Qb-W		40.0-60.0						50						F146
8	DDL6672	Sh-Kp		4.0G-12.4G						45	500-700			150	Si♦	A423
9	MA7707J-0013	UHF-K		500M-18.0G				12m	20	51	1.0k-2.0kØ	100u*	200m	125	Si♦	M914Ø
10	MA7742J-0001	UHF-S		500M-2.0G				20m	20	53	1.5k-3.0kØ	0.0	200m	125	Si♦	M914Ø
11	MA7742N-0005	S		2.0G-4.0G				22m	20	53	1.5k-3.0kØ	0.0	200m	125	Si♦	M914aØ
12	MA7742N-0007	C		4.0G-8.0G				30m	20	54	1.5k-3.0kØ	0.0	200m	125	Si♦	M914aØ
13	MA7742N-0009	X		8.0G-12.0G				22m	20	52	1.5k-3.0kØ	0.0	200m	125	Si♦	M914aØ
14	MA7742N-0011	Ku		12.0G-18.0G				18m	20	52	1.5k-3.0kØ	0.0	200m	125	Si♦	M914Ø
15	MA7742N-0012	UHF-K		500M-18.0G				17m	20	51	1.5k-3.0kØ	0.0	200m	125	Si♦	M914Ø
16	MA7744A-0001	UHF-S		500M-2.0G				20m	20	53	1.5k-3.0kØ	0.0	200m	125	Si♦	S485Ø
17	MA7744A-0003	S		2.0G-4.0G				22m	20	53	1.5k-3.0kØ	0.0	200m	125	Si♦	S485Ø
18	MA7744A-0005	C		4.0G-8.0G				30m	20	54	1.5k-3.0kØ	0.0	200m	125	Si♦	S485Ø
19	MA7744A-0007	X		8.0G-12.0G				22m	20	52	1.5k-3.0kØ	0.0	200m	125	Si♦	S485Ø
20	MA7744A-0009	Ku		12.0G-18.0G				18m	20	52	1.5k-3.0kØ	0.0	200m	125	Si♦	S485Ø
21	MA7744A-0012	UHF-K		500M-18.0G				17m	20	51	1.5k-3.0kØ	0.0	200m	125	Si♦	S485Ø
22	DC1544/8		9.375					3.0u		57	1.5K					
23	D5090Ø	UHF	100M	300M-1.0G										150	Si$	A1ak§
24	MA4815		100M												Ø	A1zy
25	MA4815A		100M												Ø	A1zy
26	1N2771		750M										1.0		Si	P3
27	MA7715A-0001	UHF	750M	500M-1.0G				16m	20	50	1.0k-2.0k	200u*	200m$	125	Si♦	S485Ø
28	MA7717N-0001	UHF	750M	500M-1.0G				16m	20	50	1.0k-2.0k	200u*	200m$	125	Si♦	M914aØ
29	MA7700K-0001	UHF-S	1250M	500M-2.0G				7.0m	20	52	70-125		100m$	125	Si	S484Ø
30	MA7707J-0003	UHF-S	1250M	500M-2.0G				18m	20	53	1.0k-2.0k	100u*	200m$	125	Si♦	M914Ø
31	MA7709A-0001	UHF-S	1250M	500M-2.0G				18m	20	53	1.0k-2.0k	100u*	200m$	125	Si♦	S485Ø
32	MA7715A-0002	L	1500M	1.0G-2.0G				17m	20	50	1.0k-2.0k	200u*	200m$	125	Si♦	S485Ø
33	MA7717N-0002	L	1500M	1.0G-2.0G				17m	20	50	1.0k-2.0k	200u*	200m$	125	Si♦	M914aØ
34	13100BD2	S	2000M		300					58	400Ø			100A	Ge	F59a†
35	13150BD2	S	2000M		230					59	120Ø			100A	Ge	F59a†
36	13200BD2	S	2000M		110					55	80Ø			100A	Ge	F59a†
37♦	A2S824	S	2.0G	2.60G-3.95G				6.0m	30	56	1.2k-1.5k	20u*	250m	200	Si#♦	A416
38▼	A2S825	S	2.0G	2.60G-3.95G				6.0m	33	56	1.2k-1.5k	20u*		200	Si♦	A416
39♦	A2S827	S	2000M	2.60G-3.95G				6.0m	30	56	1200-1500	20u*		150	Si#♦	A416
40▼	A2S828	S	2.0G					6.0m	30	-56	1.2K-1.5K	20u*		150	Si♦	A416
41	HP5082-2824	L-Ku	2000M	1.0G-15.0G				600u	40	56	1200-1500		250m	200J	Si♦	A1ah
42	DC1509	S	3000M	2.000G-4.000G						50	200Ø	150u*	400m$	150A	Si♦	A317bØ
43	DC1513	S	3000M	2.000G-4.000G						50	200Ø	150u*	400m$	150A	Si♦	A316Ø
44	DC1515	S	3000M	2.000G-4.000G						50	200Ø	150u*	400m$	150A	Si♦	P3Ø
45	DC1517	S	3000M	2.000G-4.000G						50	200Ø	150u*	400m$	150A	Si♦	u7dØ
46	DC1527	S	3000M	2.000G-4.000G						56	1500Ø	20u*	400m$	150A	Si♦	P2fØ
47	DC3013	S	3000M	2.000G-4.000G	80					53	125Ø	0.0	150m$	85A	Ge	u7d
48	DC3022	S	3000M	2.000G-4.000G						53	125Ø	0.0	150m$	85A	Ge	A316
49	MA7700K-0002	S	3000M	2.0G-4.0G				7.0m	20	52	70-125		100m$	125	Si	S484Ø
50	MA7707N-0006	S	3000M	2.0G-4.0G				20m	20	53	1.0k-2.0k	100u*	200m$	125	Si♦	M914aØ
51	MA7709A-0003	S	3000M	2.0G-4.0G				20m	20	53	1.0k-2.0k	100u*	200m$	125	Si♦	S485Ø
52	MA7715A-0003	S	3000M	2.0G-4.0G				20m	20	50	1.0k-2.0k	150u*	200m$	125	Si♦	S485Ø
53	MA7717N-0003	S	3000M	2.0G-4.0G				20m	20	50	1.0k-2.0k	150u*	200m$	125	Si♦	M914aØ
54	MA40024	S	3.0G							50	1000-2000		10 Ø	150A	♦Ø	F32fØ
55	MA40025	S	3.0G							55	1000-2000		10 Ø	150A	♦Ø	F32fØ
56	MA40040	S	3000M							50	1.0k-2.0k				♦	F88b
57	MA40041	S	3000M							55	1.0k-2.0k				♦	F88b
58	MA40052	S	3.0G							50	1000-2000			150A	♦Ø	A1ad
59	MA40053	S	3.0G							55	1000-2000			150A	♦Ø	A1ad
60	1N4379	S	3.060G		100	5.0u	12k				5000-25000	5.0m		150S	SiØ	DO7
61	MA4123	S	3060M	2.00G - 4.00G						45	5000-25000				Si	DO7
62	MA4123A	S	3060M	2.00G - 4.00G						48	5000-25000				Si	DO7
63	MA4123B	S	3060M							50	4.5k-18k	5.0m	2.0m		Si	DO7
64	MA4139	S	3060M		100					50	5k-25k				Ø	DO7
65	MA4142	S	3060M	2.00G - 4.00G	100						5000-25000			150A	Si	P3§
66	MA4142A	S	3060M	2.00G - 4.00G	200						5000-25000			150A	Si	P3§
67	MA4613	S	3060M		300					55	100Ø				Si	F56
68	MA4616	S	3.060G		1000	5.0u	12k			60	300Ø				Si	F56
69	MA41510	S	3060M							45	4500-18000	5.0m	2.0m		Si	A1ad
70	MA41511	S	3060M							48	4500-18000	5.0m	2.0m		Si	A1ad
71	MA41512	S	3060M							50	4500-18000	5.0m	2.0m		Si	A1ad
72	PD0804	S	3.060G	2.0G-4.0G						50	4500-18000	5.0m	2.0m		Si	A1ad
73	PD0804L	S	3060M	2.00G - 4.00G						50	4500-18000	5.0m	2.0m		Si	M86cØ
74	PD0805	S	3060M	2.00G - 4.00G						48	4500-18000	5.0m	2.0m		Si	A1ad
75	PD0805L	S	3060M	2.00G - 4.00G						48	4500-18000	5.0m	2.0m		Si	M86cØ
76	PD0806	S	3060M	2.00G - 4.00G						45	4500-18000	5.0m	2.0m		Si	A1ad
77	PD0806L	S	3060M	2.00G - 4.00G						45	4500-18000	5.0m	2.0m		Si	M86cØ
78	PKD900	S	3060M	2.0G-4.0G	150	5.0u		15m	40	55	4500-18000	5.0m	250m	150	Si	A298t
79	PKD901	S	3060M	2.0G-4.0G	250	5.0u		26m	40	58	4500-18000	5.0m	250m	150	Si	A298t
80	PKD902	S	3060M	2.0G-4.0G	400	5.0u		40m	40	60	4500-18000	5.0m	250m	150	Si	A298t
81▼	DME3199	S	3.1G	2.0G-4.0G	500§	0.0					300-680	10u*		150	Si♦	W303
82▼	DME3205	S	3.1G	2.0G-4.0G	500§	0.0					300-680	10u*		150	Si♦	M1137
83▼	DMF3182	S	3.1G	2.0G-4.0G	500§	0.0					300-680	10u*		150	Si♦	M1137
84▼	DMF3196	S	3.1G	2.0G-4.0G	500§	0.0					300-680	10u*		150	Si♦	W303
85▼	DMJ3202	S	3.1G	2.0G-4.0G	500§	0.0					300-680	10u*		150	Si♦	W303
86▼	DMJ3208	S	3.1G	2.0G-4.0G	500§	0.0					300-680	10u*		150	Si♦	M1137
87	1N32	S	3295M	2.00G - 4.00G	85	5.0u					4000-22000		360m		Si	P3Ø
88	JAN1N32	S	3.295G		85	5.0u	1.2k				4000-22000	5.0m		70A	Si	P3
89	1N32A	S	3295M	2.00G-4.00G	200						4000-17000				Si	P3Ø
90	1N2102	L-S	3.295G	50M-4.0G	85	5.0u					4000-22000	5.0m	.50	150A	SiØ	P3§
91	MA417	S	3295M		85					49	4k-22k				Ø	F88b
92	13100BD4	S	4000M		750					56	400Ø			100A	Ge	F59a†
93	13150BD4	S	4000M		195					57	120Ø			100A	Ge	F59a†
94	13200BD4	S	4000M		100					54	80Ø			100A	Ge	F59a†
95♦	A2S793	C	4.0G	3.95G-5.85G				8.0m	30	60		20u*		150A	Si♦	A329b
96	MS1040	S	4000M	2.0G-4.0G	200			200m	10	54	800Ø		60m	100A	Ge	F10q
97	MS1041	C	4000M	4.0G-8.2G	250			200m	10	55	250Ø		60m	100A	Ge	F10q
98	MA7700K-0003	C	6000M	4.0G-8.0G				6.0m	20	52	70-125		100m$	125	Si	S484Ø
99	MA7707N-0008	C	6000M	4.0G-8.0G				25m	20	53	1.0k-2.0k	100u*	200m$	125	Si♦	M914aØ
100	MA7707N-0014	C	6000M	4.0G-8.0G				25m	20	53	1.0k-2.0k	100u*	200m$	125	Si♦	M914a
101	MA7709A-0005	C	6000M	4.0G-8.0G				25m	20	53	1.0k-2.0k	100u*	200m$	125	Si♦	S485Ø
102	MA7709A-0014	C	6000M	4.0G-8.0G				25m	20	53	1.0k-2.0k	100u*	200m$	125	Si♦	S500
103	MA7709U-0014	C	6000M	4.0G-8.0G				25m	20	53	1.0k-2.0k	100u*	200m$	125	Si♦	S501
104	MA7715A-0004	C	6000M	4.0G-8.0G				25m	20	51	1.0k-2.0k	150u*	200m$	125	Si♦	S485Ø
105	MA7717N-0004	C	6000M	4.0G-8.0G				25m	20	51	1.0k-2.0k	150u*	200m$	125	Si♦	M914aØ
106	MA7707N-0013	UHF-X	6250M	500M-12G				12m	20	51	1.0k-2.0k	100u*	200m$	125	Si♦	M914a
107	MA7709A-0013	UHF-X	6250M	500M-12G				12m	20	51	1.0k-2.0k	100u*	200m$	125	Si♦	S500
108	MA7709U-0013	UHF-X	6250M	500M-12G				12m	20	51	1.0k-2.0k	100u*	200m$	125	Si♦	S501
109	MA7715A-0013	UHF-X	6250M	500M-12G				12m	20	50	1.0k-2.0k	100u*	100 $	125	Si♦	S500
110	MA7715U-0013	UHF-X	6250M	500M-12G				12m	20	50	1.0k-2.0k	100u*	100 $	125	Si♦	S501

SYMBOLS AND CODES EXPLAINED IN INTERPRETER

5. MICROWAVE VIDEO DETECTOR DIODES

IN ORDER OF (1) TEST FREQ (OR AVG FREQ WHEN TEST FREQ NOT AVAILABLE) and (2) TYPE No.

LINE No.	[2] TYPE No.	BAND	[1] TEST FREQ. (Hz)	FREQUENCY RANGE MIN - MAX (Hz)	MIN FIG OF MERIT FIGURE of MERIT	at PWR. LVL. (W)	at R (Ω)	MIN OUTPT Vo (V)	at PWR. LVL. -dBm	MIN TANG. SENS. -dBm	VIDEO IMPEDANCE RANGE MIN - MAX (Ω)	at MAX. VOLT. (V)	ABSOLUTE MAX RATING BURN-OUT (W)	MAX. TEMP (°C)	MAT.	DESCRIPTION DWG. No.
1	MA7717N-0013	UHF-X	6250M	500M-12G				12m	20	50	1.0k-2.0k	100u*	100 $	125	Si♦	M491a
2	JAN1N358A,AM,AMR,AR	L-X	6700M	1.0G-12.4G	30	5.0u	10k	30m	20	45	4500-18000			70A	Si	P1cØ
3	D5638	L-X	6700M	1.0G-12.4G	30	5.0u	1.2k	30m	20	45	4500-18000	5.0m		150A	Si$Ø	P1c
4	MA40236	L-X	6700M	1.0G-12.4G							5.0kØ	0.0 *	2.0 $	150	Si♦	M791†
5	MA40237	L-X	6700M	1.0G-12.4G							5.0kØ	0.0 *	2.0 $	150	Si♦	u14†
6	MA40291	L-X	6700M	1.0G-12.4G							50kØ	0.0 *	2.0 $	150	Si♦	M791†
7	MA40292	L-X	6700M	1.0G-12.4G							50kØ	0.0 *	2.0 $	150	Si♦	u14†
8	1N358	L-X	6.75G	1.0G-12.4G	15	5.0u	1.2k	15m	20	40	4500-18000	5.0m	20m	70A	SiØ	P1aØΔ
9	1N358A	L-X	6.75G	1.0G-12.4G	30	5.0u	1.2k	30m	20	45	4500-18000	5.0m	20m	70A	SiØ	P1aØΔ
10	1N369	S-X	6.75G	3.0G-12.4G	15	5.0u	1.2k	15m	20	40	4500-18000	5.0m	20m	70A	SiØ	P1aØΔ
11	1N369A	L-X	6.75G	1.0G-12.4G	15	5.0u	1.2k	15m	20	40	4500-18000	5.0m	20m	70A	SiØ	P1aØΔ
12	1N630	L-X	6.75G	1.0G-12.4G	15	5.0u	1.2k	15m	20	40	4500-18000	5.0m	.17	150A	Si	P1aØΔ
13	MA7715A-0007	S-X	7000M	2.0G-12.0G				12m	20	48	1.0k-2.0k		200m$	125	Si♦	S485Ø
14	MA7717N-0007	S-X	7000M	2.0G-12.0G				12m	20	48	1.0k-2.0k		200m$	125	Si♦	M914aØ
15	1N1610	S-X	7700M	3.00G-12.4G	15			15m	20	40	4500-18000		100m	150A	Si	P1aΔ
16	13100BD8	X	8000M		75					52	400Ø			100A	Ge	F59a†
17	13150BD8	X	8000M		100					52	120Ø			100A	Ge	F59a†
18	13200BD8	X	8000M		100					51	80Ø			100A	Ge	F59a†
19	13300BD8	X	8000M		100					50	65Ø			100A	Ge	F59a†
20	13400BD	X	8000M		90					49	40Ø			100A	Ge	F59a†
21	MS1042	X	8000M	8.2G-12.4G	120			100m	10	52	100Ø		25m	100A	Ge	F10q
22	MS1043	X	8000M	8.2G-12.4G	85			100m	10	50	85Ø		150m	100A	Ge	F10q
23	1N1611	X	9000M	8.20G-12.4G	130	1.0u					1700-3100			70A	Si	P3
24	1N1611A	C-X	9.0G	4.0G-10G	220	1.0u				52	1700-3100		.25	150A	Si	P3Ø
25	1N1611B	C-X	9.0G	4.0G-10G	220					52	1700-3100				Si	P3Ø
26	D5236	X	9000M	8.20G-12.4G	220	1.0u	1.2k			53	600-800	50u	100m	150S	Si$Ø	F85§
27	K408	X	9000M	8.20G - 12.4G	130					50	1700- 3100		1.0mØ		Si	P3Ø
28	K408A	X	9000M	8.20G - 12.4G	160					51	1700- 3100		1.0mØ		Si	P3Ø
29	K408B	X	9000M	8.20G - 12.4G	220					52	1700- 3100		1.0mØ		Si	P3Ø
30	MA408A	X	9000M		160					51	1.7k- 3.1k		1.0m		Si	DO22Ø
31	MA418	C-X	9.0G	4.0G-10G	130	5.0u					1700-3100				SiØ	P3a§
32	MA418A	C-X	9.0G	4.0G-10G	160	5.0u	1.2k				1700-3100			70A	SiØ	P3a§
33	MA418B	C-X	9.0G	4.0G-10G	220	5.0u					1700-3100				SiØ	P3a§
34	MA452	X	9000M		130					50	1.7k- 3.1k		1.0m		Si	DO22Ø
35	MA452A	X	9000M	8.20G - 12.4G	160	5.0u				51	1700- 3100			150A	SiØ	P3Ø
36	MA461	C-X	9.0G	4.0G-10G	130	5.0u				50	1700-3100				SiØ	P3§
37	MA461A	C-X	9.0G	4.0G-10G	160	5.0u				51	1700-3100				SiØ	P3§
38	MA461B	C-X	9.0G	4.0G-10G	220	5.0u				52	1700-3100				SiØ	P3§
39	MA4128	C-X	9.0G	4.0G-12.5G	130	5.0u				50	1700-3100				Si	P3Ø
40	MA4129	C-X	9.0G	4.0G-10G	130	5.0u	1.2k				1700-3100			150A		P3aØ
41	P0612	X	9000M		220					53					Si	A1st
42	P0836	X	9000M		220					53					Si	A1vd
43	P1936	X	9000M		220					53					Si	F85
44	P4272	X	9000M		130					51	1.7-3.1				Si	F85
45	P4272A	X	9000M		220					53	1.7-3.1				Si	F85
46	P4272B	X	9000M		220					53	1.7-3.1				Si	F85
47	MA408	X	9040M	9.04G-9.375G	130					50	1.7k-3.1k				Ø	F99
48	MA408B	X	9040M	9.040G-9.375G	220					52	1.7k-3.1k				Ø	F99
49	MA452B	X	9040M	9.04G-9.375G	220					52	1.7k-3.1k				Ø	F99
50	MA7709A-0011	UHF-K	9250M	500M-18.0G				12m	20	51	1.0k-2.0k	100u*	200m$	125	Si♦	S485Ø
51	MA40201	L-Ku	9.3G							55	1200-1800			150A	♦	F82
52	MA40202	L-Ku	9.3G							55	1200-1800			150A	♦	A1uu
53	MA40203	L-Ku	9.3G							52	1200-1800			150A	♦	F82
54	MA40204	L-Ku	9.3G							52	1200-1800			150A	♦	A1uu
55	MA40207	L-Ku	9.3G							55	1200-1800			150A	♦	M790
56	MA40208	L-Ku	9.3G							52	1200-1800			150A	♦	M790
57	MA40251	L-X	9300M					500u	40	55	1200-1800	20u*	100m	150A	Si♦	F85
58	MA40252	L-X	9300M					500u	40	55	1200-1800	20u*	100m	150A	Si♦	A1ac
59	MA40253	L-X	9300M					350u	40	52	1200-1800	20u*	100m	150A	Si♦	F85
60	MA40254	L-X	9300M					350u	40	52	1200-1800	20u*	100m	150A	Si♦	A1ac
61	MA40257	L-X	9300M					500u	40	55	1200-1800	20u*	100m	150A	Si♦	M790
62	MA40258	L-X	9300M					350u	40	52	1200-1800	20u*	100m	150A	Si♦	M790
63	MA40270	X	9300M							55			100m	150A	Si♦	u14
64	MA40271	X	9300M							55			100m	150A	Si♦	M791
65	MA40273	X	9300M							55			100m	150A	Si♦	M912
66	1N31	X	9.375G	8.2G-12.4G	55	5.0u	1.2k				6000-23000	5.0m	20m	70A	Si	P1bØ
67	JAN1N31	X	9375M		55	5.0u	1.2k				6000-23000	5.0m		70A	Si	P1b
68	1N31A	X	9375M	8.20G - 12.4G	200	5.0u	1.2k				3000-17000	5.0m	200m	150S	SiØ	P1b
69	1N76	X	9375M	8.20G - 12.4G				5.0m					20m	70A	SiØ	P1bØØ
70	1N76A	X	9375M	8.20G - 12.4G		15u		16m					20m	70A	SiØ	P1bØØ
71	1N76C	X	9375M	8.20G - 12.4G											Si	P1bØ
72	1N833	X	9375M	9275M-9475M						40	4500-18000	5.0m		150A	SiØ	A196b
73	1N833A	X	9375M	8.20G - 12.4G						45	4500-18000				Si	DO7
74	1N2127	L-X	9375M	1000-12400				70m	15				200m	125A	SiØ	P1aΔ
75	1N3143	C-X	9375M	4000-10000				11m	30					150A	SiØ	P3
76	1N3778	C-X	9375M	4000-10000											Si	P3§Δ
77	23100BD	UHF-K	9.375G	500M-26G	80	10u				53	350-450			100A	Ge	
78	23150BD	UHF-K	9.375G	500M-26G	80	10u				53	350-450			100A	Ge	
79	23200BD	UHF-K	9.375G	500M-26G	90	10u				51	150-300			100A	Ge	
80	23300BD	UHF-K	9.375G	500M-26G	100	10u				50	75-150			100A	Ge	
81	23350BD	UHF-K	9.375G	500M-26G	100	10u				50	75-150			100A	Ge	
82	23400BD	UHF-k	9.375G	500M-26G	120	10u				48	30-100			100A	Ge	
83	23450BD	UHF-k	9.375G	500M-26G	120	10u				48	30-100			100A	Ge	
84	AEY17	X	9375M	1.00G - 18.0G	120					53	300Ø	1.0m		150A	Ge	F36b
85	BAT14-020D	S	9.375G	0-4G						-48	350-500		1.5	150J	♦	M1198
86	BAT14-020R	S	9.375G	0-4G						-48	350-500		1.5	150J	♦	M1199
87	BAT14-020S	S	9.375G	0-4G						-48	350-500		1.5	150J	♦	M1197
88	BAT14-022R	S	9.375G	0-4G						-48	350-500		1.5	150J	♦	M1200
89	BAT14-025R	S	9.375G	0-4G						-48	350-500		1.5	150J	♦	M999
90	BAT14-050D	X	9.375G	0-8G						-48	350-500		1.5	150J	♦	M1198
91	BAT14-050R	X	9.375G	0-8G						-48	350-500		1.5	150J	♦	M1199
92	BAT14-050S	X	9.375G	0-8G						-48	350-500		1.5	150J	♦	M1197
93	BAT14-052R	X	9.375G	0-8G						-48	350-500		1.5	150J	♦	M1200
94	BAT14-055R	X	9.375G	0-8G						-48	350-500		1.5	150J	♦	M999
95	BAT14-090D	K	9.375G	0-12G						-48	350-500		1.5	150J	♦	M1198
96	BAT14-090R	K	9.375G	0-12G						-48	350-500		1.5	150J	♦	M1199
97	BAT14-090S	K	9.375G	0-12G						-48	350-500		1.5	150J	♦	M1197
98	BAT14-092R	K	9.375G	0-12G						-48	350-500		1.5	150J	♦	M1200
99	BAT14-095R	K	9.375G	0-12G						-48	350-500		1.5	150J	♦	M999
100	BAT14-110D	Q	9.375G	0-40G						-48	350-500		1.5	150J	♦	M1198
101	BAT14-110R	Q	9.375G	0-40G						-48	350-500		1.5	150J	♦	M1199
102	BAT14-110S	Q	9.375G	0-40G						-48	350-500		1.5	150J	♦	M1197
103	BAT14-112R	Q	9.375G	0-40G						-48	350-500		1.5	150J	♦	M1200
104	BAT14-115R	Q	9.375G	0-40G						-48	350-500		1.5	150J	♦	M999
105	BAT15-020D	S	9.375G	0-4G						-53	250-400		1.5	150J	♦	M1198
106	BAT15-020R	S	9.375G	0-4G						-53	250-400		1.5	150J	♦	M1199
107	BAT15-020S	S	9.375G	0-4G						-53	250-400		1.5	150J	♦	M1197
108	BAT15-022R	S	9.375G	0-4G						-53	250-400		1.5	150J	♦	M1200
109	BAT15-025R	S	9.375G	0-4G						-53	250-400		1.5	150J	♦	M999

SYMBOLS AND CODES EXPLAINED IN INTERPRETER

5. MICROWAVE VIDEO DETECTOR DIODES

IN ORDER OF (1) TEST FREQ (OR AVG FREQ WHEN TEST FREQ NOT AVAILABLE) and (2) TYPE No.

LINE No.	[2] TYPE No.	BAND	[1] TEST FREQ. (Hz)	FREQUENCY RANGE MIN - MAX (Hz)	MIN FIG OF MERIT FIGURE of MERIT	at PWR. LVL. (W)	at R (Ω)	MIN OUTPT Vo (V)	at PWR. LVL. -dBm	MIN TANG. SENS. -dBm	VIDEO IMPEDANCE RANGE MIN - MAX (Ω)	at MAX. VOLT. (V)	ABSOLUTE MAX RATING BURN-OUT (W)	MAX. TEMP (°C)	MAT.	DESCRIPTION DWG. No.
1	BAT15-050D	X	9.375G	0-8G						-53	250-400		1.5	150J	♦	M1198
2	BAT15-050R	X	9.375G	0-8G						-53	250-400		1.5	150J	♦	M1199
3	BAT15-050S	X	9.375G	0-8G						-53	250-400		1.5	150J	♦	M1197
4	BAT15-052R	X	9.375G	0-8G						-53	250-400		1.5	150J	♦	M1200
5	BAT15-055R	X	9.375G	0-8G						-53	250-400		1.5	150J	♦	M999
6	BAT15-090D	K	9.375G	0-12G						-53	250-400		1.5	150J	♦	M1198
7	BAT15-090R	K	9.375G	0-12G						-53	250-400		1.5	150J	♦	M1199
8	BAT15-090S	K	9.375G	0-12G						-53	250-400		1.5	150J	♦	M1197
9	BAT15-092R	K	9.375G	0-12G						-53	250-400		1.5	150J	♦	M1200
10	BAT15-095R	K	9.375G	0-12G						-53	250-400		1.5	150J	♦	M999
11	BAT15-110D	Q	9.375G	0-40G						-53	250-400		1.5	150J	♦	M1198
12	BAT15-110R	Q	9.375G	0-40G						-53	250-400		1.5	150J	♦	M1199
13	BAT15-110S	Q	9.375G	0-40G						-53	250-400		1.5	150J	♦	M1197
14	BAT15-112R	Q	9.375G	0-40G						-53	250-400		1.5	150J	♦	M1200
15	BAT15-115R	Q	9.375G	0-40G						-53	250-400		1.5	150J	♦	M999
16	BAV46	X	9375M							52	850Ø		200mØ	150J	Si♦	DO23
17	BAV97	L-Ku	9375M	1G-18G						52	500Ø		180mØ	150A	Si♦	F82
18	CC095509	X	9375M							55			100M	150	Si♦	u3
19	CC105009	X	9.375G							50	1.1k-1.7k		100M	150	Si♦	F10p
20	CC105209	X	9.375G							52	1.1k-1.7k		100M	150	Si♦	F10p
21	CC105509	X	9.375G							55	1.1k-1.7k		100M	150	Si♦	F10p
22	CC135009	X	9.375G							50	1.1k-1.7k		100M	150	Si♦	F59b
23	CC135209	X	9.375G							52	1.1k-1.7k		100M	150	Si♦	F59b
24	CC135509	X	9.375G							55	1.1k-1.7k		100M	150	Si♦	F59b
25	CC205009	X	9.375G							50	1.1k-1.7k		100M	150	Si♦	F107
26	CC205209	X	9.375G							52	1.1k-1.7k		100M	150	Si♦	F107
27	CC205509	X	9.375G							55	1.1k-1.7k		100M	150	Si♦	F107
28	CC215509	X	9375M							55			100M	150	Si♦	M913
29	CV7180	X	9375M	8.2G-12.4G						51	700Ø	50u*			SiØ	P2f
30	CV7181	X	9375M	8.2G-12.4G						51	700Ø	50u*			SiØ	P2f
31	CV7182	X	9375M	8.2G-12.4G						51	700Ø	50u*			SiØ	P2f
32	CV7183	X	9375M	8.2G-12.4G						51	700Ø	50u*			SiØ	P2f
33	D5233	X	9375M	8.2G-12.4G	15	5.0u	1.2k			40	4.5k-18.0k	5.0m	100m	150A	Si$Ø	F85§
34	DC1303	X	9375M	8.2G-12.4G						48	200Ø	150u*	250m$	150A	GA♦	A317bØ
35	DC1312	X	9375M	8.2G-12.4G						48	200Ø	150u*	250m$	150A	GA♦	A316Ø
36	DC1321	X	9375M	8.2G-12.4G						48	200Ø	150u*	250m$	150A	GA♦	u7dØ
37	DC1322	X	9375M	8.2G-12.4G						48	200Ø	150u*	250m$	150A	GA♦	P3Ø
38	DC1324	X	9375M	8.2G-12.4G						48	200Ø	150u*	250m$	150A	GA♦	F51cØ
39	DC1501/1	X	9375M	8.2G-12.4G	5.0*	20u				56	1500Ø	20u*			Si♦	F51cØ
40	DC1510	X	9375M	8.20G-12.40G						50	200Ø	150u*	400m$		Si♦	A317bØ
41	DC1512	X	9375M	8.20G-12.40G						50	200Ø	150u*	400m$		Si♦	A316Ø
42	DC1512/1	X	9375M	8.2G-12.4G	5.0*	20u				56	1500Ø	20u*			Si♦	A316Ø
43	DC1514	X	9375M	8.20G-12.40G						50	200Ø	150u*	400m$		Si♦	P3Ø
44	DC1516	X	9375M	8.20G-12.40G						50	200Ø	150u*	400m$		Si♦	u7dØ
45	DC1521	X	9375M	8.20G-12.40G						50	200Ø	150u*	400m$		Si♦	F51cØ
46	DC1526	X	9375M	8.2G-12.4G						56	1500Ø	20u*	400m$	150A	Si♦	P2fØ
47	DC1544/3	X	9375M	8.2G-12.4G	5.0*	20u				50	1500Ø	20u*			Si♦	P3Ø
48	DC1544/4	X	9375M	8.2G-12.4G	5.0*	20u				56	1500Ø	20u*			Si♦	P3Ø
49	DC1551	X	9375M	8.2G-12.4G						50	2000Ø	0.0	400m$	70A	Si♦	P2fØ
50	DC1553	X	9375M	8.2G-12.4G						50	2000Ø	0.0	400m$	70A	Si♦	u7dØ
51	DC1554	X	9375M	8.2G-12.4G						50	2000Ø	0.0	400m$	70A	Si♦	F51cØ
52	DC1557	X	9375M	8.2G-12.4G						50	2000Ø	0.0	400m$	70A	Si♦	A316Ø
53	DC1558	X	9375M	8.2G-12.4G						50	2000Ø	0.0	400m$	70A	Si♦	P3Ø
54	DC3010	X	9375M	8.2G-12.4G	120					53	300Ø	0.0	150m$	150A	Ge	F51c
55	DC3012	X	9375M	8.2G-12.4G	120					53	300Ø	0.0	150m$	150A	Ge	u7d
56	DC3016	X	9375M	8.2G-12.4G						53	300Ø	0.0	150m$	150A	Ge	P2f
57	DC3018	X	9375M	8.2G-12.4G						53	300Ø	0.0	150m$	150A	Ge	A316
58	DC3021	X	9375M	8.2G-12.4G						53	300Ø	0.0	150m$	150A	Ge	P3
59	MA425	X	9375M	8.20G - 12.4G											SiØ	P3b§
60	MA4614	X	9375M		100					50	75Ø				Si	F56
61	MA4617	X	9375M		300					55	150Ø				Si	F56
62	MA40175	Ku	9375M							55	1400Ø	25u*	100m	150A	Si♦	M912
63	MA41222	S-X	9375M							55	1200-1800	20u*	100m	150A	Si	F107
64	MA41223	S-X	9375M							50	1200-1800	20u*	100m	150A	Si	F107
65	MA41513	X	9375M							45	4500-18000	5.0m	3.0 Ø		Si	A1adØ
66	MA41514	X	9375M							48	4500-18000	5.0m	3.0 Ø		Si	A1adØ
67	MA41515	X	9375M							50	4500-18000	5.0m	3.0 Ø		Si	A1adØ
68	MA41813	X	9375M							55				150S	Ge	F59f
69	MA41814	X	9375M							54				150S	Ge	F59f
70	MA41819	Ku	9375M					40m	20	55	1500Ø		500m	150A	Ge	F126†
71	P0893	X	9375M		15					40					Si	A1vd
72	P0893A	X	9375M		30					45					Si	A1vd
73	P1933	X	9375M		15					40					Si	A1vd
74	PD0801	X	9375M	8.20G - 12.4G						48	4500-18000	5.0m	2.0m		Si	A1ad
75	PD0801A	X	9375M	8.20G - 12.4G						48	1700- 6000	180m	2.0m		Si	A1ad
76	PD0801AL	X	9375M	8.20G - 12.4G						48	1700- 6000	180m	2.0m		Si	M86cØ
77	PD0801L	X	9375M	8.20G - 12.4G						48	4500-18000	5.0m	2.0m		Si	M86cØ
78	PD0802	X	9375M	8.20G - 12.4G						45	4500-18000	5.0m	2.0m		Si	A1ad
79	PD0802L	X	9375M	8.20G - 12.4G						45	4500-18000	5.0m	2.0m		Si	M86cØ
80	PD0803	X	9375M	8.20G - 12.4G						40	4500-18000	5.0m	2.0m		Si	A1ad
81	PD0803L	X	9375M	8.20G - 12.4G						40	4500-18000	5.0m	2.0m		Si	M86cØ
82	PD0807	X	9375M	8.20G - 12.4G						55	1700- 6000	180m	2.0m		Si	A1ad
83	PD0807L	X	9375M	8.20G - 12.4G						55	1700- 6000	180m	2.0m		Si	M86cØ
84	PD0808	X	9375M	8.20G - 12.4G						50	4500-18000	5.0m	2.0m		Si	A1ad
85	PD0808L	X	9.375G	8.2G-12.4G						50	4500-18000	5.0m	2.0m		Si	M86cØ
86	PDD100-02	Ku	9.375G	-12.4G						58	4.5k-18.0k			150A	Si♦	F99
87	PDD100-06	Ku	9.375G	-12.4G						58	4.5k-18.0k			150A	Si♦	A351
88	PDD100-08	Ku	9.375G	-12.4G						58	4.5k-18.0k			150A	Si♦	A1at
89	PDD100-19	Ku	9.375G	-12.4G						58	4.5k-18.0k			150A	Si♦	F107
90	PDD100-42	Ku	9.375G	-12.4G						58	4.5k-18.0k			150A	Si♦	M896
91	PK0211	X	9375M							50	4500-18000				♦	F27as
92	PK0212	X	9375M							52	4500-18000				♦	F27as
93	PK0213	X	9375M							55	4500-18000				♦	F27as
94	PK0214	X	9375M							58	4500-18000				♦	F27as
95	PK0215	X	9375M													
96	PK0811	X	9375M	8.0G-12.4G	40	100u				50	4.5k-18k	5.0m			Si	A1vd
97	PK0812	X	9375M	8.0G-12.4G	65	100u				52	4.5k-18k	5.0m			Si	A1vd
98	PK0813	X	9375M	8.0G-12.4G	65	100u				55	4.5k-18k	5.0m			Si	A1vd
99	PK0814	X	9375M	8.0G-12.4G	250	100u				58	4.5k-18k				Si	A1vd
100	PK1911	X	9375M	8.0G-12.4G	40	100u				50	4.5k-18k	5.0m			Si	F82
101	PK1912	X	9375M	8.0G-12.4G	65	100u				52	4.5k-18k	5.0m			Si	F82
102	PK1913	X	9375M	8.0G-12.4G	65	100u				55	4.5k-18k	5.0m			Si	F82
103	PK1914	X	9375M	8.0G-12.4G	250	100u				58	4.5k-18k				Si	F82
104	PK4211	X	9375M	8.0G-12.4G	40	100u				50	4.5k-18k	5.0m			Si	F88
105	PK4212	X	9375M	8.0G-12.4G	65	100u				52	4.5k-18k	5.0m			Si	F88
106	PK4213	X	9375M	8.0G-12.4G	130	100u				55	4.5k-18k				Si	F88
107	PK4214	X	9375M	8.0G-12.4G	250	100u				58	4.5k-18k				Si	F88
108	PKD100-01	X	9375M	8.0G-12.4G	400	100u		40m	40	60	4.5k-18k	5.0m	100m	150A	Si♦	F27d
109	PKD100-02	X	9375M	8.0G-12.4G	400	100u		40m	40	60	4.5k-18k	5.0m	100m	150A	Si♦	F99Ø
110	PKD100-06	X	9375M	8.0G-12.4G	400	100u		40m	40	60	4.5k-18k	5.0m	100m	150A	Si♦	DO7

SYMBOLS AND CODES EXPLAINED IN INTERPRETER

5. MICROWAVE VIDEO DETECTOR DIODES

IN ORDER OF (1) TEST FREQ (OR AVG FREQ WHEN TEST FREQ NOT AVAILABLE) and (2) TYPE No.

LINE No.	[2] TYPE No.	BAND	[1] TEST FREQ. (Hz)	FREQUENCY RANGE MIN - MAX (Hz)	MIN FIG OF MERIT FIGURE of MERIT	at PWR. LVL. (W)	at R (Ω)	MIN OUTPT Vo (V)	at PWR. LVL. -dBm	MIN TANG. SENS. -dBm	VIDEO IMPEDANCE RANGE MIN - MAX (Ω)	at MAX. VOLT. (V)	ABSOLUTE MAX RATING BURN-OUT (W)	MAX. TEMP (°C)	MAT.	DESCRIPTION DWG. No.
1	PKD100-08	X	9375M	8.0G-12.4G	400	100u		40m	40	60	4.5k-18k	5.0m	100m	150A	Si♦	A1vd
2	PKD100-19	X	9375M	8.0G-12.4G	400	100u		40m	40	60	4.5k-18k	5.0m	100m	150A	Si♦	F82
3	PKD100-41	X	9375M	8.0G-12.4G	400	100u		40m	40	60	4.5k-18k	5.0m	100m	150A	Si♦	F3h
4	PKD100-42	X	9375M	8.0G-12.4G	400	100u		40m	40	60	4.5k-18k	5.0m	100m	150A	Si♦	F88
5	PKD100-51	X	9375M	8.0G-12.4G	400	100u		40m	40	60	4.5k-18k	5.0m	100m	150A	Si♦	F54k
6	PKD903	X	9375M	8.0G-12.4G	150	5.0u		15m	40	55	4500-18000	5.0m	250m	150	Si	A298t
7	PKD904	X	9375M	8.0G-12.4G	250	5.0u		26m	40	58	4500-18000	5.0m	250m	150	Si	A298t
8	PKD905	X	9375M	8.0G-12.4G	400	5.0u		40m	40	60	4500-18000	5.0m	250m	150	Si	A298t
9	CDC7609	Xr-Kp	9.4G	8.2G-12.4G				3.0m	30	49	500	0.0		150	Si♦	u28
10	CDC7609A	Xr-Kp	9.4G	8.2G-12.4G				4.0m	30		500-1000	0.0		150	Si♦	u28
11	CDC7609B	Xr-Kp	9.4G	8.2G-12.4G				8.0m	30	55	1000-2000	0.0		150	Si♦	u28
12	CDC7609C	Xr-Kp	9.4G	8.2G-12.4G				12m	30		2000-5000	0.0		150	Si♦	u28
13	CDC7609D	Xr-Kp	9.4G	8.2G-12.4G				15m	30		5000-15000	0.0		150	Si♦	u28
14	DDA4072	Xr-Kp	9.4G	8.2G-12.4G						53	600-800			150	SiⒹ	P22
15	DDA4072A	Xr-Kp	9.4G	8.2G-12.4G						51	600-800			150	SiⒹ	P22
16	DDA4072B	Xr-Kp	9.4G	8.2G-12.4G						53	600-800			150	SiⒹ	P22
17	DDA5012	Xr-Kp	9.4G	8.2G-12.4G						53	600-800			150	SiⒹ	A430
18	DDA5036	Xr-Kp	9.4G	8.2G-12.4G						53	600-800			150	SiⒹ	A423
19	DDA5093	Xr-Kp	9.4G	8.2G-12.4G						40	4.5K-18.0K			150	SiⒹ	A423
20	DDA5093A	Xr-Kp	9.4G	8.2G-12.4G						45	4.5K-18.0K			150	SiⒹ	A423
21	DDA5233	Xr-Kp	9.4G	8.2G-12.4G						40	4.5K-18.0K			150	SiⒹ	F146
22	DDA5236	Xr-Kp	9.4G	8.2G-12.4G						53	600-800					F146
23	DDC4561	Xr-Kp	9.4G	8.2G-12.4G				3m	30	49	500	0.0		150	Si♦	P3d
24	DDC4561A	Xr-Kp	9.4G	8.2G-12.4G				4m	30	49	500-1000	0.0		150	Si♦	P3d
25	DDC4561B	Xr-Kp	9.4G	8.2G-12.4G				8m	30	52	1000-2000	0.0		150	Si♦	P3d
26	DDC4561C	Xr-Kp	9.4G	8.2G-12.4G				12m	30	55	2000-5000	0.0		150	Si♦	P3d
27	DDC4561D	Xr-Kp	9.4G	8.2G-12.4G				15M	30	56	5000-15000	0.0		150	Si♦	P3d
28	DDC4562	Xr-Kp	9.4G	8.2G-12.4G				3m	30		500	0.0		150	Si♦	A1ak
29	DDC4562A	Xr-Kp	9.4G	8.2G-12.4G				4m	30		500-1000	0.0		150	Si♦	A1ak
30	DDC4562B	Xr-Kp	9.4G	8.2G-12.4G				8m	30		1000-2000	0.0		150	Si♦	A1ak
31	DDC4562C	Xr-Kp	9.4G	8.2G-12.4G				12m	30		2000-5000	0.0		150	Si♦	A1ak
32	DDC4562D	Kr-Kp	9.4G	8.2G-12.4G				15m	30	56	5000-15000	0		150	Si♦	A1qk
33	DDC4563	Kr-Kp	9.4G	8.2G-12.4G				3m	30	49	500	0		150	Si♦	F105a
34	DDC4563A	Kr-Kp	9.4G	8.2G-12.4G				4m	30	49	500-1000	0		150	Si♦	F105a
35	DDC4563B	Kr-Kp	9.4G	8.2G-12.4G				8m	30	52	1000-2000	0		150	Si♦	F105a
36	DDC4563C	Kr-Kp	9.4G	8.2G-12.4G				12m	30	55	2000-5000	0		150	Si♦	F105a
37	DDC4563D	Kr-Kp	9.4G	8.2G-12.4G				15m	30	56	5000-15000	0		150	Si♦	F105a
38	DDC4564	Kr-Kp	9.4G	8.2G-12.4G				3m	30	49	500	0		150	Si♦	M790b
39	DDC4564A	Kr-Kp	9.4G	8.2G-12.4G				4m	30	49	500-1000	0		150	Si♦	M790b
40	DDC4564B	Kr-Kp	9.4G	8.2G-12.4G				8m	30	52	1000-2000	0		150	Si♦	M790b
41	DDC4564C	Kr-Kp	9.4G	8.2G-12.4G				12m	30	55	2000-5000	0		150	Si♦	M790b
42	DDC4564D	Kr-Kp	9.4G	8.2G-12.4G				15m	30	56	5000-15000	0		150	Si♦	M790b
43	DDC4565	Kr-Kp	9.4G	8.2G-12.4G				3m	30	49	500	0		150	Si♦	M577a
44	DDC4565A	Kr-Kp	9.4G	8.2G-12.4G				4m	30	49	500-1000	0		150	Si♦	M577a
45	DDC4565B	Kr-Kp	9.4G	8.2G-12.4G				8m	30	52	1000-2000	0		150	Si♦	M577a
46	DDC4565C	Kr-Kp	9.4G	8.2G-12.4G				12m	30	55	2000-5000	0		150	Si♦	M577a
47	DDC4565D	Kr-Kp	9.4G	8.2G-12.4G				15m	30	56	5000-15000	0		150	Si♦	M577a
48	DDC4582	Xr-Kp	9.4G	8.2G-12.4G						49				150	Si♦	A427
49	DDC4582A	Xr-Kp	9.4G	8.2G-12.4G						49	500-1000			150	Si♦	A427
50	DDC4582B	Xr-Kp	9.4G	8.2G-12.4G						52	1000-2000			150	Si♦	A427
51	DDC4582C	Xr-Kp	9.4G	8.2G-12.4G						55	2000-5000			150	Si♦	A427
52	DDC4582D	Xr-Kp	9.4G	8.2G-12.4G						56	5000-15000			150	Si♦	A427
53▼	DME3200	X	9.4G	8.2G-12.4G	300§	0.0					300-680	10u*		150	Si♦	W303
54▼	DME3206	X	9.4G	8.2G-12.4G	300§	0.0					300-680	10u*		150	Si♦	M1137
55▼	DMF3183	X	9.4G	8.2G-12.4G	300§	0.0					300-680	10u*		150	Si♦	M1137
56▼	DMF3197	X	9.4G	8.2G-12.4G	300§	0.0					300-680	10u*		150	Si♦	W303
57▼	DMJ3203	X	9.4G	8.2G-12.4G	300§	0.0					300-680	10u*		150	Si♦	W303
58▼	DMJ3209	X	9.4G	8.2G-12.4G	300§	0.0					300-680	10u*		150	Si♦	M1137
59▼	A2S009	UHF-Ku	10G	100M-18.0G						58.5	1.5k	20u*		150	Si♦	C224
60▼	A2S050	UHF-Ku	10G	100M-18.0G				9.0m	29	59	2000	0.0 *		150	Si♦	C224
61▼	A2S051		10.0G							60	5.0k				Si♦	C224
62♦	A2S201	UHF-Ku	10G	100M-18.0G				5.0m	30	58.5	-1600	20u*	100m	150A	Si♦	M790d
63♦	A2S202	UHF-Ku	10G	100M-18.0G				3.0m	30	55.5	-1800	20u*	100m	150A	Si♦	M790d
64♦	A2S206	UHF-Ku	10G	100M-18.0G				5.0m	30	58.5	-1600	20u*	100m	150A	Si♦	F105
65♦	A2S207	UHF-Ku	10G	100M-18.0G				3.0m	30	55.5	-1800	20u*	100m	150A	Si♦	F105
66▼	A2S220	UHF-Ku	10G	100M-18.0G						58.5	1.5k	20u*		150	Si♦	C210
67▼	A2S250	UHF-Ku	10G	100M-18.0G				7.0m	31	59	1000	0.0 *		150	Si♦	C210
68♦	A2S251	UHF-Ku	10G	100M-18.0G				9.0m	30	60	2500	0.0 *		150A	Si♦	C210
69♦	A2S252	UHF-Ku	10G	100M-18.0G				5.0m	30	58	800-2000	0.0 *	100m	150A	Si♦	F105
70♦	A2S253	UHF-Ku	10G	100M-18.0G				8.0m	30	59	1600-6000	0.0 *	100m	150A	Si♦	F105
71♦	A2S254	UHF-Ku	10G	100M-18.0G				10m	28	59	5000-20000	0.0 *	100m	150A	Si♦	F105
72♦	A2S255	UHF-Ku	10G	100M-18.0G				9.0m	30	59	2000	0.0 *	100m	150A	Si♦	A329b
73♦	A2S257	UHF-Ku	10G	100M-18.0G				5.0m	30	58	800-2000	0.0 *	100m	150A	Si♦	M790d
74♦	A2S258	UHF-Ku	10G	100M-18.0G				8.0m	30	59	1600-6000	0.0 *	100m	150A	Si♦	M790d
75♦	A2S259	UHF-Ku	10G	100M-18.0G				10m	28	59	5000-20000	0.0 *	100m	150A	Si♦	M790d
76♦	A2S262	UHF-Ku	10G	100M-18.0G				5.0m	30	58	800-2000	0.0 *	100m	150A	Si♦	A416
77♦	A2S263	UHF-Ku	10G	100M-18.0G				8.0m	30	59	1600-6000	0.0 *	100m	150A	Si♦	A416
78♦	A2S264	UHF-Ku	10G	100M-18.0G				10m	28	59	5000-20000	0.0 *	100m	150A	Si♦	A416
79♦	A2S792	X	10G	8.20G-12.4G				6.0m	30	60		20u*		150A	Si♦	A329b
80	CDB7605	Xr-Kp	10G	8.2G-12.4G	150§			100u		30	500-700	50u*		150	Si♦	u28Ø
81	DDB4503	Xr-Kp	10G	8.2G-12.4G	150§			100u	30	50	500-700	50u		150	Si♦	M577aØ
82	HP5082-2750	L-Ku	10000M	1.0G-15.0G				500u	40	55	1200-1600		100m	150A	Si#	M277e
83	HP5082-2751	L-Ku	10000M	1.0G-15.0G				500u	40	55	1200-1600		100m	150A	Si♦#	F82
84	HP5082-2755	L-Ku	10000M	1.0G-15.0G				500u	40	55	1200-1600		100m	150A	Si♦#	A1ah
85	HP5082-2787	L-Ku	10000M	1.0G-15.0G				350u	40	52	1200-1600		100m	150A	Si♦#	A1ah
86▼	HSCH0812		10G							-54				150	♦	A1th
87	HSCH3206	X	10G								100-300k			150	♦	C208
88	HSCH3207	X	10G								80-300k			150	♦	C209
89	HSCH3486	X	10G								2-8k			150	♦	A1uc
90	HSCH5310	Ku Band	10.0G	1.0G-18.0G						-54.0				175	♦	M1128
91	HSCH5311	Ku Band	10.0G	1.0G-18.0G						-54.0				175	♦	M1128
92	HSCH5312	Ku Band	10.0G	1.0G-18.0G						-54.0				175	♦	M1128
93	HSCH5313	Ku Band	10.0G	1.0G-18.0G						-54.0				175	♦	M1128
94	HSCH5316	Ku Band	10.0G	1.0G-18.0G						-54.0				175	♦	M1128
95	HSCH5317	Ku Band	10.0G	1.0G-18.0G						-54.0				175	♦	M1128
96	HSCH5330	Ku Band	10.0G	1.0G-18.0G						-44.0				175	♦	M1128
97	HSCH5331	Ku Band	10.0G	1.0G-18.0G										175	♦	M1128
98	HSCH5332	Ku Band	10.0G	1.0G-18.0G						-44.0				175	♦	M1128
99	HSCH5333	Ku Band	10.0G	1.0G-18.0G						-44.0				175	♦	M1128
100	HSCH5336	Ku Band	10.0G	1.0G-18.0G						-44.0				175	♦	M1128
101	HSCH5337	Ku Band	10.0G	1.0G-18.0G						-44.0				175	♦	M1128
102	MA7700A-0004	X	10000M	8.0G-12.0G				7.0m	20	52	70-125		100m$	125	Si	S485Ø
103	MA7707N-0009	X	10000M	8.0G-12.0G				20m	20	52	1.0k-2.0k	100u*	200m$	125	Si♦	M914aØ
104	MA7707N-0012	S-Ku	10000M	2.0G-18G				12m	20	51	1.0k-2.0k	100u*	200m$	125	Si♦	M914a
105	MA7707N-0015	X	10000M	8.0G-12G				18m	20	52	1.0k-2.0k	100u*	200m$	125	Si♦	M914a
106	MA7709A-0007	X	10000M	8.0G-12.0G				20m	20	52	1.0k-2.0k	100u*	200m$	125	Si♦	S485Ø
107	MA7709A-0012	S-Ku	10000M	2.0G-18G				12m	20	51	1.0k-2.0k	100u*	200m$	125	Si♦	S500
108	MA7709A-0015	X	10000M	8.0G-12G				18m	20	52	1.0k-2.0k	100u*	200m$	125	Si♦	S500
109	MA7709U-0012	S-Ku	10000M	2.0G-18G				12m	20	51	1.0k-2.0k	100u*	200m$	125	Si♦	S501
110	MA7709U-0015	X	10000M	8.0G-12G				18m	20	52	1.0k-2.0k	100u*	200m$	125	Si♦	S501

SYMBOLS AND CODES EXPLAINED IN INTERPRETER

5. MICROWAVE VIDEO DETECTOR DIODES

IN ORDER OF (1) TEST FREQ (OR AVG FREQ WHEN TEST FREQ NOT AVAILABLE) and (2) TYPE No.

LINE No.	[2] TYPE No.	BAND	[1] TEST FREQ. (Hz)	FREQUENCY RANGE MIN - MAX (Hz)	MIN FIG OF MERIT FIGURE of MERIT	at PWR. LVL. (W)	at R (Ω)	MIN OUTPT Vo (V)	at PWR. LVL. -dBm	MIN TANG. SENS. -dBm	VIDEO IMPEDANCE RANGE MIN - MAX (Ω)	at MAX. VOLT. (V)	ABSOLUTE MAX RATING BURN-OUT (W)	MAX. TEMP (°C)	DESCRIPTION MAT.	DWG. No.
1	MA7715A-0005	X	10000M	8.0G-12.0G				20m	20	49	1.0k-2.0k	100u*	200m$	125	Si♦	S485Ø
2	MA7715A-0009	S-Ku	10000M	2.0G-18.0G				12m	20	47	1.0k-2.0k		200m$	125	Si♦	S485Ø
3	MA7715A-0012	S-Ku	10000M	2.0G-18G				12m	20	48	1.0k-2.0k	100u*	100 $	125	Si♦	S500
4	MA7715U-0012	S-Ku	10000M	2.0G-18G				12m	20	48	1.0k-2.0k	100u*	100 $	125	Si♦	S501
5	MA7717J-0009	S-Ku	10000M	2.0G-18.0G				12m	20	47	1.0k-2.0k		200m$	125	Si♦	M914Ø
6	MA7717N-0005	X	10000M	8.0G-12.0G				20m	20	49	1.0k-2.0k	100u*	200m$	125	Si♦	M914aØ
7	MA7717N-0012	S-Ku	10000M	2.0G-18G				12m	20	48	1.0k-2.0k	100u*	100 $	125	Si♦	M491a
8	MA40026	X	10G							50	1000-2000		5.0 Ø	150A	♦☑	F32fØ
9	MA40027	X	10G							-52	1000-2000		5.0 Ø	150A	♦☑	F32fØ
10	MA40042	X	10000M							50	1.0k-2.0k				♦	F88b
11	MA40043	X	10000M							52	1.0k-2.0k				♦	F88b
12	MA40072	X	10G							50	1000-2000			150A	♦☑	A1ad
13	MA40073	X	10G							55	1000-2000			150A	♦☑	A1ad
14	MA40230	L-X	10000M	1.0G-12.4G				800u	40	58	2.0k-8.0k	0.0 *	2.0 $	150	Si♦	M790†
15	MA40231	L-X	10000M	1.0G-12.4G				400u	40	55	10k-100k	0.0 *	2.0 $	150	Si♦	M790†
16	MA40232	L-X	10000M	1.0G-12.4G				800u	40	58	2.0k-8.0k	0.0 *	2.0 $	150	Si♦	F82†
17	MA40233	L-X	10000M	1.0G-12.4G				800u	40	55	10k-100k	0.0 *	2.0 $	150	Si♦	F82†
18	MA40234	L-X	10000M	1.0G-12.4G				800u	40	58	2.0k-8.0k	0.0 *	2.0 $	150	Si♦	A1ac†
19	MA40235	L-X	10000M	1.0G-12.4G				400u	40	55	10k-100k	0.0 *	2.0 $	150	Si♦	A1ac†
20	MA40293	L-X	10000M	1.0G-12.4G				800u	40	58	10k-100k	0.0 *	2.0 $	150	Si♦	P21†
21	MA40294	L-X	10000M	1.0G-12.4G				400u	40	55	10k-100k	0.0 *	2.0 $	150	Si♦	P21†
22	MA40295	L-X	10000M	1.0G-12.4G				800u	40	58	2.0k-8.0k	0.0 *	2.0 $	150	Si♦	F126†
23	MA40296	L-X	10000M	1.0G-12.4G				400u	40	55	10k-100k	0.0 *	2.0 $	150	Si♦	F126†
24	MA40220	X	10300M	8.2G-12.4G						55				150A	♦	u14
25	MA40221	X	10300M	8.2G-12.4G						55				150A	♦	M791
26	DDL6725	Kr-Kp	10.5G	8.2G-12.4G						48	500-700			150	Si♦	P22
27	MA40074	X	10525M	1.02G-1.07G									200m	150A	Si♦	P3d
28	MA41205	X	10525M	1.02G-1.07G									100m	150A	Si	P21
29	MA41206	S-X	10525M	1.02G-1.07G									100m	150A	Si	A1ac
30	MA41207	K	10525M	1.02G-1.07G									100m	150A	Si	F107
31	PD422	X	10.525G	10275-10775M						60				150A	♦	M896
32	DC1544/1	X	10600M	8.2G-12.4G	5.0*	20u				56	1500Ø	20u*			Si♦	P3Ø
33	DC1544/5	X	10600M	8.2G-12.4G	3.0*	20u				57	1500Ø	20u*			Si♦	P3Ø
34	DC1544/7	X	10.6G	8.2G-12.4G	5.0*	20u				53	1.5kØ	20u*			Si♦	P30Ø
35	BAV75	X	10687M	8G-12G						49	310Ø	1.0m		150A	Si♦	F27ah
36	DDB4517	Sh-Kp	11G	4.0G-12.4G						47	500-700	50u		150	Si♦	F105a
37	DDB4517A	Sh-Kp	11G	4.0G-12.4G						50	500-700	50u		150	Si♦	F105a
38	DDB6672	Sh-Kp	11G	4.0G-12.4G						45	500-700	50u		150	Si♦	A1akØ
39	DDB6672A	Sh-Kp	11G	4.0G-12.4G						48	500-700	50u		150	Si♦	A1akØ
40	DDL6672A	Sh-Kp	11.0G	4.0G-12.4G							500-700			150	Si♦	A423
41	PK0891	C-X	11000M							45	5.0k-7.0k				Si♦	A1vd
42	PK0891A	C-X	11000M							48	5.0k-7.0k				Si♦	A1vd
43	PK1954	C-X	11000M							47	5.0k-7.0k				Si♦	F85
44	PK1954A	C-X	11000M							50	5.0k-7.0k				Si♦	F85
45	MA7715A-0008	C-Ku	12000M	6.0G-18.0G				12m	20	48	1.0k-2.0k		200m$	125	Si♦	S485Ø
46	MA7717N-0008	C-Ku	12000M	6.0G-18.0G				12m	20	48	1.0k-2.0k		200m$	125	Si♦	M914aØ
47	DDA5638	Ls-Kp	12.4G	1.0G-12.4G						45	4.5K-18.0K			150	Si☑	
48	DDA5638R	Ls-Kp	12.4G	1.0G-12.4G						45	4.5K-18.0K			150	Si☑	
49	MA4615		13000M		50					47	60Ø				Si	F56
50	MA4618		13300M		160					52	100Ø				Si	F56
51	MA41820	Ku	13300M					40m	20	55	1500Ø		500m	150A	Ge	V7
52	MA4147		14G	80G-150G						35				100A	Si☑	M139
53	MA7700A-0005	X-K	14500M	11.0G-18.0G				5.0m	20	52	70-125		100m$	125	Si	S485Ø
54	MA7707J-0012	Ku	15000M	12.0G-18.0G				18m	20	51	1.0k-2.0k	100u*	200m$	125	Si♦	M914Ø
55	MA7709A-0009	Ku	15000M	12.0G-18.0G				18m	20	51	1.0k-2.0k	100u*	200m$	125	Si♦	S495Ø
56	MA7715A-0006	Ku	15000M	12.0G-18.0G				14m	20	48	1.0k-2.0k	100u*	200m$	125	Si♦	S485Ø
57	MA7717N-0006	Ku	15000M	12.0G-18.0G				14m	20	48	1.0k-2.0k	100u*	200m$	125	Si♦	M914aØ
58	MA40243	Ku	15000M	12.4G-18.0G							5.0kØ	0.0 *	2.0 $	150	Si♦	u14†
59	MA40246	Ku	15000M	12.4G-18.0G							50kØ	0.0 *	2.0 $	150	Si♦	u14†
60	MA40222	Ku	15200M	12.4G-18G						52				150A	♦	u14
61	1N2926	X-K	16G	10G-21G	15	5.0u	1.2k			40	-18000	5.0m	20m	70S	Si☑	P1b
62	1N2926A	X-K	16G	10G-21G	30	5.0u	1.2k			45	-18000	5.0m	20m	70S	Si☑	P1b
63	13100BD16	K	16000M		40					47	400Ø			100A	Ge	F59a†
64	13150BD16	K	16000M		55					46	120Ø			100A	Ge	F59a†
65	13200BD16	K	16000M		85					45	80Ø			100A	Ge	F59a†
66	13300BD16	K	16000M		90					45	65Ø			100A	Ge	F59a†
67♦	A2S791	Ku	16000M	12.4G-18.0G				4.0m	30	54.5		20u*		150A	Si♦	A329b
68	AEY31	X	16G	12G-18G						53	300Ø	1.0m		100J	Ge	F82
69	AEY31A	X	16G	12G-18G						50	300Ø	1.0m		100J	Ge	F82
70	CC104816	Ku	16G							48	1.1k-1.7k		100M	150	Si♦	F10p
71	CC105016	Ku	16G							50	1.1k-1.7k		100M	150	Si♦	F10p
72	CC105216	Ku	16G							52	1.1k-1.7k		100M	150	Si♦	F10p
73	CC134816	Ku	16G							48	1.1k-1.7k		100M	150	Si♦	F59b
74	CC135016	Ku	16G							50	1.1k-1.7k		100M	150	Si♦	F59b
75	CC135216	Ku	16G							52	1.1k-1.7k		100M	150	Si♦	F59b
76	CC204816	Ku	16G							48	1.1k-1.7k		100M	150	Si♦	F107
77	CC205016	Ku	16G							50	1.1k-1.7k		100M	150	Si♦	F107
78	CC205216	Ku	16G							52	1.1k-1.7k		100M	150	Si♦	F107
79	DC3023	J	16.0G	12.4G-18.0G						50	300Ø		150m$	85	Ge	M985
80	DDA5360	Kp-Ku	16.0G	12.0G-18.0G						58						M1143
81	DDA5360R	Kp-Ku	16.0G	12.0G-18.0G						58						M1143
82	DDB4504	Kp-Kn	16G	12.4-18.0G	100§					48	500-700	50u		150	Si♦	M577aØ
83▼	DME3201	Ku	16.0G	12.4G-18.0G	150§	0.0					300-680	10u*		150	Si♦	W303
84▼	DME3207	Ku	16.0G	12.4G-18.0G	150§	0.0					300-680	10u*		150	Si♦	M1137
85▼	DMF3184	Ku	16.0G	12.4G-18.0G	150§	0.0					300-680	10u*		150	Si♦	M1137
86▼	DMF3198	Ku	16.0G	12.4G-18.0G	150§	0.0					300-680	10u*		150	Si♦	W303
87▼	DMJ3204	Ku	16.0G	12.4G-18.0G	150§	0.0					300-680	10u*		150	Si♦	W303
88▼	DMJ3210	Ku	16.0G	12.4G-18.0G	150§	0.0					300-680	10u*		150	Si♦	M1137
89▼	HSCH5511	K	16G							-55				175	♦	M1195
90▼	HSCH5531	K	16G							-55				175	♦	M1195
91	MA4116	Ku	16000M		200					52	1.6k-2.4k				☑	P1d
92	MA4135	Ku	16000M												Si	P1b
93	MA40028	Ku	16G							48	1000-2000		5.0 Ø	150A	♦☑	F32fØ
94	MA40029	Ku	16G							52	1000-2000		5.0 Ø	150A	♦☑	F32fØ
95	MA40205	Ku	16G							52	1200-1800			150A	♦	F82
96	MA40206	Ku	16G							50	1200-1800			150A	♦	F82
97	MA40215	Ku	16G							52	1200-1800			150A	♦	M790
98	MA40216	Ku	16G							50	1200-1800			150A	♦	M790
99	MA40240	Ku	16000M	12.4G-18.0G				600u	40	52	2.0k-8.0k	0.0 *	2.0 $	150	Si♦	M790†
100	MA40241	Ku	16000M	12.4G-18.0G				300u	40	49	10k-100k	0.0 *	2.0 $	150	Si♦	M790†
101	MA40242	Ku	16000M	12.4G-18.0G				600u	40	52	2.0k-8.0k	0.0 *	2.0 $	150	Si♦	F82†
102	MA40244	Ku	16000M	12.4G-18.0G						49		0.0 *	2.0 $	150	Si♦	F82†
103	MA40248	Ku	16000M					400u	40	49	4000-10000	0.0		100m	150	Si♦	F85
104	MA40255	Ku	16000M					350u	40	52	1200-1800	20u*		100m	150A	Si♦	F85
105	MA40256	Ku	16000M					300u	40	50	1200-1800	20u*		100m	150A	Si♦	F85
106	MA40265	Ku	16000M					350u	40	52	1200-1800	20u*		100m	150A	Si♦	M790
107	MA40266	Ku	16000M					300u	40	50	1200-1800	20u*		100m	150A	Si♦	M790
108	MA40272	Ku	16000M							52				100m	150A	Si♦	u14
109	MA40274	Ku	16000M							52				100m	150A	Si♦	M912
110	MA41224	Ku	16000M							52	1200-1800	20u*		100m	150A	Si	F107

SYMBOLS AND CODES EXPLAINED IN INTERPRETER

5. MICROWAVE VIDEO DETECTOR DIODES

IN ORDER OF (1) TEST FREQ (OR AVG FREQ WHEN TEST FREQ NOT AVAILABLE) and (2) TYPE No.

LINE No.	[2] TYPE No.	BAND	[1] TEST FREQ. (Hz)	FREQUENCY RANGE MIN - MAX (Hz)	MIN FIG OF MERIT FIGURE of MERIT	at PWR. LVL. (W)	at R (Ω)	MIN OUTPT Vo (V)	at PWR. LVL. -dBm	MIN TANG. SENS. -dBm	VIDEO IMPEDANCE RANGE MIN - MAX (Ω)	at MAX. VOLT. (V)	ABSOLUTE MAX RATING BURN-OUT (W)	MAX. TEMP (°C)	MAT.	DESCRIPTION DWG. No.
1	MA41225	Ku	16000M							48	1200-1800	20u*	100m	150A	Si	F107
2	PKD101-01	Ku	16000M	12.4G-18G	250	100u		25m	40	58	4.5k-19k	5.0m	100m	150A	Si♦	F27d
3	PKD101-08	Ku	16000M	12.4G-18G	250	100u		25m	40	58	4.5k-18k	5.0m	100m	150A	Si♦	A1vd
4	PKD101-19	Ku	16000M	12.4G-18G	250	100u		25m	40	58	4.5k-18k	5.0m	100m	150A	Si♦	F82
5	PKD101-51	Ku	16000M	12.4G-18G	250	100u		25m	40	58	4.5k-18k	5.0m	100m	150A	Si♦	F54k
6	PKD906	Ku	16000M	12.4G-18G	65	5.0u		6.5m	40	52	4500-18000	5.0m	200m	150	Si	A298t
7	PKD907	Ku	16000M	12.4G-18G	150	5.0u		15m	40	55	4500-18000	5.0m	200m	150	Si	A298t
8	PKD908	Ku	16000M	12.4G-18G	250	5.0u		25m	40	58	4500-18000	5.0m	200m	150	Si	A298t
9	AEY29	J	16500M	12G-18G	50					53	300Ø	1.0m		100A	Ge	P1bØØ
10	DC1314	Ku	16500M	12.4G-18.0G						47	200Ø	150u*		150A	GA♦	A316Ø
11	DC1316	Ku	16.5G	12.4G-18.0G						47	200Ø	150u*			GA♦	u7dØ
12	DC1335	Ku	16.5G	12.4G-18.0G						47	200Ø	150u*			GA♦	F51cØ
13	DC1520	Ku	16.5G	12.4G-18.0G						50	200Ø	150u*	400m$	150A	Si♦	u7dØ
14	DC1535	Ku	16.5G	12.4G-18.0G						52	200Ø	150u*	400m$	150A	Si♦	P1eØ
15	DC1547	J	16.5G							50	200Ø		200m	150	Si♦	F51cØ
16	DC3011	Ku	16.5G	12.4G-18.0G	60					52	300Ø	0.0	150m$	85A	Ge	P1e
17	DC3024	Ku	16.5G	12.4G-18.0G						50	300Ø	0.0	150m$	85A	Ge	u7d
18	DDA5361	Ku-Kr	24.0G	18.0G-26.5G						58						M1143
19	DDA5361R	Ku-Kr	24.0G	18.0G-26.5G						58						M1143
20	DDA5362	Ku-Kr	24.0G	18.0G-26.5G						58						F146
21	MA40245	K	24000M	18.0G-26.5G				400u	40	49	2.0k-8.0k	0.0 *	2.0 $	150	Si♦	F82†
22	MA40249	K	24000M	18.0G-26.5G				400u	40	49	4000-10000	0.0 *	2.0 $	150	Si♦	M790†
23	PKD102-01	K	24000M	18G-26G	210	100u		21m	40	57	4.5k-18k	5.0m	100m	150A	Si♦	F27d
24	PKD102-19	K	24000M	18G-26G	210	100u		21m	40	57	4.5k-18k	5.0m	100m	150A	Si♦	F82
25	PKD102-51	K	24000M	18G-26G	210	100u		21m	40	57	4.5k-18k	5.0m	100m	150A	Si♦	F54k
26	PKD909	K	24000M	18G-26G	40	5.0u		4.0m	40	50	4500-18000	5.0m	200m	150	Si	A298t
27	PKD910	K	24000M	18G-26G	85	5.0u		8.0m	40	53	4500-18000	5.0m	200m	150	Si	A298t
28	PKD911	K	24000M	18G-26G	160	5.0u		18m	40	56	4500-18000	5.0m	200m	150	Si	A298t
29	DDB5098	k	24.15G	18G-26.5G						50				150	Si♦$	A366
30	DDB6673Y	k	24.15G	18G-26.5G						50				150	Si♦$	F105a
31	DDB6783	k	24.15G	18G-26.5G						50				150	Si♦$	A412
32	AEY32	K-Ka	34G	18G-40G	50						3.0k-5.0k	1.0m		100A	Ge	F82
33	DDA5363	Kr-Qb	34.9G	26.5G-40.0G						55						M1144
34	DDA5363R	Kr-Qb	34.9G	26.5G-40.0G						55						M1144
35	DDA5364	Kr-Qb	34.9G	26.5G-40.0G						55						F146
36	DDB6673	Kr-Qb	34.9G	26.5G-40.0G						40	500-700	50u		150	Si♦	F105aØ
37	PK1933	Ka	35000M							40	6.0k-8.0k				Si♦	F85
38	PKD103-19	Ka	35000M	24G-35G	180	100u		18m	40	56	4.5k-18k	5.0m	100m	150A	Si♦	F82
39	MA40267	Ka	36000M					300u	40	49	1000-2000	20u*	100m	150A	Si♦	F85
40	MA40268	Ka	36000M					300u	40	49	1000-2000	20u*	100m	150A	Si♦	M790
41	MA441		69720M	40.0G - 75.0G						35				100A	SiØ	M12
42	MA437		140G	†					2.8						Si♦	F99

6. VOLTAGE VARIABLE CAPACITORS & VARACTOR DIODES

IN ORDER OF (1) TYPICAL CAPACITANCE, (2) TEST VOLTAGE, and (3) TYPE No.

LINE No.	TYPE No. [3]	MINIMUM CUTOFF FREQUENCY (Corresponding to Type Numbers in previous column)						TYP. CAP.		CAPACITANCE RANGE	PIV	Q FACTOR		MAX. SER. RES.	MAX. DISS.	DESCRIPTION	
								1 CAP. Cj	2 at TEST VOLT	(for V = 0 to PIV) Ø - at TEST VOLT.		MIN. Q	at TEST FREQ		@ 25°C	MAT.	DWG. No.
		(Hz)	(Hz)	(Hz)	(Hz)	(Hz)	(Hz)	(F)	(V)	(pF)	(V)		(Hz)	(Ω)	(W)		
1	BXY13CA	1.0G	10G							1.5 - 2.5						§	M1095
2	BXY15CA3	2.0G	10G							1.0 - 1.5						§	M1068
3	BXY18A2	2.0G	8.0G							0.7 - 1.3						§	M1095
4	BXY18AB2	2.0G	12G							1.1-1.6						§	M1095
5	BXY18AB	1.0G	15G							0.7 - 1.0						§	M1068
6	BXY19GB	0.1G	2.5G							20-30						§	M1096
7	CKV2010-19									1.10-0.45	20	500	50M	1.8		Si	u30
8	CKV2010-20									1.65-0.55	20	500	50M	1.8		Si	u30
9	CKV2010-21									2.20-0.70	20	400	50M	1.8		Si	u30
10	CKV2010-22									3.30-0.90	20	400	50M	1.8		Si	u30
11	CKV2010-23									5.50-1.30	20	400	50M	1.8		Si	u30
12	CKV2020-01											800	1M	1.8		Si	u55
13	CKV2020-02									4.0-7.0	10	800	1M	1.8		Si	u55
14	CKV2020-03									4.0-7.0	10	800	1M	1.8		Si	u55
15	CKV2020-04										10	800	1M	1.8		Si	u55
16	CKV2020-05									8.0-13.0	10	800	1M	1.8		Si	u55
17	CKV2020-06									8.0-13.0	10	800	1M	1.8		Si	u55
18	CKV2020-07										10	800	1M	1.8		Si	u56
19	CKV2020-08									11.0-18.0	10	800	1M	1.8		Si	u56
20	CKV2020-09									11.0-18.0	10	800	1M	1.8		Si	u56
21	CKV2020-10										10	800	1M	1.8		Si	u56
22	CKV2020-11									14.0-22.0	10	800	1M	1.8		Si	u56
23	CKV2020-12									14.0-22.0	10	800	1M	1.8		Si	u56
24	CKV2020-13											800	1M	1.8		Si	A429
25	CKV2020-14											800	1M	1.8			A429
26	CKV2020-15											800	1M	1.8			A429
27	CKV2020-16									18.0-22.0	4			0.4			u57
28	CKV2020-17									18.0-22.0	4			0.4		Si	u57
29	CKV2020-18									18.0-22.0	4			0.4		Si	u57
30	CKV2020-19									9.0-21.0	4			0.4		Si	u57
31	CKV2020-20									9.0-21.0	4			0.4		Si	u57
32	CKV2020-21									45.0-55.0	4			0.4		Si	u57
33	CKV2020-22									45.0-55.0	4			0.4		Si	u57
34	CKV2020-23									45.0-55.0	4			0.4		Si	u57
35	CKV2020-24									47.5-52.5	4			0.4		Si	u57
36	CKV2020-25									47.5-52.5	4			0.4		Si	u57
37	CKV2020-26									100.0-120.0	4			0.4		Si	u55
38	CKV2020-27									100.0-120.0	4			0.4		Si	u55
39	CKV2020-28									100.0-120.0	4			0.4		Si	u55
40	CKV2020-29									104.5-115.5	4			0.4		Si	u55
41	CKV2020-30									104.5-115.5	4			0.4		Si	u55
42	CKV2020-31									140.0-170.0	4			0.4		Si	u56
43	CKV2020-32									140.0-170.0	4			0.4		Si	u56
44	CKV2020-33									140.0-170.0	4			0.4		Si	u56
45	CKV2020-34									147.0-163.0	4			0.4		Si	u56
46	CKV2020-35									147.0-163.0	4			0.4		Si	u56
47	CKV2020-36										4			0.4		Si	u56
48	CKV2020-37									180.0-220.0	4			0.4		Si	u56
49	CKV2020-38									180.0-220.0	4			0.4		Si	u56
50	CKV2020-39									190.0-210.0	4			0.4		Si	u56
51	CKV2020-40									190.0-210.0	4			0.4		Si	u56
52	CKV2020-41									10.5-12.5	3			0.4		Si	u57
53	CKV2020-42									4.3-5.7	8			0.4		Si	u57
54	CKV2020-43									4.3-5.7	8			0.4		Si	u57
55	CKV2020-44									4.3-5.7	8			0.4		Si	u57
56	CKV2020-45									4.6-5.4	8			0.4		Si	u57
57	CKV2020-46									4.6-5.4	8			0.4		Si	u57
58	CKV2020-47									4.6-5.4	8			0.4		Si	u57
59	CKV2020-48									25.0-31.0	3			0.4		Si	u57
60	CKV2020-49									10.0-13.5	8			0.4		Si	u57
61	CKV2020-50									10.0-13.5	8			0.4		Si	u57
62	CKV2020-51									10.0-13.5	8			0.4		Si	u57
63	CKV2020-52									11.0-13.0	8			0.4		Si	u57
64	CKV2020-53									11.0-13.0	8			0.4		Si	u57
65	CKV2020-54									11.0-13.0	8			0.4		Si	u57
66	CVE7800A									0.4-0.6Ø	25	750	1G			GA	u58
67	CVE7800B									0.6-0.8Ø	25	650	1G			GA	u58
68	CVE7800C									0.8-1.0Ø	25	600	1G			GA	u58
69	CVE7800D									1.0-1.5Ø	25	500	1G			GA	u58
70	CVE7800E									1.5-2.0Ø	25	375	1G			GA	u58
71	CVE7800F									2.0-2.5Ø	25	325	1G			GA	u58
72	CVE7800G									2.5-3.0Ø	25	275	1G			GA	u58
73	CVE7800H									3.0-4.0Ø	25	215	1G			GA	u58
74	CVE7900A									0.4-0.6		500	1G			GA	u58
75	CVE7900B									0.6-0.8		450	1G			GA	u58
76	CVE7900C									0.8-1.0		400	1G			GA	u58
77	CVE7900D									1.0-1.5		350	1G			GA	u58
78	CVE7900E									1.5-2.0		300	1G			GA	u58
79	CVE7900F									2.0-2.5		275	1G			GA	u58
80	CVE7900G									2.5-3.0		250	1G			GA	u58
81	CVE7900H									3.0-4.0		225	1G			GA	u58
82	CVE7900J									4.0-5.0		215	1G			GA	u58
83	CVE7900K									5.0-6.0		200	1G			GA	u58
84▼	MA46601H									1.00-1.49†;10% Δ	30 ☑	8.0k	50M			GA	V7 †
85▼	MA46601J									1.00-1.49†;10% Δ	30 ☑	9.0k	50M			GA	V7 †
86▼	MA46602G									1.50-1.99†;10% Δ	30 ☑	7.0k	50M			GA	V7 †
87▼	MA46602H									1.50-1.99†;10% Δ	30 ☑	8.0k	50M			GA	V7 †
88▼	MA46602J									1.50-1.99†;10% Δ	30 ☑	9.0k	50M			GA	V7 †
89▼	MA46603F									2.0-2.49†;10% Δ	30 ☑	6.0k	50M			GA	V7 †
90▼	MA46603G									2.0-2.49†;10% Δ	30 ☑	7.0k	50M			GA	V7 †
91▼	MA46603H									2.0-2.49†;10% Δ	30 ☑	8.0k	50M			GA	V7 †
92▼	MA46604E									2.50-2.99†;10% Δ	30 ☑	5.0k	50M			GA	V7 †
93▼	MA46604F									2.50-2.99†;10% Δ	30 ☑	6.0k	50M			GA	V7 †
94▼	MA46604G									2.50-2.99†;10% Δ	30 ☑	7.0k	50M			GA	V7 †
95▼	MA46610J									.50-.99†;10% Δ	45 ☑	9.0k	50M			GA	V7 †
96▼	MA46611H									1.0-1.49†;10% Δ	45 ☑	8.0k	50M			GA	V7 †
97▼	MA46611J									1.0-1.49†;10% Δ	45 ☑	9.0k	50M			GA	V7 †
98▼	MA46612G									1.5-1.99†;10% Δ	45 ☑	7.0k	50M			GA	V7 †
99▼	MA46612H									1.5-1.99†;10% Δ	45 ☑	8.0k	50M			GA	V7 †
100▼	MA46613F									2.00-2.49†;10% Δ	45 ☑	6.0k	50M			GA	V7 †
101▼	MA46613G									2.00-2.49†;10% Δ	45 ☑	7.0k	50M			GA	V7 †
102▼	MA46614E									2.50-299†;10% Δ	45 ☑	5.0k	50M			GA	V7 †
103▼	MA46614F									2.50-299†;10% Δ	45 ☑	6.0k	50M			GA	V7 †
104▼	MA46620H									.50-.99†;10% Δ	60 ☑	8.0k	50M			GA	V7 †
105▼	MA46620J									.50-.99†;10% Δ	60 ☑	9.0k	50M			GA	V7 †
106▼	MA46620K									.50-.99†;10% Δ	60 ☑	10k	50M			GA	V7 †
107▼	MA46621G									1.00-1.49†;10% Δ	60 ☑	7.0k	50M			GA	V7 †
108▼	MA46621H									1.00-1.49†;10% Δ	60 ☑	8.0k	50M			GA	V7 †
109▼	MA46621J									1.00-1.49†;10% Δ	60 ☑	9.0k	50M			GA	V7 †
110▼	MA46622F									1.50-1.99†;10% Δ	60 ☑	6.0k	50M			GA	V7 †

6. VOLTAGE VARIABLE CAPACITORS & VARACTOR DIODES

IN ORDER OF (1) TYPICAL CAPACITANCE, (2) TEST VOLTAGE, and (3) TYPE No.

LINE No.	3 TYPE No.	MINIMUM CUTOFF FREQUENCY (Corresponding to Type Numbers in previous column) (Hz)	(Hz)	(Hz)	(Hz)	(Hz)	(Hz)	TYP. CAP. 1 CAP. Cj (F)	2 at TEST VOLT (V)	CAPACITANCE RANGE (for V = 0 to PIV) Ø - at TEST VOLT. (pF)	PIV (V)	Q FACTOR MIN. Q	at TEST FREQ (Hz)	MAX. SER. RES. Rs (Ω)	MAX. DISS. @ 25°C (W)	DESCRIPTION MAT.	DWG. No.
1▼	MA46622G									1.50-1.99†;10% Δ	60 ☑	7.0k	50M			GA	V7 †
2▼	MA46622H									1.50-1.99†;10% Δ	60 ☑	8.0k	50M			GA	V7 †
3▼	MA46623F									2.00-2.49†;10% Δ	60 ☑	6.0k	50M			GA	V7 †
4▼	MA46623G									2.00-2.49†;10% Δ	60 ☑	7.0k	50M			GA	V7 †
5▼	MA46624E									2.50-2.99†;10% Δ	60 ☑	5.0k	50M			GA	V7 †
6▼	MA46624F									2.50-2.99†;10% Δ	60 ☑	6.0k	50M			GA	V7 †
7▼	MA48703G,H,I	250G	275G	300G				0.0		.250-.299 Ø						GA $Δ	V7 †
8▼	MA48704G,H	250G	275G					0.0		.300-.349 Ø						GA $Δ	V7 †
9▼	MA48705G	250G						0.0		.350-.399						GA $Δ	V7 †
10▼	MA45200-287							4.0		.6-15	60 ☑	800	50M				M928a
11▼	MA45225-287							4.0		.5-24	30 ☑	4.0k	50M				M928a
12▼	MA45245-287							4.0		.5-19	45 ☑	1.7k	50M				M928a
13▼	MA45290-287							4.0		1.0-7.0	80 ☑	600	50M				M928a
14▼	MA46552D							4.0		1.00-1.49	22 ☑	2.0k	50M			GA	V7 †
15▼	MA46552E							4.0		1.00-1.49	22 ☑	3.0k	50M			GA	V7 †
16▼	MA46553B							4.0		1.50-2.49	22 ☑	1.0k	50M			GA	V7 †
17▼	MA46553C							4.0		1.50-2.49	22 ☑	1.5k	50M			GA	V7 †
18▼	MA46553D							4.0		1.50-2.49	22 ☑	2.0k	50M			GA	V7 †
19▼	MA46553E							4.0		1.50-2.49	22 ☑	3.0k	50M			GA	V7 †
20▼	MA46554B							4.0		2.50-3.49	22 ☑	1.0k	50M			GA	V7 †
21▼	MA46554C							4.0		2.50-3.49	22 ☑	1.5k	50M			GA	V7 †
22▼	MA46554D							4.0		2.50-3.49	22 ☑	2.0k	50M			GA	V7 †
23▼	MA46555B							4.0		3.50-4.99	22 ☑	1.0k	50M			GA	V7 †
24▼	MA46555C							4.0		3.50-4.99	22 ☑	1.5k	50M			GA	V7 †
25▼	MA46555D							4.0		3.50-4.99	22 ☑	2.0k	50M			GA	V7 †
26	1N4885							6.0		28-39Ø	150 $			.70	20	Si	DO4
27	BXY15CA5	2.0G	15G						-6	1.5 - 2.0Ø						§	
28	BXY18AB4	1.0G	10G						-6	0.4-0.7Ø						§	M1068
29	BXY18AB5	1.0G	15G						-6	0.43-0.78Ø						§	F152
30	BXY18AB6	1.0G	15G						-6	0.25-0.43Ø						§	F152
31	MA45067							1.2f†Δ	4.0	3.6;0.0V-25V$	35 ☑	3.5k	50M			Si§	F27f
32	MA45068							1.8f†Δ	4.0	3.8;0.0V-25V$	35 ☑	3.5k	50M			Si§	F27f
33	DVE4560-24	900G						75f	0.0	.05-.10Ø	10 ☑	900k	1.0M			GA	F113
34	DVE4588-01	750G						75f§	0.0	.05-.10Ø	6.0 ☑	750k	1.0M			GA$♦	A370
35	DVE4588-11	650G						75f§	0.0	.05-.10Ø	10 ☑	650k	1.0M			GA$♦	A370
36	MDX580C	200G						100f	0.0	2.0;0.0V-6.0V$	6.0	20	10G		200m☑	GA$Δ	F27am
37	MDX580D	200G						100f	0.0	2.0;0.0V-6.0V$	6.0	20	10G		200m☑	GA$Δ	F27f
38	MDX580M	200G						100f	0.0	2.0;0.0V-6.0V$	6.0	20	10G		200m☑	GA$Δ	F54c
39	MDX580N	200G						100f	0.0	2.0;0.0V-6.0V$	6.0	20	10G		200m☑	GA$Δ	F59k
40	MDX581C	250G						100f	0.0	2.0;0.0V-6.0V$	6.0	25	10G		200m☑	GA$Δ	F27am
41	MDX581D	250G						100f	0.0	2.0;0.0V-6.0V$	6.0	25	10G		200m☑	GA$Δ	F27f
42	MDX581M	250G						100f	0.0	2.0;0.0V-6.0V$	6.0	25	10G		200m☑	GA$Δ	F54c
43	MDX581N	250G						100f	0.0	2.0;0.0V-6.0V$	6.0	25	10G		200m☑	GA$Δ	F59k
44	MDX582C	300G						100f	0.0	2.0;0.0V-6.0V$	6.0	30	10G		200m☑	GA$Δ	F27am
45	MDX582D	300G						100f	0.0	2.0;0.0V-6.0V$	6.0	30	10G		200m☑	GA$Δ	F27f
46	MDX582M	300G						100f	0.0	2.0;0.0V-6.0V$	6.0	30	10G		200m☑	GA$Δ	F54c
47	MDX582N	300G						100f	0.0	2.0;0.0V-6.0V$	6.0	30	10G		200m☑	GA$Δ	F59k
48	MDX583C	350G						100f	0.0	2.0;0.0V-6.0V$	6.0	35	10G		200m☑	GA$Δ	F27am
49	MDX583D	350G						100f	0.0	2.0;0.0V-6.0V$	6.0	35	10G		200m☑	GA$Δ	F27f
50	MDX583M	350G						100f	0.0	2.0;0.0V-6.0V$	6.0	35	10G		200m☑	GA$Δ	F54c
51	MDX583N	350G						100f	0.0	2.0;0.0V-6.0V$	6.0	35	10G		200m☑	GA$Δ	F59k
52	MDX584C	450G						100f	0.0	2.0;0.0V-6.0V$	6.0	45	10G		200m☑	GA$Δ	F27am
53	MDX584D	450G						100f	0.0	2.0;0.0V-6.0V$	6.0	45	10G		200m☑	GA$Δ	F27f
54	MDX584M	450G						100f	0.0	2.0;0.0V-6.0V$	6.0	45	10G		200m☑	GA$Δ	F54c
55	MDX584N	450G						100f	0.0	2.0;0.0V-6.0V$	6.0	45	10G		200m☑	GA$Δ	F59k
56	PA0100H,J-L,N	100G	120G	140G	160G	180G		.10p	6.0	.05 - .15Ø	6.0	☑	10G		.20	Si	F27d
57	PA0100P,Q,S-V	200G	220G	240G	260G	280G	300G	100f	6.0	.05-.15Ø	6.0	☑	10G		200m	Si	F27d
58	PA0100W	320G						100f	6.0	.05-.15Ø	6.0	☑	10G		200m	Si	F27d
59	PA0700H,J-L,N	100G	120G	140G	160G	180G		.10p	6.0	.05 - .15Ø	6.0	☑	10G		.20	Si	F9
60	PA0700P,Q,S-U	200G	220G	240G	260G	280G		100f	6.0	.05-.15Ø	6.0	☑	10G		200m	Si	F9
61	PA0700V,W	300G	320G					100f	6.0	.05-.15Ø	6.0	☑	10G		200m	Si	F9
62	PG0110D	60G						100f	10	.05-.15Ø	10	6.0	10G		200m	Si	F27f
63	PG0110F	80G						100f	10	.05-.15Ø	10	8.0	10G		200m	Si	F27f
64	PG0110H	100G						100f	10	.05-.15Ø	10	10	10G		200m	Si	F27f
65	PG0110J	120G						100f	10	.05-.15Ø	10	12	10G		200m	Si	F27f
66	PG0110K	140G						100f	10	.05-.15Ø	10	14	10G		200m	Si	F27f
67	PG0110L	160G						100f	10	.05-.15Ø	10	16	10G		200m	Si	F27f
68	PG0110N	180G						100f	10	.05-.15Ø	10	18	10G		200m	Si	F27f
69	PG0110P	200G						100f	10	.05-.15Ø	10	20	10G		200m	Si	F27f
70	PG0110Q	220G						100f	10	.05-.15Ø	10	22	10G		200m	Si	F27f
71	PG0110S	240G						100f	10	.05-.15Ø	10	24	10G		200m	Si	F27f
72	PG0110T	260G						100f	10	.05-.15Ø	10	26	10G		200m	Si	F27f
73	DVE5033-10	500G						105f	0.0	.09-.12Ø	15 ☑	500k	1.0M		40m	GA	F114
74	DVE5033-11	550G						105f	0.0	.09-.12Ø	15 ☑	550k	1.0M		40m	GA	F114
75	DVE5033-12	600G						105f	0.0	.09-.12Ø	15 ☑	600k	1.0M		40m	GA	F114
76	DVE5033-13	650G						105f	0.0	.09-.12Ø	15 ☑	650k	1.0M		40m	GA	F114
77	DVE5033-14	700G						105f	0.0	.09-.12Ø	15 ☑	700k	1.0M		40m	GA	F114
78	MA44900A	100G	150G	200G	250G	300G	350G	125f	0	.100-.149	6.0					Si	F111
79	MA44900B	100G	150G	200G	250G	300G	350G	125f	0	.100-.149	6.0					Si	F111
80	MA44900C	100G	150G	200G	250G	300G	350G	125f	0	.100-.149	6.0					Si	F111
81	MA44900D	100G	150G	200G	250G	300G	350G	125f	0	.100-.149	6.0					Si	F111
82	MA44900E	100G	150G	200G	250G	300G	350G	125f	0	.100-.149	6.0					Si	F111
83	MA44900F	100G	150G	200G	250G	300G	350G	125f	0	.100-.149	6.0					Si	F111
84	DVE4560-18	800G						125f	0.0	.10-.15Ø	10 ☑	800k	1.0M			GA	F113
85	DVE4588-02	650G						125f§	0.0	.10-.15Ø	6.0 ☑	650k	1.0M			GA$♦	A370
86	DVE4588-12	575G						125f§	0.0	.10-.15Ø	10 ☑	575k	1.0M			GA$♦	A370
87	DVE6722F	620G						125f	0.0	.10-.15Ø	10 ☑		1.0M			GAΔ	F54c
88	DVE6810F	620G						125f	0.0	.10-.15Ø	10 ☑		1.0M			GAΔ	F94a
89	GC55010A,B,C,D,E,F	800G	900G	1.0T	1.2T	1.5T	1.8T	125f	0.0	3.0;0.0-10V$	10					GA	M923
90	SD11AL12							.13p	0.0	.13 - .25	12			36		Si	P3
91	SD12AL12							.13p	0.0	.13 - .25	12			36		Si	F3a
92	SD22AL12							.13p	0.0	.13 - .25	12			36		Si	F11
93	SD32AL12							.13p	0.0	.13 - .25	12			36		Si	F21
94	SD42AL12							.13p	0.0	.13 - .25	12			36		Si	F9a
95	SDGPAL12							.13p	0.0	.13 - .25	12			36		Si	DO7
96	DVE5033-06	500G						135f	0.0	.12-.15Ø	15 ☑	500k	1.0M		40m	GA	F114
97	DVE5033-07	550G						135f	0.0	.12-.15Ø	15 ☑	550k	1.0M		40m	GA	F114
98	DVE5033-08	600G						135f	0.0	.12-.15Ø	15 ☑	600k	1.0M		40m	GA	F114
99	DVE5033-09	650G						135f	0.0	.12-.15Ø	15 ☑	650k	1.0M		40m	GA	F114
100	GC5511A,B,C,D,E,F	200G	250G	300G	350G	400G	450G	150f	0.0	2.5;0.0-10V$	10					GA	F111b†
101	GC5511G,H,J,K,L,M	500G	550G	600G	650G	700G	750G	150f	0.0	2.5;0.0-10V$	10					GA	F111b†
102	MA4688	100G						.15p	0.0	.10 - .20Ø	8.0			2.5		Si	P8
103	SD11AL18							.15p	0.0	.15 - .30	18			36		Si	P3
104	SD12AL18							.15p	0.0	.15 - .30	18			36		Si	F3a
105	SD22AL18							.15p	0.0	.15 - .30	18			36		Si	F11
106	SD32AL18							.15p	0.0	.15 - .30	18			36		Si	F21
107	SD42AL18							.15p	0.0	.15 - .30	18			36		Si	F9a
108	SDGPAL18							.15p	0.0	.15 - .30	18			36		Si	DO7
109	GC5531C,D,E,F,G	300G	350G	400G	450G	500G		150f	6.0	2.5;0.0-10V$	30 ☑					GA	F111b†
110	VAP81BN19	150GØ						150f	6.0	.10 - .20Ø	5.5 ☑					Si	F27f

6. VOLTAGE VARIABLE CAPACITORS & VARACTOR DIODES

IN ORDER OF (1) TYPICAL CAPACITANCE, (2) TEST VOLTAGE, and (3) TYPE No.

LINE No.	[3] TYPE No.	MINIMUM CUTOFF FREQUENCY (Corresponding to Type Numbers in previous column) (Hz)	(Hz)	(Hz)	(Hz)	(Hz)	(Hz)	TYP. CAP. [1] CAP. Cj (F)	[2] at TEST VOLT (V)	CAPACITANCE RANGE (for V = 0 to PIV) Ø - at TEST VOLT. (pF)	PIV (V)	Q FACTOR MIN. Q	at TEST FREQ (Hz)	MAX. SER. RES. Rs (Ω)	MAX. DISS. @ 25°C (W)	DESCRIPTION MAT.	DWG. No.
1	VAP81CN9	200GØ						150f	6.0	.10-.20Ø	5.5 ☑					Si	F54f
2	VAP81CN15	200GØ						150f	6.0	.10-.20Ø	5.5 ☑					Si	F10ap
3	VAP81CN20	200GØ						150f	6.0	.10 - .20Ø	5.5 ☑					Si$	F27f
4	VAP81FN19	350GØ						150f	6.0	.10 - .20Ø	5.5 ☑					Si$	F27t
5	DVE5033-03	500G						165f	0.0	.15-.18Ø	15 ☑	500k	1.0M		40m	GA	F114
6	DVE5033-04	550G						165f	0.0	.15-.18Ø	15 ☑	550k	1.0M		40m	GA	F114
7	DVE5033-05	600G						165f	0.0	.15-.18Ø	15 ☑	600k	1.0M		40m	GA	F114
8	SD11AL24							.17p	0.0	.17 - .35	24			72		Si	P3
9	SD12AL24							.17p	0.0	.17 - .35	24			72		Si	F3a
10	SD22AL24							.17p	0.0	.17 - .35	24			72		Si	F11
11	SD32AL24							.17p	0.0	.17 - .35	24			72		Si	F21
12	SD42AL24							.17p	0.0	.17 - .35	24			72		Si	F9a
13	SDGPAL24							.17p	0.0	.17 - .35	24			72		Si	DO7
14	MA48501A,B-F	100G	125G	150G	175G	200G	225G	174f	0.0	.150-.199Ø						GA$Δ	V7☑
15	MA48501G,H-K	250G	275G	300G	325G	350G		174f	0.0	.150-.199Ø						GA$Δ	V7☑
16	MA48701A,B-F	100G	125G	150G	175G	200G	225G	174f	0.0	.150-.199Ø						GA$Δ	V7
17	MA48701G,H-K	250G	275G	300G	325G	350G		174f	0.0	.150-.199Ø						GA$Δ	V7
18	MA44901A	100G	150G	200G	250G	300G	350G	175f	0	.150-.199	6.0					Si	F111
19	MA44901B	100G	150G	200G	250G	300G	350G	175f	0	.150-.199	6.0					Si	F111
20	MA44901C	100G	150G	200G	250G	300G	350G	175f	0	.150-.199	6.0					Si	F111
21	MA44901D	100G	150G	200G	250G	300G	350G	175f	0	.150-.199	6.0					Si	F111
22	MA44901E	100G	150G	200G	250G	300G	350G	175f	0	.150-.199	6.0					Si	F111
23	MA44901F	100G	150G	200G	250G	300G	350G	175f	0	.150-.199	6.0					Si	F111
24	DVE4560-12	700G						175f	0.0	.15-.20Ø	10 ☑	700k	1.0M			GA	F113
25	DVE4588-03	600G						175f§	0.0	.15-.20Ø	6.0 ☑	600k	1.0M			GA$♦	A370
26	DVE4588-13	500G						175f§	0.0	.15-.20Ø	10 ☑	500k	1.0M			GA$♦	A370
27	DVE6722E	570G						175f	0.0	.15-.20Ø	10 ☑		1.0M			GAΔ	F54c
28	DVE6810E	570G						175f	0.0	.15-.20Ø	10 ☑		1.0M			GAΔ	F94a
29	GC55015A,B,C,D,E,F	800G	900G	1.0T	1.2T	1.5T	1.8T	175f	0.0	3.0;0.0-10V$	10					GA	M923
30	DVE5033-01	500G						195f	0.0	.18-.21Ø	15 ☑	500k	1.0M		40m	GA	F114
31	DVE5033-02	550G						195f	0.0	.18-.21Ø	15 ☑	550k	1.0M		40m	GA	F114
32	CXY10	200G						200f	0.0	.10-.20	6.0	☑	30G		50m	GAΔ§	F56a
33	DC4301A	200G						200f	0.0	160f-200fØ	12				200m	GA	M695
34	DC4301B	300G						200f	0.0	160f-200fØ	12				200m	GA	M695
35	SD11AL6							.20p	0.0	.20 - .40	6.0			18		Si	P3
36	SD12AL6							.20p	0.0	.20 - .40	6.0			18		Si	F3a
37	SD22AL6							.20p	0.0	.20 - .40	6.0			18		Si	F11
38	SD32AL6							.20p	0.0	.20 - .40	6.0			18		Si	F21
39	SD42AL6							.20p	0.0	.20 - .40	6.0			18		Si	F9a
40	SDGPAL6							.20p	0.0	.20 - .40	6.0			18		Si	DO7
41	ML4404							200fØ	6.0	.20-.45Ø	25 ☑			1.1 ☑		SiΔ$	F27as
42	PA0101H,J-L,N	100G	120G	140G	160G	180G		.20p	6.0	.15 - .25Ø	6.0	☑	10G		.20	Si	F27d
43	PA0101P,Q,S-U	200G	220G	240G	260G	280G		200f	6.0	.15-.25Ø	6.0	☑	10G		200m	Si	F27d
44	PA0701H,J-L,N	100Ø	120G	140G	160G	180G		.20p	6.0	.15 - .25Ø	6.0		10G		.20	Si	F9
45	PA0701P,Q,S-U	200G	220G	240G	260G	280G		200f	6.0	.15-.25Ø	6.0	☑	10G		200m	Si	F9
46	PG0111D	60G						200f	10	.15-.25Ø	10	6.0	10G		200m	Si	F27f
47	PG0111F	80G						200f	10	.15-.25Ø	10	8.0	10G		200m	Si	F27f
48	PG0111H	100G						200f	10	.15-.25Ø	10	10	10G		200m	Si	F27f
49	PG0111J	120G						200f	10	.15-.25Ø	10	12	10G		200m	Si	F27f
50	PG0111K	140G						200f	10	.15-.25Ø	10	14	10G		200m	Si	F27f
51	PG0111L	160G						200f	10	.15-.25Ø	10	16	10G		200m	Si	F27f
52	PG0111N	180G						200f	10	.15-.25Ø	10	18	10G		200m	Si	F27f
53	PG0111P	200G						200f	10	.15-.25Ø	10	20	10G		200m	Si	F27f
54	MA4644A-E	240G	190G	150G	125G	80G		220f	6.0		6.0				.15	GA	F27f
55	MA48502A,B-F	100G	125G	150G	175G	200G	225G	224f	0.0	.200-.249Ø						GA$Δ	V7☑
56	MA48502G,H-K	250G	275G	300G	325G	350G		224f	0.0	.200-.249Ø						GA$Δ	V7☑
57	MA48702A,B-F	100G	125G	150G	175G	200G	225G	224f	0.0	.200-.249Ø						GA$Δ	V7
58	MA48702G,H-K	250G	275G	300G	325G	350G		224f	0.0	.200-.249Ø						GA$Δ	V7
59	MA44902A	100G	150G	200G	250G	300G	350G	225f	0	.200-.249	6.0					Si	F111
60	MA44902B	100G	150G	200G	250G	300G	350G	225f	0	.200-.249	6.0					Si	F111
61	MA44902C	100G	150G	200G	250G	300G	350G	225f	0	.200-.249	6.0					Si	F111
62	MA44902D	100G	150G	200G	250G	300G	350G	225f	0	.200-.249	6.0					Si	F111
63	MA44902E	100G	150G	200G	250G	300G	350G	225f	0	.200-.249	6.0					Si	F111
64	MA44902F	100G	150G	200G	250G	300G	350G	225f	0	.200-.249	6.0					Si	F111
65	DVE4560-06	600G						225f	0.0	.20-.25Ø	10 ☑	600k	1.0M			GA	F113
66	DVE6722D	490G						225f	0.0	.20-.25Ø	10 ☑		1.0M			GAΔ	F54c
67	DVE6810D	490G						225f	0.0	.20-.25Ø	10 ☑		1.0M			GAΔ	F94a
68	GC55020A,B,C,D,E,F	800G	900G	1.0T	1.2T	1.5T	1.8T	225f	0.0	3.0;0.0-10V$	10					GA	M923
69	MDX585C	100G						225f	0.0	.15-.30Ø	6.0	10	10G		200m☑	GA$Δ	F27am
70	MDX585D	100G						225f	0.0	.15-.30Ø	6.0	10	10G		200m☑	GA$Δ	F27t
71	MDX585M	100G						225f	0.0	.15-.30Ø	6.0	10	10G		200m☑	GA$Δ	F54c
72	MDX585N	100G						225f	0.0	.15-.30Ø	6.0	10	10G		200m☑	GA$Δ	F59k
73	MDX586C	200G						225f	0.0	.15-.30Ø	6.0	20	10G		200m☑	GA$Δ	F27am
74	MDX586D	200G						225f	0.0	.15-.30Ø	6.0	20	10G		200m☑	GA$Δ	F27t
75	MDX586M	200G						225f	0.0	.15-.30Ø	6.0	20	10G		200m☑	GA$Δ	F54c
76	MDX586N	200G						225f	0.0	.15-.30Ø	6.0	20	10G		200m☑	GA$Δ	F59k
77	MDX587C	250G						225f	0.0	.15-.30Ø	6.0	25	10G		200m☑	GA$Δ	F27am
78	MDX587D	250G						225f	0.0	.15-.30Ø	6.0	25	10G		200m☑	GA$Δ	F27t
79	MDX587M	250G						225f	0.0	.15-.30Ø	6.0	25	10G		200m☑	GA$Δ	F54c
80	MDX587N	250G						225f	0.0	.15-.30Ø	6.0	25	10G		200m☑	GA$Δ	F59k
81	MDX588C	300G						225f	0.0	.15-.30Ø	6.0	30	10G		200m☑	GA$Δ	F27am
82	MDX588D	300G						225f	0.0	.15-.30Ø	6.0	30	10G		200m☑	GA$Δ	F27t
83	MDX588M	300G						225f	0.0	.15-.30Ø	6.0	30	10G		200m☑	GA$Δ	F54c
84	MDX588N	300G						225f	0.0	.15-.30Ø	6.0	30	10G		200m☑	GA$Δ	F59k
85	SD11AL48							.23p	0.0	.23 - .45	48			36		Si	P3
86	SD12AL48							.23p	0.0	.23 - .45	48			36		Si	F3a
87	SD22AL48							.23p	0.0	.23 - .45	48			36		Si	F11
88	SD32AL48							.23p	0.0	.23 - .45	48			36		Si	F21
89	SD42AL48							.23p	0.0	.23 - .45	48			36		Si	F9a
90	SDGPAL48							.23p	0.0	.23 - .45	48			36		Si	DO7
91	SD11AL60							.24p	0.0	.24 - .48	60			36		Si	P3
92	SD12AL60							.24p	0.0	.24 - .48	60			36		Si	F3a
93	SD22AL60							.24p	0.0	.24 - .48	60			36		Si	F11
94	SD32AL60							.24p	0.0	.24 - .48	60			36		Si	F21
95	SD42AL60							.24p	0.0	.24 - .48	60			36		Si	F9a
96	SDGPAL60							.24p	0.0	.24 - .48	60			36		Si	DO7
97	PL0190-1,2,3,4		5.0G	10G	15G	20G		250f		.10-.40Ø	200 ☑	☑	10G			Si$	F27as
98	PL0190A,B	30G	40G					250f		.10-.40Ø	200 ☑	☑	10G			Si$	F27as
99	PL0520-1,2,3,4		5.0G	10G	15G	20G		250f		.10-.40Ø	24	☑	10G			Si	F10p
100	PL0520A,B-F	30G	40G	50G	60G	70G	80G	250f		.10-.40Ø	24	☑	10G		350m	Si	F10p
101	PL0520G,H,J-L	90G	100G	120G	140G	160G		250f		.10-.40Ø	24	☑	10G		350m	Si	F10p
102	PL0520N,P	180G	200G					250f		.10-.40Ø	24	☑	10G		350m	Si	F10p
103	GC5512A,B,C,D,E,F	200G	250G	300G	350G	400G	450G	250f	0.0	2.5;0.0-10V$	10					GA	F111b†
104	GC5512G,H,J,K,L,M	500G	550G	600G	650G	700G	750G	250f	0.0	2.5;0.0-10V$	10					GA	F111b†
105	MS4108	360G						250fΔ	0.0	.10-.40Ø	6.0 ☑				150m☑	GAΔ§	F27d
106	MS4408	360G						250fΔ	0.0	.10-.40Ø	6.0 ☑				150m☑	GAΔ§	F54
107	SD11AL90							.25p	0.0	.25 - .50	90			36		Si	P3
108	SD11AL100							.25p	0.0	.25 - .50	100			36		Si	P3
109	SD11BL12							.25p	0.0	.25 - .50	12			18		Si	P3
110	SD12AL90							.25p	0.0	.25 - .50	90			36		Si	F3a

6. VOLTAGE VARIABLE CAPACITORS & VARACTOR DIODES

IN ORDER OF (1) TYPICAL CAPACITANCE, (2) TEST VOLTAGE, and (3) TYPE No.

LINE No.	3 TYPE No.	MINIMUM CUTOFF FREQUENCY (Corresponding to Type Numbers in previous column) (Hz)	(Hz)	(Hz)	(Hz)	(Hz)	(Hz)	TYP. CAP. 1 CAP. Cj (F)	2 at TEST VOLT (V)	CAPACITANCE RANGE (for V = 0 to PIV) Ø - at TEST VOLT. (pF)	PIV (V)	Q FACTOR MIN. Q	at TEST FREQ (Hz)	MAX. SER. RES. Rs (Ω)	MAX. DISS. @ 25°C (W)	DESCRIPTION MAT.	DWG. No.
1	SD12AL100							.25p	0.0	.25 - .50	100			36		Si	F3a
2	SD12BL12							.25p	0.0	.25 - .50	12			18		Si	F3a
3	SD22AL90							.25p	0.0	.25 - .50	90			36		Si	F11
4	SD22AL100							.25p	0.0	.25 - .50	100			36		Si	F11
5	SD22BL12							.25p	0.0	.25 - .50	12			18		Si	F11
6	SD32AL90							.25p	0.0	.25 - .50	90			36		Si	F21
7	SD32AL100							.25p	0.0	.25 - .50	100			36		Si	F21
8	SD32BL12							.25p	0.0	.25 - .50	12			18		Si	F21
9	SD42AL90							.25p	0.0	.25 - .50	90			36		Si	F9a
10	SD42AL100							.25p	0.0	.25 - .50	100			36		Si	F9a
11	SD42BL12							.25p	0.0	.25 - .50	12			18		Si	F9a
12	SDGPAL90							.25p	0.0	.25 - .50	90			36		Si	DO7
13	SDGPAL100							.25p	0.0	.25 - .50	100			36		Si	DO7
14	SDGPBL12							.25p	0.0	.25 - .50	12			18		Si	DO7
15	MA46540C							.25p	4.0	.50-0Ø	15	1.5k	50M			GA	V7†
16	MA46540D							.25p	4.0	.50-0Ø	15	2.0k	50M			GA	V7†
17	MA46540E							.25p	4.0	.50-0Ø	15	3.0k	50M			GA	V7†
18	MA46540F							.25p	4.0	.50-0Ø	15	4.0k	50M			GA	V7†
19	MA46550C							.25p	4.0	.50-0Ø	22	1.5k	50M			GA	V7†
20	MA46550D							.25p	4.0	.50-0Ø	22	2.0k	50M			GA	V7†
21	MA46550E							.25p	4.0	.50-0Ø	22	3.0k	50M			GA	V7†
22	MA46550F							.25p	4.0	.50-0Ø	22	4.0k	50M			GA	V7†
23	MA46560C							.25p	4.0	.50-0Ø	15	1.5k	50M			GA	V7†
24	MA46560D							.25p	4.0	.50-0Ø	15	2.0k	50M			GA	V7†
25	MA46560E							.25p	4.0	.50-0Ø	15	3.0k	50M			GA	V7†
26	MA46560F							.25p	4.0	.50-0Ø	15	4.0k	50M			GA	V7†
27	MA46570C							.25p	4.0	.50-0Ø	22	1.5k	50M			GA	V7†
28	MA46570D							.25p	4.0	.50-0Ø	22	2.0k	50M			GA	V7†
29	MA46570E							.25p	4.0	.50-0Ø	22	3.0k	50M			GA	V7†
30	MA46570F							.25p	4.0	.50-0Ø	22	4.0k	50M			GA	V7†
31	CXY12	300G						250f	6.0		10			1.3 ☑	300m	GA	F56d
32	GC5532C,D,E,F,G	300G	350G	400G	450G	500G		250f	6.0	2.5;0.0-10V$	30 ☑					GA	F111b†
33	MA43033							250f	6.0	200f-300fØ	40 ☑				3.1 ☑	Si§Δ	u21
34	MA43592							250f	6.0	200f-300fØ	40 ☑				1.7 ☑	Si§Δ	F115
35	P015001D,E-H	40G	60G	80G	100G	140G		.25p	6.0	.10 - .40Ø	15				.20	Si	F27ad
36	PH1200-1,2,3,4		5.0G	10G	15G	20G		.25p	6.0	.10 - .40Ø	6.0	☑	10G			Si	F58
37	PH1200A,B-F	30G	40G	50G	60G	70G	80G	250f	6.0	.10-.40Ø	6.0	☑	10G			Si	F58
38	PH1200G,H,J-L	90G	100G	120G	140G	160G		250f	6.0	.10-.40Ø	6.0	☑	10G			Si	F58
39	PH1200N,P,Q	180G	200G	220G				250f	6.0	.10-.40Ø	6.0	☑	10G			Si	F58
40	PH1210-1,2,3,4		5.0G	10G	15G	20G		.25p	6.0	.10 - .40Ø	15	☑	10G			Si	F58
41	PH1210A,B-F	30G	40G	50G	60G	70G	80G	250f	6.0	.10-.40Ø	15	☑	10G			Si	F58
42	PH1210G,H,J-L	90G	100G	120G	140G	160G		250f	6.0	.10-.40Ø	15	☑	10G			Si	F58
43	PH1210N,P,Q	180G	200G	220G				250f	6.0	.10-.40Ø	15	☑	10G			Si	F58
44	PH1220-1,2,3,4		5.0G	10G	15G	20G		.25p	6.0	.10 - .40Ø	24	☑	10G			Si	F58
45	PH1220A,B-F	30G	40G	50G	60G	70G	80G	250f	6.0	.10-.40Ø	24	☑	10G			Si	F58
46	PH1220G,H,J-L	90G	100G	120G	140G	160G		250f	6.0	.10-.40Ø	24	☑	10G			Si	F58
47	PH1220N,P	180G	200G					250f	6.0	.10-.40Ø	24	☑	10G			Si	F58
48	PH1230-1,2,3,4		5.0G	10G	15G	20G		.25p	6.0	.10 - .40Ø	30	☑	10G			Si	F58
49	PH1230A,B-F	30G	40G	50G	60G	70G	80G	250f	6.0	.10-.40Ø	30	☑	10G			Si	F58
50	PH1230G,H,J-L	90G	100G	120G	140G	160G		250f	6.0	.10-.40Ø	30	☑	10G			Si	F58
51	PH1240-1,2,3,4		5.0G	10G	15G	20G		.25p	6.0	.10 - .40Ø	45	☑	10G			Si	F58
52	PH1240A,B-F	30G	40G	50G	60G	70G	80G	250f	6.0	.10-.40Ø	45	☑	10G			Si	F58
53	PH1240G,H,J,K	90G	100G	120G	140G			250f	6.0	.10-.40Ø	45	☑	10G			Si	F58
54	PH1250-1,2,3,4		5.0G	10G	15G	20G		.25p	6.0	.10 - .40Ø	60	☑	10G			Si	F58
55	PH1250A,B-F	30G	40G	50G	60G	70G	80G	250f	6.0	.10-.40Ø	60	☑	10G			Si	F58
56	PH1250G,H,J	90G	100G	120G				250f	6.0	.10-.40Ø	60	☑	10G			Si	F58
57	PH1260-1,2,3,4		5.0G	10G	15G	20G		.25p	6.0	.10 - .40Ø	90	☑	10G			Si	F58
58	PH1260A,B-F	30G	40G	50G	60G	70G	80G	250f	6.0	.10-.40Ø	90	☑	10G			Si	F58
59	PH1260G,H	90G	100G					250f	6.0	.10-.40Ø	90	☑	10G			Si	F58
60	PH1270-1,2,3,4		5.0G	10G	15G	20G		.25p	6.0	.10 - .40Ø	120	☑	10G			Si	F58
61	PH1270A,B-F	30G	40G	50G	60G	70G	80G	250f	6.0	.10-.40Ø	120	☑	10G			Si	F58
62	PH1270G	90G						250f	6.0	.10-.40Ø	120	☑	10G			Si	F58
63	PH1280-1,2,3,4		5.0G	10G	15G	20G		.25p	6.0	.10 - .40Ø	150	☑	10G			Si	F58
64	PH1280A,B-E	30G	40G	50G	60G	70G		250f	6.0	.10-.40Ø	150	☑	10G			Si	F58
65	PH1290-1,2,3,4		5.0G	10G	15G	20G		.25p	6.0	.10 - .40Ø	200	☑	10G			Si	F58
66	PH1290A,B	30G	40G					250f	6.0	.10-.40Ø	200	☑	10G			Si	F58
67	PL0100-1,2,3,4		5.0G	10G	15G	20G		.25p	6.0	.10 - .40Ø	6.0	☑	10G			Si	F27d
68	PL0100A,B-F	30G	40G	50G	60G	70G	80G	250f	6.0	.10-.40Ø	6.0	☑	10G			Si	F27d
69	PL0100G,H,J-L	90G	100G	120G	140G	160G		250f	6.0	.10-.40Ø	6.0	☑	10G			Si	F27d
70	PL0100N,P,Q	180G	200G	220G				250f	6.0	.10-.40Ø	6.0	☑	10G			Si	F27d
71	PL0110-1,2,3,4		5.0G	10G	15G	20G		.25p	6.0	.10 - .40Ø	15	☑	10G			Si	F27d
72	PL0110A,B-F	30G	40G	50G	60G	70G	80G	250f	6.0	.10-.40Ø	15	☑	10G			Si	F27d
73	PL0110G,H,J-L	90G	100G	120G	140G	160G		250f	6.0	.10-.40Ø	15	☑	10G			Si	F27d
74	PL0110N,P,Q	180G	200G	220G				250f	6.0	.10-.40Ø	15	☑	10G			Si	F27d
75	PL0120-1,2,3,4		5.0G	10G	15G	20G		.25p	6.0	.10 - .40Ø	24	☑	10G			Si	F27d
76	PL0120A,B-F	30G	40G	50G	60G	70G	80G	250f	6.0	.10-.40Ø	24	☑	10G			Si	F27d
77	PL0120G,H,J-L	90G	100G	120G	140G	160G		250f	6.0	.10-.40Ø	24	☑	10G			Si	F27d
78	PL0120N,P	180G	200G					250f	6.0	.10-.40Ø	24	☑	10G			Si	F27d
79	PL0130-1,2,3,4		5.0G	10G	15G	20G		.25p	6.0	.10 - .40Ø	30	☑	10G			Si	F27d
80	PL0130A,B-F	30G	40G	50G	60G	70G	80G	250f	6.0	.10-.40Ø	30	☑	10G			Si	F27d
81	PL0130G,H,J-L	90G	100G	120G	140G	160G		250f	6.0	.10-.40Ø	30	☑	10G			Si	F27d
82	PL0140-1,2,3,4		5.0G	10G	15G	20G		.25p	6.0	.10 - .40Ø	45	☑	10G			Si	F27d
83	PL0140A,B-F	30G	40G	50G	60G	70G	80G	250f	6.0	.10-.40Ø	45	☑	10G			Si	F27d
84	PL0140G,H,J,K	90G	100G	120G	140G			250f	6.0	.10-.40Ø	45	☑	10G			Si	F27d
85	PL0150-1,2,3,4		5.0G	10G	15G	20G		.25p	6.0	.10 - .40Ø	60	☑	10G			Si	F27d
86	PL0150A,B-F	30G	40G	50G	60G	70G	80G	250f	6.0	.10-.40Ø	60	☑	10G			Si	F27d
87	PL0150G,H,J	90G	100G	120G				250f	6.0	.10-.40Ø	60	☑	10G			Si	F27d
88	PL0160-1,2,3,4		5.0G	10G	15G	20G		.25p	6.0	.10 - .40Ø	90	☑	10G		.30	Si	F27d
89	PL0160A,B-F	30G	40G	50G	60G	70G	80G	250f	6.0	.10-.40Ø	90	☑	10G		300m	Si	F27d
90	PL0160G,H	90G	100G					250f	6.0	.10-.40Ø	90	☑	10G		300m	Si	F27d
91	PL0170-1,2,3,4		5.0G	10G	15G	20G		.25p	6.0	.10 - .40Ø	120	☑	10G		.35	Si	F27d
92	PL0170A,B-F	30G	40G	50G	60G	70G	80G	250f	6.0	.10-.40Ø	120	☑	10G		350m	Si	F27d
93	PL0170G	90G						250f	6.0	.10-.40Ø	120	☑	10G		350m	Si	F27d
94	PL0180-1,2,3,4		5.0G	10G	15G	20G		.25p	6.0	.10 - .40Ø	150	☑	10G		.35	Si	F27d
95	PL0180A,B-E	30G	40G	50G	60G	70G		250f	6.0	.10-.40Ø	150	☑	10G		350m	Si	F27d
96	PL0500-1,2,3,4		5.0G	10G	15G	20G		.25p	6.0	.10 - .40Ø	6.0	☑	10G			Si	F10p
97	PL0500A,B-F	30G	40G	50G	60G	70G	80G	250f	6.0	.10-.40Ø	6.0	☑	10G		350m	Si	F10p
98	PL0500G,H,J-L	90G	100G	120G	140G	160G		250f	6.0	.10-.40Ø	6.0	☑	10G		350m	Si	F10p
99	PL0500N,P,Q	180G	200G	220G				250f	6.0	.10-.40Ø	6.0	☑	10G		350m	Si	F10p
100	PL0510-1,2,3,4		5.0G	10G	15G	20G		.25p	6.0	.10 - .40Ø	15	☑	10G			Si	F10p
101	PL0510A,B-F	30G	40G	50G	60G	70G	80G	250f	6.0	.10-.40Ø	15	☑	10G		350m	Si	F10p
102	PL0510G,H,J-L	90G	100G	120G	140G	160G		250f	6.0	.10-.40Ø	15	☑	10G		350m	Si	F10p
103	PL0510N,P,Q	180G	200G	220G				250f	6.0	.10-.40Ø	15	☑	10G		350m	Si	F10p
104	PL0530-1,2,3,4		5.0G	10G	15G	20G		.25p	6.0	.10 - .40Ø	30	☑	10G			Si	F10p
105	PL0530A,B-F	30G	40G	50G	60G	70G	80G	250f	6.0	.10-.40Ø	30	☑	10G		350m	Si	F10p
106	PL0530G,H,J-L	90G	100G	120G	140G	160G		250f	6.0	.10-.40Ø	30	☑	10G		350m	Si	F10p
107	PL0540-1,2,3,4		5.0G	10G	15G	20G		.25p	6.0	.10 - .40Ø	45	☑	10G			Si	F10p
108	PL0540A,B-F	30G	40G	50G	60G	70G	80G	250f	6.0	.10-.40Ø	45	☑	10G		350m	Si	F10p
109	PL0540G,H,J,K	90G	100G	120G	140G			250f	6.0	.10-.40Ø	45	☑	10G		350m	Si	F10p
110	PL0550-1,2,3,4		5.0G	10G	15G	20G		.25p	6.0	.10 - .40Ø	60	☑	10G			Si	F10p

SYMBOLS AND CODES EXPLAINED IN INTERPRETER

6. VOLTAGE VARIABLE CAPACITORS & VARACTOR DIODES

IN ORDER OF (1) TYPICAL CAPACITANCE, (2) TEST VOLTAGE, and (3) TYPE No.

LINE No.	[3] TYPE No.	MINIMUM CUTOFF FREQUENCY (Corresponding to Type Numbers in previous column)						TYP. CAP. [1] CAP. Cj	[2] at TEST VOLT	CAPACITANCE RANGE (for V = 0 to PIV) Ø - at TEST VOLT.	PIV	Q FACTOR MIN. Q	Q FACTOR at TEST FREQ	MAX. SER. RES. Rs	MAX. DISS. @ 25°C	DESCRIPTION MAT.	DWG. No.
		(Hz)	(Hz)	(Hz)	(Hz)	(Hz)	(Hz)	(F)	(V)	(pF)	(V)		(Hz)	(Ω)	(W)		
1	PL0550A,B-F	30G	40G	50G	60G	70G	80G	250f	6.0	.10-.40Ø	60		Ø 10G		350m	Si	F10p
2	PL0550G,H,J	90G	100G	120G				250f	6.0	.10-.40Ø	60		Ø 10G		350m	Si	F10p
3	PL0560-1,2,3,4		5.0G	10G	15G	20G		.25p	6.0	.10 - .40Ø	90		Ø 10G			Si	F10p
4	PL0560A,B-F	30G	40G	50G	60G	70G	80G	250f	6.0	.10-.40Ø	90		Ø 10G		350m	Si	F10p
5	PL0560G,H	90G	100G					250f	6.0	.10-.40Ø	90		Ø 10G		350m	Si	F10p
6	PL0570-1,2,3,4		5.0G	10G	15G	20G		.25p	6.0	.10 - .40Ø	120		Ø 10G			Si	F10p
7	PL0570A,B-F	30G	40G	50G	60G	70G	80G	250f	6.0	.10-.40Ø	120		Ø 10G		350m	Si	F10p
8	PL0570G	90G						250f	6.0	.10-.40Ø	120		Ø 10G		350m	Si	F10p
9	PL0580-1,2,3,4		5.0G	10G	15G	20G		.25p	6.0	.10 - .40Ø	150		Ø 10G			Si	F10p
10	PL0580A,B-E	30G	40G	50G	60G	70G		250f	6.0	.10-.40Ø	150		Ø 10G		350m	Si	F10p
11	PL0590-1,2,3,4		5.0G	10G	15G	20G		.25p	6.0	.10 - .40Ø	200		Ø 10G			Si	F10p
12	PL0590A,B	30G	40G					250f	6.0	.10-.40Ø	200		Ø 10G		350m	Si	F10p
13	GC51101	800G						270ft△	4.0	.35-.22;10%	15	800	1.0G			GA△§	F111b†
14	GC51301	650G						270ft△	4.0	.35-.22;10%	30	650	1.0G			GA△§	F111b†
15	GC51401	500G						270ft△	4.0	.35-.22;10%	45	500	1.0G			GA△§	F111b†
16	GC51601	450G						270ft△	4.0	.35-.21;10%	60	450	1.0G			GA△§	F111b†
17	MA48503A,B-F	100G	125G	150G	175G	200G	225G	274f	0.0	.250-.299Ø						GA$△	V7Ø
18	MA48503G,H,I	250G	275G	300G				274f	0.0	.250-.299Ø						GA$△	V7Ø
19	MA48703A,B-F	100G	125G	150G	175G	200G	225G	274f	0.0	.250-.299Ø						GA$△	V7
20	MA48703G,H-K	250G	275G	300G	325G	350G		274f	0.0	.250-.299Ø						GA$△	V7
21	MA44903A	100G	150G	200G	250G	300G	350G	275f	0	.250-.299	6.0					Si	F111
22	MA44903B	100G	150G	200G	250G	300G	350G	275f	0	.250-.299	6.0					Si	F111
23	MA44903C	100G	150G	200G	250G	300G	350G	275f	0	.250-.299	6.0					Si	F111
24	MA44903D	100G	150G	200G	250G	300G	350G	275f	0	.250-.299	6.0					Si	F111
25	MA44903E	100G	150G	200G	250G	300G	350G	275f	0	.250-.299	6.0					Si	F111
26	MA44903F	100G	150G	200G	250G	300G	350G	275f	0	.250-.299	6.0					Si	F111
27	DVE4560-00	500G						275f	0.0	.25-.30Ø	10 Ø	500k	1.0M			GA	F113
28	DVE6722C	440G						275f	0.0	.25-.30Ø	10 Ø		1.0M			GA△	F54c
29	DVE6810C	440G						275f	0.0	.25-.30Ø	10 Ø		1.0M			GA△	F94a
30	GC55025A,B,C,D,E,F	800G	900G	1.0T	1.2T	1.5T	1.8T	275f	0.0	3.0;0.0-10V$	10					GA	M923
31	D5046C	180G						300f	0.0	.20-.40Ø	5.5 Ø		10G		300m	Si△§	F27ay
32♦	D5146H	180G						300f	0.0	.20-.40Ø	5.5 Ø		10G		300m	Si△§	F112a
33♦	DVD5001A	180G						300f	0.0	.200-.400	5.5 Ø		10G		100m	Si△§	F94a
34	MA4687	100G						.30p	0.0	.20 - .40Ø	8.0			1.8		Si	F27d
35	MS4107	320G						300fØ	0.0	.10-.50Ø	6.0 Ø				.15 Ø	GA△§	F27d
36	MS4407	320G						300fØ	0.0	.10-.50Ø	6.0 Ø				.15 Ø	GA△§	F54
37	SD11-5,6,7	50G	60G	70G				.30p	0.0	.30 - 2.0	6.0		Ø 10G		.20	Si	P3
38	SD11AL120							.30p	0.0	.30 - .60	120			36		Si	P3
39	SD11BL18							.30p	0.0	.30 - .60	18			18		Si	P3
40	SD12-5,6,7	50G	60G	70G				.30p	0.0	.30 - 2.0	6.0		Ø 10G		.20	Si	F3a
41	SD12AL120							.30p	0.0	.30 - .60	120			36		Si	F3a
42	SD12BL18							.30p	0.0	.30 - .60	18			18		Si	F3a
43	SD22-5,6,7	50G	60G	70G				.30p	0.0	.30 - 2.0	6.0		Ø 10G		.20	Si	F11
44	SD22AL120							.30p	0.0	.30 - .60	120			36		Si	F11
45	SD22BL18							.30p	0.0	.30 - .60	18			18		Si	F11
46	SD32-5,6,7	50G	60G	70G				.30p	0.0	.30 - 2.0	6.0		Ø 10G		.20	Si	F21
47	SD32AL120							.30p	0.0	.30 - .60	120			36		Si	F21
48	SD32BL18							.30p	0.0	.30 - .60	18			18		Si	F21
49	SD42-5,6,7	50G	60G	70G				.30p	0.0	.30 - 2.0	6.0		Ø 10G		.20	Si	F9a
50	SD42AL120							.30p	0.0	.30 - .60	120			36		Si	F9a
51	SD42BL18							.30p	0.0	.30 - .60	18			18		Si	F9a
52	SDGPAL120							.30p	0.0	.30 - .60	120			36		Si	DO7
53	SDGPBL18							.30p	0.0	.30 - .60	18			18		Si	DO7
54	MA4086							.30p	6.0	.20 - .40Ø	8.0					Si	F27d
55	MA4280							.30p	6.0	.20 - .40	30			75	.30	Si	F3a
56	MA4341AA,1,2	40G	90G	140G				.30p	6.0	.20 - .40	6.0				.15	Si	F3a
57	MA4380							.30p	6.0	.20 - .40	30			75		Si$	A31e
58	MA4968E,F	250G						300fØ	6.0	.30-.70Ø	18 Ø				200m	Si	Z48
59	MD704	100G						300f	6.0	.20-.40Ø	60	33	3.0G		750mØ	Si	F27g
60	MD704Y	100G						300f	6.0	.20-.40Ø	60	33	3.0G		750mØ	Si	u13d
61	MD709	100G						300f	6.0	.20-.40Ø	45	33	3.0G		750mØ	Si	F27g
62	MD709Y	100G						300f	6.0	.20-.40Ø	45	33	3.0G		750mØ	Si	u13d
63	MD715	120						300f	6.0	.20-.40Ø	25	40	3.0G		750mØ	Si	F27g
64	MD715Y	120G						300f	6.0	.20-.40Ø	25	40	3.0G		750mØ	Si	u13d
65	PA0102H,J,K,L	100G	120G	140G	160G			.30p	6.0	.25 - .35Ø	6.0		Ø 10G		.20	Si	F27d
66	PA0102N,P,Q,S	180G	200G	220G	240G			300f	6.0	.25-.35Ø	6.0		Ø 10G		200m	Si	F27d
67	PA0702H,J,K,L	100G	120G	140G	160G			.30p	6.0	.25 - .35Ø	6.0		Ø 10G		.20	Si	F9
68	PA0702N,P,Q,S	180G	200G	220G	240G			300f	6.0	.25-.35Ø	6.0		Ø 10G		200m	Si	F9
69	VSE32W	300G						300f	6.0	.20-.45Ø	18 Ø					Si	F128
70	VSE42W	300G						300f	6.0	.20-.45Ø	30 Ø					Si	F128
71	VTE32W	300G						300f	6.0	.20-.45Ø	18 Ø					Si	F130
72	VTE42W	300G						300f	6.0	.20-.45Ø	30 Ø					Si	F130
73	VWE32W	300G						300f	6.0	.20-.45Ø	18 Ø					Si	F131
74	VWE42W	300G						300f	6.0	.20-.45Ø	30 Ø					Si	F131
75	VXE32W	300G						300f	6.0	.20-.45Ø	18 Ø					Si	S167
76	VXE42W	300G						300f	6.0	.20-.45Ø	30 Ø					Si	S167
77	BXY48-20(A)							0.3pØ	-4		25	2500	-4				††
78	PG0112D	60G						300f	10	.25-.35Ø	10	6.0	10G		200m	Si	F27f
79	PG0112F	80G						300f	10	.25-.35Ø	10	8.0	10G		200m	Si	F27f
80	PG0112H	100G						300f	10	.25-.35Ø	10	10	10G		200m	Si	F27f
81	PG0112J	120G						300f	10	.25-.35Ø	10	12	10G		200m	Si	F27f
82	PG0112K	140G						300f	10	.25-.35Ø	10	14	10G		200m	Si	F27f
83	MA48504A,B-F	100G	125G	150G	175G	200G	225G	324f	0.0	.300-.349Ø						GA$△	V7Ø
84	MA48504G,H	250G	275G					324f	0.0	.300-.349Ø						GA$△	V7Ø
85	MA48704A,B-F	100G	125G	150G	175G	200G	225G	324f	0.0	.300-.349Ø						GA$△	V7
86	MA44904A	100G	150G	200G	250G	300G	350G	325f	0	.300-.349	6.0					Si	F111
87	MA44904B	100G	150G	200G	250G	300G	350G	325f	0	.300-.349	6.0					Si	F111
88	MA44904C	100G	150G	200G	250G	300G	350G	325f	0	.300-.349	6.0					Si	F111
89	MA44904D	100G	150G	200G	250G	300G	350G	325f	0	.300-.349	6.0					Si	F111
90	MA44904E	100G	150G	200G	250G	300G	350G	325f	0	.300-.349	6.0					Si	F111
91	MA44904F	100G	150G	200G	250G	300G	350G	325f	0	.300-.349	6.0					Si	F111
92♦	DVE4556-01	200G						325f	0.0	.30-.35Ø	6.0 Ø		1.0M		200m	GA△	F143
93♦	DVE4556-02	250G						325f	0.0	.30-.35Ø	6.0 Ø		1.0M		200m	GA△	F143
94♦	DVE4556-03	300G						325f	0.0	.30-.35Ø	6.0 Ø		1.0M		200m	GA△	F143
95♦	DVE4556-04	350G						325f	0.0	.30-.35Ø	6.0 Ø		1.0M		200m	GA△	F143
96♦	DVE4556-05	400G						325f	0.0	.30-.35Ø	6.0 Ø		1.0M		200m	GA△	F143
97♦	DVE4556-06	450G						325f	0.0	.30-.35Ø	6.0 Ø		1.0M		200m	GA△	F143
98♦	DVE4556-07	500G						325f	0.0	.30-.35Ø	6.0 Ø		1.0M		200m	GA△	F143
99♦	DVE4556-08	550G						325f	0.0	.30-.35Ø	6.0 Ø		1.0M		200m	GA△	F143
100	DVE4557-01	200G						325f	0.0	.30-.35Ø	6.0 Ø		10G		200m	GA$△	F112b
101	DVE4557-02	250G						325f	0.0	.30-.35Ø	6.0 Ø		10G		200m	GA$△	F112b
102	DVE4557-03	300G						325f	0.0	.30-.35Ø	6.0 Ø		10G		200m	GA$△	F112b
103	DVE4557-04	350G						325f	0.0	.30-.35Ø	6.0 Ø		10G		200m	GA$△	F112b
104	DVE4557-05	400G						325f	0.0	.30-.35Ø	6.0 Ø		10G		200m	GA$△	F112b
105	DVE4557-06	450G						325f	0.0	.30-.35Ø	6.0 Ø		10G		200m	GA$△	F112b
106	DVE4557-07	500G						325f	0.0	.30-.35Ø	6.0 Ø		10G		200m	GA$△	F112b
107	DVE4557-08	550G						325f	0.0	.30-.35Ø	6.0 Ø		10G		200m	GA$△	F112b
108♦	DVE4558-01	200G						325f	0.0	.30-.35Ø	6.0 Ø		10G		200m	GA$△	F94a
109♦	DVE4558-02	250G						325f	0.0	.30-.35Ø	6.0 Ø		10G		200m	GA$△	F94a
110♦	DVE4558-03	300G						325f	0.0	.30-.35Ø	6.0 Ø		10G		200m	GA$△	F94a

6. VOLTAGE VARIABLE CAPACITORS & VARACTOR DIODES

IN ORDER OF (1) TYPICAL CAPACITANCE, (2) TEST VOLTAGE, and (3) TYPE No.

LINE No.	[3] TYPE No.	MINIMUM CUTOFF FREQUENCY (Corresponding to Type Numbers in previous column)						TYP. CAP. [1] CAP. Cj	[2] at TEST VOLT	CAPACITANCE RANGE (for V = 0 to PIV) Ø - at TEST VOLT.	PIV	Q FACTOR MIN. Q	Q FACTOR at TEST FREQ	MAX. SER. RES. Rs	MAX. DISS. @ 25°C	DESCRIPTION MAT.	DWG. No.
		(Hz)	(Hz)	(Hz)	(Hz)	(Hz)	(Hz)	(F)	(V)	(pF)	(V)		(Hz)	(Ω)	(W)		
1♦	DVE4558-04	350G						325f	0.0	.30-.35Ø	6.0 Ø		10G		200m	GA$Δ	F94a
2♦	DVE4558-05	400G						325f	0.0	.30-.35Ø	6.0 Ø		10G		200m	GA$Δ	F94a
3♦	DVE4558-06	450G						325f	0.0	.30-.35Ø	6.0 Ø		10G		200m	GA$Δ	F94a
4♦	DVE4558-07	500G						325f	0.0	.30-.35Ø	6.0 Ø		10G		200m	GA$Δ	F94a
5♦	DVE4558-08	550G						325f	0.0	.30-.35Ø	6.0 Ø		10G		200m	GA$Δ	F94a
6	DVE6722B	400G						325f	0.0	.30-.35Ø	10 Ø		1.0M			GAΔ	F54c
7	DVE6810B	400G						325f	0.0	.30-.35Ø	10 Ø		1.0M			GAΔ	F94a
8	GC55030A,B,C,D,E	800G	900G	1.0T	1.2T	1.5T		325f	0.0	3.0;0.0-10V$	10					GA	M923
9	GC51102	750G						330ft†Δ	4.0	.47-.27;10%	15	750	1.0G			GAΔ§	F111bt†
10	GC51302	600G						330ft†Δ	4.0	.47-.25;10%	30	600	1.0G			GAΔ§	F111bt†
11	GC51402	450G						330ft†Δ	4.0	.47-.24;10%	45	450	1.0G			GAΔ§	F111bt†
12	GC51602	430G						330ft†Δ	4.0	.47-.22;10%	60	430	1.0G			GAΔ§	F111bt†
13	VKTE32W	300G						330f	6.0	.20-.45Ø	18 Ø					Si	F129
14	VKTE42W	300G						330f	6.0	.20-.45Ø	30 Ø					Si	F129
15	VUE32W	300G						330f	6.0	.20-.45Ø	18 Ø					Si	F133
16	VUE42W	300G						330f	6.0	.20-.45Ø	30 Ø					Si	F133
17	GC5513A,B,C,D,E,F	200G	250G	300G	350G	400G	450G	350f	0.0	2.5;0.0-10V$	10					GA	F111bt†
18	GC5513G,H,J,K,L,M	500G	550G	600G	650G	700G	750G	350f	0.0	2.5;0.0-10V$	10					GA	F111bt†
19	MS2006	250G						350fΔ	0.0	.10-.60Ø	6.0 Ø			150mØ		GAΔ§	F10b
20	MS4106	250G						350fΔ	0.0	.10-.60Ø	6.0 Ø			.15 Ø		GAΔ§	F27d
21	MS4406	250G						350fΔ	0.0	.10-.60Ø	6.0 Ø			.15 Ø		GAΔ§	F54
22	SD11BL24							.35p	0.0	.35 - .70	24			36		Si$	P3
23	SD12BL24							.35p	0.0	.35 - .70	24			36		Si$	F3a
24	SD22BL24							.35p	0.0	.35 - .70	24			36		Si$	F11
25	SD32BL24							.35p	0.0	.35 - .70	24			36		Si$	F21
26	SD42BL24							.35p	0.0	.35 - .70	24			36		Si$	F9a
27	SDGPBL24							.35p	0.0	.35 - .70	24			36		Si$	DO7
28	GC5533C,D,E,F,G	300G	350G	400G	450G	500G		350f	6.0	2.5;0.0-10V$	30 Ø					GA	F111bt†
29	MA48505A,B-F	100G	125G	150G	175G	200G	225G	374f	0.0	.350-.399Ø						GA$Δ	V7Ø
30	MA48505G	250G						374f	0.0	.350-.399Ø						GA$Δ	V7Ø
31	MA48705A,B-F	100G	125G	150G	175G	200G	225G	374f	0.0	.350-.399Ø						GA$Δ	V7
32	MA48705G,H,I	250G	275G	300G				374f	0.0	.350-.399Ø						GA$Δ	V7
33	MA44905A	100G	150G	200G	250G	300G	350G	375f	0	.350-.399	6.0					Si	F111
34	MA44905B	100G	150G	200G	250G	300G	350G	375f	0	.350-.399	6.0					Si	F111
35	MA44905C	100G	150G	200G	250G	300G	350G	375f	0	.350-.399	6.0					Si	F111
36	MA44905D	100G	150G	200G	250G	300G	350G	375f	0	.350-.399	6.0					Si	F111
37	MA44905E	100G	150G	200G	250G	300G	350G	375f	0	.350-.399	6.0					Si	F111
38	MA44905F	100G	150G	200G	250G	300G	350G	375f	0	.350-.399	6.0					Si	F111
39♦	DVE4556-11	200G						375f	0.0	.35-.40 Ø	6.0 Ø		1.0M		200m	GAΔ	F143
40♦	DVE4556-12	250G						375f	0.0	.35-.40Ø	6.0 Ø		1.0M		200m	GAΔ	F143
41♦	DVE4556-13	300G						375f	0.0	.35-.40Ø	6.0 Ø		1.0M		200m	GAΔ	F143
42♦	DVE4556-14	350G						375f	0.0	.35-.40Ø	6.0 Ø		1.0M		200m	GAΔ	F143
43♦	DVE4556-15	400G						375f	0.0	.35-.40Ø	6.0 Ø		1.0M		200m	GAΔ	F143
44♦	DVE4556-16	450G						375f	0.0	.35-.40Ø	6.0 Ø		1.0M		200m	GAΔ	F143
45♦	DVE4556-17	500G						375f	0.0	.35-.40Ø	6.0 Ø		1.0M		200m	GAΔ	F143
46	DVE4557-11	200G						375f	0.0	.35-.40Ø	6.0 Ø		10G		200m	GA$Δ	F112b
47	DVE4557-12	250G						375f	0.0	.35-.40Ø	6.0 Ø		10G		200m	GA$Δ	F112b
48	DVE4557-13	300G						375f	0.0	.35-.40Ø	6.0 Ø		10G		200m	GA$Δ	F112b
49	DVE4557-14	350G						375f	0.0	.35-.40Ø	6.0 Ø		10G		200m	GA$Δ	F112b
50	DVE4557-15	400G						375f	0.0	.35-.40Ø	6.0 Ø		10G		200m	GA$Δ	F112b
51	DVE4557-16	450G						375f	0.0	.35-.40Ø	6.0 Ø		10G		200m	GA$Δ	F112b
52	DVE4557-17	500G						375f	0.0	.35-.40Ø	6.0 Ø		10G		200m	GA$Δ	F112b
53♦	DVE4558-11	200G						375f	0.0	.35-.40Ø	6.0 Ø		10G		200m	GA$Δ	F94a
54♦	DVE4558-12	250G						375f	0.0	.35-.40Ø	6.0 Ø		10G		200m	GA$Δ	F94a
55♦	DVE4558-13	300G						375f	0.0	.35-.40Ø	6.0 Ø		10G		200m	GA$Δ	F94a
56♦	DVE4558-14	350G						375f	0.0	.35-.40Ø	6.0 Ø		10G		200m	GA$Δ	F94a
57♦	DVE4558-15	400G						375f	0.0	.35-.40Ø	6.0 Ø		10G		200m	GA$Δ	F94a
58♦	DVE4558-16	450G						375f	0.0	.35-.40Ø	6.0 Ø		10G		200m	GA$Δ	F94a
59♦	DVE4558-17	500G						375f	0.0	.35-40Ø	6.0 Ø		10G		200m	GA$Δ	F94
60	DVE6722A	360G						375f	0.0	.35-.40Ø	10 Ø		1.0M			GAΔ	F54c
61	DVE6810A	360G						375f	0.0	.35-.40Ø	10 Ø		1.0M			GAΔ	F94a
62	GC55035A,B,C,D	800G	900G	1.0T	1.2T			375f	0.0	3.0;0.0-10V$	10					GA	M923
63	MA43543							375f	0.0	200f-550fØ	50 Ø				1.0 Ø	Si$Δ	F56z
64	PFA100F01	450G						375f	0.0	.300-.450Ø						GA	F27as
65	PFA100F05	450G						375f	0.0	.300-.450Ø						GA	F10af
66	PFA100F45	450G						375f	0.0	.300-.450Ø						GA	F54c
67	PFA100G01	500G						375f	0.0	.300-.450Ø						GA	F27as
68	PFA100G05	500G						375f	0.0	.300-.450Ø						GA	F10af
69	PFA100G45	500G						375f	0.0	.300-.450Ø						GA	F54c
70	PFA100H01	550G						375f	0.0	.300-.450Ø	6.0 Ø					GA	F27as
71	PFA100H05	550G						375f	0.0	.300-.450Ø	6.0 Ø					GA	F10af
72	PFA100H45	550G						375f	0.0	.300-.450Ø	6.0 Ø					GA	F54c
73	BXY41B	200G						375f	6.0	.25 - .50Ø	25					Si#	F47b
74	BXY41C	200G						375f	6.0	.25 - .50Ø	25					Si#	F48h
75	BXY41D	200G						375f	6.0	.25 - .50Ø	25					Si#	S268f
76	BXY41E	200G						375f	6.0	.25 - .50Ø	25					Si#	F56p
77	GC51103	700G						390ft†Δ	4.0	.60-.32;10%	15	700	1.0G			GAΔ§	F111bt†
78	GC51303	550G						390ft†Δ	4.0	.60-.29;10%	30	550	1.0G			GAΔ§	F111bt†
79	GC51403	430G						390ft†Δ	4.0	.60-.26;10%	45	430	1.0G			GAΔ§	F111bt†
80	GC51603	410G						390ft†Δ	4.0	.60-.25;10%	60	410	1.0G			GAΔ§	F111bt†
81	S3041B	600GØ						0.4pØ		.40-.13Ø	25 Ø	24 Ø	25G		600m	GA$#	F112
82	CAY10	125G						.40p	0.0	.20 - .40	6.0	14	8.9G		.05	GA	F27h
83	D5046B	150G						400f	0.0	.30-.50Ø	5.5 Ø		10G		300m	SiΔ§	F27ay
84♦	D5146G	150G						400f	0.0	.30-.50Ø	5.5 Ø		10G		300m	SiΔ§	F112a
85♦	D5337-12	110G						400f	0.0	.30-.50Ø	6.0 Ø		1.0M			GAΔ	F143
86♦	DVD5001	150G						400f	0.0	.300-.500	5.5 Ø		10G		100m	SiΔ§	F94a
87	MA4039	120G						.40p	0.0	.30 - .50						Si	P8
88	MA4539	120G						.40p	0.0	.30 - .50						Si	F21
89	SD11BL6							.40p	0.0	.40 - .80	6.0			9.0		Si$	P3
90	SD12BL6							.40p	0.0	.40 - .80	6.0			9.0		Si$	F3a
91	SD22BL6							.40p	0.0	.40 - .80	6.0			9.0		Si$	F11
92	SD32BL6							.40p	0.0	.40 - .80	6.0			9.0		Si$	F21
93	SD42BL6							.40p	0.0	.40 - .80	6.0			9.0		Si$	F9a
94	SDGPBL6							.40p	0.0	.40 - .80	6.0			9.0		Si$	DO7
95	CVH2045-01							400f	4.0	6.1;0.0-45$;10%	45 Ø	3.0k	50M			Si$§	u30
96	DT300A							0.4p§	4.0	3.0to1;30V§Ø	30 Ø	4.0k	50M			Si*	V13
97	DT600A							0.4p§	4.0	4.7to1;60V§Ø	60 Ø	1.7k	50M			Si*	V13
98	DT900A							0.4p§	4.0	5.4 to 1; 90v§Ø	90 Ø	1.1k	50M			Si*	V13
99	DT4500A							0.4p§	4.0	4.0to1;45V§Ø	45 Ø	2.6k	50M			Si*	V13
100♦	DVH6730-01							400f§	4.0	2.2; 0.0-30$;20%	30 Ø	5.0kØ	50M			Si$§	A90a
101♦	DVH6731-01	250G						400f†	4.0	2.2;0.0V-30V$;10%	30 Ø	5.0k	50M			Si$§	F143
102	DVH6732-01	250G						400f†	4.0	2.2;0.0V-30V$;10%	30 Ø	5.0k	50M			Si$§	F56ad
103	DVH6733-01	250G						400f†	4.0	2.2;0.0V-30V$;10%	30 Ø	5.0k	50M			Si$§	F59u
104	DVH6734-01	250G						400f†	4.0	2.2;0.0V-30V$;10%	30 Ø	5.0k	50M			Si$§	M929
105♦	DVH6740-01							400f§	4.0	2.3;0.0-45$;20%	45 Ø	3.0k	50M			Si$§	A90a
106♦	DVH6741-01	150G						400f†	4.0	2.3;0.0V-45V$;10%	45 Ø	3.0k	50M			Si$§	F143
107	DVH6742-01	150G						400f†	4.0	2.3;0.0V-45V$;10%	45 Ø	3.0k	50M			Si$§	F56ad
108	DVH6743-01	150G						400f†	4.0	2.3;0.0V-45V$;10%	45 Ø	3.0k	50M			Si$§	F59u
109	DVH6744-01	150G						400f†	4.0	2.3;0.0V-45V$;10%	45 Ø	3.0k	50M			Si$§	M929
110	BXY41	200G						400f	6.0		25						F27h

6. VOLTAGE VARIABLE CAPACITORS & VARACTOR DIODES

IN ORDER OF (1) TYPICAL CAPACITANCE, (2) TEST VOLTAGE, and (3) TYPE No.

LINE No.	3 TYPE No.	MINIMUM CUTOFF FREQUENCY (Corresponding to Type Numbers in previous column) (Hz)	(Hz)	(Hz)	(Hz)	(Hz)	(Hz)	TYP. CAP. 1 CAP. Cj (F)	2 at TEST VOLT (V)	CAPACITANCE RANGE (for V = 0 to PIV) Ø - at TEST VOLT. (pF)	PIV (V)	Q FACTOR MIN. Q	at TEST FREQ (Hz)	MAX. SER. RES. Rs (Ω)	MAX. DISS. @ 25°C (W)	DESCRIPTION MAT.	DWG. No.
1	MA4969E,F	300G						400fØ	6.0	.20-.40Ø	10 Ø				50m	Si	Z48
2	MA43037							400f	6.0	200f-600fØ	40 Ø				3.1 Ø	Si§Δ	u21
3	ML4405							400fØ	6.0	.40-.80Ø	30 Ø			900mØ		SiΔ$	F27as
4	VAP83AN9	100GØ						400f	6.0	.30-.50Ø	5.5 Ø					Si	F54f
5	BXY48-30(A)							0.4pØ	-4		36	1500	-4				†
6	1SV80							.40p	15		30						TO7
7	PA0103H,J,K,L	100G	120G	140G	160G			.42p	6.0	.35 - .50Ø	6.0	Ø	10G		.20	Si	F27d
8	PA0703H,J,K,L	100G	120G	140G	160G			.42p	6.0	.35 - .50Ø	6.0	Ø	10G		.20	Si	F9
9	MA48506A,B-F	100G	125G	150G	175G	200G	225G	424f	0.0	.400-.449Ø						GA$Δ	V7Ø
10	MA48706A,B-F	100G	125G	150G	175G	200G	225G	424f	0.0	.400-.449Ø						GA$Δ	V7
11	MA44906A	100G	150G	200G	250G	300G	350G	425f	0	.400-.449	6.0					Si	F111
12	MA44906B	100G	150G	200G	250G	300G	350G	425f	0	.400-.449	6.0					Si	F111
13	MA44906C	100G	150G	200G	250G	300G	350G	425f	0	.400-.449	6.0					Si	F111
14	MA44906D	100G	150G	200G	250G	300G	350G	425f	0	.400-.449	6.0					Si	F111
15	MA44906E	100G	150G	200G	250G	300G	350G	425f	0	.400-.449	6.0					Si	F111
16	MA44906F	100G	150G	200G	250G	300G	350G	425f	0	.400-.449	6.0					Si	F111
17♦	DVE4556-21	200G						425f	0.0	.40-.45Ø	6.0 Ø		1.0M		200m	GAΔ	F143
18♦	DVE4556-22	250G						425f	0.0	.40-.45Ø	6.0 Ø		1.0M		200m	GAΔ	F143
19♦	DVE4556-23	300G						425f	0.0	.40-.45Ø	6.0 Ø		1.0M		200m	GAΔ	F143
20♦	DVE4556-24	350G						425f	0.0	.40-45Ø	6.0 Ø		1.0M		200m	GAΔ	F143
21♦	DVE4556-25	400G						425f	0.0	.40-.45Ø	6.0 Ø		1.0M		200m	GAΔ	F143
22♦	DVE4556-26	450G						425f	0.0	.40-.45Ø	6.0 Ø		1.0M		200m	GAΔ	F143
23	DVE4557-21	200G						425f	0.0	.40-.45Ø	6.0 Ø		10G		200m	GA$Δ	F112b
24	DVE4557-22	250G						425f	0.0	.40-.45Ø	6.0 Ø		10G		200m	GA$Δ	F112b
25	DVE4557-23	300G						425f	0.0	.40-.45Ø	6.0 Ø		10G		200m	GA$Δ	F112b
26	DVE4557-24	350G						425f	0.0	.40-.45Ø	6.0 Ø		10G		200m	GA$Δ	F112b
27	DVE4557-25	400G						425f	0.0	.40-.45Ø	6.0 Ø		10G		200m	GA$Δ	F112b
28	DVE4557-26	450G						425f	0.0	.40-.45Ø	6.0 Ø		10G		200m	GA$Δ	F112b
29♦	DVE4558-21	200G						425f	0.0	.40-.45Ø	6.0 Ø		10G		200m	GA$Δ	F94a
30♦	DVE4558-22	250G						425f	0.0	.40-.45Ø	6.0 Ø		10G		200m	GA$Δ	F94a
31♦	DVE4558-23	300G						425f	0.0	.40-.45Ø	6.0 Ø		10G		200m	GA$Δ	F94a
32♦	DVE4558-24	350G						425f	0.0	.40-.45Ø	6.0 Ø		10G		200m	GA$Δ	F94a
33♦	DVE4558-25	400G						425f	0.0	.40-.45Ø	6.0 Ø		10G		200m	GA$Δ	F94a
34♦	DVE4558-26	450G						425f	0.0	.40-.45Ø	6.0 Ø		10G		200m	GA$Δ	F94a
35	PA0103N,P	180G	200G					425f	6.0	.35-.50Ø	6.0	Ø	10G		200m	Si	F27d
36	PA0703N,P	180G	200G					425f	6.0	.35-.50Ø	6.0	Ø	10G		200m	Si	F9
37	GC5514L	700G						.45p		0.4-0.5	10					GA$Δ	V7
38	GC5514M	750G						.45p		0.4-0.5	10					GA$Δ	V7
39♦	D5146D	90G						450f	0.0	.30-.60Ø	5.5 Ø		10G		300m	SiΔ§	F112a
40	D5371D	175G						450f	0.0	.30-.60Ø	5.5 Ø	17.5	10G		300m	SiΔ§	F27g
41	GC5514A,B,C,D,E,F	200G	250G	300G	350G	400G	450G	450f	0.0	2.5;0.0-10V$	10					GA	F111bt
42	GC5514G,H,J,K	500G	550G	600G	650G			450f	0.0	2.5;0.0-10V$	10					GA	F111bt
43	MA4686	90G						.45p	0.0	.30 - .60Ø	8.0			1.4		Si	F27d
44	MDX589C	100G						450f	0.0	.30-.60Ø	6.0	10	10G		200mØ	GA$Δ	F27am
45	MDX589D	100G						450f	0.0	.30-.60Ø	6.0	10	10G		200mØ	GA$Δ	F27t
46	MDX589M	100G						450f	0.0	.30-.60Ø	6.0	10	10G		200mØ	GA$Δ	F54c
47	MDX589N	100G						450f	0.0	.30-.60Ø	6.0	10	10G		200mØ	GA$Δ	F59k
48	MDX590C	150G						450f	0.0	.30-.60Ø	6.0	15	10G		200mØ	GA$Δ	F27am
49	MDX590D	150G						450f	0.0	.30-.60Ø	6.0	15	10G		200mØ	GA$Δ	F27t
50	MDX590M	150G						450f	0.0	.30-.60Ø	6.0	15	10G		200mØ	GA$Δ	F54c
51	MDX590N	150G						450f	0.0	.30-.60Ø	6.0	15	10G		200mØ	FA$Δ	F59k
52	MDX591C	200G						450f	0.0	.30-.60Ø	6.0	20	10G		200mØ	GA$Δ	F27am
53	MDX591D	200G						450f	0.0	.30-.60Ø	6.0	20	10G		200mØ	GA$Δ	F27t
54	MDX591M	200G						450f	0.0	.30-.60Ø	6.0	20	10G		200mØ	GA$Δ	F54c
55	MDX591N	200G						450f	0.0	.30-.60Ø	6.0	20	10G		200mØ	GA$Δ	F59k
56	MDX592C	250G						450f	0.0	.30-.60Ø	6.0	25	10G		200mØ	GA$Δ	F27am
57	MDX592D	250G						450f	0.0	.30-.60Ø	6.0	25	10G		200mØ	GA$Δ	F27t
58	MDX592M	250G						450f	0.0	.30-.60Ø	6.0	25	10G		200mØ	GA$Δ	F54c
59	MDX592N	250G						450f	0.0	.30-.60Ø	6.0	25	10G		200mØ	GA$Δ	F59k
60	MDX593C	300G						450f	0.0	.30-.60Ø	6.0	30	10G		200mØ	GA$Δ	F27am
61	MDX593D	300G						450f	0.0	.30-.60Ø	6.0	30	10G		200mØ	GA$Δ	F27t
62	MDX593M	300G						450f	0.0	.30-.60Ø	6.0	30	10G		200mØ	GA$Δ	F54c
63	MDX593N	300G						450f	0.0	.30-.60Ø	6.0	30	10G		200mØ	GA$Δ	F59k
64	MS266	200G						450fΔ	0.0	.20-.70Ø	6.0 Ø				.15 Ø	GAΔ§	F10b
65	MS4105	200G						450fΔ	0.0	.20-.70Ø	6.0 Ø				.15 Ø	GAΔ§	F27d
66	MS4405	200G						450fΔ	0.0	.20-.70Ø	6.0 Ø				.15 Ø	GAΔ§	F54
67	PFA100E01	400G						450f	0.0	.300-.600Ø						GA	F27as
68	PFA100E05	400G						450f	0.0	.300-.600Ø						GA	F10af
69	PFA100E45	400G						450f	0.0	.300-.600Ø						GA	F54c
70	PSA100E05	200G						450f	0.0	.300-.600Ø	6.0 Ø					Si	F10af
71	PSA100E11	200G						450f	0.0	.300-.600Ø	6.0 Ø					Si	F56w
72	PSA100E45	200G						450f	0.0	.300-.600Ø	6.0 Ø					Si	F54c
73	SD11BL48							.45p	0.0	.45 - .90	48			18		Si$	P3
74	SD12BL48							.45p	0.0	.45 - .90	48			18		Si$	F3a
75	SD22BL48							.45p	0.0	.45 - .90	48			18		Si$	F11
76	SD32BL48							.45p	0.0	.45 - .90	48			18		Si$	F21
77	SD42BL48							.45p	0.0	.45 - .90	48			18		Si$	F9a
78	SDGPBL48							.45p	0.0	.45 - .90	48			18		Si$	DO7
79	SV213C	150G						.45p	0.0	.30 - .60Ø	6.0					GA$♦	F27a
80	GC5534C,D,E,F,G	300G	350G	400G	450G	500G		450f	6.0	2.5;0.0-10V$	30 Ø					GA	F111bt
81	MA4645B-E	190G	150G	105G	80G			450f	6.0		6.0				.30	GA	F27f
82	GC51104	600G						470ft△	4.0	.75-.36;10%	15	600	1.0G			GAΔ§	F111bt
83	GC51304	500G						470ft△	4.0	.75-.31;10%	30	500	1.0G			GAΔ§	F111bt
84	GC51404	400G						470ft△	4.0	.75-.29;10%	45	400	1.0G			GAΔ§	F111bt
85	GC51604	390G						470ft△	4.0	.75-.28;10%	60	390	1.0G			GAΔ§	F111bt
86	MA48507A,B-F	100G	125G	150G	175G	200G	225G	474f	0.0	.450-.449Ø						GA$Δ	V7Ø
87	MA48707A,B-F	100G	125G	150G	175G	200G	225G	474f	0.0	.450-.499Ø						GA$Δ	V7
88	MA44907A	100G	150G	200G	250G	300G	350G	475f	0	.450-.499	6.0					Si	F111
89	MA44907B	100G	150G	200G	250G	300G	350G	475f	0	.450-.499	6.0					Si	F111
90	MA44907C	100G	150G	200G	250G	300G	350G	475f	0	.450-.499	6.0					Si	F111
91	MA44907D	100G	150G	200G	250G	300G	350G	475f	0	.450-.499	6.0					Si	F111
92	MA44907E	100G	150G	200G	250G	300G	350G	475f	0	.450-.499	6.0					Si	F111
93	MA44907F	100G	150G	200G	250G	300G	350G	475f	0	.450-.499	6.0					Si	F111
94	MD703	90G						475f	6.0	.30-.65Ø	60	30	3.0G		750mØ	Si	F27g
95	MD703Y	90G						475f	6.0	.30-.65Ø	60	30	3.0G		750mØ	Si	u13c
96	MD708	90G						475f	6.0	.30-.65Ø	45	30	3.0G		750mØ	Si	F27g
97	MD708Y	90G						475f	6.0	.30-.65Ø	45	30	3.0G		750mØ	Si	u13c
98	MD714	100G						475f	6.0	.30-.65Ø	25	33	3.0G		750mØ	Si	F27g
99	MD714Y	100G						475f	6.0	.30-.65Ø	25	33	3.0G		750mØ	Si	u13c
100	SD11BL60							.48p	0.0	.48 - .96	60			18		Si$	P3
101	SD12BL60							.48p	0.0	.48 - .96	60			18		Si$	F3a
102	SD22BL60							.48p	0.0	.48 - .96	60			18		Si$	F11
103	SD32BL60							.48p	0.0	.48 - .96	60			18		Si$	F21
104	SD42BL60							.48p	0.0	.48 - .96	60			18		Si$	F9a
105	SDGPBL60							.48p	0.0	.48 - .96	60			18		Si$	DO7
106♦	DVE6951A							.50p%§		.60-.40	45 Ø	10kØ	50M			GA	F143
107♦	DVE6952A							.50p%§		.60-.40	45 Ø	10kØ	50M			GA	F59S
108♦	DVE6953A							.50p%§		.60-.40	45 Ø	10kØ	50M			GA	F102f
109	DVE6954A							.50p%§		.60-.40	45 Ø	10kØ	50M			GA	F112
110♦	DVE6955A							.50p%§		.60-.40	45 Ø	10kØ	50M			GA	F94a

6. VOLTAGE VARIABLE CAPACITORS & VARACTOR DIODES

IN ORDER OF (1) TYPICAL CAPACITANCE, (2) TEST VOLTAGE, and (3) TYPE No.

LINE No.	3 TYPE No.	MINIMUM CUTOFF FREQUENCY (Corresponding to Type Numbers in previous column)						TYP. CAP.		CAPACITANCE RANGE	PIV	Q FACTOR		MAX. SER.	MAX. DISS.	DESCRIPTION	
								1 CAP. Cj	2 at TEST VOLT	(for V = 0 to PIV) Ø - at TEST VOLT.		MIN. Q	at TEST FREQ	RES. Rs	@ 25°C	MAT.	DWG. No.
		(Hz)	(Hz)	(Hz)	(Hz)	(Hz)	(Hz)	(F)	(V)	(pF)	(V)		(Hz)	(Ω)	(W)		
1	DVE6956A							.50p§%		.60-.40	45 ☑	100kØ	50M			GA	†
2	D5046A	120G						500f	0.0	.30-.70Ø	5.5 ☑		10G		300m	Si△§	F27ay
3♦	D5146B	70G						500f	0.0	.30-.70Ø	5.5 ☑		10M		300m	Si△§	F112a
4♦	D5146C	80G						500f	0.0	.30-.70Ø	5.5 ☑		10G		300m	Si△§	F112a
5♦	D5146F	120G						500f	0.0	.30-.70Ø	5.5 ☑		10G		300m	Si△§	F112a
6♦	D5337-06	85G						500f	0.0	.30-.70Ø	6.0 ☑		1.0M			GA△	F143
7	D5371B	125G						500f	0.0	.30-.70Ø	5.5 ☑	12.5	10G		300m	Si△§	F27g
8	D5371C	150G						500f	0.0	.30-.70Ø	5.5 ☑	15	10G		300m	Si△§	F27g
9♦	DVE4550A							500f△	0.0	.40-.60Ø	25 ☑	15k	50M			GA	†
10♦	DVE4551A							500f△	0.0	.40-.60Ø	25 ☑	15k	50M			GA	F143
11♦	DVE4552A							500f△	0.0	.40-.60Ø	25 ☑	15k	50M			GA	F59s
12♦	DVE4555A							500f△	0.0	.40-.60Ø	25 ☑	15k	50M			GA	F94a
13♦	DVE4556-31	200G						500f	0.0	.45-.55Ø	6.0 ☑		1.0M		200m	GA△	F143
14♦	DVE4556-32	250G						500f	0.0	.45-.55Ø	6.0 ☑		1.0M		200m	GA△	F143
15♦	DVE4556-33	300G						500f	0.0	.45-.55Ø	6.0 ☑		1.0M		200m	GA△	F143
16♦	DVE4556-34	350G						500f	0.0	.45-.55Ø	6.0 ☑		1.0M		200m	GA△	F143
17	DVE4557-31	200G						500f	0.0	.45-.55Ø	6.0 ☑		10G		200m	GA$△	F112b
18	DVE4557-32	250G						500f	0.0	.45-.55Ø	6.0 ☑		10G		200m	GA$△	F112b
19	DVE4557-33	300G						500f	0.0	.45-.55Ø	6.0 ☑		10G		200m	GA$△	F112b
20	DVE4557-34	350G						500f	0.0	.45-.55Ø	6.0 ☑		10G		200m	GA$△	F112b
21	DVE4557-35	400G						500f	0.0	.45-.55Ø	6.0 ☑		10G		200m	GA$△	F112b
22♦	DVE4558-31	200G						500f	0.0	.45-.55Ø	6.0 ☑		10G		200m	GA$△	F94a
23♦	DVE4558-32	250G						500f	0.0	.45-.55Ø	6.0 ☑		10G		200m	GA$△	F94a
24♦	DVE4558-33	300G						500f	0.0	.45-.55Ø	6.0 ☑		10G		200m	GA$△	F94a
25♦	DVE4558-34	350G						500f	0.0	.45-.55Ø	6.0 ☑		10G		200m	GA$△	F94a
26♦	DVE4558-35	400G						500f	0.0	.45-.55Ø	6.0 ☑		10G		200m	GA$△	F94a
27	DVE4575A							500f△	0.0	.40-.60Ø	25 ☑	12k	50M			GA	F102f
28♦	DVE4576A							500f△	0.0	.40-.60Ø	25 ☑	15k	50M			GA	F112
29	MA4037	80G						.50p	0.0	.40 - .60						Si	P8
30	MA4038	100G						.50p	0.0	.40 - .60						Si	P8
31	MS265	160G						500f△	0.0	.20-.80Ø	6.0 ☑				.15 ☑	GA△§	F10b
32	MS4104	160G						500f△	0.0	.20-.80Ø	6.0 ☑				.15 ☑	GA△§	F27d
33	MS4404	160G						500f△	0.0	.20-.80Ø	6.0 ☑				.15 ☑	GA△§	F54
34	PFA100D01	350G						500f	0.0	.300-.700Ø						GA	F27as
35	PFA100D05	350G						500f	0.0	.300-.700Ø						GA	F10af
36	PFA100D45	350G						500f	0.0	.300-.700Ø						GA	F54c
37	SD11-3	30G						.50p	0.0	.50 - 3.5	6.0		☑ 10G		.30	Si	P3
38	SD11-4	40G						.50p	0.0	.50 - 3.0	6.0		☑ 10G		.30	Si	P3
39	SD11A90							.50p	0.0	.50 - 1.0	90			18		Si$	P3
40	SD11A100							.50p	0.0	.50 - 1.0	100			18		Si$	P3
41	SD11CL12							.50p	0.0	.50 - 1.0	12			9.0		Si$	P3
42	SD12-3	30G						.50p	0.0	.50 - 3.5	6.0		☑ 10G		.30	Si	F3a
43	SD12-4	40G						.50p	0.0	.50 - 3.0	6.0		☑ 10G		.30	Si	F3a
44	SD12A90							.50p	0.0	.50 - 1.0	90			18		Si$	F3a
45	SD12A100							.50p	0.0	.50 - 1.0	100			18		Si$	F3a
46	SD12CL12							.50p	0.0	.50 - 1.0	12			9.0		Si$	F3a
47	SD22-3	30G						.50p	0.0	.50 - 3.5	6.0		☑ 10G		.30	Si	F11
48	SD22-4	40G						.50p	0.0	.50 - 3.0	6.0		☑ 10G		.30	Si	F11
49	SD22A90							.50p	0.0	.50 - 1.0	90			18		Si$	F11
50	SD22A100							.50p	0.0	.50 - 1.0	100			18		Si$	F11
51	SD22CL12							.50p	0.0	.50 - 1.0	12			9.0		Si$	F11
52	SD32-3	30G						.50p	0.0	.50 - 3.5	6.0		☑ 10G		.30	Si	F21
53	SD32-4	40G						.50p	0.0	.50 - 3.0	6.0		☑ 10G		.30	Si	F21
54	SD32A90							.50p	0.0	.50 - 1.0	90			18		Si$	F21
55	SD32A100							.50p	0.0	.50 - 1.0	100			18		Si$	F21
56	SD32CL12							.50p	0.0	.50 - 1.0	12			9.0		Si$	F21
57	SD42-3	30G						.50p	0.0	.50 - 3.5	6.0		☑ 10G		.30	Si	F9a
58	SD42-4	40G						.50p	0.0	.50 - 3.0	6.0		☑ 10G		.30	Si	F9a
59	SD42A90							.50p	0.0	.50 - 1.0	90			18		Si$	F9a
60	SD42A100							.50p	0.0	.50 - 1.0	100			18		Si$	F9a
61	SD42CL12							.50p	0.0	.50 - 1.0	12			9.0		Si$	F9a
62	SDGPA90							.50p	0.0	.50 - 1.0	90			18		Si$	DO7
63	SDGPA100							.50p	0.0	.50 - 1.0	100			18		Si$	DO7
64	SDGPCL12							.50p	0.0	.50 - 1.0	12			9.0		Si$	DO7
65	SV543C	200G						0.5p	0.0	0.3p-0.6pØ					375m	GA	F154
66	SV543D	250G						0.5p	0.0	0.3P-0.6pØ					375m	GA	F154
67	MA45056							500f†△	4.0	3.1;0.0V-25V$	35 ☑	3.0k	50M			Si§	F27f
68	MA45064							500f†△	4.0	3.1;0.0V-25V$	35 ☑	4.0k	50M			Si§	F27f
69	MA45225							500f△	4.0	2.7;0V-25V$	25	5.5k	50M			Si$§	V11†
70	MA45245							500f△	4.0	3.3;0V-45V$	45	4.0k	50M			Si$§	V11†
71	ML4310							.50p†	4.0	2.3$ 0-25V	25 †	2.0k	50M			Si	F111a†
72	VKTA308H							500f	4.0	3.0;0.0V-30V$	30 $	4500	50M			Si	F129
73	VKTA408H							500f	4.0	4.0;0.0V-60V$	60 $	2000	50M			Si	F129
74	VNA308H							500f	4.0	3.0;0.0V-30V$	30 $	4500	50M			Si	F136
75	VNA408H							500f	4.0	4.0;0.0V-60V$	60 $	2000	50M			Si	F136
76	VSA308H							500f	4.0	3.0;0.0V-30V$	30 $	4500	50M			Si	F128
77	VSA408H							500f	4.0	4.0;0.0V-60V$	60 $	2000	50M			Si	F128
78	VTA308H							500f	4.0	3.0;0.0V-30V$	30 $	4500	50M			Si	F130
79	VTA408H							500f	4.0	4.0;0.0V-60V$	60 $	2000	50M			Si	F130
80	MA4958E	250G						.50p	6.0	.30 - .70Ø	35				.50	Si$	F27r
81	MA4958F	250G						.50p	6.0	.30 - .70Ø	35				.50	Si$	S215a
82	MA44070							500f	6.0	300f-700fØ	60 ☑				6.2 ☑	Si§△	F115
83	MA44071							500f	6.0	300f-700fØ	60 ☑				6.2 ☑	Si§△	S356a
84	MA4036	70G						.52p	0.0	.40 - .65						Si	P8
85	MA48508A,B-E	100G	125G	150G	175G	200G		524f	0.0	.500-.549Ø						GA$△	V7☑
86	MA48708A,B-E	100G	125G	150G	175G	200G		524f	0.0	.500-.549Ø						GA$△	V7
87	MA44908A	100G						525f	0	.500-.549	6.0					Si	F111
88	VSA208H							530f		3.0;0.0V-12V$	12 $	4500	50M			Si	F128
89	VKTA208H							530f	4.0	3.0;0.0V-12V$	12 $	4500	50M			Si	F129
90	VNA208H							530f	4.0	3.0;0.0V-12V$	12 $	4500	50M			Si	F136
91	VTA208H							530f	4.0	3.0;0.0V-12V$	12 $	4500	50M			Si	F130
92	VYA208H							530f	4.0	3.0;0.0V-12V$	12 $	4500	50M			Si	F135
93	GC5515K	650G						.55p		0.5-0.6	10					GA$△	V7
94	GC5515L	700G						.55p		0.5-0.6	10					GA$△	V7
95	CXY22B							.55p§	0.0		6.0 †			1.2 ☑		GA△§	F111b
96	D5046	90G						550f	0.0	.30-.80Ø	5.5 ☑		10G		300m	Si△§	F27ay
97♦	D5146E	90G						550f	0.0	.30-.80Ø	5.5 ☑		10G		300m	Si△§	F112a
98	GC5515A,B,C,D,E,F	200G	250G	300G	350G	400G	450G	550f	0.0	2.5;0.0-10V$	10					GA	F111b†
99	GC5515G,H,J	500G	550G	600G				550f	0.0	2.5;0.0-10V$	10					GA	F111b†
100	PFA100C01	300G						550f	0.0	.300-.800Ø						GA	F27as
101	PFA100C05	300G						550f	0.0	.300-.800Ø						GA	F10af
102	PFA100C45	300G						550f	0.0	.300-.800Ø						GA	F54c
103	PFL100-01	150G						550f	0.0	.300-.800Ø	6.0 ☑					GA	F27as
104	PFL100-34	150G						550f	0.0	.300-.800Ø	6.0 ☑					GA	F56x
105	PFL100-44	150G						550f	0.0	.300-.800Ø	6.0 ☑					GA	F27a
106	PFL100A01	200G						550f	0.0	.300-.800Ø	6.0 ☑					GA	F27as
107	PFL100A34	200G						550f	0.0	.300-.800Ø	6.0 ☑					GA	F56x
108	PFL100A44	200G						550f	0.0	.300-.800Ø	6.0 ☑					GA	F27a
109	PFL100B01	250G						550f	0.0	.300-.800Ø	6.0 ☑					GA	F27as
110	PFL100B34	250G						550f	0.0	.300-.800Ø	6.0 ☑					GA	F56x

6. VOLTAGE VARIABLE CAPACITORS & VARACTOR DIODES

IN ORDER OF (1) TYPICAL CAPACITANCE, (2) TEST VOLTAGE, and (3) TYPE No.

LINE No.	3 TYPE No.	MINIMUM CUTOFF FREQUENCY (Corresponding to Type Numbers in previous column) (Hz)	(Hz)	(Hz)	(Hz)	(Hz)	(Hz)	TYP. CAP. 1 CAP. Cj (F)	2 at TEST VOLT (V)	CAPACITANCE RANGE (for V = 0 to PIV) Ø - at TEST VOLT. (pF)	PIV (V)	Q FACTOR MIN. Q	at TEST FREQ (Hz)	MAX. SER. RES. Rs (Ω)	MAX. DISS. @ 25°C (W)	DESCRIPTION MAT.	DWG. No.
1	PFL100B44	250G						550f	0.0	.300-.800Ø	6.0 ☑					GA	F27a
2	PSA100-01	75G						550f	0.0	.300-.800Ø	6.0 ☑					Si	F27as
3	PSA100-05	75G						550f	0.0	.300-.800Ø	6.0 ☑					Si	F10af
4	PSA100-11	75G						550f	0.0	.300-.800Ø	6.0 ☑					Si	F56w
5	PSA100-45	75G						550f	0.0	.300-.800Ø	6.0 ☑					Si	F54c
6	PSA100A01	100G						550f	0.0	.300-.800Ø	6.0 ☑					Si	F27as
7	PSA100A05	100G						550f	0.0	.300-.800Ø	6.0 ☑					Si	F10af
8	PSA100A11	100G						550f	0.0	.300-.800Ø	6.0 ☑					Si	F56w
9	PSA100A45	100G						550f	0.0	.300-.800Ø	6.0 ☑					Si	F54c
10	PSA100B01	125G						550f	0.0	.300-.800Ø	6.0 ☑					Si	F27as
11	PSA100B05	125G						550f	0.0	.300-.800Ø	6.0 ☑					Si	F10af
12	PSA100B11	125G						550f	0.0	.300-.800Ø	6.0 ☑					Si	F56w
13	PSA100B45	125G						550f	0.0	.300-.800Ø	6.0 ☑					Si	F54c
14	PSA100C01	150G						550f	0.0	.300-.800Ø	6.0 ☑					Si	F27as
15	PSA100C05	150G						550f	0.0	.300-.800Ø	6.0 ☑					Si	F10af
16	PSA100C11	150G						550f	0.0	.300-.800Ø	6.0 ☑					Si	F56w
17	PSA100C45	150G						550f	0.0	.300-.800Ø	6.0 ☑					Si	F54c
18	PSA100D01	175G						550f	0.0	.300-.800Ø	6.0 ☑					Si	F27as
19	PSA100D05	175G						550f	0.0	.300-.800Ø	6.0 ☑					Si	F10af
20	PSA100D11	175G						550f	0.0	.300-.800Ø	6.0 ☑					Si	F56w
21	PSA100D45	175G						550f	0.0	.300-.800Ø	6.0 ☑					Si	F54c
22	PSA100E01	200G						550f	0.0	.300-.600Ø	6.0 ☑					Si	F27as
23	GC5535C,D,E,F,G	300G	350G	400G	450G	500G		550f	6.0	2.5;0.0-10V$	30 ☑					GA	F111bt
24	GC51105	550G						560ft△	4.0	.95-.43;10%	15	550	1.0G			GA△§	F111bt
25	GC51305	450G						560ft△	4.0	.95-.37;10%	30	450	1.0G			GA△§	F111bt
26	GC51405	380G						560ft△	4.0	.95-.34;10%	45	380	1.0G			GA△§	F111bt
27	GC51605	360G						560ft△	4.0	.95-.32;10%	60	360	1.0G			GA△§	F111bt
28	MA48509A,B-E	100G	125G	150G	175G	200G		574f	0.0	.550-.599Ø						GA$△	V7☑
29	MA48709A,B-E	100G	125G	150G	175G	200G		574f	0.0	.550-.599Ø						GA$△	V7
30	MA44909A	100G						575f	0	.550-.599	6.0					Si	F111
31	D5337	150G						600f	0.0	.20-1.0Ø	6.0				200m	GA	F27f
32	D5337A	200G						600f	0.0	.20-1.0Ø	6.0				200m	GA	F27f
33	D5337B	250G						600f	0.0	.20-1.0Ø	6.0				200m	GA	F27f
34♦	DVE4556-41	200G						600f	0.0	.55-.65Ø	6.0 ☑		1.0M		200m	GA△	F143
35♦	DVE4556-42	250G						600f	0.0	.55-.65Ø	6.0 ☑		1.0M		200m	GA△	F143
36♦	DVE4556-43	300G						600f	0.0	.55-.65Ø	6.0 ☑		1.0M		200m	GA△	F143
37♦	DVE4556-44	350G						600f	0.0	.55-.65Ø	6.0 ☑		1.0M		200m	GA△	F143
38	DVE4557-41	200G						600f	0.0	.55-.65Ø	6.0 ☑		10G		200m	GA$△	F112b
39	DVE4557-42	250G						600f	0.0	.55-.65Ø	6.0 ☑		10G		200m	GA$△	F112b
40	DVE4557-43	300G						600f	0.0	.55-.65Ø	6.0 ☑		10G		200m	GA$△	F112b
41	DVE4557-44	350G						600f	0.0	.55-.65Ø	6.0 ☑		10G		200m	GA$△	F112b
42♦	DVE4558-41	200G						600f	0.0	.55-.65Ø	6.0 ☑		10G		200m	GA$△	F94a
43♦	DVE4558-42	250G						600f	0.0	.55-.65Ø	6.0 ☑		10G		200m	GA$△	F94a
44♦	DVE4558-43	300G						600f	0.0	.55-.65Ø	6.0 ☑		10G		200m	GA$△	F94a
45♦	DVE4558-44	350G						600f	0.0	.55-.65Ø	6.0 ☑		10G		200m	GA$△	F94a
46	MA4362	200G						.60p	0.0	.40 - .80	5.5					Si§	F9
47	MA4537		80G					.60p	0.0	.60 - 3.0Ø	3.0					Si	F21
48	MA4538	100G						.60p☑	0.0	.40 - .60Ø						Si	F21
49	MA4748							.60p☑	0.0		25 ☑			1.2			
50	SD11A120							.60p	0.0	.60 - 1.2	120			18		Si$	P3
51	SD11CL18							.60p	0.0	.60 - 1.2	18			9.0		Si$	P3
52	SD12A120							.60p	0.0	.60 - 1.2	120			18		Si$	F3a
53	SD12CL18							.60p	0.0	.60 - 1.2	18			9.0		Si$	F3a
54	SD22A120							.60p	0.0	.60 - 1.2	120			18		Si$	F11
55	SD22CL18							.60p	0.0	.60 - 1.2	18			9.0		Si$	F11
56	SD32A120							.60p	0.0	.60 - 1.2	120			18		Si$	F21
57	SD32CL18							.60p	0.0	.60 - 1.2	18			9.0		Si$	F21
58	SD42A120							.60p	0.0	.60 - 1.2	120			18		Si$	F9a
59	SD42CL18							.60p	0.0	.60 - 1.2	18			9.0		Si$	F9a
60	SDGPA120							.60p	0.0	.60 - 1.2	120			18		Si$	DO7
61	SDGPCL18							.60p	0.0	.60 - 1.2	18			9.0		Si$	DO7
62	SV544C-1	200G						0.6p	0.0	0.5p-0.7pØ					0.5	GA	F154
63	VSE43M							600f	0.0	.30-.90Ø	25 ☑					Si	F128
64	VTE43M							600f	0.0	.30-90Ø	25 ☑					Si	F130
65	VUE43M							600f	0.0	.30-90Ø	25 ☑					Si	F133
66	VWE43M							600f	0.0	.30-90Ø	25 ☑					Si	F131
67	VXE43M							600f	0.0	.30-.90Ø	25 ☑					Si	S167
68	CVH2030-02							600f	4.0	4.5;0.0-30$;20%	30 ☑	5.0k	50M			Si$§	u30
69	CVH2045-02							600f	4.0	6.1;0.0-45$;10%	45 ☑	3.0k	50M			Si$§	u30
70♦	DVH6730-02							600f§	4.0	2.7;0.0-30$;20%	30 ☑	5.0kØ	50M			Si$§	A90a
71♦	DVH6731-02	250G						600ft	4.0	2.7;0.0V-30V$;10%	30 ☑	5.0k	50M			Si$§	F143
72	DVH6732-02	250G						600ft	4.0	2.7;0.0V-30V$;10%	30 ☑	5.0k	50M			Si$§	F56ad
73	DVH6733-02	250G						600ft	4.0	2.7;0.0V-30V$;10%	30 ☑	5.0k	50M			Si$§	F59u
74	DVH6734-02	250G						600ft	4.0	2.7;0.0V-30V$;10%	30 ☑	5.0k	50M			Si$§	M929
75♦	DVH6740-02							600f§	4.0	2.8;0.0-45$;20%	45 ☑	3.0k	50M			Si$§	A90a
76♦	DVH6741-02	150G						600ft	4.0	2.8;0.0V-45V$;10%	45 ☑	3.0k	50M			Si$§	F143
77	DVH6742-02	150G						600ft	4.0	2.8;0.0V-45V$;10%	45 ☑	3.0k	50M			Si$§	F56ad
78	DVH6743-02	150G						600ft	4.0	2.8;0.0V-45V$;10%	45 ☑	3.0k	50M			Si$§	F59u
79	DVH6744-02	150G						600ft	4.0	2.8;0.0V-45V$;10%	45 ☑	3.0k	50M			Si$§	M929
80	GC1500A☑	200G						600ft	4.0	3.0;0.0-30V$;10%	30	4.0k	50M			Si	F111bt
81	GC1600A☑	150G						600ft	4.0	4.0;0.0-45V$;10%	45	3.0k	50M			Si	F111bt
82	GC1700A☑	110G						600ft	4.0	4.5;0.0-60V$;10%	60	2.2k	50M			Si	F111bt
83	GC1800A☑	55G						600ft	4.0	5.5;0.0-90V$;10%	90	1.1k	50M			Si	F111bt
84	MA45226							600f△	4.0	2.9;0V-25V$	25	5.5k	50M			Si$§	V11†
85	MA45226C							600f△	4.0	4.5;0V-25V$	25	5.5k	50M			Si$§	u17†
86	MA45246							600f△	4.0	3.7;0V-45V$	45	4.0k	50M			Si$§	V11†
87	MA45246C							600f△	4.0	6.2;0V-45V$	45	4.0k	50M			Si$§	u17†
88	MA45260							600f△	4.0	4.0;0V-60V$	60	2.5k	50M			Si$§	V11†
89	MA45260C							600f△	4.0	7.5;0V-60V$	60	2.5k	50M			Si$§	u17†
90	MA450E,F,G,H	70G	80G	90G	100G			600f	6.0	-2.0	6.0				.15	Si	P3a△
91	MA460E,F,G,H	70G	80G	90G	100G			600f	6.0	-2.0	6.0				.15	Si	P3△
92	MA4085							.60p	6.0	.40 - .80	24						F27d
93	MA4281							.60p	6.0	.40 - .80	30			40	.60	Si	A31e
94	MA4381							.60p	6.0	.40 - .80	30			40		Si	A31e
95	MA4967E,F	150G						600fØ	6.0	.60-1.3Ø	30 ☑				600m	Si	Z48
96	MA44150	200M						600f☑	6.0	200f-600fØ	40 ☑				1.2 ☑	Si§△	F115
97	MA44250	200M						600f☑	6.0	200f-600fØ	40 ☑				1.2 ☑	Si§△	F115
98	SV55A	50G						0.6p	6.0	0.4p-0.8pØ					1.5	Si$#	F27a
99	BXY48-40(A)							0.6pØ	-4		48	1000	-4				†
100	D5018-12	250						0.6p	40						300m	GA	
101	D5018-18	300						0.6p	40						300m	GA	
102	D5018-24	350						0.6p	40						300m	GA	
103	PA0104H,J,K,L	100G	120G	140G	160G			.62p	6.0	.50 - .75Ø	6.0 ☑		10G		.20	Si	F27d
104	PA0704H,J,K,L	100G	120G	140G	160G			.62p	6.0	.50 - .75Ø	6.0 ☑		10G		.20	Si	F9
105	MA48510A,B-E	100G	125G	150G	175G	200G		624f	0.0	.600-.649Ø						GA$△	V7☑
106	MA48710A,B-E	100G	125G	150G	175G	200G		624f	0.0	.600-.649Ø						GA$△	V7
107	MA44910A	100G						625f	0	.600-.649	6.0					Si	F111
108	GC5516J	600G						.65p		0.6-0.7	10					GA$†	V7
109	GC5516K	650G						.65p		0.6-0.7	10					GA△$	V7
110♦	D5146A	60G						650f	0.0	.30-1.0Ø	5.5 ☑		10G		300m	Si△$	F112a

6. VOLTAGE VARIABLE CAPACITORS & VARACTOR DIODES

IN ORDER OF (1) TYPICAL CAPACITANCE, (2) TEST VOLTAGE, and (3) TYPE No.

LINE No.	3 TYPE No.	MINIMUM CUTOFF FREQUENCY (Corresponding to Type Numbers in previous column) (Hz)	(Hz)	(Hz)	(Hz)	(Hz)	(Hz)	TYP. CAP. 1 CAP. Cj (F)	2 at TEST VOLT (V)	CAPACITANCE RANGE (for V = 0 to PIV) Ø - at TEST VOLT. (pF)	PIV (V)	Q FACTOR MIN. Q	at TEST FREQ (Hz)	MAX. SER. RES. Rs (Ω)	MAX. DISS. @ 25°C (W)	DESCRIPTION MAT.	DWG. No.
1♦	D5337-00	65G						650f	0.0	.30-1.0Ø	6.0 Ø		1.0M			GA△	F143
2	D5371A	100G						650f	0.0	.30-1.0Ø	5.5 Ø	10	10G		300m	Si△§	F27g
3	GC5516A,B,C,D,E,F	200G	250G	300G	350G	400G	450G	650f	0.0	2.5;0.0-10V$	10					GA	F111b†
4	GC5516G,H	500G	550G					650f	0.0	2.5;0.0-10V$	10					GA	F111b†
5	MA4536	70G						650fØ	0.0								
6	MA4542	70G						650fØ	0.0								
7	PFA100-01	150G						650f	0.0	.300-1.0Ø						GA	F27as
8	PFA100-05	150G						650f	0.0	.300-1.0Ø						GA	F10af
9	PFA100-45	150G						650f	0.0	.300-1.0Ø						GA	F54c
10	PFA100A01	200G						650f	0.0	.300-1.0Ø						GA	F27as
11	PFA100A05	200G						650f	0.0	.300-1.0Ø						GA	F10af
12	PFA100A45	200G						650f	0.0	.300-1.0Ø						GA	F54c
13	PFA100B01	250G						650f	0.0	.300-1.0Ø						GA	F27as
14	PFA100B05	250G						650f	0.0	.300-1.0Ø						GA	F10af
15	PFA100B45	250G						650f	0.0	.300-1.0Ø						GA	F54c
16	MA46541C							.65p	4.0	.99-.50Ø	15	1.5k	50M			GA	V7†
17	MA46541D							.65p	4.0	.99-.50Ø	15	2.0k	50M			GA	V7†
18	MA46541E							.65p	4.0	.99-.50Ø	15	3.0k	50M			GA	V7†
19	MA46541F							.65p	4.0	.99-.50Ø	15	4.0k	50M			GA	V7†
20	MA46551C							.65p	4.0	.99-.50Ø	22	1.5k	50M			GA	V7†
21	MA46551D							.65p	4.0	.99-.50Ø	22	2.0k	50M			GA	V7†
22	MA46551E							.65p	4.0	.99-.50Ø	22	3.0k	50M			GA	V7†
23	MA46551F							.65p	4.0	.99-.50Ø	22	4.0k	50M			GA	V7†
24	MA46561E							.65p	4.0	.99-.50Ø	15	3.0k	50M			GA	V7†
25	MA46561F							.65p	4.0	.99-.50Ø	15	4.0k	50M			GA	V7†
26	MA46571C							.65p	4.0	.99-.50Ø	22	1.5k	50M			GA	V7†
27	MA46571D							.65p	4.0	.99-.50Ø	22	2.0k	50M			GA	V7†
28	MA46571E							.65p	4.0	.99-.50Ø	22	3.0k	50M			GA	V7†
29	MA46571F							.65p	4.0	.99-.50Ø	22	4.0k	50M			GA	V7†
30	BXY40	180G						650f	6.0		25						F27h
31	BXY40B	180G						650f	6.0	.40 - .90Ø	25					Si#	F47b
32	BXY40C	180G						650f	6.0	.40 - .90Ø	25					Si#	F48h
33	BXY40D	180G						650f	6.0	.40 - .90Ø	25					Si#	S268f
34	BXY40E	180G						650f	6.0	.40 - .90Ø	25					Si#	F56p
35	GC5536C,D,E,F,G	300G	350G	400G	450G	500G		650f	6.0	2.5;0.0-10V$	30 Ø					GA	F111b†
36	MA43032							650f	6.0	450f-850fØ	45 Ø				1.7 Ø	Si§△	u21
37	MS4150,1-5	10G	20G	40G	60G	80G	100G	.65p	6.0	.20 - 1.1Ø	18		Ø 10G		.30	GA	F27d
38	MS4156	120G						650f	6.0	.20-1.1Ø	18		Ø 10G		300m	GA	F27d
39	MS4200,1-5	10G	20G	40G	60G	80G	100G	.65p	6.0	.20 - 1.1Ø	30		Ø 10G		.30	GA	F27d
40	MS4206	120G						650f	6.0	.20-1.1Ø	30		Ø 10G		300m	GA	F27d
41	MS4250,1-5	10G	20G	40G	60G	80G	100G	.65p	6.0	.20 - 1.1Ø	45		Ø 10G		.30	GA	F27d
42	MS4256	120G						650f	6.0	.20-1.1Ø	45		Ø 10G		300m	GA	F27d
43	MS4300,1-5	10G	20G	40G	60G	80G	100G	.65p	6.0	.20 - 1.1Ø	60		Ø 10G		.30	GA	F27d
44	MA48511A,B-E	100G	125G	150G	175G	200G		674f	0.0	.650-.699Ø						GA$△	V7Ø
45	MA48711A,B-E	100G	125G	150G	175G	200G		674f	0.0	.650-.699Ø						GA$△	V7
46	MA44911A	100G						675f	0	.650-.699	6.0					Si	F111
47	GC51106	480G						680ft△	4.0	1.15-.48;10%	15	480	1.0G			GA△§	F111b†
48	GC51306	400G						680ft△	4.0	1.15-.41;10%	30	400	1.0G			GA△§	F111b†
49	GC51406	360G						680ft△	4.0	1.15-.37;10%	45	360	1.0G			GA△§	F111b†
50	GC51606	330G						680ft△	4.0	1.15-.35;10%	60	330	1.0G			GA△§	F111b†
51♦	DVE6951B							.70p%§		.80-.60	45 Ø	9.0kØ	50M			GA	F143
52♦	DVE6952B							.70p%§		.80-.60	45 Ø	9.0kØ	50M			GA	F59S
53♦	DVE6953B							.70p%§		.80-.60	45 Ø	9.0kØ	50M			GA	F102f
54	DVE6954B							.70p%§		.80-.60	45 Ø	9.0kØ	50M			GA	F112
55♦	DVE6955B							.70p%§		.80-.60	45 Ø	9.0kØ	50M			GA	F94a
56	DVE6956B							.70p§%		.80-.60	45 Ø	9.0kØ	50M			GA	†
57	PL0191-1,2,3,4		5.0G	10G	15G	20G		700f		.40-1.0Ø	200 Ø		Ø 10G			Si$	F27as
58	PL0191A	30G						700f		.40-1.0Ø	200 Ø		Ø 10G			Si$	F27as
59♦	DVE4550B							700f△	0.0	.60-.80Ø	25 Ø	13k	50M			GA	†
60♦	DVE4551B							700f△	0.0	.60-.80Ø	25 Ø	13k	50M			GA	F143
61♦	DVE4552B							700f△	0.0	.60-.80Ø	25 Ø	13k	50M			GA	F59s
62♦	DVE4555B							700f△	0.0	.60-.80Ø	25 Ø	13k	50M			GA	F94a
63	DVE4575B							700f△	0.0	.60-.80Ø	25 Ø	9.5k	50M			GA	F102f
64♦	DVE4576B							700f△	0.0	.60-.80Ø	25 Ø	13k	50M			GA	F112
65	MS262,3,4	80G	105G	130G				700f△	0.0	.20-1.0Ø	6.0 Ø				.15 Ø	GA△§	F10b
66	MS4101,2,3	80G	105G	130G				700f△	0.0	.20-1.0Ø	6.0 Ø				.15 Ø	GA△§	F27d
67	MS4403	130G						700f△	0.0	.20-1.0Ø	6.0 Ø				150mØ	GA△§	F54
68	SD11A24							.70p	0.0	.70 - 1.4	24			18		Si$	P3
69	SD12A24							.70p	0.0	.70 - 1.4	24			18		Si$	F3a
70	SD22A24							.70p	0.0	.70 - 1.4	24			18		Si$	F11
71	SD32A24							.70p	0.0	.70 - 1.4	24			18		Si$	F21
72	SD42A24							.70p	0.0	.70 - 1.4	24			18		Si$	F9a
73	SDGPA24							.70p	0.0	.70 - 1.4	24			18		Si$	DO7
74	MA45055							700ft△	4.0	3.5;0.0V-25V$	35 Ø	3.0k	50M			Si§	F27f
75	MA45065							700ft△	4.0	3.5;0.0V-25V$	35 Ø	4.0k	50M			Si§	F27f
76	ML4311							.70p†	4.0	3.0$ 0-25V	25 †	1.8k	50M			Si	F111a†
77	ML4331							.70p†	4.0	3.4$ 0-45V	45 †	1.7k	50M			Si	F111a†
78	ML4351							.70p†	4.0	3.5$ 0-60V	60 †	1.5k	50M			Si	F111a†
79	VKTA309H							700f	4.0	3.0;0.0V-30V$	30 $	4000	50M			Si	F129
80	VKTA409H							700f	4.0	4.0;0.0V-60V$	60 $	1750	50M			Si	F129
81	VNA309H							700f	4.0	3.0;0.0V-30V$	30 $	4000	50M			Si	F136
82	VNA409H							700f	4.0	4.0;0.0V-60V$	60 $	1750	50M			Si	F136
83	VSA309H							700f	4.0	3.0;0.0V-30V$	30 $	4000	50M			Si	F128
84	VSA409H							700f	4.0	4.0;0.0V-60V$	60 $	1750	50M			Si	F128
85	VTA309H							700f	4.0	3.0;0.0V-30V$	30 $	4000	50M			Si	F130
86	VTA409H							700f	4.0	4.0;0.0V-60V$	60 $	1750	50M			Si	F130
87	ML4406							700fØ	6.0	.70-1.2Ø	40 Ø			800mØ		Si△$	F27as
88	P015004D,E-H	40G	60G	80G	100G	140G		.70p	6.0	.40 - 1.0Ø	15				.50	Si	F27ad
89	P024004D,E-H	40G	60G	80G	100G	140G		.70p	6.0	.40 - 1.0Ø	24				.70	Si	F27ad
90	P045004C,D,E,F	20G	40G	60G	80G			.70p	6.0	.40 - 1.0Ø	45				1.1	Si	F27ad
91	PH1201-1,2,3,4		5.0G	10G	15G	20G		.70p	6.0	.40 - 1.0Ø	6.0		Ø 10G			Si	F58
92	PH1201A,B-F	30G	40G	50G	60G	70G	80G	700f	6.0	.40-1.0Ø	6.0		Ø 10G			Si	F58
93	PH1201G,H,J-L	90G	100G	120G	140G	160G		700f	6.0	.40-1.0Ø			Ø 10G			Si	F58
94	PH1201N,P	180G	200G					700f	6.0	.40-1.0Ø			Ø 10G			Si	F58
95	PH1211-1,2,3,4		5.0G	10G	15G	20G		.70p	6.0	.40 - 1.0Ø	15		Ø 10G			Si	F58
96	PH1211A,B-F	30G	40G	50G	60G	70G	80G	700f	6.0	.40-1.0Ø	15		Ø 10G			Si	F58
97	PH1211G,H,J-L	90G	100G	120G	140G	160G		700f	6.0	.40-1.0Ø			Ø 10G			Si	F58
98	PH1211N,P	180G	200G					700f	6.0	.40-1.0Ø			Ø 10G			Si	F58
99	PH1221-1,2,3,4		5.0G	10G	15G	20G		.70p	6.0	.40 - 1.0Ø	24		Ø 10G			Si	F58
100	PH1221A,B-F	30G	40G	50G	60G	70G	80G	700f	6.0	.40-1.0Ø	24		Ø 10G			Si	F58
101	PH1221G,H,J-L	90G	100G	120G	140G	160G		700f	6.0	.40-1.0Ø			Ø 10G			Si	F58
102	PH1231-1,2,3,4		5.0G	10G	15G	20G		.70p	6.0	.40 - 1.0Ø	30		Ø 10G			Si	F58
103	PH1231A,B-F	30G	40G	50G	60G	70G	80G	700f	6.0	.40-1.0Ø	30		Ø 10G			Si	F58
104	PH1231G,H,J	90G	100G	120G				700f	6.0	.40-1.0Ø	30		Ø 10G			Si	F58
105	PH1241-1,2,3,4		5.0G	10G	15G	20G		.70p	6.0	.40 - 1.0Ø	45		Ø 10G			Si	F58
106	PH1241A,B-F	30G	40G	50G	60G	70G	80G	700f	6.0	.40-1.0Ø	45		Ø 10G			Si	F58
107	PH1241G,H,J	90G	100G	120G				700f	6.0	.40-1.0Ø	45		Ø 10G			Si	F58
108	PH1251-1,2,3,4		5.0G	10G	15G	20G		.70p	6.0	.40 - 1.0Ø	60		Ø 10G			Si	F58
109	PH1251A,B-F	30G	40G	50G	60G	70G	80G	700f	6.0	.40-1.0Ø	60		Ø 10G			Si	F58
110	PH1251G,H	90G	100G					700f	6.0	.40-1.0Ø	60		Ø 10G			Si	F58

6. VOLTAGE VARIABLE CAPACITORS & VARACTOR DIODES

IN ORDER OF (1) TYPICAL CAPACITANCE, (2) TEST VOLTAGE, and (3) TYPE No.

LINE No.	[3] TYPE No.	MINIMUM CUTOFF FREQUENCY (Corresponding to Type Numbers in previous column) (Hz)	(Hz)	(Hz)	(Hz)	(Hz)	(Hz)	TYP. CAP. [1] CAP. Cj (F)	[2] at TEST VOLT (V)	CAPACITANCE RANGE (for V = 0 to PIV) Ø - at TEST VOLT. (pF)	PIV (V)	Q FACTOR MIN. Q	at TEST FREQ (Hz)	MAX. SER. RES. Rs (Ω)	MAX. DISS. @ 25°C (W)	DESCRIPTION MAT.	DWG. No.
1	PH1261-1,2,3,4		5.0G	10G	15G	20G		.70p	6.0	.40 - 1.0Ø	90	☑	10G			Si	F58
2	PH1261A,B-F	30G	40G	50G	60G	70G	80G	700f	6.0	.40-1.0Ø	90	☑	10G			Si	F58
3	PH1261G	90G						700f	6.0	.40-1.0Ø	90	☑	10G			Si	F58
4	PH1271-1,2,3,4		5.0G	10G	15G	20G		.70p	6.0	.40 - 1.0Ø	120	☑	10G			Si	F58
5	PH1271A,B-E	30G	40G	50G	60G	70G		700f	6.0	.40-1.0Ø	120	☑	10G			Si	F58
6	PH1281-1,2,3,4		5.0G	10G	15G	20G		.70p	6.0	.40 - 1.0Ø	150	☑	10G			Si	F58
7	PH1281A,B,C	30G	40G	50G				700f	6.0	.40-1.0Ø	150	☑	10G			Si	F58
8	PH1291-1,2,3,4		5.0G	10G	15G	20G		.70p	6.0	.40 - 1.0Ø	200	☑	10G			Si	F58
9	PH1291A	30G						700f	6.0	.40-1.0Ø	200	☑	10G			Si	F58
10	PL0101-1,2,3,4		5.0G	10G	15G	20G		.70p	6.0	.40 - 1.0Ø	6.0	☑	10G			Si	F27d
11	PL0101A,B-F	30G	40G	50G	60G	70G	80G	700f	6.0	.40-1.0Ø	6.0	☑	10G			Si	F27d
12	PL0101G,H,J-L	90G	100G	120G	140G	160G		700f	6.0	.40-1.0Ø	6.0	☑	10G			Si	F27d
13	PL0101N,P	180G	200G					700f	6.0	.40-1.0Ø	6.0	☑	10G			Si	F27d
14	PL0111-1,2,3,4		5.0G	10G	15G	20G		.70p	6.0	.40 - 1.0Ø	15	☑	10G			Si	F27d
15	PL0111A,B-F	30G	40G	50G	60G	70G	80G	700f	6.0	.40-1.0Ø	15	☑	10G			Si	F27d
16	PL0111G,H,J-L	90G	100G	120G	140G	160G		700f	6.0	.40-1.0Ø	15	☑	10G			Si	F27d
17	PL0111N,P	180G	200G					700f	6.0	.40-1.0Ø	15	☑	10G			Si	F27d
18	PL0121-1,2,3,4		5.0G	10G	15G	20G		.70p	6.0	.40 - 1.0Ø	24	☑	10G			Si	F27d
19	PL0121A,B-F	30G	40G	50G	60G	70G	80G	700f	6.0	.40-1.0Ø	24	☑	10G			Si	F27d
20	PL0121G,H,J-L	90G	100G	120G	140G	160G		700f	6.0	.40-1.0Ø	24	☑	10G			Si	F27d
21	PL0131-1,2,3,4		5.0G	10G	15G	20G		.70p	6.0	.40 - 1.0Ø	30	☑	10G			Si	F27d
22	PL0131A,B-F	30G	40G	50G	60G	70G	80G	700f	6.0	.40-1.0Ø	30	☑	10G			Si	F27d
23	PL0131G,H,J	90G	100G	120G				700f	6.0	.40-1.0Ø	30	☑	10G			Si	F27d
24	PL0141-1,2,3,4		5.0G	10G	15G	20G		.70p	6.0	.40 - 1.0Ø	45	☑	10G			Si	F27d
25	PL0141A,B-F	30G	40G	50G	60G	70G	80G	700f	6.0	.40-1.0Ø	45	☑	10G			Si	F27d
26	PL0141G,H,J	90G	100G	120G				700f	6.0	.40-1.0Ø	45	☑	10G			Si	F27d
27	PL0151-1,2,3,4		5.0G	10G	15G	20G		.70p	6.0	.40 - 1.0Ø	60	☑	10G			Si	F27d
28	PL0151A,B-F	30G	40G	50G	60G	70G	80G	700f	6.0	.40-1.0Ø	60	☑	10G			Si	F27d
29	PL0151G,H	90G	100G					700f	6.0	.40-1.0Ø	60	☑	10G			Si	F27d
30	PL0161-1,2,3,4		5.0G	10G	15G	20G		.70p	6.0	.40 - 1.0Ø	90	☑	10G			Si	F27d
31	PL0161A,B-F	30G	40G	50G	60G	70G	80G	700f	6.0	.40-1.0Ø	90	☑	10G			Si	F27d
32	PL0161G	90G						700f	6.0	.40-1.0Ø	90	☑	10G			Si	F27d
33	PL0171-1,2,3,4		5.0G	10G	15G	20G		.70p	6.0	.40 - 1.0Ø	120	☑	10G			Si	F27d
34	PL0171A,B-E	30G	40G	50G	60G	70G		700f	6.0	.40-1.0Ø	120	☑	10G			Si	F27d
35	PL0181-1,2,3,4		5.0G	10G	15G	20G		.70p	6.0	.40 - 1.0Ø	150	☑	10G			Si	F27d
36	PL0181A,B,C	30G	40G	50G				700f	6.0	.40-1.0Ø	150	☑	10G			Si	F27d
37	PL0501-1,2,3,4		5.0G	10G	15G	20G		.70p	6.0	.40 - 1.0Ø	6.0	☑	10G			Si	F10p
38	PL0501A,B-F	30G	40G	50G	60G	70G	80G	700f	6.0	.40-1.0Ø	6.0	☑	10G			Si	F10p
39	PL0501G,H,J-L	90G	100G	120G	140G	160G		700f	6.0	.40-1.0Ø	6.0	☑	10G			Si	F10p
40	PL0501N,P	180G	200G					700f	6.0	.40-1.0Ø	6.0	☑	10G			Si	F10p
41	PL0511-1,2,3,4		5.0G	10G	15G	20G		.70p	6.0	.40 - 1.0Ø	15	☑	10G			Si	F10p
42	PL0511A,B-F	30G	40G	50G	60G	70G	80G	700f	6.0	.40-1.0Ø	15	☑	10G			Si	F10p
43	PL0511G,H,J-L	90G	100G	120G	140G	160G		700f	6.0	.40-1.0Ø	15	☑	10G			Si	F10p
44	PL0511N,P	180G	200G					700f	6.0	.40-1.0Ø	15	☑	10G			Si	F10p
45	PL0521-1,2,3,4		5.0G	10G	15G	20G		.70p	6.0	.40 - 1.0Ø	24	☑	10G			Si	F10p
46	PL0521A,B-F	30G	40G	50G	60G	70G	80G	700f	6.0	.40-1.0Ø	24	☑	10G			Si	F10p
47	PL0521G,H,J-L	90G	100G	120G	140G	160G		700f	6.0	.40-1.0Ø	24	☑	10G			Si	F10p
48	PL0531-1,2,3,4		5.0G	10G	15G	20G		.70p	6.0	.40 - 1.0Ø	30	☑	10G			Si	F10p
49	PL0531A,B-F	30G	40G	50G	60G	70G	80G	700f	6.0	.40-1.0Ø	30	☑	10G			Si	F10p
50	PL0531G,H,J	90G	100G	120G				700f	6.0	.40-1.0Ø	30	☑	10G			Si	F10p
51	PL0541-1,2,3,4		5.0G	10G	15G	20G		.70p	6.0	.40 - 1.0Ø	45	☑	10G			Si	F10p
52	PL0541A,B-F	30G	40G	50G	60G	70G	80G	700f	6.0	.40-1.0Ø	45	☑	10G			Si	F10p
53	PL0541G,H,J	90G	100G	120G				700f	6.0	.40-1.0Ø	45	☑	10G			Si	F10p
54	PL0551-1,2,3,4		5.0G	10G	15G	20G		.70p	6.0	.40 - 1.0Ø	60	☑	10G			Si	F10p
55	PL0551A,B-F	30G	40G	50G	60G	70G	80G	700f	6.0	.40-1.0Ø	60	☑	10G			Si	F10p
56	PL0551G,H	90G	100G					700f	6.0	.40-1.0Ø	60	☑	10G			Si	F10p
57	PL0561-1,2,3,4		5.0G	10G	15G	20G		.70p	6.0	.40 - 1.0Ø	90	☑	10G			Si	F10p
58	PL0561A,B-F	30G	40G	50G	60G	70G	80G	700f	6.0	.40-1.0Ø	90	☑	10G			Si	F10p
59	PL0561G	90G						700f	6.0	.40-1.0Ø	90	☑	10G			Si	F10p
60	PL0571-1,2,3,4		5.0G	10G	15G	20G		.70p	6.0	.40 - 1.0Ø	120	☑	10G			Si	F10p
61	PL0571A,B-E	30G	40G	50G	60G	70G		700f	6.0	.40-1.0Ø	120	☑	10G			Si	F10p
62	PL0581-1,2,3,4		5.0G	10G	15G	20G		.70p	6.0	.40 - 1.0Ø	150	☑	10G			Si	F10p
63	PL0581A,B,C	30G	40G	50G				700f	6.0	.40-1.0Ø	150	☑	10G			Si	F10p
64	PL0591-1,2,3,4		5.0G	10G	15G	20G		.70p	6.0	.40 - 1.0Ø	200	☑	10G			Si	F10p
65	PL0591A	30G						700f	6.0	.40-1.0Ø	200	☑	10G			Si	F10p
66	MA44040	200M						700fØ	-12	300f-700fØ	60 ☑				6.2 ☑	Si§Δ	S429
67♦	DVE4556-51	200G						725f	0.0	.65-.80Ø	6.0 ☑		1.0M		200m	GAΔ	F143
68♦	DVE4556-52	250G						725f	0.0	.65-.80Ø	6.0 ☑		1.0M		200m	GAΔ	F143
69♦	DVE4556-53	300G						725f	0.0	.65-.80Ø	6.0 ☑		1.0M		200m	GAΔ	F143
70	DVE4557-51	200G						725f	0.0	.65-.80Ø	6.0 ☑		10G		200m	GA$Δ	F112b
71	DVE4557-52	250G						725f	0.0	.65-.80Ø	6.0 ☑		10G		200m	GA$Δ	F112b
72	DVE4557-53	300G						725f	0.0	.65-.80Ø	6.0 ☑		10G		200m	GA$Δ	F112b
73♦	DVE4558-51	200G						725f	0.0	.65-.80Ø	6.0 ☑		10G		200m	GA$Δ	F94a
74♦	DVE4558-52	250G						725f	0.0	.65-.80Ø	6.0 ☑		10G		200m	GA$Δ	F94a
75♦	DVE4558-53	300G						725f	0.0	.65-.80Ø	6.0 ☑		10G		200m	GA$Δ	F94a
76♦	MA46600D							745f	0.0	.50-.99Ø†;10%Δ	30 ☑	4.0k	50M			GA	V7 †
77♦	MA46600E							745f	0.0	.50-.99Ø†;10%Δ	30 ☑	5.0k	50M			GA	V7 †
78♦	MA46600F							745f	0.0	.50-.99Ø†;10%Δ	30 ☑	6.0k	50M			GA	V7 †
79♦	MA46600G							745f	0.0	.50-.99Ø†;10%Δ	30 ☑	7.0k	50M			GA	V7 †
80♦	MA46600H							745f	0.0	.50-.99Ø†;10%Δ	30 ☑	8.0k	50M			GA	V7 †
81♦	MA46600J							745f	0.0	.50-.99Ø†;10%Δ	30 ☑	9.0k	50M			GA	V7 †
82♦	MA46610D							745f	0.0	.50-.99Ø†;10%Δ	45 ☑	4.0k	50M			GA	V7 †
83♦	MA46610E							745f	0.0	.50-.99Ø†;10%Δ	45 ☑	5.0k	50M			GA	V7 †
84♦	MA46610F							745f	0.0	.50-.99Ø†;10%Δ	45 ☑	6.0k	50M			GA	V7 †
85♦	MA46610G							745f	0.0	.50-.99Ø†;10%Δ	45 ☑	7.0k	50M			GA	V7 †
86♦	MA46610H							745f	0.0	.50-.99Ø†;10%Δ	45 ☑	8.0k	50M			GA	V7 †
87♦	MA46620D							745f	0.0	.50-.99Ø†;10%Δ	60 ☑	4.0k	50M			GA	V7 †
88♦	MA46620E							745f	0.0	.50-.99Ø†;10%Δ	60 ☑	5.0k	50M			GA	V7 †
89♦	MA46620F							745f	0.0	.50-.99Ø†;10%Δ	60 ☑	6.0k	50M			GA	V7 †
90♦	MA46620G							745f	0.0	.50-.99Ø†;10%Δ	60 ☑	7.0k	50M			GA	V7 †
91	GC5517H	550G						.75p		0.7-0.8	10					GA$Δ	V7
92	GC5517J	600G						.75p		0.7-0.8	10					GA$Δ	V7
93	GC5517A,B,C,D,E,F	200G	250G	300G	350G	400G	450G	750f	0.0	2.5;0.0-10V$	10					GA	F111b†
94	GC5517G	500G						750f	0.0	2.5;0.0-10V$	10					GA	F111b†
95	MA4035	60G						.75p	0.0	.60 - .90						Si	P8
96	MA4535	60G						.75p	0.0	.60 - .90	3.0					Si§	F21
97	MA4541	70G						.75p	0.0	.60 - .90	3.0					Si§	F9
98	MA4546	70G						750f	0.0		3.0					Si§	F3aΔ
99	PFV100-01							750f	0.0	1.4;0.0V-15V$	15 ☑	5.0k	50M			GAΔ$	F27as
100	PFV100-05							750f	0.0	1.4;0.0V-15V$	15 ☑	5.0k	50M			GAΔ$	F10af
101	PFV100-21							750f	0.0	1.4;0.0V-15V$	15 ☑	5.0k	50M			GAΔ$	M86e
102	PFV100-31							750f	0.0	1.4;0.0V-15V$	15 ☑	5.0k	50M			GAΔ$	F10ah
103	PFV100-45							750f	0.0	1.4;0.0V-15V$	15 ☑	5.0k	50M			GAΔ$	F54c
104	PFV105-01							750f	0.0	1.5;0.0V-25V$	25 ☑	4.6k	50M			GAΔ$	F27as
105	PFV105-05							750f	0.0	1.5;0.0V-25V$	25 ☑	4.6k	50M			GAΔ$	F10af
106	PFV105-21							750f	0.0	1.5;0.0V-25V$	25 ☑	4.6k	50M			GAΔ$	M86e
107	PFV105-31							750f	0.0	1.5;0.0V-25V$	25 ☑	4.6k	50M			GAΔ$	F10ah
108	PFV105-45							750f	0.0	1.5;0.0V-25V$	25 ☑	4.6k	50M			GAΔ$	F54c
109	PFV110-01							750f	0.0	1.5;0.0V-30V$	30 ☑	4.5k	50M			GAΔ$	F27as
110	PFV110-05							750f	0.0	1.5;0.0V-30V$	30 ☑	4.5k	50M			GAΔ$	F10af

SYMBOLS AND CODES EXPLAINED IN INTERPRETER

6. VOLTAGE VARIABLE CAPACITORS & VARACTOR DIODES

IN ORDER OF (1) TYPICAL CAPACITANCE, (2) TEST VOLTAGE, and (3) TYPE No.

LINE No.	[3] TYPE No.	MINIMUM CUTOFF FREQUENCY (Corresponding to Type Numbers in previous column) (Hz)	(Hz)	(Hz)	(Hz)	(Hz)	(Hz)	TYP. CAP. [1] CAP. Cj (F)	[2] at TEST VOLT (V)	CAPACITANCE RANGE (for V = 0 to PIV) Ø - at TEST VOLT. (pF)	PIV (V)	Q FACTOR MIN. Q	at TEST FREQ (Hz)	MAX. SER. RES. Rs (Ω)	MAX. DISS. @ 25°C (W)	DESCRIPTION MAT.	DWG. No.
1	PFV110-21							750f	0.0	1.5;0.0V-30V$	30 ☑	4.5k	50M			GA△$	M86e
2	PFV110-31							750f	0.0	1.5;0.0V-30V$	30 ☑	4.5k	50M			GA△$	F10ah
3	PFV110-45							750f	0.0	1.5;0.0V-30V$	30 ☑	4.5k	50M			GA△$	F54c
4	PFV115-01							750f	0.0	1.6;0.0V-45V$	45 ☑	4.0k	50M			GA△$	F27as
5	PFV115-05							750f	0.0	1.6;0.0V-45V$	45 ☑	4.0k	50M			GA△$	F10af
6	PFV115-21							750f	0.0	1.6;0.0V-45V$	45 ☑	4.0k	50M			GA△$	M86e
7	PFV115-31							750f	0.0	1.6;0.0V-45V$	45 ☑	4.0k	50M			GA△$	F10ah
8	PFV115-45							750f	0.0	1.6;0.0V-45V$	45 ☑	4.0k	50M			GA△$	F54c
9	PFV120-01							750f	0.0	1.6;0.0V-60V$	60 ☑	3.0k	50M			GA△$	F27as
10	PFV120-05							750f	0.0	1.6;0.0V-60V$	60 ☑	3.0k	50M			GA△$	F10af
11	PFV120-21							750f	0.0	1.6;0.0V-60V$	60 ☑	3.0k	50M			GA△$	M86e
12	PFV120-31							750f	0.0	1.6;0.0V-60V$	60 ☑	3.0k	50M			GA△$	F10ah
13	PFV120-45							750f	0.0	1.6;0.0V-60V$	60 ☑	3.0k	50M			GA△$	F54c
14	PSV100-01							750f	0.0	2.5;0.0V-30V$	30 ☑	3.0k	50M			Si§	F27as
15	PSV100-05							750f	0.0	2.5;0.0V-30V$	30 ☑	3.0k	50M			Si§	F10af
16	PSV100-08							750f	0.0	2.5;0.0V-30V$	30 ☑	3.0k	50M			Si§	A1vd
17	PSV100-14							750f	0.0	2.5;0.0V-30V$	30 ☑	3.0k	50M			Si§	A2u
18	PSV100-16							750f	0.0	2.5;0.0V-30V$	30 ☑	3.0k	50M			Si§	A1st
19	PSV100-21							750f	0.0	2.5;0.0V-30V$	30 ☑	3.0k	50M			Si§	M86e
20	PSV100-31							750f	0.0	2.5;0.0V-30V$	30 ☑	3.0k	50M			Si§	F10ah
21	PSV100-45							750f	0.0	2.5;0.0V-30V$	30 ☑	3.0k	50M			Si§	F54c
22	PSV105-01							750f	0.0	3.0;0.0V-45V$	45 ☑	2.5k	50M			Si§	F27as
23	PSV105-05							750f	0.0	3.0;0.0V-45V$	45 ☑	2.5k	50M			Si§	F10af
24	PSV105-08							750f	0.0	3.0;0.0V-45V$	45 ☑	2.5k	50M			Si§	A1vd
25	PSV105-14							750f	0.0	3.0;0.0V-45V$	45 ☑	2.5k	50M			Si§	A2u
26	PSV105-16							750f	0.0	3.0;0.0V-45V$	45 ☑	2.5k	50M			Si§	A1st
27	PSV105-21							750f	0.0	3.0;0.0V-45V$	45 ☑	2.5k	50M			Si§	M86e
28	PSV105-31							750f	0.0	3.0;0.0V-45V$	45 ☑	2.5k	50M			Si§	F10ah
29	PSV105-45							750f	0.0	3.0;0.0V-45V$	45 ☑	2.5k	50M			Si§	F54c
30	BXY32	150GØ						750f	6.0	.50-1.0Ø					1.0	Si$#	F27h
31	GC5537C,D,E,F	300G	350G	400G	450G			750f	6.0	2.5;0.0-10V$	30 ☑					GA	F111b†
32	SV56A	40G						.75p	6.0	0.5p-1.0pØ					1.5	Si$#	F27a
33	VKTE43W	300G						750f	6.0	.50-1.0Ø	30 ☑					Si	F129
34	VKTE53W	250G						750f	6.0	.50-1.0Ø	48 ☑					Si	F129
35	VSE43W	300G						750f	6.0	.50-1.0Ø	30 ☑					Si	F128
36	VSE53M							750f	6.0	.50-1.0Ø	48 ☑					Si	F128
37	VSE53W	250G						750f	6.0	.50-1.0Ø	48 ☑					Si	F128
38	VSSE63W							750f†	6.0	.50-1.0Ø	60 ☑					SiX	F134
39	VTE43W	300G						750f	6.0	.50-1.0Ø	30 ☑					Si	F130
40	VTE53M							750f	6.0	.50-1.0Ø	48 ☑					Si	F130
41	VTE53W	250G						750f	6.0	.50-1.0Ø	48 ☑					Si	F130
42	VUE43W	300G						750f	6.0	.50-1.0Ø	30 ☑					Si	F133
43	VUE53M							750f	6.0	.50-1.0Ø	48 ☑					Si	F133
44	VUE53W	250G						750f	6.0	.50-1.0Ø	48 ☑					Si	F133
45	VWE43W	300G						750f	6.0	.50-1.0Ø	30 ☑					Si	F131
46	VWE53M							750f	6.0	.50-1.0Ø	48 ☑					Si	F131
47	VWE53W	250G						750f	6.0	.50-1.0Ø	48 ☑					Si	F131
48	VXE43W	300G						750f	6.0	.50-1.0Ø	30 ☑					Si	S167
49	VXE53M							750f	6.0	.50-1.0Ø	48 ☑					Si	S167
50	VXE53W	250G						750f	6.0	.50-1.0Ø	48 ☑					Si	S167
51	VXSE63W							750f†	6.0	.50-1.0Ø	60 ☑					SiX	S167
52	MS311-8							750f†	30	1.8;0.0V-30V$	30 ☑	5.0k	50M			GA♦$	F27as
53	MS311-8A							750f†	30	1.8;0.0V-30V$	30 ☑	5.0k	50M			GA♦$	F56y
54	MS311-21							750f†	30	1.8;0.0V-30V$	30 ☑	5.0k	50M			GA♦$	F59m
55	MS311-21A							750f†	30	1.8;0.0V-30V$	30 ☑	5.0k	50m			GA♦$	M892
56	MS331-8							750f†	60	2.0;0.0V-60V$	60 ☑	3.5k	50M			GA♦$	F27as
57	MS331-8A							750f†	60	2.0;0.0V-60V$	60 ☑	3.5k	50M			GA♦$	F56y
58	MS331-21							750f†	60	2.0;0.0V-60V$	60 ☑	3.5k	50M			GA♦$	F59m
59	MS331-21A							750f†	60	2.0;0.0V-60V$	60 ☑	3.5k	50m			GA♦$	M892
60	MA4255	60G						.80p	0.0	.50 - 1.4	6.0	6.0	10G			Si§	F9
61	MDX594C	50G						800f	0.0	.60-1.0Ø	6.0	5.0	10G		200m☑	GA$△	F27am
62	MDX594D	50G						800f	0.0	.60-1.0Ø	6.0	5.0	10G		200m☑	GA$△	F27t
63	MDX594M	50G						800f	0.0	.60-1.0Ø	6.0	5.0	10G		200m☑	GA$△	F54c
64	MDX594N	50G						800f	0.0	.60-1.0Ø	6.0	5.0	10G		200m☑	GA$△	F59k
65	MDX595C	100G						800f	0.0	.60-1.0Ø	6.0	10	10G		200m☑	GA$△	F27am
66	MDX595D	100G						800f	0.0	.60-1.0Ø	6.0	10	10G		200m☑	GA$△	F27t
67	MDX595M	100G						800f	0.0	.60-1.0Ø	6.0	10	10G		200m☑	GA$△	F54c
68	MDX595N	100G						800f	0.0	.60-1.0Ø	6.0	10	10G		200m☑	GA$△	F59k
69	MDX596C	150G						800f	0.0	.60-1.0Ø	6.0	15	10G		200m☑	GA$△	F27am
70	MDX596D	150G						800f	0.0	.60-1.0Ø	6.0	15	10G		200m☑	GA$△	F27t
71	MDX596M	150G						800f	0.0	.60-1.0Ø	6.0	15	10G		200m☑	GA$△	F54c
72	MDX596N	150G						800f	0.0	.60-1.0Ø	6.0	15	10G		200m☑	GA$△	F59k
73	MDX597C	200G						800f	0.0	.60-1.0Ø	6.0	20	10G		200m☑	GA$△	F27am
74	MDX597D	200G						800f	0.0	.60-1.0Ø	6.0	20	10G		200m☑	GA$△	F27t
75	MDX597M	200G						800f	0.0	.60-1.0Ø	6.0	20	10G		200m☑	GA$△	F54c
76	MDX597N	200G						800f	0.0	.60-1.0Ø	6.0	20	10G		200m☑	GA$△	F59k
77	MDX598C	250G						800f	0.0	.60-1.0Ø	6.0	25	10G		200m☑	GA$△	F27am
78	MDX598D	250G						800f	0.0	.60-1.0Ø	6.0	25	10G		200m☑	GA$△	F27t
79	MDX598M	250G						800f	0.0	.60-1.0Ø	6.0	25	10G		200m☑	GA$△	F54c
80	MDX598N	250G						800f	0.0	.60-1.0Ø	6.0	25	10G		200m☑	GA$△	F59k
81	MDX599C	300G						800f	0.0	.60-1.0Ø	6.0	30	10G		200m☑	GA$△	F27am
82	MDX599D	300G						800f	0.0	.60-1.0Ø	6.0	30	10G		200m☑	GA$△	F27t
83	MDX599M	300G						800f	0.0	.60-1.0Ø	6.0	30	10G		200m☑	GA$△	F54c
84	MDX599N	300G						800f	0.0	.60-1.0Ø	6.0	30	10G		200m☑	GA$△	F59k
85	SD11A6							.80p	0.0	.80 - 1.6	6.0			4.5		Si$	P3
86	SD12A6							.80p	0.0	.80 - 1.6	6.0			4.5		Si$	F3a
87	SD22A6							.80p	0.0	.80 - 1.6	6.0			4.5		Si$	F11
88	SD32A6							.80p	0.0	.80 - 1.6	6.0			4.5		Si$	F21
89	SD42A6							.80p	0.0	.80 - 1.6	6.0			4.5		Si$	F9a
90	SDGPA6							.80p	0.0	.80 - 1.6	6.0			4.5		Si$	DO7
91	CVH2030-03							800f	4.0	4.5;0.0-30$;10%	30 ☑	4.8k	50M			Si§§	u30
92	CVH2045-03							800f	4.0	6.1;0.0-45$;10%	45 ☑	2.8k	50M			Si§§	u30
93	CVH2060-03							800f	4.0	7.5;0.0-60$;10%	60 ☑	2.1k	50M			Si§§	u30
94	CVH2090-03							800f	4.0	8.7;0.0-90$;10%	90 ☑	1.0k	50M			Si§§	u30
95	DT300							800f§	4.0	3.4;0.0V-30V$	30 ☑	3800 Ø	50M			Si	V1
96	DT600							800f§	4.0	4.8;0.0V-60V$	60 ☑	1600 Ø	50M			Si	V1
97	DT900							800f§	4.0	5.6;0.0V-90V$	90 ☑	1000 Ø	50M			Si	V1
98	DT4500							800f§	4.0	4.2;0.0V-45V$	45 ☑	2500 Ø	50M			Si	V1
99♦	DVH6730-03							800f§	4.0	3.2;0.0-30$;10%	30 ☑	4.8k	50M			Si§§	A90a
100♦	DVH6731-03	240G						800f†	4.0	3.2;0.0V-30V$;10%	30 ☑	4.8k	50M			Si§§	F143
101	DVH6732-03	240G						800f†	4.0	3.2;0.0V-30V$;10%	30 ☑	4.8k	50M			Si§§	F56ad
102	DVH6733-03	240G						800f†	4.0	3.2;0.0V-30V$;10%	30 ☑	4.8k	50M			Si§§	F59u
103	DVH6734-03	240G						800f†	4.0	3.2;0.0V-30V$;10%	30 ☑	4.8k	50M			Si§§	M929
104♦	DVH6740-03							800f§	4.0	3.3;0.0-45$;10%	45 ☑	2.8k	50M			Si§§	A90a
105♦	DVH6741-03	140G						800f†	4.0	3.3;0.0V-45V$;10%	45 ☑	2.8k	50M			Si§§	F143
106	DVH6742-03	140G						800f†	4.0	3.3;0.0V-45V$;10%	45 ☑	2.8k	50M			Si§§	F56ad
107	DVH6743-03	140G						800f†	4.0	3.3;0.0V-45V$;10%	45 ☑	2.8k	50M			Si§§	F59u
108	DVH6744-03	140G						800f†	4.0	3.3;0.0V-45V$;10%	45 ☑	2.8k	50M			Si§§	M929
109♦	DVH6760-03							800f§	4.0	3.8;0.0-60$;10%	60 ☑	2.1k	50M			Si§§	A90a
110♦	DVH6761-03	105G						800f†	4.0	3.8;0.0V-60V$;10%	60 ☑	2.1k	50M			Si§§	F143

SYMBOLS AND CODES EXPLAINED IN INTERPRETER

6. VOLTAGE VARIABLE CAPACITORS & VARACTOR DIODES

IN ORDER OF (1) TYPICAL CAPACITANCE, (2) TEST VOLTAGE, and (3) TYPE No.

LINE No.	[3] TYPE No.	MINIMUM CUTOFF FREQUENCY (Corresponding to Type Numbers in previous column) (Hz)	(Hz)	(Hz)	(Hz)	(Hz)	(Hz)	TYP. CAP. [1] CAP. Cj (F)	[2] at TEST VOLT (V)	CAPACITANCE RANGE (for V = 0 to PIV) Ø - at TEST VOLT. (pF)	PIV (V)	Q FACTOR MIN. Q	at TEST FREQ (Hz)	MAX. SER. RES. Rs (Ω)	MAX. DISS. @ 25°C (W)	DESCRIPTION MAT.	DWG. No.
1	DVH6762-03	105G						800f†	4.0	3.8;0.0V-60V$;10%	60 ☑	2.1k	50M			Si$§	F56ad
2	DVH6763-03	105G						800f†	4.0	3.8;0.0V-60V$;10%	60 ☑	2.1k	50M			Si$§	F59u
3	DVH6764-03	105G						800f†	4.0	3.8;0.0V-60V$;10%	60 ☑	2.1k	50M			Si$§	M929
4♦	DVH6790-03							800f§	4.0	4.2;0.0-90$;10%	90 ☑	1.0k	50M			Si$§	A90a
5♦	DVH6791-03	50G						800f†	4.0	4.2;0.0V-90V$;10%	90 ☑	1.0k	50M			Si$§	F143
6	DVH6792-03	50G						800f†	4.0	4.2;0.0V-90V$;10%	90 ☑	1.0k	50M			Si$§	F56ad
7	DVH6793-03	50G						800f†	4.0	4.2;0.0V-90V$;10%	90 ☑	1.0k	50M			Si$§	F59u
8	DVH6794-03	50G						800f†	4.0	4.2;0.0V-90V$;10%	90 ☑	1.0k	50M			Si$§	M929
9	GC1500							800f†Δ	4.0	3.3;0.0V-30V$	30	3.6k	50M			Si	F111b†
10	GC1500A							800f†Δ	4.0	3.3;0.0V-30V$	30	3.6k	50M			Si	F59q
11	GC1500B							800f†Δ	4.0	3.3;0.0V-30V$	30	3.6k	50M			Si	F27ah
12	GC1500D							800f†Δ	4.0	3.3;0.0V-30V$	30	3.6k	50M			Si	F56q
13	GC1500E							800f†Δ	4.0	3.3;0.0V-30V$	30	3.6k	50M			Si	F59j
14	GC1500H							800f†Δ	4.0	3.3;0.0V-30V$	30	3.6k	50M			Si	S428b
15	GC1600							800f†Δ	4.0	4.2;0.0V;45V$	45	2.0k	50M			Si	F111b†
16	GC1600A							800f†Δ	4.0	4.2;0.0V-45V$	45	2.0k	50M			Si	F59q
17	GC1600B							800f†Δ	4.0	4.2;0.0V-45V$	45	2.0k	50M			Si	F27ah
18	GC1600D							800f†Δ	4.0	4.2;0.0V-45V$	45	2.0k	50M			Si	F56q
19	GC1600E							800f†Δ	4.0	4.2;0.0V-45V$	45	2.0k	50M			Si	F59j
20	GC1600H							800f†Δ	4.0	4.2;0.0V-45V$	45	2.0k	50M			Si	S428b
21	GC1700							800f†	4.0	4.6;0.0V-60V$	60	2.1k	50M			Si	F111b†
22	GC1800							800f†	4.0	5.5;0.0V-90V$	90	1.0k	50M			Si	F111b†
23	MA45101							800f†Δ	4.0	4.2;0.0V-45V$	55 ☑	2.5k	50M			Si$	F27f
24	MA45121							800f†Δ	4.0	4.5;0.0V-60V$	75 ☑	2.0k	50M			Si$	F27f
25	MA45141							800f†Δ	4.0	5.0;0.0V-90V$	100 ☑	1.5k	50M			Si$	F27f
26	MA45227							800fΔ	4.0	2.9;0V-25V$	25	5.0k	50M			Si$§	V11†
27	MA45227C							800fΔ	4.0	4.5;0V-25V$	25	5.0k	50M			Si$§	u17†
28	MA45247							800fΔ	4.0	3.9;0V-45V$	45	3.8k	50M			Si$§	V11†
29	MA45247C							800fΔ	4.0	6.2;0V-45V$	45	3.8k	50M			Si$§	u17†
30	MA45261							800fΔ	4.0	4.5;0V-60V$	60	2.3k	50M			Si$§	V11†
31	MA45261C							800fΔ	4.0	7.5;0V-60V$	60	2.3k	50M			Si$§	u17†
32	DC4303B							0.8p†	4.5			6.6 Ø	10G			GA	F121a
33	DC4373A							0.8p†	4.5			6.6	10G			GA	u7d
34	DC4373B							0.8p†	4.5			6.6	10G			GA	u7d
35	1N5156							800f	6.0	.60-1.0Ø	20 ☑				4.5	Si	F10j
36	1N5157							800f	6.0	.60-1.0Ø	20 ☑				4.5	Si	F27n
37	MA450D							800f	6.0		6.0	5.0	10G			Si	P3aΔ
38	MA460D							800f	6.0		6.0	5.0	10G			Si	P3aΔ
39	MA4631A,1,2	80G	120G	150G				800f☑	6.0		6.0					GA	F27d
40	MA4633A,1,2	60G	80G	100G				800f☑	6.0		30					GA	F27d
41	GC51107	440G						820f†Δ	4.0	1.4-.56;10%	15	440	1.0G			GAΔ§	F111b†
42	GC51307	360G						820f†Δ	4.0	1.4-.47;10%	30	360	1.0G			GAΔ§	F111b†
43	GC51407	340G						820f†Δ	4.0	1.4-.41;10%	45	340	1.0G			GAΔ§	F111b†
44	GC51607	310G						820f†Δ	4.0	1.4-.39;10%	60	310	1.0G			GAΔ§	F111b†
45	GC5518G	500G						.85p		0.8-0.9	10					GA$Δ	V7
46	GC5518H	550G						.85p		0.8-0.9	10					GA$Δ	V7
47	CXY22A							.85p§	0.0		6.0 †			1.0 ☑		GAΔ§	F111b
48	GC5518A,B,C,D,E,F	200G	250G	300G	350G	400G	450G	850f	0.0	2.5;0.0-10V$	10					GA	F111b†
49	GC5538C,D,E	300G	350G	400G				850f	6.0	2.5;0.0-10V$	30 ☑					GA	F111b†
50	MA43004							850f☑	6.0	.45-.85Ø	45 ☑				1.7 ☑	Si§Δ	F96
51	MD702	80G						875f	6.0	.55-1.2Ø	60	26	3.0G		750m☑	Si	F27g
52	MD702Y	80G						875f	6.0	.55-1.2Ø	60	26	3.0G		750m☑	Si	u13b
53	MD707	80G						875f	6.0	.55-1.2Ø	45	26	3.0G		750m☑	Si	F27g
54	MD707Y	80G						875f	6.0	.55-1.2Ø	45	26	3.0G		750m☑	Si	u13b
55	MD713	90G						875f	6.0	.55-1.2Ø	25	30	3.0G		750m☑	Si	F27g
56	MD713Y	90G						875f	6.0	.55-1.2Ø	25	30	3.0G		750m☑	Si	u13b
57	VKTA210H							880f	4.0	3.0;0.0V-12V$	12 $	4000	50M			Si	F129
58	VNA210H							880f	4.0	3.0;0.0V-12V$	12 $	4000	50M			Si	F136
59	VSA210H							880f	4.0	3.0;0.0V-12V$	12 $	4000	50M			Si	F128
60	VTA210H							880f	4.0	3.0;0.0V-12V$	12 $	4000	50M			Si	F130
61	VYA210H							880f	4.0	3.0;0.0V-12V$	12 $	4000	50M			Si	F135
62♦	DVE6951C							.90p%§		1.0-.80	45 ☑	8.0kØ	50M			GA	F143
63♦	DVE6952C							.90p%§		1.0-.80	450 ☑	8.0kØ	50M			GA	F59S
64♦	DVE6953C							.90p§%		1.0-.80	45 ☑	8.0kØ	50M			GA	F102f
65	DVE6954C							.90p%§		1.0-.80	45 ☑	8.0kØ	50M			GA	F112
66♦	DVE6955C							.90p%§		1.0-.80	45 ☑	8.0kØ	50M			GA	F94a
67	DVE6956C							.90p§%		1.0-.80	45 ☑	8.0kØ	50M			GA	†
68♦	DVE4550C							900fΔ	0.0	.80-1.0Ø	25 ☑	12k	50M			GA	†
69♦	DVE4551C							900fΔ	0.0	.80-1.0Ø	25 ☑	12k	50M			GA	F143
70♦	DVE4552C							900fΔ	0.0	.80-1.0Ø	25 ☑	12k	50M			GA	F59s
71♦	DVE4555C							900fΔ	0.0	.80-1.0Ø	25 ☑	12k	50M			GA	F94a
72♦	DVE4556-61	200G						900f	0.0	.80-1.0Ø	6.0 ☑		1.0M		200m	GAΔ	F143
73♦	DVE4556-62	250G						900f	0.0	.80-1.0Ø	6.0 ☑		1.0M		200m	GAΔ	F143
74	DVE4557-61	200G						900f	0.0	.80-1.0Ø	6.0 ☑		10G		200m	GA$Δ	F112b
75	DVE4557-62	250G						900f	0.0	.80-1.0Ø	6.0 ☑		10G		200m	GA$Δ	F112b
76♦	DVE4558-61	200G						900f	0.0	.80-1.0Ø	6.0 ☑		10G		200m	GA$Δ	F94a
77♦	DVE4558-62	250G						900f	0.0	.80-1.0Ø	6.0 ☑		10G		200m	GA$Δ	F94a
78	DVE4575C							900fΔ	0.0	.80-1.0Ø	25 ☑	7.5k	50M			GA	F102f
79♦	DVE4576C							900fΔ	0.0	.80-1.0Ø	25 ☑	12k	50M			GA	F112
80	SD11A48							.90p	0.0	.90 - 1.8	48			9.0		Si$	P3
81	SD12A48							.90p	0.0	.90 - 1.8	48			9.0		Si$	F3a
82	SD22A48							.90p	0.0	.90 - 1.8	48			9.0		Si$	F11
83	SD32A48							.90p	0.0	.90 - 1.8	48			9.0		Si$	F21
84	SD42A48							.90p	0.0	.90 - 1.8	48			9.0		Si$	F9a
85	SDGPA48							.90p	0.0	.90 - 1.8	48			9.0		Si$	DO7
86	SV214C	150G						.90p	0.0	.60 - 1.2Ø	6.0					GA$♦	F27a
87	SV534C	200G						0.9p	0.0	0.6p-1.2pØ					0.5	GA	F154
88	SV534D	250G						0.9p	0.0	0.6p-1.2pØ					0.5	GA	F154
89	SV544C	200G						0.9p	0.0	0.6p-1.2pØ					0.5	GA	F154
90	SV544D	250G						0.9p	0.0	0.6p-1.2pØ					0.5	GA	F154
91	MA45054							900f†Δ	4.0	3.6;0.0V-25V$	35 ☑	3.0k	50M			Si§	F27f
92	MA45066							900f†Δ	4.0	3.6;0.0V-25V$	35 ☑	4.0k	50M			Si§	F27f
93	ML4312							.90p†	4.0	3.4$ 0-25V	25 †	1.8k	50M			Si	F111a†
94	ML4332							.90p†	4.0	4.0$ 0-45V	45 †	1.5k	50M			Si	F111a†
95	ML4352							.90p†	4.0	4.2$ 0-60V	60 †	1.5k	50M			Si	F111a†
96	ML4372							.90p†	4.0	4.5$ 0-90V	90 †	700	50M			Si	F111a†
97	VKTA310H							900f	4.0	3.3;0.0V-30V$	30 $	3500	50M			Si	F129
98	VKTA410H							900f	4.0	4.5;0.0V-60V$	60 $	1750	50M			Si	F129
99	VNA310H							900f	4.0	3.3;0.0V-30V$	30 $	3500	50M			Si	F136
100	VNA410H							900f	4.0	4.5;0.0V-60V$	60 $	1750	50M			Si	F136
101	VSA310H							900f	4.0	3.3;0.0V-30V$	30 $	3500	50M			Si	F128
102	VSA410H							900f	4.0	4.5;0.0V-60V$	60 $	1750	50M			Si	F128
103	VTA310H							900f	4.0	3.3;0.0V-30V$	30 $	3500	50M			Si	F130
104	VTA410H							900f	4.0	4.5;0.0V-60V$	60 $	1750	50M			Si	F130
105	VYA310H							900f	4.0	3.3;0.0V-30V$	30 $	3500	50M			Si	F135
106	VYA410H							900f	4.0	4.5;0.0V-60V$	60 $	1750	50M			Si	F135
107	1SS29							0.9p	6.0	0.7p-1.1pØ						Si$Δ	M709
108	MA4646C-E	150G	105G	80G				900f	6.0		6.0				.60	GA	F27f
109	MA4765							.90p	6.0	.60 - 1.2Ø	24				1.0	Si	F27f
110	MDX640	100G						900f	6.0	.40-1.4Ø	12	33	3.0G		300mØ	GA$	F27am

6. VOLTAGE VARIABLE CAPACITORS & VARACTOR DIODES

IN ORDER OF (1) TYPICAL CAPACITANCE, (2) TEST VOLTAGE, and (3) TYPE No.

LINE No.	[3] TYPE No.	MINIMUM CUTOFF FREQUENCY (Corresponding to Type Numbers in previous column) (Hz)	(Hz)	(Hz)	(Hz)	(Hz)	(Hz)	TYP. CAP. [1] CAP. Cj (F)	[2] at TEST VOLT (V)	CAPACITANCE RANGE (for V = 0 to PIV) Ø - at TEST VOLT. (pF)	PIV (V)	Q FACTOR MIN. Q	at TEST FREQ (Hz)	MAX. SER. RES. Rs (Ω)	MAX. DISS. @ 25°C (W)	DESCRIPTION MAT.	DWG. No.
1	MDX641	200G						900f	6.0	.40-1.4Ø	12	66	3.0G		300mØ	GA$	F27am
2	MDX642	400G						900f	6.0	.40-1.4Ø	12	133	3.0G		300mØ	GA$	F27am
3	MDX643	600G						900f	6.0	.40-1.4Ø	12	200	3.0G		300mØ	GA$	F27am
4	MDX644	100G						900f	6.0	.40-1.4Ø	20	33	3.0G		300mØ	GA$	F27am
5	MDX645	200G						900f	6.0	.40-1.4Ø	20	66	3.0G		300mØ	GA$	F27am
6	MDX646	400G						900f	6.0	.40-1.4Ø	20	133	3.0G		300mØ	GA$	F27am
7	MDX647	600G						900f	6.0	.40-1.4Ø	20	200	3.0G		300mØ	GA$	F27am
8	PA0105H,J,K	100G	120G	140G				.90p	6.0	.75 - 1.0Ø	6.0 Ø	10G			.20	Si	F27d
9	PA0705H,J,K	100G	120G	140G				.90p	6.0	.75 - 1.0Ø	6.0 Ø	10G			.20	Si	F9
10	1S2222							.90p	15		30			1.0			
11	GC5519F	450G						.95p		0.9-1.0	10					GA$Δ	V7
12	GC5519G	500G						.95p		0.9-1.0	10					GA$Δ	V7
13	GC5519A,B,C,D,E	200G	250G	300G	350G	400G		950f	0.0	2.5;0.0-10V$	10					GA	F111b†
14	XD500	60G						950f	0.0	.50-1.4pØ	6.0	20 Ø	3.0G		300m	GAΔ	F11
15	XD501	81G						950f	0.0	.50-1.4pØ	6.0	27 Ø	3.0G		300m	GAΔ	F11
16	XD502	108G						950f	0.0	.50-1.4pØ	6.0	36 Ø	3.0G		300m	GAΔ	F11
17	XD503	144G						950f	0.0	.50-1.4pØ	6.0	46 Ø	3.0G		300m	GAΔ	F11
18	GC5539C,D	300G	350G					950f	6.0	2.5;0.0-10V$	30 Ø					GA	F111b†
19	MA4957E	150G						.95p	6.0	.60 - 1.3Ø	48				1.0	Si$	F27r
20	MA4957F	150G						.95p	6.0	.60 - 1.3Ø	48				1.0	Si$	S215a
21	MA44060							950f	6.0	700f-1.2pØ	80 Ø				8.3 Ø	Si$Δ	F115
22	MA44061							950f	6.0	700f-1.2pØ	80 Ø				8.3 Ø	Si$Δ	S356a
23	SD11A60							.96p	0.0	.96 - 1.92	60			9.0		Si$	P3
24	SD12A60							.96p	0.0	.96 - 1.92	60			9.0		Si$	F3a
25	SD22A60							.96p	0.0	.96 - 1.92	60			9.0		Si$	F11
26	SD32A60							.96p	0.0	.96 - 1.92	60			9.0		Si$	F21
27	SD42A60							960f	0.0	.96-1.92	60			9.0		Si$	F9a
28	SDGPA60							.96p	0.0	.96 - 1.92	60			9.0		Si$	DO7
29	BBY32CB							1.0p			60	1500	50M			Si	F139
30	CVH2030-01							1p	0.0	0.28-.068	100	5000	50M	1.8		Si	u30
31	CXY23A							1.0p	0.0	.80-1.2	12 Ø			3.0		GA	F27av
32	MA4034	50G						1.0p	0.0	.80 - 1.2						Si	P8
33	MA4071B							1.0pØ	0.0		10 Ø						
34	MA4072B							1.0pØ	0.0		24 Ø						
35	SD11A12							1.0p	0.0	1.0 - 2.0	12			4.5		Si$	P3
36	SD11B90							1.0p	0.0	1.0 - 2.0	90			9.0		Si$	P3
37	SD11B100							1.0p	0.0	1.0 - 2.0	100			9.0		Si$	P3
38	SD12A12							1.0p	0.0	1.0 - 2.0	12			4.5		Si$	F3a
39	SD12B90							1.0p	0.0	1.0 - 2.0	90			9.0		Si$	F3a
40	SD12B100							1.0p	0.0	1.0 - 2.0	100			9.0		Si$	F3a
41	SD22A12							1.0p	0.0	1.0 - 2.0	12			4.5		Si$	F11
42	SD22B90							1.0p	0.0	1.0 - 2.0	90			9.0		Si$	F11
43	SD22B100							1.0p	0.0	1.0 - 2.0	100			9.0		Si$	F11
44	SD32A12							1.0p	0.0	1.0 - 2.0	12			4.5		Si$	F21
45	SD32B90							1.0p	0.0	1.0 - 2.0	90			9.0		Si$	F21
46	SD32B100							1.0p	0.0	1.0 - 2.0	100			9.0		Si$	F21
47	SD42A12							1.0p	0.0	1.0 - 2.0	12			4.5		Si$	F9a
48	SD42B90							1.0p	0.0	1.0 - 2.0	90			9.0		Si$	F9a
49	SD42B100							1.0p	0.0	1.0 - 2.0	100			9.0		Si$	F9a
50	SDGPA12							1.0p	0.0	1.0 - 2.0	12			4.5		Si$	DO7
51	SDGPB90							1.0p	0.0	1.0 - 2.0	90			9.0		Si$	DO7
52	SDGPB100							1.0p	0.0	1.0 - 2.0	100			9.0		Si$	DO7
53	1N5136							1.0p	4.0	2.0;4.0V-60V$	60 Ø	350	50M		400m	Si	DO7
54	1N5136A							1.0p	4.0	2.0;4.0V-60V$	60 Ø	350	50M		400m	Si	DO7
55	BXY53							1.0p	4.0	.80-1.2Ø	60					Si	F27aj
56	CV1858B							1.0p	4.0	.70-1.30	60	350	100M		5.0	Si	F27xØ
57	CV1858D							1.0p	4.0	.70-1.30	60	350	100M		5.0	Si	F56nØ
58	CVH2030-04							1.0p	4.0	4.5;0.0-30$;10%	30 Ø	4.8k	50M			Si§§	u30
59	CVH2045-04							1.0p	4.0	6.1;0.0-45$;10%	45 Ø	2.8k	50M			Si§§	u30
60	CVH2060-04							1.0p	4.0	7.5;0.0-60$;10%	60 Ø	2.1k	50M			Si§§	u30
61	CVH2090-04							1.0p	4.0	8.7;0.0-90$;10%	90 Ø	1.0k	50M			Si§§	u30
62♦	DKV6550A							1.0p	4.0	.90-1.10Ø	22 Ø	500	50M		250m	Si	F143
63	DT301							1.0p§	4.0	3.4;0.0V-30V$	30 Ø	3800 Ø	50M			Si	V1
64	DT601							1.0p§	4.0	4.9;0.0V-60V$	60 Ø	1600 Ø	50M			Si	V1
65	DT901							1.0p§	4.0	6.0;0.0V-90V$	90 Ø	1000 Ø	50M			Si	V1
66	DT4501							1.0p§	4.0	4.4;0.0V-45V$	45 Ø	2500 Ø	50M			Si	V1
67♦	DVH6730-04							1.0p§	4.0	3.5;0.0-30$;10%	30 Ø	4.8k	50M			Si$§	A90a
68♦	DVH6731-04	240G						1.0p†	4.0	3.5;0.0V-30V$;10%	30 Ø	4.8k	50M			Si$§	F143
69	DVH6732-04	240G						1.0p†	4.0	3.5;0.0V-30V$;10%	30 Ø	4.8k	50M			Si$§	F56ad
70	DVH6733-04	240G						1.0p†	4.0	3.5;0.0V-30V$;10%	30 Ø	4.8k	50M			Si$§	F59u
71	DVH6734-04	240G						1.0p†	4.0	3.5;0.0V-30V$;10%	30 Ø	4.8k	50M			Si$§	M929
72♦	DVH6740-04							1.0p§	4.0	3.9;0.0-45$;10%	45 Ø	2.8k	50M			Si$§	A90a
73♦	DVH6741-04	140G						1.0p†	4.0	3.9;0.0V-45V$;10%	45 Ø	2.8k	50M			Si$§	F143
74	DVH6742-04	140G						1.0p†	4.0	3.9;0.0V-45V$;10%	45 Ø	2.8k	50M			Si$§	F56ad
75	DVH6743-04	140G						1.0p†	4.0	3.9;0.0V-45V$;10%	45 Ø	2.8k	50M			Si$§	F59u
76	DVH6744-04	140G						1.0p†	4.0	3.9;0.0V-45V$;10%	45 Ø	2.8k	50M			Si$§	M929
77♦	DVH6760-04							1.0p§	4.0	4.3;0.0-60$;10%	60 Ø	2.1k	50M			Si$§	A90a
78♦	DVH6761-04	105G						1.0p†	4.0	4.3;0.0V-60V$;10%	60 Ø	2.1k	50M			Si$§	F143
79	DVH6762-04	105G						1.0p†	4.0	4.3;0.0V-60V$;10%	60 Ø	2.1k	50M			Si$§	F56ad
80	DVH6763-04	105G						1.0p†	4.0	4.3;0.0V-60V$;10%	60 Ø	2.1k	50M			Si$§	F59u
81	DVH6764-04	105G						1.0p†	4.0	4.3;0.0V-60V$;10%	60 Ø	2.1k	50M			Si$§	M929
82♦	DVH6790-04							1.0p§	4.0	4.7;0.0-90$;10%	90 Ø	1.0k	50M			Si$§	A90a
83♦	DVH6791-04	50G						1.0p†	4.0	4.7;0.0V-90V$;10%	90 Ø	1.0k	50M			Si$§	F143
84	DVH6792-04	50G						1.0p†	4.0	4.7;0.0V-90V$;10%	90 Ø	1.0k	50M			Si$§	F56ad
85	DVH6793-04	50G						1.0p†	4.0	4.7;0.0V-90V$;10%	90 Ø	1.0k	50M			Si$§	F59u
86	DVH6794-04	50G						1.0p†	4.0	4.7;0.0V-90V$;10%	90 Ø	1.0k	50M			Si$§	M929
87	E700	60G						1.0p	4.0	3.3;1.0V-50V$	60	1.2k	50M			Si	F27az
88	GC1501							1.0p†Δ	4.0	3.4;0.0V-30V$	30	3.6k	50M			Si	F111b†
89	GC1501A							1.0p†Δ	4.0	3.4;0.0V-30V$	30	3.6k	50M			Si	F59q
90	GC1501B							1.0p†Δ	4.0	3.4;0.0V-30V$	30	3.6k	50M			Si	F27ah
91	GC1501D							1.0p†Δ	4.0	3.4;0.0V-30V$	30	3.6k	50M			Si	F56q
92	GC1501E							1.0p†Δ	4.0	3.4;0.0V-30V$	30	3.6k	50M			Si	F59j
93	GC1501H							1.0p†Δ	4.0	3.4;0.0V-30V$	30	3.6k	50M			Si	S428b
94	GC1601							1.0p†Δ	4.0	4.4;0.0V-45V$	45	2.0k	50M			Si	F111b†
95	GC1601A							1.0p†Δ	4.0	4.4;0.0V-45V$	45	2.0k	50M			Si	F59q
96	GC1601B							1.0p†Δ	4.0	4.4;0.0V-45V$	45	2.0k	50M			Si	F27ah
97	GC1601D							1.0p†Δ	4.0	4.4;0.0V-45V$	45	2.0k	50M			Si	F56q
98	GC1601E							1.0p†Δ	4.0	4.4;0.0V-45V$	45	2.0k	50M			Si	F59j
99	GC1601H							1.0p†Δ	4.0	4.4;0.0V-45V$	45	2.0k	50M			Si	S428b
100	GC1701							1.0p†	4.0	4.8;0.0V-60V$	60	2.0k	50M			Si	F111b†
101	GC1801							1.0p†	4.0	6.0;0.0V-90V$	90	1.0k	50M			Si	F111b†
102	GC1802							1.0p	4.0	3.8-.38	90	800	50M			Si	F111b†
103	GC51108	420G						1.0p†Δ	4.0	1.8-.69;10%	15	420	1.0G			GAΔ§	F111b†
104	GC51308	340G						1.0p†Δ	4.0	1.8-.56;10%	30	340	1.0G			GAΔ§	F111b†
105	GC51408	320G						1.0p†Δ	4.0	1.8-.50;10%	45	320	1.0G			GAΔ§	F111b†
106	GC51608	290G						1.0p†Δ	4.0	1.8-.46;10%	60	290	1.0G			GAΔ§	F111b†
107▼	MA4H001							1.0p†	4	0.3-0.6	20	3.5k	50M			Si	V25
108▼	MA4H020							1.0p†	4	0.4-0.6	25	4.0k	50M			Si	V25
109▼	MA4H020C							1.0p	4.0	0.32-0.42	25	4.5k	50M		1.0	Si	V25
110	MA45228							1.0pΔ	4.0	3.0;0V-25V$	25	4.8k	50M			Si§§	V11†

6. VOLTAGE VARIABLE CAPACITORS & VARACTOR DIODES

IN ORDER OF (1) TYPICAL CAPACITANCE, (2) TEST VOLTAGE, and (3) TYPE No.

LINE No.	TYPE No.	MINIMUM CUTOFF FREQUENCY (Corresponding to Type Numbers in previous column) (Hz)	(Hz)	(Hz)	(Hz)	(Hz)	(Hz)	TYP. CAP. 1 CAP. Cj (F)	2 at TEST VOLT (V)	CAPACITANCE RANGE (for V = 0 to PIV) Ø - at TEST VOLT. (pF)	PIV (V)	Q FACTOR MIN. Q	at TEST FREQ (Hz)	MAX. SER. RES. Rs (Ω)	MAX. DISS. @ 25°C (W)	DESCRIPTION MAT.	DWG. No.
1	MA45228C							1.0pΔ	4.0	4.5;0V-25V$	25	4.8k	50M			Si$§	u17†
2	MA45248							1.0pΔ	4.0	4.0;0V-45V$	45	3.5k	50M			Si$§	V11†
3	MA45248C							1.0pΔ	4.0	6.2;0V-45V$	45	3.5k	50M			Si$§	u17†
4	MA45262							1.0pΔ	4.0	4.8;0V-60V$	60	2.2k	50M			Si$§	V11†
5	MA45262C							1.0pΔ	4.0	7.5;0V-60V$	60	2.2k	50M			Si$§	u17†
6	MA45290							1.0pΔ	4.0	6.0;0V-90V$	90	1.5k	50M			Si$§	V11†
7	MA45290C							1.0pΔ	4.0	9.0;0V-90V$	90	1.5k	50M			Si$§	u17†
8	MC0							1.0p	4.0		60 †	10	50M			Si	A1au
9	MC200							1.0p	4.0		60	25	50M			Si	A1au
10	MC300							1.0p	4.0		60	50	50M			Si	A1au
11	MC400							1.0p	4.0	5.0;1.0V-60V$	60 †	100	50M			Si	A1au
12	MC600							1.0p	4.0	.80-1.20Ø	60	250	50M			Si	A1au
13	MMC600							1.0p	4.0	.80-1.20Ø	60	500	50M			Si	A1au
14	MV1858A							1.0p†	4.0	.70 - 1.3Ø	60			4.5	5.0	Si	F27a
15	MV1858B							1.0p†	4.0	.70 - 1.3Ø	60			4.5	5.0	Si	F10a
16	MV1858D							1.0p†	4.0	2.7;4.0V-60V$	60 ☑	350	100M		5.0	Si	F56n
17	MV1858H							1.0p†Δ	4.0	2.1-2.3Ø	60	350	100M			Si	S428b
18	MVI2097							1.0p†	4.0	2.4;2.0V-30V$	30 ☑	325	100M		200m	Si	M750
19	VVC769,A,B,C,D							1.0p%	4.0	3.2;4.0V-60V$	60	10	50M		400m§	Si	DO7†
20	VVC770,A,B,C,D							1.0p%	4.0	3.2;4.0V-60V$	60	25	50M		400m§	Si	DO7†
21	VVC771,A,B,C,D							1.0p%	4.0	3.2;4.0V-60V$	60	50	50M		400m§	Si	DO7†
22	VVC772,A,B,C,D							1.0p%	4.0	3.2;4.0V-60V$	60	100	50M		400m§	Si	DO7†
23	BXY29	90G						1.0p	6.0	.80-1.5Ø	25	☑	120G		1.0	Si#Ø	F27h
24	BXY39	150G						1.0p	6.0		40						F27h
25	BXY39B	150G						1.0p	6.0	.80-1.2Ø	40					Si#	F47b
26	BXY39C	150G						1.0p	6.0	.80 - 1.2Ø	40					Si#	F48h
27	BXY39D	150G						1.0p	6.0	.80 - 1.2Ø	40					Si#	S268f
28	BXY39E	150G						1.0p	6.0	.80 - 1.2Ø	40					Si#	F56p
29	MA43036							1.0p	6.0	500f-1.5pØ	45 ☑				2.7 ☑	Si§Δ	u21
30	MA44320							1.0p☑	6.0	500f-1.0Ø	15 ☑				208m☑	Si§Δ	A1ac
31	ML4407							1.0pØ	6.0	1.0-2.5Ø	55 ☑			700m☑		SiΔ$	F27as
32	SFD422D,E,G	60G	80G	150G				1.0pØ	6.0		60				2.5	Si$	F49
33	SFD423C,E,F	40G	80G	100G				1.0pØ	6.0		90				2.5	Si$	F49
34	D5019-06	200						1.0p	40						400m	GA	F27ax
35	D5259-06	200						1.0p	40						400m	GA	F143
36	1N4320							1.0p†	50		640 $			4.0	4.0	Si	F27d
37♦	DVE4556-71	200G						1.1p	0.0	1.0-1.2	6.0 ☑		1.0M		200m	GAΔ	F143
38	DVE4557-71	200G						1.1p	0.0	1.0-1.2Ø	6.0 ☑		10G		200m	GA$Δ	F112b
39♦	DVE4558-71	200G						1.1p	0.0	1.0-1.2Ø	6.0 ☑		10G		200m	GA$Δ	F94a
40	MA4749							1.1p☑	0.0		25 ☑			1.0			
41	MA4750							1.1p☑	0.0		25 ☑			1.0			
42	MA4751							1.1p☑	0.0		25 ☑			1.0			
43	PA0200D	60G						1.1p	0.0	.40 - 2.8Ø	5.5	6.0	10G		.15	Si	F3a☑
44	KA602D	50GØ						1.1p†	6.0	1.0-1.3Ø	30				500m§☑	#$	F58a
45	MA450C							1.1p	6.0		6.0	4.0	10G			Si	P3a
46	MA460C							1.1p	6.0		6.0	4.0	10G			Si	P3a
47	PA0106H,J	100G	120G					1.1p	6.0	1.0 - 1.25Ø	6.0	☑	10G		.20	Si	F27d
48	PA0706H,J	100G	120G					1.1p	6.0	1.0 - 1.25Ø	6.0	☑	10G		.20	Si	F9
49♦	DVE6951D							1.2p%§		1.5-1.0	45 ☑	7.0kØ	50M			GA	F143
50♦	DVE6952D							1.2p%§		1.5-1.0	45 ☑	7.0kØ	50M			GA	F59S
51♦	DVE6953D							1.2p%§		1.5-1.0	45 ☑	7.0kØ	50M			GA	F102f
52	DVE6954D							1.2p%§		1.5-1.0	45 ☑	7.0kØ	50M			GA	F112
53♦	DVE6955D							1.2p%§		1.5-1.0	45 ☑	7.0kØ	50M			GA	F94a
54	DVE6956D							1.2p§%		1.5-1.0	45 ☑	7.0kØ	50M			GA	†
55	S4019	200G						1.2p☑		1.50-.33Ø	25 ☑	15 Ø	20G		600m	GA$♦	F121c
56♦	DVE4550D							1.2pΔ	0.0	1.0-1.5Ø	25 ☑	10k	50M			GA	†
57♦	DVE4551D							1.2pΔ	0.0	1.0-1.5Ø	25 ☑	10k	50M			GA	F143
58♦	DVE4552D							1.2pΔ	0.0	1.0-1.5Ø	25 ☑	10k	50M			GA	F59s
59♦	DVE4555D							1.2pΔ	0.0	1.0-1.5Ø	25 ☑	10k	50M			GA	F94a
60	DVE4575D							1.2pΔ	0.0	1.0-1.5Ø	25 ☑	5.5k	50M			GA	F102f
61♦	DVE4576D							1.2pΔ	0.0	1.0-1.5Ø	25 ☑	10k	50M			GA	F112
62	MA4534	50G						1.2p☑	0.0		3.0					Si§	F21
63	MA4540	50G						1.2p☑	0.0		3.0					Si§	F9
64	MA4547	50G						1.2p☑	0.0		3.0					Si§	F3aΔ
65	MA4551	175G						1.2p	0.0		5.5					Si	F21
66♦	MA46601D							1.2p	0.0	1.0-1.49Ø†;10%Δ	30 ☑	4.0k	50M			GA	V7 †
67♦	MA46601E							1.2p	0.0	1.0-1.49Ø†;10%Δ	30 ☑	5.0k	50M			GA	V7 †
68♦	MA46601F							1.2p	0.0	1.0-1.49Ø†;10%Δ	30 ☑	6.0k	50M			GA	V7 †
69♦	MA46601G							1.2p	0.0	1.0-1.49Ø†;10%Δ	30 ☑	7.0k	50M			GA	V7 †
70♦	MA46611D							1.2p	0.0	1.0-1.49Ø†;10%Δ	45 ☑	4.0k	50M			GA	V7 †
71♦	MA46611E							1.2p	0.0	1.0-1.49Ø†;10%Δ	45 ☑	5.0k	50M			GA	V7 †
72♦	MA46611F							1.2p	0.0	1.0-1.49Ø†;10%Δ	45 ☑	6.0k	50M			GA	V7 †
73♦	MA46611G							1.2p	0.0	1.0-1.49Ø†;10%Δ	45 ☑	7.0k	50M			GA	V7 †
74♦	MA46621D							1.2p	0.0	1.0-1.49†;10% Δ	60 ☑	4.0k	50M			GA	V7 †
75♦	MA46621E							1.2p	0.0	1.0-1.49†;10% Δ	60 ☑	5.0k	50M			GA	V7 †
76♦	MA46621F							1.2p	0.0	1.0-1.49†;10% Δ	60 ☑	6.0k	50M			GA	V7 †
77	PA0200E,F-H,J	70G	80G	90G	100G	120G		1.2p	0.0	.40 - 2.0Ø	5.5				.15	Si	F3a☑
78	SD11A18							1.2p	0.0	1.2 - 2.4	18			4.5		Si$	P3
79	SD11B120							1.2p	0.0	1.2 - 2.4	120			9.0		Si$	P3
80	SD12A18							1.2p	0.0	1.2 - 2.4	18			4.5		Si$	F3a
81	SD12B120							1.2p	0.0	1.2 - 2.4	120			9.0		Si$	F3a
82	SD22A18							1.2p	0.0	1.2 - 2.4	18			4.5		Si$	F11
83	SD22B120							1.2p	0.0	1.2 - 2.4	120			9.0		Si$	F11
84	SD32A18							1.2p	0.0	1.2 - 2.4	18			4.5		Si$	F21
85	SD32B120							1.2p	0.0	1.2 - 2.4	120			9.0		Si$	F21
86	SD42A18							1.2p	0.0	1.2 - 2.4	18			4.5		Si$	F9a
87	SD42B120							1.2p	0.0	1.2 - 2.4	120			9.0		Si$	F9a
88	SDGPA18							1.2p	0.0	1.2 - 2.4	18			4.5		Si$	DO7
89	SDGPB120							1.2p	0.0	1.2 - 2.4	120			9.0		Si$	DO7
90	CVH2030-05							1.2p	4.0	4.5;0.0-30$;10/	30 ☑	4.6k	50M			Si$§	u30
91	CVH2045-05							1.2p	4.0	6.1;0.0-45$;10%	45 ☑	2.6k	50M			Si$§	u30
92	CVH2060-05							1.2p	4.0	7.5;0.0-60$;10%	60 ☑	2.1k	50M			Si$§	u30
93	CVH2090-05							1.2p	4.0	8.7;0.0-90$;10%	90 ☑	900	50M			Si$§	u30
94	DT302							1.2p§	4.0	3.5;0.0V-30V$	30 ☑	3600 Ø	50M			Si	V1
95	DT602							1.2p§	4.0	5.0;0.0V-60V$	60 ☑	1500 Ø	50M			Si	V1
96	DT902							1.2p§	4.0	6.2;0.0V-90V$	90 ☑	950 Ø	50M			Si	V1
97	DT4502							1.2p§	4.0	4.5;0.0V-45V$	45 ☑	2300 Ø	50M			Si	V1
98♦	DVH6730-05							1.2p§	4.0	3-8;0.0-30$;10%	30 ☑	4.6k	50M			Si$§	A90a
99♦	DVH6731-05	230G						1.2p†	4.0	3.8;0.0V-30V$;10%	30 ☑	4.6k	50M			Si$§	F143
100	DVH6732-05	230G						1.2p†	4.0	3.8;0.0V-30V$;10%	30 ☑	4.6k	50M			Si$§	F56ad
101	DVH6733-05	230G						1.2p†	4.0	3.8;0.0V-30V$;10%	30 ☑	4.6k	50M			Si$§	F59u
102	DVH6734-05	230G						1.2p†	4.0	3.8;0.0V-30V$;10%	30 ☑	4.6k	50M			Si$§	M929
103♦	DVH6740-05							1.2p§	4.0	4.3;0.0-45$;10%	45 ☑	2.6k	50M			Si$§	A90a
104♦	DVH6741-05	130G						1.2p†	4.0	4.3;0.0V-45V$;10%	45 ☑	2.6k	50M			Si$§	F143
105	DVH6742-05	130G						1.2p†	4.0	4.3;0.0V-45V$;10%	45 ☑	2.6k	50M			Si$§	F56ad
106	DVH6743-05	130G						1.2p†	4.0	4.3;0.0V-45V$;10%	45 ☑	2.6k	50M			Si$§	F59u
107	DVH6744-05	130G						1.2p†	4.0	4.3;0.0V-45V$;10%	45 ☑	2.6k	50M			Si$§	M929
108♦	DVH6760-05							1.2p§	4.0	4.6;0.0-60$;10%	60 ☑	2.1k	50M			Si$§	A90a
109♦	DVH6761-05	105G						1.2p†	4.0	4.6;0.0V-60V$;10%	60 ☑	2.1k	50M			Si$§	F143
110	DVH6762-05	105G						1.2p†	4.0	4.6;0.0V-60V$;10%	60 ☑	2.1k	50M			Si$§	F56ad

6. VOLTAGE VARIABLE CAPACITORS & VARACTOR DIODES

IN ORDER OF (1) TYPICAL CAPACITANCE, (2) TEST VOLTAGE, and (3) TYPE No.

LINE No.	[3] TYPE No.	MINIMUM CUTOFF FREQUENCY (Corresponding to Type Numbers in previous column) (Hz)	(Hz)	(Hz)	(Hz)	(Hz)	(Hz)	TYP. CAP. [1] CAP. Cj (F)	[2] at TEST VOLT (V)	CAPACITANCE RANGE (for V = 0 to PIV) Ø - at TEST VOLT. (pF)	PIV (V)	Q FACTOR MIN. Q	at TEST FREQ (Hz)	MAX. SER. RES. Rs (Ω)	MAX. DISS. @ 25°C (W)	DESCRIPTION MAT.	DWG. No.
1	DVH6763-05	105G						1.2p†	4.0	4.6;0.0V-60V$;10%	60 Ø	2.1k	50M			Si$§	F59u
2	DVH6764-05	105G						1.2p†	4.0	4.6;0.0V-60V$;10%	60 Ø	2.1k	50M			Si$§	M929
3♦	DVH6790-05							1.2p§	4.0	5.2;0.0-90$;10%	90 Ø	900	50M			Si$§	A90a
4♦	DVH6791-05	45G						1.2p†	4.0	5.2;0.0V-90V$;10%	90 Ø	900	50M			Si$§	F143
5	DVH6792-05	45G						1.2p†	4.0	5.2;0.0V-90V$;10%	90 Ø	900	50M			Si$§	F56ad
6	DVH6793-05	45G						1.2p†	4.0	5.2;0.0V-90V$;10%	90 Ø	900	50M			Si$§	F59u
7	DVH6794-05	45G						1.2p†	4.0	5.2;0.0V-90V$;10%	90 Ø	900	50M			Si$§	M929
8	E1712A							1.2p†	4.0	.70-1.7	30	1.5k	50M		4.0		F10k
9	EP1712A							1.2p†	4.0	.70-1.7	30	1.5k	50M		4.0		F27ac
10	GC1502							1.2p†Δ	4.0	3.4;0.0V-30V$	30	3.6k	50M			Si	F111b†
11	GC1502A							1.2p†Δ	4.0	3.4;0.0V-30V$	30	3.6k	50M			Si	F59q
12	GC1502B							1.2p†Δ	4.0	3.4;0.0V-30V$	30	3.6k	50M			Si	F27ah
13	GC1502D							1.2p†Δ	4.0	3.4;0.0V-30V$	30	3.6k	50M			Si	F56q
14	GC1502E							1.2p†Δ	4.0	3.4;0.0V-30V$	30	3.6k	50M			Si	F59j
15	GC1502H							1.2p†Δ	4.0	3.4;0.0V-30V$	30	3.6k	50M			Si	S428b
16	GC1602							1.2p†Δ	4.0	4.5;0.0V-45V$	45	2.0k	50M			Si	F111b†
17	GC1602A							1.2p†Δ	4.0	4.5;0.0V-45V$	45	2.0k	50M			Si	F59q
18	GC1602B							1.2p†Δ	4.0	4.5;0.0V-45V$	45	2.0k	50M			Si	F27ah
19	GC1602D							1.2p†Δ	4.0	4.5;0.0V-45V$	45	2.0k	50M			Si	F56q
20	GC1602E							1.2p†Δ	4.0	4.5;0.0V-45V$	45	2.0k	50M			Si	F59j
21	GC1602H							1.2p†Δ	4.0	4.5;0.0V-45V$	45	2.0k	50M			Si	S428b
22	GC1702	60G						1.2p§	4.0	5.0;0.0V-60V$	60 Ø	1.2k	50M				F111b†
23	GC1702A							1.2p†Δ	4.0	5.0;0.0V-60V$	60	1.2k	50M			Si	F59q
24	GC1702B							1.2p†Δ	4.0	5.0;0.0V-60V$	60	1.2k	50M			Si	F27ah
25	GC1702D							1.2p†Δ	4.0	5.0;0.0V-60V$	60	1.2k	50M			Si	F56q
26	GC1702E							1.2p†Δ	4.0	5.0;0.0V-60V$	60	1.2k	50M			Si	F59j
27	GC1702H							1.2p†Δ	4.0	5.0;0.0V-60V$	60	1.2k	50M			Si	S428b
28	GC51109	400G						1.2p†Δ	4.0	2.2-.81;10%	15	400	1.0G			GAΔ§	F111b†
29	GC51309	320G						1.2p†Δ	4.0	2.2-.65;10%	30	320	1.0G			GAΔ§	F111b†
30	GC51409	290G						1.2p†Δ	4.0	2.2-.58;10%	45	290	1.0G			GAΔ§	F111b†
31	GC51609	250G						1.2p†Δ	4.0	2.2-.52;10%	60	250	1.0G			GAΔ§	F111b†
32	HA1702A							1.2p†Δ	4.0	5.0;0.0V-30V$	30	1.2k	50M			Si	F59q
33	HA1702B							1.2p†Δ	4.0	5.0;0.0V-30V$	30	1.2k	50M			Si	F27ah
34	HA1702D							1.2p†Δ	4.0	5.0;0.0V-30V$	30	1.2k	50M			Si	F56q
35	HA1702E							1.2p†Δ	4.0	5.0;0.0V-30V$	30	1.2k	50M			Si	F59j
36	HA1702H							1.2p†Δ	4.0	5.0;0.0V-30V$	30	1.2k	50M			Si	S428b
37▼	MA4H021							1.2p†	4	0.5-0.7	25	3.8k	50M			Si	V25
38▼	MA4H021C							1.2p	4.0	0.38-0.48	25	4.4k	50M		1.0	Si	V25
39	MA45062							1.2p†Δ	4.0	3.6;0.0V-25V$	35 Ø	3.0k	50M			Si§	F27f
40	MA45102							1.2p†Δ	4.0	4.5;0.0V-45V$	55 Ø	2.5k	50M			Si$	F27f
41	MA45122							1.2p†Δ	4.0	5.0;0.0V-60V$	75 Ø	2.0k	50M			Si$	F27f
42	MA45142							1.2p†Δ	4.0	5.7;0.0V-90V$	100 Ø	1.5k	50M			Si$	F27f
43	MA45229							1.2pΔ	4.0	3.2;0V-25V$	25	4.8k	50M			Si$§	V11†
44	MA45229C							1.2pΔ	4.0	4.5;0V-25V$	25	4.8k	50M			Si$§	u17†
45	MA45249							1.2pΔ	4.0	4.2;0V-45V$	45	3.5k	50M			Si$§	V11†
46	MA45249C							1.2pΔ	4.0	6.2;0V-45V$	45	3.5k	50M			Si$§	u17†
47	MA45263							1.2pΔ	4.0	5.2;0V-60V$	60	2.0k	50M			Si$§	V11†
48	MA45263C							1.2pΔ	4.0	7.5;0V-60V$	60	2.0k	50M			Si$§	u17†
49	MA45291							1.2pΔ	4.0	6.5;0V-90V$	90	1.2k	50M			Si$§	V11†
50	MA45291C							1.2pΔ	4.0	9.0;0V-90V$	90	1.2k	50M			Si$§	u17†
51	MA46542C							1.2p	4.0	1.49-1.0Ø	15	1.5k	50M			GA	V7†
52	MA46542D							1.2p	4.0	1.49-1.0Ø	15	2.0k	50M			GA	V7†
53	MA46542E							1.2p	4.0	1.49-1.0Ø	15	3.0k	50M			GA	V7†
54	MA46552C							1.2p	4.0	1.49-1.00Ø	22	1.5k	50M			GA	V7†
55	MA46562C							1.2p	4.0	1.49-1.0	15	1.5k	50M			GA	V7†
56	MA46562D							1.2p	4.0	1.49-1.0	15	2.0k	50M			GA	V7†
57	MA46562E							1.2p	4.0	1.49-1.0	15	3.0k	50M			GA	V7†
58	MA46572C							1.2p	4.0	1.49-1.0Ø	22	1.5k	50M			GA	V7†
59	MA46572D							1.2p	4.0	1.49-1.0Ø	22	2.0k	50M			GA	V7†
60	MA46572E							1.2p	4.0	1.49-1.0Ø	22	3.0k	50M			GA	V7†
61	MAH6552D							1.2p	4.0	1.49-1.0Ø	22	2.0k	50M			GA	V7††
62	MAH6552E							1.2p	4.0	1.49-1.0Ø	22	3.0k	50M			GA	V7†
63	ML4313							1.2p†	4.0	3.7$ 0-25V	25 †	1.8k	50M			Si	F111a†
64	ML4333							1.2p†	4.0	4.3$ 0-45V	45 †	1.4k	50M			Si	F111a†
65	ML4353							1.2p†	4.0	4.5$ 0-60V	60 †	1.5k	50M			Si	F111a†
66	ML4373							1.2p†	4.0	5.1$ 0-90V	90 †	700	50M			Si	F111a†
67	VKTA311H							1.2p	4.0	3.3;0.0V-30V$	30 $	3000	50M			Si	F129
68	VKTA411H							1.2p	4.0	4.5;0.0V-60V$	60 $	1500	50M			Si	F129
69	VNA311H							1.2p	4.0	3.3;0.0V-30V$	30 $	3000	50M			Si	F136
70	VNA411H							1.2p	4.0	4.5;0.0V-60V$	60 $	1500	50M			Si	F136
71	VSA311H							1.2p	4.0	3.3;0.0V-30V$	30 $	3000	50M			Si	F128
72	VSA411H							1.2p	4.0	4.5;0.0V-60V$	60 $	1500	50M			Si	F128
73	VTA311H							1.2p	4.0	3.3;0.0V-30V$	30 $	3000	50M			Si	F130
74	VTA411H							1.2p	4.0	4.5;0.0V-60V$	60 $	1500	50M			Si	F130
75	VYA311H							1.2p	4.0	3.3;0.0V-30V$	30 $	3000	50M			Si	F135
76	VYA411H							1.2p	4.0	4.5;0.0V-60V$	60 $	1500	50M			Si	F135
77	MA4083							1.2p	6.0	.80 - 1.6	48						F49
78	MA4084							1.2p	6.0	.80 - 1.6	48						F27d
79	MA4282							1.2p	6.0		30			20		Si	F3a
80	MA4341B,1,2	30G	70G	100G				1.2p	6.0	.80 - 1.6	6.0				.30	Si	F3a
81	MA4361	175G						1.2p	6.0								
82	MA4382							1.2p	6.0								
83	MA44051							1.2p	6.0	800f-1.6pØ	80 Ø				8.3 Ø	Si§Δ	F98a
84	SV55B	40G						1.2p	6.0	0.8p-1.6pØ					1.5	Si$#	F27a
85	BBY34A							1.2p†	-4	2.0$		500	50M			Si	F134
86	MA44030	150M						1.2pØ	-12	700f-1.2Ø	80 Ø				8.3 Ø	Si§Δ	S429
87	GC1803							1.3p	4.0	4.2-.42	90	800	50M			Si	F111b†
88	DC4302A							1.3p†	4.5			6.0 Ø	10G			GA	F121a
89	DC4302B							1.3p†	4.5			6.0 Ø	10G			GA	F121a
90	DC4372A							1.3p†	4.5			6.0	10G			GA	u7d
91	DC4372B							1.3p†	4.5			6.0	10G			GA	u7d
92	MA43005							1.3pØ§	10	.65-1.3Ø	30 Ø				3.5 Ø	Si$Δ	F56b
93	MA43007							1.3pØ§	10	.80-1.3Ø	18 Ø				1.3 Ø	Si$Δ	F56
94	SD11B24							1.4p	0.0	1.4 - 2.8	24			9.0		Si$	P3
95	SD12B24							1.4p	0.0	1.4 - 2.8	24			9.0		Si$	F3a
96	SD22B24							1.4p	0.0	1.4 - 2.8	24			9.0		Si$	F11
97	SD32B24							1.4p	0.0	1.4 - 2.8	24			9.0		Si$	F21
98	SD42B24							1.4p	0.0	1.4 - 2.8	24			9.0		Si$	F9a
99	SDGPB24							1.4p	0.0	1.4 - 2.8	24			9.0		Si$	DO7
100	KA602G	40GØ						1.4p†	6.0	1.2-1.7Ø	45				700m§Ø	#$	F58a
101	MA44050							1.4p	6.0	1.2-1.6Ø	100 Ø				10 Ø	Si§Δ	F115
102	MA44058							1.4p	6.0	1.2-1.6Ø	100 Ø				10 Ø	Si§Δ	S356a
103	PL0192-1,2,3,4		5.0G	10G	15G	20G		1.5p		1.0-2.0Ø	200 Ø		Ø 10G			Si$	F27as
104	SV66B8							1.5p		1.0p-2.0pØ				5.0 Ø	10	Si$#	F153
105	CXY23B							1.5p	0.0	1.2-1.8	12 Ø			2.0		GA	F27av
106	MA4372C							1.5pØ	0.0		10 Ø						
107	MA4373C							1.5pØ	0.0		24 Ø						
108	MA4374C							1.5pØ	0.0		48 Ø						
109	MA4375C							1.5pØ	0.0		90 Ø						
110	MA4754							1.5pØ	0.0		20 Ø			800m			

SYMBOLS AND CODES EXPLAINED IN INTERPRETER

6. VOLTAGE VARIABLE CAPACITORS & VARACTOR DIODES

IN ORDER OF (1) TYPICAL CAPACITANCE, (2) TEST VOLTAGE, and (3) TYPE No.

LINE No.	TYPE No.	MINIMUM CUTOFF FREQUENCY (Corresponding to Type Numbers in previous column) (Hz)	(Hz)	(Hz)	(Hz)	(Hz)	(Hz)	TYP. CAP. 1 CAP. Cj (F)	2 at TEST VOLT (V)	CAPACITANCE RANGE (for V = 0 to PIV) Ø - at TEST VOLT. (pF)	PIV (V)	Q FACTOR MIN. Q	at TEST FREQ (Hz)	MAX. SER. RES. Rs (Ω)	MAX. DISS. @ 25°C (W)	DESCRIPTION MAT.	DWG. No.
1	PFV101-01							1.5p	0.0	2.1;0.0V-15V$	15 ☑	5.0k	50M			GAΔ$	F27as
2	PFV101-05							1.5p	0.0	2.1;0.0V-15V$	15 ☑	5.0k	50M			GAΔ$	F10af
3	PFV101-21							1.5p	0.0	2.1;0.0V-15V$	15 ☑	5.0k	50M			GAΔ$	M86e
4	PFV101-31							1.5p	0.0	2.1;0.0V-15V$	15 ☑	5.0k	50M			GAΔ$	F10ah
5	PFV101-45							1.5p	0.0	2.1;0.0V-15V$	15 ☑	5.0k	50M			GAΔ$	F54c
6	PFV106-01							1.5p	0.0	2.2;0.0V-25V$	25 ☑	4.6k	50M			GAΔ$	F27as
7	PFV106-05							1.5p	0.0	2.2;0.0V-25V$	25 ☑	4.6k	50M			GAΔ$	F10af
8	PFV106-21							1.5p	0.0	2.2;0.0V-25V$	25 ☑	4.6k	50M			GAΔ$	M86e
9	PFV106-31							1.5p	0.0	2.2;0.0V-25V$	25 ☑	4.6k	50M			GAΔ$	F10ah
10	PFV106-45							1.5p	0.0	2.2;0.0V-25V$	25 ☑	4.6k	50M			GAΔ$	F54c
11	PFV111-01							1.5p	0.0	2.3;0.0V-30V$	30 ☑	4.5k	50M			GAΔ$	F27as
12	PFV111-05							1.5p	0.0	2.3;0.0V-30V$	30 ☑	4.5k	50M			GAΔ$	F10af
13	PFV111-21							1.5p	0.0	2.3;0.0V-30V$	30 ☑	4.5k	50M			GAΔ$	M86e
14	PFV111-31							1.5p	0.0	2.3;0.0V-30V$	30 ☑	4.5k	50M			GAΔ$	F10ah
15	PFV111-45							1.5p	0.0	2.3;0.0V-30V$	30 ☑	4.5k	50M			GAΔ$	F54c
16	PFV116-01							1.5p	0.0	2.5;0.0V-45V$	45 ☑	4.0k	50M			GAΔ$	F27as
17	PFV116-05							1.5p	0.0	2.5;0.0V-45V$	45 ☑	4.0k	50M			GAΔ$	F10af
18	PFV116-21							1.5p	0.0	2.5;0.0V-45V$	45 ☑	4.0k	50M			GAΔ$	M86e
19	PFV116-31							1.5p	0.0	2.5;0.0V-45V$	45 ☑	4.0k	50M			GAΔ$	F10ah
20	PFV116-45							1.5p	0.0	2.5;0.0V-45V$	45 ☑	4.0k	50M			GAΔ$	F54c
21	PFV121-01							1.5p	0.0	2.6;0.0V-60V$	60 ☑	3.0k	50M			GAΔ$	F27as
22	PFV121-05							1.5p	0.0	2.6;0.0V-60V$	60 ☑	3.0k	50M			GAΔ$	F10af
23	PFV121-21							1.5p	0.0	2.6;0.0V-60V$	60 ☑	3.0k	50M			GAΔ$	M86e
24	PFV121-31							1.5p	0.0	2.6;0.0V-60V$	60 ☑	3.0k	50M			GAΔ$	F10ah
25	PFV121-45							1.5p	0.0	2.6;0.0V-60V$	60 ☑	3.0k	50M			GAΔ$	F54c
26	PSV101-01							1.5p	0.0	3.0;0.0V-30V$	30 ☑	3.0k	50M			Si§	F27as
27	PSV101-05							1.5p	0.0	3.0;0.0V-30V$	30 ☑	3.0k	50M			Si§	F10af
28	PSV101-08							1.5p	0.0	3.0;0.0V-30V$	30 ☑	3.0k	50M			Si§	A1vd
29	PSV101-14							1.5p	0.0	3.0;0.0V-30V$	30 ☑	3.0k	50M			Si§	A2u
30	PSV101-16							1.5p	0.0	3.0;0.0V-30V$	30 ☑	3.0k	50M			Si§	A1st
31	PSV101-21							1.5p	0.0	3.0;0.0V-30V$	30 ☑	3.0k	50M			Si§	M86e
32	PSV101-31							1.5p	0.0	3.0;0.0V-30V$	30 ☑	3.0k	50M			Si§	F10ah
33	PSV101-45							1.5p	0.0	3.0;0.0V-30V$	30 ☑	3.0k	50M			Si§	F54c
34	PSV106-01							1.5p	0.0	3.25;0.0V-45V$	45 ☑	2.5k	50M			Si§	F27as
35	PSV106-05							1.5p	0.0	3.25;0.0V-45V$	45 ☑	2.5k	50M			Si§	F10af
36	PSV106-08							1.5p	0.0	3.25;0.0V-45V$	45 ☑	2.5k	50M			Si§	A1vd
37	PSV106-14							1.5p	0.0	3.25;0.0V-45V$	45 ☑	2.5k	50M			Si§	A2u
38	PSV106-16							1.5p	0.0	3.25;0.0V-45V$	45 ☑	2.5k	50M			Si§	A1st
39	PSV106-21							1.5p	0.0	3.25;0.0V-45V$	45 ☑	2.5k	50M			Si§	M86e
40	PSV106-31							1.5p	0.0	3.25;0.0V-45V$	45 ☑	2.5k	50M			Si§	F10ah
41	PSV106-45							1.5p	0.0	3.25;0.0V-45V$	45 ☑	2.5k	50M			Si§	F54c
42	PSV118-01							1.5p	0.0	4.0;0.0V-60V$	60 ☑	2.0k	50M			Si§	F27as
43	PSV118-05							1.5p	0.0	4.0;0.0V-60V$	60 ☑	2.0k	50M			Si§	F10af
44	PSV118-08							1.5p	0.0	4.0;0.0V-60V$	60 ☑	2.0k	50M			Si§	A1vd
45	PSV118-14							1.5p	0.0	4.0;0.0V-60V$	60 ☑	2.0k	50M			Si§	A2u
46	PSV118-16							1.5p	0.0	4.0;0.0V-60V$	60 ☑	2.0k	50M			Si§	A1st
47	PSV118-21							1.5p	0.0	4.0;0.0V-60V$	60 ☑	2.0k	50M			Si§	M86e
48	PSV118-31							1.5p	0.0	4.0;0.0V-60V$	60 ☑	2.0k	50M			Si§	F10ah
49	PSV118-45							1.5p	0.0	4.0;0.0V-60V$	60 ☑	2.0k	50M			Si§	F54c
50	S3076	60G						1.5p	0.0	5.0;0-30Ø$	30 ☑	☑	10G	2.0	1.0	Si$#	F121
51	CVH2030-07							1.5p	4.0	4.5;0.0-30$;10%	30 ☑	4.4k	50M			Si$§	u30
52	CVH2045-07							1.5p	4.0	6.1;0.0-45$;10%	45 ☑	2.4k	50M			Si$§	u30
53	CVH2060-07							1.5p	4.0	7.5;0.0-60$;10%	60 ☑	2.0k	50M			Si$§	u30
54	CVH2090-07							1.5p	4.0	8.7;0.0-90$;10%	90 ☑	900	50M			Si$§	u30a
55♦	DKV6550B							1.5p	4.0	1.35-1.65Ø	22 ☑	500	50M		250m	Si	F143
56	DT303							1.5p§	4.0	3.6;0.0V-30V$	30 ☑	3600 Ø	50M			Si	V1
57	DT603							1.5p§	4.0	5.2;0.0V-60V$	60 ☑	1500 Ø	50M			Si	V1
58	DT903							1.5p§	4.0	6.8;0.0V-90V$	90 ☑	950 Ø	50M			Si	V1
59	DT4503							1.5p§	4.0	4.7;0.0V-45V$	45 ☑	2300 Ø	50M			Si	V1
60♦	DVH6730-07							1.5p§	4.0	4.0;0.0-30$;10%	30 ☑	4.4k	50M			Si$§	A90a
61♦	DVH6731-07	220G						1.5p†	4.0	4.0;0.0V-30V$;10%	30 ☑	4.4k	50M			Si$§	F143
62	DVH6732-07	220G						1.5p†	4.0	4.0;0.0V-30V$;10%	30 ☑	4.4k	50M			Si$§	F56ad
63	DVH6733-07	220G						1.5p†	4.0	4.0;0.0V-30V$;10%	30 ☑	4.4k	50M			Si$§	F59u
64	DVH6734-07	220G						1.5p†	4.0	4.0;0.0V-30V$;10%	30 ☑	4.4k	50M			Si$§	M929
65♦	DVH6740-07							1.5p§	4.0	4.6;0.0-45$;10%	45 ☑	2.4k	50M			Si$§	A90a
66♦	DVH6741-07	120G						1.5p†	4.0	4.6;0.0V-45V$;10%	45 ☑	2.4k	50M			Si$§	F143
67	DVH6742-07	120G						1.5p†	4.0	4.6;0.0V-45V$;10%	45 ☑	2.4k	50M			Si$§	F56ad
68	DVH6743-07	120G						1.5p†	4.0	4.6;0.0V-45V$;10%	45 ☑	2.4k	50M			Si$§	F59u
69	DVH6744-07	120G						1.5p†	4.0	4.6;0.0V-45V$;10%	45 ☑	2.4k	50M			Si$§	M929
70♦	DVH6760-07							1.5p§	4.0	5.1;0.0-60$;10%	60 ☑	2.0k	50M			Si$§	A90a
71♦	DVH6761-07	100G						1.5p†	4.0	5.1;0.0V-60V$;10%	60 ☑	2.0k	50M			Si$§	F143
72	DVH6762-07	100G						1.5p†	4.0	5.1;0.0V-60V$;10%	60 ☑	2.0k	50M			Si$§	F56ad
73	DVH6763-07	100G						1.5p†	4.0	5.1;0.0V-60V$;10%	60 ☑	2.0k	50M			Si$§	F59u
74	DVH6764-07	100G						1.5p†	4.0	5.1;0.0V-60V$;10%	60 ☑	2.0k	50M			Si$§	M929
75♦	DVH6790-07							1.5p§	4.0	5.7;0.0-90$;10%	90 ☑	900	50M			Si$§	A90a
76♦	DVH6791-07	45G						1.5p†	4.0	5.7;0.0V-90V$;10%	90 ☑	900	50M			Si$§	F143
77	DVH6792-07	45G						1.5p†	4.0	5.7;0.0V-90V$;10%	90 ☑	900	50M			Si$§	F56ad
78	DVH6793-07	45G						1.5p†	4.0	5.7;0.0V-90V$;10%	90 ☑	900	50M			Si$§	F59u
79	DVH6794-07	45G						1.5p†	4.0	5.7;0.0V-90V$;10%	90 ☑	900	50M			Si$§	M929
80	E701	60G						1.5p	4.0	3.3;1.0V-50V$	60	1.2k	50M			Si	F27az
81	GC1503							1.5pt△	4.0	3.5;0.0V-30V$	30	3.4k	50M			Si	F111bt
82	GC1503A							1.5pt△	4.0	3.5;0.0V-30V$	30	3.4k	50M			Si	F59q
83	GC1503B							1.5pt△	4.0	3.5;0.0V-30V$	30	3.4k	50M			Si	F27ah
84	GC1503D							1.5pt△	4.0	3.5;0.0V-30V$	30	3.4k	50M			Si	F56q
85	GC1503E							1.5pt△	4.0	3.5;0.0V-30V$	30	3.4k	50M			Si	F59j
86	GC1503H							1.5pt△	4.0	3.5;0.0V-30V$	30	3.4k	50M			Si	S428b
87	GC1603							1.5pt△	4.0	4.8;0.0V-45V$	45	2.0k	50M			Si	F111bt
88	GC1603A							1.5pt△	4.0	4.8;0.0V-45V$	45	2.0k	50M			Si	F59q
89	GC1603B							1.5pt△	4.0	4.8;0.0V-45V$	45	2.0k	50M			Si	F27ah
90	GC1603D							1.5pt△	4.0	4.8;0.0V-45V$	45	2.0k	50M			Si	F56q
91	GC1603E							1.5pt△	4.0	4.8;0.0V-45V$	45	2.0k	50M			Si	F59j
92	GC1603H							1.5pt△	4.0	4.8;0.0V-45V$	45	2.0k	50M			Si	S428b
93	GC1703	60G						1.5p§	4.0	5.3;0.0V-60V$	60 ☑	1.2k	50M				F111bt
94	GC1703A							1.5pt△	4.0	5.3;0.0V-60V$	60	1.2k	50M			Si	F59q
95	GC1703B							1.5pt△	4.0	5.3;0.0V-60V$	60	1.2k	50M			Si	F27ah
96	GC1703D							1.5pt△	4.0	5.3;0.0V-60V$	60	1.2k	50M			Si	F56q
97	GC1703E							1.5pt△	4.0	5.3;0.0V-60V$	60	1.2k	50M			Si	F59j
98	GC1703H							1.5pt△	4.0	5.3;0.0V-60V$	60	1.2k	50M			Si	S428b
99	GC1804							1.5p	4.0	4.6-.46	90	750	50M			Si	F111bt
100	GC51110	370G						1.5pt△	4.0	2.7-.96;10%	15	370	1.0G			GAΔ§	F111bt
101	GC51310	300G						1.5pt△	4.0	2.7-.77;10%	30	300	1.0G			GAΔ§	F111bt
102	GC51410	260G						1.5pt△	4.0	2.7-.66;10%	45	260	1.0G			GAΔ§	F111bt
103	GC51610	230G						1.5pt△	4.0	2.7-.61;10%	60	230	1.0G			GAΔ§	F111bt
104	HA1703A							1.5pt△	4.0	5.3;0.0V-30V$	30	1.2k	50M			Si	F59q
105	HA1703B							1.5pt△	4.0	5.3;0.0V-30V$	30	1.2k	50M			Si	F27ah
106	HA1703D							1.5pt△	4.0	5.3;0.0V-30V$	30	1.2k	50M			Si	F56q
107	HA1703E							1.5pt△	4.0	5.3;0.0V-30V$	30	1.2k	50M			Si	F59j
108	HA1703H							1.5pt△	4.0	5.3;0.0V-30V$	30	1.2k	50M			Si	S428b
109▼	MA4H002							1.5pt	4	0.5-0.8	20	3.3k	50M			Si	V25
110▼	MA4H022							1.5pt	4	0.6-0.8	25	3.6k	50M			Si	V25

SYMBOLS AND CODES EXPLAINED IN INTERPRETER

6. VOLTAGE VARIABLE CAPACITORS & VARACTOR DIODES

IN ORDER OF (1) TYPICAL CAPACITANCE, (2) TEST VOLTAGE, and (3) TYPE No.

LINE No.	3 TYPE No.	MINIMUM CUTOFF FREQUENCY (Corresponding to Type Numbers in previous column)						TYP. CAP. 1 CAP. Cj (F)	2 at TEST VOLT (V)	CAPACITANCE RANGE (for V = 0 to PIV) Ø - at TEST VOLT. (pF)	PIV (V)	Q FACTOR MIN. Q	at TEST FREQ (Hz)	MAX. SER. RES. Rs (Ω)	MAX. DISS. @ 25°C (W)	DESCRIPTION MAT.	DWG. No.
		(Hz)	(Hz)	(Hz)	(Hz)	(Hz)	(Hz)										
1▼	MA4H022C							1.5p	4.0	0.47-0.60	25	4.2k	50M		1.0	Si	V25
2	MA45230							1.5pΔ	4.0	3.3;0V-25V$	25	4.5k	50M			Si§§	V11†
3	MA45230C							1.5pΔ	4.0	4.5;0V-25V$	25	4.5k	50M			Si§§	u17†
4	MA45250							1.5pΔ	4.0	4.4;0V-45V$	45	3.3k	50M			Si§§	V11†
5	MA45250C							1.5pΔ	4.0	6.2;0V-45V$	45	3.3k	50M			Si§§	u17†
6	MA45264							1.5pΔ	4.0	5.6;0V-60V$	60	1.8k	50M			Si§§	V11†
7	MA45264C							1.5pΔ	4.0	7.5;0V-60V$	60	1.8k	50M			Si§§	u17†
8	MA45292							1.5pΔ	4.0	7.0;0V-90V$	90	1.1k	50M			Si§§	V11†
9	MA45292C							1.5pΔ	4.0	9.0;0V-90V$	90	1.1k	50M			Si§§	u17†
10	MC1							1.5p	4.0		60 †	10	50M			Si	A1au
11	MC201							1.5p	4.0		60	25	50M			Si	A1au
12	MC301Ø							1.5p	4.0		60	50	50M			Si	A1au
13	MC401							1.5p	4.0	5.0;1.0V-60V$	60 †	100	50M			Si	A1au
14	MC601							1.5p	4.0	1.20-1.80Ø	60	250	50M			Si	A1au
15	MMC601							1.5p	4.0	1.20-1.80Ø	60	500	50M			Si	A1au
16	VVC773,A,B,C,D							1.5p%	4.0	3.2;4.0V-60V$	60	10	50M		400m§	Si	DO7†
17	VVC774,A,B,C,D							1.5p%	4.0	3.2;4.0V-60V$	60	25	50M		400m§	Si	DO7†
18	VVC775,A,B,C,D							1.5p%	4.0	3.2;4.0V-60V$	60	50	50M		400m§	Si	DO7†
19	VVC776,A,B,C,D							1.5p%	4.0	3.2;4.0V-60V$	60	100	50M		400m§	Si	DO7†
20	BXY28	80G						1.5p	6.0	1.0 - 10	45			.90 Ø	3.5	Si#$	F27h
21	MA450B							1.5p	6.0		6.0	3.0	10G			Si	P3aΔ
22	MA460B							1.5p	6.0		6.0	3.0	10G			Si	P3Δ
23	MA4764							1.5p	6.0	1.0 - 2.0Ø	40				2.0	Si	F27f
24	MA44140	170M						1.5pØ	6.0	500f-1.5Ø	45 Ø				1.7 Ø	Si§Δ	F115
25	MA44240	170M						1.5pØ	6.0	500f-1.5pØ	45 Ø				1.7 Ø	Si§Δ	F115
26	MD701	60G						1.5p	6.0	1.1-1.9Ø	60	20	3.0G		1.0 Ø	Si	F27g
27	MD701Y	60G						1.5p	6.0	1.1-1.9Ø	60	20	3.0G		1.0 Ø	Si	u13a
28	MD706	60G						1.5p	6.0	1.1-1.9Ø	45	20	3.0G		1.0 Ø	Si	F27g
29	MD706Y	60G						1.5p	6.0	1.1-1.9Ø	45	20	3.0G		1.0 Ø	Si	u13a
30	MD712	80G						1.5p	6.0	1.1-1.9Ø	25	26	3.0G		1.0 Ø	Si	F27g
31	MD712Y	80G						1.5p	6.0	1.1-1.9Ø	25	26	3.0G		1.0 Ø	Si	u13a
32	P024010C,D,E,F	20G	40G	60G	80G			1.5p	6.0	1.0 - 2.0Ø	24				.90	Si	F27ad
33	P090010A,B,C,D	5G	10G	20G	40G			1.5p	6.0	1.0 - 2.0Ø	90				2.0	Si	F27ad
34	PH1202-1,2,3,4		5.0G	10G	15G	20G		1.5p	6.0	1.0 - 2.0Ø	6.0	Ø	10G			Si$	F58
35	PH1202A,B-F	30G	40G	50G	60G	70G	80G	1.5p	6.0	1.0-2.0Ø	6.0	Ø	10G			Si$	F58
36	PH1202G,H,J-L	90G	100G	120G	140G	160G		1.5p	6.0	1.0-2.0Ø	6.0	Ø	10G			Si$	F58
37	PH1202N	180G						1.5p	6.0	1.0-2.0Ø	6.0	Ø	10G			Si$	F58
38	PH1212-1,2,3,4		5.0G	10G	15G	20G		1.5p	6.0	1.0 - 2.0Ø	15	Ø	10G			Si$	F58
39	PH1212A,B-F	30G	40G	50G	60G	70G	80G	1.5p	6.0	1.0-2.0Ø	15	Ø	10G			Si$	F58
40	PH1212G,H,J-L	90G	100G	120G	140G	160G		1.5p	6.0	1.0-2.0Ø	15	Ø	10G			Si$	F58
41	PH1212N	180G						1.5p	6.0	1.0-2.0Ø	15	Ø	10G			Si$	F58
42	PH1222-1,2,3,4		5.0G	10G	15G	20G		1.5p	6.0	1.0 - 2.0Ø	24	Ø	10G			Si$	F58
43	PH1222A,B-F	30G	40G	50G	60G	70G	80G	1.5p	6.0	1.0-2.0Ø	24	Ø	10G			Si$	F58
44	PH1222G,H,J	90G	100G	120G				1.5p	6.0	1.0-2.0Ø	24	Ø	10G			Si$	F58
45	PH1232-1,2,3,4		5.0G	10G	15G	20G		1.5p	6.0	1.0 - 2.0Ø	30	Ø	10G			Si$	F58
46	PH1232A,B-F	30G	40G	50G	60G	70G	80G	1.5p	6.0	1.0-2.0Ø	30	Ø	10G			Si$	F58
47	PH1232G,H	90G	100G					1.5p	6.0	1.0-2.0Ø	30	Ø	10G			Si$	F58
48	PH1242-1,2,3,4		5.0G	10G	15G	20G		1.5p	6.0	1.0 - 2.0Ø	45	Ø	10G			Si$	F58
49	PH1242A,B-F	30G	40G	50G	60G	70G	80G	1.5p	6.0	1.0-2.0Ø	45	Ø	10G			Si$	F58
50	PH1242G,H	90G	100G					1.5p	6.0	1.0-2.0Ø	45	Ø	10G			Si$	F58
51	PH1252-1,2,3,4		5.0G	10G	15G	20G		1.5p	6.0	1.0 - 2.0Ø	60	Ø	10G			Si$	F58
52	PH1252A,B-F	30G	40G	50G	60G	70G	80G	1.5p	6.0	1.0-2.0Ø	60	Ø	10G			Si$	F58
53	PH1252G	90G						1.5p	6.0	1.0-2.0Ø	60	Ø	10G			Si$	F58
54	PH1262-1,2,3,4		5.0G	10G	15G	20G		1.5p	6.0	1.0 - 2.0Ø	90	Ø	10G			Si$	F58
55	PH1262A,B-E	30G	40G	50G	60G	70G		1.5p	6.0	1.0-2.0Ø	90	Ø	10G			Si$	F58
56	PH1272-1,2,3,4		5.0G	10G	15G	20G		1.5p	6.0	1.0-2.0Ø	120	Ø	10G			Si$	F58
57	PH1272A,B-D	30G	40G	50G	60G			1.5p	6.0	1.0-2.0Ø	120	Ø	10G			Si$	F58
58	PH1282-1,2,3,4		5.0G	10G	15G	20G		1.5p	6.0	1.0 - 2.0Ø	150	Ø	10G			Si$	F58
59	PH1282A,B	30G	40G					1.5p	6.0	1.0-2.0Ø	150	Ø	10G			Si$	F58
60	PH1292-1,2,3,4		5.0G	10G	15G	20G		1.5p	6.0	1.0 - 2.0Ø	200	Ø	10G			Si$	F58
61	PL0102-1,2,3,4		5.0G	10G	15G	20G		1.5p	6.0	1.0 - 2.0Ø	6.0	Ø	10G			Si	F27d
62	PL0102A,B-F	30G	40G	50G	60G	70G	80G	1.5p	6.0	1.0-2.0Ø	6.0	Ø	10G			Si	F27d
63	PL0102G,H,J-L	90G	100G	120G	140G	160G		1.5p	6.0	1.0-2.0Ø	6.0	Ø	10G			Si	F27d
64	PL0102N	180G						1.5p	6.0	1.0-2.0Ø	6.0	Ø	10G			Si	F27d
65	PL0112-1,2,3,4		5.0G	10G	15G	20G		1.5p	6.0	1.0 - 2.0Ø	15	Ø	10G			Si	F27d
66	PL0112A,B-F	30G	40G	50G	60G	70G	80G	1.5p	6.0	1.0-2.0Ø	15	Ø	10G			Si	F27d
67	PL0112G,H,J-L	90G	100G	120G	140G	160G		1.5p	6.0	1.0-2.0Ø	15	Ø	10G			Si	F27d
68	PL0112N	180G						1.5p	6.0	1.0-2.0Ø	15	Ø	10G			Si	F27d
69	PL0122-1,2,3,4		5.0G	10G	15G	20G		1.5p	6.0	1.0 - 2.0Ø	24	Ø	10G			Si	F27d
70	PL0122A,B-F	30G	40G	50G	60G	70G	80G	1.5p	6.0	1.0-2.0Ø	24	Ø	10G			Si	F27d
71	PL0122G,H,J	90G	100G	120G				1.5p	6.0	1.0-2.0Ø	24	Ø	10G			Si	F27d
72	PL0132-1,2,3,4		5.0G	10G	15G	20G		1.5p	6.0	1.0 - 2.0Ø	30	Ø	10G			Si	F27d
73	PL0132A,B-F	30G	40G	50G	60G	70G	80G	1.5p	6.0	1.0-2.0Ø	30	Ø	10G			Si	F27d
74	PL0132G,H	90G	100G					1.5p	6.0	1.0-2.0Ø	30	Ø	10G			Si	F27d
75	PL0142-1,2,3,4		5.0G	10G	15G	20G		1.5p	6.0	1.0 - 2.0Ø	45	Ø	10G			Si	F27d
76	PL0142A,B-F	30G	40G	50G	60G	70G	80G	1.5p	6.0	1.0-2.0Ø	45	Ø	10G			Si	F27d
77	PL0142G,H	90G	100G					1.5p	6.0	1.0-2.0Ø	45	Ø	10G			Si	F27d
78	PL0152-1,2,3,4		5.0G	10G	15G	20G		1.5p	6.0	1.0 - 2.0Ø	60	Ø	10G			Si	F27d
79	PL0152A,B-F	30G	40G	50G	60G	70G	80G	1.5p	6.0	1.0-2.0Ø	60	Ø	10G			Si	F27d
80	PL0152G	90G						1.5p	6.0	1.0-2.0Ø	60	Ø	10G			Si	F27d
81	PL0162-1,2,3,4		5.0G	10G	15G	20G		1.5p	6.0	1.0 - 2.0Ø	90	Ø	10G			Si	F27d
82	PL0162A,B-E	30G	40G	50G	60G	70G		1.5p	6.0	1.0-2.0Ø	90	Ø	10G			Si	F27d
83	PL0172-1,2,3,4		5.0G	10G	15G	20G		1.5p	6.0	1.0 - 2.0Ø	120	Ø	10G			Si	F27d
84	PL0172A,B-D	30G	40G	50G	60G			1.5p	6.0	1.0-2.0Ø	120	Ø	10G			Si	F27d
85	PL0182-1,2,3,4		5.0G	10G	15G	20G		1.5p	6.0	1.0 - 2.0Ø	150	Ø	10G			Si	F27d
86	PL0182A,B	30G	40G					1.5p	6.0	1.0-2.0Ø	150	Ø	10G			Si	F27d
87	PL0502-1,2,3,4		5.0G	10G	15G	20G		1.5p	6.0	1.0 - 2.0Ø	6.0	Ø	10G			Si	F10p
88	PL0502A,B-F	30G	40G	50G	60G	70G	80G	1.5p	6.0	1.0-2.0Ø	6.0	Ø	10G			Si	F10p
89	PL0502G,H,J-L	90G	100G	120G	140G	160G		1.5p	6.0	1.0-2.0Ø	6.0	Ø	10G			Si	F10p
90	PL0502N	180G						1.5p	6.0	1.0-2.0Ø	6.0	Ø	10G			Si	F10p
91	PL0512-1,2,3,4		5.0G	10G	15G	20G		1.5p	6.0	1.0 - 2.0Ø	15	Ø	10G			Si	F10p
92	PL0512A,B-F	30G	40G	50G	60G	70G	80G	1.5p	6.0	1.0-2.0Ø	15	Ø	10G			Si	F10p
93	PL0512G,H,J-L	90G	100G	120G	140G	160G		1.5p	6.0	1.0-2.0Ø	15	Ø	10G			Si	F10p
94	PL0512N	180G						1.5p	6.0	1.0-2.0Ø	15	Ø	10G			Si	F10p
95	PL0522-1,2,3,4		5.0G	10G	15G	20G		1.5p	6.0	1.0 - 2.0Ø	24	Ø	10G			Si	F10p
96	PL0522A,B-F	30G	40G	50G	60G	70G	80G	1.5p	6.0	1.0-2.0Ø	24	Ø	10G			Si	F10p
97	PL0522G,H,J	90G	100G	120G				1.5p	6.0	1.0-2.0Ø	24	Ø	10G			Si	F10p
98	PL0532-1,2,3,4		5.0G	10G	15G	20G		1.5p	6.0	1.0 - 2.0Ø	30	Ø	10G			Si	F10p
99	PL0532A,B-F	30G	40G	50G	60G	70G	80G	1.5p	6.0	1.0-2.0Ø	30	Ø	10G			Si	F10p
100	PL0532G,H	90G	100G					1.5p	6.0	1.0-2.0Ø	30	Ø	10G			Si	F10p
101	PL0542-1,2,3,4		5.0G	10G	15G	20G		1.5p	6.0	1.0 - 2.0Ø	45	Ø	10G			Si	F10p
102	PL0542A,B-F	30G	40G	50G	60G	70G	80G	1.5p	6.0	1.0-2.0Ø	45	Ø	10G			Si	F10p
103	PL0542G,H	90G	100G					1.5p	6.0	1.0-2.0Ø	45	Ø	10G			Si	F10p
104	PL0552-1,2,3,4		5.0G	10G	15G	20G		1.5p	6.0	1.0 - 2.0Ø	60	Ø	10G			Si	F10p
105	PL0552A,B-F	30G	40G	50G	60G	70G	80G	1.5p	6.0	1.0-2.0Ø	60	Ø	10G			Si	F10p
106	PL0552G	90G						1.5p	6.0	1.0-2.0Ø	60	Ø	10G			Si	F10p
107	PL0562-1,2,3,4		5.0G	10G	15G	20G		1.5p	6.0	1.0 - 2.0Ø	90	Ø	10G			Si	F10p
108	PL0562A,B-E	30G	40G	50G	60G	70G		1.5p	6.0	1.0-2.0Ø	90	Ø	10G			Si	F10p
109	PL0572-1,2,3,4		5.0G	10G	15G	20G		1.5p	6.0	1.0 - 2.0Ø	120	Ø	10G			Si	F10p
110	PL0572A,B-D	30G	40G	50G	60G			1.5p	6.0	1.0-2.0Ø	120	Ø	10G			Si	F10p

6. VOLTAGE VARIABLE CAPACITORS & VARACTOR DIODES

IN ORDER OF (1) TYPICAL CAPACITANCE, (2) TEST VOLTAGE, and (3) TYPE No.

LINE No.	3 TYPE No.	MINIMUM CUTOFF FREQUENCY (Corresponding to Type Numbers in previous column) (Hz)	(Hz)	(Hz)	(Hz)	(Hz)	(Hz)	TYP. CAP. 1 CAP. Cj (F)	2 at TEST VOLT (V)	CAPACITANCE RANGE (for V = 0 to PIV) Ø - at TEST VOLT. (pF)	PIV (V)	Q FACTOR MIN. Q	at TEST FREQ (Hz)	MAX. SER. RES. Rs (Ω)	MAX. DISS. @ 25°C (W)	DESCRIPTION MAT.	DWG. No.
1	PL0582-1,2,3,4		5.0G	10G	15G	20G		1.5p	6.0	1.0 - 2.0Ø	150	Ø	10G			Si	F10p
2	PL0582A,B	30G	40G					1.5p	6.0	1.0-2.0Ø	150	Ø	10G			Si	F10p
3	PL0592-1,2,3,4		5.0G	10G	15G	20G		1.5p	6.0	1.0 - 2.0Ø	200	Ø	10G			Si	F10p
4	SV56B	30G						1.5p	6.0	1.0p-2.0pØ					1.5	Si$#	F27a
5	SV66B							1.5p	6.0	1.0p-2.0pØ				5.0 Ø	10	Si$#	F153
6	VJSE74W							1.5p†	6.0	1.0-2.0Ø	80 Ø					SiX	F132
7	VKTE44W	250G						1.5p	6.0	1.0-2.0Ø	30 Ø					Si	F129
8	VKTE54W	200G						1.5p	6.0	1.0-2.0Ø	48 Ø					Si	F129
9	VSE44W	250G						1.5p	6.0	1.0-2.0Ø	30 Ø					Si	F128
10	VSE54W	200G						1.5p	6.0	1.0-2.0Ø	48 Ø					Si	F128
11	VSSE74W							1.5p†	6.0	1.0-2.0Ø	80 Ø					SiX	F134
12	VTE44W	250G						1.5p	6.0	1.0-2.0Ø	30 Ø					Si	F130
13	VTE54W	200G						1.5p	6.0	1.0-2.0Ø	48 Ø					Si	F130
14	VUE44W	250G						1.5p	6.0	1.0-2.0Ø	30 Ø					Si	F133
15	VUE54W	200G						1.5p	6.0	1.0-2.0Ø	48 Ø					Si	F133
16	VWE44W	250G						1.5p	6.0	1.0-2.0Ø	30 Ø					Si	F131
17	VWE54W	200G						1.5p	6.0	1.0-2.0Ø	48 Ø					Si	F131
18	VXE44W	250G						1.5p	6.0	1.0-2.0Ø	30 Ø					Si	S167
19	VXE54W	200G						1.5p	6.0	1.0-2.0Ø	48 Ø					Si	S167
20	VXSE74W							1.5p†	6.0	1.0-2.0Ø	80 Ø					SiX	S167
21	MS312-8							1.5p†	30	2.6;0.0V-30V$	30 Ø	5.0k	50M			GA♦$	F27as
22	MS312-8A							1.5p†	30	2.6;0.0V-30V$	30 Ø	5.0k	50M			GA♦$	F56y
23	MS312-21							1.5p†	30	2.6;0.0V-30V$	30 Ø	5.0k	50M			GA♦$	F59m
24	MS312-21A							1.5p†	30	2.6;0.0V-30V$	30 Ø	5.0k	50m			GA♦$	M892
25	MS332-8							1.5p†	60	3.0;0.0V-60V$	60 Ø	3.5k	50M			GA♦$	F27as
26	MS332-8A							1.5p†	60	3.0;0.0V-60V$	60 Ø	3.5k	50M			GA♦$	F56y
27	MS332-21							1.5p†	60	3.0;0.0V-60V$	60 Ø	3.5k	50M			GA♦$	F59m
28	MS332-21A							1.5p†	60	3.0;0.0V-60V$	60 Ø	3.5k	50m			GA♦$	M892
29	BBY32DA							1.6p			60	1500	50M			Si	F139
30	MA4752							1.6pØ	0.0		25 Ø			800m			
31	SD11B6							1.6p	0.0	1.6 - 3.2	6.0			2.6		Si	P3
32	SD12B6							1.6p	0.0	1.6 - 3.2	6.0			2.6		Si	F3a
33	SD22B6							1.6p	0.0	1.6 - 3.2	6.0			2.6		Si	F11
34	SD32B6							1.6p	0.0	1.6 - 3.2	6.0			2.6		Si	F21
35	SD42B6							1.6p	0.0	1.6 - 3.2	6.0			2.6		Si	F9a
36	SDGPB6							1.6p	0.0	1.6 - 3.2	6.0			2.6		Si	DO7
37	BXY38	120G						1.6p	6.0		50						F27h
38	BXY38B	120G						1.6p	6.0	1.2 - 2.0Ø	50					Si#	F47b
39	BXY38C	120G						1.6p	6.0	1.2 - 2.0Ø	50					Si#	F48h
40	BXY38D	120G						1.6p	6.0	1.2 - 2.0Ø	50					Si#	S268f
41	BXY38E	120G						1.6p	6.0	1.2 - 2.0Ø	50					Si#	F56p
42	MA4283	10G						1.6p	6.0		30			14		Si	F3a
43	MA4383	10G						1.6p	6.0		30			14		Si	A31e
44	MA44020	130M						1.6pØ	-12	1.2-1.6Ø	100 Ø				10 Ø	Si§Δ	S429
45♦	DVE4550E							1.7pΔ	0.0	1.5-2.0Ø	25 Ø	7.5k	50M			GA	†
46♦	DVE4551E							1.7pΔ	0.0	1.5-2.0Ø	25 Ø	7.5k	50M			GA	F143
47♦	DVE4552E							1.7pΔ	0.0	1.5-2.0Ø	25 Ø	7.5k	50M			GA	F59s
48♦	DVE4555E							1.7pΔ	0.0	1.5-2.0Ø	25 Ø	7.5k	50M			GA	F94a
49	DVE4575E							1.7pΔ	0.0	1.5-2.0Ø	25 Ø	5.2k	50M			GA	F102f
50♦	DVE4576E							1.7pΔ	0.0	1.5-2.0Ø	25 Ø	7.5k	50M			GA	F112
51♦	MA46602D							1.7p	0.0	1.50-1.99Ø†;10%Δ	30 Ø	4.0k	50M			GA	V7 †
52♦	MA46602E							1.7p	0.0	1.50-1.99Ø†;10%Δ	30 Ø	5.0k	50M			GA	V7 †
53♦	MA46602F							1.7p	0.0	1.50-1.99Ø†;10%Δ	30 Ø	6.0k	50M			GA	V7 †
54♦	MA46612D							1.7p	0.0	1.5-1.99Ø†;10%Δ	45 Ø	4.0k	50M			GA	V7 †
55♦	MA46612E							1.7p	0.0	1.5-1.99Ø†;10%Δ	45 Ø	5.0k	50M			GA	V7 †
56♦	MA46612F							1.7p	0.0	1.5-1.99Ø†;10%Δ	45 Ø	6.0k	50M			GA	V7 †
57♦	MA46622D							1.7p	0.0	1.5-1.99Ø†;10%Δ	60 Ø	4.0k	50M			GA	V7 †
58♦	MA46622E							1.7p	0.0	1.5-1.99Ø†;10%Δ	60 Ø	5.0k	50M			GA	V7 †
59	VKTA312H							1.7p	4.0	3.5;0.0V-30V$	30 $	3000	50M			Si	F129
60	VKTA412H							1.7p	4.0	5.0;0.0V-60V$	60 $	1500	50M			Si	F129
61	VNA312H							1.7p	4.0	3.5;0.0V-30V$	30 $	3000	50M			Si	F136
62	VNA412H							1.7p	4.0	5.0;0.0V-60V$	60 $	1500	50M			Si	F136
63	VSA312H							1.7p	4.0	3.5;0.0V-30V$	30 $	3000	50M			Si	F128
64	VSA412H							1.7p	4.0	5.0;0.0V-60V$	60 $	1500	50M			Si	F128
65	VTA312H							1.7p	4.0	3.5;0.0V-30V$	30 $	3000	50M			Si	F130
66	VTA412H							1.7p	4.0	5.0;0.0V-60V$	60 $	1500	50M			Si	F130
67	VYA312H							1.7p	4.0	3.5;0.0V-30V$	30 $	3000	50M			Si	F135
68	VYA412H							1.7p	4.0	5.0;0.0V-60V$	60 $	1500	50M			Si	F135
69	BBY34B							1.7p†	-4	2.5$		500	50M			Si	F134
70	1SS103							1.7p	15		35			.60			
71♦	DVE6951E							1.8p%§		2.0-1.5	45 Ø	6.0kØ	50M			GA	F143
72♦	DVE6952E							1.8p%§		2.0-1.5	45 Ø	6.0kØ	50M			GA	F59S
73♦	DVE6953E							1.8p%§		2.0-1.5	45 Ø	6.0kØ	50M			GA	F102f
74	DVE6954E							1.8p%§		2.0-1.5	45 Ø	6.0kØ	50M			GA	F112
75♦	DVE6955E							1.8p%§		2.0-1.5	45 Ø	6.0kØ	50M			GA	F94a
76	DVE6956E							1.8p§%		2.0-1.5	45 Ø	6.0kØ	50M			GA	†
77	SD11B48							1.8p	0.0	1.8 - 3.6	48			4.5		Si	P3
78	SD12B48							1.8p	0.0	1.8 - 3.6	48			4.5		Si	F3a
79	SD22B48							1.8p	0.0	1.8 - 3.6	48			4.5		Si	F11
80	SD32B48							1.8p	0.0	1.8 - 3.6	48			4.5		Si	F21
81	SD42B48							1.8p	0.0	1.8 - 3.6	48			4.5		Si	F9a
82	SDGPB48							1.8p	0.0	1.8 - 3.6	48			4.5		Si	DO7
83	CVH2030-08							1.8p	4.0	4.5;0.0-30$;10%	30 Ø	4.2k	50M			Si$§	u30
84	CVH2045-08							1.8p	4.0	6.1;0.0-45$;10%	45 Ø	2.3k	50M			Si$§	u30
85	CVH2060-08							1.8p	4.0	7.5;0.0-60$;10%	60 Ø	2.0k	50M			Si$§	u30
86	CVH2090-08							1.8p	4.0	8.7;0.0-90$;10%	90 Ø	850	50M			Si$§	u30a
87	DT304							1.8p§	4.0	3.6;0.0V-30V$	30 Ø	3600 Ø	50M			Si	V1
88	DT604							1.8p§	4.0	5.4;0.0V-60V$	60 Ø	1400 Ø	50M			Si	V1
89	DT904							1.8p§	4.0	7.2;0.0V-90V$	90 Ø	900 Ø	50M			Si	V1
90	DT4504							1.8p§	4.0	4.8;0.0V-45V$	45 Ø	2300 Ø	50M			Si	V1
91♦	DVH6730-08							1.8p§	4.0	4.1;0.0-30$;10%	30 Ø	4.2k	50M			Si$§	A90a
92♦	DVH6731-08	210G						1.8p†	4.0	4.1;0.0V-30V$;10%	30 Ø	4.2k	50M			Si$§	F143
93	DVH6732-08	210G						1.8p†	4.0	4.1;0.0V-30V$;10%	30 Ø	4.2k	50M			Si$§	F56ad
94	DVH6733-08	210G						1.8p†	4.0	4.1;0.0V-30V$;10%	30 Ø	4.2k	50M			Si$§	F59u
95	DVH6734-08	210G						1.8p†	4.0	4.1;0.0V-30V$;10%	30 Ø	4.2k	50M			Si$§	M929
96♦	DVH6740-08							1.8p§	4.0	4.9;0.0-45$;10%	45 Ø	2.3k	50M			Si$§	A90a
97♦	DVH6741-08	115G						1.8p†	4.0	4.9;0.0V-45V$;10%	45 Ø	2.3k	50M			Si$§	F143
98	DVH6742-08	115G						1.8p†	4.0	4.9;0.0V-45V$;10%	45 Ø	2.3k	50M			Si$§	F56ad
99	DVH6743-08	115G						1.8p†	4.0	4.9;0.0V-45V$;10%	45 Ø	2.3k	50M			Si$§	F59u
100	DVH6744-08	115G						1.8p†	4.0	4.9;0.0V-45V$;10%	45 Ø	2.3k	50M			Si$§	M929
101♦	DVH6760-08							1.8p§	4.0	5.4;0.0-60$;10%	60 Ø	2.0k	50M			Si$§	A90a
102♦	DVH6761-08	100G						1.8p†	4.0	5.4;0.0V-60V$;10%	60 Ø	2.0k	50M			Si$§	F143
103	DVH6762-08	100G						1.8p†	4.0	5.4;0.0V-60V$;10%	60 Ø	2.0k	50M			Si$§	F56ad
104	DVH6763-08	100G						1.8p†	4.0	5.4;0.0V-60V$;10%	60 Ø	2.0k	50M			Si$§	F59u
105	DVH6764-08	100G						1.8p†	4.0	5.4;0.0V-60V$;10%	60 Ø	2.0k	50M			Si$§	M929
106♦	DVH6790-08							1.8p§	4.0	6.2;0.0-90$;10%	90 Ø	900	50M			Si$§	A90a
107♦	DVH6791-08	45G						1.8p†	4.0	6.2;0.0V-90V$;10%	90 Ø	900	50M			Si$§	F143
108	DVH6792-08	45G						1.8p†	4.0	6.2;0.0V-90V$;10%	90 Ø	900	50M			Si$§	F56ad
109	DVH6793-08	45G						1.8p†	4.0	6.2;0.0V-90V$;10%	90 Ø	900	50M			Si$§	F59u
110	DVH6794-08	45G						1.8p†	4.0	6.2;0.0V-90V$;10%	90 Ø	900	50M			Si$§	M929

6. VOLTAGE VARIABLE CAPACITORS & VARACTOR DIODES

IN ORDER OF (1) TYPICAL CAPACITANCE, (2) TEST VOLTAGE, and (3) TYPE No.

LINE No.	3 TYPE No.	MINIMUM CUTOFF FREQUENCY (Corresponding to Type Numbers in previous column) (Hz)	(Hz)	(Hz)	(Hz)	(Hz)	(Hz)	TYP. CAP. 1 CAP. Cj (F)	2 at TEST VOLT (V)	CAPACITANCE RANGE (for V = 0 to PIV) Ø - at TEST VOLT. (pF)	PIV (V)	Q FACTOR MIN. Q	at TEST FREQ (Hz)	MAX. SER. RES. Rs (Ω)	MAX. DISS. @ 25°C (W)	DESCRIPTION MAT.	DWG. No.
1	GC1504							1.8p†Δ	4.0	3.5;0.0V-30V$	30	3.3k	50M			Si	F111b†
2	GC1504A							1.8p†Δ	4.0	3.5;0.0V-30V$	30	3.3k	50M			Si	F59q
3	GC1504B							1.8p†Δ	4.0	3.5;0.0V-30V$	30	3.3k	50M			Si	F27ah
4	GC1504D							1.8p†Δ	4.0	3.5;0.0V-30V$	30	3.3k	50M			Si	F56q
5	GC1504E							1.8p†Δ	4.0	3.5;0.0V-30V$	30	3.3k	50M			Si	F59j
6	GC1504H							1.8p†Δ	4.0	3.5;0.0V-30V$	30	3.3k	50M			Si	S428b
7	GC1604							1.8p†Δ	4.0	4.9;0.0V-45V$	45	2.0k	50M			Si	F111b†
8	GC1604A							1.8p†Δ	4.0	4.9;0.0V-45V$	45	2.0k	50M			Si	F59q
9	GC1604B							1.8p†Δ	4.0	4.9;0.0V-45V$	45	2.0k	50M			Si	F27ah
10	GC1604D							1.8p†Δ	4.0	4.9;0.0V-45V$	45	2.0k	50M			Si	F56q
11	GC1604E							1.8p†Δ	4.0	4.9;0.0V-45V$	45	2.0k	50M			Si	F59j
12	GC1604H							1.8p†Δ	4.0	4.9;0.0V-45V$	45	2.0k	50M			Si	S428b
13	GC1704	60G						1.8p§	4.0	5.5;0.0V-60V$	60 Ø	1.2k	50M				F111b†
14	GC1704A							1.8p†Δ	4.0	5.5;0.0V-60V$	60	1.2k	50M			Si	F59q
15	GC1704B							1.8p†Δ	4.0	5.5;0.0V-60V$	60	1.2k	50M			Si	F27ah
16	GC1704D							1.8p†Δ	4.0	5.5;0.0V-60V$	60	1.2k	50M			Si	F56q
17	GC1704E							1.8p†Δ	4.0	5.5;0.0V-60V$	60	1.2k	50M			Si	F59j
18	GC1704H							1.8p†Δ	4.0	5.5;0.0V-60V$	60	1.2k	50M			Si	S428b
19	GC1754							1.8p†Δ	4.0	5.0;0.0V-60V$;10%	60	1.2k	50M		250m	Si	A1ah
20	GC1754B							1.8p†Δ	4.0	5.0;0.0V-60V$;5%	60	1.2k	50M		250m	Si	A1ah
21	GC1754C							1.8p†Δ	4.0	5.0;0.0V-60V$;2%	60	1.2k	50M		250m	Si	A1ah
22	GC51111	360G						1.8p†Δ	4.0	3.3-1.14;10%	15	360	1.0G			GAΔ§	F111b†
23	GC51311	290G						1.8p†Δ	4.0	3.3-.89;10%	30	290	1.0G			GAΔ§	F111b†
24	GC51411	240G						1.8p†Δ	4.0	3.3-.79;10%	45	240	1.0G			GAΔ§	F111b†
25	GC51611	220G						1.8p†Δ	4.0	3.3-.72;10%	60	220	1.0G			GAΔ§	F111b†
26	HA1704A							1.8p†Δ	4.0	5.5;0.0V-30V$	30	1.2k	50M			Si	F59q
27	HA1704B							1.8p†Δ	4.0	5.5;0.0V-30V$	30	1.2k	50M			Si	F27ah
28	HA1704D							1.8p†Δ	4.0	5.5;0.0V-30V$	30	1.2k	50M			Si	F56q
29	HA1704E							1.8p†Δ	4.0	5.5;0.0V-30V$	30	1.2k	50M			Si	F59j
30	HA1704H							1.8p†Δ	4.0	5.5;0.0V-30V$	30	1.2k	50M			Si	S428b
31▼	MA4H003							1.8p†	4	0.7-1.0	20	3.1k	50M			Si	V25
32▼	MA4H023							1.8p†	4.0	0.7-0.9	25	3.5k	50M		1.0	Si	V25
33▼	MA4H023C							1.8p	4.0	0.58-0.72	25	4.0k	50M		1.0	Si	V25
34	MA45063							1.8p†Δ	4.0	3.8;0.0V-25V$	35 Ø	3.0k	50M			Si§	F27f
35	MA45103							1.8p†Δ	4.0	4.9;0.0V-45V$	55 Ø	2.5k	50M			Si$	F27f
36	MA45123							1.8p†Δ	4.0	5.5;0.0V-60V$	75 Ø	2.0k	50M			Si$	F27f
37	MA45143							1.8p†Δ	4.0	6.6;0.0V-90V$	100 Ø	1.5k	50M			Si$	F27f
38	MA45231							1.8pΔ	4.0	3.5;0V-25V$	25	4.0k	50M			Si$§	V11†
39	MA45231C							1.8pΔ	4.0	4.5;0V-25V$	25	4.0k	50M			Si$§	u17†
40	MA45251							1.8pΔ	4.0	4.6;0V-45V$	45	3.0k	50M			Si$§	V11†
41	MA45251C							1.8pΔ	4.0	6.2;0V-45V$	45	3.0k	50M			Si$§	u17†
42	MA45265							1.8pΔ	4.0	5.9;0V-60V$	60	1.8k	50M			Si$§	V11†
43	MA45265C							1.8pΔ	4.0	7.5;0V-60V$	60	1.8k	50M			Si$§	u17†
44	MA45293							1.8pΔ	4.0	7.3;0V-90V$	90	1.0k	50M			Si$§	V11†
45	MA45293C							1.8pΔ	4.0	9.0;0V-90V$	90	1.0k	50M			Si$§	u17†
46	ML4314							1.8p†	4.0	4.1$0-25V	25 †	1.8k	50M			Si	F111a†
47	ML4334							1.8p†	4.0	5.0$ 0-45V	45 †	1.2k	50M			Si	F111a†
48	ML4354							1.8p†	4.0	5.5$ 0-60V	60 †	1.0k	50M			Si	F111a†
49	ML4374							1.8p†	4.0	6.2$ 0-90V	90 †	600	50M			Si	F111a†
50	SQ1213A,B,C							1.8pΔ†	4.0	2.7;2V-30V$	30	1.5k	50M		400m	Si	A1ah
51	SQ1263A,B,C							1.8p§%	4.0		30 Ø	750	50M		250m	Si#$	A1ah
52	MA4256							1.8p	6.0	1.2-2.5	6.0	5.0	10G			SiΔ	F9
53	MA4956C	100G						1.8p	6.0	1.2-2.5Ø	60				2.5	Si$	F49a
54	MA4956E	100G						1.8p	6.0	1.2-2.5Ø	60				2.5	Si$	F27r
55	MA4956F	100G						1.8p	6.0	1.2-2.5Ø	60				2.5	Si$	S215a
56▼	BB105G	1.0M						1.8pØ	25	1.8-17.5	30			1.2		Si	A342
57♦	BB405G							1.8pØ	25	1.8-15.5	30			1.2		Si	DO34
58	BBY32DB							1.9p			60	1400	50M			Si	F139
59	SD11B60							1.9p	0.0	1.92-3.8	60					Si	P3
60	SD12B60							1.9p	0.0	1.92-3.8	60			4.5		Si	F3a
61	SD22B60							1.9p	0.0	1.92-3.8	60			4.5		Si	F11
62	SD32B60							1.9p	0.0	1.92-3.8	60			4.5		Si	F21
63	SD42B60							1.9p	0.0	1.92-3.8	60			4.5		Si	F9a
64	SDGPB60							1.9p	0.0	1.92-3.8	60			4.5		Si	DO7
65	GC1805							1.9p	4.0	5.0-.50	90	750	50M			Si	F111b†
66	1N5155A							1.9p	6.0	1.71-2.09Ø	35 Ø				8.7	Si	F27e
67	1S362,3	70G	90G					2.0pØ			5.0				200m	Si§	F3a
68	BBY33DA2	8.0G						2.0p			30	3500	50M			Si	F151
69	1N3770	140G						2.0pØ	0.0		5.5					Si	F9
70	CXY23C							2.0p	0.0	1.6-2.5	12 Ø			1.5		GA	F27av
71	MA4253							2.0p	0.0		5.5		120G			Si§	F9
72	MA4254							2.0p	0.0		5.5		100G			Si§	F9
73	MA4296	120G						2.0p	0.0			10	120G			Si	P3
74	MA4297	120G						2.0p	0.0							Si	F3a
75	MA4298	140G						2.0p	0.0			10	150G			Si	P3
76	MA4552							2.0p	0.0		5.5	14	10G			Si§	F21
77	MA4553							2.0p	0.0		5.5	12	10G			Si§	F21
78	MA4554							2.0p	0.0		5.5	10	10G			Si§	F21
79	MA4555							2.0p	0.0		5.5	6.0	10G			Si§	F21
80	MA4753							2.0pØ	0.0		25 Ø			800m			
81	SD11-1	10G						2.0p	0.0	2.0 - 16	6.0	1.0	10G		.30	Si	P3
82	SD11-2	20G						2.0p	0.0	2.0 - 4.0	6.0	2.0	10G		.30	Si	P3
83	SD11B12							2.0p	0.0	2.0 - 4.0	12			2.6		Si	P3
84	SD11C90							2.0p	0.0	2.0 - 4.0	90			4.5		Si	P3
85	SD11C100							2.0p	0.0	2.0 - 4.0	100			4.5		Si	P3
86	SD12-1	10G						2.0p	0.0	2.0 - 16	6.0	1.0	10G		.30	Si	F3a
87	SD12-2	20G						2.0p	0.0	2.0 - 4.0	6.0	2.0	10G		.30	Si	F3a
88	SD12B12							2.0p	0.0	2.0 - 4.0	12			2.6		Si	F3a
89	SD12C90							2.0p	0.0	2.0 - 4.0	90			4.5		Si	F3a
90	SD12C100							2.0p	0.0	2.0 - 4.0	100			4.5		Si	F3a
91	SD22-1	10G						2.0p	0.0	2.0 - 16	6.0	1.0	10G		.30	Si	F11
92	SD22-2	20G						2.0p	0.0	2.0 - 4.0	6.0	2.0	10G		.30	Si	F11
93	SD22B12							2.0p	0.0	2.0 - 4.0	12			2.6		Si	F11
94	SD22C90							2.0p	0.0	2.0 - 4.0	90			4.5		Si	F11
95	SD22C100							2.0p	0.0	2.0 - 4.0	100			4.5		Si	F11
96	SD32-1	10G						2.0p	0.0	2.0 - 16	6.0	1.0	10G		.30	Si	F21
97	SD32-2	20G						2.0p	0.0	2.0 - 4.0	6.0	2.0	10G		.30	Si	F21
98	SD32B12							2.0p	0.0	2.0 - 4.0	12			2.6		Si	F21
99	SD32C90							2.0p	0.0	2.0 - 4.0	90			4.5		Si	F21
100	SD32C100							2.0p	0.0	2.0 - 4.0	100			4.5		Si	F21
101	SD42-1	10G						2.0p	0.0	2.0 - 16	6.0	1.1	10G		.30	Si	F9a
102	SD42-2	20G						2.0p	0.0	2.0 - 4.0	6.0	2.0	10G		.30	Si	F9a
103	SD42B12							2.0p	0.0	2.0 - 4.0	12			2.6		Si	F9a
104	SD42C90							2.0p	0.0	2.0 - 4.0	90			4.5		Si	F9a
105	SD42C100							2.0p	0.0	2.0 - 4.0	100			4.5		Si	F9a
106	SDGPB12							2.0p	0.0	2.0 - 4.0	12			2.6		Si	DO7
107	SDGPC90							2.0p	0.0	2.0 - 4.0	90			4.5		Si	DO7
108	SDGPC100							2.0p	0.0	2.0 - 4.0	100			4.5		Si	DO7
109♦	BB405B							2.0pØ	1.0	2.0-15.5	30			800m		Si	DO34
110♦	DKV6550C							2.0p	4.0	1.80-2.20Ø	22 Ø	400	50M		250m	Si	F143

6. VOLTAGE VARIABLE CAPACITORS & VARACTOR DIODES

IN ORDER OF (1) TYPICAL CAPACITANCE, (2) TEST VOLTAGE, and (3) TYPE No.

LINE No.	3 TYPE No.	MINIMUM CUTOFF FREQUENCY (Corresponding to Type Numbers in previous column) (Hz)	(Hz)	(Hz)	(Hz)	(Hz)	(Hz)	TYP. CAP. 1 CAP. Cj (F)	2 at TEST VOLT (V)	CAPACITANCE RANGE (for V = 0 to PIV) Ø - at TEST VOLT. (pF)	PIV (V)	Q FACTOR MIN. Q	at TEST FREQ (Hz)	MAX. SER. RES. Rs (Ω)	MAX. DISS. @ 25°C (W)	DESCRIPTION MAT.	DWG. No.
1	MA46543B							2.0p	4.0	2.49-1.50Ø	15	1.0k	50M			GA	V7†
2	MA46543C							2.0p	4.0	2.49-1.50Ø	15	1.5k	50M			GA	V7†
3	MA46543D							2.0p	4.0	2.49-1.50Ø	15	2.0k	50M			GA	V7†
4	MA46543E							2.0p	4.0	2.49-1.50Ø	15	3.0k	50M			GA	V7†
5	MA46563B							2.0p	4.0	2.49-1.50Ø	15	1.0k	50M			GA	V7†
6	MA46563C							2.0p	4.0	2.49-1.50Ø	15	1.5k	50M			GA	V7†
7	MA46563D							2.0p	4.0	2.49-1.50Ø	15	2.0k	50M			GA	V7†
8	MA46563E							2.0p	4.0	2.49-1.50Ø	15	3.0k	50M			GA	V7†
9	MA46573B							2.0p	4.0	2.49-1.50Ø	22	1.0k	50M			GA	V7†
10	MA46573C							2.0p	4.0	2.49-1.50Ø	22	1.5k	50M			GA	V7†
11	MA46573D							2.0p	4.0	2.49-1.50Ø	22	2.0k	50M			GA	V7†
12	MA46573E							2.0p	4.0	2.49-1.50Ø	22	3.0k	50M			GA	V7†
13	MAH6553B							2.0p	4.0	2.49-1.50Ø	22	1.0k	50M			GA	V7†
14	MAH6553C							2.0p	4.0	2.49-1.50Ø	22	1.5k	50M			GA	V7†
15	MAH6553D							2.0p	4.0	2.49-1.50Ø	22	2.0k	50M			GA	V7†
16	MAH6553E							2.0p	4.0	2.49-1.50Ø	22	3.0k	50M			GA	V7†
17	1N5154							2.0p	6.0	1.0-3.0Ø	35 ☑				5.0	Si	F10q
18	1N5155							2.0p	6.0	1.0-3.0Ø	35 ☑				5.0	Si	F27e
19	BXY56	160G						2.0p	6.0	1.5-2.5Ø	60					Si	F27aj
20	MA43031							2.0p	6.0	1.6-2.4Ø	70 ☑				3.5 ☑	Si§△	M796
21	ML4408							2.0pØ	6.0	2.0-4.0Ø	75 ☑			550mØ		Si△$	F27as
22	MS4160,1-5	10G	20G	40G	60G	80G	100G	2.0p	6.0	1.1 - 3.0Ø	18	☑	10G		.50	GA	F27d
23	MS4166	120G						2.0p	6.0	1.1-3.0Ø	18	☑	10G		500m	GA	F27d
24	MS4210,1-5	10G	20G	40G	60G	80G	100G	2.0p	6.0	1.1 - 3.0Ø	30	☑	10G		.50	GA	F27d
25	MS4260,1-5	10G	20G	40G	60G	80G	100G	2.0p	6.0	1.1 - 3.0Ø	45	☑	10G		.50	GA	F27d
26	MS4310,11-14	10G	20G	40G	60G	80G		2.0p	6.0	1.1 - 3.0Ø	60	☑	10G		.50	GA	F27d
27	S3028	45G						2.0p	6.0	2.25;6-45Ø$	50 ☑	☑	10G	2.0	2.0	Si$#	F121
28	S3028A	40G						2.0p	6.0	2.1;6-45Ø$	50 ☑	☑	10G		2.0	Si$#	F121
29	SV264B							2.0p	6.0	1.0-3.0Ø	90				11	Si	S250c
30	SV264B-4							2.0p	6.0	1.0p-3.0pØ				3.0	11	Si$#	F153
31	SV264B-6							2.0p	6.0	1.0p-3.0pØ				3.0	11	Si$#	F153
32	SV264B-8							2.0p	6.0	1.0p-3.0pØ				3.0	11	Si$#	F153
33	VSE44M							2.0p	6.0	1.5-2.5Ø	35 ☑					Si	F128
34	VTE44M							2.0p	6.0	1.5-2.5Ø	35 ☑					Si	F130
35	VUE44M							2.0p	6.0	1.5-2.5Ø	35 ☑					Si	F133
36	VWE44M							2.0p	6.0	1.5-2.5Ø	35 ☑					Si	F131
37	VXE44M							2.0p	6.0	1.5-2.5Ø	35 ☑					Si	S167
38	VAB814A3N44	120G						2.0p	18	1.5 - 2.5Ø	180				14 ☑	Si	F43b
39	1SV70							2.0pØ	25	5.0-6.0;3.0V-25V$	30			800m	150m	Si#$	DO35
40▼	BB105B	1.0M						2.0pØ	25	2.0-17.5	30			0.8		Si	A342
41	MV205A							2.0p†Ø	25	5.25;3.0V-25V$	30	225	100M		5.0	Si	F59q
42	MV205B							2.0p†Ø	25	5.25;3.0V-25V$	30	225	100M		5.0	Si	F27ah
43	MV205D							2.0p†Ø	25	5.25;3.0V-25V$	30	225	100M		5.0	Si	F56q
44	MV205E							2.0p†Ø	25	5.25;3.0V-25V$	30	225	100M		5.0	Si	F59j
45	MV205H							2.0p†Ø	25	5.25;3.0V-25V$	30	225	100M		5.0	Si	S428b
46	MV206A							2.0p†	25	5.0;3.0V-25V$	30	100	100M		5.0	Si	F59q
47	MV206B							2.0p†	25	5.0;3.0V-25V$	30	100	100M		5.0	Si	F27ah
48	MV206D							2.0p†	25	5.0;3.0V-25V$	30	100	100M		5.0	Si	F56q
49	MV206E							2.0p†	25	5.0;3.0V-25V$	30	100	100M		5.0	Si	F59j
50	MV206H							2.0p†	25	5.0;3.0V-25V$	30	100	100M		5.0	Si	S428b
51	MA450A							2.1p	6.0		6.0	2.0	10G			Si	P3a△
52	MA460A							2.1p	6.0		6.0	2.0	10G			Si	P3△
53	MD700	50G						2.1p	6.0	1.8-2.5Ø	60	16	3.0G		1.5 ☑	Si	F27g
54	MD700Y	50G						2.1p	6.0	1.8-2.5Ø	60	16	3.0G		1.5 ☑	Si	u13
55	MD705	50G						2.1p	6.0	1.8-2.5Ø	45	16	3.0G		1.5 ☑	Si	F27g
56	MD705Y	50G						2.1p	6.0	1.8-2.5Ø	45	16	3.0G		1.5 ☑	Si	u13
57	MD711	70G						2.1p	6.0	1.8-2.5Ø	25	23	3.0G		1.0 ☑	Si	F27g
58	MD711Y	70G						2.1p	6.0	1.8-2.5Ø	25	23	3.0G		1.0 ☑	Si	u13a
59	KV109B							2.1p†	25	2.0-2.3Ø	28	300	50m		5.0m§	Si#$	A353△
60♦	DVE6951F							2.2p%§		2.5-2.0	45 ☑	505kØ	50M			GA	F143
61♦	DVE6952F							2.2p%§		2.5-2.0	45 ☑	5.5kØ	50M			GA	F59S
62♦	DVE6953F							2.2p%§		2.5-2.0	45 ☑	5.5kØ	50M			GA	F102f
63	DVE6954F							2.2p%§		2.5-2.0	45 ☑	5.5kØ	50M			GA	F112
64♦	DVE6955F							2.2p%§		2.5-2.0	45 ☑	5.5kØ	50M			GA	F94a
65	DVE6956F							2.2p§%		2.5-2.0	45 ☑	5.5kØ	50M			GA	†
66♦	DVE4550F							2.2pΔ	0.0	2.0-2.5Ø	25 ☑	6.5k	50M			GA	†
67♦	DVE4551F							2.2pΔ	0.0	2.0-2.5Ø	25 ☑	6.5k	50M			GA	F143
68♦	DVE4552F							2.2pΔ	0.0	2.0-2.5Ø	25 ☑	6.5k	50M			GA	F59s
69♦	DVE4555F							2.2pΔ	0.0	2.0-2.5Ø	25 ☑	6.5k	50M			GA	F94a
70	DVE4575F							2.2pΔ	0.0	2.0-2.5Ø	25 ☑	4.9k	50M			GA	F102f
71♦	DVE4576F							2.2pΔ	0.0	2.0-2.5Ø	25 ☑	6.5k	50M			GA	F112
72♦	MA46603D							2.2p	0.0	2.0-2.49Ø†;10%△	30 ☑	4.0k	50M			GA	V7 †
73♦	MA46603E							2.2p	0.0	2.0-2.49Ø†;10%△	30 ☑	5.0k	50M			GA	V7 †
74♦	MA46613D							2.2p	0.0	2.00-2.49Ø†;10%△	45 ☑	4.0k	50M			GA	V7 †
75♦	MA46613E							2.2p	0.0	2.00-2.49Ø†;10%△	45 ☑	5.0k	50M			GA	V7 †
76♦	MA46623D							2.2p	0.0	2.0-2.49Ø†;10%△	60 ☑	4.0k	50M			GA	V7 †
77♦	MA46623E							2.2p	0.0	2.0-2.49Ø†;10%△	60 ☑	5.0k	50M			GA	V7 †
78	PA0200C	50G						2.2p	0.0	.80 - 3.6Ø	5.5	5.0	10G		.15	Si	F3a☑
79	1N5138							2.2p	4.0	2.0;4.0V-60V$	60 ☑	350	50M		400m	Si	DO7
80	1N5138A							2.2p	4.0	2.0;4.0V-60V$	60 ☑	350	50M		400m	Si	DO7
81	CV1860B							2.2p	4.0	1.76-2.64	60	350	100M		5.0	Si	F27x☑
82	CV1860D							2.2p	4.0	1.76-2.64	60	350	100M		5.0	Si	F56n☑
83	CVH2030-09							2.2p	4.0	4.5;0.0-30$;10%	30 ☑	4.0k	50M			Si§§	u30
84	CVH2045-09							2.2p	4.0	6.1;0.0-45$;10%	45 ☑	2.2k	50M			Si§§	u30
85	CVH2060-09							2.2p	4.0	7.5;0.0-60$;10%	60 ☑	2.0k	50M			Si§§	u30a
86	CVH2090-09							2.2p	4.0	8.7;0.0-90$;10%	90 ☑	850	50M			Si§§	u30a
87	DC4255B	25G						2.2p	4.0		60	500	50M			Si	DO35△
88	DC4265B	27G						2.2p	4.0		60	550	50M			Si	F121a△
89	DC4285B	27G						2.2p	4.0		60	550	50M			Si	M524c△
90	DT305							2.2p§	4.0	3.7;0.0V-30V$	30 ☑	3400 Ø	50M			Si	V1
91	DT605							2.2p§	4.0	5.6;0.0V-60V$	60 ☑	1400 Ø	50M			Si	V1
92	DT905							2.2p§	4.0	7.8;0.0V-90V$	90 ☑	900 Ø	50M			Si	V1
93	DT4505							2.2p§	4.0	5.0;0.0V-45V$	45 ☑	2100 Ø	50M			Si	V1
94♦	DVH6730-09							2.2p§	4.0	4.1;0.0-30$;10%	30 ☑	4.0k	50M			Si§§	A90a
95♦	DVH6731-09	200G						2.2p†	4.0	4.1;0.0V-30V$;10%	30 ☑	4.0k	50M			Si§§	F143
96	DVH6732-09	200G						2.2p†	4.0	4.1;0.0V-30V$;10%	30 ☑	4.0k	50M			Si§§	F56ad
97	DVH6733-09	200G						2.2p†	4.0	4.1;0.0V-30V$;10%	30 ☑	4.0k	50M			Si§§	F59u
98	DVH6734-09	200G						2.2p†	4.0	4.1;0.0V-30V$;10%	30 ☑	4.0k	50M			Si§§	M929
99♦	DVH6740-09							2.2p§	4.0	5.1;0.0-45$;10%	45 ☑	2.2k	50M			Si§§	A90a
100♦	DVH6741-09	110G						2.2p†	4.0	5.1;0.0V-45V$;10%	45 ☑	2.2k	50M			Si§§	F143
101	DVH6742-09	110G						2.2p†	4.0	5.1;0.0V-45V$;10%	45 ☑	2.2k	50M			Si§§	F56ad
102	DVH6743-09	110G						2.2p†	4.0	5.1;0.0V-45V$;10%	45 ☑	2.2k	50M			Si§§	F59u
103	DVH6744-09	110G						2.2p†	4.0	5.1;0.0V-45V$;10%	45 ☑	2.2k	50M			Si§§	M929
104♦	DVH6760-09							2.2p§	4.0	5.6;0.0-60$;10%	60 ☑	2.0k	50M			Si§§	A90a
105♦	DVH6761-09	100G						2.2p†	4.0	5.6;0.0V-60V$;10%	60 ☑	2.0k	50M			Si§§	F143
106	DVH6762-09	100G						2.2p†	4.0	5.6;0.0V-60V$;10%	60 ☑	2.0k	50M			Si§§	F56ad
107	DVH6763-09	100G						2.2p†	4.0	5.6;0.0V-60V$;10%	60 ☑	2.0k	50M			Si§§	F59u
108	DVH6764-09	100G						2.2p†	4.0	5.6;0.0V-60V$;10%	60 ☑	2.0k	50M			Si§§	M929
109♦	DVH6790-09							2.2p§	4.0	6.5;0.0-90$;10%	90 ☑	850	50M			Si§§	A90a
110♦	DVH6791-09	42G						2.2p†	4.0	6.5;0.0V-90V$;10%	90 ☑	850	50M			Si§§	F143

SYMBOLS AND CODES EXPLAINED IN INTERPRETER

6. VOLTAGE VARIABLE CAPACITORS & VARACTOR DIODES

IN ORDER OF (1) TYPICAL CAPACITANCE, (2) TEST VOLTAGE, and (3) TYPE No.

LINE No.	[3] TYPE No.	MINIMUM CUTOFF FREQUENCY (Corresponding to Type Numbers in previous column) (Hz)	(Hz)	(Hz)	(Hz)	(Hz)	(Hz)	TYP. CAP. [1] CAP. Cj (F)	[2] at TEST VOLT (V)	CAPACITANCE RANGE (for V = 0 to PIV) Ø - at TEST VOLT. (pF)	PIV (V)	Q FACTOR MIN. Q	at TEST FREQ (Hz)	MAX. SER. RES. Rs (Ω)	MAX. DISS. @ 25°C (W)	DESCRIPTION MAT.	DWG. No.
1	DVH6792-09	42G						2.2p†	4.0	6.5;0.0V-90V$;10%	90 ☑	850	50M			Si$§	F56ad
2	DVH6793-09	42G						2.2p†	4.0	6.5;0.0V-90V$;10%	90 ☑	850	50M			Si$§	F59u
3	DVH6794-09	42G						2.2p†	4.0	6.5;0.0V-90V$;10%	90 ☑	850	50M			Si$§	M929
4	E602	25G						2.2p	4.0	2.8;1.0V-25V$	30	500	50M			Si	F27az
5	E702	60G						2.2p	4.0	3.5;1.0V-50V$	60	1.2k	50M			Si	F27az
6	E1714A							2.2p†	4.0	1.7-2.7	30	1.4k	50M		4.0		F10k
7	EP1014A							2.2p†Δ	4.0	1.9;2.0V-30V$	30	1.5k	50M		5.0	Si	F59q
8	EP1014B							2.2p†Δ	4.0	1.9;2.0V-30V$	30	1.5k	50M		5.0	Si	F27ah
9	EP1014D							2.2p†Δ	4.0	1.9;2.0V-30V$	30	1.5k	50M		5.0	Si	F56q
10	EP1014E							2.2p†Δ	4.0	1.9;2.0V-30V$	30	1.5k	50M		5.0	Si	F59j
11	EP1014H							2.2p†Δ	4.0	1.9;2.0V-30V$	30	1.5k	50M		5.0	Si	S428b
12	EP1714A							2.2p†	4.0	1.7-2.7	30	1.4k	50M		4.0		F27ac
13	G702A,B,C							2.2pΔ†	4.0	1.7-2.2Ø;10,5,2%	25	700	50M		400m	Si	DO35
14	GC1505							2.2p†Δ	4.0	3.7;0.0V-30V$	30	3.3k	50M			Si	F111b†
15	GC1505A							2.2p†Δ	4.0	3.7;0.0V-30V$	30	3.3k	50M			Si	F59q
16	GC1505B							2.2p†Δ	4.0	3.7;0.0V-30V$	30	3.3k	50M			Si	F27ah
17	GC1505D							2.2p†Δ	4.0	3.7;0.0V-30V$	30	3.3k	50M			Si	F56q
18	GC1505E							2.2p†Δ	4.0	3.7;0.0V-30V$	30	3.3k	50M			Si	F59j
19	GC1505H							2.2p†Δ	4.0	3.7;0.0V-30V$	30	3.3k	50M		•	Si	S428b
20	GC1605							2.2p†Δ	4.0	5.0;0.0V-45V$	45	2.0k	50M			Si	F111b†
21	GC1605A							2.2p†Δ	4.0	5.0;0.0V-45V$	45	2.0k	50M			Si	F59q
22	GC1605B							2.2p†Δ	4.0	5.0;0.0V-45V$	45	2.0k	50M			Si	F27ah
23	GC1605D							2.2p†Δ	4.0	5.0;0.0V-45V$	45	2.0k	50M			Si	F56q
24	GC1605E							2.2p†Δ	4.0	5.0;0.0V-45V$	45	2.0k	50M			Si	F59j
25	GC1605H							2.2p†Δ	4.0	5.0;0.0V-45V$	45	2.0k	50M			Si	S428b
26	GC1705	60G						2.2p§	4.0	5.8;0.0V-60V$	60 ☑	1.2k	50M				F111b†
27	GC1705A							2.2p†Δ	4.0	5.8;0.0V-60V$	60	1.2k	50M			Si	F59q
28	GC1705B							2.2p†Δ	4.0	5.8;0.0V-60V$	60	1.2k	50M			Si	F27ah
29	GC1705D							2.2p†Δ	4.0	5.8;0.0V-60V$	60	1.2k	50M			Si	F56q
30	GC1705E							2.2p†Δ	4.0	5.8;0.0V-60V$	60	1.2k	50M			Si	F59j
31	GC1705H							2.2p†Δ	4.0	5.8;0.0V-60V$	60	1.2k	50M			Si	S428b
32	GC1755							2.2p†Δ	4.0	5.0;0.0V-60V$;10%	60	1.2k	50M		250m	Si	A1ah
33	GC1755B							2.2p†Δ	4.0	5.0;0.0V-60V$;5%	60	1.2k	50M		250m	Si	A1ah
34	GC1755C							2.2p†Δ	4.0	5.0;0.0V-60V$;2%	60	1.2k	50M		250m	Si	A1ah
35	GC51112	340G						2.2p†Δ	4.0	4.1-1.41;10%	15	340	1.0G			GAΔ§	F111b†
36	GC51312	270G						2.2p†Δ	4.0	4.1-1.08;10%	30	270	1.0G			GAΔ§	F111b†
37	GC51412	230G						2.2p†Δ	4.0	4.1-.93;10%	45	230	1.0G			GAΔ§	F111b†
38	GC51612	210G						2.2p†Δ	4.0	4.1-.85;10%	60	210	1.0G			GAΔ§	F111b†
39	HA1705A							2.2p†Δ	4.0	5.8;0.0V-30V$	30	1.2k	50M			Si	F59q
40	HA1705B							2.2p†Δ	4.0	5.8;0.0V-30V$	30	1.2k	50M			Si	F27ah
41	HA1705D							2.2p†Δ	4.0	5.8;0.0V-30V$	30	1.2k	50M			Si	F56q
42	HA1705E							2.2p†Δ	4.0	5.8;0.0V-30V$	30	1.2k	50M			Si	F59j
43	HA1705H							2.2p†Δ	4.0	5.8;0.0V-30V$	30	1.2k	50M			Si	S428b
44	LP1014A							2.2p†Δ	4.0	4.0;0.0V-25V$	25	1.0k	50M		5.0	Si	F59q
45	LP1014B							2.2p†Δ	4.0	4.0;0.0V-25V$	25	1.0k	50M		5.0	Si	F27ah
46	LP1014D							2.2p†Δ	4.0	4.0;0.0V-25V$	25	1.0k	50M		5.0	Si	F56q
47	LP1014E							2.2p†Δ	4.0	4.0;0.0V-25V$	25	1.0k	50M		5.0	Si	F59j
48	LP1014H							2.2p†Δ	4.0	4.0;0.0V-25V$	25	1.0k	50M		5.0	Si	S428b
49▼	MA4H004							2.2p†	4	0.9-1.2	20	2.9k	50M			Si	V25
50▼	MA4H024							2.2p†	4.0	0.8-1.1	25	3.4k	50M		1.0	Si	V25
51▼	MA4H024C							2.2p	4.0	0.68-0.90	25	3.8k	50M		1.0	Si	V25
52	MA45232							2.2pΔ	4.0	3.6;0V-25V$	25	4.0k	50M			Si$§	V11†
53	MA45232C							2.2pΔ	4.0	4.5;0V-25V$	25	4.0k	50M			Si$§	u17†
54	MA45252							2.2pΔ	4.0	4.8;0V-45V$	45	3.0k	50M			Si$§	V11†
55	MA45252C							2.2pΔ	4.0	6.2;0V-45V$	45	2.7k	50M			Si$§	u17†
56	MA45266							2.2pΔ	4.0	6.0;0V-60V$	60	1.7k	50M			Si$§	V11†
57	MA45266C							2.2pΔ	4.0	7.5;0V-60V$	60	1.6k	50M			Si$§	u17†
58	MA45294							2.2pΔ	4.0	7.5;0V-90V$	90	900	50M			Si$§	V11†
59	MA45294C							2.2pΔ	4.0	9.0;0V-90V$	90	900	50M			Si$§	u17†
60	MC2							2.2p	4.0		60 †	10	50M			Si	A1au
61	MC202							2.2p	4.0		60	25	50M			Si	A1au
62	MC302							2.2p	4.0		60	50	50M			Si	A1au
63	MC402							2.2p	4.0	5.0;1.0V-60V$	60 †	100	50M			Si	A1au
64	MC602							2.2p	4.0	1.75-2.65Ø	60	250	50M			Si	A1au
65	ML4315							2.2p†	4.0	4.3$ 0-25V	25 †	1.7k	50M			Si	F111a†
66	ML4335							2.2p†	4.0	5.3$ 0-45V	45 †	1.1k	50M			Si	F111a†
67	ML4355							2.2p†	4.0	5.8$ 0-60V	60 †	1.0k	50M			Si	F111a†
68	ML4375							2.2p†	4.0	6.7$ 0-90V	90 †	500	50M			Si	F111a†
69	MMC602							2.2p	4.0	1.75-2.65Ø	60	500	50M			Si	A1au
70	MV1860A							2.2p†	4.0	1.76 - 2.64Ø	60			2.1	5.0	Si	F27a
71	MV1860B							2.2p†	4.0	1.76 - 2.64Ø	60			2.1	5.0	Si	F10a
72	MV1860D							2.2p†	4.0	3.1;4.0V-60V$	60 ☑	350	100M		5.0	Si	F56n
73	MV1860E							2.2p†Δ	4.0	2.5-2.7Ø	60	350	100M			Si	F59j
74	MV1860H							2.2p†Δ	4.0	2.5-2.7Ø	60	350	100M			Si	S428b
75	MVI2098							2.2p†	4.0	2.8;2.0V-30V$	30 ☑	325	100M		200m	Si	M750
76	SQ1214A,B,C							2.2pΔ†	4.0	2.8;2V-30V$	30	1.4k	50M		400m	Si	A1ah
77	SQ1264A,B,C							2.2p§%	4.0		30 ☑	700	50M		250m	Si#$	A1ah
78	SQ1714,B,C							2.2pΔ†	4.0	2.6;2V-30V$	30	1.4k	50M		400m	Si	DO7
79	VVC777,A,B,C,D							2.2p%	4.0	3.2;4.0V-60V$	60	10	50M		400m§	Si	DO7†
80	VVC778,A,B,C,D							2.2p%	4.0	3.2;4.0V-60V$	60	50	50M		400m§	Si	DO7†
81	VVC779,A,B,C,D							2.2p%	4.0	3.2;4.0V-60V$	60	100	50M		400m§	Si	DO7†
82	VVC788,A,B,C,D							2.2p%	4.0	3.2;4.0V-60V$	60	25	50M		400m§	Si	DO7†
83	DC4371A							2.2p†	4.5			4.3	10G			GA	u7d
84	DC4371B							2.2p†	4.5			4.3	10G			GA	u7d
85	KA602V	30GØ						2.2p†	6.0	1.7-2.7Ø	45				1.0 §☑	#$	F58a
86	MA43035							2.2p	6.0	1.0-3.5Ø	75 ☑				1.6 ☑	Si§Δ	M796
87▼	1T32							2.2p	25	16.33-2.10	30			0.6			M1150
88	MA4684	35G						2.3p	0.0	1.8 - 2.8Ø	8.0			.80		Si	S215
89	MA4341C,1,2	20G	50G	80G				2.3p	6.0	1.6 - 3.0	6.0				.50	Si	F3a
90	MA44052							2.3p	6.0	1.6-3.0Ø	120 ☑				16 ☑	Si§Δ	F98a
91	SV55C	25G						2.3p	6.0	1.6p-3.0pØ					1.5	Si$#	F27a
92	BB505B							2.3pØ	25	2.3;0-25V$	30 ☑			800m		Si	DO35
93	SD11B18							2.4p	0.0	2.4 - 4.8	18			2.6		Si	P3
94	SD11C120							2.4p	0.0	2.4 - 4.8	120			4.5		Si	P3
95	SD12B18							2.4p	0.0	2.4 - 4.8	18			2.6		Si	F3a
96	SD12C120							2.4p	0.0	2.4 - 4.8	120			4.5		Si	F3a
97	SD22B18							2.4p	0.0	2.4 - 4.8	18			2.6		Si	F11
98	SD22C120							2.4p	0.0	2.4 - 4.8	120			4.5		Si	F11
99	SD32B18							2.4p	0.0	2.4 - 4.8	18			2.6		Si	F21
100	SD32C120							2.4p	0.0	2.4 - 4.8	120			4.5		Si	F21
101	SD42B18							2.4p	0.0	2.4 - 4.8	18			2.6		Si	F9a
102	SD42C120							2.4p	0.0	2.4 - 4.8	120			4.5		Si	F9a
103	SDGPB18							2.4p	0.0	2.4 - 4.8	18			2.6		Si	DO7
104	SDGPC120							2.4p	0.0	2.4 - 4.8	120			4.5		Si	DO7
105	VKTA413H							2.4p	4.0	5.5;0.0V-60V$	60 $	1200	50M			Si	F129
106	VNA413H							2.4p	4.0	5.5;0.0V-60V$	60 $	1200	50M			Si	F136
107	VSA413H							2.4p	4.0	5.5;0.0V-60V$	60 $	1200	50M			Si	F128
108	VTA413H							2.4p	4.0	5.5;0.0V-60V$	60 $	1200	50M			Si	F130
109	VYA413H							2.4p	4.0	5.5;0.0V-60V$	60 $	1200	50M			Si	F135
110	MA43002							2.4pØ	6.0	1.6-2.4Ø	70 ☑				3.5 ☑	Si§Δ	F96

SYMBOLS AND CODES EXPLAINED IN INTERPRETER

6. VOLTAGE VARIABLE CAPACITORS & VARACTOR DIODES

IN ORDER OF (1) TYPICAL CAPACITANCE, (2) TEST VOLTAGE, and (3) TYPE No.

LINE No.	3 TYPE No.	MINIMUM CUTOFF FREQUENCY (Corresponding to Type Numbers in previous column) (Hz)	(Hz)	(Hz)	(Hz)	(Hz)	(Hz)	TYP. CAP. 1 CAP. Cj (F)	2 at TEST VOLT (V)	CAPACITANCE RANGE (for V = 0 to PIV) Ø - at TEST VOLT. (pF)	PIV (V)	Q FACTOR MIN. Q	at TEST FREQ (Hz)	MAX. SER. RES. Rs (Ω)	MAX. DISS. @ 25°C (W)	DESCRIPTION MAT.	DWG. No.
1	PL0197-1		5.0G					2.5p		20-30Ø	200 ☑	☑	10G			Si$	F27as
2	BXY10C							2.5p	0.0	1.5 - 3.5Ø	50			1.5		Si$§	S286
3	BXY13C							2.5p	0.0	1.5 - 3.5Ø	50			1.5		Si$§	DO19
4	MA4556							2.5p☑	0.0		5.5	6.0	10G			Si§	F21
5	PFV102-01							2.5p	0.0	2.6;0.0V-15V$	15 ☑	4.6k	50M			GAΔ$	F27as
6	PFV102-05							2.5p	0.0	2.6;0.0V-15V$	15 ☑	4.6k	50M			GAΔ$	F10af
7	PFV102-21							2.5p	0.0	2.6;0.0V-15V$	15 ☑	4.6k	50M			GAΔ$	M86e
8	PFV102-31							2.5p	0.0	2.6;0.0V-15V$	15 ☑	4.6k	50M			GAΔ$	F10ah
9	PFV102-45							2.5p	0.0	2.6;0.0V-15V$	15 ☑	4.6k	50M			GAΔ$	F54c
10	PFV107-01							2.5p	0.0	2.9;0.0V-25V$	25 ☑	4.2k	50M			GAΔ$	F27as
11	PFV107-05							2.5p	0.0	2.9;0.0V-25V$	25 ☑	4.2k	50M			GAΔ$	F10af
12	PFV107-21							2.5p	0.0	2.9;0.0V-25V$	25 ☑	4.2k	50M			GAΔ$	M86e
13	PFV107-31							2.5p	0.0	2.9;0.0V-25V$	25 ☑	4.2k	50M			GAΔ$	F10ah
14	PFV107-45							2.5p	0.0	2.9;0.0V-25V$	25 ☑	4.2k	50M			GAΔ$	F54c
15	PFV112-01							2.5p	0.0	3.2;0.0V-30V$	30 ☑	4.1k	50M			GAΔ$	F27as
16	PFV112-05							2.5p	0.0	3.2;0.0V-30V$	30 ☑	4.1k	50M			GAΔ$	F10af
17	PFV112-21							2.5p	0.0	3.2;0.0V-30V$	30 ☑	4.1k	50M			GAΔ$	M86e
18	PFV112-31							2.5p	0.0	3.2;0.0V-30V$	30 ☑	4.1k	50M			GAΔ$	F10ah
19	PFV112-45							2.5p	0.0	3.2;0.0V-30V$	30 ☑	4.1k	50M			GAΔ$	F54c
20	PFV117-01							2.5p	0.0	3.6;0.0V-45V$	45 ☑	4.0k	50M			GAΔ$	F27as
21	PFV117-05							2.5p	0.0	3.6;0.0V-45V$	45 ☑	4.0k	50M			GAΔ$	F10af
22	PFV117-21							2.5p	0.0	3.6;0.0V-45V$	45 ☑	4.0k	50M			GAΔ$	M86e
23	PFV117-31							2.5p	0.0	3.6;0.0V-45V$	45 ☑	4.0k	50M			GAΔ$	F10ah
24	PFV117-45							2.5p	0.0	3.6;0.0V-45V$	45 ☑	4.0k	50M			GAΔ$	F54c
25	PFV122-01							2.5p	0.0	3.8;0.0V-60V$	60 ☑	3.0k	50M			GAΔ$	F27as
26	PFV122-05							2.5p	0.0	3.8;0.0V-60V$	60 ☑	3.0k	50M			GAΔ$	F10af
27	PFV122-21							2.5p	0.0	3.8;0.0V-60V$	60 ☑	3.0k	50M			GAΔ$	M86e
28	PFV122-31							2.5p	0.0	3.8;0.0V-60V$	60 ☑	3.0k	50M			GAΔ$	F10ah
29	PFV122-45							2.5p	0.0	3.8;0.0V-60V$	60 ☑	3.0k	50M			GAΔ$	F54c
30	PSV102-01							2.5p	0.0	3.0;0.0V-30V$	30 ☑	3.0k	50M			Si§	F27as
31	PSV102-05							2.5p	0.0	3.0;0.0V-30V$	30 ☑	3.0k	50M			Si§	F10af
32	PSV102-08							2.5p	0.0	3.0;0.0V-30V$	30 ☑	3.0k	50M			Si§	A1vd
33	PSV102-14							2.5p	0.0	3.0;0.0V-30V$	30 ☑	3.0k	50M			Si§	A2u
34	PSV102-16							2.5p	0.0	3.0;0.0V-30V$	30 ☑	3.0k	50M			Si§	A1st
35	PSV102-21							2.5p	0.0	3.0;0.0V-30V$	30 ☑	3.0k	50M			Si§	M86e
36	PSV102-31							2.5p	0.0	3.0;0.0V-30V$	30 ☑	3.0k	50M			Si§	F10ah
37	PSV102-45							2.5p	0.0	3.0;0.0V-30V$	30 ☑	3.0k	50M			Si§	F54c
38	PSV107-01							2.5p	0.0	3.5;0.0V-45V$	45 ☑	2.5k	50M			Si§	F27as
39	PSV107-05							2.5p	0.0	3.5;0.0V-45V$	45 ☑	2.5k	50M			Si§	F10af
40	PSV107-08							2.5p	0.0	3.5;0.0V-45V$	45 ☑	2.5k	50M			Si§	A1vd
41	PSV107-14							2.5p	0.0	3.5;0.0V-45V$	45 ☑	2.5k	50M			Si§	A2u
42	PSV107-16							2.5p	0.0	3.5;0.0V-45V$	45 ☑	2.5k	50M			Si§	A1st
43	PSV107-21							2.5p	0.0	3.5;0.0V-45V$	45 ☑	2.5k	50M			Si§	M86e
44	PSV107-31							2.5p	0.0	3.5;0.0V-45V$	45 ☑	2.5k	50M			Si§	F10ah
45	PSV107-45							2.5p	0.0	3.5;0.0V-45V$	45 ☑	2.5k	50M			Si§	F54c
46	PSV119-01							2.5p	0.0	4.0;0.0V-60V$	60 ☑	1.7k	50M			Si§	F27as
47	PSV119-05							2.5p	0.0	4.0;0.0V-60V$	60 ☑	1.7k	50M			Si§	F10af
48	PSV119-08							2.5p	0.0	4.0;0.0V-60V$	60 ☑	1.7k	50M			Si§	A1vd
49	PSV119-14							2.5p	0.0	4.0;0.0V-60V$	60 ☑	1.7k	50M			Si§	A2u
50	PSV119-16							2.5p	0.0	4.0;0.0V-60V$	60 ☑	1.7k	50M			Si§	A1st
51	PSV119-21							2.5p	0.0	4.0;0.0V-60V$	60 ☑	1.7k	50M			Si§	M86e
52	PSV119-31							2.5p	0.0	4.0;0.0V-60V$	60 ☑	1.7k	50M			Si§	F10ah
53	PSV119-45							2.5p	0.0	4.0;0.0V-60V$	60 ☑	1.7k	50M			Si§	F54c
54	PSV130-01							2.5p	0.0	5.0;0.0V-60V$	90 ☑	1.5k	50M			Si§	F27as
55	PSV130-05							2.5p	0.0	5.0;0.0V-60V$	90 ☑	1.5k	50M			Si§	F10af
56	PSV130-08							2.5p	0.0	5.0;0.0V-60V$	90 ☑	1.5k	50M			Si§	A1vd
57	PSV130-14							2.5p	0.0	5.0;0.0V-60V$	90 ☑	1.5k	50M			Si§	A2u
58	PSV130-16							2.5p	0.0	5.0;0.0V-60V$	90 ☑	1.5k	50M			Si§	A1st
59	PSV130-21							2.5p	0.0	5.0;0.0V-60V$	90 ☑	1.5k	50M			Si§	M86e
60	PSV130-31							2.5p	0.0	5.0;0.0V-60V$	90 ☑	1.5k	50M			Si§	F10ah
61	PSV130-45							2.5p	0.0	5.0;0.0V-60V$	90 ☑	1.5k	50M			Si§	F54c
62	GC1806							2.5p	4.0	6.6-.66	90	700	50M			Si	F111b†
63	VNA313H							2.5p	4.0	3.5;0.0V-30V$	30 $	3000	50M			Si	F136
64	VSA313H							2.5p	4.0	3.5;0.0V-30V$	30 $	3000	50M			Si	F128
65	VTA313H							2.5p	4.0	3.5;0.0V-30V$	30 $	3000	50M			Si	F130
66	VYA313H							2.5p	4.0	3.5;0.0V-30V$	30 $	3000	50M			Si	F135
67	MA4284							2.5p	6.0		30	6.0	10G	8.0		Si	F3a
68	MA4384							2.5p	6.0		30			8.0		Si	A31e
69	MA4966C,E,F	100G						2.5p☑	6.0	1.2-2.5Ø	48 ☑				1.5	Si	Z48
70	BBY34C							2.5p†	-4	2.6$		400	50M			Si	F134
71	BB505G							2.5p☑	25	2.5;0-25V$	30 ☑			1.2		Si	DO35
72	KV109A							2.5p†	25	2.3-2.8Ø	28	300	50m		5.0m§	Si#$	A353Δ
73	KV109V							2.5p†	25	1.9-3.1Ø	28	160	50m		5.0m§	Si#$	A353Δ
74	MS313-8							2.5p†	30	3.3;0.0V-30V$	30 ☑	4.5k	50M			GA♦$	F27as
75	MS313-8A							2.5p†	30	3.3;0.0V-30V$	30 ☑	4.5k	50M			GA♦$	F56y
76	MS313-21							2.5p†	30	3.3;0.0V-30V$	30 ☑	4.5k	50M			GA♦$	F59m
77	MS313-21A							2.5p†	30	3.3;0.0V-30V$	30 ☑	4.5k	50m			GA♦$	M892
78	MS333-8							2.5p†	60	4.0;0.0V-60V$	60 ☑	3.5k	50M			GA♦$	F27as
79	MS333-8A							2.5p†	60	4.0;0.0V-60V$	60 ☑	3.5k	50M			GA♦$	F56y
80	MS333-21							2.5p†	60	4.0;0.0V-60V$	60 ☑	3.5k	50M			GA♦$	F59m
81	MS333-21A							2.5p†	60	4.0;0.0V-60V$	60 ☑	3.5k	50m			GA♦$	M892
82	MA44010	110M						2.5p☑	-12	1.6-2.5Ø	120 ☑				17 ☑	Si$Δ	S429
83♦	DVE4550G							2.7pΔ	0.0	2.5-3.0Ø	25 ☑	5.5k	50M			GA	†
84♦	DVE4551G							2.7pΔ	0.0	2.5-3.0Ø	25 ☑	5.5k	50M			GA	F143
85♦	DVE4552G							2.7pΔ	0.0	2.5-3.0Ø	25 ☑	5.5k	50M			GA	F59s
86♦	DVE4555G							2.7pΔ	0.0	2.5-3.0Ø	25 ☑	5.5k	50M			GA	F94a
87	DVE4575G							2.7pΔ	0.0	2.5-3.0Ø	25 ☑	4.7k	50M			GA	F102f
88♦	DVE4576G							2.7pΔ	0.0	2.5-3.0Ø	25 ☑	5.5k	50M			GA	F112
89♦	MA46604D							2.7p	0.0	2.50-2.99Ø†;10%Δ	30 ☑	4.0k	50M			GA	V7 †
90♦	MA46614D							2.7p	0.0	2.50-2.99Ø†;10%Δ	45 ☑	4.0k	50M			GA	V7 †
91♦	MA46624D							2.7p	0.0	2.5-2.99Ø†;10%Δ	60 ☑	4.0k	50M			GA	V7 †
92	CVH2030-10							2.7p	4.0	4.5;0.0-30$;10%	30 ☑	3.8k	50M			Si$§	u30
93	CVH2045-10							2.7p	4.0	6.1;0.0-45$;10%	45 ☑	2.2k	50M			Si$§	u30a
94	CVH2060-10							2.7p	4.0	7.5;0.0-60$;10%	60 ☑	1.9k	50M			Si$§	u30a
95	CVH2090-10							2.7p	4.0	8.7;0.0-90$;10%	90 ☑	850	50M			Si$§	u30a
96	DT306							2.7p§	4.0	3.8;0.0V-30V$	30 ☑	3200 Ø	50M			Si	V1
97	DT606							2.7p§	4.0	5.8;0.0V-60V$	60 ☑	1300 Ø	50M			Si	V1
98	DT906							2.7p§	4.0	8.2;0.0V-90V$	90 ☑	850 Ø	50M			Si	V1
99	DT4506							2.7p§	4.0	5.1;0.0V-45V$	45 ☑	2100 Ø	50M			Si	V1
100♦	DVH6730-10							2.7p§	4.0	4.2;0.0-30;10%	30 ☑	3.8k	50M			Si$§	A90a
101♦	DVH6731-10	190G						2.7p†	4.0	4.2;0.0V-30V$;10%	30 ☑	3.8k	50M			Si$§	F143
102	DVH6732-10	190G						2.7p†	4.0	4.2;0.0V-30V$;10%	30 ☑	3.8k	50M			Si$§	F56ad
103	DVH6733-10	190G						2.7p†	4.0	4.2;0.0V-30V$;10%	30 ☑	3.8k	50M			Si$§	F59u
104	DVH6734-10	190G						2.7p†	4.0	4.2;0.0V-30V$;10%	30 ☑	3.8k	50M			Si$§	M929
105♦	DVH6740-10							2.7p§	4.0	5.2;0.0-45$;10%	45 ☑	2.2k	50M			Si$§	A90a
106♦	DVH6741-10	110G						2.7p†	4.0	5.2;0.0V-45V$;10%	45 ☑	2.2k	50M			Si$§	F143
107	DVH6742-10	110G						2.7p†	4.0	5.2;0.0V-45V$;10%	45 ☑	2.2k	50M			Si$§	F56ad
108	DVH6743-10	110G						2.7p†	4.0	5.2;0.0V-45V$;10%	45 ☑	2.2k	50M			Si$§	F59u
109	DVH6744-10	110G						2.7p†	4.0	5.2;0.0V-45V$;10%	45 ☑	2.2k	50M			Si$§	M929
110♦	DVH6760-10							2.7p§	4.0	5.8;0.0-60$;10%	60 ☑	1.9k	50M			Si$§	A90a

6. VOLTAGE VARIABLE CAPACITORS & VARACTOR DIODES

IN ORDER OF (1) TYPICAL CAPACITANCE, (2) TEST VOLTAGE, and (3) TYPE No.

LINE No.	TYPE No.	MINIMUM CUTOFF FREQUENCY (Corresponding to Type Numbers in previous column) (Hz)	(Hz)	(Hz)	(Hz)	(Hz)	(Hz)	TYP. CAP. 1 CAP. Cj (F)	2 at TEST VOLT (V)	CAPACITANCE RANGE (for V = 0 to PIV) Ø - at TEST VOLT. (pF)	PIV (V)	Q FACTOR MIN. Q	at TEST FREQ (Hz)	MAX. SER. RES. Rs (Ω)	MAX. DISS. @ 25°C (W)	DESCRIPTION MAT.	DWG. No.
1♦	DVH6761-10	95G						2.7pt	4.0	5.8;0.0V-60V$;10%	60 ☑	1.9k	50M			Si$§	F143
2	DVH6762-10	95G						2.7pt	4.0	5.8;0.0V-60V$;10%	60 ☑	1.9k	50M			Si$§	F56ad
3	DVH6763-10	95G						2.7pt	4.0	5.8;0.0V-60V$;10%	60 ☑	1.9k	50M			Si$§	F59u
4	DVH6764-10	95G						2.7pt	4.0	5.8;0.0V-60V$;10%	60 ☑	1.9k	50M			Si$§	M929
5♦	DVH6790-10							2.7p§	4.0	6.8;0.0-90$;10%	90 ☑	850	50M			Si$§	A90a
6♦	DVH6791-10	42G						2.7pt	4.0	6.8;0.0V-90V$;10%	90 ☑	850	50M			Si$§	F143
7	DVH6792-10	42G						2.7pt	4.0	6.8;0.0V-90V$;10%	90 ☑	850	50M			Si$§	F56ad
8	DVH6793-10	42G						2.7pt	4.0	6.8;0.0V-90V$;10%	90 ☑	850	50M			Si$§	F59u
9	DVH6794-10	42G						2.7pt	4.0	6.8;0.0V-90V$;10%	90 ☑	850	50M			Si$§	M929
10	GC1506							2.7pt△	4.0	3.7;0.0V-30V$	30	3.1k	50M			Si	F111bt
11	GC1506A							2.7pt△	4.0	3.7;0.0V-30V$	30	3.1k	50M			Si	F59q
12	GC1506B							2.7pt△	4.0	3.7;0.0V-30V$	30	3.1k	50M			Si	F27ah
13	GC1506D							2.7pt△	4.0	3.7;0.0V-30V$	30	3.1k	50M			Si	F56q
14	GC1506E							2.7pt△	4.0	3.7;0.0V-30V$	30	3.1k	50M			Si	F59j
15	GC1506H							2.7pt△	4.0	3.7;0.0V-30V$	30	3.1k	50M			Si	S428b
16	GC1606							2.7pt△	4.0	5.2;0.0V-45V$	45	1.8k	50M			Si	F111bt
17	GC1606A							2.7pt△	4.0	5.2;0.0V-45V$	45	1.8k	50M			Si	F59q
18	GC1606B							2.7pt△	4.0	5.2;0.0V-45V$	45	1.8k	50M			Si	F27ah
19	GC1606D							2.7pt△	4.0	5.2;0.0V-45V$	45	1.8k	50M			Si	F56q
20	GC1606E							2.7pt△	4.0	5.2;0.0V-45V$	45	1.8k	50M			Si	F59j
21	GC1606H							2.7pt△	4.0	5.2;0.0V-45V$	45	1.8k	50M			Si	S428b
22	GC1706	55G						2.7p§	4.0	5.9;0.0V-60V$	60 ☑	1.1k	50M				F111bt
23	GC1706A							2.7pt△	4.0	5.9;0.0V-60V$	60	1.1k	50M			Si	F59q
24	GC1706B							2.7pt△	4.0	5.9;0.0V-60V$	60	1.1k	50M			Si	F27ah
25	GC1706D							2.7pt△	4.0	5.9;0.0V-60V$	60	1.1k	50M			Si	F56q
26	GC1706E							2.7pt△	4.0	5.9;0.0V-60V$	60	1.1k	50M			Si	F59j
27	GC1706H							2.7pt△	4.0	5.9;0.0V-60V$	60	1.1k	50M			Si	S428b
28	GC1756							2.7pt△	4.0	5.0;0.0V-60V$;10%	60	1.2k	50M		250m	Si	A1ah
29	GC1756B							2.7pt△	4.0	5.0;0.0V-60V$;5%	60	1.2k	50M		250m	Si	A1ah
30	GC1756C							2.7pt△	4.0	5.0;0.0V-60V$;2%	60	1.2k	50M		250m	Si	A1ah
31	GC51113	320G						2.7pt△	4.0	5.0-1.7;10%	15	320	1.0G			GA△§	F111bt
32	GC51313	260G						2.7pt△	4.0	5.0-1.31;10%	30	260	1.0G			GA△§	F111bt
33	GC51413	220G						2.7pt△	4.0	5.0-1.13;10%	45	220	1.0G			GA△§	F111bt
34	HA1215A							2.7pt△	4.0	3.1;2.0V-30V$;10%	30	1.0k	50M		250m	Si	A1ah
35	HA1215B							2.7pt△	4.0	3.1;2.0V-30V$;5%	30	1.0k	50M		250m	Si	A1ah
36	HA1215C							2.7pt△	4.0	3.1;2.0V-30V$;2%	30	1.0k	50M		250m	Si	A1ah
37	HA1706A							2.7pt△	4.0	5.9;0.0V-30V$	30	1.1k	50M			Si	F59q
38	HA1706B							2.7pt△	4.0	5.9;0.0V-30V$	30	1.1k	50M			Si	F27ah
39	HA1706D							2.7pt△	4.0	5.9;0.0V-30V$	30	1.1k	50M			Si	F56q
40	HA1706E							2.7pt△	4.0	5.9;0.0V-30V$	30	1.1k	50M			Si	F59j
41	HA1706H							2.7pt△	4.0	5.9;0.0V-30V$	30	1.1k	50M			Si	S428b
42	HA1915A							2.7pΔt	4.0	3.1;2.0V-30V$;10%	30	1.0k	50M		400m	Si	DO7
43	HA1915B							2.7pΔt	4.0	3.1;2.0V-30V$;5%	30	1.0k	50M		400m	Si	DO7
44	HA1915C							2.7pΔt	4.0	3.1;2.0V-30V$;2%	30	1.0k	50M		400m	Si	DO7
45▼	MA4H005							2.7pt	4	1.0-1.4	20	2.7k	50M			Si	V25
46▼	MA4H025							2.7pt	4.0	1.0-1.25	25	3.3k	50M		1.0	Si	V25
47▼	MA4H025C							2.7p	4.0	0.88-1.06	25	3.6k	50M		1.0	Si	V25
48	MA45104							2.7pt△	4.0	5.2;0.0V-45V$	55 ☑	2.0k	50M			Si$	F27f
49	MA45124							2.7pt△	4.0	5.9;0.0V-60V$	75 ☑	2.0k	50M			Si$	F27f
50	MA45144							2.7pt△	4.0	7.2;0.0V-90V$	100 ☑	1.0k	50M			Si$	F27f
51	MA45164							2.7pt△	4.0	5.2;0.0V-45V$		2.0k	50M			Si$	A1ad
52	MA45165							2.7pt△	4.0	5.3;0.0V-45V$	50 ☑	2.0k	50M			Si$	A1act
53	MA45233							2.7pΔ	4.0	3.7;0V-25V$	25	4.0k	50M			Si$§	V11†
54	MA45233C							2.7pΔ	4.0	4.5;0V-25V$	25	4.0k	50M			Si$§	u17†
55	MA45253							2.7pΔ	4.0	5.0;0V-45V$	45	2.7k	50M			Si$§	V11†
56	MA45253C							2.7pΔ	4.0	6.2;0V-45V$	45	2.4k	50M			Si$§	u17†
57	MA45267							2.7pΔ	4.0	6.2;0V-60V$	60	1.7k	50M			Si$§	V11†
58	MA45267C							2.7pΔ	4.0	7.5;0V-60V$	60	1.6k	50M			Si$§	u17†
59	MA45295							2.7pΔ	4.0	7.8;0V-90V$	90	900	50M			Si$§	V11†
60	MA45295C							2.7pΔ	4.0	9.0;0V-90V$	90	900	50M			Si$§	u17†
61	ML4316							2.7pt	4.0	4.4$ 0-25V	25 †	1.6k	50M			Si	F111at
62	ML4336							2.7pt	4.0	5.5$ 0-45V	45 †	1.1k	50M			Si	F111at
63	ML4356							2.7pt	4.0	6.1$ 0-60V	60 †	1.0k	50M			Si	F111at
64	ML4376							2.7pt	4.0	7.0$ 0-90V	90 †	500	50M			Si	F111at
65	SQ1215A,B,C							2.7pΔt	4.0	2.8;2V-30V$	30	1.3k	50M		400m	Si	A1ah
66	SQ1265A,B,C							2.7p§%	4.0		30 ☑	650	50M		250m	Si#$	A1ah
67	SQ1715,B,C							2.7pΔt	4.0	2.7;2V-30V$	30	1.3k	50M		400m	Si	DO7
68♦	DVE6951G							2.8p%§		3.0-2.5	45 ☑	5.0kØ	50M			GA	F143
69♦	DVE6952G							2.8p%§		3.0-2.5	45 ☑	5.0kØ	50M			GA	F59S
70♦	DVE6953G							2.8p%§		3.0-2.5	45 ☑	5.0kØ	50M			GA	F102f
71	DVE6954G							2.8p%§		3.0-2.5	45 ☑	5.0kØ	50M			GA	F112
72♦	DVE6955G							2.8p%§		3.0-2.5	45 ☑	5.0kØ	50M			GA	F94a
73	DVE6956G							2.8p§%		3.0-2.5	45 ☑	5.0kØ	50M			GA	†
74	SD11C24							2.8p	0.0	2.8 - 5.6	24			4.5		Si	P3
75	SD12C24							2.8p	0.0	2.8 - 5.6	24			4.5		Si	F3a
76	SD22C24							2.8p	0.0	2.8 - 5.6	24			4.5		Si	F11
77	SD32C24							2.8p	0.0	2.8 - 5.6	24			4.5		Si	F21
78	SD42C24							2.8p	0.0	2.8 - 5.6	24			4.5		Si	F9a
79	SDGPC24							2.8p	0.0	2.8 - 5.6	24			4.5		Si	DO7
80▼	1T33							2.9p	25	32.03-2.71	30			0.8			M1150
81	PL0193-1,2,3		5.0G	10G	15G			3.0p		2.0-4.0Ø	200 ☑		Ø 10G			Si$	F27as
82	SV66C							3.0p		2.0p-4.0pØ				5.0 ☑	10	Si$#	F153
83	SV67C							3.0p		2.0p-4.0pØ				5.0 ☑	10	Si$#	F153
84	CXY23D							3.0p	0.0	2.5-3.5	12 ☑			1.0		GA	F27av
85	MA4755							3.0pØ	0.0		35 ☑			600m			
86	PA0200B	40G						3.0p	0.0	2.0 - 4.0Ø	5.5	4.0	10G		.20	Si	F3aØ
87♦	DKV6550D							3.0p	4.0	2.70-3.30Ø	22 ☑	400	50M		250m	Si	F143
88	E1716A							3.0pt	4.0	2.7-3.3	30	1.2k	50M		4.0		F10k
89	EP1016A							3.0pt△	4.0	2.2;2.0V-30V$	30	1.4k	50M		5.0	Si	F59q
90	EP1016B							3.0pt△	4.0	2.2;2.0V-30V$	30	1.4k	50M		5.0	Si	F27ah
91	EP1016D							3.0pt△	4.0	2.2;2.0V-30V$	30	1.4k	50M		5.0	Si	F56q
92	EP1016E							3.0pt△	4.0	2.2;2.0V-30V$	30	1.4k	50M		5.0	Si	F59j
93	EP1016H							3.0pt△	4.0	2.2;2.0V-30V$	30	1.4k	50M		5.0	Si	S428b
94	EP1716A							3.0pt	4.0	2.7-3.3	30	1.2k	50M		4.0		F27ac
95	LP1016A							3.0pt△	4.0	4.1;0.0V-25V$	25	900	50M		5.0	Si	F59q
96	LP1016B							3.0pt△	4.0	4.1;0.0V-25V$	25	900	50M		5.0	Si	F27ah
97	LP1016D							3.0pt△	4.0	4.1;0.0V-25V$	25	900	50M		5.0	Si	F56q
98	LP1016E							3.0pt△	4.0	4.1;0.0V-25V$	25	900	50M		5.0	Si	F59j
99	LP1016H							3.0pt△	4.0	4.1;0.0V-25V$	25	900	50M		5.0	Si	S428b
100	MA46544B							3.0p	4.0	3.49-2.50Ø	15	1.0k	50M			GA	V7†
101	MA46544C							3.0p	4.0	3.49-2.50Ø	15	1.5k	50M			GA	V7†
102	MA46544D							3.0p	4.0	3.49-2.50Ø	15	2.0k	50M			GA	V7†
103	MA46564B							3.0p	4.0	3.49-2.50Ø	15	1.0k	50M			GA	V7†
104	MA46564C							3.0p	4.0	3.49-2.50Ø	15	1.5k	50M			GA	V7†
105	MA46564D							3.0p	4.0	3.49-2.50Ø	15	2.0k	50M			GA	V7†
106	MA46574B							3.0p	4.0	3.49-2.50Ø	22	1.0k	50M			GA	V7†
107	MA46574C							3.0p	4.0	3.49-2.50Ø	22	1.5k	50M			GA	V7†
108	MA46574D							3.0p	4.0	3.49-2.50Ø	22	2.0k	50M			GA	V7†
109	MAH6554B							3.0p	4.0	3.49-2.50Ø	22	1.0k	50M			GA	V7†
110	MAH6554C							3.0p	4.0	3.49-2.50Ø	22	1.5k	50M			GA	V7†

6. VOLTAGE VARIABLE CAPACITORS & VARACTOR DIODES

IN ORDER OF (1) TYPICAL CAPACITANCE, (2) TEST VOLTAGE, and (3) TYPE No.

LINE No.	3 TYPE No.	MINIMUM CUTOFF FREQUENCY (Corresponding to Type Numbers in previous column) (Hz)	(Hz)	(Hz)	(Hz)	(Hz)	(Hz)	TYP. CAP. 1 CAP. Cj (F)	2 at TEST VOLT (V)	CAPACITANCE RANGE (for V = 0 to PIV) Ø - at TEST VOLT. (pF)	PIV (V)	Q FACTOR MIN. Q	at TEST FREQ (Hz)	MAX. SER. RES. Rs (Ω)	MAX. DISS. @ 25°C (W)	DESCRIPTION MAT.	DWG. No.
1	MAH6554D							3.0p	4.0	3.49-2.50Ø	22	2.0k	50M			GA	V7†
2	MV1716,A							3.0p	4.0		30 Ø	600	50M		400m	Si∆#	DO7
3	MA4259							3.0p	5.0								P6
4	BXY37	100G						3.0p	6.0		70						F27h
5	BXY37B	100G						3.0p	6.0	2.0 - 4.0Ø	70					Si#	F47b
6	BXY37C	100G						3.0p	6.0	2.0 - 4.0Ø	70					Si#	F48h
7	BXY37D	100G						3.0p	6.0	2.0 - 4.0Ø	70					Si#	S266f
8	BXY37E	100G						3.0p	6.0	2.0-4.0Ø	70					Si#	F56p
9	BXY57	140G						3.0p	6.0	2.5-3.5Ø	60					Si	F27ai
10	MA4955C	70G						3.0p	6.0	2.0 - 4.0Ø	80				4.0	Si$	F49a
11	MA4955E	70G						3.0p	6.0	2.0 - 4.0Ø	80				4.0	Si$	F27r
12	MA44310							3.0pØ	6.0	1.0-3.0Ø	35 Ø				416mØ	Si$∆	A31e
13	P030020B,C,D,E	10G	20G	40G	60G			3.0p	6.0	2.0 - 4.0Ø	30				1.5	Si	F27ad
14	P060020A,B,C,D	5G	10G	20G	40G			3.0p	6.0	2.0 - 4.0Ø	60				2.0	Si	F27ad
15	PH1203-1,2,3,4		5.0G	10G	15G	20G		3.0p	6.0	2.0 - 4.0Ø	6.0	Ø	10G			Si	F58
16	PH1203A,B-F	30G	40G	50G	60G	70G	80G	3.0p	6.0	2.0-4.0Ø	6.0	Ø	10G			Si	F58
17	PH1203G,H	90G	100G					3.0p	6.0	2.0-4.0Ø	6.0	Ø	10G			Si	F58
18	PH1213-1,2,3,4		5.0G	10G	15G	20G		3.0p	6.0	2.0 - 4.0Ø	15	Ø	10G			Si$	F58
19	PH1213A,B-F	30G	40G	50G	60G	70G	80G	3.0p	6.0	2.0-4.0Ø	15	Ø	10G			Si	F58
20	PH1213G,H	90G	100G					3.0p	6.0	2.0-4.0Ø	15	Ø	10G			Si	F58
21	PH1223-1,2,3,4		5.0G	10G	15G	20G		3.0p	6.0	2.0 - 4.0Ø	24	Ø	10G			Si$	F58
22	PH1223A,B-F	30G	40G	50G	60G	70G	80G	3.0p	6.0	2.0-4.0Ø	24	Ø	10G			Si	F58
23	PH1223G,H	90G	100G					3.0p	6.0	2.0-4.0Ø	24	Ø	10G			Si	F58
24	PH1233-1,2,3,4		5.0G	10G	15G	20G		3.0p	6.0	2.0 - 4.0Ø	30	Ø	10G			Si$	F58
25	PH1233A,B-E	30G	40G	50G	60G	70G		3.0p	6.0	2.0-4.0Ø	30	Ø	10G			Si	F58
26	PH1243-1,2,3,4		5.0G	10G	15G	20G		3.0p	6.0	2.0 - 4.0Ø	45	Ø	10G			Si$	F58
27	PH1243A,B-E	30G	40G	50G	60G	70G		3.0p	6.0	2.0-4.0Ø	45	Ø	10G			Si	F58
28	PH1253-1,2,3,4		5.0G	10G	15G	20G		3.0p	6.0	2.0 - 4.0Ø	60	Ø	10G			Si$	F58
29	PH1253A,B-E	30G	40G	50G	60G	70G		3.0p	6.0	2.0-4.0Ø	60	Ø	10G			Si	F58
30	PH1263-1,2,3,4		5.0G	10G	15G	20G		3.0p	6.0	2.0 - 4.0Ø	90	Ø	10G			Si$	F58
31	PH1263A,B-D	30G	40G	50G	60G			3.0p	6.0	2.0-4.0Ø	90	Ø	10G			Si	F58
32	PH1273-1,2,3,4		5.0G	10G	15G	20G		3.0p	6.0	2.0 - 4.0Ø	120	Ø	10G			Si$	F58
33	PH1273A,B,C	30G	40G	50G				3.0p	6.0	2.0-4.0Ø	120	Ø	10G			Si	F58
34	PH1283-1,2,3,4		5.0G	10G	15G	20G		3.0p	6.0	2.0 - 4.0Ø	150	Ø	10G			Si$	F58
35	PH1283A	30G						3.0p	6.0	2.0-4.0Ø	150	Ø	10G			Si	F58
36	PH1293-1,2,3	5.0G	10G	15G				3.0p	6.0	2.0 - 4.0Ø	200	Ø	10G			Si$	F58
37	PL0103-1,2,3,4		5.0G	10G	15G	20G		3.0p	6.0	2.0 - 4.0Ø	6.0	Ø	10G			Si	F27d
38	PL0103A,B-F	30G	40G	50G	60G	70G	80G	3.0p	6.0	2.0-4.0Ø	6.0	Ø	10G			Si	F27d
39	PL0103G,H	90G	100G					3.0p	6.0	2.0-4.0Ø	6.0	Ø	10G			Si	F27d
40	PL0113-1,2,3,4		5.0G	10G	15G	20G		3.0p	6.0	2.0 - 4.0Ø	15	Ø	10G			Si	F27d
41	PL0113A,B-F	30G	40G	50G	60G	70G	80G	3.0p	6.0	2.0-4.0Ø	15	Ø	10G			Si	F27d
42	PL0113G,H	90G	100G					3.0p	6.0	2.0-4.0Ø	15	Ø	10G			Si	F27d
43	PL0123-1,2,3,4		5.0G	10G	15G	20G		3.0p	6.0	2.0 - 4.0Ø	24	Ø	10G			Si	F27d
44	PL0123A,B-F	30G	40G	50G	60G	70G	80G	3.0p	6.0	2.0-4.0Ø	24	Ø	10G			Si	F27d
45	PL0123G,H	90G	100G					3.0p	6.0	2.0-4.0Ø	24	Ø	10G			Si	F27d
46	PL0133-1,2,3,4		5.0G	10G	15G	20G		3.0p	6.0	2.0 - 4.0Ø	30	Ø	10G			Si	F27d
47	PL0133A,B-E	30G	40G	50G	60G	70G		3.0p	6.0	2.0-4.0Ø	30	Ø	10G			Si	F27d
48	PL0143-1,2,3,4		5.0G	10G	15G	20G		3.0p	6.0	2.0 - 4.0Ø	45	Ø	10G			Si	F27d
49	PL0143A,B-E	30G	40G	50G	60G	70G		3.0p	6.0	2.0-4.0Ø	45	Ø	10G			Si	F27d
50	PL0153-1,2,3,4		5.0G	10G	15G	20G		3.0p	6.0	2.0 - 4.0Ø	60	Ø	10G			Si	F27d
51	PL0153A,B-E	30G	40G	50G	60G	70G		3.0p	6.0	2.0-4.0Ø	60	Ø	10G			Si	F27d
52	PL0163-1,2,3,4		5.0G	10G	15G	20G		3.0p	6.0	2.0 - 4.0Ø	90	Ø	10G			Si	F27d
53	PL0163A,B-D	30G	40G	50G	60G			3.0p	6.0	2.0-4.0Ø	90	Ø	10G			Si	F27d
54	PL0173-1,2,3,4		5.0G	10G	15G	20G		3.0p	6.0	2.0 - 4.0Ø	120	Ø	10G			Si	F27d
55	PL0173A,B,C	30G	40G	50G				3.0p	6.0	2.0-4.0Ø	120	Ø	10G			Si	F27d
56	PL0183-1,2,3,4		5.0G	10G	15G	20G		3.0p	6.0	2.0 - 4.0Ø	150	Ø	10G			Si	F27d
57	PL0183A	30G						3.0p	6.0	2.0-4.0Ø	150	Ø	10G			Si	F27d
58	PL0503-1,2,3,4		5.0G	10G	15G	20G		3.0p	6.0	2.0 - 4.0Ø	6.0	Ø	10G			Si	F10p
59	PL0503A,B-F	30G	40G	50G	60G	70G	80G	3.0p	6.0	2.0-4.0Ø	6.0	Ø	10G			Si	F10p
60	PL0503G,H	90G	100G					3.0p	6.0	2.0-4.0Ø	6.0	Ø	10G			Si	F10p
61	PL0513-1,2,3,4		5.0G	10G	15G	20G		3.0p	6.0	2.0 - 4.0Ø	15	Ø	10G			Si	F10p
62	PL0513A,B-F	30G	40G	50G	60G	70G	80G	3.0p	6.0	2.0-4.0Ø	15	Ø	10G			Si	F10p
63	PL0513G,H	90G	100G					3.0p	6.0	2.0-4.0Ø	15	Ø	10G			Si	F10p
64	PL0523-1,2,3,4		5.0G	10G	15G	20G		3.0p	6.0	2.0 - 4.0Ø	24	Ø	10G			Si	F10p
65	PL0523A,B-F	30G	40G	50G	60G	70G	80G	3.0p	6.0	2.0-4.0Ø	24	Ø	10G			Si	F10p
66	PL0523G,H	90G	100G					3.0p	6.0	2.0-4.0Ø	24	Ø	10G			Si	F10p
67	PL0533-1,2,3,4		5.0G	10G	15G	20G		3.0p	6.0	2.0 - 4.0Ø	30	Ø	10G			Si	F10p
68	PL0533A,B-E	30G	40G	50G	60G	70G		3.0p	6.0	2.0-4.0Ø	30	Ø	10G			Si	F10p
69	PL0543-1,2,3,4		5.0G	10G	15G	20G		3.0p	6.0	2.0 - 4.0Ø	45	Ø	10G			Si	F10p
70	PL0543A,B-E	30G	40G	50G	60G	70G		3.0p	6.0	2.0-4.0Ø	45	Ø	10G			Si	F59
71	PL0553-1,2,3,4		5.0G	10G	15G	20G		3.0p	6.0	2.0 - 4.0Ø	60	Ø	10G			Si	F10p
72	PL0553A,B-E	30G	40G	50G	60G	70G		3.0p	6.0	2.0-4.0Ø	60	Ø	10G			Si	F10p
73	PL0563-1,2,3,4		5.0G	10G	15G	20G		3.0p	6.0	2.0 - 4.0Ø	90	Ø	10G			Si	F10p
74	PL0563A,B-D	30G	40G	50G	60G			3.0p	6.0	2.0-4.0Ø	90	Ø	10G			Si	F10p
75	PL0573-1,2,3,4		5.0G	10G	15G	20G		3.0p	6.0	2.0 - 4.0Ø	120	Ø	10G			Si	F10p
76	PL0573A,B,C	30G	40G	50G				3.0p	6.0	2.0-4.0Ø	120	Ø	10G			Si	F10p
77	PL0583-1,2,3,4		5.0G	10G	15G	20G		3.0p	6.0	2.0 - 4.0Ø	150	Ø	10G			Si	F10p
78	PL0583A	30G						3.0p	6.0	2.0-4.0Ø	150	Ø	10G			Si	F10p
79	PL0593-1,2,3	5.5G	10G	15G				3.0p	6.0	2.0 - 4.0Ø	200	Ø	10G			Si	F10p
80	SV56C	25G						3.0p	6.0	2.0p-4.0pØ					1.5	Si$#	F27a
81	VJE55W	150G						3.0p	6.0	2.0-4.0Ø	48 Ø					Si	F132
82	VSE55M							3.0p	6.0	2.0-4.0Ø	48 Ø					Si	F128
83	VSE55W	150G						3.0p	6.0	2.0-4.0Ø	48 Ø					Si	F128
84	VTE55W	150G						3.0p	6.0	2.0-4.0Ø	48 Ø					Si	F130
85	VUE55W	150G						3.0p	6.0	2.0-4.0Ø	48 Ø					Si	F133
86	VWE55W	150G						3.0p	6.0	2.0-4.0Ø	48 Ø					Si	F131
87	VXE55W	150G						3.0p	6.0	2.0-4.0Ø	48 Ø					Si	S167
88	MA4251							3.0pØ	30								F3a
89	MA4562							3.0pØ	30								F9
90	GC1807							3.1p	4.0	7.8-.78	90	700	50M			Si	F111bt
91	MD710	60G						3.1p	6.0	2.4-3.9Ø	25	20	3.0G		1.5 Ø	Si	F27g
92	MD710Y	60G						3.1p	6.0	2.4-3.9Ø	25	20	3.0G		1.5 Ø	Si	u13
93	MA4257							3.2p	0.0	2.5 - 4.0		3.0	10G				F9
94	SD11C6							3.2p	0.0	3.2 - 6.0	6.0			1.5		Si	P3
95	SD12C6							3.2p	0.0	3.2 - 6.0	6.0			1.5		Si	F3a
96	SD22C6							3.2p	0.0	3.2 - 6.0	6.0			1.5		Si	F11
97	SD32C6							3.2p	0.0	3.2 - 6.0	6.0			1.5		Si	F21
98	SD42C6							3.2p	0.0	3.2 - 6.0	6.0			1.5		Si	F9a
99	SDGPC6							3.2p	0.0	3.2 - 6.0	6.0			1.5		Si	DO7
100	1N5137							3.3p	4.0	2.2;4.0V-60V$	60 Ø	350	50M		400m	Si	DO7
101	1N5137A							3.3p	4.0	2.2;4.0V-60V$	60 Ø	350	50M		400m	Si	DO7
102	CV1862B							3.3p	4.0	2.97-3.63	60	300	100M		5.0	Si	F27xØ
103	CV1862D							3.3p	4.0	2.97-3.63	60	300	100M		5.0	Si	F56nØ
104	CVH2030-11							3.3p	4.0	4.5;0.0-30$;10%	30 Ø	3.6k	50M			Si$§	u30a
105	CVH2045-11							3.3p	4.0	6.1;0.0-45$;10%	45 Ø	2.1k	50M			Si$§	u30a
106	CVH2060-11							3.3p	4.0	7.5;0.0-60$;10%	60 Ø	1.8k	50M			Si$§	u30a
107	CVH2090-11							3.3p	4.0	8.7;0.0-90$;10%	90 Ø	850	50M			Si$§	u30a
108	DC4256B	22G						3.3p	4.0		60	450	50M			Si	DO35∆
109	DC4266B	25G						3.3p	4.0		60	500	50M			Si	F121a∆
110	DC4286B	25G						3.3p	4.0		60	500	50M			Si	M524c∆

6. VOLTAGE VARIABLE CAPACITORS & VARACTOR DIODES

IN ORDER OF (1) TYPICAL CAPACITANCE, (2) TEST VOLTAGE, and (3) TYPE No.

LINE No.	[3] TYPE No.	MINIMUM CUTOFF FREQUENCY (Corresponding to Type Numbers in previous column) (Hz)	(Hz)	(Hz)	(Hz)	(Hz)	(Hz)	TYP. CAP. [1] CAP. Cj (F)	[2] at TEST VOLT (V)	CAPACITANCE RANGE (for V = 0 to PIV) Ø - at TEST VOLT. (pF)	PIV (V)	Q FACTOR MIN. Q	at TEST FREQ (Hz)	MAX. SER. RES. Rs (Ω)	MAX. DISS. @ 25°C (W)	DESCRIPTION MAT.	DWG. No.
1	DT307							3.3p§	4.0	3.9;0.0V-30V$	30 ☑	3000 Ø	50M			Si	V1
2	DT607							3.3p§	4.0	6.0;0.0V-60V$	60 ☑	1300 Ø	50M			Si	V1
3	DT907							3.3p§	4.0	8.4;0.0V-90V$	90 ☑	850 Ø	50M			Si	V1
4	DT4507							3.3p§	4.0	5.3;0.0V-45V$	45 ☑	2000 Ø	50M			Si	V1
5♦	DVH6730-11							3.3p§	4.0	4.2;0.0-30$;10%	30 ☑	3.6k	50M			Si$§	A90a
6♦	DVH6731-11	180G						3.3p†	4.0	4.2;0.0V-30V$;10%	30 ☑	3.6k	50M			Si$§	F143
7	DVH6732-11	180G						3.3p†	4.0	4.2;0.0V-30V$;10%	30 ☑	3.6k	50M			Si$§	F56ad
8	DVH6733-11	180G						3.3p†	4.0	4.2;0.0V-30V$;10%	30 ☑	3.6k	50M			Si$§	F59u
9	DVH6734-11	180G						3.3p†	4.0	4.2;0.0V-30V$;10%	30 ☑	3.6k	50M			Si$§	M929
10♦	DVH6740-11							3.3p§	4.0	5.3;0.0-45$;10%	45 ☑	2.1k	50M			Si$§	A90a
11♦	DVH6741-11	105G						3.3p†	4.0	5.3;0.0V-45V$;10%	45 ☑	2.1k	50M			Si$§	F143
12	DVH6742-11	105G						3.3p†	4.0	5.3;0.0V-45V$;10%	45 ☑	2.1k	50M			Si$§	F56ad
13	DVH6743-11	105G						3.3p†	4.0	5.3;0.0V-45V$;10%	45 ☑	2.1k	50M			Si$§	F59u
14	DVH6744-11	105G						3.3p†	4.0	5.3;0.0V-45V$;10%	45 ☑	2.1k	50M			Si$§	M929
15♦	DVH6760-11							3.3p§	4.0	6.0;0.0-60$;10%	60 ☑	1.8k	50M			Si$§	A90a
16♦	DVH6761-11	90G						3.3p†	4.0	6.0;0.0V-60V$;10%	60 ☑	1.8k	50M			Si$§	F143
17	DVH6762-11	90G						3.3p†	4.0	6.0;0.0V-60V$;10%	60 ☑	1.8k	50M			Si$§	F56ad
18	DVH6763-11	90G						3.3p†	4.0	6.0;0.0V-60V$;10%	60 ☑	1.8k	50M			Si$§	F59u
19	DVH6764-11	90G						3.3p†	4.0	6.0;0.0V-60V$;10%	60 ☑	1.8k	50M			Si$§	M929
20♦	DVH6790-11							3.3p§	4.0	7.1;0.0-90$;10%	90 ☑	850	50M			Si$§	A90a
21♦	DVH6791-11	42G						3.3p†	4.0	7.1;0.0V-90V$;10%	90 ☑	850	50M			Si$§	F143
22	DVH6792-11	42G						3.3p†	4.0	7.1;0.0V-90V$;10%	90 ☑	850	50M			Si$§	F56ad
23	DVH6793-11	42G						3.3p†	4.0	7.1;0.0V-90V$;10%	90 ☑	850	50M			Si$§	F59u
24	DVH6794-11	42G						3.3p†	4.0	7.1;0.0V-90V$;10%	90 ☑	850	50M			Si$§	M929
25	E603	25G						3.3p	4.0	2.8;1.0V-25V$	30	500	50M			Si	F27az
26	E703	55G						3.3p	4.0	3.7;1.0V-50V$	60	1.1k	50M			Si	F27az
27	G603A,B,C							3.3pΔ†	4.0	1.7-2.2Ø;10,5,2%	25	600	50M		400m	Si	DO35
28	GC1507							3.3p†Δ	4.0	3.8;0.0V-30V$	30	3.0k	50M			Si	F111b†
29	GC1507A							3.3p†Δ	4.0	3.8;0.0V-30V$	30	3.0k	50M			Si	F59q
30	GC1507B							3.3p†Δ	4.0	3.8;0.0V-30V$	30	3.0k	50M			Si	F27ah
31	GC1507D							3.3p†Δ	4.0	3.8;0.0V-30V$	30	3.0k	50M			Si	F56q
32	GC1507E							3.3p†Δ	4.0	3.8;0.0V-30V$	30	3.0k	50M			Si	F59j
33	GC1507H							3.3p†Δ	4.0	3.8;0.0V-30V$	30	3.0k	50M			Si	S428b
34	GC1607							3.3p†Δ	4.0	5.3;0.0V-45V$	45	1.8k	50M			Si	F111b†
35	GC1607A							3.3p†Δ	4.0	5.3;0.0V-45V$	45	1.8k	50M			Si	F59q
36	GC1607B							3.3p†Δ	4.0	5.3;0.0V-45V$	45	1.8k	50M			Si	F27ah
37	GC1607D							3.3p†Δ	4.0	5.3;0.0V-45V$	45	1.8k	50M			Si	F56q
38	GC1607E							3.3p†Δ	4.0	5.3;0.0V-45V$	45	1.8k	50M			Si	F59j
39	GC1607H							3.3p†Δ	4.0	5.3;0.0V-45V$	45	1.8k	50M			Si	S428b
40	GC1707	55G						3.3p§	4.0	6.0;0.0V-60V$	60 ☑	1.1k	50M				F111b†
41	GC1707A							3.3p†Δ	4.0	6.0;0.0V-60V$	60	1.1k	50M			Si	F59q
42	GC1707B							3.3p†Δ	4.0	6.0;0.0V-60V$	60	1.1k	50M			Si	F27ah
43	GC1707D							3.3p†Δ	4.0	6.0;0.0V-60V$	60	1.1k	50M			Si	F56q
44	GC1707E							3.3p†Δ	4.0	6.0;0.0V-60V$	60	1.1k	50M			Si	F59j
45	GC1707H							3.3p†Δ	4.0	6.0;0.0V-60V$	60	1.1k	50M			Si	S428b
46	GC1757							3.3p†Δ	4.0	6.0;0.0V-60V$;10%	60	1.1k	50M		250m	Si	A1ah
47	GC1757B							3.3p†Δ	4.0	6.0;0.0V-60V$;5%	60	1.1k	50M		250m	Si	A1ah
48	GC1757C							3.3p†Δ	4.0	6.0;0.0V-60V$;2%	60	1.1k	50M		250m	Si	A1ah
49	HA1216A							3.3p†Δ	4.0	3.1;2.0V-30V$;10%	30	1.0k	50M		250m	Si	A1ah
50	HA1216B							3.3p†Δ	4.0	3.1;2.0V-30V$;5%	30	1.0k	50M		250m	Si	A1ah
51	HA1216C							3.3p†Δ	4.0	3.1;2.0V-30V$;2%	30	1.0k	50M		250m	Si	A1ah
52	HA1707A							3.3p†Δ	4.0	6.0;0.0V-30V$	30	1.1k	50M			Si	F59q
53	HA1707B							3.3p†Δ	4.0	6.0;0.0V-30V$	30	1.1k	50M			Si	F27ah
54	HA1707D							3.3p†Δ	4.0	6.0;0.0V-30V$	30	1.1k	50M			Si	F56q
55	HA1707E							3.3p†Δ	4.0	6.0;0.0V-30V$	30	1.1k	50M			Si	F59j
56	HA1707H							3.3p†Δ	4.0	6.0;0.0V-30V$	30	1.1k	50M			Si	S428b
57	HA1916A							3.3pΔ†	4.0	3.1;2.0V-30V$;10%	30	1.0k	50M		400m	Si	DO7
58	HA1916B							3.3pΔ†	4.0	3.1;2.0V-30V$;5%	30	1.0k	50M		400m	Si	DO7
59	HA1916C							3.3pΔ†	4.0	3.1;2.0V-30V$;2%	30	1.0k	50M		400m	Si	DO7
60▼	MA4H006							3.3p†	4	1.2-1.6	20	2.5k	50M			Si	V25
61▼	MA4H026							3.3p†	4.0	1.15-1.45	25	3.1k	50M		1.0	Si	V25
62▼	MA4H026C							3.3p	4.0	1.05-1.40	25	3.4k	50M		1.0	Si	V25
63	MA45105							3.3p†Δ	4.0	5.3;0.0V-45V$	55 ☑	2.0k	50M			Si$	F27f
64	MA45125							3.3p†Δ	4.0	6.0;0.0V-60V$	75 ☑	2.0k	50M			Si$	F27f
65	MA45145							3.3p†Δ	4.0	7.5;0.0V-90V$	100 ☑	1.0k	50M			Si$	F27f
66	MA45156							3.3p†Δ	4.0	6.2;0.0V-60V$	65 ☑	1.5k	50M			Si$	A1ac†
67	MA45166							3.3p†Δ	4.0	5.4;0.0V-45V$	50 ☑	2.0k	50M			Si$	A1ac†
68	MA45234							3.3pΔ	4.0	3.7;0V-25V$	25	3.5k	50M			Si$§	V11†
69	MA45234C							3.3pΔ	4.0	4.5;0V-25V$	25	3.5k	50M			Si$§	u17†
70	MA45254							3.3pΔ	4.0	5.2;0V-45V$	45	2.4k	50M			Si$§	V11†
71	MA45254C							3.3pΔ	4.0	6.2;0V-45V$	45	2.2k	50M			Si$§	u17†
72	MA45268							3.3pΔ	4.0	6.3;0V-60V$	60	1.6k	50M			Si$§	V11†
73	MA45268C							3.3pΔ	4.0	7.5;0V-60V$	60	1.6k	50M			Si$§	u17†
74	MA45296							3.3pΔ	4.0	8.0;0V-90V$	90	800	50M			Si$§	V11†
75	MA45296C							3.3pΔ	4.0	9.0;0V-90V$	90	800	50M			Si$§	u17†
76	MC3							3.3p	4.0		60 †	10	50M			Si	A1au
77	MC203							3.3p	4.0		60	25	50M			Si	A1au
78	MC303							3.3p	4.0			50	50M			Si	A1au
79	MC403							3.3p	4.0	5.0;1.0V-60V$	60 †	100	50M			Si	A1au
80	MC603							3.3p	4.0	2.65-3.95Ø	60	250	50M			Si	A1au
81	ML4317							3.3p†	4.0	4.6$ 0-25V	25 †	1.4k	50M			Si	F111a†
82	ML4337							3.3p†	4.0	5.7$ 0-45V	45 †	1.0k	50M			Si	F111a†
83	ML4357							3.3p†	4.0	6.4$ 0-60V	60 †	1.0k	50M			Si	F111a†
84	ML4377							3.3p†	4.0	7.3$ 0-90V	90 †	500	50M			Si	F111a†
85	MMC603							3.3p	4.0	2.65-3.95Ø	60	500	50M			Si	A1au
86	MV1862A							3.3p†	4.0	2.97 - 3.63Ø	60			1.6	5.0	Si	F27a
87	MV1862B							3.3p†	4.0	2.97 - 3.63Ø	60			1.6	5.0	Si	F10a
88	MV1862D							3.3p†	4.0	3.3;4.0V-60V$	60 ☑	300	100M		5.0	Si	F56n
89	MV1862E							3.3p†Δ	4.0	2.6-2.8Ø	60	300	100M			Si	F59j
90	MV1862H							3.3p†Δ	4.0	2.6-2.8Ø	60	300	100M			Si	S428b
91	MVI2099							3.3p†	4.0	2.9;2.0V-30V$	30 ☑	300	100M		200m	Si	M750
92	SQ1216A,B,C							3.3p†Δ	4.0	3.2V-30V$	30	1.2k	50M		400m	Si	A1ah
93	SQ1266A,B,C							3.3p§%	4.0		30 ☑	600	50M		250m	Si#$	A1ah
94	SQ1716,B,C							3.3pΔ†	4.0	3.0;2V-30V$	30	1.2k	50M		400m	Si	DO7
95	VVC780,A,B,C,D							3.3p%	4.0	3.2;4.0V-60V$	60	25	50M		400m§	Si	DO7†
96	VVC781,A,B,C,D							3.3p%	4.0	3.2;4.0V-60V$	60	50	50M		400m§	Si	DO7†
97	VVC782,A,B,C,D							3.3p%	4.0	3.2;4.0V-60V$	60	100	50M		400m§	Si	DO7†
98	DC4303A							3.3p†	4.5			3.4 Ø	10G			GA	F121a
99	DC4304A							3.3p†	4.5			3.4 Ø	10G			GA	F121a
100	DC4304B							3.3p†	4.5			3.4 Ø	10G			GA	F121a
101	DC4374A							3.3p†	4.5			3.4	10G			GA	u7d
102	DC4374B							3.3p†	4.5			3.4	10G			GA	u7d
103	1S361	50G						3.5p☑			5.0				200m	Si§	F3a
104♦	DVE6951H							3.5p%§		4.0-3.0	45 ☑	4.5kØ	50M			GA	F143
105♦	DVE6952H							3.5p%§		4.0-3.0	45 ☑	4.5kØ	50M			GA	F59S
106♦	DVE6953H							3.5p%§		4.0-3.0	45 ☑	4.5kØ	50M			GA	F102f
107	DVE6954H							3.5p%§		4.0-3.0	45 ☑	4.5kØ	50M			GA	F112
108♦	DVE6955H							3.5p%§		4.0-3.0	45 ☑	4.5kØ	50M			GA	F94a
109	DVE6956H							3.5p§%		4.0-3.0	45 ☑	4.5kØ	50M			GA	†
110	DVE4550H							3.5pΔ	0.0	3.0-4.0Ø	25 ☑	4.3k	50M			GA	†

SYMBOLS AND CODES EXPLAINED IN INTERPRETER

6. VOLTAGE VARIABLE CAPACITORS & VARACTOR DIODES

IN ORDER OF (1) TYPICAL CAPACITANCE, (2) TEST VOLTAGE, and (3) TYPE No.

LINE No.	3 TYPE No.	MINIMUM CUTOFF FREQUENCY (Corresponding to Type Numbers in previous column) (Hz)	(Hz)	(Hz)	(Hz)	(Hz)	(Hz)	TYP. CAP. 1 CAP. Cj (F)	2 at TEST VOLT (V)	CAPACITANCE RANGE (for V = 0 to PIV) Ø - at TEST VOLT. (pF)	PIV (V)	Q FACTOR MIN. Q	at TEST FREQ (Hz)	MAX. SER. RES. Rs (Ω)	MAX. DISS. @ 25°C (W)	DESCRIPTION MAT.	DWG. No.
1♦	DVE4551H							3.5pΔ	0.0	3.0-4.0Ø	25 Ø	4.3k	50M			GA	F143
2♦	DVE4552H							3.5pΔ	0.0	3.0-4.0Ø	25 Ø	4.3k	50M			GA	F59s
3♦	DVE4555H							3.5pΔ	0.0	3.0-4.0Ø	25 Ø	4.3k	50M			GA	F94a
4	DVE4575H							3.5pΔ	0.0	3.0-4.0Ø	25 Ø	4.3k	50M			GA	F102f
5♦	DVE4576H							3.5pΔ	0.0	3.0-4.0Ø	25 Ø	4.3k	50M			GA	F112
6	PFV103-01							3.5p	0.0	2.9;0.0V-15V$	15 Ø	4.6k	50M			GAΔ$	F27as
7	PFV103-05							3.5p	0.0	2.9;0.0V-15V$	15 Ø	4.6k	50M			GAΔ$	F10af
8	PFV103-21							3.5p	0.0	2.9;0.0V-15V$	15 Ø	4.6k	50M			GAΔ$	M86e
9	PFV103-31							3.5p	0.0	2.9;0.0V-15V$	15 Ø	4.6k	50M			GAΔ$	F10ah
10	PFV103-45							3.5p	0.0	2.9;0.0V-15V$	15 Ø	4.6k	50M			GAΔ$	F54c
11	PFV108-01							3.5p	0.0	3.2;0.0V-25V$	25 Ø	4.2k	50M			GAΔ$	F27as
12	PFV108-05							3.5p	0.0	3.2;0.0V-25V$	25 Ø	4.2k	50M			GAΔ$	F10af
13	PFV108-21							3.5p	0.0	3.2;0.0V-25V$	25 Ø	4.2k	50M			GAΔ$	M86e
14	PFV108-31							3.5p	0.0	3.2;0.0V-25V$	25 Ø	4.2k	50M			GAΔ$	F10ah
15	PFV108-45							3.5p	0.0	3.2;0.0V-25V$	25 Ø	4.2k	50M			GAΔ$	F54c
16	PFV113-01							3.5p	0.0	3.6;0.0V-30V$	30 Ø	4.1k	50M			GAΔ$	F27as
17	PFV113-05							3.5p	0.0	3.6;0.0V-30V$	30 Ø	4.1k	50M			GAΔ$	F10af
18	PFV113-21							3.5p	0.0	3.6;0.0V-30V$	30 Ø	4.1k	50M			GAΔ$	M86e
19	PFV113-31							3.5p	0.0	3.6;0.0V-30V$	30 Ø	4.1k	50M			GAΔ$	F10ah
20	PFV113-45							3.5p	0.0	3.6;0.0V-30V$	30 Ø	4.1k	50M			GAΔ$	F54c
21	PFV118-01							3.5p	0.0	4.1;0.0V-45V$	45 Ø	3.6k	50M			GAΔ$	F27as
22	PFV118-05							3.5p	0.0	4.1;0.0V-45V$	45 Ø	3.6k	50M			GAΔ$	F10af
23	PFV118-21							3.5p	0.0	4.1;0.0V-45V$	45 Ø	3.6k	50M			GAΔ$	M86e
24	PFV118-31							3.5p	0.0	4.1;0.0V-45V$	45 Ø	3.6k	50M			GAΔ$	F10ah
25	PFV118-45							3.5p	0.0	4.1;0.0V-45V$	45 Ø	3.6k	50M			GAΔ$	F54c
26	PFV123-01							3.5p	0.0	4.4;0.0V-60V$	60 Ø	2.6k	50M			GAΔ$	F27as
27	PFV123-05							3.5p	0.0	4.4;0.0V-60V$	60 Ø	2.6k	50M			GAΔ$	F10af
28	PFV123-21							3.5p	0.0	4.4;0.0V-60V$	60 Ø	2.6k	50M			GAΔ$	M86e
29	PFV123-31							3.5p	0.0	4.4;0.0V-60V$	60 Ø	2.6k	50M			GAΔ$	F10ah
30	PFV123-45							3.5p	0.0	4.4;0.0V-60V$	60 Ø	2.6k	50M			GAΔ$	F54c
31	PSV103-01							3.5p	0.0	3.5;0.0V-30V$	30 Ø	2.5k	50M			Si§	F27as
32	PSV103-05							3.5p	0.0	3.5;0.0V-30V$	30 Ø	2.5k	50M			Si§	F10af
33	PSV103-08							3.5p	0.0	3.5;0.0V-30V$	30 Ø	2.5k	50M			Si§	A1vd
34	PSV103-14							3.5p	0.0	3.5;0.0V-30V$	30 Ø	2.5k	50M			Si§	A2u
35	PSV103-16							3.5p	0.0	3.5;0.0V-30V$	30 Ø	2.5k	50M			Si§	A1st
36	PSV103-21							3.5p	0.0	3.5;0.0V-30V$	30 Ø	2.5k	50M			Si§	M86e
37	PSV103-31							3.5p	0.0	3.5;0.0V-30V$	30 Ø	2.5k	50M			Si§	F10ah
38	PSV103-45							3.5p	0.0	3.5;0.0V-30V$	30 Ø	2.5k	50M			Si§	F54c
39	PSV108-01							3.5p	0.0	4.0;0.0V-45V$	45 Ø	2.0k	50M			Si§	F27as
40	PSV108-05							3.5p	0.0	4.0;0.0V-45V$	45 Ø	2.0k	50M			Si§	F10af
41	PSV108-08							3.5p	0.0	4.0;0.0V-45V$	45 Ø	2.0k	50M			Si§	A1vd
42	PSV108-14							3.5p	0.0	4.0;0.0V-45V$	45 Ø	2.0k	50M			Si§	A2u
43	PSV108-16							3.5p	0.0	4.0;0.0V-45V$	45 Ø	2.0k	50M			Si§	A1st
44	PSV108-21							3.5p	0.0	4.0;0.0V-45V$	45 Ø	2.0k	50M			Si§	M86e
45	PSV108-31							3.5p	0.0	4.0;0.0V-45V$	45 Ø	2.0k	50M			Si§	F10ah
46	PSV108-45							3.5p	0.0	4.0;0.0V-45V$	45 Ø	2.0k	50M			Si§	F54c
47	PSV120-01							3.5p	0.0	5.0;0.0V-60V$	60 Ø	1.5k	50M			Si§	F27as
48	PSV120-05							3.5p	0.0	5.0;0.0V-60V$	60 Ø	1.5k	50M			Si§	F10af
49	PSV120-08							3.5p	0.0	5.0;0.0V-60V$	60 Ø	1.5k	50M			Si§	A1vd
50	PSV120-14							3.5p	0.0	5.0;0.0V-60V$	60 Ø	1.5k	50M			Si§	A2u
51	PSV120-16							3.5p	0.0	5.0;0.0V-60V$	60 Ø	1.5k	50M			Si§	A1st
52	PSV120-21							3.5p	0.0	5.0;0.0V-60V$	60 Ø	1.5k	50M			Si§	M86e
53	PSV120-31							3.5p	0.0	5.0;0.0V-60V$	60 Ø	1.5k	50M			Si§	F10ah
54	PSV120-45							3.5p	0.0	5.0;0.0V-60V$	60 Ø	1.5k	50M			Si§	F54c
55	PSV131-01							3.5p	0.0	6.0;0.0V-90V$	90 Ø	1.5k	50M			Si	F27as
56	PSV131-05							3.5p	0.0	6.0;0.0V-90V$	90 Ø	1.5k	50M			Si	F10af
57	PSV131-08							3.5p	0.0	6.0;0.0V-90V$	90 Ø	1.5k	50M			Si	A1vd
58	PSV131-14							3.5p	0.0	6.0;0.0V-90V$	90 Ø	1.5k	50M			Si	A2u
59	PSV131-16							3.5p	0.0	6.0;0.0V-90V$	90 Ø	1.5k	50M			Si	A1st
60	PSV131-21							3.5p	0.0	6.0;0.0V-90V$	90 Ø	1.5k	50M			Si	M86e
61	PSV131-31							3.5p	0.0	6.0;0.0V-90V$	90 Ø	1.5k	50M			Si	F10ah
62	PSV131-45							3.5p	0.0	6.0;0.0V-90V$	90 Ø	1.5k	50M			Si	F54c
63	VNA314H							3.5p	4.0	3.5;0.0V-30V$	30 $	2750	50M			Si	F136
64	VNA414H							3.5p	4.0	6.0;0.0V-60V$	60 $	1000	50M			Si	F136
65	VSA314H							3.5p	4.0	3.5;0.0V-30V$	30 $	2750	50M			Si	F128
66	VSA414H							3.5p	4.0	6.0;0.0V-60V$	60 $	1000	50M			Si	F128
67	VTA314H							3.5p	4.0	3.5;0.0V-30V$	30 $	2750	50M			Si	F130
68	VTA414H							3.5p	4.0	6.0;0.0V-60V$	60 $	1000	50M			Si	F130
69	VYA314H							3.5p	4.0	3.5;0.0V-30V$	30 $	2750	50M			Si	F135
70	VYA414H							3.5p	4.0	6.0;0.0V-60V$	60 $	1000	50M			Si	F135
71	MA44130	100M						3.5pØ	6.0	1.0-3.5Ø	75 Ø				5.0 Ø	Si§Δ	F115
72	MA44230	100M						3.5pØ	6.0	1.0-3.5Ø	75 Ø				5.0 Ø	Si§Δ	F115
73	ML4409							3.5p	6.0	3.5-8.0Ø	90 Ø			400mØ		Si§Δ$	F27as
74	BBY34D							3.5pt	-4	2.7$		400	50M			Si	F134
75	BBY36							3.5pt	-4	2.7$		400	50M			Si	A1ac
76	MA43003							3.5pØ	10	1.9-3.5Ø	40 Ø				5.8 Ø	Si§Δ	F56b
77	MS334-8							3.5p	60	4.5;0.0V-60V$	60 Ø	3.0k	50M			GA♦$	F27as
78	MS334-8A							3.5p	60	4.5;0.0V-60V$	60 Ø	3.0k	50M			GA♦$	F56y
79	MS334-21							3.5p	60	4.5;0.0V-60V$	60 Ø	3.0k	50M			GA♦$	F59m
80	MS334-21A							3.5pt	60	4.5;0.0V-60V$	60 Ø	3.0k	50M			GA♦$	M892
81	SD11C48							3.6p	0.0	3.6 - 7.2	48			2.6		Si	P3
82	SD12C48							3.6p	0.0	3.6 - 7.2	48			2.6		Si	F3a
83	SD22C48							3.6p	0.0	3.6 - 7.2	48			2.6		Si	F11
84	SD32C48							3.6p	0.0	3.6 - 7.2	48			2.6		Si	F21
85	SD42C48							3.6p	0.0	3.6 - 7.2	48			2.6		Si	F9a
86	SDGPC48							3.6p	0.0	3.6 - 7.2	48			2.6		Si	DO7
87	E1717A							3.6pt	4.0	3.3-4.0	30	1.2k	50M		4.0		F10k
88	EP1017A							3.6pt Δ	4.0	2.3;2.0V-30V$	30	1.2k	50M		5.0	Si	F59q
89	EP1017B							3.6pt Δ	4.0	2.3;2.0V-30V$	30	1.2k	50M		5.0	Si	F27ah
90	EP1017D							3.6pt Δ	4.0	2.3;2.0V-30V$	30	1.2k	50M		5.0	Si	F56q
91	EP1017E							3.6pt Δ	4.0	2.3;2.0V-30V$	30	1.2k	50M		5.0	Si	F59j
92	EP1017H							3.6pt Δ	4.0	2.3;2.0V-30V$	30	1.2k	50M		5.0	Si	S428b
93	EP1717A							3.6pt	4.0	3.3-4.0	30	1.2k	50M		4.0		F27ac
94	LP1017A							3.6pt Δ	4.0	4.2;0.0V-25V$	25	900	50M		5.0	Si	F59q
95	LP1017B							3.6pt Δ	4.0	4.2;0.0V-25V$	25	900	50M		5.0	Si	F27ah
96	LP1017D							3.6pt Δ	4.0	4.2;0.0V-25V$	25	900	50M		5.0	Si	F56q
97	LP1017E							3.6pt Δ	4.0	4.2;0.0V-25V$	25	900	50M		5.0	Si	F59j
98	LP1017H							3.6pt Δ	4.0	4.2;0.0V-25V$	25	900	50M		5.0	Si	S428b
99	MV1717,A							3.6p	4.0		30 Ø	600	50M		400m	Si Δ #	DO7
100	BBY32EA							3.7p			60	1200	50M			Si	F139
101	GC1808							3.7p	4.0	9.1-.90	90	650	50M			Si	F111bt
102	KA602B	20GØ						3.7pt	6.0	2.7-4.7Ø	60				1.5 §Ø	#$	F58a
103	MA43030							3.7p	6.0	3.0-4.5Ø	85 Ø				11 Ø	Si§Δ	M796
104	SD11C60							3.8p	0.0	3.8 - 7.6	60			2.6		Si	P3
105	SD12C60							3.8p	0.0	3.8 - 7.6	60			2.6		Si	F3a
106	SD22C60							3.8p	0.0	3.8 - 7.6	60			2.6		Si	F11
107	SD32C60							3.8p	0.0	3.8 - 7.6	60			2.6		Si	F21
108	SD42C60							3.8p	0.0	3.8 - 7.6	60			2.6		Si	F9a
109	SDGPC60							3.8p	0.0	3.8 - 7.6	60			2.6		Si	DO7
110	1N5458							3.9pt	4	2.5 - 3.1	30	600	50M		400m	Si	DO7

6. VOLTAGE VARIABLE CAPACITORS & VARACTOR DIODES

IN ORDER OF (1) TYPICAL CAPACITANCE, (2) TEST VOLTAGE, and (3) TYPE No.

LINE No.	3 TYPE No.	MINIMUM CUTOFF FREQUENCY (Corresponding to Type Numbers in previous column) (Hz)	(Hz)	(Hz)	(Hz)	(Hz)	(Hz)	TYP. CAP. 1 CAP. Cj (F)	2 at TEST VOLT (V)	CAPACITANCE RANGE (for V = 0 to PIV) Ø - at TEST VOLT. (pF)	PIV (V)	Q FACTOR MIN. Q	at TEST FREQ (Hz)	MAX. SER. RES. Rs (Ω)	MAX. DISS. @ 25°C (W)	DESCRIPTION MAT.	DWG. No.
1	1N5458,A,B,C,D							3.9p%	4.0	2.5;2v - 30v$	30	600	50M		.40	Si	DO7
2	1N5458A							3.9p†	4	2.5 - 3.1	30	600	50M		400m	Si	DO7
3	1N5458B							3.9p†	4	2.5 - 3.1	30	600	50M		400m	Si	DO7
4	1N5458C							3.9p†	4	2.5 - 3.1	30	600	50M		400m	Si	DO7
5	1N5458D							3.9p†	4	2.5 - 3.1	30	600	50M		400m	Si	DO7
6	CVH2030-13							3.9p	4.0	4.5;0.0-30$;10%	30 ☑	3.4k	50M			Si$§	u30a
7	CVH2045-13							3.9p	4.0	6.1;0.0-45$;10%	45 ☑	2.0k	50M			Si$§	u30a
8	CVH2090-13							3.9p	4.0	8.7;0.0-90$;10%	90 ☑	800	50M			Si$§	u30a
9	DT308							3.9p§	4.0	4.0;0.0V-30V$	30 ☑	2800 Ø	50M			Si	V1
10	DT608							3.9p§	4.0	6.2;0.0V-60V$	60 ☑	1200 Ø	50M			Si	V1
11	DT908							3.9p§	4.0	8.6;0.0V-90V$	90 ☑	800 Ø	50M			Si	V1
12	DT4508							3.9p§	4.0	5.3;0.0V.45V$	45 ☑	2000 Ø	50M			Si	V1
13♦	DVH6730-13							3.9p§	4.0	4.2;0.0-30$;10%	30 ☑	3.4k	50M			Si$§	A90a
14♦	DVH6731-13	170G						3.9p†	4.0	4.2;0.0V-30V$;10%	30 ☑	3.4k	50M			Si$§	F143
15	DVH6732-13	170G						3.9p†	4.0	4.2;0.0V-30V$;10%	30 ☑	3.4k	50M			Si$§	F56ad
16	DVH6733-13	170G						3.9p†	4.0	4.2;0.0V-30V$;10%	30 ☑	3.4k	50M			Si$§	F59u
17	DVH6734-13	170G						3.9p†	4.0	4.2;0.0V-30V$;10%	30 ☑	3.4k	50M			Si$§	M929
18♦	DVH6740-13							3.9p§	4.0	5.4;0.0-45$;10%	45 ☑	2.0k	50M			Si$§	A90a
19♦	DVH6741-13	100G						3.9p†	4.0	5.4;0.0V-45V$;10%	45 ☑	2.0k	50M			Si$§	F143
20	DVH6742-13	100G						3.9p†	4.0	5.4;0.0V-45V$;10%	45 ☑	2.0k	50M			Si$§	F56ad
21	DVH6743-13	100G						3.9p†	4.0	5.4;0.0V-45V$;10%	45 ☑	2.0k	50M			Si$§	F59u
22	DVH6744-13	100G						3.9p†	4.0	5.4;0.0V-45V$;10%	45 ☑	2.0k	50M			Si$§	M929
23♦	DVH6760-13							3.9p§	4.0	6.2;0.0-60$;10%	60 ☑	1.7k	50M			Si$§	A90a
24♦	DVH6761-13	85G						3.9p†	4.0	6.2;0.0V-60V$;10%	60 ☑	1.7k	50M			Si$§	F143
25	DVH6762-13	85G						3.9p†	4.0	6.2;0.0V-60V$;10%	60 ☑	1.7k	50M			Si$§	F56ad
26	DVH6763-13	85G						3.9p†	4.0	6.2;0.0V-60V$;10%	60 ☑	1.7k	50M			Si$§	F59u
27	DVH6764-13	85G						3.9p†	4.0	6.2;0.0V-60V$;10%	60 ☑	1.7k	50M			Si$§	M929
28♦	DVH6790-13							3.9p§	4.0	7.3;0.0-90$;10%	90 ☑	800	50M			Si$§	A90a
29♦	DVH6791-13	40G						3.9p†	4.0	7.3;0.0V-90V$;10%	90 ☑	800	50M			Si$§	F143
30	DVH6792-13	40G						3.9p†	4.0	7.3;0.0V-90V$;10%	90 ☑	800	50M			Si$§	F56ad
31	DVH6793-13	40G						3.9p†	4.0	7.3;0.0V-90V$;10%	90 ☑	800	50M			Si$§	F59u
32	DVH6794-13	40G						3.9p†	4.0	7.3;0.0V-90V$;10%	90 ☑	800	50M			Si$§	M929
33	G604A,B,C							3.9pΔ†	4.0	1.8-2.4Ø;10,5,2%	25	600	50M		400m	Si	DO35
34	GC1508							3.9p†Δ	4.0	3.9;0.0V-30V$	30	2.6k	50M			Si	F111b†
35	GC1508A							3.9p†Δ	4.0	3.9;0.0V-30V$	30	2.6k	50M			Si	F59q
36	GC1508B							3.9p†Δ	4.0	3.9;0.0V-30V$	30	2.6k	50M			Si	F27ah
37	GC1508D							3.9p†Δ	4.0	3.9;0.0V-30V$	30	2.6k	50M			Si	F56q
38	GC1508E							3.9p†Δ	4.0	3.9;0.0V-30V$	30	2.6k	50M			Si	F59j
39	GC1508H							3.9p†Δ	4.0	3.9;0.0V-30V$	30	2.6k	50M			Si	S428b
40	GC1608							3.9p†Δ	4.0	5.4;0.0V-45V$	45	1.8k	50M			Si	F111b†
41	GC1608A							3.9p†Δ	4.0	5.4;0.0V-45V$	45	1.8k	50M			Si	F59q
42	GC1608B							3.9p†Δ	4.0	5.4;0.0V-45V$	45	1.8k	50M			Si	F27ah
43	GC1608D							3.9p†Δ	4.0	5.4;0.0V-45V$	45	1.8k	50M			Si	F56q
44	GC1608E							3.9p†Δ	4.0	5.4;0.0V-45V$	45	1.8k	50M			Si	F59j
45	GC1608H							3.9p†Δ	4.0	5.4;0.0V-45V$	45	1.8k	50M			Si	S428b
46	GC1708	52G						3.9p§	4.0	6.0;0.0V-60V$	60 ☑	1.05k	50M				F111b†
47	GC1708A							3.9p†Δ	4.0	6.0;0.0V-60V$	60	1.0k	50M			Si	F59q
48	GC1708B							3.9p†Δ	4.0	6.0;0.0V-60V$	60	1.0k	50M			Si	F27ah
49	GC1708D							3.9p†Δ	4.0	6.0;0.0V-60V$	60	1.0k	50M			Si	F56q
50	GC1708E							3.9p†Δ	4.0	6.0;0.0V-60V$	60	1.0k	50M			Si	F59j
51	GC1708H							3.9p†Δ	4.0	6.0;0.0V-60V$	60	1.0k	50M			Si	S428b
52	GC1758							3.9p†Δ	4.0	6.0;0.0V-60V$;10%	60	1.1k	50M		250m	Si	A1ah
53	GC1758B							3.9p†Δ	4.0	6.0;0.0V-60V$;5%	60	1.1k	50M		250m	Si	A1ah
54	GC1758C							3.9p†Δ	4.0	6.0;0.0V-60V$;2%	60	1.1k	50M		250m	Si	A1ah
55	HA1217A							3.9p†Δ	4.0	3.1;2.0V-30V$;10%	30	1.0k	50M		250m	Si	A1ah
56	HA1217B							3.9p†Δ	4.0	3.1;2.0V-30V$;5%	30	1.0k	50M		250m	Si	A1ah
57	HA1217C							3.9p†Δ	4.0	3.1;2.0V-30V$;2%	30	1.0k	50M		250m	Si	A1ah
58	HA1708A							3.9p†Δ	4.0	6.0;0.0V-30V$	30	1.0k	50M			Si	F59q
59	HA1708B							3.9p†Δ	4.0	6.0;0.0V-30V$	30	1.0k	50M			Si	F27ah
60	HA1708D							3.9p†Δ	4.0	6.0;0.0V-30V$	30	1.0k	50M			Si	F56q
61	HA1708E							3.9p†Δ	4.0	6.0;0.0V-30V$	30	1.0k	50M			Si	F59j
62	HA1708H							3.9p†Δ	4.0	6.0;0.0V-30V$	30	1.0k	50M			Si	S428b
63	HA1917A							3.9pΔ†	4.0	3.1;2.0V-30V$;10%	30	1.0k	50M		400m	Si	DO7
64	HA1917B							3.9pΔ†	4.0	3.1;2.0V-30V$;5%	30	1.0k	50M		400m	Si	DO7
65	HA1917C							3.9pΔ†	4.0	3.1;2.0V-30V$;2%	30	1.0k	50M		400m	Si	DO7
66▼	MA4H007							3.9p†	4	1.4-1.8	20	2.25k	50M			Si	V25
67▼	MA4H027							3.9p†	4.0	1.3-1.75	25	2.9k	50M		1.0	Si	V25
68▼	MA4H027C							3.9p	4.0	1.25-1.55	25	3.2k	50M		1.0	Si	V25
69	MA45235							3.9pΔ	4.0	3.8;0V-25V$	25	3.5k	50M			Si$§	V11†
70	MA45235C							3.9pΔ	4.0	4.5;0V-25V$	25	3.5k	50M			Si$§	u17†
71	MA45255							3.9pΔ	4.0	5.3;0V-45V$	45	2.2k	50M			Si$§	V11†
72	MA45255C							3.9pΔ	4.0	6.2;0V-45V$	45	2.0k	50M			Si$§	u17†
73	MA45269							3.9pΔ	4.0	6.4;0V-60V$	60	1.5k	50M			Si$§	V11†
74	MA45269C							3.9pΔ	4.0	7.5;0V-60V$	60	1.5k	50M			Si$§	u17†
75	MA45297							3.9pΔ	4.0	8.2;0V-90V$	90	800	50M			Si$§	V11†
76	MA45297C							3.9pΔ	4.0	9.0;0V-90V$	90	800	50M			Si$§	u17†
77	ML4318							3.9p†	4.0	4.6$ 0-25V	25 †	1.3k	50M			Si	F111a†
78	ML4338							3.9p†	4.0	5.8$ 0-45V	45 †	950	50M			Si	F111a†
79	ML4358							3.9p†	4.0	6.5$0 - 60V	60 †	1.0k	50M			Si	F111a†
80	ML4378							3.9p†	4.0	7.5$ 0-90V	90 †	500	50M			Si	F111a†
81	SQ1217A,B,C							3.9pΔ†	4.0	3;2V-30V$	30	1.1k	50M		400m	Si	A1ah
82	SQ1267A,B,C							3.9p§%	4.0		30 ☑	550	50M		250m	Si#$	A1ah
83	SQ1717,B,C							3.9pΔ†	4.0	2.8;2V-30V$	30	1.1k	50M		400m	Si	DO7
84	MA4557							4.0pØ	0.0		5.5	4.0	10G			Si§	F21
85	SD11C12							4.0p	0.0	4.0 - 7.5	12			1.7		Si	P3
86	SD11D90							4.0p	0.0	4.0 - 8.0	90			2.6		Si	P3
87	SD11D100							4.0p	0.0	4.0 - 8.0	100			2.6		Si	P3
88	SD12C12							4.0p	0.0	4.0 - 7.5	12			1.7		Si	F3a
89	SD12D90							4.0p	0.0	4.0 - 8.0	90			2.6		Si	F3a
90	SD12D100							4.0p	0.0	4.0 - 8.0	100			2.6		Si	F3a
91	SD22C12							4.0p	0.0	4.0 - 7.5	12			1.7		Si	F11
92	SD22D90							4.0p	0.0	4.0 - 8.0	90			2.6		Si	F11
93	SD22D100							4.0p	0.0	4.0 - 8.0	100			2.6		Si	F11
94	SD32C12							4.0p	0.0	4.0 - 7.5	12			1.7		Si	F21
95	SD32D90							4.0p	0.0	4.0 - 8.0	90			2.6		Si	F21
96	SD32D100							4.0p	0.0	4.0 - 8.0	100			2.6		Si	F21
97	SD42C12							4.0p	0.0	4.0 - 7.5	12			1.7		Si	F9a
98	SD42D90							4.0p	0.0	4.0 - 8.0	90			2.6		Si	F9a
99	SD42D100							4.0p	0.0	4.0 - 8.0	100			2.6		Si	F9a
100	SDGPC12							4.0p	0.0	4.0 - 7.5	12			1.7		Si	DO7
101	SDGPD90							4.0p	0.0	4.0 - 8.0	90			2.6		Si	DO7
102	SDGPD100							4.0p	0.0	4.0 - 8.0	100			2.6		Si	DO7
103	VC6204							4.0p	4.0	10-2.0;0.0V-20V	20 $	60	30M				A1da
104	VVC854,A,B,C,D							4.0p%	4.0	2.0;4.0V-20V$	20	125	50M		400m§	Si	DO7†
105	MA4285							4.0p	6.0		30			6.0		Si	F3a
106	MA4385							4.0p	6.0		30			6.0		Si	A31e
107	MA4965C,D,E	70G						4.0pØ	6.0	2.0-4.0Ø	60 ☑				3.0	Si	Z48
108	PHR904-83	100G						4.0p	6.0		80 ☑					SiΔ$	S356
109	VSSE75W							4.0p	6.0	3.0-5.0Ø	100 ☑					SiX	F134
110	VXSE75W							4.0p	6.0	3.0-5.0Ø	100 ☑					SiX	S167

6. VOLTAGE VARIABLE CAPACITORS & VARACTOR DIODES

IN ORDER OF (1) TYPICAL CAPACITANCE, (2) TEST VOLTAGE, and (3) TYPE No.

LINE No.	[3] TYPE No.	MINIMUM CUTOFF FREQUENCY (Corresponding to Type Numbers in previous column) (Hz)	(Hz)	(Hz)	(Hz)	(Hz)	(Hz)	TYP. CAP. [1] CAP. Cj (F)	[2] at TEST VOLT (V)	CAPACITANCE RANGE (for V = 0 to PIV) Ø - at TEST VOLT. (pF)	PIV (V)	Q FACTOR MIN. Q	at TEST FREQ (Hz)	MAX. SER. RES. Rs (Ω)	MAX. DISS. @ 25°C (W)	DESCRIPTION MAT.	DWG. No.
1	1N4091	30G						4.2p	0.0	2.4 - 6.0Ø	6.0				.30	Si	P3
2	PA0200A	30G						4.2p	0.0	2.4 - 6.0Ø	5.5	3.0	10G		.30	Si	F3a☑
3	MA46545B							4.2p	4.0	4.99-3.50Ø	15	1.00k	50M			GA	V7†
4	MA46545C							4.2p	4.0	4.99-3.50Ø	15	1.5k	50M			GA	V7†
5	MA46545D							4.2p	4.0	4.99-3.50Ø	15	2.0k	50M			GA	V7†
6▼	BB109G							4.3pØ	25	4.3-32	30			0.6		Si	A342
7	ZC898							4.4p§	2.0	6.5-5.0	25	300	50M		400m		A1st
8♦	DVE6951J							4.5p%§		5.0-4.0	45 ☑	4.3kØ	50M			GA	F143
9♦	DVE6952J							4.5p%§		5.0-4.0	45 ☑	4.3kØ	50M			GA	F59S
10♦	DVE6953J							4.5p%§		5.0-4.0	45 ☑	4.3kØ	50M			GA	F102f
11	DVE6954J							4.5p%§		5.0-4.0	45 ☑	4.3kØ	50M			GA	F112
12♦	DVE6955J							4.5p§%		5.0-4.0	45 ☑	4.3kØ	50M			GA	F94a
13	DVE6956J							4.5p§%		5.0-4.0	45 ☑	4.3kØ	50M			GA	†
14	BXY10D							4.5p	0.0	3.0 - 6.0Ø	50			1.3		Si$§	S286
15	BXY13D							4.5p	0.0	3.0 - 6.0Ø	50			1.3		Si$§	DO19
16	PFV104-01							4.5p	0.0	3.0;0.0V-15V$	15 ☑	4.6k	50M			GAΔ$	F27as
17	PFV104-05							4.5p	0.0	3.0;0.0V-15V$	15 ☑	4.6k	50M			GAΔ$	F10af
18	PFV104-21							4.5p	0.0	3.0;0.0V-15V$	15 ☑	4.6k	50M			GAΔ$	M86e
19	PFV104-31							4.5p	0.0	3.0;0.0V-15V$	15 ☑	4.6k	50M			GAΔ$	F10ah
20	PFV104-45							4.5p	0.0	3.0;0.0V-15V$	15 ☑	4.6k	50M			GAΔ$	F54c
21	PFV109-01							4.5p	0.0	3.5;0.0V-25V$	25 ☑	4.2k	50M			GAΔ$	F27as
22	PFV109-05							4.5p	0.0	3.5;0.0V-25V$	25 ☑	4.2k	50M			GAΔ$	F10af
23	PFV109-21							4.5p	0.0	3.5;0.0V-25V$	25 ☑	4.2k	50M			GAΔ$	M86e
24	PFV109-31							4.5p	0.0	3.5;0.0V-25V$	25 ☑	4.2k	50M			GAΔ$	F10ah
25	PFV109-45							4.5p	0.0	3.5;0.0V-25V$	25 ☑	4.2k	50M			GAΔ$	F54c
26	PFV114-01							4.5p	0.0	3.8;0.0V-30V$	30 ☑	4.1k	50M			GAΔ$	F27as
27	PFV114-05							4.5p	0.0	3.8;0.0V-30V$	30 ☑	4.1k	50M			GAΔ$	F10af
28	PFV114-21							4.5p	0.0	3.8;0.0V-30V$	30 ☑	4.1k	50M			GAΔ$	M86e
29	PFV114-31							4.5p	0.0	3.8;0.0V-30V$	30 ☑	4.1k	50M			GAΔ$	F10ah
30	PFV114-45							4.5p	0.0	3.8;0.0V-30V$	30 ☑	4.1k	50M			GAΔ$	F54c
31	PFV119-01							4.5p	0.0	4.4;0.0V-45V$	45 ☑	3.6k	50M			GAΔ$	F27as
32	PFV119-05							4.5p	0.0	4.4;0.0V-45V$	45 ☑	3.6k	50M			GAΔ$	F10af
33	PFV119-21							4.5p	0.0	4.4;0.0V-45V$	45 ☑	3.6k	50M			GAΔ$	M86e
34	PFV119-31							4.5p	0.0	4.4;0.0V-45V$	45 ☑	3.6k	50M			GAΔ$	F10ah
35	PFV119-45							4.5p	0.0	4.4;0.0V-45V$	45 ☑	3.6k	50M			GAΔ$	F54c
36	PFV124-01							4.5p	0.0	4.8;0.0V-60V$	60 ☑	2.6k	50M			GAΔ$	F27as
37	PFV124-05							4.5p	0.0	4.8;0.0V-60V$	60 ☑	2.6k	50M			GAΔ$	F10af
38	PFV124-21							4.5p	0.0	4.8;0.0V-60V$	60 ☑	2.6k	50M			GAΔ$	M86e
39	PFV124-31							4.5p	0.0	4.8;0.0V-60V$	60 ☑	2.6k	50M			GAΔ$	F10ah
40	PFV124-45							4.5p	0.0	4.8;0.0V-60V$	60 ☑	2.6k	50M			GAΔ$	F54c
41	PSV104-01							4.5p	0.0	3.5;0.0V-30V$	30 ☑	2.5k	50M			Si§	F27as
42	PSV104-05							4.5p	0.0	3.5;0.0V-30V$	30 ☑	2.5k	50M			Si§	F10af
43	PSV104-08							4.5p	0.0	3.5;0.0V-30V$	30 ☑	2.5k	50M			Si§	A1vd
44	PSV104-14							4.5p	0.0	3.5;0.0V-30V$	30 ☑	2.5k	50M			Si§	A2u
45	PSV104-16							4.5p	0.0	3.5;0.0V-30V$	30 ☑	2.5k	50M			Si§	A1st
46	PSV104-21							4.5p	0.0	3.5;0.0V-30V$	30 ☑	2.5k	50M			Si§	M86e
47	PSV104-31							4.5p	0.0	3.5;0.0V-30V$	30 ☑	2.5k	50M			Si§	F10ah
48	PSV104-45							4.5p	0.0	3.5;0.0V-30V$	30 ☑	2.5k	50M			Si§	F54c
49	PSV109-01							4.5p	0.0	4.5;0.0V-45V$	45 ☑	2.0k	50M			Si§	F27as
50	PSV109-05							4.5p	0.0	4.5;0.0V-45V$	45 ☑	2.0k	50M			Si§	F10af
51	PSV109-08							4.5p	0.0	4.5;0.0V-45V$	45 ☑	2.0k	50M			Si§	A1vd
52	PSV109-14							4.5p	0.0	4.5;0.0V-45V$	45 ☑	2.0k	50M			Si§	A2u
53	PSV109-16							4.5p	0.0	4.5;0.0V-45V$	45 ☑	2.0k	50M			Si§	A1st
54	PSV109-21							4.5p	0.0	4.5;0.0V-45V$	45 ☑	2.0k	50M			Si§	M86e
55	PSV109-31							4.5p	0.0	4.5;0.0V-45V$	45 ☑	2.0k	50M			Si§	F10ah
56	PSV109-45							4.5p	0.0	4.5;0.0V-45V$	45 ☑	2.0k	50M			Si§	F54c
57	PSV121-01							4.5p	0.0	5.3;0.0V-60V$	60 ☑	1.3k	50M			Si§	F27as
58	PSV121-05							4.5p	0.0	5.3;0.0V-60V$	60 ☑	1.3k	50M			Si§	F10af
59	PSV121-08							4.5p	0.0	5.3;0.0V-60V$	60 ☑	1.3k	50M			Si§	A1vd
60	PSV121-14							4.5p	0.0	5.3;0.0V-60V$	60 ☑	1.3k	50M			Si§	A2u
61	PSV121-16							4.5p	0.0	5.3;0.0V-60V$	60 ☑	1.3k	50M			Si§	A1st
62	PSV121-21							4.5p	0.0	5.3;0.0V-60V$	60 ☑	1.3k	50M			Si§	M86e
63	PSV121-31							4.5p	0.0	5.3;0.0V-60V$	60 ☑	1.3k	50M			Si§	F10ah
64	PSV121-45							4.5p	0.0	5.3;0.0V-60V$	60 ☑	1.3k	50M			Si§	F54c
65	PSV140-01							4.5p	0.0	8.0;0.0V-120V$	120 ☑	500	50M			Si	F27as
66	PSV140-05							4.5p	0.0	8.0;0.0V-120V$	120 ☑	500	50M			Si	F10af
67	PSV140-08							4.5p	0.0	8.0;0.0V-120V$	120 ☑	500	50M			Si	A1vd
68	PSV140-14							4.5p	0.0	8.0;0.0V-120V$	120 ☑	500	50M			Si	A2u
69	PSV140-16							4.5p	0.0	8.0;0.0V-120V$	120 ☑	500	50M			Si	A1st
70	PSV140-21							4.5p	0.0	8.0;0.0V-120V$	120 ☑	500	50M			Si	M86e
71	PSV140-31							4.5p	0.0	8.0;0.0V-120V$	120 ☑	500	50M			Si	F10ah
72	PSV140-45							4.5p	0.0	8.0;0.0V-120V$	120 ☑	500	50M			Si	F54c
73	E1718A							4.5p†	4.0	4.0-5.0	30	1.0k	50M		4.0		F10k
74	EP1018A							4.5p†Δ	4.0	2.4;2.0V-30V$	30	1.2k	50M		5.0	Si	F59q
75	EP1018B							4.5p†Δ	4.0	2.4;2.0V-30V$	30	1.2k	50M		5.0	Si	F27ah
76	EP1018D							4.5p†Δ	4.0	2.4;2.0V-30V$	30	1.2k	50M		5.0	Si	F56q
77	EP1018E							4.5p†Δ	4.0	2.4;2.0V-30V$	30	1.2k	50M		5.0	Si	F59j
78	EP1018H							4.5p†Δ	4.0	2.4;2.0V-30V$	30	1.2k	50M		5.0	Si	S428b
79	EP1718A							4.5p†	4.0	4.0-5.0	30	1.0k	50M		4.0		F27ac
80	GC1809							4.5p	4.0	12.0-1.2	90	650	50M			Si	F111b†
81	LP1018A							4.5p†Δ	4.0	4.3;0.0V-25V$	25	900	50M		5.0	Si	F59q
82	LP1018B							4.5p†Δ	4.0	4.3;0.0V-25V$	25	900	50M		5.0	Si	F27ah
83	LP1018D							4.5p†Δ	4.0	4.3;0.0V-25V$	25	900	50M		5.0	Si	F56q
84	LP1018E							4.5p†Δ	4.0	4.3;0.0V-25V$	25	900	50M		5.0	Si	F59j
85	LP1018H							4.5p†Δ	4.0	4.3;0.0V-25V$	25	900	50M		5.0	Si	S428b
86	MA46565B							4.5p	4.0	4.99-3.50Ø	15	1.0k	50M			GA	V7†
87	MA46565C							4.5p	4.0	4.99-3.50Ø	15	1.5k	50M			GA	V7†
88	MA46565D							4.5p	4.0	4.99-3.50Ø	15	2.0k	50M			GA	V7†
89	MA46575B							4.5p	4.0	4.99-3.50Ø	22	1.0k	50M			GA	V7†
90	MA46575C							4.5p	4.0	4.99-3.50Ø	22	1.5k	50M			GA	V7†
91	MA46575D							4.5p	4.0	4.99-3.50Ø	22	2.0k	50M			GA	V7†
92	MAH6555B							4.5p	4.0	4.99-3.50Ø	22	1.0k	50M			GA	V7†
93	MAH6555C							4.5p	4.0	4.99-3.50Ø	22	1.5k	50M			GA	V7†
94	MAH6555D							4.5p	4.0	4.99-3.50Ø	22	2.0k	50M			GA	V7†
95	MV1718,A							4.5p	4.0		30 ☑	500	50M		400m	Si△#	DO7
96	1S2090							4.5p	5.0	3.0-6.0Ø	20	200	50M			Si§#	DO35
97	BXY27	50G						4.5p	6.0	4.0 - 70	55			.40 ☑	4.0	Si#$	F27h
98	MA4065							4.5p	6.0	3.0 - 6.0Ø	80					Si	S4c
99	MA4260							4.5p	6.0							Si	A1
100	MA4341D1							4.5p	6.0	3.0 - 6.0	6.0			.90	.50	Si	F3a
101	MA4341D2							4.5p	6.0	3.0 - 6.0	6.0			.50	.50	Si	P3a§
102	MA4341D							4.5p	6.0	3.0 - 6.0	6.0			1.7	.50	Si	F3a
103	MA43000							4.5p☑	6.0	3.0-4.5Ø	105 ☑				11 ☑	Si$Δ	S428c
104	SV55D	17G						4.5p	6.0	3.0 - 6.0Ø	48				1.0	Si	F27a
105	SV566D							4.5p	6.0	4.0-5.5Ø	70				7.0	Si	S250c
106	BBY37							4.5p†	-4	3.0$		350	50M			Si	F140
107	1S2267							4.5p	10	3.5-6.0Ø	25	160	50M			Si§#	DO35
108	1S2268							4.5p	10	3.5-6.0Ø	25	200	50M			Si§#	DO35
109	1S2339							4.5p	10	3.5-5.5Ø	20	100	100M			Si	DO35
110	MA4337F							4.5p	90	3.0 - 6.0	90			1.7	.30	Si	F9

6. VOLTAGE VARIABLE CAPACITORS & VARACTOR DIODES

IN ORDER OF (1) TYPICAL CAPACITANCE, (2) TEST VOLTAGE, and (3) TYPE No.

LINE No.	TYPE No.	MINIMUM CUTOFF FREQUENCY (Corresponding to Type Numbers in previous column) (Hz)	(Hz)	(Hz)	(Hz)	(Hz)	(Hz)	TYP. CAP. 1 CAP. Cj (F)	2 at TEST VOLT (V)	CAPACITANCE RANGE (for V = 0 to PIV) Ø - at TEST VOLT. (pF)	PIV (V)	Q FACTOR MIN. Q	at TEST FREQ (Hz)	MAX. SER. RES. Rs (Ω)	MAX. DISS. @ 25°C (W)	DESCRIPTION MAT.	DWG. No.
1	MA4358F							4.5p	120	3.0 - 6.0	120			1.7	.50	Si	F21
2	BA138							4.6p	30	3.8 - 5.5Ø	30			2.0		Si$#	DO7
3	1N5440							4.7pt	4	2.4 - 3.1	30	450	50M		400m	Si	DO7
4	1N5440,A,B,C,D							4.7p%	4.0	2.4;2V-30V$	30	450	50M		400m	Si	DO7
5	1N5440A							4.7pt	4	2.4 - 3.1	30	450	50M		400m	Si	DO7
6	1N5440B							4.7pt	4	2.4 - 3.1	30	450	50M		400m	Si	DO7
7	1N5440C							4.7pt	4	2.4 - 3.1	30	450	50M		400m	Si	DO7
8	1N5440D							4.7pt	4	2.4 - 3.1	30	450	50M		400m	Si	DO7
9	1N5459							4.7pt	4	2.6 - 3.1	30	600	50M		400m	Si	DO7
10	1N5459,A,B,C,D							4.7p%	4.0	2.6;2v - 30v$	30	600	50M		.40	Si	DO7
11	1N5459A							4.7pt	4	2.6 - 3.1	30	600	50M		400m	Si	DO7
12	1N5459B							4.7pt	4	2.6 - 3.1	30	600	50M		400m	Si	DO7
13	1N5459C							4.7pt	4	2.6 -3.1	30	600	50M		400m	Si	DO7
14	1N5459D							4.7pt	4	2.6 -3.1	30	600	50M		400m	Si	DO7
15	BXY54							4.7p	4.0	3.7-5.7Ø	60					Si	F27aj
16	CV1863B							4.7p	4.0	4.23-5.17	60	300	100M		5.0	Si	F27x☑
17	CV1863D							4.7p	4.0	4.23-5.17	60	300	100M		5.0	Si	F56n☑
18	CVH2030-14							4.7p	4.0	4.5;0.0-30$;10%	30 ☑	3.2k	50M			Si$§	u30a
19	CVH2045-14							4.7p	4.0	6.1;0.0-45$;10%	45 ☑	2.0k	50M			Si$§	u30a
20	CVH2060-14							4.7p	4.0	7.5;0.0-60$;10%	60 ☑	1.6k	50M			Si$§	u30a
21	CVH2090-14							4.7p	4.0	8.7;0.0-90$;10%	90 ☑	800	50M			Si$§	u30a
22	DC4257B							4.7p	4.0		60	450 Ø	50M			Si	DO35△
23	DC4267B	22G						4.7p	4.0		60	450	50M			Si	F121a△
24	DC4287B							4.7p	4.0			450 Ø	50M			Si	M524c△
25	DT309							4.7p§	4.0	4.1;0.0V-30V$	30 ☑	2600 Ø	50M			Si	V1
26	DT609							4.7p§	4.0	6.4;0.0V-60V$	60 ☑	1200 Ø	50M			Si	V1
27	DT909							4.7p§	4.0	8.6;0.0V-90V$	90 ☑	800 Ø	50M			Si	V1
28	DT4509							4.7p§	4.0	5.4;0.0V-45V$	45 ☑	1800 Ø	50M			Si	V1
29♦	DVH6730-14							4.7p§	4.0	4.2;0.0-30$;10%	30 ☑	3.2k	50M			Si$§	A90a
30♦	DVH6731-14	160G						4.7pt	4.0	4.2;0.0V-30V$;10%	30 ☑	3.2k	50M			Si$§	F143
31	DVH6732-14	160G						4.7pt	4.0	4.2;0.0V-30V$;10%	30 ☑	3.2k	50M			Si$§	F56ad
32	DVH6733-14	160G						4.7pt	4.0	4.2;0.0V-30V$;10%	30 ☑	3.2k	50M			Si$§	F59u
33	DVH6734-14	160G						4.7pt	4.0	4.2;0.0V-30V$;10%	30 ☑	3.2k	50M			Si$§	M929
34♦	DVH6740-14							4.7p§	4.0	5.4;0.0-45$;10%	45 ☑	2.0k	50M			Si$§	A90a
35♦	DVH6741-14	100G						4.7pt	4.0	5.4;0.0V-45V$;10%	45 ☑	2.0k	50M			Si$§	F143
36	DVH6742-14	100G						4.7pt	4.0	5.4;0.0V-45V$;10%	45 ☑	2.0k	50M			Si$§	F56ad
37	DVH6743-14	100G						4.7pt	4.0	5.4;0.0V-45V$;10%	45 ☑	2.0k	50M			Si$§	F59u
38	DVH6744-14	100G						4.7pt	4.0	5.4;0.0V-45V$;10%	45 ☑	2.0k	50M			Si$§	M929
39♦	DVH6760-14							4.7p§	4.0	6.4;0.0-60$;10%	60 ☑	1.6k	50M			Si$§	A90a
40♦	DVH6761-14	80G						4.7pt	4.0	6.4;0.0V-60V$;10%	60 ☑	1.6k	50M			Si$§	F143
41	DVH6762-14	80G						4.7pt	4.0	6.4;0.0V-60V$;10%	60 ☑	1.6k	50M			Si$§	F56ad
42	DVH6763-14	80G						4.7pt	4.0	6.4;0.0V-60V$;10%	60 ☑	1.6k	50M			Si$§	F59u
43	DVH6764-14	80G						4.7pt	4.0	6.4;0.0V-60V$;10%	60 ☑	1.6k	50M			Si$§	M929
44♦	DVH6790-14							4.7p§	4.0	7.5;0.0-90$;10%	90 ☑	800	50M			Si$§	A90a
45♦	DVH6791-14	40G						4.7pt	4.0	7.5;0.0V-90V$;10%	90 ☑	800	50M			Si$§	F143
46	DVH6792-14	40G						4.7pt	4.0	7.5;0.0V-90V$;10%	90 ☑	800	50M			Si$§	F56ad
47	DVH6793-14	40G						4.7pt	4.0	7.5;0.0V-90V$;10%	90 ☑	800	50M			Si$§	F59u
48	DVH6794-14	40G						4.7pt	4.0	7.5;0.0V-90V$;10%	90 ☑	800	50M			Si$§	M929
49	E605	25G						4.7p	4.0	2.8;1.0V-25V$	30	500	50M			Si	F27az
50	E705	50G						4.7p	4.0	3.8;1.0V-50V$	60	1.0k	50M			Si	F27az
51	GC1509							4.7pt△	4.0	3.9;0.0V-30V$	30	2.5k	50M			Si	F111bt
52	GC1509A							4.7pt△	4.0	3.9;0.0V-30V$	30	2.5k	50M			Si	F59q
53	GC1509B							4.7pt△	4.0	3.9;0.0V-30V$	30	2.5k	50M			Si	F27ah
54	GC1509D							4.7pt△	4.0	3.9;0.0V-30V$	30	2.5k	50M			Si	F56q
55	GC1509E							4.7pt△	4.0	3.9;0.0V-30V$	30	2.5k	50M			Si	F59j
56	GC1509H							4.7pt△	4.0	3.9;0.0V-30V$	30	2.5k	50M			Si	S428b
57	GC1609							4.7pt△	4.0	5.5;0.0V-45V$	45	1.8k	50M			Si	F111bt
58	GC1609A							4.7pt△	4.0	5.5;0.0V-45V$	45	1.8k	50M			Si	F59q
59	GC1609B							4.7pt△	4.0	5.5;0.0V-45V$	45	1.8k	50M			Si	F27ah
60	GC1609D							4.7pt△	4.0	5.5;0.0V-45V$	45	1.8k	50M			Si	F56q
61	GC1609E							4.7pt△	4.0	5.5;0.0V-45V$	45	1.8k	50M			Si	F59j
62	GC1609H							4.7pt△	4.0	5.5;0.0V-45V$	45	1.8k	50M			Si	S428b
63	GC1709	52G						4.7p§	4.0	6.5;0.0V-60V$	60 ☑	1.05k	50M				F111bt
64	GC1709A							4.7pt△	4.0	6.5;0.0V-60V$	60	1.0k	50M			Si	F59q
65	GC1709B							4.7pt△	4.0	6.5;0.0V-60V$	60	1.0k	50M			Si	F27ah
66	GC1709D							4.7pt△	4.0	6.5;0.0V-60V$	60	1.0k	50M			Si	F56q
67	GC1709E							4.7pt△	4.0	6.5;0.0V-60V$	60	1.0k	50M			Si	F59j
68	GC1709H							4.7pt△	4.0	6.5;0.0V-60V$	60	1.0k	50M			Si	S428b
69	GC1759							4.7pt△	4.0	7.0;0.0V-60V$;10%	60	1.1k	50M		250m	Si	A1ah
70	GC1759B							4.7pt△	4.0	7.0;0.0V-60V$;5%	60	1.1k	50M		250m	Si	A1ah
71	GC1759C							4.7pt△	4.0	7.0;0.0V-60V$;2%	60	1.1k	50M		250m	Si	A1ah
72	HA1218A							4.7pt△	4.0	3.2;2.0V-30V$;10%	30	900	50M		250m	Si	A1ah
73	HA1218B							4.7pt△	4.0	3.2;2.0V-30V$;5%	30	900	50M		250m	Si	A1ah
74	HA1218C							4.7pt△	4.0	3.2;2.0V-30V$;2%	30	900	50M		250m	Si	A1ah
75	HA1709A							4.7pt△	4.0	6.5;0.0V-30V$	30	1.0k	50M			Si	F59q
76	HA1709B							4.7pt△	4.0	6.5;0.0V-30V$	30	1.0k	50M			Si	F27ah
77	HA1709D							4.7pt△	4.0	6.5;0.0V-30V$	30	1.0k	50M			Si	F56q
78	HA1709E							4.7pt△	4.0	6.5;0.0V-30V$	30	1.0k	50M			Si	F59j
79	HA1709H							4.7pt△	4.0	6.5;0.0V-30V$	30	1.0k	50M			Si	S428b
80	HA1918A							4.7p△†	4.0	3.2;2.0V-30V$;10%	30	900	50M		400m	Si	DO7
81	HA1918B							4.7p△†	4.0	3.2;2.0V-30V$;5%	30	900	50M		400m	Si	DO7
82	HA1918C							4.7p△†	4.0	3.2;2.0V-30V$;2%	30	900	50M		400m	Si	DO7
83▼	MA4H008							4.7pt	4	1.5-2.0	20	2.0k	50M			Si	V25
84▼	MA4H028							4.7pt	4.0	1.6-2.1	25	2.7k	50M		1.0	Si	V25
85▼	MA4H028C							4.7p	4.0	1.50-1.90	25	3.0k	50M		1.0	Si	V25
86	MA45106							4.7pt△	4.0	5.4;0.0V-45V$	55 ☑	2.0k	50M			Si$	F27f
87	MA45110							4.7pt△	4.0	5.4;0.0V-45V$		2.0k	50M			Si$	DO7
88	MA45126							4.7pt△	4.0	6.5;0.0V-60V$	75 ☑	1.5k	50M			Si$	F27f
89	MA45130							4.7pt△	4.0	6.5;0.0V-60V$		1.5k	50M			Si$	DO7
90	MA45146							4.7pt△	4.0	7.9;0.0V-90V$	100 ☑	800	50M			Si$	F27f
91	MA45157							4.7pt△	4.0	6.5;0.0V-60V$	65 ☑	1.5k	50M			Si$	A1act
92	MA45167							4.7pt△	4.0	5.4;0.0V-45V$	50 ☑	1.5k	50M			Si$	A1act
93	MA45236							4.7p△	4.0	3.8;0V-25V$	25	3.0k	50M			Si$§	V11†
94	MA45236C							4.7p△	4.0	4.5;0V-25V$	25	3.0k	50M			Si$§	u17†
95	MA45256							4.7p△	4.0	5.4;0V-45V$	45	2.0k	50M			Si$§	V11†
96	MA45256C							4.7p△	4.0	6.2;0V-45V$	45	2.0k	50M			Si$§	u17†
97	MA45270							4.7p△	4.0	6.5;0V-60V$	60	1.4k	50M			Si$§	V11†
98	MA45270C							4.7p△	4.0	7.5;0V-60V$	60	1.4k	50M			Si$§	u17†
99	MA45298							4.7p△	4.0	8.5;0V-90V$	90	700	50M			Si$§	V11†
100	MA45298C							4.7p△	4.0	9.0;0V-90V$	90	700	50M			Si$§	u17†
101	MA45330							4.7p△	4.0	4.5;0V-30V$	30	1.8k	50M			Si$#	DO7†
102	MA45345							4.7p△	4.0	5.6;0V-45V$	45	1.5k	50M			Si$#	DO7†
103	MA45360							4.7p△	4.0	7.2;0V-60V$	60	1.0k	50M			Si$#	DO7†
104	ML4319							4.7pt	4.0	4.7$ 0-25V	25 †	1.1k	50M			Si	F111at
105	ML4339							4.7pt	4.0	6.0$ 0-45V	45 †	850	50M			Si	F111at
106	ML4359							4.7pt	4.0	6.7$ 0-60V	60 †	1.0k	50M			Si	F111at
107	ML4379							4.7pt	4.0	7.8$ 0-90V	90 †	500	50M			Si	F111at
108	MV1863A							4.7pt	4.0	4.23 - 5.17Ø	60			1.1	5.0	Si	F27a
109	MV1863B							4.7pt	4.0	4.23 - 5.17Ø	60			1.1	5.0	Si	F10a
110	MV1863D							4.7pt	4.0	3.3;4.0V-60V$	60 ☑	300	100M		5.0	Si	F56n

6. VOLTAGE VARIABLE CAPACITORS & VARACTOR DIODES

IN ORDER OF (1) TYPICAL CAPACITANCE, (2) TEST VOLTAGE, and (3) TYPE No.

LINE No.	3 TYPE No.	MINIMUM CUTOFF FREQUENCY (Corresponding to Type Numbers in previous column) (Hz)	(Hz)	(Hz)	(Hz)	(Hz)	(Hz)	TYP. CAP. 1 CAP. Cj (F)	2 at TEST VOLT (V)	CAPACITANCE RANGE (for V = 0 to PIV) Ø - at TEST VOLT. (pF)	PIV (V)	Q FACTOR MIN. Q	at TEST FREQ (Hz)	MAX. SER. RES. Rs (Ω)	MAX. DISS. @ 25°C (W)	DESCRIPTION MAT.	DWG. No.
1	MV1863E							4.7p†Δ	4.0	2.6-2.8Ø	60	300	100M			Si	F59j
2	MV1863H							4.7p†Δ	4.0	2.6-2.8Ø	60	300	100M			Si	S428b
3	MVI2100							4.7p†	4.0	2.9;2.0V-30V$	30 ☑	300	100M		200m	Si	M750
4	PC1405A							4.7p§Δ	4.0		30 $	200	50M				A2u
5	PC1405B							4.7p§Δ	4.0		30 $	300	50M				A2u
6	PC1405C							4.7p§Δ	4.0		30 $	400	50M				A2u
7	PC1415A							4.7p§Δ	4.0		60 $	200	50M				A2u
8	PC1415B							4.7p§Δ	4.0		60 $	300	50M				A2u
9	PC1415C							4.7p§Δ	4.0		60 $	400	50M				A2u
10	PC1425A							4.7p§Δ	4.0		90 $	200	50M				A2u
11	PC1425B							4.7p§Δ	4.0		90 $	300	50M				A2u
12	PC1435A							4.7p§Δ	4.0		120 $	200	50M				A2u
13	PC1445A							4.7p§Δ	4.0		150 $	200	50M				A2u
14	SQ1218A,B,C							4.7pΔ†	4.0	3;2V-30V$	30	1.0k	50M		400m	Si	A1ah
15	SQ1268A,B,C							4.7p§%	4.0		30 ☑	500	50M		250m	Si#$	A1ah
16	SQ1718,B,C							4.7pΔ†	4.0	2.9;2V-30V$	30	1.0k	50M		400m	Si	DO7
17	VQA415							4.7p	4.0	2.8;4.0V-60V$	60 $	350	50M			Si	DO7
18	VQA515							4.7p§	4.0	3.4;4.0V-100V$	100 $	250	50M			Si	DO7
19	DC4305A							4.7p†	4.5			3.0 Ø	10G			GA	F121a
20	DC4305B							4.7p†	4.5			3.0 Ø	10G			GA	F121a
21	DC4375A							4.7p†	4.5			3.0	10G			GA	u7d
22	DC4375B							4.7p†	4.5			3.0	10G			GA	u7d
23	KV1401							4.7p	10	12;2.0V-10V$	20 $	75	10m			Si#▼	DO7
24	KV1402							4.7p	10	12;2.0V-10V$	20 $	200	1.0m			Si#▼	DO7
25	KV1403							4.7p	10	12;2.0V-10V$	20 $	200	1.0m			Si#▼	DO7
26	SD11C18							4.8p	0.0	4.8 - 9.0	18			1.7		Si	P3
27	SD11D120							4.8p	0.0	4.8 - 9.6	120			2.6		Si	P3
28	SD12C18							4.8p	0.0	4.8 - 9.0	18			1.7		Si	F3a
29	SD12D120							4.8p	0.0	4.8 - 9.6	120			2.6		Si	F3a
30	SD22C18							4.8p	0.0	4.8 - 9.0	18			1.7		Si	F11
31	SD22D120							4.8p	0.0	4.8 - 9.6	120			2.6		Si	F11
32	SD32C18							4.8p	0.0	4.8 - 9.0	18			1.7		Si	F21
33	SD32D120							4.8p	0.0	4.8 - 9.6	120			2.6		Si	F21
34	SD42C18							4.8p	0.0	4.8 - 9.0	18			1.7		Si	F9a
35	SD42D120							4.8p	0.0	4.8 - 9.6	120			2.6		Si	F9a
36	SDGPC18							4.8p	0.0	4.8 - 9.0	18			1.7		Si	DO7
37	SDGPD120							4.8p	0.0	4.8 - 9.6	120			2.6		Si	DO7
38	VNA315H							4.9p	4.0	4.0;0.0V-30V$	30 $	2500	50M			Si	F136
39	VNA415H							4.9p	4.0	6.5;0.0V-60V$	60 $	900	50M			Si	F136
40	VSA315H							4.9p	4.0	4.0;0.0V-30V$	30 $	2500	50M			Si	F128
41	VSA415H							4.9p	4.0	6.5;0.0V-60V$	60 $	900	50M			Si	F128
42	VTA315H							4.9p	4.0	4.0;0.0V-30V$	30 $	2500	50M			Si	F130
43	VTA415H							4.9p	4.0	6.5;0.0V-60V$	60 $	900	50M			Si	F130
44	VYA315H							4.9p	4.0	4.0;0.0V-30V$	30 $	2500	50M			Si	F135
45	VYA415H							4.9p	4.0	6.5;0.0V-60V$	60 $	900	50M			Si	F135
46	1S360	30G						5.0pØ			5.0				200m	Si§	F3a
47♦	DKV6550E							5.0p	4.0	4.50-5.50Ø	22 ☑	400	50M		250m	Si	F143
48	MC5							5.0p	4.0		60 †	10	50M			Si	A1au
49	MC205							5.0p	4.0		60	25	50M			Si	A1au
50	MC305							5.0p	4.0		60	50	50M			Si	A1au
51	MC405							5.0p	4.0	5.0;1.0V-60V$	60 †	100	50M			Si	A1au
52	MC605							5.0p	4.0	4.00-6.00Ø	60	250	50M			Si	A1au
53	MMC605							5.0p	4.0	4.00-6.00Ø	60	500	50M			Si	A1au
54	VC605,A,B							5.0p%	4.0	3.0;1V-25V$	40 $	200	.05G			Si	DO7
55	VC606,A,B							5.0p%	4.0	3.0;1V-25V$	40 $	300	.05G			Si	DO7
56	VVC783,A,B,C,D							5.0p%	4.0	3.2;4.0V-60V$	60	10	50M		400m§	Si	DO7†
57	VVC784,A,B,C,D							5.0p%	4.0	3.2;4.0V-60V$	60	25	50M		400m§	Si	DO7†
58	VVC785,A,B,C,D							5.0p%	4.0	3.2;4.0V-60V$	60	50	50M		400m§	Si	DO7†
59	VVC786,A,B,C,D							5.0p%	4.0	3.2;4.0V-60V$	60	100	50M		400m§	Si	DO7†
60	BXY36	75G						5.0p	6.0		75					Si	F47c†
61	BXY36B	75G						5.0p	6.0	4.0 - 6.0Ø	70					Si#	F47b
62	BXY36C	75G						5.0p	6.0	4.0 - 6.0Ø	70					Si#	F48h
63	BXY36D	75G						5.0p	6.0	4.0 - 6.0Ø	70					Si#	S268f
64	BXY36E	75G						5.0p	6.0	4.0-6.0Ø	70					Si#	F56p
65	MA4964B,C	60G						5.0pØ	6.0	3.0-5.0Ø	70 ☑				5.0	Si	Z48
66	MA43034							5.0p	6.0	3.0-8.0Ø	100 ☑				1.2 ☑	Si§Δ	M796
67	MA44053							5.0p	6.0	4.0-6.0Ø	175 ☑				25 ☑	Si§Δ	F98a
68	MA44300							5.0pØ	6.0	3.0-5.0Ø	50 ☑				416mØ	Si§Δ	A31e
69	VAT13AN9,N11	23G						5.1p†	4.0	9.5;0.0-120V$;3.9%	120 ☑	475	50M			Si#§Δ	V8
70	GC1810							5.4p	4.0	13.0-1.35	90	600	50M			Si	F111b†
71	BBY32FA							5.5p			60	1200	50M			Si	F139
72♦	DVE6951K							5.5p%§		6.0-5.0	45 ☑	4.0kØ	50M			GA	F143
73♦	DVE6952K							5.5p%§		6.0-5.0	45 ☑	4.0kØ	50M			GA	F59S
74♦	DVE6953K							5.5p%§		6.0-5.0	45 ☑	4.0kØ	50M			GA	F102f
75	DVE6954K							5.5p%§		6.0-5.0	45 ☑	4.0kØ	50M			GA	F112
76♦	DVE6955K							5.5p§%		6.0-5.0	45 ☑	4.0kØ	50M			GA	F94a
77	DVE6956K							5.5p§%		6.0-5.0	45 ☑	4.0kØ	50M			GA	†
78	MA4954B	60G						5.5p	6.0	4.0 - 7.0Ø	100				8.0	Si$	S250d
79	MA4954C	60G						5.5p	6.0	4.0 - 7.0Ø	100				8.0	Si$	F49a
80	SD11D24							5.6p	0.0	5.6 - 10.5	24			2.6		Si	P3
81	SD12D24							5.6p	0.0	5.6 - 10.5	24			2.6		Si	F3a
82	SD22D24							5.6p	0.0	5.6 - 10.5	24			2.6		Si	F11
83	SD32D24							5.6p	0.0	5.6 - 10.5	24			2.6		Si	F21
84	SD42D24							5.6p	0.0	5.6 - 10.5	24			2.6		Si	F9a
85	SDGPD24							5.6p	0.0	5.6 - 10.5	24			2.6		Si	DO7
86	1N5460							5.6pt	4	2.6 -3.1	30	600	50M		400m	Si	DO7
87	1N5460,A,B,C,D							5.6p%	4.0	2.6;2v - 30v$	30	600	50M		.40	Si	DO7
88	1N5460A							5.6pt	4	2.6 -3.1	30	600	50M		400m	Si	DO7
89	1N5460B							5.6pt	4	2.6 -3.1	30	600	50M		400m	Si	DO7
90	1N5460C							5.6pt	4	2.6-3.1	30	600	50m		400m	Si	DO7
91	1N5460D							5.6pt	4	2.6-3.1	30	600	50m		400m	Si	DO7
92	CVH2030-15							5.6p	4.0	4.5;0.0-30$;10%	30 ☑	3.0k	50M			Si§§	u30a
93	CVH2045-15							5.6p	4.0	6.1;0.0-45$;10%	45 ☑	1.9k	50M			Si§§	u30a
94	CVH2060-15							5.6p	4.0	7.5;0.0-60$;10%	60 ☑	1.5k	50M			Si§§	u30a
95	CVH2090-15							5.6p	4.0	8.7;0.0-90$;10%	90 ☑	800	50M			Si§§	u30a
96	DT310							5.6p§	4.0	4.1;0.0V-30V$	30 ☑	2600 Ø	50M			Si	V1
97	DT610							5.6p§	4.0	6.6;0.0V-60V$	60 ☑	1200 Ø	50M			Si	V1
98	DT910							5.6p§	4.0	8.8;0.0V-90V$	90 ☑	750 Ø	50M			Si	V1
99	DT4510							5.6p§	4.0	5.6;0.0V-45V$	45 ☑	1800 Ø	50M			Si	V1
100♦	DVH6730-15							5.6p§	4.0	4.3;0.0-30$;10%	30 ☑	3.0k	50M			Si§§	A90a
101♦	DVH6731-15	150G						5.6pt	4.0	4.3;0.0V-30V$;10%	30 ☑	3.0k	50M			Si§§	F143
102	DVH6732-15	150G						5.6pt	4.0	4.3;0.0V-30V$;10%	30 ☑	3.0k	50M			Si§§	F56ad
103	DVH6733-15	150G						5.6pt	4.0	4.3;0.0V-30V$;10%	30 ☑	3.0k	50M			Si§§	F59u
104	DVH6734-15	150G						5.6pt	4.0	4.3;0.0V-30V$;10%	30 ☑	3.0k	50M			Si§§	M929
105♦	DVH6740-15							5.6p§	4.0	5.5;0.0-45$;10%	45 ☑	1.9k	50M			Si§§	A90a
106♦	DVH6741-15	95G						5.6pt	4.0	5.5;0.0V-45V$;10%	45 ☑	1.9k	50M			Si§§	F143
107	DVH6742-15	95G						5.6pt	4.0	5.5;0.0V-45V$;10%	45 ☑	1.9k	50M			Si§§	F56ad
108	DVH6743-15	95G						5.6pt	4.0	5.5;0.0V-45V$;10%	45 ☑	1.9k	50M			Si§§	F59u
109	DVH6744-15	95G						5.6pt	4.0	5.5;0.0V-45V$;10%	45 ☑	1.9k	50M			Si§§	M929
110♦	DVH6760-15							5.6p§	4.0	6.6;0.0-60$;10%	60 ☑	1.5k	50M			Si§§	A90a

6. VOLTAGE VARIABLE CAPACITORS & VARACTOR DIODES

IN ORDER OF (1) TYPICAL CAPACITANCE, (2) TEST VOLTAGE, and (3) TYPE No.

LINE No.	TYPE No.	MINIMUM CUTOFF FREQUENCY (Corresponding to Type Numbers in previous column)						TYP. CAP. 1 CAP. Cj	2 at TEST VOLT	CAPACITANCE RANGE (for V = 0 to PIV) Ø - at TEST VOLT.	PIV	Q FACTOR MIN. Q	at TEST FREQ	MAX. SER. RES. Rs	MAX. DISS. @ 25°C	DESCRIPTION MAT.	DWG. No.
		(Hz)	(Hz)	(Hz)	(Hz)	(Hz)	(Hz)	(F)	(V)	(pF)	(V)		(Hz)	(Ω)	(W)		
1♦	DVH6761-15	75G						5.6p†	4.0	6.6;0.0V-60V$;10%	60 ☑	1.5k	50M			Si$§	F143
2	DVH6762-15	75G						5.6p†	4.0	6.6;0.0V-60V$;10%	60 ☑	1.5k	50M			Si$§	F56ad
3	DVH6763-15	75G						5.6p†	4.0	6.6;0.0V-60V$;10%	60 ☑	1.5k	50M			Si$§	F59u
4	DVH6764-15	75G						5.6p†	4.0	6.6;0.0V-60V$;10%	60 ☑	1.5k	50M			Si$§	M929
5♦	DVH6790-15							5.6p§	4.0	7.7;0.0-90$;10%	90 ☑	800	50M			Si$§	A90a
6♦	DVH6791-15	40G						5.6p†	4.0	7.7;0.0V-90V$;10%	90 ☑	800	50M			Si$§	F143
7	DVH6792-15	40G						5.6p†	4.0	7.7;0.0V-90V$;10%	90 ☑	800	50M			Si$§	F56ad
8	DVH6793-15	40G						5.6p†	4.0	7.7;0.0V-90V$;10%	90 ☑	800	50M			Si$§	F59u
9	DVH6794-15	40G						5.6p†	4.0	7.7;0.0V-90V$;10%	90 ☑	800	50M			Si$§	M929
10	E1719A							5.6p†	4.0	5.0-6.1	30	1.0k	50M		4.0		F10k
11	EP1019A							5.6p†Δ	4.0	2.5;2.0V-30V$	30	1.0k	50M		5.0	Si	F59q
12	EP1019B							5.6p†Δ	4.0	2.5;2.0V-30V$	30	1.0k	50M		5.0	Si	F27ah
13	EP1019D							5.6p†Δ	4.0	2.5;2.0V-30V$	30	1.0k	50M		5.0	Si	F56q
14	EP1019E							5.6p†Δ	4.0	2.5;2.0V-30V$	30	1.0k	50M		5.0	Si	F59j
15	EP1019H							5.6p†Δ	4.0	2.5;2.0V-30V$	30	1.0k	50M		5.0	Si	S428b
16	EP1719A							5.6p†	4.0	5.0-6.1	30	1.0k	50M		4.0		F27ac
17	G605A,B,C							5.6pΔ†	4.0	1.8-2.4Ø;10,5,2%	25	600	50M		400m	Si	DO35
18	GC1510							5.6p†Δ	4.0	4.0;0.0V-30V$	30	2.5k	50M			Si	F111b†
19	GC1510A							5.6p†Δ	4.0	4.0;0.0V-30V$	30	2.5k	50M			Si	F59q
20	GC1510B							5.6p†Δ	4.0	4.0;0.0V-30V$	30	2.5k	50M			Si	F27ah
21	GC1510D							5.6p†Δ	4.0	4.0;0.0V-30V$	30	2.5k	50M			Si	F56q
22	GC1510E							5.6p†Δ	4.0	4.0;0.0V-30V$	30	2.5k	50M			Si	F59j
23	GC1510H							5.6p†Δ	4.0	4.0;0.0V-30V$	30	2.5k	50M			Si	S428b
24	GC1610							5.6p†	4.0	5.5;0.0V-45V$	45	1.7k	50M			Si	F111b†
25	GC1710	52G						5.6p§	4.0	6.5;0.0V-60V$	60 ☑	1.05k	50M				F111b†
26	GC1710A							5.6p†Δ	4.0	6.5;0.0V-60V$	60	1.0k	50M			Si	F59q
27	GC1710B							5.6p†Δ	4.0	6.5;0.0V-60V$	60	1.0k	50M			Si	F27ah
28	GC1710D							5.6p†Δ	4.0	6.5;0.0V-60V$	60	1.0k	50M			Si	F56q
29	GC1710E							5.6p†Δ	4.0	6.5;0.0V-60V$	60	1.0k	50M			Si	F59j
30	GC1710H							5.6p†Δ	4.0	6.5;0.0V-60V$	60	1.0k	50M			Si	S428b
31	GC1760							5.6p†Δ	4.0	7.0;0.0V-60V$;10%	60	1.0k	50M		250m	Si	A1ah
32	GC1760B							5.6p†Δ	4.0	7.0;0.0V-60V$;5%	60	1.0k	50M		250m	Si	A1ah
33	GC1760C							5.6p†Δ	4.0	7.0;0.0V-60V$;2%	60	1.0k	50M		250m	Si	A1ah
34	HA1219A							5.6p†Δ	4.0	3.2;2.0V-30V$;10%	30	800	50M		250m	Si	A1ah
35	HA1219B							5.6p†Δ	4.0	3.2;2.0V-30V$;5%	30	800	50M		250m	Si	A1ah
36	HA1219C							5.6p†Δ	4.0	3.2;2.0V-30V$;2%	30	800	50M		250m	Si	A1ah
37	HA1710A							5.6p†Δ	4.0	6.5;0.0V-30V$	30	1.0k	50M			Si	F59q
38	HA1710B							5.6p†Δ	4.0	6.5;0.0V-30V$	30	1.0k	50M			Si	F27ah
39	HA1710D							5.6p†Δ	4.0	6.5;0.0V-30V$	30	1.0k	50M			Si	F56q
40	HA1710E							5.6p†Δ	4.0	6.5;0.0V-30V$	30	1.0k	50M			Si	F59j
41	HA1710H							5.6p†Δ	4.0	6.5;0.0V-30V$	30	1.0k	50M			Si	S428b
42	HA1919A							5.6pΔ†	4.0	3.2;2.0V-30V$;10%	30	800	50M		400m	Si	DO7
43	HA1919B							5.6pΔ†	4.0	3.2;2.0V-30V$;5%	30	800	50M		400m	Si	DO7
44	HA1919C							5.6pΔ†	4.0	3.2;2.0V-30V$;2%	30	800	50M		400m	Si	DO7
45	LP1019A							5.6p†Δ	4.0	4.4;0.0V-25V$	25	800	50M		5.0	Si	F59q
46	LP1019B							5.6p†Δ	4.0	4.4;0.0V-25V$	25	800	50M		5.0	Si	F27ah
47	LP1019D							5.6p†Δ	4.0	4.4;0.0V-25V$	25	800	50M		5.0	Si	F56q
48	LP1019E							5.6p†Δ	4.0	4.4;0.0V-25V$	25	800	50M		5.0	Si	F59j
49	LP1019H							5.6p†Δ	4.0	4.4;0.0V-25V$	25	800	50M		5.0	Si	S428b
50▼	MA4H009							5.6p†	4	1.8-2.3	20	1.8k	50M			Si	V25
51▼	MA4H029							5.6p†	4.0	1.9-2.4	25	2.5k	50M		1.0	Si	V25
52▼	MA4H029C							5.6p	4.0	1.8-2.3	25	2.8k	50M		1.0	Si	V25
53	MA45237							5.6pΔ	4.0	3.9;0V-25V$	25	3.0k	50M			Si$§	V11†
54	MA45237C							5.6pΔ	4.0	4.5;0V-25V$	25	3.0k	50M			Si$§	u17†
55	MA45257							5.6pΔ	4.0	5.4;0V-45V$	45	2.0k	50M			Si$§	V11†
56	MA45257C							5.6pΔ	4.0	6.2;0V-45V$	45	1.8k	50M			Si$§	u17†
57	MA45271							5.6pΔ	4.0	6.5;0V-60V$	60	1.4k	50M			Si$§	V11†
58	MA45271C							5.6pΔ	4.0	7.5;0V-60V$	60	1.4k	50M			Si$§	u17†
59	MA45299							5.6pΔ	4.0	8.8;0V-90V$	90	600	50M			Si$§	V11†
60	MA45299C							5.6pΔ	4.0	9.0;0V-90V$	90	600	50M			Si$§	u17†
61	MA45331							5.6pΔ	4.0	4.5;0V-30V$	30	1.7k	50M			Si$#	DO7†
62	MA45346							5.6pΔ	4.0	5.7;0V-45V$	45	1.4k	50M			Si$#	DO7†
63	MA45361							5.6pΔ	4.0	7.2;0V-60V$	60	900	50M			Si$#	DO7†
64	ML4340							5.6p†	4.0	6.0$ 0-45V	45 †	750	50M			Si	F111a†
65	ML4360							5.6p†	4.0	6.8$ 0-60V	60 †	800	50M			Si	F111a†
66	ML4380							5.6p†	4.0	8.0$ 0-90V	90 †	500	50M			Si	F111a†
67	MV1719,A							5.6p	4.0		30 ☑	500	50M		400m	Si△#	DO7
68	SQ1219A,B,C							5.6pΔ†	4.0	3.1;2V-30V$	30	1.0k	50M		400m	Si	A1ah
69	SQ1269A,B,C							5.6p§%	4.0		30 ☑	500	50M		250m	Si#$	A1ah
70	SQ1719,B,C							5.6pΔ†	4.0	2.9;2V-30V$	30	1.0k	50M		400m	Si	DO7
71	1SV89							5.7p	10	10.5-16;2VØ	32			1.2			DO35
72	PL0194-1,2		5.0G	10G				6.0p		4.0-8.0Ø	200 ☑	☑	10G			Si$	F27as
73	SV67D							6.0p		4.0p-8.0pØ				3.0 ☑	13	Si$#	F153
74	MA4685	70G						6.0p	0.0	4.0 - 8.0Ø	8.0			1.2		Si	S215
75	PSV132-01							6.0p	0.0	7.0;0.0V-90V$	90 ☑	1.1k	50M			Si	F27as
76	PSV132-05							6.0p	0.0	7.0;0.0V-90V$	90 ☑	1.5k	50M			Si	F10af
77	PSV132-08							6.0p	0.0	7.0;0.0V-90V$	90 ☑	1.1k	50M			Si	A1vd
78	PSV132-14							6.0p	0.0	7.0;0.0V-90V$	90 ☑	1.1k	50M			Si	A2u
79	PSV132-16							6.0p	0.0	7.0;0.0V-90V$	90 ☑	1.1k	50M			Si	A1st
80	PSV132-21							6.0p	0.0	7.0;0.0V-90V$	90 ☑	1.1k	50M			Si	M86e
81	PSV132-31							6.0p	0.0	7.0;0.0V-90V$	90 ☑	1.1k	50M			Si	F10ah
82	PSV132-45							6.0p	0.0	7.0;0.0V-90V$	90 ☑	1.1k	50M			Si	F54c
83	SD11D6							6.0p	0.0	6.0 - 12	6.0			1.0		Si	P3
84	SD12D6							6.0p	0.0	6.0 - 12	6.0			1.0		Si	F3a
85	SD22D6							6.0p	0.0	6.0 - 12	6.0			1.0		Si	F11
86	SD32D6							6.0p	0.0	6.0 - 12	6.0			1.0		Si	F21
87	SD42D6							6.0p	0.0	6.0 - 12	6.0			1.0		Si	F9a
88	SDGPD6							6.0p	0.0	6.0 - 12	6.0			1.0		Si	DO7
89	MA46546A							6.0p	4.0	6.99-5.0Ø	15	500	50M			GA	V7†
90	MA46546B							6.0p	4.0	6.99-5.0Ø	15	1.0k	50M			GA	V7†
91	MA46546C							6.0p	4.0	6.99-5.0Ø	15	1.5k	50M			GA	V7†
92	MA46556A							6.0p	4.0	6.99-5.0Ø	22	500	50M			GA	V7†
93	MA46556B							6.0p	4.0	6.99-5.0Ø	22	1.0k	50M			GA	V7†
94	MA46556C							6.0p	4.0	6.99-5.0Ø	22	1.5k	50M			GA	V7†
95	MA46566A							6.0p	4.0	6.99-5.0Ø	15	500	50M			GA	V7†
96	MA46566B							6.0p	4.0	6.99-5.0Ø	15	1.0k	50M			GA	V7†
97	MA46566C							6.0p	4.0	6.99-5.0Ø	15	1.5k	50M			GA	V7†
98	MA46576A							6.0p	4.0	6.99-5.0Ø	22	500	50M			GA	V7†
99	MA46576B							6.0p	4.0	6.99-5.0Ø	22	1.0k	50M			GA	V7†
100	MA46576C							6.0p	4.0	6.99-5.0Ø	22	1.5k	50M			GA	V7†
101	MA4261							6.0p	5.0							Si	P3a
102	1N5152A							6.0p	6.0	5.4-6.6Ø	75 ☑				11	Si	F27e
103	1N5153A							6.0p	6.0	5.4-6.6Ø	75 ☑				11	Si	F48b
104	MA4286							6.0p	6.0		30			4.0		Si	F3a
105	MA4386							6.0p	6.0		30			4.0		Si	A31e
106	PH1204-1,2,3,4		5.0G	10G	15G	20G		6.0p	6.0	4.0 - 8.0Ø	6.0	☑	10G			Si$	F58
107	PH1204A,B-F	30G	40G	50G	60G	70G	80G	6.0p	6.0	4.0-8.0Ø	6.0	☑	10G			Si$	F58
108	PH1214-1,2,3,4		5.0G	10G	15G	20G		6.0p	6.0	4.0 - 8.0Ø	15	☑	10G			Si$	F58
109	PH1214A,B-F	30G	40G	50G	60G	70G	80G	6.0p	6.0	4.0-8.0Ø	15	☑	10G			Si$	F58
110	PH1224-1,2,3,4		5.0G	10G	15G	20G		6.0p	6.0	4.0 - 8.0Ø	24	☑	10G			Si$	F58

6. VOLTAGE VARIABLE CAPACITORS & VARACTOR DIODES

IN ORDER OF (1) TYPICAL CAPACITANCE, (2) TEST VOLTAGE, and (3) TYPE No.

LINE No.	3 TYPE No.	MINIMUM CUTOFF FREQUENCY (Corresponding to Type Numbers in previous column) (Hz)						TYP. CAP. 1 CAP. Cj (F)	2 at TEST VOLT (V)	CAPACITANCE RANGE (for V = 0 to PIV) Ø - at TEST VOLT. (pF)	PIV (V)	Q FACTOR MIN. Q	Q FACTOR at TEST FREQ (Hz)	MAX. SER. RES. Rs (Ω)	MAX. DISS. @ 25°C (W)	MAT.	DESCRIPTION DWG. No.
1	PH1224A,B-F	30G	40G	50G	60G	70G	80G	6.0p	6.0	4.0-8.0Ø	24		☑ 10G			Si$	F58
2	PH1234-1,2,3,4		5.0G	10G	15G	20G		6.0p	6.0	4.0 - 8.0Ø	30		☑ 10G			Si$	F58
3	PH1234A,B,C	30G	40G	50G				6.0p	6.0	4.0-8.0Ø	30		☑ 10G			Si$	F58
4	PH1244-1,2,3,4		5.0G	10G	15G	20G		6.0p	6.0	4.0 - 8.0Ø	45		☑ 10G			Si$	F58
5	PH1244A,B,C	30G	40G	50G				6.0p	6.0	4.0-8.0Ø	45		☑ 10G			Si$	F58
6	PH1254-1,2,3,4		5.0G	10G	15G	20G		6.0p	6.0	4.0 - 8.0Ø	60		☑ 10G			Si$	F58
7	PH1254A,B,C	30G	40G	50G				6.0p	6.0	4.0-8.0Ø	60		☑ 10G			Si$	F58
8	PH1264-1,2,3,4		5.0G	10G	15G	20G		6.0p	6.0	4.0 - 8.0Ø	90		☑ 10G			Si$	F58
9	PH1264A,B,C	30G	40G	50G				6.0p	6.0	4.0-8.0Ø	90		☑ 10G			Si$	F58
10	PH1274-1,2,3,4		5.0G	10G	15G	20G		6.0p	6.0	4.0 - 8.0Ø	120		☑ 10G			Si$	F58
11	PH1274A	30G						6.0p	6.0	4.0-8.0Ø	120		☑ 10G			Si$	F58
12	PH1284-1,2,3	5.0G	10G	15G				6.0p	6.0	4.0 - 8.0Ø	150		☑ 10G			Si$	F58
13	PH1294-1,2	5.0G	10G					6.0p	6.0	4.0 - 8.0Ø	200		☑ 10G			Si$	F58
14	PL0104-1,2,3,4		5.0G	10G	15G	20G		6.0p	6.0	4.0 - 8.0Ø	6.0		☑ 10G			Si	F27d
15	PL0104A,B-F	30G	40G	50G	60G	70G	80G	6.0p	6.0	4.0-8.0Ø	6.0		☑ 10G			Si	F27d
16	PL0114-1,2,3,4		5.0G	10G	15G	20G		6.0p	6.0	4.0 - 8.0Ø	15		☑ 10G			Si	F27d
17	PL0114A,B-F	30G	40G	50G	60G	70G	80G	6.0p	6.0	4.0-8.0Ø	15		☑ 10G			Si	F27d
18	PL0124-1,2,3,4		5.0G	10G	15G	20G		6.0p	6.0	4.0 - 8.0Ø	24		☑ 10G			Si	F27d
19	PL0124A,B-F	30G	40G	50G	60G	70G	80G	6.0p	6.0	4.0-8.0Ø	24		☑ 10G			Si	F27d
20	PL0134-1,2,3,4		5.0G	10G	15G	20G		6.0p	6.0	4.0 - 8.0Ø	30		☑ 10G			Si	F27d
21	PL0134A,B,C	30G	40G	50G				6.0p	6.0	4.0-8.0Ø	30		☑ 10G			Si	F27d
22	PL0144-1,2,3,4		5.0G	10G	15G	20G		6.0p	6.0	4.0 - 8.0Ø	45		☑ 10G			Si	F27d
23	PL0144A,B,C	30G	40G	50G				6.0p	6.0	4.0-8.0Ø	45		☑ 10G			Si	F27d
24	PL0154-1,2,3,4		5.0G	10G	15G	20G		6.0p	6.0	4.0 - 8.0Ø	60		☑ 10G			Si	F27d
25	PL0154A,B,C	30G	40G	50G				6.0p	6.0	4.0-8.0Ø	60		☑ 10G			Si	F27d
26	PL0164-1,2,3,4		5.0G	10G	15G	20G		6.0p	6.0	4.0 - 8.0Ø	90		☑ 10G			Si	F27d
27	PL0164A,B,C	30G	40G	50G				6.0p	6.0	4.0-8.0Ø	90		☑ 10G			Si	F27d
28	PL0174-1,2,3,4		5.0G	10G	15G	20G		6.0p	6.0	4.0 - 8.0Ø	120		☑ 10G			Si	F27d
29	PL0174A	30G						6.0p	6.0	4.0-8.0Ø	120		☑ 10G			Si	F27d
30	PL0184-1,2,3	5.0G	10G	15G				6.0p	6.0	4.0 - 8.0Ø	150		☑ 10G			Si	F27d
31	SV56D	17G						6.0p	6.0	4.0p-8.0pØ					1.5	Si$#	F27a
32	SV89D							6.0p	6.0	4.0p-8.0pØ				2.0	20	Si$#	M1111
33	VJE66W	100G						6.0p	6.0	5.0-7.0Ø	60 ☑					Si	F132
34	VQE66W							6.0p	6.0	5.0-7.0Ø	60 ☑					Si	DO7
35	VSE66W	100G						6.0p	6.0	5.0-7.0Ø	60 ☑					Si	F128
36	VTE66W	100G						6.0p	6.0	5.0-7.0Ø	60 ☑					Si	F130
37	VUE66W	100G						6.0p	6.0	5.0-7.0Ø	60 ☑					Si	F133
38	VWE66W	100G						6.0p	6.0	5.0-7.0Ø	60 ☑					Si	F131
39	VXE66W	100G						6.0p	6.0	5.0-7.0Ø	60 ☑					Si	S167
40	VNA316H							6.2p	4.0	4.3;0.0V-30V$	30 $	2500	50M			Si	F136
41	VNA416H							6.2p	4.0	7.0;0.0V-60V$	60 $	900	50M			Si	F136
42	VSA316H							6.2p	4.0	4.3;0.0V-30V$	30 $	2500	50M			Si	F128
43	VSA416H							6.2p	4.0	7.0;0.0V-60V$	60 $	900	50M			Si	F128
44	VTA316H							6.2p	4.0	4.3;0.0V-30V$	30 $	2500	50M			Si	F130
45	VTA416H							6.2p	4.0	7.0;0.0V-60V$	60 $	900	50M			Si	F130
46	VYA316H							6.2p	4.0	4.3;0.0V-30V$	30 $	2500	50M			Si	F135
47	VYA416H							6.2p	4.0	7.0;0.0V-60V$	60 $	900	50M			Si	F135
48	1N5151							6.2p	6.0	5.0-7.5Ø	75 ☑				7.5	Si	F10g
49	1N5152							6.2p	6.0	5.0-7.5Ø	75 ☑				7.5	Si	F27e
50	1N5153							6.2p	6.0	5.0-7.5Ø	75 ☑				7.5	Si	F48b
51	VJE66M							6.2p	6.0	5.0-7.5Ø	70 ☑					Si	F132
52	VSE66M							6.2p	6.0	5.0-7.5Ø	70 ☑					Si	F128
53	VTE66M							6.2p	6.0	5.0-7.5Ø	70 ☑					Si	F130
54	VUE66M							6.2p	6.0	5.0-7.5Ø	70 ☑					Si	F133
55	VWE66M							6.2p	6.0	5.0-7.5Ø	70 ☑					Si	F131
56	VXE66M							6.2p	6.0	5.0-7.5Ø	70 ☑					Si	S167
57	VJSE96W							6.3p	6.0	5.0-7.5Ø	160 ☑					SiX	F32
58	PSV110-01							6.5p	0.0	4.75;0.0V-45V$	45 ☑	1.7k	50M			Si§	F27as
59	PSV110-05							6.5p	0.0	4.75;0.0V-45V$	45 ☑	1.7k	50M			Si§	F10af
60	PSV110-08							6.5p	0.0	4.75;0.0V-45V$	45 ☑	1.7k	50M			Si§	A1vd
61	PSV110-14							6.5p	0.0	4.75;0.0V-45V$	45 ☑	1.7k	50M			Si§	A2u
62	PSV110-16							6.5p	0.0	4.75;0.0V-45V$	45 ☑	1.7k	50M			Si§	A1st
63	PSV110-21							6.5p	0.0	4.75;0.0V-45V$	45 ☑	1.7k	50M			Si§	M86e
64	PSV110-31							6.5p	0.0	4.75;0.0V-45V$	45 ☑	1.7k	50M			Si§	F10ah
65	PSV110-45							6.5p	0.0	4.75;0.0V-45V$	45 ☑	1.7k	50M			Si§	F54c
66	PSV122-01							6.5p	0.0	5.5;0.0V-60V$	60 ☑	1.2k	50M			Si§	F27as
67	PSV122-05							6.5p	0.0	5.5;0.0V-60V$	60 ☑	1.2k	50M			Si§	F10af
68	PSV122-08							6.5p	0.0	5.5;0.0V-60V$	60 ☑	1.2k	50M			Si§	A1vd
69	PSV122-14							6.5p	0.0	5.5;0.0V-60V$	60 ☑	1.2k	50M			Si§	A2u
70	PSV122-16							6.5p	0.0	5.5;0.0V-60V$	60 ☑	1.2k	50M			Si§	A1st
71	PSV122-21							6.5p	0.0	5.5;0.0V-60V$	60 ☑	1.2k	50M			Si§	M86e
72	PSV122-31							6.5p	0.0	5.5;0.0V-60V$	60 ☑	1.2k	50M			Si§	F10ah
73	PSV122-45							6.5p	0.0	5.5;0.0V-60V$	60 ☑	1.2k	50M			Si§	F54c
74	PSV141-01							6.5p	0.0	8.0;0.0V-120V$	120 ☑	500	50M			Si	F27as
75	PSV141-05							6.5p	0.0	8.0;0.0V-120V$	120 ☑	500	50M			Si	F10af
76	PSV141-08							6.5p	0.0	8.0;0.0V-120V$	120 ☑	500	50M			Si	A1vd
77	PSV141-14							6.5p	0.0	8.0;0.0V-120V$	120 ☑	500	50M			Si	A2u
78	PSV141-16							6.5p	0.0	8.0;0.0V-120V$	120 ☑	500	50M			Si	A1st
79	PSV141-21							6.5p	0.0	8.0;0.0V-120V$	120 ☑	500	50M			Si	M86e
80	PSV141-31							6.5p	0.0	8.0;0.0V-120V$	120 ☑	500	50M			Si	F10ah
81	PSV141-45							6.5p	0.0	8.0;0.0V-120V$	120 ☑	500	50M			Si	F54c
82	VAT11N16,N18,N20							6.5p†Δ	0.0	5.0 - 7.9Ø	120		500	50M			Z42
83	VAT1002N9	100G						6.5p†	0.0	4.75;0.0-45V$	45		2.0k	50M		Si	F54q
84	MA4019B							6.5p	4.0	4.5$ 110☑	100			.05G		Si#$	Z45
85	VA107							6.5p	4.0	3.0;1.0V-30V$	30		150	50M	500m	Si$	DO14Δ
86♦	VA138							6.5p	4.0	3.0;2.0V-25V $	25 $		75	50M	400m	Si$	DO14Δ
87♦	VA139							6.5p	4.0	4.0;2.0V-50V $	50 $		150	50M	400m	Si$	DO14Δ
88♦	VA140							6.5p	4.0	4.0;2.0V-80V$	80 $		75	50M	400m	Si$	DO14Δ
89♦	VA141							6.5p	4.0	4.2;2.0V-100V$	100 $		125	50M	400m	Si$	DO14Δ
90♦	VA150							6.5p	4.0	4.0;2.0V-80V$	80 $		100	50M	400m	Si$	DO14Δ
91♦	VA156							6.5p	4.0	3.0;1.0V-25V$	25 $		150	50M	400m	Si$	DO14Δ
92♦	VA162							6.5p	4.0	4.2;2.0V-100V$	100 $		75	50M	400m	Si$	DO14Δ
93	VA212	37GØ						6.5p	4.0	6.2;2.0V-150V$	150 $		75	50M	6.5 ☑ 500m	Si$	DO14Δ
94	VA213	50GØ						6.5p	4.0	6.2;2.0V-150V$	150 $		100	50M	4.9 ☑ 500m	Si$	DO14Δ
95	VA312							6.5p	4.0	5.7;2.0-200V$	200 $		75	50M	6.5 ☑ 500m	Si$	DO14Δ
96	VA313							6.5p	4.0	5.7;2.0-200V$	200 $		100	50M	4.9 ☑ 500m	Si$	DO14Δ
97	VVC417,A,B,C,D							6.5p%	4.0	2.2;4.0V-25V$	25		75	50M	400m§	Si	DO7†
98	VVC418,A,B,C,D							6.5p%	4.0	3.6;4.0V-80V$	80		75	50M	400m§	Si	DO7†
99	VVC419,A,B,C,D							6.5p%	4.0	3.9;4.0V-100V$	100		125	50M	400m§	Si	DO7†
100♦	VA156A							6.5p%	-4	3.0;2.0V-25V $	25		150	50M	400m		DO7†
101♦	VA156B							6.5p%	-4	3.0;2.0V-25V $	25		150	50M	400m		DO7†
102	MA43001							6.5p☑	10	2.5-6.5Ø	75 ☑				8.7 ☑	Si$Δ	S428
103	GC1811							6.6p	4.0	16.0-1.60	90		600	50M		Si	F111b†
104	MA4273B							6.6p	4.0	5.2 - 8.0Ø	110		100	.05G	.50	Si	A31e
105	KA602A	10GØ						6.7p†	6.0	4.7-8.7Ø	60				2.5 §☑	#$	F58a
106	1N4786							6.8p%	4.0	2.56;0.0-4.0V$	25 $	15	50M		500m	Si	DO14
107	1N4786A							6.8p%	4.0	2.56;0.0-4.0V$	25 $	15	50M		500m	Si	DO14
108	1N4786B							6.8p%	4.0	2.56;0.0-4.0V$	25 $	15	50M		500m	Si	DO14
109	1N4786C							6.8p%	4.0	2.56;0.0-4.0V$	25 $	15	50M		500m	Si	DO14
110	1N4786D							6.8p%	4.0	2.56;0.0-4.0V$	25 $	15	50M		500m	Si	DO14

6. VOLTAGE VARIABLE CAPACITORS & VARACTOR DIODES

IN ORDER OF (1) TYPICAL CAPACITANCE, (2) TEST VOLTAGE, and (3) TYPE No.

LINE No.	3 TYPE No.	MINIMUM CUTOFF FREQUENCY (Corresponding to Type Numbers in previous column) (Hz)	(Hz)	(Hz)	(Hz)	(Hz)	(Hz)	TYP. CAP. 1 CAP. Cj (F)	2 at TEST VOLT (V)	CAPACITANCE RANGE (for V = 0 to PIV) Ø - at TEST VOLT. (pF)	PIV (V)	Q FACTOR MIN. Q	at TEST FREQ (Hz)	MAX. SER. RES. Rs (Ω)	MAX. DISS. @ 25°C (W)	DESCRIPTION MAT.	DWG. No.
1	1N4801							6.8p%	4.0	2.56;0.0-4.0V$	100 $	15	50M		500m	Si	DO14
2	1N4801A							6.8p%	4.0	2.56;0.0-4.0V$	100 $	15	50M		500m	Si	DO14
3	JAN1N4801A							6.8p%	4.0	2.56;0.0-4.0V$	100 $	15	50M		500m	Si	A1dd
4	1N4801B							6.8p%	4.0	2.56;0.0-4.0V$	100 $	15	50M		500m	Si	DO14
5	JAN1N4801B							6.8p%	4.0	2.56;0.0-4.0V$	100 $	15	50M		500m	Si	A1dd
6	1N4801C							6.8p%	4.0	2.56;0.0-4.0V$	100 $	15	50M		500m	Si	DO14
7	1N4801D							6.8p%	4.0	2.56;0.0-4.0V$	100 $	15	50M		500m	Si	DO14
8	1N5139							6.8p	4.0	2.7;4.0V-60V$	60 Ø	350	50M		400m	Si	DO7
9	1N5139A							6.8p	4.0	2.7;4.0V-60V$	60 Ø	350	50M		400m	Si	DO7
10	JAN1N5139A							6.8p	4.0	6.46-7.14Ø	65 Ø	350	50M		400m	Si	DO7
11	1N5441							6.8p%	4.0	2.5;2V-30V$	30	450	50M		400m	Si	DO7
12	1N5441A							6.8p%	4.0	2.5;2V-30V$	30	450	50M		400m	Si	DO7
13	1N5441B							6.8p%	4.0	2.5;2V-30V$	30	450	50M		400m	Si	DO7
14	1N5441C							6.8p%	4.0	2.5;2V-30V$	30	450	50M		400m	Si	DO7
15	1N5441D							6.8p%	4.0	2.5;2V-30V$	30	450	50M		400m	Si	DO7
16	1N5461							6.8p%	4.0	2.7;2V-30V$	30	600	50M		400m	Si	DO7
17	1N5461A							6.8p%	4.0	2.7;2V-30V$	30	600	50M		400m	Si	DO7
18	1N5461B							6.8p%	4.0	2.7;2V-30V$	30	600	50M		400m	Si	DO7
19	JAN1N5461B							6.8p	4.0	6.46-7.14Ø	30 Ø	600	50M		400m	Si	DO7
20	1N5461C							6.8p%	4.0	2.7;2V-30V$	30	600	50M		400m	Si	DO7
21	JAN1N5461C							6.8p	4.0	6.66-6.94Ø	30 Ø	600	50M		400m	Si	DO7
22	1N5461D							6.8p%	4.0	2.7;2V-30V$	30	600	50M		400m	Si	DO7
23	1N5681							6.8p%	4.0	3.1;2.0V-40V$	40	600	50M		400m	Si	DO7
24	1N5681A							6.8p%	4.0	3.1;2.0V-40V$	40	600	50M		400m	Si	DO7
25	1N5681B							6.8p%	4.0	3.1;2.0V-40V$	40	600	50M		400m	Si	DO7
26	1N5696							6.8p%	4.0	2.7;4.0V-60V$	60	450	50M		400m	Si	DO7
27	1N5696A							6.8p%	4.0	2.7;4.0V-60V$	60	450	50M		400m	Si	DO7
28	1N5696B							6.8p%	4.0	2.7;4.0V-60V$	60	450	50M		400m	Si	DO7
29	CV1006,A,B,C,D	7.5G						6.8p%	4.0	15-2.4	60	150	50M		400m	Si	DO7
30	CV1106,A,B,C,D	7.5G						6.8p%	4.0	15-2.0	100	150	50M		400m	Si	DO7
31	CV1620							6.8p	4.0	6.1-7.5Ø	20	300	50M		400m	Si$	DO7
32	CV1864B							6.8p	4.0	6.10-7.50	60	300	100M		5.0	Si	F27xØ
33	CV1864D							6.8p	4.0	6.10-7.50	60	300	100M		5.0	Si	F56nØ
34	CV5007							6.8p	4.0	2.5;2.0V-30V$	30	450	50M		400m	Si	DO7
35	CVH2030-16							6.8p	4.0	4.5;0.0-30$;10%	30 Ø	2.8k	50M			Si§§	u30a
36	CVH2045-16							6.8p	4.0	6.1;0.0-45$;10%	45 Ø	1.8k	50M			Si§§	u30a
37	CVH2060-16							6.8p	4.0	7.5;0.0-60$;10%	60 Ø	1.4k	50M			Si§§	u30a
38	CVH2090-16							6.8p	4.0	8.7;0.0-90$;10%	90 Ø	750	50M			Si§§	u30a
39	D1720,B,C							6.8p†%	4.0	2.8;2V-30V$	30 Ø	500	50M		400m	Si#$	DO7
40	DC4210B	22G						6.8p	4.0		60	450	50M			Si	DO7Δ
41	DT311							6.8p§	4.0	4.2;0.0V-30V$	30 Ø	2400 Ø	50M			Si	V1
42	DT611							6.8p§	4.0	6.8;0.0V-60V$	60 Ø	1100 Ø	50M			Si	V1
43	DT911							6.8p§	4.0	8.8;0.0V-90V$	90 Ø	750 Ø	50M			Si	V1
44	DT4511							6.8p§	4.0	5.6;0.0V-45V$	45 Ø	1800 Ø	50M			Si	V1
45♦	DVH6730-16							6.8p§	4.0	4.3;0.0-30$;10%	30 Ø	2.8k	50M			Si§§	A90a
46♦	DVH6731-16	140G						6.8p†	4.0	4.3;0.0V-30V$;10%	30 Ø	2.8k	50M			Si§§	F143
47	DVH6732-16	140G						6.8p†	4.0	4.3;0.0V-30V$;10%	30 Ø	2.8k	50M			Si§§	F56ad
48	DVH6733-16	140G						6.8p†	4.0	4.3;0.0V-30V$;10%	30 Ø	2.8k	50M			Si§§	F59u
49	DVH6734-16	140G						6.8p†	4.0	4.3;0.0V-30V$;10%	30 Ø	2.8k	50M			Si§§	M929
50♦	DVH6740-16							6.8p§	4.0	5.6;0.0-45$;10%	45 Ø	1.8k	50M			Si§§	A90a
51♦	DVH6741-16	90G						6.8p†	4.0	5.6;0.0V-45V$;10%	45 Ø	1.8k	50M			Si§§	F143
52	DVH6742-16	90G						6.8p†	4.0	5.6;0.0V-45V$;10%	45 Ø	1.8k	50M			Si§§	F56ad
53	DVH6743-16	90G						6.8p†	4.0	5.6;0.0V-45V$;10%	45 Ø	1.8k	50M			Si§§	F59u
54	DVH6744-16	90G						6.8p†	4.0	5.6;0.0V-45V$;10%	45 Ø	1.8k	50M			Si§§	M929
55♦	DVH6760-16							6.8p§	4.0	6.7;0.0-60$;10%	60 Ø	1.4k	50M			Si§§	A90a
56♦	DVH6761-16	70G						6.8p†	4.0	6.7;0.0V-60V$;10%	60 Ø	1.4k	50M			Si§§	F143
57	DVH6762-16	70G						6.8p†	4.0	6.7;0.0V-60V$;10%	60 Ø	1.4k	50M			Si§§	F56ad
58	DVH6763-16	70G						6.8p†	4.0	6.7;0.0V-60V$;10%	60 Ø	1.4k	50M			Si§§	F59u
59	DVH6764-16	70G						6.8p†	4.0	6.7;0.0V-60V$;10%	60 Ø	1.4k	50M			Si§§	M929
60♦	DVH6790-16							6.8p§	4.0	7.8;0.0-90$;10%	90 Ø	750	50M			Si§§	A90a
61♦	DVH6791-16	37G						6.8p†	4.0	7.8;0.0V-90V$;10%	90 Ø	750	50M			Si§§	F143
62	DVH6792-16	37G						6.8p†	4.0	7.8;0.0V-90V$;10%	90 Ø	750	50M			Si§§	F56ad
63	DVH6793-16	37G						6.8p†	4.0	7.8;0.0V-90V$;10%	90 Ø	750	50M			Si§§	F59u
64	DVH6794-16	37G						6.8p†	4.0	7.8;0.0V-90V$;10%	90 Ø	750	50M			Si§§	M929
65	E607	25G						6.8p	4.0	2.8;1.0V-25V$	30	500	50M			Si	F27az
66	E707	50G						6.8p	4.0	4.0;1.0V-50V$	60	1.0k	50M			Si	F27az
67	E1720A							6.8p†	4.0	6.1-7.5	30	1.0k	50M		4.0		F10k
68	EP1020A							6.8p†Δ	4.0	2.5;2.0V-30V$	30	1.0k	50M		5.0	Si	F59q
69	EP1020B							6.8p†Δ	4.0	2.5;2.0V-30V$	30	1.0k	50M		5.0	Si	F27ah
70	EP1020D							6.8p†Δ	4.0	2.5;2.0V-30V$	30	1.0k	50M		5.0	Si	F56q
71	EP1020E							6.8p†Δ	4.0	2.5;2.0V-30V$	30	1.0k	50M		5.0	Si	F59j
72	EP1020H							6.8p†Δ	4.0	2.5;2.0V-30V$	30	1.0k	50M		5.0	Si	S428b
73	EP1720A							6.8p†	4.0	6.1-7.5	30	1.0k	50M		4.0		F27ac
74	G106,A,B							6.8p%	4.0		25	100 Ø	50M		500m	Si$	A60j
75	G206,A,B							6.8p%	4.0		25	200 Ø	50M		500m	Si$	A60j
76	G306,A,B							6.8p%	4.0		25	300 Ø	50M		500m	Si$	A60j
77	G406,A,B							6.8p%	4.0		25	400 Ø	50M		500m	Si$	A60j
78	G506A,B							6.8p%	4.0		25	500 Ø	50M		500m	Si$	A60j
79	G606A,B,C							6.8pΔ†	4.0	1.9-2.4Ø;10,5,2%	25	600	50M		400m	Si	DO35
80	GC1511							6.8p†Δ	4.0	4.0;0.0V-30V$	30	2.2k	50M			Si	F111b†
81	GC1511A							6.8p†Δ	4.0	4.0;0.0V-30V$	30	2.2k	50M			Si	F59q
82	GC1511B							6.8p†Δ	4.0	4.0;0.0V-30V$	30	2.2k	50M			Si	F27ah
83	GC1511D							6.8p†Δ	4.0	4.0;0.0V-30V$	30	2.2k	50M			Si	F56q
84	GC1511E							6.8p†Δ	4.0	4.0;0.0V-30V$	30	2.2k	50M			Si	F59j
85	GC1511H							6.8p†Δ	4.0	4.0;0.0V-30V$	30	2.2k	50M			Si	S428b
86	GC1611							6.8p†	4.0	5.5;0.0V-45V$	45	1.7k	50M			Si	F111b†
87	GC1711	50G						6.8p§	4.0	6.5;0.0V-60V$	60 Ø	1.0k	50M				F111b†
88	GC1711A							6.8p†Δ	4.0	6.5;0.0V-60V$	60	1.0k	50M			Si	F59q
89	GC1711B							6.8p†Δ	4.0	6.5;0.0V-60V$	60	1.0k	50M			Si	F27ah
90	GC1711D							6.8p†Δ	4.0	6.5;0.0V-60V$	60	1.0k	50M			Si	F56q
91	GC1711E							6.8p†Δ	4.0	6.5;0.0V-60V$	60	1.0k	50M			Si	F59j
92	GC1711H							6.8p†Δ	4.0	6.5;0.0V-60V$	60	1.0k	50M			Si	S428b
93	GC1761							6.8p†Δ	4.0	7.0;0.0V-60V$;10%	60	1.0k	50M		250m	Si	A1ah
94	GC1761B							6.8p†Δ	4.0	7.0;0.0V-60V$;5%	60	1.0k	50M		250m	Si	A1ah
95	GC1761C							6.8p†Δ	4.0	7.0;0.0V-60V$;2%	60	1.0k	50M		250m	Si	A1ah
96	HA1220A							6.8p†Δ	4.0	3.8;2.0V-30V$;10%	30	800	50M		250m	Si	A1ah
97	HA1220B							6.8p†Δ	4.0	3.8;2.0V-30V$;5%	30	800	50M		250m	Si	A1ah
98	HA1220C							6.8p†Δ	4.0	3.8;2.0V-30V$;2%	30	800	50M		250m	Si	A1ah
99	HA1711A							6.8p†Δ	4.0	6.5;0.0V-30V$	30	1.0k	50M			Si	F59q
100	HA1711B							6.8p†Δ	4.0	6.5;0.0V-30V$	30	1.0k	50M			Si	F27ah
101	HA1711D							6.8p†Δ	4.0	6.5;0.0V-30V$	30	1.0k	50M			Si	F56q
102	HA1711E							6.8p†Δ	4.0	6.5;0.0V-30V$	30	1.0k	50M			Si	F59j
103	HA1711H							6.8p†Δ	4.0	6.5;0.0V-30V$	30	1.0k	50M			Si	S428b
104	HA1920A							6.8pΔ†	4.0	3.8;2.0V-30V$;10%	30	800	50M		400m	Si	DO7
105	HA1920B							6.8pΔ†	4.0	3.8;2.0V-30V$;5%	30	800	50M		400m	Si	DO7
106	HA1920C							6.8pΔ†	4.0	3.8;2.0V-30V$;2%	30	800	50M		400m	Si	DO7
107	KV620							6.8p§	4.0	2.5;2.0V-20V$	20 Ø	300	50M		400m	Si#$	DO7
108	KV4801							6.8p%	4.0	3.675;4.0V-100V$	100 $	125	50m		500m	▼	DO14
109	KV4801A							6.8p%	4.0	3.675;4.0V-100V$	100 $	125	50m		500m	▼	DO14
110	KV4801B							6.8p%	4.0	3.675;4.0V-100V$	100 $	125	50m		500m	▼	DO14

6. VOLTAGE VARIABLE CAPACITORS & VARACTOR DIODES

IN ORDER OF (1) TYPICAL CAPACITANCE, (2) TEST VOLTAGE, and (3) TYPE No.

LINE No.	3 TYPE No.	MINIMUM CUTOFF FREQUENCY (Corresponding to Type Numbers in previous column) (Hz)	(Hz)	(Hz)	(Hz)	(Hz)	(Hz)	TYP. CAP. 1 CAP. Cj (F)	2 at TEST VOLT (V)	CAPACITANCE RANGE (for V = 0 to PIV) Ø - at TEST VOLT. (pF)	PIV (V)	Q FACTOR MIN. Q	at TEST FREQ (Hz)	MAX. SER. RES. Rs (Ω)	MAX. DISS. @ 25°C (W)	DESCRIPTION MAT.	DWG. No.
1	KV4801C							6.8p%	4.0	3.675;4.0V-100V$	100 $	125	50M		500m	▼	DO14
2	KV4801D							6.8p%	4.0	3.675;4.0V-100V$	100 $	125	50M		500m	▼	DO14
3	LP1020A							6.8pt∆	4.0	4.5;0.0V-25V$	25	800	50M		5.0	Si	F59q
4	LP1020B							6.8pt∆	4.0	4.5;0.0V-25V$	25	800	50M		5.0	Si	F27ah
5	LP1020D							6.8pt∆	4.0	4.5;0.0V-25V$	25	800	50M		5.0	Si	F56q
6	LP1020E							6.8pt∆	4.0	4.5;0.0V-25V$	25	800	50M		5.0	Si	F59j
7	LP1020H							6.8pt∆	4.0	4.5;0.0V-25V$	25	800	50M		5.0	Si	S428b
8	MA45107							6.8pt∆	4.0	5.4;0.0V-45V$	55 ☑	1.5k	50M			Si$	F27f
9	MA45111							6.8pt∆	4.0	5.4;0.0V-45V$		1.5k	50M			Si$	DO7
10	MA45127							6.8pt∆	4.0	6.5;0.0V-60V$	75 ☑	1.5k	50M			Si$	F27f
11	MA45131							6.8pt∆	4.0	6.5;0.0V-60V$		1.5k	50M			Si$	DO7
12	MA45147							6.8pt∆	4.0	8.2;0.0V-90V$	100 ☑	800	50M			Si$	F27f
13	MA45158							6.8pt∆	4.0	6.5;0.0V-60V$	65 ☑	1.5k	50M			Si§	A1ac†
14	MA45168							6.8pt∆	4.0	5.4;0.0V-45V$	50 ☑	1.5k	50M			Si$	A1ac†
15	MA45238							6.8p∆	4.0	3.9;0V-25V$	25	3.0k	50M			Si$§	V11†
16	MA45238C							6.8p∆	4.0	4.5;0V-25V$	25	3.0k	50M			Si$§	u17†
17	MA45258							6.8p∆	4.0	5.4;0V-45V$	45	1.8k	50M			Si$§	V11†
18	MA45258C							6.8p∆	4.0	6.2;0V-45V$	45	1.8k	50M			Si$§	u17†
19	MA45272							6.8p∆	4.0	6.5;0V-60V$	60	1.2k	50M			Si$§	V11†
20	MA45272C							6.8p∆	4.0	7.5;0V-60V$	60	1.2k	50M			Si$§	u17†
21	MA45332							6.8p∆	4.0	4.5;0V-30V$	30	1.6k	50M			Si$#	DO7†
22	MA45347							6.8p∆	4.0	5.8;0V-45V$	45	1.3k	50M			Si$#	DO7†
23	MA45362							6.8p∆	4.0	7.2;0V-60V$	60	800	50M			Si$#	DO7†
24	MC720	15G						6.8p	4.0	2.5;2.0V-20V$	20 ☑	300	50M			Si	A1au
25	ML4341							6.8pt	4.0	6.2$ 0-45V	45 †	650	50M			Si	F111at
26	ML4361							6.8pt	4.0	6.9$ 0-60V	60 †	800	50M			Si	F111at
27	ML4381							6.8pt	4.0	8.1$ 0-90V	90 †	500	50M			Si	F111at
28	MV1620							6.8p§	4.0	6.1-7.5Ø	20 ☑	300	50M		400m	Si	DO7
29	MV1620B							6.8p∆†	4.0	2.5;2.0V-20V$;5%	20	300	50M		400m	Si	DO7
30	MV1620C							6.8p∆†	4.0	2.5;2.0V-20V$;2%	20	300	50M		400m	Si	DO7
31	MV1720A							6.8p	4.0		30 ☑	500	50M		400m	Si∆#	DO7
32	MV1864A							6.8pt	4.0	6.1-7.5Ø	60			800m	5.0	Si	F10a
33	MV1864B							6.8pt	4.0	6.1-7.5Ø	60			800m	5.0	Si	F27a
34	MV1864D							6.8pt	4.0	3.4;4.0V-60V$	60 ☑	300	100M		5.0	Si	F56n
35	MV1864E							6.8pt∆	4.0	2.7-2.9Ø	60	300	100M			Si	F59j
36	MV1864H							6.8pt∆	4.0	2.7-2.9Ø	60	300	100M			Si	S428b
37♦	MV2101							6.8p§	4.0	6.1-7.5Ø	30 ☑	450	50M		280m	Si	M764a
38♦	MV2201							6.8p§	4.0	5.4-8.1 Ø	25 ☑	300	50M		280m	Si	M764a
39	MV2201B,C							6.8p§%	4.0	1.9;1.0V-10V$	25	300	50M		400m	Si	C132
40	MVI2101							6.8pt	4.0	3.3;2.0V-30V$	30 ☑	275	100M		200m	Si	M750
41	PC107,A,B,C,D	2.2G						6.8p%	4.0	4.5;500mV-30V$	30 $	75	100M		600m		DO14
42▼	PC107,A,B,C,D#							6.8p	4.0	4.5;0.5V-30V $	30 $	75	100M		400m		DO7
43	PC138,A,B,C,D	3.8G						6.8p%	4.0	4.5;500mV-30V$	30 $	38	100M		600m		DO14
44▼	PC138,A,B,C,D#							6.8p	4.0	4.5;0.5V-30V $	30 $	38	100M		400m		DO7
45	PC139,A,B,C,D	7.5G						6.8p%	4.0	5.7;500mV-50V$	50 $	75	100M		600m		DO14
46▼	PC139,A,B,C,D#							6.8p	4.0	5.7;0.5V-50V $	50 $	75	100M		400m		DO7
47	PC140,A,B,C,D	3.8G						6.8p%	4.0	6.8;500mV-80V$	80 $	38	100M		600m		DO14
48▼	PC140,A,B,C,D#							6.8p	4.0	6.8;0.5V-80V $	80 $	38	100M		400m		DO7
49	PC141,A,B,C,D	6.8G						6.8p%	4.0	7.6;500mV-80V$	100 $	68	100M		600m		DO14
50▼	PC141,A,B,C,D#							6.8p	4.0	7.6;0.5V-100V $	100 $	68	100M		400m		DO7
51	PG107							6.8p∆	4.0	4.4;2.0V-65V$	70	100	100M		400m	Si	DO7
52	PG107A							6.8p∆	4.0	4.4;2.0V-65V$;10%	70	100	100M		400m	Si	DO7
53	PG107B							6.8p∆	4.0	4.4;2.0V-65V$;5%	70	100	100M		400m	Si	DO7
54	PG107C							6.8p∆	4.0	4.4;2.0V-65V$;2%	70	100	100M		400m	Si	DO7
55	PG107D							6.8p∆	4.0	4.4;2.0V-65V$;1%	70	100	100M		400m	Si	DO7
56	PG207							6.8p∆	4.0	4.3;2.0V-65V$	70	100	100M		400m	Si	DO7
57	PG207A							6.8p∆	4.0	4.3;2.0V-65V$;10%	70	100	100M		400m	Si	DO7
58	PG207B							6.8p∆	4.0	4.3;2.0V-65V$;5%	70	100	100M		400m	Si	DO7
59	PG207C							6.8p∆	4.0	4.3;2.0V-65V$;2%	70	100	100M		400m	Si	DO7
60	PG207D							6.8p∆	4.0	4.3;2.0V-65V$;1%	70	100	100M		400m	Si	DO7
61	PG307							6.8p∆	4.0	3.85;2.0V-50V$	55	150	100M		400m	Si	DO7
62	PG307A							6.8p∆	4.0	3.85;2.0V-50V$;10%	55	150	100M		400m	Si	DO7
63	PG307B							6.8p∆	4.0	3.85;2.0V-50V$;5%	55	150	100M		400m	Si	DO7
64	PG307C							6.8p∆	4.0	3.85;2.0V-50V$;2%	55	150	100M		400m	Si	DO7
65	PG307D							6.8p∆	4.0	3.85;2.0V-50V$;1%	55	150	100M		400m	Si	DO7
66	SQ1220A,B,C							6.8p∆†	4.0	3.1;2V-30V$	30	1.0k	50M		400m	Si	A1ah
67	SQ1270A,B,C							6.8p§%	4.0		30 ☑	500	50M		250m	Si#$	A1ah
68	SQ1720,B,C							6.8p∆†	4.0	3.1;2V-30V$	30	1.0k	50M		400m	Si	DO7
69	SQ5461A							6.8pt∆	4.0	3.1;2.0V-30V$;10%	30	600	50M		400m	Si	DO7
70	SQ5461B							6.8pt∆	4.0	3.1;2.0V-30V$;5%	30	600	50M		400m	Si	DO7
71	SQ5461C							6.8pt∆	4.0	3.1;2.0V-30V$;2%	30	600	50M		400m	Si	DO7
72	VA5139							6.8p	4.0	6.1-7.5	90	350	50M		400m	Si	DO7
73	VA5139A							6.8p	4.0	6.5-7.1	90	350	50M		400m	Si	DO7
74	VC720	15G						6.8p	4.0	2.6;2.0V-20V$	20 ☑	300	50M			Si	DO7
75	VQA416							6.8p	4.0	2.9;4.0V-60V$	60 $	350	50M			Si	DO7
76	VQA516							6.8p§	4.0	3.6;4.0V-100V$	100 $	200	50M			Si	DO7
77	VVC700,A,B,C,D							6.8p%	4.0	2.4;4.0V-30V$	30	38	100M		400m§	Si	DO7†
78	VVC701,A,B,C,D							6.8p%	4.0	2.4;4.0V-30V$	30	75	100M		400m§	Si	DO7†
79	VVC702,A,B,C,D							6.8p%	4.0	2.9;4.0V-50V$	50	75	100M		400m§	Si	DO7†
80	VVC703,A,B,C,D							6.8p%	4.0	3.6;4.0V-80V$	80	38	100M		400m§	Si	DO7†
81	VVC721,A,B,C,D							6.8p%	4.0	3.9;4.0V-100V$	100	68	100M		400m§	Si	DO7†
82	VVC726,A,B,C,D							6.8p%	4.0	2.0;4.0V-20V$	20	300	50M		400m§	Si	DO7†
83	VVC1620,A,B,C							6.8p%	4.0	2.0-3.2;2.0V-20V$	20	300	50M		400m§	Si	DO7†
84	ZC700							6.8p∆†	4.0	2.7;2.0V-30V$;10%	30	450	50M		400m	Si	DO7∆
85	ZC700C							6.8p∆†	4.0	2.7;2.0V-30V$;2%	30	450	50M		400m	Si	DO7∆
86	ZC740							6.8p§	4.0	2.7;2.0V-3.0V$	30	450	50M			Si$∆	C219
87	ZC700B							6.8p∆†	4.0	2.7;2.0V-30V$;5%	30	450	50M		400m	Si	DO7∆
88	SV66D							7.0p		4.0p-10.0pØ				1.5 ☑	11	Si$#	F153
89▼	V907E,A,B,C,D%							7.0p		6.9;0.5V-100V $	100 $				400m		DO7
90	BXY11E							7.0p	0.0	5.0 - 10Ø	65			1.0		Si§§	S286
91	BXY14E							7.0p	0.0	5.0 - 10Ø	65			1.0		Si§§	DO19
92	1S2094	7.5G						7.0pØ	4.0	1.33;4.0V-10V$	18 ☑	150	50M			Si$#	DO35
93▼	1SV160							7.0pØ	4.0	1.2-1.5;2.0-4.0V $	15			1.2		Si	W177
94	MC7							7.0p	4.0	5.6-8.4	60 †	10	50k			Si	A1au
95	MC407							7.0p	4.0	5.0;1.0V-60V$	60 †	100	50M			Si	A1au
96	MC607							7.0p	4.0	5.60-8.4Ø	60	250	50M			Si	A1au
97	MMC607							7.0p	4.0	5.60-8.40Ø	60	500	50M			Si	A1au
98	PC0600A							7.0p§∆	4.0		30 $	200	50M				DO7
99	PC0600B							7.0p§∆	4.0		30 $	300	50M				DO7
100	PC0600C							7.0p§∆	4.0		30 $	400	50M				DO7
101	PC0600D							7.0p§∆	4.0		30 $	500	50M				DO7
102	PC0610A							7.0p§∆	4.0		60 $	200	50M				DO7
103	PC0610B							7.0p§∆	4.0		60 $	300	50M				DO7
104	PC0610C							7.0p§∆	4.0		60 $	400	50M				DO7
105	PC0620A							7.0p§∆	4.0		90 $	200	50M				DO7
106	PC0620B							7.0p§∆	4.0		90 $	300	50M				DO7
107	PC0620C							7.0p§∆	4.0		90 $	400	50M				DO7
108	PC0630A							7.0p§∆	4.0		120 $	200	50M				DO7
109	PC0630B							7.0p§∆	4.0		120 $	300	50M				DO7
110	PC0640A							7.0p§∆	4.0		150 $	200	50M				DO7

6. VOLTAGE VARIABLE CAPACITORS & VARACTOR DIODES

IN ORDER OF (1) TYPICAL CAPACITANCE, (2) TEST VOLTAGE, and (3) TYPE No.

LINE No.	3 TYPE No.	MINIMUM CUTOFF FREQUENCY (Corresponding to Type Numbers in previous column) (Hz)	(Hz)	(Hz)	(Hz)	(Hz)	(Hz)	TYP. CAP. 1 CAP. Cj (F)	2 at TEST VOLT (V)	CAPACITANCE RANGE (for V = 0 to PIV) Ø - at TEST VOLT. (pF)	PIV (V)	Q FACTOR MIN. Q	at TEST FREQ (Hz)	MAX. SER. RES. Rs (Ω)	MAX. DISS. @ 25°C (W)	DESCRIPTION MAT.	DWG. No.
1	PC1400A							7.0p§Δ	4.0		30 $	200	50M				A2u
2	PC1400B							7.0p§Δ	4.0		30 $	300	50M				A2u
3	PC1400C							7.0p§Δ	4.0		30 $	400	50M				A2u
4	PC1400D							7.0p§Δ	4.0		30 $	500	50M				A2u
5	PC1410A							7.0p§Δ	4.0		60 $	200	50M				A2u
6	PC1410B							7.0p§Δ	4.0		60 $	300	50M				A2u
7	PC1410C							7.0p§Δ	4.0		60 $	400	50M				A2u
8	PC1420A							7.0p§Δ	4.0		90 $	200	50M				A2u
9	PC1420B							7.0p§Δ	4.0		90 $	300	50M				A2u
10	PC1420C							7.0p§Δ	4.0		90 $	400	50M				A2u
11	PC1430A							7.0p§Δ	4.0		120 $	200	50M				A2u
12	PC1430B							7.0p§Δ	4.0		120 $	300	50M				A2u
13	PC1440A							7.0p§Δ	4.0		150 $	200	50M				A2u
14	PC2600A							7.0p§Δ	4.0		30 $	200	50M				DO7
15	PC2600B							7.0p§Δ	4.0		30 $	300	50M				DO7
16	PC2600C							7.0p§Δ	4.0		30 $	400	50M				DO7
17	PC2600D							7.0p§Δ	4.0		30 $	500	50M				DO7
18	PC2610A							7.0p§Δ	4.0		60 $	200	50M				DO7
19	PC2610B							7.0p§Δ	4.0		60 $	300	50M				DO7
20	PC2610C							7.0p§Δ	4.0		60 $	400	50M				DO7
21	PC2610D							7.0p§Δ	4.0		60 $	500	50M				DO7
22	PC2620A							7.0p§Δ	4.0		90 $	200	50M				DO7
23	PC2620B							7.0p§Δ	4.0		90 $	300	50M				DO7
24	PC2620C							7.0p§Δ	4.0		90 $	400	50M				DO7
25	PC2620D							7.0p§Δ	4.0		90 $	500	50M				DO7
26	PC2630A							7.0p§Δ	4.0		120 $	200	50M				DO7
27	PC2630B							7.0p§Δ	4.0		120 $	300	50M				DO7
28	PC2630C							7.0p§Δ	4.0		120 $	400	50M				DO7
29	PC2630D							7.0p§Δ	4.0		120 $	500	50M				DO7
30	PC2640A							7.0p§Δ	4.0		150 $	200	50M				DO7
31	PC2640B							7.0p§Δ	4.0		150 $	300	50M				DO7
32	PC2640C							7.0p§Δ	4.0		150 $	400	50M				DO7
33	PV1430							7.0p§	4.0		120	400	50M				A2u
34	TIV306							7.0p	4.0	5.0-9.0Ø	20	200	50M		250m	Si#	DO35
35♦	V7,A,B,C,D%	750M						7.0p%	4.0	4.1;0.5V-25V $	25 $	13	50M		400m	Si$	DO14
36♦	V7,A,B,C,D#	750M						7.0p%	4.0	4.1;0.5V-25V $	25 $	13	50M		400m		DO7
37	V7E,A,B,C,D	150M						7.0p%	4.0	6.9;500mV-100V$	100 $	3.0	50M		400m		DO7
38♦	V7E,A,B,C,D#	350M						7.0p%	4.0	6.9;0.5V-100V $	100 $	3.0	50M		400m	Si$	DO14
39♦	V907,A,B,C,D%	750M						7.0p%	4.0	4.1;0.5V-25V $	25 $	15	50M		400m		DO7
40	V907,A,B,C,D#	750M						7.0p%	4.0	3.0-18	25 $	15	50M		500m	Si$	DO14
41♦	V907E,A,B,C,D							7.0p%	4.0	6.9;500mV-100V$	100 $				400m		DO14
42	V907E,A,B,C,D#	350M						7.0p%	4.0	1.5-18	100 $	7.0	50M		500m	Si$	DO14
43	VC7,A,B							7.0p%	4.0	2.2 - 18	50 $	10	.05G				DO7
44	VC207,A,B							7.0p%	4.0	2.2 - 18	50 $	25	.05G				DO7
45	VC306,A,B							7.0p%	4.0	3.0;1V-25V$	25 $	50	.05G				DO7
46	VC307,A,B							7.0p%	4.0	4.0;2V-80V$	80 $	50	.05G				DO7
47	VC406,A,B							7.0p%	4.0	3.0;1V-25V$	25 $	100	.05G				DO7
48	VC407,A,B							7.0p%	4.0	4.0;1V-50V$	50 $	100	.05G				DO7
49	VC408,A,B							7.0p%	4.0	4.0;2.0-80V$	100 $	100	50M				DO7
50	VC607,A,B							7.0p%	4.0	3.0;1V-25V$	40 $	200	.05G				DO7
51	VC608,A,B							7.0p%	4.0	3.0;1V-25V$	40 $	300	.05G			Si	DO7
52	VC821,A,B							7.0p%	4.0	3.0 - 18	25 $	13	.05G				DO7
53	VC841,A,B							7.0p%	4.0	1.5 - 18	100 $	3.0	50M				DO7
54	VC6607							7.0p	4.0	17-3.5;0.0V-20V	20 $	400	30M				A1da
55	VVC201,A,B,C,D							7.0p%	4.0	2.2;4.0V-25V$	25	13	50M		400m§	Si	DO7†
56	VVC202,A,B,C,D							7.0p%	4.0	3.9,4.0V-100V$	100	3.0	50M		400m§	Si	DO7†
57	VVC704,A,B,C,D							7.0p%	4.0	2.2;4.0V-25V$	25	15	50M		400m§	Si	DO7†
58	VVC722,A,B,C,D							7.0p%	4.0	3.9;4.0V-100V$	100	15	50M		400m§	Si	DO7†
59	VVC789,A,B,C,D							7.0p%	4.0	3.2;4.0V-60V$	60	10	50M		400m§	Si	DO7†
60	VVC790,A,B,C,D							7.0p%	4.0	2.9;4.0V-50V$	50	10	50M		400m§	Si	DO7†
61	VVC791,A,B,C,D							7.0p%	4.0	2.9;4.0V-50V$	50	25	50M		400m§	Si	DO7†
62	VVC792,A,B,C,D							7.0p%	4.0	3.2;4.0V-60V$	60	100	50M		400m§	Si	DO7†
63	VVC793,A,B,C,D							7.0p%	4.0	3.6;4.0V-80V$	80	50	50M		400m§	Si	DO7†
64	VVC846,A,B,C,D							7.0p%	4.0	3.9;4.0V-100V$	100	100	50M		400m§	Si	DO7†
65	VVC847,A,B,C,D							7.0p%	4.0	2.4;4.0V-30V$	30	100	50M		400m§	Si	DO7†
66	VVC848,A,B,C,D							7.0p%	4.0	2.7;4.0V-40V$	40	200	50M		400m§	Si	DO7†
67	VVC849,A,B,C,D							7.0p%	4.0	3.2;4.0V-60V$	60	100	50M		400m§	Si	DO7†
68	MA4963B,C	50G						7.0pØ	6.0	4.0 - 7.0Ø	80 Ø				7.0	Si	Z48
69	SD11D48							7.2p	0.0	7.2 - 14	48			1.5		Si	P3
70	SD12D48							7.2p	0.0	7.2 - 14	48			1.5		Si	F3a
71	SD22D48							7.2p	0.0	7.2 - 14	48			1.5		Si	F11
72	SD32D48							7.2p	0.0	7.2 - 14	48			1.5		Si	F21
73	SD42D48							7.2p	0.0	7.2 - 14	48			1.5		Si	F9a
74	SDGPD48							7.2p	0.0	7.2 - 14	48			1.5		Si	DO7
75	MA4060D							7.5p	0.0	5.0 - 10	90			3.5		Si	S4d
76	MA4061D							7.5p	0.0	5.0 - 10	140			3.5		Si	S4d
77	MA4062D							7.5p	0.0	5.0 - 10Ø	70				10	Si	S4d
78	MA4099D							7.5p	0.0	5.0 - 10Ø	60			2.0		Si*	Z23
79	MA4760D							7.5p	0.0	5.0 - 10Ø	90			3.5		Si	Z23
80	MA4761D							7.5p	0.0	5.0 - 10Ø	120			3.5		Si	Z23
81	SD11D12							7.5p	0.0	7.5 - 15	12			1.3		Si	P3
82	SD12D12							7.5p	0.0	7.5 - 15	12			1.3		Si	F3a
83	SD22D12							7.5p	0.0	7.5 - 15	12			1.3		Si	F11
84	SD32D12							7.5p	0.0	7.5 - 15	12			1.3		Si	F21
85	SD42D12							7.5p	0.0	7.5 - 15	12			1.3		Si	F9a
86	SDGPD12							7.5p	0.0	7.5 - 15	12			1.3		Si	DO7
87	SV87A							7.5p	0.0	5.0p-10.0pØ				3.0	20	Si$#	M1111
88	SV88A							7.5p	0.0	5.0p-10.0pØ				4.0	20	Si$#	M1111
89	SD11D60							7.6p	0.0	7.6 - 14	60			1.5		Si	P3
90	SD12D60							7.6p	0.0	7.6 - 14	60			1.5		Si	F3a
91	SD22D60							7.6p	0.0	7.6 - 14	60			1.5		Si	F11
92	SD32D60							7.6p	0.0	7.6 - 14	60			1.5		Si	F21
93	SD42D60							7.6p	0.0	7.6 - 14	60			1.5		Si	F9a
94	SDGPD60							7.6p	0.0	7.6 - 14	60			1.5		Si	DO7
95	BXY19E							8.0p	0.0	5.0 - 10Ø	80 Ø			.50	8.0	Si	
96	SD11E90							8.0p	0.0	8.0 - 15	90			1.5		Si	P3
97	SD11E100							8.0p	0.0	8.0 - 15	100			1.5		Si	P3
98	SD12E90							8.0p	0.0	8.0 - 15	90			1.5		Si	F3a
99	SD12E100							8.0p	0.0	8.0 - 15	100			1.5		Si	F3a
100	SD22E90							8.0p	0.0	8.0 - 15	90			1.5		Si	F11
101	SD22E100							8.0p	0.0	8.0 - 15	100			1.5		Si	F11
102	SD32E90							8.0p	0.0	8.0 - 15	90			1.5		Si	F21
103	SD32E100							8.0p	0.0	8.0 - 15	100			1.5		Si	F21
104	SD42E90							8.0p	0.0	8.0 - 15	90			1.5		Si	F9a
105	SD42E100							8.0p	0.0	8.0 - 15	100			1.5		Si	F9a
106	SDGPE90							8.0p	0.0	8.0 - 15	90			1.5		Si	DO7
107	SDGPE100							8.0p	0.0	8.0 - 15	100			1.5		Si	DO7
108	GC1812							8.0p	4.0	19.7-1.97	90	550	50M			Si	F111b†
109	MA44120	50M						8.0pØ	6.0	3.0-8.0Ø	100 Ø				8.3 Ø	Si$Δ	S454
110	MA44220	50M						8.0pØ	6.0	3.0-8.0Ø	100 Ø				8.3 Ø	Si$Δ	S454

6. VOLTAGE VARIABLE CAPACITORS & VARACTOR DIODES

IN ORDER OF (1) TYPICAL CAPACITANCE, (2) TEST VOLTAGE, and (3) TYPE No.

LINE No.	[3] TYPE No.	MINIMUM CUTOFF FREQUENCY (Corresponding to Type Numbers in previous column) (Hz)	(Hz)	(Hz)	(Hz)	(Hz)	(Hz)	TYP. CAP. [1] CAP. Cj (F)	[2] at TEST VOLT (V)	CAPACITANCE RANGE (for V = 0 to PIV) Ø - at TEST VOLT. (pF)	PIV (V)	Q FACTOR MIN. Q	at TEST FREQ (Hz)	MAX. SER. RES. Rs (Ω)	MAX. DISS. @ 25°C (W)	DESCRIPTION MAT.	DWG. No.
1	MA4B300							8.0pØ	60	5.0-8.0Ø	145 Ø				22 Ø	Si§Δ	S454
2	1N4787							8.2p%	4.0	2.56;0.0-4.0V$	25 $	15	50M		500m	Si	DO14
3	1N4787A							8.2p%	4.0	2.56;0.0-4.0V$	25 $	15	50M		500m	Si	DO14
4	1N4787B							8.2p%	4.0	2.56;0.0-4.0V$	25 $	15	50M		500m	Si	DO14
5	1N4787C							8.2p%	4.0	2.56;0.0-4.0V$	25 $	15	50M		500m	Si	DO14
6	1N4787D							8.2p%	4.0	2.56;0.0-4.0V$	25 $	15	50M		500m	Si	DO14
7	1N4802							8.2p%	4.0	2.58;0.0-4.0V$	100 $	15	50M		500m	Si	DO14
8	1N4802A							8.2p%	4.0	2.58;0.0-4.0V$	100 $	15	50M		500m	Si	DO14
9	JAN1N4802A							8.2p%	4.0	2.58;0.0-4.0V$	100 $	15	50M		500m	Si	A1dd
10	1N4802B							8.2p%	4.0	2.58;0.0-4.0V$	100 $	15	50M		500m	Si	DO14
11	JAN1N4802B							8.2p%	4.0	2.58;0.0-4.0V$	100 $	15	50M		500m	Si	A1dd
12	1N4802C							8.2p%	4.0	2.58;0.0-4.0V$	100 $	15	50M		500m	Si	DO14
13	1N4802D							8.2p%	4.0	2.58;0.0-4.0V$	100 $	15	50M		500m	Si	DO14
14	1N5442							8.2p%	4.0	2.5;2V-30V$	30	450	50M		400m	Si	DO7
15	1N5442A							8.2p%	4.0	2.5;2V-30V$	30	450	50M		400m	Si	DO7
16	1N5442B							8.2p%	4.0	2.5;2V-30V$	30	450	50M		400m	Si	DO7
17	1N5442C							8.2p%	4.0	2.5;2V-30V$	30	450	50M		400m	Si	DO7
18	1N5442D							8.2p%	4.0	2.5;2V-30V$	30	450	50M		400m	Si	DO7
19	1N5462							8.2p%	4.0	2.8;2V-30V$	30	600	50M		400m	Si	DO7
20	1N5462A							8.2p%	4.0	2.8;2V-30V$	30	600	50M		400m	Si	DO7
21	1N5462B							8.2p%	4.0	2.8;2V-30V$	30	600	50M		400m	Si	DO7
22	JAN1N5462B							8.2p	4.0	7.79-8.61Ø	30 Ø	600	50M		400m	Si	DO7
23	1N5462C							8.2p%	4.0	2.8;2V-30V$	30	600	50M		400m	Si	DO7
24	JAN1N5462C							8.2p	4.0	8.04-8.36Ø	30 Ø	600	50M		400m	Si	DO7
25	1N5462D							8.2p%	4.0	2.8;2V-30V$	30	600	50M		400m	Si	DO7
26	1N5682							8.2p%	4.0	3.1;2.0V-40V$	40	600	50M		400m	Si	DO7
27	1N5682A							8.2p%	4.0	3.1;2.0V-40V$	40	600	50M		400m	Si	DO7
28	1N5682B							8.2p%	4.0	3.1;2.0V-40V$	40	600	50M		400m	Si	DO7
29	1N5697							8.2p%	4.0	2.7;4.0V-60V$	60	450	50M		400m	Si	DO7
30	1N5697A							8.2p%	4.0	2.7;4.0V-60V$	60	450	50M		400m	Si	DO7
31	1N5697B							8.2p%	4.0	2.7;4.0V-60V$	60	450	50M		400m	Si	DO7
32	CV1622							8.2p	4.0	7.4-9.0Ø	20	300	50M		400m	Si$	DO7
33	CV1865B							8.2p	4.0	7.38-9.02	60	300	100M		5.0	Si	F27xØ
34	CV1865D							8.2p	4.0	7.38-9.02	60	300	100M		5.0	Si	F56nØ
35	CV5008							8.2p	4.0	2.5;2.0V-30V$	30	450	50M		400m	Si	DO7
36	CVH2030-17							8.2p	4.0	4.5;0.0-30$;10%	30 Ø	2.6k	50M			Si§§	u30a
37	CVH2045-17							8.2p	4.0	6.1;0.0-45$;10%	45 Ø	1.7k	50M			Si§§	u30a
38	CVH2060-17							8.2p	4.0	7.5;0.0-60$;10%	60 Ø	1.3k	50M			Si§§	u30a
39	CVH2090-17							8.2p	4.0	8.7;0.0-90$;10%	90 Ø	750	50M				u30b
40	D1722,B,C							8.2p†%	4.0	2.8;2V-30V$	30 Ø	500	50M		400m	Si#$	DO7
41	DC4211B							8.2p	4.0			400 Ø	50M			Si	DO7Δ
42	DT312							8.2p§	4.0	4.2;0.0V-30V$	30 Ø	2400 Ø	50M			Si	V1
43	DT612							8.2p§	4.0	6.8;0.0V-60V$	60 Ø	1100 Ø	50M			Si	V1
44	DT912							8.2p§	4.0	9.0;0.0V-90V$	90 Ø	700 Ø	50M			Si	V1
45	DT4512							8.2p§	4.0	5.8;0.0V-45V$	45 Ø	1600 Ø	50M			Si	V1
46♦	DVH6730-17							8.2p§	4.0	4.3;0.0-30$;10%	30 Ø	2.6k	50M			Si§§	A90a
47♦	DVH6731-17	130G						8.2p†	4.0	4.3;0.0V-30V$;10%	30 Ø	2.6k	50M			Si§§	F143
48	DVH6732-17	130G						8.2p†	4.0	4.3;0.0V-30V$;10%	30 Ø	2.6k	50M			Si§§	F56ad
49	DVH6733-17	130G						8.2p†	4.0	4.3;0.0V-30V$;10%	30 Ø	2.6k	50M			Si§§	F59u
50	DVH6734-17	130G						8.2p†	4.0	4.3;0.0V-30V$;10%	30 Ø	2.6k	50M			Si§§	M929
51♦	DVH6740-17							8.2p§	4.0	5.7;0.0-45$;10%	45 Ø	1.7k	50M			Si§§	A90a
52♦	DVH6741-17	85G						8.2p†	4.0	5.7;0.0V-45V$;10%	45 Ø	1.7k	50M			Si§§	F143
53	DVH6742-17	85G						8.2p†	4.0	5.7;0.0V-45V$;10%	45 Ø	1.7k	50M			Si§§	F56ad
54	DVH6743-17	85G						8.2p†	4.0	5.7;0.0V-45V$;10%	45 Ø	1.7k	50M			Si§§	F59u
55	DVH6744-17	85G						8.2p†	4.0	5.7;0.0V-45V$;10%	45 Ø	1.7k	50M			Si§§	M929
56♦	DVH6760-17							8.2p§	4.0	6.8;0.0-60$;10%	60 Ø	1.3k	50M			Si§§	A90a
57♦	DVH6761-17	65G						8.2p†	4.0	6.8;0.0V-60V$;10%	60 Ø	1.3k	50M			Si§§	F143
58	DVH6762-17	65G						8.2p†	4.0	6.8;0.0V-60V$;10%	60 Ø	1.3k	50M			Si§§	F56ad
59	DVH6763-17	65G						8.2p†	4.0	6.8;0.0V-60V$;10%	60 Ø	1.3k	50M			Si§§	F59u
60	DVH6764-17	65G						8.2p†	4.0	6.8;0.0V-60V$;10%	60 Ø	1.3k	50M			Si§§	M929
61♦	DVH6790-17							8.2p§	4.0	7.9;0.0-90$;10%	90 Ø	750	50M			Si§§	A90a
62♦	DVH6791-17	37G						8.2p†	4.0	7.9;0.0V-90V$;10%	90 Ø	750	50M			Si§§	F143
63	DVH6792-17	37G						8.2p†	4.0	7.9;0.0V-90V$;10%	90 Ø	750	50M			Si§§	F56ad
64	DVH6793-17	37G						8.2p†	4.0	7.9;0.0V-90V$;10%	90 Ø	750	50M			Si§§	F59u
65	DVH6794-17	37G						8.2p†	4.0	7.9;0.0V-90V$;10%	90 Ø	750	50M			Si§§	M929
66	E1722A							8.2p†	4.0	7.5-9.0	30	1.0k	50M		4.0		F10k
67	EP1022A							8.2p†Δ	4.0	2.6;2.0V-30V$	30	1.0k	50M		5.0	Si	F59q
68	EP1022B							8.2p†Δ	4.0	2.6;2.0V-30V$	30	1.0k	50M		5.0	Si	F27ah
69	EP1022D							8.2p†Δ	4.0	2.6;2.0V-30V$	30	1.0k	50M		5.0	Si	F56q
70	EP1022E							8.2p†Δ	4.0	2.6;2.0V-30V$	30	1.0k	50M		5.0	Si	F59j
71	EP1022H							8.2p†Δ	4.0	2.6;2.0V-30V$	30	1.0k	50M		5.0	Si	S428b
72	EP1722A							8.2p†	4.0	7.5-9.0	30	1.0k	50M		4.0		F27ac
73	GC1512							8.2p†Δ	4.0	4.0;0.0V-30V$	30	2.0k	50M			Si	F111b†
74	GC1512A							8.2p†Δ	4.0	4.0;0.0V-30V$	30	2.0k	50M			Si	F59q
75	GC1512B							8.2p†Δ	4.0	4.0;0.0V-30V$	30	2.0k	50M			Si	F27ah
76	GC1512D							8.2p†Δ	4.0	4.0;0.0V-30V$	30	2.0k	50M			Si	F56q
77	GC1512E							8.2p†Δ	4.0	4.0;0.0V-30V$	30	2.0k	50M			Si	F59j
78	GC1512H							8.2p†Δ	4.0	4.0;0.0V-30V$	30	2.0k	50M			Si	S428b
79	GC1612							8.2p†	4.0	5.6;0.0V-45V$	45	1.5k	50M			Si	F111b†
80	GC1712	50G						8.2p§	4.0	7.0;0.0V-60V$	60 Ø	1.0k	50M				F111b†
81	GC1712A							8.2p†Δ	4.0	7.0;0.0V-60V$	60	1.0k	50M			Si	F59q
82	GC1712B							8.2p†Δ	4.0	7.0;0.0V-60V$	60	1.0k	50M			Si	F27ah
83	GC1712D							8.2p†Δ	4.0	7.0;0.0V-60V$	60	1.0k	50M			Si	F56q
84	GC1712E							8.2p†Δ	4.0	7.0;0.0V-60V$	60	1.0k	50M			Si	F59j
85	GC1712H							8.2p†Δ	4.0	7.0;0.0V-60V$	60	1.0k	50M			Si	S428b
86	GC1762							8.2p†Δ	4.0	7.0;0.0V-60V$;10%	60	1.0k	50M		250m	Si	A1ah
87	GC1762B							8.2p†Δ	4.0	7.0;0.0V-60V$;5%	60	1.0k	50M		250m	Si	A1ah
88	GC1762C							8.2p†Δ	4.0	7.0;0.0V-60V$;2%	60	1.0k	50M		250m	Si	A1ah
89	HA1222A							8.2p†Δ	4.0	3.9;2.0V-30V$;10%	30	800	50M		250m	Si	A1ah
90	HA1222B							8.2p†Δ	4.0	3.9;2.0V-30V$;5%	30	800	50M		250m	Si	A1ah
91	HA1222C							8.2p†Δ	4.0	3.9;2.0V-30V$;2%	30	800	50M		250m	Si	A1ah
92	HA1712A							8.2p†Δ	4.0	7.0;0.0V-30V$	30	1.0k	50M			Si	F59q
93	HA1712B							8.2p†Δ	4.0	7.0;0.0V-30V$	30	1.0k	50M			Si	F27ah
94	HA1712D							8.2p†Δ	4.0	7.0;0.0V-30V$	30	1.0k	50M			Si	F56q
95	HA1712E							8.2p†Δ	4.0	7.0;0.0V-30V$	30	1.0k	50M			Si	F59j
96	HA1712H							8.2p†Δ	4.0	7.0;0.0V-30V$	30	1.0k	50M			Si	S428b
97	HA1922A							8.2pΔ†	4.0	3.9;2.0V-30V$;10%	30	800	50M		400m	Si	DO7
98	HA1922B							8.2pΔ†	4.0	3.9;2.0V-30V$;5%	30	800	50M		400m	Si	DO7
99	HA1922C							8.2pΔ†	4.0	3.9;2.0V-30V$;2%	30	800	50M		400m	Si	DO7
100	KV622							8.2p§	4.0	2.5;2.0V-20V$	20 Ø	300	50M		400m	Si#$	DO7
101	KV4802							8.2p%	4.0	3.66;4.0V-100V$	100 $	100	50m		500m	▼	DO14
102	KV4802A							8.2p%	4.0	3.66;4.0V-100V$	100 $	100	50m		500m	▼	DO14
103	KV4802B							8.2p%	4.0	3.66;4.0V-100V$	100 $	100	50m		500m	▼	DO14
104	KV4802C							8.2p%	4.0	3.66;4.0V-100V$	100 $	100	50m		500m	▼	DO14
105	KV4802D							8.2p%	4.0	3.66;4.0V-100V$	100 $	100	50m		500m	▼	DO14
106	LP1022A							8.2p†Δ	4.0	4.5;0.0V-25V$	25	800	50M		5.0	Si	F59q
107	LP1022B							8.2p†Δ	4.0	4.5;0.0V-25V$	25	800	50M		5.0	Si	F27ah
108	LP1022D							8.2p†Δ	4.0	4.5;0.0V-25V$	25	800	50M		5.0	Si	F56q
109	LP1022E							8.2p†Δ	4.0	4.5;0.0V-25V$	25	800	50M		5.0	Si	F59j
110	LP1022H							8.2p†Δ	4.0	4.5;0.0V-25V$	25	800	50M		5.0	Si	S428b

6. VOLTAGE VARIABLE CAPACITORS & VARACTOR DIODES

IN ORDER OF (1) TYPICAL CAPACITANCE, (2) TEST VOLTAGE, and (3) TYPE No.

LINE No.	3 TYPE No.	MINIMUM CUTOFF FREQUENCY (Corresponding to Type Numbers in previous column) (Hz)	(Hz)	(Hz)	(Hz)	(Hz)	(Hz)	TYP. CAP. 1 CAP. Cj (F)	2 at TEST VOLT (V)	CAPACITANCE RANGE (for V = 0 to PIV) Ø - at TEST VOLT. (pF)	PIV (V)	Q FACTOR MIN. Q	at TEST FREQ (Hz)	MAX. SER. RES. Rs (Ω)	MAX. DISS. @ 25°C (W)	DESCRIPTION MAT.	DWG. No.
1	MA45070							8.2p	4.0		45	1500	50M			Si	DO7
2	MA45150							8.2p	4.0		60	1200	50M			Si	DO7
3	MA45159							8.2pt∆	4.0	6.8;0.0V-60V$	65 ☑	1.2k	50M			Si§	A1act
4	MA45169							8.2pt∆	4.0	2.6;4.0V-45V$	50 ☑	1.5k	50M				A1act
5	MA45239C							8.2p∆	4.0	4.5;0V-25V$	25	2.8k	50M			Si$§	u17†
6	MA45259							8.2p∆	4.0	5.5;0V-45V$	45	1.7k	50M			Si$§	V11†
7	MA45259C							8.2p∆	4.0	6.2;0V-45V$	45	1.7k	50M			Si$§	u17†
8	MA45273							8.2p∆	4.0	6.8;0V-60V$	60	1.2k	50M			Si$§	V11†
9	MA45333							8.2p∆	4.0	4.5;0V-30V$	30	1.5k	50M			Si$#	DO7†
10	MA45348							8.2p∆	4.0	5.8;0V-45V$	45	1.2k	50M			Si$#	DO7†
11	MA45363							8.2p∆	4.0	7.2;0V-60V$	60	750	50M			Si$#	DO7†
12	MC722	15G						8.2p	4.0	2.5;2.0V-20V$	20 ☑	300	50M			Si	A1au
13	ML4342							8.2pt	4.0	6.3$ 0-45V	45 †	450	50M			Si	F111at
14	ML4362							8.2pt	4.0	7.0$ 0-60V	60 †	800	50M			Si	F111at
15	ML4382							8.2pt	4.0	8.3$ 0-09V	90 †	500	50M			Si	F111at
16	MV1622							8.2p§	4.0	7.4-9.0Ø	20 ☑	300	50M		400m	Si	DO7
17	MV1622B							8.2p∆†	4.0	2.5;2.0V-20V$;5%	20	300	50M		400m	Si	DO7
18	MV1622C							8.2p∆†	4.0	2.5;2.0V-20V$;2%	20	300	50M		400m	Si	DO7
19	MV1722							8.2p§	4.0	7.4 - 9.0Ø	30 ☑	500	.05G		.40	Si$	DO7
20	MV1722A							8.2p	4.0		30 ☑	500	50M		400m	Si∆#	DO7
21	MV1865A							8.2pt	4.0	7.38 - 9.02Ø	60			.80	5.0	Si	F27a
22	MV1865B							8.2pt	4.0	7.38 - 9.02Ø	60			.80	5.0	Si	F10a
23	MV1865D							8.2pt	4.0	3.4;4.0V-60V$	60 ☑	300	100M		5.0	Si	F56n
24	MV1865E							8.2pt∆	4.0	2.7-2.9Ø	60	300	100M			Si	F59j
25	MV1865H							8.2pt∆	4.0	2.7-2.9Ø	60	300	100M			Si	S428b
26♦	MV2102							8.2p§	4.0	7.4-9.0Ø	30 ☑	450	50M		280m	Si	M764a
27	MVI2102							8.2pt	4.0	3.3;2.0V-30V$	30 ☑	275	100M		200m	Si	M750
28	SQ1222A,B,C							8.2p∆†	4.0	3.2;2V-30V$	30	1.0k	50M		400m	Si	A1ah
29	SQ1272A,B,C							8.2p§%	4.0		30 ☑	500	50M		250m	Si#$	A1ah
30	SQ1722,B,C							8.2p∆†	4.0	3.2;2V-30V$	30	1.0k	50M		400m	Si	DO7
31	SQ5462A							8.2pt∆	4.0	3.1;2.0V-30V$;10%	30	600	50M		400m	Si	DO7
32	SQ5462B							8.2pt∆	4.0	3.1;2.0V-30V$;5%	30	600	50M		400m	Si	DO7
33	SQ5462C							8.2pt∆	4.0	3.1;2.0V-30V$;2%	30	600	50M		400m	Si	DO7
34	VC722	15G						8.2p	4.0	2.6;2.0V-20V$	20 ☑	300	50M			Si	DO7
35	VVC727,A,B,C,D							8.2p%	4.0	2.0;4.0V-20V$	20	300	50M		400m§	Si	DO7†
36	VVC728,A,B,C,D							8.2p%	4.0	2.4;4.0V-30V$	30	500	50M		400m§	Si	DO7†
37	VVC1622,A,B,C							8.2p%	4.0	2.0-3.2;2.0V-20V$	20	300	50M		400m§	Si	DO7†
38	ZC701							8.2p∆†	4.0	2.7;2.0V-30V$;10%	30	450	50M		400m	Si	DO7∆
39	ZC701B							8.2p∆†	4.0	2.7;2.0V-30V$;5%	30	450	50M		400m	Si	DO7∆
40	ZC701C							8.2p∆†	4.0	2.7;2.0V-30V$;2%	30	450	50M		400m	Si	DO7∆
41	ZC741							8.2p§	4.0	2.7;2.0V-3.0V$	30	450	50M			Si$∆	C219
42	MA46547A							8.5p	4.0	10-7Ø	15	500	50M			GA	V7†
43	MA46547B							8.5p	4.0	10-7Ø	15	1.0k	50M			GA	V7†
44	MA46547C							8.5p	4.0	10-7Ø	15	1.5k	50M			GA	V7†
45	MA46557A							8.5p	4.0	10-7Ø	22	500	50M			GA	V7†
46	MA46557B							8.5p	4.0	10-7Ø	22	1.0k	50M			GA	V7†
47	MA46557C							8.5p	4.0	10-7Ø	22	1.5k	50M			GA	V7†
48	MA46567A							8.5p	4.0	10-7Ø	15	500	50M			GA	V7†
49	MA46567B							8.5p	4.0	10-7Ø	15	1.0k	50M			GA	V7†
50	MA46567C							8.5p	4.0	10-7Ø	15	1.5k	50M			GA	V7†
51	MA46577A							8.5p	4.0	10-7Ø	22	500	50M			GA	V7†
52	MA46577B							8.5p	4.0	10-7Ø	22	1.0k	50M			GA	V7†
53	MA46577C							8.5p	4.0	10-7Ø	22	1.5k	50M			GA	V7†
54	MA4287							8.5p	6.0			30		3.0		Si	A31e
55	MA4387							8.5p	6.0			30		3.0		Si	A31e
56	SD11D18							9.0p	0.0	9.0 - 18	18			1.3		Si	P3
57	SD12D18							9.0p	0.0	9.0 - 18	18			1.3		Si	F3a
58	SD22D18							9.0p	0.0	9.0 - 18	18			1.3		Si	F11
59	SD32D18							9.0p	0.0	9.0 - 18	18			1.3		Si	F21
60	SD42D18							9.0p	0.0	9.0 - 18	18			1.3		Si	F9a
61	SDGPD18							9.0p	0.0	9.0 - 18	18			1.3		Si	DO7
62	TIV307							9.0p	4.0	7.0-11Ø	20	200	50M		250m	Si#	DO35
63	VVC794,A,B,C,D							9.0p%	4.0	2.2;4.0V-25V$	25	50	50M		400m§	Si	DO7†
64	BXY35	25G						9.0p	6.0		100						DO4
65	BXY35A	25G						9.0p	6.0	6.0 - 12Ø	100					Si#	DO4
66	MA4341E1							9.0p	6.0	6.0 - 12	6.0			.50	1.0	Si	P3a§
67	MA4341E							9.0p	6.0	6.0 - 12	6.0			1.3	1.0	Si	F3a
68	MA4953B	50G						9.0p	6.0	6.0 - 12Ø	120				12	Si$	S250d
69	MA4953C	50G						9.0p	6.0	6.0 - 12Ø	120				12	Si$	F49a
70	BBY35F							9.0pt	-4	3.5$		250	50M			Si	M1069
71	BB117							9.5p	4.0	8.0-11Ø	20			1.2		Si#	M501
72	SD11E120							9.6p	0.0	9.6 - 18	120			1.5		Si	P3
73	SD12E120							9.6p	0.0	9.6 - 18	120			1.5		Si	F3a
74	SD22E120							9.6p	0.0	9.6 - 18	120			1.5		Si	F11
75	SD32E120							9.6p	0.0	9.6 - 18	120			1.5		Si	F21
76	SD42E120							9.6p	0.0	9.6 - 18	120			1.5		Si	F9a
77	SDGPE120							9.6p	0.0	9.6 - 18	120			1.5		Si	DO7
78	GC1813							9.8p	4.0	25-2.5	90	550	50M			Si	F111bt
79	VNA417H							9.8p	4.0	7.0;0.0V-60V$	60 $	800	50M			Si	F136
80	VSA417H							9.8p	4.0	7.0;0.0V-60V$	60 $	800	50M			Si	F128
81	VTA417H							9.8p	4.0	7.0;0.0V-60V$	60 $	800	50M			Si	F130
82	VYA417H							9.8p	4.0	7.0;0.0V-60V$	60 $	800	50M			Si	F135
83▼	V910E,A,B,C,D%							10p		6.9;0.5V-100V $	100 $				400m		DO7
84	MA4756							10pØ	0.0		35 ☑			500m			
85	PSV111-01							10p	0.0	5.0;0.0V-45V$	45 ☑	1.7k	50M			Si§	F27as
86	PSV111-05							10p	0.0	5.0;0.0V-45V$	45 ☑	1.7k	50M			Si§	F10af
87	PSV111-08							10p	0.0	5.0;0.0V-45V$	45 ☑	1.7k	50M			Si§	A1vd
88	PSV111-14							10p	0.0	5.0;0.0V-45V$	45 ☑	1.7k	50M			Si§	A2u
89	PSV111-16							10p	0.0	5.0;0.0V-45V$	45 ☑	1.7k	50M			Si§	A1st
90	PSV111-21							10p	0.0	5.0;0.0V-45V$	45 ☑	1.7k	50M			Si§	M86e
91	PSV111-31							10p	0.0	5.0;0.0V-45V$	45 ☑	1.7k	50M			Si§	F10ah
92	PSV111-45							10p	0.0	5.0;0.0V-45V$	45 ☑	1.7k	50M			Si§	F54c
93	PSV123-01							10p	0.0	6.0;0.0V-60V$	60 ☑	1.1k	50M			Si§	F27as
94	PSV123-05							10p	0.0	6.0;0.0V-60V$	60 ☑	1.1k	50M			Si§	F10ah
95	PSV123-08							10p	0.0	6.0;0.0V-60V$	60 ☑	1.1k	50M			Si§	A1vd
96	PSV123-14							10p	0.0	6.0;0.0V-60V$	60 ☑	1.1k	50M			Si§	A2u
97	PSV123-16							10p	0.0	6.0;0.0V-60V$	60 ☑	1.1k	50M			Si§	A1st
98	PSV123-21							10p	0.0	6.0;0.0V-60V$	60 ☑	1.1k	50M			Si§	M86e
99	PSV123-31							10p	0.0	6.0;0.0V-60V$	60 ☑	1.1k	50M			Si§	F10ah
100	PSV123-45							10p	0.0	6.0;0.0V-60V$	60 ☑	1.1k	50M			Si§	F54c
101	PSV133-01							10p	0.0	7.5;0.0V-90V$	90 ☑	1.0k	50M			Si	F27as
102	PSV133-14							10p	0.0	7.5;0.0V-90V$	90 ☑	1.0k	50M			Si	A2u
103	PSV133-16							10p	0.0	7.5;0.0V-90V$	90 ☑	1.0k	50M			Si	A1st
104	PSV133-21							10p	0.0	7.5;0.0V-90V$	90 ☑	1.0k	50M			Si	M86e
105	PSV133-31							10p	0.0	7.5;0.0V-90V$	90 ☑	1.0k	50M			Si	F10ah
106	PSV142-01							10p	0.0	9.0;0.0V-120V$	120 ☑	480	50M			Si	F27as
107	PSV142-05							10p	0.0	9.0;0.0V-120V$	120 ☑	480	50M			Si	F10af
108	PSV142-08							10p	0.0	9.0;0.0V-120V$	120 ☑	480	50M			Si	A1vd
109	PSV142-14							10p	0.0	9.0;0.0V-120V$	120 ☑	480	50M			Si	A2u
110	PSV142-16							10p	0.0	9.0;0.0V-120V$	120 ☑	480	50M			Si	A1st

SYMBOLS AND CODES EXPLAINED IN INTERPRETER

6. VOLTAGE VARIABLE CAPACITORS & VARACTOR DIODES

IN ORDER OF (1) TYPICAL CAPACITANCE, (2) TEST VOLTAGE, and (3) TYPE No.

LINE No.	3 TYPE No.	MINIMUM CUTOFF FREQUENCY (Corresponding to Type Numbers in previous column) (Hz)	(Hz)	(Hz)	(Hz)	(Hz)	(Hz)	TYP. CAP. 1 CAP. Cj (F)	2 at TEST VOLT (V)	CAPACITANCE RANGE (for V = 0 to PIV) Ø - at TEST VOLT. (pF)	PIV (V)	Q FACTOR MIN. Q	at TEST FREQ (Hz)	MAX. SER. RES. Rs (Ω)	MAX. DISS. @ 25°C (W)	DESCRIPTION MAT.	DWG. No.
1	PSV142-21							10p	0.0	9.0;0.0V-120V$	120 ☑	480	50M			Si	M86e
2	PSV142-31							10p	0.0	9.0;0.0V-120V$	120 ☑	480	50M			Si	F10ah
3	PSV142-45							10p	0.0	9.0;0.0V-120V$	120 ☑	480	50M			Si	F54c
4	SD11E24							10p	0.0	10.5-21	24			1.5		Si	P3
5	SD12E24							10p	0.0	10.5-21	24			1.5		Si	F3a
6	SD22E24							10p	0.0	10.5-21	24			1.5		Si	F11
7	SD32E24							10p	0.0	10.5-21	24			1.5		Si	F21
8	SD42E24							10p	0.0	10.5-21	24			1.5		Si	F9a
9	SDGPE24							10p	0.0	10.5-21	24			1.5		Si	DO7
10	VAT52N16,N18,N20							10p†Δ	0.0	8.0 - 11.9Ø	60	1000	50M				Z42
11	BA120							10p	2.0	8.0 - 12Ø	50	440 Ø	30M	1.2		Si	DO7
12	ZC800							10pΔ†	2.0	5.75;2.0V-20V$;20%	25	300	50M		400m	Si▼	DO7Δ
13	ZC800A							10pΔ†	2.0	5.75;2.0V-20V$;10%	25	300	50M		400m	Si	DO7Δ
14	ZC800B							10pΔ†	2.0	5.75;2.0V-20V$;5%	25	300	50M		400m	Si	DO7Δ
15	ZC820							10p	2.0	5.5;2-20V$	25	300	50M		300m	Si▼	C219
16	ZC830A,B							10p%Δ	2.0	4.5-6.0;2.0V-20V$	25 $	300	50M		200m	Si▼	M156eΔ
17	1N4788							10p%	4.0	2.5;0.0-4.0V$	25 $	15	50M		500m	Si	DO14
18	1N4788A							10p%	4.0	2.5;0.0-4.0V$	25 $	15	50M		500m	Si	DO14
19	1N4788B							10p%	4.0	2.5;0.0-4.0V$	25 $	15	50M		500m	Si	DO14
20	1N4788C							10p%	4.0	2.5;0.0-4.0V$	25 $	15	50M		500m	Si	DO14
21	1N4788D							10p%	4.0	2.5;0.0-4.0V$	25 $	15	50M		500m	Si	DO14
22	1N4803							10p%	4.0	2.5;0.0-4.0V$	100 $	15	50M		500m	Si	DO14
23	1N4803A							10p%	4.0	2.5;0.0-4.0V$	100 $	15	50M		500m	Si	DO14
24	JAN1N4803A							10p%	4.0	2.58;0.0-4.0V$	100 $	15	50M		500m	Si	A1dd
25	1N4803B							10p%	4.0	2.5;0.0-4.0V$	100 $	15	50M		500m	Si	DO14
26	JAN1N4803B							10p%	4.0	2.58;0.0-4.0V$	100 $	15	50M		500m	Si	A1dd
27	1N4803C							10p%	4.0	2.5;0.0-4.0V$	100 $	15	50M		500m	Si	DO14
28	1N4803D							10p%	4.0	2.5;0.0-4.0V$	100 $	15	50M		500m	Si	DO14
29	1N5140							10p	4.0	2.8;4.0V-60V$	60 ☑	300	50M		400m	Si	DO7
30	1N5140A							10p	4.0	2.8;4.0V-60V$	60 ☑	300	50M		400m	Si	DO7
31	JAN1N5140A							10p	4.0	9.5-10.5Ø	65 ☑	300	50M		400m	Si	DO7
32	1N5443							10p%	4.0	2.6;2V-30V$	30	400	50M		400m	Si	DO7
33	1N5443A							10p%	4.0	2.6;2V-30V$	30	400	50M		400m	Si	DO7
34	1N5443B							10p%	4.0	2.6;2V-30V$	30	400	50M		400m	Si	DO7
35	1N5443C							10p%	4.0	2.6;2V-30V$	30	400	50M		400m	Si	DO7
36	1N5443D							10p%	4.0	2.6;2V-30V$	30	400	50M		400m	Si	DO7
37	1N5463							10p%	4.0	2.8;2V-30V$	30	550	50M		400m	Si	DO7
38	1N5463A							10p%	4.0	2.8;2V-30V$	30	550	50M		400m	Si	DO7
39	1N5463B							10p%	4.0	2.8;2V-30V$	30	550	50M		400m	Si	DO7
40	JAN1N5463B							10p	4.0	9.95-10.5Ø	30 ☑	550	50M		400m	Si	DO7
41	1N5463C							10p%	4.0	2.8;2V-30V$	30	550	50M		400m	Si	DO7
42	JAN1N5463C							10p	4.0	9.8-10.2Ø	30 ☑	550	50M		400m	Si	DO7
43	1N5463D							10p%	4.0	2.8;2V-30V$	30	550	50M		400m	Si	DO7
44	1N5683							10p%	4.0	3.2;2.0V-40V$	40	550	50M		400m	Si	DO7
45	1N5683A							10p%	4.0	3.2;2.0V-40V$	40	550	50M		400m	Si	DO7
46	1N5683B							10p%	4.0	3.2;2.0V-40V$	40	550	50M		400m	Si	DO7
47	1N5698							10p%	4.0	2.8;4.0V-60V$	60	400	50M		400m	Si	DO7
48	1N5698A							10p%	4.0	2.8;4.0V-60V$	60	400	50M		400m	Si	DO7
49	1N5698B							10p%	4.0	2.8;4.0V-60V$	60	400	50M		400m	Si	DO7
50	CV1008,A,B,C,D	7.5G						10p%	4.0	22-3.5	60	150	50M		400m	Si	DO7
51	CV1108,A,B,C,D	7.5G						10p%	4.0	22-2.8	100	150	50M		400m	Si	DO7
52	CV1624							10p	4.0	9.0-11Ø	20	300	50M		400m	Si$	DO7
53	CV1866B							10p	4.0	9.00-11	60	250	100M		5.0	Si	F27x☑
54	CV1866D							10p	4.0	9.00-11	60	250	100M		5.0	Si	F56n☑
55	CV5010							10p	4.0	2.5;2.0V-30V$	30	400	50M		400m	Si	DO7
56	CVH2030-19							10p	4.0	4.5;0.0-30$;10%	30 ☑	2.4k	50M			Si$§	u30a
57	CVH2045-19							10p	4.0	6.1;0.0-45$;10%	45 ☑	1.6k	50M			Si$§	u30a
58	CVH2060-19							10p	4.0	7.5;0.0-60$;10%	60 ☑	1.2k	50M			Si$§	u30a
59	CVH2090-19							10p	4.0	8.7;0.0-90$;10%	90 ☑	750	50M				u30b
60	D1724,B,C							10p†%	4.0	2.8;2V-30V$	30 ☑	500	50M		400m	Si#$	DO7
61	DC4212B							10p	4.0			350 Ø	50M			Si	DO7Δ
62	DT313							10p§	4.0	4.4;0.0V-30V$	30 ☑	2200 Ø	50M			Si	V1
63	DT613							10p§	4.0	7.0;0.0V-60V$	60 ☑	1000 Ø	50M			Si	V1
64	DT913							10p§	4.0	9.2;0.0V-90V$	90 ☑	700 Ø	50M			Si	V1
65	DT4513							10p§	4.0	5.8;0.0V-45V$	45 ☑	1600 Ø	50M			Si	V1
66♦	DVH6730-19							10p§	4.0	4.4;0.0-30$;10%	30 ☑	2.4k	50M			Si$§	A90a
67♦	DVH6731-19	120G						10p†	4.0	4.4;0.0V-30V$;10%	30 ☑	2.4k	50M			Si$§	F143
68	DVH6732-19	120G						10p†	4.0	4.4;0.0V-30V$;10%	30 ☑	2.4k	50M			Si$§	F56ad
69	DVH6733-19	120G						10p†	4.0	4.4;0.0V-30V$;10%	30 ☑	2.4k	50M			Si$§	F59u
70	DVH6734-19	120G						10p†	4.0	4.4;0.0V-30V$;10%	30 ☑	2.4k	50M			Si$§	M929
71♦	DVH6740-19							10p§	4.0	5.8;0.0-45$;10%	45 ☑	1.6k	50M			Si$§	A90a
72♦	DVH6741-19	80G						10p†	4.0	5.8;0.0V-45V$;10%	45 ☑	1.6k	50M			Si$§	F143
73	DVH6742-19	80G						10p†	4.0	5.8;0.0V-45V$;10%	45 ☑	1.6k	50M			Si$§	F56ad
74	DVH6743-19	80G						10p†	4.0	5.8;0.0V-45V$;10%	45 ☑	1.6k	50M			Si$§	F59u
75	DVH6744-19	80G						10p†	4.0	5.8;0.0V-45V$;10%	45 ☑	1.6k	50M			Si$§	M929
76♦	DVH6760-19							10p§	4.0	6.8;0.0-60$;10%	60 ☑	1.2k	50M			Si$§	A90a
77♦	DVH6761-19	60G						10p†	4.0	6.8;0.0V-60V$;10%	60 ☑	1.2k	50M			Si$§	F143
78	DVH6762-19	60G						10p†	4.0	6.8;0.0V-60V$;10%	60 ☑	1.2k	50M			Si$§	F56ad
79	DVH6763-19	60G						10p†	4.0	6.8;0.0V-60V$;10%	60 ☑	1.2k	50M			Si$§	F59u
80	DVH6764-19	60G						10p†	4.0	6.8;0.0V-60V$;10%	60 ☑	1.2k	50M			Si$§	M929
81♦	DVH6790-19							10p§	4.0	8.0;0.0-90$;10%	90 ☑	750	50M			Si$§	A90a
82♦	DVH6791-19	37G						10p†	4.0	8.0;0.0V-90V$;10%	90 ☑	750	50M			Si$§	F143
83	DVH6792-19	37G						10p†	4.0	8.0;0.0V-90V$;10%	90 ☑	750	50M			Si$§	F56ad
84	DVH6793-19	37G						10p†	4.0	8.0;0.0V-90V$;10%	90 ☑	750	50M			Si$§	F59u
85	DVH6794-19	37G						10p†	4.0	8.0;0.0V-90V$;10%	90 ☑	750	50M			Si$§	M929
86	E610	25G						10p	4.0	2.8;1.0V-25V$	30	500	50M			Si	F27az
87	E710	45G						10p	4.0	4.0;1.0V-50V$	60	900	50M			Si	F27az
88	E1724A							10p†	4.0	9.0-11	30	1.0k	50M		4.0		F10k
89	EP1024A							10p†Δ	4.0	2.7;2.0V-30V$	30	1.0k	50M		5.0	Si	F59q
90	EP1024B							10p†Δ	4.0	2.7;2.0V-30V$	30	1.0k	50M		5.0	Si	F27ah
91	EP1024D							10p†Δ	4.0	2.7;2.0V-30V$	30	1.0k	50M		5.0	Si	F56q
92	EP1024E							10p†Δ	4.0	2.7;2.0V-30V$	30	1.0k	50M		5.0	Si	F59j
93	EP1024H							10p†Δ	4.0	2.7;2.0V-30V$	30	1.0k	50M		5.0	Si	S428b
94	EP1724A							10p†	4.0	9.0-11	30	1.0k	50M		4.0		F27ac
95	G110,A,B							10p%	4.0		25	100 Ø	50M		500m	Si$	A60j
96	G210,A,B							10p%	4.0		25	200 Ø	50M		500m	Si$	A60j
97	G310,A,B							10p%	4.0		25	300 Ø	50M		500m	Si$	A60j
98	G410,A,B							10p%	4.0		25	400 Ø	50M		500m	Si$	A60j
99	G510A,B							10p%	4.0		25	500 Ø	50M		500m	Si$	A60j
100	G610A,B,C							10pΔ†	4.0	1.9-2.4Ø;10,5,2%	25	600	50M		400m	Si	DO35
101	GC1513							10p†Δ	4.0	4.2;0.0V-30V$	30	2.0k	50M			Si	F111b†
102	GC1513A							10p†Δ	4.0	4.2;0.0V-30V$	30	2.0k	50M			Si	F59q
103	GC1513B							10p†Δ	4.0	4.2;0.0V-30V$	30	2.0k	50M			Si	F27ah
104	GC1513D							10p†Δ	4.0	4.2;0.0V-30V$	30	2.0k	50M			Si	F56q
105	GC1513E							10p†Δ	4.0	4.2;0.0V-30V$	30	2.0k	50M			Si	F59j
106	GC1513H							10p†Δ	4.0	4.2;0.0V-30V$	30	2.0k	50M			Si	S428b
107	GC1613							10p†	4.0	5.6;0.0V-45V$	45	1.5k	50M			Si	F111b†
108	GC1713	47G						10p§	4.0	7.0;0.0V-60V$	60 ☑	950	50M				F111b†
109	GC1713A							10p†Δ	4.0	7.0;0.0V-60V$	60	950	50M			Si	F59q
110	GC1713B							10p†Δ	4.0	7.0;0.0V-60V$	60	950	50M			Si	F27ah

6. VOLTAGE VARIABLE CAPACITORS & VARACTOR DIODES

IN ORDER OF (1) TYPICAL CAPACITANCE, (2) TEST VOLTAGE, and (3) TYPE No.

LINE No.	3 TYPE No.	MINIMUM CUTOFF FREQUENCY (Corresponding to Type Numbers in previous column) (Hz)	(Hz)	(Hz)	(Hz)	(Hz)	(Hz)	TYP. CAP. 1 CAP. Cj (F)	2 at TEST VOLT (V)	CAPACITANCE RANGE (for V = 0 to PIV) Ø - at TEST VOLT. (pF)	PIV (V)	Q FACTOR MIN. Q	at TEST FREQ (Hz)	MAX. SER. RES. Rs (Ω)	MAX. DISS. @ 25°C (W)	DESCRIPTION MAT.	DWG. No.
1	GC1713D							10pt△	4.0	7.0;0.0V-60V$	60	950	50M			Si	F56q
2	GC1713E							10pt△	4.0	7.0;0.0V-60V$	60	950	50M			Si	F59j
3	GC1713H							10pt△	4.0	7.0;0.0V-60V$	60	950	50M			Si	S428b
4	GC1763							10pt△	4.0	7.0;0.0V-60V$;10%	60	900	50M		400m	Si	DO7
5	GC1763B							10pt△	4.0	7.0;0.0V-60V$;5%	60	900	50M		400m	Si	DO7
6	GC1763C							10pt△	4.0	7.0;0.0V-60V$;2%	60	900	50M		400m	Si	DO7
7	HA1224A							10pt△	4.0	3.9;2.0V-30V$;10%	30	700	50M		250m	Si	A1ah
8	HA1224B							10pt△	4.0	3.9;2.0V-30V$;5%	30	700	50M		250m	Si	A1ah
9	HA1224C							10pt△	4.0	3.9;2.0V-30V$;2%	30	700	50M		250m	Si	A1ah
10	HA1713A							10pt△	4.0	7.0;0.0V-30V$	30	950	50M			Si	F59q
11	HA1713B							10pt△	4.0	7.0;0.0V-30V$	30	950	50M			Si	F27ah
12	HA1713D							10pt△	4.0	7.0;0.0V-30V$	30	950	50M			Si	F56q
13	HA1713E							10pt△	4.0	7.0;0.0V-30V$	30	950	50M			Si	F59j
14	HA1713H							10pt△	4.0	7.0;0.0V-30V$	30	950	50M			Si	S428b
15	HA1924A							10p△†	4.0	3.9;2.0V-30V$;10%	30	700	50M		400m	Si	DO7
16	HA1924B							10p△†	4.0	3.9;2.0V-30V$;5%	30	700	50M		400m	Si	DO7
17	HA1924C							10p△†	4.0	3.9;2.0V-30V$;2%	30	700	50M		400m	Si	DO7
18	KV624							10p§	4.0	2.6;2.0V-20V$	20 Ø	300	50M		400m	Si#$	DO7
19	KV4803							10p%	4.0	3.975;4.0V-100V$	100 $	100	50m		500m	▼	DO14
20	KV4803A							10p%	4.0	3.975;4.0V-100V$	100 $	100	50m		500m	▼	DO14
21	KV4803B							10p%	4.0	3.975;4.0V-100V$	100 $	100	50m		500m	▼	DO14
22	KV4803C							10p%	4.0	3.975;4.0V-100V$	100 $	100	50M		500m	▼	DO14
23	KV4803D							10p%	4.0	3.975;4.0V-100V$	100 $	100	50m		500m	▼	DO14
24	LP1024A							10pt△	4.0	4.5;0.0V-25V$	25	700	50M		5.0	Si	F59q
25	LP1024B							10pt△	4.0	4.5;0.0V-25V$	25	700	50M		5.0	Si	F27ah
26	LP1024D							10pt△	4.0	4.5;0.0V-25V$	25	700	50M		5.0	Si	F56q
27	LP1024E							10pt△	4.0	4.5;0.0V-25V$	25	700	50M		5.0	Si	F59j
28	LP1024H							10pt△	4.0	4.5;0.0V-25V$	25	700	50M		5.0	Si	S428b
29▼	MA4H030							10pt	4	2.6-3.2	30	1.0k	50M			Si	V25
30	MA4019C							10p	4.0	5.2$	110 Ø	100	50M			Si#$	Z45
31	MA4273C							10p	4.0	8.0 - 12Ø	110	100	.05G		.50	Si	A31e
32	MA45108							10pt△	4.0	5.4;0.0V-45V$	55 Ø	1.5k	50M			Si$	F27f
33	MA45112							10pt△	4.0	5.4;0.0V-45V$		1.5k	50M			Si$	DO7
34	MA45128							10pt△	4.0	7.0;0.0V-60V$	75 Ø	1.0k	50M			Si$	F27f
35	MA45132							10pt△	4.0	7.0;0.0V-60V$		1.0k	50M			Si$	DO7
36	MA45148							10pt△	4.0	8.5;0.0V-90V$	100 Ø	700	50M			Si$	F27f
37	MA45160							10pt△	4.0	7.0;0.0V-60V$	65 Ø	1.0k	50M			Si§	A1act
38	MA45170							10pt△	4.0	2.7;4.0V-45V$	50 Ø	1.5k	50M				A1act
39	MA45240C							10p△	4.0	4.5;0V-25V$	25	2.5k	50M			Si§§	u17†
40	MA45274							10p△	4.0	7.0;0V-60V$	60	1.0k	50M			Si§§	V11†
41	MA45334							10p△	4.0	4.6;0V-30V$	30	1.3k	50M			Si$#	DO7†
42	MA45349							10p△	4.0	5.9;0V-45V$	45	1.0k	50M			Si$#	DO7†
43	MA45364							10p△	4.0	7.3;0V-60V$	60	700	50M			Si$#	DO7†
44	MC10							10p	4.0		60 †	10	50M			Si	A1au
45	MC410							10p	4.0	5.0;1.0V-60V$	60 †	100	50M			Si	A1au
46	MC610							10p	4.0	8.00-12.0Ø	60	250	50M			Si	A1au
47	MC724	15G						10p	4.0	2.5;2.0V-20V$	20 Ø	300	50M			Si	A1au
48	ML4343							10pt	4.0	6.3$ 0-45V	45 †	400	50M			Si	F111at
49	ML4363							10pt	4.0	7.1$ 0-60V	60 †	800	50M			Si	F111at
50	ML4383							10pt	4.0	8.4$ 0-09V	90 †	400	50M			Si	F111at
51	MV1624							10p§	4.0	9.0-11Ø	20 Ø	300	50M		400m	Si	DO7
52	MV1624B							10p△†	4.0	2.5;2.0V-20V$;5%	20	300	50M		400m	Si	DO7
53	MV1624C							10p△†	4.0	2.5;2.0V-20V$;2%	20	300	50M		400m	Si	DO7
54	MV1724							10p§	4.0	9.0 - 11Ø	30 Ø	500	.05G		.40	Si$	DO7
55	MV1724A							10p	4.0		30 Ø	500	50M		400m	Si△#	DO7
56	MV1858E							10pt△	4.0	2.1-2.3Ø	60	350	100M			Si	F59j
57♦	MV1866	45GØ						10p§	4.0	9.0-11Ø	60 Ø	500	50M		400m	Si$	DO7
58	MV1866A							10pt	4.0	9.0 - 11Ø	60			.70	5.0	Si	F27a
59	MV1866B							10pt	4.0	9.0 - 11Ø	60			.70	5.0	Si	F10a
60	MV1866D							10pt	4.0	3.5;4.0V-60V$	60 Ø	250	100M		5.0	Si	F56n
61	MV1866E							10pt△	4.0	2.8-3.0Ø	60	250	100M			Si	F59j
62	MV1866H							10pt△	4.0	2.8-3.0Ø	60	250	100M			Si	S428b
63♦	MV2103							10p§	4.0	9.0-11Ø	30 Ø	400	50M		280m	Si	M764a
64♦	MV2203							10p§	4.0	8.0-12.5 Ø	25 Ø	200	50M		280m	Si	M764a
65	MV2203B,C							10p§%	4.0	2.0,1.0V-10V$	25	200	50M		400m	Si	C132
66	MVI2103							10pt	4.0	3.3;2.0V-30V$	30 Ø	275	100M		200m	Si	M750
67	PC112,A,B,C,D	2.5G						10p%	4.0	6.9;500mV-80V$	80 $	50	50M		600m		DO14
68▼	PC112,A,B,C,D#							10p	4.0	6.9;0.5V-80V $	80 $	50	50M		400m		DO7
69	PC115,A,B,C,D	5.0G						10p%	4.0	7.7;500mV-100V$	100 $	100	50M		600m		DO14
70▼	PC115,A,B,C,D#							10p	4.0	7.7;0.5V-100V $	100 $	100	50M		400m		DO7
71▼	PC132,A,B,C,D							10p%	4.0			50	50M		400m		DO7
72▼	PC132,A,B,C,D#							10p	4.0	4.5;0.5V-30V $	30 $	50	50M		400m		DO7
73	PC135,A,B,C,D	7.5G						10p%	4.0	5.8;500mV-50V$	50 $	75	100M		600m		DO14
74▼	PC135,A,B,C,D#							10p	4.0	5.8;0.5V-50V $	50 $	75	100M		400m		DO7
75	PC0601A							10p§△	4.0		30 $	200	50M				DO7
76	PC0601B							10p§△	4.0		30 $	300	50M				DO7
77	PC0601C							10p§△	4.0		30 $	400	50M				DO7
78	PC0601D							10p§△	4.0		30 $	500	50M				DO7
79	PC0611A							10p§△	4.0		60 $	200	50M				DO7
80	PC0611B							10p§△	4.0		60 $	300	50M				DO7
81	PC0611C							10p§△	4.0		60 $	400	50M				DO7
82	PC0621A							10p§△	4.0		90 $	200	50M				DO7
83	PC0621B							10p§△	4.0		90 $	300	50M				DO7
84	PC0631A							10p§△	4.0		120 $	200	50M				DO7
85	PC0641A							10p§△	4.0		150 $	200	50M				DO7
86	PC1401A							10p§△	4.0		30 $	200	50M				A2u
87	PC1401B							10p§△	4.0		30 $	300	50M				A2u
88	PC1401C							10p§△	4.0		30 $	400	50M				A2u
89	PC1401D							10p§△	4.0		30 $	500	50M				A2u
90	PC1411A							10p§△	4.0		60 $	200	50M				A2u
91	PC1411B							10p§△	4.0		60 $	300	50M				A2u
92	PC1411C							10p§△	4.0		60 $	400	50M				A2u
93	PC1421A							10p§△	4.0		90 $	200	50M				A2u
94	PC1421B							10p§△	4.0		90 $	300	50M				A2u
95	PC1431A							10p§△	4.0		120 $	200	50M				A2u
96	PC1441A							10p§△	4.0		150 $	200	50M				A2u
97	PC2601A							10p§△	4.0		30 $	200	50M				DO7
98	PC2601B							10p§△	4.0		30 $	300	50M				DO7
99	PC2601C							10p§△	4.0		30 $	400	50M				DO7
100	PC2601D							10p§△	4.0		30 $	500	50M				DO7
101	PC2611A							10p§△	4.0		60 $	200	50M				DO7
102	PC2611B							10p§△	4.0		60 $	300	50M				DO7
103	PC2611C							10p§△	4.0		60 $	400	50M				DO7
104	PC2611D							10p§△	4.0		60 $	500	50M				DO7
105	PC2621A							10p§△	4.0		90 $	200	50M				DO7
106	PC2621B							10p§△	4.0		90 $	300	50M				DO7
107	PC2621C							10p§△	4.0		90 $	400	50M				DO7
108	PC2621D							10p§△	4.0		90 $	500	50M				DO7
109	PC2631A							10p§△	4.0		120 $	200	50M				DO7
110	PC2631B							10p§△	4.0		120 $	300	50M				DO7

6. VOLTAGE VARIABLE CAPACITORS & VARACTOR DIODES

IN ORDER OF (1) TYPICAL CAPACITANCE, (2) TEST VOLTAGE, and (3) TYPE No.

LINE No.	[3] TYPE No.	MINIMUM CUTOFF FREQUENCY (Corresponding to Type Numbers in previous column) (Hz)	(Hz)	(Hz)	(Hz)	(Hz)	(Hz)	TYP. CAP. [1] CAP. Cj (F)	[2] at TEST VOLT (V)	CAPACITANCE RANGE (for V = 0 to PIV) Ø - at TEST VOLT. (pF)	PIV (V)	Q FACTOR MIN. Q	at TEST FREQ (Hz)	MAX. SER. RES. Rs (Ω)	MAX. DISS. @ 25°C (W)	DESCRIPTION MAT.	DWG. No.
1	PC2631C							10p§Δ	4.0		120 $	400	50M				DO7
2	PC2641A							10p§Δ	4.0		150 $	200	50M				DO7
3	PC2641B							10p§Δ	4.0		150 $	300	50M				DO7
4	PC2641C							10p§Δ	4.0		150 $	400	50M				DO7
5	PG110							10pΔ	4.0	4.45;2.0V-65V$	70	100	100M		400m	Si	DO7
6	PG110A							10pΔ	4.0	4.45;2.0V-65V$;10%	70	100	100M		400m	Si	DO7
7	PG110B							10pΔ	4.0	4.45;2.0V-65V$;5%	70	100	100M		400m	Si	DO7
8	PG110C							10pΔ	4.0	4.45;2.0V-65V$;2%	70	100	100M		400m	Si	DO7
9	PG110D							10pΔ	4.0	4.45;2.0V-65V$;1%	70	100	100M		400m	Si	DO7
10	PG210							10pΔ	4.0	4.35;2.0V-65V$	70	100	100M		400m	Si	DO7
11	PG210A							10pΔ	4.0	4.35;2.0V-65V$;10%	70	100	100M		400m	Si	DO7
12	PG210B							10pΔ	4.0	4.35;2.0V-65V$;5%	70	100	100M		400m	Si	DO7
13	PG210C							10pΔ	4.0	4.35;2.0V-65V$;2%	70	100	100M		400m	Si	DO7
14	PG210D							10pΔ	4.0	4.35;2.0V-65V$;1%	70	100	100M		400m	Si	DO7
15	PG310							10pΔ	4.0	3.9;2.0V-50V$	55	150	100M		400m	Si	DO7
16	PG310A							10pΔ	4.0	3.9;2.0V-50V$;10%	55	150	100M		400m	Si	DO7
17	PG310B							10pΔ	4.0	3.9;2.0V-50V$;5%	55	150	100M		400m	Si	DO7
18	PG310C							10pΔ	4.0	3.9;2.0V-50V$;2%	55	150	100M		400m	Si	DO7
19	PG310D							10pΔ	4.0	3.9;2.0V-50V$;1%	55	150	100M		400m	Si	DO7
20	PV1431							10p§	4.0		120	400	500M				A2u
21	SQ1224A,B,C							10pΔ†	4.0	3.2;2V-30V$	30	1.0k	50M		400m	Si	A1ah
22	SQ1274A,B,C							10p§%	4.0		30 ☑	500	50M		250m	Si#$	A1ah
23	SQ1724,B,C							10pΔ†	4.0	3.1;2V-30V$	30	1.0k	50M		400m	Si	DO7
24	SQ5463A							10p†Δ	4.0	3.1;2.0V-30V$;10%	30	550	50M		400m	Si	DO7
25	SQ5463B							10p†Δ	4.0	3.1;2.0V-30V$;5%	30	550	50M		400m	Si	DO7
26	SQ5463C							10p†Δ	4.0	3.1;2.0V-30$;2%	30	550	50M		400m	Si	DO7
27	SV77D							10p	4.0					3.5	5.0	Si$#	M1110
28♦	V10,A,B,C,D%	750M						10p%	4.0	4.1;0.5V-25V $	25 $	13	50M		400m	Si$	DO14
29♦	V10,A,B,C,D#	750M						10p%	4.0	4.1;0.5V-25V $	25 $	13	50M		400m		DO7
30	V10E,A,B,C,D	175M						10p%	4.0	6.9;500mV-100V$	100 $	3.5	50M		400m		DO7
31♦	V10E,A,B,C,D#	350M						10p%	4.0	6.9;0.5V-100V $	100 $	3.5	50M		400m	Si$	DO14
32♦	V910,A,B,C,D%	750M						10p%	4.0	4.1;0.5V-25V $	25 $	15	50M		400m		DO7
33	V910,A,B,C,D#	750M						10p%	4.0	4.3-26	25 $	15	50M		500m	Si$	DO14
34♦	V910E,A,B,C,D							10p%	4.0	6.9;500mV-100V$	100 $				400m		DO14
35	V910E,A,B,C,D#	350M						10p%	4.0	2.2-26	100 $	7.0	50M		500m	Si$	DO14
36	VA112							10p	4.0	4.0;2.0V-80V$	80 $	50	50M		500m	Si$	DO14Δ
37	VA115							10p	4.0	4.2;2.0V-100V$	100 $	100	50M		500m	Si$	DO14Δ
38♦	VA132							10p	4.0	3.0;2.0V-25V $	25 $	50	50M		400m	Si$	DO14Δ
39♦	VA135							10p	4.0	4.0;2.0V-50V $	50 $	150	50M		400m	Si$	DO14Δ
40♦	VA151							10p	4.0	4.0;2.0V-80V$	80 $	100	50M		400m	Si$	DO14Δ
41♦	VA157							10p	4.0	3.0;2.0V-25V $	25 $	150	50M		400m	Si$	DO14Δ
42♦	VA163							10p	4.0	4.5;2.0V-100V $	100 $	75	50M		400m	Si$	DO14Δ
43	VA210	37GØ						10p	4.0	6.2;2.0V-150V$	150 $	75	50M	4.3 ☑	500m	Si$	DO14Δ
44	VA211	50GØ						10p	4.0	6.2;2.0V-150V$	150 $	100	50M	3.2 ☑	500m	Si$	DO14Δ
45	VA310							10p	4.0	6.0;2.0-200V$	200 $	75	50M	4.3 ☑	500m	Si$	DO14Δ
46	VA311							10p	4.0	6.0;2.0-200V$	200 $	100	50M	3.2 ☑	500m	Si$	DO14Δ
47	VA5140							10p	4.0	9.0-11	90	300	50M		400m	Si	DO7
48	VA5140A							10p	4.0	9.5-10.5	90	300	50M		400m	Si	DO7
49	VC10,A,B							10p%	4.0	3.1 - 26	50 $	10	.05G				DO7
50	VC210,A,B							10p%	4.0	3.1 - 26	50 $	25	.05G				DO7
51	VC309,A,B							10p%	4.0	3.0;1V-25V$	25 $	50	.05G				DO7
52	VC310,A,B							10p%	4.0	4.0;2V-80V$	80 $	50	.05G				DO7
53	VC409,A,B							10p%	4.0	3.0;1V-25V$	25 $	100	.05G				DO7
54	VC410,A,B							10p%	4.0	4.0;1V-50V$	50 $	100	.05G				DO7
55	VC411,A,B							10p%	4.0	4.0;2.0-80V$	100 $	100	50M				DO7
56	VC610,A,B							10p%	4.0	3.0;1V-25V$	40 $	200	.05G				DO7
57	VC611,A,B							10p%	4.0	3.0;1V-25V$	40 $	300	.05G			Si	DO7
58	VC724	15G						10p	4.0	2.6;2.0V-20V$	20 ☑	300	50M			Si	DO7
59	VC822,A,B							10p%	4.0	4.3 - 26	25 $	13	.05G				DO7
60	VC842,A,B							10p%	4.0	2.2-26	100 $	3.5	50M				DO7
61	VQA417							10p	4.0	3.0;4.0V-60V$	60 $	300	50M			Si	DO7
62	VQA517							10p§	4.0	3.7;4.0V-100V$	100 $	200	50M			Si	DO7
63	VVC203,A,B,C,D							10p%	4.0	2.2;4.0V-25V$	25	13	50M		400m§	Si	DO7†
64	VVC204,A,B,C,D							10p%	4.0	3.9;4.0V-100V$	100	3.5	50M		400m§	Si	DO7†
65	VVC401,A,B,C,D							10p%	4.0	3.6;4.0V-80V$	80	50	50M		400m§	Si	DO7†
66	VVC403,A,B,C,D							10p%	4.0	3.9;4.0V-100V$	100	100	50M		400m§	Si	DO7†
67	VVC412,A,B,C,D							10p%	4.0	2.2;4.0V-25V$	25	50	50M		400m§	Si	DO7†
68	VVC705,A,B,C,D							10p%	4.0	2.4;4.0V-30V$	30	50	50M		400m§	Si	DO7†
69	VVC706,A,B,C,D							10p%	4.0	2.9;4.0V-50V$	50	75	100M		400m§	Si	DO7†
70	VVC729,A,B,C,D							10p%	4.0	2.4;4.0V-30V$	30	500	50M		400m§	Si	DO7†
71	VVC730,A,B,C,D							10p%	4.0	2.0;4.0V-20V$	20	300	50M		400m§	Si	DO7†
72	VVC795,A,B,C,D							10p%	4.0	1.35;4.0V-8.0V$	8.0	50	50M		400m§	Si	DO7†
73	VVC796,A,B,C,D							10p%	4.0	2.9;4.0V-50V$	50	10	50M		400m§	Si	DO7†
74	VVC797,A,B,C,D							10p%	4.0	2.9;4.0V-50V$	50	25	50M		400m§	Si	DO7†
75	VVC798,A,B,C,D							10p%	4.0	3.2;4.0V-60V$	60	10	50M		400m§	Si	DO7†
76	VVC799,A,B,C,D							10p%	4.0	3.2;4.0V-60V$	60	100	50M		400m§	Si	DO7†
77	VVC850,A,B,C,D							10p%	4.0	2.4;4.0V-30V$	30	100	50M		400m§	Si	DO7†
78	VVC851,A,B,C,D							10p%	4.0	2.7;4.0V-40V$	40	200	50M		400m§	Si	DO7†
79	VVC852,A,B,C,D							10p%	4.0	3.2;4.0V-60V$	60	100	50M		400m§	Si	DO7†
80	VVC853,A,B,C,D							10p%	4.0	4.2;4.0V-110V$	110	100	50M		400m§	Si	DO7†
81	VVC910,A,B,C,D							10p%	4.0	2.2;4.0V-25V$	25	150	50M		400m§	Si	DO7†
82	VVC911,A,B,C,D							10p%	4.0	2.9;4.0V-50V$	50	150	50M		400m§	Si	DO7†
83	VVC912,A,B,C,D							10p%	4.0	3.6;4.0V-80V$	80	100	50M		400m§	Si	DO7†
84	VVC913,A,B,C,D							10p%	4.0	3.9;4.0V-100V$	100	75	50M		400m§	Si	DO7†
85	VVC914,A,B,C,D							10p%	4.0	4.8;4.0V-150V$	150	60	50M		400m§	Si	DO7†
86	VVC915,A,B,C,D							10p%	4.0	4.8;4.0V-150V$	150	100	50M		400m§	Si	DO7†
87	VVC1624,A,B,C							10p%	4.0	2.0-3.2;2.0V-20V$	20	300	50M		400m§	Si	DO7†
88	ZC702							10pΔ†	4.0	2.7;2.0V-30V$;10%	30	400	50M		400m	Si	DO7Δ
89	ZC702B							10pΔ†	4.0	2.7;2.0V-30V$;5%	30	400	50M		400m	Si	DO7Δ
90	ZC702C							10pΔ†	4.0	2.7;2.0V-30V$;2%	30	400	50M		400m	Si	DO7Δ
91	ZC742							10p§	4.0	2.7;2.0V-3.0V$	30	400	50M			Si$Δ	C219
92	SV89E							10p	6.0	8.0p-14.0pØ				1.5	20	Si$#	M1111
93	BXY22G							10p	15	8.8 - 11.2Ø	30			1.5		Si#$	F48a
94	PL0195-1		5.0G					11p		8.0-14Ø	200 ☑		☑ 10G			Si$	F27as
95	1S2209B							11p	3.0	4.0§	30			.60			
96	2101							11p§	3.0	5.5;3.0V-20V$	22 ☑	300	50M		400m	Si#	DO7Δ
97	2101A							11p§	3.0	5.5;3.0V-20V$	22 ☑	300	50M		400m	Si#	DO7Δ
98	2102							11p§	3.0	5.0;3.0V-20V$	22 ☑	200	50M		400m	Si#	DO7Δ
99	2102A							11p§	3.0	5.0;3.0V-20V$	22 ☑	200	50M		400m	Si#	DO7Δ
100	2103							11p§	3.0	2.3;3.0V-8.0V$	15 ☑	200	50M		400m	Si#	DO7Δ
101	2103A							11p§	3.0	2.3;3.0V-8.0V$	15 ☑	200	50M		400m	Si#	DO7Δ
102	BB121A	24GØ						11p	3.0	4.5-6.0;3.0V-25V$	30 $			800m		Si$#	DO35Δ
103	BB141A	24G						11p	3.0	4.0-6.0;3.0-25V$	30			800m		Si	DO35Δ
104	BB205A							11p	3.0	17-2.3	30			800m		Si#	M501
105	BB205G							11p	3.0	17-2.4	30			1.2		Si#	M501
106	BB221	24G						11p	3.0	5.5;3.0V-25V$	30			800m		Si	DO35
107	BB222	16G						11p	3.0	5.2;3.0V-25V$	30			1.2		Si	DO35
108	BB505B#							11p	3.0	11-2at3V-25V	28		470M	.80		Si$#	DO35
109	BB505G#							11p	3.0	11-1.8at3V-25V	28		470M	1.2		Si$#	DO35
110	BBY31							11p	3.0	17.5-1.8	28			1.2		Si #	M156e

SYMBOLS AND CODES EXPLAINED IN INTERPRETER

6. VOLTAGE VARIABLE CAPACITORS & VARACTOR DIODES

IN ORDER OF (1) TYPICAL CAPACITANCE, (2) TEST VOLTAGE, and (3) TYPE No.

LINE No.	TYPE No.	MINIMUM CUTOFF FREQUENCY (Corresponding to Type Numbers in previous column) (Hz)	(Hz)	(Hz)	(Hz)	(Hz)	(Hz)	TYP. CAP. 1 CAP. Cj (F)	2 at TEST VOLT (V)	CAPACITANCE RANGE (for V = 0 to PIV) Ø - at TEST VOLT. (pF)	PIV (V)	Q FACTOR MIN. Q	at TEST FREQ (Hz)	MAX. SER. RES. Rs (Ω)	MAX. DISS. @ 25°C (W)	DESCRIPTION MAT.	DWG. No.
1♦	DKV6533							11p§	3.0	10.5-12.5 Ø	8.0 ☑	150	50M			Si§#	A90a △
2♦	DKV6533A							11p§	3.0	10.5-12.5 Ø	15 ☑	200	50M			Si§#	A90a △
3♦	DKV6533B							11p§	3.0	10.5-12.5 Ø	22 ☑	200	50M			Si§#	A90a △
4♦	DKV6533C							11p§	3.0	10.5-12.5 Ø	22 ☑	300	50M			Si§#	A90a △
5♦	DKV6533D							11p§	3.0	10.9-12.5 Ø	15 ☑	200	50M			Si§#	A90a △
6♦	DKV6533E							11p§	3.0	10.9-12.1 Ø	22 ☑	200	50M			Si§#	A90a △
7♦	DKV6533F							11p§	3.0	10.9-12.1 Ø	22 ☑	300	50M			Si§#	A90a △
8	FC56							11p	3.0	4.0;3.0-25V$	28	30				Si$#	A1da
9	KV31S1	21GØ						11p§	3.0	5.0;3.0V-25V$	30	200	50M	700mØ	120m	Si#$	M500
10	KV2101	17GØ						11p§	3.0	5.5;3.0V-20V$	22 ☑	300	50M	800mØ	250m	Si#▼	DO7△
11	KV2101A	17GØ						11p§	3.0	5.5;3.0V-20V$	22 ☑	300	50M	800mØ	250m	SOi#▼	DO7△
12	KV2102	15GØ						11p§	3.0	5.0;3.0V-20V$	22 ☑	200	50M	900mØ	250m	Si#▼	DO7△
13	KV2102A	15GØ						11p§	3.0	5.0;3.0V-20V$	22 ☑	200	50M	900mØ	250m	Si#▼	DO7△
14	KV2103	15GØ						11p§	3.0	2.3;3.0V-8.0V$	15 ☑	200	50M	900mØ	250m	Si#▼	DO7△
15	KV2103A	15GØ						11p§	3.0	2.3;3.0V-8.0V$	15 ☑	200	50M	900mØ	250m	Si#▼	DO7△
16	KV2104	7.0GØ						11p§	3.0	10.5-12.5Ø	8.0 ☑	100	50M	1.9 ☑	250m	Si#▼	DO7△
17	KV3101	21GØ						11p§	3.0	5.5;3.0V-25V$	30 ☑	300	50M	700mØ	400m	Si#$	M501
18	KV3111	21GØ						11p§	3.0	7.49;1V-25V$;1.5%	30 ☑	300	50M	700mØ	400m	Si#$	M501
19	MA320							11p△	3.0	4.0;3.0 - 25V$	28			1.2		Si#$	A246△
20	MA46533A							11p	3.0	12.5-10.5Ø	15	900				GA	A415
21	MA46533B							11p	3.0	12.5-10.5Ø	22	900				GA	A415
22	MA46533C							11p	3.0	12.5-10.5Ø	22	1.2k				GA	A415
23	MA46533D							11p	3.0	12.1-10.9Ø	15	900				GA	A415
24	MA46533E							11p	3.0	12.1-10.9Ø	22	900				GA	A415
25	MA46533F							11p	3.0	12.1-10.9Ø	22	1.2k				GA	A415
26	MV201							11p§	3.0	9.0-14Ø	23 ☑	160	50M		250m	Si$	DO35
27	GC1814							11p	4.0	30-3.0	90	550	50M			Si	F111b†
28	TIV308							11p	4.0	9.0-14Ø	20	200	50M		250m	Si#	DO35
29	PH1205-1,2,3,4		5.0G	10G	15G	20G		11p	6.0	8.0 - 14Ø	6.0	☑	10G			Si$	F58
30	PH1205A,B,C	30G	40G	50G				11p	6.0	8.0-14Ø	6.0	☑	10G			Si$	F58
31	PH1215-1,2,3,4		5.0G	10G	15G	20G		11p	6.0	8.0 - 14Ø	15	☑	10G			Si$	F58
32	PH1215A,B,C	30G	40G	50G				11p	6.0	8.0-14Ø	15	☑	10G			Si$	F58
33	PH1225-1,2,3,4		5.0G	10G	15G	20G		11p	6.0	8.0 - 14Ø	24	☑	10G			Si$	F58
34	PH1225A,B,C	30G	40G	50G				11p	6.0	8.0-14Ø	24	☑	10G			Si$	F58
35	PH1235-1,2,3,4	5.0G	10G	15G	20G			11p	6.0	8.0 - 14Ø	30	☑	10G			Si$	F58
36	PH1235A	30G						11p	6.0	8.0-14Ø	30	☑	10G			Si$	F58
37	PH1245-1,2,3,4		5.0G	10G	15G	20G		11p	6.0	8.0 - 14Ø	45	☑	10G			Si$	F58
38	PH1245A	30G						11p	6.0	8.0-14Ø	45	☑	10G			Si$	F58
39	PH1255-1,2,3,4		5.0G	10G	15G	20G		11p	6.0	8.0 - 14Ø	60	☑	10G			Si$	F58
40	PH1255A	30G						11p	6.0	8.0-14Ø	60	☑	10G			Si$	F58
41	PH1265-1,2,3,4		5.0G	10G	15G	20G		11p	6.0	8.0 - 14Ø	90	☑	10G			Si$	F58
42	PH1275-1,2,3,4		5.0G	10G	15G	20G		11p	6.0	8.0 - 14Ø	120	☑	10G			Si$	F58
43	PH1285-1,2	5.0G	10G					11p	6.0	8.0 - 14Ø	150	☑	10G			Si$	F58
44	PH1295-1	5.0G						11p	6.0	8.0 - 14Ø	200	☑	10G			Si$	F58
45	PL0105-1,2,3,4		5.0G	10G	15G	20G		11p	6.0	8.0 - 14Ø	6.0	☑	10G			Si	F27d
46	PL0105A,B,C	30G	40G	50G				11p	6.0	8.0-14Ø	6.0	☑	10G			Si	F27d
47	PL0115-1,2,3,4		5.0G	10G	15G	20G		11p	6.0	8.0 - 14Ø	15	☑	10G			Si	F27d
48	PL0115A,B,C	30G	40G	50G				11p	6.0	8.0-14Ø	15	☑	10G			Si	F27d
49	PL0125-1,2,3,4		5.0G	10G	15G	20G		11p	6.0	8.0 - 14Ø	24	☑	10G			Si	F27d
50	PL0125A,B,C	30G	40G	50G				11p	6.0	8.0-14Ø	24	☑	10G			Si	F27d
51	PL0135-1,2,3,4		5.0G	10G	15G	20G		11p	6.0	8.0 - 14Ø	30	☑	10G			Si	F27d
52	PL0135A	30G						11p	6.0	8.0-14Ø	30	☑	10G			Si	F27d
53	PL0145-1,2,3,4		5.0G	10G	15G	20G		11p	6.0	8.0 - 14Ø	45	☑	10G			Si	F27d
54	PL0145A	30G						11p	6.0	8.0-14Ø	45	☑	10G			Si	F27d
55	PL0155-1,2,3,4		5.0G	10G	15G	20G		11p	6.0	8.0 - 14Ø	60	☑	10G			Si	F27d
56	PL0155A	30G						11p	6.0	8.0-14Ø	60	☑	10G			Si	F27d
57	PL0165-1,2,3,4		5.0G	10G	15G	20G		11p	6.0	8.0 - 14Ø	90	☑	10G			Si	F27d
58	PL0175-1,2,3,4		5.0G	10G	15G	20G		11p	6.0	8.0 - 14Ø	120	☑	10G			Si	F27d
59	PL0185-1,2	5.0G	10G					11p	6.0	8.0 - 14Ø	150	☑	10G			Si	F27d
60▼	V912E,A,B,C,D%							12p		7.5;0.5V-100V $	100 $				400m		DO7
61	SD11E6							12p	0.0	12 - 24	6.0			1.0		Si	P3
62	SD12E6							12p	0.0	12 - 24	6.0			1.0		Si	F3a
63	SD22E6							12p	0.0	12 - 24	6.0			1.0		Si	F11
64	SD32E6							12p	0.0	12 - 24	6.0			1.0		Si	F21
65	SD42E6							12p	0.0	12 - 24	6.0			1.0		Si	F9a
66	SDGPE6							12p	0.0	12 - 24	6.0			1.0		Si	DO7
67	1S2085	10G						12p	3.0	3.5;3.0-25V$	28	160	50M			Si△#	DO7
68	1S2086	10G						12p	3.0	3.5;3.0-25V$	28	160	50M			Si△#	DO7
69	1S2087	20G						12p	3.0	4.0;3.0-25V$	28	300	50M			Si△#	DO7
70	1S2088	20G						12p	3.0	4.0;3.0-25V$	28	300	50M			Si△#	DO7
71	1S2208B							12p	3.0	4.5§	30			.60M			
72	BB121B	24GØ						12p	3.0	4.5-6.0;3.0V-25V$	30 $			800m		Si$#	DO35△
73	BB142	16G						12p	3.0	4.0-6.0;3.0-25V$	30 ☑			1.2		Si$#	DO35△
74	FC57							12p	3.0	5.2;3.0-25V$	28	20				Si$#	A1da
75	KV109G							12p†	3.0	8.0-17Ø	28	160	50m		5.0m§	Si#$	A353△
76	MV102							12p§	3.0	5.0;3.0V-25V$	28 †			800m		Si#$	A1s
77	MV103							12p§	3.0	4.0;3.0V-25V$	28 †			800m		Si#$	A1s
78	1N3554							12p	4.0			100				Si	A60p
79	1N4789							12p%	4.0	2.49;0.0-4.0V$	25 $	15	50M		500m	Si	DO14
80	1N4789A							12p%	4.0	2.49;0.0-4.0V$	25 $	15	50M		500m	Si	DO14
81	1N4789B							12p%	4.0	2.49;0.0-4.0V$	25 $	15	50M		500m	Si	DO14
82	1N4789C							12p%	4.0	2.49;0.0-4.0V$	25 $	15	50M		500m	Si	DO14
83	1N4789D							12p%	4.0	2.49;0.0-4.0V$	25 $	15	50M		500m	Si	DO14
84	1N4804							12p%	4.0	2.49;0.0-4.0V$	100 $	15	50M		500m	Si	DO14
85	1N4804A							12p%	4.0	2.49;0.0-4.0V$	100 $	15	50M		500m	Si	DO14
86	JAN1N4804A							12p%	4.0	2.49;0.0-4.0V$	100 $	15	50M		500m	Si	A1dd
87	1N4804B							12p%	4.0	2.49;0.0-4.0V$	100 $	15	50M		500m	Si	DO14
88	JAN1N4804B							12p%	4.0	2.49;0.0-4.0V$	100 $	15	50M		500m	Si	A1dd
89	1N4804C							12p%	4.0	2.49;0.0-4.0V$	100 $	15	50M		500m	Si	DO14
90	1N4804D							12p%	4.0	2.49;0.0-4.0V$	100 $	15	50M		500m	Si	DO14
91	1N5141							12p	4.0	2.8;4.0V-60V$	60 ☑	300	50M		400m	Si	DO7
92	1N5141A							12p	4.0	2.8;4.0V-60V$	60 ☑	300	50M		400m	Si	DO7
93	JAN1N5141A							12p	4.0	11.4-12.6Ø	65 ☑	300	50M		400m	Si	DO7
94	1N5444							12p%	4.0	2.6;2V-30V$	30	400	50M		400m	Si	DO7
95	1N5444A							12p%	4.0	2.6;2V-30V$	30	400	50M		400m	Si	DO7
96	1N5444B							12p%	4.0	2.6;2V-30V$	30	400	50M		400m	Si	DO7
97	1N5444C							12p%	4.0	2.6;2V-30V$	30	400	50M		400m	Si	DO7
98	1N5444D							12p%	4.0	2.6;2V-30V$	30	400	50M		400m	Si	DO7
99	1N5464							12p%	4.0	2.8;2V-30V$	30	550	50M		400m	Si	DO7
100	1N5464A							12p%	4.0	2.8;2V-30V$	30	550	50M		400m	Si	DO7
101	1N5464B							12p%	4.0	2.8;2V-30V$	30	550	50M		400m	Si	DO7
102	JAN1N5464B							12p	4.0	11.4-12.6Ø	30 ☑	550	50M		400m	Si	DO7
103	1N5464C							12p%	4.0	2.8;2V-30V$	30	550	50M		400m	Si	DO7
104	JAN1N5464C							12p	4.0	11.75-12.24Ø	30 ☑	550	50M		400m	Si	DO7
105	1N5464D							12p%	4.0	2.8;2V-30V$	30	550	50M		400m	Si	DO7
106	1N5684							12p%	4.0	3.2;2.0V-40V$	40	550	50M		400m	Si	DO7
107	1N5684A							12p%	4.0	3.2;2.0V-40V$	40	550	50M		400m	Si	DO7
108	1N5684B							12p%	4.0	3.2;2.0V-40V$	40	550	50M		400m	Si	DO7
109	1N5699							12p%	4.0	2.8;4.0V-60V$	60	400	50M		400m	Si	DO7
110	1N5699A							12p%	4.0	2.8;4.0V-60V$	60	400	50M		400m	Si	DO7

6. VOLTAGE VARIABLE CAPACITORS & VARACTOR DIODES

IN ORDER OF (1) TYPICAL CAPACITANCE, (2) TEST VOLTAGE, and (3) TYPE No.

LINE No.	[3] TYPE No.	MINIMUM CUTOFF FREQUENCY (Corresponding to Type Numbers in previous column) (Hz)	(Hz)	(Hz)	(Hz)	(Hz)	(Hz)	TYP. CAP. [1] CAP. Cj (F)	[2] at TEST VOLT (V)	CAPACITANCE RANGE (for V = 0 to PIV) Ø - at TEST VOLT. (pF)	PIV (V)	Q FACTOR MIN. Q	at TEST FREQ (Hz)	MAX. SER. RES. Rs (Ω)	MAX. DISS. @ 25°C (W)	DESCRIPTION MAT.	DWG. No.
1	1N5699B							12p%	4.0	2.8;4.0V-60V$	60	400	50M		400m	Si	DO7
2	CV1626							12p	4.0	10.8-13.2Ø	20	300	50M		400m	Si$	DO7
3	CV1868B							12p	4.0	10.8-13.20	60	200	100M		5.0	Si	F27x⊠
4	CV1868D							12p	4.0	10.8-13.20	60	200	100M		5.0	Si	F56n⊠
5	CV5012							12p	4.0	2.5;2.0V-30V$	30	400	50M		400m	Si	DO7
6	CVH2030-20							12p	4.0	4.5;0.0-30$;10%	30 ⊠	2.2k	50M			Si$§	u30a
7	CVH2060-20							12p	4.0	7.5;0.0-60$;10%	60 ⊠	1.1k	50M			Si$§	u30b
8	CVH2090-20							12p	4.0	8.7;0.0-90$;10%	90 ⊠	700	50M				u30b
9	D1726,B,C							12p†%	4.0	3.0;2V-30V$	30 ⊠	450	50M		400m	Si#$	DO7
10	DC4213B							12p	4.0			350 Ø	50M			Si	DO7△
11	DT314							12p§	4.0	4.4;0.0V-30V$	30 ⊠	2200 Ø	50M			Si	V1
12	DT614							12p§	4.0	7.0;0.0V-60V$	60 ⊠	1000 Ø	50M			Si	V1
13	DT914							12p§	4.0	9.2;0.0V-90V$	90 ⊠	650 Ø	50M			Si	V1
14	DT4514							12p§	4.0	6.0;0.0V-45V$	45 ⊠	1400 Ø	50M			Si	V1
15♦	DVH6730-20							12p§	4.0	4.4;0.0-30$;10%	30 ⊠	2.2k	50M			Si$§	A90a
16♦	DVH6731-20	110G						12p†	4.0	4.4;0.0V-30V$;10%	30 ⊠	2.2k	50M			Si$§	F143
17	DVH6732-20	110G						12p†	4.0	4.4;0.0V-30V$;10%	30 ⊠	2.2k	50M			Si$§	F56ad
18	DVH6733-20	110G						12p†	4.0	4.4;0.0V-30V$;10%	30 ⊠	2.2k	50M			Si$§	F59u
19	DVH6734-20	110G						12p†	4.0	4.4;0.0V-30V$;10%	30 ⊠	2.2k	50M			Si$§	M929
20♦	DVH6760-20							12p§	4.0	6.9;0.0-60$;10%	60 ⊠	1.1k	50M			Si$§	A90a
21♦	DVH6761-20	55G						12p†	4.0	6.9;0.0V-60V$;10%	60 ⊠	1.1k	50M			Si$§	F143
22	DVH6762-20	55G						12p†	4.0	6.9;0.0V-60V$;10%	60 ⊠	1.1k	50M			Si$§	F56ad
23	DVH6763-20	55G						12p†	4.0	6.9;0.0V-60V$;10%	60 ⊠	1.1k	50M			Si$§	F59u
24	DVH6764-20	55G						12p†	4.0	6.9;0.0V-60V$;10%	60 ⊠	1.1k	50M			Si$§	M929
25♦	DVH6790-20							12p§	4.0	8.1;0.0-90$;10%	90 ⊠	700	50M			Si$§	A90a
26♦	DVH6791-20	35G						12p†	4.0	8.1;0.0V-90V$;10%	90 ⊠	700	50M			Si$§	F143
27	DVH6792-20	35G						12p†	4.0	8.1;0.0V-90V$;10%	90 ⊠	700	50M			Si$§	F56ad
28	DVH6793-20	35G						12p†	4.0	8.1;0.0V-90V$;10%	90 ⊠	700	50M			Si$§	F59u
29	DVH6794-20	35G						12p†	4.0	8.1;0.0V-90V$;10%	90 ⊠	700	50M			Si$§	M929
30	E1726A							12p†	4.0	11-13.2	30	1.0k	50M		4.0		F10k
31	EP1026A							12p†△	4.0	2.8;2.0V-30V$	30	900	50M		5.0	Si	F59q
32	EP1026B							12p†△	4.0	2.8;2.0V-30V$	30	900	50M		5.0	Si	F27ah
33	EP1026D							12p†△	4.0	2.8;2.0V-30V$	30	900	50M		5.0	Si	F56q
34	EP1026E							12p†△	4.0	2.8;2.0V-30V$	30	900	50M		5.0	Si	F59j
35	EP1026H							12p†△	4.0	2.8;2.0V-30V$	30	900	50M		5.0	Si	S428b
36	EP1726A							12p†	4.0	11-13.2	30	1.0k	50M		4.0		F27ac
37	GC1514A							12p†△	4.0	4.2;0.0V-30V$	30	1.6k	50M			Si	F59q
38	GC1514B							12p†△	4.0	4.2;0.0V-30V$	30	1.6k	50M			Si	F27ah
39	GC1514D							12p†△	4.0	4.2;0.0V-30V$	30	1.6k	50M			Si	F56q
40	GC1514E							12p†△	4.0	4.2;0.0V-30V$	30	1.6k	50M			Si	F59j
41	GC1514H							12p†△	4.0	4.2;0.0V-30V$	30	1.6k	50M			Si	S428b
42	GC1714	45G						12p§	4.0	7.0;0.0V-60V$	60 ⊠	900	50M				F111b†
43	GC1714A							12p†△	4.0	7.0;0.0V-60V$	60	900	50M			Si	F59q
44	GC1714B							12p†△	4.0	7.0;0.0V-60V$	60	900	50M			Si	F27ah
45	GC1714D							12p†△	4.0	7.0;0.0V-60V$	60	900	50M			Si	F56q
46	GC1714E							12p†△	4.0	7.0;0.0V-60V$	60	900	50M			Si	F59j
47	GC1714H							12p†△	4.0	7.0;0.0V-60V$	60	900	50M			Si	S428b
48	GC1764							12p†△	4.0	7.0;0.0V-60V$;10%	60	900	40M		400m	Si	DO7
49	GC1764B							12p†△	4.0	7.0;0.0V-60V$;5%	60	900	50M		400m	Si	DO7
50	GC1764C							12p†△	4.0	7.0;0.0V-60V$;2%	60	900	50M		400m	Si	DO7
51	HA1226A							12p†△	4.0	3.9;2.0V-30V$;10%	30	700	50M		250m	Si	A1ah
52	HA1226B							12p†△	4.0	3.9;2.0V-30V$:5%	30	700	50M		250m	Si	A1ah
53	HA1226C							12p†△	4.0	3.9;2.0V-30V$;2%	30	700	50M		250m	Si	A1ah
54	HA1714A							12p†△	4.0	7.0;0.0V-30V$	30	900	50M			Si	F59q
55	HA1714B							12p†△	4.0	7.0;0.0V-30V$	30	900	50M			Si	F27ah
56	HA1714D							12p†△	4.0	7.0;0.0V-30V$	30	900	50M			Si	F56q
57	HA1714E							12p†△	4.0	7.0;0.0V-30V$	30	900	50M			Si	F59j
58	HA1714H							12p†△	4.0	7.0;0.0V-30V$	30	900	50M			Si	S428b
59	HA1926A							12p△†	4.0	3.9;2.0V-30V$;10%	30	700	50M		400m	Si	DO7
60	HA1926B							12p△†	4.0	3.9;2.0V-30V$;5%	30	700	50M		400m	Si	DO7
61	HA1926C							12p△†	4.0	3.9;2.0V-30V$;2%	30	700	50M		400m	Si	DO7
62	KV626							12p§	4.0	2.6;2.0V-20V$	20 ⊠	300	50M		400m	Si#$	DO7
63	KV4804							12p%	4.0	3.995;4.0V-100V$	100 $	100	50m		500m	▼	DO14
64	KV4804A							12p%	4.0	3.995;4.0V-100V$	100 $	100	50m		500m	▼	DO14
65	KV4804B							12p%	4.0	3.995;4.0V-100V$	100 $	100	50m		500m	▼	DO14
66	KV4804C							12p%	4.0	3.995;4.0V-100V$	100 $	100	50m		500m	▼	DO14
67	KV4804D							12p%	4.0	3.995;4.0V-100V$	100 $	100	50m		500m	▼	DO14
68	LP1026A							12p†△	4.0	4.5;0.0V-25V$	25	700	50M		5.0	Si	F59q
69	LP1026B							12p†△	4.0	4.5;0.0V-25V$	25	700	50M		5.0	Si	F27ah
70	LP1026D							12p†△	4.0	4.5;0.0V-25V$	25	700	50M		5.0	Si	F56q
71	LP1026E							12p†△	4.0	4.5;0.0V-25V$	25	700	50M		5.0	Si	F59j
72	LP1026H							12p†△	4.0	4.5;0.0V-25V$	25	700	50M		5.0	Si	S428b
73▼	MA4H031							12p†	4	3.1-3.8	30	1.0k	50M			Si	V25
74	MA45071							12p	4.0		45	1200	50M			Si	DO7
75	MA45151							12p	4.0		60	1000	50M			Si	DO7
76	MA45161							12p†△	4.0	7.0;0.0V-60V$	65 ⊠	1.0k	50M			Si§	A1ac†
77	MA45171							12p†△	4.0	2.7;4.0V-45V$	50 ⊠	1.2k	50M				A1ac†
78	MA45241C							12p△	4.0	4.5;0V-25V$	25	2.5k	50M			Si$§	u17†
79	MA45275							12p△	4.0	7.0;0V-60V$	60	1.0k	50M			Si$§	V11†
80	MA45335							12p△	4.0	4.6;0V-30V$	30	1.2k	50M			Si$#	DO7†
81	MA45350							12p△	4.0	5.9;0V-45V$	45	1.0k	50M			Si$#	DO7†
82	MA45365							12p△	4.0	7.3;0V-60V$	60	650	50M			Si$#	DO7†
83	MC726	15G						12p	4.0	2.6;2.0V-20V$	20 ⊠	300	50M			Si	A1au
84	ML4364							12p†	4.0	7.2$ 0-60V	60 †	800	50M			Si	F111a†
85	ML4384							12p†	4.0	8.5$ 0-90V	90 †	400	50M			Si	F111a†
86	MV1626							12p§	4.0	10.8-13.2Ø	20 ⊠	300	50M		400m	Si	DO7
87	MV1626B							12p△†	4.0	2.5;2.0V-20V$;5%	20	300	50M		400m	Si	DO7
88	MV1626C							12p△†	4.0	2.5;2.0V-20V$;2%	20	300	50M		400m	Si	DO7
89	MV1726							12p§	4.0	10.8 - 13.2Ø	30 ⊠	450	.05G		.40	Si$	DO7
90	MV1726A							12p	4.0		30 ⊠	450	50M		400m	Si△#	DO7
91♦	MV1868	45GØ						12p§	4.0	10.8-13.2Ø	60 ⊠	500	50M		400m	Si$	DO7
92	MV1868A							12p†	4.0	10.8-13.2Ø	60			600m	5.0	Si	F27a
93	MV1868B							12p†	4.0	10.8-13.2Ø	60			600m	5.0	Si	F10a
94	MV1868D							12p†	4.0	3.5;4.0V-60V$	60 ⊠	200	100M		5.0	Si	F56n
95	MV1868E							12p†△	4.0	2.8-3.0Ø	60	200	100M			Si	F59j
96	MV1868H							12p†△	4.0	2.8-3.0Ø	60	200	100M			Si	S428b
97♦	MV2104							12p§	4.0	10.8-13.2Ø	30 ⊠	400	50M		280m	Si	M764a
98	MVI2104							12p†	4.0	3.3;2.0V-30V$	30 ⊠	275	100M		200m	Si	M750
99	SQ1226A,B,C							12p△†	4.0	3.2;2V-30V$	30	900	50M		400m	Si	A1ah
100	SQ1276A,B,C							12p§%	4.0		30 ⊠	450	50M		250m	Si#$	A1ah
101	SQ1726,B,C							12p△†	4.0	3.1;2V-30V$	30	900	50M		400m	Si	DO7
102	SQ5464A							12p†△	4.0	3.1;2.0V-30V$;10%	30	550	50M		400m	Si	DO7
103	SQ5464B							12p†△	4.0	3.1;2.0V-30V$;5%	30	550	50M		400m	Si	DO7
104	SQ5464C							12p†△	4.0	3.1;2.0V-30V$;2%	30	550	50M		400m	Si	DO7
105♦	V12,A,B,C,D%	750M						12p%	4.0	4.2;0.5V-25V $	25 $	13	50M		400m	Si$	DO14
106♦	V12,A,B,C,D#	750M						12p%	4.0	4.2;0.5V-25V $	25 $	13	50M		400m		DO7
107	V12E,A,B,C,D	200M						12p%	4.0	7.5;500mV-100V$	100 $	4.0	50M		400m		DO7
108♦	V12E,A,B,C,D#	350M						12p%	4.0	7.5;0.5V-100V $	100 $	4.0	50M		400m	Si$	DO14
109♦	V912,A,B,C,D%	750M						12p%	4.0	4.2;0.5V-25V $	25 $	15	50M		400m		DO7
110	V912,A,B,C,D#	750M						12p%	4.0	5.2-31	25 $	15	50M		500m	Si$	DO14

6. VOLTAGE VARIABLE CAPACITORS & VARACTOR DIODES

IN ORDER OF (1) TYPICAL CAPACITANCE, (2) TEST VOLTAGE, and (3) TYPE No.

LINE No.	3 TYPE No.	MINIMUM CUTOFF FREQUENCY (Corresponding to Type Numbers in previous column) (Hz)	(Hz)	(Hz)	(Hz)	(Hz)	(Hz)	TYP. CAP. 1 CAP. Cj (F)	2 at TEST VOLT (V)	CAPACITANCE RANGE (for V = 0 to PIV) Ø - at TEST VOLT. (pF)	PIV (V)	Q FACTOR MIN. Q	at TEST FREQ (Hz)	MAX. SER. RES. Rs (Ω)	MAX. DISS. @ 25°C (W)	DESCRIPTION MAT.	DWG. No.
1♦	V912E,A,B,C,D							12p%	4.0	7.5;500mV-100V$	100 $				400m		DO14
2	V912E,A,B,C,D#	350M						12p%	4.0	2.7-31	100 $	7.0	50M		500m	Si$	DO14
3	VA5141							12p	4.0	10.8-13.2	90	300	50M		400m	Si	DO7
4	VA5141A							12p	4.0	11.4-12.6	90	300	50M		400m	Si	DO7
5	VC12,A,B							12p%	4.0	3.8 - 31	50 $	10	.05G				DO7
6	VC212,A,B							12p%	4.0	3.8 - 31	50 $	25	.05G				DO7
7	VC612,A,B							12p%	4.0	3.0;1V-25V$	40 $	200	.05G				DO7
8	VC613,A,B							12p%	4.0	3.0;1V-25V$	40 $	300	.05G			Si	DO7
9	VC726	15G						12p	4.0	2.6;2.0V-20V$	20 ☑	300	50M			Si	DO7
10	VC823,A,B							12p%	4.0	5.2 - 31	25 $	13	.05G				DO7
11	VC843,A,B							12p%	4.0	2.7-31	100 $	4.0	50M				DO7
12	VVC205,A,B,C,D							12p%	4.0	2.2;4.0V-25V$	25	13	50M		400m§	Si	DO7†
13	VVC206,A,B,C,D							12p%	4.0	3.9;4.0V-100V$	100	4.0	50M		400m§	Si	DO7†
14	VVC731,A,B,C,D							12p%	4.0	2.0;4.0V-20V$	20	300	50M		400m§	Si	DO7†
15	VVC732,A,B,C,D							12p%	4.0	2.4;4.0V-30V$	30	450	50M		400m§	Si	DO7†
16	VVC810,A,B,C,D							12p%	4.0	2.9;4.0V-50V$	50				400m§	Si	DO7†
17	VVC811,A,B,C,D							12p%	4.0	2.9;4.0V-50V$	50				400m§	Si	DO7†
18	VVC1626,A,B,C							12p%	4.0	2.0-3.2;2.0V-20V$	20	300	50M		400m§	Si	DO7†
19	ZC703							12pΔ†	4.0	2.8;2.0V-30V$;10%	30	400	50M		400m	Si	DO7Δ
20	ZC703B							12pΔ†	4.0	2.8;2.0V-30V$;5%	30	400	50M		400m	Si	DO7Δ
21	ZC703C							12pΔ†	4.0	2.8;2.0V-30V$;2%	30	400	50M		400m	Si	DO7Δ
22	ZC743							12p§	4.0	2.8;2.0V-3.0V$	30	400	50M			Si$Δ	C219
23	1N5149							12p	6.0	5.0-20Ø	80 ☑				14	Si	F48b
24	1N5150							12p	6.0	5.0-20Ø	80 ☑				19	Si	F48b
25	1N5150A							12p	6.0	10.8-13.2Ø	80 ☑				29	Si	F48b
26	MA4288							12p	6.0		30			3.0		Si	F3a
27	MA4388							12p	6.0		30			3.0		Si	A31e
28	MA4962B,C							12p☑	6.0	6.0 - 12Ø	90 ☑			1.0	10	Si	Z48
29	VBE77M							12p	6.0	10-14Ø	90 ☑					Si	S168
30	VEC87M							12p	6.0	10.5-13.5Ø	100 ☑					Si	S169
31	VEE77M							12p	6.0	10-14Ø	90 ☑					Si	S169
32	VJE77M							12p	6.0	10-14Ø	90 ☑					Si	F132
33	BXY22H							12p	15	10.8 - 13.2Ø	30			1.5		Si$#	F48a
34	BXY23							12p	15	10.7 - 13.3Ø	30 ☑			.90		Si	
35▼	BB130							12pØ	28	15-160	30 $			2.0			C201a
36	HA1822A							13pΔ†	1.0	4.5;1.0V-28V$;10%	30	300	50M		400m	Si	DO7Δ
37	HA1822B							13pΔ†	1.0	4.5;1.0V-28V$;5%	30	300	50M		400m	Si	DO7Δ
38	HA1822C							13pΔ†	1.0	4.5;1.0V-28V$;2%	30	300	50M		400m	Si	DO7Δ
39▼	1SV123							13p	3.0	5.5;3.0-25V $	30			600m			A339
40	BB122	16G						13p	3.0	4.5-6.0;3.0-25V$	30 $			1.2		Si$#	DO35Δ
41	BB141B	24G						13p	3.0	4.0-6.0;3.0-25V$	30			800m		Si	DO35Δ
42	BBY24S1							14p†	0.0	8.5$	120	300	50M			Si	M1069
43	PSV112-01							14p	0.0	5.0;0.0V-45V$	45 ☑	1.7k	50M			Si§	F27as
44	PSV112-05							14p	0.0	5.0;0.0V-45V$	45 ☑	1.7k	50M			Si§	F10af
45	PSV112-08							14p	0.0	5.0;0.0V-45V$	45 ☑	1.7k	50M			Si§	A1vd
46	PSV112-14							14p	0.0	5.0;0.0V-45V$	45 ☑	1.7k	50M			Si§	A2u
47	PSV112-16							14p	0.0	5.0;0.0V-45V$	45 ☑	1.7k	50M			Si§	A1st
48	PSV112-21							14p	0.0	5.0;0.0V-45V$	45 ☑	1.7k	50M			Si§	M86e
49	PSV112-31							14p	0.0	5.0;0.0V-45V$	45 ☑	1.7k	50M			Si§	F10ah
50	PSV112-45							14p	0.0	5.0;0.0V-45V$	45 ☑	1.7k	50M			Si§	F54c
51	PSV124-01							14p	0.0	6.5;0.0V-60V$	60 ☑	1.0k	50M			Si§	F27as
52	PSV124-05							14p	0.0	6.5;0.0V-60V$	60 ☑	1.0k	50M			Si§	F10af
53	PSV124-08							14p	0.0	6.5;0.0V-60V$	60 ☑	1.0k	50M			Si§	A1vd
54	PSV124-14							14p	0.0	6.5;0.0V-60V$	60 ☑	1.0k	50M			Si§	A2u
55	PSV124-16							14p	0.0	6.5;0.0V-60V$	60 ☑	1.0k	50M			Si§	A1st
56	PSV124-21							14p	0.0	6.5;0.0V-60V$	60 ☑	1.0k	50M			Si§	M86e
57	PSV124-31							14p	0.0	6.5;0.0V-60V$	60 ☑	1.0k	50M			Si§	F10ah
58	PSV124-45							14p	0.0	6.5;0.0V-60V$	60 ☑	1.0k	50M			Si§	F54c
59	PSV134-01							14p	0.0	8.0;0.0V-90V$	90 ☑	900	50M			Si	F27as
60	PSV134-14							14p	0.0	8.0;0.0V-90V$	90 ☑	900	50M			Si	A2u
61	PSV134-16							14p	0.0	8.0;0.0V-90V$	90 ☑	900	50M			Si	A1st
62	PSV134-21							14p	0.0	8.0;0.0V-90V$	90 ☑	900	50M			Si	M86e
63	PSV134-31							14p	0.0	8.0;0.0V-90V$	90 ☑	900	50M			Si	F10ah
64	PSV143-01							14p	0.0	9.5;0.0V-120V$	120 ☑	480	50M			Si	F27as
65	PSV143-14							14p	0.0	9.5;0.0V-120V$	120 ☑	480	50M			Si	A2u
66	PSV143-16							14p	0.0	9.5;0.0V-120V$	120 ☑	480	50M			Si	A1st
67	PSV143-21							14p	0.0	9.5;0.0V-120V$	120 ☑	480	50M			Si	M86e
68	PSV143-31							14p	0.0	9.5;0.0V-120V$	120 ☑	480	50M			Si	F10ah
69	SD11E48							14p	0.0	14 - 27	48			1.0		Si	P3
70	SD11E60							14p	0.0	14 - 28	60			1.0		Si	P3
71	SD12E48							14p	0.0	14 - 27	48			1.0		Si	F3a
72	SD12E60							14p	0.0	14 - 28	60			1.0		Si	F3a
73	SD22E48							14p	0.0	14 - 27	48			1.0		Si	F11
74	SD22E60							14p	0.0	14 - 28	60			1.0		Si	F11
75	SD32E48							14p	0.0	14 - 27	48			1.0		Si	F21
76	SD32E60							14p	0.0	14 - 28	60			1.0		Si	F21
77	SD42E48							14p	0.0	14 - 27	48			1.0		Si	F9a
78	SD42E60							14p	0.0	14 - 28	60			1.0		Si	F9a
79	SDGPE48							14p	0.0	14 - 27	48			1.0		Si	DO7
80	SDGPE60							14p	0.0	14 - 28	60			1.0		Si	DO7
81	1S2207							14p	2.0	2.5§	27			1.5			
82	GC1815							14p	4.0	36-3.6	90	550	50M			Si	F111b†
83	VVC812,A,B,C,D							14p%	4.0	2.2;4.0V-25V$	25				400m§	Si	DO7†
84	1S553T	1.2G						14p	6.0	10-18Ø	20	60	20M			Si△	A395a
85	VYA518EA							14p§	6.0	8.8;0.0V-80V$	85 ☑	300	50M			Si	F135
86	BXY22J							14p	15	13 - 16Ø	30			1.5		Si$#	F48a
87▼	BB204B							14pØ	30	14-42	30 $			0.4		Si	C220
88▼	BB204G							14pØ	30	14-39	30 $			0.4		Si	C220
89▼	V915E,A,B,C,D%							15p		7.5;0.5V-100V $	100 $				400m		DO7
90	BXY11F							15p	0.0	9.0 - 18Ø	65			1.0		Si§§	S286
91	BXY14F							15p	0.0	9.0 - 18Ø	65			1.0		Si§§	DO19
92	BXY19F							15p	0.0	9.0 - 18Ø	90 ☑			.50	15	Si	
93	MA4060C							15p	0.0	10 - 20	90			2.5		Si	S4d
94	MA4061C							15p	0.0	10 - 20	140			2.5		Si	S4d
95	MA4062C							15p	0.0	10 - 20Ø	70				12	Si	S4d
96	MA4375E							15pØ	0.0		90 ☑						
97	MA4760C							15p	0.0	10 - 20Ø	90			2.5		Si	Z23
98	MA4761C							15p	0.0	10 - 20Ø	120			2.5		Si	Z23
99	SD11E12							15p	0.0	15 - 30	12			1.0		Si	P3
100	SD12E12							15p	0.0	15 - 30	12			1.0		Si	F3a
101	SD22E12							15p	0.0	15 - 30	12			1.0		Si	F11
102	SD32E12							15p	0.0	15 - 30	12			1.0		Si	F21
103	SD42E12							15p	0.0	15 - 30	12			1.0		Si	F9a
104	SDGPE12							15p	0.0	15 - 30	12			1.0		Si	DO7
105	SV87B							15p	0.0	10.0p-20.0pØ				1.5	20	Si$#	M1111
106	SV88B							15p	0.0	10.0p-20.0pØ				2.3	20	Si$#	M1111
107	1T25							15pΔ	2.0	6.5;2.0-25V$	30	325	50M	600m		Si$▼	A342
108	ZC801							15pΔ†	2.0	5.75;2.0V-20V$;20%	25	300	50M		400m	Si	DO7Δ
109	ZC801A							15pΔ†	2.0	5.75;2.0V-20V$;10%	25	300	50M		400m	Si	DO7Δ
110	ZC801B							15pΔ†	2.0	5.75;2.0V-20V$;5%	25	300	50M		400m	Si	DO7Δ

6. VOLTAGE VARIABLE CAPACITORS & VARACTOR DIODES

IN ORDER OF (1) TYPICAL CAPACITANCE, (2) TEST VOLTAGE, and (3) TYPE No.

LINE No.	[3] TYPE No.	MINIMUM CUTOFF FREQUENCY (Corresponding to Type Numbers in previous column) (Hz)	(Hz)	(Hz)	(Hz)	(Hz)	(Hz)	TYP. CAP. [1] CAP. Cj (F)	[2] at TEST VOLT (V)	CAPACITANCE RANGE (for V = 0 to PIV) Ø - at TEST VOLT. (pF)	PIV (V)	Q FACTOR MIN. Q	at TEST FREQ (Hz)	MAX. SER. RES. Rs (Ω)	MAX. DISS. @ 25°C (W)	DESCRIPTION MAT.	DWG. No.
1	ZC821							15p	2.0	5.5;2-20V$	25	300	50M		300m	Si▼	C219
2	ZC831A,B							15p%Δ	2.0	4.5-6.0;2.0V-20V$	25 $	300	50M		200m		M156eΔ
3▼	1SV153							15p	3.0	5.5;3.0-25V $	30			600m		Si	W349
4	1N4790							15p%	4.0	2.49;0.0-4.0V$	25 $	15	50M		500m	Si	DO14
5	1N4790A							15p%	4.0	2.49;0.0-4.0V$	25 $	15	50M		500m	Si	DO14
6	1N4790B							15p%	4.0	2.49;0.0-4.0V$	25 $	15	50M		500m	Si	DO14
7	1N4790C							15p%	4.0	2.49;0.0-4.0V$	25 $	15	50M		500m	Si	DO14
8	1N4790D							15p%	4.0	2.49;0.0-4.0V$	25 $	15	50M		500m	Si	DO14
9	1N4805							15p%	4.0	2.49;0.0-4.0V$	100 $	15	50M		500m	Si	DO14
10	1N4805A							15p%	4.0	2.49;0.0-4.0V$	100 $	15	50M		500m	Si	DO14
11	JAN1N4805A							15p%	4.0	2.49;0.0-4.0V$	100 $	15	50M		500m	Si	A1dd
12	1N4805B							15p%	4.0	2.49;0.0-4.0V$	100 $	15	50M		500m	Si	DO14
13	JAN1N4805B							15p%	4.0	2.49;0.0-4.0V$	100 $	15	50M		500m	Si	A1dd
14	1N4805C							15p%	4.0	2.49;0.0-4.0V$	100 $	15	50M		500m	Si	DO14
15	1N4805D							15p%	4.0	2.49;0.0-4.0V$	100 $	15	50M		500m	Si	DO14
16	1N5142							15p	4.0	2.8;4.0V-60V$	60 Ø	250	50M		400m	Si	DO7
17	1N5142A							15p	4.0	2.8;4.0V-60V$	60 Ø	250	50M		400m	Si	DO7
18	JAN1N5142A							15p	4.0	14.3-15.7Ø	65 Ø	250	50M		400m	Si	DO7
19	1N5445							15p%	4.0	2.6;2V-30V$	30	400	50M		400m	Si	DO7
20	1N5445A							15p%	4.0	2.6;2V-30V$	30	400	50M		400m	Si	DO7
21	1N5445B							15p%	4.0	2.6;2V-30V$	30	400	50M		400m	Si	DO7
22	1N5445C							15p%	4.0	2.6;2V-30V$	30	400	50M		400m	Si	DO7
23	1N5445D							15p%	4.0	2.6;2V-30V$	30	400	50M		400m	Si	DO7
24	1N5465							15p%	4.0	2.8;2V-30V$	30	550	50M		400m	Si	DO7
25	1N5465A							15p%	4.0	2.8;2V-30V$	30	550	50M		400m	Si	DO7
26	1N5465B							15p%	4.0	2.8;2V-30V$	30	550	50M		400m	Si	DO7
27	JAN1N5465B							15p	4.0	14.25-15.75Ø	30 Ø	550	50M		400m	Si	DO7
28	1N5465C							15p%	4.0	2.8;2V-30V$	30	550	50M		400m	Si	DO7
29	JAN1N5465C							15p	4.0	14.7-15.3Ø	30 Ø	550	50M		400m	Si	DO7
30	1N5465D							15p%	4.0	2.8;2V-30V$	30	550	50M		400m	Si	DO7
31	1N5685							15p%	4.0	3.2;2.0V-40V$	40	550	50M		400m	Si	DO7
32	1N5685A							15p%	4.0	3.2;2.0V-40V$	40	550	50M		400m	Si	DO7
33	1N5685B							15p%	4.0	3.2;2.0V-40V$	40	550	50M		400m	Si	DO7
34	1N5700							15p%	4.0	2.8;4.0V-60V$	60	400	50M		400m	Si	DO7
35	1N5700A							15p%	4.0	2.8;4.0V-60V$	60	400	50M		400m	Si	DO7
36	1N5700B							15p%	4.0	2.8;4.0V-60V$	60	400	50M		400m	Si	DO7
37	BXY55							15p	4.0	12-18Ø	60					Si	F27aj
38	CV830							15p	4.0	13.5-16.5Ø	30	30	50M		400m	Si	DO7
39	CV1010,A,B,C,D	7.5G						15p%	4.0	33-5.0	60	150	50M		400m	Si	DO7
40	CV1110,A,B,C,D	7.5G						15p%	4.0	33-3.9	100	150	50M		400m	Si	DO7
41	CV1628							15p	4.0	13.5-16.5Ø	20	250	50M		400m	Si$	DO7
42	CV1870B							15p	4.0	13.50-16.50	60	200	100M		5.0	Si	F27xØ
43	CV1870D							15p	4.0	13.50-16.50	60	200	100M		5.0	Si	F56nØ
44	CV5015							15p	4.0	2.5;2.0V-30V$	30	400	50M		400m	Si	DO7
45	CVH2030-21							15p	4.0	4.5;0.0-30$;10%	30 Ø	2.0k	50M			Si$§	u30b
46	CVH2060-21							15p	4.0	7.5;0.0-60$;10%	60 Ø	1.0k	50M			Si$§	u30b
47	CVH2090-21							15p	4.0	8.7;0.0-90$;10%	90 Ø	700	50M				u30b
48	D1728,B,C							15pt%	4.0	3.0;2V-30V$	30 Ø	450	50M		400m	Si#$	DO7
49	DC4214B	20G						15p	4.0		60	400	50M			Si	DO7Δ
50	DT315							15p§	4.0	4.6;0.0V-30V$	30 Ø	2000 Ø	50M			Si	V1
51	DT615							15p§	4.0	7.0;0.0V-60V$	60 Ø	950 Ø	50M			Si	V1
52	DT915							15p§	4.0	9.4;0.0V-90V$	90 Ø	650 Ø	50M			Si	V1
53	DT4515							15p§	4.0	6.0;0.0V-45V$	45 Ø	1400 Ø	50M			Si	V1
54♦	DVH6730-21							15p§	4.0	4.4;0.0-30$;10%	30 Ø	2.0k	50M			Si$§	A90a
55♦	DVH6731-21	100G						15pt	4.0	4.4;0.0V-30V$;10%	30 Ø	2.0k	50M			Si$§	F143
56	DVH6732-21	100G						15pt	4.0	4.4;0.0V-30V$;10%	30 Ø	2.0k	50M			Si$§	F56ad
57	DVH6733-21	100G						15pt	4.0	4.4;0.0V-30V$;10%	30 Ø	2.0k	50M			Si$§	F59u
58	DVH6734-21	100G						15pt	4.0	4.4;0.0V-30V$;10%	30 Ø	2.0k	50M			Si$§	M929
59♦	DVH6760-21							15p§	4.0	7.0;0.0-60$;10%	60 Ø	1.0k	50M			Si$§	A90a
60♦	DVH6761-21	50G						15pt	4.0	7.0;0.0V-60V$;10%	60 Ø	1.0k	50M			Si$§	F143
61	DVH6762-21	50G						15pt	4.0	7.0;0.0V-60V$;10%	60 Ø	1.0k	50M			Si$§	F56ad
62	DVH6763-21	50G						15pt	4.0	7.0;0.0V-60V$;10%	60 Ø	1.0k	50M			Si$§	F59u
63	DVH6764-21	50G						15pt	4.0	7.0;0.0V-60V$;10%	60 Ø	1.0k	50M			Si$§	M929
64♦	DVH6790-21							15p§	4.0	8.2;0.0-90$;10%	90 Ø	700	50M			Si$§	A90a
65♦	DVH6791-21	35G						15pt	4.0	8.2;0.0V-90V$;10%	90 Ø	700	50M			Si$§	F143
66	DVH6792-21	35G						15pt	4.0	8.2;0.0V-90V$;10%	90 Ø	700	50M			Si$§	F56ad
67	DVH6793-21	35G						15pt	4.0	8.2;0.0V-90V$;10%	90 Ø	700	50M			Si$§	F59u
68	DVH6794-21	35G						15pt	4.0	8.2;0.0V-90V$;10%	90 Ø	700	50M			Si$§	M929
69	E715	40G						15p	4.0	4.0;1.0V-50V$	60	800	50M			Si	F27az
70	EP1028A							15pt△	4.0	2.8;2.0V-30V$	30	900	50M		5.0	Si	F59q
71	EP1028B							15pt△	4.0	2.8;2.0V-30V$	30	900	50M		5.0	Si	F27ah
72	EP1028D							15pt△	4.0	2.8;2.0V-30V$	30	900	50M		5.0	Si	F56q
73	EP1028E							15pt△	4.0	2.8;2.0V-30V$	30	900	50M		5.0	Si	F59j
74	EP1028H							15pt△	4.0	2.8;2.0V-30V$	30	900	50M		5.0	Si	S428b
75	G115,A,B							15p%	4.0		25	100 Ø	50M		500m	Si$	A60j
76	G215,A,B							15p%	4.0		25	200 Ø	50M		500m	Si$	A60j
77	G315,A,B							15p%	4.0		25	300 Ø	50M		500m	Si$	A60j
78	G415,A,B							15p%	4.0		25	400 Ø	50M		500m	Si$	A60j
79	G515,A,B							15p%	4.0		25	500 Ø	50M		500m	Si$	A60j
80	G615A,B,C							15pΔ†	4.0	2.0-2.5Ø;10,5,2%	25	600	50M		400m	Si	DO35
81	GC1715	42G						15p§	4.0	7.0;0.0V-60V$	60 Ø	850	50M				F111b†
82	GC1715A							15pt△	4.0	7.0;0.0V-60V$	60	850	50M			Si	F59q
83	GC1715B							15pt△	4.0	7.0;0.0V-60V$	60	850	50M			Si	F27ah
84	GC1715D							15pt△	4.0	7.0;0.0V-60V$	60	850	50M			Si	F56q
85	GC1715E							15pt△	4.0	7.0;0.0V-60V$	60	850	50M			Si	F59j
86	GC1715H							15pt△	4.0	7.0;0.0V-60V$	60	850	50M			Si	S428b
87	GC1765							15pt△	4.0	7.0;0.0V-60V$;10%	60	900	50M		400m	Si	DO7
88	GC1765B							15pt△	4.0	7.0;0.0V-60V$;5%	60	900	50M		400m	Si	DO7
89	GC1765C							15pt△	4.0	7.0;0.0V-60V$;2%	60	900	50M		400m	Si	DO7
90	HA1228A							15pt△	4.0	3.9;2.0V-30V$;10%	30	700	50M		250m	Si	A1ah
91	HA1228B							15pt△	4.0	3.9;2.0V-30V$;5%	30	700	50M		250m	Si	A1ah
92	HA1228C							15pt△	4.0	3.9;2.0V-30V$;2%	30	700	50M		250m	Si	A1ah
93	HA1715A							15pt△	4.0	7.0;0.0V-30V$	30	850	50M			Si	F59q
94	HA1715B							15pt△	4.0	7.0;0.0V-30V$	30	850	50M			Si	F27ah
95	HA1715D							15pt△	4.0	7.0;0.0V-30V$	30	850	50M			Si	F56q
96	HA1715E							15pt△	4.0	7.0;0.0V-30V$	30	850	50M			Si	F59j
97	HA1715H							15pt△	4.0	7.0;0.0V-30V$	30	850	50M			Si	S428b
98	HA1928A							15pΔ†	4.0	3.9;2.0V-30V$;10%	30	700	50M		400m	Si	DO7
99	HA1928B							15pΔ†	4.0	3.9;2.0V-30V$;5%	30	700	50M		400m	Si	DO7
100	HA1928C							15pΔ†	4.0	3.9;2.0V-30V$;2%	30	700	50M		400m	Si	DO7
101	KV110A							15pt	4.0	12-18Ø	45	300	50m		100m§	Si#$	A352
102	KV110G							15pt	4.0	12-18Ø	45	150	50m		100m§	Si#$	A352
103	KV628							15p§	4.0	2.6;2.0V-20V$	20 Ø	250	50M		400m	Si#$	DO7
104	KV4805							15p%	4.0	4.02;4.0V-100V$	100 $	100	50m		500m	▼	DO14
105	KV4805A							15p%	4.0	4.02;4.0V-100V$	100 $	100	50m		500m	▼	DO14
106	KV4805B							15p%	4.0	4.02;4.0V-100V$	100 $	100	50m		500m	▼	DO14
107	KV4805C							15p%	4.0	4.02;4.0V-100V$	100 $	100	50M		500m	▼	DO14
108	KV4805D							15p%	4.0	4.02;4.0V-100V$	100 $	100	50m		500m	▼	DO14
109	LP1028A							15pt△	4.0	4.5;0.0V-25V$	25	600	50M		5.0	Si	F59q
110	LP1028B							15pt△	4.0	4.5;0.0V-25V$	25	600	50M		5.0	Si	F27ah

SYMBOLS AND CODES EXPLAINED IN INTERPRETER

6. VOLTAGE VARIABLE CAPACITORS & VARACTOR DIODES

IN ORDER OF (1) TYPICAL CAPACITANCE, (2) TEST VOLTAGE, and (3) TYPE No.

LINE No.	3 TYPE No.	MINIMUM CUTOFF FREQUENCY (Corresponding to Type Numbers in previous column) (Hz)	(Hz)	(Hz)	(Hz)	(Hz)	(Hz)	TYP. CAP. 1 CAP. Cj (F)	2 at TEST VOLT (V)	CAPACITANCE RANGE (for V = 0 to PIV) Ø - at TEST VOLT. (pF)	PIV (V)	Q FACTOR MIN. Q	at TEST FREQ (Hz)	MAX. SER. RES. Rs (Ω)	MAX. DISS. @ 25°C (W)	DESCRIPTION MAT.	DWG. No.
1	LP1028D							15pt△	4.0	4.5;0.0V-25V$	25	600	50M		5.0	Si	F56q
2	LP1028E							15pt△	4.0	4.5;0.0V-25V$	25	600	50M		5.0	Si	F59j
3	LP1028H							15pt△	4.0	4.5;0.0V-25V$	25	600	50M		5.0	Si	S428b
4▼	MA4H032							15pt	4	3.7-4.6	30	900	50M			Si	V25
5	MA4019D							15p	4.0	5.2$	110 Ø	100	50M			Si#$	Z45
6	MA4273D							15p	4.0	12 - 18Ø	110	100	.05G		.50	Si	A31e
7	MA45109							15pt△	4.0	5.5;0.0V-45V$	55 Ø	1.0k	50M			Si$	F27f
8	MA45113							15pt△	4.0	5.5;0.0V-45V$		1.0k	50M			Si$	DO7
9	MA45129							15pt△	4.0	7.0;0.0V-60V$	75 Ø	900	50M			Si$	F27f
10	MA45133							15pt△	4.0	7.0;0.0V-60V$		900	50M			Si$	DO7
11	MA45149							15pt△	4.0	8.6;0.0V-90V$	100 Ø	600	50M			Si$	F27f
12	MA45162							15pt△	4.0	7.0;0.0V-60V$		900	50M			Si§	A1uu
13	MA45172							15pt△	4.0	2.7;4.0V-45V$		1.0k	50M				A1uu
14	MA45242C							15pΔ	4.0	4.5;0V-25V$	25	2.2k	50M			Si$§	u17†
15	MA45276							15pΔ	4.0	7.2;0V-60V$	60	1.0k	50M			Si$§	V11†
16	MA45336							15pΔ	4.0	4.6;0V-30V$	30	1.2k	50M			Si$#	DO7†
17	MA45351							15pΔ	4.0	5.9;0V-45V$	45	800	50M			Si$#	DO7†
18	MA45366							15pΔ	4.0	7.3;0V-60V$	60	600	50M			Si$#	DO7†
19	MC15							15p	4.0		60 †	10	50M			Si	A1au
20	MC415							15p	4.0	5.0;1.0V-60V$	60 †	100	50M			Si	A1au
21	MC615							15p	4.0	12.0-18.0Ø	60	250	50M			Si	A1au
22	MC728	12G						15p	4.0	2.6;2.0V-20V$	20 Ø	250	50M			Si	A1au
23	ML4365							15pt	4.0	7.3$ 0-60V	60 †	600	50M			Si	F111a†
24	ML4385							15pt	4.0	8.6$ 0-90V	90 †	400	50M			Si	F111a†
25♦	MV830							15p§	4.0	13.5-16.5Ø	30 Ø	30	50M		2.0	Si	DO7
26	MV830B							15pΔ†	4.0	2.0;4V-25V$;5%	30	30	50M		400m	Si	DO7
27	MV830C							15pΔ†	4.0	2.0;4V-25V$;2%	30	30	50M		400m	Si	DO7
28	MV1628							15p§	4.0	13.5-16.5Ø	20 Ø	250	50M		400m	Si	DO7
29	MV1628B							15pΔ†	4.0	2.5;2.0V-20V$;5%	20	250	50M		400m	Si	DO7
30	MV1628C							15pΔ†	4.0	2.5;2.0V-20V$;2%	20	250	50M		400m	Si	DO7
31	MV1728							15p§	4.0	13.5 - 16.5Ø	30 Ø	450	.05G		.40	Si$	DO7
32	MV1728A							15p	4.0		30 Ø	450	50M		400m	Si△#	DO7
33♦	MV1870	45GØ						15p§	4.0	13.5-16.5Ø	60 Ø	400	50M		400m	Si$	DO7
34	MV1870A							15pt	4.0	13.5-16.5Ø	60			500m	5.0	Si	F27a
35	MV1870B							15pt	4.0	13.5-16.5Ø	60			500m	5.0	Si	F10a
36	MV1870D							15pt	4.0	3.5;4.0V-60V$	60 Ø	200	100M		5.0	Si	F56n
37	MV1870E							15pt△	4.0	2.8-3.0Ø	60	200	100M			Si	F59j
38	MV1870H							15pt△	4.0	2.8-3.0Ø	60	200	100M			Si	S428b
39♦	MV2105							15p§	4.0	13.5-16.5Ø	30 Ø	400	50M		280m	Si	M764a
40♦	MV2205							15p§	4.0	13.0-17.0 Ø	25 Ø	200	50M		280m	Si	M764a
41	MV2205B,C							15p§%	4.0	2.1;1.0V-10V$	25	200	50M		400m	Si	C132
42	MVI2105							15pt	4.0	3.3;2.0V-30V$	30 Ø	275	100M		200m	Si	M750
43	PC123,A,B,C,D	2.5G						15p%	4.0	4.6;500mV-30V$	30 $	50	50M		600m		DO14
44▼	PC123,A,B,C,D#							15p	4.0	4.6;0.5V-30V $	30 $	50	50M		400m		DO7
45	PC124,A,B,C,D	6.2G						15p%	4.0	5.9;500mV-50V$	50 $	125	50M		600m		DO14
46▼	PC124,A,B,C,D#							15p	4.0	5.9;0.5V-50V $	50 $	125	50M		400m		DO7
47▼	PC125,A,B,C,D							15p%	4.0			50	50M		400m		DO7
48▼	PC125,A,B,C,D#							15p	4.0	7.0;0.5V-80V $	80 $	50	50M		400m		DO7
49▼	PC126,A,B,C,D							15p%	4.0			100	50M		400m		DO7
50▼	PC126,A,B,C,D#							15p	4.0	7.9;0.5V-100V $	100 $	100	50M		400m		DO7
51	PC0602A							15p§△	4.0		30 $	200	50M				DO7
52	PC0602B							15p§△	4.0		30 $	300	50M				DO7
53	PC0602C							15p§△	4.0		30 $	400	50M				DO7
54	PC0602D							15p§△	4.0		30 $	500	50M				DO7
55	PC0612A							15p§△	4.0		60 $	200	50M				DO7
56	PC0612B							15p§△	4.0		60 $	300	50M				DO7
57	PC0612C							15p§△	4.0		60 $	400	50M				DO7
58	PC0622A							15p§△	4.0		90 $	200	50M				DO7
59	PC0622B							15p§△	4.0		90 $	300	50M				DO7
60	PC0632A							15p§△	4.0		120 $	200	50M				DO7
61	PC0632B							15p§△	4.0		120 $	300	50M				DO7
62	PC0642A							15p§△	4.0		150 $	200	50M				DO7
63	PC1402A							15p§△	4.0		30 $	200	50M				A2u
64	PC1402B							15p§△	4.0		30 $	300	50M				A2u
65	PC1402C							15p§△	4.0		30 $	400	50M				A2u
66	PC1402D							15p§△	4.0		30 $	500	50M				A2u
67	PC1412A							15p§△	4.0		60 $	200	50M				A2u
68	PC1412B							15p§△	4.0		60 $	300	50M				A2u
69	PC1412C							15p§△	4.0		60 $	400	50M				A2u
70	PC1422A							15p§△	4.0		90 $	200	50M				A2u
71	PC1422B							15p§△	4.0		90 $	300	50M				A2u
72	PC1432A							15p§△	4.0		120 $	200	50M				A2u
73	PC1442A							15p§△	4.0		150 $	200	50M				A2u
74	PC2602A							15p§△	4.0		30 $	200	50M				DO7
75	PC2602B							15p§△	4.0		30 $	300	50M				DO7
76	PC2602C							15p§△	4.0		30 $	400	50M				DO7
77	PC2602D							15p§△	4.0		30 $	500	50M				DO7
78	PC2612A							15p§△	4.0		60 $	200	50M				DO7
79	PC2612B							15p§△	4.0		60 $	300	50M				DO7
80	PC2612C							15p§△	4.0		60 $	400	50M				DO7
81	PC2612D							15p§△	4.0		60 $	500	50M				DO7
82	PC2622A							15p§△	4.0		90 $	200	50M				DO7
83	PC2622B							15p§△	4.0		90 $	300	50M				DO7
84	PC2622C							15p§△	4.0		90 $	400	50M				DO7
85	PC2632A							15p§△	4.0		120 $	200	50M				DO7
86	PC2632B							15p§△	4.0		120 $	300	50M				DO7
87	PC2632C							15p§△	4.0		120 $	400	50M				DO7
88	PC2642A							15p§△	4.0		150 $	200	50M				DO7
89	PC2642B							15p§△	4.0		150 $	300	50M				DO7
90	PC2642C							15p§△	4.0		150 $	400	50M				DO7
91	PG115							15pΔ	4.0	4.5;2.0V-65V$	70	200	50M		400m	Si	DO7
92	PG115A							15pΔ	4.0	4.5;2.0V-65V$;10%	70	200	50M		400m	Si	DO7
93	PG115B							15pΔ	4.0	4.5;2.0V-65V$;5%	70	200	50M		400m	Si	DO7
94	PG115C							15pΔ	4.0	4.5;2.0V-65V$;2%	70	200	50M		400m	Si	DO7
95	PG115D							15pΔ	4.0	4.5;2.0V-65V$;1%	70	200	50M		400m	Si	DO7
96	PG215							15pΔ	4.0	4.4;2.0V-65V$	70	200	50M		400m	Si	DO7
97	PG215A							15pΔ	4.0	4.4;2.0V-65V$;10%	70	200	50M		400m	Si	DO7
98	PG215B							15pΔ	4.0	4.4;2.0V-65V$;5%	70	200	50M		400m	Si	DO7
99	PG215C							15pΔ	4.0	4.4;2.0V-65V$;2%	70	200	50M		400m	Si	DO7
100	PG215D							15pΔ	4.0	4.4;2.0V-65V$;1%	70	200	50M		400m	Si	DO7
101	PG315							15pΔ	4.0	3.95;2.0V-50V$	55	300	50M		400m	Si	DO7
102	PG315A							15pΔ	4.0	3.95;2.0V-50V$;10%	55	300	50M		400m	Si	DO7
103	PG315B							15pΔ	4.0	3.95;2.0V-50V$;5%	55	300	50M		400m	Si	DO7
104	PG315C							15pΔ	4.0	3.95;2.0V-50V$;2%	55	3000	50M		400m	Si	DO7
105	PG315D							15pΔ	4.0	3.95;2.0V-50V$;1%	55	300	50M		400m	Si	DO7
106	PV1432							15p§	4.0		120	400	500M				A2u
107	SQ1228A,B,C							15pΔ†	4.0	3.2;2V-30V$	30	900	50M		400m	Si	A1ah
108	SQ1278A,B,C							15p§%	4.0		30 Ø	450	50M		250m	Si#$	A1ah
109	SQ1728,B,C							15pΔ†	4.0	3.1;2V-30V$	30	900	50M		400m	Si	DO7
110	SQ5465A							15pt△	4.0	3.1;2.0V-30V$;10%	30	550	50M		400m	Si	DO7

6. VOLTAGE VARIABLE CAPACITORS & VARACTOR DIODES

IN ORDER OF (1) TYPICAL CAPACITANCE, (2) TEST VOLTAGE, and (3) TYPE No.

LINE No.	[3] TYPE No.	MINIMUM CUTOFF FREQUENCY (Corresponding to Type Numbers in previous column) (Hz)	(Hz)	(Hz)	(Hz)	(Hz)	(Hz)	TYP. CAP. [1] CAP. Cj (F)	[2] at TEST VOLT (V)	CAPACITANCE RANGE (for V = 0 to PIV) Ø - at TEST VOLT. (pF)	PIV (V)	Q FACTOR MIN. Q	at TEST FREQ (Hz)	MAX. SER. RES. Rs (Ω)	MAX. DISS. @ 25°C (W)	DESCRIPTION MAT.	DWG. No.
1	SQ5465B							15p†Δ	4.0	3.1;2.0V-30V$;5%	30	550	50M		400m	Si	DO7
2	SQ5465C							15p†Δ	4.0	3.1;2.0V-30V$;2%	30	550	50M		400m	Si	DO7
3	SV77E							15p	4.0					3.0	5.0	Si$#	M1110
4♦	V15,A,B,C,D%	750M						15p%	4.0	4.2;0.5V-25V $	25 $	13	50M		400m	Si$	DO14
5♦	V15,A,B,C,D#	750M						15p%	4.0	4.2;0.5V-25V $	25 $	13	50M		400m		DO7
6	V15E,A,B,C,D	225M						15p%	4.0	7.5;500mV-100V$	100 $	4.5	50M		400m		DO7
7♦	V15E,A,B,C,D#	350M						15p%	4.0	7.5;0.5V-100V $	100 $	4.5	50M		400m	Si$	DO14
8♦	V915,A,B,C,D%	750M						15p%	4.0	4.2;0.5V-25V $	25 $	15	50M		400m		DO7
9	V915,A,B,C,D#	750M						15p%	4.0	6.5-39	25 $	15	50M		500m	Si$	DO14
10♦	V915E,A,B,C,D							15p%	4.0	7.5;500mV-100V$	100 $				400m		DO14
11	V915E,A,B,C,D#	350M						15p%	4.0	3.3-39	100 $	7.0	50M		500m	Si$	DO14
12♦	VA123							15p	4.0	3.0;2.0V-25V $	25 $	50	50M		400m	Si$	DO14Δ
13♦	VA124							15p	4.0	4.0;2.0V-50V $	50 $	125	50M		400m	Si$	DO14Δ
14	VA125							15p	4.0	4.0;2.0V-80V$	80 $	50	50M		500m	Si$	DO14Δ
15	VA126							15p	4.0	4.2;2.0V-100V$	100 $	100	50M		500m	Si$	DO14Δ
16♦	VA152							15p	4.0	4.0;2.0V-80V $	80 $	100	50M		400m	Si$	DO14Δ
17♦	VA158							15p	4.0	3.0;2.0V-25V $	25 $	150	50M		400m	Si$	DO14Δ
18♦	VA165							15p	4.0	4.8;2.0V-100V $	100 $	75	50M		400m	Si$	DO14Δ
19	VA208	37GØ						15p	4.0	6.2;2.0V-150V$	150 $	75	50M	2.9 ☑	500m	Si$	DO14Δ
20	VA209	50GØ						15p	4.0	6.2;2.0V-150V$	150 $	100	50M	2.2 ☑	500m	Si$	DO14Δ
21	VA308							15p	4.0	6.2;2.0 - 200V$	200 $	75	50M	2.8 ☑	500m	Si$	DO14Δ
22	VA309							15p	4.0	6.2;2.0 - 200V$	200 $	100	50M	2.1 ☑	500m	Si$	DO14Δ
23	VA5142							15p	4.0	13.5-16.5	90	250	50M		400m	Si	DO7
24	VA5142A							15p	4.0	14.3-15.7	90	250	50M		400m	Si	DO7
25	VC15,A,B							15p%	4.0	4.7 - 39	50 $	10	.05G				DO7
26	VC215,A,B							15p%	4.0	4.7 - 39	50 $	25	.05G				DO7
27	VC314,A,B							15p%	4.0	3.0;1.0 - 25V$	25 $	50	50M				DO7
28	VC315,A,B							15p%	4.0	4.0;2V-80V$	80 $	50	.05G				DO7
29	VC414,A,B							15p%	4.0	3.0;1V-25V$	25 $	100	.05G				DO7
30	VC415,A,B							15p%	4.0	4.0;1V-50V$	50 $	100	.05G				DO7
31	VC416,A,B							15p%	4.0	4.0;2.0 - 80V$	100 $	100	50M				DO7
32	VC615,A,B							15p%	4.0	3.0;1V-25V$	40 $	200	.05G				DO7
33	VC616,A,B							15p%	4.0	3.0;1V-25V$	40 $	300	.05G				DO7
34	VC728	12G						15p	4.0	2.6;2.0V-20V$	20 ☑	250	50M			Si	DO7
35	VC824,A,B							15p%	4.0	6.5 - 39	25 $	13	.05G				DO7
36	VC844,A,B							15p%	4.0	3.3 - 39	100 $	4.5	50M				DO7
37	VC6615							15p	4.0	35-7.5;0.0V-20V	20 $	400	30M				A1da
38	VNA418H							15p	4.0	7.0;0.0V-60V$	60 $	600	50M			Si	F136
39	VQA418							15p	4.0	3.0;4.0V-60V$	60 $	300	50M			Si	DO7
40	VQA518							15p§	4.0	3.7;4.0V-100V$	100 $	200	50M			Si	DO7
41	VSA418H							15p	4.0	7.0;0.0V-60V$	60 $	600	50M			Si	F128
42	VTA418H							15p	4.0	7.0;0.0V-60V$	60 $	600	50M			Si	F130
43	VVC207,A,B,C,D							15p%	4.0	2.2;4.0V-25V$	25	13	50M		400m§	Si	DO7†
44	VVC208,A,B,C,D							15p%	4.0	3.9;4.0V-100V$	100	4.5	50M		400m§	Si	DO7†
45	VVC405,A,B,C,D							15p%	4.0	2.2;4.0V-25V$	25	50	50M		400m§	Si	DO7†
46	VVC406,A,B,C,D							15p%	4.0	2.9;4.0V-50V$	50	125	50M		400m§	Si	DO7†
47	VVC407,A,B,C,D							15p%	4.0	3.6;4.0V-80V$	80	50	50M		400m§	Si	DO7†
48	VVC408,A,B,C,D							15p%	4.0	3.9;4.0V-100V$	100	100	50M		400m§	Si	DO7†
49	VVC707,A,B,C,D							15p%	4.0	2.4;4.0V-30V$	30	50	50M		400m§	Si	DO7†
50	VVC733,A,B,C,D							15p%	4.0	2.4;4.0V-30V$	30	30	50M		400m§	Si	DO7†
51	VVC734,A,B,C,D							15p%	4.0	2.4;4.0V-30V$	30	450	50M		400m§	Si	DO7†
52	VVC735,A,B,C,D							15p%	4.0	2.0;4.0V-20V$	20	250	50M		400m§	Si	DO7†
53	VVC813,A,B,C,D							15p%	4.0	3.2;4.0V-60V$	60	10	50M		400m§	Si	DO7†
54	VVC814,A,B,C,D							15p%	4.0	3.2;4.0V-60V$	60	100	50M		400m§	Si	DO7†
55	VVC855,A,B,C,D							15p%	4.0	2.4;4.0V-30V$	30	100	50M		400m§	Si	DO7†
56	VVC856,A,B,C,D							15p%	4.0	2.7;4.0V-40V$	40	200	50M		400m§	Si	DO7†
57	VVC857,A,B,C,D							15p%	4.0	2.7;4.0V-40V$	40	300	50M		400m§	Si	DO7†
58	VVC858,A,B,C,D							15p%	4.0	3.2;4.0V-60V$	60	100	50M		400m§	Si	DO7†
59	VVC859,A,B,C,D							15p%	4.0	4.2;4.0V-110V$	110	100	50M		400m§	Si	DO7†
60	VVC916,A,B,C,D							15p%	4.0	2.2;4.0V-25V$	25	150	50M		400m§	Si	DO7†
61	VVC917,A,B,C,D							15p%	4.0	2.9;4.0V-50V$	50	75	50M		400m§	Si	DO7†
62	VVC918,A,B,C,D							15p%	4.0	3.6;4.0V-80V$	80	100	50M		400m§	Si	DO7†
63	VVC919,A,B,C,D							15p%	4.0	3.9;4.0V-100V$	100	75	50M		400m§	Si	DO7†
64	VVC920,A,B,C,D							15p%	4.0	4.8;4.0V-150V$	150	60	50M		400m§	Si	DO7†
65	VVC921,A,B,C,D							15p%	4.0	4.8;4.0V-150V$	150	100	50M		400m§	Si	DO7†
66	VVC955,A,B,C,D							15p%	4.0	2.9;4.0V-50V$	50				400m§	Si	DO7†
67	VVC957,A,B,C,D							15p%	4.0	3.6;4.0V-80V$	80				400m§	Si	DO7†
68	VVC1001,A,B,C,D							15p%	4.0	3.14;4.0V-50V$	50	700	50M		400m§	Si	DO7†
69	VVC1002,A,B,C,D							15p%	4.0	3.16;4.0V-60V$	60	500	50M		400m§	Si	DO7†
70	VVC1628,A,B,C							15p%	4.0	2.0-3.2;2.0V-20V$	20	250	50M		400m§	Si	DO7†
71	VYA418H							15p	4.0	7.0;0.0V-60V$	60 $	600	50M			Si	F135
72	ZC704							15pΔ†	4.0	2.8;2.0V-30V$;10%	30	400	50M		400m	Si	DO7Δ
73	ZC704B							15pΔ†	4.0	2.8;2.0V-30V$;5%	30	400	50M		400m	Si	DO7Δ
74	ZC704C							15pΔ†	4.0	2.8;2.0V-30V$;2%	30	400	50M		400m	Si	DO7Δ
75	ZC744							15p§	4.0	2.8;2.0V-3.0V$	30	400	50M			Si$Δ	C219
76	MA340							16p☑	2.0	2.4;2.0-10V$	25			1.2		Si$#	A246
77	MA44110							16p☑	6.0	8.0-16Ø	150 ☑			1.0	12 ☑	Si$Δ	S454
78	MA44210							16p☑	6.0	8.0-16Ø	150 ☑			1.0	12 ☑	Si$Δ	S454
79	MA345	2.0GØ						16p☑	10	10-16Ø	15	40 Ø	50M			Si#	A24d
80	PL0196-1		5.0G					17p		14-20Ø	200 ☑	☑	10G			Si$	F27as
81	BB205A#							17p	1.0	11-2at3V-25V	28		470u	.80		Si$#	A342a
82	BB205B	860MØ						17p†	1.0	17-2.0	30			800m		Si#	M501
83	BB205B#							17p	1.0	11-1.9at3V-25V	28		470u	.80		Si$#	A342a
84	BB205G#							17p	1.0	11-1.8at3V-25V	28		470u	1.2		Si$#	A342a
85	GC1816							17p	4.0	44-4.4	90	550	50M			Si	F111b†
86	MA4289							17p	6.0		30			3.0		Si	F3a
87	PH1206-1,2,3,4		5.0G	10G	15G	20G		17p	6.0	14 - 20Ø	6.0	☑	10G			Si$	F58
88	PH1206A,B	30G	40G					17p	6.0	14-20Ø	6.0	☑	10G			Si$	F58
89	PH1216-1,2,3,4		5.0G	10G	15G	20G		17p	6.0	14 - 20Ø	15	☑	10G			Si$	F58
90	PH1216A,B	30G	40G					17p	6.0	14-20Ø	15	☑	10G			Si$	F58
91	PH1226-1,2,3,4		5.0G	10G	15G	20G		17p	6.0	14 - 20Ø	24	☑	10G			Si$	F58
92	PH1226A	30G						17p	6.0	14-20Ø	24	☑	10G			Si$	F58
93	PH1236-1,2,3	5.0G	10G	15G				17p	6.0	14 - 20Ø	30	☑	10G			Si$	F58
94	PH1246-1,2,3	5.0G	10G	15G				17p	6.0	14 - 20Ø	45	☑	10G			Si$	F58
95	PH1256-1,2,3	5.0G	10G	15G				17p	6.0	14 - 20Ø	60	☑	10G			Si$	F58
96	PH1266-1,2,3	5.0G	10G	15G				17p	6.0	14 - 20Ø	90	☑	10G			Si$	F58
97	PH1276-1,2,3	5.0G	10G	15G				17p	6.0	14 - 20Ø	120	☑	10G			Si$	F58
98	PH1286-1	5.0G						17p	6.0	14 - 20Ø	150	☑	10G			Si$	F58
99	PH1296-1	5.0G						17p	6.0	14 - 20Ø	200	☑	10G			Si$	F58
100	PL0106-1,2,3,4		5.0G	10G	15G	20G		17p	6.0	14 - 20Ø	6.0	☑	10G			Si	F27d
101	PL0106A,B	30G	40G					17p	6.0	14-20Ø	6.0	☑	10G			Si	F27d
102	PL0116-1,2,3,4		5.0G	10G	15G	20G		17p	6.0	14 - 20Ø	15	☑	10G			Si	F27d
103	PL0116A,B	30G	40G					17p	6.0	14-20Ø	15	☑	10G			Si	F27d
104	PL0126-1,2,3,4		5.0G	10G	15G	20G		17p	6.0	14 - 20Ø	24	☑	10G			Si	F27d
105	PL0126A	30G						17p	6.0	14-20Ø	24	☑	10G			Si	F27d
106	PL0136-1,2,3	5.0G	10G	15G				17p	6.0	14 - 20Ø	30	☑	10G			Si	F27d
107	PL0146-1,2,3	5.0G	10G	15G				17p	6.0	14 - 20Ø	45	☑	10G			Si	F27d
108	PL0156-1,2,3	5.0G	10G	15G				17p	6.0	14 - 20Ø	60	☑	10G			Si	F27d
109	PL0166-1,2,3	5.0G	10G	15G				17p	6.0	14 - 20Ø	90	☑	10G			Si	F27d
110	PL0176-1,2,3	5.0G	10G	15G				17p	6.0	14 - 20Ø	120	☑	10G			Si	F27d

SYMBOLS AND CODES EXPLAINED IN INTERPRETER

6. VOLTAGE VARIABLE CAPACITORS & VARACTOR DIODES

IN ORDER OF (1) TYPICAL CAPACITANCE, (2) TEST VOLTAGE, and (3) TYPE No.

LINE No.	[3] TYPE No.	MINIMUM CUTOFF FREQUENCY (Corresponding to Type Numbers in previous column) (Hz)	(Hz)	(Hz)	(Hz)	(Hz)	(Hz)	TYP. CAP. [1] CAP. Cj (F)	[2] at TEST VOLT (V)	CAPACITANCE RANGE (for V = 0 to PIV) Ø - at TEST VOLT. (pF)	PIV (V)	Q FACTOR MIN. Q	at TEST FREQ (Hz)	MAX. SER. RES. Rs (Ω)	MAX. DISS. @ 25°C (W)	DESCRIPTION MAT.	DWG. No.
1	PL0186-1	5.0G						17p	6.0	14 - 20Ø	150 ☑		10G			Si	F27d
2▼	BB112							17pØ	8.5	17-540	12 $			1.5		Si	C201a
3	VGA919S							17p§	10	40p0.0V;7.0p60V	250 $			2.5		Si	S170
4	BBY25S1							18p†	0.0	9.0$	120	300	50M			Si	M1069
5	PSV113-01							18p	0.0	5.25;0.0V-45V$	45 ☑	1.5k	50M			Si§	F27as
6	PSV113-05							18p	0.0	5.25;0.0V-45V$	45 ☑	1.5k	50M			Si§	F10af
7	PSV113-08							18p	0.0	5.25;0.0V-45V$	45 ☑	1.5k	50M			Si§	A1vd
8	PSV113-14							18p	0.0	5.25;0.0V-45V$	45 ☑	1.5k	50M			Si§	A2u
9	PSV113-16							18p	0.0	5.25;0.0V-45V$	45 ☑	1.5k	50M			Si§	A1st
10	PSV113-21							18p	0.0	5.25;0.0V-45V$	45 ☑	1.5k	50M			Si§	M86e
11	PSV113-31							18p	0.0	5.25;0.0V-45V$	45 ☑	1.5k	50M			Si§	F10ah
12	PSV113-45							18p	0.0	5.25;0.0V-45V$	45 ☑	1.5k	50M			Si§	F54c
13	PSV125-01							18p	0.0	7.0;0.0V-60V$	60 ☑	1.0k	50M			Si§	F27as
14	PSV125-06							18p	0.0	7.0;0.0V-60V$	60 ☑	1.0k	50M			Si§	A1st
15	PSV125-14							18p	0.0	7.0;0.0V-60V$	60 ☑	1.0k	50M			Si§	A2u
16	PSV125-21							18p	0.0	7.0;0.0V-60V$	60 ☑	1.0k	50M			Si§	M86e
17	PSV125-31							18p	0.0	7.0;0.0V-60V$	60 ☑	1.0k	50M			Si§	F10ah
18	PSV135-01							18p	0.0	8.2;0.0V-90V$	90 ☑	800	50M			Si	F27as
19	PSV135-14							18p	0.0	8.2;0.0V-90V$	90 ☑	800	50M			Si	A2u
20	PSV135-16							18p	0.0	8.2;0.0V-90V$	90 ☑	800	50M			Si	A1st
21	PSV135-21							18p	0.0	8.2;0.0V-90V$	90 ☑	800	50M			Si	M86e
22	PSV135-31							18p	0.0	8.2;0.0V-90V$	90 ☑	800	50M			Si	F10ah
23	PSV144-01							18p	0.0	10;0.0V-120V$	120 ☑	480	50M			Si	F27as
24	PSV144-14							18p	0.0	10;0.0V-120V$	120 ☑	480	50M			Si	A2u
25	PSV144-16							18p	0.0	10;0.0V-120V$	120 ☑	480	50M			Si	A1st
26	PSV144-21							18p	0.0	10;0.0V-120V$	120 ☑	480	50M			Si	M86e
27	PSV144-31							18p	0.0	10;0.0V-120V$	120 ☑	480	50M			Si	F10ah
28	SD11E18							18p	0.0	18 - 36	18			1.0		Si	P3
29	SD12E18							18p	0.0	18 - 36	18			1.0		Si	F3a
30	SD22E18							18p	0.0	18 - 36	18			1.0		Si	F11
31	SD32E18							18p	0.0	18 - 36	18			1.0		Si	F21
32	SD42E18							18p	0.0	18 - 36	18			1.0		Si	F9a
33	SDGPE18							18p	0.0	18 - 36	18			1.0		Si	DO7
34	FC55							18p	1.0	3.3;1.0-10V$	15	90				Si$#	A1da
35	1N4791							18p%	4.0	2.48;0.0-4.0V$	20 $	15	50M			Si	DO14
36	1N4791A							18p%	4.0	2.48;0.0-4.0V$	20 $	15	50M			Si	DO14
37	1N4791B							18p%	4.0	2.48;0.0-4.0V$	20 $	15	50M			Si	DO14
38	1N4791C							18p%	4.0	2.48;0.0-4.0V$	20 $	15	50M			Si	DO14
39	1N4791D							18p%	4.0	2.48;0.0-4.0V$	20 $	15	50M			Si	DO14
40	1N4806							18p%	4.0	2.48;0.0-4.0V$	90 $	15	50M		500m	Si	DO14
41	1N4806A							18p%	4.0	2.48;0.0-4.0V$	90 $	15	50M		500m	Si	DO14
42	JAN1N4806A							18p%	4.0	2.48;0.0-4.0V$	90 $	15	50M		500m	Si	A1dd
43	1N4806B							18p%	4.0	2.48;0.0-4.0V$	90 $	15	50M		500m	Si	DO14
44	JAN1N4806B							18p%	4.0	2.48;0.0-4.0V$	90 $	15	50M		500m	Si	A1dd
45	1N4806C							18p%	4.0	2.48;0.0-4.0V$	90 $	15	50M		500m	Si	DO14
46	1N4806D							18p%	4.0	2.48;0.0-4.0V$	90 $	15	50M		500m	Si	DO14
47	1N5143							18p	4.0	2.8;4.0V-60V$	60 ☑	250	50M		400m	Si	DO7
48	1N5143A							18p	4.0	2.8;4.0V-60V$	60 ☑	250	50M		400m	Si	DO7
49	JAN1N5143A							18p	4.0	17.1-18.9Ø	65 ☑	250	50M		400m	Si	DO7
50	1N5446							18p%	4.0	2.6;2V-30V$	30	350	50M		400m	Si	DO7
51	1N5446A							18p%	4.0	2.6;2V-30V$	30	350	50M		400m	Si	DO7
52	1N5446B							18p%	4.0	2.6;2V-30V$	30	350	50M		400m	Si	DO7
53	1N5446C							18p%	4.0	2.6;2V-30V$	30	350	50M		400m	Si	DO7
54	1N5446D							18p%	4.0	2.6;2V-30V$	30	350	50M		400m	Si	DO7
55	1N5466							18p%	4.0	2.9;2V-30V$	30	500	50M		400m	Si	DO7
56	1N5466A							18p%	4.0	2.9;2V-30V$	30	500	50M		400m	Si	DO7
57	1N5466B							18p%	4.0	2.9;2V-30V$	30	500	50M		400m	Si	DO7
58	JAN1N5466B							18p	4.0	17.1-18.9Ø	30 ☑	500	50M		400m	Si	DO7
59	1N5466C							18p%	4.0	2.9;2V-30V$	30	500	50M		400m	Si	DO7
60	JAN1N5466C							18p	4.0	17.64-18.36Ø	30 ☑	500	50M		400m	Si	DO7
61	1N5466D							18p%	4.0	2.9;2V-30V$	30	500	50M		400m	Si	DO7
62	1N5686							18p%	4.0	3.2;2.0V-40V$	40	500	50M		400m	Si	DO7
63	1N5686A							18p%	4.0	3.2;2.0V-40V$	40	500	50M		400m	Si	DO7
64	1N5686B							18p%	4.0	3.2;2.0V-40V$	40	500	50M		400m	Si	DO7
65	1N5701							18p%	4.0	2.8;4.0V-60V$	60	375	50M		400m	Si	DO7
66	1N5701A							18p%	4.0	2.8;4.0V-60V$	60	375	50M		400m	Si	DO7
67	1N5701B							18p%	4.0	2.8;4.0V-60V$	60	375	50M		400m	Si	DO7
68	CV831							18p	4.0	16.2-19.8Ø	30	25	50M		400m	Si	DO7
69	CV1630							18p	4.0	16.2-19.8Ø	20	250	50M		400m	Si$	DO7
70	CV1871B							18p	4.0	16.20-19.80	60	200	100M		5.0	Si	F27x☑
71	CV1871D							18p	4.0	16.20-19.80	60	200	100M		5.0	Si	F56n☑
72	CV5018							18p	4.0	2.5;2.0V-30V$	30	350	50M		400m	Si	DO7
73	CVH2030-22							18p	4.0	4.5;0.0-30$;10%	30 ☑	1.8k	50M			Si$§	u30b
74	CVH2060-22							18p	4.0	7.5;0.0-60$;10%	60 ☑	1.0k	50M			Si$§	u30b
75	D1730,B,C							18p†%	4.0	3.0;2V-30V$	30 ☑	450	50M		400m	Si#$	DO7
76	DC4215B							18p	4.0			250 Ø	50M			Si	DO7Δ
77	DT316							18p§	4.0	4.6to1;30V§Ø	30 ☑	2.0k	50M			Si*	V13
78	DT616							18p§	4.0	7.2to1;60V§Ø	60 ☑	900	50M			Si*	V13
79	DT916							18p§	4.0	9.4 to 1;90v§Ø	90 ☑	600	50M			Si*	V13
80	DT4516							18p§	4.0	6.2to1;45V§Ø	45 ☑	1.2k	50M			Si*	V13
81♦	DVH6730-22							18p§	4.0	4.4;0.0-30$;10%	30 ☑	1.8k	50M			Si$§	A90a
82♦	DVH6731-22	90G						18p†	4.0	4.4;0.0V-30V$;10%	30 ☑	1.8k	50M			Si$§	F143
83	DVH6732-22	90G						18p†	4.0	4.4;0.0V-30V$;10%	30 ☑	1.8k	50M			Si$§	F56ad
84	DVH6733-22	90G						18p†	4.0	4.4;0.0V-30V$;10%	30 ☑	1.8k	50M			Si$§	F59u
85	DVH6734-22	90G						18p†	4.0	4.4;0.0V-30V$;10%	30 ☑	1.8k	50M			Si$§	M929
86♦	DVH6760-22							18p§	4.0	7.0;0.0-60$;10%	60 ☑	1.0k	50M			Si$§	A90a
87♦	DVH6761-22	50G						18p†	4.0	7.0;0.0V-60V$;10%	60 ☑	1.0k	50M			Si$§	F143
88	DVH6762-22	50G						18p†	4.0	7.0;0.0V-60V$;10%	60 ☑	1.0k	50M			Si$§	F56ad
89	DVH6763-22	50G						18p†	4.0	7.0;0.0V-60V$;10%	60 ☑	1.0k	50M			Si$§	F59u
90	DVH6764-22	50G						18p†	4.0	7.0;0.0V-60V$;10%	60 ☑	1.0k	50M			Si$§	M929
91	EP1030A							18p†Δ	4.0	2.9;2.0V-30V$	30	800	50M		5.0	Si	F59q
92	EP1030B							18p†Δ	4.0	2.9;2.0V-30V$	30	800	50M		5.0	Si	F27ah
93	EP1030D							18p†Δ	4.0	2.9;2.0V-30V$	30	800	50M		5.0	Si	F56q
94	EP1030E							18p†Δ	4.0	2.9;2.0V-30V$	30	800	50M		5.0	Si	F59j
95	EP1030H							18p†Δ	4.0	2.9;2.0V-30V$	30	800	50M		5.0	Si	S428b
96	GC1716	42G						18p§	4.0	7.0;0.0V-60V$	60 ☑	850	50M				F111b†
97	GC1716A							18p†Δ	4.0	7.0;0.0V-60V$	60	850	50M			Si	F59q
98	GC1716B							18p†Δ	4.0	7.0;0.0V-60V$	60	850	50M			Si	F27ah
99	GC1716D							18p†Δ	4.0	7.0;0.0V-60V$	60	850	50M			Si	F56q
100	GC1716E							18p†Δ	4.0	7.0;0.0V-60V$	60	850	50M			Si	F59j
101	GC1716H							18p†Δ	4.0	7.0;0.0V-60V$	60	850	50M			Si	S428b
102	GC1766							18p†Δ	4.0	7.0;0.0V-60V$;10%	60	800	50M		400m	Si	DO7
103	GC1766B							18p†Δ	4.0	7.0;0.0V-60V$;5%	60	800	50M		400m	Si	DO7
104	GC1766C							18p†Δ	4.0	7.0;0.0V-60V$;2%	60	800	50M		400m	Si	DO7
105	HA1230A							18p†Δ	4.0	4.0;2.0V-30V$;10%	30	600	50M		250m	Si	A1ah
106	HA1230B							18p†Δ	4.0	4.0;2.0V-30V$;5%	30	600	50M		250m	Si	A1ah
107	HA1230C							18p†Δ	4.0	4.0;2.0V-30V$;2%	30	600	50M		250m	Si	A1ah
108	HA1716A							18p†Δ	4.0	7.0;0.0V-30V$	30	850	50M			Si	F59q
109	HA1716B							18p†Δ	4.0	7.0;0.0V-30V$	30	850	50M			Si	F27ah
110	HA1716D							18p†Δ	4.0	7.0;0.0V-30V$	30	850	50M			Si	F56q

6. VOLTAGE VARIABLE CAPACITORS & VARACTOR DIODES

IN ORDER OF (1) TYPICAL CAPACITANCE, (2) TEST VOLTAGE, and (3) TYPE No.

LINE No.	[3] TYPE No.	MINIMUM CUTOFF FREQUENCY (Corresponding to Type Numbers in previous column) (Hz)	(Hz)	(Hz)	(Hz)	(Hz)	(Hz)	TYP. CAP. [1] CAP. Cj (F)	[2] at TEST VOLT (V)	CAPACITANCE RANGE (for V = 0 to PIV) Ø - at TEST VOLT. (pF)	PIV (V)	Q FACTOR MIN. Q	at TEST FREQ (Hz)	MAX. SER. RES. Rs (Ω)	MAX. DISS. @ 25°C (W)	DESCRIPTION MAT.	DWG. No.
1	HA1716E							18pt△	4.0	7.0;0.0V-30V$	30	850	50M			Si	F59j
2	HA1716H							18pt△	4.0	7.0;0.0V-30V$	30	850	50M			Si	S428b
3	HA1930A							18p△†	4.0	4.0;2.0V-30V$;10%	30	600	50M		400m	Si	DO7
4	HA1930B							18p△†	4.0	4.0;2.0V-30V$;5%	30	600	50M		400m	Si	DO7
5	HA1930C							18p△†	4.0	4.0;2.0V-30V$;2%	30	600	50M		400m	Si	DO7
6	KV110B							18pt	4.0	14.4-21.6Ø	45	300	50M		100m§	Si#	A352
7	KV110D							18pt	4.0	14.4-21.6Ø	45	150	50m		100m§	Si#$	A352
8	KV630							18p§	4.0	2.6;2.0V-20V$	20 ☑	250	50M		400m	Si#$	DO7
9	KV4806							18p%	4.0	4.03;4.0V-90V$	90 $	100	50m		500m	▼	DO14
10	KV4806A							18p%	4.0	4.03;4.0V-90V$	90 $	100	50M		500m	▼	DO14
11	KV4806B							18p%	4.0	4.03;4.0V-90V$	90 $	100	50m		500m	▼	DO14
12	KV4806C							18p%	4.0	4.03;4.0V-90V$	90 $	100	50m		500m	▼	DO14
13	KV4806D							18p%	4.0	4.03;4.0V-90V$	90 $	100	50m		500m	▼	DO14
14	LP1030A							18pt△	4.0	4.6;0.0V-25V$	25	600	50M		5.0	Si	F59q
15	LP1030B							18pt△	4.0	4.6;0.0V-25V$	25	600	50M		5.0	Si	F27ah
16	LP1030D							18pt△	4.0	4.6;0.0V-25V$	25	600	50M		5.0	Si	F56q
17	LP1030E							18pt△	4.0	4.6;0.0V-25V$	25	600	50M		5.0	Si	F59j
18	LP1030H							18pt△	4.0	4.6;0.0V-25V$	25	600	50M		5.0	Si	S428b
19▼	MA4H033							18pt	4	4.5-5.6	30	900	50M			Si	V25
20	MA45072							18p	4.0		45	1000	50M			Si	DO7
21	MA45152							18p	4.0		60	800	50M			Si	DO7
22	MA45277							18p△	4.0	7.2;0V-60V$	60	900	50M			Si§§	V11†
23	MA45337							18p△	4.0	4.6;0V-30V$	30	1.1k	50M			Si$#	DO7†
24	MA45352							18p△	4.0	5.9;0V-45V$	45	800	50M			Si$#	DO7†
25	MA45367							18p△	4.0	7.3;0V-60V$	60	500	50M			Si$#	DO7†
26	MC730	12G						18p	4.0	2.6;2.0V-20V$	20 ☑	250	50M			Si	A1au
27♦	MV831							18p§	4.0	16.2-19.8Ø	30 ☑	25	50M		2.0	Si	DO7
28	MV831B							18p△†	4.0	2.0;4V-25V$;5%	30	25	50M		400m	Si	DO7
29	MV831C							18p△†	4.0	2.0;4V-25V$;2%	30	25	50M		400m	Si	DO7
30	MV1630							18p§	4.0	16.2-19.8Ø	20 ☑	250	50M		400m	Si	DO7
31	MV1630B							18p△†	4.0	2.6;2.0V-20V$;5%	20	250	50M		400m	Si	DO7
32	MV1630C							18p△†	4.0	2.6;2.0V-20V$;2%	20	250	50M		400m	Si	DO7
33	MV1730							18p§	4.0	16.2 - 19.8Ø	30 ☑	450	.05G		.40	Si$	DO7
34	MV1730A							18p	4.0		30 ☑	450	50M		400m	Si△#	DO7
35♦	MV1871	45GØ						18p§	4.0	16.2-19.8Ø	60 ☑	400	50M		400m	Si§	DO7
36♦	MV2106							18p§	4.0	16.2-19.8Ø	30 ☑	350	50M		280m	Si	M764a
37	MVI2106							18pt	4.0	3.3;2.0V-30V$	30 ☑	250	100M		200m	Si	M750
38	SQ1230A,B,C							18pt△	4.0	3.2;2V-30V$	30	900	50M		250m	Si	A1ah
39	SQ1280A,B,C							18p§%	4.0		30 ☑	450	50M		250m	Si#$	A1ah
40	SQ1730,B,C							18p△†	4.0	3.1;2V-30V$	30	900	50M		400m	Si	DO7
41	SQ5466A							18pt△	4.0	3.1;2.0V-30V$;10%	30	500	50M		400m	Si	DO7
42	SQ5466B							18pt△	4.0	3.1;2.0V-30V$;5%	30	500	50M		400m	Si	DO7
43	SQ5466C							18pt△	4.0	3.1;2.0V-30V$;2%	30	500	50M		400m	Si	DO7
44	VA5143							18p	4.0	16.2-19.8	90	250	50M		400m	Si	DO7
45	VA5143A							18p	4.0	17.1-18.9	90	250	50M		400m	Si	DO7
46	VC618,A,B							18p%	4.0	3.0;1V-25V$	40 $	200	.05G				DO7
47	VC619,A,B							18p%	4.0	3.0;1V-25V$	40 $	300	.05G				DO7
48	VC730	12G						18p	4.0	2.6;2.0V-20V$	20 ☑	250	50M			Si	DO7
49	VVC736,A,B,C,D							18p§	4.0	2.4;4.0V-30V$	30	25	50M		400m§	Si	DO7†
50	VVC737,A,B,C,D							18p§	4.0	2.0;4.0V-20V$	20	250	50M		400m§	Si	DO7†
51	VVC738,A,B,C,D							18p§	4.0	2.4;4.0V-30V$	30	450	50M		400m§	Si	DO7†
52	VVC861,A,B,C,D							18p§	4.0	2.7;4.0V-40V$	40	300	50M		400m§	Si	DO7†
53	VVC1630,A,B,C							18p%	4.0	2.0-3.2;2.0V-20V$	20	250	50M		400m§	Si	DO7†
54	ZC705							18p△†	4.0	2.8;2.0V-30V$;10%	30	350	50M		400m	Si	DO7△
55	ZC705B							18p△†	4.0	2.8;2.0V-30V$;5%	30	350	50M		400m	Si	DO7△
56	ZC705C							18p△†	4.0	2.8;2.0V-30V$;2%	30	350	50M		400m	Si	DO7△
57	ZC745							18p§	4.0	2.8;2.0V-3.0V$	30	350	50M			Si$△	C219
58	MA4341F1							18p	6.0	12 - 25	6.0			500m	1.0	Si	P3a§
59	1S554T	1.2G						19p	6.0	16-21Ø	20	60	20M			Si△	A395a
60▼	V920E,A,B,C,D%							20p		7.9;0.5V-90V $	90 $				400m		DO7
61	HA1824A							20p△†	1.0	4.5;1.0V-28V$;10%	30	250	50M		400m	Si	DO7△
62	HA1824B							20p△†	1.0	4.5;1.0V-28V$;5%	30	250	50M		400m	Si	DO7△
63	HA1824C							20p△†	1.0	4.5;1.0V-28V$;2%	30	250	50M		400m	Si	DO7△
64	BB106							20pØ	3.0	4.5;3.0V-25V$	30			600m		Si#	M501
65	1N3555							20p	4.0		100	60	50M			Si	A60p
66	1N3945							20p	4.0	4.0 - 6.0	20	7.0	.05G		.50	Si	DO14
67	1N5447							20p%	4.0	2.6;2V-30V$	30	350	50M		400m	Si	DO7
68	1N5447A							20p%	4.0	2.6;2V-30V$	30	350	50M		400m	Si	DO7
69	1N5447B							20p%	4.0	2.6;2V-30V$	30	350	50M		400m	Si	DO7
70	1N5447C							20p%	4.0	2.6;2V-30V$	30	350	50M		400m	Si	DO7
71	1N5447D							20p%	4.0	2.6;2V-30V$	30	350	50M		400m	Si	DO7
72	1N5467							20p%	4.0	2.9;2V-30V$	30	500	50M		400m	Si	DO7
73	1N5467A							20p%	4.0	2.9;2V-30V$	30	500	50M		400m	Si	DO7
74	1N5467B							20p%	4.0	2.9;2V-30V$	30	500	50M		400m	Si	DO7
75	JAN1N5467B							20p	4.0	19-21Ø	30 ☑	500	50M		400m	Si	DO7
76	1N5467C							20p%	4.0	2.9;2V-30V$	30	500	50M		400m	Si	DO7
77	JAN1N5467C							20p	4.0	19.6-20.4Ø	30 ☑	500	50M		400m	Si	DO7
78	1N5467D							20p%	4.0	2.9;2V-30V$	30	500	50M		400m	Si	DO7
79	2001							20p§	4.0	6.0;4.0V-20V$	22 ☑	160	50M		400m	Si#	DO7△
80	2001A							20p§	4.0	6.0;4.0V-20V$	22 ☑	160	50M		400m	Si#	DO7△
81	2002							20p§	4.0	2.4;4.0V-8.0V$	15 ☑	160	50M		400m	Si#	DO7△
82	2002A							20p§	4.0	2.4;4.0V-8.0V$	15 ☑	160	50M		400m	Si#	DO7△
83	BA102							20pØ	4.0	20-45Ø	20 †			3.0		Si#$	DO7
84	BA102A							20pØ	4.0	20-25Ø	20 †			3.0		Si	DO7
85▼	BB119							20pØ	4.0	15-35	15 $			1.5		Si	DO35
86	CV1632							20p	4.0	18-22Ø	20	250	50M		400m	Si$	DO7
87	CV1872B							20p	4.0	18-22	60	175	100M		5.0	Si	F27x☑
88	CV1872D							20p	4.0	18-22	60	175	100M		5.0	Si	F56n☑
89	CV5020							20p	4.0	2.5;2.0V-30V$	30	350	50M		400m	Si	DO7
90	D1732,B,C							20pt%	4.0	3.2;2V-30V$	30 ☑	400	50M		400m	Si#$	DO7
91	DHA6520							20p	4.0	18-22Ø		80	50m				DO7
92	DHA6520A							20p	4.0	18-22Ø		160	50m				DO7
93	DHA6520B							20p	4.0	18-22Ø		160	50m				DO7
94	DHA6520C							20p	4.0	19-21Ø		160	50m				DO7
95	DHA6520D							20p	4.0	19-21Ø		160	50m				DO7
96♦	DKV6520							20p§	4.0	18-22 Ø	8.0 ☑	80	50M			Si§#	A90a △
97♦	DKV6520A							20p§	4.0	18-22 Ø	15 ☑	160	50M			Si§#	A90a △
98♦	DKV6520B							20p§	4.0	18-22 Ø	22 ☑	160	50M			Si§#	A90a △
99♦	DKV6520C							20p§	4.0	19-21 Ø	15 ☑	160	50M			Si§#	A90a △
100♦	DKV6520D							20p§	4.0	19-21 Ø	22 ☑	160	50M			Si§#	A90a △
101	EP1032A							20pt△	4.0	2.9;2.0V-30V$	30	800	50M		5.0	Si	F59q
102	EP1032B							20pt△	4.0	2.9;2.0V-30V$	30	800	50M		5.0	Si	F27ah
103	EP1032D							20pt△	4.0	2.9;2.0V-30V$	30	800	50M		5.0	Si	F56q
104	EP1032E							20pt△	4.0	2.9;2.0V-30V$	30	800	50M		5.0	Si	F59j
105	EP1032H							20pt△	4.0	2.9;2.0V-30V$	30	800	50M		5.0	Si	S428b
106	HC7082							20p	4.0	50 - 10	20	10	.05G			Si	DO7
107	HC7127							20p	4.0	50 - 5.0	70	10	.05G			Si	DO7
108	KV632							20p§	4.0	2.6;2.0V-20V$	20 ☑	250	50M		400m	Si#$	DO7
109	KV2001	11GØ						20p§	4.0	6.0;4.0V-20V$	22 ☑	160	50M	700m☑	250m	Si#▼	DO7△
110	KV2001A	11GØ						20p§	4.0	6.0;4.0V-20V$	22 ☑	160	50M	700m☑	250m	Si#▼	DO7△

6. VOLTAGE VARIABLE CAPACITORS & VARACTOR DIODES

IN ORDER OF (1) TYPICAL CAPACITANCE, (2) TEST VOLTAGE, and (3) TYPE No.

LINE No.	[3] TYPE No.	MINIMUM CUTOFF FREQUENCY (Corresponding to Type Numbers in previous column) (Hz)	(Hz)	(Hz)	(Hz)	(Hz)	(Hz)	TYP. CAP. [1] CAP. Cj (F)	[2] at TEST VOLT (V)	CAPACITANCE RANGE (for V = 0 to PIV) Ø - at TEST VOLT. (pF)	PIV (V)	Q FACTOR MIN. Q	at TEST FREQ (Hz)	MAX. SER. RES. Rs (Ω)	MAX. DISS. @ 25°C (W)	DESCRIPTION MAT.	DWG. No.
1	KV2002	11GØ						20p§	4.0	2.4;4.0V-8.0V$	15 ☑	160	50M	700mØ	250m	Si#▼	DO7Δ
2	KV2002A	11GØ						20p§	4.0	2.4;4.0V-8.0V$	15 ☑	160	50M	700mØ	250m	Si#▼	DO7Δ
3	KV2004	6.0GØ						20p§	4.0	18-22Ø	8.0 ☑	80	50M	1.3 ☑	250m	Si#▼	DO7Δ
4	LP1032A							20p†Δ	4.0	4.6;0.0V-25V$	25	500	50M		5.0	Si	F59q
5	LP1032B							20p†Δ	4.0	4.6;0.0V-25V$	25	500	50M		5.0	Si	F27ah
6	LP1032D							20p†Δ	4.0	4.6;0.0V-25V$	25	500	50M		5.0	Si	F56q
7	LP1032E							20p†Δ	4.0	4.6;0.0V-25V$	25	500	50M		5.0	Si	F59j
8	LP1032H							20p†Δ	4.0	4.6;0.0V-25V$	25	500	50M		5.0	Si	S428b
9	MA46520A							20p	4.0	22-18Ø	15	700				GA	A415
10	MA46520B							20p	4.0	22-18Ø	22	700				GA	A415
11	MA46520C							20p	4.0	21-19Ø	15	700				GA	A415
12	MA46520D							20p	4.0	21-19Ø	22	700				GA	A415
13	MC732	12G						20p	4.0	2.6;2.0V-20V$	20 ☑	250	50M			Si	A1au
14	MV1632							20p§	4.0	18-22Ø	20 ☑	250	50M		400m	Si	DO7
15	MV1632B							20pΔ†	4.0	2.6;2.0V-20V$;5%	20	250	50M		400m	Si	DO7
16	MV1632C							20pΔ†	4.0	2.6;2.0V-20V$;2%	20	250	50M		400m	Si	DO7
17	MV1732							20p§	4.0	18 - 22Ø	30 ☑	400	.05G		.40	Si$	DO7
18	SQ1232A,B,C							20pΔ†	4.0	3.2;2V-30V$	30	800	50M		250m	Si	A1ah
19	SQ1282A,B,C							20p§%	4.0		30 ☑	400	50M		250m	Si#$	A1ah
20	SQ1732,B,C							20pΔ†	4.0	3.1;2V-30V$	30	800	50M		400m	Si	DO7
21	SQ5467A							20p†Δ	4.0	3.1;2.0V-30V$;10%	30	500	50M		400m	Si	DO7
22	SQ5467B							20p†Δ	4.0	3.1;2.0V-30V$;5%	30	500	50M		400m	Si	DO7
23	SQ5467C							20p†Δ	4.0	3.1;2.0V-30V$;2%	30	500	50M		400m	Si	DO7
24♦	V20,A,B,C,D%	750M						20p%	4.0	3.9;0.5V-20V $	20 $	7.0	50M		400m	Si$	DO14
25♦	V20,A,B,C,D#	750M						20p%	4.0	3.9;0.5V-20V $	20 $	7.0	50M		400m		DO7
26	V20E,A,B,C,D	350M						20p%	4.0	7.9;500mV-90V$	90 $	7.0	50M		400m		DO7
27♦	V20E,A,B,C,D#	350M						20p%	4.0	7.9;0.5V-90V $	90 $	7.0	50M		400m	Si$	DO14
28	V20EG							20p	4.0	20%	70 $	10	50M		400m	Si$	DO7Δ
29	V20G							20p	4.0	20%	20 $	10	50M		400m	Si$	DO7Δ
30♦	V920,A,B,C,D%	750M						20p%	4.0	3.9;0.5V-20V $	25 $	15	50M		400m		DO7
31	V920,A,B,C,D#	750M						20p%	4.0	8.3-50	25 $	15	50M		500m	Si$	DO14
32♦	V920E,A,B,C,D							20p%	4.0	7.9;500mV-90V$	90 $				400m		DO14
33	V920E,A,B,C,D#	350M						20p%	4.0	5.0-50	90 $	7.0	50M		500m	Si$	DO14
34	VC20,A,B							20p%	4.0	6.5-50	50 $	10	50M				DO7
35	VC220,A,B							20p%	4.0	6.5 - 50	50 $	25	.05G				DO7
36	VC732	12G						20p	4.0	2.6;2.0V-20V$	20 ☑	250	50M			Si	DO7
37	VC825,A,B							20p%	4.0	10 - 50	20 $	7.0	.05G				DO7
38	VC845,A,B							20p%	4.0	5.0 - 50	70 $	7.0	.05G				DO7
39	VVC209,A,B,C,D							20p%	4.0	2.0;4.0V-20V$	20	7.0	50M		400m§	Si	DO7†
40	VVC210,A,B,C,D							20p%	4.0	3.3;4.0V-70V$	70	7.0	50M		400m§	Si	DO7†
41	VVC708,A,B,C,D							20p%	4.0	2.0;4.0V-20V$	20	15	50M		400m§	Si	DO7†
42	VVC709,A,B,C,D							20p%	4.0	3.8;4.0V-90V$	90	15	50M		400m§	Si	DO7†
43	VVC739,A,B,C,D							20p%	4.0	2.0;4.0V-20V$	20	250	50M		400m§	Si	DO7†
44	VVC740,A,B,C,D							20p%	4.0	2.4;4.0V-30V$	30	400	50M		400m§	Si	DO7†
45	VVC922,A,B,C,D							20p%	4.0	2.0;4.0V-20V$	20	10	50M		400m§	Si	DO7†
46	VVC923,A,B,C,D							20p%	4.0	3.3;4.0V-70V$	70	10	50M		400m§	Si	DO7†
47	VVC958,A,B,C,D							20p%	4.0	3.7;4.0V-90V$	90	7.0	50M		400m§	Si	DO7†
48	VVC1003,A,B,C,D							20p%	4.0	3.14;4.0V-50V$	50	700	50M		400m§	Si	DO7†
49	VVC1004,A,B,C,D							20p%	4.0	3.16;4.0V-60V$	60	500	50M		400m§	Si	DO7†
50	VVC1041,A,B,C,D							20p%	4.0	1.45;4.0V-10V$	10	100	50M		400m§	Si	DO7†
51	VVC1042,A,B,C,D							20p%	4.0	1.45;4.0V-10V$	10	100	50M		400m§	Si	DO7†
52	VVC1043,A,B,C,D							20p%	4.0	1.45;4.0V-10V$	10	100	50M		400m§	Si	DO7†
53	VVC1632,A,B,C							20p%	4.0	2.0-3.2;2.0V-20V$	20	250	50M		400m§	Si	DO7†
54	1N4388							20p☑	6.0		100 ☑	200	50M	2.0	10	Si	DO4
55	MA4961A,B							20p☑	6.0	10 - 20Ø	120 ☑			.50	15	Si	Z48
56	SD11F24							21p	0.0	21 - 42	24			1.0		Si	P3
57	SD12F24							21p	0.0	21 - 42	24			1.0		Si	F3a
58	SD22F24							21p	0.0	21 - 42	24			1.0		Si	F11
59	SD32F24							21p	0.0	21 - 42	24			1.0		Si	F21
60	SD42F24							21p	0.0	21 - 42	24			1.0		Si	F9a
61	SDGPF24							21p	0.0	21 - 42	24			1.0		Si	DO7
62	BB209#							21p	3.0	21-2.6at3V-25V	28	250	300M	.85 ☑		Si$#	A342a
63	1N3552							21p	4.0	20-22Ø	22	25	50M		150mØ		DO7
64	1N3627							21p	4.0	10 - 50	20	25	50M			Si	DO7
65	VVC815,A,B,C,D							21p%	4.0	2.2;4.0V-25V$	25	50	50M		400m§	Si	DO7†
66	BBY26S1							22p†	0.0	9.5$	120	300	50M			Si	M1069
67	PSV114-01							22p	0.0	5.5;0.0V-45V$	45 ☑	1.5k	50M			Si§	F27as
68	PSV114-06							22p	0.0	5.5;0.0V-45V$	45 ☑	1.5k	50M			Si§	A1st
69	PSV114-14							22p	0.0	5.5;0.0V-45V$	45 ☑	1.5k	50M			Si§	A2u
70	PSV114-21							22p	0.0	5.5;0.0V-45V$	45 ☑	1.5k	50M			Si§	M86e
71	PSV114-31							22p	0.0	5.5;0.0V-45V$	45 ☑	1.5k	50M			Si§	F10ah
72	PSV126-01							22p	0.0	7.0;0.0V-60V$	60 ☑	900	50M			Si§	F27as
73	PSV126-06							22p	0.0	7.0;0.0V-60V$	60 ☑	900	50M			Si§	A1st
74	PSV126-14							22p	0.0	7.0;0.0V-60V$	60 ☑	900	50M			Si§	A2u
75	PSV126-21							22p	0.0	7.0;0.0V-60V$	60 ☑	900	50M			Si§	M86e
76	PSV126-31							22p	0.0	7.0;0.0V-60V$	60 ☑	900	50M			Si§	F10ah
77	PSV136-01							22p	0.0	8.5;0.0V-90V$	90 ☑	700	50M			Si	F27as
78	PSV136-14							22p	0.0	8.5;0.0V-90V$	90 ☑	700	50M			Si	A2u
79	PSV136-16							22p	0.0	8.5;0.0V-90V$	90 ☑	700	50M			Si	A1st
80	PSV136-21							22p	0.0	8.5;0.0V-90V$	90 ☑	700	50M			Si	M86e
81	PSV136-31							22p	0.0	8.5;0.0V-90V$	90 ☑	700	50M			Si	F10ah
82	PSV145-01							22p	0.0	10;0.0V-120V$	120 ☑	480	50M			Si	F27as
83	PSV145-14							22p	0.0	10;0.0V-120V$	120 ☑	480	50M			Si	A2u
84	PSV145-16							22p	0.0	10;0.0V-120V$	120 ☑	480	50M			Si	A1st
85	PSV145-21							22p	0.0	10;0.0V-120V$	120 ☑	480	50M			Si	M86e
86	PSV145-31							22p	0.0	10;0.0V-120V$	120 ☑	480	50M			Si	F10ah
87	MV1410							22p†Δ	2.0	22-27Ø	12	200	1.0M		400m	Si	DO7Δ
88	MV1410A							22p†Δ	2.0	22-27Ø	12	200	1.0M		400m	Si	DO7Δ
89	MV1410B							22p†Δ	2.0	22-27Ø	12	200	1.0M		400m	Si	DO7Δ
90	ZC802							22pΔ†	2.0	5.75;2.0V-20V$;20%	25	300	50M		400m	Si▼	DO7Δ
91	ZC802A							22pΔ†	2.0	5.75;2.0V-20V$;10%	25	300	50M		400m	Si	DO7Δ
92	ZC802B							22pΔ†	2.0	5.75;2.0V-20V$;5%	25	300	50M		400m	Si	DO7Δ
93	ZC822							22p	2.0	5.5;2-20V$	25	200	50M		300m	Si▼	C219
94	ZC832A,B							22p%Δ	2.0	5.0-65;2.0V-20V$	25 $	200	50M		200m		M156eΔ
95	FMMD3102							22p†	3.0	37p-5p(.3-30V)	30 ☑	300	50M		200m	Si▼	M156e
96	MMBV3102							22p	3.0	20-25	30	300	50M		350m		M928
97	1N4598							22p	4.0	118 - 26Ø	90	50	.05G		.25		DO7
98	1N4609							22p	4.0	12.5 - 33Ø	35	60	.05G		.25	Si	DO7
99	1N4609A							22p	4.0		35	60	50M			Si	DO7
100	1N4792							22p%	4.0	2.46;0.0-4.0V$	20 $	15	50M		500m	Si	DO14
101	1N4792A							22p%	4.0	2.46;0.0-4.0V$	20 $	15	50M		500m	Si	DO14
102	1N4792B							22p%	4.0	2.46;0.0-4.0V$	20 $	15	50M		500m	Si	DO14
103	1N4792C							22p%	4.0	2.46;0.0-4.0V$	20 $	15	50M		500m	Si	DO14
104	1N4792D							22p%	4.0	2.46;0.0-4.0V$	20 $	15	50M		500m	Si	DO14
105	1N4807							22p%	4.0	2.46;0.0-4.0V$	90 $	15	50M		500m	Si	DO14
106	1N4807A							22p%	4.0	2.46;0.0-4.0V$	90 $	15	50M		500m	Si	DO14
107	JAN1N4807A							22p%	4.0	2.46;0.0-4.0V$	90 $	15	50M		500m	Si	A1dd
108	1N4807B							22p%	4.0	2.46;0.0-4.0V$	90 $	15	50M		500m	Si	DO14
109	JAN1N4807B							22p%	4.0	2.46;0.0-4.0V$	90 $	15	50M		500m	Si	A1dd
110	1N4807C							22p%	4.0	2.46;0.0-4.0V$	90 $	15	50M		500m	Si	DO14

SYMBOLS AND CODES EXPLAINED IN INTERPRETER

6. VOLTAGE VARIABLE CAPACITORS & VARACTOR DIODES

IN ORDER OF (1) TYPICAL CAPACITANCE, (2) TEST VOLTAGE, and (3) TYPE No.

LINE No.	[3] TYPE No.	MINIMUM CUTOFF FREQUENCY (Corresponding to Type Numbers in previous column) (Hz)	(Hz)	(Hz)	(Hz)	(Hz)	(Hz)	TYP. CAP. [1] CAP. Cj (F)	[2] at TEST VOLT (V)	CAPACITANCE RANGE (for V = 0 to PIV) Ø - at TEST VOLT. (pF)	PIV (V)	Q FACTOR MIN. Q	Q FACTOR at TEST FREQ (Hz)	MAX. SER. RES. Rs (Ω)	MAX. DISS. @ 25°C (W)	DESCRIPTION MAT.	DESCRIPTION DWG. No.
1	1N4807D							22p%	4.0	2.46;0.0-4.0V$	90 $	15	50M		500m	Si	DO14
2	1N5144							22p	4.0	3.2;4.0V-60V$	60 ☑	200	50M		400m	Si	DO7
3	1N5144A							22p	4.0	3.2;4.0V-60V$	60 ☑	200	50M		400m	Si	DO7
4	JAN1N5144A							22p	4.0	20.9-23.1Ø	65 ☑	200	50M		400m	Si	DO7
5	1N5448							22p%	4.0	2.6;2V-30V$	30	350	50M		400m	Si	DO7
6	1N5448A							22p%	4.0	2.6;2V-30V$	30	350	50M		400m	Si	DO7
7	1N5448B							22p%	4.0	2.6;2V-30V$	30	350	50M		400m	Si	DO7
8	1N5448C							22p%	4.0	2.6;2V-30V$	30	350	50M		400m	Si	DO7
9	1N5448D							22p%	4.0	2.6;2V-30V$	30	350	50M		400m	Si	DO7
10	1N5468							22p%	4.0	2.9;2V-30V$	30	500	50M		400m	Si	DO7
11	1N5468A							22p%	4.0	2.9;2V-30V$	30	500	50M		400m	Si	DO7
12	1N5468B							22p%	4.0	2.9;2V-30V$	30	500	50M		400m	Si	DO7
13	JAN1N5468B							22p	4.0	20.9-23.1Ø	30 ☑	500	50M		400m	Si	DO7
14	1N5468C							22p%	4.0	2.9;2V-30V$	30	500	50M		400m	Si	DO7
15	JAN1N5468C							22p	4.0	21.56-22.44Ø	30 ☑	500	50M		400m	Si	DO7
16	1N5468D							22p%	4.0	2.9;2V-30V$	30	500	50M		400m	Si	DO7
17	1N5687							22p%	4.0	3.3;2.0V-40V$	40	500	50M		400m	Si	DO7
18	1N5687A							22p%	4.0	3.3;2.0V-40V$	40	500	50M		400m	Si	DO7
19	1N5687B							22p%	4.0	3.3;2.0V-40V$	40	500	50M		400m	Si	DO7
20	1N5702							22p%	4.0	3.2;4.0V-60V$	60	375	50M		400m	Si	DO7
21	1N5702A							22p%	4.0	3.2;4.0V-60V$	60	375	50M		400m	Si	DO7
22	1N5702B							22p%	4.0	3.2;4.0V-60V$	60	375	50M		400m	Si	DO7
23	CV832							22p	4.0	19.8-24.2Ø	30	25	50M		400m	Si	DO7
24	CV1012,A,B,C,D	7.5G						22p%	4.0	48-7.1	60	150	50M		400m	Si	DO7
25	CV1112,A,B,C,D	7.5G						22p%	4.0	48-5.6	100	150	50M		400m	Si	DO7
26	CV1634							22p	4.0	19.8-24.2Ø	20	200	50M		400m	Si$	DO7
27	CV1873B							22p	4.0	19.80-24.20	60	175	100M		5.0	Si	F27x☑
28	CV1873D							22p	4.0	19.80-24.20	60	175	100M		5.0	Si	F56n☑
29	CV5022							22p	4.0	2.5;2.0V-30V$	30	350	50M		400m	Si	DO7
30	CVH2030-23							22p	4.0	4.5;0.0-30$;10%	30 ☑	1.6k	50M			Si$§	u30b
31	CVH2060-23							22p	4.0	7.5;0.0-60$;10%	60 ☑	950	50M			Si$§	u30b
32	D1734,B,C							22p†%	4.0	3.2;2V-30V$	30 ☑	400	50M		400m	Si#$	DO7
33	DC4216B							22p	4.0			250 Ø	50M			Si	DO7Δ
34♦	DVH6730-23							22p§	4.0	4.5;0.0-30$;10%	30 ☑	1.6k	50M			Si$§	A90a
35♦	DVH6731-23	80G						22p†	4.0	4.5;0.0V-30V$;10%	30 ☑	1.6k	50M			Si$§	F143
36	DVH6732-23	80G						22p†	4.0	4.5;0.0V-30V$;10%	30 ☑	1.6k	50M			Si$§	F56ad
37	DVH6733-23	80G						22p†	4.0	4.5;0.0V-30V$;10%	30 ☑	1.6k	50M			Si$§	F59u
38	DVH6734-23	80G						22p†	4.0	4.5;0.0V-30V$;10%	30 ☑	1.6k	50M			Si$§	M929
39♦	DVH6760-23							22p§	4.0	7.0;0.0-60$;10%	60 ☑	950	50M			Si$§	A90a
40♦	DVH6761-23	47G						22p†	4.0	7.0;0.0V-60V$;10%	60 ☑	950	50M			Si$§	F143
41	DVH6762-23	47G						22p†	4.0	7.0;0.0V-60V$;10%	60 ☑	950	50M			Si$§	F56ad
42	DVH6763-23	47G						22p†	4.0	7.0;0.0V-60V$;10%	60 ☑	950	50M			Si$§	F59u
43	DVH6764-23	47G						22p†	4.0	7.0;0.0V-60V$;10%	60 ☑	950	50M			Si$§	M929
44	E722	40G						22p	4.0	4.0;1.0V-50V$	60	800	50M			Si	F27az
45	EP1034A							22p†Δ	4.0	2.9;2.0V-30V$	30	800	50M		5.0	Si	F59q
46	EP1034B							22p†Δ	4.0	2.9;2.0V-30V$	30	800	50M		5.0	Si	F27ah
47	EP1034D							22p†Δ	4.0	2.9;2.0V-30V$	30	800	50M		5.0	Si	F56q
48	EP1034E							22p†Δ	4.0	2.9;2.0V-30V$	30	800	50M		5.0	Si	F59j
49	EP1034H							22p†Δ	4.0	2.9;2.0V-30V$	30	800	50M		5.0	Si	S428b
50	G122,A,B							22p%	4.0		25	100 Ø	50M		500m	Si$	A60j
51	G222,A,B							22p%	4.0		25	200 Ø	50M		500m	Si$	A60j
52	G322,A,B							22p%	4.0		25	300 Ø	50M		500m	Si$	A60j
53	G422,A,B							22p%	4.0		25	400 Ø	50M		500m	Si$	A60j
54	G522A,B,C							22pΔ†	4.0	2.0-2.5Ø;10,5,2%	25	500	50M		400m	Si	DO35
55	GC1717	42G						22p§	4.0	7.0;0.0V-60V$	60 ☑	850	50M				F111b†
56	GC1717A							22p†Δ	4.0	7.0;0.0V-60V$	60	850	50M			Si	F59q
57	GC1717B							22p†Δ	4.0	7.0;0.0V-60V$	60	850	50M			Si	F27ah
58	GC1717D							22p†Δ	4.0	7.0;0.0V-60V$	60	850	50M			Si	F56q
59	GC1717E							22p†Δ	4.0	7.0;0.0V-60V$	60	850	50M			Si	F59j
60	GC1717H							22p†Δ	4.0	7.0;0.0V-60V$	60	850	50M			Si	S428b
61	GC1767							22p†Δ	4.0	7.0;0.0V-60V$;10%	60	800	50M		400m	Si	DO7
62	GC1767B							22p†Δ	4.0	7.0;0.0V-60V$;5%	60	800	50M		400m	Si	DO7
63	GC1767C							22p†Δ	4.0	7.0;0.0V-60V$;2%	60	800	50M		400m	Si	DO7
64	HA1234A							22p†Δ	4.0	4.0;2.0V-30V$;10%	30	600	50M		250m	Si	A1ah
65	HA1234B							22p†Δ	4.0	4.0;2.0V-30V$;5%	30	600	50M		250m	Si	A1ah
66	HA1234C							22p†Δ	4.0	4.0;2.0V-30V$;2%	30	600	50M		250m	Si	A1ah
67	HA1717A							22p†Δ	4.0	7.0;0.0V-30V$	30	850	50M			Si	F59q
68	HA1717B							22p†Δ	4.0	7.0;0.0V-30V$	30	850	50M			Si	F27ah
69	HA1717D							22p†Δ	4.0	7.0;0.0V-30V$	30	850	50M			Si	F56q
70	HA1717E							22p†Δ	4.0	7.0;0.0V-30V$	30	850	50M			Si	F59j
71	HA1717H							22p†Δ	4.0	7.0;0.0V-30V$	30	850	50M			Si	S428b
72	HA1934A							22pΔ†	4.0	4.0;2.0V-30V$;10%	30	600	50M		400m	Si	DO7
73	HA1934B							22pΔ†	4.0	4.0;2.0V-30V$;5%	30	600	50M		400m	Si	DO7
74	HA1934C							22pΔ†	4.0	4.0;2.0V-30V$;2%	30	600	50M		400m	Si	DO7
75	KV110E							22p†	4.0	17.6-26.4Ø	45	150	50m		100m§	Si#$	A352
76	KV110V							22p†	4.0	17.6-26.4Ø	45	300	50m		100m§	Si#$	A352
77	KV634							22p§	4.0	2.6;2.0V-20V$	20 ☑	250	50M		400m	Si#$	DO7
78	KV4807							22p%	4.0	4.05;4.0V-90V$	90 $	100	50m		500m	▾	DO14
79	KV4807A							22p%	4.0	4.05;4.0V-90V$	90 $	100	50m		500m	▾	DO14
80	KV4807B							22p%	4.0	4.05;4.0V-90V$	90 $	100	50m		500m	▾	DO14
81	KV4807C							22p%	4.0	4.05;4.0V-90V$	90 $	100	50m		500m	▾	DO14
82	KV4807D							22p%	4.0	4.05;4.0V-90V$	90 $	100	50m		500m	▾	DO14
83	LP1034A							22p†Δ	4.0	4.7;0.0V-25V$	25	500	50M		5.0	Si	F59q
84	LP1034B							22p†Δ	4.0	4.7;0.0V-25V$	25	500	50M		5.0	Si	F27ah
85	LP1034D							22p†Δ	4.0	4.7;0.0V-25V$	25	500	50M		5.0	Si	F56q
86	LP1034E							22p†Δ	4.0	4.7;0.0V-25V$	25	500	50M		5.0	Si	F59j
87	LP1034H							22p†Δ	4.0	4.7;0.0V-25V$	25	500	50M		5.0	Si	S428b
88▾	MA4H034							22p†	4	5.5-6.8	30	800	50M			Si	V25
89	MA4019E							22p	4.0	5.2$	110 ☑	100	50M			Si$#	A31e
90	MA4273E							22p	4.0	17.6 - 26.4Ø	110	100	.05G		.50	Si	A31e
91	MA45114							22p†Δ	4.0	5.5;0.0V-45V$		1.0k	50M			Si$	DO7
92	MA45134							22p†Δ	4.0	7.0;0.0V-60V$		700	50M			Si$	DO7
93	MA45278							22pΔ	4.0	7.4;0V-60V$	60	900	50M			Si$§	V11†
94	MA45338							22pΔ	4.0	4.6;0V-30V$	30	1.0k	50M			Si$#	DO7†
95	MA45353							22pΔ	4.0	5.9;0V-45V$	45	600	50M			Si$#	DO7†
96	MA45368							22pΔ	4.0	7.3;0V-60V$	60	400	50M			Si$#	DO7†
97	MC22							22p	4.0		60 †	10	50M			Si	A1au
98	MC422							22p	4.0	5.0;1.0V-60V$	60 †	100	50M			Si	A1au
99	MC622							22p	4.0	17.6-26.4Ø	60	250	50M			Si	A1au
100♦	MV832							22p§	4.0	19.8-24.2Ø	30 ☑	25	50M		2.0	Si	DO7
101	MV832B							22pΔ†	4.0	2.1;4V-25V$;5%	30	25	50M		400m	Si	DO7
102	MV832C							22pΔ†	4.0	2.1;4V-25V$;2%	30	25	50M		400m	Si	DO7
103	MV1634							22p§	4.0	19.8-24.2Ø	20 ☑	250	50M		400m	Si	DO7
104	MV1634B							22pΔ†	4.0	2.6;2.0V-20V$;5%	20	250	50M		400m	Si	DO7
105	MV1634C							22pΔ†	4.0	2.6;2.0V-20V$;2%	20	250	50M		400m	Si	DO7
106	MV1734							22p§	4.0	19.8 - 24.2Ø	30 ☑	400	.05G		.40	Si$	DO7
107	MV1734A							22p	4.0		30 ☑	400	50M		400m	Si$#	DO7
108♦	MV1872	45GØ						22p§	4.0	19.8-24.2Ø	60 ☑	400	50M		400m	Si$	DO7
109♦	MV2107							22p§	4.0	19.8-24.2Ø	30 ☑	350	50M		280m	Si	M764a
110♦	MV2207							22p§	4.0	17.6-26.4Ø	25 ☑	150	50M		280m	Si	M764a

SYMBOLS AND CODES EXPLAINED IN INTERPRETER

6. VOLTAGE VARIABLE CAPACITORS & VARACTOR DIODES

IN ORDER OF (1) TYPICAL CAPACITANCE, (2) TEST VOLTAGE, and (3) TYPE No.

LINE No.	3 TYPE No.	MINIMUM CUTOFF FREQUENCY (Corresponding to Type Numbers in previous column) (Hz)	(Hz)	(Hz)	(Hz)	(Hz)	(Hz)	TYP. CAP. 1 CAP. Cj (F)	2 at TEST VOLT (V)	CAPACITANCE RANGE (for V = 0 to PIV) Ø - at TEST VOLT. (pF)	PIV (V)	Q FACTOR MIN. Q	at TEST FREQ (Hz)	MAX. SER. RES. Rs (Ω)	MAX. DISS. @ 25°C (W)	DESCRIPTION MAT.	DWG. No.
1	MVI2107							22p†	4.0	3.3;2.0V-30V$	30 ☑	200	100M		200m	Si	M750
2	PC113,A,B,C,D	2.5G						22p%	4.0	7.5;500mV-80V$	80 $	50	50M		600m		DO14
3▼	PC113,A,B,C,D#							22p	4.0	7.5;0.5V-80V $	80 $	50	50M		400m		DO7
4	PC116,A,B,C,D	5.0G						22p%	4.0	8.2;500mV-100V$	100 $	100	50M		600m		DO14
5▼	PC116,A,B,C,D#							22p	4.0	8.2;0.5V-100V $	100 $	100	50M		400m		DO7
6	PC133,A,B,C,D	2.5G						22p%	4.0	4.6;500mV-30V$	30 $	50	50M		600m		DO14
7▼	PC133,A,B,C,D#							22p	4.0	4.6;0.5V-30V $	30 $	50	50M		400m		DO7
8	PC136,A,B,C,D	6.2G						22p%	4.0	6.0;500mV-50V$	50 $	125	50M		600m		DO14
9▼	PC136,A,B,C,D#							22p	4.0	6.0;0.5V-50V $	50 $	125	50M		400m		DO7
10	PC0603A							22p§Δ	4.0		30 $	200	50M				DO7
11	PC0603B							22p§Δ	4.0		30 $	300	50M				DO7
12	PC0603C							22p§Δ	4.0		30 $	400	50M				DO7
13	PC0613A							22p§Δ	4.0		60 $	200	50M				DO7
14	PC0613B							22p§Δ	4.0		60 $	300	50M				DO7
15	PC0613C							22p§Δ	4.0		60 $	400	50M				DO7
16	PC0623A							22p§Δ	4.0		90 $	200	50M				DO7
17	PC0623B							22p§Δ	4.0		90 $	300	50M				DO7
18	PC0633A							22p§Δ	4.0		120 $	200	50M				DO7
19	PC0643A							22p§Δ	4.0		150 $	200	50M				DO7
20	PC1403A							22p§Δ	4.0		30 $	200	50M				A2u
21	PC1403B							22p§Δ	4.0		30 $	300	50M				A2u
22	PC1403C							22p§Δ	4.0		30 $	400	50M				A2u
23	PC1413A							22p§Δ	4.0		60 $	200	50M				A2u
24	PC1413B							22p§Δ	4.0		60 $	300	50M				A2u
25	PC1413C							22p§Δ	4.0		60 $	400	50M				A2u
26	PC1423A							22p§Δ	4.0		90 $	200	50M				A2u
27	PC1423B							22p§Δ	4.0		90 $	300	50M				A2u
28	PC1433A							22p§Δ	4.0		120 $	200	50M				A2u
29	PC1443A							22p§Δ	4.0		150 $	200	50M				A2u
30	PC2603A							22p§Δ	4.0		30 $	200	50M				DO7
31	PC2603B							22p§Δ	4.0		30 $	300	50M				DO7
32	PC2603C							22p§Δ	4.0		30 $	400	50M				DO7
33	PC2613A							22p§Δ	4.0		60 $	200	50M				DO7
34	PC2613B							22p§Δ	4.0		60 $	300	50M				DO7
35	PC2613C							22p§Δ	4.0		90 $	400	50M				DO7
36	PC2623A							22p§Δ	4.0		90 $	200	50M				DO7
37	PC2623B							22p§Δ	4.0		90 $	300	50M				DO7
38	PC2623C							22p§Δ	4.0		90 $	400	50M				DO7
39	PC2633A							22p§Δ	4.0		120 $	200	50M				DO7
40	PC2633B							22p§Δ	4.0		120 $	300	50M				DO7
41	PC2633C							22p§Δ	4.0		120 $	400	50M				DO7
42	PC2643A							22p§Δ	4.0		150 $	200	50M				DO7
43	PC2643B							22p§Δ	4.0		150 $	300	50M				DO7
44	PG122							22pΔ	4.0	4.55;2.0V-65V$	70	200	50M		400m	Si	DO7
45	PG122A							22pΔ	4.0	4.55;2.0V-65V$;10%	70	200	50M		400m	Si	DO7
46	PG122B							22pΔ	4.0	4.55;2.0V-65V$;5%	70	200	50M		400m	Si	DO7
47	PG122C							22pΔ	4.0	4.55;2.0V-65V$;2%	70	100	50M		400m	Si	DO7
48	PG122D							22pΔ	4.0	4.55;2.0V-65V$;1%	70	200	50M		400m	Si	DO7
49	PG222							22pΔ	4.0	4.45;2.0V-65V$	70	200	50M		400m	Si	DO7
50	PG222A							22pΔ	4.0	4.45;2.0V-65V$;10%	70	200	50M		400m	Si	DO7
51	PG222B							22pΔ	4.0	4.45;2.0V-65V$;5%	70	200	50M		400m	Si	DO7
52	PG222C							22pΔ	4.0	4.45;2.0V-65V$;2%	70	200	50M		400m	Si	DO7
53	PG222D							22pΔ	4.0	4.45;2.0V-65V$;1%	70	200	50M		400m	Si	DO7
54	PG322							22pΔ	4.0	3.95;2.0V-50V$	55	300	50M		400m	Si	DO7
55	PG322A							22pΔ	4.0	3.95;2.0V-50V$;10%	55	300	50M		400m	Si	DO7
56	PG322B							22pΔ	4.0	3.95;2.0V-50V$;5%	55	300	50M		400m	Si	DO7
57	PG322C							22pΔ	4.0	3.95;2.0V-50V$;2%	55	300	50M		400m	Si	DO7
58	PG322D							22pΔ	4.0	3.95;2.0V-50V$;1%	55	300	50M		400m	Si	DO7
59	PV1433							22p§	4.0		120	400	500M				A2u
60	SQ1234A,B,C							22pΔ†	4.0	3.3;2V-30V$	30	800	50M		250m	Si	A1ah
61	SQ1284A,B,C							22p§%	4.0		30 ☑	400	50M		250m	Si#$	A1ah
62	SQ1734,B,C							22pΔ†	4.0	3.2;2V-30V$	30	800	50M		400m	Si	DO7
63	SQ5468A							22p†Δ	4.0	3.2;2.0V-30V$;10%	30	500	50M		400m	Si	DO7
64	SQ5468B							22p†Δ	4.0	3.2;2.0V-30V$;5%	30	500	50M		400m	Si	DO7
65	SQ5468C							22p†Δ	4.0	3.2;2.0V-30V$;2%	30	500	50M		400m	Si	DO7
66	SV77F							22p	4.0					2.5	5.0	Si$#	M1110
67	VA113							22p	4.0	4.0;2.0V-80V$	80 $	50	50M		500m	Si$	DO14Δ
68	VA116							22p	4.0	4.2;2.0V-100V$	100 $	100	50M		500m	Si$	DO14Δ
69♦	VA133							22p	4.0	3.0;2.0V-25V $	25 $	50	50M		400m	Si$	DO14Δ
70♦	VA136							22p	4.0	4.0;2.0V-50V $	50 $	125	50M		400m	Si$	DO14Δ
71♦	VA153							22p	4.0	4.0;2.0V-80V $	80 $	100	50M		400m	Si$	DO14Δ
72♦	VA159							22p	4.0	3.0;2.0V-25V $	25 $	150	50M		400m	Si$	DO14Δ
73♦	VA166							22p	4.0	5.0;2.0V-100V $	100 $	75	50M		400m	Si$	DO14Δ
74	VA206	37GØ						22p	4.0	6.2;2.0V-150V$	150 $	75	50M	1.4 ☑	500m	Si$	DO14Δ
75	VA207	50GØ						22p	4.0	6.2;2.0V-150V$	150 $	100	50M	1.1 ☑	500m	Si$	DO14Δ
76	VA306							22p	4.0	6.5;2.0 - 200V$	200 $	75	50M	2.0 ☑	500m	Si$	DO14Δ
77	VA307							22p	4.0	6.5;2.0 - 200V$	200 $	100	50M	1.5 ☑	500m	Si$	DO14Δ
78	VC321,A,B							22p%	4.0	3.0;1V-25V$	25 $	50	.05G				DO7
79	VC322,A,B							22p%	4.0	4.0;2V-80V$	80 $	50	.05G				DO7
80	VC421,A,B							22p%	4.0	3.0;1V-25V$	25 $	100	.05G				DO7
81	VC422,A,B							22p%	4.0	4.0;1V-50V$	50 $	100	.05G				DO7
82	VC423,A,B							22p%	4.0	4.0;2.0 - 80V$	100 $	100	50M				DO7
83	VC622,A,B							22p%	4.0	3.0;1V-25V$	40 $	200	.05G				DO7
84	VC623,A,B							22p%	4.0	3.0;1V-25V$	40 $	300	.05G				DO7
85	VC734	12G						22p	4.0	2.6;2.0V-20V$	20 ☑	250	50M			Si	DO7
86	VQA419							22p	4.0	3.0;4.0V-60V$	60 $	250	50M			Si	DO7
87	VQA519							22p§	4.0	3.8;4.0V-100V$	100 $	150	50M			Si	DO7
88	VVC402,A,B,C,D							22p%	4.0	3.6;4.0V-80V$	80	50	50M		400m§	Si	DO7†
89	VVC404,A,B,C,D							22p%	4.0	3.9;4.0V-100V$	100	100	50M		400m§	Si	DO7†
90	VVC413,A,B,C,D							22p%	4.0	2.2;4.0V-25V$	25	50	50M		400m§	Si	DO7†
91	VVC415,A,B,C,D							22p%	4.0	2.9;4.0V-50V$	50	125	50M		400m§	Si	DO7†
92	VVC710,A,B,C,D							22p%	4.0	2.4;4.0V-30V$	30	50	50M		400m§	Si	DO7†
93	VVC741,A,B,C,D							22p%	4.0	2.4;4.0V-30V$	30	25	50M		400m§	Si	DO7†
94	VVC742,A,B,C,D							22p%	4.0	2.4;4.0V-30V$	30	400	50M		400m§	Si	DO7†
95	VVC743,A,B,C,D							22p%	4.0	2.0;4.0V-20V$	20	250	50M		400m§	Si	DO7†
96	VVC816,A,B,C,D							22p%	4.0	3.2;4.0V-60V$	60	10	50M		400m§	Si	DO7†
97	VVC817,A,B,C,D							22p%	4.0	3.2;4.0V-60V$	60	100	50M		400m§	Si	DO7†
98	VVC862,A,B,C,D							22p%	4.0	2.4;4.0V-30V$	30	100	50M		400m§	Si	DO7†
99	VVC863,A,B,C,D							22p%	4.0	2.7;4.0V-40V$	40	200	50M		400m§	Si	DO7†
100	VVC864,A,B,C,D							22p%	4.0	2.7;4.0V-40V$	40	300	50M		400m§	Si	DO7†
101	VVC865,A,B,C,D							22p%	4.0	3.2;4.0V-60V$	60	100	50M		400m§	Si	DO7†
102	VVC866,A,B,C,D							22p%	4.0	4.2;4.0V-110V$	110	100	50M		400m§	Si	DO7†
103	VVC924,A,B,C,D							22p%	4.0	2.2;4.0V-25V$	25	150	50M		400m§	Si	DO7†
104	VVC925,A,B,C,D							22p%	4.0	2.9;4.0V-50V$	50	75	50M		400m§	Si	DO7†
105	VVC926,A,B,C,D							22p%	4.0	3.6;4.0V-80V$	80	100	50M		400m§	Si	DO7†
106	VVC927,A,B,C,D							22p%	4.0	3.9;4.0V-100V$	100	75	50M		400m§	Si	DO7†
107	VVC928,A,B,C,D							22p%	4.0	4.8;4.0V-150V$	150	60	50M		400m§	Si	DO7†
108	VVC929,A,B,C,D							22p%	4.0	4.8;4.0V-150V$	150	100	50M		400m§	Si	DO7†
109	VVC1009,A,B,C,D							22p%	4.0		40	300	50M			Si	DO7
110	VVC1011,A,B,C,D							22p%	4.0	5.0;4.0V-150V$	150	10	50M		400m§	Si	DO7†

SYMBOLS AND CODES EXPLAINED IN INTERPRETER

6. VOLTAGE VARIABLE CAPACITORS & VARACTOR DIODES

IN ORDER OF (1) TYPICAL CAPACITANCE, (2) TEST VOLTAGE, and (3) TYPE No.

LINE No.	3 TYPE No.	MINIMUM CUTOFF FREQUENCY (Corresponding to Type Numbers in previous column) (Hz)	(Hz)	(Hz)	(Hz)	(Hz)	(Hz)	TYP. CAP. 1 CAP. Cj (F)	2 at TEST VOLT (V)	CAPACITANCE RANGE (for V = 0 to PIV) Ø - at TEST VOLT. (pF)	PIV (V)	Q FACTOR MIN. Q	at TEST FREQ (Hz)	MAX. SER. RES. Rs (Ω)	MAX. DISS. @ 25°C (W)	DESCRIPTION MAT.	DWG. No.
1	VVC1012,A,B,C,D							22p%	4.0	4.4;4.0V-130V$	130	150	50M		400m§	Si	DO7†
2	VVC1013,A,B,C,D							22p%	4.0	5.6;4.0V-200V$	200	10	50M		400m§	Si	DO7†
3	VVC1634,A,B,C							22p%	4.0	2.0-3.2;2.0V-20V$	20	250	50M		400m§	Si	DO7†
4	ZC706							22pΔ†	4.0	2.8;2.0V-30V$;10%	30	350	50M		400m	Si	DO7Δ
5	ZC706B							22pΔ†	4.0	2.8;2.0V-30V$;5%	30	350	50M		400m	Si	DO7Δ
6	ZC706C							22pΔ†	4.0	2.8;2.0V-30V$;2%	30	350	50M		400m	Si	DO7Δ
7	ZC707B							22pΔ†	4.0	2.8;2.0V-30V$;5%	30	350	50M		400m	Si	DO7Δ
8	ZC746							22p§	4.0	2.8;2.0V-3.0V$	30	350	50M			Si$Δ	C219
9	MA4290							22p	6.0		30			3.0		Si	F3a
10	MA4762							22p	6.0	15 - 30Ø	250			1.0	50	Si	S4g
11	MA4763							22p	6.0	15 - 30Ø	250			1.0		Si	F56k
12♦	BB212							22pØ	8.0	22-620	12 $			2.5		Si$$	C220
13	SVC251SP							23pØ	1.6	1.7;1.6-5.0V$	12			0.6		Si	C226
14	SVC251Y							23pØ	1.6	1.7;1.6-5.0V$	12			.60		Si	C201
15	BA102B							23pØ	4.0	23-31Ø	20 †			3.0		Si	DO7
16	BBY38							23p†	-4	4.0$		100	50M			Si	F140
17	SD11F6							24p	0.0	24 - 50	6.0			1.0		Si	P3
18	SD12F6							24p	0.0	24 - 50	6.0			1.0		Si	F3a
19	SD22F6							24p	0.0	24 - 50	6.0			1.0		Si	F11
20	SD32F6							24p	0.0	24 - 50	6.0			1.0		Si	F21
21	SD42F6							24p	0.0	24 - 50	6.0			1.0		Si	F9a
22	SDGPF6							24p	0.0	24 - 50	6.0			1.0		Si	DO7
23	VBC89C							24p	6.0	19-29Ø	150 Ø					Si	S168
24	1N3557							24p	8.0		210	75	50M			Si	DO14
25	1SV88							25p		8.0§	30			.80			
26	FC54M							25p	1.0			100	25M			Si	C187
27	KV3802	16GØ						25p§	3.0	5.2;3.0V-25V$	30 Ø	200	50M	700mØ	400m	Si#$	M501
28	MA4063							25p	6.0	20 - 30Ø	60					Si	S4c
29	MA4064							25p	6.0	20 - 30Ø	90						S4c
30	PH1207-1,2,3,4		5.0G	10G	15G	20G		25p	6.0	20 - 30Ø	6.0	Ø	10G			Si$	F58
31	PH1207A,B	30G	40G					25p	6.0	20-30Ø	6.0	Ø	10G			Si$	F58
32	PH1217-1,2,3,4		5.0G	10G	15G	20G		25p	6.0	20 - 30Ø	15	Ø	10G			Si$	F58
33	PH1217A,B	30G	40G					25p	6.0	20-30Ø	15	Ø	10G			Si$	F58
34	PH1227-1,2,3,4		5.0G	10G	15G	20G		25p	6.0	20 - 30Ø	24	Ø	10G			Si$	F58
35	PH1227A	30G						25p	6.0	20-30Ø	24	Ø	10G			Si$	F58
36	PH1237-1,2	5.0G	10G					25p	6.0	20 - 30Ø	30	Ø	10G			Si$	F58
37	PH1247-1,2	5.0G	10G					25p	6.0	20 - 30Ø	45	Ø	10G			Si$	F58
38	PH1257-1,2	5.0G	10G					25p	6.0	20 - 30Ø	60	Ø	10G			Si$	F58
39	PH1267-1,2	5.0G	10G					25p	6.0	20 - 30Ø	90	Ø	10G			Si$	F58
40	PH1277-1,2	5.0G	10G					25p	6.0	20 - 30Ø	120	Ø	10G			Si$	F58
41	PH1287-1	5.0G						25p	6.0	20 - 30Ø	150	Ø	10G			Si$	F58
42	PH1297-1	5.0G						25p	6.0	20 - 30Ø	200	Ø	10G			Si$	F58
43	PL0107-1,2,3,4		5.0G	10G	15G	20G		25p	6.0	20 - 30Ø		Ø	10G			Si	F27d
44	PL0107A,B	30G	40G					25p	6.0	20-30Ø	6.0	Ø	10G			Si	F27d
45	PL0117-1,2,3,4		5.0G	10G	15G	20G		25p	6.0	20 - 30Ø		Ø	10G			Si	F27d
46	PL0117A,B	30G	40G					25p	6.0	20-30Ø	15	Ø	10G			Si	F27d
47	PL0127-1,2,3,4		5.0G	10G	15G	20G		25p	6.0	20 - 30Ø		Ø	10G			Si	F27d
48	PL0127A	30G						25p	6.0	20-30Ø	24	Ø	10G			Si	F27d
49	PL0137-1,2	5.0G	10G					25p	6.0	20 - 30Ø		Ø	10G			Si	F27d
50	PL0147-1,2	5.0G	10G					25p	6.0	20 - 30Ø		Ø	10G			Si	F27d
51	PL0157-1,2	5.0G	10G					25p	6.0	20 - 30Ø		Ø	10G			Si	F27d
52	PL0167-1,2	5.0G	10G					25p	6.0	20 - 30Ø		Ø	10G			Si	F27d
53	PL0177-1,2	5.0G	10G					25p	6.0	20 - 30Ø		Ø	10G			Si	F27d
54	PL0187-1	5.0G						25p	6.0	20 - 30Ø		Ø	10G			Si	F27d
55	BB329	9.0GØ						26p§	3.0	12(Min);Vr 1-28V$	32	250 Ø	300M	.85		Si$#	DO35
56	VVC818,A,B,C,D							26p%	4.0	2.9;4.0V-50V$	50	10	50M		400m§	Si	DO7†
57	VVC819,A,B,C,D							26p%	4.0	2.9;4.0V-50V$	50	25	50M		400m§	Si	DO7†
58▼	V927E,A,B,C,D%							27p		7.4;0.5V-65V $	65 $				400m		DO7
59	PSV115-01							27p	0.0	5.5;0.0V-45V$	45 Ø	1.5k	50M			Si§	F27as
60	PSV115-06							27p	0.0	5.5;0.0V-45V$	45 Ø	1.5k	50M			Si§	A1st
61	PSV115-14							27p	0.0	5.5;0.0V-45V$	45 Ø	1.5k	50M			Si§	A2u
62	PSV115-21							27p	0.0	5.5;0.0V-45V$	45 Ø	1.5k	50M			Si§	M86e
63	PSV115-31							27p	0.0	5.5;0.0V-45V$	45 Ø	1.5k	50M			Si§	F10ah
64	PSV137-01							27p	0.0	8.5;0.0V-90V$	90 Ø	700	50M			Si	F27as
65	PSV137-14							27p	0.0	8.5;0.0V-90V$	90 Ø	700	50M			Si	A2u
66	PSV137-16							27p	0.0	8.5;0.0V-90V$	90 Ø	700	50M			Si	A1st
67	PSV137-21							27p	0.0	8.5;0.0V-90V$	90 Ø	700	50M			Si	M86e
68	PSV137-31							27p	0.0	8.5;0.0V-90V$	90 Ø	700	50M			Si	F10ah
69	PSV146-01							27p	0.0	10;0.0V-120V$	120 Ø	460	50M			Si	F27as
70	PSV146-14							27p	0.0	10;0.0V-120V$	120 Ø	460	50M			Si	A2u
71	PSV146-16							27p	0.0	10;0.0V-120V$	120 Ø	460	50M			Si	A1st
72	PSV146-21							27p	0.0	10;0.0V-120V$	120 Ø	460	50M			Si	M86e
73	PSV146-31							27p	0.0	10;0.0V-120V$	120 Ø	460	50M			Si	F10ah
74	SD11F48							27p	0.0	27 - 54	48			1.0		Si	P3
75	SD12F48							27p	0.0	27 - 54	48			1.0		Si	F3a
76	SD22F48							27p	0.0	27 - 54	48			1.0		Si	F11
77	SD32F48							27p	0.0	27 - 54	48			1.0		Si	F21
78	SD42F48							27p	0.0	27 - 54	48			1.0		Si	F9a
79	SDGPF48							27p	0.0	27 - 54	48			1.0		Si	DO7
80	2003(A)							27p§	2.5	3.0;8.0V-25V$	15 Ø	135	50M		400m	Si#	DO7Δ
81	2003A							27p§	2.5	3.0;8.0V-25V$	15 Ø	135	50M		400m	Si#	DO7Δ
82	1N4793							27p%	4.0	2.46;0.0-4.0V$	20 $	15	50M		500m	Si	DO14
83	1N4793A							27p%	4.0	2.46;0.0-4.0V$	20 $	15	50M		500m	Si	DO14
84	1N4793B							27p%	4.0	2.46;0.0-4.0V$	20 $	15	50M		500m	Si	DO14
85	1N4793C							27p%	4.0	2.46;0.0-4.0V$	20 $	15	50M		500m	Si	DO14
86	1N4793D							27p%	4.0	2.46;0.0-4.0V$	20 $	15	50M		500m	Si	DO14
87	1N4808							27p%	4.0	2.46;0.0-4.0V$	65 $	15	50M		500m	Si	DO14
88	1N4808A							27p%	4.0	2.46;0.0-4.0V$	65 $	15	50M		500m	Si	DO14
89	JAN1N4808A							27p%	4.0	2.46;0.0-4.0V$	65 $	15	50M		500m	Si	A1dd
90	1N4808B							27p%	4.0	2.46;0.0-4.0V$	65 $	15	50M		500m	Si	DO14
91	JAN1N4808B							27p%	4.0	2.46;0.0-4.0V$	65 $	15	50M		500m	Si	A1dd
92	1N4808C							27p%	4.0	2.46;0.0-4.0V$	65 $	15	50M		500m	Si	DO14
93	1N4808D							27p%	4.0	2.46;0.0-4.0V$	65 $	15	50M		500m	Si	DO14
94	1N5145							27p	4.0	3.2;4.0V-60V$	60 Ø	200	50M		400m	Si	DO7
95	1N5145A							27p	4.0	3.2;4.0V-60V$	60 Ø	200	50M		400m	Si	DO7
96	JAN1N5145A							27p	4.0	25.7-28.3Ø	65 Ø	200	50M		400m	Si	DO7
97	1N5449							27p%	4.0	2.6;2V-30V$	30	350	50M		400m	Si	DO7
98	1N5449A							27p%	4.0	2.6;2V-30V$	30	350	50M		400m	Si	DO7
99	1N5449B							27p%	4.0	2.6;2V-30V$	30	350	50M		400m	Si	DO7
100	1N5449C							27p%	4.0	2.6;2V-30V$	30	350	50M		400m	Si	DO7
101	1N5449D							27p%	4.0	2.6;2V-30V$	30	350	50M		400m	Si	DO7
102	1N5469							27p%	4.0	2.9;2V-30V$	30	500	50M		400m	Si	DO7
103	1N5469A							27p%	4.0	2.9;2V-30V$	30	500	50M		400m	Si	DO7
104	1N5469B							27p%	4.0	2.9;2V-30V$	30	500	50M		400m	Si	DO7
105	JAN1N5469B							27p	4.0	25.65-28.35Ø	30 Ø	500	50M		400m	Si	DO7
106	1N5469C							27p%	4.0	2.9;2V-30V$	30	500	50M		400m	Si	DO7
107	JAN1N5469C							27p	4.0	26.46-27.54Ø	30 Ø	500	50M		400m	Si	DO7
108	1N5469D							27p%	4.0	2.9;2V-30V$	30	500	50M		400m	Si	DO7
109	1N5688							27p%	4.0	3.3;2.0V-40V$	40	500	50M		400m	Si	DO7
110	1N5688A							27p%	4.0	3.3;2.0V-40V$	40	500	50M		400m	Si	DO7

6. VOLTAGE VARIABLE CAPACITORS & VARACTOR DIODES

IN ORDER OF (1) TYPICAL CAPACITANCE, (2) TEST VOLTAGE, and (3) TYPE No.

LINE No.	3 TYPE No.	MINIMUM CUTOFF FREQUENCY (Corresponding to Type Numbers in previous column) (Hz)	(Hz)	(Hz)	(Hz)	(Hz)	(Hz)	TYP. CAP. 1 CAP. Cj (F)	2 at TEST VOLT (V)	CAPACITANCE RANGE (for V = 0 to PIV) Ø - at TEST VOLT. (pF)	PIV (V)	Q FACTOR MIN. Q	at TEST FREQ (Hz)	MAX. SER. RES. Rs (Ω)	MAX. DISS. @ 25°C (W)	DESCRIPTION MAT.	DWG. No.
1	1N5688B							27p%	4.0	3.3;2.0V-40V$	40	500	50M		400m	Si	DO7
2	1N5703							27p%	4.0	3.2;4.0V-60V$	60	350	50M		400m	Si	DO7
3	1N5703A							27p%	4.0	3.2;4.0V-60V$	60	350	50M		400m	Si	DO7
4	1N5703B							27p%	4.0	3.2;4.0V-60V$	60	350	50M		400m	Si	DO7
5	CV833							27p	4.0	24.3-29.7Ø	30	25	50M		400m	Si	DO7
6	CV1636							27p	4.0	24.3-29.7Ø	20	200	50M		400m	Si$	DO7
7	CV5027							27p	4.0	2.5;2.0V-30V$	30	300	50M		400m	Si	DO7
8	CVH2030-25							27p	4.0	4.5;0.0-30$;10%	30 ☑	1.4k	50M			Si$§	u30b
9	CVH2060-25							27p	4.0	7.5;0.0-60$;10%	60 ☑	950	50M			Si$§	u30b
10	D1736,B,C							27p†%	4.0	3.2;2V-30V$	30 ☑	400	50M		400m	Si#$	DO7
11	DC4217B	15G						27p	4.0		60	300	50M			Si	DO14Δ
12♦	DVH6730-25							27p§	4.0	4.5;0.0-30$;10§	30 ☑	1.4k	50M			Si$§	A90a
13♦	DVH6731-25	70G						27p†	4.0	4.5;0.0V-30V$;10%	30 ☑	1.4k	50M			Si$§	F143
14	DVH6732-25	70G						27p†	4.0	4.5;0.0V-30V$;10%	30 ☑	1.4k	50M			Si$§	F56ad
15	DVH6733-25	70G						27p†	4.0	4.5;0.0V-30V$;10%	30 ☑	1.4k	50M			Si$§	F59u
16	DVH6734-25	70G						27p†	4.0	4.5;0.0V-30V$;10%	30 ☑	1.4k	50M			Si$§	M929
17♦	DVH6760-25							27p§	4.0	7.0;0.0-60$;10%	60 ☑	950	50M			Si$§	A90a
18♦	DVH6761-25	47G						27p†	4.0	7.0;0.0V-60V$;10%	60 ☑	950	50M			Si$§	F143
19	DVH6762-25	47G						27p†	4.0	7.0;0.0V-60V$;10%	60 ☑	950	50M			Si$§	F56ad
20	DVH6763-25	47G						27p†	4.0	7.0;0.0V-60V$;10%	60 ☑	950	50M			Si$§	F59u
21	DVH6764-25	47G						27p†	4.0	7.0;0.0V-60V$;10%	60 ☑	950	50M			Si$§	M929
22	EP1036A							27p†Δ	4.0	2.9;2.0V-30V$	30	800	50M		5.0	Si	F59q
23	EP1036B							27p†Δ	4.0	2.9;2.0V-30V$	30	800	50M		5.0	Si	F27ah
24	EP1036D							27p†Δ	4.0	2.9;2.0V-30V$	30	800	50M		5.0	Si	F56q
25	EP1036E							27p†Δ	4.0	2.9;2.0V-30V$	30	800	50M		5.0	Si	F59j
26	EP1036H							27p†Δ	4.0	2.9;2.0V-30V$	30	800	50M		5.0	Si	S428b
27	GC1718							27p†	4.0	7.0;0.0V-60V$	60	900	50M			Si	F111b†
28	GC1768							27p†Δ	4.0	7.0;0.0V-60V$;10%	60	600	50M		400m	Si	DO7
29	GC1768B							27p†Δ	4.0	7.0;0.0V-60V$;5%	60	600	50M		400m	Si	DO7
30	GC1768C							27p†Δ	4.0	7.0;0.0V-60V$;2%	60	600	50M		400m	Si	DO7
31	HA1236A							27pΔ†	4.0	4.0;2.0V-30V$;10%	30	600	50M		250m	Si	A1ah
32	HA1236B							27pΔ†	4.0	4.0;2.0V-30V$;5%	30	600	50M		250m	Si	A1ah
33	HA1236C							27pΔ†	4.0	4.0;2.0V-30V$;2%	30	600	50M		250m	Si	A1ah
34	HA1936A							27pΔ†	4.0	4.0;2.0V-30V$;10%	30	600	50M		400m	Si	DO7
35	HA1936B							27pΔ†	4.0	4.0;2.0V-30V$;5%	30	600	50M		400m	Si	DO7
36	HA1936C							27pΔ†	4.0	4.0;2.0V-30V$;2%	30	600	50M		400m	Si	DO7
37	HC7083							27p	4.0	70 - 14	20	10	.05G			Si	DO7
38	HC7095							27p	4.0	70 - 7.0	65	10	.05G			Si	DO7
39	KV636							27p§	4.0	2.6;2.0V-20V$	20 ☑	200	50M		400m	Si#$	DO7
40	LP1036A							27p†Δ	4.0	4.7;0.0V-25V$	25	500	50M		5.0	Si	F59q
41	LP1036B							27p†Δ	4.0	4.7;0.0V-25V$	25	500	50M		5.0	Si	F27ah
42	LP1036D							27p†Δ	4.0	4.7;0.0V-25V$	25	500	50M		5.0	Si	F56q
43	LP1036E							27p†Δ	4.0	4.7;0.0V-25V$	25	500	50M		5.0	Si	F59j
44	LP1036H							27p†Δ	4.0	4.7;0.0V-25V$	25	500	50M		5.0	Si	S428b
45▼	MA4H035							27p†	4	6.7-8.9	30	700	50M			Si	V25
46	MA45073							27p	4.0		40	800	50M			Si	DO7
47	MA45153							27p	4.0		60	600	50M			Si	DO7
48	MA45279							27pΔ	4.0	7.4;0V-60V$	60	800	50M			Si$§	V11†
49	MA45339							27pΔ	4.0	4.7;0V-30V$	30	900	50M			Si$#	DO7†
50	MA45354							27pΔ	4.0	6.0;0V-45V$	45	600	50M			Si$#	DO7†
51	MA45369							27pΔ	4.0	7.4;0V-60V$	60	350	50M			Si$#	DO7†
52♦	MV833							27p§	4.0	24.3-27Ø	30 ☑	25	50M		2.0	Si	DO7
53	MV833B							27pΔ†	4.0	2.1;4V-25V$;5%	30	25	50M		400m	Si	DO7
54	MV833C							27pΔ†	4.0	2.1;4V-25V$;2%	30	25	50M		400m	Si	DO7
55	MV1636							27p§	4.0	24.3-29.7Ø	20 ☑	200	50M		400m	Si	DO7
56	MV1636B							27pΔ†	4.0	2.6;2.0V-20V$;5%	20	200	50M		400m	Si	DO7
57	MV1636C							27pΔ†	4.0	2.6;2.0V-20V$;2%	20	200	50M		400m	Si	DO7
58	MV1736							27p§	4.0	24.3 - 29.7Ø	30 ☑	400	.05G		.40	Si$	DO7
59	MV1736A							27p	4.0		30 ☑	400	50M		400m	Si△#	DO7
60♦	MV1874	45GØ						27p§	4.0	24.3-29.7Ø	60 ☑	300	50M		400m	Si$	DO7
61♦	MV2108							27p§	4.0	24.3-29.7Ø	30 ☑	300	50M		280m	Si	M764a
62	MVI2108							27p†	4.0	3.3;2.0V-30V$	30 ☑	200	100M		200m	Si	M750
63	SQ1236A,B,C							27pΔ†	4.0	3.3;2V-30V$	30	800	50M		250m	Si	A1ah
64	SQ1286A,B,C							27p§%	4.0		30 ☑	400	50M		250m	Si#$	A1ah
65	SQ1736,B,C							27pΔ†	4.0	3.2;2V-30V$	30	800	50M		400m	Si	DO7
66	SQ5469A							27p†Δ	4.0	3.2;2.0V-30V$;10%	30	500	50M		400m	Si	DO7
67	SQ5469B							27p†Δ	4.0	3.2;2.0V-30V$;5%	30	500	50M		400m	Si	DO7
68	SQ5469C							27p†Δ	4.0	3.2;2.0V-30V$;2%	30	500	50M		400m	Si	DO7
69♦	V27,A,B,C,D%	750M						27p%	4.0	4.0;0.5V-20V $	20 $	7.0	50M		400m	Si$	DO14
70♦	V27,A,B,C,D#	750M						27p%	4.0	4.0;0.5V-20V $	20 $	7.0	50M		400m		DO7
71	V27E,A,B,C,D	350M						27p%	4.0	7.4;500mV-65V$	65 $	7.0	50M		400m		DO7
72♦	V27E,A,B,C,D#	350M						27p%	4.0	7.4;0.5V-65V $	65 $	7.0	50M		400m	Si$	DO14
73	V27EG							27p	4.0	20%	65 $	10	50M		400m	Si$	DO7Δ
74	V27G							27p	4.0	20%	20 $	10	50M		400m	Si$	DO7Δ
75♦	V927,A,B,C,D%	750M						27p%	4.0	4.0;0.5V-20V $	25 $	15	50M		400m		DO7
76	V927,A,B,C,D#	750M						27p%	4.0	11.7-70	25 $	15	50M		500m	Si$	DO14
77♦	V927E,A,B,C,D							27p%	4.0	7.4;500mV-65V$	65 $				400m		DO14
78	V927E,A,B,C,D#	350M						27p%	4.0	7.0-70	65 $	7.0	50M		500m	Si$	DO14
79	VC27,A,B							27p%	4.0	9.0 - 70	50 $	10	.05G				DO7
80	VC227,A,B							27p%	4.0	9.0 - 70	50 $	25	.05G				DO7
81	VC627,A,B							27p%	4.0	3.0;1V-25V$	40 $	200	.05G				DO7
82	VC628,A,B							27p%	4.0	3.0;1V-25V$	40 $	300	.05G				DO7
83	VC736	10G						27p	4.0	2.6;2.0V-20V$	20 ☑	200	50M			Si	DO7
84	VC826,A,B							27p%	4.0	14 - 70	20 $	7.0	.05G				DO7
85	VC846,A,B							27p%	4.0	7.0 - 70	65 $	7.0	.05G				DO7
86	VVC211,A,B,C,D							27p%	4.0	2.0;4.0V-20V$	20	7.0	50M		400m§	Si	DO7†
87	VVC212,A,B,C,D							27p%	4.0	3.25;4.0V-65V$	60	7.0	50M		400m§	Si	DO7†
88	VVC711,A,B,C,D							27p%	4.0	3.25;4.0V-65V$	65	15	50M		400m§	Si	DO7†
89	VVC744,A,B,C,D							27p%	4.0	2.4;4.0V-30V$	30	400	50M		400m§	Si	DO7†
90	VVC745,A,B,C,D							27p%	4.0	2.0;4.0V-20V$	20	200	50M		400m§	Si	DO7†
91	VVC746,A,B,C,D							27p%	4.0	2.4;4.0V-30V$	30	25	50M		400m§	Si	DO7†
92	VVC820,A,B,C,D							27p%	4.0	2.9;4.0V-50V$	50	10	50M		400m§	Si	DO7†
93	VVC821,A,B,C,D							27p%	4.0	2.9;4.0V-50V$	50	25	50M		400m§	Si	DO7†
94	VVC868,A,B,C,D							27p%	4.0	2.7;4.0V-40V$	40	300	50M		400m§	Si	DO7†
95	VVC930,A,B,C,D							27p%	4.0	2.0;4.0V-20V$	20	10	50M		400m§	Si	DO7†
96	VVC931,A,B,C,D							27p%	4.0	3.25;4.0V-65V$	65	10	50M		400m§	Si	DO7†
97	VVC1005,A,B,C,D							27p%	4.0	3.15;4.0V-50V$	50	600	50M		400m§	Si	DO7†
98	VVC1006,A,B,C,D							27p%	4.0	3.17;4.0V-60V$	60	400	50M		400m§	Si	DO7†
99	VVC1010,A,B,C,D							27p%	4.0		40	300	50M			Si	DO7
100	VVC1014,A,B,C,D							27p%	4.0	5.0;4.0V-150V$	150	10	50M		400m§	Si	DO7†
101	VVC1015,A,B,C,D							27p%	4.0	4.4;4.0V-130V$	130	150	50M		400m§	Si	DO7†
102	VVC1016,A,B,C,D							27p%	4.0	5.6;4.0V-200V$	200	10	50M		400m§	Si	DO7†
103	VVC1636,A,B,C							27p%	4.0	2.0-3.2;2.0V-20V$	20	200	50M		400m§	Si	DO7†
104	ZC707							27pΔ†	4.0	2.8;2.0V-30V$;10%	30	350	50M		400m	Si	DO7Δ
105	ZC707C							27pΔ†	4.0	2.8;2.0V-30V$;2%	30	350	50M		400m	Si	DO7Δ
106	ZC747							27p§	4.0	2.8;2.0V-3.0V$	30	300	50M			Si$Δ	C219
107	MA4291	10G						27p	6.0		30			3.0		Si	F3a
108	PSV127-01							28p	0.0	7.0;0.0V-60V$	60 ☑	900	50M			Si§	F27as
109	PSV127-06							28p	0.0	7.0;0.0V-60V$	60 ☑	900	50M			Si§	A1st
110	PSV127-14							28p	0.0	7.0;0.0V-60V$	60 ☑	900	50M			Si§	A2u

SYMBOLS AND CODES EXPLAINED IN INTERPRETER

6. VOLTAGE VARIABLE CAPACITORS & VARACTOR DIODES

IN ORDER OF (1) TYPICAL CAPACITANCE, (2) TEST VOLTAGE, and (3) TYPE No.

LINE No.	[3] TYPE No.	MINIMUM CUTOFF FREQUENCY (Corresponding to Type Numbers in previous column) (Hz)	(Hz)	(Hz)	(Hz)	(Hz)	(Hz)	TYP. CAP. [1] CAP. Cj (F)	[2] at TEST VOLT (V)	CAPACITANCE RANGE (for V = 0 to PIV) Ø - at TEST VOLT. (pF)	PIV (V)	Q FACTOR MIN. Q	at TEST FREQ (Hz)	MAX. SER. RES. Rs (Ω)	MAX. DISS. @ 25°C (W)	DESCRIPTION MAT.	DWG. No.
1	PSV127-21							28p	0.0	7.0;0.0V-60V$	60 Ø	900	50M			Si§	M86e
2	PSV127-31							28p	0.0	7.0;0.0V-60V$	60 Ø	900	50M			Si§	F10ah
3	SD11F60							28p	0.0	28 - 56	60			1.0		Si	P3
4	SD12F60							28p	0.0	28 - 56	60			1.0		Si	F3a
5	SD22F60							28p	0.0	28 - 56	60			1.0		Si	F11
6	SD32F60							28p	0.0	28 - 56	60			1.0		Si	F21
7	SD42F60							28p	0.0	28 - 56	60			1.0		Si	F9a
8	SDGPF60							28p	0.0	28 - 56	60			1.0		Si	DO7
9	2801							28p§	3.0	5.75;3.0V-20V$	22 Ø	200	50M		400m	Si#	DO7Δ
10	2801A							28p§	3.0	5.75;3.0V-20V$	22 Ø	200	50M		400m	Si#	DO7Δ
11	2802							28p§	3.0	5.2;3.0V-20V$	22 Ø	150	50M		400m	Si#	DO7Δ
12	2802A							28p§	3.0	5.2;3.0V-20V$	22 Ø	150	50M		400m	Si#	DO7Δ
13	2803							28p§	3.0	2.4;3.0V-8.0V$	15 Ø	150	50M		400m	Si#	DO7Δ
14	2803A							28p§	3.0	2.4;3.0V-8.0V$	15 Ø	150	50M		400m	Si#	DO7Δ
15♦	DKV6534							28p§	3.0	25-31 Ø	8.0 Ø	150	50M			Si§#	A90a Δ
16♦	DKV6534A							28p§	3.0	25-31 Ø	15 Ø	150	50M			Si§#	A90a Δ
17♦	DKV6534B							28p§	3.0	25-31 Ø	22 Ø	150	50M			Si§#	A90a Δ
18♦	DKV6534C							28p§	3.0	25-31 Ø	22 Ø	200	50M			Si§#	A90a Δ
19♦	DKV6534D							28p§	3.0	26.5-29.5 Ø	15 Ø	150	50M			Si§#	A90a Δ
20♦	DKV6534E							28p§	3.0	26.5-29.5 Ø	22 Ø	150	50M			Si§#	A90a Δ
21♦	DKV6534F							28p§	3.0	26.5-29.5 Ø	22 Ø	200	50M			Si§#	A90a Δ
22	KV2801	12GØ						28p§	3.0	5.7;3.0V-20V$	22 Ø	200	50M	450mØ	250m	Si#▼	DO7Δ
23	KV2801A	12GØ						28p§	3.0	5.75;3.0V-20V$	22 Ø	200	50M	450mØ	250m	Si#▼	DO7Δ
24	KV2802	10GØ						28p§	3.0	5.2;3.0V-20V$	22 Ø	150	50M	550mØ	250m	Si#▼	DO7Δ
25	KV2802A	10GØ						28p§	3.0	5.2;3.0V-20V$	22 Ø	150	50M	550mØ	250m	Si#▼	DO7Δ
26	KV2803	10GØ						28p§	3.0	2.4;3.0V-8.0V$	15 Ø	150	50M	550mØ	250m	Si#▼	DO7Δ
27	KV2803A	10GØ						28p§	3.0	2.4;3.0V-8.0V$	15 Ø	150	50M	550mØ	250m	Si#▼	DO7Δ
28	KV2804	5.0GØ						28p§	3.0	25-31Ø	8.0 Ø	75	50M	1.1 Ø	250m	Si#▼	DO7Δ
29	MA46534D							28p	3.0	29.5-26.5Ø	15	600				GA	A415
30	MA46534E							28p	3.0	29.5-26.5Ø	22	600				GA	A415
31	MA46534F							28p	3.0	29.5-26.5Ø	22	800				GA	A415
32	BAY96	25G						28pØ	6.0	28 - 39Ø	120			1.2	20	Si$#	DO4
33	VBC89J							28p	6.0	28-39Ø	120 Ø					Si	S168
34▼	1SV161							29p	2.0	10.5;2.0-25V $	30			800m		Si	W349
35	1SV50							29p	3.0	5.0§	30			1.5			
36	1SV75							29p	3.0	5.0-6.5;3V-25V$	30			500m		Si	A339
37	BB139	14G						29p	3.0	5.00-6.5;3.0-25V$	30	150 Ø	100M	350mØ		Si#Δ	DO35Δ
38♦	BB809							29p	3.0	4.5-32	28 $			0.6		Si #	DO34
39	FMMD109							29p§	3.0	39p-6p(1-22V)1MHz	30 Ø	280	50M		200m	Si▼	M156e
40	KV38S2	14GØ						29p§	3.0	5.7;3.0V-25V$	30	200	50M	700mØ	120m	Si#$	M500
41	KV3801	14GØ						29p§	3.0	5.7;3.0V-25V$	30 Ø	200	50M	700mØ	400m	Si#$	M501
42	MV104#							29p	3.0	26-32Ø	30			500m		SiΔ#	A1s
43	MV109							29p	3.0	6.5;3.0V-25V$	30	280	50M		400m	Si	A276
44♦	MV209							29p	3.0	26-32 Ø	30 Ø	200	50M		280m	Si	M764a
45	BA102C							29pØ	4.0	29-38Ø	20 †			3.0		Si	DO7
46	MA4060B							30p	0.0	20-40	90	50 Ø		2.0		Si	S4d
47	MA4061B							30p	0.0	20 - 40	140			2.0		Si	S4d
48	MA4062B							30p	0.0	20 - 40Ø	70				15	Si	S4d
49	MA4760B							30p	0.0	20 - 40Ø	90			2.0		Si	Z23
50	MA4761B							30p	0.0	20 - 40Ø	120			2.0		Si	Z23
51	PH0307							30p	0.0	20 - 40Ø	90			1.5		Si	DO4
52	PH0310							30p	0.0	40 - 60Ø	120			1.5		Si	DO4
53	PH0313							30p	0.0	40 - 60Ø	150			1.5		Si	DO4
54	SD11F12							30p	0.0	30 - 62	12			1.0		Si	P3
55	SD12F12							30p	0.0	30 - 62	12			1.0		Si	F3a
56	SD22F12							30p	0.0	30 - 62	12			1.0		Si	F11
57	SD32F12							30p	0.0	30 - 62	12			1.0		Si	F21
58	SD42F12							30p	0.0	30 - 62	12			1.0		Si	F9a
59	SDGPF12							30p	0.0	30 - 62	12			1.0		Si	DO7
60	SV87C							30p	0.0	20.0p-40.0pØ				1.0	20	Si$#	M1111
61	SV88C							30p	0.0	20.0p-40.0pØ				1.5	20	Si$#	M1111
62	HA1826A							30pΔ†	1.0	4.5;1.0V-28V$;10%	30	250	50M		400m	Si	DO7Δ
63	HA1826B							30pΔ†	1.0	4.5;1.0V-28V$;5%	30	250	50M		400m	Si	DO7Δ
64	HA1826C							30pΔ†	1.0	4.5;1.0V-28V$;2%	30	250	50M		400m	Si	DO7Δ
65	1SV101							30p	3.0	2.0-2.63.0V-9.0V$	15			0.5		Si	Δ
66▼	1SV162							30p	3.0	5.5;3.0-25V $	28	350 Ø	50M	500m		Si	W349
67	BB103							30p	3.0	2.65;3.0 - 30V$	30	100	100M	.50		Si$#	DO7
68	BB110							30p	3.0	27-33Ø	3.0			400m		Si#	M501
69	VVC1044,A,B,C,D							30p%	4.0	1.45;4.0V-10V$	10	100	50M		400m§	Si	DO7†
70	VVC1045,A,B,C,D							30p%	4.0	1.45;4.0V-10V$	10	100	50M		400m§	Si	DO7†
71	VVC1046,A,B,C,D							30p%	4.0	1.45;4.0V-10V$	10	100	50M		400m§	Si	DO7†
72	MA44100							30pØ	6.0	16-30Ø	250 Ø			450m	25 Ø	Si§Δ	S454
73	MA44200							30pØ	6.0	16-30Ø	250 Ø			450u	25 Ø	Si§Δ	S454
74	BB209							31p	1.0	6.8;3.0V-25V$	30	180 Ø	50M	850mØ		Si$#	A342aΔ
75	BB110B							31pØ	3.0	27-31Ø	30 $			400m		Si#	M501
76	MA322							31pΔ	3.0	5.0;3.0V-25V$	30			600m		Si#$	A246Δ
77	ZC111							31p	3.0	2.65;3.0V-30V$	30 $			.40		Si§Δ	C219
78	PSV116-01							32p	0.0	5.5;0.0V-45V$	45 Ø	1.0k	50M			Si§	F27as
79	PSV116-06							32p	0.0	5.5;0.0V-45V$	45 Ø	1.0k	50M			Si§	A1st
80	PSV116-14							32p	0.0	5.5;0.0V-45V$	45 Ø	1.0k	50M			Si§	A2u
81	PSV116-21							32p	0.0	5.5;0.0V-45V$	45 Ø	1.1k	50M			Si§	M86e
82	PSV116-31							32p	0.0	5.5;0.0V-45V$	45 Ø	1.0k	50M			Si§	F10ah
83	PSV128-01							32p	0.0	7.0;0.0V-60V$	60 Ø	800	50M			Si§	F27as
84	PSV128-06							32p	0.0	7.0;0.0V-60V$	60 Ø	800	50M			Si§	A1st
85	PSV128-14							32p	0.0	7.0;0.0V-60V$	60 Ø	800	50M			Si§	A2u
86	PSV128-21							32p	0.0	7.0;0.0V-60V$	60 Ø	800	50M			Si§	M86e
87	PSV128-31							32p	0.0	7.0;0.0V-60V$	60 Ø	800	50M			Si§	F10ah
88	PSV138-01							32p	0.0	9.0;0.0V-90V$	90 Ø	600	50M			Si	F27as
89	PSV138-14							32p	0.0	9.0;0.0V-90V$	90 Ø	600	50M			Si	A2u
90	PSV138-16							32p	0.0	9.0;0.0V-90V$	90 Ø	600	50M			Si	A1st
91	PSV138-21							32p	0.0	9.0;0.0V-90V$	90 Ø	600	50M			Si	M86e
92	PSV138-31							32p	0.0	9.0;0.0V-90V$	90 Ø	600	50M			Si	F10ah
93	PSV147-01							32p	0.0	10;0.0V-120V$	120 Ø	460	50M			Si	F27as
94	PSV147-14							32p	0.0	10;0.0V-120V$	120 Ø	460	50M			Si	A2u
95	PSV147-16							32p	0.0	10;0.0V-120V$	120 Ø	460	50M			Si	A1st
96	PSV147-21							32p	0.0	10;0.0V-120V$	120 Ø	460	50M			Si	M86e
97	PSV147-31							32p	0.0	10;0.0V-120V$	120 Ø	460	50M			Si	F10ah
98▼	1SV147							32pØ	3.0	2.1-2.6;3.0-8.0V $	15			500m			C262
99	1S1658	5.0GØ						32p	4.0	65-15	20	100 Ø	50M			Si#$	DO7
100	MA4292							32p	6.0		30			3.0		Si	F3a
101▼	V933E,A,B,C,D%							33p		6.5;0.5V-60V $	60 $				400m		DO7
102	MV1409							33pt△	2.0	33-40Ø	12	200	1.0M		400m	Si	DO7Δ
103	MV1409A							33pt△	2.0	33-40Ø	12	200	1.0M		400m	Si	DO7Δ
104	MV1409B							33pt△	2.0	33-40Ø	12	200	1.0M		400m	Si	DO7Δ
105	ZC803							33pΔ†	2.0	5.75;2.0V-20V$;20%	25	300	50M		400m	Si	DO7Δ
106	ZC803A							33pΔ†	2.0	5.75;2.0V-20V$;10%	25	300	50M		400m	Si	DO7Δ
107	ZC803B							33pΔ†	2.0	5.75;2.0V-20V$;5%	25	300	50M		400m	Si	DO7Δ
108	ZC823							33p	2.0	5.5;2-20V$	25	200	50M		300m	Si▼	C219
109	ZC833A,B							33p%Δ	2.0	5.0-65;2.0V-20V$	25 $	200	50M		200m		M156eΔ
110	BB110G							33pØ	3.0	29-33Ø	30 $			400m		Si#	M501

6. VOLTAGE VARIABLE CAPACITORS & VARACTOR DIODES

IN ORDER OF (1) TYPICAL CAPACITANCE, (2) TEST VOLTAGE, and (3) TYPE No.

LINE No.	3 TYPE No.	MINIMUM CUTOFF FREQUENCY (Corresponding to Type Numbers in previous column) (Hz)	(Hz)	(Hz)	(Hz)	(Hz)	(Hz)	1 TYP. CAP. Cj (F)	2 at TEST VOLT (V)	CAPACITANCE RANGE (for V = 0 to PIV) Ø - at TEST VOLT. (pF)	PIV (V)	Q FACTOR MIN. Q	at TEST FREQ (Hz)	MAX. SER. RES. Rs (Ω)	MAX. DISS. @ 25°C (W)	DESCRIPTION MAT.	DWG. No.
1	1N3182							33p	4.0		20	65 Ø	50M	3.0	.16	Si	DO7
2	1N4794							33p%	4.0	2.46;0.0-4.0V$	20 $	15	50M		500m	Si	DO14
3	1N4794A							33p%	4.0	2.46;0.0-4.0V$	20 $	15	50M		500m	Si	DO14
4	1N4794B							33p%	4.0	2.46;0.0-4.0V$	20 $	15	50M		500m	Si	DO14
5	1N4794C							33p%	4.0	2.46;0.0-4.0V$	20 $	15	50M		500m	Si	DO14
6	1N4794D							33p%	4.0	2.46;0.0-4.0V$	20 $	15	50M		500m	Si	DO14
7	1N4809							33p%	4.0	2.46;0.0-4.0V$	60 $	15	50M		500m	Si	DO14
8	1N4809A							33p%	4.0	2.46;0.0-4.0V$	60 $	15	50M		500m	Si	DO14
9	JAN1N4809A							33p%	4.0	2.46;0.0-4.0V$	60 $	15	50M		500m	Si	A1dd
10	1N4809B							33p%	4.0	2.46;0.0-4.0V$	60 $	15	50M		500m	Si	DO14
11	JAN1N4809B							33p%	4.0	2.46;0.0-4.0V$	60 $	15	50M		500m	Si	A1dd
12	1N4809C							33p%	4.0	2.46;0.0-4.0V$	60 $	15	50M		500m	Si	DO14
13	1N4809D							33p%	4.0	2.46;0.0-4.0V$	60 $	15	50M		500m	Si	DO14
14	1N5146							33p	4.0	3.2;4.0V-60V$	60 Ø	200	50M		400m	Si	DO7
15	1N5146A							33p	4.0	3.2;4.0V-60V$	60 Ø	200	50M		400m	Si	DO7
16	JAN1N5146A							33p	4.0	31.4-34.6Ø	65 Ø	200	50M		400m	Si	DO7
17	1N5450							33p%	4.0	2.6;2V-30V$	30	350	50M		400m	Si	DO7
18	1N5450A							33p%	4.0	2.6;2V-30V$	30	350	50M		400m	Si	DO7
19	1N5450B							33p%	4.0	2.6;2V-30V$	30	350	50M		400m	Si	DO7
20	1N5450C							33p%	4.0	2.6;2V-30V$	30	350	50M		400m	Si	DO7
21	1N5450D							33p%	4.0	2.6;2V-30V$	30	350	50M		400m	Si	DO7
22	1N5470							33p%	4.0	2.9;2V-30V$	30	500	50M		400m	Si	DO7
23	1N5470A							33p%	4.0	2.9;2V-30V$	30	500	50M		400m	Si	DO7
24	1N5470B							33p%	4.0	2.9;2V-30V$	30	500	50M		400m	Si	DO7
25	JAN1N5470B							33p	4.0	31.35-34.65Ø	30 Ø	500	50M		400m	Si	DO7
26	1N5470C							33p%	4.0	2.9;2V-30V$	30	500	50M		400m	Si	DO7
27	JAN1N5470C							33p	4.0	32.34-33.66Ø	30 Ø	500	50M		400m	Si	DO7
28	1N5470D							33p%	4.0	2.9;2V-30V$	30	500	50M		400m	Si	DO7
29	1N5689							33p%	4.0	3.3;2.0V-40V$	40	500	50M		400m	Si	DO7
30	1N5689A							33p%	4.0	3.3;2.0V-40V$	40	500	50M		400m	Si	DO7
31	1N5689B							33p%	4.0	3.3;2.0V-40V$	40	500	50M		400m	Si	DO7
32	1N5704							33p%	4.0	3.2;4.0V-60V$	60	350	50M		400m	Si	DO7
33	1N5704A							33p%	4.0	3.2;4.0V-60V$	60	350	50M		400m	Si	DO7
34	1N5704B							33p%	4.0	3.2;4.0V-60V$	60	350	50M		400m	Si	DO7
35	CV834							33p	4.0	29.7-36.3Ø	30	20	50M		400m	Si	DO7
36	CV1014,A,B,C,D	7.5G						33p%	4.0	73-10.6	60	150	50M		400m	Si	DO7
37	CV1114,A,B,C,D	7.5G						33p%	4.0	73-8.3	100	150	50M		400m	Si	DO7
38	CV1638							33p	4.0	29.7-36.3Ø	20	200	50M		400m	Si$	DO7
39	CV5033							33p	4.0	2.5;2.0V-30V$	30	200	50M		400m	Si	DO7
40	CVH2030-26							33p	4.0	4.5;0.0-30$;10%	30 Ø	1.4k	50M			Si§§	u30b
41	CVH2060-26							33p	4.0	7.5;0.0-60$;10%	60 Ø	900	50M			Si§§	u30c
42	D1738,B,C							33p%†	4.0	3.2;2V-30V$	30 Ø	350	50M		400m	Si#$	DO7
43	DC4218B							33p	4.0			200 Ø	50M			Si	DO7Δ
44♦	DVH6730-26							33p§	4.0	4.5;0.0-30$;10%	30 Ø	1.4k	50M			Si§§	A90a
45♦	DVH6731-26	70G						33p†	4.0	4.5;0.0V-30V$;10%	30 Ø	1.4k	50M			Si§§	F143
46	DVH6732-26	70G						33p†	4.0	4.5;0.0V-30V$;10%	30 Ø	1.4k	50M			Si§§	F56ad
47	DVH6733-26	70G						33p†	4.0	4.5;0.0V-30V$;10%	30 Ø	1.4k	50M			Si§§	F59u
48	DVH6734-26	70G						33p†	4.0	4.5;0.0V-30V$;10%	30 Ø	1.4k	50M			Si§§	M929
49♦	DVH6760-26							33p§	4.0	7.0;0.0-60$;10%	60 Ø	900	50M			Si§§	A90a
50♦	DVH6761-26	45G						33p†	4.0	7.0;0.0V-60V$;10%	60 Ø	900	50M			Si§§	F143
51	DVH6762-26	45G						33p†	4.0	7.0;0.0V-60V$;10%	60 Ø	900	50M			Si§§	F56ad
52	DVH6763-26	45G						33p†	4.0	7.0;0.0V-60V$;10%	60 Ø	900	50M			Si§§	F59u
53	DVH6764-26	45G						33p†	4.0	7.0;0.0V-60V$;10%	60 Ø	900	50M			Si§§	M929
54	EP1038A							33p†Δ	4.0	3.0;2.0V-30V$	30	700	50M		5.0	Si	F59q
55	EP1038B							33p†Δ	4.0	3.0;2.0V-30V$	30	700	50M		5.0	Si	F27ah
56	EP1038D							33p†Δ	4.0	3.0;2.0V-30V$	30	700	50M		5.0	Si	F56q
57	EP1038E							33p†Δ	4.0	3.0;2.0V-30V$	30	700	50M		5.0	Si	F59j
58	EP1038H							33p†Δ	4.0	3.0;2.0V-30V$	30	700	50M		5.0	Si	S428b
59	G133,A,B							33p%	4.0		20	100 Ø	50M		.50	Si$	A60k
60	G233,A,B							33p%	4.0		20	200 Ø	50M		.50	Si$	A60k
61	G333,A,B							33p%	4.0		20	300 Ø	50M		.50	Si$	A60k
62	G433,A,B							33p%	4.0		20	400 Ø	50M		.50	Si$	A60k
63	GC1719							33p†	4.0	7.0;0.0V-60V$	60	800	50M			Si	F111b†
64	GC1769							33p†Δ	4.0	7.0;0.0V-60V$;10%	60	600	50M		400m	Si	DO7
65	GC1769B							33p†Δ	4.0	7.0;0.0V-60V$;5%	60	600	50M		400m	Si	DO7
66	GC1769C							33p†Δ	4.0	7.0;0.0V-60V$;2%	60	600	50M		400m	Si	DO7
67	HA1238A							33pΔ†	4.0	4.0;2.0V-30V$;10%	30	600	50M		250m	Si	A1ah
68	HA1238B							33pΔ†	4.0	4.0;2.0V-30V$;5%	30	600	50M		250m	Si	A1ah
69	HA1238C							33pΔ†	4.0	4.0;2.0V-30V$;2%	30	600	50M		250m	Si	A1ah
70	HA1938A							33pΔ†	4.0	4.0;2.0V-30V$;10%	30	600	50M		400m	Si	DO7
71	HA1938B							33pΔ†	4.0	4.0;2.0V-30V$;5%	30	600	50M		400m	Si	DO7
72	HA1938C							33pΔ†	4.0	4.0;2.0V-30V$;2%	30	600	50M		400m	Si	DO7
73	HC7084							33p	4.0	85 - 17	20	10	.05G			Si	DO7
74	HC7096							33p	4.0	85 - 9.0	60	10	.05G			Si	DO7
75	KV638							33p§	4.0	2.6;2.0V-20V$	20 Ø	200	50M		400m	Si#$	DO7
76	LP1038A							33p†Δ	4.0	4.7;0.0V-25V$	25	500	50M		5.0	Si	F59q
77	LP1038B							33p†Δ	4.0	4.7;0.0V-25V$	25	500	50M		5.0	Si	F27ah
78	LP1038D							33p†Δ	4.0	4.7;0.0V-25V$	25	500	50M		5.0	Si	F56q
79	LP1038E							33p†Δ	4.0	4.7;0.0V-25V$	25	500	50M		5.0	Si	F59j
80	LP1038H							33p†Δ	4.0	4.7;0.0V-25V$	25	500	50M		5.0	Si	S428b
81▼	MA4H036							33p†	4	8.9-10.7	30	600	50M			Si	V25
82	MA4019F							33p	4.0	5.2$	110 Ø	100	50M			Si#$	A31e
83	MA4273F							33p	4.0	26.4 - 39.6Ø	110	100	.05G		.50	Si	A31e
84	MA45115							33p†Δ	4.0	5.5;0.0V-45V$		700	50M			Si$	DO7
85	MA45135							33p†Δ	4.0	7.0;0.0V-60V$		500	50M			Si$	DO7
86	MA45280							33pΔ	4.0	7.4;0V-60V$	60	700	50M			Si§§	V11†
87	MA45340							33pΔ	4.0	4.7;0V-30V$	30	750	50M			Si§#	DO7†
88	MA45355							33pΔ	4.0	6.0;0V-45V$	45	400	50M			Si§#	DO7†
89	MA45370							33pΔ	4.0	7.4;0V-60V$	60	300	50M			Si§#	DO7†
90♦	MV834							33p§	4.0	29.7-36.3 Ø	30 Ø	20	50M		2.0	Si	DO7
91	MV834B							33pΔ†	4.0	2.2;4V-25V$;5%	30	20	50M		400m	Si	DO7
92	MV834C							33pΔ†	4.0	2.2;4V-25V$;2%	30	20	50M		400m	Si	DO7
93♦	MV1638							33p§	4.0	29.7-36.3 Ø	20 Ø	200	50M		400m	Si	DO7
94	MV1638B							33pΔ†	4.0	2.6;2.0V-20V$;5%	20	200	50M		400m	Si	DO7
95	MV1638C							33pΔ†	4.0	2.6;2.0V-20V$;2%	20	200	50M		400m	Si	DO7
96	MV1738							33p§	4.0	29.7 - 36.3Ø	30 Ø	350	.05G		.40	Si$	DO7
97	MV1738A							33p	4.0		30 Ø	350	50M		400m	Si#$	DO7
98♦	MV1876	45GØ						33p§	4.0	29.7-36.3Ø	60 Ø	300	50M		400m	Si$	DO7
99♦	MV2109							33p§	4.0	29.7-36.3Ø	30 Ø	200	50M		280m	Si	M764a
100♦	MV2209							33p§	4.0	26.4-39.6 Ø	25 Ø	150	50M		280m	Si	M764a
101	MVI2109							33p†	4.0	3.3;2.0V-30V$	30 Ø	200	100M		200m	Si	M750
102	PC127,A,B,C,D	2.5G						33p%	4.0	4.6;500mV-30V$	30 $	50	50M		600m		DO14
103▼	PC127,A,B,C,D#							33p	4.0	4.6;0.5V-30V $	30 $	50	50M		400m		DO7
104	PC128,A,B,C,D	6.2G						33p%	4.0	6.0;500mV-50V$	50 $	125	50M		600m		DO14
105▼	PC128,A,B,C,D#							33p	4.0	6.0;0.5V-50V $	50 $	125	50M		400m		DO7
106▼	PC129,A,B,C,D							33p%	4.0			50	50M		400m		DO7
107▼	PC129,A,B,C,D#							33p	4.0	7.5;0.5V-80V $	80 $	50	50M		400m		DO7
108▼	PC130,A,B,C,D							33p%	4.0			100	50M		400m		DO7
109▼	PC130,A,B,C,D#							33p	4.0	8.2;0.5V-100V $	100 $	100	50M		400m		DO7
110	PC0604A							33p§Δ	4.0		30 $	200	50M				DO7

6. VOLTAGE VARIABLE CAPACITORS & VARACTOR DIODES

IN ORDER OF (1) TYPICAL CAPACITANCE, (2) TEST VOLTAGE, and (3) TYPE No.

LINE No.	[3] TYPE No.	MINIMUM CUTOFF FREQUENCY (Corresponding to Type Numbers in previous column) (Hz)	(Hz)	(Hz)	(Hz)	(Hz)	(Hz)	TYP. CAP. [1] CAP. Cj (F)	[2] at TEST VOLT (V)	CAPACITANCE RANGE (for V = 0 to PIV) Ø - at TEST VOLT. (pF)	PIV (V)	Q FACTOR MIN. Q	at TEST FREQ (Hz)	MAX. SER. RES. Rs (Ω)	MAX. DISS. @ 25°C (W)	DESCRIPTION MAT.	DWG. No.
1	PC0604B							33p§Δ	4.0		30 $	300	50M				DO7
2	PC0604C							33p§Δ	4.0		30 $	400	50M				DO7
3	PC0614A							33p§Δ	4.0		60 $	200	50M				DO7
4	PC0614B							33p§Δ	4.0		60 $	300	50M				DO7
5	PC0614C							33p§Δ	4.0		60 $	400	50M				DO7
6	PC0624A							33p§Δ	4.0	2.4;.10-4.0V$	90 $	200	50M				DO7
7	PC0624B							33p§Δ	4.0		90 $	300	50M				DO7
8	PC0634A							33p§Δ	4.0		120 $	200	50M				DO7
9	PC0644A							33p§Δ	4.0		150 $	200	50M				DO7
10	PC1404A							33p§Δ	4.0		30 $	200	50M				A2u
11	PC1404B							33p§Δ	4.0		30 $	300	50M				A2u
12	PC1404C							33p§Δ	4.0		30 $	400	50M				A2u
13	PC1414A							33p§Δ	4.0		60 $	200	50M				A2u
14	PC1414B							33p§Δ	4.0		60 $	300	50M				A2u
15	PC1414C							33p§Δ	4.0		60 $	400	50M				A2u
16	PC1424A							33p§Δ	4.0		90 $	200	50M				A2u
17	PC1424B							33p§Δ	4.0		90 $	300	50M				A2u
18	PC1434A							33p§Δ	4.0		120 $	200	50M				A2u
19	PC1444A							33p§Δ	4.0		150 $	200	50M				A2u
20	PC2604A							33p§Δ	4.0		30 $	200	50M				DO7
21	PC2604B							33p§Δ	4.0		30 $	300	50M				DO7
22	PC2604C							33p§Δ	4.0		30 $	400	50M				DO7
23	PC2614A							33p§Δ	4.0		60 $	200	50M				DO7
24	PC2614B							33p§Δ	4.0		60 $	300	50M				DO7
25	PC2614C							33p§Δ	4.0		60 $	400	50M				DO7
26	PC2624A							33p§Δ	4.0		90 $	200	50M				DO7
27	PC2624B							33p§Δ	4.0		90 $	300	50M				DO7
28	PC2624C							33p§Δ	4.0		90 $	400	50M				DO7
29	PC2634A							33p§Δ	4.0		120 $	200	50M				DO7
30	PC2634B							33p§Δ	4.0		120 $	300	50M				DO7
31	PC2644A							33p§Δ	4.0		150 $	200	50M				DO7
32	PC2644B							33p§Δ	4.0		150 $	300	50M				DO7
33	PG133							33pΔ	4.0	4.6;2.0V-65V$	70	200	50M		400m	Si	DO7
34	PG133A							33pΔ	4.0	4.6;2.0V-65V$;10%	70	200	50M		400m	Si	DO7
35	PG133B							33pΔ	4.0	4.6;2.0V-65V$;5%	70	200	50M		400m	Si	DO7
36	PG133C							33pΔ	4.0	4.6;2.0V-65V$;2%	70	100	50M		400m	Si	DO7
37	PG133D							33pΔ	4.0	4.6;2.0V-65V$;1%	70	200	50M		400m	Si	DO7
38	PG233							33pΔ	4.0	4.5;2.0V-65V$	70	200	50M		400m	Si	DO7
39	PG233A							33pΔ	4.0	4.5;2.0V-65V$;10%	70	200	50M		400m	Si	DO7
40	PG233B							33pΔ	4.0	4.5;2.0V-65V$;5%	70	200	50M		400m	Si	DO7
41	PG233C							33pΔ	4.0	4.5;2.0V-65V$;2%	70	200	50M		400m	Si	DO7
42	PG233D							33pΔ	4.0	4.5;2.0V-65V$;1%	70	200	50M		400m	Si	DO7
43	PG333							33pΔ	4.0	4.0;2.0V-50V$	55	300	50M		400m	Si	DO7
44	PG333A							33pΔ	4.0	4.0;2.0V-50V$;10%	55	300	50M		400m	Si	DO7
45	PG333B							33pΔ	4.0	4.0;2.0V-50V$;5%	55	300	50M		400m	Si	DO7
46	PG333C							33pΔ	4.0	4.0;2.0V-50V$;2%	55	300	50M		400m	Si	DO7
47	PG333D							33pΔ	4.0	4.0;2.0V-50V$;1%	55	300	50M		400m	Si	DO7
48	PV1434							33p§	4.0		120	400	500M				A2u
49	SQ1238A,B,C							33pΔ†	4.0	3.3;2V-30V$	30	800	50M		250m	Si	A1ah
50	SQ1288A,B,C							33p§%	4.0		30 Ø	350	50M		250m	Si#$	A1ah
51	SQ1738,B,C							33pΔ†	4.0	3.2;2V-30V$	30	700	50M		400m	Si	DO7
52	SQ5470A							33p†Δ	4.0	3.2;2.0V-30V$;10%	30	500	50M		400m	Si	DO7
53	SQ5470B							33p†Δ	4.0	3.2;2.0V-30V$;5%	30	500	50M		400m	Si	DO7
54	SQ5470C							33p†Δ	4.0	3.2;2.0V-30V$;2%	30	500	50M		400m	Si	DO7
55	SV77G							33p	4.0					2.0	5.0	Si$#	M1110
56♦	V33,A,B,C,D%	750M						33p%	4.0	4.1;0.5V-20V $	20 $	7.0	50M		400m	Si$	DO14
57♦	V33,A,B,C,D#	750M						33p%	4.0	4.1;0.5V-20V $	20 $	7.0	50M		400m		DO7
58	V33E,A,B,C,D	350M						33p%	4.0	6.5;500mV-60V$	60 $	7.0	50M		400m		DO7
59▼	V33E,A,B,C,D#							33p	4.0	6.5;0.5V-60V $	60 $	7.0	50M		400m		DO14
60	V33EG							33p	4.0	20%	60 $	10	50M		400m	Si$	DO7Δ
61	V33G							33p	4.0	20%	20 $	10	50M		400m	Si$	DO7Δ
62♦	V933,A,B,C,D%	750M						33p%	4.0	4.1;0.5V-20V $	25 $	15	50M		400m		DO7
63	V933,A,B,C,D#	750M						33p%	4.0	14.2-85	25 $	15	50M		500m	Si$	DO14
64♦	V933E,A,B,C,D							33p%	4.0	6.5;500mV-60V$	60 $				400m		DO14
65	V933E,A,B,C,D#	350M						33p%	4.0	9.0-85	60 $	7.0	50M		500m	Si$	DO14
66♦	VA127							33p	4.0	3.0;2.0V-25V $	25 $	50	50M		400m	Si$	DO14Δ
67♦	VA128							33p	4.0	4.0;2.0V-50V $	50 $	125	50M		400m	Si$	DO14Δ
68	VA129							33p	4.0	4.0;2.0V-80V$	80 $	50	50M		500m	Si$	DO14Δ
69	VA130							33p	4.0	4.2;2.0V-100V$	100 $	100	50M		500m	Si$	DO14Δ
70♦	VA154							33p	4.0	4.0;2.0V-80V $	80 $	100	50M		400m	Si$	DO14Δ
71♦	VA160							33p	4.0	3.0;2.0V-25V $	25 $	150	50M		400m	Si$	DO14Δ
72♦	VA167							33p	4.0	5.2;2.0V-100V $	100 $	75	50M		400m	Si$	DO14Δ
73	VA204	37GØ						33p	4.0	6.2;2.0V-150V$	150 $	75	50M	1.3 Ø	500m	Si$	DO14Δ
74	VA205	50GØ						33p	4.0	6.2;2.0V-150V$	150 $	100	50M	1.0 Ø	500m	Si$	DO14Δ
75	VA304							33p	4.0	6.7;2.0-200V$	200 $	50	50M	2.0 Ø	500m	Si$	DO14Δ
76	VA305							33p	4.0	6.6;2.0-200V$	200 $	75	50M	1.3 Ø	500m	Si$	DO14Δ
77	VC33,A,B							33p%	4.0	11 - 85	50 $	10	.05G				DO7
78	VC233,A,B							33p%	4.0	11 - 85	50 $	25	.05G				DO7
79	VC332,A,B							33p%	4.0	3.0;1V-25V$	25 $	50	.05G				DO7
80	VC333,A,B							33p%	4.0	4.0;2V-80V$	80 $	50	.05G				DO7
81	VC432,A,B							33p%	4.0	3.0;1V-25V$	25 $	100	.05G				DO7
82	VC433,A,B							33p%	4.0	4.0;1V-50V$	50 $	100	.05G				DO7
83	VC434,A,B							33p%	4.0	4.0;2.0-80V$	100 $	100	50M				DO7
84	VC633,A,B							33p%	4.0	3.0;1V-25V$	40 $	200	.05G				DO7
85	VC634,A,B							33p%	4.0	3.0;1V-25V$	40 $	300	.05G				DO7
86	VC827,A,B							33p%	4.0	17 - 85	20 $	7.0	.05G				DO7
87	VC847,A,B							33p%	4.0	9.0 - 85	60 $	7.0	.05G				DO7
88	VC6233							33p	4.0	75-17;0.0V-20V	20 $	60	30M				A1da
89	VC6633							33p	4.0	75-17;0.0V-20V	20 $	400	30M				A1da
90	VQA420							33p	4.0	3.1;4.0V-60V$	60 $	200	50M			Si	DO7
91	VQA520							33p§	4.0	3.8;4.0V-100V$	100 $	150	50M			Si	DO7
92	VVC213,A,B,C,D							33p%	4.0	2.0;4.0V-20V$	20	7.0	50M		400m§	Si	DO7†
93	VVC214,A,B,C,D							33p%	4.0	3.2;4.0V-60V$	60	7.0	50M		400m§	Si	DO7†
94	VVC409,A,B,C,D							33p%	4.0	2.2;4.0V-25V$	25	50	50M		400m§	Si	DO7†
95	VVC410,A,B,C,D							33p%	4.0	2.9;4.0V-50V$	50	125	50M		400m§	Si	DO7†
96	VVC411,A,B,C,D							33p%	4.0	3.6;4.0V-80V$	80	50	50M		400m§	Si	DO7†
97	VVC712,A,B,C,D							33p%	4.0	2.0;4.0V-20V$	20	7.0	50M		400m§	Si	DO7†
98	VVC713,A,B,C,D							33p%	4.0	2.4;4.0V-30V$	30	50	50M		400m§	Si	DO7†
99	VVC723,A,B,C,D							33p%	4.0	3.9;4.0V-100V$	100	100	50M		400m§	Si	DO7†
100	VVC747,A,B,C,D							33p%	4.0	2.4;4.0V-30V$	30	20	50M		400m§	Si	DO7†
101	VVC748,A,B,C,D							33p%	4.0	2.4;4.0V-30V$	30	350	50M		400m§	Si	DO7†
102	VVC749,A,B,C,D							33p%	4.0	2.0;4.0V-20V$	20	200	50M		400m§	Si	DO7†
103	VVC822,A,B,C,D							33p%	4.0	2.2;4.0V-25V$	25	50	50M		400m§	Si	DO7†
104	VVC823,A,B,C,D							33p%	4.0	2.9;4.0V-50V$	50	10	50M		400m§	Si	DO7†
105	VVC824,A,B,C,D							33p%	4.0	2.9;4.0V-50V$	50	25	50M		400m§	Si	DO7†
106	VVC825,A,B,C,D							33p%	4.0	2.9;4.0V-50V$	50	50	50M		400m§	Si	DO7†
107	VVC869,A,B,C,D							33p%	4.0	2.7;4.0V-40V$	40	300	50M		400m§	Si	DO7†
108	VVC870,A,B,C,D							33p%	4.0	2.4;4.0V-30V$	30	100	50M		400m§	Si	DO7†
109	VVC871,A,B,C,D							33p%	4.0	2.7;4.0V-40V$	40	200	50M		400m§	Si	DO7†
110	VVC872,A,B,C,D							33p%	4.0	3.2;4.0V-60V$	60	100	50M		400m§	Si	DO7†

6. VOLTAGE VARIABLE CAPACITORS & VARACTOR DIODES

IN ORDER OF (1) TYPICAL CAPACITANCE, (2) TEST VOLTAGE, and (3) TYPE No.

LINE No.	TYPE No.	MINIMUM CUTOFF FREQUENCY (Corresponding to Type Numbers in previous column) (Hz)	(Hz)	(Hz)	(Hz)	(Hz)	(Hz)	TYP. CAP. 1 CAP. Cj (F)	2 at TEST VOLT (V)	CAPACITANCE RANGE (for V = 0 to PIV) Ø - at TEST VOLT. (pF)	PIV (V)	Q FACTOR MIN. Q	at TEST FREQ (Hz)	MAX. SER. RES. Rs (Ω)	MAX. DISS. @ 25°C (W)	DESCRIPTION MAT.	DWG. No.
1	VVC873,A,B,C,D							33p%	4.0	4.2;4.0V-110V$	110	100	50M		400m§	Si	DO7†
2	VVC932,A,B,C,D							33p%	4.0	2.0;4.0V-20V$	20	10	50M		400m§	Si	DO7†
3	VVC933,A,B,C,D							33p%	4.0	2.2;4.0V-25V$	25	150	50M		400m§	Si	DO7†
4	VVC934,A,B,C,D							33p%	4.0	2.9;4.0V-50V$	50	75	50M		400m§	Si	DO7†
5	VVC935,A,B,C,D							33p%	4.0	3.2;4.0V-60V$	60	10	50M		400m§	Si	DO7†
6	VVC936,A,B,C,D							33p%	4.0	3.6;4.0V-80V$	80	100	50M		400m§	Si	DO7†
7	VVC937,A,B,C,D							33p%	4.0	3.9;4.0V-100V$	100	75	50M		400m§	Si	DO7†
8	VVC938,A,B,C,D							33p%	4.0	3.9;4.0V-100V$	100	100	50M		400m§	Si	DO7†
9	VVC939,A,B,C,D							33p%	4.0	4.8;4.0V-150V$	150	60	50M		400m§	Si	DO7†
10	VVC940,A,B,C,D							33p%	4.0	4.8;4.0V-150V$	150	100	50M		400m§	Si	DO7†
11	VVC1007,A,B,C,D							33p%	4.0	3.15;4.0V-50V$	50	600	50M		400m§	Si	DO7†
12	VVC1008,A,B,C,D							33p%	4.0	3.17;4.0V-60V$	60	400	50M		400m§	Si	DO7†
13	VVC1017,A,B,C,D							33p%	4.0	5.0;4.0V-150V$	150	7.0	50M		400m§	Si	DO7†
14	VVC1018,A,B,C,D							33p%	4.0	4.4;4.0V-130V$	130	100	50M		400m§	Si	DO7†
15	VVC1019,A,B,C,D							33p%	4.0	5.6;4.0V-200V$	200	7.0	50M		400m§	Si	DO7†
16	VVC1638,A,B,C							33p%	4.0	2.0-3.2;2.0V-20V$	20	200	50M		400m§	Si	DO7†
17	ZC708Ø							33pΔ†	4.0	2.8;2.0V-30V$;10%	30	200	50M		400m	Si	DO7Δ
18	ZC708B							33pΔ†	4.0	2.8;2.0V-30V$;5%	30	200	50M		400m	Si	DO7Δ
19	ZC708C							33pΔ†	4.0	2.8;2.0V-30V$;2%	30	200	50M		400m	Si	DO7Δ
20	ZC748							33p§	4.0	2.8;2.0V-3.0V$	30	200	50M			Si$Δ	C219
21	BA119							35p	2.0	45 - 65Ø	50	100 Ø	30M	1.0		Si	DO7
22	1N950							35p	4.0	6.0 - 88	130	7.0	.05G	10		Si	DO7
23	1N950A							35p	4.0		130	7.0	50M			Si	DO7
24	1N950B							35p	4.0	6.0-88;5.0%	130 $	39	50M		400m	Si	DO7
25	1N954							35p	4.0	14 - 88	25	7.0	.05G	11		Si	DO7
26	1N954A							35p	4.0	14-88;10%	25 $	20	50M		400m	Si	DO7
27	1N954B							35p	4.0	14-18;5.0%	25 $	20	50M		400m	Si	DO7
28	HC7001							35p	4.0	6.0-88	130	7.0	50M	10	400m	Si	DO7
29	HC7006							35p	4.0	14-88	25	20	50M		400m	Si	DO7
30	KV950							35p%	4.0	5.1;4.0V-130V$	130 $	100	50m		400m	▼	DO14
31	KV950A							35p%	4.0	5.1;4.0V-130V$	130 $	100	50m		400m	▼	DO14
32	KV950B							35p%	4.0	5.1;4.0V-130V$	130 $	100	50m		400m	▼	DO14
33	KV950C							35p%	4.0	5.1;4.0V-130V$	130 $	100	50m		400m	▼	DO14
34	KV950D							35p%	4.0	5.1;4.0V-130V$	130 $	100	50m		400m	▼	DO14
35	1N4387							35pØ	6.0		150 Ø	150	50M	1.5	20 Ø	Si$Δ	DO4
36	VBC99J							35p	6.0	23-39Ø	150 Ø					Si	S168
37	SD11F18							36p	0.0	36 - 75	18			1.0		Si	P3
38	SD12F18							36p	0.0	36 - 75	18			1.0		Si	F3a
39	SD22F18							36p	0.0	36 - 75	18			1.0		Si	F11
40	SD32F18							36p	0.0	36 - 75	18			1.0		Si	F21
41	SD42F18							36p	0.0	36 - 75	18			1.0		Si	F9a
42	SDGPF18							36p	0.0	36 - 75	18			1.0		Si	DO7
43	BB104							36p	3.0	2.65;3.0 - 30V$	30	100	100M	.40		Si$#	M396
44	MV104G							36p§	3.0	34-39Ø	32	100	100M		280m	Si$	TO92Δ
45	BA102D							36pØ	4.0	36-45Ø	20 †			3.0		Si	DO7
46	SVC202							37p	1.6	37.45-10.17	7.5			0.6		Si	TO92
47	MA4352G1							37.p	12	25 - 50	12			.50	8.0	Si	F21§
48	BBY27S1							38p†	0.0	10$	120	300	50M			Si	M1069
49	BB609							38p	1.0	38-2.6at1V-28V	30	250	100M	.70 Ø		Si$#	DO35
50	BB204							38p	3.0	34-42Ø	30			400m		Si$#	C153a
51	MA46534A							38p	3.0	31-25Ø	15	600				GA	A415
52	MA46534B							38p	3.0	31-25Ø	22	600				GA	A415
53	MA46534C							38p	3.0	31-25Ø	22	800				GA	A415
54▼	V939E,A,B,C,D%							39p		6.3;0.5V-55V $	55 $				400m		DO7
55	SVC201SP							39p	1.0	39-12.6	9.0 %			0.6		Si	C226
56	BB104B							39pØ	3.0	34-39Ø	30			400m		Si#	M689
57	BB104G							39pØ	3.0	2.65;3.0V-30V$	30	100	100M	400m		Si$#	M689
58	MV104							39p§	3.0	37-42Ø	32	100	100M		280m	Si$	TO92Δ
59	1N4795							39p%	4.0	2.44;0.0-4.0V$	55 $	15	50M		500m	Si	DO14
60	1N4795A							39p%	4.0	2.44;0.0-4.0V$	55 $	15	50M		500m	Si	DO14
61	1N4795B							39p%	4.0	2.44;0.0-4.0V$	55 $	15	50M		500m	Si	DO14
62	1N4795C							39p%	4.0	2.44;0.0-4.0V$	55 $	15	50M		500m	Si	DO14
63	1N4795D							39p%	4.0	2.44;0.0-4.0V$	55 $	15	50M		500m	Si	DO14
64	1N4810							39p%	4.0	2.44;0.0-4.0V$	55 $	15	50M		500m	Si	DO14
65	1N4810A							39p%	4.0	2.44;0.0-4.0V$	55 $	15	50M		500m	Si	DO14
66	JAN1N4810A							39p%	4.0	2.44;0.0-4.0V$	55 $	15	50M		500m	Si	A1dd
67	1N4810B							39p%	4.0	2.44;0.0-4.0V$	55 $	15	50M		500m	Si	DO14
68	JAN1N4810B							39p%	4.0	2.44;0.0-4.0V$	55 $	15	50M		500m	Si	A1dd
69	1N4810C							39p%	4.0	2.44;0.0-4.0V$	55 $	15	50M		500m	Si	DO14
70	1N4810D							39p%	4.0	2.44;0.0-4.0V$	55 $	15	50M		500m	Si	DO14
71	1N5147							39p	4.0	3.2;4.0V-60V$	60 Ø	200	50M		400m	Si	DO7
72	1N5147A							39p	4.0	3.2;4.0V-60V$	60 Ø	200	50M		400m	Si	DO7
73	JAN1N5147A							39p	4.0	37.1-40.9Ø	65 Ø	200	50M		400m	Si	DO7
74	1N5451							39p%	4.0	2.6;2V-30V$	30	300	50M		400m	Si	DO7
75	1N5451A							39p%	4.0	2.6;2V-30V$	30	300	50M		400m	Si	DO7
76	1N5451B							39p%	4.0	2.6;2V-30V$	30	300	50M		400m	Si	DO7
77	1N5451C							39p%	4.0	2.6;2V-30V$	30	300	50M		400m	Si	DO7
78	1N5451D							39p%	4.0	2.6;2V-30V$	30	300	50M		400m	Si	DO7
79	1N5471							39p%	4.0	2.9;2V-30V$	30	450	50M		400m	Si	DO7
80	1N5471A							39p%	4.0	2.9;2V-30V$	30	450	50M		400m	Si	DO7
81	1N5471B							39p%	4.0	2.9;2V-30V$	30	450	50M		400m	Si	DO7
82	JAN1N5471B							39p	4.0	37.05-40.95Ø	30 Ø	450	50M		400m	Si	DO7
83	1N5471C							39p%	4.0	2.9;2V-30V$	30	450	50M		400m	Si	DO7
84	JAN1N5471C							39p	4.0	38.22-39.78Ø	30 Ø	450	50M		400m	Si	DO7
85	1N5471D							39p%	4.0	2.9;2V-30V$	30	450	50M		400m	Si	DO7
86	1N5690							39p%	4.0	3.3;2.0V-40V$	40	450	50M		400m	Si	DO7
87	1N5690A							39p%	4.0	3.3;2.0V-40V$	40	450	50M		400m	Si	DO7
88	1N5690B							39p%	4.0	3.3;2.0V-40V$	40	450	50M		400m	Si	DO7
89	1N5705							39p%	4.0	3.2;4.0V-60V$	60	325	50M		400m	Si	DO7
90	1N5705A							39p%	4.0	3.2;4.0V-60V$	60	325	50M		400m	Si	DO7
91	1N5705B							39p%	4.0	3.2;4.0V-60V$	60	325	50M		400m	Si	DO7
92	CV835							39p	4.0	35.1-42.9Ø	30	20	50M		400m	Si	DO7
93	CV1640							39p	4.0	35.1-42.9Ø	20	200	50M		400m	Si$	DO7
94	CV5039							39p	4.0	2.5;2.0V-30V$	30	150	50M		400m	Si	DO7
95	CVH2030-27							39p	4.0	4.5;0.0-30$;10%	30 Ø	1.2k	50M			Si$§	u30b
96	CVH2060-27							39p	4.0	7.5;0.0-60$;10%	60 Ø	900	50M			Si$§	u30c
97	D1740,B,C							39p†%	4.0	3.2;2V-30V$	30 Ø	350	50M		400m	Si#$	DO7
98	DC4224B							39p	4.0			200 Ø	50M			Si	DO7Δ
99♦	DVH6730-27							39p§	4.0	4.5;0.0-30$;10%	30 Ø	1.2k	50M			Si$§	A90a
100♦	DVH6731-27	60G						39p†	4.0	4.5;0.0V-30V$;10%	30 Ø	1.2k	50M			Si$§	F143
101	DVH6732-27	60G						39p†	4.0	4.5;0.0V-30V$;10%	30 Ø	1.2k	50M			Si$§	F56ad
102	DVH6733-27	60G						39p†	4.0	4.5;0.0V-30V$;10%	30 Ø	1.2k	50M			Si$§	F59u
103	DVH6734-27	60G						39p†	4.0	4.5;0.0V-30V$;10%	30 Ø	1.2k	50M			Si$§	M929
104♦	DVH6760-27							39p§	4.0	7.0;0.0-60$;10%	60 Ø	900	50M			Si$§	A90a
105♦	DVH6761-27	45G						39p†	4.0	7.0;0.0V-60V$;10%	60 Ø	900	50M			Si$§	F143
106	DVH6762-27	45G						39p†	4.0	7.0;0.0V-60V$;10%	60 Ø	900	50M			Si$§	F56ad
107	DVH6763-27	45G						39p†	4.0	7.0;0.0V-60V$;10%	60 Ø	900	50M			Si$§	F59u
108	DVH6764-27	45G						39p†	4.0	7.0;0.0V-60V$;10%	60 Ø	900	50M			Si$§	M929
109	GC1720							39p†	4.0	7.0;0.0V-60V$	60	800	50M			Si	F111b†
110	GC1770							39p†Δ	4.0	7.0;0.0V-60V$;10%	60	600	50M		400m	Si	DO7

6. VOLTAGE VARIABLE CAPACITORS & VARACTOR DIODES

IN ORDER OF (1) TYPICAL CAPACITANCE, (2) TEST VOLTAGE, and (3) TYPE No.

LINE No.	[3] TYPE No.	MINIMUM CUTOFF FREQUENCY (Corresponding to Type Numbers in previous column) (Hz)	(Hz)	(Hz)	(Hz)	(Hz)	(Hz)	TYP. CAP. [1] CAP. Cj (F)	[2] at TEST VOLT (V)	CAPACITANCE RANGE (for V = 0 to PIV) Ø - at TEST VOLT. (pF)	PIV (V)	Q FACTOR MIN. Q	Q FACTOR at TEST FREQ (Hz)	MAX. SER. RES. Rs (Ω)	MAX. DISS. @ 25°C (W)	DESCRIPTION MAT.	DESCRIPTION DWG. No.
1	GC1770B							39p†Δ	4.0	7.0;0.0V-60V$;5%	60	600	50M		400m	Si	DO7
2	GC1770C							39p†Δ	4.0	7.0;0.0V-60V$;2%	60	600	50M		400m	Si	DO7
3	HA1940A							39pΔ†	4.0	4.0;2.0V-30V$;10%	30	500	50M		400m	Si	DO7
4	HA1940B							39pΔ†	4.0	4.0;2.0V-30V$;5%	30	500	50M		400m	Si	DO7
5	HA1940C							39pΔ†	4.0	4.0;2.0V-30V$;2%	30	500	50M		400m	Si	DO7
6	HC7085							39p	4.0	100 - 20	20	10	.05G			Si	DO7
7	HC7097							39p	4.0	100 - 10	55	10	.05G			Si	DO7
8	KV640							39p§	4.0	2.6;2.0V-20V$	20 Ø	200	50M		400m	Si#$	DO7
9▼	MA4H037							39p†	4	10.7-12.2	30	550	50M			Si	V25
10	MA45074							39p	4.0		40	600	50M			Si	DO7
11	MA45154							39p	4.0		60	400	50M			Si	DO7
12	MA45341							39pΔ	4.0	4.7;0V-30V$	30	500	50M			Si$#	DO7†
13	MA45356							39pΔ	4.0	6.0;0V-45V$	45	400	50M			Si$#	DO7†
14	MA45371							39pΔ	4.0	7.4;0V-60V$	60	250	50M			Si$#	DO7†
15♦	MV835							39p§	4.0	35.1-42.9 Ø	30 Ø	20	50M		2.0	Si	DO7
16	MV835B							39pΔ†	4.0	2.2;4V-25V$;5%	30	20	50M		400m	Si	DO7
17	MV835C							39pΔ†	4.0	2.2;4V-25V$;2%	30	20	50M		400m	Si	DO7
18♦	MV1640							39p§	4.0	35.1-42.9 Ø	20 Ø	200	50M		400m	Si	DO7
19	MV1640B							39pΔ†	4.0	2.6;2.0V-20V$;5%	20	200	50M		400m	Si	DO7
20	MV1640C							39pΔ†	4.0	2.6;2.0V-20V$;2%	20	200	50M		400m	Si	DO7
21	MV1740							39p§	4.0	35.1 - 42.9Ø	30 Ø	350	.05G		.40	Si$	DO7
22	MV1740A							39p	4.0		30 Ø	350	50M		400m	SiΔ#	DO7
23♦	MV1877	45GØ						39p§	4.0	36.7-42.9Ø	60 Ø	300	50M		400m	Si$	DO7
24♦	MV2110							39p§	4.0	35.1-42.9Ø	30 Ø	150	50M		280m	Si	M764a
25	MV2209B,C							39p§%	4.0	2.1;1.0V-10V$	25	150	50M		400m	Si	C132
26	PG139							39pΔ	4.0	4.65;2.0V-65V$	70	200	50M		500m	Si	DO14
27	PG139A							39pΔ	4.0	4.65;2.0V-65V$;10%	70	200	50M		500m	Si	DO14
28	PG139B							39pΔ	4.0	4.65;2.0V-65V$;5%	70	200	50M		500m	Si	DO14
29	PG139C							39pΔ	4.0	4.65;2.0V-65V$;2%	70	200	50M		500m	Si	DO14
30	PG139D							39pΔ	4.0	4.65;2.0V-65V$;1%	70	200	50M		500m	Si	DO14
31	PG239							39pΔ	4.0	4.65;2.0V-65V$	70	200	50M		500m	Si	DO14
32	PG239A							39pΔ	4.0	4.65;2.0V-65V$;10%	70	200	50M		500m	Si	DO14
33	PG239B							39pΔ	4.0	4.65;2.0V-65V$;5%	70	200	50M		500m	Si	DO14
34	PG239C							39pΔ	4.0	4.65;2.0V-65V$;2%	70	200	50M		500m	Si	DO14
35	PG239D							39pΔ	4.0	4.65;2.0V-65V$;1%	70	200	50M		500m	Si	DO14
36	PG339							39pΔ	4.0	4.0;2.0V-50V$	55	300	50M		400m	Si	DO7
37	PG339A							39pΔ	4.0	4.0;2.0V-50V$;10%	55	300	50M		400m	Si	DO7
38	PG339B							39pΔ	4.0	4.0;2.0V-50V$;5%	55	300	50M		400m	Si	DO7
39	PG339C							39pΔ	4.0	4.0;2.0V-50V$;2%	55	300	50M		400m	Si	DO7
40	PG339D							39pΔ	4.0	4.0;2.0V-50V$;1%	55	300	50M		400m	Si	DO7
41	SQ1740,B,C							39pΔ†	4.0	3.2;2V-30V$	30	600	50M		400m	Si	DO7
42	SQ5471A							39p†Δ	4.0	3.2;2.0V-30V$;10%	30	450	50M		400m	Si	DO7
43	SQ5471B							39p†Δ	4.0	3.2;2.0V-30V$;5%	30	450	50M		400m	Si	DO7
44	SQ5471C							39p†Δ	4.0	3.2;2.0V-30V$;2%	30	450	50M		400m	Si	DO7
45♦	V39,A,B,C,D%	750M						39p%	4.0	4.1;0.5V-20V $	20 $	7.0	50M		400m	Si$	DO14
46♦	V39,A,B,C,D#	750M						39p%	4.0	4.1;0.5V-20V $	20 $	7.0	50M		400m		DO7
47	V39E,A,B,C,D	350M						39p%	4.0	6.3;500mV-55V$	55 $	7.0	50M		400m		DO7
48♦	V39E,A,B,C,D#	350M						39p%	4.0	6.3;0.5V-55V $	55 $	7.0	50M		400m	Si$	DO14
49	V39EG							39p	4.0	20%	55 $	10	50M		400m	Si$	DO7Δ
50	V39G							39p	4.0	20%	20 $	10	50M		400m	Si$	DO7Δ
51♦	V939,A,B,C,D%	750M						39p%	4.0	4.1;0.5V-20V $	25 $	15	50M		400m		DO7
52	V939,A,B,C,D#	750M						39p%	4.0	16.6-100	25 $	15	50M		500m	Si$	DO14
53♦	V939E,A,B,C,D							39p%	4.0	6.3;500mV-55V$	55 %				400m		DO14
54	V939E,A,B,C,D#	350M						39p%	4.0	11-100	55 $	7.0	50M		500m	Si$	DO14
55	VC39,A,B							39p%	4.0	13 - 100	50 $	10	.05G				DO7
56	VC239,A,B							39p%	4.0	13 - 100	50 $	25	.05G				DO7
57	VC639,A,B							39p%	4.0	3.0;1V-25V$	40 $	200	.05G			Si	DO7
58	VC641,A,B							39p%	4.0	3.0;1V-25V$	40 $	300	.05G				DO7
59	VC740	10G						39p	4.0	2.6;2.0V-20V$	20 Ø	200	50M			Si	DO7
60	VC828,A,B							39p%	4.0	20 - 100	20 $	7.0	.05G				DO7
61	VC848,A,B							39p%	4.0	11 - 100	55 $	7.0	.05G				DO7
62	VVC215,A,B,C,D							39p%	4.0	2.0;4.0V-20V$	20	7.0	50M		400m§	Si	DO7†
63	VVC216,A,B,C,D							39p%	4.0	3.05;4.0V-55V$	55	7.0	50M		400m§	Si	DO7†
64	VVC714,A,B,C,D							39p%	4.0	2.0;4.0V-20V$	20	15	50M		400m§	Si	DO7†
65	VVC750,A,B,C,D							39p%	4.0	2.0;4.0V-20V$	20	200	50M		400m§	Si	DO7†
66	VVC751,A,B,C,D							39p%	4.0	2.4;4.0V-30V$	30	20	50M		400m§	Si	DO7†
67	VVC752,A,B,C,D							39p%	4.0	2.4;4.0V-30V$	30	350	50M		400m§	Si	DO7†
68	VVC826,A,B,C,D							39p%	4.0	2.9;4.0V-50V$	50	10	50M		400m§	Si	DO7†
69	VVC827,A,B,C,D							39p%	4.0	3.2;4.0V-60V$	60	25	50M		400m§	Si	DO7†
70	VVC874,A,B,C,D							39p%	4.0	2.7;4.0V-40V$	40	300	50M		400m§	Si	DO7†
71	VVC941,A,B,C,D							39p%	4.0	2.0;4.0V-20V$	20	10	50M		400m§	Si	DO7†
72	VVC942,A,B,C,D							39p%	4.0	3.1;4.0V-55V$	55	10	50M		400m§	Si	DO7†
73	VVC1640,A,B,C							39p%	4.0	2.0-3.2;2.0V-20V$	20	200	50M		400m§	Si	DO7†
74	ZC709Ø							39pΔ†	4.0	2.8;2.0V-30V$;10%	30	150	50M		400m	Si	DO7Δ
75	ZC709B							39pΔ†	4.0	2.8;2.0V-30V$;5%	30	150	50M		400m	Si	DO7Δ
76	ZC709C							39pΔ†	4.0	2.8;2.0V-30V$;2%	30	150	50M		400m	Si	DO7Δ
77	ZC749							39p§	4.0	2.8;2.0V-3.0V$	30	150	50M			Si$Δ	C219
78	PSV117-01							40p	0.0	5.5;0.0V-45V$	45 Ø	1.0k	50M			Si§	F27as
79	PSV117-06							40p	0.0	5.5;0.0V-45V$	45 Ø	1.0k	50M			Si§	A1st
80	PSV117-14							40p	0.0	5.5;0.0V-45V$	45 Ø	1.0k	50M			Si§	A2u
81	PSV117-21							40p	0.0	5.5;0.0V-45V$	45 Ø	1.0k	50M			Si§	M86e
82	PSV117-31							40p	0.0	5.0;0.0V-45V$	45 Ø	1.0k	50M			Si§	F10ah
83	PSV129-01							40p	0.0	7.0;0.0V-60V$	60 Ø	800	50M			Si§	F27as
84	PSV129-06							40p	0.0	7.0;0.0V-60V$	60 Ø	800	50M			Si§	A1st
85	PSV129-14							40p	0.0	7.0;0.0V-60V$	60 Ø	800	50M			Si§	A2u
86	PSV129-21							40p	0.0	7.0;0.0V-60V$	60 Ø	800	50M			Si§	M86e
87	PSV129-31							40p	0.0	7.0;0.0V-60V$	60 Ø	800	50M			Si§	F10ah
88	PSV139-01							40p	0.0	9.0;0.0V-90V$	90 Ø	600	50M			Si	F27as
89	PSV139-14							40p	0.0	9.0;0.0V-90V$	90 Ø	600	50M			Si	A2u
90	PSV139-16							40p	0.0	9.0;0.0V-90V$	90 Ø	600	50M			Si	A1st
91	PSV139-21							40p	0.0	9.0;0.0V-90V$	90 Ø	600	50M			Si	M86e
92	PSV139-31							40p	0.0	9.0;0.0V-90V$	90 Ø	600	50M			Si	F10ah
93	PSV148-01							40p	0.0	10;0.0V-120V$	120 Ø	460	50M			Si	F27as
94	PSV148-14							40p	0.0	10;0.0V-120V$	120 Ø	460	50M			Si	A2u
95	PSV148-16							40p	0.0	10;0.0V-120V$	120 Ø	460	50M			Si	A1st
96	PSV148-21							40p	0.0	10;0.0V-120V$	120 Ø	460	50M			Si	M86e
97	PSV148-31							40p	0.0	10;0.0V-120V$	120 Ø	460	50M			Si	F10ah
98	MV306							40p§	3.0	37.0-42.0Ø	20 †	200	50M		500m	Si#$	DO35
99	VVC1047,A,B,C,D							40p%	4.0	1.45;4.0V-10V$	10	100	50M		400m§	Si	DO7†
100	VVC1048,A,B,C,D							40p%	4.0	1.45;4.0V-10V$	10	100	50M		400m§	Si	DO7†
101	VVC1049,A,B,C,D							40p%	4.0	1.45;4.0V-10V$	10	100	50M		400m§	Si	DO7†
102	SD11G24							42p	0.0	42 - 87	24			1.0		Si	P3
103	SD12G24							42p	0.0	42 - 87	24			1.0		Si	F3a
104	SD22G24							42p	0.0	42 - 87	24			1.0		Si	F11
105	SD32G24							42p	0.0	42 - 87	24			1.0		Si	F21
106	SD42G24							42p	0.0	42 - 87	24			1.0		Si	F9a
107	SDGPG24							42p	0.0	42 - 87	24			1.0		Si	DO7
108▼	1SV103							42pØ	3.0	2.6-2.9;3.0-30V $	32			600m			C262
109	SVC211							42p	3.0	42.0-13.5	30	100	100M			Si	TO92
110	SVC211SP							42p	3.0	42.0-13.5	30	100	100M			Si	TO92

6. VOLTAGE VARIABLE CAPACITORS & VARACTOR DIODES

IN ORDER OF (1) TYPICAL CAPACITANCE, (2) TEST VOLTAGE, and (3) TYPE No.

LINE No.	3 TYPE No.	MINIMUM CUTOFF FREQUENCY (Corresponding to Type Numbers in previous column) (Hz)	(Hz)	(Hz)	(Hz)	(Hz)	(Hz)	TYP. CAP. 1 CAP. Cj (F)	2 at TEST VOLT (V)	CAPACITANCE RANGE (for V = 0 to PIV) Ø - at TEST VOLT. (pF)	PIV (V)	Q FACTOR MIN. Q	at TEST FREQ (Hz)	MAX. SER. RES. Rs (Ω)	MAX. DISS. @ 25°C (W)	DESCRIPTION MAT.	DWG. No.
1	SVC203							43p☑	3.0	36.92-43.03Ø		60	100M		100m	Si	C225
2	BB304I							43p☑	20	1.75;2-8V$	30 ☑	180	50M	400m		Si	TO92
3	BB304II							44p☑	20	1.75;2-8V$	30 ☑	180	50M	400m		Si	TO92
4	FC53M							45p	1.0			100	25M			Si	C187
5	DKV6510							45p†Ø	2.0	10;2.0V-10V$	12 ☑	500	1.0M		250m		A90a△
6	BB304III							45p☑	20	1.75;2-8V$	30 ☑	180	50M	400m		Si	TO92
7	VVC828,A,B,C,D							46p%	4.0	2.2;4.0V-25V$	25	50	50M		400m§	Si	DO7†
8	BB304IV							46p☑	20	1.75;2-8V$	30 ☑	180	50M	400m		Si	TO92
9▼	V947E,A,B,C,D%							47p		6.1;0.5V-50V $	50 $				400m		DO7
10	HA1836A							47p△†	1.0	4.5;1.0V-28V$;10%	30	200	50M		400m	Si	DO7△
11	HA1836B							47p△†	1.0	4.5;1.0V-28V$;5%	30	200	50M		400m	Si	DO7△
12	HA1836C							47p△†	1.0	4.5;1.0V-28V$;2%	30	200	50M		400m	Si	DO7△
13	MV1408							47p†△	2.0	37-57Ø	12	200	1.0M		400m	Si	DO7△
14	MV1408A							47p†△	2.0	37-57Ø	12	200	1.0M		400m	Si	DO7△
15	MV1408B							47p†△	2.0	37-57Ø	12	200	1.0M		400m	Si	DO7△
16	ZC804							47p△†	2.0	5.75;2.0V-20V$;20%	25	300	50M		400m	Si	DO7△
17	ZC804A							47p△†	2.0	5.75;2.0V-20V$;10%	25	300	50M		400m	Si	DO7△
18	ZC804B							47p△†	2.0	5.75;2.0V-20V$;5%	25	300	50M		400m	Si	DO7△
19	ZC824							47p	2.0	5.5;2-20V$	25	200	50M			Si▼	C219
20	ZC834A,B							47p%△	2.0	5.0-65;2.0V-20V$	25 $	200	50M		200m		M156e△
21	1N3556							47p	4.0		100	50	100M			Si	A60p
22	1N4599							47p	4.0	5.0;2.0-100V$	110	100	50M	100	.50		DO14
23	1N4796							47p%	4.0	2.43;0.0-4.0V$	20 $	15	50M		500m	Si	DO14
24	1N4796A							47p%	4.0	2.43;0.0-4.0V$	20 $	15	50M		500m	Si	DO14
25	1N4796B							47p%	4.0	2.43;0.0-4.0V$	20 $	15	50M		500m	Si	DO14
26	1N4796C							47p%	4.0	2.43;0.0-4.0V$	20 $	15	50M		500m	Si	DO14
27	1N4796D							47p%	4.0	2.43;0.0-4.0V$	20 $	15	50M		500m	Si	DO14
28	1N4811							47p%	4.0	2.43;0.0-4.0V$	50 $	15	50M		500m	Si	DO14
29	1N4811A							47p%	4.0	2.43;0.0-4.0V$	50 $	15	50M		500m	Si	DO14
30	JAN1N4811A							47p%	4.0	2.43;0.0-4.0V$	50 $	15	50M		500m	Si	A1dd
31	1N4811B							47p%	4.0	2.43;0.0-4.0V$	50 $	15	50M		500m	Si	DO14
32	JAN1N4811B							47p%	4.0	2.43;0.0-4.0V$	50 $	15	50M		500m	Si	A1dd
33	1N4811C							47p%	4.0	2.43;0.0-4.0V$	50 $	15	50M		500m	Si	DO14
34	1N4811D							47p%	4.0	2.43;0.0-4.0V$	50 $	15	50M		500m	Si	DO14
35	JAN1N5148A							47p	4.0	44.7-49.3Ø	65 ☑	200	50M		400m	Si	DO7
36	1N5452							47p%	4.0	2.6;2V-30V$	30	250	50M		400m	Si	DO7
37	1N5452A							47p%	4.0	2.6;2V-30V$	30	250	50M		400m	Si	DO7
38	1N5452B							47p%	4.0	2.6;2V-30V$	30	250	50M		400m	Si	DO7
39	1N5452C							47p%	4.0	2.6;2V-30V$	30	250	50M		400m	Si	DO7
40	1N5452D							47p%	4.0	2.6;2V-30V$	30	250	50M		400m	Si	DO7
41	1N5472							47p%	4.0	2.9;2V-30V$	30	400	50M		400m	Si	DO7
42	1N5472A							47p%	4.0	2.9;2V-30V$	30	400	50M		400m	Si	DO7
43	1N5472B							47p%	4.0	2.9;2V-30V$	30	400	50M		400m	Si	DO7
44	JAN1N5472B							47p	4.0	44.65-49.35Ø	30 ☑	400	50M		400m	Si	DO7
45	1N5472C							47p%	4.0	2.9;2V-30V$	30	400	50M		400m	Si	DO7
46	JAN1N5472C							47p	4.0	46.06-47.94Ø	30 ☑	400	50M		400m	Si	DO7
47	1N5472D							47p%	4.0	2.9;2V-30V$	30	400	50M		400m	Si	DO7
48	1N5691							47p%	4.0	3.3;2.0V-40V$	40	400	50M		400m	Si	DO7
49	1N5691A							47p%	4.0	3.3;2.0V-40V$	40	400	50M		400m	Si	DO7
50	1N5691B							47p%	4.0	3.3;2.0V-40V$	40	400	50M		400m	Si	DO7
51	1N5706							47p%	4.0	3.2;4.0V-60V$	60	300	50M		400m	Si	DO7
52	1N5706A							47p%	4.0	3.2;4.0V-60V$	60	300	50M		400m	Si	DO7
53	1N5706B							47p%	4.0	3.2;4.0V-60V$	60	300	50M		400m	Si	DO7
54	CV836							47p	4.0	42.3-51.7Ø	30	15	50M		400m	Si	DO7
55	CV1016,A,B,C,D	7.5G						47p%	4.0	103-15	60	150	50M		400m	Si	DO7
56	CV1116,A,B,C,D	7.5G						47p%	4.0	103-11.5	100	150	50M		400m	Si	DO7
57	CV1642							47p	4.0	42.3-51.7Ø	20	200	50M		400m	Si$	DO7
58	CV5047							47p	4.0	2.5;2.0V-30V$	30	150	50M		400m	Si	DO7
59	D1742,B,C							47p†%	4.0	3.2;2V-30V$	30 ☑	300	50M		400m	Si#$	DO7
60	DC4225B							47p	4.0			200 Ø	50M			Si	DO7△
61	G147,A,B							47p%	4.0		20	100 Ø	50M		.50	Si$	A60k
62	G247,A,B							47p%	4.0		20	200 Ø	50M		.50	Si$	A60k
63	G347,A,B							47p%	4.0		20	300 Ø	50M		.50	Si$	A60k
64	HA1942A							47p△†	4.0	4.0;2.0V-30V$;10%	30	500	50M		400m	Si	DO7
65	HA1942B							47p△†	4.0	4.0;2.0V-30V$;5%	30	500	50M		400m	Si	DO7
66	HA1942C							47p△†	4.0	4.0;2.0V-30V$;2%	30	500	50M		400m	Si	DO7
67	HC7086							47p	4.0	120 - 24	20	10	.05G			Si	DO7
68	HC7098							47p	4.0	120 - 14	50	10	.05G			Si	DO7
69	KV642							47p§	4.0	2.6;2.0V-20V$	20 ☑	200	50M		400m	Si#$	DO7
70▼	MA4H038							47p†	4	12.2-14.8	30	500	50M			Si	V25
71	MA4019G							47p	4.0	5.2$	110 ☑	100	50M			Si#$	A31e
72	MA4273G							47p	4.0	37.6 - 56.4Ø	110	100	.05G		.50	Si	A31e
73	MA45116							47p†△	4.0	5.5;0.0V-45V$		500	50M			Si$	DO7
74	MA45136							47p†△	4.0	7.0;0.0V-60V$		400	50M			Si$	DO7
75	MA45342							47p△	4.0	4.7;0V-30V$	30	400	50M			Si$#	DO7†
76	MA45357							47p△	4.0	6.0;0V-45V$	45	300	50M			Si$#	DO7†
77	MA45372							47p△	4.0	7.4;0V-60V$	60	250	50M			Si$#	DO7†
78♦	MV836							47p	4.0	42.3-51.7 Ø	30 ☑	15	50M		2.0	Si	DO7
79	MV836B							47p△†	4.0	2.2;4V-25V$;5%	30	15	50M		400m	Si	DO7
80	MV836C							47p△†	4.0	2.2;4V-25V$;2%	30	15	50M		400m	Si	DO7
81♦	MV1642							47p§	4.0	42.3-51.7 Ø	20 ☑	200	50M		400m	Si	DO7
82	MV1642B							47p△†	4.0	2.7;2.0V-20V$;5%	20	200	50M		400m	Si	DO7
83	MV1642C							47p△†	4.0	2.7;2.0V-20V$;2%	20	200	50M		400m	Si	DO7
84	MV1742							47p§	4.0	42.3 - 51.7Ø	30 ☑	300	.05G		.40	Si$	DO7
85	MV1742A							47p	4.0		30 ☑	300	50M		400m	Si△#	DO7
86♦	MV1878	45GØ						47p§	4.0	42.3-51.7Ø	60 ☑	300	50M		400m	Si$	DO7
87♦	MV2111							47p§	4.0	42.3-51.7Ø	30 ☑	150	50M		280m	Si	M764a
88♦	MV2211							47p§	4.0	37.6-56.4 Ø	25 ☑	100	50M		280m	Si	M764a
89	PC114,A,B,C,D	2.5G						47p%	4.0	7.4;500mV-80V$	80 $	50	50M		600m		DO14
90▼	PC114,A,B,C,D#							47p	4.0	7.4;0.5V-80V $	80 $	50	50M		400m		DO7
91	PC117,A,B,C,D	5.0G						47p%	4.0	8.0;500mV-100V$	100 $	100	50M		600m		DO14
92▼	PC117,A,B,C,D#							47p	4.0	8.0;0.5V-100V $	100 $	100	50M		400m		DO7
93	PC122,A,B,C,D	3.7G						47p%	4.0	8.0;500mV-100V$	100 $	75	50M		600m		DO14
94▼	PC122,A,B,C,D#							47p	4.0	8.0;0.5V-100V $	100 $	75	50M		400m		DO7
95	PC134,A,B,C,D	2.5G						47p%	4.0	4.6;500mV-30V$	30 $	50	50M		600m		DO14
96▼	PC134,A,B,C,D#							47p	4.0	4.6;0.5V-30V $	30 $	550	50M		400m		DO7
97	PC137,A,B,C,D	5.0G						47p%	4.0	6.0;500mV-50V$	50 $	100	50M		600m		DO14
98▼	PC137,A,B,C,D#							47p	4.0	6.0;0.5V-50V $	50 $	100	50M		400m		DO7
99	PC0605A							47p§△	4.0		30 $	200	50M				DO7
100	PC0605B							47p§△	4.0		30 $	300	50M				DO7
101	PC0605C							47p§△	4.0		30 $	400	50M				DO7
102	PC0615A							47p§△	4.0		60 $	200	50M				DO7
103	PC0615B							47p§△	4.0		60 $	300	50M				DO7
104	PC0615C							47p§△	4.0		60 $	400	50M				DO7
105	PC0625A							47p§△	4.0		90 $	200	50M				DO7
106	PC0625B							47p§△	4.0		90 $	300	50M				DO7
107	PC0635A							47p§△	4.0		120 $	200	50M				DO7
108	PC0645A							47p§△	4.0		150 $	200	50M				DO7
109	PC2605A							47p△	4.0		30 $	200	50M				DO7
110	PC2605B							47p△	4.0		30 $	300	50M				DO7

6. VOLTAGE VARIABLE CAPACITORS & VARACTOR DIODES

IN ORDER OF (1) TYPICAL CAPACITANCE, (2) TEST VOLTAGE, and (3) TYPE No.

LINE No.	3 TYPE No.	MINIMUM CUTOFF FREQUENCY (Corresponding to Type Numbers in previous column) (Hz)	(Hz)	(Hz)	(Hz)	(Hz)	(Hz)	TYP. CAP. 1 CAP. Cj (F)	2 at TEST VOLT (V)	CAPACITANCE RANGE (for V = 0 to PIV) Ø - at TEST VOLT. (pF)	PIV (V)	Q FACTOR MIN. Q	at TEST FREQ (Hz)	MAX. SER. RES. Rs (Ω)	MAX. DISS. @ 25°C (W)	DESCRIPTION MAT.	DWG. No.
1	PC2605C							47pΔ	4.0		30 $	400	50M				DO7
2	PC2615A							47pΔ	4.0		60 $	200	50M				DO7
3	PC2615B							47pΔ	4.0		60 $	300	50M				DO7
4	PC2615C							47pΔ	4.0		60 $	400	50M				DO7
5	PC2625A							47p§Δ	4.0		90 $	200	50M				DO7
6	PC2625B							47p§Δ	4.0		90 $	300	50M				DO7
7	PC2625C							47p§Δ	4.0		90 $	400	50M				DO7
8	PC2635A							47p§Δ	4.0		120 $	200	50M				DO7
9	PC2635B							47p§Δ	4.0		120 $	300	50M				DO7
10	PC2645A							47p§Δ	4.0		150 $	200	50M				DO7
11	PC2645B							47p§Δ	4.0		150 $	300	50M				DO7
12	PG147							47pΔ	4.0	4.65;2.0V-50V$;	70	200	50M		500m	Si	DO14
13	PG147A							47pΔ	4.0	4.65;2.0V-50V$;10%	70	200	50M		500m	Si	DO14
14	PG147B							47pΔ	4.0	4.65;2.0V-50V$;5%	70	200	50M		500m	Si	DO14
15	PG147C							47pΔ	4.0	4.65;2.0V-50V$;2%	70	200	50M		500m	Si	DO14
16	PG147D							47pΔ	4.0	4.65;2.0V-50V$;1%	70	200	50M		500m	Si	DO14
17	PG247							47pΔ	4.0	4.55;2.0V-50V$	70	200	50M		500m	Si	DO14
18	PG247A							47pΔ	4.0	4.55;2.0V-50V$;10%	70	200	50M		500m	Si	DO14
19	PG247B							47pΔ	4.0	4.55;2.0V-50V$;5%	70	200	50M		500m	Si	DO14
20	PG247C							47pΔ	4.0	4.55;2.0V-50V$;2%	70	200	50M		500m	Si	DO14
21	PG247D							47pΔ	4.0	4.55;2.0V-50V$;1%	70	200	50M		500m	Si	DO14
22	PG347A							47pΔ	4.0	4.0;2.0V-50V$;10%	55	300	50M		500m	Si	DO14
23	PG347B							47pΔ	4.0	4.0;2.0V-50V$;5%	55	300	50M		500m	Si	DO14
24	PG347C							47pΔ	4.0	4.0;2.0V-50V$	55	300	50M		500m	Si	DO14
25	PG347D							47pΔ	4.0	4.0;2.0V-50V$;1%	55	300	50M		500m	Si	DO14
26	PV1435							47p§	4.0		120	400	500M				A2u
27	SQ1742,B,C							47pΔ†	4.0	3.2;2V-30V$	30	500	50M		400m	Si	DO7
28	SQ5472A							47p†Δ	4.0	3.2;2.0V-30V$;10%	30	400	50M		400m	Si	DO7
29	SQ5472B							47p†Δ	4.0	3.2;2.0V-30V$;5%	30	400	50M		400m	Si	DO7
30	SQ5472C							47p†Δ	4.0	3.2;2.0V-30V$;2%	30	400	50M		400m	Si	DO7
31	SV77H							47p	4.0					2.0	5.0	Si$#	M1110
32♦	V47,A,B,C,D%	750M						47p%	4.0	3.9;0.5V-20V $	20 $	7.0	50M		400m	Si$	DO14
33♦	V47,A,B,C,D#	750M						47p%	4.0	3.9;0.5V-20V $	20 $	7.0	50M		400m		DO7
34	V47E,A,B,C,D	350M						47p%	4.0	6.1;500mV-50V$	50 $	7.0	50M		400m		DO7
35♦	V47E,A,B,C,D#	350M						47p%	4.0	6.1;0.5V-50V $	50 $	7.0	50M		400m	Si$	DO14
36	V47EG							47p	4.0	20%	50 $	10	50M		400m	Si$	DO7Δ
37	V47G							47p	4.0	20%	20 $	10	50M		400m	Si$	DO7Δ
38♦	V947,A,B,C,D%	750M						47p%	4.0	3.9;0.5V-20V $	25 $	15	50M		400m		DO7
39	V947,A,B,C,D#	750M						47p%	4.0	20-120	25 $	15	50M		500m	Si$	DO14
40♦	V947E,A,B,C,D							47p%	4.0	6.1;500mV-50V$	50 $				400m		DO14
41	V947E,A,B,C,D#	350M						47p%	4.0	14-120	50 $	7.0	50M		500m	Si$	DO14
42	VA114							47p	4.0	4.0;2.0V-80V$	80 $	50	50M		500m	Si$	DO14Δ
43	VA117							47p	4.0	4.2;2.0V-100V$	100 $	100	50M		500m	Si$	DO14Δ
44	VA122							47p	4.0	4.2;2.0V-100V$	100 $	75	50M		500m	Si$	DO14Δ
45♦	VA134							47p	4.0	3.0;2.0V-25V $	25 $	50	50M		400m	Si$	DO14Δ
46♦	VA137							47p	4.0	4.0;2.0V-50V $	50 $	100	50M		400m	Si$	DO14Δ
47♦	VA155							47p	4.0	4.0;2.0V-80V $	80 $	100	50M		400m	Si$	DO14Δ
48♦	VA161							47p	4.0	3.0;2.0V-25V $	25 $	150	50M		400m	Si$	DO14Δ
49	VA202	37GØ						47p	4.0	6.2;2.0V-150V$	150 $	75	50M	900mØ	500m	Si$	DO14Δ
50	VA203	50GØ						47p	4.0	6.2;2.0V-150V$	150 $	100	50M	700mØ	500m	Si$	DO14Δ
51	VA302							47p	4.0	6.7;2.0-200V$	200 $	50	50M	1.4 Ø	500m	Si$	DO14Δ
52	VA303							47p	4.0	6.7;2.0-200V$	200 $	75	50M	900mØ	500m	Si$	DO14Δ
53	VC47,A,B							47p%	4.0	17 - 120	40 $	10	.05G				DO7
54	VC247,A,B							47p%	4.0	17 - 120	40 $	25	.05G				DO7
55	VC346,A,B							47p%	4.0	3.0;1V-25V$	25 $	50	.05G				DO7
56	VC347,A,B							47p%	4.0	4.0;2V-80V$	80 $	50	.05G				DO7
57	VC446,A,B							47p%	4.0	3.0;1V-25V$	25 $	100	.05G				DO7
58	VC447,A,B							47p%	4.0	4.0;1V-50V$	50 $	100	.05G				DO7
59	VC448,A,B							47p%	4.0	4.0;2.0-80V$	100 $	100	50M				DO7
60	VC647,A,B							47p%	4.0	3.0;1V-25V$	40 $	200	.05G			Si	DO7
61	VC648,A,B							47p%	4.0	3.0;1V-25V$	40 $	300	.05G				DO7
62	VC742	10G						47p	4.0	2.6;2.0V-20V$	20 Ø	200	50M			Si	DO7
63	VC829,A,B							47p%	4.0	24 - 120	20 $	7.0	.05G				DO7
64	VC849,A,B							47p%	4.0	14 - 120	50 $	7.0	.05G				DO7
65	VLA521							47p§	4.0	3.9;4.0V-100V$	100 $	120	50M			Si	DO14
66	VQA421							47p	4.0	3.1;4.0V-60V$	60 $	50M				Si	DO7
67	VVC217,A,B,C,D							47p%	4.0	2.0;4.0V-20V$	20	7.0	50M		400m§	Si	DO7†
68	VVC218,A,B,C,D							47p%	4.0	2.9;4.0V-50V$	50	7.0	50M		400m§	Si	DO7†
69	VVC414,A,B,C,D							47p%	4.0	2.2;4.0V-25V$	25	50	50M		400m§	Si	DO7†
70	VVC416,A,B,C,D							47p%	4.0	2.9;4.0V-50V$	50	100	50M		400m§	Si	DO7†
71	VVC715,A,B,C,D							47p%	4.0	2.4;4.0V-30V$	30	50	50M		400m§	Si	DO7†
72	VVC716,A,B,C,D							47p%	4.0	3.6;4.0V-80V$	80	50	50M		400m§	Si	DO7†
73	VVC724,A,B,C,D							47p%	4.0	3.9;4.0V-100V$	100	75	50M		400m§	Si	DO7†
74	VVC725,A,B,C,D							47p%	4.0	3.9;4.0V-100V$	100	100	50M		400m§	Si	DO7†
75	VVC753,A,B,C,D							47p%	4.0	2.0;4.0V-20V$	20	200	50M		400m§	Si	DO7†
76	VVC754,A,B,C,D							47p%	4.0	2.4;4.0V-30V$	30	15	50M		400m§	Si	DO7†
77	VVC755,A,B,C,D							47p%	4.0	2.4;4.0V-30V$	30	300	50M		400m§	Si	DO7†
78	VVC829,A,B,C,D							47p%	4.0	2.7;4.0V-40V$	40	10	50M		400m§	Si	DO7†
79	VVC830,A,B,C,D							47p%	4.0	2.7;4.0V-40V$	40	25	50M		400m§	Si	DO7†
80	VVC875,A,B,C,D							47p%	4.0	2.4;4.0V-30V$	30	100	50M		400m§	Si	DO7†
81	VVC876,A,B,C,D							47p%	4.0	2.7;4.0V-40V$	40	300	50M		400m§	Si	DO7†
82	VVC877,A,B,C,D							47p%	4.0	3.2;4.0V-60V$	60	100	50M		400m§	Si	DO7†
83	VVC878,A,B,C,D							47p%	4.0	4.2;4.0V-110V$	110	75	50M		400m§	Si	DO7†
84	VVC943,A,B,C,D							47p%	4.0	2.0;4.0V-20V$	20	10	50M		400m§	Si	DO7†
85	VVC944,A,B,C,D							47p%	4.0	2.2;4.0V-25V$	25	150	50M		400m§	Si	DO7†
86	VVC945,A,B,C,D							47p%	4.0	2.9;4.0V-50V$	50	10	50M		400m§	Si	DO7†
87	VVC946,A,B,C,D							47p%	4.0	2.9;4.0V-50V$	50	75	50M		400m§	Si	DO7†
88	VVC947,A,B,C,D							47p%	4.0	3.6;4.0V-80V$	80	100	50M		400m§	Si	DO7†
89	VVC948,A,B,C,D							47p%	4.0	3.9;4.0V-100V$	100	100	50M		400m§	Si	DO7†
90	VVC949,A,B,C,D							47p%	4.0	4.8;4.0V-150V$	150	60	50M		400m§	Si	DO7†
91	VVC950,A,B,C,D							47p%	4.0	4.8;4.0V-150V$	150	100	50M		400m§	Si	DO7†
92	VVC1642,A,B,C							47p%	4.0	2.0-3.2;2.0V-20V$	20	200	50M		400m§	Si	DO7†
93	ZC710Ø							47pΔ†	4.0	2.8;2.0V-30V$;10%	30	150	50M		400m	Si	DO7Δ
94	ZC710B							47pΔ†	4.0	2.8;2.0V-30V$;5%	30	150	50M		400m	Si	DO7Δ
95	ZC710C							47pΔ†	4.0	2.8;2.0V-30V$;2%	30	150	50M		400m	Si	DO7Δ
96	BB304V							47pØ	20	1.75;2-8V$	30 Ø	180	50M	400m		Si	TO92
97	1N5148							48p	4.0	3.2;4.0V-60V$	60 Ø	200	50M		400m	Si	DO7
98	1N5148A							48p	4.0	3.2;4.0V-60V$	60 Ø	200	50M		400m	Si	DO7
99	PH0306							50p	0.0	40 - 60Ø	90			1.2		Si	DO4
100	PH0309							50p	0.0	40 - 60Ø	120			1.2		Si	DO4
101	PH0312							50p	0.0	40 - 60Ø	150			1.2		Si	DO4
102	PSV149-01							50p	0.0	10;0.0V-120V$	120 Ø	460	50M			Si	F27as
103	PSV149-14							50p	0.0	10;0.0V-120V$	120 Ø	460	50M			Si	A2u
104	PSV149-16							50p	0.0	10;0.0V-120V$	120 Ø	460	50M			Si	A1st
105	PSV149-21							50p	0.0	10;0.0V-120V$	120 Ø	460	50M			Si	M86e
106	PSV149-31							50p	0.0	10;0.0V-120V$	120 Ø	460	50M			Si	F10ah
107	SD11G6							50p	0.0	50 - 100	6.0			1.0		Si	P3
108	SD12G6							50p	0.0	50 - 100	6.0			1.0		Si	F3a
109	SD22G6							50p	0.0	50 - 100	6.0			1.0		Si	F11
110	SD32G6							50p	0.0	50 - 100	6.0			1.0		Si	F21

6. VOLTAGE VARIABLE CAPACITORS & VARACTOR DIODES

IN ORDER OF (1) TYPICAL CAPACITANCE, (2) TEST VOLTAGE, and (3) TYPE No.

LINE No.	3 TYPE No.	MINIMUM CUTOFF FREQUENCY (Corresponding to Type Numbers in previous column) (Hz)	(Hz)	(Hz)	(Hz)	(Hz)	(Hz)	TYP. CAP. 1 CAP. Cj (F)	2 at TEST VOLT (V)	CAPACITANCE RANGE (for V = 0 to PIV) Ø - at TEST VOLT. (pF)	PIV (V)	Q FACTOR MIN. Q	at TEST FREQ (Hz)	MAX. SER. RES. Rs (Ω)	MAX. DISS. @ 25°C (W)	DESCRIPTION MAT.	DWG. No.
1	SD42G6							50p	0.0	50 - 100	6.0			1.0		Si	F9a
2	SDGPG6							50p	0.0	50 - 100	6.0			1.0		Si	DO7
3	1N951							50p	4.0	12 - 120	80	7.0	.05G		4.5	Si	DO7
4	1N951A							50p	4.0		80	7.0	50M			Si	DO7
5	1N951B							50p	4.0	12-120;5.0%	80 $	36	50M		400m	Si	DO7
6	1N955							50p	4.0	22 - 120	25	7.0	.05G	5.0		Si	DO7
7	1N955A							50p	4.0	22-120;10%	25 $	20	50M		400m	Si	DO7
8	1N955B							50p	4.0	22-120;5.0%	25 $	20	50M		400m	Si	DO7
9	1N3551							50p	4.0	47-53Ø	11	30	50M		150mØ		DO7
10	1N3628							50p	4.0	25 - 125	20	30	.05G			Si	DO7
11	2201							50p§	4.0	6.3;4.0V-20V$	22 Ø	125	50M		400m	Si#	DO7Δ
12	2201A							50p§	4.0	6.3;4.0V-20V$	22 Ø	125	50M		400m	Si#	DO7Δ
13	2202							50p§	4.0	2.5;4.0V-8.0V$	15 Ø	125	50M		400m	Si#	DO7Δ
14	2202A							50p§	4.0	2.5;4.0V-8.0V$	15 Ø	125	50M		400m	Si#	DO7Δ
15	DHA6522							50p	4.0	45-55Ø		165	50m				DO7
16	DHA6522A							50p	4.0	45-55Ø		125	50m				DO7
17	DHA6522B							50p	4.0	45-55Ø		125	50m				DO7
18	DHA6522C							50p	4.0	47.5-52.5Ø		125	50m				DO7
19	DHA6522D							50p	4.0	47.5-52.5Ø		125	50m				DO7
20♦	DKV6522							50p§	4.0	45-55 Ø	8.0 Ø	65	50M			Si§#♦	A90a Δ
21♦	DKV6522A							50p§	4.0	45-55 Ø	15 Ø	125	50M			Si§#♦	A90a Δ
22♦	DKV6522B							50p§	4.0	45-55 Ø	22 Ø	125	50M			Si§#♦	A90a Δ
23♦	DKV6522C							50p§	4.0	47.5-52.5 Ø	15 Ø	125	50M			Si§#♦	A90a Δ
24♦	DKV6522D							50p§	4.0	47.5-52.5 Ø	22 Ø	125	50M			Si§#♦	A90a Δ
25	HC7002							50p	4.0	12-120	80	7.0	50M		400m	Si	DO7
26	HC7007							50p	4.0	22-120	25	7.0	50M	5.0	400m	Si	DO7
27	KV951							50p%	4.0	4.1;4.0V-80V$	80 $	100	50m		400m	▼	DO14
28	KV951A							50p%	4.0	4.1;4.0V-80V$	80 $	100	50m		400m	▼	DO14
29	KV951B							50p%	4.0	4.1;4.0V-80V$	80 $	100	50m		400m	▼	DO14
30	KV951C							50p%	4.0	4.1;4.0V-80V$	80 $	100	50m		400m	▼	DO14
31	KV951D							50p%	4.0	4.1;4.0V-80V$	80 $	100	50m		400m	▼	DO14
32	KV2201	8.0GØ						50p§	4.0	6.3;4.0V-20V$	22 Ø	125	50M	400mØ	250m	Si#▼	DO7Δ
33	KV2201A	8.0GØ						50p§	4.0	6.3;4.0V-20V$	22 Ø	125	50M	400mØ	250m	Si#▼	DO7Δ
34	KV2202	8.0GØ						50p§	4.0	2.5;4.0V-8.0V$	15 Ø	125	50M	400mØ	250m	Si#▼	DO7Δ
35	KV2202A	8.0GØ						50p§	4.0	2.5;4.0V-8.0V$	15 Ø	125	50M	400mØ	250m	Si#▼	DO7Δ
36	KV2204	5.0GØ						50p§	4.0	45-55Ø	8.0 Ø	65	50M	600mØ	250m	Si#▼	DO7Δ
37	MA46522A							50p	4.0	55-45Ø	15	600				GA	A415
38	MA46522B							50p	4.0	55-45Ø	22	600				GA	A415
39	MA46522C							50p	4.0	52.5-47.5Ø	15	600				GA	A415
40	MA46522D							50p	4.0	52.5-47.5Ø	22	600				GA	A415
41	VVC1050,A,B,C,D							50p%	4.0	1.45;4.0V-10V$	10	100	50M		400m§	Si	DO7†
42	VVC1051,A,B,C,D							50p%	4.0	1.45;4.0V-10V$	10	100	50M		400m§	Si	DO7†
43	VVC1052,A,B,C,D							50p%	4.0	1.45;4.0V-10V$	10	100	50M		400m§	Si	DO7†
44	1N4386							50pØ	6.0		250 Ø	75	50M	1.5	25	Si	DO4
45	VBC119J							50p	6.0	38-58Ø	200 Ø					Si	S168
46▼	MA4K001-184							50p	8.0		30	330	20M		1.0	Si $	A431
47▼	MA4K001-935							50p	8.0		30	330	20M		1.0	Si $	A432
48▼	MA4K016-184							50p	8.0		45	300	20M		1.0	Si $	A431
49▼	MA4K016-935							50p	8.0		45	300	20M		1.0	Si $	A432
50▼	MA4K031-184							50p	8.0		60	275	20M		1.0	Si $	A431
51▼	MA4K031-935							50p	8.0		60	275	20M		1.0	Si $	A432
52▼	MA4K046-184							50p	8.0		90	200	20M		1.0	Si $	A431
53▼	MA4K046-935							50p	8.0		90	200	20M		1.0	Si $	A432
54▼	MA4K061-184							50p	8.0		120	200	20M		1.0	Si $	A431
55▼	MA4K061-935							50p	8.0		120	200	20M		1.0	Si $	A432
56	SD11G48							54p	0.0	54 - 112	48			1.0		Si	P3
57	SD12G48							54p	0.0	54 - 112	48			1.0		Si	F3a
58	SD22G48							54p	0.0	54 - 112	48			1.0		Si	F11
59	SD32G48							54p	0.0	54 - 112	48			1.0		Si	F21
60	SD42G48							54p	0.0	54 - 112	48			1.0		Si	F9a
61	BA150Δ							55p	2.0	45 - 65	25	500 Ø	30M	.25 Ø	.25	Si△	DO7
62▼	V956E,A,B,C,D%							56p		5.7;0.5V-40V $	40 $				400m		DO7
63	1N3488							56p	4.0								
64	1N4797							56p%	4.0	2.42;0.0-4.0V$	15 $	15	50M		500m	Si	DO14
65	1N4797A							56p%	4.0	2.42;0.0-4.0V$	15 $	15	50M		500m	Si	DO14
66	1N4797B							56p%	4.0	2.42;0.0-4.0V$	15 $	15	50M		500m	Si	DO14
67	1N4797C							56p%	4.0	2.42;0.0-4.0V$	15 $	15	50M		500m	Si	DO14
68	1N4797D							56p%	4.0	2.42;0.0-4.0V$	15 $	15	50M		500m	Si	DO14
69	1N4812							56p%	4.0	2.42;0.0-4.0V$	40 $	15	50M		500m	Si	DO14
70	1N4812A							56p%	4.0	2.42;0.0-4.0V$	40 $	15	50M		500m	Si	DO14
71	JAN1N4812A							56p%	4.0	2.42;0.0-4.0V$	40 $	15	50M		500m	Si	A1dd
72	1N4812B							56p%	4.0	2.42;0.0-4.0V$	40 $	15	50M		500m	Si	DO14
73	JAN1N4812B							56p%	4.0	2.42;0.0-4.0V$	40 $	15	50M		500m	Si	A1dd
74	1N4812C							56p%	4.0	2.42;0.0-4.0V$	40 $	15	50M		500m	Si	DO14
75	1N4812D							56p%	4.0	2.42;0.0-4.0V$	40 $	15	50M		500m	Si	DO14
76	1N5453							56p%	4.0	2.6;2V-30V$	30	200	50M		400m	Si	DO7
77	1N5453A							56p%	4.0	2.6;2V-30V$	30	200	50M		400m	Si	DO7
78	1N5453B							56p%	4.0	2.6;2V-30V$	30	200	50M		400m	Si	DO7
79	1N5453C							56p%	4.0	2.6;2V-30V$	30	200	50M		400m	Si	DO7
80	1N5453D							56p%	4.0	2.6;2V-30V$	30	200	50M		400m	Si	DO7
81	1N5473							56p%	4.0	2.9;2V-30V$	30	300	50M		400m	Si	DO7
82	1N5473A							56p%	4.0	2.9;2V-30V$	30	300	50M		400m	Si	DO7
83	1N5473B							56p%	4.0	2.9;2V-30V$	30	300	50M		400m	Si	DO7
84	JAN1N5473B							56p	4.0	53.2-58.8Ø	30 Ø	600	50M		400m	Si	DO7
85	1N5473C							56p%	4.0	2.9;2V-30V$	30	300	50M		400m	Si	DO7
86	JAN1N5473C							56p	4.0	54.88-57.12Ø	30 Ø	300	50M		400m	Si	DO7
87	1N5473D							56p%	4.0	2.9;2V-30V$	30	300	50M		400m	Si	DO7
88	1N5692							56p%	4.0	3.3;2.0V-40V$	40	300	50M		400m	Si	DO7
89	1N5692A							56p%	4.0	3.3;2.0V-40V$	40	300	50M		400m	Si	DO7
90	1N5692B							56p%	4.0	3.3;2.0V-40V$	40	300	50M		400m	Si	DO7
91	1N5707							56p%	4.0	3.2;4.0V-60V$	60	225	50M		400m	Si	DO7
92	1N5707A							56p%	4.0	3.2;4.0V-60V$	60	225	50M		400m	Si	DO7
93	1N5707B							56p%	4.0	3.2;4.0V-60V$	60	225	50M		400m	Si	DO7
94	CV837							56p	4.0	50.4-61.6Ø	30	15	50M		400m	Si	DO7
95	CV1644							56p	4.0	50.4-61.6Ø	20	150	50M		400m	Si$	DO7
96	CV5056							56p	4.0	2.6;2.0V-30V$	30	150	50M		400m	Si	DO7
97	D1744,B,C							56p†%	4.0	3.2;2.0V-30V$	30 Ø	300	50M		400m	Si#$	DO7
98	DC4226B							56p	4.0			120 Ø	50M			Si	DO14
99	HA1944A							56pΔ†	4.0	4.0;2.0V-30V$;10%	30	400	50M		400m	Si	DO7
100	HA1944B							56pΔ†	4.0	4.0;2.0V-30V$;5%	30	400	50M		400m	Si	DO7
101	HA1944C							56pΔ†	4.0	4.0;2.0V-30V$;2%	30	400	50M		400m	Si	DO7
102	HC7060							56p	4.0	145 - 20	40	10	.05G			Si	DO7
103	HC7087							56p	4.0	145 - 32	15	10	.05G			Si	DO7
104	KV644							56p§	4.0	2.6;2.0V-20V$	20 Ø	150	50M		400m	Si#$	DO7
105▼	MA4H039							56p†	4	14.8-18.0	30	450	50M			Si	V25
106	MA45075							56p	4.0		40	400	50M			Si	DO7
107	MA45343							56pΔ	4.0	4.7;0V-30V$	30	300	50M			Si$#	DO7†
108	MA45358							56pΔ	4.0	6.0;0V-45V$	45	250	50M			Si$#	DO7†
109♦	MV837							56p	4.0	50.4-61.6 Ø	30 Ø	15	50M		2.0	Si	DO7
110	MV837B							56pΔ†	4.0	2.2;4V-25V$;5%	30	15	50M		400m	Si	DO7

SYMBOLS AND CODES EXPLAINED IN INTERPRETER

6. VOLTAGE VARIABLE CAPACITORS & VARACTOR DIODES

IN ORDER OF (1) TYPICAL CAPACITANCE, (2) TEST VOLTAGE, and (3) TYPE No.

LINE No.	3 TYPE No.	MINIMUM CUTOFF FREQUENCY (Corresponding to Type Numbers in previous column) (Hz)	(Hz)	(Hz)	(Hz)	(Hz)	(Hz)	TYP. CAP. 1 CAP. Cj (F)	2 at TEST VOLT (V)	CAPACITANCE RANGE (for V = 0 to PIV) Ø - at TEST VOLT. (pF)	PIV (V)	Q FACTOR MIN. Q	at TEST FREQ (Hz)	MAX. SER. RES. Rs (Ω)	MAX. DISS. @ 25°C (W)	DESCRIPTION MAT.	DWG. No.
1	MV837C							56pΔ†	4.0	2.2;4V-25V$;2%	30	15	50M		400m	Si	DO7
2♦	MV1644							56p§	4.0	50.4-61.6 Ø	20 ☑	150	50M		400m	Si	DO7
3	MV1644B							56pΔ†	4.0	2.7;2.0V-20V$;5%	20	150	50M		400m	Si	DO7
4	MV1644C							56pΔ†	4.0	2.7;2.0V-20V$;2%	20	150	50M		400m	Si	DO7
5	MV1744							56p§	4.0	50.4 - 61.6Ø	30 ☑	300	.05G		.40	Si$	DO7
6	MV1744A							56p	4.0		30 ☑	300	50M		400m	Si△#	DO7
7♦	MV2112							56p§	4.0	50.4-61.6Ø	30 ☑	150	50M		280m	Si	M764a
8	SQ1744,B,C							56pΔ†	4.0	3.2;2V-30V$	30	450	50M		400m	Si	DO7
9	SQ5473A							56p†Δ	4.0	3.3;2.0V-30V$;10%	30	300	50M		400m	Si	DO7
10	SQ5473B							56p†Δ	4.0	3.3;2.0V-30V$;5%	30	300	50M		400m	Si	DO7
11	SQ5473C							56p†Δ	4.0	3.3;2.0V-30V$;2%	30	300	50M		400m	Si	DO7
12♦	V56,A,B,C,D%	750M						56p%	4.0	3.5;0.5V-15V $	15 $	7.0	50M		400m	Si$	DO14
13♦	V56,A,B,C,D#	750M						56p%	4.0	3.5;0.5V-15V $	15 $	7.0	50M		400m		DO7
14	V56E,A,B,C,D	350M						56p%	4.0	5.7;500mV-40V$	40 $	7.0	50M		400m		DO7
15♦	V56E,A,B,C,D#	350M						56p%	4.0	5.7;0.5V-40V $	40 $	7.0	50M		400m	Si$	DO14
16	V56EG							56p	4.0	20%	40 $	10	50M		400m	Si$	DO7Δ
17	V56G							56p	4.0	20%	15 $	10	50M		400m	Si$	DO7Δ
18♦	V956,A,B,C,D%	750M						56p%	4.0	3.5;0.5V-15V $	25 $	15	50M		400m		DO7
19	V956,A,B,C,D#	750M						56p%	4.0	24.1-145	25 $	15	50M		500m	Si$	DO14
20♦	V956E,A,B,C,D							56p%	4.0	5.7;500mV-40V$	40 $				400m		DO14
21	V956E,A,B,C,D#	350M						56p%	4.0	20-145	40 $	7.0	50M		500m	Si$	DO14
22	VC56,A,B							56p%	4.0	20 - 145	40 $	10	.05G				DO7
23	VC256,A,B							56p%	4.0	20 - 145	40 $	25	.05G				DO7
24	VC744	7.5G						56p	4.0	2.6;2.0V-20V$	20 ☑	150	50M			Si	DO7
25	VC831,A,B							56p%	4.0	32 - 145	15 $	7.0	.05G				DO7
26	VC851,A,B							56p%	4.0	20 - 145	40 $	7.0	.05G				DO7
27	VC6256							56p	4.0	125-29;0.0V-20V	20 $	60	30M				A1da
28	VVC219,A,B,C,D							56p%	4.0	1.75;4.0V-15V$	15	7.0	50M		400m§	Si	DO7†
29	VVC220,A,B,C,D							56p%	4.0	2.7;4.0V-40V$	40	7.0	50M		400m§	Si	DO7†
30	VVC756,A,B,C,D							56p%	4.0	2.4;4.0V-30V$	30	15	50M		400m§	Si	DO7†
31	VVC757,A,B,C,D							56p%	4.0	2.4;4.0V-30V$	30	300	50M		400m§	Si	DO7†
32	VVC758,A,B,C,D							56p%	4.0	2.0;4.0V-20V$	20	150	50M		400m§	Si	DO7†
33	VVC831,A,B,C,D							56p%	4.0	2.7;4.0V-40V$	40	10	50M		400m§	Si	DO7†
34	VVC832,A,B,C,D							56p%	4.0	2.7;4.0V-40V$	40	25	50M		400m§	Si	DO7†
35	VVC951,A,B,C,D							56p%	4.0	1.75;4.0V-150V$	15	15	50M		400m§	Si	DO7†
36	VVC1644,A,B,C							56p%	4.0	2.0-3.2;2.0V-20V$	20	150	50M		400m§	Si	DO7†
37	ZC711☑							56pΔ†	4.0	2.8;2.0V-30V$;10%	30	150	50M		400m	Si	DO7Δ
38	ZC711B							56pΔ†	4.0	2.8;2.0V-30V$;5%	30	150	50M		400m	Si	DO7Δ
39	ZC711C							56pΔ†	4.0	2.8;2.0V-30V$;2%	30	150	50M		400m	Si	DO7Δ
40	VLA522Q							57pØ§	8	3.85;4.0-85V$	100	200	50M			Si	DO14
41	VLA522T							57pØ§	8.0	3.85;4.0V-85V$	100 $	125	50M			Si	DO14
42	1S1619							60pØ	0.0	20;0.0V-15V$	20	70				Si$	A1bw
43	MA4060A							60p	0.0	40 - 80	90			1.5		Si	S4d
44	MA4061A							60p	0.0	40-80	140			1.5		Si	S4d
45	MA4062A							60p	0.0	40 - 80Ø	70				20	Si	S4d
46	MA4760A							60p	0.0	40 - 80Ø	90			1.5		Si	Z23
47	MA4761A							60p	0.0	40 - 80Ø	120			1.5		Si	Z23
48	SV87D							60p	0.0	40.0p-80.0pØ				0.8	20	Si$#	M1111
49	SV88D							60p	0.0	40.0p-80.0pØ				1.0	20	Si$#	M1111
50	DKV6510A							60p†	2.0	10;2.0V-10V$	12 ☑	500	1.0M		250m		A90aΔ
51	DKV6510B							60p†	2.0	10;2.0V-10V$	12 ☑	750	1.0M		250m		A90aΔ
52	SD11G12							62p	0.0	62 - 125	12			1.0		Si	P3
53	SD12G12							62p	0.0	62 - 125	12			1.0		Si	F3a
54	SD22G12							62p	0.0	62 - 125	12			1.0		Si	F11
55	SD32G12							62p	0.0	62 - 125	12			1.0		Si	F21
56	SD42G12							62p	0.0	62 - 125	12			1.0		Si	F9a
57	SDGPG12							62p	0.0	62 - 125	12			1.0		Si	DO7
58	1S1617							65pØ	0.0	31;0.0V-15V$	25	150				Si$	A1bw
59	1S1618							65pØ	0.0	20;0.0V-15V$	25	150				Si$	A1bw
60	VVC889,A,B,C,D							65p%	4.0	2.2;4.0V-25V$	25	50	50M		400m§	Si	DO7†
61	VVC890,A,B,C,D							65p%	4.0	2.2;4.0V-25V$	25	150	50M		400m§	Si	DO7†
62	VVC891,A,B,C,D							65p%	4.0	2.9;4.0V-50V$	50	50	50M		400m§	Si	DO7†
63	VVC892,A,B,C,D							65p%	4.0	2.9;4.0V-50V$	50	100	50M		400m§	Si	DO7†
64	VVC893,A,B,C,D							65p%	4.0	3.6;4.0V-80V$	80	50	50M		400m§	Si	DO7†
65	VVC894,A,B,C,D							65p%	4.0	3.6;4.0V-80V$	80	100	50M		400m§	Si	DO7†
66	VVC895,A,B,C,D							65p%	4.0	3.9;4.0V-100V$	100	65	50M		400m§	Si	DO7†
67	VVC896,A,B,C,D							65p%	4.0	3.9;4.0V-100V$	100	90	50M		400m§	Si	DO7†
68	VVC897,A,B,C,D							65p%	4.0	4.8;4.0V-150V$	150	60	50M		400m§	Si	DO7†
69	VVC898,A,B,C,D							65p%	4.0	4.8;4.0V-150V$	150	100	50M		400m§	Si	DO7†
70	2203							67p§	2.5	3.0;8.0V-25V$	15 ☑	100	50M		400m	Si#	DO7Δ
71	2203A							67p§	2.5	3.0;8.0V-25V$	15 ☑	100	50M		400m	Si#	DO7Δ
72▼	V968E,A,B,C,D%							68p		4.6;0.5V-30V $	30 $				400m		DO7
73	HA1838A							68pΔ†	1.0	4.5;1.0V-28V$;10%	30	200	50M		400m	Si	DO7Δ
74	HA1838B							68pΔ†	1.0	4.5;1.0V-28V$;5%	30	200	50M		400m	Si	DO7Δ
75	HA1838C							68pΔ†	1.0	4.5;1.0V-28V$;2%	30	200	50M		400m	Si	DO7Δ
76	MV1407							68p†Δ	2.0	54-82Ø	12	200	1.0M		400m	Si	DO7Δ
77	MV1407A							68p†Δ	2.0	54-82Ø	12	200	1.0M		400m	Si	DO7Δ
78	MV1407B							68p†Δ	2.0	54-82Ø	12	200	1.0M		400m	Si	DO7Δ
79	ZC805							68pΔ†	2.0	5.75;2.0V-20V$;20%	25	300	50M		400m	Si▼	DO7Δ
80	ZC805A							68pΔ†	2.0	5.75;2.0V-20V$;10%	25	300	50M		400m	Si	DO7Δ
81	ZC805B							68pΔ†	2.0	5.75;2.0V-20V$;5%	25	300	50M		400m	Si	DO7Δ
82	ZC825							68p	2.0	5.5;2-20V$	25	100	50M			Si$#	F27v
83	ZC835A,B							68p%Δ	2.0	5.0-65;2.0V-20V$	25 $	100	50M		200m		M156eΔ
84	1N4798							68p%	4.0	2.4;0.0-4.0V$	15 $	15	50M		500m	Si	DO14
85	1N4798A							68p%	4.0	2.4;0.0-4.0V$	15 $	15	50M		500m	Si	DO14
86	1N4798B							68p%	4.0	2.4;0.0-4.0V$	15 $	15	50M		500m	Si	DO14
87	1N4798C							68p%	4.0	2.4;0.0-4.0V$	15 $	15	50M		500m	Si	DO14
88	1N4798D							68p%	4.0	2.4;0.0-4.0V$	15 $	15	50M		500m	Si	DO14
89	1N4813							68p%	4.0	2.4;0.0-4.0V$	15 $	15	50M		500m	Si	DO14
90	1N4813A							68p%	4.0	2.4;0.0-4.0V$	15 $	15	50M		500m	Si	DO14
91	JAN1N4813A							68p%	4.0	2.40;0.0-4.0V$	30 $	15	50M		500m	Si	A1dd
92	1N4813B							68p%	4.0	2.4;0.0-4.0V$	15 $	15	50M		500m	Si	DO14
93	JAN1N4813B							68p%	4.0	2.40;0.0-4.0V$	30 $	15	50M		500m	Si	A1dd
94	1N4813C							68p%	4.0	2.4;0.0-4.0V$	15 $	15	50M		500m	Si	DO14
95	1N4813D							68p%	4.0	2.4;0.0-4.0V$	15 $	15	50M		500m	Si	DO14
96	1N5454							68p%	4.0	2.7;2V-30V$	30	175	50M		400m	Si	DO7
97	1N5454A							68p%	4.0	2.7;2V-30V$	30	175	50M		400m	Si	DO7
98	1N5454B							68p%	4.0	2.7;2V-30V$	30	175	50M		400m	Si	DO7
99	1N5454C							68p%	4.0	2.7;2V-30V$	30	175	50M		400m	Si	DO7
100	1N5454D							68p%	4.0	2.7;2V-30V$	30	175	50M		400m	Si	DO7
101	1N5474							68p%	4.0	2.9;2V-30V$	30	250	50M		400m	Si	DO7
102	1N5474A							68p%	4.0	2.9;2V-30V$	30	250	50M		400m	Si	DO7
103	1N5474B							68p%	4.0	2.9;2V-30V$	30	250	50M		400m	Si	DO7
104	JAN1N5474B							68p	4.0	64.6-71.4Ø	30 ☑	600	50M		400m	Si	DO7
105	1N5474C							68p%	4.0	2.9;2V-30V$	30	250	50M		400m	Si	DO7
106	JAN1N5474C							68p	4.0	66.64-69.36Ø	30 ☑	250	50M		400m	Si	DO7
107	1N5474D							68p%	4.0	2.9;2V-30V$	30	250	50M		400m	Si	DO7
108	1N5693							68p%	4.0	3.3;2.0V-40V$	40	250	50M		400m	Si	DO7
109	1N5693A							68p%	4.0	3.3;2.0V-40V$	40	250	50M		400m	Si	DO7
110	1N5693B							68p%	4.0	3.3;2.0V-40V$	40	250	50M		400m	Si	DO7

6. VOLTAGE VARIABLE CAPACITORS & VARACTOR DIODES

IN ORDER OF (1) TYPICAL CAPACITANCE, (2) TEST VOLTAGE, and (3) TYPE No.

LINE No.	3 TYPE No.	MINIMUM CUTOFF FREQUENCY (Corresponding to Type Numbers in previous column) (Hz)	(Hz)	(Hz)	(Hz)	(Hz)	(Hz)	TYP. CAP. 1 CAP. Cj (F)	2 at TEST VOLT (V)	CAPACITANCE RANGE (for V = 0 to PIV) Ø - at TEST VOLT. (pF)	PIV (V)	Q FACTOR MIN. Q	at TEST FREQ (Hz)	MAX. SER. RES. Rs (Ω)	MAX. DISS. @ 25°C (W)	DESCRIPTION MAT.	DWG. No.
1	1N5708							68p%	4.0	3.2;4.0V-60V$	60	175	50M		400m	Si	DO7
2	1N5708A							68p%	4.0	3.2;4.0V-60V$	60	175	50M		400m	Si	DO7
3	1N5708B							68p%	4.0	3.2;4.0V-60V$	60	175	50M		400m	Si	DO7
4	CV838							68p	4.0	61.2-74.8Ø	30	15	50M		400m	Si	DO7
5	CV1646							68p	4.0	61.2-74.8Ø	20	150	50M		400m	Si$	DO7
6	CV5068							68p	4.0	2.6;2.0V-30V$	30	150	50M		400m	Si	DO7
7	D1746,B,C							68p†%	4.0	3.2;2.0V-30V$	30 ☑	250	50M		400m	Si#$	A1st
8	DC4227B							68p	4.0			120 Ø	50M			Si	DO14
9	G168,A,B							68p%	4.0		20	100 Ø	50M		.50	Si$	A60k
10	G268,A,B							68p%	4.0		20	200 Ø	50M		.50	Si$	A60k
11	HA1946A							68pΔ†	4.0	4.0;2.0V-30V$;10%	30	300	50M		400m	Si	DO7
12	HA1946B							68pΔ†	4.0	4.0;2.0V-30V$;5%	30	300	50M		400m	Si	DO7
13	HA1946C							68pΔ†	4.0	4.0;2.0V-30V$;2%	30	300	50M		400m	Si	DO7
14	HC7088							68p	4.0	175 - 39	15	12	.05G			Si	DO7
15	KV646							68p§	4.0	2.6;2.0V-20V$	20 ☑	150	50M		400m	Si#$	DO7
16▼	MA4H040							68p†	4	18.0-23.0	30	400	50M			Si	V25
17♦	MV838							68p	4.0	61.2-74.8 Ø	30 ☑	15	50M		2.0	Si	DO7
18	MV838B							68pΔ†	4.0	2.2;4V-25V$;5%	30	15	50M		400m	Si	DO7
19	MV838C							68pΔ†	4.0	2.2;4V-25V$;2%	30	15	50M		400m	Si	DO7
20♦	MV1646							68p§	4.0	61.2-74.8 Ø	20 ☑	150	50M		400m	Si	DO7
21	MV1646B							68pΔ†	4.0	2.7;2.0V-20V$;5%	20	150	50M		400m	Si	DO7
22	MV1646C							68pΔ†	4.0	2.7;2.0V-20V$;2%	20	150	50M		400m	Si	DO7
23	MV1720							68p§	4.0	61.2-74.8Ø	30 ☑	500	50M		.40	Si$	DO7
24	MV1746							68p§	4.0	61.2 - 74.8Ø	30 ☑	250	.05G		.40	Si$	DO7
25	MV1746A							68p	4.0		30 ☑	500	50M		400m	Si$Δ#	DO7
26♦	MV2113							68p§	4.0	61.2-74.8Ø	30 ☑	150	50M		280m	Si	M764a
27♦	MV2213							68p§	4.0	54.4-81.6Ø	25 ☑	100	50M		280m	Si	M764a
28	SQ1746,B,C							68pΔ†	4.0	3.2;2V-30V$	30	300	50M		400m	Si	DO7
29	SQ5474A							68p†Δ	4.0	3.3;2.0V-30V$;10%	30	250	50M		400m	Si	DO7
30	SQ5474B							68p†Δ	4.0	3.3;2.0V-30V$;5%	30	250	50M		400m	Si	DO7
31	SQ5474C							68p†Δ	4.0	3.3;2.0V-30V$;2%	30	250	50M		400m	Si	DO7
32♦	V68,A,B,C,D%	750M						68p%	4.0	3.5;0.5V-15V $	15 $	9.0	50M		400m		DO7
33♦	V68,A,B,C,D#	750M						68p%	4.0	3.5;0.5V-15V $	15 $	9.0	50M		400m	Si$	DO14
34	V68E,A,B,C,D	450M						68p%	4.0	4.6;500mV-30V$	30 $	9.0	50M		400m		DO7
35♦	V68E,A,B,C,D#	450M						68p%	4.0	4.6;0.5V-30V $	30 $	9.0	50M		400m	Si$	DO14
36	V68G							68p	4.0	20%	15 $	12	50M		400m	Si$	DO7Δ
37♦	V968,A,B,C,D%	750M						68p%	4.0	3.5;0.5V-15V $	25 $	15	50M		400m		DO7
38	V968,A,B,C,D#	750M						68p%	4.0	29.1-175	25 $	15	50M		500m	Si$	DO14
39♦	V968E,A,B,C,D							68p%	4.0	4.6;500mV-30V$	30 $				400m		DO14
40	V968E,A,B,C,D#	450M						68p%	4.0	28-175	30 $	9.0	50M		500m	Si$	DO14
41♦	VA168							68p	4.0	5.2;2.0V-100V $	100 $	75	50M		400m	Si$	DO14Δ
42♦	VA169							68p	4.0	4.0;2.0V-50V $	50 $	75	50M		400m	Si$	DO14Δ
43♦	VA170							68p	4.0	4.0;2.0V-80V$	80 $	75	50M		400m	Si$	DO14Δ
44♦	VA171							68p	4.0	4.0;2.0V-50V $	50 $	100	50M		400m	Si$	DO14Δ
45♦	VA172							68p	4.0	3.0;2.0V-25V $	25 $	100	50M		400m	Si$	DO14Δ
46♦	VA173							68p	4.0	3.0;2.0V-25V $	25 $	75	50M		400m	Si$	DO14Δ
47	VA200	37GØ						68p	4.0	6.2;2.0V-150V$	150 $	75	50M	700mØ	500m	Si$	DO14Δ
48	VA201	25GØ						68p	4.0	6.2;2.0V-150V$	150 $	50	50M	1.0 Ø	500m	Si$	DO14Δ
49	VA300							68p	4.0	6.8;2.0-200V$	200 $	50	50M	1.0 Ø	500m	Si$	DO14Δ
50	VA301							68p	4.0	6.7;2.0-200V$	200 $	75	50M	700mØ	500m	Si$	DO14Δ
51	VC68,A,B							68p%	4.0	31 - 175	25 $	10	.05G				DO7
52	VC268,A,B							68p%	4.0	31 - 175	25 $	25	.05G				DO7
53	VC367,A,B							68p%	4.0	3.0;1V-25V$	25 $	50	.05G				DO7
54	VC467,A,B							68p%	4.0	3.0;1V-25V$	25 $	100	.05G				DO7
55	VC746	7.5G						68p	4.0	2.6;2.0V-20V$	20 ☑	150	50M			Si	DO7
56	VC832,A,B							68p%	4.0	39 - 175	15 $	9.0	.05G				DO7
57	VC852,A,B							68p%	4.0	175 - 29	30 $	9.0	.05G			Si	DO7
58	VLA422							68p	4.0	3.1;4.0V-60V$	60 $	150				Si	DO14
59	VLA522							68p§	4.0	3.9;4.0V-100V$	100 $	100	50M			Si	DO14
60	VLA722S							68p§	4.0	4.7;4.0V-150V$	150 $	80	50M			Si	DO14
61	VVC221,A,B,C,D							68p%	4.0	1.75;4.0V-15V$	15	9.0	50M		400m§	Si	DO7†
62	VVC717,A,B,C,D							68p%	4.0	2.4;4.0V-30V$	30	9.0	50M		400m§	Si	DO7†
63	VVC759,A,B,C,D							68p%	4.0	2.4;4.0V-30V$	30	15	50M		400m§	Si	DO7†
64	VVC760,A,B,C,D							68p%	4.0	2.4;4.0V-30V$	30	500	50M		400m§	Si	DO7†
65	VVC761,A,B,C,D							68p%	4.0	2.0;4.0V-20V$	20	150	50M		400m§	Si	DO7†
66	VVC762,A,B,C,D							68p%	4.0	2.4;4.0V-30V$	30	250	50M		400m§	Si	DO7†
67	VVC833,A,B,C,D							68p%	4.0	2.2;4.0V-25V$	25	25	50M		400m§	Si	DO7†
68	VVC834,A,B,C,D							68p%	4.0	2.4;4.0V-30V$	30	50	50M		400m§	Si	DO7†
69	VVC835,A,B,C,D							68p%	4.0	2.7;4.0V-40V$	40	10	50M		400m§	Si	DO7†
70	VVC879,A,B,C,D							68p%	4.0	2.4;4.0V-30V$	30	100	50M		400m§	Si	DO7†
71	VVC952,A,B,C,D							68p%	4.0	1.75;4.0V-150V$	15	12	50M		400m§	Si	DO7†
72	VVC1646,A,B,C							68p%	4.0	2.0-3.2;2.0V-20V$	20	150	50M		400m§	Si	DO7†
73	ZC712☑							68pΔ†	4.0	2.8;2.0V-30V$;10%	30	150	50M		400m	Si	DO7Δ
74	ZC712B							68pΔ†	4.0	2.8;2.0V-30V$;5%	30	150	50M		400m	Si	DO7Δ
75	ZC712C							68pΔ†	4.0	2.8;2.0V-30V$;2%	30	150	50M		400m	Si	DO7Δ
76	ZC753							68p§	4.0	2.8;2.0V-3.0V$	30	150	50M			Si$Δ	C219
77	PH0305							70p	0.0	60 - 80Ø	90			.80		Si	DO4
78	PH0308							70p	0.0	60 - 80Ø	120			.80		Si	DO4
79	PH0311							70p	0.0	40 - 60Ø	150			.80		Si	DO4
80	1N952							70p	4.0	20 - 170	60	7.0	.05G	2.1		Si	DO7
81	1N952A							70p	4.0		60	7.0	50M			Si	DO7
82	1N952B							70p	4.0	20-270;5.0%	60 $	30	50M		400m	Si	DO7
83	1N956							70p	4.0	32 - 170	25	7.0	.05G	2.1		Si	DO7
84	1N956A							70p	4.0	33-170;10%	25 $	20	50M		400m	Si	DO7
85	1N956B							70p	4.0	33-170;5.0%	25 $	20	50M		400m	Si	DO7
86	1N3947							70p	4.0		9.0	9.0	50M			Si	DO14
87	HC7004							70p	4.0	20-170	60	7.0	50M	2.1	400m	Si	DO7
88	HC7008							70p	4.0	32-170	25	7.0	50M	2.1	400m	Si	DO7
89	KV952							70p%	4.0	3.55;4.0V-60V$	60 $	100	50m		400m	▼	DO14
90	KV952A							70p%	4.0	3.55;4.0V-60V$	60 $	100	50m		400m	▼	DO14
91	KV952B							70p%	4.0	3.55;4.0V-60V$	60 $	100	50m		400m	▼	DO14
92	KV952C							70p%	4.0	3.55;4.0V-60V$	60 $	100	50m		400m	▼	DO14
93	KV952D							70p%	4.0	3.55;4.0V-60V$	60 $	100	50M		400m	▼	DO14
94	FC63							70p	5.0	18;1.0-9.0V$	15 $	100	1.0M			Si#$	
95	1N3946							71p	4.0		90	7.0	50M		.50	Si	DO14
96	SD11G18							75p	0.0	75 - 150	18			1.0		Si	P3
97	SD12G18							75p	0.0	75 - 150	18			1.0		Si	F3a
98	SD22G18							75p	0.0	75 - 150	18			1.0		Si	F11
99	SD32G18							75p	0.0	75 - 150	18			1.0		Si	F21
100	SD42G18							75p	0.0	75 - 150	18			1.0		Si	F9a
101	SDGPG18							75p	0.0	75 - 150	18			1.0		Si	DO7
102	FC52M							80p	1.0			100	25M			Si	C187
103	1S1765							80p	2.5	72 - 88	40	500	.02G			Si#$	A1bw
104	DC4228B							80p	4.0			100 Ø	50M			Si	DO14
105▼	V982E,A,B,C,D%							82p		4.0;0.5V-20V $	20 $				400m		DO7
106	1N4799							82p%	4.0	2.36;0.0-4.0V$	15 $	15	50M		500m	Si	DO14
107	1N4799A							82p%	4.0	2.36;0.0-4.0V$	15 $	15	50M		500m	Si	DO14
108	1N4799B							82p%	4.0	2.36;0.0-4.0V$	15 $	15	50M		500m	Si	DO14
109	1N4799C							82p%	4.0	2.36;0.0-4.0V$	15 $	15	50M		500m	Si	DO14
110	1N4799D							82p%	4.0	2.36;0.0-4.0V$	15 $	15	50M		500m	Si	DO14

6. VOLTAGE VARIABLE CAPACITORS & VARACTOR DIODES

IN ORDER OF (1) TYPICAL CAPACITANCE, (2) TEST VOLTAGE, and (3) TYPE No.

LINE No.	3 TYPE No.	MINIMUM CUTOFF FREQUENCY (Corresponding to Type Numbers in previous column)						TYP. CAP. 1 CAP. Cj	2 at TEST VOLT	CAPACITANCE RANGE (for V = 0 to PIV) Ø - at TEST VOLT.	PIV	Q FACTOR MIN. Q	Q FACTOR at TEST FREQ	MAX. SER. RES. Rs	MAX. DISS. @ 25°C	DESCRIPTION MAT.	DESCRIPTION DWG. No.
		(Hz)	(Hz)	(Hz)	(Hz)	(Hz)	(Hz)	(F)	(V)	(pF)	(V)		(Hz)	(Ω)	(W)		
1	1N4814							82p%	4.0	2.36;0.0-4.0V$	20 $	15	50M		500m	Si	DO14
2	1N4814A							82p%	4.0	2.36;0.0-4.0V$	20 $	15	50M		500m	Si	DO14
3	JAN1N4814A							82p%	4.0	2.36;0.0-4.0V$	20 $	15	50M		500m	Si	A1dd
4	1N4814B							82p%	4.0	2.36;0.0-4.0V$	20 $	15	50M		500m	Si	DO14
5	JAN1N4814B							82p%	4.0	2.36;0.0-4.0V$	20 $	15	50M		500m	Si	A1dd
6	1N4814C							82p%	4.0	2.36;0.0-4.0V$	20 $	15	50M		500m	Si	DO14
7	1N4814D							82p%	4.0	2.36;0.0-4.0V$	20 $	15	50M		500m	Si	DO14
8	1N5455							82p%	4.0	2.7;2V-30V$	30	175	50M		400m	Si	DO7
9	1N5455A							82p%	4.0	2.7;2V-30V$	30	175	50M		400m	Si	DO7
10	1N5455B							82p%	4.0	2.7;2V-30V$	30	175	50M		400m	Si	DO7
11	1N5455C							82p%	4.0	2.7;2V-30V$	30	175	50M		400m	Si	DO7
12	1N5455D							82p%	4.0	2.7;2V-30V$	30	175	50M		400m	Si	DO7
13	1N5475							82p%	4.0	2.9;2V-30V$	30	225	50M		400m	Si	DO7
14	1N5475A							82p%	4.0	2.9;2V-30V$	30	225	50M		400m	Si	DO7
15	1N5475B							82p%	4.0	2.9;2V-30V$	30	225	50M		400m	Si	DO7
16	JAN1N5475B							82p	4.0	77.9-86.1Ø	30 Ø	600	50M		400m	Si	DO7
17	1N5475C							82p%	4.0	2.9;2V-30V$	30	225	50M		400m	Si	DO7
18	JAN1N5475C							82p	4.0	80.36-83.64Ø	30 Ø	225	50M		400m	Si	DO7
19	1N5475D							82p%	4.0	2.9;2V-30V$	30	225	50M		400m	Si	DO7
20	1N5694							82p%	4.0	3.3;2.0V-40V$	40	225	50M		400m	Si	DO7
21	1N5694A							82p%	4.0	3.3;2.0V-40V$	40	225	50M		400m	Si	DO7
22	1N5694B							82p%	4.0	3.3;2.0V-40V$	40	225	50M		400m	Si	DO7
23	1N5709							82p%	4.0	3.2;4.0V-60V$	60	150	50M		400m	Si	DO7
24	1N5709A							82p%	4.0	3.2;4.0V-60V$	60	150	50M		400m	Si	DO7
25	1N5709B							82p%	4.0	3.2;4.0V-60V$	60	150	50M		400m	Si	DO7
26	CV839							82p	4.0	73.8-90.2Ø	30	10	50M		400m	Si	DO7
27	CV1648							82p	4.0	73.8-90.2Ø	20	150	50M		400m	Si$	DO7
28	CV5082							82p	4.0	2.6;2.0V-30V$	30	100	50M		400m	Si	DO7
29	D1748,B,C							82p†%	4.0	3.2;2.0V-30V$	30 Ø	250	50M		400m	Si#$	DO7
30	HA1948A							82pΔ†	4.0	4.0;2.0V-30V$;10%	30	250	50M		400m	Si	DO7
31	HA1948B							82pΔ†	4.0	4.0;2.0V-30V$;5%	30	250	50M		400m	Si	DO7
32	HA1948C							82pΔ†	4.0	4.0;2.0V-30V$;2%	30	250	50M		400m	Si	DO7
33	HC7089							82p	4.0	210 - 47	15	12	.05G			Si	DO7
34	KV648							82p§	4.0	2.6;2.0V-20V$	20 Ø	150	50M		400m	Si#$	DO7
35♦	MV839							82p	4.0	73.8-90.2 Ø	30 Ø	10	50M		2.0	Si	DO7
36	MV839B							82pΔ†	4.0	2.2;4V-25V$;5%	30	10	50M		400m	Si	DO7
37	MV839C							82pΔ†	4.0	2.2;4V-25V$;2%	30	10	50M		400m	Si	DO7
38♦	MV1648							82p§	4.0	73.8-90.2 Ø	20 Ø	150	50M		400m	Si	DO7
39	MV1648B							82pΔ†	4.0	2.7;2.0V-20V$;5%	20	150	50M		400m	Si	DO7
40	MV1648C							82pΔ†	4.0	2.7;2.0V-20V$;2%	20	150	50M		400m	Si	DO7
41	MV1748							82p§	4.0	73.8 - 90.2Ø	30 Ø	250	.05G		.40	Si$	DO7
42	MV1748A							82p	4.0		30 Ø	500	50M		400m	Si△#	DO7
43♦	MV2114							82p§	4.0	73.8-90.2Ø	30 Ø	100	50M		280m	Si	M764a
44	SQ1748,B,C							82pΔ†	4.0	3.2;2V-30V$	30	300	50M		400m	Si	DO7
45	SQ5475A							82pt△	4.0	3.3;2.0V-30V$;10%	30	225	50M		400m	Si	DO7
46	SQ5475B							82pt△	4.0	3.3;2.0V-30V$;5%	30	225	50M		400m	Si	DO7
47	SQ5475C							82pt△	4.0	3.3;2.0V-30V$;2%	30	225	50M		400m	Si	DO7
48♦	V82,A,B,C,D%	600M						82p%	4.0	3.5;0.5V-15V $	15 $	9.0	50M		400m		DO7
49♦	V82,A,B,C,D#	600M						82p%	4.0	3.5;0.5V-15V $	15 $	9.0	50M		400m	Si$	DO14
50	V82E,A,B,C,D	450M						82p%	4.0	4.0;500mV-20V$	20 $	9.0	50M		400m		DO7
51♦	V82E,A,B,C,D#	450M						82p%	4.0	4.0;0.5V-20V $	20 $	9.0	50M		400m	Si$	DO14
52	V82G							82p	4.0	20%	15 $	12	50M		400m	Si$	DO7△
53♦	V982,A,B,C,D%	600M						82p%	4.0	3.5;0.5V-15V $	25 $	12	50M		400m		DO7
54	V982,A,B,C,D#	600M						82p%	4.0	35-210	25 $	12	50M		500m	Si$	DO14
55♦	V982E,A,B,C,D							82p%	4.0	4.0;500mV-20V$	20 $				400m		DO14
56	V982E,A,B,C,D#	450M						82p%	4.0	40-210	20 $	9.0	50M		500m	Si$	DO14
57	VC82,A,B							82p%	4.0	36 - 210	25 $	10	.05G				DO7
58	VC282,A,B							82p%	4.0	36 - 210	25 $	25	.05G				DO7
59	VC748	7.5G						82p	4.0	2.6;2.0V-20V$	20 Ø	150	50M			Si	DO7
60	VC833,A,B							82p%	4.0	47 - 210	15 $	9.0	.05G				DO7
61	VC853,A,B							82p%	4.0	210 - 41	20 $	9.0	.05G			Si	DO7
62	VVC222,A,B,C,D							82p%	4.0	1.75;4.0V-15V$	15	9.0	50M		400m§	Si	DO7†
63	VVC718,A,B,C,D							82p%	4.0	2.0;4.0V-20V$	20	9.0	50M		400m§	Si	DO7†
64	VVC719,A,B,C,D							82p%	4.0	2.0;4.0V-20V$	20	15	50M		400m§	Si	DO7†
65	VVC763,A,B,C,D							82p%	4.0	2.4;4.0V-30V$	30	10	50M		400m§	Si	DO7†
66	VVC764,A,B,C,D							82p%	4.0	2.4;4.0V-30V$	30	250	50M		400m§	Si	DO7†
67	VVC765,A,B,C,D							82p%	4.0	2.0;4.0V-20V$	20	150	50M		400m§	Si	DO7†
68	VVC836,A,B,C,D							82p%	4.0	2.2;4.0V-25V$	25	25	50M		400m§	Si	DO7†
69	VVC837,A,B,C,D							82p%	4.0	2.7;4.0V-40V$	40	10	50M		400m§	Si	DO7†
70	VVC953,A,B,C,D							82p%	4.0	1.75;4.0V-150V$	15	12	50M		400m§	Si	DO7†
71	VVC1648,A,B,C							82p%	4.0	2.0-3.2;2.0V-20V$	20	150	50M		400m§	Si	DO7†
72	ZC713Ø							82pΔ†	4.0	2.8;2.0V-30V$;10%	30	100	50M		400m	Si	DO7Δ
73	ZC713B							82pΔ†	4.0	2.8;2.0V-30V$;5%	30	100	50M		400m	Si	DO7Δ
74	ZC713C							82pΔ†	4.0	2.8;2.0V-30V$;2%	30	100	50M		400m	Si	DO7Δ
75	ZC754							82p§	4.0	2.8;2.0V-3.0V$	30	150	50M			Si$Δ	C219
76	VVC838,A,B,C,D							99p%	4.0	1.75;4.0V-15V$	15	25	50M		400m§	Si	DO7†
77▼	V900E,A,B,C,D%							100p		4.0;0.5V-20V $	20 $				400m		DO7
78	HA1844A							100pΔ†	1.0	4.5;1.0V-28V$;10%	30	150	50M		400m	Si	DO7Δ
79	HA1844B							100pΔ†	1.0	4.5;1.0V-28V$;5%	30	150	50M		400m	Si	DO7Δ
80	HA1844C							100pΔ†	1.0	4.5;1.0V-28V$;2%	30	150	50M		400m	Si	DO7Δ
81	MV1406							100pt△	2.0	80-120Ø	12	200	1.0M		400m	Si	DO7Δ
82	MV1406A							100pt△	2.0	80-120Ø	12	200	1.0M		400m	Si	DO7Δ
83	MV1406B							100pt△	2.0	80-120Ø	12	200	1.0M		400m	Si	DO7Δ
84	ZC806							100pΔ†	2.0	5.75;2.0V-20V$;20%	25	300	50M		400m	Si▼	DO7Δ
85	ZC806A							100pΔ†	2.0	5.75;2.0V-20V$;10%	25	300	50M		400m	Si	DO7Δ
86	ZC806B							100pΔ†	2.0	5.75;2.0V-20V$;5%	25	300	50M		400m	Si	DO7Δ
87	ZC826							100p	2.0	5.5;2-20V$	25	100	50M			Si▼	C219
88	ZC836A,B							100p%Δ	2.0	5.75;2.0V-20V$	25 $	100	50M		200m	Si▼	M156eΔ
89	1N953							100p	4.0	46 - 240	25	7.0	.05G	1.5		Si	DO7
90	1N953A							100p	4.0	46-240;10%	25	7.0	50M		400m	Si	DO7
91	1N953B							100p	4.0	46-240;5.0%	25 $	23	50M		400m	Si	DO7
92	1N4800							100p%	4.0	2.33;0.0-4.0V$	15 $	15	50M		500m	Si	DO14
93	1N4800A							100p%	4.0	2.33;0.0-4.0V$	15 $	15	50M		500m	Si	DO14
94	1N4800B							100p%	4.0	2.33;0.0-4.0V$	15 $	15	50M		500m	Si	DO14
95	1N4800C							100p%	4.0	2.33;0.0-4.0V$	15 $	15	50M		500m	Si	DO14
96	1N4800D							100p%	4.0	2.33;0.0-4.0V$	15 $	15	50M		500m	Si	DO14
97	1N4815							100p%	4.0	2.33;0.0-4.0V$	20 $	15	50M		500m	Si	DO14
98	1N4815A							100p%	4.0	2.33;0.0-4.0V$	20 $	15	50M		500m	Si	DO14
99	JAN1N4815A							100p%	4.0	2.33;0.0-4.0V$	20 $	15	50M		500m	Si	A1dd
100	1N4815B							100p%	4.0	2.33;0.0-4.0V$	20 $	15	50M		500m	Si	DO14
101	JAN1N4815B							100p%	4.0	2.33;0.0-4.0V$	20 $	15	50M		500m	Si	A1dd
102	1N4815C							100p%	4.0	2.33;0.0-4.0V$	20 $	15	50M		500m	Si	DO14
103	1N4815D							100p%	4.0	2.33;0.0-4.0V$	20 $	15	50M		500m	Si	DO14
104	1N5456							100p%	4.0	2.7;2V-30V$	30	175	50M		400m	Si	DO7
105	1N5456A							100p%	4.0	2.7;2V-30V$	30	175	50M		400m	Si	DO7
106	1N5456B							100p%	4.0	2.7;2V-30V$	30	175	50M		400m	Si	DO7
107	1N5456C							100p%	4.0	2.7;2V-30V$	30	175	50M		400m	Si	DO7
108	1N5456D							100p%	4.0	2.7;2V-30V$	30	175	50M		400m	Si	DO7
109	1N5476							100p%	4.0	2.9;2V-30V$	30	200	50M		400m	Si	DO7
110	1N5476A							100p%	4.0	2.9;2V-30V$	30	200	50M		400m	Si	DO7

6. VOLTAGE VARIABLE CAPACITORS & VARACTOR DIODES

IN ORDER OF (1) TYPICAL CAPACITANCE, (2) TEST VOLTAGE, and (3) TYPE No.

LINE No.	TYPE No.	MINIMUM CUTOFF FREQUENCY (Corresponding to Type Numbers in previous column) (Hz)	(Hz)	(Hz)	(Hz)	(Hz)	(Hz)	TYP. CAP. 1 CAP. Cj (F)	2 at TEST VOLT (V)	CAPACITANCE RANGE (for V = 0 to PIV) Ø - at TEST VOLT. (pF)	PIV (V)	Q FACTOR MIN. Q	at TEST FREQ (Hz)	MAX. SER. RES. Rs (Ω)	MAX. DISS. @ 25°C (W)	DESCRIPTION MAT.	DWG. No.
1	1N5476B							100p%	4.0	2.9;2V-30V$	30	200	50M		400m	Si	DO7
2	JAN1N5476B							100p	4.0	95-105Ø	30 Ø	600	50M		400m	Si	DO7
3	1N5476C							100p%	4.0	2.9;2V-30V$	30	200	50M		400m	Si	DO7
4	JAN1N5476C							100p	4.0	98-102Ø	30 Ø	200	50M		400m	Si	DO7
5	1N5476D							100p%	4.0	2.9;2V-30V$	30	200	50M		400m	Si	DO7
6	1N5695							100p%	4.0	3.3;2.0V-40V$	40	200	50M		400m	Si	DO7
7	1N5695A							100p%	4.0	3.3;2.0V-40V$	40	200	50M		400m	Si	DO7
8	1N5695B							100p%	4.0	3.3;2.0V-40V$	40	200	50M		400m	Si	DO7
9	1N5710							100p%	4.0	3.2;4.0V-60V$	60	150	50M		400m	Si	DO7
10	1N5710A							100p%	4.0	3.2;4.0V-60V$	60	150	50M		400m	Si	DO7
11	1N5710B							100p%	4.0	3.2;4.0V-60V$	60	150	50M		400m	Si	DO7
12	CV840							100p	4.0	90-110Ø	30	10	50M		400m	Si	DO7
13	CV1650							100p	4.0	90-110Ø	20	150	50M		400m	Si$	DO7
14	CV5100							100p	4.0	2.6;2.0V-30V$	30	100	50M		400m	Si	DO7
15	D1750,B,C							100p†%	4.0	3.2;2.0V-30V$	30 Ø	250	50M		400m	Si#$	DO7
16	DC4232B	2.0G						100p	4.0		60	200	10M			Si	TO18Δ
17	HA1950A							100pΔ†	4.0	4.0;2.0V-30V$;10%	30	200	50M		400m	Si	DO7
18	HA1950B							100pΔ†	4.0	4.0;2.0V-30V$;5%	30	200	50M		400m	Si	DO7
19	HA1950C							100pΔ†	4.0	4.0;2.0V-30V$;2%	30	200	50M		400m	Si	DO7
20	HC7005							100p	4.0	46-240	25	7.0	50M	1.5	400m	Si	DO7
21	HC7090							100p	4.0	260 - 57	15	10	.05G			Si	DO7
22	KV650							100p§	4.0	2.6;2.0V-20V$	20 Ø	150	50M		400m	Si#$	DO7
23♦	MV840							100p	4.0	90.0-110.0 Ø	30 Ø	10	50M		2.0	Si	DO7
24	MV840B							100pΔ†	4.0	2.2;4V-25V$;5%	30	10	50M		400m	Si	DO7
25	MV840C							100pΔ†	4.0	2.2;4V-25V$;2%	30	10	50M		400m	Si	DO7
26♦	MV1650							100p§	4.0	90.0-110.0 Ø	20 Ø	150	50M		400m	Si	DO7
27	MV1650B							100pΔ†	4.0	2.7;2.0V-20V$;5%	20	150	50M		400m	Si	DO7
28	MV1650C							100pΔ†	4.0	2.7;2.0V-20V$;2%	20	150	50M		400m	Si	DO7
29	MV1750							100p§	4.0	90 - 110Ø	30 Ø	250	.05G		.40	Si$	DO7
30	MV1750A							100p	4.0		30 Ø	500	50M		400m	SiΔ#	DO7
31♦	MV2115							100p§	4.0	90-110Ø	30 Ø	100	50M		280m	Si	M764a
32♦	MV2215							100p§	4.0	80.0-120Ø	25 Ø	50	50M		280m	Si	M764a
33	SQ1750,B,C							100pΔ†	4.0	3.2;2V-30V$	30	300	50M		400m	Si	DO7
34	SQ5476A							100p†Δ	4.0	3.3;2.0V-30V$;10%	30	200	50M		400m	Si	DO7
35	SQ5476B							100p†Δ	4.0	3.3;2.0V-30V$;5%	30	200	50M		400m	Si	DO7
36	SQ5476C							100p†Δ	4.0	3.3;2.0V-30V$;2%	30	200	50M		400m	Si	DO7
37♦	V100,A,B,C,D%	600M						100p%	4.0	3.5;0.5V-15 $	15 $	9.0	50M		400m		DO7
38♦	V100,A,B,C,D#	600M						100p%	4.0	3.5;0.5V-15V $	15 $	9.0	50M		400m	Si$	DO14
39	V100E,A,B,C,D	450M						100p%	4.0	4.0;500mV-20V$	20 $	9.0	50M		400m		DO7
40♦	V100E,A,B,C,D#	400M						100p%	4.0	4.0;0.5V-20V $	20 $	9.0	50M		400m	Si$	DO14
41	V100G							100p	4.0	20%	15 $	10	50M		400m	Si$	DO7Δ
42♦	V900,A,B,C,D%	600M						100p%	4.0	3.5;0.5V-15V $	25 $	15	50M		400m		DO7
43	V900,A,B,C,D#	600M						100p%	4.0	43.3-260	25 $	12	50M		500m	Si$	DO14
44♦	V900E,A,B,C,D							100p%	4.0	4.0;500mV-20V$	20 $				400m		DO14
45	V900E,A,B,C,D#	400M						100p%	4.0	50-260	20 $	8.0	50M		500m	Si$	DO14
46	VC99,A,B							100p%	4.0	56 - 260	15 $	10	.05G				DO7
47	VC299,A,B							100p%	4.0	56 - 260	15 $	25	.05G				DO7
48	VC399,A,B							100p%	4.0	3.0;1V-25V$	25 $	50	.05G				DO7
49	VC834,A,B							100p%	4.0	57 - 260	15 $	9.0	.05G				DO7
50	VC854,A,B							100p%	4.0	260 - 50	20 $	8.0	.05G			Si	DO7
51	VC6299							100p	4.0	240-55;0.0V-20V	20 $	60	30M				A1da
52	VLA423							100p	4.0	3.2;4.0V-60V$	60 $	100				Si	DO14
53	VVC223,A,B,C,D							100p%	4.0	1.75;4.0V-15V$	15	8.0	50M		400m§	Si	DO7†
54	VVC720,A,B,C,D							100p%	4.0	2.0;4.0V-20V$	20	8.0	50M		400m§	Si	DO7†
55	VVC766,A,B,C,D							100p%	4.0	2.4;4.0V-30V$	30	10	50M		400m§	Si	DO7†
56	VVC767,A,B,C,D							100p%	4.0	2.4;4.0V-30V$	30	250	50M		400m§	Si	DO7†
57	VVC768,A,B,C,D							100p%	4.0	2.0;4.0V-20V$	20	150	50M		400m§	Si	DO7†
58	VVC839,A,B,C,D							100p%	4.0	2.0;4.0V-20V$	20	10	500M		400m§	Si	DO7†
59	VVC880,A,B,C,D							100p%	4.0	1.75;4.0V-15V$	15	9.0	50M		400m§	Si	DO7†
60	VVC881,A,B,C,D							100p%	4.0	2.4;4.0V-30V$	30	50	50M		400m§	Si	DO7†
61	VVC899,A,B,C,D							100p%	4.0	2.9;4.0V-50V$	50	65	50M		400m§	Si	DO7†
62	VVC900,A,B,C,D							100p%	4.0	3.9;4.0V-100V$	100	65	50M		400m§	Si	DO7†
63	VVC954,A,B,C,D							100p%	4.0	1.75;4.0V-150V$	15	10	50M		400m§	Si	DO7†
64	VVC1650,A,B,C							100p%	4.0	2.0-3.2;2.0V-20V$	20	150	50M		400m§	Si	DO7†
65	ZC714							100pΔ†	4.0	2.8;2.0V-30V$;10%	30	100	50M		400m	Si	DO7Δ
66	ZC714B							100pΔ†	4.0	2.8;2.0V-30V$;5%	30	100	50M		400m	Si	DO7Δ
67	ZC714C							100pΔ†	4.0	2.8;2.0V-30V$;2%	30	100	50M		400m	Si	DO7Δ
68▼	MA4K006-184							100p	8.0		30	300	20M		1.0	Si $	A431
69▼	MA4K006-935							100p	8.0		30	300	20M		1.0	Si $	A432
70▼	MA4K021-184							100p	8.0		45	275	20M		1.0	Si $	A431
71▼	MA4K021-935							100p	8.0		45	275	20M		1.0	Si $	A432
72▼	MA4K036-184							100p	8.0		60	250	20M		1.0	Si $	A431
73▼	MA4K036-935							100p	8.0		60	250	20M		1.0	Si $	A432
74▼	MA4K051-184							100p	8.0		90	200	20M		1.0	Si $	A431
75▼	MA4K051-935							100p	8.0		90	200	20M		1.0	Si $	A432
76▼	MA4K066-184							100p	8.0		120	200	20M		1.0	Si $	A431
77▼	MA4K066-935							100p	8.0		120	200	20M		1.0	Si $	A432
78	2301							110p§	4.0	6.6;4.0V-20V$	22 Ø	80	50M		400m	Si#	DO7Δ
79	2301A							110p§	4.0	6.6;4.0V-20V$	22 Ø	80	50M		400m	Si#	DO7Δ
80	2302							110p§	4.0	2.5;4.0V-20V$	15 Ø	80	50M		400m	Si#	DO7Δ
81	2302A							110p§	4.0	2.5;4.0V-8.0V$	15 Ø	80	50M		400m	Si#	DO7Δ
82	DHA6523							110p	4.0	100-120Ø		40	50M				DO7
83	DHA6523A							110p	4.0	100-120Ø		80	50m				DO7
84	DHA6523B							110p	4.0	100-120Ø		80	50m				DO7
85	DHA6523C							110p	4.0	104.5-115.5Ø		80	50m				DO7
86	DHA6523D							110p	4.0	104.5-115.5Ø		80	50m				DO7
87♦	DKV6523							110p§	4.0	100-120 Ø	8.0 Ø	40	50M			Si§#	A90a Δ
88♦	DKV6523A							110p§	4.0	100-120 Ø	15 Ø	80	50M			Si§#	A90a Δ
89♦	DKV6523B							110p§	4.0	100-120 Ø	22 Ø	80	50M			Si§#	A90a Δ
90♦	DKV6523C							110p§	4.0	104.5-115.5 Ø	15 Ø	80	50M			Si§#	A90a Δ
91♦	DKV6523D							110p§	4.0	104.5-115.5 Ø	22 Ø	80	50M			Si§#	A90a Δ
92	KV2301	5.5GØ						110p§	4.0	6.6;4.0V-20V$	22 Ø	80	50M	250mØ	250m	Si#▼	DO7Δ
93	KV2301A	5.5GØ						110p§	4.0	6.6;4.0V-20V$	22 Ø	80	50M	250mØ	250m	Si#▼	DO7Δ
94	KV2302	5.5GØ						110p§	4.0	2.5;4.0V-8.0V$	15 Ø	80	50M	250mØ	250m	Si#▼	DO7Δ
95	KV2302A	5.5GØ						110p§	4.0	2.5;4.0V-8.0V$	15 Ø	80	50M	250mØ	250m	Si#▼	DO7Δ
96	KV2304	3.0GØ						110p§	4.0	100-120Ø	8.0 Ø	40	50M	500mØ	250m	Si#▼	DO7Δ
97	MA46523A							110p	4.0	120-100Ø	15	375				GA	A1da
98	MA46523B							110p	4.0	120-100Ø	22	375				GA	A1da
99	MA46523C							110p	4.0	115-104Ø	15	375				GA	A1da
100	MA46523D							110p	4.0	115-104Ø	22	375				GA	A1da
101	MA4060AA							120p	0.0	80 - 160	90			1.2		Si	S4d
102	MA4061AA							120p	0.0	80 - 160	140			1.2		Si	S4d
103	MA4098AA							120p	0.0	80 - 160Ø	140			1.2		Si✱	Z23
104	MA4760AA							120p	0.0	80 - 160Ø	90			1.2		Si	Z23
105	MA4761AA							120p	0.0	80 - 160Ø	120			1.2		Si	Z23
106♦	MV1404							120p†	2.0	96-144Ø	12	200	1.0M		400m	Si	DO7
107	MV1404A							120p†Δ	2.0	96-144Ø	12	200	1.0M		400m	Si	DO7Δ
108	MV1404B							120p†Δ	2.0	96-144Ø	12	200	1.0M		400m	Si	DO7Δ
109▼	MV1404H							120p†	2.0	96-144Ø	12	200	1.0M		400m	Si	DO7
110	ZC807							120pΔ†	2.0	5.75;2.0V-20V$;20%	25	200	20M		400m	Si	DO7

6. VOLTAGE VARIABLE CAPACITORS & VARACTOR DIODES

IN ORDER OF (1) TYPICAL CAPACITANCE, (2) TEST VOLTAGE, and (3) TYPE No.

LINE No.	3 TYPE No.	MINIMUM CUTOFF FREQUENCY (Corresponding to Type Numbers in previous column) (Hz)	(Hz)	(Hz)	(Hz)	(Hz)	(Hz)	TYP. CAP. 1 CAP. Cj (F)	2 at TEST VOLT (V)	CAPACITANCE RANGE (for V = 0 to PIV) Ø - at TEST VOLT. (pF)	PIV (V)	Q FACTOR MIN. Q	at TEST FREQ (Hz)	MAX. SER. RES. Rs (Ω)	MAX. DISS. @ 25°C (W)	DESCRIPTION MAT.	DWG. No.
1	ZC807A							120pΔ†	2.0	5.75;2.0V-20V$;10%	25	200	20M		400m	Si	DO7
2	ZC807B							120pΔ†	2.0	5.75;2.0V-20V$;5%	25	200	20M		400m	Si	DO7
3	1N5457							120p†	4	2.7 - 3.3	30	150	50M		400m	Si	DO7
4	1N5457,A,B,C,D							120p%	4.0	2.7;2v - 30v$	30	150	50M		.40	Si	DO7
5	1N5457A							120p†	4	2.7 - 3.3	30	150	50M		400m	Si	DO7
6	1N5457B							120p†	4	2.7 - 3.3	30	150	50M		400m	Si	DO7
7	1N5457C							120p†	4	2.7 - 3.3	30	150	50M		400m	Si	DO7
8	1N5457D							120p†	4	2.7 - 3.3	30	150	50M		400m	Si	DO7
9	CV1652							120p	4.0	2.6;2.0V-20V$	20	250 Ø	20M		400m	Si$	DO14
10	DC4233B	2.0G						120p	4.0		60	200	10M			Si	TO18Δ
11	KV652							120p§	4.0	2.6;2.0V-20V$	20 Ø	100	50M		400m	Si#$	DO14
12	MV1652							120p†	4.0	108 - 135Ø	20	250	.02G		.40	Si$	DO14
13	MV1652B							120pΔ†	4.0	2.6;2.0V-20V$;5%	20	250	40M		500m	Si	DO14
14	MV1652C							120pΔ†	4.0	2.6;2.0V-20V$;2%	20	250	40M		500m	Si	DO14
15♦	MV2301							120p§	4.0	108-135	20 Ø	250	20M		500m	Si$	TO92
16	MV2301B,C							120p§%	4.0	2.3;2.0V-20V$	20	250	20M		400m	Si	C132
17	VC112,A,B							120p%	4.0	68 - 310	15 $	25	.05G				DO7
18	VC752	5.0G						120p	4.0	2.6;2.0V-20V$	20 Ø	100	50M			Si	DO7
19	VVC840,A,B,C,D							120p%	4.0	1.75;4.0V-15V$	15	25	50M		400m§	Si	DO7†
20♦	DKV6515							125p§	2.0	13;2.0V-10V$	12 Ø	200	1.0M			Si§#	A90a Δ
21♦	DKV6515A							125p§	2.0	13;2.0V-10V$	12 Ø	200	1.0M			Si§#	A90a Δ
22♦	DKV6515B							125p§	2.0	13;2.0V-10V$	12 Ø	500	1.0M			Si§#	A90a Δ
23	KV1501	1.3GØ						125p§	2.0	13;2.0V-10V$	20 Ø	50	10M	1.0 Ø	250m	Si#▼	DO7Δ
24	KV1502	500MØ						125p§	2.0	13;2.0V-10V$	20 Ø	200	1.0M	2.5 Ø	250m	Si#▼	DO7Δ
25	KV1503	500MØ						125p§	2.0	13;2.0V-10V$	20 Ø	200	1.0M	2.5 Ø	250m	Si#▼	DO7
26▼	MA4K007-184							125p	8.0		30	300	20M		1.0	Si $	A431
27▼	MA4K007-935							125p	8.0		30	300	20M		1.0	Si $	A432
28▼	MA4K022-184							125p	8.0		45	250	20M		1.0	Si $	A431
29▼	MA4K022-935							125p	8.0		45	250	20M		1.0	Si $	A432
30▼	MA4K037-184							125p	8.0		60	250	20M		1.0	Si $	A431
31▼	MA4K037-935							125p	8.0		60	250	20M		1.0	Si $	A432
32▼	MA4K052-184							125p	8.0		90	175	20M		1.0	Si $	A431
33▼	MA4K052-935							125p	8.0		90	175	20M		1.0	Si $	A432
34▼	MA4K067-184							125p	8.0		120	175	20M		1.0	Si $	A431
35▼	MA4K067-935							125p	8.0		120	175	20M		1.0	Si $	A432
36	FC64M							140p	5.0	123-157Ø	20	200 Ø	10M			Si#$	C187
37	2303							145p§	2.5	3.1;8.0V-25V$	15 Ø	65	50M		400m	Si#	DO7Δ
38	2303A							145p§	2.5	3.1;8.0V-25V$	15 Ø	65	50M		400m	Si#	DO7Δ
39	FC51M							150p	1.0			100	25M			Si	C187
40	HA1848A							150pΔ†	1.0	4.5;1.0V-28V$;10%	30	100	50M		400m	Si	DO7Δ
41	HA1848B							150pΔ†	1.0	4.5;1.0V-28V$;5%	30	100	50M		400m	Si	DO7Δ
42	HA1848C							150pΔ†	1.0	4.5;1.0V-28V$;2%	30	100	50M		400m	Si	DO7Δ
43	CV1654							150p	4.0	2.6;2.0V-20V$	20	250 Ø	20M		400m	Si$	DO14
44	DC4234B	2.0G						150p	4.0		60	200	10M			Si	TO18Δ
45	KV654							150p§	4.0	2.6;2.0V-20V$	20 Ø	100	50M		400m	Si#$	DO14
46	MV1654							150p†	4.0	132 - 165Ø	20	250	.02G		.40	Si$	DO14
47	MV1654B							150pΔ†	4.0	2.6;2.0V-20V$;5%	20	250	40M		500m	Si	DO14
48	MV1654C							150pΔ†	4.0	2.6;2.0V-20V$;2%	20	250	40M		500m	Si	DO14
49♦	MV2302							150p§	4.0	132-165 Ø	20 Ø	250	20M		500m	Si$	TO92
50	MV2302B,C							150p§%	4.0	2.3;2.0V-20V$	20	250	20M		400m	Si	C132
51	VC115,A,B							150p%	4.0	85 - 380	15 $	25	.05G				DO7
52	VVC841,A,B,C,D							150p%	4.0	1.75;4.0V-15V$	15	25	50M		400m§	Si	DO7†
53	VVC901,A,B,C,D							150p%	4.0	2.9;4.0V-50V$	50	65	50M		400m§	Si	DO7†
54	VVC902,A,B,C,D							150p%	4.0	3.9;4.0V-100V$	100	65	50M		400m§	Si	DO7†
55	1N5421							150p	8.0	5.8;4.0-200V$	200 §	200	25M		.25	Si	M190j
56	1N5714							150p	8.0	4.1;4.0V-100V$	200	200	25M		250m	Si$	A1du
57▼	MA4K008-184							150p	8.0		30	300	20M		1.0	Si $	A431
58▼	MA4K008-935							150p	8.0		30	300	20M		1.0	Si $	A432
59▼	MA4K023-184							150p	8.0		45	250	20M		1.0	Si $	A431
60▼	MA4K023-935							150p	8.0		45	250	20M		1.0	Si $	A432
61▼	MA4K038-184							150p	8.0		60	225	20M		1.0	Si $	A431
62▼	MA4K038-935							150p	8.0		60	225	20M		1.0	Si $	A432
63▼	MA4K053-935							150p	8.0		90	175	20M		1.0	Si $	A432
64▼	MA4K068-184							150p	8.0		120	175	20M		1.0	Si $	A431
65▼	MA4K068-935							150p	8.0		120	175	20M		1.0	Si $	A432
66	PV1500-15							150p	8.0	8.0;0.0V-100V$	100	200	25M			Si	A2x
67	PV1501-15							150p	8.0	6.0;0.0V-60V$	60	200	25M			Si	A2x
68	PV1502-15							150p	8.0	4.0;0.0V-30V$	30	200	25M			Si	A2x
69	2401							155p§	4.0	6.4;4.0V-20V$	22 Ø	70	50M		400m	Si#	DO7Δ
70	2401A							155p§	4.0	6.4;4.0V-20V$	22 Ø	70	50M		400m	Si#	DO7Δ
71	2402							155p§	4.0	2.4;4.0V-8.0V$	15 Ø	70	50M		400m	Si#	DO7Δ
72	2402A							155p§	4.0	2.4;4.0V-8.0V$	15 Ø	70	50M		400m	Si#	DO7Δ
73	DHA6524							155p	4.0	140-170Ø		35	50m				DO7
74	DHA6524A							155p	4.0	140-170Ø		70	50m				DO7
75	DHA6524B							155p	4.0	140-170Ø		70	50m				DO7
76	DHA6524C							155p	4.0	147-163Ø		70	50m				DO7
77	DHA6524D							155p	4.0	147-163Ø		70	50m				DO7
78♦	DKV6524							155p§	4.0	140-170 Ø	8.0 Ø	35	50M			Si§#	A90a Δ
79♦	DKV6524A							155p§	4.0	140-170 Ø	15 Ø	70	50M			Si§#	A90a Δ
80♦	DKV6524B							155p§	4.0	140-170 Ø	22 Ø	70	50M			Si§#	A90a Δ
81♦	DKV6524C							155p§	4.0	147-163 Ø	15 Ø	70	50M			Si§#	A90a Δ
82♦	DKV6524D							155p§	4.0	147-163 Ø	22 Ø	70	50M			Si§#	A90a Δ
83	KV2401	4.5GØ						155p§	4.0	6.4;4.0V-20V$	22 Ø	70	50M	220mØ	250m	Si#▼	DO7Δ
84	KV2401A	4.5GØ						155p§	4.0	6.4;4.0V-20V$	22 Ø	70	50m	220mØ	250m	Si#▼	DO7Δ
85	KV2402	4.5GØ						155p§	4.0	2.4;4.0V-8.0V$	15 Ø	70	50M	220mØ	250m	Si#▼	DO7Δ
86	KV2402A	4.5GØ						155p§	4.0	2.4;4.0V-8.0V$	15 Ø	70	50M	220mØ	250m	Si#▼	DO7Δ
87	KV2404	2.5GØ						155p§	4.0	140-170Ø	8.0 Ø	35	50M	400mØ	250m	Si#▼	DO7Δ
88♦	DKV6516							175p§	2.0	13;2.0V-10V$	12 Ø	200	1.0M			Si§#	A90a Δ
89♦	DKV6516A							175p§	2.0	13;2.0V-10V$	12 Ø	200	1.0M			Si§#	A90a Δ
90♦	DKV6516B							175p§	2.0	13;2.0V-10V$	12 Ø	500	1.0M			Si§#	A90a Δ
91	KV1601	1.2GØ						175p§	2.0	12.5;2.0V-10V$	20 Ø	50	10M	750mØ	250m	Si#▼	DO7Δ
92	KV1602	500MØ						175p§	2.0	12.5;2.0V-10V$	20 Ø	200	1.0M	1.8 Ø	250m	Si#▼	DO7Δ
93	KV1603	500MØ						175p§	2.0	12.5;2.0V-10V$	20 Ø	200	1.0M	1.8 Ø	250m	Si#▼	DO7
94♦	MV1403							175p†	2.0	140-210Ø	12 Ø	200	1.0M		400m	Si	DO7
95	MV1403A							175p†Δ	2.0	140-210Ø	12	200	1.0M		400m	Si	DO7Δ
96	MV1403B							175p†Δ	2.0	140-210Ø	12	200	1.0M		400m	Si	DO7Δ
97▼	MV1403H							175p†	2.0	140-210Ø	12	200	1.0M		400m	Si	DO7
98	ZC808							175pΔ†	2.0	5.75;2.0V-20V$;20%	25	150	20M		400m	Si	DO7
99	ZC808A							175pΔ†	2.0	5.75;2.0V-20V$;10%	25	150	20M		400m	Si	DO7
100	ZC808B							175pΔ†	2.0	5.75;2.0V-20V$;5%	25	150	20M		400m	Si	DO7
101	CV1656							180p	4.0	2.6;2.0V-20V$	20	200 Ø	20M		400m	Si$	DO14
102	KV656							180p§	4.0	2.6;2.0V-20V$	20 Ø	80	50M		400m	Si#$	DO14
103	MV1656							180p†	4.0	162 - 198Ø	20	200	.02G		.40	Si$	DO14
104	MV1656B							180pΔ†	4.0	2.6;2.0V-20V$;5%	20	200	40M		500m	Si	DO14
105	MV1656C							180pΔ†	4.0	2.6;2.0V-20V$;2%	20	200	40M		500m	Si	DO14
106♦	MV2303							180p§	4.0	162-198 Ø	20 Ø	200	20M		500m	Si$	TO92
107	MV2303B,C							180p§%	4.0	2.3;2.0V-20V$	20	200	20M		400m	Si	C132
108	VC118,A,B							180p%	4.0	120 - 450	10 $	25	.05G				DO7
109	VVC842,A,B,C,D							180p%	4.0	1.45;4.0V-10V$	10	25	50M		400m§	Si	DO7†
110	HA1850A							200pΔ†	1.0	4.5;1.0V-28V$;10%	30	75	50M		400m	Si	DO7Δ

6. VOLTAGE VARIABLE CAPACITORS & VARACTOR DIODES

IN ORDER OF (1) TYPICAL CAPACITANCE, (2) TEST VOLTAGE, and (3) TYPE No.

LINE No.	3 TYPE No.	MINIMUM CUTOFF FREQUENCY (Corresponding to Type Numbers in previous column) (Hz)	(Hz)	(Hz)	(Hz)	(Hz)	(Hz)	TYP. CAP. 1 CAP. Cj (F)	2 at TEST VOLT (V)	CAPACITANCE RANGE (for V = 0 to PIV) Ø - at TEST VOLT. (pF)	PIV (V)	Q FACTOR MIN. Q	at TEST FREQ (Hz)	MAX. SER. RES. Rs (Ω)	MAX. DISS. @ 25°C (W)	DESCRIPTION MAT.	DWG. No.
1	HA1850B							200pΔ†	1.0	4.5;1.0V-28V$;5%	30	75	50M		400m	Si	DO7Δ
2	HA1850C							200pΔ†	1.0	4.5;1.0V-28V$;2%	30	75	50M		400m	Si	DO7Δ
3	2501							200p§	4.0	6.4;4.0V-20V$	22 Ø	60	50M		400m	Si#	DO14Δ
4	2501A							200p§	4.0	6.4;4.0V-20V$	22 Ø	60	50M		400m	Si#	DO14Δ
5	2502							200p§	4.0	2.5;4.0V-8.0V$	2.5	60	50M		400m	Si#	DO14Δ
6	2502A							200p§	4.0	2.5;4.0V-8.0V$	15 Ø	60	50M		400m	Si#	DO14Δ
7	CV1658							200p	4.0	2.6;2.0V-20V$	20	200 Ø	20M		400m	Si$	DO14
8	DHA6525A							200p	4.0	180-220Ø		60	50m				DO7
9	DHA6525B							200p	4.0	180-220Ø		60	50m				DO7
10	DHA6525C							200p	4.0	190-210Ø		60	50m				DO7
11	DHA6525D							200p	4.0	190-210Ø		60	50m				DO7
12♦	DKV6525A							200p§	4.0	180-220 Ø	15 Ø	60	50M			Si§#	A90a Δ
13♦	DKV6525B							200p§	4.0	180-220 Ø	22 Ø	60	50M			Si§#	A90a Δ
14♦	DKV6525C							200p§	4.0	190-210 Ø	15 Ø	60	50M			Si§#	A90a Δ
15♦	DKV6525D							200p§	4.0	190-210 Ø	22 Ø	60	50M			Si§#	A90a Δ
16	DTH3511,A	3.0G						200p§%	4.0	6.4;4.0V-20V$	22 Ø	60	50M	200mØ	250m	Si▼	DO7Δ
17	KV658							200p§	4.0	2.6;2.0V-20V$	20 Ø	80	50M		400m	Si#$	DO14
18	KV2501	4.0GØ						200p§	4.0	6.4;4.0V-20V$	22 Ø	60	50M	200mØ	250m	Si#▼	DO7Δ
19	KV2501A	4.0GØ						200p§	4.0	6.4;4.0V-20V$	22 Ø	60	50M	200mØ	250m	Si#▼	DO7Δ
20	KV2502	4.0GØ						200p§	4.0	2.5;4.0V-8.0V$	15 Ø	60	50M	200mØ	250m	Si#▼	DO7Δ
21	KV2502A	4.0GØ						200p§	4.0	2.5;4.0V-8.0V$	15 Ø	60	50M	200mØ	250m	Si#▼	DO7Δ
22	KV2504	2.2GØ						200p§	4.0	180-220Ø	8.0 Ø	30	50M	350mØ	250m	Si#▼	DO7Δ
23	MA46525A							200p	4.0	220-180Ø	15	270				GA	A1da
24	MA46525B							200p	4.0	220-180Ø	22	270				GA	A1da
25	MA46525C							200p	4.0	210-190Ø	15	270				GA	A1da
26	MA46525D							200p	4.0	210-190Ø	22	270				GA	A1da
27	MV1658							200p†	4.0	180 - 220Ø	20	200	.02G		.40	Si$	DO14
28	MV1658B							200pΔ†	4.0	2.6;2.0V-20V$;5%	20	200	40M		500m	Si	DO14
29	MV1658C							200pΔ†	4.0	2.6;2.0V-20V$;2%	20	200	40M		500m	Si	DO14
30♦	MV2304							200p§	4.0	180-220 Ø	20 Ø	200	20M		500m	Si$	TO92
31	MV2304B,C							200p§%	4.0	2.3;2.0V-20V$	20	200	20M		400m	Si	C132
32▼	MA4K009-184							200p	8.0		30	275	20M		1.0	Si $	A431
33▼	MA4K009-935							200p	8.0		30	275	20M		1.0	Si $	A432
34▼	MA4K024-184							200p	8.0		45	250	20M		1.0	Si $	A431
35▼	MA4K024-935							200p	8.0		45	250	20M		1.0	Si $	A432
36▼	MA4K039-184							200p	8.0		60	225	20M		1.0	Si $	A431
37▼	MA4K039-935							200p	8.0		60	225	20M		1.0	Si $	A432
38▼	MA4K053-184							200p	8.0		90	150	20M		1.0	Si $	A431
39▼	MA4K054-935							200p	8.0		90	150	20M		1.0	Si $	A432
40▼	MA4K069-184							200p	8.0		120	175	20M		1.0	Si $	A431
41▼	MA4K069-935							200p	8.0		120	150	20M		1.0	Si $	A432
42	2403							210p§	2.5	3.1;8.0V-25V$	2.5	55	50M		400m	Si#	DO7Δ
43	2403A							210p§	2.5	3.1;8.0V-25V$	15 Ø	55	50M		400m	Si#	DO7Δ
44	DC4298	4.5G						210p	4.0		100 Ø	180	25M			Si	M955Δ
45	CV1660							220p	4.0	2.6;2.0V-20V$	20	150 Ø	20M		400m	Si$	DO14
46	KV660							220p§	4.0	2.6;2.0V-20V$	20 Ø	60	50M		400m	Si#$	DO14
47	MV1660							220p†	4.0	198 - 242Ø	20	150	.02G		.40	Si$	DO14
48	MV1660B							220pΔ†	4.0	2.6;2.0V-20V$;5%	20	150	40M		500m	Si	DO14
49	MV1660C							220pΔ†	4.0	2.6;2.0V-20V$;2%	20	150	40M		500m	Si	DO14
50♦	MV2305							220p§	4.0	198-242 Ø	20 Ø	150	20M		500m	Si$	TO92
51	MV2305B,C							220p§%	4.0	2.3;2.0V-20V$	20	150	20M		400m	Si	C132
52	VC122,A,B							220p%	4.0	150 - 550	10 $	25	.05G				DO7
53	VVC843,A,B,C,D							220p%	4.0	1.45;4.0V-10V$	10	25	50M		400m§	Si	DO7†
54♦	DKV6517							225p§	2.0	13;2.0V-10V$	12 Ø	200	1.0M			Si§#	A90a Δ
55♦	DKV6517A							225p§	2.0	13;2.0V-10V$	12 Ø	200	1.0M			Si§#	A90a Δ
56♦	DKV6517B							225p§	2.0	13;2.0V-10V$	12 Ø	500	1.0M			Si§#	A90a Δ
57	KV1701	1.1GØ						225p§	2.0	12.5;2.0V-10V$	20 Ø	50	10M	610mØ	250m	Si#▼	DO7Δ
58	KV1702	500MØ						225p§	2.0	12.5;2.0V-10V$	20 Ø	200	1.0M	1.4 Ø	250m	Si#▼	DO7Δ
59	KV1703	500MØ						225p§	2.0	12.5;2.0V-10V$	20 Ø	200	1.0M	1.4 Ø	250m	Si#▼	DO7
60♦	MV1405							250p†	2.0	200-300Ø	12	200	1.0M		400m	Si	DO7
61	MV1405A							250p†Δ	2.0	200-300Ø	12	200	1.0M		400m	Si	DO7Δ
62	MV1405B							250p†Δ	2.0	200-300Ø	12	200	1.0M		400m	Si	DO7Δ
63▼	MV1405H							250p†	2.0	200-300Ø	12	200	1.0M		400m	Si	DO7
64	ZC809							250pΔ†	2.0	5.75;2.0V-20V$;20%	25	100	20M		400m	Si	DO7
65	ZC809A							250pΔ†	2.0	5.75;2.0V-20V$;10%	25	100	20M		400m	Si	DO7
66	ZC809B							250pΔ†	2.0	5.75;2.0V-20V$;5%	25	100	20M		400m	Si	DO7
67	CV1662							250p	4.0	2.3;2.0V-15V$	15	150 Ø	20M		400m	Si$	DO14
68	KV662							250p§	4.0	2.3;2.0V-15V$	15 Ø	60	50M		400m	Si#$	DO14
69	MV1662							250p†	4.0	225 - 275Ø	15	150	.02G		.40	Si$	DO14
70	MV1662B							250pΔ†	4.0	2.3;2.0V-15V$;5%	15	150	40M		500m	Si	DO14
71	MV1662C							250pΔ†	4.0	2.3;2.0V-15V$;2%	15	150	40M		500m	Si	DO14
72♦	MV2306							250p§	4.0	225-275 Ø	20 Ø	150	20M		500m	Si$	TO92
73	MV2306B,C							250p§%	4.0	2.3;2.0V-20V$	20	150	20M		400m	Si	C132
74	VVC903,A,B,C,D							250p%	4.0	2.9;4.0V-50V$	50	65	50M		400m§	Si	DO7†
75	VVC904,A,B,C,D							250p%	4.0	3.9;4.0V-100V$	100	65	50M		400m§	Si	DO7†
76	1N5422							250p	8.0	5.8;4.0-200V$	200 §	200	25M		.25	Si	M190j
77	1N5715							250p	8.0	4.1;4.0V-100V$	200	200	25M		250m	Si$	A1du
78▼	MA4K025-184							250p	8.0		45	225	20M		1.0	Si $	A431
79▼	MA4K025-935							250p	8.0		45	225	20M		1.0	Si $	A432
80♦	MA4K040-184							250p	8.0		60	200	20M		1.0	Si $	A431
81♦	MA4K040-935							250p	8.0		60	200	20M		1.0	Si $	A432
82▼	MA4K055-184							250p	8.0		90	150	20M		1.0	Si $	A431
83▼	MA4K055-935							250p	8.0		90	150	20M		1.0	Si $	A432
84▼	MA4K070-184							250p	8.0		120	150	20M		1.0	Si $	A431
85▼	MA4K070-935							250p	8.0		120	150	20M		1.0	Si $	A432
86	PV1503-15							250p	8.0	8.0;0.0V-100V$	100	200	25M			Si	A2x
87	PV1504-15							250p	8.0	6.0;0.0V-60V$	60	200	25M			Si	A2x
88	PV1505-15							250p	8.0	4.0;0.0V-30V$	30	200	25M			Si	A2x
89	2503							270p§	2.5	3.1;8.0V-25V$	15 Ø	50	50M		400m	Si#	DO14Δ
90	2503A							270p§	2.5	3.1;8.0V-25V$	15 Ø	50	50M		400m	Si#	DO14Δ
91	DHA6525							270p	2.5	250-290Ø		30	50m				DO7
92♦	DKV6525							270p§	2.5	250-290 Ø	8.0 Ø	30	50M			Si§#	A90a Δ
93	CV1664							270p	4.0	2.3;2.0V-15V$	15	100 Ø	20M		400m	Si$	DO14
94	DC4243C	750M						270p	4.0		90	750	1.0M			Si	C200Δ
95	KV664							270p§	4.0	2.3;2.0V-15V$	15 Ø	40	50M		400m	Si#$	DO14
96	MV1664							270p†	4.0	243 - 300Ø	15	100	.02G		.40	Si$	DO14
97	MV1664B							270pΔ†	4.0	2.3;2.0V-15V$;5%	15	100	40M		500m	Si	DO14
98	MV1664C							270pΔ†	4.0	2.3;2.0V-15V$;2%	15	100	40M		500m	Si	DO14
99♦	MV2307							270p§	4.0	243-300 Ø	20 Ø	100	20M		500m	Si$	TO92
100	MV2307B,C							270p§%	4.0	2.3;2.0V-20V$	20	100	20M		400m	Si	C132
101	VC127,A,B							270p%	4.0	180 - 660	10 $	25	.05G				DO7
102	VVC844,A,B,C,D							270p%	4.0	1.45;4.0V-10V$	10	25	50M		400m§	Si	DO7†
103	BB113							290p	1.0	230-280Ø	32			4.0		Si△#	M675
104	2601							300p§	4.0	6.5;4.0V-20V$	22 Ø	40	50M		400m	Si#	DO14Δ
105	2601A							300p§	4.0	6.5;4.0V-20V$	22 Ø	40	50M		400m	Si#	DO14Δ
106	2602							300p§	4.0	2.5;4.0V-8.0V$	2.5	40	50M		400m	Si#	DO14Δ
107	2602A							300p§	4.0	2.5;4.0V-8.0V$	15 Ø	40	50M		400m	Si#	DO14Δ
108	KV666							300p§	4.0	2.3;2.0V-15V$	15 Ø	40	50M		400m	Si#$	DO14
109	KV2601	2.7GØ						300p§	4.0	6.5;4.0V-20V$	22 Ø	40	50M	190mØ	250m	Si#▼	DO14Δ
110	KV2601A	2.7GØ						300p§	4.0	6.5;4.0V-20V$	22 Ø	40	50M	190mØ	250m	Si#▼	DO14Δ

6. VOLTAGE VARIABLE CAPACITORS & VARACTOR DIODES

IN ORDER OF (1) TYPICAL CAPACITANCE, (2) TEST VOLTAGE, and (3) TYPE No.

LINE No.	3 TYPE No.	MINIMUM CUTOFF FREQUENCY (Corresponding to Type Numbers in previous column) (Hz)	(Hz)	(Hz)	(Hz)	(Hz)	(Hz)	TYP. CAP. 1 CAP. Cj (F)	2 at TEST VOLT (V)	CAPACITANCE RANGE (for V = 0 to PIV) Ø - at TEST VOLT. (pF)	PIV (V)	Q FACTOR MIN. Q	at TEST FREQ (Hz)	MAX. SER. RES. Rs (Ω)	MAX. DISS. @ 25°C (W)	DESCRIPTION MAT.	DWG. No.
1	KV2602	2.7GØ						300p§	4.0	2.5;4.0V-8.0V$	15 ☑	40	50M	190mØ	250m	Si#▼	DO14Δ
2	KV2602A	2.7GØ						300p§	4.0	2.5;4.0V-8.0V$	15 ☑	40	50M	190mØ	250m	Si#▼	DO14Δ
3	KV2604	1.5GØ						300p§	4.0	270-330Ø	8.0 ☑	20	50M	350mØ	250m	Si#▼	DO14Δ
4▼	MA4K026-184							300p	8.0		45	225	20M		1.0	Si $	A431
5▼	MA4K026-935							300p	8.0		45	225	20M		1.0	Si $	A432
6▼	MA4K041-184							300p	8.0		60	200	20M		1.0	Si $	A431
7▼	MA4K041-935							300p	8.0		60	200	20M		1.0	Si $	A432
8▼	MA4K056-184							300p	8.0		90	150	20M		1.0	Si $	A431
9▼	MA4K056-935							300p	8.0		90	150	20M		1.0	Si $	A432
10▼	MA4K071-184							300p	8.0		120	150	20M		1.0	Si $	A431
11▼	MA4K071-935							300p	8.0		120	150	20M		1.0	Si $	A432
12	CV1666							330p	4.0	2.3;2.0V-15V$	15	100 Ø	20M		400m	Si$	DO14
13	MV1666							330p†	4.0	297 - 363Ø	15	100	.02G		.40	Si$	DO14
14	MV1666B							330pΔ†	4.0	2.3;2.0V-15V$;5%	15	100	40M		500m	Si	DO14
15	MV1666C							330pΔ†	4.0	2.3;2.0V-15V$;2%	15	100	40M		500m	Si	DO14
16♦	MV2308							330p§	4.0	297-363 Ø	20 ☑	100	20M		500m	Si$	TO92
17	MV2308B,C							330p§%	4.0	2.3;2.0V-20V$	20	100	20M		400m	Si	C132
18	VA521							330p	4.0	5.0;2.0V-100V$	100 $	200	25M	125m	1.0	Si$	A83cjΔ
19	VA522							330p	4.0	4.0;2.0V-80V$	80 $	200	25M	125m	1.0	Si$	A83cjΔ
20	VA523							330p	4.0	4.0;1.0V-50V$	50 $	200	25M	125m	1.0	Si$	A83cjΔ
21	VA524							330p	4.0	3.0;1.0V-25V$	25 $	200	25M	125m	1.0	Si$	A83cjΔ
22	VC133,A,B							330p%	4.0	250-800	8.0 $	25	50M				DO7
23	VC533,B,C,D							330p%	4.0	145 - 840	30 $	25	.05G				A1fz
24	VVC845,A,B,C,D							330p%	4.0	1.35;4.0V-8.0V$	8.0	25	50M		400m§	Si	DO7†
25	VVC882,A,B,C,D							330p%	4.0	2.4;4.0V-30V$	30	25	50M		400m§	Si	DO7†
26	VVC1021,A,B,C,D							330p%	4.0	2.2;4.0V-25V$	25	50	50M		400m§	Si	DO7†
27	VVC1022,A,B,C,D							330p%	4.0	2.2;4.0V-25V$	25	200	50M		400m§	Si	DO7†
28	VVC1023,A,B,C,D							330p%	4.0	3.9;4.0V-100V$	100	15	50M		400m§	Si	DO7†
29	VVC1024,A,B,C,D							330p%	4.0	3.9;4.0V-100V$	100	200	50M		400m§	Si	DO7†
30	DC4244C	500M						350p	4.0		90	500	1.0M			Si	C200Δ
31	DC4299	5.0G						350p	4.0		100 ☑	200	25M			Si	M955Δ
32	VVC905,A,B,C,D							350p%	4.0	2.9;4.0V-50V$	50	55	50M		400m§	Si	DO7†
33	VVC906,A,B,C,D							350p%	4.0	3.9;4.0V-100V$	100	55	50M		400m§	Si	DO7†
34	VC539,B,C,D							390p%	4.0	180 - 1010	25 $	25	.05G				A1fz
35	VVC883,A,B,C,D							390p%	4.0	2.2;4.0V-25V$	25	25	50M		400m§	Si	DO7†
36▼	MA4K027-184							400p	8.0		45	225	20M		1.0	Si $	A431
37▼	MA4K027-935							400p	8.0		45	225	20M		1.0	Si $	A432
38▼	MA4K042-184							400p	8.0		60	200	20M		1.0	Si $	A431
39▼	MA4K042-935							400p	8.0		60	200	20M		1.0	Si $	A432
40▼	MA4K057-184							400p	8.0		90	100	20M		1.0	Si $	A431
41▼	MA4K057-935							400p	8.0		90	100	20M		1.0	Si $	A432
42▼	MA4K072-184							400p	8.0		120	100	20M		1.0	Si $	A431
43▼	MA4K072-935							400p	8.0		120	100	20M		1.0	Si $	A432
44	SVC333							408pØ	3.0	345.0-408.4		300	1.0M		100m	Si	C226
45▼	1SV102							410p	2.0	23;2.0-25V $	30	200	1.0M			Si	C263
46	2603							410p§	2.5	3.1;8.0V-25V$	15 ☑	35	50M		400m	Si#	DO14Δ
47	2603A							410p§	2.5	3.1;8.0V-25V$	15 ☑	35	50M		400m	Si#	DO14Δ
48	SVC321							459p	1.2	459.1-20.3	8.0	200	1.0M			Si	TO92
49	SVC321SP							459p	1.2	459.1-20.3	8.0	200	1.0M			Si	TO92
50♦	MVAM109							460p	1.0	400-520 Ø	15 ☑	150	1.0M		280m	Si	M764a
51	VC547,B,C,D							470p%	4.0	220 - 1200	25 $	25	.05G				A1fz
52	VVC884,A,B,C,D							470p%	4.0	2.2;4.0V-25V$	25	25	50M		400m§	Si	DO7†
53▼	1SV149							480p	1.0	19.5;1.0-8.0V $	15	200	1.0M			Si	C261
54♦	DVE4556-35	400G						500p	0.0	.45-5.5	6.0				200m	GASΔ	F143
55	1SV100							500p	1.0	17-251.0V-9.0V$	15	200	1M	0.8		Si	Δ
56♦	MVAM115							500p	1.0	440-560 Ø	18 ☑	150	1.0M		280m	Si	M764a
57♦	MVAM125							500p	1.0	440-560 Ø	28 ☑	150	1.0M		280m	Si	M764a
58♦	DKV6518							500p§	1.2	15;1.25V-10V$	12 ☑	150	1.0M			Si§#	A429 Δ
59♦	DKV6518A							500p§	1.2	15;1.25V-10V$	12 ☑	150	1.0M			Si§#	A429 Δ
60♦	DKV6518B							500p§	1.2	15;1.25V-10V$	12 ☑	300	1.0M			Si§#	A429 Δ
61	KV1801	700MØ						500p§	1.2	14;1.25V-10V$	20 ☑	30	10M	450mØ	250m	Si#▼	DO14Δ
62	KV1802	300MØ						500p§	1.2	14;1.25V-10V$	20 ☑	150	1.0M	1.1 ☑	250m	Si#▼	DO14Δ
63	KV1803	300MØ						500p§	1.2	14;1.25V-7.0V$	20 ☑	150	1.0M	1.1 ☑	250m	Si#▼	DO14
64	1SV118							500p	3.0	18§	35	200	1.0M				TO92
65	2701							500p§	4.0	6.7;4.0V-20V$	22 ☑	30	50M		400m	Si#	DO14Δ
66	2701A							500p§	4.0	6.7;4.0V-20V$	22 ☑	30	50M		400m	Si#	DO14Δ
67	2702							500p§	4.0	2.5;4.0V-8.0V$	2.5	30	50M		400m	Si#	DO14Δ
68	2702A							500p§	4.0	2.5;4.0V-8.0V$	15 ☑	30	50M		400m	Si#	DO14Δ
69	KV105A							500p†	4.0	400-600Ø	90	500	1.0M		150m§	SiΔ*	A354
70	KV105B							500p†	4.0	400-600Ø	50	500	1.0M		150m§	SiΔ*	A354
71	KV2701	2.0GØ						500p§	4.0	6.7;4.0V-20V$	22 ☑	30	50M	160mØ	250m	Si#▼	DO14Δ
72	KV2701A	2.0GØ						500p§	4.0	6.7;4.0V-20V$	22 ☑	30	50M	160mØ	250m	Si#▼	DO14Δ
73	KV2702	2.0GØ						500p§	4.0	2.5;4.0V-8.0V$	15 ☑	30	50M	160mØ	250m	Si#▼	DO14Δ
74	KV2702A	2.0GØ						500p§	4.0	2.5;4.0V-8.0V$	15 ☑	30	50M	160mØ	250m	Si#▼	DO14Δ
75	KV2704	1.2GØ						500p§	4.0	450-550Ø	8.0 ☑	15	50M	250mØ	250m	Si#▼	DO14Δ
76	VVC907,A,B,C,D							500p%	4.0	2.9;4.0V-50V$	50	45	50M		400m§	Si	DO7†
77	VVC908,A,B,C,D							500p%	4.0	3.9;4.0V-100V$	100	45	50M		400m§	Si	DO7†
78	VVC1025,A,B,C,D							500p%	4.0	2.2;4.0V-25V$	25	50	50M		400m§	Si	DO7†
79	VVC1026,A,B,C,D							500p%	4.0	2.2;4.0V-25V$	25	200	50M		400m§	Si	DO7†
80	VVC1027,A,B,C,D							500p%	4.0	3.9;4.0V-100V$	100	15	50M		400m§	Si	DO7†
81	VVC1028,A,B,C,D							500p%	4.0	3.9;4.0V-100V$	100	200	50M		400m§	Si	DO7†
82	1N5423							500p	8.0	5.8;4.0-200V$	200 §	150	25M		.25	Si	M190k
83	1N5424							500p	8.0	4.2;4.0-100V$	100 §	300	10M		.25	Si	M190k
84	1N5716							500p	8.0	4.1;4.0V-100V$	200	150	25M		250m	Si$	A83cc
85	1N5717							500p	8.0	4.2;4.0V-100V$	100	300	10M		250m	Si$	A83cc
86▼	MA4K028-184							500p	8.0		45	175	20M		1.0	Si $	A431
87▼	MA4K028-935							500p	8.0		45	175	20M		1.0	Si $	A432
88▼	MA4K043-184							500p	8.0		60	150	20M		1.0	Si $	A431
89▼	MA4K043-935							500p	8.0		60	150	20M		1.0	Si $	A432
90▼	MA4K058-184							500p	8.0		90	100	20M		1.0	Si $	A431
91▼	MA4K058-935							500p	8.0		90	100	20M		1.0	Si $	A432
92▼	MA4K073-184							500p	8.0		120	100	20M		1.0	Si $	A431
93▼	MA4K073-935							500p	8.0		120	100	20M		1.0	Si $	A432
94	PV1506-15							500p	8.0	8.0;0.0V-100V$	100	150	25M			Si	A2x
95	PV1507-15							500p	8.0	6.0;0.0V-60V$	60	150	25M			Si	A2x
96	PV1508-15							500p	8.0	4.0;0.0V-30V$	30	150	25M			Si	A2x
97♦	BB509							520p	1.0	440-600 Ø	30	200 Ø	1.0M			Si$#	Y236a
98	1SV117							550p	1.0	18§	15	200	1.0M				TO92
99	MV1401							550p§	1.0	468-633Ø	12 ☑	200	1.0M		400m	Si$	DO14
100	VC556,B,C,D							560p%	4.0	330 - 1500	15 $	25	.05G				A1fz
101	VVC885,A,B,C,D							560p	4.0	1.75;4.0V-15V$	15	25	50M		400m§	Si	DO7†
102	FC66M							620pØΔ	1.0	21;1.0V-25V$	30 ☑	200	1.0M			Si	C187
103	2703							650p§	2.5	3.1;8.0V-25V$	15 ☑	25	50M		400m	Si#	DO14Δ
104	2703A							650p§	2.5	3.1;8.0V-25V$	15 ☑	25	50M		400m	Si#	DO14Δ
105	VA621							660p	4.0	5.0;2.0V-100V$	100 $	150	25M	90m	1.0	Si$	A83ckΔ
106	VA622							660p	4.0	4.0;2.0V-80V$	80 $	150	25M	90m	1.0	Si$	A83ckΔ
107	VA623							660p	4.0	4.0;1.0V-50V$	50 $	150	25M	90m	1.0	Si$	A83ckΔ
108	VA624							660p	4.0	3.0;1.0V-25V$	25 $	150	25M	90m	1.0	Si$	A83ckΔ
109	VC568,B,C,D							680p%	4.0	400 - 1700	15 $	25	.05G				A1fz
110	VVC886,A,B,C,D							680p%	4.0	1.75;4.0V-15V$	15	25	50M		400m§	Si	DO7†

SYMBOLS AND CODES EXPLAINED IN INTERPRETER

6. VOLTAGE VARIABLE CAPACITORS & VARACTOR DIODES

IN ORDER OF (1) TYPICAL CAPACITANCE, (2) TEST VOLTAGE, and (3) TYPE No.

LINE No.	[3] TYPE No.	MINIMUM CUTOFF FREQUENCY (Corresponding to Type Numbers in previous column) (Hz)	(Hz)	(Hz)	(Hz)	(Hz)	(Hz)	TYP. CAP. [1] CAP. Cj (F)	[2] at TEST VOLT (V)	CAPACITANCE RANGE (for V = 0 to PIV) Ø - at TEST VOLT. (pF)		PIV (V)	Q FACTOR MIN. Q	at TEST FREQ (Hz)	MAX. SER. RES. Rs (Ω)	MAX. DISS. @ 25°C (W)	DESCRIPTION MAT.	DWG. No.
1	P030004C,D,E,F	20G	40G	60G	80G			700p	6.0	.40-1.0Ø		30				800m	Si	F27ad
2▼	MA4K029-184							750p	8.0			45	150	20M		1.0	Si $	A431
3▼	MA4K029-935							750p	8.0			45	150	20M		1.0	Si $	A432
4▼	MA4K044-184							750p	8.0			60	125	20M		1.0	Si $	A431
5▼	MA4K044-935							750p	8.0			60	125	20M		1.0	Si $	A432
6▼	MA4K059-184							750p	8.0			90	80	20M		1.0	Si $	A431
7▼	MA4K059-935							750p	8.0			90	80	20M		1.0	Si $	A432
8▼	MA4K074-184							750p	8.0			120	80	20M		1.0	Si $	A431
9▼	MA4K074-935							750p	8.0			120	80	20M		1.0	Si $	A432
10	PV1509-15							750p	8.0	6.0;0.0V-60V$		60	150	25M			Si	A2x
11	PV1510-15							750p	8.0	4.0;0.0V-30V$		30	150	25M			Si	A2x
12	VC582,B,C,D							820p%	4.0	520 - 2100		10 $	25	.05G				A1fz
13	VVC887,A,B,C,D							820p	4.0	1.45;4.0V-10V$		10	25	50M		400m§	Si	DO7†
14	VA723							990p	4.0	4.0;1.0V-50V$		50 $	150	25M	60m	1.0	Si$	A83ckΔ
15	VA724							990p	4.0	3.0;1.0V-25V$		25 $	150	25M	60m	1.0	Si$	A83ckΔ
16	VC599,B,C,D							1.0n%	4.0	640 - 2500		10 $	25	.05G				A1fz
17	VVC888,A,B,C,D							1.0n%	4.0	1.45;4.0V-10V$		10	25	50M		400m§	Si	DO7†
18	VVC909,A,B,C,D							1.0n%	4.0	3.9;4.0V-100V$		25	100	50M		400m§	Si	DO7†
19	VVC1020,A,B,C,D							1.0n%	4.0			25	100	50M			Si	DO7
20	VVC1029,A,B,C,D							1.0n%	4.0	2.2;4.0V-25V$		25	50	50M		400m§	Si	DO7†
21	VVC1030,A,B,C,D							1.0n%	4.0	2.2;4.0V-25V$		25	200	50M		400m§	Si	DO7†
22	VVC1031,A,B,C,D							1.0n%	4.0	3.9;4.0V-100V$		100	15	50M		400m§	Si	DO7†
23	VVC1032,A,B,C,D							1.0n%	4.0	3.9;4.0V-100V$		100	200	50M		400m§	Si	DO7†
24	VVC8000,A,B,C							1.0n%	4.0	7.0;4.0V-100V$		100	25	100M		250m	Si	D07
25	VVC8010,A,B,C							1.0n%	4.0	7.0;4.0V-100V$		100	25	100m		250m	Si	D07
26	VVC8020,A,B,C							1.0n%	4.0	7.0;4.0V-100V$		100	25	100m		250m	Si	D07
27	VVC8030,A,B,C							1.0n%	4.0	7.5;5.0V-120V$		120	30	100m		250m	Si	D07
28	VVC8040,A,B,C							1.0n%	4.0	7.5;5.0V-120V$		120	30	100m		250m	Si	D07
29	VVC8050,A,B,C							1.0n%	4.0	7.5;5.0V-120V$		120	30	100m		250m	Si	D07
30	1N5425							1.0n	8.0	4.2;4.0-100V$		100 §	200	10M		.25	Si	M190m
31	1N5718							1.0n	8.0	4.2;4.0V-100V$		100	200	10M		250m	Si$	A83cc
32▼	MA4K030-184							1.0n	8.0			45	125	20M		1.0	Si $	A431
33▼	MA4K030-935							1.0n	8.0			45	125	20M		1.0	Si $	A432
34▼	MA4K045-184							1.0n	8.0			60	100	20M		1.0	Si $	A431
35▼	MA4K045-935							1.0n	8.0			60	100	20M		1.0	Si $	A432
36▼	MA4K060-184							1.0n	8.0			90	70	20M		1.0	Si $	A431
37▼	MA4K060-935							1.0n	8.0			90	70	20M		1.0	Si $	A432
38▼	MA4K075-184							1.0n	8.0			120	70	20M		1.0	Si $	A431
39▼	MA4K075-935							1.0n	8.0			120	70	20M		1.0	Si $	A432
40	PV1511-15							1.0n	8.0	6.0;0.0V-60V$		60	100	25M			Si	A2x
41	PV1512-15							1.0n	8.0	4.0;0.0V-30V$		30	100	25M			Si	A2x
42	VA823							1.3n	4.0	4.0;1.0V-50V$		50 $	100	25M	60m	1.0	Si$	A83cmΔ
43	VA824							1.3n	4.0	3.0;1.0V-25V$		25 $	100	25M	60m	1.0	Si$	A83cmΔ
44	D5018-06	200						0.6	40							300m	GA	
45	MA46561C							.65	4.0	.99-.50Ø		15	1.5k	50M			GA	V7†
46	MA46561D							.65	4.0	.99-.50Ø		15	2.0k	50M			GA	V7†
47▼	BB521							2.0	28	1.8-2.2	Ø	30			0.7		Si	Y236a
48▼	BB621							2.0	28	1.8-2.2	Ø	30			0.7		Si	F166
49▼	BB622							2.1	28	1.8-2.5	Ø	30			1.0		Si	F166
50▼	BB529							2.8	28	2.5-3.2	Ø	30			850mØ		Si	Y236a
51▼	BB629							2.8	28	2.5-3.2	Ø	30			850mØ		Si	F166
52♦	VA107A							6.5 %	4	3.0;2.0V-30V	$	30	150	50M		400m		DO7†
53♦	VA107B							6.5 %	4	3.0;2.0V-30V	$	30	150	50M		400m		D07†
54♦	VA138A							6.5 %	4	3.0;2.0V-25V	$	25	75	50M		400m		DO7†
55♦	VA138B							6.5 %	4	3.0;2.0V-25V	$	25	75	50M		400m		DO7†
56♦	VA139A							6.5 %	4	4.0;2.0V-50V	$	50	150	50M		400m		DO7†
57♦	VA139B							6.5 %	4	4.0;2.0V-50V	$	50	150	50M		400m		DO7†
58♦	VA140A							6.5	4	4.0;2.0V-80V	$	80	75	50M		400m		DO7†
59♦	VA140B							6.5	4	4.0;2.0V-80V	$	80	75	50M		400m		DO7†
60♦	VA141A							6.5 %	4	4.2;2.0V-100V	$	100	125	50M		400m		DO7†
61♦	VA141B							6.5 %	4	4.2;2.0V-100V	$	100	125	50M		400m		DO7†
62♦	VA150A							6.5	4	4.0;2.0V-80V	$	80	100	50M		400m		DO7†
63♦	VA150B							6.5	4	4.0;2.0V-80V	$	80	100	50M		400m		DO7†
64♦	VA162A							6.5 %	4	4.2;2.0V-100V	$	100	75	50M		400m		DO7†
65♦	VA162B							6.5 %	4	4.2;2.0V-100V	$	100	75	50M		400m		DO7†
66	ZC899							6.6 §	2.0	6.5-5.0		25	300	50M		400m		A1st
67	MV1412							10	2.0	8-12;2.0V;1.0M$		12 ☑	200	1.0M		400m	Si	DO7Δ
68	MV1412A							10	2.0	8-12;2.0V;1.0M$		12 ☑	200	1.0M		400m	Si	DO7Δ
69	MV1412B							10	2.0	8-12;2.0V;1.0M$		12 ☑	200	1.0M		400m	Si	DO7Δ
70♦	VA112A							10	4	4.0;2.0V-80V	$	80	50	50M		400m		DO7†
71♦	VA112B							10	4	4.0;2.0V-80V	$	80	50	50M		400m		DO7†
72♦	VA115A							10 %	4	4.5;2.0V-100V	$	100	100	50M		400m		DO7†
73♦	VA115B							10 %	4	4.5;2.0V-100V	$	100	100	50M		400m		DO7†
74♦	VA132A							10 %	4	3.0;2.0V-25V	$	25	50	50M		400m		DO7†
75♦	VA132B							10 %	4	3.0;2.0V-25V	$	25	50	50M		400m		DO7†
76♦	VA135A							10 %	4	4.0;2.0V-50V	$	50	150	50M		400m		DO7†
77♦	VA135B							10 %	4	4.0;2.0V-50V	$	50	150	50M		400m		DO7†
78♦	VA151A							10	4	4.0;2.0V-80V	$	80	100	50M		400m		DO7†
79♦	VA151B							10	4	4.0;2.0V-80V	$	80	100	50M		400m		DO7†
80♦	VA157A							10 %	4	3.0;2.0V-25V	$	25	150	50M		400m		DO7†
81♦	VA157B							10 %	4	3.0;2.0V-25V	$	25	150	50M		400m		DO7†
82♦	VA163A							10 %	4	4.5;2.0V-100V	$	100	75	50M		400m		DO7†
83♦	VA163B							10 %	4	4.5;2.0V-100V	$	100	75	50M		400m		D07†
84	MV1411							15 †	2.0	12-18;2.0V;1.0M$		12 ☑	200	1.0M		400m	Si	DO7Δ
85	MV1411A							15 †	2.0	12-18;2.0V;1.0M$		12 ☑	200	1.0M		400m	Si	DO7Δ
86	MV1411B							15 †	2.0	12-18;2.0V;1.0M$		12 ☑	200	1.0M		400m	Si	DO7Δ
87♦	VA123A							15 %	4	3.0;2.0V-25V	$	25	50	50M		400m		DO7†
88♦	VA123B							15 %	4	3.0;2.0V-25V	$	25	50	50M		400m		DO7†
89♦	VA124A							15 %	4	4.0;2.0V-50V	$	50	125	50M		400m		DO7†
90♦	VA124B							15 %	4	4.0;2.0V-50V	$	50	125	50M		400m		DO7†
91♦	VA125A							15	4	5.0;2.0V-80V	$	80	50	50M		400m		DO7†
92♦	VA125B							15	4	5.0;2.0V-80V	$	80	50	50M		400m		DO7†
93♦	VA126A							15 %	4	4.8;2.0V-100V	$	100	100	50M		400m		DO7†
94♦	VA126B							15 %	4	4.8;2.0V-100V	$	100	100	50M		400m		DO7†
95♦	VA152A							15	4	4.0;2.0V-80V	$	80	100	50M		400m		DO7†
96♦	VA152B							15	4	4.0;2.0V-80V	$	80	100	50M		400m		DO7†
97♦	VA158A							15 %	4	3.0;2.0V-25V	$	25	150	50M		400m		DO7†
98♦	VA158B							15 %	4	3.0;2.0V-25V	$	25	150	50M		400m		DO7†
99♦	VA165A							15 %	4	4.8;2.0V-100V	$	100	75	50M		400m		DO7†
100♦	VA165B							15 %	4	4.8;2.0V-100V	$	100	75	50M		400m		DO7†
101♦	VA113A							22 %	4	4.0;2.0V-80V	$	80	50	50M		400m		DO7†
102♦	VA113B							22 %	4	4.0;2.0V-80V	$	80	50	50M		400m		DO7†
103♦	VA116A							22 %	4	5.0;2.0V-100V	$	100	100	50M		400m		DO7†
104♦	VA116B							22 %	4	5.0;2.0V-100V	$	100	100	50M		400m		DO7†
105♦	VA133A							22 %	4	3.0;2.0V-25V	$	25	50	50M		400m		DO7†
106♦	VA133B							22 %	4	3.0;2.0V-25V	$	25	50	50M		400m		DO7†
107♦	VA136A							22 %	4	4.0;2.0V-50V	$	50	125	50M		400m		DO7†
108♦	VA136B							22 %	4	4.0;2.0V-50V	$	50	125	50M		400m		DO7†
109♦	VA153A							22	4	4.0;2.0V-80V	$	80	100	50M		400m		DO7†
110♦	VA153B							22	4	4.0;2.0V-80V	$	80	100	50M		400m		DO7†

SYMBOLS AND CODES EXPLAINED IN INTERPRETER

6. VOLTAGE VARIABLE CAPACITORS & VARACTOR DIODES

IN ORDER OF (1) TYPICAL CAPACITANCE, (2) TEST VOLTAGE, and (3) TYPE No.

LINE No.	3 TYPE No.	MINIMUM CUTOFF FREQUENCY (Corresponding to Type Numbers in previous column) (Hz)	(Hz)	(Hz)	(Hz)	(Hz)	(Hz)	TYP. CAP. 1 CAP. Cj (F)	2 at TEST VOLT (V)	CAPACITANCE RANGE (for V = 0 to PIV) Ø - at TEST VOLT. (pF)	PIV (V)	Q FACTOR MIN. Q	at TEST FREQ (Hz)	MAX. SER. RES. Rs (Ω)	MAX. DISS. @ 25°C (W)	DESCRIPTION MAT.	DWG. No.
1♦	VA159A							22 %	-4	3.0;2.0V-25V $	25	150	50M		400m		DO7†
2♦	VA159B							22 %	-4	3.0;2.0V-25V $	25	150	50M		400m		DO7†
3♦	VA166A							22 %	-4	5.0;2.0V-100V $	100	75	50M		400m		DO7†
4♦	VA166B							22 %	-4	5.0;2.0V-100V $	100	75	50M		400m		DO7†
5♦	BBY40							29	3.0	4.3-32	30			0.6		Si #	W174
6♦	VA127A							33 %	-4	3.0;2.0V-25V $	25	50	50M		400m		DO7†
7♦	VA127B							33 %	-4	3.0;2.0V-25V $	25	50	50M		400m		DO7†
8♦	VA128A							33 %	-4	4.0;2.0V-50V $	50	125	50M		400m		DO7†
9♦	VA128B							33 %	-4	4.0;2.0V-50V $	50	125	50M		400m		DO7†
10♦	VA129A							33 %	-4	4.0;2.0V-80V $	80	50	50M		400m		DO7†
11♦	VA129B							33 %	-4	4.0;2.0V-80V $	80	50	50M		400m		DO7†
12♦	VA130A							33 %	-4	5.2;2.0V-100V $	100	100	50M		400m		DO7†
13♦	VA130B							33 %	-4	5.2;2.0V-100V $	100	100	50M		400m		DO7†
14♦	VA154A							33 %	-4	4.0;2.0V-80V $	80	100	50M		400m		DO7†
15♦	VA154B							33 %	-4	4.0;2.0V-80V $	80	100	50M		400m		DO7†
16♦	VA160A							33 %	-4	3.0;2.0V-25V $	25	150	50M		400m		DO7†
17♦	VA160B							33 %	-4	3.0;2.0V-25V $	25	150	50M		400m		DO7†
18♦	VA167A							33 %	-4	5.2;2.0V-100V $	100	75	50M		400m		DO7†
19♦	VA167B							33 %	-4	5.2;2.0V-100V $	100	75	50M		400m		DO7†
20	SVC201Y							39	1.0	39-12.6	9.0 %			0.6		Si	C201
21♦	VA114A							47 %	-4	4.0;2.0V-80V $	80	50	50M		400m		DO7†
22♦	VA114B							47 %	-4	4.0;2.0V-80V $	80	50	50M		400m		DO7†
23♦	VA117A							47 %	-4	5.2;2.0V-100V $	100	100	50M		400m		DO7†
24♦	VA117B							47 %	-4	5.2;2.0V-100V $	100	100	50M		400m		DO7†
25♦	VA122A							47 %	-4	5.2;2.0V-100V $	100	75	50M		400m		DO7†
26♦	VA122B							47 %	-4	5.2;2.0V-100V $	100	75	50M		400m		DO7†
27♦	VA134A							47 %	-4	3.0;2.0V-25V $	25	50	50M		400m		DO7†
28♦	VA134B							47 %	-4	3.0;2.0V-25V $	25	50	50M		400m		DO7†
29♦	VA137A							47 %	-4	4.0;2.0V-50V $	50	100	50M		400m		DO7†
30♦	VA137B							47 %	-4	4.0;2.0V-50V $	50	100	50M		400m		DO7†
31♦	VA155A							47 %	-4	4.0;2.0V-80V $	80	100	50M		400m		DO7†
32♦	VA155B							47 %	-4	4.0;2.0V-80V $	80	100	50M		400m		DO7†
33♦	VA161A							47 %	-4	3.0;2.0V-25V $	25	150	50M		400m		DO7†
34♦	VA161B							47 %	-4	3.0;2.0V-25V $	25	150	50M		400m		DO7†
35♦	VA168A							68 %	-4	5.2;2.0V-100V $	100	75	50M		400m		DO7†
36♦	VA168B							68 %	-4	5.2;2.0V-100V $	100	75	50M		400m		DO7†
37♦	VA169A							68 %	-4	4.0;2.0V-50V $	50	75	50M		400m		DO7†
38♦	VA169B							68 %	-4	4.0;2.0V-50V $	50	75	50M		400m		DO7†
39♦	VA170A							68 %	-4	4.0;2.0V-80V $	80	75	50M		400m		DO7†
40♦	VA170B							68 %	-4	4.0;2.0V-80V $	80	75	50M		400m		DO7†
41♦	VA171A							68 %	-4	4.0;2.0V-50V $	50	100	50M		400m		DO7†
42♦	VA171B							68	-4	4.0;2.0V-50V $	50	100	50M		400m		DO7†
43♦	VA172A							68 %	-4	3.0;2.0V-25V $	25	100	50M		400m		DO7†
44♦	VA172B							68 %	-4	3.0;2.0V-25V $	25	100	50M		400m		DO7†
45♦	VA173A							68 %	-4	3.0;2.0V-25V $	25	75	50M		400m		DO7†
46♦	VA173B							68 %	-4	3.0;2.0V-25V $	25	75	50M		400m		DO7†
47	MA46524A							155	4.0	170-140Ø	15	300				GA	A1da
48	MA46524B							155	4.0	170-140Ø	22	300				GA	A1da
49	MA46524C							155	4.0	163-147Ø	15	300				GA	A1da
50	MA46524D							155	4.0	163-147Ø	22	300				GA	A1da
51	SVC311							516 Ø	1.0	516.8-46.87	9.0 %	400	1.0M			Si	C201
52	SVC303Y							600 ☑	1.0	600-35	9.0 %	200	1M			Si	C201
53	CVH2060-13							3.9k	4.0	7.5;0.0-60$;10%	60 ☑	1.7k	50M			Si§§	u30a

7. TUNNEL DIODES

IN ORDER OF (1) PEAK CURRENT, (2) MAXIMUM CAPACITANCE, and (3) TYPE No.

LINE No.	3 TYPE No.	PEAK CUR. 1 Ip (A)	TOLERANCE ± (A)	2 MAX. TOTAL CAP. (F)	MIN Ip/Iv	Vp (V)	Vv (V)	RESISTIVE Vf at Ip (V)	CUTOFF FREQ. (Hz)	SER. IND. Ls (H)	SER. RES. Rs (Ω)	NEG. RES. -R (Ω)	NOISE VOLT. (V)	ABSOLUTE MAX. RATINGS FWD. CUR. (A)	DISS. @25°C (W)	THER. RES. °C/mW	MAX. TEMP (°C)	DESCRIPTION MAT.	DWG. No.
1	107550G			.13pØ					50GØ		7.0	75	1.5 §					Ge	F59k†
2	106050G			.15pØ					50GØ		6.0	60	1.5 §					Ge	F59k†
3	107540G			.18pØ					40GØ		6.0	75	1.5 §					Ge	F59k†
4	104540A			.19pØΔ					40GØ		8.0	45					100J	GA	F59k†
5	104550G			.20pΔØ					50GØ		6.0	45	1.5 §					Ge	F59k†
6	106040G			.22pØ					40GØ		5.0	60	1.5 §					Ge	F59k†
7	102540A			.26pØΔ					40GØ		7.0	25					100J	GA	F59k†
8	107530G			.27pØ					30GØ		5.0	75	1.4 §					Ge	F59k†
9	104530A			.28pΔØ					30GØ		7.0	45					100J	GA	F59k†
10	104540G			.30pΔØ					40GØ		5.0	45	1.5 §					Ge	F59k†
11	106030G			.30pØ					30GØ		5.0	60	1.4 §					Ge	F59k†
12	107525G			.32pØ					25GØ		5.0	75	1.4 §					Ge	F59k†
13	104525A			.36pØΔ					25GØ		6.0	45					100J	GA	F59k†
14	102530A			.37pØΔ					30GØ		7.0	25					100J	GA	F59k†
15	104530G			.40pΔØ					30GØ		4.0	45	1.4 §					Ge	F59k†
16	106025G			.45pØ					25GØ		4.0	60	1.4 §					Ge	F59k†
17	107520G			.46pØ					20GØ		4.0	75	1.4 §					Ge	F59k†
18	102525A			.50pØΔ					25GØ		6.0	25					100J	GA	F59k †
19	104520A			.50pØΔ					20GØ		5.0	45					100J	GA	F59k†
20	104525G			.50pΔØ					25GØ		4.0	45	1.4 §					Ge	F59k†
21	101030A			.53pØΔ					30GØ		6.0	10					100J	GA	F59k†
22	106020G			.55pΔØ					20GØ		4.0	60	1.4 §					GE	F59k†
23	104520G			.60pΔØ					20GØ		4.0	45	1.4 §					Ge	F59k†
24	101025A			.64pΔØ					25GØ		5.0	10					100	GA	F59k†
25	107515G			.72pØ					15GØ		3.0	75	1.3 §					Ge	F59k†
26	104515A			.76pØΔ					15GØ		4.0	45					100J	GA	F59k†
27	104515G			.80pΔØ					15GØ		3.0	45	1.3 §					Ge	F59k†
28	106015G			.90pΔØ					15GØ		3.3	60	1.3 §					GE	F59K†
29	101020A			1.0pΔØ					20GØ		4.0	10					100	GA	F59k†
30	102515A			1.1pØΔ					15GØ		4.0	25					100J	GA	F59k†
31	104510A			1.1pØΔ					10GØ		4.0	45					100J	GA	F59k†
32	107510G			1.1pØ					10GØ		3.0	75	1.3 §					Ge	F59k†
33	106010G			1.3pΔØ					10GØ		3.3	60	1.3 §					Ge	F59kΩ†
34	104510G			1.4pΔØ					10GØ		3.0	45	1.3 §					Ge	F59k†
35	101015A			1.6pΔØ					15GØ		3.0	10					100	GA	F59k†
36	102510A			2.1pØΔ					10GØ		3.0	25					100J	GA	F59k†
37	102520A	000		.72pØΔ					20GØ		5.0	25					100J	GA	F59k†
38	MA4C850	25u		2.5p				300m		300p				50m	20m		100S	GA	V5
39	MA4C401	50u		1.0p				140m		300p				100m	20m		100S	Ge	V5
40	MA4C851	50u		2.5p				260m		300p				100m	20m		100S	GA	V5
41	MA4C402	100u		1.0p				120m		300p				200m	20m		100S	Ge	V5
42	MA4C852	100u		2.0p				225m		300p				200m	20m		100S	GA	V5
43	1N2927	.10m	.01m	80p	2.5	75m	475m	600m			10			.50m			200S	Si	TO18
44	1N4393	.10m	.01m	80p	2.5	75m	475m	650m			10			.25m			200S	Si	DO17
45	1N4393A	100u	5.0u	80p		70mΔ	475mΔ	1.0 Δ			10 ☑			250u			200S	Si	DO17
46	1N4393B	100u	2.0u	80p		65mΔ	475mΔ	1.0 Δ			10 ☑			250u			200S	Si	DO17
47	1N4396A	100u	5.0u	150p		75mΔ	500mΔ	1.0 Δ			2.0 ☑			2.0m			200S	Si	DO17
48	1N4396B	100u	2.0u	150p		70mΔ	500mΔ	1.0 Δ			2.0 ☑			2.0m			200S	Si	DO17
49	1N2927A	102u	2.0u	80p		75mΔ	475mΔ	1.0 §Δ			10 ☑			3.5			200S	Si	TO18
50	A1E207A	125u	75u	700f	4.1 †	480m*		110m*		300p	15						100A	Ge*	F59t
51	A1E210A	125u	75u	1.0p	4.1 †	550m*		120m*		300p	10						100A	Ge*	F59t
52	A1E215A	125u	75u	1.5p	4.1 †	450m*		110m*		300p	10						100A	Ge*	F59t
53	A1E220A	125u	75u	2.0p	4.1 †	450m*		105m*		300p	8.0						100A	Ge*	F59t
54	10100BD	150u		.70p		540 *		110m*			8.0						100	Ge	F59k†
55	10150BD	150u		1.0p		540 *		100m*			7.0						100	Ge	F59k†
56	A1E250A	150u	100u	1.0p	5.0 †	560m*		105m*		300p	10						100A	Ge*	F59t
57	1N4394	.22m	.02m	90p	2.5	80m	480m	660m			7.0			.50m			200S	Si	DO17
58	1N4394A	220u	11u	90p		72mΔ	480mΔ	1.0 Δ			7.0 ☑			500u			200S	Si	DO17
59	1N4394B	220u	4.0u	90p		67mΔ	480mΔ	1.0 Δ			7.0 ☑			500u			200S	Si	DO17
60	1N4397A	220u	11u	200p		77mΔ	510mΔ	1.0 Δ			2.0 ☑			4.5m			200S	Si	DO17
61	1N4397B	220u	4.0u	200p		73mΔ	510mΔ	1.0 Δ			2.0 ☑			4.5m			200S	Si	DO17
62	10200BD	250u		.70p		550 *		110m			7.0						100	Ge	F59k†
63	A1E307A	250u	50u	700f	6.2 †	480m*		120m*		300p	15						100A	Ge*	F59t
64	10250BD	250u		1.0p		550 *		100m			6.0						100	Ge	F59k†
65	A1E310A	250u	50u	1.0p	6.2 †	480m*		110m*		300p	12						100A	Ge*	F59t
66	MA4C403	250u		1.0p				100m		300p				500m	20m		100S	Ge	V5
67	PB0401-04	250u	25u	1.0p			390m	100m									85	Ge	F10ae
68	PB0401-05	250u	25u	1.0p			390m	100m									85	Ge	F10af
69	PB0401-07	250u	25u	1.0p			390m	100m									85	Ge	A1uc
70	PB0401-35	250u	25u	1.0p			390m	100m									85	Ge	F56
71	PB0402-04	250u	25u	1.0p			390m	120m									85	Ge	F10ae
72	PB0402-05	250u	25u	1.0p			390m	120m									85	Ge	F10af
73	PB0402-07	250u	25u	1.0p			390m	120m									85	Ge	A1uc
74	PB0402-35	250u	25u	1.0p			390m	120m									85	Ge	F56
75	A1E315A	250u	50u	1.5p	6.2 †	450m*		110m*		300p	10						100A	Ge*	F59t
76	MA4C853	250u		1.5p				200m		300p				500m	20m		100S	GA	V5
77	A1E320A	250u	50u	2.0p	6.2 †	480m*		100m*		300p	8.0						100A	Ge*	F59t
78	10300BD	350u		.70p		550 *		110m			7.0						100	Ge	F59k†
79	A1E407A	350u	50u	700f	7.0 †	480m*		110m*		300p	15						100A	Ge*	F59t
80	10350BD	350u		1.0p		550 *		100m			6.0						100	Ge	F59k†
81	A1E410A	350u	50u	1.0p	7.0 †	480m*		110m*		300p	12						100A	Ge*	F59t
82	A1E415A	350u	50u	1.5p	7.0 †	480m*		100m*		300p	10						100A	Ge*	F59t
83	A1E420A	350u	50u	2.0p	7.0 †	450m*		100m*		300p	8.0						100A	Ge*	F59t
84	MA4C404	400u		1.0p				100m		300p				800m	20m		100S	Ge	V5
85	1N3217	470u	50u	8.0pØ				600mΔ		400p	4.0 ☑	333 Δ		2.0m			100S	Ge	F127
86	1N2928	.47m	.05m	100p	2.5	80m	490m	670m			3.0			2.5m			200S	Si	TO18
87	1N4395	.47m	.05m	100p	2.5	80m	490m	670m			3.0			1.0m			200S	Si	DO17
88	1N4395A	470u	20u	100p		74mΔ	490mΔ	1.0 Δ			3.0 ☑			1.0m			200S	Si	DO17
89	1N4395B	470u	10u	100p		69mΔ	490mΔ	1.0 Δ			3.0 ☑			1.0m			200S	Si	DO17
90	A1E507A	475u	75u	700f	6.7 †	480m*		100m*		300p	15 ☑						100A	Ge*	F59t
91	A1E510A	475u	75u	1.0p	6.7 †	450m*		100m*		300p	12						100A	Ge*	F59t
92	A1E515A	475u	75u	1.5p	6.7 †	440m*		85m*		300p	9.0						100A	Ge*	F59t
93	A1E520A	475u	75u	2.0p	6.7 †	450m*		85m*		300p	8.5						100A	Ge*	F59t
94	1N2928A	480u	10u	100p		80mΔ	490mΔ	1.0 §Δ			3.0 ☑			18			200S	Si	TO18
95	10400BD	500u		.70p		560 *		100m			6.0						100	Ge	F59k†
96	10450BD	500u		1.0p		560 *		80m			5.0						100	Ge	F59k†
97	MA4C100	500u	25u	1.0p	6.0	50m	320m	460m		170p				5.0m	20m		100S	Ge	M987
98	MA4C100B	500u	25u	1.0p	6.0	50m	320m	460m		300p				5.0m	20m		100A	Ge	M83a
99	MA4C100C	500u	25u	1.0p	6.0	50m	320m	460m		500p				5.0m	20m		100A	Ge	A375
100	MA4C405	500u		1.0p				80m		300p				1.0	20m		100S	Ge	V5
101	MA4C550	500u	25u	1.0p	12	100m	500m	950m		170p				5.0m	20m		100S	Ge	M987
102	MA4C550B	500u	25u	1.0p	12	100m	500m	950m		300p				325u	20m		100A	GA	M83a
103	MA4C550C	500u	25u	1.0p	12	100m	500m	950m		500p				275u	20m		100A	GA	A375
104	PB0403-04	500u	50u	1.0p			410m	90m									85	Ge	F10ae
105	PB0403-05	500u	50u	1.0p			410m	90m									85	Ge	F10af
106	PB0403-07	500u	50u	1.0p			410m	90m									85	Ge	A1uc
107	PB0403-35	500u	50u	1.0p			410m	90m									85	Ge	F56
108	MA4C102	500u	50u	2.0p	6.0	50m	320m	460m		170p				5.0m	20m		100S	Ge	M987
109	MA4C102B	500u	50u	2.0p	6.0	50m	320m	460m		300p				5.0m	20m		100A	Ge	M83a
110	MA4C102C	500u	50u	2.0p	6.0	50m	320m	460m		500p				5.0m	20m		100A	Ge	A375

SYMBOLS AND CODES EXPLAINED IN INTERPRETER

7. TUNNEL DIODES

IN ORDER OF (1) PEAK CURRENT, (2) MAXIMUM CAPACITANCE, and (3) TYPE No.

LINE No.	3 TYPE No.	PEAK CUR. 1 Ip (A)	TOLERANCE ± (A)	2 MAX. TOTAL CAP. (F)	MIN Ip/Iv	Vp (V)	Vv (V)	RESISTIVE Vf at Ip (V)	CUTOFF FREQ. (Hz)	SER. IND. Ls (H)	SER. RES. Rs (Ω)	NEG. RES. -R (Ω)	NOISE VOLT. (V)	ABSOLUTE MAX. RATINGS FWD. CUR. (A)	DISS. @25°C (W)	THER. RES. °C/mW	MAX. TEMP (°C)	DESCRIPTION MAT.	DWG. No.
1	MA4C551	500u	50u	2.0p	12	100m	500m	950m		170p				5.0m	20m		100S	Ge	M987
2	MA4C551B	500u	50u	2.0p	12	100m	500m	950m		300p				825u	20m		100A	GA	M83a
3	MA4C551C	500u	50u	2.0p	12	100m	500m	950m		500p				775u	20m		100A	GA	A375
4	TD9	.50m	.05m	5.0p	4.5	65m	350m	500m	2.5G	.50n	2.5	250		2.5m			100S	Ge	A82a
5	MA4C258H	1.0m	100u	550f					50GØ	100p	7.0			5.0m	20m		100A	Ge	F56ac
6	MA4C258D	1.0m	100u	560f					50GØ	100p	7.0			5.0m	20m		100A	Ge	F54p
7	MA4C257H	1.0m	100u	650f					40GØ	100p	6.0			5.0m	20m		100A	Ge	F56ac
8	MA4C257D	1.0m	100u	660f					40GØ	100p	6.0			5.0m	20m		100A	Ge	F54p
9	MA4C256H	1.0m	100u	750f					30GØ	100p	5.0			5.0m	20m		100A	Ge	F56ac
10	MA4C256D	1.0m	100u	760f					30GØ	100p	5.0			5.0m	20m		100A	Ge	F54p
11	G20001G	1.0m		800f	6.0	75m			20GØ		6.0 ☑						100A	Ge	F56aa
12	MS1512A	1.0m		.80pØ					20GØ	.30n	7.0	120	.95m§				100S	GS	F10h
13	MS1564A	1.0m		.80pØ					20GØ	.10n	7.0	120	.95m§				100S	GS	F54
14	MA4C255H	1.0m	100u	950f					25GØ	100p	5.0			5.0m	20m		100A	Ge	F56ac
15	MA4C255D	1.0m	100u	960f					25GØ	100p	5.0			5.0m	20m		100A	Ge	F54p
16	MS1505A	1.0m		1.0pØ					8.0GØ	.30n	5.0	120	.90m§				100S	GS	F10h
17	MS1508A	1.0m		1.0pØ					15GØ	.30n	7.0	120	.95m§				100S	GS	F10h
18	MS1563A	1.0m		1.0pØ					15GØ	.10n	7.0	120	.95m§				100S	GS	F54
19	MA4C254H	1.0m	100u	1.15p					20GØ	100p	4.0			5.0m	20m		100A	Ge	F56ac
20	MA4C254D	1.0m	100u	1.16p					20GØ	100p	4.0			5.0m	20m		100A	Ge	F54p
21	MS1507A	1.0m		1.2pØ					12GØ	.30n	6.0	120	.90m§				100S	GS	F10h
22	MS1562A	1.0m		1.2pØ					12GØ	.10n	6.0	120	.90m§				100S	GS	F54
23	MA4C253H	1.0m	100u	1.25p					15GØ	100p	3.0			5.0m	20m		100A	Ge	F56ac
24	MA4C253D	1.0m	100u	1.26p					15GØ	100p	3.0			5.0m	20m		100A	Ge	F54p
25	MA4C252H	1.0m	100u	1.65p					10GØ	100p	3.0			5.0m	20m		100A	Ge	F56ac
26	MA4C252D	1.0m	100u	1.66p					10GØ	100p	3.0			5.0m	20m		100A	Ge	F54p
27	MA4C103	1.0m	50u	2.0p	6.0	60m	340m	460m		170p				5.0m	20m		100S	Ge	M987
28	MA4C103B	1.0m	50u	2.0p	6.0	60m	340m	460m		300p				5.0m	20m		100A	Ge	M83a
29	MA4C103C	1.0m	50u	2.0p	6.0	60m	340m	460m		500p				5.0m	20m		100A	Ge	A375
30	MA4C552	1.0m	50u	2.0p	12	100m	500m	950m		170p				5.0m	20m		100S	Ge	M987
31	MA4C552B	1.0m	50u	2.0p	12	100m	500m	950m		300p				825u	20m		100A	GA	M83a
32	MA4C552C	1.0m	50u	2.0p	12	100m	500m	950m		500p				775u	20m		100A	GA	A375
33	MS1561A	1.0m		2.0pØ					8.0GØ	.10n	5.0	120	.90m§				100S	GS	F54
34	MS1504A	1.0m		2.5pØ					6.0GØ	.30n	4.0	120	.85m§				100S	GS	F10h
35	MS1560A	1.0m		2.5pØ					6.0GØ	.10n	4.0	120	.85m§				100S	GS	F54
36	MA4C104	1.0m	100u	3.0p	6.0	60m	340m	460m		170p				5.0m	20m		100S	Ge	M987
37	MA4C104B	1.0m	100u	3.0p	6.0	60m	340m	460m		300p				5.0m	20m		100A	Ge	M83a
38	MA4C104C	1.0m	100u	3.0p	6.0	60m	340m	460m		500p				5.0m	20m		100A	Ge	A375
39	MA4C553	1.0m	100u	3.0p	12	115m	510m	1.0		170p				5.0m	20m		100S	Ge	M987
40	MA4C553B	1.0m	100u	3.0p	12	115m	510m	1.0		300p				1.3m	20m		100A	GA	M83a
41	MA4C553C	1.0m	100u	3.0p	12	115m	510m	1.0		500p				1.2m	20m		100A	GA	A375
42	MA4C251H	1.0m	100u	3.35p					5.0GØ	100p	2.0			5.0m	20m		100A	Ge	F56ac
43	MA4C251D	1.0m	100u	3.36p					5.0GØ	100p	2.0			5.0m	20m		100A	Ge	F54p
44	1N3713	1.0m	25u	5.0p	7.0	65m	355m	510m	3.2G	500p	1.7	118		5.0m			100S	Ge	A82a
45	JAN1N3713	1.0m	25u	5.0p		72mΔ	395mΔ	535mΔ			4.0 ☑	135 ☑		5.0m			100A	Ge	A82a
46	MS233A	1.0m		5.0pØ							3.0	85 Δ	850m§☑					GS	
47	TU10/1	1.0m	.10m	5.0p	4.0	7.0m	55m	250m		.75n	3.0 ☑	110					100S	Ge	S211
48	TU10/2	1.0m	.30m	5.0p	4.0	7.0m	55m	250m		.75n	3.0 ☑	110					100S	Ge	S211
49	MA4C250H	1.0m	100u	6.35p					2.5GØ	100p	2.0			5.0m	20m		100A	Ge	F56ac
50	MA4C250D	1.0m	100u	6.36p					2.5GØ	100p	2.0			5.0m	20m		100A	Ge	F54p
51	1N3218	1.0m	100u	10pØ				600mΔ		500p	4.0 ☑	200 Δ		5.0m			100S	Ge	F127
52	1N3712	1.0m	.10m	10p	5.0	65m	350m	500m	2.3G	.50n	1.5	125		5.0m			100S	Ge	A82a
53	TU101	1.0m	.10m	10p	4.0	7.0m	55m	250m		1.5n	3.0	110					100S	Ge	M264
54	1N3560	1.0m	25u	20p	5.0	55m	320m	475m	1.3G	1.0n	1.5			3.0m			100	Ge	C16
55	1N3561	1.0m	25u	20p	8.0	55m	320m	475m	1.3G	1.0n	1.5			3.0m			100	Ge	C16
56	1N2929	1.0m	.10m	150p	2.5	80m	500m	700m			2.0			5.0m			200S	Si	TO18
57	1N2929A	1.0m	2.0u	150p		80mΔ	500mΔ	1.0 §Δ			2.0 ☑			35			200S	Si	TO18
58	1N4396	1.0m	.10m	150p	2.5	80m	500m	680m			2.0			2.0m			200S	Si	DO17
59	117550G	1.5m		130fΔØ	6.0				50GØ	100p	7.0	75					100A	Ge	F54mt
60	117540G	1.5m		180fΔØ	6.0				40GØ	100p	6.0	75					100A	Ge	F54mt
61	PT0400-04	1.5m		230fØ					25G		8.0							Ge	F10ae
62	PT0400-05	1.5m		230fØ					25G		8.0							Ge	F10af
63	117530G	1.5m		270fΔØ	6.0				30GØ	100p	5.0	75					100A	Ge	F54mt
64	MS1209A	1.5m		.30pØ					50GØ	.10n	7.0	120	1.5m§				100S	Ge	F54
65	117525G	1.5m		320fΔØ	6.0				25GØ	100p	5.0	75					100A	Ge	F54mt
66	MS1208A	1.5m		.40pØ					40GØ	.10n	7.0	120	1.5m§				100S	Ge	F54
67	117520G	1.5m		460fΔØ	6.0				20GØ	100p	4.0	75					100A	Ge	F54mt
68	MA4604A1	1.5m		.50pØ	5.0	55m			25G		8.0 ☑	70	60m					Ge	F56
69	MA4C268H	1.5m	150u	550f					50GØ	100p	7.0			5.0m	20m		100A	Ge	F56ac
70	MA4C268D	1.5m	150u	560f					50GØ	100p	7.0			5.0m	20m		100A	Ge	F54p
71	MS1207A	1.5m		.60pØ					30GØ	.10n	6.0	120	1.4m§				100S	Ge	F54
72	MS1586A	1.5m		.60pØ					25GØ	.10n	8.0	85 ☑	.95m§				100S	GS	F54
73	MA4C267H	1.5m	150u	650f					40GØ	100p	6.0			5.0m	20m		100A	Ge	F56ac
74	MA4C267D	1.5m	150u	660f					40GØ	100p	6.0			5.0m	20m		100A	Ge	F54p
75	MS1206A	1.5m		.70pØ					25GØ	.10n	5.0	120	1.4m§				100S	Ge	F54
76	117515G	1.5m		720fΔØ	6.0				15GØ	100p	3.0	75					100A	Ge	F54mt
77	G20015G	1.5m		750f	6.0	75m			20GØ		6.0 ☑						100A	Ge	F56aa
78	MA4C266H	1.5m	150u	750f					30GØ	100p	5.0			5.0m	20m		100A	Ge	F56ac
79	MA4C266D	1.5m	150u	760f					30GØ	100p	5.0			5.0m	20m		100A	Ge	F54p
80	MS1021A	1.5m		.80pØ					20GØ	.30n	5.0	120	1.4m§				100S	Ge	F10h
81	MS1205A	1.5m		.80pØ					20GØ	.10n	5.0	120	1.4m§				100S	Ge	F54
82	MS1525A	1.5m		.80pØ					20GØ	.30n	7.0	85 ☑	.95m§				100S	GS	F10h
83	MS1585A	1.5m		.80pØ					20GØ	.10n	7.0	85 ☑	.95m§				100S	GS	F54
84	MA4C265H	1.5m	150u	950f					25GØ	100p	5.0			5.0m	20m		100A	Ge	F56ac
85	MA4C265D	1.5m	150u	960f					25GØ	100p	5.0			5.0m	20m		100A	Ge	F54p
86	MS1020A	1.5m		1.0pØ					15GØ	.30n	4.0	120	1.4m§				100S	Ge	F10h
87	MS1204A	1.5m		1.0pØ					15GØ	.10n	4.0	120	1.4m§				100S	Ge	F54
88	MS1524A	1.5m		1.0pØ					15GØ	.30n	7.0	85 ☑	.90m§				100S	GS	F10h
89	MS1584A	1.5m		1.0pØ					15GØ	.10n	7.0	85 ☑	.90m§				100S	GS	F54
90	117510G	1.5m		1.1pΔØ	6.0				10GØ	100p	3.0	75					100A	Ge	F54mt
91	MA4C264H	1.5m	150u	1.1p					20GØ	100p	4.0			5.0m	20m		100A	Ge	F56ac
92	MA4C264D	1.5m	150u	1.11p					20GØ	100p	4.0			5.0m	20m		100A	Ge	F54p
93	MA4604A	1.5m	.45m	1.2p	5.0	55m	350m		15G	.10n	8.0	70	45m☑				125S	Ge	F10f
94	MS1007A	1.5m		1.2pØ					10GØ	.30n	4.0	120	1.4m§				100S	Ge	F10h
95	MS1202A	1.5m		1.2pØ					10GØ	.10n	4.0	120	1.4m§				100S	Ge	F54
96	MS1523A	1.5m		1.2pØ					12GØ	.30n	6.0	85 ☑	.90m§				100S	GS	F10h
97	MA4C263H	1.5m	150u	1.25p					15GØ	100p	3.0			5.0m	20m		100A	Ge	F56ac
98	MA4C263D	1.5m	150u	1.26p					15GØ	100p	3.0			5.0m	20m		100A	Ge	F54p
99	GI103V	1.5m	200u	1.3p	4.0	90mΔ			20G		7.0 ☑						70A	Ge§*	F10am
100	MS1583A	1.5m		1.3pØ					12GØ	.10n	6.0	85 ☑	.90m§				100S	GS	F54
101	GI103B	1.5m	200u	1.6p	4.0	90mΔ			15G		6.0 ☑						70A	Ge§*	F10am
102	MA4C262H	1.5m	150u	1.75p					10GØ	100p	3.0			5.0m	20m		100A	Ge	F56ac
103	MA4C262D	1.5m	150u	1.76p					10GØ	100p	3.0			5.0m	20m		100A	Ge	F54p
104	MS1005A	1.5m		1.8pØ					6.0GØ	.30n	3.0	120	1.4m§				100S	Ge	F10h
105	MS1201A	1.5m		1.8pØ					6.0GØ	.10n	3.0	120	1.4m§				100S	Ge	F54
106	MA4604B	1.5m	.45m	1.9p	5.0	55m	350m		10G	.10n	6.0	70	65m☑				125S	Ge	F10f
107	MS1522A	1.5m		2.0pØ					8.0GØ	.30n	5.0	85 ☑	.85m§				100S	GS	F10h
108	MS1582A	1.5m		2.0pØ					8.0GØ	.10n	5.0	85 ☑	.85m§				100S	GS	F54
109	GI103A	1.5m	200u	2.1p	4.0	90mΔ			10G		6.0 ☑						70A	Ge§*	F10am
110	MS1521A	1.5m		2.5pØ					6.0GØ	.30n	4.0	85 ☑	.85m§				100S	GS	F10h

7. TUNNEL DIODES

IN ORDER OF (1) PEAK CURRENT, (2) MAXIMUM CAPACITANCE, and (3) TYPE No.

LINE No.	TYPE No.	PEAK CUR. Ip (A)	TOLERANCE ± (A)	MAX. TOTAL CAP. (F)	MIN Ip/Iv	Vp (V)	Vv (V)	RESISTIVE Vf at Ip (V)	CUTOFF FREQ. (Hz)	SER. IND. Ls (H)	SER. RES. Rs (Ω)	NEG. RES. -R (Ω)	NOISE VOLT. (V)	ABSOLUTE MAX. RATINGS FWD. CUR. (A)	DISS. @25°C (W)	THER. RES. °C/mW	MAX. TEMP (°C)	DESCRIPTION MAT.	DWG. No.
1	MS1581A	1.5m		2.5pØ					6.0GØ	.10n	4.0	85 ☑	.85m§				100S	GS	F54
2	MA4C261H	1.5m	150u	3.45p					5.0GØ	100p	2.0			5.0m	20m		100A	Ge	F56ac
3	MA4C261D	1.5m	150u	3.46p					5.0GØ	100p	2.0			5.0m	20m		100A	Ge	F54p
4	MA4604C	1.5m	.45m	3.6p	5.0	55m	350m		3.0G	.10n	6.0	70	85m☑				125S	Ge	F10f
5	MS224A	1.5m		5.0pØ							2.0	85 △	1.3 §☑					Ge	
6	MS1520A	1.5m		5.0pØ					3.0GØ	.30n	3.0	85 ☑	.85m§				100S	GS	F10h
7	MA4C260H	1.5m	150u	6.35p					2.5GØ	100p	2.0			5.0m	20m		100A	Ge	F56ac
8	MA4C260D	1.5m	150u	6.36p					2.5GØ	100p	2.0			5.0m	20m		100A	Ge	F54p
9	1S1677	1.6m	200u	900f	6.0				28G	100p	7.0	80		5.0m			80J	Ge	F54b
10	1S1676	1.6m	200u	1.3p	6.0				18G	100p	5.0	80		5.0m			80J	Ge	F54b
11	A1G250D	1.7m		200fØ					50GØ	100p	10	70 △	1.4 §				100A	Ge*	F59r
12	A1G240D	1.7m		220fØ					40GØ	100p	10	70 △	1.4 §				100A	Ge*	F59r
13	A1G230D	1.7m		300fØ					30GØ	100p	10	70 △	1.4 §				100A	Ge*	F59r
14	A1G225D	1.7m		380fØ					25GØ	100p	8.0	70 △	1.4 §				100A	Ge*	F59r
15	A1G220D	1.7m		520fØ					20GØ	100p	8.0	70 △	1.4 §				100A	Ge*	F59r
16	A1G215D	1.7m		750fØ					15GØ	100p	4.0	70 △	1.4 §				100A	Ge*	F59r
17	A1G210D	1.7m		1.2pØ					10GØ	100p	3.0	70 △	1.4 §				100A	Ge*	F59r
18	A1G205D	1.7m		3.0pØ					5.0GØ	100p	2.0	70 △	1.4 §				100A	Ge*	F59r
19	GI103G	1.7m	400u	3.2p	4.0	90m△			5.0G		6.0 ☑						70A	Ge§*	F10am
20	PT0634	1.9m		3.5p		100m		1.0										GA	A1st
21	116050G	2.0m		150f△Ø	6.0				50GØ	100p	6.0	60					100A	Ge	F54m†
22	116040G	2.0m		220f△Ø	6.0				40GØ	100p	5.0	60					100A	Ge	F54m†
23	A1G450D	2.0m		250fØ					50GØ	100p	10	52 △	1.4 §				100A	Ge*	F59r
24	116030G	2.0m		300f△Ø	6.0				30GØ	100p	5.0	60					100A	Ge	F54m†
25	A1G440D	2.0m		300fØ					40GØ	100p	10	52 △	1.4 §				100A	Ge*	F59r
26	A1G430D	2.0m		380fØ					30GØ	100p	8.0	52 △	1.4 §				100A	Ge*	F59r
27	MS1575A	2.0m		.40pØ					30GØ	.10n	7.0	60 ☑	.95m§				100S	GS	F54
28	116025G	2.0m		450f△Ø	6.0				25GØ	100p	4.0	60					100A	Ge	F54m†
29	A1G425D	2.0m		450fØ					25GØ	100p	8.0	52 △	1.4 §				100A	Ge*	F59r
30	116020G	2.0m		550f△Ø	6.0				20GØ	100p	4.0	60					100A	Ge	F54m†
31	A1G420D	2.0m		600fØ					20GØ	100p	6.0	52 △	1.4 §				100A	Ge*	F59r
32	MS1574A	2.0m		.60pØ					25GØ	.10n	7.0	60 ☑	.95m§				100S	GS	F54
33	MA4C278H	2.0m	200u	650f					50GØ	100p	6.0			5.0m	20m		100A	Ge	F56ac
34	MA4C278D	2.0m	200u	660f					50GØ	100p	6.0			5.0m	20m		100A	Ge	F54p
35	A1G415D	2.0m		800fØ					15GØ	100p	5.0	52 △	1.4 §				100A	Ge*	F59r
36	MS1511A	2.0m		.80pØ					20GØ	.30n	6.0	60 ☑	.95m§				100S	GS	F10h
37	MS1573A	2.0m		.80pØ					20GØ	.10n	6.0	60 ☑	.95m§				100S	GS	F54
38	MA4C277H	2.0m	200u	850f					40GØ	100p	5.0			5.0m	20m		100A	Ge	F56ac
39	MA4C277D	2.0m	200u	860f					40GØ	100p	5.0			5.0m	20m		100A	Ge	F54p
40	116015G	2.0m		900f△Ø	6.0				15GØ	100p	3.0	60					100A	Ge	F54m†
41	G20002G	2.0m		1.0p	6.0	70m			20GØ		5.0 ☑						100A	Ge	F56aa
42	MS1510A	2.0m		1.0pØ					15GØ	.30n	6.0	60 ☑	.90m§				100S	GS	F10h
43	MS1572A	2.0m		1.0pØ					15GØ	.10n	6.0	60 ☑	.90m§				100S	GS	F54
44	MA4C276H	2.0m	200u	1.05p					30GØ	100p	5.0			5.0m	20m		100A	Ge	F56ac
45	MA4C276D	2.0m	200u	1.06p					30GØ	100p	5.0			5.0m	20m		100A	Ge	F54p
46	MA4C275H	2.0m	200u	1.25p					25GØ	100p	4.0			5.0m	20m		100A	Ge	F56ac
47	MA4C275D	2.0m	200u	1.26p					25GØ	100p	4.0			5.0m	20m		100A	Ge	F54p
48	116010G	2.0m		1.3p△Ø	6.0				10GØ	100p	3.0	60					100A	Ge	F54m†
49	MA4605A	2.0m	.60m	1.3p	6.0	55m	350m		15G	.10n	8.0	50	45m				125S	Ge	F10f
50	MA4C274H	2.0m	200u	1.35p					20GØ	100p	4.0			5.0m	20m		100A	Ge	F56ac
51	MA4C274D	2.0m	200u	1.36p					20GØ	100p	4.0			5.0m	20m		100A	Ge	F54p
52	MS1506A	2.0m		1.5pØ					12GØ	.30n	5.0	60 ☑	.90m§				100S	GS	F10h
53	MS1571A	2.0m		1.5pØ					12GØ	.10n	5.0	60 ☑	.90m§				100S	GS	F54
54	MA4C273H	2.0m	200u	1.55p					15GØ	100p	3.0			5.0m	20m		100A	Ge	F56ac
55	MA4C273D	2.0m	200u	1.56p					15GØ	100p	3.0			5.0m	20m		100A	Ge	F54p
56	A1G410D	2.0m		1.8pØ					10GØ	100p	3.0	52 △	1.4 §				100A	Ge*	F59r
57	MA4C272H	2.0m	200u	1.95p					10GØ	100p	3.0			5.0m	20m		100A	Ge	F56ac
58	MA4C272D	2.0m	200u	1.96p					10GØ	100p	3.0			5.0m	20m		100A	Ge	F54p
59	MA4605B	2.0m	.60m	2.4p	6.0	55m	350m		10G	.10n	6.0	50	65m				125S	Ge	F10f
60	MS1509A	2.0m		2.5pØ					8.0GØ	.30n	5.0	60 ☑	.85m§				100S	GS	F10h
61	MS1570A	2.0m		2.5pØ					8.0GØ	.10n	5.0	60 ☑	.85m§				100S	GS	F54
62	MS1300	2.0m	.10m	3.0p	6.0	70m	375m	500m		.50n	5.0						100	Ge	DO17
63	PT0450	2.0m	200u	3.0p	8.1			530m									85	Ge	F10ae
64	A1G405D	2.0m		3.35pØ					5.0GØ	100p	2.0	52 △	1.4 §				100A	Ge*	F59r
65	MA4C271H	2.0m	200u	4.35p					5.0GØ	100p	2.0			5.0m	20m		100A	Ge	F56ac
66	MA4C271D	2.0m	200u	4.36p					5.0GØ	100p	2.0			5.0m	20m		100A	Ge	F54p
67	MA4605C	2.0m	.60m	4.4p	6.0	55m	350m		3.0G	.10n	5.0	50	85m				125S	Ge	F10f
68	MA4C270H	2.0m	200u	7.85p					2.5GØ	100p	2.0			5.0m	20m		100A	Ge	F56ac
69	MA4C270D	2.0m	200u	7.86p					2.5GØ	100p	2.0			5.0m	20m		100A	Ge	F54p
70	1S1200A	2.0m	50u	10p	5.0	65m	.35	.50			2.0 ☑	70		20m			100S		
71	1T1101	2.0m	.05m	10p	7.0	70m	340m	480m	3.0G	.40n	1.5	60		40m	25m		100J	Ge*	M27
72	1T1102	2.0m	.05m	10p	4.5	70m	340m	480m	3.0G	.40n	1.5	70		40m	25m		100J	Ge*	M27
73	1T1103	2.0m	.30m	10p	4.5	70m	340m	480m	3.0G	.40n	1.5	70		40m	25m		100J	Ge*	M27
74	TU11/1	2.0m	.20m	10p	4.0	7.0m	55m	250m		.75n	2.5 ☑	80					100S	Ge	S211
75	TU11/2	2.0m	.60m	10p	4.0	7.0m	55m	250m		.75n	2.5 ☑	80					100S	Ge	S211
76	1S1199A	2.0m	100u	15p	5.0	65m	.35	.50			2.0 ☑	70		20m			100S		
77	TU102	2.0m	.20	15p	4.0						2.0	80						Ge	M264
78	1S1198A	2.0m	200u	20p	5.0	65m	.35	.50			2.5 ☑	70		20m			100S		
79	GI307A	2.0m	200u	20p	7.0	70m△	400mØ										60A	Ge§*	M898
80	1T1110	2.0m	.30m	30p	4.5	70m	340m	480m	1.5G	.40n	1.5	70		40m	25m		85J	Ge*	M27
81	TD261A	2.2m	200m	1.0p	8.0	110m	390m	650m		1.5n	7.0			2.2m	1.5m		100	Ge	M214
82	TD261	2.2m	200m	3.0p	8.0	100m	390m	650m		1.5n	5.0			2.2m	1.5m		100	Ge	M214
83	1N3715	2.2m	.05m	10p	7.0	65m	355m	510m	3.0G	.50n	1.1	53		10m			100S	Ge	A82a
84	JAN1N3715	2.2m	.05m	10p		72m△	395m△	535m△			3.0 ☑	62 ☑		10m			100A	Ge	A82a
85	1N3219	2.2m	200u	20pØ				600m△		500p	3.0 ☑	100 △		5.0m			100S	Ge	F127
86	1N3714	2.2m	.20m	25p△Ø	4.2	65m	350m	500m	2.2G	.50n	1.0	55		10m			100S	Ge	A82a
87	1N4397	2.2m	.22m	200p	2.5	80m	510m	690m			2.0			4.5m			200S	Si	DO17
88	114550G	2.5m		200f△Ø	6.0				50GØ	100p	6.0	45					100A	Ge	F54m†
89	114540G	2.5m		300f△Ø	6.0				40GØ	100p	5.0	45					100A	Ge	F54m†
90	A1G650D	2.5m		300fØ					50GØ	100p	8.0	38 △	1.4 §				100A	Ge*	F59r
91	114530G	2.5m		400fØ	6.0				30GØ	100p	4.0	45					100A	Ge	F54m†
92	MS1248A	2.5m		.40pØ					50GØ	.10n	7.0	85 ☑	1.5m§				100S	Ge	F54
93	A1G640D	2.5m		450fØ					40GØ	100p	8.0	38 △	1.4 §				100A	Ge*	F59r
94	114525G	2.5m		500f△Ø	6.0				25GØ	100p	4.0	45					100A	Ge	F54m†
95	A1G630D	2.5m		500fØ					30GØ	100p	7.0	38 △	1.4 §				100A	Ge*	F59r
96	MS1247A	2.5m		.50pØ					40GØ	.10n	7.0	85 ☑	1.5m§				100S	Ge	F54
97	114520G	2.5m		600f△Ø	6.0				20GØ	100p	4.0	45					100A	Ge	F54m†
98	A1G625D	2.5m		700fØ					25GØ	100p	6.0	38 △	1.4 §				100A	Ge*	F59r
99	MS1146A	2.5m		.70pØ					30GØ	.30n	6.0	85 ☑	1.5m§				100S	Ge	F10h
100	MS1246A	2.5m		.70pØ					30GØ	.10n	6.0	85 ☑	1.5m§				100S	Ge	F54
101	114515G	2.5m		800f△Ø	6.0				15GØ	100p	3.0	45					100A	Ge	F54m†
102	MS1145A	2.5m		.80pØ					25GØ	.30n	5.0	85 ☑	1.4m§				100S	Ge	F10h
103	MS1245A	2.5m		.80pØ					25GØ	.10n	5.0	85 ☑	1.4m§				100S	Ge	F54
104	MS1144A	2.5m		.90pØ					20GØ	.30n	4.0	85 ☑	1.4m§				100S	Ge	F10h
105	MS1244A	2.5m		.90pØ					20GØ	.10n	4.0	85 ☑	1.4m§				100S	Ge	F54
106	A1G620D	2.5m		1.0pØ					20GØ	100p	5.0	38 △	1.4 §				100A	Ge*	F59r
107	A1G615D	2.5m		1.2pØ					15GØ	100p	5.0	38 △	1.4 §				100A	Ge*	F59r
108	MS1143A	2.5m		1.2pØ					15GØ	.30n	4.0	85 ☑	1.4m§				100S	Ge	F10h
109	MS1243A	2.5m		1.2pØ					15GØ	.10n	4.0	85 ☑	1.4m§				100S	Ge	F54
110	114510G	2.5m		1.4p△Ø	6.0				10GØ	100p	3.0	45					100A	Ge	F54m†

SYMBOLS AND CODES EXPLAINED IN INTERPRETER

7. TUNNEL DIODES

IN ORDER OF (1) PEAK CURRENT, (2) MAXIMUM CAPACITANCE, and (3) TYPE No.

LINE No.	TYPE No.	PEAK CUR. 1 Ip	TOLERANCE ±	2 MAX. TOTAL CAP.	MIN Ip/Iv	Vp	Vv	RESISTIVE Vf at Ip	CUTOFF FREQ.	SER. IND. Ls	SER. RES. Rs	NEG. RES. -R	NOISE VOLT.	ABSOLUTE MAX. RATINGS FWD. CUR.	DISS. @25°C	THER. RES.	MAX. TEMP	DESCRIPTION MAT.	DWG. No.
		(A)	(A)	(F)		(V)	(V)	(V)	(Hz)	(H)	(Ω)	(Ω)	(V)	(A)	(W)	°C/mW	(°C)		
1	MS1142A	2.5m		1.8pØ					10GØ	.30n	3.0	85 Ø	1.4m§				100S	Ge	F10h
2	MS1242A	2.5m		1.8pØ					10GØ	.10n	3.0	85 Ø	1.4m§				100S	Ge	F54
3	A1G610D	2.5m		2.0pØ					10GØ	100p	4.0	38 Δ	1.4 §				100A	Ge*	F59r
4	MS1141A	2.5m		2.7pØ					6.0GØ	.30n	3.0	85 Ø	1.4m§				100S	Ge	F10h
5	MS1241A	2.5m		2.7pØ					6.0GØ	.10n	3.0	85 Ø	1.4m§				100S	Ge	F54
6	A1G605D	2.5m		3.5pØ					5.0GØ	100p	2.0	38 Δ	1.4 §				100A	Ge*	F59r
7	MS1140A	2.5m		7.0pØ					3.0GØ	.30n	2.0	85 Ø	1.3m§				100S	Ge	F10h
8	PT0401-04	3.0m		750fØ					25G		2.5							Ge	F10ae
9	PT0401-05	3.0m		750fØ					25G		2.5							Ge	F10af
10	PT3531	3.0m	.30m	1.1pØ	10	135m	500m		10GØ		4.5 Ø	75						GA	F10f
11	PT3532	3.0m	.30m	2.0pØ	10	130m	500m		7.0GØ		3.5 Ø	75						GA	F10f
12	PT0635	3.0m		6.0p		120m		1.0										GA	A1st
13	MS1225A	3.5m		.50pØ					50GØ	.10n	6.0	60 Ø	1.5m§				100S	Ge	F54
14	MS1224A	3.5m		.60pØ					40GØ	.10n	6.0	60 Ø	1.4m§				100S	Ge	F54
15	MS1223A	3.5m		.80pØ					30GØ	.10n	5.0	60 Ø	1.4m§				100S	Ge	F54
16	MS1102A	3.5m		1.0pØ					20GØ	.30n	4.0	60 Ø	1.3m§				100S	Ge	F10h
17	MS1222A	3.5m		1.0pØ					20GØ	.10n	4.0	60 Ø	1.3m§				100S	Ge	F54
18	MS1101A	3.5m		1.4pØ					15GØ	.30n	3.0	60 Ø	1.3m§				100S	Ge	F10h
19	MS1221A	3.5m		1.4pØ					15GØ	.10n	3.0	60 Ø	1.3m§				100S	Ge	F54
20	MS1100A	3.5m		2.5pØ					10GØ	.30n	2.5	60 Ø	1.3m§				100S	Ge	F10h
21	MS1220A	3.5m		2.5pØ					10GØ	.10n	2.5	60 Ø	1.3m§				100S	Ge	F54
22	MS225A	3.5m		3.5pØ							2.0	40 Δ	1.3 §					GE	
23	MA4606A2	4.0m		.60pØ	6.0	55m			30G		4.0 Ø	30						Ge	F56
24	MA4606A1	4.0m		.80pØ	6.0	55m			22G		4.0 Ø	30						Ge	F56
25	PT0402-04	4.0m		1.0pØ					25G		2.0							Ge	F10ae
26	PT0402-05	4.0m		1.0pØ					25G		2.0							Ge	F10af
27	MA4606A	4.0m	1.2m	1.6p	6.0	55m	350m		15GØ	.10n	4.0	30					125S	Ge	F10f
28	MA4606B	4.0m	1.2m	2.9p	6.0	55m	350m		10GØ	.10n	4.0	30					125S	Ge	F10f
29	MA4606C	4.0m	1.2m	4.4p	6.0	55m	350m		3.0GØ	.10n	4.0	30					125S	Ge	F10f
30	TD262A	4.7m	500m	1.0p	8.0	120m	400m	650m		1.5n	4.0			5.0m	3.5m		100	Ge	M214
31	TD262	4.7m	500m	6.0p	8.0	110m	390m	650m		1.5n	3.5			5.0m	3.5m		100	Ge	M214
32	1N3717	4.7m	.12m	25p	7.6	65m	355m	510m	3.4G	.50n	.52	24		25m			100S	Ge	A82a
33	JAN1N3717	4.7m	.12m	25p		72mΔ	395mΔ	535mΔ			2.0 Ø	29 Ø		25m			100A	Ge	A82a
34	1S1760	4.7m	.11m	25p		65m		510m			2.0 Ø			30m			100	Ge	A82a
35	1N3220	4.7m	500u	30pØ				600mΔ		400p	2.0 Ø	100 Δ		25m			100S	Ge	F127
36	1S1761	4.7m	.30m	40p		65m		500m			2.0 Ø			30m			100J	Ge	A82a
37	1N3716	4.7m	.50m	50p	4.0	65m	350m	500m	1.8G	.50n	.50	25		25m			100S	Ge	A82a
38	1N2930	4.7m	.47m	250p	2.5	85m	520m	740m			1.0			15m			200S	Si	TO18
39	1N2930A	4.7m	90u	250p		85mΔ	520mΔ	1.0 §Δ			1.0 Ø			100			200S	Si	TO18
40	1N4398	4.7m	.47m	250p	2.5	85m	520m	700m			1.0			10m			200S	Si	DO17
41	1N4398A	4.70m	240u	250p		79mΔ	520mΔ	1.0 Δ			1.0 Ø			10m			200S	Si	DO17
42	1N4398B	4.70m	90u	250p		74mΔ	520mΔ	1.0 Δ			1.0 Ø			10m			200S	Si	DO17
43	GI304A	4.8m	300u	20p	5.0	75mΔ	420mØ										60A	Ge§*	M898
44	114540A	5.0m		190fΔØ	12				40GØ	100p	8.0	45					100A	GA	F54m†
45	114530A	5.0m		280fΔØ	12				30GØ	100p	7.0	45					100A	GA	F54m†
46	114525A	5.0m		360fΔØ	12				25GØ	100p	6.0	45					100A	GA	F54m†
47	114520A	5.0m		500fΔØ	12				20GØ	100p	5.0	45					100A	GA	F54m†
48♦	MA4C705H	5.0m	500u	540fΔ					40GØ	100p	8.0			5.0m	500m		100A	GA	F56ac
49♦	MA4C705D	5.0m	500u	550fΔ					40GØ	100p	8.0			5.0m	500m		100A	GA	F54p
50♦	MA4C704H	5.0m	500u	630fΔ					30GØ	100p	7.0			5.0m	500m		100A	GA	F56ac
51♦	MA4C704D	5.0m	500u	640fΔ					30GØ	100p	7.0			5.0m	500m		100A	GA	F54p
52♦	MA4C703H	5.0m	500u	710fΔ					25GØ	100p	6.0			5.0m	500m		100A	GA	F56ac
53♦	MA4C703D	5.0m	500u	720fΔ					25GØ	100p	6.0			5.0m	500m		100A	GA	F54p
54	114515A	5.0m		760fΔØ	12				15GØ	100p	4.0	45					100A	GA	F54m†
55♦	MA4C702H	5.0m	500u	850fΔ					20GØ	100p	5.0			5.0m	500m		100A	GA	F56ac
56♦	MA4C702D	5.0m	500u	860fΔ					20GØ	100p	5.0			5.0m	500m		100A	GA	F54p
57	114510A	5.0m		1.1pΔØ	12				10GØ	100p	4.0	45					100A	GA	F54m†
58♦	MA4C701D	5.0m	500u	1.1pΔ					15GØ	100p	4.0			5.0m	500m		100A	GA	F54p
59♦	MA4C701H	5.0m	500u	1.1pΔ					15GØ	100p	4.0			5.0m	500m		100A	GA	F56ac
60♦	MA4C700H	5.0m	500u	1.45pΔ					10GØ	100p	4.0			5.0m	500m		100A	GA	F56ac
61♦	MA4C700D	5.0m	500u	1.46pΔ					10GØ	100p	4.0			5.0m	500m		100A	GA	F54p
62	MA4651A	5.0m		1.5pØ	15		500m		10GØ		4.0 Ø	45						GA	F10f
63	PT3529	5.0m	.50m	2.0pØ	12	145m	500m		8.0GØ		3.0 Ø	45						GA	F10f
64	MA4651B	5.0m		2.5pØ	15		500m		8.0GØ		3.0 Ø	45						GA	F10f
65♦	MA4C105	5.0m	250u	3.0p	6.0	70m	350m	480m		170p				10m	20m		100S	Ge	M987
66	MA4C105B	5.0m	250u	3.0p	6.0	70m	350m	480m		300p				10m	20m		100A	Ge	M83a
67	MA4C105C	5.0m	250u	3.0p	6.0	70m	350m	480m		500p				10m	20m		100A	Ge	A375
68	MA4C554	5.0m		3.0p	12	115m	510m	1.0		170p				10m	20m		100S	Ge	M987
69	MA4C554B	5.0m	250u	3.0p	12	115m	510m	1.0		300p				1.3m	20m		100A	GA	M83a
70	MA4C554C	5.0m	250u	3.0p	12	115m	510m	1.0		500p				1.2m	20m		100A	GA	A375
71	MS1152	5.0m	.25m	3.0p	6.0	70m	370m	550m		.30n	3.0	35					125S	Ge	F10c
72	MS1163	5.0m	.25m	3.0p	6.0	70m	370m	550m		.30n	3.0	35					100A	Ge	F10c
73	MS1163A	5.0m		3.0p		70m	.38	.50			5.0 Ø							Ge	
74	PT0451	5.0m	500u	4.0p	8.1	75m		530m									85	Ge	F10ae
75	105050A	5.0m	.25m	5.0p		135		1.0									100J	GA	F59k†
76	105100A	5.0m	.50m	5.0p		135		1.1									100J	GA	F59k†
77	105100G	5.0m	.50m	5.0p		70		480m									100J	Ge	F59k†
78	155050A	5.0m	250u	5.0p	12	135m		1.0u									100A	GA	A82ft
79	155050G	5.0m	250u	5.0p	6.0	70m		480m									100A	Ge	A82ft
80	155100A	5.0m	500u	5.0p	12	135m		1.0u									100A	GA	A82ft
81	155100G	5.0m	500u	5.0p	6.0	70m		480m									100A	Ge	A82ft
82	GI308A	5.0m	500u	5.0p	5.0	100mΔ								6.0m			70A	Ge§*	F10am
83	GI308B	5.0m	500u	5.0p	5.0	100mΔ								6.0m			70A	Ge§*	F10am
84♦	MA4C106	5.0m	500u	5.0p	6.0	70m	350m	480m		170p				10m	20m		100S	Ge	M987
85	MA4C106B	5.0m	500u	5.0p	6.0	70m	350m	480m		300p				10m	20m		100A	Ge	M83a
86	MA4C106C	5.0m	500u	5.0p	6.0	70m	350m	480m		500p				10m	20m		100A	Ge	A375
87	MA4C555	5.0m	500u	5.0p	12	135m	520m	1.1		170p				10m	20m		100S	Ge	M987
88	MA4C555B	5.0m	500u	5.0p	12	135m	520m	1.1		300p				2.3m	20m		100A	GA	M83a
89	MA4C555C	5.0m	500u	5.0p	12	135m	520m	1.1		500p				2.2m	20m		100A	GA	A375
90	MA4651C	5.0m		5.0pØ	15		500m		5.0GØ		2.0 Ø	45						GA	F10f
91	MS1302	5.0m	.25m	5.0p	6.0	75m	375m	520m		.50n	3.0						100	Ge	DO17
92	PT3530	5.0m	.50m	5.0p	12	145m	500m		6.0GØ		2.5 Ø	45						GA	F10f
93	PT0636	5.0m	500u	7.5p	10	125		1.1									85	GA	
94	1N3857	5.0m	.25m	8.0p	8.0	70m	330m	525m			3.0 Ø			10m	5.0m		100A	Ge	M83
95	MS1301	5.0m	.25m	10p	6.0	70m	385m	500m		.50n	2.0						100	Ge	DO17
96	PT3528	5.0m	.50m	13p	12	150m	500m		12GØ		4.0 Ø	45						GA	F10f
97	1N3128	5.0m	250u	15p	8.0	80mΔ	280mØ	530m§		600p	3.0 Ø			10m	5.0m		100A	Ge	M83
98	1N3852	5.0m	.25m	15p	8.0	70m	330m	525m			3.0 Ø			10m	5.0m		100A	Ge	M83
99	TU12/1	5.0m	.50m	15p	4.0	7.0m	55m	250m		1.5n	2.0 Ø	30					100S	Ge	M264
100	TU12/2	5.0m	1.5m	15p	4.0	7.0m	55m	250m		1.5n	2.0 Ø	30					100S	Ge	M264
101	TU105	5.0m	.75m	20p	4.0	7.0m	55m	250m		1.5n	2.0	30					100S	Ge	M264
102	1N3847	5.0m	.50m	25p	6.0			510m			3.0 Ø			10m	5.0m		100A	Ge	M83
103	1N3562	5.0m	25u	85p	6.0	55m	320m	475m	1.3G	1.0n	.70			15m			100	Ge	C16
104	GI304B	5.2m	300u	20p	5.0	75mΔ	420mØ										60A	Ge§*	M898
105	PT0403-04	5.5m		1.4pØ					25G		6.0							Ge	F10ae
106	PT0403-05	5.5m		1.4pØ					25G		6.0							Ge	F10af
107	1S1762	6.0m	.60m	7.0p		65m		500m			5.0 Ø			7.0m			100J	Ge	A82
108	1S1763	6.0m	1.0m	30p		65m		500m			2.0 Ø			30m			100J	Ge	A82a
109	1T1104	6.0m	1.0m	30p	4.5	70m	330m	460m	3.0G	.40n	.80	25		50m	30m		85J	Ge*	M27
110	GI305A	9.6m	500u	30p	5.0	85mΔ	430mØ										60A	Ge§*	M898

SYMBOLS AND CODES EXPLAINED IN INTERPRETER

7. TUNNEL DIODES

IN ORDER OF (1) PEAK CURRENT, (2) MAXIMUM CAPACITANCE, and (3) TYPE No.

LINE No.	[3] TYPE No.	PEAK CUR. [1] Ip (A)	TOLERANCE ± (A)	[2] MAX. TOTAL CAP. (F)	MIN Ip/Iv	Vp (V)	Vv (V)	RESISTIVE Vf at Ip (V)	CUTOFF FREQ. (Hz)	SER. IND. Ls (H)	SER. RES. Rs (Ω)	NEG. RES. -R (Ω)	NOISE VOLT. (V)	ABSOLUTE MAX. RATINGS FWD. CUR. (A)	DISS. @25°C (W)	THER. RES. °C/mW	MAX. TEMP (°C)	DESCRIPTION MAT.	DWG. No.
1	112540A	10m		26fΔØ	12				40GØ	100p	7.0	25					100A	GA	F54m†
2	112530A	10m		370fΔØ	12				30GØ	100p	7.0	25					100A	GA	F54m†
3	112525A	10m		500fΔØ	12				25GØ	100p	6.0	25					100A	GA	F54m†
4♦	MA4C715H	10m	1.0m	610fΔ					40GØ	100p	7.0			5.0m	500m		100A	GA	F56ac
5♦	MA4C715D	10m	1.0m	620fΔ					40GØ	100p	7.0			5.0m	500m		100A	GA	F54p
6	112520A	10m		720fΔØ	12				20GØ	100p	5.0	25					100A	GA	F54m†
7♦	MA4C714H	10m	1.0m	720fΔ					30GØ	100p	6.0			5.0m	500m		100A	GA	F56ac
8♦	MA4C714D	10m	1.0m	730fΔ					30GØ	100p	6.0			5.0m	500m		100A	GA	F54p
9♦	MA4C713H	10m	1.0m	850fΔ					25GØ	100p	5.0			5.0m	500m		100A	GA	F56ac
10♦	MA4C713D	10m	1.0m	860fΔ					25GØ	100p	5.0			5.0m	500m		100A	GA	F54p
11	MA4607A2	10m		1.0pØ	6.0	60m			30G		3.0 Ø	10						Ge	F56
12♦	MA4C712H	10m	1.0m	1.07pΔ					20GØ	100p	4.0			5.0m	500m		100A	GA	F56ac
13♦	MA4C712D	10m	1.0m	1.08pΔ					20GØ	100p	4.0			5.0m	500m		100A	GA	F54p
14	112515A	10m		1.1pΔØ	12				15GØ	100p	4.0	25					100A	GA	F54m†
15	MA4607A1	10m		1.2pØ	6.0	60m			22G		3.0 Ø	10						Ge	F56
16♦	MA4C711H	10m	1.0m	1.45pΔ					15GØ	100p	3.0			5.0m	500m		100A	GA	F56ac
17♦	MA4C711D	10m	1.0m	1.46pΔ					15GØ	100p	3.0			5.0m	500m		100A	GA	F54p
18	PT3525	10m	1.0m	1.5pØ	15	175m	500m		20GØ		3.0 Ø	24						GA	F10f
19	1S2199	10m	1.0m	2.0p	6.0	120mΔ	370m	630mΔ			4.0 Ø			11m	13m		85S	GE	A82
20	GI308D	10m	1.0m	2.0p	5.0	140mΔ								6.0m			70A	Ge§*	F10am
21	TD263B	10m	1.0m	2.0p	8.0	120m	420m	670m		1.5n	2.5			10m	7.0m		100	Ge	M214
22	112510A	10m		2.1pΔØ	12				10GØ	100p	3.0	25					100A	GA	F54m†
23	MA4607A	10m	3.0m	2.4p	6.0	55m	350m		15GØ	.10n	3.0	10					125S	Ge	F10f
24♦	MA4C710H	10m	1.0m	2.45pΔ					10GØ	100p	2.0			5.0m	500m		100A	GA	F56ac
25♦	MA4C710D	10m	1.0m	2.46pΔ					10GØ	100p	2.0			5.0m	500m		100A	GA	F54p
26	MA4652A	10m		2.5pØ	15		500m		9.0GØ		3.0 Ø	20						GA	F10f
27	PT3526	10m	1.0m	3.0pØ	15	160m	500m		12GØ		2.8 Ø	24						GA	F10f
28♦	1N3862	10m		4.0p				420m§						10	10m		100S	Ge	M83
29	MA4607B	10m	3.0m	4.4p	6.0	55m	350m		8.0GØ	.10n	3.0	10					125S	Ge	F10f
30	101050A	10m	.50m	5.0p		155		1.1									100J	GA	F59k†
31	101050G	10m	.50m	5.0p		80		500m									100J	Ge	F59k†
32	151050A	10m	500u	5.0p	12	155m		1.1m									100A	GA	A82f†
33	151050G	10m	500u	5.0p	6.0	80m		500m									100A	Ge	A82f†
34	GI308G	10m	1.0m	5.0p	5.0	120mΔ								15m			70A	Ge§*	F10am
35	MA4C107	10m	500u	5.0p	6.0	80m	360m	500m		170p				20m	20m		100S	Ge	M987
36	MA4C107B	10m	500u	5.0p	6.0	80m	360m	500m		300p				20m	20m		100A	Ge	M83a
37	MA4C107C	10m	500u	5.0p	6.0	80m	360m	500m		500p				20m	20m		100A	Ge	A375
38	MA4C556	10m	500u	5.0p	12	135m	520m	1.1		170p				20m	20m		100S	Ge	M987
39♦	MA4C556B	10m	500u	5.0p	12	135m	520m	1.1		300p				2.5m	20m		100A	GA	M83a
40♦	MA4C556C	10m	500u	5.0p	12	135m	520m	1.1		500p				2.5m	20m		100A	GA	A375
41	MA4652B	10m		5.0pØ	15		500m		6.0GØ		2.0 Ø	20						GA	F10f
42	MS1154	10m	.50m	5.0p	6.0	80m	380m	470m		.30n	2.0	18					125S	Ge	F10c
43	MS1165	10m	.50m	5.0p	6.0	80m	380m	470m		.35n	2.0	18					100A	Ge	F10c
44	MS1165A	10m		5.0p		80m	.38	.51			3.0 Ø							Ge	
45	TD263A	10m	1.0m	5.0p	8.0	110m	410m	650m		1.5n	2.0			10m	7.0m		100	Ge	M214
46	PT0452	10m	1.0u	6.0p	8.1	80m		540m									85	Ge	F10ae
47	PT3527	10m	1.0m	7.0p	15	150m	500m		8.0GØ		2.5 Ø	24						GA	F10f
48	1N3858	10m	.50m	8.0p	8.0	75m	350m	545m			2.5 Ø			18m	10m		100A	Ge	M83
49	1S2200	10m	1.0m	8.0p	6.0	90mΔ	350m	600mΔ			3.0 Ø			11m	13m		100S	GE	A82
50	MA4607C	10m	3.0m	8.4p	6.0	55m	350m		3.0GØ	.10n	3.0	10					125S	Ge	F10f
51	TD263	10m	1.0m	9.0p	8.0	100m	400m	650m		1.5n	1.7			10m	7.0m		100	Ge	M214
52	101100A	10m	1.0m	10p		155		1.1									100J	GA	F59k†
53	101100G	10m	1.0m	10p		80		500m									100J	Ge	F59k†
54	151100A	10m	1.0m	10p	12	155m		1.1u									100A	GA	A82f†
55	151100G	10m	1.0m	10p	6.0	80m		500m									100A	Ge	A82f†
56	GI308V	10m	1.0m	10p	5.0	110mΔ								20m			70A	Ge§*	F10am
57	MA4C108	10m	1.0m	10p	6.0	80m	360m	500m		170p				20m	20m		100S	Ge	M987
58	MA4C108B	10m	1.0m	10p	6.0	80m	360m	500m		300p				20m	20m		100A	Ge	M83a
59	MA4C108C	10m	1.0m	10p	6.0	80m	360m	500m		500p				20m	20m		100A	Ge	A375
60	MA4C557	10m	1.0m	10p	12	155m	530m	1.1		170p				20m	20m		100S	Ge	M987
61♦	MA4C557B	10m	1.0m	10p	12	155m	530m	1.1		300p				5.0m	20m		100A	GA	M83a
62♦	MA4C557C	10m	1.0m	10p	12	155m	530m	1.1		500p				5.0m	20m		100A	GA	A375
63	MA4652C	10m		10pØ	15		500m		4.0GØ		2.0 Ø	20						GA	F10f
64	MS1304	10m	.50m	10p	6.0	80m	375m	525m		.50n	2.0						100	Ge	DO17
65	1N3853	10m	.50m	15p	8.0	75m	350m	545m			2.5 Ø			18m	10m		100A	Ge	M83
66	PT0637	10m		15p		150m		1.1										GA	A1st
67	1N3118	10m	1.0m	20pØ	10	160m	600m	700m		6.0n	5.0 Ø	25			50m		100S	GA	DO17
68	MS1303	10m	.50m	20p	6.0	75m	385m	500m		.50n	1.5						100	Ge	DO17
69	1N3848	10m	1.0m	25p	6.0			520m			2.5 Ø			18m	10m		100A	Ge	M83
70	TU13/1	10m	1.0m	30p	4.0	7.0m	55m	250m		1.5n	2.0 Ø	15					100S	Ge	M264
71	TU13/2	10m	2.0m	30p	4.0	7.0m	55m	250m		1.5n	2.0 Ø	15					100S	Ge	M264
72	TU110	10m	1.0m	40p	4.0	7.0m	55m	250m		1.5n	1.5 Ø	10					100S	Ge	M264
73	1N3719	10m	.25m	50p	7.0	65m	355m	510m	2.8G	.50n	.36	12		50m			100S	Ge	A82a
74	JAN1N3719	10m	.25m	50p		72mΔ	395mΔ	535mΔ			1.5 Ø	14 Ø		50m			100A	Ge	A82a
75	1N3718	10m	1.0m	90p	4.1	65m	350m	500m	1.6G	.50n	.30	13		50m			100S	Ge	A82a
76	1N3221	10m	1.0m	100pØ				600mΔ		400p	1.5 Ø	66 Δ		50m			100S	Ge	F127
77	1N2931	10m	1.0m	400p	2.5	85m	530m	740m			1.0			25m			200S	Si	TO18
78	1N2931A	10m	200u	400p		85mΔ	530mΔ	1.0 §Δ			1.0 Ø			150			200S	Si	TO18
79	1N4399	10m	1.0m	400p	2.5	85m	530m	700m			1.0			15m			200S	Si	DO17
80	1N4399A	10m	500u	400p		80mΔ	530mΔ	1.0 Δ			1.0 Ø			15m			200S	Si	DO17
81	1N4399B	10m	200u	400p		75mΔ	530mΔ	1.0 Δ			1.0 Ø			15m			200S	Si	DO17
82	GI305B	10.4m	600u	30p	5.0	85mΔ	430mØ										60A	Ge§*	M898
83	PT3511	11m	15m	30p	30	185m	500m		10GØ		.80 Ø	2.0						GA	F10f
84	PT3512	11m	15m	100p	15	180m	500m		8.0GØ		.70 Ø	2.0						GA	F10f
85	PT3522	18m	1.8m	1.1pØ	12	175m	500m		25GØ		3.0 Ø	14						GA	F10f
86	PT3523	18m	1.8m	4.0p	12	160m	500m		12GØ		2.5 Ø	14						GA	F10f
87	PT3524	18m	1.8m	10p	15	150m	500m		8.0GØ		2.0 Ø	14						GA	F10f
88	MA4C157	19m	1.9m	5.0p	5.0	150m	350m	450m		.17n	6.0			38m	20m		100S	Ge	M987
89	MA4C157B	19m	1.9m	5.0p	5.0	150m	350m	450m		300p	6.0			38m	20m		100S	Ge	M83a
90	MA4C157C	19m	1.9m	5.0p	5.0	150m	350m	450m		500p	6.0			38m	20m		100S	Ge	A375
91	111040A	20m		390fΔØ	12				40GØ	100p	7.0	10					100A	GA	F54m†
92	111030A	20m		530fΔØ	12				30GØ	100p	6.0	10					100A	GA	F54m†
93	111025A	20m		640fΔØ	12				25GØ	100p	5.0	10					100A	GA	F54m†
94♦	MA4C725H	20m	2.0m	740fΔ					40GØ	100p	7.0			5.0m	500m		100A	GA	F56ac
95♦	MA4C725D	20m	2.0m	750fΔ					40GØ	100p	7.0			5.0m	500m		100A	GA	F54p
96♦	MA4C724H	20m	2.0m	880fΔ					30GØ	100p	6.0			5.0m	500m		100A	GA	F56ac
97♦	MA4C724D	20m	2.0m	890fΔ					30GØ	100p	6.0			5.0m	500m		100A	GA	F54p
98♦	MA4C723H	20m	2.0m	990fΔ					25GØ	100p	5.0			5.0m	500m		100A	GA	F56ac
99	111020A	20m		1.0pΔØ	12				20GØ	100p	4.0	10					100A	GA	F54m†
100♦	MA4C723D	20m	2.0m	1.0pΔ					25GØ	100p	5.0			5.0m	500m		100A	GA	F54p
101	MA4655	20m		1.2pØ	10	150m			25GØ		3.0 Ø	13						GA	F56
102♦	MA4C722H	20m	2.0m	1.35pΔ					20GØ	100p	4.0			5.0m	500m		100A	GA	F56ac
103♦	MA4C722D	20m	2.0m	1.36pΔ					20GØ	100p	4.0			5.0m	500m		100A	GA	F54p
104	111015A	20m		1.6pΔØ	12				15GØ	100p	3.0	10					100A	GA	F54m†
105♦	MA4C721H	20m	2.0m	1.95pΔ					15GØ	100p	3.0			5.0m	500m		100A	GA	F56ac
106♦	MA4C721D	20m	2.0m	1.96pΔ					15GØ	100p	3.0			5.0m	500m		100A	GA	F54p
107	111010A	20m		3.5pΔØ	12				10GØ	100p	2.0	10					100A	GA	F54m†
108♦	MA4C720H	20m	2.0m	3.85pΔ					10GØ	100p	1.5			5.0m	500m		100A	GA	F56ac
109♦	MA4C720D	20m	2.0m	3.86pΔ					10GØ	100p	1.5			5.0m	500m		100A	GA	F54p
110	GI308SZ	20m	2.0m	4.0p	5.0	160mΔ								8.0m			70A	Ge§*	F10am

SYMBOLS AND CODES EXPLAINED IN INTERPRETER

7. TUNNEL DIODES

IN ORDER OF (1) PEAK CURRENT, (2) MAXIMUM CAPACITANCE, and (3) TYPE No.

LINE No.	[3] TYPE No.	PEAK CUR. [1] Ip (A)	TOLERANCE ± (A)	[2] MAX. TOTAL CAP. (F)	MIN Ip/Iv	Vp (V)	Vv (V)	RESISTIVE Vf at Ip (V)	CUTOFF FREQ. (Hz)	SER. IND. Ls (H)	SER. RES. Rs (Ω)	NEG. RES. -R (Ω)	NOISE VOLT. (V)	ABSOLUTE MAX. RATINGS FWD. CUR. (A)	DISS. @25°C (W)	THER. RES. °C/mW	MAX. TEMP (°C)	DESCRIPTION MAT.	DWG. No.
1	MA4653A	20m		4.0pØ	15		500m		8.0GØ		2.0 Ø	10						GA	F10f
2	MA4653B	20m		8.0pØ	15		500m		6.0GØ		1.5 Ø	10						GA	F10f
3	1N3859	20m	1.0m	10p	8.0	85m	365m	565m			2.0 Ø			35m	20m		100A	Ge	M83
4	102050A	20m	1.0m	10p		175		1.1									100J	GA	F59k†
5	102050G	20m	1.0m	10p		90		540m									100J	Ge	F59k†
6	152050A	20m	1.0m	10p	12	175m		1.1u									100A	GA	A82f†
7	152050G	20m	1.0m	10p	6.0	90m		540m									100A	Ge	A82f†
8	MA4C109	20m	1.0m	10p	6.0	90m	370m	540m		170p				40m	20m		100S	Ge	M987
9	MA4C109B	20m	1.0m	10p	6.0	90m	370m	540m		300p				40m	20m		100A	Ge	M83a
10	MA4C109C	20m	1.0m	10p	6.0	90m	370m	540m		500p				40m	20m		100A	Ge	A375
11	MA4C558	20m	1.0m	10p	12	155m	530m	1.1		170p				40m	20m		100S	Ge	M987
12♦	MA4C558B	20m	1.0m	10p	12	155m	530m	1.1		300p				5.0m	20m		100A	GA	M83a
13♦	MA4C558C	20m	1.0m	10p	12	155m	530m	1.1		500p				5.0m	20m		100A	GA	A375
14	MS1159	20m	1.0m	10p	6.0	85m	390m	490m		.30n	1.0	10					125S	Ge	F10c
15	MS1167	20m	1.0m	10p	6.0	85m	390m	490m		.35n	1.0	10					100A	Ge	F10c
16	MS1167A	20m		10p		85m	.39	.54			2.0 Ø							Ge	
17	PT0453	20m	2.0u	10p	8.1	90m		550m									85	Ge	F10ae
18	GI308E	20m	2.0m	15p	5.0	140mΔ								20m			70A	Ge§*	F10am
19	1N3129	20m	1.0m	20p	8.0	100mΔ	300mØ	575m§		600p	2.5 Ø			35m	20m		100A	Ge	M83
20	1N3854	20m	1.0m	20p	8.0	85m	365m	565m			2.0 Ø			35m	20m		100A	Ge	M83
21	102100A	20m	2.0m	20p		175m		1.1									100J	GA	F59k†
22	102100G	20m	2.0m	20p		90		540m									100J	Ge	F59k†
23	152100A	20m	2.0m	20p	12	175m		1.1u									100A	GA	A82f†
24	152100G	20m	2.0m	20p	6.0	90m		540m									100A	Ge	A82f†
25	MA4C110	20m	2.0m	20p	6.0	90m	370m	540m		170p				40m	20m		100S	Ge	M987
26	MA4C110B	20m	2.0m	20p	6.0	90m	370m	540m		300p				40m	20m		100A	Ge	M83a
27	MA4C110C	20m	2.0m	20p	6.0	90m	370m	540m		500p				40m	20m		100A	Ge	A375
28	MA4C559	20m	2.0m	20p	12	175m	535m	1.1		170p				40m	20m		100S	Ge	M987
29♦	MA4C559B	20m	2.0m	20p	12	175m	535m	1.1		300p				10m	20m		100A	GA	M83a
30♦	MA4C559C	20m	2.0m	20p	12	175m	535m	1.1		500p				10m	20m		100A	GA	A375
31	MA4653C	20m		20pØ	15		500m		4.0GØ		1.5 Ø	10						GA	F10f
32	MS1305	20m	1.0m	20p	6.0	85m	385m	530m		.50n	1.5						100	Ge	DO17
33	1N3849	20m	2.0m	30p	6.0			540m			2.0 Ø			35m	20m		100A	Ge	M83
34	PT0638	20m		35p		170m		1.1										GA	A1st
35	TU14/1	20m	2.0m	60p	4.0	7.0m	55m	250m		1.5n	2.0 Ø	10					100S	Ge	M264
36	TU14/2	20m	4.0m	60p	4.0	7.0m	55m	250m		1.5n	2.0 Ø	10					100S	Ge	M264
37♦	TD264A	22m	2.0m	4.0p	8.0	130m	425m	680m		1.5n	2.0			5.0m	7.5m		100	Ge	M214
38♦	TD264	22m	2.0m	18p	8.0	115m	425m	650m		1.5n	1.8			5.0m	7.5m		100	Ge	M214
39	1N3721	22m	.50m	100p	7.0	65m	355m	510m	2.6G	.50n	.22	5.3		100m			100S	Ge	A82a
40	JAN1N3721	22m	.50m	100p		72mΔ	395mΔ	535mΔ			1.0 Ø	6.2 Ø		50m			100A	Ge	A82a
41	1N3150	22m	2.0m	125p	7.6	65m	350m	500m	2.2G	4.0n	.15	10		100m			100S	Ge	TO18
42	1N3222	22m	2.0m	150pØ				600mΔ		400p	1.0 Ø	50 Δ		100m			100S	Ge	F127
43	1N3720	22m	2.0m	150p	4.2	65m	350m	500m	1.6G	.50n	.20	5.6		100m			100S	Ge	A82a
44	1N2932	22m	2.2m	1200p	2.5	90m	530m	740m			.80			40m			200S	Si	TO18
45♦	1N2932A	22m	440u	1.2n		90mΔ	530mΔ	1.0 §Δ			800mØ			40m			200S	Si	TO18
46♦	MA4C400	25m		1.0p				160m		300p				50m	20m		100S	GE	V5
47	PT3519	30m	3.0m	2.5pØ	15	175m	500m		25GØ		2.5 Ø	9.0						GA	F10f
48	MA4608A	30m	9.0m	6.4p	6.0	55m	350m		10GØ	.10n	2.0	4.0					125S	Ge	F10f
49	PT3520	30m	3.0m	8.0p	15	150m	500m		15GØ		2.0 Ø	9.0						GA	F10f
50	MA4608B	30m	9.0m	12.4p	6.0	55m	350m		5.0GØ	.10n	2.0	4.0					125S	Ge	F10f
51	PT3521	30m	3.0m	20p	15	145m	500m		10GØ		1.8 Ø	9.0						GA	F10f
52	MA4608C	30m	9.0m	25.4p	6.0	55m	350m		3.0GØ	.10n	2.0	4.0					125S	Ge	F10f
53	PT3516	45m	4.5m	4.0p	15	175m	500m		20GØ		1.8 Ø	6.0						GA	F10f
54	PT3517	45m	4.5m	10p	15	160m	500m		15GØ		1.5 Ø	6.0						GA	F10f
55	PT3518	45m	4.5m	30p	15	150m	500m		10GØ		1.2 Ø	6.0						GA	F10f
56	1N2933	47m	4.7m	1800p	2.5	90m	530m	740m			.60			75m			200S	Si	TO18
57♦	1N2933A	47m	815u	1.8n		90mΔ	530mΔ	1.0 §Δ			600mØ			75m			200S	Si	TO18
58	MA4C158	50m	5.0m	4.0p	3.8	150m	350m	450m		.17n	3.0			100m	20m		100S	Ge	M987
59	MA4C158B	50m	5.0m	4.0p	3.8	150m	350m	450m		300p	3.0			100m	20m		100S	Ge	M83a
60	MA4C158C	50m	5.0m	4.0p	3.8	150m	350m	450m		500p	3.0			100m	20m		100S	Ge	A375
61	MA4654A1	50m		4.0pØ	10	180m			15G		2.0 Ø	4.0						GA	F56
62♦	TD265A	50m	5.0m	5.0p	8.0	200m	425m	750m		1.5n	1.5				18m		100	Ge	M214
63♦	1S1764	50m	5.0m	7.0p		90m		550m			2.0 Ø						100J	Ge	A82a
64♦	GI308K	50m	5.0m	8.0p	5.0	180mΔ											70A	Ge§*	F10am
65	MA4654A	50m		10pØ	10		500m		6.0GØ		1.5 Ø	4.0						GA	F10f
66	1N3860	50m	2.5m	12p	8.0	105m	380m	585m			1.5 Ø			85m	50m		100A	Ge	M83
67	MA4654B	50m		15pØ	10		500m		4.0GØ		1.2 Ø	4.0						GA	F10f
68♦	GI308I	50m	5.0m	20p	5.0	150mΔ											70A	Ge§*	F10am
69	PT0454	50m	5.0u	20p	8.1	100m		570m									85	Ge	F10ae
70	1N3130	50m	2.5m	25p	8.0	120mΔ	350mØ	620m§		600p	1.5 Ø			85m	50m		100A	Ge	M83
71	MA4C11	50m	2.5m	25p	6.0	100m	380m	565m		170p				100m	20m		100S	Ge	M987
72	MA4C111	50m	2.5m	25p	6.0	100m	380m	565m		170p				100m	20m		100S	Ge	M987
73	MA4C111B	50m	2.5m	25p	6.0	100m	380m	565m		300p				100m	20m		100A	Ge	M83a
74	MA4C111C	50m	2.5m	25p	6.0	100m	380m	565m		500p				100m	20m		100A	Ge	A375
75	MA4C560	50m	2.5m	25p	12	175m	535m	1.1		170p				100m	20m		100S	Ge	M987
76♦	MA4C560B	50m	2.5m	25p	12	175m	535m	1.1		300p				100m	20m		100A	GA	M83a
77♦	MA4C560C	50m	2.5m	25p	12	175m	535m	1.1		500p				100m	20m		100A	GA	A375
78♦	TD265	50m	5.0m	25p	8.0	180m	425m	700m		1.5n	1.4				18m		100	Ge	M214
79	1N3138	50m	2.5m	30p	13	260mΔ	510mØ	1.4 §		600p	2.6 Ø			100m	40m		175S	GA	M83
80	MA4654C	50m		30pØ	10		500m		3.0GØ		1.2 Ø	4.0						GA	F10f
81	1N3850	50m	5.0m	40p	6.0			585m			1.5 Ø			85m	50m		100A	Ge	M83
82	105010A	50m	5.0m	50p		195m		1.2									100J	GA	F59k†
83	105010G	50m	5.0m	50p		100		565m									100J	Ge	F59k†
84	155010A	50m	5.0m	50p	12	195m		1.1u									100A	GA	A82f†
85	155010G	50m	5.0m	50p	6.0	100m		565m									100A	Ge	A82f†
86	MA4C112	50m	5.0m	50p	6.0	100m	380m	565m		170p				100m	20m		100S	Ge	M987
87	MA4C112B	50m	5.0m	50p	6.0	100m	380m	565m		300p				100m	20m		100A	Ge	M83a
88	MA4C112C	50m	5.0m	50p	6.0	100m	380m	565m		500p				100m	20m		100A	Ge	A375
89	MA4C561	50m	5.0m	50p	12	195m	540m	1.1		170p				100m	20m		100S	Ge	M987
90♦	MA4C561B	50m	5.0m	50p	12	195m	540m	1.2		300p				100m	20m		100A	GA	M83a
91♦	MA4C561C	50m	5.0m	50p	12	195m	540m	1.2		500p				100m	20m		100A	GA	A375
92	PT0639	50m	5.0m	70p	10	180m		1.2									85	GA	
93	MA4609A	60m	18m	15.4p	6.0	55m	350m		8.0GØ	.10n	1.0	2.0					125S	Ge	F10f
94	MA4609B	60m	18m	30.4p	6.0	55m	350m		4.0GØ	.10n	1.0	2.0					125S	Ge	F10f
95	MA4609C	60m	18m	60.4p	6.0	55m	350m		2.0GØ	.10n	1.0	2.0					125S	Ge	F10f
96	PT3513	90m	9.0m	9.0p	15	180m	500m		15GØ		1.0 Ø	3.0						GA	F10f
97	PT3514	90m	9.0m	20p	15	175m	500m		10GØ		.80 Ø	3.0						GA	F10f
98	1N3856	90m	5.0m	25p	8.1	140mΔ	390mØ	630mΔ			1.0 Ø			170m	100m		100S	Ge	M83
99	PT3515	90m	9.0m	60p	15	170m	500m		8.0GØ		.70 Ø	3.0						GA	F10f
100	1S2201	100m	15m	5.0p	4.2	200m	450m	650m									100	Ge	A82a
101♦	TD266A	100m	10m	6.0p	8.0	260m	450m	800m		1.5n	1.2				35m		100	Ge	M214
102♦	TD266	100m	10m	35p	8.0	210m	450m	720m		1.5n	1.1				35m		100	Ge	M214
103	1N3851	100m	10m	40p	6.0			595m			1.0 Ø			170m	100m		100A	Ge	M83
104	101010A	100m	10m	100p		205m		1.2	10GØ			10					100	GA	F59k†
105	101010G	100m	10m	100p		110		575m									100J	Ge	F59k†
106	151010A	100m	10m	100p	12	205m		1.1u									100A	GA	A82f
107	151010G	100m	10m	100p	6.0	110m		575m									100A	Ge	A82f†
108	MA4C113	100m	10m	100p	6.0	110m	390m	575m		170p				200m	20m		100S	Ge	M987
109	MA4C113B	100m	10m	100p	6.0	110m	390m	575m		300p				200m	20m		100A	Ge	M83a
110	MA4C113C	100m	10m	100p	6.0	110m	390m	575m		500p				200m	20m		100A	Ge	A375

SYMBOLS AND CODES EXPLAINED IN INTERPRETER

7. TUNNEL DIODES

IN ORDER OF (1) PEAK CURRENT, (2) MAXIMUM CAPACITANCE, and (3) TYPE No.

LINE No.	[3] TYPE No.	PEAK CUR. [1] Ip (A)	TOLERANCE ± (A)	[2] MAX. TOTAL CAP. (F)	MIN Ip/Iv	Vp (V)	Vv (V)	RESISTIVE Vf at Ip (V)	RESISTIVE CUTOFF FREQ. (Hz)	SER. IND. Ls (H)	SER. RES. Rs (Ω)	NEG. RES. -R (Ω)	NOISE VOLT. (V)	ABSOLUTE MAX. RATINGS FWD. CUR. (A)	DISS. @25°C (W)	THER. RES. °C/mW	MAX. TEMP (°C)	DESCRIPTION MAT.	DWG. No.
1♦	MA4C562B	100m	10m	100p	12	205m	545m	1.1		300p				200m	20m		100A	GA	M83a
2♦	MA4C562C	100m	10m	100p	12	205m	545m	1.1		500p				200m	20m		100A	GA	A375
3	PT0640	100m	10m	150p	10	190m		1.2									85	GA	
4	1N2934	100m	10m	2500p	2.5	90m	530m	720m			.50			100m			200S	Si	TO18
5♦	1N2934A	102m	2.0m	2500p		90mΔ	530mΔ	1.0 §Δ			500mØ			150m			200S	Si	TO18
6	PT3510	150m	15m	18p	15	190m	500m		15GØ		1.0 Ø	2.0						GA	F10f
7	MA4C114B	200m	20m	200p	6.0	120m	400m	580m		300p				400m	20m		100A	Ge	M83a
8	MA4C114C	200m	20m	200p	6.0	120m	400m	580m		500p				400m	20m		100A	Ge	A375
9♦	MA4C563B	200m	20m	200p	12	225m	550m	1.2		300p				400m	20m		100A	GA	M83a
10♦	MA4C563C	200m	20m	200p	12	225m	550m	1.2		500p				400m	20m		100A	GA	A375
11	101040A	.39		.39pØΔ					40GØ		7.0	10					100J	GA	F59k†
12	PT0633	500m	50u	3.0p	10	95m		1.0									85	GA	

8. MISCELLANEOUS DEVICES

IN ORDER OF (1) USE and (2) TYPE No.

LINE No.	[2] TYPE No.	[1] USE	DESCRIPTION MAT.	DESCRIPTION DWG. No.	TECHNICAL DATA
1	ALD4201				Line Extender/Booster Amplifier;3.7-4.2GHz;20dB Gain Min.l8.0dB Noise Fig.Min.;1.75 VSWR Max
2	DBX72L				Microwave Mixer;2-7GHz RF/FLO;IF DC-1.3GHz;7dBm Min LO Drive;15dBm Intercept Point
3	DBX158L				Microwave Mixer;8-15GHz RF/FLO;IF DC-1.0GHz;7dBm Min LO Drive;15dBm Intercept Point
4	DBX158M				Microwave Mixer;8-15GHz RF/FLO;IF DC-1.0GHz;10dBm Min LO Drive;20dBm Intercept Point
5	DBX167L				Microwave Mixer;7-16GHz RF/FLO;IF DC-4GHz;7dBm Min.LO Drive;15dBm Intercept Point
6	DBX167M				Microwave Mixer;7-16GHz RF/FLO;IF DC-4.0GHz;10dBm Min LO Drive;15dBm Intercept Point
7	DBX184LS				Microwave Mixer;4-18GHz RF/FLO;IF DC-1.5GHz;7dBm Min LO Drive;15dBm Intercept Point
8	DBX184MS				Microwave Mixer;4-18GHz RF/FLO;IF DC-1.5GHz;10dBm Min LO Drive;20dBm Intercept Point
9	DBX185L				Microwave Mixer;5-18GHz RF/FLO;IF DC-6.0GHz;7dBm Min LO Drive;15dBm Intercept Point
10	DBX185M				Microwave Mixer;5-18GHz RF/FLO;IF DC-6.0GHz;10dBm Min LO Drive;20dBm Intercept Point
11	DBY824H			M1145	Microwave Mixer;2-8GHz RF/LO;IF.005-GHz;13dBm Min LO Drive;22dBm Intercept Point
12	DBY824M			M1145	Microwave Mixer;2-8GHz RF/LO;IF.005-4GHz;10dBm Min LO Drive;20dBm Intercept Point,
13	DBY824S			M1145	Microwave Mixer;2-8GHz RF/LO;IF.005-4GHz;21dBm Min LO Drive;27dBm Intercept Point
14	DBY824SS			M1145	Microwave Mixer;2-8GHz RF/LO;IF.005-4GHz;23dBm Min LO Drive;32dBm Intercept Point
15	DBY18212H			M1145	Microwave Mixer;2-18GHz RF;2-26GHz LO;IF 1-12 HGz;10dBm Min LO Drive;20dBm Intercept Point
16	GAO20F-D		GA	F134	GUNN Diode;Vop 10V;Iop 200mA;Pout 20mW;Freq Range 11GHz
17	HP5082-0015		Si		VBR 35V min.
18	HP5082-0017		Si		VBR 75V min.
19	HP5082-0018		Si		VBR 25V min.
20	HP5082-0021		Si		VBR 40V min.
21	HP5082-0032		Si		VBR 65V min.
22	HP5082-0090		Si		VBR 45V min.
23	HP5082-9395			M905	Freq. 4-8GHz;VF 0.25V;RS 13Ω;CT 0.35pF;Beam Lead Quads for Double Balance Mixers
24	UMX2020				Microwave Mixer;
25	1N3353	5	Ge	TO18	IP 100uA max;VF 80mV at 1.0mA;C 4.0pF;LS 1.0nh
26	1N3539	5	Si	TO18	If.1.0mA max; Ir-1.25mA max; VF-.60V min at If-.047mA
27	1N3539A	5	Si	TO18	IF-1.0mA max;IR-1.25mA max; C-10pf max; Vf-700mV min.
28	1N3540	5	Si	TO18	If-2.0mA max; Ir-2.5mA max; VF-.60V min at IF-.10mA.
29	1N3540A	5	Si	TO18	IF-2.0mA max;I-2.5mA max;C-20pf max; Vf-700mV min.
30	1N3541	5	Si	TO18	If-2.5mA max; Ir-6.25mA max; VF-.60V min at If-.22mA
31	1N3541A	5	Si	TO18	IF-2.5mA max;IR-6.25mA max; C-50pf max; Vf-700mV min.
32	1N3542	5	Si	TO18	If-3.0mA max; Ir-12.5mA max; VF-.60V min at If-.47mA
33	1N3542A	5	Si	TO18	IF-3.0mA max;IR-12.5mA max; C-70pf max; Vf-700mV min.
34	1N3543	5	Si	TO18	If-5.0mA max; Ir-25mA max; VF-.60V min at If-1.0mA
35	1N3543A	5	Si	TO18	IF-5.0mA max;IR-25mA max; C-100pf max; Vf-700mV min.
36	1T1401	5	Ge	M27a	If-9.0mA/180mV; Power diss-4.0mW.
37	1T1402	5	Ge	M27a	If-12mA/180mV; Power diss-4.0mW.
38	AEY17	5	GE	A417	BACKWARD DIODE:for Broadband Low Level Detector Appi;Freq Rng 1 to 18GHz
39	AEY32	5	GE	F107b	BACKWARD DIODE:for Broadband Low Level Detector App.in K-band and Q-band;F 18-40GHz
40	BD1	5	Ge	A82a	Ip 1.0mA max;Ct 20pf max;Vf at If 10mA,90mV;VR at Ir 1.0mA,440mV.
41	BD2	5	Ge	A82a	Ip 500uA max;Ct 10pf max;VF at IF 5.0mA, 90mV;VR at Ir 1.0mA, 465mV.
42	BD3	5	Ge	A82a	Ip 200uA max;Ct 10pf max;VF at IF 2.0mA, 90mV;VR at Ir 1.0mA, 465mV.
43	BD4	5	Ge	A82a	Ip 100uA max;Ct 10pf max;VF at IF 1.0mA, 90mV;VR at Ir 1.0mA, 465mV.
44	BD5	5	Ge	A82a	Ip 50uA max;Ct 10pf max;VF at IF 500uA, 90mV;VR at Ir 1.0mA, 465mV.
45	BD6	5	Ge	A82a	Ip 20uA max;Ct 10pf max;VF at IF 200uA, 90mV;VR at Ir 1.0mA, 465mV.
46	BD7	5	Ge	A82a	Ip 10uA max;Ct 10pf max;VF at IF 100uA, 90mV;VR at Ir 1.0mA, 465mV.
47	BD402	5	Ge	DO20	Ip-.50mA max;Ct-3.0pf max;Vf at If-15mA-130mV;VR at Ir-1.0mA-465mV.
48	BD403	5	Ge	DO20	Ip-200uA max;Ct-1.0pf max;Vf at If-6.0mA-170mV;VR at IR-1.0mA-465mV.
49	BD404	5	Ge	DO20	Ip-.10mA max;Ct-1.0pf max;Vf at If-3.0mA-170mV;VR at Ir-1.0mA-465mV.
50	BD405	5	Ge	DO20	Ip-.05mA max;Ct-1.0pf max;Vf at If-1.5mA-160mV;VR at Ir-1.0mA-465mV.
51	BD406	5	Ge	DO20	Ip-.02mA max;Ct-2.0pf max;Vf at If-.60mA-160mV;VR at Ir-1.0mA-465mV.
52	BD407	5	Ge	DO20	Ip 10uA max;Ct 10pf max;VF at IF 300uA, 160mV;VR at Ir 1.0mA, 465mV.
53	GI401A	5	Ge§*	M899	Ip 100uA max;Ctot 2.5pF max;VF330mV at 100uA;VR 90mA at 1.0mA;Ir 4.0mA max
54	GI401B	5	Ge§*	M899	Ip 100uA max;Ctot 5.0pF max;VF330mV at 100uA;VR 90mA at 1.0mA;Ir 5.6mA max
55	GI403A	5	Ge§*	M898	Ip 150uA max;Ctot 8.0pF max;VF350mV at 100uA;VR 120mA at 3.0mA
56	MA4C400A,B,C,D	5	Ge	V5	Ip 25uA max;VF160mV at IF 3.0mA;VR 330mV at I25uA;Ct 1.0pF max;IF 50mA max
57	MA4C400D1,D2,188				
		5	Ge	V5	Ip 25uA max;VF160mV at IF 3.0mA;VR 330mV at I25uA;Ct 1.0pF max;IF 50mA max
58	MA4C401A,B,C,D	5	Ge	V5	Ip 50uA max;VF140mV at IF3.0mA;VR 350mV at I50uA;Ct 1.0pF max;IF 50mA max
59	MA4C401D1,D2,188				
		5	Ge	V5	Ip 50uA max;VF140mV at IF 3.0mA;VR 350mV at I50uA;Ct 1.0pF max;IF 50mA max
60	MA4C402A,B,C,D	5	Ge	V5	Ip 100uA max;VF120mV at IF 3.0mA;VR 375mV at I100uA;Ct 1.0pF max;IF 50mA max
61	MA4C402D1,D2,188				
		5	Ge	V5	Ip 100uA max;VF120mV at IF 3.0mA;VR 375mV at I100uA;Ct 1.0pF max;IF 50mA max
62	MA4C403A,B,C,D	5	Ge	V5	Ip 250uA max;VF100mV at IF 3.0mA;VR 390mV at I250uA;Ct 1.0pF max;IF 50mA max
63	MA4C403D1,D2,188				
		5	Ge	V5	Ip 250uA max;VF100mV at IF 3.0mA;VR 390mV at I250uA;Ct 1.0pF max;IF 50mA max
64	MA4C404A,B,C,D	5	Ge	V5	Ip 400uA max;VF100mV at IF 3.0mA;VR 390mV at I400uA;Ct 1.0pF max;IF 50mA max
65	MA4C404D1,D2,188				
		5	Ge	V5	Ip 400uA max;VF100mV at IF 3.0mA;VR 390mV at I400uA;Ct 1.0pF max;IF 50mA max
66	MA4C405A,B,C,D	5	Ge	V5	Ip 500uA max;VF80mV at IF 3.0mA;VR 390mV at I500uA;Ct 1.0pF max;IF 50mA max
67	MA4C405D1,D2,188				
		5	Ge	V5	Ip 500uA max;VF80mV at IF 3.0mA;VR 390mV at I500uA;Ct 1.0pF max;IF 50mA max
68	MA4C850A,B,C,D	5	GA	V5	Ip 25uA max;VF300mV at 3.0mA;VR 675mV at I25uA;Ct 2.5pF max;IF 1.025mA max
69	MA4C850D1,D2,188				
		5	GA	V5	Ip 25uA max;VF300mV at 3.0mA;VR 675mV at I25uA;Ct 2.5pF max;IF 1.025mA max
70	MA4C851A,B,C,D	5	GA	V5	Ip 50uA max;VF260mV at 3.0mA;VR 700mV at I50uA;Ct 2.5pF max;IF 1.025mA max
71	MA4C851D1,D2,188				
		5	GA	V5	Ip 50uA max;VF260mV at 3.0mA;VR 700mV at I50uA;Ct 2.5pF max;IF 1.025mA max
72	MA4C852A,B,C,D	5	GA	V5	Ip 100uA max;VF225mV at IF 3.0mA;VR 725mV at I100uA;Ct 2.0pF max;IF 775uA max
73	MA4C852D1,D2,188				
		5	GA	V5	Ip 100uA max;VF225mV at IF 3.0mA;VR 725mV at I100uA;Ct 2.0pF max;IF 775uA max
74	MA4C853A,B,C,D	5	GA	V5	Ip 250uA max;VF200mV at IF 3.0mA;VR 750mV at I250uA;Ct 1.5pF max;IF 525uA max
75	MA4C853D1,D2,188				
		5	GA	V5	Ip 250uA max;VF200mV at IF 3.0mA;VR 750mV at I250uA;Ct 1.5pF max;IF 525uA max
76	MA4610	5	Ge	F56	VSWR at 8.8; 13.3 Gc-2.0;NFo-15db max;NRo-6db max;Zif at 20Kc-50 to 200 ohms
77	MA4610A	5	Ge	F56	VSWR at 8.8; 13.3 Gc-2.0;NFo-3db max;Zif at 20Kc-50 to 200 ohms.
78	MA4619	5	Ge	F10v	VSWR at 8.8±13.3Gc-2.0;NFo-15db max;NRo-6db max;Zif at 20Kc-50 to 200 ohms.
79	MA4619A	5	Ge	F10v	VSWR at 8.8±13.3Gc-2.0;NFo-15db max;NRo-6db max;Zif at 20Kc-50 to 200 ohms.
80	MA4624	5	Si	P1bØ	Doppler Mixer;freq.-13300MHz;NF-15db max;VSWR-2.0;Zif-50-150 ohms.
81	MA4624A	5	Si	P1bØ	Doppler Mixer;freq.-13300MHz;NF-12db max;VSWR-2.0;Zif-50-150 ohms.
82	MA4625	5	Si	P1bØ	Doppler Mixer;freq.-16000MHz;NF-15db max;VSWR-2.0;Zif-50-150 ohms.
83	MA4625A	5	Si	P1bØ	Doppler Mixer;freq.-16000MHz;NF-12db max;VSWR-2.0;Zif-50-150 ohms.
84	MS1010	5	Ge	F10b	Ip 300uA max;Ct 3pf max;VR at IR 300uA - 400mV;VF at 3mA - 80mA.
85	MS1011	5	Ge	F10b	Ip-300uA max;Ct-1.5pf max;VR at IR-300uA-400mV;VF at 3.0mA-90mV;Vp-50mV.
86	MS1012	5	Ge	F10b	Ip-300uA max;Ct-1.0pf max;VR at IR-300uA-400mV;VF at 3.0mA-100mV;Vp-50mV.
87	PB0451	5	Ge	F10ae	Doppler;Freq. 9.375GHz;Max Overall NF 15db;Typ IF Imp 70Ω;NRO 6 max.
88	PB0452	5	Ge	F10ae	Doppler;Freq. 9.375GHz;Max Overall NF 15db;Typ IF Imp 250Ω;NRO 6 max.
89	PB0453	5	Ge	F10ae	Doppler;Freq. 9.375GHz;Max Overall NF 12db;Typ IF Imp 70Ω;NRO 3 max.
90	PB0454	5	Ge	F10ae	Doppler;Freq. 9.375GHz;Max Overall NF 12db;Typ IF Imp 250Ω;NRO 3 max.
91	PB0461	5	Ge	F10ae	Doppler;Freq. 13.3GHz;Max Overall NF 15db;Typ IF Imp 70Ω;NRO 6 max.
92	PB0462	5	Ge	F10ae	Doppler;Freq. 13.3GHz;Max Overall NF 15db;Typ IF Imp 250Ω;NRO 6 max.
93	PB0463	5	Ge	F10ae	Doppler;Freq. 13.3GHz;Max Overall NF 12db;Typ IF Imp 70Ω;NRO 3 max.
94	PB0464	5	Ge	F10ae	Doppler;Freq. 13.3GHz;Max Overall NF 12db;Typ IF Imp 250Ω;NRO 3 max.
95	TU1B	5	Ge	M264	Vr-520mV max;VF-120mV max. at 30mA;C-3.0pf max;IFM-5.0mA.
96	1N3481	7	Ge∅	F3†	Freq X-Band,9.0GHz;Incident Power 10mW peak;Ins Loss 1.0dB max;Iso 18dB min
97	1N3482	7	Ge∅	F3†	Freq X-Band,9.0GHz;Incident Power 1.25W peak;Ins Loss 1.2dB max;Iso 25dB min
98	1N5165	7		A1ah	VBR 30V;CT 1.0pF;VR 15V;IF 50mA
99	1N5166	7	Si♦	A416	Schott Barr;Fast Switch,Mixer,Detector to 3GHz;If(min) 35mA;V(F) at 1V
100	1N5167	7		A1ah	VBR 20V;CT 1.0pF;VR 15V;IF 35mA

8. MISCELLANEOUS DEVICES

IN ORDER OF (1) USE and (2) TYPE No.

LINE No.	[2] TYPE No.	[1] USE	DESCRIPTION MAT.	DWG. No.	TECHNICAL DATA
1	1N5711	7	#$	A414	Schott Barr;Fast Switch (±100ps);Pd 250mW at 25°C;Min BV 70V;Temp Rg 65 to 200°C
2	JAN1N5711	7	#$	A414	Schott Barr;Fast Switch (±100ps);Pd 250mW at 25°C;Min BV 70V;Temp Rg 65 to 200°C
3	1N5712	7	#$	A414	Schott Barr;Fast Switch (±100ps);Pd 250mW at 25°C;Min BV 20V;Temp Rg 65 to 200°C
4	JAN1N5712	7	#$	A414	Schott Barr;Fast Switch (±100ps);Pd 250mW at 25°C;Min BV 20V;Temp Rg 65 to 200°C
5	1N5713	7	#$	A415	Schott Barr;Fast Switching;I(F) 20mA (min);V(F) at 1V;V(BR) 15V (min);I(R) at 10uA
6	1N5719	7		A1ah	V(BR) 150V;C(T) 0.3pF;trr 100ns;R(S) 1.25Ω;Lifetime
7	JAN1N5719	7	Si#	A415	Pin RF Switch/Attenuation;Pd 250mW at 25°C;Min BV 150V;Temp Rg 65 to 150°C
8	1N5767	7	Si	A416	Longlife RF Var Atten;Low Distortion;V(BR) 100V(min),I(R) at10uA;R(S) 2.5Ω(max), I(F) at 100
9	1N5957	7	Si	A146s	PIN;VBR 100V min;CVR .4pF max at 50V;RS 3.5Ω max;IR 1uA max;Minor.Lifetime 1.5us min.
10	1N6263	7		A1ah	VBR 60V;CT 2.2pF;VR 50V;IF 15mA
11	1SS85	7	Si#$	DO35	VHF Tuner Band Switch;Ls 3.0nH typ at 250MHz;C 1.2pF max at 6V,1MHz
12	1SV26	7		M1112	trr max 500ms;rds max 3.6Ω;rdp max 500Ω;Ct max 0.35pf;VR 100v;Pd 1.0W;IF 50mA;T; 175 °C
13	1SV27	7		F156	trr max 500ms;rds max 3.6Ωrdp max 500Ω;Ct max 0.35pf;VR 100v;Pd 1.0W;IF 50mA;T; 175 °C
14	1SV28	7		M1113	trr max 500ns;rds max 3.6Ω;rdp max 500Ω;Ct max 0.25pf;VR 100v;Pd 1.0W;IF 50mA;T; 175 °C
15	1SV34	7	Si	DO35	trr 1.0Ous;Rds 8.0Ω;Rdp 2.5kΩ;Ct 0.3pf;T 2.0us;VF max 1.1V;IF 50mA;VR 100V;T; 175°C
16	1SV35	7		DO35	trr typ 1.0us;rds max 10.0Ω;rdp typ 2.5kΩ;Ct max 0.5pf;VR 100v;Pd 0.4W;IF 50mA;T; 175 °C
17	1SV36	7		M1112	trr typ 1.0us;rds max 10.0Ω;rdp typ 2.5kΩ;Ct max 0.6pf;VR 100V;Pd 0.4W;IF 50mA;T; 175°C
18	1SV37	7		F155	trr typ 1.0us;rds max 10.0Ω;rdp typ 2.5kΩ;Ct max 0.6pf;VR 100V;Pd 0.4W;IF 50mA;T; 175°C
19	1SV46	7	Si$	M1113	trr max 120ns;Ph 4.0W;Li 0.7 dB;C; max 0.2pf;VR 60v;IF 50mA;T; 175 °C
20	1SV47	7	Si$	F155	trr max 120ns;Ph 4.0W;Li 0.7 dB;C; max 0.2pf;VR 60V;IF 50mA;T; 175°C
21	1SV48	7		F156	trr max 60ns;P(tc 25°C) 1.0W;Li 1.0 dB;C; 0.36pf;VR 30V;IF 50mA;T; 175°C
22	1SV65	7	Si$	M1114	trr max 60ns;P(TC 25°C) 0.5W;Li 0.9 dB;C; 0.18pf;VR 30v;IF 50mA;T;175 °C
23	1SV66	7	Si$	M1114	trr max 60ns;P(TC 25°C) 0.5W;Li 0.9 dB;C: 0.18pf;VR 30V;IF 50mA;T;175°C
24	2N6701	7	Si	W26a	Pout 23dBm at 1dB;Pt 1.1W;Osc Freq 5.0G;NPN
25♦	A2S024	7	Si♦	C205	Schott Barrier;Fast Switch,General Purpose;F(F) min/V(F) 1.0V 15mA;Single Diode
26♦	A2S031	7	Si♦	C205	Fast Switching;Low Turn-on;Min IF 10mA at .45V;Lifetime 100pS at IF 5.0mA;Single Diode
27	A2S087	7	Si♦	C205	Schott Barr Fast Switch, Mixer, Detector;Med Cap;I(F) min/V(F) 1.0V-35mA;Single Diode
28	A2S097	7	Si♦	C205	Schott Barr Fast Switch, Mixer, Detector;Med Cap;I(F) min/V(F) 1.0V-20mA;Single Diode
29	A2S301	7	Si♦	A416	Schott Barr;Fast Switch,Mixer,Detector to 3GHz;If(min) 50mA;V(F) at 1V
30	A2S302	7	Si♦	A416	Schott Barr;Fast Switch,Mixer,Detector to 3GHz;If(min) 35mA;V(F) at 1V
31	A2S303	7	Si♦	A416	Schott Barr;Fast Switch,Mixer,Detector to 3GHz;If(min) 35mA;V(F) at 1V
32	A2S305	7	Si♦	A416	Schott Barr;Fast Switch,Mixer,Detector to 3GHz;If(min) 75mA;V(F) at 1V
33	A2S306	7	Si♦	A416	Matched Pair of A2S301;Unencapsulated/Unconnected
34	A2S308	7	Si♦	A416	Matched Pair of A2S303;Unencapsulated/Unconnected
35♦	A2S356	7	Si♦	M1246b	Matched Bridge Quad Encapsulated (A2S303)
36	A2S370	7	Si♦	A416	Matched Quad of A2S303;Unencapsulated/Unconnected
37♦	A2S396	7	Si♦	M1246a	Matched Ring Quad Encapsulated (A2S303)
38	A2S800	7	Si♦	A416	Schott Barrier;Fast Switch,General Purpose;F(F) min/V(F) 1.0V 15mA;Single Diode
39	A2S804	7	Si♦	A416	Schott Barrier;Fast Switch,General Purpose;F(F) min/V(F) 1.0V 15mA;Match Pair
40	A2S805	7	Si♦	A416	Schott Barrier;Fast Switch,General Purpose;F(F) min/V(F) 1.0V 15mA;Match Quad
41	A2S807	7	Si♦	A416	Schott Barrier;Fast Switch,General Purpose;F(F) min/V(F) 1.0V 15mA;Single Diode
42	A2S810	7	Si♦	A416	Schott Barr Fast Switch, Mixer, Dectector;Med Cap;I(F) min/V(F) 1.0V-35mA;Single Diode
43	A2S811	7	Si♦	A416	Schott Barr Fast Switch, Mixer, Dectector;Med Cap;I(F) min/V(F) 1.0V-20mA;Single Diode
44♦	A2S813	7	Si♦	M1246b	Schott Barr Fast Switch, Mixer, Detector;Med Cap;V(F) Match (20mV/1 and 10A);Match Bridge Qu
45♦	A2S814	7	Si♦	M1246a	Schott Barr Fast Switch, Mixer, Detector;Med Cap;V(F) Match (20mV/1 and 10A);Match Ring Quad
46	A2S815	7	Si♦	A416	Schott Barr Fast Switch, Mixer, Detector;Med Cap;V(F) Match (20mV/1 and 10A);Match Quad
47	A2S826	7	Si♦	A416	Schott Barr Fast Switch, Mixer, Detector;Med Cap;V(F) Match (10mV/10mA);Batch Match
48♦	A2S835	7	Si♦	A416	Fast Switching;Low Turn-on;Min IF 10mA at .45V;Lifetime 100pS at IF 5.0mA;Single Diode
49♦	A2S838	7	Si♦	A416	Fast Switching;Low Turn-on;Min IF 50mA at 1.0V;Lifetime 100pS at IF 5.0mA;Single Diode
50♦	A2S839	7	Si♦	A416	Fast Switching;Low Turn-on;VF Match 10mV at 10mA;Min IF 10mA at .45V;Batch Matched
51	A2S860	7	Si♦	A416	Schott Barr Fast Switch, Mixer, Detector;Med Cap;V(F) Match (20mV/1 and 10A);Match Pair
52♦	A2S861	7	Si♦	A416	Fast Switching;Low Turn-on;VF Match 10mV at 5mA;Min IF 10mA at .45V;Matched Pair
53	A2S862	7	Si♦	A416	Schott Barr Fast Switch, Mixer, Detector;Med Cap;V(F) Match (20mV/1 and 10A);Match Quad
54♦	A2S863	7	Si♦	A416	Fast Switching;Low Turn-on;VF Match 10mV at 5mA;Min IF 10mA at .45V;Matched Quad
55	A2S864	7	Si♦	A416	Schott Barr Fast Switch, Mixer, Detector;Med Cap;V(F) Match (20mV/1 and 10A);Match Pair
56	A2S865	7	Si♦	A416	Schott Barrier;Fast Switch,General Purpose;F(F) min/V(F) 1.0V 15mA;Batch Match
57	A2S866	7	Si♦	A416	Schott Barr Fast Switch, Mixer, Detector;Med Cap;V(F) Match (10mV/10mA);Batch Match
58	A2S900	7	Si♦	A416	Schott Barr;Fast Switch,Mixer,Detector to 3GHz;If(min) 20mA;V(F) at 1V
59	A2S912	7	Si♦	A416	Matched Pair (A2S900) Unencapsulated/Unconnected
60	A2S970	7	Si♦	A416	Matched Quad (A2S900) Unencapsulated/Unconnected
61♦	A5S001	7		C205	PIN Hi Speed Sw;Trr 5.0nS typ;Lifetime 15nS typ;VBR 70Vmin;Rs 1.0Ω typ;Cap .12pf typ
62♦	A5S012	7	Si	C204	PIN Universal Sw;Trr 150nS typ;Lifetime 200nS typ;VBR 150Vmin;Rs 1.0Ω typ;Cap .07pf typ
63♦	A5S013	7	Si	C205	PIN Universal Sw;Trr 150nS typ;Lifetime 200nS typ;VBR 150Vmin;Rs 1.0Ω typ;Cap .07pf typ
64♦	A5S025	7		C204	PIN Lo Freq Sw;Trr 8.0uS typ;Lifetime 1.3uS typ;VBR 100Vmin;Rs 1.5Ω typ;Cap .10pf typ
65♦	A5S034	7	Si	C205	Med Speed Gen Purpose RF Control;Min Vbr 30V;Ct 1.0pf at 20V
66♦	A5S090	7	Si	C205	Medium Speed Switch,RF Control;Min VBR 100V at IR 10uA;Rs 1Ω at 20mA IF;Lifetime 200nS typ.
67♦	A5S091	7	Si	C204	Medium Speed Switch,RF Control;Min VBR 100V at IR 10uA;Rs 1Ω at 20mA IF;Lifetime 200nS typ.
68	A5S092	7	Si	C205	Hi Speed RF Cont Switch;V(BR) min, 50V;R(S) Typ 1.5Ω;T(RR) 1.0ns(Typ)
69	A5S093	7	Si	C204	Long Life,Low Dist RF Attenuator;Lifetime (Typ) 2.0us;V(BR) 100V, I(R) at 10mA
70	A5S105	7	Si	F10an†	PIN Gen Purpose Sw;Trr150nS;Lifetime 100nS min;VBR200Vmin;Rs1.2Ωmax;CT.32pf max;Pd 1.0W
71♦	A5S107	7	Si	F27ay	PIN Gen Purpose Sw;Trr 150nS;Lifetime 100nS min;VBR 200V min;Rs1.2Ωmax;CT.35pf max;Pd3.0W
72	A5S113	7	Si	F10an†	PIN Hi Speed Sw;Trr 10nS;Lifetime 15nS typ;VBR 70Vmin;Rs 1.0Ω max;CT .40pf max;Pd 1.0W
73	A5S115	7	Si	F27ah†	PIN Hi Speed Sw;Trr 10nS;Lifetime 15nS typ;VBR 70Vmin;Rs 1.0Ω max;CT .45pf max;Pd 3.0W
74♦	A5S138	7	Si	A416	PIN Gen Purpose Sw;Trr 8.0uS;Lifetime 1.0uSmin;VBR 100Vmin;Rs 2.5Ω max;CT.40pf max;Pd1.5W
75♦	A5S139	7	Si	A416	PIN Gen Purpose Sw;Trr 9.0uS;Lifetime 1.7uSmin;VBR 100Vmin;Rs 3.5Ω max;CT.40pf max;Pd 1.5W
76	A5S161	7	Si	C217	Hi Speed RF Cont Switch;V(BR) min, 70V;R(S) Typ 1.0Ω;T(RR) 5.0ns(Typ)
77	A5S163	7	Si	C217	Medium Speed Switch,RF Control;Min V(BR) 200V,I(R) at 10uA;R(S) max 1.2Ω,I(F) at 10mA
78	A5S165	7	Si	C217	Medium Speed Switch,RF Control;Min V(BR) 200V,I(R) at 10uA;R(S) max 1.2Ω,I(F) at 10mA
79	A5S168	7	Si	A1ah†	PIN Gen Purpose Sw;VBR 35Vmin;Rs .60Ω max;CT 1.0pf max
80	A5S188	7	Si	A1ah†	PIN Gen Purpose Sw;VBR 35Vmin;Rs .50Ω max;CT 2.0pf max
81♦	A5S301	7	Si	A416	PIN Gen Purpose Sw;Trr 150nS;Lifetime 100nSmin;VBR 200Vmin;Rs 1.0Ω max;CT .25pf max;Pd 3.5W
82	A5S302	7	Si	A1ah†	PIN Gen Purpose Sw;Trr 150nS;Lifetime 100nSmin;VBR 300Vmin;Rs 1.0Ω max;CT .20pf max;Pd 3.0W
83	A5S303	7	Si	A1ah†	PIN Gen Purpose Sw;Trr 150nS;Lifetime 100nSmin;VBR 100Vmin;Rs 1.5Ω max;CT .30pf max;Pd 2.5W
84	A5S339	7	Si	A1ah†	PIN Gen Purpose SW;Trr 150nS;Lifetime 100nS min;VBR 150Vmin;RS 1.25Ωmax;CT.25pf max;Pd2.0W
85♦	A5S342	7	Si	A416	PIN Gen Purpose Sw;Trr 5.0nSmax;Lifetime 15nS typ;VBR70Vmin;Rs1.0Ωmax;CT.40pf max;Pd3.0W
86	A5S350	7	Si	C216	Medium Speed Switch,RF Control;Min V(BR) 200V,I(R) at 10uA;R(S) max 2.0Ω,I(F) at 20mA
87	A5S377	7	Si	A1ah†	PIN Gen Purpose Sw;Trr 150nS;Lifetime 100nS min;VBR 200V min;Rs1.5Ωmax;CT.30pf max;Pd2.5W
88♦	A5S400	7	Si	C205	X Band Limiter Chip;1.0W CW,100W Peak;VBR 40Vmin;IF 40mAmin;Cap.20pf typ
89♦	A5S401	7	Si	C205	X Band Limiter Chip;1.0W CW,100W Peak;VBR 30Vmin;IF 40mAmin;Cap.20pf typ
90♦	A5S402	7	Si	C205	Ku Band Limiter Chip;1.0W CW,70W Peak;VBR 40Vmin;IF 40mAmin;Cap.12pf typ
91♦	A5S403	7	Si	C205	Ku Band Limiter Chip;1.0W CW,70W Peak;VBR 30Vmin;IF 40mAmin;Cap.12pf typ
92	A5S420	7	Si	A416	Hi Speed RF Cont Switch;V(BR) min, 50V;R(S) Typ 1.5Ω;T(RR) 1.0ns(Typ)
93▼	A5S423	7	Si	C216	RF Control Medium Speed Switch;Min V(BR) 200V at I(R) 10uA;R(S) 2.0ohm at I(F) 20mA
94▼	A750	7		M1240	SPST PIN Diode Switch;Max VSWR 1.5;26.5-40.0GHz Freq range;1.5dB Insertion Loss
95▼	A751	7		M1241	SPDT PIN Diode Switch;1.5 max VSWR;100nS Switching;26.5-40GHz Freq;2.0dB Insertion Loss
96▼	AHD0402-0	7		M1257	SPDT Switch;VSWR 1.8 max;Isolation 50dB min;Insertion Loss 1.3dB max;Freq 2.0-4.0GHz
97▼	AHD0802-0	7		M1257	SPDT Switch;VSWR 1.8 max;Isolation 50dB min;Insertion Loss 1.8dB max;Freq 2.0-8.0GHz
98▼	AHD1202-0	7		M1257	SPDT Switch;VSWR 1.8 max;Isolation 50dB min;Insertion Loss 2.3dB max;Freq 2.0-12.0GHz
99▼	AHD1802-0	7		M1257	SPDT Switch;VSWR 1.8 max;Isolation 50dB min;Insertion Loss 2.9dB max;Freq 2.0-18.0GHz
100▼	AHF0402-0	7		M1258	SP5T Switch;VSWR 1.8 max;Speed 100nS;Isol 50dB min;Ins Loss 1.7dB max;Freq 2.0-4.0GHz
101▼	AHF0802-0	7		M1258	SP5T Switch;VSWR 1.8 max;Speed 100nS;Isol 50dB min;Ins Loss 2.2dB max;Freq 2.0-8.0GHz
102▼	AHF1202-0	7		M1258	SP5T Switch;VSWR 1.8 max;Speed 100nS;Isol 50dB min;Ins Loss 2.7dB max;Freq 2.0-12.0GHz
103▼	AHF1802-0	7		M1258	SP5T Switch;VSWR 1.8 max;Speed 100nS;Isol 50dB min;Ins Loss 3.5dB max;Freq 2.0-18.0GHz
104▼	AHL0402-0	7		M1259	Limiter;VSWR 1.8 max;Pin -10dBm;Lim thresh 10dBm typ;Ins Loss 1.0dB max;Freq 2.0-4.0GHz
105▼	AHL0802-0	7		M1259	Limiter;VSWR 1.8 max;Pin -10dBm;Lim thresh 10dBm typ;Ins Loss 1.3dB max;Freq 2.0-8.0GHz
106▼	AHL1202-0	7		M1259	Limiter;VSWR 1.8 max;Pin -10dBm;Lim thresh 10dBm typ;Ins Loss 1.8dB max;Freq 2.0-12.0GHz
107▼	AHL1802-0	7		M1259	Limiter;VSWR 1.8 max;Pin -10dBm;Lim thresh 10dBm typ;Ins Loss 2.2dB max;Freq 2.0-18.0GHz
108▼	AHQ0402-0	7		M1258	SP4T Switch;VSWR 1.8 max;Speed 100nS;Isol 50dB min;Ins Loss 1.6dB max;Freq 2.0-4.0GHz
109▼	AHQ0802-0	7		M1258	SP4T Switch;VSWR 1.8 max;Speed 100nS;Isol 50dB min;Ins Loss 2.2dB max;Freq 2.0-8.0GHz
110▼	AHQ1202-0	7		M1258	SP4T Switch;VSWR 1.8 max;Speed 100nS;Isol 50dB min;Ins Loss 2.7dB max;Freq 2.0-12.0GHz

8. MISCELLANEOUS DEVICES

IN ORDER OF (1) USE and (2) TYPE No.

LINE No.	[2] TYPE No.	[1] USE	DESCRIPTION MAT.	DESCRIPTION DWG. No.	TECHNICAL DATA
1▼	AHQ1802-0	7		M1258	SP4T Switch;VSWR 1.8 max;Speed 100nS;Isol 50dB min;Ins Loss 3.4dB max;Freq 2.0-18.0GHz
2▼	AHS0402-0	7		M1256	SPST Switch;Ins Loss 0.9dB max;Freq 2.0-4.0GHz;VSWR 1.8 max;Isolation 40dB min;Speed 50nS
3▼	AHS0402-1	7		M1256	SPST Switch;Ins Loss 1.1dB max;Freq 2.0-4.0GHz;VSWR 1.8 max;Isolation 55dB min;Speed 50nS
4▼	AHS0802-0	7		M1256	SPST Switch;Ins Loss 1.2dB max;Freq 4.0-8.0GHz;VSWR 1.8 max;Isolation 40dB min;Speed 50nS
5▼	AHS0802-1	7		M1256	SPST Switch;Ins Loss 1.4dB max;Freq 4.0-8.0GHz;VSWR 1.8 max;Isolation 60dB min;Speed 50nS
6▼	AHS1202-0	7		M1256	SPST Switch;Ins Loss 1.7dB max;Freq 8.0-12.0GHz;VSWR 1.8 max;Isolation 40dB min;Speed 50nS
7▼	AHS1202-1	7		M1256	SPST Switch;Ins Loss 1.9dB max;Freq 8.0-12.0GHz;VSWR 1.8 max;Isolation 60dB min;Speed 50nS
8▼	AHS1802-0	7		M1256	SPST Switch;Ins Loss 2.1dB max;Freq 12.0-18.0GHz;VSWR 1.8 max;Isolation 40dB min;Speed 50nS
9▼	AHS1802-1	7		M1256	SPST Switch;Ins Loss 2.4dB max;Freq 12.0-18.0GHz;VSWR 1.8 max;Isolation 60dB min;Speed 50nS
10▼	AHT0402-0	7		M1258	SP3T Switch;VSWR 1.8 max;Speed 100nS;Isol 50dB min;Ins Loss 1.4dB max;Freq 2.0-4.0GHz
11▼	AHT0802-0	7		M1258	SP3T Switch;VSWR 1.8 max;Speed 100nS;Isol 50dB min;Ins Loss 2.0dB max;Freq 2.0-8.0GHz
12▼	AHT1202-0	7		M1258	SP3T Switch;VSWR 1.8 max;Speed 100nS;Isol 50dB min;Ins Loss 2.5dB max;Freq 2.0-12.0GHz
13▼	AHT1802-0	7		M1258	SP3T Switch;VSWR 1.8 max;Speed 100nS;Isol 50dB min;Ins Loss 3.1dB max;Freq 2.0-18.0GHz
14▼	BA243A	7	Si	DO35	VR 35V max;IF 100mA max at VF 1.0V;Z 1.0 Ω max at IF 10mA;Ct 1.8pF max;IR 50nA at VR 20V
15▼	BA244A	7	Si	DO35	VR 35V max;IF 100mA max at VF 1.0V;IR 50nA at VR 20V;ZF 0.5Ω at IF 10mA;Ct 1.8pF max
16♦	BA282	7	Si	DO35	VR 35V max;IF 100mA max at VF 1.0V;IR 50nA at VR 20V;ZF 0.7Ω at IF 3.0mA;Ct 1.25pF max
17♦	BA283	7	Si	DO35	VR 35V max;IF 100mA max at VF 1.0V;IR 50nA at VR 20V;ZF 1.2Ω at IF 3.0mA;Ct 1.2pF max
18	BA379	7		M1149	PIN Diode;VR 30V;IF 20mA;VF 1.0V at IF 20mA
19▼	BA479	7	Si	A342a	Current Controlled RF resistance in adjustable attenuators;CD 0.5pF;Zr 9k Ω at 100MHz/0VR
20▼	BA479A	7	Si	A342a	Current Controlled RF resistance in adjustable attenuators;CD 0.5pF;Zr 2.5k Ωat 100MHz/0VR
21▼	BA479G	7	Si	DO35	Current Controlled RF resistance in adjustable attenuators;CD 0.5pF;Zr 4.5k Ωat 100MHz/0VR
22♦	BA682	7	Si	F166	VR 35V max;IF 100mA max at VF 1.0V;IR 50nA at VR 20V;ZF 0.7Ω at IF 3.0mA;Ct 1.25pF max
23▼	BA683	7	Si	F166	VR 35V max;IF 100mA max at VF 1.0V;IR 50nA at VR 20V;ZF 1.2Ω at IF 3.0mA;Ct 1.2pF max
24	BAR12-1	7		DO35	PIN Diode;V(BR) 150V min;Charge Carrier Lifetime 1.5us typ
25	BAR12-2	7		DO35	PIN Diode;V(BR) 150V min;Charge Carrier Lifetime 2.5us typ
26	BAR12-3	7		DO35	PIN Diode;V(BR) 150V min;Charge Carrier Lifetime 4.0us typ
27	BAR12-5	7		DO35	PIN Diode;V(BR) 150V min;Charge Carrier Lifetime 6.0us typ
28	BAR13-1	7		A342	PIN Diode;V(BR) 150V min;Charge Carrier Lifetime 1.5us typ
29	BAR13-2	7		A342	PIN Diode;V(BR) 150V min;Charge Carrier Lifetime 2.5us typ
30	BAR13-3	7		A342	PIN Diode;V(BR) 150V min;Charge Carrier Lifetime 4.0us type
31	BAR13-5	7		A342	PIN Diode;V(BR) 150V min;Charge Carrier Lifetime 6.0us typ
32	BAR14-1	7		TO236	PIN Diode;V(BR) 150V min;Charge Carrier Lifetime 1.5us typ
33	BAR14-2	7		TO236	PIN Dioed;V(BR) 150V min;Charge carrrier lifetime 2.5us typ.
34	BAR14-3	7		TO236	PIN Dioed;V(BR) 150V min;Charge carrier lifetime 4.0 us typ
35	BAR14-5	7		TO236	PIN Dioed;V(BR) 150V min;Charge carrier lifetime 6.0us typ
36	BAR15-1	7		TO236	PIN Dioed;V(BR) 150V min;Charge carrier lifetime 1.5us typ
37	BAR15-2	7		TO236	PIN Dioed;V(BR) 150V min;Charge carrier lifetime 2.5us typ
38	BAR15-3	7		TO236	PIN Dioed;V(BR) 150V min;Charge carrier lifetime 4.0us typ
39	BAR15-5	7		TO236	PIN Dioed;V(BR) 150V min;Charge carrier lifetime 6.0us typ
40	BAR16-1	7		TO236	PIN Dioed;V(BR) 150V min;Charge carrier lifetime 1.5us type
41	BAR16-2	7		TO236	PIN Diode;V(BR) 150V min;Charge Carrier Lifetime 2.5us typ
42	BAR16-3	7		TO236	PIN Diode;V(BR) 150V min;Charge Carrier Lifetime 4.0us typ
43	BAR16-5	7		TO236	PIN Diode;V(BR) 150V min;Charge Carrier Lifetime 6.0us typ
44▼	BB621	7	Si	F165	Current Controlled RF resistance in adjustable attenuators;CD 9pf,f 470MHz,Rs 0.8Ω max
45▼	BB622	7	Si	F165	Current Controlled RF resistance in adjustable attenuators;RS 1.2Ω max at CD 9pf and 470MHz
46▼	BB629	7	Si	F165	Current Controlled RF resistance in adjustable attenuators;RS 0.7Ω max at CD 12pf and 100MHz
47	BXY42B	7	Si		PIN Diodes for Phase Shifting Switch Applications;VBR at IR/10uA 150V;CVR at VR 50V/1MHz 0
48	BXY42BA2	7		M1068	PIN Diode;VR 50V min at IR 10uA
49	BXY42BA3	7		M1069	PIN Diode;VR 50V min at IR 10uA
50	BXY42BA4	7		M1070	PIN Diode;VR 50V min at IR 10uA
51	BXY42BA5	7		F121	PIN Diode;VR 50V min at IR 10uA
52	BXY42BA6	7		F134	PIN Diode;VR 50V min at IR 10uA
53	BXY43A	7		F139	PIN Diode;VR 150V min at IR 10uA
54	BXY43B	7		F139	PIN Diode;VR 150V min at IR 10uA
55	BXY43C#	7	Si	F139	Pin diode;Vr 150V at 10uA;Cj 0.15 to 0.3pf at Vr 50V,f 1MHz;Rs .8Ω at IF 100mA,f 2.4GHz
56	BXY44E	7	Si		PIN Diodes for Phase Shifting Switch Applications;VBR at IR/10uA 350V;CVR at VR 50V/1MHz 1
57	BXY58EA	7	Si		PIN Diodes for Phase Shifting Switch Applications;VBR at IR/10uA 500V;CVR at VR 50V/1MHz 0
58	BXY59D	7	Si		PIN Diodes for Phase Shifting Switch Applications;VBR at IR/10uA 650V;CVR at VR 50V/1MHz 0
59	CLA3131-01	7	Si	V4†	R-F Limiter;Freq.Rng100MHz-20GHz;Typ Insertion Loss0.10db at10GHz;Typ recovery Time 10ns
60	CLA3131-02	7	Si	V4†	R-F Limiter;Freq.Rng100MHz-20GHz;Typ Insertion Loss0.20db at10GHz;Typ recovery Time 10ns
61	CLA3131-03	7	Si	V4†	R-F Limiter;Freq.Rng100MHz-20GHz;Typ Insertion Loss0.20db at5.0GHz;Typ recovery Time 10ns
62	CLA3132-01	7	Si	V4†	R-F Limiter;Freq.Rng100MHz-20GHz;Typ Insertion Loss0.10db at10GHz;Typ recovery Time 20ns
63	CLA3132-02	7	Si	V4†	R-F Limiter;Freq.Rng100MHz-20GHz;Typ Insertion Loss0.20db at10GHz;Typ recovery Time 20ns
64	CLA3132-03	7	Si	V4†	R-F Limiter;Freq.Rng100MHz-20GHz;Typ Insertion Loss0.20db at5.0GHz;Typ recovery Time 20ns
65	CLA3133-01	7	Si	V4†	R-F Limiter;Freq.Rng100MHz-20GHz;Typ Insertion Loss0.10db at10GHz;Typ recovery Time 50ns
66	CLA3133-02	7	Si	V4†	R-F Limiter;Freq.Rng100MHz-20GHz;Typ Insertion Loss0.20db at10GHz;Typ recovery Time 50ns
67	CLA3133-03	7	Si	V4†	R-F Limiter;Freq.Rng100MHz-20GHz;Typ Insertion Loss0.20db at5.0GHz;Typ recovery Time 50ns
68	CLA3134-01	7	Si	V4†	R-F Limiter;Freq Rnc 100MHz-20 GHz;VB 15V;Recovery Time 5.0 ns typ;Insertion Loss 10db
69	CLA3134-02	7	Si	V4†	R-F Limiter;Freq Rnc 100MHz-20 GHz;VB 30V;Recovery Time 5.0 ns typ;Insertion Loss 10db
70	CLA3135-01	7	Si	V4†	R-F Limiter;Freq Rnc 100MHz-20 GHz;VB 30V;Recovery Time 10 ns typ;Insertion Loss 10db
71	CLA3135-02	7	Si	V4†	R-F Limiter;Freq Rnc 100MHz-20 GHz;VB 60V;Recovery Time 10 ns typ;Insertion Loss 10db
72	CSA7205	7	Si	u30a	High Volt,PIN;VB 500V min;Rs 1.2Ω typ at 100mA/500MHZ;Lifetime .5 u sec typ
73	CSA7205A	7	Si	u30b	High Volt,PIN;VB 500V min;Rs .5Ω typ at 100mA/500MHZ;Lifetime 2.0 u sec typ
74	CSA7205B	7	Si	u30b	High Volt,PIN;VB 500V min;Rs .4Ω typ at 100mA/500MHZ;Lifetime 3.0 u sec typ
75	CSA7205C	7	Si	u30c	High Volt,PIN;VB 500V min;Rs .25Ω typ at 100mA/500MHZ;Lifetime 4.0 u sec typ
76	CSB7002-01	7	Si	V4	PIN/NIP Fast Sw;Ts 5.0ns typ;Lifetime 50ns typ;Rs 8.0Ω typ at 500MHz,1.0mA;VBR 80V min
77	CSB7002-02	7	Si	V4	PIN/NIP Fast Sw;Ts 5.0ns typ;Lifetime 80ns typ;Rs 2.5Ω typ at 500MHz,1.0mA;VBR 80V min
78	CSB7002-03	7	Si	V4	PIN/NIP Fast Sw;Ts 5.0ns typ;Lifetime 80ns typ;Rs 2.5Ω typ at 500MHz,1.0mA;VBR 80V min
79	CSB7002-04	7	Si	V4	PIN/NIP Fast Sw;Ts 5.0ns typ;Lifetime 100ns typ;Rs 2.0Ω typ at 500MHz,1.0mA;VBR 80V min
80	CSB7002-05	7	Si	V4	PIN/NIP Lo Loss;Ts 5.0ns typ;Lifetime 20ns typ;Rs 3.0Ω typ at 500MHz,1.0mA;VBR 25V min
81	CSB7002-06	7	Si	V4	PIN/NIP Lo Loss;Ts 5.0ns typ;Lifetime 20ns typ;Rs 2.5Ω typ at 500MHz,1.0mA;VBR 25V min
82	CSB7002-07	7	Si	V4	PIN/NIP Lo Loss;Ts 5.0ns typ;Lifetime 20ns typ;Rs 2.5Ω typ at 500MHz,1.0mA;VBR 25V min
83	CSB7003-01	7	Si	V4	PIN/NIP Slow Sw;Ts 20ns typ;Lifetime 150ns typ;Rs 2.5Ω typ at 500MHz,1.0mA;VBR 80V min
84	CSB7003-02	7	Si	V4	PIN/NIP Slow Sw;Ts 20ns typ;Lifetime 200ns typ;Rs 2.5Ω typ at 500MHz,1.0mA;VBR 80V min
85	CSB7003-03	7	Si	V4	PIN/NIP Slow Sw;Ts 20ns typ;Lifetime 250ns typ;Rs 2.5Ω typ at 500MHz,1.0mA;VBR 80V min
86	CSB7003-04	7	Si	V4	PIN/NIP Slow Sw;Ts 20ns typ;Lifetime 300ns typ;Rs 2.5Ω typ at 500MHz,1.0mA;VBR 80V min
87	CSB7201-01	7	Si	V4	PIN/NIP Lo-Freq Atten;Ts 20ns typ;Lifetime 1.0us typ;Rs 50Ω typ at 500MHz,1.0mA;VBR 200Vmin
88	CSB7201-02	7	Si	V4	PIN/NIP Lo-Freq Atten;Ts 20ns typ;Lifetime 1.5us typ;Rs 30Ω typ at 500MHz,1.0mA;VBR 200Vmin
89	CSB7201-03	7	Si	V4	PIN/NIP Lo-Freq Atten;Lifetime 10us typ;Rs 20Ω typ at 500MHz,1.0mA;VBR 200V min
90	CSB7401-01	7	Si	V4	PIN/NIP Hi-Speed Atten;Ts 5.0ns typ;Lifetime 50ns typ;Rs 15Ω typ at 500MHz,1.0mA;VBR 100Vmin
91	CSB7401-02	7	Si	V4	PIN/NIP Hi-Speed Atten;Ts 5.0ns typ;Lifetime 80ns typ;Rs 10Ω typ at 500MHz,1.0mA;VBR 100Vmin
92	CSB7401-03	7	Si	V4	PIN/NIP Hi-Speed Atten;Ts 5.0ns typ;Lifetime 100ns typ;Rs 10Ωtyp at 500MHz,1.0mA;VBR 100Vmin
93	CSM7301-01	7	Si	V4	PIN/NIP Sw/Atten;Ts 20ns typ;Lifetime 100ns typ;Rs 8.0Ω typ at 500MHz,1.0mA;VBR 100V min
94	CSM7301-02	7	Si	V4	PIN/NIP Sw/Atten;Ts 20ns typ;Lifetime 150ns typ;Rs 8.0Ω typ at 500MHz,1.0mA;VBR 100V min
95	CSM7301-03	7	Si	V4	PIN/NIP Sw/Atten;Ts 20ns typ;Lifetime 200ns typ;Rs 5.0Ω typ at 500MHz,1.0mA;VBR 100V min
96	CSM7301-04	7	Si	V4	PIN/NIP Sw/Atten;Ts 5.0ns typ;Lifetime 50ns typ;Rs 15Ω typ at 500MHz,1.0mA;VBR 100V min
97	CSM7301-05	7	Si	V4	PIN/NIP Sw/Atten;Ts 5.0ns typ;Lifetime 70ns typ;Rs 15Ω typ at 500MHz,1.0mA;VBR 100V min
98	CSM7301-06	7	Si	V4	PIN/NIP Sw/Atten;Ts 5.0ns typ;Lifetime 100ns typ;Rs 15Ω typ at 500MNz,1.0mA;VBR 100V min
99	D5151	7	Si	A1ak	PIN Hi-Speed Sw;Ts 2.5ns typ;Lifetime 50ns typ;Rs 10Ω typ at 500MHz;1.0mA;VBR 50V min
100	D5151A	7	Si	A1ak	PIN Hi-Speed Sw;Ts 2.5ns typ;Lifetime 50ns typ;Rs 10Ω typ at 500MHz;1.0mA;VBR 80V min
101	D5151B	7	Si	A1ak	PIN Hi-Speed Sw;Ts 2.5ns typ;Lifetime 50ns typ;Rs 10Ω typ at 500MHz;1.0mA;VBR 80V min
102	DC1016	7	Si	A3ag	PIN,VHF-UHF;VR 250Vmin;Cd .70pFmax;Rf .75Ω max at 100mA;Lifetime 1.0us typ
103	DC1028A	7	Si	A278	PIN,VHF-UHF;VR 250Vmin;Cd .45pFmax;Rf 1.1Ω max at 100mA;Lifetime 700ns typ
104	DC1222A	7	GA	S356b	Ku-Band Gunn Diode;Po 5.0mW, 140mA, 6.5VTyp; Max Ratings: VR1.0V, Pwr In 3.0W
105	DC1222B	7	GA	S356b	Ku-Band Gunn Diode;PO 10mW, 160mA, 6.5V Typ; Max Ratings: VR1.0V, Pwr In 3.0W
106	DC1222C	7	GA	S356b	Ku-Band Gunn Diode;Po 15mW, 170mA,6.5 Typ; Max Ratings: VR 1.0V, Pwr In 3.0W
107	DC1222D	7	GA	S356b	Ku-Band Gunn Diode;Po 20mW, 180mA, 6.5 Typ; Max Ratings: VR 1.0V, Pwr In 3.0W
108	DC1222E	7	GA	S356b	Ku-Band Gunn Diode;Po 30mW, 200 mA, 6.5 Typ; Max Ratings: VR1.0V Pwr In 3.0W
109	DC1272F	7	GA	S356b	Ku-Band Gunn Diode;Po 50mW, 500mA, 6.5Typ; Max Ratings: VR 1.0V, Pwr In 3.0W
110	DC1272G	7	GA	S356b	KuΩBand Gunn Diode;Po 100mW, 700mA, 6.5 Typ;Max Ratings: VR 1.0V, Pwr In 3.0W

8. MISCELLANEOUS DEVICES

IN ORDER OF (1) USE and (2) TYPE No.

LINE No.	[2] TYPE No.	[1] USE	DESCRIPTION MAT.	DWG. No.	TECHNICAL DATA
1	DC1272H	7	GA	S356b	Ku-Band Gunn Diode;Po 200mW, 800mA,6.5 Typ;Max Ratings: VR 1.0V, Pwr In 3.0W
2	DC2011	7	Si	u34Ø	PIN,Chip;VR 100Vmin;Cd .20pFmax at 50V;Rf 3.0Ω max at 25mA;trr 300ns typ
3	DC2011A,B,C,D,G	7	Si	V9Ø	PIN,Microstrip Carrier;VR 100Vmin;Cd .20pFmax at 50V;Rf 3.0Ω max at 25mA;trr 300ns typ
4	DC2011AR	7	Si	V9Ø	PIN, Microstrip Carrier;V(R) 100V min;Cd .20pF max at 50V;Rf 3.0Ω at 25mA;trr 300ns
5	DC2012	7	Si	M657	PIN,Microstrip Carrier;VR 100Vmin;Cd .20pFmax at 50V;Rf 3.0Ω max at 25mA;trr 300ns typ
6	DC2013	7	Si	u34Ø	PIN,Chip;VR 100Vmin;Cd .10pFmax at 50V;Rf 3.0Ω max at 50mA;trr 200ns typ
7	DC2013A,B,C,D,G	7	Si	V9Ø	PIN,Microstrip Carrier;VR 100Vmin;Cd .10pFmax at 50V;Rf 3.0Ω max at 50mA;trr 200ns typ
8	DC2013AR	7	Si	V9	PIN, Microstrip Carrier;V(R) 100V min;Cd .10pF max at 50V;Rf 3.0Ω at 50mA;trr 200ns
9	DC2020	7	Si	M658a	PIN Limiter;1-12GHz;Leakage 100mWmax at 100Wpeak;Ins Loss 1.9dB;Rect Curr Return Req
10	DC2023	7			Pin diode Vr V min;Fr 1-12GHz;Insertion loss 1.9dB;Pp 100W
11	DC2101A	7	Si	V10 †	PIN General Purpose;VR 250Vmin;Cd .50pfmax;Rf 1.2Ω max at 100mA;trr 700ns typ
12	DC2101B	7	Si	V10 †	PIN General Purpose;VR 250Vmin;Cd .50pfmax;Rf 1.2Ω max at 100mA;trr 700ns typ
13	DC2101C	7	Si	V10 †	PIN General Purpose;VR 250Vmin;Cd .50pfmax;Rf 1.2Ω max at 100mA;trr 700ns typ
14	DC2101G	7	Si	V10 †	PIN General Purpose;VR 250Vmin;Cd .50pfmax;Rf 1.2Ω max at 100mA;trr 700ns typ
15	DC2103A	7	Si	V10 †	PIN General Purpose;VR 500Vmin;Cd 1.0pfmax;Rf 1.2Ω max at 100mA;trr 2.0us typ
16	DC2103B	7	Si	V10 †	PIN General Purpose;VR 500Vmin;Cd 1.0pfmax;Rf 1.2Ω max at 100mA;trr 2.0us typ
17	DC2103C	7	Si	V10 †	PIN General Purpose;VR 500Vmin;Cd 1.0pfmax;Rf 1.2Ω max at 100mA;trr 2.0us typ
18	DC2103G	7	Si	V10 †	PIN General Purpose;VR 500Vmin;Cd 1.0pfmax;Rf 1.2Ω max at 100mA;trr 2.0us typ
19	DC2104A	7	Si	V10 †	PIN General Purpose;VR 250Vmin;Cd .40pfmax;Rf 1.2Ω max at 100mA;trr 700ns typ
20	DC2104B	7	Si	V10 †	PIN General Purpose;VR 250Vmin;Cd .40pfmax;Rf 1.2Ω max at 100mA;trr 700ns typ
21	DC2104C	7	Si	V10 †	PIN General Purpose;VR 250Vmin;Cd .40pfmax;Rf 1.2Ω max at 100mA;trr 700ns typ
22	DC2104G	7	Si	V10 †	PIN General Purpose;VR 250Vmin;Cd .40pfmax;Rf 1.2Ω max at 100mA;trr 700ns typ
23	DC2110A	7	Si	V10 †	PIN General Purpose;Vr 50Vmin;Cd .40pfmax;Rf 2.0Ω max at 20mA;trr 5.0ns typ
24	DC2110B	7	Si	V10 †	PIN General Purpose;Vr 50Vmin;Cd .40pfmax;Rf 2.0Ω max at 20mA;trr 5.0ns typ
25	DC2110C	7	Si	V10 †	PIN General Purpose;Vr 50Vmin;Cd .40pfmax;Rf 2.0Ω max at 20mA;trr 5.0ns typ
26	DC2110G	7	Si	V10 †	PIN General Purpose;Vr 50Vmin;Cd .40pfmax;Rf 2.0Ω max at 20mA;trr 5.0ns typ
27	DC2118A	7	Si	V10 †	PIN General Purpose;VR 100Vmin;Cd .40pfmax;Rf 1.0Ωmax at 100mA;Arr 50ns typ
28	DC2118B	7	Si	V10 †	PIN General Purpose;VR 100Vmin;Cd .40pfmax;Rf 1.0Ωmax at 100mA;Arr 50ns typ
29	DC2118C	7	Si	V10 †	PIN General Purpose;VR 100Vmin;Cd .40pfmax;Rf 1.0Ωmax at 100mA;Arr 50ns typ
30	DC2118G	7	Si	V10 †	PIN General Purpose;VR 100Vmin;Cd .40pfmax;Rf 1.0Ωmax at 100mA;trr 50ns typ
31	DC2119A	7	Si	V10 †	PIN General Purpose;VR 100Vmin;Cd .40pfmax;Rf 1.0Ωmax at 100mA;trr 50ns typ
32	DC2119B	7	Si	V10 †	PIN General Purpose;VR 100Vmin;Cd .40pfmax;Rf 1.0Ωmax at 100mA;trr 50ns typ
33	DC2119C	7	Si	V10 †	PIN General Purpose;VR 100Vmin;Cd .40pfmax;Rf 1.0Ωmax at 100mA;trr 50ns typ
34	DC2119G	7	Si	V10 †	PIN General Purpose;VR 100Vmin;Cd .40pfmax;Rf 1.0Ωmax at 100mA;trr 50ns typ
35	DC2130A	7	Si	V10 †	PIn General Purpose;VR 500Vmin;Cd .75pfmax;Rf .80Ω max at 100mA;trr 2.0us typ
36	DC2130G	7	Si	V10 †	PIn General Purpose;VR 500Vmin;Cd .75pfmax;Rf .80Ω max at 100mA;trr 2.0us typ
37	DC2140A	7	Si	V10 †	PIn General Purpose;Vr 400Vmin;Cd 1.0pfmax;Rf 1.0Ω max at 100mA;trr 4.0us typ
38	DC2140G	7	Si	V10 †	PIn General Purpose;Vr 400Vmin;Cd 1.0pfmax;Rf 1.0Ω max at 100mA;trr 4.0us typ
39	DC2171H	7	Si		PIN Limiten;.01-1GHz; Leakage 100mW max at 10W peak;Ins Loss0.5db
40	DC2172H	7	Si		PIN Limiter;.01-.03GHz;Leakage 100mW max at 10W Peak;Ins Loss 0.2db
41	DC2403A	7	Si	M956	Pin;Stripline;VSWR 1.2;Ins Loss 2.0dB;Isolation 20dB;trr 2000nS.
42	DC2410A	7	Si	M956	Pin;Stripline;VSWR 1.2;Ins Loss 1.0dB;Isolation 20dB;trr 8nS.
43	DC2412A	7	Si	M956	Pin;Stripline;VSWR 1.2;Ins Loss 1.0dB;Isolation 20dB;trr 3nS.
44	DC2418A1	7	Si	M956	Pin;Stripline;VR 150V;VSWR 1.2;Ins.Loss .50dB;Isolation 25dB;trr 50nS typ.
45	DC2418A	7	Si	M956	Pin;Stripline;VR 150V;VSWR 1.2;Ins.Loss .50dB;Isolation 20dB;trr 50nS typ.
46	DC2419A1	7	Si	M956a	Pin;Stripline;VR 150V;VSWR 1.2;Ins.Loss .50dB;Isolation 25dB;trr 50nS typ.
47	DC2419A	7	Si	M956a	Pin;Stripline;VR 150V;VSWR 1.2;Ins.Loss .50dB;Isolation 20dB;trr 50nS typ.
48	DC2443A	7	Si	M956a	Pin;Stripline;VSWR 1.2;Ins Loss 2.0dB;Isolation 20dB;trr 2000nS.
49	DC2460A	7	Si	M956a	Pin;Stripline;VSWR 1.2;Ins Loss 0.6dB;Isolation 30dB;trr 50nS.
50	DC2510A,B,C,D,G	7	Si	V9a	PIN,Microstrip Carrier;VR 50Vmin;Cd .20pFmax at 50V;Rf 2.0Ω max at 25mA;trr 5.0ns typ
51	DC2512A,B,C,D,G	7	Si	V9a	PIN,Microstrip Carrier;VR 25Vmin;Cd .12pFmax at 20V;Rf 2.0Ω max at 25mA;trr 3.0ns typ
52	DC2518A,B,C,D,G	7	Si	V9a	PIN,Microstrip Carrier;VR 50Vmin;Cd .10pFmax at 50V;Rf 1.0Ω max at 100mA;trr 50ns typ
53	DC2519A,B,C,D,G	7	Si	V9	PIN,Microstrip Carrier;VR 50Vmin;Cd .10pFmax at 50V;Rf 1.0Ω max at 100mA;trr 50ns typ
54	DC2552A,B,C,D,G	7	Si	V9	PIN,Microstrip Carrier;VR 25Vmin;Cd .12pFmax at 20V;Rf 2.0Ω max at 25mA;trr 3.0ns typ
55	DC2602	7	Si	M1194	PIN;VBr 40V;Switch Speed 1ns at 94GHz
56♦	DC2603	7	Si	M1194	PIN;VBr 40V Switch Speed 1ns
57	DC2610A	7	Si	M658a	PIN,Microstrip Sw;1-12GHz;100Wpeak;VR 50V;Isol 20dB(20mA);Ins Loss .60dB(-20V);trr 6.0ns
58	DC2611	7			Pin diode; Vr 50Vmin;Fr 1-12GHz;Insertion loss 0.6dB at -20V;Pp 100W
59	DC2612A	7	Si	M658a	PIN Sw/Limiter;1-12GHz;Leakage 100mWmax at 5.0Wpeak;Ins Loss 1.0dB;Isol 20dB;trr 3.0ns
60	DC2613	7			Pin diode; Vr 20Vmin;Fr 1-12GHz;Insertion loss 0.6dB at -20V;Pp10W
61	DC2614	7			Pin diode;Vr100Vmin;Fr 1-12GHz;Insertion loss 0.5dB at -20V;Pp100W
62	DC2615	7			Pin diode;Vr 100Vmin;Fr 1-12GHz;Insertion loss0.5dB at -20V;Pp100W
63	DC2616	7			Pin diode;Vr 20Vmin;Fr 1-12GHz;Insertion loss 0.6dB at -20V;Pp10W
64	DC2618A	7	Si	M658a	PIN,Microstrip Sw;1-12GHz;100Wpeak;VR 100V;Isol 20dB(20mA);Ins Loss .50dB(-20V);trr 40ns
65	DC2619A	7	Si	M658b	PIN,Microstrip Sw;1-12GHz;100Wpeak;VR 100V;Isol 20dB(20mA);Ins Loss .50dB(-20V);trr 40ns
66	DC2624D	7	Si	A317c	PIN Limiter;12-18GHz;Leakage 100mWmax at 50Wpeak;Ins Loss 1.6dB
67	DC2652A	7	Si	M658b	PIN Sw/Limiter;1-12GHz;Leakage 100mWmax at 5.0Wpeak;Ins Loss 1.0dB;Isol 20dB;trr 3.0ns
68	DC2801A	7	Si	A278	PIN,VHF-UHF;VR 100Vmin;Cd .50pFmax;Rf 2.0Ω max at 100mA;Lifetime 700ns typ
69	DC2802G	7	Si	A3ag	PIN,VHF-UHF;VR 100Vmin;Cd .80pFmax;Rf .90Ω max at 100mA;Lifetime 1.0us typ
70	DC2825E	7	Si	DO35	PIN,VHF-UHF;VR 250Vmin;Cd .40pFmax;Rf 1.0Ω max at 100mA;Lifetime 300ns typ
71	DC2840E	7	Si	DO35	PIN,VHF-UHF;VR 250Vmin;Cd .30pFmax;Rf 1.0Ω max at 100mA;Lifetime 300ns typ
72	DC2841E	7	Si	DO35	PIN,VHF-UHF;VR 200Vmin;Cd .40pFmax;Rf 1.5Ω max at 100mA;Lifetime 300ns typ
73	DC2842E	7	Si	DO35	PIN,VHF-UHF;VR 200Vmin;Cd .25pFmax;Rf 2.0Ω max at 100mA;Lifetime 500ns typ
74	DC2843E	7	Si	DO35	PIN,VHF-UHF;VR 100Vmin;Cd .40pFmax;Rf 1.0Ω max at 100mA;Lifetime 50ns typ
75	DC2844E	7	Si	DO35	PIN,VHF-UHF;VR 100Vmin;Cd .40pFmax;Rf 1.5Ω max at 100mA;Lifetime 50ns typ
76	DC2845E	7	Si	DO35	PIN,VHF-UHF;VR 150Vmin;Cd .30pFmax;Rf 3.5Ω max at 100mA;Lifetime 1.5us typ
77	DC2846E	7	Si	DO35	PIN,VHF-UHF;VR 150Vmin;Cd .40pFmax;Rf 2.5Ω max at 100mA;Lifetime 700ns typ
78	DC2847E	7	Si	DO35	PIN,VHF-UHF;VR 100Vmin;Cd .30pFmax;Rf 2.0Ω max at 25mA;Lifetime 500ns typ
79	DC2848E	7	Si	DO35	PIN,VHF-UHF;VR 100Vmin;Cd .40pFmax;Rf 1.2Ω max at 100mA;Lifetime 500ns typ
80	DC2849E	7	Si	DO35	PIN,VHF-UHF;VR 100Vmin;Cd .40pFmax;Rf 3.5Ω max at 100mA;Lifetime 1.5us typ
81	DC2850E	7	Si	DO35	PIN,VHF-UHF;VR 100Vmin;Cd 1.2pFmax;Rf .80Ω max at 5.0mA;Lifetime 10ns typ
82	DC2870C	7	Si#	DO35	PIN, VHF-UHF;VR 50V min;Cd .40pF max;1.5Ω at 20mA; Lifetime 5ns Typ
83	DL0200	7	Si	t	Limiter diode;Cj.15pf;Rs1.5Ω;Tl5nS ;Max Power2.5W;Peek Power 48dBm;Leakage Point Typ. 22dBm
84	DL0201	7	Si	t	Limiter diode;Cj.25pf;Rs1.0Ω;Tl5nS ;Max Power3.0W;Peek Power 50dBm;Leakage Point Typ. 23dBm
85	DL201	7	Si	F151	Liniter diode;VBR 30v;Cj 0.1pf at Vr -10v,f 1MHz;Pp 100W at lus;TL 5ns
86	DL202	7	Si	F151	Limiter diode;VBR 30v;Cj 0.2pf at Vr -10v,f 1MHz;Pp 100W at 1us;TL 5ns
87	DL203	7	Si	F151	Limiter diode;VBR 30v;Cj 0.3pf at Vr -10v,f 1MHz;Pp 100W at 1us;TL 5ns
88	DL204	7	Si	F151	Limiter diode;VBR 30;Cj 0.4pf at Vr -10v,f 1MHz;Pp 100W at 1us;TL 5ns
89	DL0300	7	Si	t	Limiter diode;Cj.15pf;Rs1.5Ω;Tl10nS;Max Power2.0W;Peek Power 48dBm;Leakage Point Typ. 26dBm
90	DL0301	7	Si	t	Limiter diode;Cj.25pf;Rs0.9Ω;Tl10nS;Max Power3.0W;Peek Power 50dBm;Leakage Point Typ. 23dBm
91	DL401	7	Si	F151	Limiter diode;VBR 40v;Cj 0.1pf at Vr -10v,f 1MHz;Pp 100W at 1us;TL 5ns
92	DL402	7	Si	F151	Limiter diode;VBR 40v;Cj 0.2pf at Vr -10v,f 1MHz;Pp 100W at 1us;TL 5ns
93	DL403	7	Si	F151	Limiter diode;VBR 40v;Cj 0.3pf at Vr.10v,f 1MHz;Pp100 W at lus;TL5ns
94	DL404	7	Si	F151	Limiter diode;VBR 40v;Cj 0.4pf at Vr -10v,f 1MHz;Pp 100W at 1us;TL 5nss
95	DL0500	7	Si	t	Limiter diode;Cj.15pf;Rs1.5Ω;Tl20nS;Max Power2.5W;Peek Power 51dBm;Leakage Point Typ. 27dBm
96	DL0501	7	Si	t	Limiter diode;Cj.25pf;Rs0.9Ω;Tl20nS;Max Power3.5W;Peek Power 51dBm;Leakage Point Typ. 28dBm
97	DL601	7	Si	F151	Limiter diode;VBR 60v;Cj 0.1pf at Vr -10v,f 1MHz;Pp 100W at 1us;TL 10ns
98	DL602	7	Si	F151	Limiter diode;VBR 60v;Cj 0.2pf at Vr -10v,f 1MHz;Pp 100W at 1us;TL 10ns
99	DL603	7	Si	F151	Limiter diode;VBR 60v;Cj 0.3pf at Vr -10v,f 1MHz;Pp 100W at 1us;TL 5ns
100	DL604	7	Si	F151	Limiter diode;VBR 60v;Cj 0.4pf at Vr -10v,f 1MHz;Pp 100W at 1us;TL 10ns
101	DL801	7	Si	F151	Limiter diode;Vbr 80V;Cj 0.1pF at Vr -10V;f 1MHz;Pp 100W at lus max;TI 15nS
102	DL802	7	Si	F151	Limiter diode;Vbr 80V;Cj 0.2pF at Vr -10V,f 1MHz;Pp 100W at lus max;TI 15nS
103	DL803	7	Si	F151	Limiter diode;Vbr 80V;Cj 0.3pf at Vr -10V,f 1MHz;Pp 100W at lus max;TI 15nS
104	DL804	7	Si	F151	Limiter diode;Vbr 80V;Cj 0.4pf at Vr -10V,f 1MHz;Pp 100W at lus max;TI 15nS
105	DN0700	7	SiΔ$	V1	NIP(Reverse Diffused PIN)Hi Speed Sw;Trr 5.0nS typ;Rs1.8Ω max at 100mA,1.0GHz;VB 70V min
106	DN0701	7	SiΔ$	V1	NIP(Reverse Diffused PIN)Hi Speed Sw;Trr 5.0nS typ;Rs1.5Ω max at 100mA,1.0GHz;VB 70V min
107	DN0702	7	SiΔ$	V1	NIP(Reverse Diffused PIN)Hi Speed Sw;Trr 5.0nS typ;Rs1.0Ω max at 100mA,1.0GHz;VB 70V min
108	DN1000	7	SiΔ$	V1	NIP(Reverse Diffused PIN)Hi Speed Sw;Trr 10nS typ;Rs2.0Ω max at 100ma,1.0GHz;VB 100V min
109	DN1001	7	SiΔ$	V1	NIP(Reverse Diffused PIN)Hi Speed Sw;Trr 10nS typ;Rs1.5Ω max at 100mA,1.0GHz;VB 100V min
110	DN1002	7	SiΔ$	V1	NIP(Reverse Diffused PIN)Hi Speed Sw;Trr 10nS typ;Rs1.0Ω max at 100mA,1.0GHz;VB 100V min

8. MISCELLANEOUS DEVICES

IN ORDER OF (1) USE and (2) TYPE No.

LINE No.	[2] TYPE No.	[1] DESCRIPTION USE	MAT.	DWG. No.	TECHNICAL DATA
1	DN1005AM	7	Si*§	M1052	Vb Min at 10uA 100V;Max Cj at 10V/1.0MHz 0.3pf;Max Rs at -20mA/1.0GHz 3.5Ω
2	DN1005BM	7	Si*§	M1052	Vb Min at 10uA 100V;Max Cj at 10V/1.0MHz .05pf;Max Rs at -20mA/1.0GHz 2.5Ω
3	DN1005CM	7	Si*§	M1052	Vb Min at 10uA 100V;Max Cj at 10V/1.0MHz .06pf;Max Rs at -20mA/1.0GHz 1.8Ω
4	DN2000	7	SiΔ$	V1	NIP(Reverse Diffused PIN)Hi Speed Sw;Trr 20nS typ;Rs 2.5Ω max at 100mA,1.0GHz;VB200V min
5	DN2002	7	SiΔ$	V1	NIP(Reverse Diffused PIN)Hi Speed Sw;Trr 20nS typ;Rs 1.0Ω max at 100mA,1.0GHz;VB200V min
6	DN3000	7	SiΔ	V1	NIP(Reverse Diffused PIN)Hi Volt Sw;VB 300V min;Rs 1.2Ω max at 100mA,1.0GHz;TL 1.0uS min
7	DN3000A	7	SiΔ	V1	Nip;General Purpose;Vb Min 300V;Cj at 50V/1.0MHz 50ff;Rs Max at 20mA/1.0GHz 3.0Ω;TL 900nS
8	DN3001	7	SiΔ	V1	NIP(Reverse Diffused PIN)Hi Volt Sw;VB 300V min;Rs .60Ω max at 100mA,1.0GHz;TL 1.0uS min
9	DN3002	7	SiΔ	V1	NIP(Reverse Diffused PIN)Hi Volt Sw;VB 300V min;Rs .40Ω max at 100mA,1.0GHz;TL 1.0uS min
10	DN5000	7	SiΔ	V1	NIP(Reverse Diffused PIN)Hi Volt Sw;VB 500V min;Rs 1.2Ω max at 100mA,1.0GHz;TL 1.5uS min
11	DN5001	7	SiΔ	V1	NIP(Reverse Diffused PIN)Hi Volt Sw;VB 500V min;Rs .60Ω max at 100mA,1.0GHz;TL 1.5uS min
12	DN5002	7	SiΔ	V1	NIP(Reverse Diffused PIN)Hi Volt Sw;VB 500V min;Rs .40Ω max at 100mA,1.0GHz;TL 1.5uS min
13	DN8000	7	SiΔ	V1	NIP(Reverse Diffused PIN)Hi Volt Sw;VB 800V min;Rs 1.2Ω max at 100mA,1.0GHz;TL 1.8uS min
14	DN8001	7	SiΔ	V1	NIP(Reverse Diffused PIN)Hi Volt Sw;VB 800V min;Rs .60Ω max at 100mA,1.0GHz;TL 1.8uS min
15	DN8002	7	SiΔ	V1	NIP(Reverse Diffused PIN)Hi Volt Sw;VB 800V min;Rs .40Ω max at 100mA,1.0GHz;TL 1.8uS min
16	DN10001	7	Si		High Power PIN/NIP Diode; Vb1000V/10uA; Cj2.0pf/ 50V;Rs.30Ω;Ts500nS;Pd35W
17	DN10002	7	Si	u64a	High Power PIN/NIP Diode; Vb1000V/10uA; Cj1.3pf/ 50V;Rs.35Ω;Ts350nS;Pd25W
18	DN10003	7	Si	u64b	High Power PIN/NIP Diode; Vb1000V/10uA; Cj0.6pf/ 50V;Rs.50Ω;Ts250nS;Pd17.5W
19	DN10004	7	Si	u64c	High Power PIN/NIP Diode; Vb1000V/10uA; Cj0.4pf/ 50V;Rs.70Ω;Ts200nS;Pd14.6W
20	DP0300	7	SiΔ	V1	PIN;Fast Sw;Trr 1.0ns;Tl 10nS;Cj 150ff Max at 6V/1.0MHz;Vb Min 30V
21	DP0301	7	SiΔ	V1	PIN;Fast Sw;Trr 1.0ns;Tl 10nS;Cj 200ff Max at 6V/1.0MHz;Vb Min 30V
22	DP0302	7	SiΔ	V1	PIN;Fast Sw;Trr 1.0ns;Tl 10nS;Cj 250ff Max at 6V/1.0MHz;Vb Min 30V
23	DP0700	7	SiΔ$	V1	VB 70V min at 10uA;Cj 100ffmax at 50V,1MHz;RS1.8Ωmax;TL 50ns max at IR6mA,If10mA;Trr5.0ns
24	DP0700A	7	Si		Switching and Attenuating Diode;Cj.05Max;RsTyp./20mA-2.8;Tl50nS;Ts5nS
25	DP0701	7	SiΔ$	V1	VB 70V min at 10uA;Cj 200ffmax at 50V,1MHz;RS1.5Ωmax;TL 50ns max at IR6mA,If10mA;Trr5.0ns
26	DP0702	7	SiΔ$	V1	VB 70V min at 10uA;Cj 300ffmax at 50V,1MHz;RS1.0Ωmax;TL 50ns max at IR6mA,If10mA;Trr5.0ns
27	DP1000	7	SiΔ$	V1	VB 100V min at 10uA;Cj100ff max at 50V,1MHz;RS2.0Ωmax;TL100ns max at IR6mA,If10mA;Trr10ns
28	DP1001	7	SiΔ$	V1	VB 100V min at 10uA;Cj 200ff max at 50V,1MHz;RS 1.5Ωmax;IL100ns max at IR6mA,If10mA;Trr10ns
29	DP1002	7	SiΔ$	V1	VB 100V min at 10uA;Cj 300ff max at 50V,1MHz;RS 1.0Ωmax;IL100ns max at IR6mA,If10mA;Trr10ns
30	DP1005A000	7	Si$	M888☑	PIN;VB 100V min;Ct at 10V 30fF max;RS at 100mA 2.0Ω max;TS 10ns 10-90%
31	DP1005A003	7	Si$	M888a☑	PIN;VB 100V min;Ct at 10V 30fF max;RS at 100mA 2.0Ω max;TS 10ns 10-90%
32	DP1005AM	7	Si*§	M1052	Vb Min at 10uA 100V;Max Cj at -10V/1.0MHz 0.3pf;Max Rs at 20mA/1.0GHz 3.5Ω
33	DP1005B000	7	Si$	M888☑	PIN;VB 100V min;Ct at 10V 50fF max;RS at 100mA 1.7Ω max;TS 10ns 10-90%
34	DP1005B003	7	Si$	M888a☑	PIN;VB 100V min;Ct at 10V 50fF max;RS at 100mA 1.7Ω max;TS 10ns 10-90%
35	DP1005BM	7	Si*§	M1052	Vb Min at 10uA 100V;Max Cj at -10V/1.0MHz 0.5pf;Max Rs at 20mA/1.0GHz 2.5Ω
36	DP1005C000	7	Si$	M888☑	PIN;VB 100V min;Ct at 10V 60fF max;RS at 100mA 1.5Ω max;TS 10ns 10-90%
37	DP1005C003	7	Si$	M888a☑	PIN;VB 100V min;Ct at 10V 60fF max;RS at 100mA 1.5Ω max;TS 10ns 10-90%
38	DP1005CM	7	Si*§	M1052	Vb Min at 10uA 100V;Max Cj at -10V/1.0MHz .06pf;Max Rs at 20mA/1.0GHz 1.8Ω
39	DP1501	7	SiΔ	V1	PIN;Precision Atten;Cj Max at 50V/1.0MHz 60ff;Rs Min at 10uA 1.0kΩ;Vb Min 150V;Tl 500nS
40	DP1502	7	SiΔ	V1	PIN;Precision Atten;Cj Max at 50V/1.0MHz 100ff;Rs Min at 10uA 600Ω;Vb Min 150V;Tl 500nS
41	DP1503	7	SiΔ	V1	PIN;Precision Atten;Cj Max at 50V/1.0MHz 150ff;Rs Min at 10uA 500Ω;Vb Min 150V;Tl 500nS
42	DP1504	7	SiΔ	V1	PIN;Precision Atten;Rs Min at 10uA 400Ω;Cj Max at 50V/1.0MHz 200ff;Vb Min 150V;TL 500nS
43	DP1505	7	SiΔ	V1	PIN;Precision Atten;Rs Min at 10uA 350Ω;Cj Max at 50V/1.0MHz 250ff;Vb Min 150V;TL 500nS
44	DP1506	7	SiΔ	V1	PIN;Precision Atten;Rs Min at 10uA 300Ω;Cj Max at 50V/1.0MHz 300ff;Vb Min 150V;TL 500nS
45	DP2000	7	SiΔ$	V1	VB 200V min at 10uA;Cj 100ff max at 50V,1MHz;RS 2.5Ωmax;IL200ns max at IR6mA,If10mA;Trr20ns
46	DP2001	7	SiΔ$	V1	VB 200V min at 10uA;Cj 200ff max at 50V,1MHz;RS 1.5Ωmax;IL200ns max at IR6mA,If10mA;Trr20ns
47	DP2002	7	SiΔ$	V1	VB 200V min at 10uA;Cj 300ff max at 50V,1MHz;RS 1.0Ωmax;IL200ns max at IR6mA,If10mA;Trr20ns
48	DP3000	7	SiΔ	V1	PIN;VB 300Vmin at 10uA;Cj 100ff max at 50V,1MHz;RS 1.2Ω max;TL 1.0usmin;Rther 40°C/W max
49	DP3000A	7	SiΔ	V1	PIN;General Purpose;Vb Min 300V;Cj at 50V/1.0MHz 50ff;Rs Max at 20mA/1.0GHz 3.5Ω;TL 600nS
50	DP3001	7	SiΔ	V1	PIN;VB 300Vmin at 10uA;Cj 300ff max at 50V,1MHz;RS 600mΩmax;TL1.0usmin;Rther 25°C/W max
51	DP3002	7	SiΔ	V1	PIN;VB 300Vmin at 10uA;Cj 500ff max at 50V,1MHz;RS 400mΩmax;TL1.0usmin;Rther 20°C/W max
52	DP5000	7	SiΔ	V1	PIN;VB 500Vmin at 10uA;Cj 100ff max at 50V,1MHz;RS 1.2Ωmax;TL1.5usmin;Rther 35°C/W max
53	DP5001	7	SiΔ	V1	PIN;VB 500Vmin at 10uA;Cj 300ff max at 50V,1MHz;RS 600mΩmax;TL1.5usmin;Rther 20°C/W max
54	DP5002	7	SiΔ	V1	PIN;VB 500Vmin at 10uA;Cj 500ff max at 50V,1MHz;RS 400mΩmax;TL1.5usmin;Rther 18°C/W max
55	DP8000	7	SiΔ	V1	PIN;VB 800Vmin at 10uA;Cj 100ff max at 50V,1MHz;RS 1.2Ωmax;TL1.8usmin;Rther 25°C/W max
56	DP8001	7	SiΔ	V1	PIN;VB 800Vmin at 10uA;Cj 300ff max at 50V,1MHz;RS 600mΩmax;TL1.8usmin;Rther 20°C/W max
57	DP8002	7	SiΔ	V1	PIN;VB 800Vmin at 10uA;Cj 500ff max at 50V,1MHz;RS 400mΩmax;TL1.8usmin;Rther 15°C/W max
58	DP10001	7	Si	u64	High Power PIN/NIP Diode; Vb1000V/10uA; Cj2.0pf/-50V;Rs.3Ω ;Ts500nS;Pd35W
59	DP10002	7	Si	u64a	High Power PIN/NIP Diode; Vb1000V/10uA; Cj1.3pf/-50V;Rs.35Ω;Ts350nS;Pd25W
60	DP10003	7	Si	u64b	High Power PIN/NIP Diode; Vb1000V/10uA; Cj0.6pf/-50V;Rs.50Ω;Ts250nS;Pd17.5W
61	DP10004	7	Si	u64c	High Power PIN/NIP Diode; Vb1000V/10uA; Cj0.4pf/-50V;Rs.70Ω;Ts200nS;Pd14.6W
62	DPB101-00S	7	Si*		Beam Lead PIN;BW 1 to 18GHz;Rs at 50mH 5.5Ω;Ts 25mS;Tl 80mS;Vb Min 100v
63	DPB102-00S	7	Si*		Beam Lead PIN;BW 1 to 18GHz;Rs at 50mA 5.0Ω;Ts 25mS;Tl 80mS;Vb Min 100v
64	DPB103-00S	7	Si*		Beam Lead PIN;BW 1 to 18GHz;Rs at 50mA 4.0Ω;Ts 25mS;Tl 80mS;Vb Min 100v
65	DPB104-00S	7	Si*		Beam Lead PIN;BW 1 to 18GHz;Rs at 50mA 3.0Ω;Ts 25mS;Tl 80mS;Vb Min 100v
66	DPB105-00S	7	Si*		Beam Lead PIN;BW 1 to 18GHz;Rs at 50mA 4.0Ω;Ts 25mS;Tl 80mS;Vb Min 100v
67	DPB106-00S	7	Si	W277	Pin diode;Vb100V;Rs3.5Ω/50ma;Ts25nS;TlTyp.100nS;Tlmax.150nS
68	DSA6925	7	Si		VB 500V;Cj 150fF;Rd 2.5Ω max;Switching Time 100ns;Carrier Lifetime 200ns.
69	DSA6925A	7	Si		VB 500V;Cj 151-400fF;Rd 1.4Ω max;Switching Time 100ns;Carrier Lifetime 400ns.
70	DSA6925B	7	Si		VB 500V;Cj 401-600fF;Rd 1.1Ω max;Switching Time 100ns;Carrier Lifetime 600ns.
71	DSA6925C	7	Si		VB 500V;Cj 601-1.0pF;Rd 900mΩ max;Switching Time 100ns;Carrier Lifetime 800ns.
72♦	DSA6928	7	Si	F98	VB 500V;Cj 150fF;Rd 2.5Ω max;Switching Time 100ns;Carrier Lifetime 200ns.
73♦	DSA6928A	7	Si	F98	VB 500V;Cj 151-400fF;Rd 1.4Ω max;Switching Time 100ns;Carrier Lifetime 400ns.
74♦	DSA6928B	7	Si	F98	VB 500V;Cj 401-600fF;Rd 1.1Ω max;Switching Time 100ns;Carrier Lifetime 600ns.
75♦	DSA6928C	7	Si	F98	VB 500V;Cj 601-1.0pF;Rd 900mΩ max;Switching Time 100ns;Carrier Lifetime 800ns.
76	DSG6470A	7	Si	M934	PIN Beam Lead to 34GHz;Ts 25ns typ;Lifetime 100ns typ;Rs 5.5Ωmax at 3GHz,50mA;VBR 200V min
77	DSG6470B	7	Si	M934	PIN Beam Lead to 34GHz;Ts 25ns typ;Lifetime 100ns typ;Rs 4.0Ωmax at 3GHz,50mA;VBR 200V min
78	DSG6470C	7	Si	M934	PIN Beam Lead to 34GHz;Ts 25ns typ;Lifetime 100ns typ;Rs 3.0Ωmax at 3GHz,50mA;VBR 150V min
79	DSG6470D	7	Si	M934	PIN Beam Lead to 34GHz;Ts 25ns typ;Lifetime 100ns typ;Rs 5.5Ωmax at 3GHz,50mA;VBR 200V min
80	DSG6470E	7	Si	M934	PIN Beam Lead to 34GHz;Ts 25ns typ;Lifetime 100ns typ;Rs 4.0Ωmax at 3GHz,50mA;VBR 200V min
81	DSG6474A	7	Si	M934	PIN Beam Lead to 34GHz;Ts 25ns typ;Lifetime 100ns typ;Rs 5.5Ωmax at 3GHz,50mA;VBR 100V min
82	DSG6474B	7	Si	M934	PIN Beam Lead to 34GHz;Ts 25ns typ;Lifetime 100ns typ;Rs 4.0Ωmax at 3GHz,50mA;VBR 100V min
83	DSG6474C	7	Si	M934	PIN Beam Lead to 34GHz;Ts 25ns typ;Lifetime 100ns typ;Rs 3.0Ωmax at 3GHz,50mA;VBR 100V min
84	DSG6474D	7	Si	M934	PIN Beam Lead to 34GHz;Ts 25ns typ;Lifetime 100ns typ;Rs 5.5Ωmax at 3GHz,50mA;VBR 100V min
85	DSG6474E	7	Si	M934	PIN Beam Lead to 34GHz;Ts 25ns typ;Lifetime 100ns typ;Rs 4.0Ωmax at 3GHz,50mA;VBR 100V min
86	DSH6172	7	Si$	A1ak	Schottky Barrier;Switch;VB 20Vmin;IR 500nA max;VF .40Vdc at 1.0mA max
87	DSH6173	7	Si$	A1ak	Schottky Barrier;Switch;VB 30Vmin;IR 300nA max;VF .40Vdc at 1.0mA max
88	DSH6174	7	Si$	A1ak	Schottky Barrier;Switch;VB 30Vmin;IR 300nA max;VF .40Vdc at 1.0mA max
89	DSM4380A	7	Si	M1092	Abs Max Ratings Pt 250mw;T 150°C; VB 100V; Rs 3.5ΩMAX;CT 0.03pF MAX
90	DSM4380B	7	Si	M1092	Abs MAX Ratings Pt 250mw;T 150°C; VB 100V;Rs 3.0ΩMAX;CT 0.04pF MAX
91	DSM4380C	7	Si	M1092	Abs max Ratings Pt 250mW;T 150°C;VB 100V;Rs 2.5Ωmax;Ct .06pf max
92	DSM4380D	7	Si	M1092	Abs MAX Ratings Pt 250mw;T 150°C; VB 100V; Rs 4.0ΩMAX;CT 0.06pF MAX
93	DSM4380E	7	Si	M1092	Abs MAX Ratings Pt 250mw;T 150°C; VB 100V;Rs 3.0ΩMAX;CT 0.025pF MAX
94	DSM4381A	7	Si	M1092	Abs MAX Ratings Pt 250mw;T 150°C; VB200v;RS 3.5ΩMAX;CT 0.03pF MAX
95	DSM4381B	7	Si	M1092	Abs MAX Ratings Pt 250mw;T 150°C;VB 200v;RS 3.0ΩMAX;CT 0.04pF MAX
96	DSM4381C	7	Si	M1092	Abs MAX Ratings Pt 250mw;T 150°C; VB 200v;RS 2.5ΩMAX;CT 0.06pF MAX
97	DSM4381D	7	Si	M1092	Abs MAX Ratings Pt 250mw;T 150°C; VB 200v;RS 4.0ΩMAX;CT 0.06pF MAX
98	DSM4381E	7	Si	M1092	Abs MAX Ratings Pt 250mw;T 150°C; VB 200v;RS 3.0ΩMAX;CT 0.025pF MAX
99	GA504A	7	Δ	F79a	Pin Switching Diode;Ctot .50-.80pF;VBR 50Vmax;fc 200GHz at 50mA,50V,QS50nC
100	GA504B	7	Δ	F79a	Pin Switching Diode;Ctot .50-.80pF;VBR 50Vmax;fc 150GHz at 50mA,50V,QS50nC
101	GA504V	7	Δ	F79a	Pin Switching Diode;Ctot.45-1.0pF;VBR 50Vmax;fc100GHz at 50mA,50V;Qs25nC
102	GC4210	7	Si$	F111b†	PIN Fast Sw;TL 100nSmax at IF 10mA,IR 6mA;Cj .06pFmax at 10V;Rs 1.5Ω max at 20mA;VB 100Vmin
103	GC4211	7	Si$	F111b†	PIN Fast Sw;TL 100nSmax at IF 10mA,IR 6mA;Cj .10pFmax at 10V;Rs 1.0Ω max at 20mA;VB 100Vmin
104	GC4212	7	Si$	F111b†	PIN Fast Sw;TL 100nSmax at IF 10mA,IR 6mA;Cj .20pFmax at 10V;Rs .75Ω max at 20mA;VB 100Vmin
105	GC4213	7	Si$	F111b†	PIN Fast Sw;TL 100nSmax at IF 10mA,IR 6mA;Cj .30pFmax at 10V;Rs .60Ω max at 20mA;VB 100Vmin
106	GC4214	7	Si$	F111b†	PIN Fast Sw;TL 100nSmax at IF 10mA,IR 6mA;Cj .40pFmax at 10V;Rs .50Ω max at 20mA;VB 100Vmin
107	GC4215	7	Si$	F111b†	PIN Fast Sw;TL 100nSmax at IF 10mA,IR 6mA;Cj .50pFmax at 10V;Rs .35Ω max at 20mA;VB 100Vmin
108	GC4220	7	Si$	F111b†	PIN Fast Sw;TL 400nSmax at IF 10mA,IR 6mA;Cj .06pFmax at 10V;Rs 2.5Ω max at 20mA;VB 250Vmin
109	GC4221	7	Si$	F111b†	PIN Fast Sw;TL 400nSmax at IF 10mA,IR 6mA;Cj .10pFmax at 10V;Rs 2.0Ω max at 20mA;VB 250Vmin
110	GC4222	7	Si$	F111b†	PIN Fast Sw;TL 400nSmax at IF 10mA,IR 6mA;Cj .20pFmax at 10V;Rs 1.5Ω max at 20mA;VB 250Vmin

8. MISCELLANEOUS DEVICES

IN ORDER OF (1) USE and (2) TYPE No.

LINE No.	[2] TYPE No.	[1] USE	DESCRIPTION MAT.	DESCRIPTION DWG. No.	TECHNICAL DATA
1	GC4223	7	Si$	F111b†	PIN Fast Sw;TL 400nSmax at IF 10mA,IR 6mA;Cj .30pFmax at 10V;Rs 1.0Ω max at 20mA;VB 250Vmin
2	GC4224	7	Si$	F111b†	PIN Fast Sw;TL 400nSmax at IF 10mA,IR 6mA;Cj .40pFmax at 10V;Rs .80Ω max at 20mA;VB 250Vmin
3	GC4225	7	Si$	F111b†	PIN Fast Sw;TL 400nSmax at IF 10mA,IR 6mA;Cj .50pFmax at 10V;Rs .60Ω max at 20mA;VB 250Vmin
4	GC4271	7	Si$	F111b†	PIN Fast Sw;TL 60nSmax at IF 10mA,IR 6mA;Cj .10pFmax at 10V;Rs 1.0Ω max at 20mA;VB 70Vmin
5	GC4272	7	Si$	F111b†	PIN Fast Sw;TL 60nSmax at IF 10mA,IR 6mA;Cj .20pFmax at 10V;Rs .80Ω max at 20mA;VB 70Vmin
6	GC4273	7	Si$	F111b†	PIN Fast Sw;TL 60nSmax at IF 10mA,IR 6mA;Cj .30pFmax at 10V;Rs .70Ω max at 20mA;VB 70Vmin
7	GC4274	7	Si$	F111b†	PIN Fast Sw;TL 60nSmax at IF 10mA,IR 6mA;Cj .40pFmax at 10V;Rs .60Ω max at 20mA;VB 70Vmin
8	GC4275	7	Si$	F111b†	PIN Fast Sw;TL 60nSmax at IF 10mA,IR 6mA;Cj .50pFmax at 10V;Rs .50Ω max at 20mA;VB 70Vmin
9	GC4310	7	Si$	F111c†	NIP Fast Sw;TL 170nSmax at IF 10mA,IR 6mA;Cj .06pFmax at 10V;Rs 1.5Ω max at 20mA;VB 100Vmin
10	GC4311	7	Si$	F111c†	NIP Fast Sw;TL 170nSmax at IF 10mA,IR 6mA;Cj .10pFmax at 10V;Rs 1.0Ω max at 20mA;VB 100Vmin
11	GC4312	7	Si$	F111c†	NIP Fast Sw;TL 170nSmax at IF 10mA,IR 6mA;Cj .20pFmax at 10V;Rs .90Ω max at 20mA;VB 100Vmin
12	GC4313	7	Si$	F111c†	NIP Fast Sw;TL 170nSmax at IF 10mA,IR 6mA;Cj .30pFmax at 10V;Rs .80Ω max at 20mA;VB 100Vmin
13	GC4314	7	Si$	F111c†	NIP Fast Sw;TL 170nSmax at IF 10mA,IR 6mA;Cj .40pFmax at 10V;Rs .60Ω max at 20mA;VB 100Vmin
14	GC4315	7	Si$	F111c†	NIP Fast Sw;TL 170nSmax at IF 10mA,IR 6mA;Cj .50pFmax at 10V;Rs .40Ω max at 20mA;VB 100Vmin
15	GC4320	7	Si$	F111c†	NIP Fast Sw;TL 200nSmax at IF 10mA,IR 6mA;Cj .06pFmax at 10V;Rs 1.5Ω max at 20mA;VB 200Vmin
16	GC4321	7	Si$	F111c†	NIP Fast Sw;TL 200nSmax at IF 10mA,IR 6mA;Cj .10pFmax at 10V;Rs 1.2Ω max at 20mA;VB 200Vmin
17	GC4322	7	Si$	F111c†	NIP Fast Sw;TL 200nSmax at IF 10mA,IR 6mA;Cj .20pFmax at 10V;Rs 1.0Ω max at 20mA;VB 200Vmin
18	GC4323	7	Si$	F111c†	NIP Fast Sw;TL 200nSmax at IF 10mA,IR 6mA;Cj .30pFmax at 10V;Rs .90Ω max at 20mA;VB 200Vmin
19	GC4324	7	Si$	F111c†	NIP Fast Sw;TL 200nSmax at IF 10mA,IR 6mA;Cj .40pFmax at 10V;Rs .80Ω max at 20mA;VB 200Vmin
20	GC4325	7	Si$	F111c†	NIP Fast Sw;TL 200nSmax at IF 10mA,IR 6mA;Cj .50pFmax at 10V;Rs .50Ω max at 20mA;VB 200Vmin
21	GC4371	7	Si$	F111c†	NIP Fast Sw;TL 70nSmax at IF 10mA,IR 6mA;Cj .10pFmax at 10V;Rs .70Ω max at 20mA;VB 70Vmin
22	GC4372	7	Si$	F111c†	NIP Fast Sw;TL 70nSmax at IF 10mA,IR 6mA;Cj .20pFmax at 10V;Rs .70Ω max at 20mA;VB 70Vmin
23	GC4373	7	Si$	F111c†	NIP Fast Sw;TL 70nSmax at IF 10mA,IR 6mA;Cj .30pFmax at 10V;Rs .60Ω max at 20mA;VB 70Vmin
24	GC4374	7	Si$	F111c†	NIP Fast Sw;TL 70nSmax at IF 10mA,IR 6mA;Cj .40pFmax at 10V;Rs .50Ω max at 20mA;VB 70Vmin
25	GC4375	7	Si$	F111c†	NIP Fast Sw;TL 70nSmax at IF 10mA,IR 6mA;Cj .50pFmax at 10V;Rs .40Ω max at 20mA;VB 70Vmin
26	GC4410	7	SiΔ	F111b†	PIN Hi-Volt Sw;VB 100Vmin;Cj .10pFmax at 50V;Rs 1.5Ω max at 100mA;Lifetime 2.0uS min
27	GC4411	7	SiΔ	F111b†	PIN Hi-Volt Sw;VB 100Vmin;Cj .25pFmax at 50V;Rs 1.2Ω max at 100mA;Lifetime 2.0uS min
28	GC4412	7	SiΔ	F111b†	PIN Hi-Volt Sw;VB 100Vmin;Cj .50pFmax at 50V;Rs 1.0Ω max at 100mA;Lifetime 2.0uS min
29	GC4413	7	SiΔ	F111b†	PIN Hi-Volt Sw;VB 100Vmin;Cj .75pFmax at 50V;Rs .80Ω max at 100mA;Lifetime 2.0uS min
30	GC4430	7	SiΔ	F111b†	PIN Hi-Volt Sw;VB 300Vmin;Cj .10pFmax at 50V;Rs .60Ω max at 100mA;Lifetime 1.5uS min
31	GC4431	7	SiΔ	F111b†	PIN Hi-Volt Sw;VB 300Vmin;Cj .25pFmax at 50V;Rs .50Ω max at 100mA;Lifetime 1.5uS min
32	GC4432	7	SiΔ	F111b†	PIN Hi-Volt Sw;VB 300Vmin;Cj .50pFmax at 50V;Rs .40Ω max at 100mA;Lifetime 1.5uS min
33	GC4433	7	SiΔ	F111b†	PIN Hi-Volt Sw;VB 300Vmin;Cj .75pFmax at 50V;Rs .30Ω max at 100mA;Lifetime 1.5uS min
34	GC4490	7	SiΔ	F111b†	PIN Hi-Volt Sw;VB 900Vmin;Cj .10pFmax at 50V;Rs 1.5Ω max at 100mA;Lifetime 2.0uS min
35	GC4491	7	SiΔ	F111b†	PIN Hi-Volt Sw;VB 900Vmin;Cj .25pFmax at 50V;Rs 1.2Ω max at 100mA;Lifetime 2.0uS min
36	GC4492	7	SiΔ	F111b†	PIN Hi-Volt Sw;VB 900Vmin;Cj .50pFmax at 50V;Rs 1.0Ω max at 100mA;Lifetime 2.0uS min
37	GC4493	7	SiΔ	F111b†	PIN Hi-Volt Sw;VB 900Vmin;Cj .75pFmax at 50V;Rs .80Ω max at 100mA;Lifetime 2.0uS min
38	GC4510	7	SiΔ	F111c†	NIP Hi-Volt Sw;VB 100Vmin;Cj .10pFmax at 50V;Rs 1.5Ω max at 100mA;Lifetime 2.0uS min
39	GC4511	7	SiΔ	F111c†	NIP Hi-Volt Sw;VB 100Vmin;Cj .25pFmax at 50V;Rs 1.2Ω max at 100mA;Lifetime 2.0uS min
40	GC4512	7	SiΔ	F111c†	NIP Hi-Volt Sw;VB 100Vmin;Cj .50pFmax at 50V;Rs 1.0Ω max at 100mA;Lifetime 2.0uS min
41	GC4513	7	SiΔ	F111c†	NIP Hi-Volt Sw;VB 100Vmin;Cj .75pFmax at 50V;Rs .80Ω max at 100mA;Lifetime 2.0uS min
42	GC4530	7	SiΔ	F111c†	NIP Hi-Volt Sw;VB 300Vmin;Cj .10pFmax at 50V;RS .60Ω max at 100mA;Lifetime 1.5uS min
43	GC4531	7	SiΔ	F111c†	NIP Hi-Volt Sw;VB 300Vmin;Cj .25pFmax at 50V;Rs .50Ω max at 100mA;Lifetime 1.5uS min
44	GC4532	7	SiΔ	F111c†	NIP Hi-Volt Sw;VB 300Vmin;Cj .50pFmax at 50V;Rs .40Ω max at 100mA;Lifetime 1.5uS min
45	GC4533	7	SiΔ	F111c†	NIP Hi-Volt Sw;VB 300Vmin;Cj .75pFmax at 50V;Rs .30Ω max at 100mA;Lifetime 1.5uS min
46	GC4590	7	SiΔ	F111c†	NIP Hi-Volt Sw;VB 900Vmin;Cj .10pFmax at 50V;Rs 1.5Ω max at 100mA;Lifetime 2.0uS min
47	GC4591	7	SiΔ	F111c†	NIP Hi-Volt Sw;VB 900Vmin;Cj .25pFmax at 50V;Rs 1.2Ω max at 100mA;Lifetime 2.0uS min
48	GC4592	7	SiΔ	F111c†	NIP Hi-Volt Sw;VB 900Vmin;Cj .50pFmax at 50V;Rs 1.0Ω max at 100mA;Lifetime 2.0uS min
49	GC4593	7	SiΔ	F111c†	NIP Hi-Volt Sw;VB 900Vmin;Cj .75pFmax at 50V;Rs .80Ω max at 100mA;Lifetime 2.0uS min
50	GC4710	7	Si	F111b†	Limiter;VB35V;Cj0 150offmax;Cj-6 130offmax;Rs1.5Ωmax at20MHz;PeakPD 100W;TL5.0ns max
51	GC4711	7	Si	F111b†	Limiter;VB35V;Cj0 200offmax;Cj-6 180offmax;Rs1.0Ωmax at20MHz;PeakPD 100W;TL10ns max
52	GC4712	7	Si	F111b†	Limiter;VB35V;Cj0 400offmax;Cj-6 330offmax;Rs800Ωmax at20MHz;PeakPD 100W;TL10ns max
53	GC4720	7	Si	F111b†	Limiter;VB70V;Cj0 150offmax;Cj-6 130offmax;Rs1.5Ωmax at20MHz;PeakPD 500W;TL15ns max
54	GC4721	7	Si	F111b†	Limiter;VB70V;Cj0 200offmax;Cj-6 180offmax;Rs1.0Ωmax at20MHz;PeakPD 500W;TL20ns max
55	GC4722	7	Si	F111b†	Limiter;VB70V;Cj0 400offmax;Cj-6 330offmax;Rs800Ωmax at20MHz;PeakPD 500W;TL20ns max
56	GD402A	7	*	A352	VHF Switch;Rs 4.5Ω at 15mA;Ct .80pFmax at 5.0V;VR 15Vmax,IF 30mAmax
57	HP5082-0001	7		u20j	PIN;VBR 70V min;RS .8Ω;CVR .12pF;trr 5ns;Lifetime 15ns;all typical.
58	HP5082-0009	7			CT 0.14pF;NF 7.0dB;TSS -55dBM Equivalent to HP5082-2750
59	HP5082-0012	7		u19n	PIN;VBR 150V min;RS .8Ω;CVR .07pF;trr 150ns;Lifetime 200ns;All typical.
60	HP5082-0013	7			TSS-54dbm Equivalent to HSCH3206
61	HP5082-0023	7			CT 0.18pF;NF 6.0dB;TSS -54dBm Equivalent to HP5082-2713
62	HP5082-0024	7			VBR 70V;IF15mA;CT 1.7pF;Equivalent to HP5082-2800
63	HP5082-0025	7		u19e	PIN for VHF/UHF;VBR 100V min;RS 1.5Ω;CVR 0.1pF;trr 8us;Lifetime 1.3us;all typical.
64	HP5082-0029	7			CT 0.14pF;NF 7.0dB;TSS -54dBm;Equivalent to HP5082-2721
65	HP5082-0030	7		u19p	PIN;VBR 150V min;RS .8Ω;CVR .07pF;trr 150ns;Lifetime 200ns;All typical.
66	HP5082-0031	7			VBR 5.0V;IF 10mA;CT 0.8pF;Equivalent to HP5082-2835
67	HP5082-0034	7		u19a	PIN for VHF/UHF;VBR 35V min;RS 0.4Ω;CVR 0.8pF;trr 5ns;Lifetime 2.5ns;all typical.
68	HP5082-0039	7		u19f	PIN for VHF/UHF;VBR 100V min;RS 2.0Ω;CVR 0.1pF;trr 10us;Lifetime 2.0us;all typical.
69▼	HP5082-0041	7	♦#		Max Cjo .18pF;NF 6.0db at 9.375GHz;Junctoper temp -65°C-150°C
70	HP5082-0047	7		u19n	PIN;VBR 150V min;RS .6Ω;CVR .09pF;trr 150ns;Lifetime 200ns;All typical.
71	HP5082-0049	7		u19d	PIN;VBR 400V min;RS .6Ω;CVR .12pF;trr 200ns;Lifetime 800ns;all typical.
72▼	HP5082-0057	7	♦#	U69a	Max Cjo 1.0pF;VBR min 20V;IF min 35mA;Junct oper temp -65°C-150°C
73▼	HP5082-0058	7	♦#	U69a	Max Cjo 1.1pF;VBR min 15V;IF min 20mA;Junct oper temp -65°C-200°C
74▼	HP5082-0087	7	♦#	U69a	Max Cjo 1.0pF;VBR min 20V;IF min 35mA;Junct oper temp -65°C-200°C
75▼	HP5082-0094	7	♦#	U69	Max Cjo 1.7pF;VBR min 70V;IF min 15mA;Junct oper temp -65°C-200°C
76▼	HP5082-0097	7	♦#	U69a	Max Cjo 1.1pF;VBR min 15V;IF min 25mA;Junct oper temp -65°C-200°C
77	HP5082-2080	7			Equivalent to HP5082-2835
78	HP5082-2231	7		M908	VF 0.25V;RD 11Ω;CT 0.60pF;Freq. 2GHz;Quads for Double Balance Mixers
79	HP5082-2233	7		M908	VF 0.30V;RD 13Ω;CT 0.50pF;Freq. 4-8GHz;Quads for Double Balance Mixers
80	HP5082-2263	7		M908	V(F) 0.45V;R(D) 13Ω;C(T) 0.45pF;Freq: 4-8GHz;Quads for Double Bal. Mixers
81	HP5082-2271	7		M908	VF 0.25V;RD 11Ω;CT 0.60pF;Freq. 2-4GHz;Quads for Double Balance Mixer
82	HP5082-2272	7		M908	VF 0.25V;RD 13Ω;CT 0.45pF;Freq. 4-8GHz;Quads for Double Balance Mixer
83	HP5082-2274	7		A1ah	VBR 3V;CJO .12pF;NF 6.5dB;Freq. 16GHz;Schottky Diodes for Mixers and Detectors
84	HP5082-2277	7		M908	V(F) 0.35V;R(D) 16Ω;C(T) 0.60pF;Freq: 4-8GHz;Quads for Double Bal. Mixer
85	HP5082-2279	7		M908	V(F) 0.30V;R(D) 15Ω;C(T) 0.25pF;Freq: 8-12GHz;Quads for Double Bal. Mixer
86	HP5082-2280	7		M908	VF 0.30V;RD 15Ω;CT 0.20pF;Freq. 12-18GHz;Quads for Double Balance Mixer
87	HP5082-2291	7		M908	VF 0.35V;RD 11Ω;CT 0.60pF;Freq. 2GHz;Schottky Quads for Double Balance Mixerss
88	HP5082-2292	7		M908	V(F) 0.35V;R(D) 13Ω;C(T) 0.40pF;Freq 4-8GHz;Quads for Double Balance Mixers
89	HP5082-2294	7		M908	V(F) 0.45V;R(D) 15Ω;C(T) 0.20pF;Freq 12-18GHz;Quads for Double Balance Mixers
90	HP5082-2296	7		A1ah	Freq 9.375GHz:N(F) 6.0dB;Schottky for Mixers and Detectors
91	HP5082-2298	7		A1ah	Freq 9.375GHz;N(F) 6.5dB;Schottky for Mixers and Detectors
92	HP5082-2301	7		A1ah	V(BR) 30V;V(F) 400mV;I(F) 50mA;C(T) 1.0pF;for General Purpose App
93	HP5082-2302	7		A1ah	V(BR) 30V;V(F) 400mV;I(F) 35mA;C(T) 1.0pF;for General Purpose App
94	HP5082-2303	7		A1ah	V(BR) 20V;V(F) 400mV;I(F) 35mA;C(T) 1.0pF;for General Purpose App
95	HP5082-2305	7		A1ah	V(BR) 30V;V(F) 400mV;I(F) 75mA;C(T) 1.0pF;for General Purpose App
96	HP5082-2306	7		A1ah	Equivalent to HP5082-2301
97	HP5082-2308	7		A1ah	Equivalent to HP5082-2303
98	HP5082-2351	7		A1ah	Matched Pair to HP5082-2350
99	HP5082-2356	7		A1ah	V(F) 20mV;Co 0.2pF;Matched BridgeQuad Encapsulated
100	HP5082-2370	7		A1ah	V(F) 20mV;Co 0.2pF;Matched Quad Unconnected
101	HP5082-2396	7		A1ah	V(F) 20mV;Co 0.2pF;Matched Ring Quad Encapsulated
102	HP5082-2401	7		A1ah	Matched Pair to HP5082-2400
103	HP5082-2521	7		A1ah	Matched Pair to HP5082-2520
104	HP5082-2566	7		A1ah	Matched Pair to HP5082-2565
105	HP5082-2706	7		A1ah	Matched Pair to HP5082-2701
106	HP5082-2707	7		A1ah	Matched Pair to HP5082-2702
107	HP5082-2712	7		A1ah	Equivalent to HP5082-2711
108	HP5082-2714	7		A1ah	Equivalent to HP5082-2713
109	HP5082-2724	7		A1ah	Equivalent to HP5082-2723
110	HP5082-2804	7		A1ah	Matched Pair to HP5082-2800

SYMBOLS AND CODES EXPLAINED IN INTERPRETER

8. MISCELLANEOUS DEVICES

IN ORDER OF (1) USE and (2) TYPE No.

LINE No.	2 TYPE No.	1 USE	DESCRIPTION MAT.	DWG. No.	TECHNICAL DATA
1	HP5082-2805	7		A1ah	Matched Pair to HP5082-2800
2	HP5082-2810	7		A1ah	V(BR) 20V;V(F) 410mV;I(F) 35mA;CT 1.2pF;For General Purpose App
3	HP5082-2811	7		A1ah	V(BR) 15V;V(F) 410mV;I(F) 20mA;CT 1.2pF;For General Purpose App
4	HP5082-2813	7		A1ah	Matched Bridge Quad Encapsulated (HP5082-2811)
5	HP5082-2814	7		A1ah	Matched Ring Quad Encapsulated (HP5082-2811)
6	HP5082-2815	7		A1ah	Matched Quad Unconnected (HP5082-2811)
7	HP5082-2818	7		A1ah	Matched Pair Diode (HP5082-2817)
8	HP5082-2826	7		A1ah	Batch Match Diode (HP5082-2811)
9	HP5082-2830	7		M908	V(F) 0.35V;R(D) 10Ω;CT 0.5pF typ Quads for Double Bal Mixers
10	HP5082-2831	7		M908	V(F) 0.25V;R(D) 10Ω;CT 0.5pF typ Quads for Double Bal Mixers
11	HP5082-2835	7		A1ah	V(BR) 5V;V(F) 340;I(F) 10mA;CT 1.0pF;For General Purpose App
12	HP5082-2836	7		A1ah	Batch Matched to HP5082-2800
13	HP5082-2837	7		A402	VBR 70V;VF 410mV;IR 200nA;CO 2.0pF;Lifetime 100ps;Beam Lead
14	HP5082-2900	7		A1ah	VBR 10V;VF 400mV;IF 20mA;CT 1.2pF;for General Purpose App.
15	HP5082-2912	7		A1ah	Matched Pair Unconnected (HP5082-2900) VF 30mV
16	HP5082-2970	7		A1ah	Matched Quad Unconnected (HP5082-2900) VF 30mV
17	HP5082-2997	7		A1ah	Matched Bridge Quad Encapsulated;VF 30mV (HP5082-2900)
18	HP5082-3001	7		A1uc	PIN for Switch/Attenuating;VBR 200V;Ct .25pf;trr 100ns
19	HP5082-3002	7		A1uc	PIN for Switch/Attenuating;VBR 300V;Ct .20pf;trr 100ns
20	HP5082-3039	7		A1uc	PIN for Switch/Attenuating;VBR 150V;Ct .25pf;trr 100ns
21	HP5082-3040	7	Si	M526	Stripline Pin;VBR 150V;VSWR 1.5;Ins Loss 500mdb;Isolation 20db.
22	HP5082-3041	7	Si	M526	PIN;Stripline;PIV 70V;VSWR 1.5 max;Ins Loss 1.0dB max;Isolation 20dB;trr 10ns;Lifetime 15ns
23	HP5082-3042	7		A1uc	PIN for Switch/Attenuating;VBR 70V;Ct .40pf;trr 5.0ns
24	HP5082-3043	7		A1uc	PIN for Switch/Attenuating;VBR 50V;Ct .40pf;trr 10ns
25	HP5082-3046	7	Si	M526	PIN;Stripline;PIV 450V;VSWR 1.5 max;Ins Loss 1.0dB max;Isolation 20dB;Lifetime 1.0us.
26	HP5082-3071	7	Si	M526	PIN Stripline;Microwave Limiter;VBR 50 min;VSWR 2.0 max;Ins Loss 1.2dB max;Pd 1.0W.
27	HP5082-3077	7		A1uc	PIN for Switch/Attenuating;VBR 200V;Ct .30pf;trr 100ns
28	HP5082-3080	7		A1uc	PIN for Switch/Attenuating;VBR 100V;Ct .40pf
29	HP5082-3081	7		A1uc	PIN for Switch/Attenuating;VBR 100V;Ct .40pf
30	HP5082-3101	7	Si#	F10w	Pin;VBR 200V min;Ct 320ff max;Rs 1.2Ω max;trr 150ns;Pd 1.0W.
31	HP5082-3102	7	Si#	F10w	Pin;VBR 300V min;Ct 300ff max;Rs 800mΩ max;trr 150ns;Pd 1.0W.
32	HP5082-3140	7	Si#	M723	PIN Stripline;PIV 150V;Iso 20dB min;Ins Loss 0.5dB max;VSWR 1.5 max;Lifetime 200ns.
33	HP5082-3141	7	Si#	M723	PIN Stripline;PIV 70V;Iso 20dB min;Ins Loss 1.0dB max;VSWR 1.5 max;trr 10ns;Lifetime 15ns.
34	HP5082-3168	7		A1uc	PIN for Switch/Attenuating;VBR 35V;Ct 2.0pf;trr 12ns
35	HP5082-3170	7	Si#	M723	PIN Stripline;PIV 150V;Iso 20dB min;Ins Loss 0.5dB max;VSWR 1.5 max;Lifetime 200ns.
36	HP5082-3188	7		A1uc	PIN for Switch/Attenuating;VBR 35V;Ct 1.0pf;trr 12ns
37	HP5082-3201	7	Si#	F27agØ	Pin;VBR 200V min;Ct 350ff max;Rs 1.2Ω max;trr 150ns;Pd 3.0W.
38	HP5082-3202	7	Si#	F27agØ	Pin;VBR 300V min;Ct 320ff max;Rs 800mΩ max;trr 150ns;Pd 3.0W.
39	HP5082-3303	7	Si#	F27ahØ	PIN;VBR 200V min;CT 400fF max;Rs 1.2Ωmax;trr 150ns;Pd 3.0W.
40	HP5082-3304	7	Si#	F27ahØ	PIN;VBR 300V min;CT 320fF max;Rs .80Ωmax;trr 150ns;Pd 3.0W.
41	HP5082-3305	7	Si	F10w	PIN;VBR 70V min;RS 1.0Ω max;CVR 0.4pF max;trr 10ns max;Pd .7Wdc max.
42	HP5082-3306	7	Si	F27ah	PIN;VBR 70V min;RS 1.0Ω max;CVR 0.45pF max;trr 10ns max;Pd 1.25Wdc max.
43	HP5082-3340	7	Si	M526	PIN;Stripline;Piv 150V;VSWR 1.5 max;Ins Loss 500mdB max;Isolation 20dB;Lifetime 200ns.
44	HP5082-3379	7		A1uc	PIN for Switch/Attenuating;VBR 50V;Ct .40
45	HP5082-3900	7	Si	M794a	P;VB 200V typ;Co .025pF max at 0V;Rs 8Ω max at 50mA;Carrier Lifetime 150ns min
46	HP5082-9394	7		M905	Freq. 4-8GHz;VF 0.35V;RS 13Ω;CT 0.35pF;Beam Lead Quads for Double Balance Mixers
47	HP5082-9396	7		M905	Freq. 8-12GHz;VF 0.45V;RS 13Ω;CTO .20pF;Beam Lead Quads fordDouble Balance Mixers
48	HP5082-9397	7		M905	Freq. 8-12GHz;VF 0.30V;RS 13Ω;CT 0.20pF;Beam Lead Quads for Double Balance Mixers
49	HP5082-9398	7		M905	Freq. 12-18GHz;VF 0.45V;RS 15Ω;CT 0.45pF;Beam Lead Quads for Double Balance Mixers
50	HP5082-9399	7		M905	Freq. 12-18GHz;VF 0.30V;RS 15Ω;CT 0.45pF;Beam Lead Quads for Double Balance Mixers
51	HP5082-9696	7		M905	Freq. 2-4GHz;VF 0.35V;RS 11Ω;CT 0.55pF;Beam Lead Quads for Double Balance Mixers
52	HP5082-9697	7		M905	Freq. 2-4GHz;VF 0.25V;RS 11Ω;CT 0.55pF;Beam Lead Quads for Double Balance Mixers
53	HP5082-9891	7			X-Band Schottky Detector Chip
54	HPND4165	7		A1uc	PIN for Switch/Attenuating;VBR 100V;Ct .30pf
55	HPND4166	7		A1uc	PIN for Switch/Attenuating;VBR 100V;Ct .30pf
56	HPND-4001	7	§	A402	Pin;V(BR) 50V min;CT 0.08pF max;R(S) 2.2Ω max at 10mA;trr 3.0ns Typ;Pd 250mW max
57	HPND-4005	7		M1127	VBR 120v;Cvr .02pf at Vr 10v,f 10GHz;trr 20ns;Rs 6.5Ω;Minority Carrier Lifetime 150ns
58	HPND-4050	7	§	A402	PIN;VBR 30V min;CT 0.15pF max;Rs 1.7Ω max at If 10mA;trr 2.0ns typ;Pd 150mW max
59	HSCH-1001	7	♦	A1ah	Pin;V(BR) 70V;PT 400mW;Temp -65 200°C
60	HXTR5103	7	Si	W26a	Pout 23dBm at 1dB;Pt 1.4W;Osc Freq 5.0G;NPN
61	HXTR5104	7	Si	W16	Pout 29dBm at 1dB;Pt 4.0W;Osc Freq 4.0G;NPN
62▼	K750	7		M1240	SPST PIN Diode Switch;Max VSWR 1.5;18.0-26.5GHz Freq range;1.0dB Insertion Loss
63▼	K751	7		M1241	SPDT PIN Diode Switch;1.5 max VSWR;100nS Switching;18-26.5GHz Freq range;1.5dB Insert Loss
64	KA507A	7	$	F27au	Pin Switching Diode;Ctot .80-1.2pF;VBR 500V;fc 200GHz at 100mA,100V,QS200nC
65	KA507B	7	$	F27au	Pin Switching Diode;Ctot .80-1.2pF;VBR 300V;fc 200GHz at 100mA,100V,QS200nC
66	KA507V	7	$	F27au	Pin Switching Diode;Ctot .65-1.2pF;VBR 300V;fc 150GHz at 100mA,100V,QS200nC
67	KA509A	7	$	F27au	Pin Switching Diode;Ctot .90-1.2pF;VBR 200V;fc 150GHz at 25mA,100V,QS25nC
68	KA509B	7	$	F27au	Pin Switching Diode;Ctot .70-1.0pF;VBR 200V;fc 150GHz at 25mA,100V,QS25nC
69	KA509V	7	$	F27au	Pin Switching Diode;Ctot .50-1.2pF;VBR 200V;fc 100GHz at 25mA,100V,QS25nC
70	KA510A	7	$#	F100a	Limiter Diode;Ctot .70-1.4pF;rs 1.5Ω at IF 100mA;VBR 30V;Qs 10nC
71	KA510B	7	$#	F100a	Limiter Diode;Ctot 1.2-2.4pF;rs 1.5Ω at IF 100mA;VBR 30V;Qs 10nC
72	KA510D	7	$#	F100a	Limiter Diode;Ctot 1.2-2.4pF;rs 2.5Ω at IF 100mA;VBR 30V;Qs 10nC
73	KA510E	7	$#	F100a	Limiter Diode;Ctot 2.2-3.6pF;rs 2.5Ω at IF 100mA;VBR 30V;Qs 10nC
74	KA510G	7	$#	F100a	Limiter Diode;Ctot .60-1.4pF;rs 2.5Ω at IF 100mA;VBR 30V;Qs 10nC
75	KA510V	7	$#	F100a	Limiter Diode;Ctot 2.2-3.4pF;rs 1.5Ω at IF 100mA;VBR 30V;Qs 10nC
76	KA513A	7	▼	M897	n-i-p-i-n Diode; fc 100GHz; Pmax 2.0W at Tcase 35°C
77	KA513B	7	▼	M897	n-i-p-i-n Diode; fc 100GHz; Pmax 2.0W at Tcase 35°C
78	KD407A	7	#$	A352	VHF Switch;Rs 1.0Ω at 10mA,50-300MHz;Ct 1pF at 5V;VR 24Vmax,IF 50mAmax
79	KD409A	7	$	A353	VHF Switch;Rs 500mΩ at 10mA,50-1000MHz;Ct 1.2pF at 15V;VR 24Vmax,IF 50mAmax
80	KS35A2	7	Si#$	M500	PIN;VBR 35V min;Ct 1.0pF max at 20V;Rs 0.70 ohm max at 5mA; Lifetime 500ns
81	KS1001	7	Si△	A1tc	PIN:VBR 1200 V min;Ct 6pF max at 100V;Rs 0.20 ohm max at 750mA;Lifetime 6us
82	KS1002	7	Si△	A1tc	PIN;VBR 1200V min;Ct 6pF max at 100V;Rs 0.30 ohm max at 750mA;Lifetime 3us
83	KS1003	7	Si△	A1tc	PIN;VBR 1200V min;Ct 6pF max at 100V;Rs 0.40 ohm max at 750 mA;Lifetime 1.5us
84	KS2243	7	Si$#	DO35	PIN;VBR 20V min;Ct 2.0pF max at 15V;Rs 1.0Ω max at 10mA;Lifetime 100ns
85	KS2244	7	Si$#	DO35	PIN;VBR 20V min;Ct 2.0pF max at 15V;Rs 0.5Ω max at 10mA;Lifetime 100ns
86	KS3522	7	Si$#	M501	PIN;VBR 35V min;Ct 1.0pF max at 5V;Rs 0.7Ω max at 5mA;Lifetime 500ns
87	KS3542	7	Si#$	DO34	PIN;VBR 35V min;Ct 1.2pF max at 3V;Rs 0.70 ohm max at 3mA;Lifetime 100ns
88	KS3543	7	Si#$	DO34	PIN:VBR 35V min;Ct 1.0pF max at 3V;Rs 1.20 ohm max at 3mA;Lifetime 100ns
89	KS4522	7	Si#$	DO7	Pin;VBR 45V min;Ct 1.0pf max at 20V;Rs 1.0Ω max at 10mA;Lifetime 1.3us.
90	KS4523	7	Si#$	DO7	Pin;VBR 45V min;Ct 2.0pf max at 20V;Rs 500mΩ max at 10mA;Lifetime 1.3us.
91	KS4524	7	Si#$	DO7	Pin;VBR 45V min;Ct 2.0pf max at 20V;Rs 1.0Ω max at 10mA;Lifetime 1.3us.
92	KS7522	7	Si#$	DO7	Pin;VBR 75V min;Ct 1.0pf max at 20V;Rs 1.0Ω max at 10mA;Lifetime 1.3us.
93	KS7523	7	Si#$	DO7	Pin;VBR 75V min;Ct 2.0pf max at 20V;Rs 500mΩ max at 10mA;Lifetime 1.3us.
94	KS7524	7	Si#$	DO7	Pin;VBR 75V min;Ct 2.0pf max at 20V;Rs 1.0Ω max at 10mA;Lifetime 1.3us.
95	KS8303	7	Si#	A1ah	PIN;VBR 100V min;Ct 0.3pF max at 50V;Rs 1.5Ω max at 100mA;Lifetime 100ns
96	KS8304	7	Si#	A1ah	PIN;VBR 100V min;Ct 0.3pF max at 50V;Rs 1.5Ω max at 100mA;Lifetime 100ns
97	KS8379	7	Si#	A376	PIN;VBR 30V min;Ct 0.45pF max at 20V;Rs 6.5Ω max at 10mA;Lifetime 500ns
98	KS8380	7	Si#	A1ah	PIN;VBR 100V min;Ct 0.4pF max at 50V;Rs 2.5Ω max at 100mA;Lifetime 1.3us
99	KS8381	7	Si#	A1ah	PIN;VBR 100V min;Ct 0.4pF max at 50V;Rs 3.5Ω max at 100mA;Lifetime 2.0us
100	KS9301	7	Si#	A1ah	PIN;VBR 200V min;Ct 1.0pF max at 100V;Rs 1.0Ω max at 100mA;Lifetime 100ns
101	KS9302	7	Si#	A1ah	PIN;VBR 300V min;Ct 1.0pF max at 100V;Rs 1.0Ω max at 100mA;Lifetime 100ns
102	KS9339	7	Si#	A1ah	PIN;VBR 150V min;Ct 1.25pF max at 100V;Rs 1.25Ω max at 100mA;Lifetime 100ns
103	KS9342	7	Si#	A1ah	PIN;VBR 70V min;Ct 1.0pF max at 20V;Rs 1.0Ω max at 20mA;Lifetime 15ns
104	KS9343	7	Si#	A1ah	PIN;VBR 50V min;Ct 1.0pF max at 20V;Rs 1.0Ω max at 20mA;Lifetime 15ns
105	KS9377	7	Si#	A1ah	PIN;VBR 200V min;Ct 1.5pF max at 100V;Rs 1.5Ω max at 100mA;Lifetime 100ns
106▼	Ku750	7		M1240	SPST PIN Diode Switch;Max VSWR 1.5;12.4-18.0GHz Freq range;1.0dB Insertion Loss
107	MA4P101	7	%	M794	PIN DIODE;VB 30V;Cj .02pF;Available in Beam Lead Pkg
108	MA4P102	7	%	M794	PIN DIODE;VB 30V;Cj .05pF;Available in Beam Lead or Standard Pkg
109	MA4P103-30	7	%	V7	PIN DIODE;VB 30V;Cj .15pF;Available in Standard Pkg
110	MA4P202-30	7	%	V7	PIN DIODE;VB 100V;Cj .05pF;Available in Standard Pkg

8. MISCELLANEOUS DEVICES

IN ORDER OF (1) USE and (2) TYPE No.

LINE No.	2 TYPE No.	1 USE	DESCRIPTION MAT.	DESCRIPTION DWG. No.	TECHNICAL DATA
1	MA4P203-30	7	%	V7	PIN DIODE;VB 100V;Cj .15pF;Available in Standard Pkg
2	MA4P303-30	7	%	V7	PIN DIODE;VB 200V;Cj .15pF;Available in Standard Pkg
3	MA4P404-30	7	%	V7	PIN DIODE;VB 300V;Cj .20pF;Available in Standard Pkg
4	MA4P504-30	7	%	V7	PIN DIODE;VB 500V;Cj .20pF;Available in Standard Pkg
5	MA4P505-30	7	%	V7	PIN DIODE;VB 500V;Cj .30pF;Available in Standard Pkg
6	MA4P506-30	7		V7	PIN DIODE;VB 500V;Max Cj .70pF at VR 100V
7	MA4P604-30	7		V7	PIN DIODE;VB 1.0k;Max Cj .30pF at VR 100V
8	MA4P606-30	7		V7	PIN DIODE;VB 1.0KV;Max Cj .60pF at VR 100V
9	MA4P607	7		S454	PIN DIODE;VB 1.0kV;Max Cj 1.3pF at VR 100V
10	MA4P608	7		S454	PIN DIODE;VB 1.0kV;Max Cj 2.5pF at VR 100V
11	MA4P709	7		S489	PIN Diode;VB1.5kV;Max C;3.3pf at VR 100V
12	MA4011B	7	Si	F27d	Pin;S band;VB-200V min;Ctotal-.75pf;RS-4.0 ohms max.
13	MA4011C	7	Si	F3a	Pin;L band;VB-200V min;Ctotal-1.5pf;RS-2.5 ohms max.
14	MA4011D	7	Si	F3a	Pin;UHF band;VB-200V min;Ctotal-3.0pf;RS-2.0 ohms max.
15	MA4263	7		F3b	X-band;Pdiss-10W; VB-400V.
16	MA4264	7		F3b	X-band;Pdiss-10W; VB-800V.
17	MA4265	7		F3b	X-band;Pdiss-10W; VB-1200V.
18	MA4266	7		F21	X-band;Pdiss-10W; VB-400V.
19	MA4267	7		F21	X-band;Pdiss-10W; VB-800V.
20	MA4268	7		F21	X-band;Pdiss-10W; VB-1200V.
21	MA4544	7	Si	DO7	Pin;VB-100V;Ct at 50V-.50pf;Rs-2.0 ohms.
22	MA7757J-0012	7		M914†	Limiter Module;2.0-18GHz;Leakage 21dBm max for 1kHz,1us,200W Pulse;IL 2dBmax;VSWR 1.7 max
23	MA7757J-0013	7		M914†	Limiter Module;2.0-18GHz;Leakage 17dBm max for 1kHz,1us,100W Pulse;IL 2dBmax;VSWR 1.7 max
24	MA8334	7		M981	PIN SPDT Select Sw;20-500MHz;CW Pinput 50W;Isolation 24dB min,450MHz;VSWR 1.4max;Loss.4dBmax
25	MA8342-0001	7		M914b	ATTENUATOR;PIN Diode;Fo .2-4GHz;VBR 50V;# of Diodes 3;MidBand Atten. 47-55dB at 2mA
26	MA8342-0002	7		M914	ATTENUATOR;PIN Diode;Fo 4-18GHz;VBR 50V;# of Diodes 3;MidBand Atten. 15mindB at 2mA
27	MA8342-0003	7		M914b	ATTENUATOR;PIN Diode;Fo 4-8GHz;VBR 50V;# of Diodes 3;MidBandAtten. 47-55dB at 2mA
28	MA8342-0004	7		M914	ATTENUATOR;PIN Diode;Fo 8-18GHz;VBR 50V;# of Diodes 3;MidBand Atten. 15mindB at 2mA
29	MA8342-0005	7		M914a	Broadb Atten;8.0-18GHz;600mA max;Loss 2.5dB max/VSWR 2.0 max at 0V;Atten 60dB min at 10mA
30	MA8342-0006	7		M914c	Broadb Atten;2.0-4.0GHz;600mA max;Loss 1.7dB max/VSWR 2.0 max at 0V;Atten 70dB min at 10mA
31	MA8342-0007	7		M914b	ATTENUATOR;PIN Diode;Fo .2-4GHz;BVR 50V;# of Diodes 3;MidBand Atten. 62-69dB at 2mA
32	MA8342-0008	7		M914c	Broadb Atten;4.0-8.0GHz;600mA max;Loss 2.0dB max/VSWR 2.25 max at 0V;Atten 65dB min at 10mA
33	MA8342-0009	7		M914b	ATTENUATOR;PIN Diode;Fo 4-8GHz;VBR 50V;# of Diodes 3;MidBandAtten. 62-69dB at 2mA
34	MA8342-0010	7		M914a	ATTENUATOR;PIN Diode;Fo 8-18GHz;VBR 50V;# of Diodes 3;MidBand Atten. 48-57dB at 2mA
35	MA8342-0011	7		M914a	ATTENUATOR;PIN Diode;Fo 8-18GHz;VBR 50V;# of Diodes 3;MidBand Atten. 57-65dB at 2mA
36	MA8343-0001	7		M914	Broadb Sw;.5-18GHz;200mA max;Loss 1.0dB max/VSWR 1.9 max at -10V;Isolation 20dB min at 20mA
37	MA8343-0005	7		M914a	Broadb Sw;.5-18GHz;600mA max;Loss 2.75dB max/VSWR 2.0 max at 0V;Isolation 35dB min at 30mA
38	MA8343-0006	7		M914a	Broadb Sw;.5-18GHz;600mA max;Loss 2.75dB max/VSWR 2.0 max at 6V;Isolation 35dB min at -30mA
39	MA8343-0050	7		M914†	PIN SPST Shunt Sw;500MHz-2.0GHz;IL .60dBmax;VSWR 1.5 max;Isolation 40dBmin at 30mA Drive
40	MA8343-0051	7		M914†	PIN SPST Shunt Sw;2.0GHz-4.0GHz;IL .70dBmax;VSWR 1.5max;Isolation 45dBmin at 30mA Drive
41	MA8343-0052	7		M914†	PIN SPST Shunt Sw;4.0GHz-8.0GHz;IL 1.0dBmax;VSWR 1.7max;Isolation 50dBmin at 30mA Drive
42	MA8343-0053	7		M914†	PIN SPST Shunt Sw;8.0GHz-12GHz;IL 1.2dBmax;VSWR 1.7max;Isolation 50dBmin at 30mA Drive
43	MA8343-0054	7		M914†	PIN SPST Shunt Sw;12GHz-18GHz;IL 1.4dBmax;VSWR 2.0max;Isolation 45dBmin at 30mA Drive
44	MA8343-0055	7		M914†	PIN SPST Shunt Sw;2.0GHz-18GHz;IL 1.6dBmax;VSWR 2.0max;Isolation 40dBmin at 30mA Drive
45	MA8345-0001	7			Broadb Sw;4.0-8.0GHz;250mW CW max;Loss 2.0dB max/VSWR 2.0max at -30mA;Isolation 70dB min
46	MA8345-0002	7			Broadb Sw;1.0-12GHz;250mW CW max;Loss 1.5dB max/VSWR 2.0max at -30mA;Isolation 45dB min
47	MA8345-0003	7			Broadb Sw;1.0-18GHz;250mW CW max;Loss 2.5dB max/VSWR 2.0max at -30mA;Isolation 35dB min
48	MA8345-0056	7		M951	PIN SPDT Select Sw;2.0GHz-4.0GHz;IL 1.0dBmax;VSWR 1.5 max;Isolation 55dBmin at 30mA Drive
49	MA8345-0057	7		M951	PIN SPDT Select Sw;4.0GHz-8.0GHz;IL 1.5dBmax;VSWR 1.7 max;Isolation 50dBmin at 30mA Drive
50	MA8345-0058	7		M951	PIN SPDT Select Sw;8.0GHz-12GHz;IL 1.7dBmax;VSWR 1.8 max;Isolation 50dBmin at 30mA Drive
51	MA8345-0059	7		M951	PIN SPDT Select Sw;12GHz-18GHz;IL 2.0dBmax;VSWR 2.0 max;Isolation 45dBmin at 30mA Drive
52	MA47000	7	Si	S448	Pin;Ct at 250V-3.2pf max;Rs at 150mA-.40 ohms max;BV-750V min.
53	MA47001	7	Si	S448	Pin;Ct at 250V-2.0pf max;Rs at 150mA-.70 ohms max;BV-750V min.
54	MA47002	7	Si	S448	Pin;Ct at 250V-3.2pf max;Rs at 150mA-.40 ohms max;BV-500V min.
55	MA47003	7	Si	S448	Pin;Ct at 250V-2.0pf max;Rs at 150mA-.70 ohms max;BV-500V min.
56	MA47004	7	Si	S107	Pin;Ct at 150V-1.2pf max;Rs at 100mA-.80 ohms max;BV-500V min.
57	MA47005	7	Si	F27d	Pin;Ct at 50V-.60pf max;Rs at 100mA-2.0 ohms max;BV-800V min.
58	MA47006	7	Si	F27d	Pin;Ct at 50V-.60pf max;Rs at 100mA-1.5 ohms max;BV-800V min.
59	MA47007	7	Si	F27d	Pin;Ct at 50V-.80pf max;Rs at 100mA-1.7 ohms max;BV-800V min.
60	MA47008	7	Si	F27d	Pin;Ct at 50V-.80pf max;Rs at 100mA-1.2 ohms max;BV-800V min.
61	MA47009	7	Si	F27d	Pin;Ct at 50V-1.1pf max;Rs at 100mA-1.5 ohms max;BV-800V min.
62	MA47010	7	Si	F27d	Pin;Ct at 50V-1.1pf max;Rs at 100mA-1.0 ohms max;BV-800V min.
63	MA47011	7	Si	F27d	Pin;Ct at 50V-.60pf max;Rs at 100mA-1.4 ohms max;BV-600V min.
64	MA47012	7	Si	F27d	Pin;Ct at 50V-.60pf max;Rs at 100mA-1.1 ohms max;BV-600V min.
65	MA47013	7	Si	F27d	Pin;Ct at 50V-.80pf max;Rs at 100mA-1.1 ohms max;BV-600V min.
66	MA47014	7	Si	F27d	Pin;Ct at 50V-.80pf max;Rs at 100mA-.90 ohms max;BV-600V min.
67	MA47015	7	Si	F27d	Pin;Ct at 50V-1.1pf max;Rs at 100mA-1.0 ohms max;BV-600V min.
68	MA47016	7	Si	F27d	Pin;Ct at 50V-1.1pf max;Rs at 100mA-.80 ohms max;BV-600V min.
69	MA47017	7	Si	F27d	Pin;Ct at 50V-1.7pf max;Rs at 100mA-.90 ohms max;BV-600V min.
70	MA47018	7	Si	F27d	Pin;Ct at 50V-1.7pf max;Rs at 100mA-.70 ohms max;BV-600V min.
71	MA47019	7	Si	F27d	Pin;Ct at 50V-.60pf max;Rs at 100mA-1.2 ohms max;BV-400V min.
72	MA47020	7	Si	F27d	Pin;Ct at 50V-.60pf max;Rs at 100mA-.90 ohms max;BV-400V min.
73	MA47021	7	Si	F27d	Pin;Ct at 50V-.80pf max;Rs at 100mA-.90 ohms max;BV-400V min.
74	MA47022	7	Si	F27d	Pin;Ct at 50V-.80pf max;Rs at 100mA-.70 ohms max;BV-400V min.
75	MA47023	7	Si	F27d	Pin;Ct at 50V-1.1pf max;Rs at 100mA-.80 ohms max;BV-400V min.
76	MA47024	7	Si	F27d	Pin;Ct at 50V-1.1pf max;Rs at 100mA-.60 ohms max;BV-400V min.
77	MA47025	7	Si	F27d	Pin;Ct at 50V-1.7pf max;Rs at 100mA-.70 ohms max;BV-400V min.
78	MA47026	7	Si	F27d	Pin;Ct at 50V-1.7pf max;Rs at 100mA-1.5 ohms max;BV-400V min.
79	MA47027	7	Si	F27d	Pin;Ct at 50V-.40 max;Rs at 100mA-1.2 ohms max;BV-300V min.
80	MA47028	7	Si	F27d	Pin;Ct at 50V-.60 max;Rs at 100mA-1.0 ohms max;BV-300V min.
81	MA47029	7	Si	F27d	Pin;Ct at 50V-.40 max;Rs at 100mA-1.2 ohms max;BV-200V min.
82	MA47030	7	Si	F27d	Pin;Ct at 50V-.60 max;Rs at 100mA-1.0 ohms max;BV-200V min.
83	MA47031	7	Si	F27d	PIN;BV 50V typ;CUR .02pF max;RS 8.0Ω max;PD 250mW;Switching time 5.0ns typ
84	MA47032	7	Si	F27d	Pin;Ct at 50V-.40 max;Rs at 100mA-.80 ohms max;BV-300V min.
85	MA47033	7	Si	F27d	Pin;Ct at 50V-.45 max;Rs at 100mA-.80 ohms max;BV-300V min.
86	MA47034	7	Si	F27d	Pin;Ct at 50V-.35 max;Rs at 100mA-1.0 ohms max;BV-150V min.
87	MA47035	7	Si	F27d	Pin;Ct at 50V-.40 max;Rs at 100mA-.80 ohms max;BV-150V min.
88	MA47036	7	Si	F27d	Pin;Ct at 50V-.45 max;Rs at 100mA-.70 ohms max;BV-150V min.
89	MA47037	7	Si	F27d	Pin;Ct at 30V-.30 max;Rs at 30mA-2.5 ohms max;BV-150V min.
90	MA47038	7	Si	F27d	Pin;Ct at 30V-.40 max;Rs at 30mA-2.0 ohms max;BV-150V min.
91	MA47039	7	Si	F27d	Pin;Ct at 30V-.30pf max;Rs at 30mA-2.5 ohms max;BV-75V min.
92	MA47040	7	Si	F27d	Pin;Ct at 30V-.40pf max;Rs at 30mA-2.0 ohms max;BV-75V min.
93	MA47041	7	Si	A1ac	PIN;Ct at 10V .10pf max;RS at 30mA 2.5Ω max;BV 150V min.
94	MA47042	7	Si	A1ad	Pin;Ct at 30V-.20pf max;Rs at 30mA-2.0 ohms max;BV-150V min.
95	MA47043	7	Si	A1ad	Pin;Ct at 30V-.30pf max;Rs at 30mA-1.5 ohms max;BV-150V min.
96	MA47044	7	Si	A1ad	Pin;Ct at 30V-.10pf max;Rs at 30mA-2.5 ohms max;BV-75V min.
97	MA47045	7	Si	A1ad	Pin;Ct at 30V-.20pf max;Rs at 30mA-2.0 ohms max;BV-75V min.
98	MA47046	7	Si	A1ad	Pin;Ct at 30V-.30pf max;Rs at 30mA-1.5 ohms max;BV-75V min.
99	MA47047	7	Si	A1ac	PIN;Ct at 50V .30pf max;RS at 30mA 1.5Ω max;BV 200V min.
100	MA47051	7	Si	F27f	PIN;Ct at 10V 350fF;RS 1.0Ω max;BV 100V min;Switching time 5.0ns typ
101	MA47052	7	Si	F27f	PIN;Ct at 10V 350fF;RS 1.5Ω max;BV 200V min;Switching time 5.0ns typ
102	MA47053	7	Si	A1ac	PIN;Ct at 10V .20pf max;RS at 10mA 1.5Ω max;BV 100V min.
103	MA47054	7	Si	A1ac	PIN;CT at 10V .25pF;RS at 10mA 1.2Ω max;BV 100V min
104	MA47057	7	Si$	F106a	RF Switch;Freq 4.5GHz;Pj 5.0W;Insertion Loss 1.2dB;Isolation 25dB
105	MA47066	7	Si	A1ac	PIN;CT at 20V .30pF max;RS 1.5Ω max;BV 150V min
106♦	MA47067	7	Si $	F106a	RF Switch;Freq 7.5GHz;Pj 5.0W;Insertion Loss 1.2dB;Isolation 25dB
107	MA47068	7	Si$	F106a	RF Switch;Freq 8.0GHz;Pj 5.0W;Insertion Loss 1.2dB;Isolation 25dB
108	MA47069	7	Si$	F106a	RF Switch;Freq 8.5GHz;Pj 4.0W;Insertion Loss 1.2dB;Isolation 25dB
109	MA47071	7	Si$	F106b	RF Switch;Freq 9.5GHz;Pj 2.5W;Insertion Loss 1.2dB;Isolation 25dB
110	MA47075	7	Si	F27f	PIN;CT at 100V 200-500fF;RS 1.2Ω max;BV 1.0kV;Thermal Res. 30°C/W max

8. MISCELLANEOUS DEVICES

IN ORDER OF (1) USE and (2) TYPE No.

LINE No.	[2] TYPE No.	[1] USE	DESCRIPTION MAT.	DWG. No.	TECHNICAL DATA
1	MA47076	7	Si	F27f	Pin,CT at 100V 300-400ff;RS 1.2Ω max;BV 750V;Thermal Res. 30°C/W max.
2	MA47077	7	Si	F27f	PIN;CT at 100V 500-800fF;RS 700mΩ max;BV 1.0kV;Thermal Res. 35°C/W max
3	MA47078	7	Si	F27f	Pin,CT at 100V 600-800ff;RS 700mΩ max;BV 750V;Thermal Res. 25°C/W max.
4	MA47079	7	Si	F27f	PIN;CT at 100V 200-400fF;RS 600mΩ max;BV 500V;Thermal Res. 20°C/W max
5	MA47080	7	Si	F27f	PIN;CT at 100V 400-700fF;RS 450mΩ max;BV 500V;Thermal Res. 15°C/W max
6	MA47081	7	Si	F27f	PIN;CT at 100V .70-1.0pF;RS 300mΩ max;BV 500V;Thermal Res. 10°C/W max
7	MA47082	7	Si	F27f	Pin,CT at 50V 200-400ff;RS 600mΩ max;BV 300V;Thermal Res. 20°C/W max.
8	MA47083	7	Si	A1uu	PIN;Ct at 50V .25pf max;RS 690Ω-1040Ω;BV 300V;RS/VS Bias Slope 860m-900m.
9	MA47084	7	Si	S396c	PIN;CT at 250V 2.6-3.8pF;RS 300mΩ max;BV 1.0kV;Thermal Res. 5°C/W max
10	MA47085	7	Si	F27f	PIN,Limiter;CT at 0.0V 400fF max;RS 1.5Ω max;BV 30V min;Thermal Res. 20°C/W max
11	MA47086	7	Si	F115	PIN;CT at 20V .40pF max;RS 1.5Ω max;BV 80V min;Limiter
12	MA47088	7		F115	PIN:CT at 20V .40pF max;RS 1.8Ω max;BV 30V min
13	MA47089	7		A1ac	PIN,Limiter;CT at 0.0V 300fF max;RS 2.0Ω max;BV 30V min;Thermal Res. 500°C/W max
14	MA47090	7		A1ac	PIN;CT at 20V .30pF max;RS 1.8Ω max;BV 80V min;Limiter
15	MA47091	7		F27r	PIN;VBR 30V min;CTR 300fF max;RS 2.0Ω max.
16	MA47100	7	Si	A1ac	PIN;Ct at 50V .35pf max;RS at 30mA 10Ω max;BV 100V min.
17	MA47101	7	Si	A1uu	PIN;Ct at 50V .35pf max;RS at 100mA 7.0Ω max;BV 50V min.
18	MA47110	7	Si	A1zw	PIN;RF Switching Time 250ns max at 50mA,-50V;VBR100V min;Ct .50pF max
19	MA47111	7		A1zx	PIN;Ct at 50V .8pF max;RS 3.0Ω typ;BV 100V min;Lifetime 8.0us typ
20	MA47120	7		A1ac	PIN;VB 35 min-50typ;CVR 1.0pF max;RS .5Ω max;Lifetime 100ns typ.
21	MA47121	7		A1ac	PIN;VB 35 min-50typ;CVR 2.0pF max;RS .6Ω max;Lifetime 100ns typ.
22	MA47122	7		A1zw	PIN;VB 35 min-50typ;CVR 2.0pF max;RS .6Ω max;Lifetime 100ns typ.
23	MA47123	7		A1zw	PIN;RF Switching Time 200ns max at 50mA,-50V;VB200V min;Ct .50pF max
24▼	MA47131	7	Si $	F106c	Waveguide Switching Diode;Center Freq 15.5GHz;Insertion Loss .75dB;Isolatn 20dB-Pincid 10mW
25▼	MA47132	7	Si $	F106c	Waveguide Switching Diode;Center Freq 16GHz;Insertion Loss .75dB;Isolation 20dB-Pincid 10mW
26▼	MA47133	7	Si $	F106c	Waveguide Switching Diode;Center Freq 16.5GHz;Insertion Loss .75dB;Isolatn 20dB-Pincid 10mW
27▼	MA47134	7	Si $	F106c	Waveguide Switching Diode;Center Freq 17GHz;Insertion Loss .75dB;Isolation 20dB-Pincid 10mW
28▼	MA47135	7	Si $	F106c	Waveguide Switching Diode;Center Freq 17.5GHz;Insertion Loss .75dB,Isolatn 20dB-Pincid 10mW
29	MA47160	7	$	A1ac	Switching;VB 70V min;Vf 410mV max;If 15mA min;Ct 2.0pF max;Carrier Lifetime 100ps max
30	MA47161	7	$	A1ac	Switching;VB 20V min;Vf 410mV max;If 35mA min;Ct 1.2pF max;Carrier Lifetime 100ps max
31	MA47162	7	$	A1ac	Switching;VB 15V min;Vf 410mV max;If 20mA min;Ct 1.2pF max;Carrier Lifetime 100ps max
32	MA47200	7	Si	S347	PIN;BV 500V;Ther.Res. 10°C/W typ;Max VSWR 1.5;Min Isolation 30dB.
33	MA47201	7	Si	M793	PIN;BV 500V;Ther.Res. 10°C/W typ;Max VSWR 1.5;Min Isolation 30dB.
34	MA47202	7	Si	S347	PIN;BV 500V;Ther.Res. 15°C/W typ;Max VSWR 1.5;Min Isolation 25dB.
35	MA47203	7	Si	M793	PIN;BV 500V;Ther.Res. 15°C/W typ;Max VSWR 1.5;Min Isolation 25dB.
36	MA47204	7	Si	S347	PIN;BV 500V;Ther.Res. 20°C/W typ;Max VSWR 1.5;Min Isolation 20dB.
37	MA47205	7	Si	M793	PIN;BV 500V;Ther.Res. 20°C/W typ;Max VSWR 1.5;Min Isolation 20dB.
38	MA47206	7	Si	S347	PIN;BV 100V;Ther.Res. 30°C/W typ;Max VSWR 1.5;Min Isolation 20dB.
39	MA47207	7	Si	M793	PIN;BV 100V;Ther.Res. 30°C/W typ;Max VSWR 1.5;Min Isolation 20dB.
40	MA47208	7		S347	BROADBAND PIN;X-Band;Freq 1.0GHz;VB1.0kVmin;Max IL(20V)0.25dB;Max VSWR1.5V;Min ISOL 30dBmin
41	MA47220	7	Si	M723	PIN;BV 150V min;PD 4.1W;Min Isolation 20dB;Max VSWR 1.5;RF Switching 100ns typ
42	MA47221	7	Si	M723	PIN;BV 70Vmin;PD6.25W;Min Isolation 20dB;Max VSWR 1.5;RF Switching 10ns typ
43	MA47222	7	Si	M723	PIN;BV 150V min;PD 6.25W;Min Isolation 20dB;Max VSWR 1.5;RF Switching 100ns typ
44	MA47223	7		M723	Broadband Pin;X-Band;Freq 4-8GHz;VB 500Vmin;Max IL(20V)0.5dB;Max VSWR 1.5V;Min Isol 20dBmin
45	MA47266	7		A1zy	PIN Diode;VB 200V min;CT 1.5pF at 100V min;RS 6.5Ω at IF 1.0mA
46	MA47301	7	Si	M794	PIN;BV 50V typ;CVR .02pF max;RS 8.0Ω max;PD 250mW;Switching Time 5.0ns typ
47	MA47302	7		M794	PIN;BV 50V typ;CVR .05pF max;RS 6.0Ω max;PD 250mW;Switching time 5.0ns typ
48	MA47400	7	Si	u16	PIN;Ct at 100V 3.0pF max;VBR 1.0kV min;RS at 150mA .3Ω max;TL 5.0us
49	MA47401	7	Si	u16a	PIN;Ct at 100V .25pF max;VBR 1.0kV min;RS at 100mA .80Ω max;TL 3.0us
50	MA47402	7	Si	u16a	PIN;Ct at 100V .55pF max;VBR 1.0kV min;RS at 100mA .50Ω max;TL 4.0us
51	MA47403	7	Si	M796	PIN;Ct at 100V .25pF max;VBR 500V min;RS at 100mA .60Ω typ;TL 1.5us.
52	MA47404	7	Si	M796	PIN;Ct at 100V .40pF max;VBR 500V min;RS at 100mA .45Ω typ;TL 1.5us.
53	MA47405	7	Si	M796	PIN;Ct at 100V .25pF max;VBR 500V min;RS at 50mA .60Ω typ;TL .8us.
54	MA47406	7		u17	PIN;CT at 50V .35pF;RS at 30mA 10Ω max;BV 100V
55	MA47407	7		M796	PIN;VBR 200V min;CTR 150fF max;RS 1.0Ω max.
56	MA47408	7		M796	PIN;VBR 100V min;Ct 350fF at 10V;RS 1.0Ω max;Switching Time 5.0ns typ
57	MA47409	7		M796	PIN;VBR 100V min;CTR 150fF max;RS 1.5Ω max.
58	MA47410	7		M796	PIN;VBR 30Vmin;CT 400fF max;RS 1.5Ωmax;Thermal Res 40°C/W max
59	MA47411	7		M796	PIN;VBR 80V min;CTR 200fF max;RS 1.5Ω max.
60	MA47412	7		M796	PIN;VBR 30V min;CT 300fF max;RS 2.0Ω max;Thermal Res. 500°C/W max
61	MA47413	7		A1zx	PIN;Ct at 50V .8pF max;RS 3.0Ω typ;BV 100V min;Lifetime 8.0us typ
62	MA47414	7		u21	PIN;VBR 30V min;CT 300fF max;RS 2.0Ω max;Thermal Res. 40°C/W max
63	MA47416	7		u17	PIN;CT at 50V .35pF;RS at 20mA 18Ω max;BV 100V
64	MA47418	7		u17	PIN;CT at 50V .30pF;RS at 30mA 1.5Ω max;BV 200V
65	MA47419	7		u17	PIN;RF Switching time 250ns max at 50mA,-50V;VBR 100V min;Ct .50pF max
66	MA47420	7		u21	PIN;VB 35 min-50 typ;CVR 1.0pF max;RS .5Ω max;Lifetime 100ns typ
67	MA47421	7		u21	PIN;VB 35 min-50 typ;CVR 2.0pF max;RS
68	MA47422	7		u21	PIN;VB 35 min 50 typ;CVR 2.0pF max;RS
69	MA47423	7		u17	PIN;RF Switching time 200ns max at 50mA,-50V;VB 200V min;Ct .50pf max
70	MA47424	7		u21	PIN;Ct at 10V 350fF;RS 1.5Ω max;BV 200V min;Switching time 5.0ns typ
71	MA47425	7	Si	u17	PIN;CT at 10V .20pF;RS at 10mA 1.5Ω max;BV 100V min
72	MA47426	7	Si	u17	PIN;CT at 10V .25pF;RS at 10mA 1.2Ω max;BV 100V min
73	MA47427	7	Si	u17	PIN;Ct at 10V .10pF;RS at 30mA 2.5Ωmax;BV 150V min
74	MA47600	7	Si	A1ac	PIN;Ct at 50V .35pf max;RS at 20mA 18Ω max;BV 100V min.
75	MA47865	7	Si		Replacement for Philco Part No. L4750C/T0338
76	MA47867	7	Si		Replacement for Philco Part No. T0095
77	MA47868	7	Si		Replacement for Philco Part No. T6488
78	MA47869	7	Si		Replacement for Philco Part No. T5573
79	MA47870	7	Si		Replacement for Philco Part No. L4120
80	MA47876	7	Si		Replacement for Philco Part No. L4715(T4046)
81	MA47878	7	Si		Replacement for Philco Part No. T5056-2m
82	MA47879	7	Si		Replacement for Philco Part No. T4082
83	MA47880	7	Si		Replacement for Philco Part No. T0125
84	MA47881	7	Si		Replacement for Philco Part No. L8700
85	MA47883	7	Si		Replacement for Philco Part No. T5014
86	MA47890-131	7		u16a	PIN;Cj 3.0pF max;RS .20Ω max;BV 1.8kV min
87	MA47890-150	7		S489	PIN;Cj 3.0pF max;RS .20Ω max;BV 1.8kV min
88	MA47891-109	7		S396c	PIN;Cj 2.0pF max;RS .30Ω max;BV 1.2kV min
89	MA47891-131	7		u16a	PIN;Cj 2.0pF max;RS .30Ω max;BV 1.2kV min
90	MA47891-150	7		S489	PIN;Cj 2.0pF max;RS .30Ω max;BV 1.2kV min
91	MA47892-109	7		S396c	PIN;Cj 1.0pF max;RS .40Ω max;BV 1.2kV min
92	MA47892-131	7		u16a	PIN;Cj 1.0pF max;RS .40Ω max;BV 1.2kV min
93	MA47892-150	7		S489	PIN;Cj 1.0pF max;RS .40Ω max;BV 1.2kV min
94	MA47893-30	7		F115	PIN;Cj .20pF max;RS .80Ω max;BV 1.2kV min
95	MA47893-109	7		S396c	PIN;Cj .20pF max;RS .80Ω max;BV 1.2kV min
96	MA47893-131	7		u16a	PIN;Cj .20pF max;RS .80Ω max;BV 1.2kV min
97	MA47894-30	7		F115	PIN;Cj .10pF max;RS 1.0Ω max;BV 1.2kV min
98	MA47894-109	7		S396c	PIN;Cj .10pF max;RS 1.0Ω max;BV 1.2kV min
99	MA47894-131	7		u16a	PIN;Cj .10pF max;RS 1.0Ω max;BV 1.2kV min
100	MA47895-30	7		F115	PIN;Cj .70pF max;Rs .70Ω max;BV 600V min
101	MA47895-54	7		A1ac	PIN;Cj .70pF max;RS .40Ω max;BV 600V min
102	MA47895-109	7		S396c	PIN;Cj .70pF max;RS .40Ω max;BV 600V min
103	MA47895-131	7		u16a	PIN;Cj .70pF max;RS .40Ω max;BV 600V min
104	MA47896-30	7		F115	PIN;Cj .20pF max;RS .70Ω max;BV 600V min
105	MA47896-54	7		A1ac	PIN;Cj .20pF max;RS .70Ω max;BV 600V min
106	MA47896-131	7		u16a	PIN;Cj .20pF max;RS .70Ω max;BV 600V min
107	MA47897-30	7		F115	PIN;Cj .10pF max;RS 1.0Ω max;BV 600V min
108	MA47897-54	7		A1ac	PIN;Cj .10pF max;RS 1.0Ω max;BV 600V min
109	MA47897-131	7		u16a	PIN;Cj .10pF max;RS 1.0Ω max;BV 600V min
110	MA47898-30	7		F115	PIN;Cj .20pF max;RS .90Ω max;BV 300V min

8. MISCELLANEOUS DEVICES

IN ORDER OF (1) USE and (2) TYPE No.

LINE No.	[2] TYPE No.	[1] USE	DESCRIPTION MAT.	DWG. No.	TECHNICAL DATA
1	MA47898-54	7		A1ac	PIN;Cj .20pF max;RS .90Ω max;BV 300V min
2	MA47898-131	7		u16a	PIN;Cj .20pF max;RS .90Ω max;BV 300V min
3	MA47899-30	7		F115	PIN;Cj .10pF max;RS 1.0Ω max;BV 300V min
4	MA47899-54	7		A1ac	PIN;Cj .10pF max;RS 1.0Ω max;BV 300V min
5	MA47899-131	7		u16a	PIN;Cj .10pF MAX:RS 1.0Ω max;BV 300V min
6	MC103A	7	Si	DO16	PIN:V(BR) 30v min;Ct at 15V 1.5pf max;rts 1.0Ω max;P 0.2w
7	MC301	7	S:$	DO35	PIN; v(BR)R 30v min;CT at 15V 2.0pF max;RS 1.252 max;Pd 200mW 4
8	MC302#	7	S:$	DO35	PIN; v(BR)R 30V min;CT at 10V 2.2pf max;Rfs .852 max at IF 3.0mA;Pd 200mW
9	MC500A	7	Si	M277c	BV-1000V min;Cap.-.30pf at 100V;Series Resistance-2.0 ohms max.
10	MC500B	7	Si	A2d	BV-1000V min;Cap.-.30pf at 100V;Series Resistance-2.0 ohms max.
11	MC501A	7	Si	M277c	BV-1000V min;Cap.-.30pf at 100V;Series Resistance-.75ohms max.
12	MC501B	7	Si	A2d	BV-1000V min;Cap.-.30pf at 100V;Series Resistance-.75ohms max.
13	MC502A	7	Si	M277c	BV-1000V min;Cap.-.60pf at 100V;Series Resistance-2.0 ohms max.
14	MC502B	7	Si	A2d	BV-1000V min;Cap.-.60pf at 100V;Series Resistance-2.0 ohms max.
15	MC503A	7	Si	M277c	BV-1000V min;Cap.-.60pf at 100V;Series Resistance-.75ohms max.
16	MC503B	7	Si	A2d	BV-1000V min;Cap.-.60pf at 100V;Series Resistance-.75ohms max.
17	MC504A	7	Si	M277c	BV-1000V min;Cap.-.90pf at 100V;Series Resistance-2.0 ohms max.
18	MC504B	7	Si	A2d	BV-1000V min;Cap.-.90pf at 100V;Series Resistance-2.0 ohms max.
19	MC505A	7	Si	M277c	BV-1000V min;Cap.-.90pf at 100V;Series Resistance-.75ohms max.
20	MC505B	7	Si	A2d	BV-1000V min;Cap.-.90pf at 100V;Series Resistance-.75ohms max.
21	MC506A	7	Si	M277c	BV-1000V min;Cap.-1.2pf at 100V;Series Resistance-2.0 ohms max.
22	MC506B	7	Si	A2d	BV-1000V min;Cap.-1.2pf at 100V;Series Resistance-2.0 ohms max.
23	MC507A	7	Si	M277c	BV-1000V min;Cap.-1.2pf at 100V;Series Resistance-.75ohms max.
24	MC507B	7	Si	A2d	BV-1000V min;Cap.-1.2pf at 100V;Series Resistance-.75ohms max.
25	MC508A	7	Si	M277c	BV-800V min;Cap.-.90pf at 100V;Series Resistance-2.0 ohms max.
26	MC508B	7	Si	A2d	BV-800V min;Cap.-.90pf at 100V;Series Resistance-2.0 ohms max.
27	MC509A	7	Si	M277c	BV-800V min;Cap.-.90pf at 100V;Series Resistance-.75ohms max.
28	MC509B	7	Si	A2d	BV-800V min;Cap.-.90pf at 100V;Series Resistance-.75ohms max.
29	MC510A	7	Si	M277c	BV-800V min;Cap.-1.2pf at 100V;Series Resistance-2.0 ohms max.
30	MC510B	7	Si	A2d	BV-800V min;Cap.-1.2pf at 100V;Series Resistance-2.0 ohms max.
31	MC511A	7	Si	M277c	BV-800V min;Cap.-1.2pf at 100V;Series Resistance-.75ohms max.
32	MC511B	7	Si	A2d	BV-800V min;Cap.-1.2pf at 100V;Series Resistance-.75ohms max.
33	MC512A	7	Si	M277c	BV-800V min;Cap.-1.5pf at 100V;Series Resistance-2.0 ohms max.
34	MC512B	7	Si	A2d	BV-800V min;Cap.-1.5pf at 100V;Series Resistance-2.0 ohms max.
35	MC513A	7	Si	M277c	BV-800V min;Cap.-1.5pf at 100V;Series Resistance-.75ohms max.
36	MC513B	7	Si	A2d	BV-800V min;Cap.-1.5pf at 100V;Series Resistance-.75ohms max.
37	MC514A	7	Si	M277c	BV-800V min;Cap.-1.8pf at 100V;Series Resistance-2.0 ohms max.
38	MC514B	7	Si	A2d	BV-800V min;Cap.-1.8pf at 100V;Series Resistance-2.0 ohms max.
39	MC515A	7	Si	M277c	BV-800V min;Cap.-1.8pf at 100V;Series Resistance-.75ohms max.
40	MC515B	7	Si	A2d	BV-800V min;Cap.-1.8pf at 100V;Series Resistance-.75ohms max.
41	MC516A	7	Si	M277c	BV-600V min;Cap.-1.5pf at 100V;Series Resistance-2.0 ohms max.
42	MC516B	7	Si	A2d	BV-600V min;Cap.-1.5pf at 100V;Series Resistance-2.0 ohms max.
43	MC517A	7	Si	M277c	BV-600V min;Cap.-1.5pf at 100V;Series Resistance-.75ohms max.
44	MC517B	7	Si	A2d	BV-600V min;Cap.-1.5pf at 100V;Series Resistance-.75ohms max.
45	MC518A	7	Si	M277c	BV-600V min;Cap.-1.8pf at 100V;Series Resistance-2.0 ohms max.
46	MC518B	7	Si	A2d	BV-600V min;Cap.-1.8pf at 100V;Series Resistance-2.0 ohms max.
47	MC519A	7	Si	M277c	BV-600V min;Cap.-1.8pf at 100V;Series Resistance-.75ohms max.
48	MC519B	7	Si	A2d	BV-600V min;Cap.-1.8pf at 100V;Series Resistance-.75ohms max.
49	MC1354	7	Si	A2g	PIV-750V;IR-.02uA at VR-200V;Pd-300mW max.
50	MC1444	7	Si	A2g	PIV-1500V;IR-.02uA at VR-1000V;Pd-300mW max.
51	MC1462	7	Si	A2d	PIV-750V;IR-.10uA at VR-600V;Pd-750mW max.
52	MC1465	7	Si	A2g	PIV-1100V;IR-.10uA at VR-1000V;Pd-300mW max.
53	MD90	7	Si	M785	Switching Beam Lead PIN;V(BR)40V min;trr 24ns;VF 1.0V max at IF 10mA;CT 15fF;rs 6.0Ω.
54	MD100	7	Si	M785	Swithching beam lead pin;V(BR) 40V min;trr 21ns;VF 1.0V max at IF 10mA;CT 50ff;rs 4.0Ω
55	MD101	7	Si	M785	Switching Beam Lead PIN;V(BR)40V min;trr 35ns;VF 1.0V max at IF 10mA;CT 100fF;rs 3.0Ω.
56	MI105	7	Si	DO34	PIN;VRM 30V;Ct at 0V .50pF max;rfs1 at 10mA 20Ωmax;rfs2 at 10uA 1kΩmin
57	MI204	7	Si	DO35	PIN;VRM 30V;Ct at 15V 1.2pF Max;rfs1 at 10mA 10Ω max;rfs2 at 10uA 1kΩ min
58	MI206	7	SI	DO35	PIN:V(BR) 30v min;Ct at OV 1.5pf max;rts 3.0Ω max;P 0.3w
59	MI301	7	Si$	DO35	PIN;V(BR)R 110V min;Ct at 0V 3.0pF max;Rfs 1.2Ω max at IF 20mA;Pdiss 350mW
60	MI303	7	Si	DO35	PIN;VRM 180V;Ct at 0V 4.0pF max;rfs 1.0Ωmax;Pd 500mW
61	MI308	7	SI	DO35	PIN:V(BR) 50V min;Ct at 0V 1.6pf max;rts 0.7Ω max;Prf 50w
62	MI402	7	Si	DO41	PIN;V(BR)270V min;Ct at 12V-3.0pf max;RS 0.7Ω max;Pd 1.0W.
63	MI407	7	SI	DO41	PIN:V(BR) 50V min;Ct at 0V 1.8pf max;rts 0.7Ω max;Prf 100w
64	ML4202	7		†	V(B) 35V;Rf 0.9Ω;Cjo .45 max;fco 200GHz
65	ML4204	7		†	V(B) 30V;Rf 1.5Ω;Cjo .35 max;fco 220GHz
66	ML4206	7		†	V(B) 15V;Rf 1.5Ω;Cjo .25 max;fco 250GHz
67	ML4602	7	Si	F27as	Pin;Cj 250fF max; at 50V;Rs at 100mA 1.0Ω max;VB 90V min.
68	ML4603	7	Si	F27as	Pin;Cj 200fF max at 100V;Rs at 100mA 1.5Ω max;VB 200V min.
69	ML4604	7	Si	F27as	Pin;Cj 450fF max at 100V;Rs at 100mA 1.0Ω max;VB 400V min.
70	ML4605	7	Si	F27as	Pin;Cj 450fF max at 100V;Rs at 100mA 1.0Ω max;VB 600V min.
71	ML4610	7	Si	F47	PIN;VB 15V min;CT 400fF max;Rf 1.5Ω max;TL 10ns typ;TS 1.0ns typ;Freq RG 0.1-40GHz.
72	ML4611	7	Si	F47	PIN;VB 40V min;CT 350fF max;RF 1.5Ω max;TL 20ns typ;TS 2.0ns typ;Freq RG 0.1-40GHz.
73	ML4612	7	Si	F47	PIN;VB 40V min;CT 500fF max;RF 1.3Ω max;TL 20ns typ;TS 2.0ns typ;Freq RG 0.1-40GHz.
74	ML4613	7	Si	F47	PIN;VB 40V min;CT 500fF max;RF 1.3Ω max;TL 20ns typ;TS 2.0ns typ;Freq RG 0.1-40GHz.
75	ML4614	7	Si	F47	PIN;VB 70V min;CT 350fF max;RF 1.5Ω max;TL 60ns typ;TS 6.0ns typ;Freq RG 0.1-40GHz.
76	ML4615	7	Si	F47	PIN;VB 70V min;CT 500fF max;RF 1.3Ω max;TL 60ns typ;TS 6.0ns typ;Freq RG 0.1-40GHz.
77	ML4616	7	Si	F47	PIN;VB 70V min;CT 500fF max;RF 1.3Ω max;TL 60ns typ;TS 6.0ns typ;Freq RG 0.1-40GHz.
78	ML4617	7	Si	F47	PIN;VB 100V min;CT 350fF max;RF 1.5Ω max;TL 120ns typ;TS 12ns typ;Freq RG 0.1-40GHz.
79	ML4618	7	Si	F47	PIN;VB 100V min;CT 500fF max;RF 1.3Ω max;TL 120ns typ;TS 12ns typ;Freq RG 0.1-40GHz.
80	ML4619	7	Si	F47	PIN;VB 100V min;CT 600fF max;RF 1.0Ω max;TL 120ns typ;TS 12ns typ;Freq RG 0.1-40GHz.
81	ML4620	7	Si	F47	PIN;VB 100V min;CT 500fF max;RF 1.3Ω max;TL 120ns typ;TS 12ns typ;Freq RG 0.1-40GHz.
82	ML4621	7	Si	F47	PIN;VB 100V min;CT 600fF max;RF 1.0Ω max;TL 120ns typ;TS 12ns typ;Freq RG 0.1-40GHz.
83	ML4622	7	Si	F47	PIN;VB 150V min;CT 350fF max;RF 1.3Ω max;TL 250ns typ;TS 25ns typ;Freq RG 0.1-40GHz.
84	ML4623	7	Si	F47	PIN;VB 150V min;CT 450fF max;RF 1.0Ω max;TL 250ns typ;TS 25ns typ;Freq RG 0.1-40GHz.
85	ML4624	7	Si	F47	PIN;VB 150V min;CT 600fF max;RF 800mΩ max;TL 250ns typ;TS 25ns typ;Freq RG 0.1-40GHz.
86	ML4625	7	Si	F47	PIN;VB 150V min;CT 450fF max;RF 1.0Ω max;TL 250ns typ;TS 25ns typ;Freq RG 0.1-40GHz.
87	ML4626	7	Si	F47	PIN;VB 150V min;CT 600fF max;RF 800mΩ max;TL 250ns typ;TS 25ns typ;Freq RG 0.1-40GHz.
88	ML4627	7	Si	F47	PIN;VB 200V min;CT 350fF max;RF 1.3Ω max;TL 400ns typ;TS 40ns typ;Freq RG 0.1-40GHz.
89	ML4628	7	Si	F47	PIN;VB 200V min;CT 450fF max;RF 1.0Ω max;TL 400ns typ;TS 40ns typ;Freq RG 0.1-40GHz.
90	ML4629	7	Si	F47	PIN;VB 200V min;CT 600fF max;RF 800mΩ max;TL 400ns typ;TS 40ns typ;Freq RG 0.1-40GHz.
91	ML4630	7	Si	F47	PIN;VB 200V min;CT 450fF max;RF 1.0Ω max;TL 400ns typ;TS 40ns typ;Freq RG 0.1-40GHz.
92	ML4631	7	Si	F47	PIN;VB 200V min;CT 600fF max;RF 800mΩ max;TL400ns typ;TS 40ns typ;Freq RG 0.1-40GHz.
93	ML4640	7	Si	F47	PIN;VB 300V min;CT 350fF max;RF 1.3Ω max;TL 500ns typ;TS 50ns typ;Freq RG 0.1-12.4GHz.
94	ML4641	7	Si	F47	PIN;VB 300V min;CT 450fF max;RF 1.0Ω max;TL 750ns typ;TS 75ns typ;Freq RG 0.1-12.4GHz.
95	ML4642	7	Si	F47	PIN;VB 300V min;CT 600fF max;RF 800mΩ max;TL 1.0us typ;TS 100ns typ;Freq RG 0.1-12.4GHz.
96	ML4643	7	Si	F47	PIN;VB 300V min;CT 800fF max;RF 700mΩ max;TL 1.0us typ;TS 100ns typ;Freq RG 0.1-12.4GHz.
97	ML4644	7	Si	F47	Pin;VB 400V min;CT 350fF max;Rf 1.3Ω max;TL 1.0us typ;Ts 100ns typ;Freq RG 0.1-12.4GHz.
98	ML4645	7	Si	F47	PIN;VB 400V min;CT 450fF max;RF 1.0Ω max;TL1.5us typ;TS 150ns typ;Freq RG 0.1-12.4GHz.
99	ML4646	7	Si	F47	PIN;VB 400V min;CT 600fF max;RF 800mΩ max;TL 2.0us typ;TS 200ns typ;Freq RG 0.1-12.4GHz.
100	ML4647	7	Si	S454	PIN;VB 400V min;CT 800fF max;RF 700mΩ max;TL 2.0us typ;TS 200ns typ;Freq RG 0.1-12.4GHz.
101	ML4648	7	Si	F47	PIN;VB 500V min;CT 350fF max;RF 1.3Ω max;TL 1.0us typ;TS 100ns typ;Freq RG 0.1-12.4GHz.
102	ML4649	7	Si	F47	PIN;VB 500V min;CT 450fF max;RF 1.0Ω max;TL1.5us typ;TS 150ns typ;Freq RG 0.1-12.4GHz.
103	ML4650	7	Si	F47	PIN;VB 500V min;CT 600fF max;RF 800mΩ max;TL2.0us typ;TS 200ns typ;Freq RG 0.1-12.4GHz.
104	ML4651	7	Si	S454	PIN;VB 500V min;CT 800fF max;RF 700mΩ max;TL 2.0us typ;TS 200ns typ;Freq RG 0.1-12.4GHz.
105	ML4652	7	Si	F47	PIN;VB 600V min;CT 350fF max;RF 1.3Ω max;TL 1.5us typ;TS 150ns typ;Freq RG 0.1-12.4GHz.
106	ML4653	7	Si	F47	PIN;VB 600V min;CT 450fF max;RF 1.0Ω max;TL 2.0us typ;TS 200ns typ;Freq RG 0.1-12.4GHz.
107	ML4654	7	Si	F47	PIN;VB 600V min;CT 600fF max;RF 800mΩ max;TL 3.0us typ;TS 300ns typ;Freq RG 0.1-12.4GHz.
108	ML4655	7	Si	S454	PIN;VB 600V min;CT 800fF max;RF 700mΩ max;TL 3.0us typ;TS 300ns typ;Freq RG 0.1-12.4GHz.
109	ML4660-114	7	Si	S347	Broadband Pin;Freq RG 0.1-18GHz;Insertion Loss 1.5dB max;ISOL 20dB min;TS 1.0ns typ;VB15Vmin
110	ML4660-115	7	Si	M793	Broadband Pin;Freq RG 0.1-18GHz;Insertion Loss 1.5dB max;ISOL 20dB min;TS 1.0nstyp;VB 15Vmin

8. MISCELLANEOUS DEVICES

IN ORDER OF (1) USE and (2) TYPE No.

LINE No.	2 TYPE No.	1 USE	DESCRIPTION MAT.	DWG. No.	TECHNICAL DATA
1	ML4660-144	7	Si	M723	Broadband Pin;Freq RG 0.1-12GHz;Insertion Loss 1.5dB max;ISOL 20dB min;TS 1.0nstyp;VB 15Vmin
2	ML4661-114	7	Si	S347	Broadband Pin;Freq RG 0.1-12GHz;Insertion Loss 700mdBmax;ISOL 20dB min;TS 2.0ns typ;VB40Vmin
3	ML4661-115	7	Si	M793	Broadband Pin;Freq RG 0.1-18GHz;Insertion Loss 700mdBmax;ISOL 20dB min;TS 2.0nstyp;VB 40Vmin
4	ML4661-144	7	Si	M723	Broadband Pin;Freq RG 0.1-12GHz;Insertion Loss 700mdBmax;ISOL 20dB min;TS 2.0nstyp;VB 40Vmin
5	ML4662-114	7	Si	S347	Broadband Pin;Freq RG 0.1-12GHz;Insertion Loss 700mdBmax;ISOL 20dB min;TS 2.0ns typ;VB40Vmin
6	ML4662-115	7	Si	M793	Broadband Pin;Freq RG 0.1-12GHz;Insertion Loss 700mdBmax;ISOL 20dB min;TS 2.0nstyp;VB 40Vmin
7	ML4662-144	7	Si	M723	Broadband Pin;Freq RG 0.1-12GHz;Insertion Loss 700mdBmax;ISOL 20dB min;TS 2.0nstyp;VB 40Vmin
8	ML4663-114	7	Si	S347	Broadband Pin;Freq RG 0.1-12GHz;Insertion Loss 700mdBmax;ISOL 20dB min;TS 6.0ns typ;VB70Vmin
9	ML4663-115	7	Si	M793	Broadband Pin;Freq RG 0.1-12GHz;Insertion Loss 700mdB max;Isol 20dB min;IS6.0nstyp;VB70Vmin
10	ML4663-144	7	Si	M723	Broadband Pin;Freq RG 0.1-12GHz;Insertion Loss 700mdBmax;ISOL 20dB min;TS 6.0nstyp;VB 70Vmin
11	ML4664-114	7	Si	S347	Broadband Pin;Freq RG 0.1-12GHz;Insertion Loss 700mdBmax;ISOL 20dB min;TS 6.0ns typ;VB70Vmin
12	ML4664-115	7	Si	M793	Broadband Pin;Freq RG 0.1-12GHz;Insertion Loss 700mdBmax;ISOL 20dB min;TS 6.0nstyp;VB 70Vmin
13	ML4664-144	7	Si	M723	Broadband Pin;Freq RG 0.1-12GHz;Insertion Loss 700mdBmax;ISOL 20dB min;TS 6.0nstyp;VB 70Vmin
14	ML4665-114	7	Si	S347	Broadband Pin;Freq RG 0.1-12GHz;Insertion Loss 700mdBmax;ISOL 20dB min;TS 12ns typ;VB100Vmin
15	ML4665-115	7	Si	M793	Broadband Pin;Freq RG 0.1-12GHz;Insertion Loss 700mdBmax;ISOL 20dB min;TS 12ns typ;VB100Vmin
16	ML4665-144	7	Si	M723	Broadband Pin;Freq RG 0.1-12GHz;Insertion Loss 700mdBmax;ISOL 20dB min;TS 12ns typ;VB100Vmin
17	ML4666-114	7	Si	S347	Broadband Pin;Freq RG 0.1-12GHz;Insertion Loss 700mdBmax;ISOL 20dB min;TS 12ns typ;VB100Vmin
18	ML4666-115	7	Si	M793	Broadband Pin;Freq RG 0.1-12GHz;Insertion Loss 700mdB max;Isol 20dB min;IS12nstyp;VB100Vmin
19	ML4666-144	7	Si	M723	Broadband Pin;Freq RG 0.1-12GHz;Insertion Loss 700mdBmax;ISOL 20dB min;TS 12ns typ;VB100Vmin
20	ML4667-114	7	Si	S347	Broadband Pin;Freq RG 0.1-12GHz;Insertion Loss 700mdBmax;ISOL 20dB min;TS 25ns typ;VB150Vmin
21	ML4667-115	7	Si	M793	Broadband Pin;Freq RG 0.1-12GHz;Insertion Loss 700mdBmax;ISOL 20dB min;TS 25ns typ;VB150Vmin
22	ML4667-144	7	Si	M723	Broadband Pin;Freq RG 0.1-12GHz;Insertion Loss 700mdBmax;ISOL 20dB min;TS 25ns typ;VB150Vmin
23	ML4668-114	7	Si	S347	Broadband Pin;Freq RG 0.1-12GHz;Insertion Loss 700mdBmax;ISOL 20dB min;TS 25ns typ;VB150Vmin
24	ML4668-115	7	Si	M793	Broadband Pin;Freq RG 0.1-12GHz;Insertion Loss 700mdBmax;ISOL 20dB min;TS 25ns typ;VB150Vmin
25	ML4668-144	7	Si	M723	Broadband Pin;Freq RG 0.1-12GHz;Insertion Loss 700mdBmax;ISOL 20dB min;TS 25ns typ;VB150Vmin
26	ML4669-114	7	Si	S347	Broadband Pin;Freq RG 0.1-12GHz;Insertion Loss 1.0dB max;ISOL 20dB min;TS 40ns typ;VB200Vmin
27	ML4669-115	7	Si	M793	Broadband Pin;Freq RG 0.1-12GHz;Insertion Loss 1.0dB max;ISOL 20dB min;TS 40ns typ;VB200Vmin
28	ML4669-144	7	Si	M723	Broadband Pin;Freq RG 0.1-12GHz;Insertion Loss 1.0dB max;ISOL 20dB min;TS 40ns typ;VB200Vmin
29	ML4670-114	7	Si	S347	Broadband Pin;Freq RG 0.1-12GHz;Insertion Loss 1.0dB max;ISOL 20dB min;TS 40ns typ;VB200Vmin
30	ML4670-115	7	Si	M793	Broadband Pin;Freq RG 0.1-12GHz;Insertion Loss 1.0dB max;ISOL 20dB min;TS 40ns typ;VB200Vmin
31	ML4670-144	7	Si	M723	Broadband Pin;Freq RG 0.1-12GHz;Insertion Loss 1.0dB max;ISOL 20dB min;TS 40ns typ;VB200Vmin
32	ML4671-114	7	Si	S347	Broadband Pin;Freq RG 0.1-12GHz;Insertion Loss 1.0dB max;ISOL 20dB min;TS 50ns typ;VB300Vmin
33	ML4671-115	7	Si	M793	Broadband Pin;Freq RG 0.1-12GHz;Insertion Loss 1.0dB max;ISOL 20dB min;TS 50ns typ;VB300Vmin
34	ML4671-144	7	Si	M723	Broadband Pin;Freq RG 0.1-12GHz;Insertion Loss 1.0dB max;ISOL 20dB min;TS 50ns typ;VB300Vmin
35	ML4672-114	7	Si	S347	Broadband Pin;Freq RG 0.1-12GHz;Insertion Loss 1.2dB max;ISOL 20dB min;TS 100nstyp;VB400Vmin
36	ML4672-115	7	Si	M793	Broadband Pin;Freq RG 0.1-12GHz;Insertion Loss 1.2dB max;ISOL 20dB min;TS100ns typ;VB400Vmin
37	ML4672-144	7	Si	M723	Broadband Pin;Freq RG 0.1-12GHz;Insertion Loss 1.2dB max;ISOL 20dB min;TS100ns typ;VB400Vmin
38	ML4673-114	7	Si	S347	Broadband Pin;Freq RG 0.1-12GHz;Insertion Loss 1.2dB max;ISOL 20dB min;TS 100nstyp;VB500Vmin
39	ML4673-115	7	Si	M793	Broadband Pin;Freq RG 0.1-12GHz;Insertion Loss 1.2dB max;ISOL 20dB min;TS100ns typ;VB500Vmin
40	ML4673-144	7	Si	M723	Broadband Pin;Freq RG 0.1-12GHz;Insertion Loss 1.2dB max;ISOL 20dB min;TS100ns typ;VB500Vmin
41	ML4674-114	7	Si	S347	Broadband Pin;Freq RG 0.1-12GHz;Insertion Loss 1.2dB max;ISOL 20dB min;TS 150nstyp;VB600Vmin
42	ML4674-115	7	Si	M793	Broadband Pin;Freq RG 0.1-12GHz;Insertion Loss 1.2dB max;ISOL 20dB min;TS100ns typ;VB600Vmin
43	ML4674-144	7	Si	M723	Broadband Pin;Freq RG 0.1-12GHz;Insertion Loss 1.2dB max;ISOL 20dB min;TS150ns typ;VB600Vmin
44	ML5620C	7		†	Freq 0.6G Peak Power 2.0k;Switching Speed 500ns;Broadband Switch
45	ML5620CJ	7		†	Freq 0.6G;Peak Power 1.0k;Switching Speed 500ns;Broadband Switch
46	ML5620J	7		†	Freq 1.1G Peak Power 1.0k;Switching Speed 500ns;Broadband Switch
47	ML5620PL	7		†	Freq 0.4GHz Peak Power 2.0k;Switching Speed 500ns;Broadband Switch
48	ML5620PS	7		†	Freq 0.5G;Peak Power 2.0k;Switching Speed 500ns;Broadband Switch
49	ML5620S	7		†	Freq 0.5G Peak Power 2.0k;Switching Speed 500ns Broadband Switch
50	ML5620X	7		†	Freq 0.8G Peak Power 1.5k;Switching Speed 500ns;Broadband Switch
51	ML5621C	7		†	Freq 0.7G Peak Power 10W;Switching Speed 25ns;Broadband Switch
52	ML5621CJ	7		†	Freq 0.7G;Peak Power 10W;Switching Speed 25ns;Broadband Switch
53	ML5621J	7		†	Freq 1.3G Peak Power 10W;Switching Speed 25ns;Broadband Switch
54	ML5621PL	7		†	Freq 0.4GHz Peak Power 10W;Switching Speed 25ns;Broadband Switch
55	ML5621PS	7		†	Freq 0.5G;Peak Power 10W;Switching Speed 25ns;Broadband Switch
56	ML5621S	7		†	Freq 0.5G Peak Power 10W;Switching Speed 25ns;Broadband Switch
57	ML5621X	7		†	Freq 0.9G Peak Power 10W;Switching Speed 25ns;Broadband Switch
58	ML5624C	7		†	Freq 0.9G;Peak Power 2.0k;Switching Speed 500ns;Broadband Switch
59	ML5624J	7		†	Freq 1.5G;Peak Power 1.0k;Switching Speed 500ns;Broadband Switch
60	ML5624PL	7		†	Freq 0.5G;Peak Power 2.0k;Switching Speed 500ns;Broadband Switch
61	ML5624PS	7		†	Freq 0.7G;Peak Power 2.0k;Switching Speed 500ns;Broadband Switch
62	ML5624S	7		†	Freq 0.7G;Peak Power 2.0k;Switching Speed 500ns;Broadband Switch
63	ML5624SJ	7		†	Freq 1.5G;Peak Power 1.0k;Switching Speed 500ns;Broadband Switch
64	ML5624X	7		†	Freq 1.2G;Peak Power 1.5k;Switching Speed 500ns;Broadband Switch
65	ML5625C	7		†	Freq 1.0G;Peak Power 10W;Switching Speed 25ns;Broadband Switch
66	ML5625J	7		†	Freq 1.7G;Peak Power 10W;Switching Speed 25ns;Broadband Switch
67	ML5625PL	7		†	Freq 0.5G;Peak Power 10W;Switching Speed 25ns;Broadband Switch
68	ML5625PS	7		†	Freq 0.7G;Peak Power 10W;Switching Speed 25ns;Broadband Switch
69	ML5625S	7		†	Freq 0.7G;Peak Power 10W;Switching Speed 25ns;Broadband Switch
70	ML5625SJ	7		†	Freq 1.7G;Peak Power 10W;Switching Speed 25ns;Broadband Switch
71	ML5625X	7		†	Freq 1.3G;Peak Power 10W;Switching Speed 25ns;Broadband Switch
72	ML5640C	7		†	Freq 0.8G;Peak Power 2.0W;Switching Speed 500ns;Broadband Switch
73	ML5640J	7		†	Freq 1.5G Peak Power 2.0W;Switching Speed 500ns;Broadband Switch
74	ML5640PL	7		†	Freq 0.5G;Peak Power 2.0W;Switching Speed 500ns;Broadband Switch
75	ML5640PS	7		†	Freq 0.6G Peak Power 2.0W;Switching Speed 500ns;Broadband Switch
76	ML5640S	7		†	Freq 0.6G;Peak Power 2.0W;Switching Speed 500ns;Broadband Switch
77	ML5640X	7		†	Freq 1.2G Peak Power 2.0W;Switching Speed 500ns;Broadband Switch
78	ML5640XJ	7		†	Freq 1.8G Peak Power 2.0W;Switching Speed 500ns;Broadband Switch
79	ML5641C	7		†	Freq 0.8G;Peak Power 1.0W;Switching Speed 25ns;Broadband Switch
80	ML5641J	7		†	Freq 1.5G Peak Power 1.0W;Switching Speed 25ns;Broadband Switch
81	ML5641PL	7		†	Freq 0.5G;Peak Power 1.0W;Switching Speed 25ns;Broadband Switch
82	ML5641PS	7		†	Freq 0.6G Peak Power 1.0W;Switching Speed 25ns;Broadband Switch
83	ML5641S	7		†	Freq 0.6G;Peak Power 1.0W;Switching Speed 25ns;Broadband Switch
84	ML5641X	7		†	Freq 1.2G Peak Power 1.0W;Switching Speed 25ns;Broadband Switch
85	ML5641XJ	7		†	Freq 1.8G Peak Power 1.0W;Switching Speed 25ns;Broadband Switch
86	ML5642J	7		†	Freq 1.5G Peak Power 1.0k;Switching Speed 500ns;Broadband Switch
87	ML5642X	7		†	Freq 1.2G Peak Power 1.0k;Switching Speed 500ns;Broadband Switch
88	ML5643J	7		†	Freq 1.5G Peak Power 10W;Switching Speed 25ns;Broadband Switch
89	ML5643X	7		†	Freq 1.2G Peak Power 10W;Switching Speed 25ns;Broadband Switch
90	ML5644C	7		†	Freq 1.0G;Peak Power 2.0W;Switching Speed 500ns;Broadband Switch
91	ML5644J	7		†	Freq 2.2G;Peak Power 2.0W;Switching Speed 500ns;Broadband Switch
92	ML5644PL	7		†	Freq 0.5G;Peak Power 2.0W;Switching Speed 50ns;Broadband Switch
93	ML5644PS	7		†	Freq 0.8G Peak Power 2.0W;Switching Speed 500ns;Broadband Switch
94	ML5644S	7		†	Freq 0.7G;Peak Power 2.0W;Switching Speed 500ns;Broadband Switch
95	ML5644X	7		†	Freq 1.6G;Peak Power 2.0W;Switching Speed 500ns;Broadband Switch
96	ML5644XJ	7		†	Freq 2.3G Peak Power 2.0W;Switching Speed 500ns;Broadband Switch
97	ML5645C	7		†	Freq 1.0G;Peak Power 1.0W;Switching Speed 40ns;Broadband Switch
98	ML5645J	7		†	Freq 2.2G;Peak Power 1.0W;Switching Speed 25ns;Broadband Switch
99	ML5645PL	7		†	Freq 0.5G;Peak Power 1.0W;Switching Speed 500ns;Broadband Switch
100	ML5645PS	7		†	Freq 0.8G Peak Power 1.0W;Switching Speed 40ns;Broadband Switch
101	ML5645S	7		†	Freq 0.7G;Peak Power 1.0W;Switching Speed 40ns;Broadband Switch
102	ML5645X	7		†	Freq 1.6G;Peak Power 1.0W;Switching Speed 40ns;Broadband Switch
103	ML5645XJ	7		†	Freq 2.3G Peak Power 1.0W;Switching Speed 40ns;Broadband Switch
104	ML5646J	7		†	Freq 2.2G Peak Power 1.0k;Switching Speed 500ns;Broadband Switch
105	ML5646X	7		†	Freq 1.6G;Peak Power 1.0k;Switching Speed 500ns;Broadband Switch
106	ML5647J	7		†	Freq 2.2G Peak Power 10W;Switching Speed 40ns;Broadband Switch
107	ML5647X	7		†	Freq 1.6G;Peak Power 10W;Switching Speed 25ns;Broadband Switch
108	ML5710C	7		†	Freq Range 4.0G-8.0G;Peak Power 100W;CW 3.0W;Broadband Switch
109	ML5710J	7		†	Freq Range 12.0G-18.0G;Peak Power 100W;CW 1.0W;Broadband Switch
110	ML5710LJ	7		†	Freq Range 1.0G-18.0G;Peak Power 100W;CW 1.0W;Broadband Switch

8. MISCELLANEOUS DEVICES

IN ORDER OF (1) USE and (2) TYPE No.

LINE No.	2 TYPE No.	1 USE	DESCRIPTION MAT.	DWG. No.	TECHNICAL DATA
1	ML5710PL	7		†	Freq Range 0.5G-2.0G;Peak Power 100W;CW 4.0W;Broadband Switch
2	ML5710PX	7		†	Freq Range 0.5G-12.0G;Peak Power 100W;CW 2.0W;Broadband Switch
3	ML5710S	7		†	Freq Range 2.0G-4.0G;Peak Power 100W;CW 4.0W;Broadband Switch
4	ML5710X	7		†	Freq Range 8.0G-12.0G;Peak Power 100W;CW 2.0W;Broadband Switch
5	ML5720C	7		†	Freq Range 4.0G-8.0G;Peak Power 100W;CW 3.0W;Broadband Switch
6	ML5720J	7		†	Freq Range 12.0G-18.0G;Peak Power 100W;CW 1.0W;Broadband Switch
7	ML5720LJ	7		†	Freq Range 1.0G-18.0G;Peak Power 300w;CW 2.0W;Broadband Switch
8	ML5720PL	7		†	Freq Range 0.5G-2.0G;Peak Power 100W;CW 4.0W;Broadband Switch
9	ML5720PX	7		†	Freq Range 0.5G-12.0G;Peak Power 300W;CW 3.0W;Broadband Switch
10	ML5720S	7		†	Freq Range 2.0G-4.0G;Peak Power 100W;CW 4.0W;Broadband Switch
11	ML5720X	7		†	Freq Range 8.0G-12.0G;Peak Power 100W;CW 2.0W;Broadband Switch
12	ML5730C	7		†	Freq Range 4.0G-8.0G;Peak Power 300W;CW 4.0W;Broadband Switch
13	ML5730J	7		†	Freq Range 12.0G-18.0G;Peak Power 300W;CW 2.0W;Broadband Switch
14	ML5730PL	7		†	Freq Range 0.5G-2.0G;Peak Power 300W;CW 5.0W;Broadband Switch
15	ML5730S	7		†	Freq Range 2.0G-4.0G;Peak Power 300W;CW 5.0W;Broadband Switch
16	ML5730X	7		†	Freq Range 8.0G-12.0G;Peak Power 300W;CW 3.0W;Broadband Switch
17	ML5740C	7		†	Freq Range 4.0G-8.0G;Peak Power 1.0k;CW 6.0W;Broadband Switch
18	ML5740PL	7		†	Freq Range 0.5G-2.0G;Peak Power 1.0k;CW 7.0W;Broadband Switch
19	ML5740S	7		†	Freq Range 2.0G-4.0G;Peak Power 1.0k;CW 7.0W;Broadband Switch
20	ML5740X	7		†	Freq Range 8.0G-12.0G;Peak Power 1.0k;CW 5.0W;Broadband Switch
21	ML17310M2	7		S510	Limiter;Coax Passive;Freq OperRange 500M-2.0GHz;Po150mW
22	ML17310M3	7		S510	Limiter;Coax Passive;Freq OperRange 500M-2.0GHz;Po 200mW
23	ML17310M4	7		S510a	Limiter;Coax Passive;Freq OperRange 500M-2.0GHz;Po 200mW
24	ML17320M2	7		S510	Limiter;Coax Passive;Freq OperRange 2.0G-4.0GHz;Po 150mW
25	ML17320M3	7		S510	Limiter;Coax Passive;Freq Oper Range 2.0G-4.0GHz;Po 200mW
26	ML17320M4	7		S510a	Limiter;Coax Passive;Freq OperRange 2.0G-4.0GHz;Po 200mW
27	ML17330M2	7		S510	Limiter;Coax Passive;Freq OperRange 4.0G-8.0GHz;Po 100mW
28	ML17330M3	7		S510	Limiter;Coax Passive;Freq OperRange 4.0G-8.0GHz;Po 150mW
29	ML17330M4	7		S510	Limiter;Coax Passive;Freq OperRange 4.0G-8.0GHz;Po 200mW
30	ML17340M2	7		S510	Limiter;Coax Passive;Freq OperRange 8.0G-12GHz;Po 100mW
31	ML17340M3	7		S510	Limiter; Coax Passive; Freq Oper Range 8.0G-12GHz;Po 150mW
32	ML17340M4	7		S510	Limiter; Coax Passive; Freq Oper Range 8.0G-12GHz; Po 200mW
33	ML17350M2	7		S510	Limiter;Coax Passive;Freq Oper Range 12G-18GHz;Po 200mW
34	ML17350M3	7		S510	Limiter; Coax Passive; Freq Oper Range 12G-18GHz; Po 200mW
35	ML17370M1	7		S510	Limiter; Coax Passive; Freq Oper Range 500M-12GHz; Po 200mW
36	ML17370M2	7		S510	Limiter; Coax Passive; Freq Oper Range 500M-12GHz; Po 200mW
37	ML17380M1	7		S510	Limiter; Coax Passive; Freq Oper Range 1.0G-18GHz; Po 200mW
38	ML17380M2	7		S510	Limiter; Coax Passive; Freq Oper Range 1.0G-18GHz; Po 200mW
39	MPN3401	7	Si	A276	Pin;VR 35V;Pd 400mW;Capacitance 1.0pF max;Ser Resistance 700mΩ max.
40	MPN3402	7	Si	A276	Pin;VR 35V;Pd 400mW;Capacitance 2.0pF max;Ser Resistance 600mΩ max.
41	MPN3404	7	Si	M764a	PIN;VR 20V;Pd 400mW max;Capacitance 180fF;Ser Resistance 850mΩ max.
42▼	MPN3700	7	Si	TO92	High Voltage PIN Switching Diode;V(BR)R 200V min;PF 200mW;R(s) 1Ω max;I(R) 0.1uA max
43	MS6102-8	7		F27as∅	PIN;VBR 100V min;CJ 200ff max;RS 1.0Ω max;Carrier Lifetime 100ns Typ
44	MS6102-8A	7		F56y	PIN;VBR 100V min;CJ 200ff max;RS 1.0Ω max;Carrier Lifetime 100ns Typ
45	MS6102-22	7		u20h∅	PIN;VBR 100V min;CJ 200ff max
46	MS6102-23	7		M893	PIN;VBR 100V min;CJ 200ff max
47	MS6102-24	7		M838a	PIN;VBR 100V min;CJ 200ff max
48	MS6104-8	7		F27as∅	PIN;VBR 200V min;CJ 150ff max;RS 1.0Ω max;Carrier Lifetime 200ns Typ
49	MS6104-8A	7		F56y	PIN;VBR 200V min;CJ 150ff max;RS 1.0Ω max;Carrier Lifetime 200ns Typ
50	MS6104-22	7		u20h∅	PIN;VBR 200V min;CJ 150ff max
51	MS6104-23	7		M893	PIN;VBR 200V min;CJ 150ff max
52	MS6104-24	7		M838a	PIN;VBR 200V min;CJ 150ff max
53	MS6106-8	7		F27as∅	PIN;VBR 100V min;CJ 120ff max;RS 1.5Ω max;Carrier Lifetime 100ns Typ
54	MS6106-8A	7		F56y	PIN;VBR 100V min;CJ 120ff max;RS 1.5Ω max;Carrier Lifetime 100ns Typ
55	MS6106-22	7		u20h∅	PIN;VBR 100V min;CJ 120ff max
56	MS6106-23	7		M893	PIN;VBR 100V min;CJ 120ff max
57	MS6106-24	7		M838a	PIN;VBR 100V min;CJ 120ff max
58	MS6108-8	7		F27as∅	PIN;VBR 200V min;CJ 100ff max;RS 1.5Ω max;Carrier Lifetime 200ns Typ
59	MS6108-8A	7		F56y	PIN;VBR 200V min;CJ 100ff max;RS 1.5Ω max;Carrier Lifetime 200ns Typ
60	MS6108-22	7		u20h∅	PIN;VBR 200V min;CJ 100ff max
61	MS6108-23	7		M893	PIN;VBR 200V min;CJ 100ff max
62	MS6108-24	7		M838a	PIN;VBR 200V min;CJ 100ff max
63	MS8111	7	♦	DO35	Lo Threshold Sw;VBR 5.0V at IR 10uA;VF .40V at IF 1.0mA;Ct 1.6pF at 1.0MHz;IR 200nA at 3V
64	MS8121	7	♦	DO35	Lo Threshold Sw;VBR 5.0V at IR 10uA;VF .40V at IF 1.0mA;Ct 1.6pF at 1.0MHz;IR 200nA at 3V
65	MS8211	7	♦	DO35	Lo Threshold Sw;VBR 10V at IR 10uA;VF .40V at IF 1.0mA;Ct 1.6pF at 1.0MHz;IR 200nA at 3V
66	MS8221	7	♦	DO35	Lo Threshold Sw;VBR 10V at IR 10uA;VF .40V at IF 1.0mA;Ct 1.6pF at 1.0MHz;IR 200nA at 3V
67	MS8311	7	♦	DO35	Lo Threshold Sw;VBR 20V at IR 10uA;VF .40V at IF 1.0mA;Ct 1.6pF at 1.0MHz;IR 200nA at 3V
68	MSM1201KU	7		M1057	Hi-Speed SPST Sw Mod;Frng 12-18GHz;Ins Loss at 10V 1.4db max;Isol at 10mA 45db min
69	MSM3122VK	7		M1055	SP3T Mods;Freq Rng 0.1-18GHz;Inser Loss at 50mA 2.3db Max;Isolation at 15mA 40db Min
70	MSM3122X	7		M1055	SP3T Mods;Freq Rng 8.0-12.4GHz;Inser Loss at 50mA 1.9db Max;Isolation at 15mA 45db Min
71	ND6261-3F	7	Si	V16	PIN Diodes;Med Life;Cath Heat Sink;Rs at If/10mA 2.5Ω;Min BVat Ir/10uA 100V
72	ND6271-5E	7	Si	V16	PIN Diodes;Med Life;Cath Heat Sink;Rs at If/10mA 2.5Ω;Min BVat Ir/10uA 100V
73	ND6281-3G	7	Si	V15	PIN Diodes;Med Life;Cath Heat Sink;Rs at If/10mA 2.5Ω;Min BVat Ir/10uA 100V
74	ND6341-7E	7	Si	V15	PIN Diodes;Long Lipe;Anode Heat Sink;Rs et If 10mA 8.0Ω;Min BV at Ir 10uA 100V
75	ND6361-3F	7	Si	V16	PIN Diodes;Long Lipe;Anode Heat Sink;Rs et If 10mA 8.0Ω;Min BV at Ir 10uA 100V
76	ND6371-5E	7	Si	V16	PIN Diodes;Long Lipe;Anode Heat Sink;Rs et If 10mA 8.0Ω;Min BV at Ir 10uA 100V
77	ND6461-3G	7	Si	V15	PIN Diodes;Low Life;Cath Heat Sink;Rs at If/10mA 1.0Ω;Min BVat Ir/10uA 60V
78	ND6471-5E	7	Si	V16	PIN Diodes;Low Life;Cath Heat Sink;Rs at If/10mA 1.0Ω;Min BVat Ir/10uA 60V
79	ND6481-5E	7	Si	V16	PIN Diodes;Fast Switch;Cath Heat Sink;Rs at If/10mA 0.8Ω;MinBV at Ir/10uA 30V
80	ND6651-3M	7	Si	V15	PIN Diodes;Fast Switch;Cath Heat Sink;Rs at If/10mA 0.8Ω;MinBV at Ir/10uA 30V
81	ND6661-3M	7	Si	V15	PIN Diodes;Fast Switch;Cath Heat Sink;Rs at If/10mA 0.8Ω;MinBV at Ir/10uA 30V
82	ND6801-7E	7	Si	V15	PIN Diodes;Long Lipe;Anode Heat Sink;Rs et If 10mA 10Ω;Min BV at Ir 10uA 30V
83	NJS6918	7			Limiter;9300-9500MHz;VSWR 1.5;Transmitter Pwr 4.0kW
84	PC1RP	7		A1ba	Pin diode;Vmw 100V;If max 500mA;Po 3.0W max;Ct 0.7pf
85	PC1RP-B	7		A1bb	Pin diode;Vmw 100v;IF max 500ma;Po 3.0W max;CT 0.7pf
86	PD1RP	7		A1ba	Pin diode;Vmw 150v;IF max 500ma;Po 3.0W max;CT 0.7pf
87	PD1RP-B	7		A1bb	Pin diode Vmw 150v;IF max 500ma;Po 3.0W max;CT 0.7pf
88	PD2RP	7			PIN VHF/UHF;VR 200V max;Cd .70pF max;RF .75Ωat IF 50mA
89	PD3RP	7			Pin diode;Vmw 200v;IF max 500ma;Po 3.0w max;Ct 0.7pf
90	PD3RP-A	7		A1ba	Pin diode;Vmw 200v;IF max 500ma;Po 3.0w max;Ct 0.7pf
91	PFS700-01	7		F27as	Pin;VB 70Vmin;Cj .05pf max at 10V max;Rs at IF 50mA 1.5Ω;Ts 2.5ns typ.
92	PFS700-05	7		F10af	Pin;VB 70V min;Cj .05pf max at 10V;Max Rs at IF 50mA 1.5Ω;Ts 2.5ns typ.
93	PFS700-08	7		A1vd	Pin;VB 70V min;Cj .05pf max at 10V;Max Rs at IF 50mA 1.5Ω;Ts 2.5ns typ.
94	PFS700-45	7		F54c	Pin;VB 70V min;Cj .05pf max at 10V;Max Rs at IF 50mA 1.5Ω;Ts 2.5ns typ.
95	PFS701-01	7		F27as	Pin;VB 70V min;Cj .10pf max at 10V;Max Rs at IF 50mA 1.2Ω;Ts 2.5ns typ.
96	PFS701-05	7		F10af	Pin;VB 70V min;Cj .10pf max at 10V;Max Rs at IF 50mA 1.2Ω;Ts 2.5ns typ.
97	PFS701-08	7		A1vd	Pin;VB 70V min;Cj .10pf max at 10V;Max Rs at IF 50mA 1.2Ω;Ts 2.5ns typ.
98	PFS701-45	7		F54c	Pin;VB 70V min;Cj .10pf max at 10V;Max Rs at IF 50mA 1.2Ω;Ts 2.5ns typ.
99	PFS702-01	7		F27as	Pin;VB 70V min;Cj .15pf max at 10V;Max Rs 1.0Ω at IF 50mA;Ts 2.5ns typ.
100	PFS702-05	7		F10af	Pin;VB 70V min;Cj .15pf max at 10V;Max Rs 1.0Ω at IF 50mA;Ts 2.5ns typ.
101	PFS702-08	7		A1vd	Pin;VB 70V min;Cj .15pf max at 10V;Max Rs 1.0Ω at IF 50mA;Ts 2.5ns typ.
102	PFS702-45	7		F54c	Pin;VB 70V min;Cj .15pf max at 10V;Max Rs 1.0Ω at IF 50mA;Ts 2.5ns typ.
103	PFS703-01	7		F27as	Pin;VB 70V min;Cj .20pf max at 10V;Max Rs .80Ω at IF 50mA;Ts 2.5ns typ.
104	PFS703-05	7		F10af	Pin;VB 70V min;Cj .20pf max at 10V;Max Rs .80Ω at IF 50mA;Ts 2.5ns typ.
105	PFS703-08	7		A1vd	Pin;VB 70V min;Cj .20pf max at 10V;Max Rs .80Ω at IF 50mA;Ts 2.5ns typ.
106	PFS703-45	7		F54c	Pin;VB 70V min;Cj .20pf max at 10V;Max Rs .80Ω at IF 50mA;Ts 2.5ns typ.
107	PFS704-01	7		F27as	Pin;VB 70V min;Cj .25pf max at 10V;Max Rs .80Ω at IF 50mA;Ts 2.5ns typ.
108	PFS704-05	7		F10af	Pin;VB 70V min;Cj .25pf max at 10V;Max Rs .80Ω at IF 50mA;Ts 2.5ns typ.
109	PFS704-08	7		A1vd	Pin;VB 70V min;Cj .25pf max at 10V;Max Rs .80Ω at IF 50mA;Ts 2.5ns typ.
110	PFS704-45	7		F54c	Pin;VB 70V min;Cj .25pf max at 10V;Max Rs .80Ω at IF 50mA;Ts 2.5ns typ.

8. MISCELLANEOUS DEVICES

IN ORDER OF (1) USE and (2) TYPE No.

LINE No.	2 TYPE No.	1 USE	DESCRIPTION MAT.	DWG. No.	TECHNICAL DATA
1	PFS705-01	7		F27as	Pin;VB 70V min;Cj .30pf max at 10V;Max Rs .70Ω at IF 50mA;Ts 5.0ns typ.
2	PFS705-05	7		F10af	Pin;VB 70V min;Cj .30pf max at 10V;Max Rs .70Ω at IF 50mA;Ts 5.0ns typ.
3	PFS705-08	7		A1vd	Pin;VB 70V min;Cj .30pf max at 10V;Max Rs .70Ω at IF 50mA;Ts 5.0ns typ.
4	PFS705-45	7		F54c	Pin;VB 70V min;Cj .30pf max at 10V;Max Rs .70Ω at IF 50mA;Ts 5.0ns typ.
5	PFS706-01	7		F27as	Pin;VB 70V min;Cj .35pf max at 10V;Max Rs .70Ω at IF 50mA;Ts 5.0ns typ.
6	PFS706-05	7		F10af	Pin;VB 70V min;Cj .35pf max at 10V;Max Rs .70Ω at IF 50mA;Ts 5.0ns typ.
7	PFS706-08	7		A1vd	Pin;VB 70V min;Cj .35pf max at 10V;Max Rs .70Ω at IF 50mA;Ts 5.0ns typ.
8	PFS706-45	7		F54c	Pin;VB 70V min;Cj .35pf max at 10V;Max Rs .70Ω at IF 50mA;Ts 5.0ns typ.
9	PFS707-01	7		F27as	Pin;VB 125V min;Cj .05pf max at 10V;Max Rs 2.0Ω at IF 50mA;Ts 10ns typ.
10	PFS707-05	7		F10af	Pin;VB 125V min;Cj .05pf max at 10V;Max Rs 2.0Ω at IF 50mA;Ts 10ns typ.
11	PFS707-08	7		A1vd	Pin;VB 125V min;Cj .05pf max at 10V;Max Rs 2.0Ω at IF 50mA;Ts 10ns typ.
12	PFS707-45	7		F54c	Pin;VB 125V min;Cj .05pf max at 10V;Max Rs 2.0Ω at IF 50mA;Ts 10ns typ.
13	PFS708-01	7		F27as	Pin;VB 125V min;Cj .10pf max at 10V;Max Rs 1.5Ω at IF 50mA;Ts 10ns typ.
14	PFS708-05	7		F10af	Pin;VB 125V min;Cj .10pf max at 10V;Max Rs 1.5Ω at IF 50mA;Ts 10ns typ.
15	PFS708-08	7		A1vd	Pin;VB 125V min;Cj .10pf max at 10V;Max Rs 1.5Ω at IF 50mA;Ts 10ns typ.
16	PFS708-45	7		F54c	Pin;VB 125V min;Cj .10pf max at 10V;Max Rs 1.5Ω at IF 50mA;Ts 10ns typ.
17	PFS709-01	7		F27as	Pin;VB 125V min;Cj .15pf max at 10V;Max Rs 1.2Ω at IF 50mA;Ts 10ns typ.
18	PFS709-05	7		F10af	Pin;VB 125V min;Cj .15pf max at 10V;Max Rs 1.2Ω at IF 50mA;Ts 10ns typ.
19	PFS709-08	7		A1vd	Pin;VB 125V min;Cj .15pf max at 10V;Max Rs 1.2Ω at IF 50mA;Ts 10ns typ.
20	PFS709-45	7		F54c	Pin;VB 125V min;Cj .15pf max at 10V;Max Rs 1.2Ω at IF 50mA;Ts 10ns typ.
21	PFS710-01	7		F27as	Pin;VB 125V min;Cj .20pf max at 10V;Max Rs 1.0Ω at IF 50mA;Ts 10ns typ.
22	PFS710-05	7		F10af	Pin;VB 125V min;Cj .20pf max at 10V;Max Rs 1.0Ω at IF 50mA;Ts 10ns typ.
23	PFS710-08	7		A1vd	Pin;VB 125V min;Cj .20pf max at 10V;Max Rs 1.0Ω at IF 50mA;Ts 10ns typ.
24	PFS710-45	7		F54c	Pin;VB 125V min;Cj .20pf max at 10V;Max Rs 1.0Ω at IF 50mA;Ts 10ns typ.
25	PFS711-01	7		F27as	Pin;VB 125V min;Cj .25pf max at 10V;Max Rs .80Ω at IF 50mA;Ts 10ns typ.
26	PFS711-05	7		F10af	Pin;VB 125V min;Cj .25pf max at 10V;Max Rs .80Ω at IF 50mA;Ts 10ns typ.
27	PFS711-08	7		A1vd	Pin;VB 125V min;Cj .25pf max at 10V;Max Rs .80Ω at IF 50mA;Ts 10ns typ.
28	PFS711-45	7		F54c	Pin;VB 125V min;Cj .25pf max at 10V;Max Rs .80Ω at IF 50mA;Ts 10ns typ.
29	PFS712-01	7		F27as	Pin;VB 125V min;Cj .30pf max at 10V;Max Rs .70Ω at IF 50mA;Ts 10ns typ.
30	PFS712-05	7		F10af	Pin;VB 125V min;Cj .30pf max at 10V;Max Rs .70Ω at IF 50mA;Ts 10ns typ.
31	PFS712-08	7		A1vd	Pin;VB 125V min;Cj .30pf max at 10V;Max Rs .70Ω at IF 50mA;Ts 10ns typ.
32	PFS712-45	7		F54c	Pin;VB 125V min;Cj .30pf max at 10V;Max Rs .70Ω at IF 50mA;Ts 10ns typ.
33	PFS713-01	7		F27as	Pin;VB 125V min;Cj .35pf max at 10V;Max Rs .70Ω at IF 50mA;Ts 10ns typ.
34	PFS713-05	7		F10af	Pin;VB 125V min;Cj .35pf max at 10V;Max Rs .70Ω at IF 50mA;Ts 10ns typ.
35	PFS713-08	7		A1vd	Pin;VB 125V min;Cj .35pf max at 10V;Max Rs .70Ω at IF 50mA;Ts 10ns typ.
36	PFS713-45	7		F54c	Pin;VB 125V min;Cj .35pf max at 10V;Max Rs .70Ω at IF 50mA;Ts 10ns typ.
37	PGS300-08	7		A1vd	Pin;Min VB 100V;Max Ct .30pf at 50V;Max Rs 1.5Ω at 100mA.
38	PGS301-08	7		A1vd	Pin;Min VB 100V;Max Ct .40pf at 50V;Max Rs 2.5Ω at 100mA.
39	PGS302-08	7		A1vd	Pin;Min VB 100V;Max Ct .40pf at 50V;Max Rs 3.5Ω at 100mA.
40	PGS303-08	7		A1vd	Pin;Min VB 300V;Max Ct .20pf at 50V;Max Rs 1.0Ω at 100mA.
41	PGS304-08	7		A1vd	Pin;Min VB 150V;Max Ct .25pf at 50V;Max Rs 1.25Ω at 100mA.
42	PGS305-08	7		A1vd	Pin;Min VB 200V;Max Ct .25pf at 50V;Max Rs 1.0Ω at 100mA.
43	PGS306-01	7		F27as	Pin;Min VB 300V;Max Ct .30pf at 50V;Max Rs .80Ω at 100mA.
44	PGS306-05	7		F10af	Pin;Min VB 300V;Max Ct .30pf at 50V;Max Rs .80Ω at 100mA.
45	PGS307-01	7		F27as	Pin;Min VB 200V;Max Ct .32pf at 50V;Max Rs 1.2Ω at 100mA.
46	PGS307-05	7		F10af	Pin;Min VB 200V;Max Ct .32pf at 50V;Max Rs 1.2Ω at 100mA.
47	PGS308-01	7		F27as	Pin;Min VB 300V;Max Ct .32pf at 50V;Max Rs .80Ω at 100mA.
48	PGS308-05	7		F10af	Pin;Min VB 300V;Max Ct .32pf at 50V;Max Rs .80Ω at 100mA.
49	PGS309-01	7		F27as	Pin;Min VB 200V;Max Ct .40pf at 50V;Max Rs 1.2Ω at 100mA.
50	PGS309-05	7		F10af	Pin;Min VB 200V;Max Ct .40pf at 50V;Max Rs 1.2Ω at 100mA.
51	PHS700-01	7		F27as	Pin;Min VB 1.0kV;Max Ct 2.0pf;Max Rs .30Ω;Ts 600ns typ.
52	PHS700-82	7		S396a	Pin;Min VB 1.0kV;Max Ct 2.0pf;Max Rs .30Ω;Ts 600ns typ.
53	PHS700-83	7		S356	Pin;Min VB 1.0kV;Max Ct 2.0pf;Max Rs .30Ω;Ts 600ns typ.
54	PHS701-01	7		F27as	Pin;Min VB 1.0kV;Max Ct 1.0pf;Max Rs .50Ω;Ts 500ns typ.
55	PHS701-82	7		S396a	Pin;Min VB 1.0kV;Max Ct 1.0pf;Max Rs .50Ω;Ts 500ns typ.
56	PHS701-83	7		S356	Pin;Min VB 1.0kV;Max Ct 1.0pf;Max Rs .50Ω;Ts 500ns typ.
57	PHS702-01	7		F27as	Pin;Min VB 1.0kV;Max Ct .80pf;Max Rs .60Ω;Ts 350ns typ.
58	PHS702-82	7		S396a	Pin;Min VB 1.0kV;Max Ct .80pf;Max Rs .60Ω;Ts 350ns typ.
59	PHS702-83	7		S356	Pin;Min VB 1.0kV;Max Ct .80pf;Max Rs .60Ω;Ts 350ns typ.
60	PHS703-01	7		F27as	Pin;Min VB 1.0kV;Max Ct .60pf;Max Rs .70Ω;Ts 350ns typ.
61	PHS703-82	7		S396a	Pin;Min VB 1.0kV;Max Ct .60pf;Max Rs .70Ω;Ts 350ns typ.
62	PHS703-83	7		S356	Pin;Min VB 1.0kV;Max Ct .60pf;Max Rs .70Ω;Ts 350ns typ.
63	PHS704-01	7		F27as	Pin;Min VB 1.0kV;Max Ct .40pf;Max Rs 1.0Ω;Ts 300ns typ.
64	PHS704-82	7		S396a	Pin;Min VB 1.0kV;Max Ct .40pf;Max Rs 1.0Ω;Ts 300ns typ.
65	PHS704-83	7		S356	Pin;Min VB 1.0kV;Max Ct .40pf;Max Rs 1.0Ω;Ts 300ns typ.
66	PHS705-01	7		F27as	Pin;Min VB 750V;Max Ct 1.2pf;Max Rs .40Ω;Ts 500ns typ.
67	PHS705-82	7		S396a	Pin;Min VB 750V;Max Ct 1.2pf;Max Rs .40Ω;Ts 500ns typ.
68	PHS705-83	7		S356	Pin;Min VB 750V;Max Ct 1.2pf;Max Rs .40Ω;Ts 500ns typ.
69	PHS706-01	7		F27as	Pin;Min VB 750V;Max Ct 1.0pf;Max Rs .50Ω;Ts 450ns typ.
70	PHS706-82	7		S396a	Pin;Min VB 750V;Max Ct 1.0pf;Max Rs .50Ω;Ts 450ns typ.
71	PHS706-83	7		S356	Pin;Min VB 750V;Max Ct 1.0pf;Max Rs .50Ω;Ts 450ns typ.
72	PHS707-01	7		F27as	Pin;Min VB 750V;Max Ct .80pf;Max Rs .60Ω;Ts 350ns typ.
73	PHS707-82	7		S396a	Pin;Min VB 750V;Max Ct .80pf;Max Rs .60Ω;Ts 350ns typ.
74	PHS707-83	7		S356	Pin;Min VB 750V;Max Ct .80pf;Max Rs .60Ω;Ts 350ns typ.
75	PHS708-01	7		F27as	Pin;Min VB 750V;Max Ct .60pf;Max Rs .70Ω;Ts 350ns typ.
76	PHS708-82	7		S396a	Pin;Min VB 750V;Max Ct .60pf;Max Rs .70Ω;Ts 350ns typ.
77	PHS708-83	7		S356	Pin;Min VB 750V;Max Ct .60pf;Max Rs .70Ω;Ts 350ns typ.
78	PHS709-01	7		F27as	Pin;Min VB 750V;Max Ct .40pf;Max Rs 1.0Ω;Ts 300ns typ.
79	PHS709-82	7		S396a	Pin;Min VB 750V;Max Ct .40pf;Max Rs 1.0Ω;Ts 300ns typ.
80	PHS709-83	7		S356	Pin;Min VB 750V;Max Ct .40pf;Max Rs 1.0Ω;Ts 300ns typ.
81	PHS710-01	7		F27as	Pin;Min VB 500V;Max Ct 1.5pf;Max Rs .25Ω;Ts 300ns typ.
82	PHS710-82	7		S396a	Pin;Min VB 500V;Max Ct 1.5pf;Max Rs .25Ω;Ts 300ns typ.
83	PHS710-83	7		S356	Pin;Min VB 500V;Max Ct 1.5pf;Max Rs .25Ω;Ts 300ns typ.
84	PHS711-01	7		F27as	Pin;Min VB 500V;Max Ct 1.2pf;Max Rs .25Ω;Ts 300ns typ.
85	PHS711-82	7		S396a	Pin;Min VB 500V;Max Ct 1.2pf;Max Rs .25Ω;Ts 300ns typ.
86	PHS711-83	7		S356	Pin;Min VB 500V;Max Ct 1.2pf;Max Rs .25Ω;Ts 300ns typ.
87	PHS712-01	7		F27as	Pin;Min VB 500V;Max Ct 1.0pf;Max Rs .30Ω;Ts 250ns typ.
88	PHS712-82	7		S396a	Pin;Min VB 500V;Max Ct 1.0pf;Max Rs .30Ω;Ts 250ns typ.
89	PHS712-83	7		S356	Pin;Min VB 500V;Max Ct 1.0pf;Max Rs .30Ω;Ts 250ns typ.
90	PHS713-01	7		F27as	Pin;Min VB 500V;Max Ct .80pf;Max Rs .30Ω;Ts 200ns typ.
91	PHS713-82	7		S396a	Pin;Min VB 500V;Max Ct .80pf;Max Rs .30Ω;Ts 200ns typ.
92	PHS713-83	7		S356	Pin;Min VB 500V;Max Ct .80pf;Max Rs .30Ω;Ts 200ns typ.
93	PHS714-01	7		F27as	Pin;Min VB 500V;Max Ct .60pf;Max Rs .40Ω;Ts 150ns typ.
94	PHS714-82	7		S396a	Pin;Min VB 500V;Max Ct .60pf;Max Rs .40Ω;Ts 150ns typ.
95	PHS714-83	7		S356	Pin;Min VB 500V;Max Ct .60pf;Max Rs .40Ω;Ts 150ns typ.
96	PHS715-01	7		F27as	Pin;Min VB 500V;Max Ct .40pf;Max Rs .50Ω;Ts 100ns typ.
97	PHS715-82	7		S396a	Pin;Min VB 500V;Max Ct .40pf;Max Rs .50Ω;Ts 100ns typ.
98	PHS715-83	7		S356	Pin;Min VB 500V;Max Ct .40pf;Max Rs .50Ω;Ts 100ns typ.
99	PHS716-01	7		F27as	Pin;Min VB 300V;Max Ct 1.2pf;Max Rs .25Ω;Ts 250ns typ.
100	PHS716-82	7		S396a	Pin;Min VB 300V;Max Ct 1.2pf;Max Rs .25Ω;Ts 250ns typ.
101	PHS716-83	7		S356	Pin;Min VB 300V;Max Ct 1.2pf;Max Rs .25Ω;Ts 250ns typ.
102	PHS717-01	7		F27as	Pin;Min VB 300V;Max Ct 1.0pf;Max Rs .25Ω;Ts 200ns typ.
103	PHS717-82	7		S396a	Pin;Min VB 300V;Max Ct 1.0pf;Max Rs .25Ω;Ts 200ns typ.
104	PHS717-83	7		S356	Pin;Min VB 300V;Max Ct 1.0pf;Max Rs .25Ω;Ts 200ns typ.
105	PHS718-01	7		F27as	Pin;Min VB 300V;Max Ct .80pf;Max Rs .30Ω;Ts 150ns typ.
106	PHS718-82	7		S396a	Pin;Min VB 300V;Max Ct .80pf;Max Rs .30Ω;Ts 150ns typ.
107	PHS718-83	7		S356	Pin;Min VB 300V;Max Ct .80pf;Max Rs .30Ω;Ts 150ns typ.
108	PHS719-01	7		F27as	Pin;Min VB 300V;Max Ct .60pf;Max Rs .40Ω;Ts 100ns typ.
109	PHS719-82	7		S396a	Pin;Min VB 300V;Max Ct .60pf;Max Rs .40Ω;Ts 100ns typ.
110	PHS719-83	7		S359	Pin;Min VB 300V;Max Ct .60pf;Max Rs .40Ω;Ts 100ns typ.

SYMBOLS AND CODES EXPLAINED IN INTERPRETER

8. MISCELLANEOUS DEVICES

IN ORDER OF (1) USE and (2) TYPE No.

LINE No.	[2] TYPE No.	[1] USE	DESCRIPTION MAT.	DESCRIPTION DWG. No.	TECHNICAL DATA
1	PHS720-01	7		F27as	Pin;Min VB 300V;Max Ct .40pf;Max Rs .50Ω;Ts 75ns typ.
2	PHS720-82	7		S396a	Pin;Min VB 300V;Max Ct .40pf;Max Rs .50Ω;Ts 75ns typ.
3	PHS720-83	7		S356	Pin;Min VB 300V;Max Ct .40pf;Max Rs .50Ω;Ts 75ns typ.
4	PLL700-01	7		F27as	Pin;Min-Max VB 30-60V at 10uA;Max Cj .05pf at 10V;Min Rs 1.5Ω at IF 25mA;Min fc 250GHz.
5	PLL700-04	7		F10ae	Pin;Min-Max VB 30-60V at 10uA;Max Cj .05pf at 10V;Min Rs 1.5Ω at IF 25mA;Min fc 250GHz.
6	PLL700-05	7		F10af	Pin;Min-Max VB 30-60V at 10uA;Max Cj .05pf at 10V;Min Rs 1.5Ω at IF 25mA;Min fc 250GHz.
7	PLL700-08	7		A1vd	Pin;Min-Max VB 30-60V at 10uA;Max Cj .05pf at 10V;Min Rs 1.5Ω at IF 25mA;Min fc 250GHz.
8	PLL700-45	7		F54c	Pin;Min-Max VB 30-60V at 10uA;Max Cj .05pf at 10V;Min Rs 1.5Ω at IF 25mA;Min fc 250GHz.
9	PLL701-01	7		F27as	Pin;Min-Max VB 30-60V at 10uA;Max Cj .10pf at 10V;Min Rs 1.0Ω at IF 25mA;Min fc 250GHz.
10	PLL701-04	7		F10ae	Pin;Min-Max VB 30-60V at 10uA;Max Cj .10pf at 10V;Min Rs 1.0Ω at IF 25mA;Min fc 250GHz.
11	PLL701-05	7		F10af	Pin;Min-Max VB 30-60V at 10uA;Max Cj .10pf at 10V;Min Rs 1.0Ω at IF 25mA;Min fc 250GHz.
12	PLL701-08	7		A1vd	Pin;Min-Max VB 30-60V at 10uA;Max Cj .10pf at 10V;Min Rs 1.0Ω at IF 25mA;Min fc 250GHz.
13	PLL701-45	7		F54c	Pin;Min-Max VB 30-60V at 10uA;Max Cj .10pf at 10V;Min Rs 1.0Ω at IF 25mA;Min fc 250GHz.
14	PLL702-01	7		F27as	Pin;Min-Max VB 30-60V at 10uA;MaxCj .15pf at 10V;Min RS 1.0Ω at IF25mA;Min fc 225GHz.
15	PLL702-04	7		F10ae	Pin;Min-Max VB 30-60V at 10uA;MaxCj .15pf at 10V;Min RS 1.0Ω at IF 25mA;Min fc 225GHz.
16	PLL702-05	7		F10af	Pin;Min-Max VB 30-60V at 10uA;MaxCj .15pf at 10V;Min RS 1.0Ω at IF 25mA;Min fc 225GHz.
17	PLL702-08	7		A1vd	Pin;Min-Max VB 30-60V at 10uA;MaxCj .15pf at 10V;Min RS 1.0Ω at IF 25mA;Min fc 225GHz.
18	PLL702-45	7		F54c	Pin;Min-Max VB 30-60V at 10uA;MaxCj .15pf at 10V;Min RS 1.0Ω at IF 25mA;Min fc 225GHz.
19	PLL703-01	7		F27as	Pin;Min-Max VB 30-60V at 10uA;MaxCj .20pf at 10V;Min RS 1.0Ω at IF 25mA;Min fc 200GHz.
20	PLL703-04	7		F10ae	Pin;Min-Max VB 30-60V at 10uA;MaxCj .20pf at 10V;Min RS 1.0Ω at IF 25mA;Min fc 200GHz.
21	PLL703-05	7		F10af	Pin;Min-Max VB 30-60V at 10uA;MaxCj .20pf at 10V;Min RS 1.0Ω at IF 25mA;Min fc 200GHz.
22	PLL703-08	7		A1vd	Pin;Min-Max VB 30-60V at 10uA;MaxCj .20pf at 10V;Min RS 1.0Ω at IF 25mA;Min fc 200GHz.
23	PLL703-45	7		F54c	Pin;Min-Max VB 30-60V at 10uA;MaxCj .20pf at 10V;Min RS 1.0Ω at IF 25mA;Min fc 200GHz.
24	PLL704-01	7		F27as	Pin;Min-Max VB 30-60V at 10uA;Max Cj .25pf at 10V;Min Rs .80Ω at IF 25mA;Min fc 175GHz.
25	PLL704-04	7		F10ae	Pin;Min-Max VB 30-60V at 10uA;Max Cj .25pf at 10V;Min Rs .80Ω at IF 25mA;Min fc 175GHz.
26	PLL704-05	7		F10af	Pin;Min-Max VB 30-60V at 10uA;Max Cj .25pf at 10V;Min Rs .80Ω at IF 25mA;Min fc 175GHz.
27	PLL704-08	7		A1vd	Pin;Min-Max VB 30-60V at 10uA;Max Cj .25pf at 10V;Min Rs .80Ω at IF 25mA;Min fc 175GHz.
28	PLL704-45	7		F54c	Pin;Min-Max VB 30-60V at 10uA;Max Cj .25pf at 10V;Min Rs .80Ω at IF 25mA;Min fc 175GHz.
29	PLL705-01	7		F27as	Pin;Min-Max VB 60-120V at 10uA;Max Cj .10pf at 10V;Min Rs 1.0Ω at IF 25mA;Min fc 150GHz.
30	PLL705-04	7		F10ae	Pin;Min-Max VB 60-120V at 10uA;Max Cj .10pf at 10V;Min Rs 1.0Ω at IF 25mA;Min fc 150GHz.
31	PLL705-05	7		F10af	Pin;Min-Max VB 60-120V at 10uA;Max Cj .10pf at 10V;Min Rs 1.0Ω at IF 25mA;Min fc 150GHz.
32	PLL705-08	7		A1vd	Pin;Min-Max VB 60-120V at 10uA;Max Cj .10pf at 10V;Min Rs 1.0Ω at IF 25mA;Min fc 150GHz.
33	PLL705-45	7		F54c	Pin;Min-Max VB 60-120V at 10uA;Max Cj .10pf at 10V;Min Rs 1.0Ω at IF 25mA;Min fc 150GHz.
34	PLL706-01	7		F27as	Pin;Min-Max VB 60-120V at 10uA;Max Cj .15pf at 10V;Min Rs 1.0Ω at IF 25mA;Min fc 150GHz.
35	PLL706-04	7		F10ae	Pin;Min-Max VB 60-120V at 10uA;Max Cj .15pf at 10V;Min Rs 1.0Ω at IF 25mA;Min fc 150GHz.
36	PLL706-05	7		F10af	Pin;Min-Max VB 60-120V at 10uA;Max Cj .15pf at 10V;Min Rs 1.0Ω at IF 25mA;Min fc 150GHz.
37	PLL706-08	7		A1vd	Pin;Min-Max VB 60-120V at 10uA;Max Cj .15pf at 10V;Min Rs 1.0Ω at IF 25mA;Min fc 150GHz.
38	PLL706-45	7		F54c	Pin;Min-Max VB 60-120V at 10uA;Max Cj .15pf at 10V;Min Rs 1.0Ω at IF 25mA;Min fc 150GHz.
39	PLL707-01	7		F27as	Pin;Min-Max VB 60-120V at 10uA;Max Cj .20pf at 10V;Min Rs 1.0Ω at IF 25mA;Min fc 150GHz.
40	PLL707-04	7		F10ae	Pin;Min-Max VB 60-120V at 10uA;Max Cj .20pf at 10V;Min Rs 1.0Ω at IF 25mA;Min fc 150GHz.
41	PLL707-05	7		F10af	Pin;Min-Max VB 60-120V at 10uA;Max Cj .20pf at 10V;Min Rs 1.0Ω at IF 25mA;Min fc 150GHz.
42	PLL707-08	7		A1vd	Pin;Min-Max VB 60-120V at 10uA;Max Cj .20pf at 10V;Min Rs 1.0Ω at IF 25mA;Min fc 150GHz.
43	PLL707-45	7		F54c	Pin;Min-Max VB 60-120V at 10uA;Max Cj .20pf at 10V;Min Rs 1.0Ω at IF 25mA;Min fc 150GHz.
44	PLL708-01	7		F27as	Pin;Min-Max VB 60-120V at 10uA;Max Cj .25pf at 10V;Min Rs .80Ω at IF 25mA;Min fc 150GHz.
45	PLL708-04	7		F10ae	Pin;Min-Max VB 60-120V at 10uA;Max Cj .25pf at 10V;Min Rs .80Ω at IF 25mA;Min fc 150GHz.
46	PLL708-05	7		F10af	Pin;Min-Max VB 60-120V at 10uA;Max Cj .25pf at 10V;Min Rs .80Ω at IF 25mA;Min fc 150GHz.
47	PLL708-08	7		A1vd	Pin;Min-Max VB 60-120V at 10uA;Max Cj .25pf at 10V;Min Rs .80Ω at IF 25mA;Min fc 150GHz.
48	PLL708-45	7		F54c	Pin;Min-Max VB 60-120V at 10uA;Max Cj .25pf at 10V;Min Rs .80Ω at IF 25mA;Min fc 150GHz.
49	PMS700-08	7		A1vd	Pin;Min VB 200V;Max Ct .25pf at 50V;Min Rs 1.04kΩ at IF 10uA;Max Rs 1.5Ω at IF 100mA.
50	PMS701-08	7		A1vd	Pin;Min VB 200V;Max Ct .30pf at 50V;Min Rs 1.0kΩ at IF 10uA;Max Rs 2.5Ω at IF 100mA.
51	PMS702-08	7		A1vd	Pin;Min VB 200V;Max Ct .35pf at 50V;Min Rs 2.0kΩ at IF 10uA;Max Rs 5.0Ω at IF 100mA.
52	PS0120	7	Si	F27d	Pin;VB-200V;Ct at 50V-.40pf max;Rs-1.5 ohms max;Pdiss-1.0W.
53	PS0120A	7	Si	F27d	Pin;VB-200V;Ct at 50V-.60pf max;Rs-1.2 ohms max;Pdiss-1.5W.
54	PS0120B	7	Si	F27d	Pin;VB-200V;Ct at 50V-.80pf max;Rs-1.0 ohms max;Pdiss-2.0W.
55	PS0120C	7	Si	F27d	Pin;VB-200V;Ct at 50V-1.1pf max;Rs-.80 ohms max;Pdiss-2.5W.
56	PS0120D	7	Si	F27d	Pin;VB-200V;Ct at 50V-1.7pf max;Rs-.80 ohms max;Pdiss-5.0W.
57	PS0130	7	Si	F27d	Pin;VB-300V;Ct at 50V-.40pf max;Rs-1.5 ohms max;Pdiss-1.0W.
58	PS0130A	7	Si	F27d	Pin;VB-300V;Ct at 50V-.60pf max;Rs-1.2 ohms max;Pdiss-1.5W.
59	PS0130B	7	Si	F27d	Pin;VB-300V;Ct at 50V-.80pf max;Rs-1.0 ohms max;Pdiss-2.0W.
60	PS0130C	7	Si	F27d	Pin;VB-300V;Ct at 50V-1.1pf max;Rs-.80 ohms max;Pdiss-2.5W.
61	PS0130D	7	Si	F27d	Pin;VB-300V;Ct at 50V-1.7pf max;Rs-.80 ohms max;Pdiss-5.0W.
62	PS0140	7	Si	F27d	Pin;VB-400V;Ct at 50V-.40pf max;Rs-1.5 ohms max;Pdiss-1.0W.
63	PS0140A	7	Si	F27d	Pin;VB-400V;Ct at 50V-.60pf max;Rs-1.2 ohms max;Pdiss-1.5W.
64	PS0140B	7	Si	F27d	Pin;VB-400V;Ct at 50V-.80pf max;Rs-1.0 ohms max;Pdiss-2.0W.
65	PS0140C	7	Si	F27d	Pin;VB-400V;Ct at 50V-1.1pf max;Rs-.80 ohms max;Pdiss-2.5W.
66	PS0140D	7	Si	F27d	Pin;VB-400V;Ct at 50V-1.7pf max;Rs-.80 ohms max;Pdiss-5.0W.
67	PS0150	7	Si	F27d	Pin;VB-500V;Ct at 50V-.40pf max;Rs-1.5 ohms max;Pdiss-1.0W.
68	PS0150A	7	Si	F27d	Pin;VB-500V;Ct at 50V-.60pf max;Rs-1.2 ohms max;Pdiss-1.5W.
69	PS0150B	7	Si	F27d	Pin;VB-500V;Ct at 50V-.80pf max;Rs-1.0 ohms max;Pdiss-2.0W.
70	PS0150C	7	Si	F27d	Pin;VB-500V;Ct at 50V-1.1pf max;Rs-.80 ohms max;Pdiss-2.5W.
71	PS0150D	7	Si	F27d	Pin;VB-500V;Ct at 50V-1.7pf max;Rs-.80 ohms max;Pdiss-5.0W.
72	PS0190	7	Si	F27d	Pin;VB-1000V;Ct at 50V-.50pf max;Rs-2.0 ohms max;Pdiss-1.0W.
73	PS0190A	7	Si	F27d	Pin;VB-1000V;Ct at 50V-1.0pf max;Rs-1.5 ohms max;Pdiss-1.5W.
74	PS0503AX	7	Si	F10p	Pin; VB-30V; Cj at 0.0V-.20pf max; Rs-2.0 ohms max; Pdiss-.30W.
75	PS0503AY	7	Si	F10p	Pin; VB-30V; Cj at 0.0V-.20pf max; Rs-2.5 ohms max; Pdiss-.30W.
76	PS0503AZ	7	Si	F10p	Pin; VB-30V; Cj at 0.0V-.20pf max; Rs-3.0 ohms max; Pdiss-.30W.
77	PS0503BX	7	Si	F10p	Pin; VB-30V; Cj at 0.0V-.25pf max; Rs-2.0 ohms max; Pdiss-.40W.
78	PS0503BY	7	Si	F10p	Pin; VB-30V; Cj at 0.0V-.25pf max; Rs-2.5 ohms max; Pdiss-.40W.
79	PS0503BZ	7	Si	F10p	Pin; VB-30V; Cj at 0.0V-.25pf max; Rs-3.0 ohms max; Pdiss-.40W.
80	PS0503CX	7	Si	F10p	Pin; VB-30V; Cj at 0.0V-.30pf max; Rs-2.0 ohms max; Pdiss-.50W.
81	PS0503CY	7	Si	F10p	Pin; VB-30V; Cj at 0.0V-.30pf max; Rs-2.5 ohms max; Pdiss-.50W.
82	PS0503CZ	7	Si	F10p	Pin; VB-30V; Cj at 0.0V-.30pf max; Rs-3.0 ohms max; Pdiss-.50W.
83	PS0503DX	7	Si	F10p	Pin; VB-30V; Cj at 0.0V-.40pf max; Rs-2.0 ohms max; Pdiss-.75W.
84	PS0503DY	7	Si	F10p	Pin; VB-30V; Cj at 0.0V-.40pf max; Rs-2.5 ohms max; Pdiss-.75W.
85	PS0503DZ	7	Si	F10p	Pin; VB-30V; Cj at 0.0V-.40pf max; Rs-3.0 ohms max; Pdiss-.75W.
86	PS0503EX	7	Si	F10p	Pin; VB-30V; Cj at 0.0V-.50pf max; Rs-2.0 ohms max; Pdiss-1.0W.
87	PS0503EY	7	Si	F10p	Pin; VB-30V; Cj at 0.0V-.50pf max; Rs-2.5 ohms max; Pdiss-1.0W.
88	PS0503EZ	7	Si	F10p	Pin; VB-30V; Cj at 0.0V-.50pf max; Rs-3.0 ohms max; Pdiss-1.0W.
89	PS0503X	7	Si	F10p	Pin; VB-30V; Cj at 0.0V-.15pf max; Rs-2.0 ohms max; Pdiss-.20W.
90	PS0503Y	7	Si	F10p	Pin; VB-30V; Cj at 0.0V-.15pf max; Rs-2.5 ohms max; Pdiss-.20W.
91	PS0503Z	7	Si	F10p	Pin; VB-30V; Cj at 0.0V-.15pf max; Rs-3.0 ohms max; Pdiss-.20W.
92	PS0505AX	7	Si	F10p	Pin; VB-50V; Cj at 0.0V-.20pf max; Rs-2.0 ohms max; Pdiss-.30W.
93	PS0505AY	7	Si	F10p	Pin; VB-50V; Cj at 0.0V-.20pf max; Rs-2.5 ohms max; Pdiss-.30W.
94	PS0505AZ	7	Si	F10p	Pin; VB-50V; Cj at 0.0V-.20pf max; Rs-3.0 ohms max; Pdiss-.30W.
95	PS0505BX	7	Si	F10p	Pin; VB-50V; Cj at 0.0V-.25pf max; Rs-2.0 ohms max; Pdiss-.40W.
96	PS0505BY	7	Si	F10p	Pin; VB-50V; Cj at 0.0V-.25pf max; Rs-2.5 ohms max; Pdiss-.40W.
97	PS0505BZ	7	Si	F10p	Pin; VB-50V; Cj at 0.0V-.25pf max; Rs-3.0 ohms max; Pdiss-.40W.
98	PS0505CX	7	Si	F10p	Pin; VB-50V; Cj at 0.0V-.30pf max; Rs-2.0 ohms max; Pdiss-.50W.
99	PS0505CY	7	Si	F10p	Pin; VB-50V; Cj at 0.0V-.30pf max; Rs-2.5 ohms max; Pdiss-.50W.
100	PS0505CZ	7	Si	F10p	Pin; VB-50V; Cj at 0.0V-.30pf max; Rs-3.0 ohms max; Pdiss-.50W.
101	PS0505DX	7	Si	F10p	Pin; VB-50V; Cj at 0.0V-.40pf max; Rs-2.0 ohms max; Pdiss-.75W.
102	PS0505DY	7	Si	F10p	Pin; VB-50V; Cj at 0.0V-.40pf max; Rs-2.5 ohms max; Pdiss-.75W.
103	PS0505DZ	7	Si	F10p	Pin; VB-50V; Cj at 0.0V-.40pf max; Rs-3.0 ohms max; Pdiss-.75W.
104	PS0505EX	7	Si	F10p	Pin; VB-50V; Cj at 0.0V-.50pf max; Rs-2.0 ohms max; Pdiss-1.0W.
105	PS0505EY	7	Si	F10p	Pin; VB-50V; Cj at 0.0V-.50pf max; Rs-2.5 ohms max; Pdiss-1.0W.
106	PS0505EZ	7	Si	F10p	Pin; VB-50V; Cj at 0.0V-.50pf max; Rs-3.0 ohms max; Pdiss-1.0W.
107	PS0505X	7	Si	F10p	Pin; VB-50V; Cj at 0.0V-.15pf max; Rs-2.0 ohms max; Pdiss-.20W.
108	PS0505Y	7	Si	F10p	Pin; VB-50V; Cj at 0.0V-.15pf max; Rs-2.5 ohms max; Pdiss-.20W.
109	PS0505Z	7	Si	F10p	Pin; VB-50V; Cj at 0.0V-.15pf max; Rs-3.0 ohms max; Pdiss-.20W.
110	PS0510AX	7	Si	F10p	Pin; VB-100V; Cj at 0.0V-.20pf max; Rs-2.0 ohms max; Pdiss-.30W.

8. MISCELLANEOUS DEVICES

IN ORDER OF (1) USE and (2) TYPE No.

LINE No.	[2] TYPE No.	[1] USE	DESCRIPTION MAT.	DESCRIPTION DWG. No.	TECHNICAL DATA
1	PS0510AY	7	Si	F10p	Pin; VB-100V; Cj at 0.0V-.20pf max; Rs-2.5 ohms max; Pdiss-.30W.
2	PS0510AZ	7	Si	F10p	Pin; VB-100V; Cj at 0.0V-.20pf max; Rs-3.0 ohms max; Pdiss-.30W.
3	PS0510BX	7	Si	F10p	Pin; VB-100V; Cj at 0.0V-.25pf max; Rs-2.0 ohms max; Pdiss-.40W.
4	PS0510BY	7	Si	F10p	Pin; VB-100V; Cj at 0.0V-.25pf max; Rs-2.5 ohms max; Pdiss-.40W.
5	PS0510BZ	7	Si	F10p	Pin; VB-100V; Cj at 0.0V-.25pf max; Rs-3.0 ohms max; Pdiss-.40W.
6	PS0510CX	7	Si	F10p	Pin; VB-100V; Cj at 0.0V-.30pf max; Rs-2.0 ohms max; Pdiss-.50W.
7	PS0510CY	7	Si	F10p	Pin; VB-100V; Cj at 0.0V-.30pf max; Rs-2.5 ohms max; Pdiss-.50W.
8	PS0510CZ	7	Si	F10p	Pin; VB-100V; Cj at 0.0V-.30pf max; Rs-3.0 ohms max; Pdiss-.50W.
9	PS0510DX	7	Si	F10p	Pin; VB-100V; Cj at 0.0V-.40pf max; Rs-2.0 ohms max; Pdiss-.75W.
10	PS0510DY	7	Si	F10p	Pin; VB-100V; Cj at 0.0V-.40pf max; Rs-2.5 ohms max; Pdiss-.75W.
11	PS0510DZ	7	Si	F10p	Pin; VB-100V; Cj at 0.0V-.40pf max; Rs-3.0 ohms max; Pdiss-.75W.
12	PS0510EX	7	Si	F10p	Pin; VB-100V; Cj at 0.0V-.50pf max; Rs-2.0 ohms max; Pdiss-1.0W.
13	PS0510EY	7	Si	F10p	Pin; VB-100V; Cj at 0.0V-.50pf max; Rs-2.5 ohms max; Pdiss-1.0W.
14	PS0510EZ	7	Si	F10p	Pin; VB-100V; Cj at 0.0V-.50pf max; Rs-3.0 ohms max; Pdiss-1.0W.
15	PS0510X	7	Si	F10p	Pin; VB-100V; Cj at 0.0V-.15pf max; Rs-2.0 ohms max; Pdiss-.20W.
16	PS0510Y	7	Si	F10p	Pin; VB-100V; Cj at 0.0V-.15pf max; Rs-2.5 ohms max; Pdiss-.20W.
17	PS0510Z	7	Si	F10p	Pin; VB-100V; Cj at 0.0V-.15pf max; Rs-3.0 ohms max; Pdiss-.20W.
18	PS0515AX	7	Si	F10p	Pin; VB-150V; Cj at 0.0V-.20pf max; Rs-2.0 ohms max; Pdiss-.30W.
19	PS0515AY	7	Si	F10p	Pin; VB-150V; Cj at 0.0V-.20pf max; Rs-2.5 ohms max; Pdiss-.30W.
20	PS0515AZ	7	Si	F10p	Pin; VB-150V; Cj at 0.0V-.20pf max; Rs-3.0 ohms max; Pdiss-.30W.
21	PS0515BX	7	Si	F10p	Pin; VB-150V; Cj at 0.0V-.25pf max; Rs-2.0 ohms max; Pdiss-.40W.
22	PS0515BY	7	Si	F10p	Pin; VB-150V; Cj at 0.0V-.25pf max; Rs-2.5 ohms max; Pdiss-.40W.
23	PS0515BZ	7	Si	F10p	Pin; VB-150V; Cj at 0.0V-.25pf max; Rs-3.0 ohms max; Pdiss-.40W.
24	PS0515CX	7	Si	F10p	Pin; VB-150V; Cj at 0.0V-.30pf max; Rs-2.0 ohms max; Pdiss-.50W.
25	PS0515CY	7	Si	F10p	Pin; VB-150V; Cj at 0.0V-.30pf max; Rs-2.5 ohms max; Pdiss-.50W.
26	PS0515CZ	7	Si	F10p	Pin; VB-150V; Cj at 0.0V-.30pf max; Rs-3.0 ohms max; Pdiss-.50W.
27	PS0515DX	7	Si	F10p	Pin; VB-150V; Cj at 0.0V-.40pf max; Rs-2.0 ohms max; Pdiss-.75W.
28	PS0515DY	7	Si	F10p	Pin; VB-150V; Cj at 0.0V-.40pf max; Rs-2.5 ohms max; Pdiss-.75W.
29	PS0515DZ	7	Si	F10p	Pin; VB-150V; Cj at 0.0V-.40pf max; Rs-3.0 ohms max; Pdiss-.75W.
30	PS0515EX	7	Si	F10p	Pin; VB-150V; Cj at 0.0V-.50pf max; Rs-2.0 ohms max; Pdiss-1.0W.
31	PS0515EY	7	Si	F10p	Pin; VB-150V; Cj at 0.0V-.50pf max; Rs-2.5 ohms max; Pdiss-1.0W.
32	PS0515EZ	7	Si	F10p	Pin; VB-150V; Cj at 0.0V-.50pf max; Rs-3.0 ohms max; Pdiss-1.0W.
33	PS0515X	7	Si	F10p	Pin; VB-150V; Cj at 0.0V-.15pf max; Rs-2.0 ohms max; Pdiss-.20W.
34	PS0515Y	7	Si	F10p	Pin; VB-150V; Cj at 0.0V-.15pf max; Rs-2.5 ohms max; Pdiss-.20W.
35	PS0515Z	7	Si	F10p	Pin; VB-150V; Cj at 0.0V-.15pf max; Rs-3.0 ohms max; Pdiss-.20W.
36	PS0520AX	7	Si	F10p	Pin; VB-200V; Cj at 0.0V-.20pf max; Rs-2.0 ohms max; Pdiss-.30W.
37	PS0520AY	7	Si	F10p	Pin; VB-200V; Cj at 0.0V-.20pf max; Rs-2.5 ohms max; Pdiss-.30W.
38	PS0520AZ	7	Si	F10p	Pin; VB-200V; Cj at 0.0V-.20pf max; Rs-3.0 ohms max; Pdiss-.30W.
39	PS0520BX	7	Si	F10p	Pin; VB-200V; Cj at 0.0V-.25pf max; Rs-2.0 ohms max; Pdiss-.40W.
40	PS0520BY	7	Si	F10p	Pin; VB-200V; Cj at 0.0V-.25pf max; Rs-2.5 ohms max; Pdiss-.40W.
41	PS0520BZ	7	Si	F10p	Pin; VB-200V; Cj at 0.0V-.25pf max; Rs-3.0 ohms max; Pdiss-.40W.
42	PS0520CX	7	Si	F10p	Pin; VB-200V; Cj at 0.0V-.30pf max; Rs-2.0 ohms max; Pdiss-.50W.
43	PS0520CY	7	Si	F10p	Pin; VB-200V; Cj at 0.0V-.30pf max; Rs-2.5 ohms max; Pdiss-.50W.
44	PS0520CZ	7	Si	F10p	Pin; VB-200V; Cj at 0.0V-.30pf max; Rs-3.0 ohms max; Pdiss-.50W.
45	PS0520DX	7	Si	F10p	Pin; VB-200V; Cj at 0.0V-.40pf max; Rs-2.0 ohms max; Pdiss-.75W.
46	PS0520DY	7	Si	F10p	Pin; VB-200V; Cj at 0.0V-.40pf max; Rs-2.5 ohms max; Pdiss-.75W.
47	PS0520DZ	7	Si	F10p	Pin; VB-200V; Cj at 0.0V-.40pf max; Rs-3.0 ohms max; Pdiss-.75W.
48	PS0520EX	7	Si	F10p	Pin; VB-200V; Cj at 0.0V-.50pf max; Rs-2.0 ohms max; Pdiss-1.0W.
49	PS0520EY	7	Si	F10p	Pin; VB-200V; Cj at 0.0V-.50pf max; Rs-2.5 ohms max; Pdiss-1.0W.
50	PS0520EZ	7	Si	F10p	Pin; VB-200V; Cj at 0.0V-.50pf max; Rs-3.0 ohms max; Pdiss-1.0W.
51	PS0520X	7	Si	F10p	Pin; VB-200V; Cj at 0.0V-.15pf max; Rs-2.0 ohms max; Pdiss-.20W.
52	PS0520Y	7	Si	F10p	Pin; VB-200V; Cj at 0.0V-.15pf max; Rs-2.5 ohms max; Pdiss-.20W.
53	PS0520Z	7	Si	F10p	Pin; VB-200V; Cj at 0.0V-.15pf max; Rs-3.0 ohms max; Pdiss-.20W.
54	PS0525AX	7	Si	F10p	Pin; VB-250V; Cj at 0.0V-.20pf max; Rs-2.0 ohms max; Pdiss-.30W.
55	PS0525AY	7	Si	F10p	Pin; VB-250V; Cj at 0.0V-.20pf max; Rs-2.5 ohms max; Pdiss-.30W.
56	PS0525AZ	7	Si	F10p	Pin; VB-250V; Cj at 0.0V-.20pf max; Rs-2.5 ohms max; Pdiss-.30W.
57	PS0525BX	7	Si	F10p	Pin; VB-250V; Cj at 0.0V-.25pf max; Rs-2.0 ohms max; Pdiss-.40W.
58	PS0525BY	7	Si	F10p	Pin; VB-250V; Cj at 0.0V-.25pf max; Rs-2.5 ohms max; Pdiss-.40W.
59	PS0525BZ	7	Si	F10p	Pin; VB-250V; Cj at 0.0V-.25pf max; Rs-2.5 ohms max; Pdiss-.40W.
60	PS0525CX	7	Si	F10p	Pin; VB-250V; Cj at 0.0V-.30pf max; Rs-2.0 ohms max; Pdiss-.50W.
61	PS0525CY	7	Si	F10p	Pin; VB-250V; Cj at 0.0V-.30pf max; Rs-2.5 ohms max; Pdiss-.50W.
62	PS0525CZ	7	Si	F10p	Pin; VB-250V; Cj at 0.0V-.30pf max; Rs-2.5 ohms max; Pdiss-.50W.
63	PS0525DX	7	Si	F10p	Pin; VB-250V; Cj at 0.0V-.40pf max; Rs-2.0 ohms max; Pdiss-.75W.
64	PS0525DY	7	Si	F10p	Pin; VB-250V; Cj at 0.0V-.40pf max; Rs-2.5 ohms max; Pdiss-.75W.
65	PS0525DZ	7	Si	F10p	Pin; VB-250V; Cj at 0.0V-.40pf max; Rs-2.5 ohms max; Pdiss-.75W.
66	PS0525EX	7	Si	F10p	Pin; VB-250V; Cj at 0.0V-.50pf max; Rs-2.0 ohms max; Pdiss-1.0W.
67	PS0525EY	7	Si	F10p	Pin; VB-250V; Cj at 0.0V-.50pf max; Rs-2.5 ohms max; Pdiss-1.0W.
68	PS0525EZ	7	Si	F10p	Pin; VB-250V; Cj at 0.0V-.50pf max; Rs-2.5 ohms max; Pdiss-1.0W.
69	PS0525X	7	Si	F10p	Pin; VB-250V; Cj at 0.0V-.15pf max; Rs-2.0 ohms max; Pdiss-.20W.
70	PS0525Y	7	Si	F10p	Pin; VB-250V; Cj at 0.0V-.15pf max; Rs-2.5 ohms max; Pdiss-.20W.
71	PS0525Z	7	Si	F10p	Pin; VB-250V; Cj at 0.0V-.15pf max; Rs-2.5 ohms max; Pdiss-.20W.
72	PS0530AX	7	Si	F10p	Pin; VB-300V; Cj at 0.0V-.20pf max; Rs-2.0 ohms max; Pdiss-.30W.
73	PS0530AY	7	Si	F10p	Pin; VB-300V; Cj at 0.0V-.20pf max; Rs-2.5 ohms max; Pdiss-.30W.
74	PS0530AZ	7	Si	F10p	Pin; VB-300V; Cj at 0.0V-.20pf max; Rs-3.0 ohms max; Pdiss-.30W.
75	PS0530BX	7	Si	F10p	Pin; VB-300V; Cj at 0.0V-.25pf max; Rs-2.0 ohms max; Pdiss-.40W.
76	PS0530BY	7	Si	F10p	Pin; VB-300V; Cj at 0.0V-.25pf max; Rs-2.5 ohms max; Pdiss-.40W.
77	PS0530BZ	7	Si	F10p	Pin; VB-300V; Cj at 0.0V-.25pf max; Rs-3.0 ohms max; Pdiss-.40W.
78	PS0530CX	7	Si	F10p	Pin; VB-300V; Cj at 0.0V-.30pf max; Rs-2.0 ohms max; Pdiss-.50W.
79	PS0530CY	7	Si	F10p	Pin; VB-300V; Cj at 0.0V-.30pf max; Rs-2.5 ohms max; Pdiss-.50W.
80	PS0530CZ	7	Si	F10p	Pin; VB-300V; Cj at 0.0V-.30pf max; Rs-3.0 ohms max; Pdiss-.50W.
81	PS0530DX	7	Si	F10p	Pin; VB-300V; Cj at 0.0V-.40pf max; Rs-2.0 ohms max; Pdiss-.75W.
82	PS0530DY	7	Si	F10p	Pin; VB-300V; Cj at 0.0V-.40pf max; Rs-2.5 ohms max; Pdiss-.75W.
83	PS0530DZ	7	Si	F10p	Pin; VB-300V; Cj at 0.0V-.40pf max; Rs-3.0 ohms max; Pdiss-.75W.
84	PS0530EX	7	Si	F10p	Pin; VB-300V; Cj at 0.0V-.50pf max; Rs-2.0 ohms max; Pdiss-1.0W.
85	PS0530EY	7	Si	F10p	Pin; VB-300V; CCCj at 0.0V-.50pf max; Rs-2.5 ohms max; Pdiss-1.0W.
86	PS0530EZ	7	Si	F10p	Pin; VB-300V; Cj at 0.0V-.50pf max; Rs-3.0 ohms max; Pdiss-1.0W.
87	PS0530X	7	Si	F10p	Pin; VB-300V; Cj at 0.0V-.15pf max; Rs-2.0 ohms max; Pdiss-.20W.
88	PS0530Y	7	Si	F10p	Pin; VB-300V; Cj at 0.0V-.15pf max; Rs-2.5 ohms max; Pdiss-.20W.
89	PS0530Z	7	Si	F10p	Pin; VB-300V; Cj at 0.0V-.15pf max; Rs-3.0 ohms max; Pdiss-.20W.
90	PS0605AX	7	Si	DO7	Pin;VB-50V;Ct at 50V-.60pf max;Rs-.80 ohms max;Pdiss-.40W.
91	PS0605AY	7	Si	DO7	Pin;VB-50V;Ct at 50V-.60pf max;Rs-1.2 ohms max;Pdiss-.40W.
92	PS0605AZ	7	Si	DO7	Pin;VB-50V;Ct at 50V-.60pf max;Rs-1.7 ohms max;Pdiss-.40W.
93	PS0605BX	7	Si	DO7	Pin;VB-50V;Ct at 50V-.80pf max;Rs-.60 ohms max;Pdiss-.60W.
94	PS0605BY	7	Si	DO7	Pin;VB-50V;Ct at 50V-.80pf max;Rs-1.0 ohms max;Pdiss-.60W.
95	PS0605BZ	7	Si	DO7	Pin;VB-50V;Ct at 50V-.80pf max;Rs-1.5 ohms max;Pdiss-.60W.
96	PS0605CX	7	Si	DO7	Pin;VB-50V;Ct at 50V-1.0pf max;Rs-.40 ohms max;Pdiss-.80W.
97	PS0605CY	7	Si	DO7	Pin;VB-50V;Ct at 50V-1.0pf max;Rs-.80 ohms max;Pdiss-.80W.
98	PS0605CZ	7	Si	DO7	Pin;VB-50V;Ct at 50V-1.0pf max;Rs-1.1 ohms max;Pdiss-.80W.
99	PS0605DX	7	Si	DO7	Pin;VB-50V;Ct at 50V-1.5pf max;Rs-.40 ohms max;Pdiss-1.0W.
100	PS0605DY	7	Si	DO7	Pin;VB-50V;Ct at 50V-1.5pf max;Rs-.80 ohms max;Pdiss-1.0W.
101	PS0605DZ	7	Si	DO7	Pin;VB-50V;Ct at 50V-1.5pf max;Rs-1.1ohms max;Pdiss-1.0W.
102	PS0605X	7	Si	DO7	Pin;VB-50V;Ct at 50V-.40pf max;Rs-1.0 ohms max;Pdiss-.20W.
103	PS0605Y	7	Si	DO7	Pin;VB-50V;Ct at 50V-.40pf max;Rs-1.5 ohms max;Pdiss-.20W.
104	PS0605Z	7	Si	DO7	Pin;VB-50V;Ct at 50V-.40pf max;Rs-2.0 ohms max;Pdiss-.20W.
105	PS0610AX	7	Si	DO7	Pin;VB-100V;Ct at 50V-.60pf max;Rs-.80 ohms max;Pdiss-.40W.
106	PS0610AY	7	Si	DO7	Pin;VB-100V;Ct at 50V-.60pf max;Rs-1.2ohms max;Pdiss-.40W.
107	PS0610AZ	7	Si	DO7	Pin;VB-100V;Ct at 50V-.60pf max;Rs-1.7ohms max;Pdiss-.40W.
108	PS0610BX	7	Si	DO7	Pin;VB-100V;Ct at 50V-.80pf max;Rs-.60 ohms max;Pdiss-.60W.
109	PS0610BY	7	Si	DO7	Pin;VB-100V;Ct at 50V-.80pf max;Rs-1.0 ohms max;Pdiss-.60W.
110	PS0610BZ	7	Si	DO7	Pin;VB-100V;Ct at 50V-.80pf max;Rs-1.5 ohms max;Pdiss-.60W.

8. MISCELLANEOUS DEVICES

IN ORDER OF (1) USE and (2) TYPE No.

LINE No.	2 TYPE No.	1 USE	DESCRIPTION MAT.	DESCRIPTION DWG. No.	TECHNICAL DATA
1	PS0610CX	7	Si	DO7	Pin;VB-100V;Ct at 50V-1.0max;Rs-.40 ohms max;Pdiss-.80W.
2	PS0610CY	7	Si	DO7	Pin;VB-100V;Ct at 50V-1.0pf max;Rs-.80 ohms max;Pdiss-.80W.
3	PS0610CZ	7	Si	DO7	Pin;VB-100V;Ct at 50V-1.0pf max;Rs-1.1 ohms max;Pdiss-.80W.
4	PS0610DX	7	Si	DO7	Pin;VB-100V;Ct at 50V-1.5pf max;Rs-.40 ohms max;Pdiss-1.0W.
5	PS0610DY	7	Si	DO7	Pin;VB-100V;Ct at 50V-1.5pf max;Rs-.80 ohms max;Pdiss-1.0W.
6	PS0610DZ	7	Si	DO7	Pin;VB-100V;Ct at 50V-1.5pf max;Rs-1.1 ohms max;Pdiss-1.0W.
7	PS0610X	7	Si	DO7	Pin;VB-100V;Ct at 50V-.40pf max;Rs-1.0 ohms max;Pdiss-.20W.
8	PS0610Y	7	Si	DO7	Pin;VB-100V;Ct at 50V-.40pf max;Rs-1.5ohms max;Pdiss-.20W.
9	PS0610Z	7	Si	DO7	Pin;VB-100V;Ct at 50V-.40pf max;Rs-2.0 ohms max;Pdiss-.20W.
10	PS0620AX	7	Si	DO7	Pin;VB-200V;Ct at 50V-.60pf max;Rs-.80 ohms max;Pdiss-.40W.
11	PS0620AY	7	Si	DO7	Pin;VB-200V;Ct at 50V-.60pf max;Rs-1.2 ohms max;Pdiss-.40W.
12	PS0620AZ	7	Si	DO7	Pin;VB-200V;Ct at 50V-.60pf max;Rs-1.7 ohms max;Pdiss-.40W.
13	PS0620BX	7	Si	DO7	Pin;VB-200V;Ct at 50V-.80pf max;Rs-.60 ohms max;Pdiss-.60W.
14	PS0620BY	7	Si	DO7	Pin;VB-200V;Ct at 50V-.80pf max;Rs-1.0 ohms max;Pdiss-.60W.
15	PS0620BZ	7	Si	DO7	Pin;VB-200V;Ct at 50V-.80pf max;Rs-1.5 ohms max;Pdiss-.60W.
16	PS0620CX	7	Si	DO7	Pin;VB-200V;Ct at 50V-1.0pf max;Rs-.40 ohms max;Pdiss-.80W.
17	PS0620CY	7	Si	DO7	Pin;VB-200V;Ct at 50V-1.0pf max;Rs-.80 ohms max;Pdiss-.80W.
18	PS0620CZ	7	Si	DO7	Pin;VB-200V;Ct at 50V-1.0pf max;Rs-1.1 ohms max;Pdiss-.80W.
19	PS0620DX	7	Si	DO7	Pin;VB-200V;Ct at 50V-1.5pf max;Rs-.40 ohms max;Pdiss-1.0W.
20	PS0620DY	7	Si	DO7	Pin;VB-200V;Ct at 50V-1.5pf max;Rs-.80 ohms max;Pdiss-1.0W.
21	PS0620DZ	7	Si	DO7	Pin;VB-200V;Ct at 50V-1.5pf max;Rs-1.1 ohms max;Pdiss-1.0W.
22	PS0620X	7	Si	DO7	Pin;VB-200V;Ct at 50V-.40pf max;Rs-1.0 ohms max;Pdiss-.20W.
23	PS0620Y	7	Si	DO7	Pin;VB-200V;Ct at 50V-.40pf max;Rs-1.5 ohms max;Pdiss-.20W.
24	PS0620Z	7	Si	DO7	Pin;VB-200V;Ct at 50V-.40pf max;Rs-2.0 ohms max;Pdiss-.20W.
25	PS0630AX	7	Si	DO7	Pin;VB-300V;Ct at 50V-.60pf max;Rs-.80 ohms max;Pdiss-.40W.
26	PS0630AY	7	Si	DO7	Pin;VB-300V;Ct at 50V-.60pf max;Rs-1.2 ohms max;Pdiss-.40W.
27	PS0630AZ	7	Si	DO7	Pin;VB-300V;Ct at 50V-.60pf max;Rs-1.7 ohms max;Pdiss-.40W.
28	PS0630BX	7	Si	DO7	Pin;VB-300V;Ct at 50V-.80pf max;Rs-.60 ohms max;Pdiss-.60W.
29	PS0630BY	7	Si	DO7	Pin;VB-300V;Ct at 50V-.80pf max;Rs-1.0 ohms max;Pdiss-.60W.
30	PS0630BZ	7	Si	DO7	Pin;VB-300V;Ct at 50V-.80pf max;Rs-1.5 ohms max;Pdiss-.60W.
31	PS0630CX	7	Si	DO7	Pin;VB-300V;Ct at 50V-1.0pf max;Rs-.40 ohms max;Pdiss-.80W.
32	PS0630CY	7	Si	DO7	Pin;VB-300V;Ct at 50V-1.0pf max;Rs-.80 ohms max;Pdiss-.80W.
33	PS0630CZ	7	Si	DO7	Pin;VB-300V;Ct at 50V-1.0pf max;Rs-1.1 ohms max;Pdiss-.80W.
34	PS0630DX	7	Si	DO7	Pin;VB-300V;Ct at 50V-1.5pf max;Rs-.40 ohms max;Pdiss-1.0W.
35	PS0630DY	7	Si	DO7	Pin;VB-300V;Ct at 50V-1.5pf max;Rs-.80 ohms max;Pdiss-1.0W.
36	PS0630DZ	7	Si	DO7	Pin;VB-300V;Ct at 50V-1.5pf max;Rs-1.1 ohms max;Pdiss-1.0W.
37	PS0630X	7	Si	DO7	Pin;VB-300V;Ct at 50V-.40pf max;Rs-1.0 ohms max;Pdiss-.20W.
38	PS0630Y	7	Si	DO7	Pin;VB-300V;Ct at 50V-.40pf max;Rs-1.5 ohms max;Pdiss-.20W.
39	PS0630Z	7	Si	DO7	Pin;VB-300V;Ct at 50V-.40pf max;Rs-2.0 ohms max;Pdiss-.20W.
40	PS0640AX	7	Si	DO7	Pin;VB-400V;Ct at 50V-.60pf max;Rs-.80 ohms max;Pdiss-.40W.
41	PS0640AY	7	Si	DO7	Pin;VB-400V;Ct at 50V-.60pf max;Rs-1.2 ohms max;Pdiss-.40W.
42	PS0640AZ	7	Si	DO7	Pin;VB-400V;Ct at 50V-.60pf max;Rs-1.7 ohms max;Pdiss-.40W.
43	PS0640BX	7	Si	DO7	Pin;VB-400V;Ct at 50V-.80pf max;Rs-.60 ohms max;Pdiss-.60W.
44	PS0640BY	7	Si	DO7	Pin;VB-400V;Ct at 50V-.80pf max;Rs-1.0 ohms max;Pdiss-.60W.
45	PS0640BZ	7	Si	DO7	Pin;VB-400V;Ct at 50V-.80pf max;Rs-1.5 ohms max;Pdiss-.60W.
46	PS0640CX	7	Si	DO7	Pin;VB-400V;Ct at 50V-1.0pf max;Rs-.40 ohms max;Pdiss-.80W.
47	PS0640CY	7	Si	DO7	Pin;VB-400V;Ct at 50V-1.0pf max;Rs-.80 ohms max;Pdiss-.80W.
48	PS0640CZ	7	Si	DO7	Pin;VB-400V;Ct at 50V-1.0pf max;Rs-1.1 ohms max;Pdiss-.80W.
49	PS0640DX	7	Si	DO7	Pin;VB-400V;Ct at 50V-1.5pf max;Rs-.40 ohms max;Pdiss-1.0W.
50	PS0640DY	7	Si	DO7	Pin;VB-400V;Ct at 50V-1.5pf max;Rs-.80 ohms max;Pdiss-1.0W.
51	PS0640DZ	7	Si	DO7	Pin;VB-400V;Ct at 50V-1.5pf max;Rs-1.1 ohms max;Pdiss-1.0W.
52	PS0640X	7	Si	DO7	Pin;VB-400V;Ct at 50V-.40pf max;Rs-1.0 ohms max;Pdiss-.20W.
53	PS0640Y	7	Si	DO7	Pin;VB-400V;Ct at 50V-.40pf max;Rs-1.5 ohms max;Pdiss-.20W.
54	PS0640Z	7	Si	DO7	Pin;VB-400V;Ct at 50V-.40pf max;Rs-2.0 ohms max;Pdiss-.20W.
55	PS0650AX	7	Si	DO7	Pin;VB-500V;Ct at 50V-.60pf max;Rs-.80 ohms max;Pdiss-.40W.
56	PS0650AY	7	Si	DO7	Pin;VB-500V;Ct at 50V-.60pf max;Rs-1.2 ohms max;Pdiss-.40W.
57	PS0650AZ	7	Si	DO7	Pin;VB-500V;Ct at 50V-.60pf max;Rs-1.7 ohms max;Pdiss-.40W.
58	PS0650BX	7	Si	DO7	Pin;VB-500V;Ct at 50V-.80pf max;Rs-.60 ohms max;Pdiss-.60W.
59	PS0650BY	7	Si	DO7	Pin;VB-500V;Ct at 50V-.80pf max;Rs-1.0 ohms max;Pdiss-.60W.
60	PS0650BZ	7	Si	DO7	Pin;VB-500V;Ct at 50V-.80pf max;Rs-1.5 ohms max;Pdiss-.60W.
61	PS0650CX	7	Si	DO7	Pin;VB-500V;Ct at 50V-1.0pf max;Rs-.40 ohms max;Pdiss-.80W.
62	PS0650CY	7	Si	DO7	Pin;VB-500V;Ct at 50V-1.0pf max;Rs-.80 ohms max;Pdiss-.80W.
63	PS0650CZ	7	Si	DO7	Pin;VB-500V;Ct at 50V-1.0pf max;Rs-1.1 ohms max;Pdiss-.80W.
64	PS0650DX	7	Si	DO7	Pin;VB-500V;Ct at 50V-1.5pf max;Rs-.40 ohms max;Pdiss-1.0W.
65	PS0650DY	7	Si	DO7	Pin;VB-500V;Ct at 50V-1.5pf max;Rs-.80 ohms max;Pdiss-1.0W.
66	PS0650DZ	7	Si	DO7	Pin;VB-500V;Ct at 50V-1.5pf max;Rs-1.1 ohms max;Pdiss-1.0W.
67	PS0650X	7	Si	DO7	Pin;VB-500V;Ct at 50V-.40pf max;Rs-1.0 ohms max;Pdiss-.20W.
68	PS0650Y	7	Si	DO7	Pin;VB-500V;Ct at 50V-.40pf max;Rs-1.5 ohms max;Pdiss-.20W.
69	PS0650Z	7	Si	DO7	Pin;VB-500V;Ct at 50V-.40pf max;Rs-2.0 ohms max;Pdiss-.20W.
70	PS0805AX	7	Si	A1ag	Pin;VB-50V;Ct at 50V-.60pf max;Rs-.80 ohms max;Pdiss-.225W.
71	PS0805AY	7	Si	A1ag	Pin;VB-50V;Ct at 50V-.60pf max;Rs-1.2 ohms max;Pdiss-.225W.
72	PS0805AZ	7	Si	A1ag	Pin;VB-50V;Ct at 50V-.60pf max;Rs-1.7 ohms max;Pdiss-.225W.
73	PS0805BX	7	Si	A1ag	Pin;VB-50V;Ct at 50V-.80pf max;Rs-.60 ohms max;Pdiss-.30W.
74	PS0805BY	7	Si	A1ag	Pin;VB-50V;Ct at 50V-.80pf max;Rs-1.0 ohms max;Pdiss-.30W.
75	PS0805BZ	7	Si	A1ag	Pin;VB-50V;Ct at 50V-.80pf max;Rs-1.5 ohms max;Pdiss-.30W.
76	PS0805CX	7	Si	A1ag	Pin;VB-50V;Ct at 50V-1.0pf max;Rs-.40 ohms max;Pdiss-.45W.
77	PS0805CY	7	Si	A1ag	Pin;VB-50V;Ct at 50V-1.0pf max;Rs-.80 ohms max;Pdiss-.45W.
78	PS0805CZ	7	Si	A1ag	Pin;VB-50V;Ct at 50V-1.0pf max;Rs-1.1 ohms max;Pdiss-.45W.
79	PS0805DX	7	Si	A1ag	Pin;VB-50V;Ct at 50V-1.5pf max;Rs-.40 ohms max;Pdiss-.60W.
80	PS0805DY	7	Si	A1ag	Pin;VB-50V;Ct at 50V-1.5pf max;Rs-.80 ohms max;Pdiss-.60W.
81	PS0805DZ	7	Si	A1ag	Pin;VB-50V;Ct at 50V-1.5pf max;Rs-1.1 ohms max;Pdiss-.60W.
82	PS0805X	7	Si	A1ag	Pin;VB-50V;Ct at 50V-.40pf max;Rs-1.0 ohms max;Pdiss-.15W.
83	PS0805Y	7	Si	A1ag	Pin;VB-50V;Ct at 50V-.40pf max;Rs-1.5 ohms max;Pdiss-.15W.
84	PS0805Z	7	Si	A1ag	Pin;VB-50V;Ct at 50V-.40pf max;Rs-2.0 ohms max;Pdiss-.15W.
85	PS0810AX	7	Si	A1ag	Pin;VB-100V;Ct at 50V-.60pf max;Rs-.80 ohms max;Pdiss-.225W.
86	PS0810AY	7	Si	A1ag	Pin;VB-100V;Ct at 50V-.60pf max;Rs-1.2 ohms max;Pdiss-.225W.
87	PS0810AZ	7	Si	A1ag	Pin;VB-100V;Ct at 50V-.60pf max;Rs-1.7 ohms max;Pdiss-.225W.
88	PS0810BX	7	Si	A1ag	Pin;VB-100V;Ct at 50V-.80pf max;Rs-.60 ohms max;Pdiss-.30W.
89	PS0810BY	7	Si	A1ag	Pin;VB-100V;Ct at 50V-.80pf max;Rs-1.0 ohms max;Pdiss-.30W.
90	PS0810BZ	7	Si	A1ag	Pin;VB-100V;Ct at 50V-.80pf max;Rs-1.5 ohms max;Pdiss-.30W.
91	PS0810CX	7	Si	A1ag	Pin;VB-100V;Ct at 50V-1.0pf max;Rs-.40 ohms max;Pdiss-.45W.
92	PS0810CY	7	Si	A1ag	Pin;VB-100V;Ct at 50V-1.0pf max;Rs-.80 ohms max;Pdiss-.45W.
93	PS0810CZ	7	Si	A1ag	Pin;VB-100V;Ct at 50V-1.0pf max;Rs-1.1 ohms max;Pdiss-.45W.
94	PS0810DX	7	Si	A1ag	Pin;VB-100V;Ct at 50V-1.5pf max;Rs-.40 ohms max;Pdiss-.60W.
95	PS0810DY	7	Si	A1ag	Pin;VB-100V;Ct at 50V-1.5pf max;Rs-.80 ohms max;Pdiss-.60W.
96	PS0810DZ	7	Si	A1ag	Pin;VB-100V;Ct at 50V-1.5pf max;Rs-1.1 ohms max;Pdiss-.60W.
97	PS0810X	7	Si	A1ag	Pin;VB-100V;Ct at 50V-.40pf max;Rs-1.0 ohms max;Pdiss-.15W.
98	PS0810Y	7	Si	A1ag	Pin;VB-100V;Ct at 50V-.40pf max;Rs-1.5 ohms max;Pdiss-.15W.
99	PS0810Z	7	Si	A1ag	Pin;VB-100V;Ct at 50V-.40pf max;Rs-2.0 ohms max;Pdiss-.15W.
100	PS0820AX	7	Si	A1ag	Pin;VB-200V;Ct at 50V-.60pf max;Rs-.80 ohms max;Pdiss-.225W.
101	PS0820AY	7	Si	A1ag	Pin;VB-200V;Ct at 50V-.60pf max;Rs-1.2 ohms max;Pdiss-.225W.
102	PS0820AZ	7	Si	A1ag	Pin;VB-200V;Ct at 50V-.60pf max;Rs-1.7 ohms max;Pdiss-.225W.
103	PS0820BX	7	Si	A1ag	Pin;VB-200V;Ct at 50V-.80pf max;Rs-.60 ohms max;Pdiss-.30W.
104	PS0820BY	7	Si	A1ag	Pin;VB-200V;Ct at 50V-.80pf max;Rs-1.0 ohms max;Pdiss-.30W.
105	PS0820BZ	7	Si	A1ag	Pin;VB-200V;Ct at 50V-.80pf max;Rs-1.5 ohms max;Pdiss-.30W.
106	PS0820CX	7	Si	A1ag	Pin;VB-200V;Ct at 50V-1.0pf max;Rs-.40 ohms max;Pdiss-.45W.
107	PS0820CY	7	Si	A1ag	Pin;VB-200V;Ct at 50V-1.0pf max;Rs-.80 ohms max;Pdiss-.45W.
108	PS0820CZ	7	Si	A1ag	Pin;VB-200V;Ct at 50V-1.0pf max;Rs-1.1 ohms max;Pdiss-.45W.
109	PS0820DX	7	Si	A1ag	Pin;VB-200V;Ct at 50V-1.5pf max;Rs-.40 ohms max;Pdiss-.60W.
110	PS0820DY	7	Si	A1ag	Pin;VB-200V;Ct at 50V-1.5pf max;Rs-.80 ohms max;Pdiss-.60W.

8. MISCELLANEOUS DEVICES

IN ORDER OF (1) USE and (2) TYPE No.

LINE No.	[2] TYPE No.	[1] USE	DESCRIPTION MAT.	DWG. No.	TECHNICAL DATA
1	PS0820DZ	7	Si	A1ag	Pin;VB-200V;Ct at 50V-1.5pf max;Rs-1.1 ohms max;Pdiss-.60W.
2	PS0820X	7	Si	A1ag	Pin;VB-200V;Ct at 50V-.40pf max;Rs-1.0 ohms max;Pdiss-.15W.
3	PS0820Y	7	Si	A1ag	Pin;VB-200V;Ct at 50V-.40pf max;Rs-1.5 ohms max;Pdiss-.15W.
4	PS0820Z	7	Si	A1ag	Pin;VB-200V;Ct at 50V-.40pf max;Rs-2.0 ohms max;Pdiss-.15W.
5	PS0830AX	7	Si	A1ag	Pin;VB-300V;Ct at 50V-.60pf max;Rs-.80 ohms max;Pdiss-.225W.
6	PS0830AY	7	Si	A1ag	Pin;VB-300V;Ct at 50V-.60pf max;Rs-1.2 ohms max;Pdiss-.225W.
7	PS0830AZ	7	Si	A1ag	Pin;VB-300V;Ct at 50V-.60pf max;Rs-1.7 ohms max;Pdiss-.225W.
8	PS0830BX	7	Si	A1ag	Pin;VB-300V;Ct at 50V-.80pf max;Rs-.60 ohms max;Pdiss-.30W.
9	PS0830BY	7	Si	A1ag	Pin;VB-300V;Ct at 50V-.80pf max;Rs-1.0 ohms max;Pdiss-.30W.
10	PS0830BZ	7	Si	A1ag	Pin;VB-300V;Ct at 50V-.80pf max;Rs-1.5ohms max;Pdiss-.30W.
11	PS0830CX	7	Si	A1ag	Pin;VB-300V;Ct at 50V-1.0pf max;Rs-.40 ohms max;Pdiss-.45W.
12	PS0830CY	7	Si	A1ag	Pin;VB-300V;Ct at 50V-1.0pf max;Rs-.80 ohms max;Pdiss-.45W.
13	PS0830CZ	7	Si	A1ag	Pin;VB-300V;Ct at 50V-1.0pf max;Rs-1.1ohms max;Pdiss-.45W.
14	PS0830DX	7	Si	A1ag	Pin;VB-300V;Ct at 50V-1.5pf max;Rs-.40 ohms max;Pdiss-.60W.
15	PS0830DY	7	Si	A1ag	Pin;VB-300V;Ct at 50V-1.5pf max;Rs-.80 ohms max;Pdiss-.60W.
16	PS0830DZ	7	Si	A1ag	Pin;VB-300V;Ct at 50V-1.5pf max;Rs-1.1ohms max;Pdiss-.60W.
17	PS0830X	7	Si	A1ag	Pin;VB-300V;Ct at 50V-.40pf max;Rs-1.0 ohms max;Pdiss-.15W.
18	PS0830Y	7	Si	A1ag	Pin;VB-300V;Ct at 50V-.40pf max;Rs-1.5 ohms max;Pdiss-.15W.
19	PS0830Z	7	Si	A1ag	Pin;VB-300V;Ct at 50V-.40pf max;Rs-2.0 ohms max;Pdiss-.15W.
20	PS0840AX	7	Si	A1ag	Pin;VB-400V;Ct at 50V-.60pf max;Rs-.80 ohms max;Pdiss-.225W.
21	PS0840AY	7	Si	A1ag	Pin;VB-400V;Ct at 50V-.60pf max;Rs-1.2ohms max;Pdiss-.225W.
22	PS0840AZ	7	Si	A1ag	Pin;VB-400V;Ct at 50V-.60pf max;Rs-1.7ohms max;Pdiss-.225W.
23	PS0840BX	7	Si	A1ag	Pin;VB-400V;Ct at 50V-.80pf max;Rs-.60 ohms max;Pdiss-.30W.
24	PS0840BY	7	Si	A1ag	Pin;VB-400V;Ct at 50V-.80pf max;Rs-1.0 ohms max;Pdiss-.30W.
25	PS0840BZ	7	Si	A1ag	Pin;VB-400V;Ct at 50V-.80pf max;Rs-1.5ohms max;Pdiss-.30W.
26	PS0840CX	7	Si	A1ag	Pin;VB-400V;Ct at 50V-1.0pf max;Rs-.40 ohms max;Pdiss-.45W.
27	PS0840CY	7	Si	A1ag	Pin;VB-400V;Ct at 50V-1.0pf max;Rs-.80 ohms max;Pdiss-.45W.
28	PS0840CZ	7	Si	A1ag	Pin;VB-400V;Ct at 50V-1.0pf max;Rs-1.1ohms max;Pdiss-.45W.
29	PS0840DX	7	Si	A1ag	Pin;VB-400V;Ct at 50V-1.5pf max;Rs-.40 ohms max;Pdiss-.60W.
30	PS0840DY	7	Si	A1ag	Pin;VB-400V;Ct at 50V-1.5pf max;Rs-.80 ohms max;Pdiss-.60W.
31	PS0840DZ	7	Si	A1ag	Pin;VB-400V;Ct at 50V-1.5pf max;Rs-1.1ohms max;Pdiss-.60W.
32	PS0840X	7	Si	A1ag	Pin;VB-400V;Ct at 50V-.40pf max;Rs-1.0 ohms max;Pdiss-.15W.
33	PS0840Y	7	Si	A1ag	Pin;VB-400V;Ct at 50V-.40pf max;Rs-1.5ohms max;Pdiss-.15W.
34	PS0840Z	7	Si	A1ag	Pin;VB-400V;Ct at 50V-.40pf max;Rs-2.0 ohms max;Pdiss-.15W.
35	PS0850AX	7	Si	A1ag	Pin;VB-500V;Ct at 50V-.60pf max;Rs-.80 ohms max;Pdiss-.225W.
36	PS0850AY	7	Si	A1ag	Pin;VB-500V;Ct at 50V-.60pf max;Rs-1.2ohms max;Pdiss-.225W.
37	PS0850AZ	7	Si	A1ag	Pin;VB-500V;Ct at 50V-.60pf max;Rs-1.7ohms max;Pdiss-.225W.
38	PS0850BX	7	Si	A1ag	Pin;VB-500V;Ct at 50V-.80pf max;Rs-.60 ohms max;Pdiss-.30W.
39	PS0850BY	7	Si	A1ag	Pin;VB-500V;Ct at 50V-.80pf max;Rs-1.0 ohms max;Pdiss-.30W.
40	PS0850BZ	7	Si	A1ag	Pin;VB-500V;Ct at 50V-.80pf max;Rs-1.5ohms max;Pdiss-.30W.
41	PS0850CX	7	Si	A1ag	Pin;VB-500V;Ct at 50V-1.0pf max;Rs-.40 ohms max;Pdiss-.45W.
42	PS0850CY	7	Si	A1ag	Pin;VB-500V;Ct at 50V-1.0pf max;Rs-.80 ohms max;Pdiss-.45W.
43	PS0850CZ	7	Si	A1ag	Pin;VB-500V;Ct at 50V-1.0pf max;Rs-1.1ohms max;Pdiss-.45W.
44	PS0850DX	7	Si	A1ag	Pin;VB-500V;Ct at 50V-1.5pf max;Rs-.40 ohms max;Pdiss-.60W.
45	PS0850DY	7	Si	A1ag	Pin;VB-500V;Ct at 50V-1.5pf max;Rs-.80 ohms max;Pdiss-.60W.
46	PS0850DZ	7	Si	A1ag	Pin;VB-500V;Ct at 50V-1.5pf max;Rs-1.1ohms max;Pdiss-.60W.
47	PS0850X	7	Si	A1ag	Pin;VB-500V;Ct at 50V-.40pf max;Rs-1.0 ohms max;Pdiss-.15W.
48	PS0850Y	7	Si	A1ag	Pin;VB-500V;Ct at 50V-.40pf max;Rs-1.5ohms max;Pdiss-.15W.
49	PS0850Z	7	Si	A1ag	Pin;VB-500V;Ct at 50V-.40pf max;Rs-2.0 ohms max;Pdiss-.15W.
50	S3023	7	Si$#	F121	Pin;V(BR) 180V;C(T) 0.45pF at Vr 50V,1MHz;R(S) 0.5Ω at I(F) 100mA
51	S3066	7	Si$#	A338	Pd 7.5W;V(BR) 60V;G1.0-3.0pF at 10V,1MHz;Fin 2.27GHz at Pin 6.0W;Fout 6.8GHz at Pout 2.5W
52	SLX4B	7			Limiter;9300-9500MHz;VSWR 1.5;Transmitter Pwr 4.0kW
53▼	TXVP4001	7	§	A402	VBR 50V min at IR 10uA;CT .08pF max at VR 30V;Minority Carrier Lifetime 30 nS at IF 10mA
54▼	TXVP4005	7	#	M1127	VBR 100V at IR 10uA;CT .02pF max at VR 10V;Minority Carrier Lifetime 150nS max at IF 10mA
55▼	TXVP4050	7	§	A402	VBR 30V min at IR 10uA;CT .15pF max at VR 20V;Minority Carrier Lifetime 25 nS at IF 10mA
56	UM4000	7	Si	†	Pin diode;Vr 100-1000V;Ct 3.0Pf at 0V,1GHz;Rs 0.5Ω max at 100ma, 1GHz
57	UM4001A	7	Si	F32g	PIN;VB 100V;Ct 3.0pF max at 0.0V;Rs 500mΩ max at 100mA;Carrier Lifetime 7.0us
58	UM4001B	7	Si	A285	PIN;VB 100V;Ct 3.0pF max at 0.0V;Rs 500mΩ max at 100mA;Carrier Lifetime 7.0us
59	UM4001C	7	Si	S288Ø	PIN;VB 100V;Ct 3.0pF max at 0.0V;Rs 500mΩ max at 100mA;Carrier Lifetime 7.0us
60	UM4001D	7	Si	S401Ø	PIN;VB 100V;Ct 3.0pF max at 0.0V;Rs 500mΩ max at 100mA;Carrier Lifetime 7.0us
61	UM4001E	7	Si	A286	PIN;VB 100V;Ct 3.0pF max at 0.0V;Rs 500mΩ max at 100mA;Carrier Lifetime 7.0us
62	UM4002A	7	Si	F32g	PIN;VB 200V;Ct 3.0pF max at 0.0V;Rs 500mΩ max at 100mA;Carrier Lifetime 7.0us
63	UM4002B	7	Si	A285	PIN;VB 200V;Ct 3.0pF max at 0.0V;Rs 500mΩ max at 100mA;Carrier Lifetime 7.0us
64	UM4002C	7	Si	S288Ø	PIN;VB 200V;Ct 3.0pF max at 0.0V;Rs 500mΩ max at 100mA;Carrier Lifetime 7.0us
65	UM4002D	7	Si	S401Ø	PIN;VB 200V;Ct 3.0pF max at 0.0V;Rs 500mΩ max at 100mA;Carrier Lifetime 7.0us
66	UM4002E	7	Si	A286	PIN;VB 200V;Ct 3.0pF max at 0.0V;Rs 500mΩ max at 100mA;Carrier Lifetime 7.0us
67	UM4006A	7	Si	F32g	PIN;VB 600V;Ct 3.0pF max at 0.0V;Rs 500mΩ max at 100mA;Carrier Lifetime 7.0us
68	UM4006B	7	Si	A285	PIN;VB 600V;Ct 3.0pF max at 0.0V;Rs 500mΩ max at 100mA;Carrier Lifetime 7.0us
69	UM4006C	7	Si	S288Ø	PIN;VB 600V;Ct 3.0pF max at 0.0V;Rs 500mΩ max at 100mA;Carrier Lifetime 7.0us
70	UM4006D	7	Si	S401Ø	PIN;VB 600V;Ct 3.0pF max at 0.0V;Rs 500mΩ max at 100mA;Carrier Lifetime 7.0us
71	UM4006E	7	Si	A286	PIN;VB 600V;Ct 3.0pF max at 0.0V;Rs 500mΩ max at 100mA;Carrier Lifetime 7.0us
72	UM4010A	7	Si	F32g	PIN;VB 1.0kV;Ct 3.0pF max at 0.0V;Rs 500mΩ max at 100mA;Carrier Lifetime 7.0uS
73	UM4010B	7	Si	A285	PIN;VB 1.0kV;Ct 3.0pF max at 0.0V;Rs 500mΩ max at 100mA;Carrier Lifetime 7.0uS
74	UM4010C	7	Si	S288Ø	PIN;VB 1.0kV;Ct 3.0pF max at 0.0V;Rs 500mΩ max at 100mA;Carrier Lifetime 7.0uS
75	UM4010D	7	Si	S401Ø	PIN;VB 1.0kV;Ct 3.0pF max at 0.0V;Rs 500mΩ max at 100mA;Carrier Lifetime 7.0uS
76	UM4010E	7	Si	A286	PIN;VB 1.0kV;Ct 3.0pF max at 0.0V;Rs 500mΩ max at 100mA;Carrier Lifetime 7.0uS
77	UM4300	7	Si	†	Pin diode;Vr 100-1000V;Ct 2.2Pf at 0V, 1GHz;Rs 1.5Ω max at 100ma, 1GHz
78	UM4301A	7	Si	F32g	PIN;VB 100V;Ct 2.2pF max at 0.0V;Rs 1.5Ω max at 100mA;Carrier Lifetime 5.0us min
79	UM4301B	7	Si	A285	PIN;VB 100V;Ct 2.2pF max at 0.0V;Rs 1.5Ω max at 100mA;Carrier Lifetime 5.0us min
80	UM4301C	7	Si	S288Ø	PIN;VB 100V;Ct 2.2pF max at 0.0V;Rs 1.5Ω max at 100mA;Carrier Lifetime 5.0us min
81	UM4301D	7	Si	S401Ø	PIN;VB 100V;Ct 2.2pF max at 0.0V;Rs 1.5Ω max at 100mA;Carrier Lifetime 5.0us min
82	UM4301E	7	Si	A286	PIN;VB 100V;Ct 2.2pF max at 0.0V;Rs 1.5Ω max at 100mA;Carrier Lifetime 5.0us min
83	UM4302A	7		F137	PIN Diode;for Attenuator;VR 200V at IR 10uA;CT 2.2pF
84	UM4302B	7		A285	PIN Diode;for Attenuator;VR 200V at IR 10uA;CT 2.2pF
85	UM4302C	7		S288b	PIN Diode;for Attenuator;VR 200V at IR 10uA;CT 2.2pF
86	UM4302D	7		S401	PIN Diode;for Attenuator;VR 200V at IR 10uA;CT 2.2pF
87	UM4302E	7		A286	PIN Diode;for Attenuator;VR 200V at IR 10uA;CT 2.2pF
88	UM4306A	7		F137	PIN Diode;for Attenuator;VR 600V at IR 10uA;CT 2.2pF
89	UM4306B	7		A285	PIN Diode;for Attenuator;VR 600V at IR 10uA;CT 2.2pF
90	UM4306C	7		S288b	PIN Diode;for Attenuator;VR 600V at IR 10uA;CT 2.2pF
91	UM4306D	7		S401	PIN Diode;for Attenuator;VR 600V at IR 10uA;CT 2.2pF
92	UM4306E	7		A286	PIN Diode;for Attenuator;VR 600V at IR 10uA;CT 2.2pF
93	UM4310A	7	Si	F32g	PIN;VB 1.0kV;Ct 2.2pF max at 0.0V;Rs 1.5Ω max at 100mA;Carrier Lifetime 5.0us min
94	UM4310B	7	Si	A285	PIN;VB 1.0kV;Ct 2.2pF max at 0.0V;Rs 1.5Ω max at 100mA;Carrier Lifetime 5.0us min
95	UM4310C	7	Si	S288Ø	PIN;VB 1.0kV;Ct 2.2pF max at 0.0V;Rs 1.5Ω max at 100mA;Carrier Lifetime 5.0us min
96	UM4310D	7	Si	S401Ø	PIN;VB 1.0kV;Ct 2.2pF max at 0.0V;Rs 1.5Ω max at 100mA;Carrier Lifetime 5.0us min
97	UM4310E	7	Si	A286	PIN;VB 1.0kV;Ct 2.2pF max at 0.0V;Rs 1.5Ω max at 100mA;Carrier Lifetime 5.0us min
98	UM4900	7	Si	†	Pin diode;Vr 100-600V;Ct 3.0Pf at 0V,1GHz;Rs 0.5Ω max at 100ma, 1GHz
99	UM4901A	7	Si	F32g	PIN;VB 100V;Ct 3.0pF max at 0.0V;Rs 500mΩ max at 100mA;Carrier Lifetime 5.0us min
100	UM4901B	7	Si	A285	PIN;VB 100V;Ct 3.0pF max at 0.0V;Rs 500mΩ max at 100mA;Carrier Lifetime 5.0us min
101	UM4901C	7	Si	S288Ø	PIN;VB 100V;Ct 3.0pF max at 0.0V;Rs 500mΩ max at 100mA;Carrier Lifetime 5.0us min
102	UM4901D	7	Si	S401Ø	PIN;VB 100V;Ct 3.0pF max at 0.0V;Rs 500mΩ max at 100mA;Carrier Lifetime 5.0us min
103	UM4901E	7	Si	A286	PIN;VB 100V;Ct 3.0pF max at 0.0V;Rs 500mΩ max at 100mA;Carrier Lifetime 5.0us min
104	UM4902A	7	Si	F32c	PIN;VB 200V;Ct 3.0pF max at 0.0V;Rs 500mΩ max at 100mA;Carrier Lifetime 5.0us min
105	UM4902B	7	Si	A146c	PIN;VB 200V;Ct 3.0pF max at 0.0V;Rs 500mΩ max at 100mA;Carrier Lifetime 5.0us min
106	UM4902C	7	Si	S288	PIN;VB 200V;Ct 3.0pF max at 0.0V;Rs 500mΩ max at 100mA;Carrier Lifetime 5.0us min
107	UM4906A	7	Si	F32g	PIN;VB 600V;Ct 3.0pF max at 0.0V;Rs 500mΩ max at 100mA;Carrier Lifetime 5.0us min
108	UM4906B	7	Si	A285	PIN;VB 600V;Ct 3.0pF max at 0.0V;Rs 500mΩ max at 100mA;Carrier Lifetime 5.0us min
109	UM4906C	7	Si	S288Ø	PIN;VB 600V;Ct 3.0pF max at 0.0V;Rs 500mΩ max at 100mA;Carrier Lifetime 5.0us min
110	UM4906D	7	Si	S401Ø	PIN;VB 600V;Ct 3.0pF max at 0.0V;Rs 500mΩ max at 100mA;Carrier Lifetime 5.0us min

8. MISCELLANEOUS DEVICES

IN ORDER OF (1) USE and (2) TYPE No.

LINE No.	2 TYPE No.	1 USE	DESCRIPTION MAT.	DESCRIPTION DWG. No.	TECHNICAL DATA
1	UM4906E	7	Si	A286	PIN;VB 600V;Ct 3.0pF max at 0.0V;Rs 500mΩ max at 100mA;Carrier Lifetime 5.0us min
2	UM6000	7	Si	†	Pin diode;Vr 100-1000V;Ct 0.5Pf at 0V,1GHz;Rs 1.7Ω max at 100ma, 1GHz
3	UM6001A	7	Si	F32p	PIN;VB 100V;Ct at 0.0V 500fF max;Rs at 100mA 1.7Ω max;Carrier Lifetime 1.0us min.
4	UM6001B	7	Si	A196p	PIN;VB 100V;Ct at 0.0V 500fF max;RS at 100mA 1.7Ω max;Carrier Lifetime 1.0us min.
5	UM6001C	7	Si	M696	PIN;VB 100V;Ct at 0.0V 500fF max;RS at 100mA 1.7Ω max;Carrier Lifetime 1.0us min.
6	UM6001E	7	Si	A287	PIN;VB 100V;Ct at 0.0V 500fF max;RS at 100mA 1.7Ω max;Carrier Lifetime 1.0us min.
7	UM6001H	7	Si	S462	PIN;VB 100V;Ct at 0.0V 500fF max;RS at 100mA 1.7Ω max;Carrier Lifetime 1.0us min.
8	UM6002A	7	Si	F32p	PIN;VB 200V;Ct at 0.0V 500fF max;RS at 100mA 1.7Ω max;Carrier Lifetime 1.0us min.
9	UM6002B	7	Si	A196p	PIN;VB 200V;Ct at 0.0V 500fF max;RS at 100mA 1.7Ω max;Carrier Lifetime 1.0us min.
10	UM6002C	7	Si	M696	PIN;VB 200V;Ct at 0.0V 500fF max;RS at 100mA 1.7Ω max;Carrier Lifetime 1.0us min.
11	UM6002E	7	Si	A287	PIN;VB 200V;Ct at 0.0V 500fF max;RS at 100mA 1.7Ω max;Carrier Lifetime 1.0us min.
12	UM6002H	7	Si	S462	PIN;VB 200V;Ct at 0.0V 500fF max;RS at 100mA 1.7Ω max;Carrier Lifetime 1.0us min.
13	UM6006A	7	Si	F32p	PIN;VB 600V;Ct at 0.0V 500fF max;RS at 100mA 1.7Ω max;Carrier Lifetime 1.0us min.
14	UM6006B	7	Si	A196p	PIN;VB 600V;Ct at 0.0V 500fF max;RS at 100mA 1.7Ω max;Carrier Lifetime 1.0us min.
15	UM6006C	7	Si	M696	PIN;VB 600V;Ct at 0.0V 500fF max;RS at 100mA 1.7Ω max;Carrier Lifetime 1.0us min.
16	UM6006E	7	Si	A287	PIN;VB 600V;Ct at 0.0V 500fF max;RS at 100mA 1.7Ω max;Carrier Lifetime 1.0us min.
17	UM6010A	7	Si	F32p	PIN;VB 1.0kV;Ct at 0.0V 500fF max;RS at 100mA 1.7Ω max;Carrier Lifetime 1.0us min.
18	UM6010B	7	Si	A196p	PIN;VB 1.0kV;Ct at 0.0V 500fF max;RS at 100mA 1.7Ω max;Carrier Lifetime 1.0us min.
19	UM6010C	7	Si	M696	PIN;VB 1.0kV;Ct at 0.0V 500fF max;RS at 100mA 1.7Ω max;Carrier Lifetime 1.0us min.
20	UM6010E	7	Si	A287	PIN;VB 1.0kV;Ct at 0.0V 500fF max;RS at 100mA 1.7Ω max;Carrier Lifetime 1.0us min.
21	UM6200	7	Si	†	Pin diode;Vr 100-400V;Ct 1.1pF at 0V,1GHz;Rs 0.4Ω max at 100ma, 1GHz
22	UM6201A	7	Si	F32p	PIN;VB 100V;Ct at 0.0V 1.1pF max;RS at 100mA 400mΩ max;Carrier Lifetime 600ns min.
23	UM6201B	7	Si	A196p	PIN;VB 100V;Ct at 0.0V 1.1pF max;RS at 100mA 400mΩ max;Carrier Lifetime 600ns min.
24	UM6201C	7	Si	M696	PIN;VB 100V;Ct at 0.0V 1.1pF max;RS at 100mA 400mΩ max;Carrier Lifetime 600ns min.
25	UM6201E	7	Si	A287	PIN;VB 100V;Ct at 0.0V 1.1pF max;RS at 100mA 400mΩ max;Carrier Lifetime 600ns min.
26	UM6202A	7	Si	F32p	PIN;VB 200V;Ct at 0.0V 1.1pF max;RS at 100mA 400mΩ max;Carrier Lifetime 600ns min.
27	UM6202B	7	Si	A196p	PIN;VB 200V;Ct at 0.0V 1.1pF max;RS at 100mA 400mΩ max;Carrier Lifetime 600ns min.
28	UM6202C	7	Si	M696	PIN;VB 200V;Ct at 0.0V 1.1pF max;RS at 100mA 400mΩ max;Carrier Lifetime 600ns min.
29	UM6202E	7	Si	A287	PIN;VB 200V;Ct at 0.0V 1.1pF max;RS at 100mA 400mΩ max;Carrier Lifetime 600ns min.
30	UM6204A	7	Si	F32p	PIN;VB 400V;Ct at 0.0V 1.1pF max;RS at 100mA 400mΩ max;Carrier Lifetime 600ns min.
31	UM6204B	7	Si	A196p	PIN;VB 400V;Ct at 0.0V 1.1pF max;Rs at 100mA 400mΩ max;Carrier Lifetime 600ns min.
32	UM6204C	7	Si	M696	PIN;VB 400V;Ct at 0.0V 1.1pF max;RS at 100mA 400mΩ max;Carrier Lifetime 600ns min.
33	UM6204E	7	Si	A287	PIN;VB 400V;Ct at 0.0V 1.1pF max;RS at 100mA 400mΩ max;Carrier Lifetime 600ns min.
34	UM6600	7	Si	†	Pin diode;Vr 100-1000V;Ct 0.4Pf at 0V,1GHz;Rs 2.5Ω max at 100ma, 1GHz
35	UM6601A	7	Si	F32p	PIN;VB 100V;Ct at 0.0V 400fF max;Rs at 100mA 2.5Ω max;Carrier Lifetime 1.0us min.
36	UM6601B	7	Si	A196p	PIN;VB 100V;Ct at 0.0V 400fF max;RS at 100mA 2.5Ω max;Carrier Lifetime 1.0us min.
37	UM6601C	7	Si	M696	PIN;VB 100V;Ct at 0.0V 400fF max;RS at 100mA 2.5Ω max;Carrier Lifetime 1.0us min.
38	UM6601E	7	Si	A287	PIN;VB 100V;Ct at 0.0V 400fF max;RS at 100mA 2.5Ω max;Carrier Lifetime 1.0us min.
39	UM6601H	7	Si	S462	PIN;VB 100V;Ct at 0.0V 400fF max;RS at 100mA 2.5Ω max;Carrier Lifetime 1.0us min.
40	UM6602A	7	Si	F32p	PIN;VB 200V;Ct at 0.0V 400fF max;RS at 100mA 2.5Ω max;Carrier Lifetime 1.0us min.
41	UM6602B	7	Si	A196p	PIN;VB 200V;Ct at 0.0V 400fF max;RS at 100mA 2.5Ω max;Carrier Lifetime 1.0us min.
42	UM6602C	7	Si	M696	PIN;VB 200V;Ct at 0.0V 400fF max;RS at 100mA 2.5Ω max;Carrier Lifetime 1.0us min.
43	UM6602E	7	Si	A287	PIN;VB 200V;Ct at 0.0V 400fF max;RS at 100mA 2.5Ω max;Carrier Lifetime 1.0us min.
44	UM6602H	7	Si	S462	PIN;VB 200V;Ct at 0.0V 400fF max;RS at 100mA 2.5Ω max;Carrier Lifetime 1.0us min.
45	UM6606A	7	Si	F32p	PIN;VB 600V;Ct at 0.0V 400fF max;RS at 100mA 2.5Ω max;Carrier Lifetime 1.0us min.
46	UM6606B	7	Si	A196p	PIN;VB 600V;Ct at 0.0V 400fF max;RS at 100mA 2.5Ω max;Carrier Lifetime 1.0us min.
47	UM6606C	7	Si	M696	PIN;VB 600V;Ct at 0.0V 400fF max;RS at 100mA 2.5Ω max;Carrier Lifetime 1.0us min.
48	UM6606E	7	Si	A287	PIN;VB 600V;Ct at 0.0V 400fF max;RS at 100mA 2.5Ω max;Carrier Lifetime 1.0us min.
49	UM6606H	7	Si	S462	PIN;VB 600V;Ct at 0.0V 400fF max;RS at 100mA 2.5Ω max;Carrier Lifetime 1.0us min.
50	UM6610A	7		F32p	PIN Diode;VR 1.0kV at IR 10uA;CT .40pF
51	UM6610B	7		A285a	PIN Diode;VR 1.0kV at IR 10uA;CT .40pF
52	UM6610C	7		M696	PIN Diode;VR 1.0kV at IR 10uA;CT .40pF
53	UM6610D	7		A287b	PIN Diode;VR 1.0kV at IR 10uA;CT .40pF
54	UM6610E	7		A287c	PIN diode;VR 1.0k at IR 10uA;CT .40pF
55	UM7000	7	Si	†	Pin diode;Vr 100-1000V;Ct 0.9Pf at 0V, 1GHz;Rs 1.0Ω max at 100ma, 1GHz
56	UM7001A	7	Si	F32k	PIN;VB 100V;Ct 900fF max at 0.0V;Rs 1.0Ω max at 100mA;Carrier Lifetime 2.5us min
57	UM7001B	7	Si	A196h	PIN;VB 100V;Ct 900fF max at 0.0V;Rs 1.0Ω max at 100mA;Carrier Lifetime 2.5us min
58	UM7001C	7	Si	S288c☑	PIN;VB 100V;Ct 900fF max at 0.0V;Rs 1.0Ω max at 100mA;Carrier Lifetime 2.5us min
59	UM7001D	7	Si	S401a☑	PIN;VB 100V;Ct 900fF max at 0.0V;Rs 1.0Ω max at 100mA;Carrier Lifetime 2.5us min
60	UM7001E	7	Si	A287a	PIN;VB 100V;Ct 900fF max at 0.0V;Rs 1.0Ω max at 100mA;Carrier Lifetime 2.5us min
61	UM7002A	7	Si	F32d	PIN;VB 200V;Ct 900fF max at 0.0V;Rs 1.0Ω max at 100mA;Carrier Lifetime 2.5us min
62	UM7002B	7	Si	A146b	PIN;VB 200V;Ct 900fF max at 0.0V;Rs 1.0Ω max at 100mA;Carrier Lifetime 2.5us min
63	UM7002C	7	Si	S288a	PIN;VB 200V;Ct 900fF max at 0.0V;Rs 1.0Ω max at 100mA;Carrier Lifetime 2.5us min
64	UM7006A	7	Si	F32k	PIN;VB 600V;Ct 900fF max at 0.0V;Rs 1.0Ω max at 100mA;Carrier Lifetime 2.5us min
65	UM7006B	7	Si	A196h	PIN;VB 600V;Ct 900fF max at 0.0V;Rs 1.0Ω max at 100mA;Carrier Lifetime 2.5us min
66	UM7006C	7	Si	S288c☑	PIN;VB 600V;Ct 900fF max at 0.0V;Rs 1.0Ω max at 100mA;Carrier Lifetime 2.5us min
67	UM7006D	7	Si	S401a☑	PIN;VB 600V;Ct 900fF max at 0.0V;Rs 1.0Ω max at 100mA;Carrier Lifetime 2.5us min
68	UM7006E	7	Si	A287a	PIN;VB 600V;Ct 900fF max at 0.0V;Rs 1.0Ω max at 100mA;Carrier Lifetime 2.5us min
69	UM7010A	7	Si	F32k	PIN;VB 1.0kV;Ct 900fF max at 0.0V;Rs 1.0Ω max at 100mA;Carrier Lifetime 2.5us min
70	UM7010B	7	Si	A196h	PIN;VB 1.0kV;Ct 900fF max at 0.0V;Rs 1.0Ω max at 100mA;Carrier Lifetime 2.5us min
71	UM7010C	7	Si	S288c☑	PIN;VB 1.0kV;Ct 900fF max at 0.0V;Rs 1.0Ω max at 100mA;Carrier Lifetime 2.5us min
72	UM7010D	7	Si	S401a☑	PIN;VB 1.0kV;Ct 900fF max at 0.0V;Rs 1.0Ω max at 100mA;Carrier Lifetime 2.5us min
73	UM7010E	7	Si	A287a	PIN;VB 1.0kV;Ct 900fF max at 0.0V;Rs 1.0Ω max at 100mA;Carrier Lifetime 2.5us min
74	UM7100	7	Si	†	Pin diode;Vr 100-800V;Ct 1.2Pf at 0V, 1GHz;Rs 0.6Ω max at 100ma, 1GHz
75	UM7101A	7	Si	F32m	Pin,VB 100V;Ct at 100V 1.2pf max;Rs at 100mA 600mΩ min;Carrier Lifetime 2.0us min.
76	UM7101B	7	Si	A196h	PIN;VB 100V;Ct at 100V-1.2pF max;Rs at 100mA-600mΩ min;Carrier lifetime 2.0us min.
77	UM7101C	7	Si	S288c☑	PIN;VB 100V;Ct at 100V-1.2pF max;Rs at 100mA-600mΩ min;Carrier lifetime 2.0us min.
78	UM7101D	7	Si	S401a☑	PIN;VB 100V;Ct at 100V-1.2pF max;Rs at 100mA-600mΩ min;Carrier lifetime 2.0us min.
79	UM7101E	7	Si	A287a	PIN;VB 100V;Ct at 100V-1.2pF max;Rs at 100mA-600mΩ min;Carrier lifetime 2.0us min.
80	UM7102A	7		F32k	VR 200V;RS 0.6Ω;CT 1.2pF;Lifetime 2.0us;
81	UM7102B	7		A324	VR 200V;RS 0.6Ω;CT 1.2pF;Lifetime 2.0us;
82	UM7102C	7		S288c	VR 200V;RS 0.6Ω;CT 1.2pF;Lifetime 2.0us;Stud Case
83	UM7102D	7		S401	VR 200V;RS 0.6Ω;CT 1.2pF;Lifetime 2.0us;Insulated Stud Case
84	UM7102E	7		A324	VR 200V;RS 0.6Ω;CT 1.2pF;Lifetime 2.0us;Ribbon Leads
85	UM7104A	7	Si	F32m	PIN;VB 400V;Ct at 100V-1.2pF max;Rs at 100mA-600mΩ min;Carrier lifetime 2.0us min.
86	UM7104B	7	Si	A196h	PIN;VB 400V;Ct at 100V-1.2pF max;Rs at 100mA-600mΩ min;Carrier lifetime 2.0us min.
87	UM7104C	7	Si	S288c☑	PIN;VB 400V;Ct at 100V-1.2pF max;Rs at 100mA-600mΩ min;Carrier lifetime 2.0us min.
88	UM7104E	7	Si	A287a	PIN;VB 400V;Ct at 100V-1.2pF max;Rs at 100mA-600mΩ min;Carrier lifetime 2.0us min.
89	UM7108A	7	Si	F32m	PIN;VB 800V;Ct at 100V-1.2pF max;Rs at 100mA-600mΩ min;Carrier lifetime 2.0us min.
90	UM7108C	7	Si	S288c☑	PIN;VB 800V;Ct at 100V-1.2pF max;Rs at 100mA-600mΩ min;Carrier lifetime 2.0us min.
91	UM7108D	7	Si	S401a☑	PIN;VB 800V;Ct at 100V-1.2pF max;Rs at 100mA-600mΩ min;Carrier lifetime 2.0us min.
92	UM7108E	7	Si	A287a	PIN;VB 800V;Ct at 100V-1.2pF max;Rs at 100mA-600mΩ min;Carrier lifetime 2.0us min.
93	UM7200	7	Si	†	Pin diode;Vr 100-400V;Ct 2.2Pf at 0V, 1GHz;Rs 0.25Ω max at 100ma, 1GHz
94	UM7201A	7	Si	F32n	Pin;VB 100V;Ct at 100V 2.2pf max;Rs at 100mA 250mΩ min;Carrier Lifetime 1.5us min.
95	UM7201B	7	Si	A196h	PIN;VB 100V;Ct at 100V-2.2pF max;Rs at 100mA-250mΩ min;Carrier lifetime 1.5us min.
96	UM7201C	7	Si	S288c☑	PIN;VB 100V;Ct at 100V-2.2pF max;Rs at 100mA-250mΩ min;Carrier lifetime 1.5us min.
97	UM7201D	7	Si	S401a☑	PIN;VB 100V;Ct at 100V-2.2pF max;Rs at 100mA-250mΩ min;Carrier lifetime 1.5us min.
98	UM7201E	7	Si	A287a	PIN;VB 100V;Ct at 100V-2.2pF max;Rs at 100mA-250mΩ min;Carrier lifetime 1.5us min.
99	UM7202A	7	Si	F32n	PIN;VB 200V;Ct at 0.0V 2.2pF max;Rs at 100mA 200mΩ max;Carrier lifetime 2.5us min.
100	UM7202B	7	Si	A196h	PIN;VB 200V;Ct at 0.0V 2.2pF max;Rs at 100mA 200mΩ max;Carrier lifetime 2.5us min.
101	UM7202C	7	Si	S288c☑	PIN;VB 200V;Ct at 0.0V 2.2pF max;Rs at 100mA 200mΩ max;Carrier lifetime 2.5us min.
102	UM7202D	7	Si	S401a☑	PIN;VB 200V;Ct at 0.0V 2.2pF max;Rs at 100mA 200mΩ max;Carrier lifetime 2.5us min.
103	UM7202E	7	Si	A287a	PIN;VB 200V;Ct at 0.0V 2.2pF max;Rs at 100mA 200mΩ max;Carrier lifetime 2.5us min.
104	UM7204A	7	Si	F32n	PIN;VB 400V;Ct at 100V-2.2pF max;Rs at 100mA-250mΩ min;Carrier lifetime 1.5us min.
105	UM7204B	7	Si	A196h	PIN;VB 400V;Ct at 100V-2.2pF max;Rs at 100mA-250mΩ min;Carrier lifetime 1.5us min.
106	UM7204C	7	Si	S288c☑	PIN;VB 400V;Ct at 100V-2.2pF max;Rs at 100mA-250mΩ min;Carrier lifetime 1.5us min.
107	UM7204D	7	Si	S401a☑	PIN;VB 400V;Ct at 100V-2.2pF max;Rs at 100mA-250mΩ min;Carrier lifetime 1.5us min.
108	UM7204E	7	Si	A287a	PIN;VB 400V;Ct at 100V-2.2pF max;Rs at 100mA-250mΩ min;Carrier lifetime 1.5us min.
109	UM7206A	7	Si	F32n	PIN;VB 600V;Ct 2.2pF max at 0.0V;Rs 250mΩ max at 100mA;Carrier Lifetime 1.5us min
110	UM7300	7	Si	†	Pin diode;Vr 100-1000V;Ct 2.7Pf at 0V, 1GHz;Rs 3.0Ω max at 100ma, 1GHz

8. MISCELLANEOUS DEVICES

IN ORDER OF (1) USE and (2) TYPE No.

LINE No.	[2] TYPE No.	[1] USE	DESCRIPTION MAT.	DESCRIPTION DWG. No.	TECHNICAL DATA
1	UM7301A	7	Si		PIN;VB 100V;Ct 700fF max at 0.0V;Rs 3.5Ω max at 100mA;Carrier Lifetime 2.5us min
2	UM7301B	7	Si	A196h	PIN;VB 100V;Ct 700fF max at 0.0V;Rs 3.5Ω max at 100mA;Carrier Lifetime 2.5us min
3	UM7301C	7	Si	S288c⊠	PIN;VB 100V;Ct 700fF max at 0.0V;Rs 3.5Ω max at 100mA;Carrier Lifetime 2.5us min
4	UM7301D	7	Si	S401a⊠	PIN;VB 100V;Ct 700fF max at 0.0V;Rs 3.5Ω max at 100mA;Carrier Lifetime 2.5us min
5	UM7301E	7	Si	A287a	PIN;VB 100V;Ct 700fF max at 0.0V;Rs 3.5Ω max at 100mA;Carrier Lifetime 2.5us min
6	UM7302A	7	Si	F32n	PIN;VB 200V;Ct at 0.0V 800fF max;Pd 10W max;Parallel Res 100Ω max;Carrier lifetime 2.5us min
7	UM7302B	7	Si	A196h	PIN;VB 200V;Ct at 0.0V 800fF max;Pd 10W max;Parallel Res 100Ω max;Carrier lifetime 2.5us min
8	UM7302C	7	Si	S288c⊠	PIN;VB 200V;Ct at 0.0V 800fF max;Pd 10W max;Parallel Res 100Ω max;Carrier lifetime 2.5us min
9	UM7302D	7	Si	S401a⊠	PIN;VB 200V;Ct at 0.0V 800fF max;Pd 10W max;Parallel Res 100Ω max;Carrier lifetime 2.5us min
10	UM7302E	7	Si	A287a	PIN;VB 200V;Ct at 0.0V 800fF max;Pd 10W max;Parallel Res 100Ω max;Carrier lifetime 2.5us min
11	UM7306A	7	Si	F32n	PIN;VB 600V;Ct at 0.0V 800fF max;Pd 10W max;Parallel Res 100Ω max;Carrier lifetime 2.5us min
12	UM7306B	7	Si	A196h	PIN;VB 600V;Ct at 0.0V 800fF max;Pd 10W max;Parallel Res 100Ω max;Carrier lifetime 2.5us min
13	UM7306C	7	Si	S288c⊠	PIN;VB 600V;Ct at 0.0V 800fF max;Pd 10W max;Parallel Res 100Ω max;Carrier lifetime 2.5us min
14	UM7306D	7	Si	S401a⊠	PIN;VB 600V;Ct at 0.0V 800fF max;Pd 10W max;Parallel Res 100Ω max;Carrier lifetime 2.5us min
15	UM7306E	7	Si	A287a	PIN;VB 600V;Ct at 0.0V 800fF max;Pd 10W max;Parallel Res 100Ω max;Carrier lifetime 2.5us min
16	UM7310A	7	Si		PIN;VB 1.0kV;Ct 700fF max at 0.0V;Rs 3.5Ω max at 100mA;Carrier Lifetime 2.5us min
17	UM7310B	7	Si	A196h	PIN;VB 1.0kV;Ct 700fF max at 0.0V;Rs 3.5Ω max at 100mA;Carrier Lifetime 2.5us min
18	UM7310C	7	Si	S288c⊠	PIN;VB 1.0kV;Ct 700fF max at 0.0V;Rs 3.5Ω max at 100mA;Carrier Lifetime 2.5us min
19	UM7310D	7	Si	S401a⊠	PIN;VB 1.0kV;Ct 700fF max at 0.0V;Rs 3.5Ω max at 100mA;Carrier Lifetime 2.5us min
20	UM7310E	7	Si	A287a	PIN;VB 1.0kV;Ct 700fF max at 0.0V;Rs 3.5Ω max at 100mA;Carrier Lifetime 2.5us min
21	UM9301	7		A196n	PIN;VB 100V;CT at 100MHz-0.8pF;RD at 100mA-3.5Ω max;Current for RD 75Ω-.5mA min.
22	UM9302	7		A196n	PIN;VB 100V;CT at 100MHz-0.8pF;RD at 100mA-6.0Ω max;Current for RD 75Ω-1.5mA min.
23	UM9401	7		A324	PIN;VB 50V;CT at 100MHz-1.5pF;RD at 50mA-1.0Ω max;PD 8.5W at 25°C Heat Sink.
24	UM9402	7		A325	PIN;VB 50V;CT at 100MHz-1.5pF;RD at 50mA-1.0Ω max;PD 10W at 25°C pin temp.
25	UM9415	7		A285	PIN Diode;VR 50V at IR 10uA;CT 4.0pF max
26	UM9601	7		M1072	PIN Diode;UHF to 4.0GHz;VR 100V;VF .85V at IF 100mA
27	UM9602	7		M1072	PIN Diode;UHF to 4.0GHz;VR 400V;VF .85V at IF 100mA
28	UM9603	7		M1073	PIN Diode;UHF to 4.0GHz;VR 100V;VF .85V at IF 100mA
29	UM9604	7		M1073	PIN Diode;UHF to 4.0GHz;VR 400V;VF .85V at IF 100mA
30	UM9605	7		M1074	PIN Diode;UHF to 4.0GHz;VR 100V;VF .95V at IF 100mA
31	UM9606	7		M1074	PIN Diode;UHF TO 4.0GHz;VR 400V;VF .95V at IF 100mA
32	UM9607	7		M1071	PIN Diode;UHF to 4.0GHz;VR 100V;VF .95V at IF 100mA
33	UM9608	7		M1071	PIN Diode;UHF to 4.0GHz;VR 400V;VF .95V at IF 100mA
34▼	UM9701	7	Si	A435	PD 500mW;VR 100V;Rs .8Ω at Freq 100 MHz and Curr 10mA;CT 1.8pF at Freq 1.0MHz and VR 50V
35	VSD211AN9	7	Si	F54f	Pin;BV 200V min;Cap 100fF at 50V;Rs 2.0Ω max;Pd 500mW max;Carrier Life 45ns max.
36	MA4851	10	Si	A1ad△	Broad band mix;f 3.0GHz;Zif at 1.0 mW125-250Ω;Max VSWR2.0;NF7.5dB
37	MA4852	10	Si	A1ad△	Broad band mix;f 3.0GHz;Zif at 1.0 mW125-250Ω;Max VSWR1.5;NF6.5dB
38	MA4853	10	Si	A1ad△	Broad band mix;f 3.0GHz;Zif at 1.0 mW125-250Ω;Max VSWR1.5;NF5.5dB
39	MA4855	10	Si	A1ad△	Broad band mix;f 9.3GHz;Zif at 1.0 mW200-400Ω;Max VSWR2.0;NF8.5dB
40	MA4856	10	Si	A1ad△	Broad Band mix;f 9.3GHz;Zif at 1.0mW 200-400Ω;Max VSWR 1.8;NF 7.5dB
41	MA4882	10	Si	A1ad△	Broad band mix;f 1.0GHz;Zif at 1.0 mW125-250Ω;Max VSWR1.5;NF5.5dB
42	MA4883	10	Si	A1ad△	Broad band mix;f 1.0GHz;Zif at 1.0 mW125-250Ω;Max VSWR 1.6;NF6.5dB
43	MA40410	10	GA♦	†	90Hz Det/Mix;Tss -45dBm;Mixer NF 10dB at 90GHz;Cj 5.0fF typ;Rs 9Ω typ
44	MA40412	10	GA♦	†	90Hz Det/Mix;Tss -45dBm;Mixer NF 10.5dB at 90GHz;Cj 5.0fF typ;Rs 9Ω typ
45	1ST11	14	Si	M1044	IMPATT Diode;Max fo 9.0GHz;Typ Po 1.2W;Tj Max 200°C
46	1ST12	14	Si	M1044	IMPATT Diode;Max fo 12.4GHz;Typ Po 0.85W;Tj 200°C
47	1ST13	14	Si	M1044	IMPATT Diode;Max fo 17.5GHz;Typ Po 0.7W;Tj Max 200°C
48	1ST14	14	Si	M1044	IMPATT Diode;Max fo 22GHz;Typ Po 0.4W;Tj Max 200°C
49	1ST15	14	Si	M1044	IMPATT Diode;Max fo 9.0GHz;Typ Po 2.2W;Tj max °200C
50	1ST16	14	Si	M1044	IMPATT Diode;Max fo 12.4GHz;Typ Po 1.8W;Tj max 200°C
51	1ST17	14	Si	M1044	IMPATT Diode;Max fo 17.5GHz;Typ Po 1.2W;Tj Max 200°C
52	1ST18	14	Si	M1044	IMPATT Diode;Max fo 22GHz;Typ Po 0.8W;Tj Max 200°C
53	1ST20	14	Si	M1044	IMPATT Diode;Max fo 9.0GHz;MIN Po 3.0W;Tj Max 200°C
54	1ST21	14	Si	M1044	IMPATT Diode;Max fo 12.4GHz;Min Po 2.5W;Tj Max 200°C
55	1ST22	14	Si	M1044	IMPATT Diode;Max fo 17.5GHz;MIN Po 2.0W;Tj max 200°C
56	A9300	14		M1136c	Pulsed Gunn OSC:Range 26.5-40GHz,Mech Tuning ±100MHz,Pwr Out 1W peak,Oper Volt 8-20V
57	A9400	14		M1134c	Gunn Osc:Range 26.5-40GHz,Mech Tuning ±250MHz,Pwr Out 10-200mW,Oper Volt 5±1VDC
58	A9500	14		M1135c	Controlled Voltage Gunn Effect OSC:Range 26.5-40GHz,Pwr Out to 120mW,Mech and Elec Tuning
59	AD611A	14	Si	S250e	IMPATT Diode;freq-8 to 12 GHz;Pt-.30W min;n-2.5 percent min.
60	AD611B	14	Si	S250e	IMPATT Diode;freq-8 to 12 GHz;Pt-.4W min;n-3.0 percent min.
61	AD611C	14	Si	S250e	IMPATT Diode;freq-8 to 12 GHz;Pt-.5W min;n-3.0 percent min.
62	B9400	14		M1134d	Gunn Osc:Range 33-50GHz,Mech Tuning ±250MHz,Pwr Out 10-120mW,Oper Volt 4±1VDC
63	B9500	14		M1135d	Controlled Voltage Gunn Effect OSC:Range 33-50GHz,Pwr Out to 80mW,Mech and Elec Tuning
64	BXY50	14	Si	F100	Impatt Diode;Po 600mW;8.0-10GHz;Volt 91V;Current 135mA;CT 900fF;Eff 5.0%;Ir 10uA max.
65	BXY51	14	Si	F100	Impatt Diode;Po 450mW;10-12GHz;Volt 80V;Current 120mA;CT 850fF;Eff 5.0%;Ir 10uA max.
66	BXY52	14	Si	F100	Impatt Diode;Po 370mW;12-14GHz;Volt 70V;Current 120mA;CT 750fF;Eff 4.5%;Ir 10uA max.
67	BXY60	14	Si	F100	Impatt Diode;Po 750mW;6-8GHz;Volt. 120V;Current 125mA;CT 970fF;Eff 5.0%;Ir 10uA max.
68	CL8630	14		M1048	X-BAND GUNN DIODE:Center Freq 10.687GHz;Po 8.0mW;VCC 7.0V
69	CL8630S	14		M1048	X-BAND GUNN DIODE:Center Freq 10.687GHz;Po 8.0mW;VCC 7.0V
70	CL8633	14		M1048	X-BAND GUNN DIODE:Center Freq 10.525GHz;Po 8.0mW;VCC 7.0V
71	CL8633S	14		M1048	X-BAND GUNN DIODE:Center Freq 10.525GHz;Po 8.0mW;VCC 7.0V
72	CXY11A	14	GA	F27h	Gunn Effect Device;X band Po 5.0mW;Ptot 1.0W;freq8.0-12GHz.
73	CXY11B	14	GA	F27h	Gunn Effect Device;X band Po 10mW;Ptot 1.0W;freq8.0-12GHz.
74	CXY11C09	14	GA	F27h	Gunn effect device;X Band;Freq 8.0GHz-10GHz;PO 15mW;Vp 8.0V;Ip 200mA max.
75	CXY11C10	14	GA	F27h	Gunn effect device;X Band;Freq 9.0GHz-11GHz;PO 15mW;Vp 7.0V;Ip 200mA max.
76	CXY11C11	14	GA	F27h	Gunn effect device;X Band;Freq 10GHz-12GHz;PO 15mW;Vp 7.0V;Ip 200mA max.
77	CXY11C	14	GA	F27h	Gunn Effect Device;X band Po 15mW;Ptot 1.0W;freq8.0-12GHz.
78	CXY13E09	14	GA	F27h	Gunn effect device;X Band;Freq 8.0GHz-10GHz;PO 30mW;Vp 9.0V;Ip 300mA max.
79	CXY13E10	14	GA	F27h	Gunn effect device;X Band;Freq 9.0GHz-11GHz;PO 30mW;Vp 8.0V;Ip 300mA max.
80	CXY13E11	14	GA	F27h	Gunn effect device;X Band;Freq 10GHz-12GHz;PO 30mW;Vp 8.0V;Ip 300mA max.
81	CXY14A	14	GA	F27h	Gunn Effect Device; J Band; PO 5.0mW; Ptot 1.0W; freq. 12-18GHz.
82	CXY14B	14	GA	F27h	Gunn Effect Device; J Band; PO 10mW; Ptot 1.0W; freq. 12-18GHz.
83	CXY14C	14	GA	F27h	Gunn Effect Device; J Band; PO 15mW; Ptot 1.0W; freq. 12-18GHz.
84	CXY16A	14	GA	F27h	Gunn Effect Device;X Band;Po 50mW;Freq. 8.0-12GHz;Current 350mA;Pd 10W.
85	CXY16B	14	GA	F27h	Gunn Effect Device;X Band;Po 75mW;Freq. 8.0-12GHz;Current 450mA;Pd 10W.
86	CXY16C	14	GA	F27h	Gunn Effect Device;X Band;Po 100mW;Freq. 8.0-12GHz;Current 550mA;Pd 10W.
87	CXY16D	14	GA	F27h	Gunn Effect Device;X Band;Po 200mW;Freq. 8.0-12GHz;Current 650mA;Pd 10W.
88	CXY16E	14	GA	F27h	Gunn Effect Device;X Band;Po 300mW;Freq. 8.0-12GHz;Current 750mA;Pd 10W.
89	CXY16F	14	GA	F27h	Gunn Effect Device;X Band;Po 400mW;Frew. 8.0-12GHz;Current 850mA.Pd 10W.
90	CXY17A	14	GA	F27h	Gunn Effect Device;C Band;Pt 4.0W;Freq. 4.0G-8.0G;Po 50mW;VP 11V max;IP 600mA.
91	CXY17B	14	GA	F27h	Gunn Effect Device;C Band;Pt 6.0W;Freq. 4.0G-8.0G;Po 75mW;VP 11V max;IP 800mA.
92	CXY17C	14	GA	F27h	Gunn Effect Device;C Band;Pt 8.0W;Freq. 4.0G-8.0G;Po 100mW;VP 11V max;IP 1.0A.
93	CXY17D	14	GA	F27h	Gunn Effect Device;C Band;Pt 9.0W;Freq. 4.0G-8.0G;Po 200mW;VP 11V max;IP 1.1A.
94	CXY17E	14	GA	F27h	Gunn Effect Device;C Band;Pt 10W;Freq. 4.0G-8.0G;Po 300mW;VP 11V max;IP 1.2A.
95	CXY18A	14	GA	F27h	Gunn Effect Device;J Band;Pt 6.0W;Freq. 12-18GHz;VP 9.0V max;IP 800mA.
96	CXY18B	14	GA	F27h	Gunn Effect Device;J Band;Pt 6.0W;Freq. 12-18GHz;VP 9.0V max;IP 800mA.
97	CXY18C	14	GA	F27h	Gunn Effect Device;J Band;Pt 6.0W;Freq. 12-18GHz;VP 9.0V max;IP 800mA.
98	CXY18D	14	GA	F27h	Gunn Effect Device;J Band;Pt 10W;Freq. 12-18GHz;VP 9.0V max;IP 1.0A.
99	CXY18E	14	GA	F27h	Gunn Effect Device;J Band;Pt 10W;Freq. 12-18GHz;VP 9.0V max;IP 1.0A.
100	CXY19	14	GA	F27ar	Gunn Effect Device;Freq 8 to 12GHz;PO 100mW;Vmax 15V;Ptot 6W;Idc 450mA.
101	CXY19A	14	GA	F27ar	Gunn Effect Device;X Band;Freq 8-12GHz;Po 250mW;Pt 6.0W.
102	CXY19B	14	GA	F27h	Gunn Effect Device;Xband;Freq 8.0-12GHz;Po 300mW;Ptot 7.5W.
103	CXY21	14	GA	F27aj	Gunn Effect Device;XBand;Po 60mW;Freq 8.0-12GHz;Pd 2.5W;Current 210mA.
104	CXY24A	14	GA	M982	Gunn Effect Device; Q Band; Freq. 30-38 GHz;Po 25mW min; Vmax 6.0V;Imax 1.1A
105	CXY24B	14	GA	M982	Gunn Effect Device; Q Band; Freq. 30-38 GHz;Po 50mW min; Vmax 6.0V;Imax 1.1A
106	DC1101	14		S521	IMPATT Diode;Freq 30-41GHz;Pout 200mW max
107	DC1151	14		S515	Impatt diode;Fr 31-38GHz;Ppo 5W max;Vop 35V;Iop 4A
108	DC1152	14		S515	Impatt diode;Fr 31-38GHz;Ppo 31W max;Vop 55V;Iop 14A
109	DC1201A	14	GA	F121a	X-Band Gunn Diode;Po 5.0mWmin,145mA,7.0V typ;Max Ratings:Vf 10V,VR 1.0V,Pd 3.0W
110	DC1201B	14	GA	F121a	X-Band Gunn Diode;Po 10mWmin,145mA,7.0V typ;Max Ratings:Vf 10V,VR 1.0V,Pd 3.0W

8. MISCELLANEOUS DEVICES

IN ORDER OF (1) USE and (2) TYPE No.

LINE No.	2 TYPE No.	1 USE	DESCRIPTION MAT.	DWG. No.	TECHNICAL DATA
1	DC1201C	14	GA	F121a	X-Band Gunn Diode;Po 15mWmin,150mA,7.0V typ;Max Ratings:Vf 10V,VR 1.0V,Pd 3.0W
2	DC1201D	14	GA	F121a	X-Band Gunn Diode;Po 20mWmin,160mA,7.0V typ;Max Ratings:Vf 10V,VR 1.0V,Pd 3.0W
3	DC1201E	14	GA	F121a	X-Band Gunn Diode;Po 30mWmin,200mA,7.0V typ;Max Ratings:Vf 10V,VR 1.0V,Pd 3.0W
4	DC1202A	14	GA	F121a†	Ku-Band Gunn Diode;Po 5.0mWmin,140mA,6.5V typ;Max Ratings:Vf 8.0V,VR 1.0V,Pd 3.0W
5	DC1202B	14	GA	F121a†	Ku-Band Gunn Diode;Po 10mWmin,160mA,6.5V typ;Max Ratings:Vf 8.0V,VR 1.0V,Pd 3.0W
6	DC1202C	14	GA	F121a†	Ku-Band Gunn Diode;Po 15mWmin,170mA,6.5V typ;Max Ratings:Vf 8.0V,VR 1.0V,Pd 3.0W
7	DC1202D	14	GA	F121a†	Ku-Band Gunn Diode;Po 20mWmin,180mA,6.5V typ;Max Ratings:Vf 8.0V,VR 1.0V,Pd 3.0W
8	DC1202E	14	GA	F121a†	Ku-Band Gunn Diode;Po 30mWmin,200mA,6.5V typ;Max Ratings:Vf 8.0V,VR 1.0V,Pd 3.0W
9	DC1203A	14	GA	F121a	C-Band Gunn Diode;Po 5.0mWmin,100mA,12V typ;Max Ratings:Vf 16V,VR 1.0V,Pd 3.0W
10	DC1203B	14	GA	F121a	C-Band Gunn Diode;Po 10mWmin,120mA,12V typ;Max Ratings:Vf 16V,VR 1.0V,Pd 3.0W
11	DC1203C	14	GA	F121a	C-Band Gunn Diode;Po 15mWmin,130mA,12V typ;Max Ratings:Vf 16V,VR 1.0V,Pd 3.0W
12	DC1203D	14	GA	F121a	C-Band Gunn Diode;Po 20mWmin,140mA,12V typ;Max Ratings:Vf 16V,VR 1.0V,Pd 3.0W
13	DC1203E	14	GA	F121a	C-Band Gunn Diode;Po 30mWmin,180mA,12V typ;Max Ratings:Vf 16V,VR 1.0V,Pd 3.0W
14	DC1231A	14	GA	S356b	X-Band Gunn Diode;Po 5.0mWmin,145mA,7.5V typ;Max Ratings:Vf 10V,VR 1.0V,Pd 3.0W
15	DC1231B	14	GA	S356b	X-Band Gunn Diode;Po 10mWmin,145mA,7.5V typ;Max Ratings:Vf 10V,VR 1.0V,Pd 3.0W
16	DC1231C	14	GA	S356b	X-Band Gunn Diode;Po 15mWmin,150mA,7.5V typ;Max Ratings:Vf 10V,VR 1.0V,Pd 3.0W
17	DC1231D	14	GA	S356b	X-Band Gunn Diode;Po 20mWmin,160mA,7.5V typ;Max Ratings:Vf 10V,VR 1.0V,Pd 3.0W
18	DC1231E	14	GA	S356b	X-Band Gunn Diode;Po 30mWmin,200mA,7.5V typ;Max Ratings:Vf 10V,VR 1.0V,Pd 3.0W
19	DC1232A	14	GA	S356b†	Ku-Band Gunn Diode;Po 5.0mWmin,140mA,6.5V typ;Max Ratings:Vf 8.0V,VR1.0V,Pd 3.0W
20	DC1232B	14	GA	S356b†	Ku-Band Gunn Diode;Po 10mWmin,160mA,6.5V typ;Max Ratings:Vf 8.0V,VR1.0V,Pd 3.0W
21	DC1232C	14	GA	S356b†	Ku-Band Gunn Diode;Po 15mWmin,170mA,6.5V typ;Max Ratings:Vf 8.0V,VR1.0V,Pd 3.0W
22	DC1232D	14	GA	S356b†	Ku-Band Gunn Diode;Po 20mWmin,180mA,6.5V typ;Max Ratings:Vf 8.0V,VR1.0V,Pd 3.0W
23	DC1232E	14	GA	S356b†	Ku-Band Gunn Diode;Po 30mWmin,200mA,6.5V typ;Max Ratings:Vf 8.0V,VR1.0V,Pd 3.0W
24	DC1233A	14	GA	S356b	C-Band Gunn Diode;Po 5.0mWmin,100mA,12V typ;Max Ratings:Vf 16V,VR 1.0V,Pd 3.0W
25	DC1233B	14	GA	S356b	C-Band Gunn Diode;Po 10mWmin,120mA,12V typ;Max Ratings:Vf 16V,VR 1.0V,Pd 3.0W
26	DC1233C	14	GA	S356b	C-Band Gunn Diode;Po 15mWmin,130mA,12V typ;Max Ratings:Vf 16V,VR 1.0V,Pd 3.0W
27	DC1233D	14	GA	S356b	C-Band Gunn Diode;Po 20mWmin,140mA,12V typ;Max Ratings:Vf 16V,VR 1.0V,Pd 3.0W
28	DC1233E	14	GA	S356b	C-Band Gunn Diode;Po 30mWmin,180mA,12V typ;Max Ratings:Vf 16V,VR 1.0V,Pd 3.0W
29	DC1251F	14	GA	F121b	X-Band Gunn Diode;Po 50mWmin;400mA,10V typ;Max Ratings:Vf 12V,VR1.0V,Pd 14W
30	DC1251G	14	GA	F121b	X-Band Gunn Diode;Po 100mWmin;600mA,10V typ;Max Ratings:Vf 12V,VR1.0V,Pd 14W
31	DC1251H	14	GA	F121b	X-Band Gunn Diode;Po 200mWmin;900mA,10V typ;Max Ratings:Vf 12V,VR1.0V,Pd 14W
32	DC1251J	14	GA	F121b	X-Band Gunn Diode;Po 300mWmin;1.3A,9.5V typ;Max Ratings:Vf 12V,VR1.0V,Pd 14W
33	DC1252F	14	GA	F121b†	Ku-Band Gunn Diode;Po 50mWmin;500mA,6.5V typ;Max Ratings:Vf 10V,VR 1.0V,Pd 14W
34	DC1252G	14	GA	F121b†	Ku-Band Gunn Diode;Po 100mWmin;700mA,6.5V typ;Max Ratings:Vf 10V,VR 1.0V,Pd 14W
35	DC1252H	14	GA	F121b†	Ku-Band Gunn Diode;Po 200mWmin;900mA,6.5V typ;Max Ratings:Vf 10V,VR 1.0V,Pd 14W
36	DC1253F	14	GA	F121b	C-Band Gunn Diode;Po 50mWmin;400mA,14V typ;Max Ratings:Vf 18V,VR 1.0V,PD 14W
37	DC1253G	14	GA	F121b	C-Band Gunn Diode;Po 100mWmin;600mA,14V typ;Max Ratings:Vf 18V,VR 1.0V,PD 14W
38	DC1253H	14	GA	F121b	C-Band Gunn Diode;Po 200mWmin;900mA,14V typ;Max Ratings:Vf 18V,VR 1.0V,PD 14W
39	DC1275F	14	.	S521	Gunn Diode;Freq 18-26GHz;Min Out Pwr 100mW;Voperating 6.0V;loperating 500mA
40	DC1275G	14		S521	Gunn Diode;Freq 18-26GHz;Min Out Pwr 150mW;Voperating 6.0V;loperating 700mA
41	DC1275H	14		S521	Gunn Diode;Freq 18-26GHz;Min Out Pwr 200mW;Voperating 6.0V;loperating 1.0A
42	DC1276F	14		S522	Gunn Diode;Freq 18-26GHz;Min Out Pwr 50mW;Voperating 5.0V;loperating 700mA
43	DC1276G	14		S522	Gunn Diode;Freq 18-26GHz;Min Out Pwr 100mW;Voperating 5.0V;loperating 1.2A
44	DC1281F	14	GA	S356c	X-Band Gunn Diode;Po 50mWmin;400mA,10V typ;Max Ratings:Vf 12V,VR 1.0V,Pd 14W
45	DC1281G	14	GA	S356c	X-Band Gunn Diode;Po 100mWmin;600mA,10V typ;Max Ratings:Vf 12V,VR 1.0V,Pd 14W
46	DC1281H	14	GA	S356c	X-Band Gunn Diode;Po 200mWmin;900mA,10V typ;Max Ratings:Vf 12V,VR 1.0V,Pd 14W
47	DC1281J	14	GA	S356c	X-Band Gunn Diode;Po 300mWmin;1.3A,9.5V typ;Max Ratings:Vf 12V,VR 1.0V,Pd 14W
48	DC1282F	14	GA	S356c†	Ku-Band Gunn Diode;Po 50mWmin;500mA,6.5V typ;Max Ratings:Vf 10V,VR 1.0V,Pd 14W
49	DC1282G	14	GA	S356c†	Ku-Band Gunn Diode;Po 100mWmin;700mA,6.5V typ;Max Ratings:Vf 10V,VR 1.0V,Pd 14W
50	DC1282H	14	GA	S356c†	Ku-Band Gunn Diode;Po 200mWmin;900mA,6.5V typ;Max Ratings:Vf 10V,VR 1.0V,Pd 14W
51	DC1283F	14	GA	S356c	C-Band Gunn Diode;Po 50mWmin;400mA,14V typ;Max Ratings:Vf 18V,VR 1.0V,Pd 14W
52	DC1283G	14	GA	S356c	C-Band Gunn Diode;Po 100mWmin;600mA,14V typ;Max Ratings:Vf 18V,VR 1.0V,Pd 14W
53	DC1283H	14	GA	S356c	C-Band Gunn Diode;Po 200mWmin;900mA,14V typ;Max Ratings:Vf 18V,VR 1.0V,Pd 14W
54	DGB8064	14	GA	F141	Gunn diode;Freq 40-50 GHz;Qb-Vb Band;5mW;140mA;3V;Pol Anode
55	DGB8065	14	GA	F142	Gunn diode;Freq 40-50 GHz;Qb-Vb Band;5mW;140mA;3V;Pol Anode
56	DGB8066	14	GA	F145	Gunn diode;Freq 40-60 GHz;Qb-W Band;5mW;140mA;3V;Pol Anode
57♦	DGB8081	14	GA$	F143	X Band Gunn diode;Freq 9.3-10.9GHz;Pout 5mW min;Oper Curr 50mA typ;Oper Volt 8V typ;Pol Anod
58♦	DGB8091	14	GA$	F143	K Band Gunn diode;Freq 23.5-24.5GHz;Oper Volt 5V;Pol Anode;Pout 5mW min;Oper Curr 80mA
59♦	DGB8094	14	GA$	F141	K Band Gunn diode;Freq 23.5-24.5GHz;Oper Volt 5V;Pol Anode;Pout 5mW min;Oper Curr 80mA
60♦	DGB8095	14	GA$	F142	K Band Gunn diode;Freq 23.5-24.5GHz;Oper Volt 5V;Pol Anode;Pout 5mW min;Oper Curr 80mA
61♦	DGB8121	14	GA$	F143	X Band Gunn diode;Freq 8.2-9.3 and 10.9-12.4GHz;Pout 10mW;Curr 85mA;Oper Volt 8V;Pol Anode
62♦	DGB8122	14	GA$	F144	X Band Gunn diode;Freq 8.2-12.4GHz;Pout 10mW;Oper Curr 85mA;Oper Volt 8V;Pol Anode
63♦	DGB8123	14	GA$	F160	X Band Gunn diode;Freq 8.2-12.4GHz;Pout 10mW;Oper Curr 85mA;Oper Volt 8V;Pol Anode
64♦	DGB8124	14	GA	F141	X Band Gunn diode;Freq 8.2-12.4GHz;Pout 10mW;Oper Curr 85mA;Oper Volt 8V;Pol Anode
65♦	DGB8125	14	GA$	F142	X Band Gunn diode;Freq 8.2-12.4GHz;Pout 10mW;Oper Curr 85mA;Oper Volt 8V;Pol Anode
66♦	DGB8131	14	GA$	F143	Ku Band Gunn diode;Freq 12.4-18GHz;Oper Volt 7V;Pol Anode ;Pout 10mW min;Oper Curr 100mA
67♦	DGB8132	14	GA$	F144	Ku Band Gunn diode;Freq 12.4-16GHz;Oper Volt 7V;Pol Anode ;Pout 10mW min;Oper Curr 100mA
68♦	DGB8133	14	GA$	F160	Ku Band Gunn diode;Freq 12.4-16GHz;Oper Volt 7V;Pol Anode ;Pout 10mW min;Oper Curr 100mA
69♦	DGB8134	14	GA$	F141	Ku Band Gunn diode;Freq 12.4-18GHz;Oper Volt 7V;Pol Anode ;Pout 10mW min;Oper Curr 100mA
70♦	DGB8135	14	GA$	F142	Ku Band Gunn diode;Freq 12.4-18GHz;Oper Volt 7V;Pol Anode ;Pout 10mW min;Oper Curr 100mA
71♦	DGB8141	14	GA$	F143	K Band Gunn diode;Freq 18-23.5 and 24.5-26.5GHz;Oper Volt 5V;Pol Anode;Pout 10mW;Curr 135mA
72♦	DGB8144	14	GA$	F141	K Band Gunn diode;Freq 18-23.5 and 24.5-26.5GHz;Oper Volt 5V;Pol Anode;Pout 10mW;Curr 135mA
73♦	DGB8145	14	GA$	F142	K Band Gunn diode;Freq 18-23.5 and 24.5-26.5GHz;Oper Volt 5V;Pol Anode;Pout 10mW;Curr 135mA
74♦	DGB8154	14	GA$	F141	Ka Band Gunn diode;Freq 26.5-40GHz;Oper Volt 4V;Pol Anode;Pout 10mW min;Oper Curr 200mA
75♦	DGB8155	14	GA$	F142	Ka Band Gunn diode;Freq 26.5-40GHz;Oper Volt 4V;Pol Anode;Pout 10mW min;Oper Curr 200mA
76♦	DGB8156	14	GA$	F145	Ka Band Gunn diode;Freq 26.5-40GHz;Oper Volt 4V;Pol Anode;Pout 10mW min;Oper Curr 200mA
77	DGB8164	14	GA	F141	Gunn diode;Freq 40-50 GHz;Qb-Vb Band;10mW;250mA;3V;Pol Anode
78	DGB8165	14	GA	F142	Gunn diode;Freq 40-50 GHz;Qb-Vb Band;10mW;250mA;3V;Pol Anode
79	DGB8166	14	GA	F145	Gunn diode;Freq 40-60 GHz;Qb-W Band;10mW;250mA;3V;Pol Anode
80♦	DGB8181	14	GA$	F143	X Band Gunn diode;Freq 9.3-10.9GHz;Pout 5mW min;Oper Curr 80mA typ;Oper Volt 8V;Pol Anode
81♦	DGB8191	14	GA$	F143	K Band Gunn diode;Freq 23.5-24.5GHz;Oper Volt 5V;Pol Anode;Pout 10mW min;Oper Curr 125mA
82♦	DGB8194	14	GA$	F141	K Band Gunn diode;Freq 23.5-24.5GHz;Oper Volt 5V;Pol Anode;Pout 10mW min;Oper Curr 125mA
83♦	DGB8195	14	GA$	F142	K Band Gunn diode;Freq 23.5-24.5GHz;Oper Volt 5V;Pol Anode;Pout 10mW min;Oper Curr 125mA
84♦	DGB8211	14	GA$	F143	C Band Gunn diode;Freq 4-8.2GHz;Po 20mW;150mA Oper Curr;Oper Volt 12V typ;Pol Cathode
85♦	DGB8212	14	GA$	F144	C Band Gunn diode;Freq 4-8.2GHz;Po 20mW;150mA Oper Curr;Oper Volt 12V typ;Pol Cathode
86♦	DGB8213	14	GA$	F160	C Band Gunn diode;Freq 4-8.2GHz;Po 20mW;150mA Oper Curr;Oper Volt 12V typ;Pol Cathode
87♦	DGB8214	14	GA$	F141	C Band Gunn diode;Freq 4-8.2GHz;Po 20mW;150mA Oper Curr;Oper Volt 12V typ;Pol Cathode
88♦	DGB8215	14	GA$	F142	C Band Gunn diode;Freq 4-8.2GHz;Po 20mW;150mA Oper Curr;Oper Volt 12V typ;Pol Cathode
89♦	DGB8221	14	GA$	F143	X Band Gunn diode;Freq 8.2-9.3 and 10.9-12.4GHz;Pout 20mW;Curr 130mA;Oper Volt 8V;Pol Anode
90♦	DGB8222	14	GA$	F144	X Band Gunn diode;Freq 8.2-12.4GHz;Pout 20mW;Oper Curr 130mA;Oper Volt 8V;Pol Anode
91♦	DGB8223	14	GA$	F160	X Band Gunn diode;Freq 8.2-12.4GHz;Pout 20mW;Oper Curr 130mA;Oper Volt 8V;Pol Anode
92♦	DGB8224	14	GA$	F141	X Band Gunn diode;Freq 8.2-12.4GHz;Pout 20mW;Oper Curr 130mA;Oper Volt 8V;Pol Anode
93♦	DGB8225	14	GA$	F142	X Band Gunn diode;Freq 8.2-12.4GHz;Pout 20mW;Oper Curr 130mA;Oper Volt 8V;Pol Anode
94♦	DGB8231	14	GA$	F143	Ku Band Gunn diode;Freq 12.4-18GHz;Oper Volt 7V;Pol Anode ;Pout 20mW min;Oper Curr 150mA
95♦	DGB8232	14	GA$	F144	Ku Band Gunn diode;Freq 12.4-16GHz;Oper Volt 7V;Pol Anode ;Pout 20mW min;Oper Curr 150mA
96♦	DGB8233	14	GA$	F160	Ku Band Gunn diode;Freq 12.4-16GHz;Oper Volt 7V;Pol Anode ;Pout 20mW min;Oper Curr 150mA
97♦	DGB8234	14	GA$	F141	Ku Band Gunn diode;Freq 12.4-18GHz;Oper Volt 7V;Pol Anode ;Pout 20mW min;Oper Curr 150mA
98♦	DGB8235	14	GA$	F142	Ku Band Gunn diode;Freq 12.4-18GHz;Oper Volt 7V;Pol Anode;Pout 20mW min;Oper Curr 150mA
99♦	DGB8241	14	GA$	F143	K Band Gunn diode;Freq 18-23.5 and 24.5-26.5GHz;Oper Volt 5V;Pol Anode;Pout 20mW;Curr 220mA
100♦	DGB8244	14	GA$	F141	K Band Gunn diode;Freq 18-23.5 and 24.5-26.5GHz;Oper Volt 5V;Pol Anode;Pout 20mW;Curr 220mA
101♦	DGB8245	14	GA$	F142	K Band Gunn diode;Freq 18-23.5 and 24.5-26.5GHz;Oper Volt 5V; Pol Anode;Pout 20mW;Curr 220mA
102♦	DGB8254	14	GA$	F141	Ka Band Gunn diode;Freq 26.5-40GHz;Oper Volt 5V;Pol Cathode;Pout 20mW min;Oper Curr 300mA
103♦	DGB8255	14	GA$	F142	Ka Band Gunn diode;Freq 26.5-40GHz;Oper Volt 5V;Pol Cathode;Pout 20mW min;Oper Curr 300mA
104♦	DGB8256	14	GA$	F145	Ka Band Gunn diode;Freq 26.5-40GHz;Oper Volt 5V;Pol Cathode;Pout 20mW min;Oper Curr 300mA
105	DGB8266	14	GA	F145	Gunn diode;Freq 40-60 GHz;Qb-W Band;20mW;400mA;4V;Pol cath
106♦	DGB8281	14	GA$	F143	X Band Gunn diode;Freq 9.3-10.9GHz;Pout 5mW min;Oper Curr 120mA typ;Oper Volt 8V;Pol Anode
107♦	DGB8291	14	GA$	F143	K Band Gunn diode;Freq 23.5-24.5GHz;Oper Volt 5V;Pol Anode;Pout 20mW min;Oper Curr 200mA
108♦	DGB8294	14	GA$	F141	K Band Gunn diode;Freq 23.5-24.5GHz;Oper Volt 5V;Pol Anode;Pout 20mW min;Oper Curr 200mA
109♦	DGB8295	14	GA$	F142	K Band Gunn diode;Freq 23.5-24.5GHz;Oper Volt 5V;Pol Anode;Pout 20mW min;Oper Curr 200mA
110♦	DGB8311	14	GA$	F143	C Band Gunn diode;Freq 4-8.2GHz;Pout 50mW;Oper Curr 200mA;Oper Volt 12V typ;Pol Cathode

8. MISCELLANEOUS DEVICES

IN ORDER OF (1) USE and (2) TYPE No.

LINE No.	2 TYPE No.	1 USE	DESCRIPTION MAT.	DESCRIPTION DWG. No.	TECHNICAL DATA
1♦	DGB8312	14	GA$	F144	C Band Gunn diode;Freq 4-8.2GHz;Pout 50mW;Oper Curr 200mA;Oper Volt 12V typ;Pol Cathode
2♦	DGB8313	14	GA$	F160	C Band Gunn diode;Freq 4-8.2GHz;Pout 50mW;Oper Curr 200mA;Oper Volt 12V typ;Pol Cathode
3♦	DGB8314	14	GA$	F141	C Band Gunn diode;Freq 4-8.2GHz;Pout 50mW;Oper Curr 200mA;Oper Volt 12V typ;Pol Cathode
4♦	DGB8315	14	GA$	F142	C Band Gunn diode;Freq 4-8.2GHz;Pout 50mW;Oper Curr 200mA;Oper Volt 12V typ;Pol Cathode
5♦	DGB8321	14	GA$	F143	X Band Gunn diode;Freq 8.2-12.4GHz;Pout 50mW min;Oper Curr 200mA;Oper Volt 10V;Pol Cathode
6♦	DGB8322	14	GA$	F144	X Band Gunn diode;Freq 8.2-12.4GHz;Pout 50mW min;Oper Curr 200mA;Oper Volt 10V;Pol Cathode
7♦	DGB8323	14	GA$	F160	X Band Gunn diode;Freq 8.2-12.4GHz;Pout 50mW min;Oper Curr 200mA;Oper Volt 10V;Pol Cathode
8♦	DGB8324	14	GA$	F141	X Band Gunn diode;Freq 8.2-12.4GHz;Pout 50mW min;Oper Curr 200mA;Oper Volt 10V;Pol Cathode
9♦	DGB8325	14	GA$	F142	X Band Gunn diode;Freq 8.2-12.4GHz;Pout 50mW min;Oper Curr 200mA;Oper Volt 10V;Pol Cathode
10♦	DGB8331	14	GA	F143	Ku Band Gunn diode;Freq 12.4-18GHz;Oper Volt 8V;Pol Cathode;Pout 50mW min;Oper Curr 260mA
11♦	DGB8332	14	GA$	F144	Ku Band Gunn diode;Freq 12.4-16GHz;Oper Volt 8V;Pol Cathode;Pout 50mW min;Oper Curr 260mA
12♦	DGB8333	14	GA$	F160	Ku Band Gunn diode;Freq 12.4-16GHz;Oper Volt 8V;Pol Cathode;Pout 50mW min;Oper Curr 260mA
13♦	DGB8334	14	GA$	F141	Ku Band Gunn diode;Freq 12.4-18GHz;Oper Volt 8V;Pol Cathode;Pout 50mW min;Oper Curr 260mA
14♦	DGB8335	14	GA$	F142	Ku Band Gunn diode;Freq 12.4-18GHz;Oper Volt 8V;Pol Cathode;Pout 50mW min;Oper Curr 260mA
15♦	DGB8344	14	GA$	F141	K Band Gunn diode;Freq 18-26.5GHz;Oper Volt 6V;Pol Cathode; Pout 50mW min;Oper Curr 330mA
16♦	DGB8345	14	GA$	F142	K Band Gunn diode;Freq 18-26.5GHz;Oper Volt 6V;Pol Cathode; Pout 50mW min;Oper Curr 330mA
17♦	DGB8354	14	GA$	F141	Ka Band Gunn diode;Freq 26.5-35GHz;Oper Volt 5V;Pol Cathode;Pout 50mW min;Oper Curr 450mA
18♦	DGB8355	14	GA$	F142	Ka Band Gunn diode;Freq 26.5-35GHz;Oper Volt 5V;Pol Cathode;Pout 50mW min;Oper Curr 450mA
19♦	DGB8356	14	GA$	F145	Ka Band Gunn diode;Freq 26.5-40GHz;Oper Volt 5V;Pol Cathode;Pout 50mW min;Oper Curr 450mA
20	DGB8366	14	GA	F145	Gunn diode;Freq 40-60 GHz;Qb-W Band;50mW;600mA;4V;Pol cath
21♦	DGB8411	14	GA$	F143	C Band Gunn diode;Freq 4-8.2GHz;Pout 100mW;Oper Curr 300mA;Oper Volt 12V typ;Pol Cathode
22♦	DGB8412	14	GA$	F144	C Band Gunn diode;Freq 4-8.2GHz;Pout 100mW;Oper Curr 300mA;Oper Volt 12V typ;Pol Cathode
23♦	DGB8413	14	GA$	F160	C Band Gunn diode;Freq 4-8.2GHz;Pout 100mW;Oper Curr 300mA;Oper Volt 12V typ;Pol Cathode
24♦	DGB8414	14	GA$	F141	C Band Gunn diode;Freq 4-8.2GHz;Pout 100mW;Oper Curr 300mA;Oper Volt 12V typ;Pol Cathode
25♦	DGB8415	14	GA$	F142	C Band Gunn diode;Freq 4-8.2GHz;Pout 100mW;Oper Curr 300mA;Oper Volt 12V typ;Pol Cathode
26♦	DGB8421	14	GA$	F143	X Band Gunn diode;Freq 8.2-12.4GHz;Oper Volt 10V;Pol Cathode;Pout 100mW min;Oper Curr 300mA
27♦	DGB8422	14	GA$	F144	X Band Gunn diode;Freq 8.2-12.4GHz;Oper Volt 10V;Pol Cathode;Pout 100mW min;Oper Curr 300mA
28♦	DGB8423	14	GA$	F160	X Band Gunn diode;Freq 8.2-12.4GHz;Oper Volt 10V;Pol Cathode;Pout 100mW min;Oper Curr 300mA
29♦	DGB8424	14	GA$	F141	X Band Gunn diode;Freq 8.2-12.4GHz;Oper Volt 10V;Pol Cathode;Pout 100mW min;Oper Curr 300mA
30♦	DGB8425	14	GA$	F142	X Band Gunn diode;Freq 8.2-12.4GHz;Oper Volt 10V;Pol Cathode;Pout 100mW min;Oper Curr 300mA
31♦	DGB8431	14	GA$	F143	Ku Band Gunn diode;Freq 12.4-18GHz;Oper Volt 8V;Pol Cathode;Pout 100mW min;Oper Curr 400mA
32♦	DGB8432	14	GA$	F144	KU Band Gunn diode;Freq 12.4-16GHz;Oper Volt 8V;Pol Cathode;Pout 100mW min;Oper Curr 400mA
33♦	DGB8433	14	GA$	F160	KU Band Gunn diode;Freq 12.4-16GHz;Oper Volt 8V;Pol Cathode;Pout 100mW min;Oper Curr 400mA
34♦	DGB8434	14	GA$	F141	KU Band Gunn diode;Freq 12.4-18GHz;Oper Volt 8V;Pol Cathode;Pout 100mW min;Oper Curr 400mA
35♦	DGB8435	14	GA$	F142	KU Band Gunn diode;Freq 12.4-18GHz;Oper Volt 8V;Pol Cathode;Pout 100mW min;Oper Curr 400mA
36♦	DGB8444	14	GA$	F141	K Band Gunn diode;Freq 18-26.5GHz;Oper Volt 6V;Pol Cathode; Pout 100mW min;Oper Curr 620mA
37♦	DGB8445	14	GA$	F142	K Band Gunn diode;Freq 18-26.5GHz;Oper Volt 6V;Pol Cathode; Pout 100mW min;Oper Curr 620mA
38♦	DGB8454	14	GA$	F141	Ka Band Gunn diode;Freq 26.5-35GHz;Oper Volt 5V;Pol Cathode;Pout 100mW min;Oper Curr 750mA
39♦	DGB8455	14	GA$	F142	Ka Band Gunn diode;Freq 26.5-35GHz;Oper Volt 5V;Pol Cathode;Pout 100mW min;Oper Curr 750mA
40♦	DGB8456	14	GA$	F145	Ka Band Gunn diode;Freq 26.5-40GHz;Oper Volt 5V;Pol Cathode;Pout 100mW min;Oper Curr 750mA
41	DGB8466	14	GA	F145	Gunn diode;Freq 40-50 GHz;Qb-Vb Band;75mW;750mA;4V;Pol cath
42	DGB8511	14	GA$	F143	Gunn diode;Freq 4-8.2GHz;C Band;Po 200mw;I 500ma;V 12v;Pol cath
43	DGB8512	14	GA$	F144	Gunn diode;Freq 4-8.2GHz;C Band;Po 200mw;I 500ma;V 12v;Pol cath
44♦	DGB8513	14	GA$	F160	Gunn diode;Freq 4-8 GHZ,C Band;Po 200mw;I 500ma;V 13v;Pol cath
45	DGB8515	14	GA$	F142	Gunn diode;Freq 4-8.2GHz;C Band;Po 200mw;I 500ma;V 12v;Pol cath
46♦	DGB8521	14	GA$	F143	X Band Gunn diode;Freq 8.2-12.4GHz;Oper Volt 10V;Pol Cathode;Pout 200mW min;Oper Curr 600mA
47♦	DGB8522	14	GA$	F144	X Band Gunn diode;Freq 8.2-12.4GHz;Oper Volt 10V;Pol Cathode;Pout 200mW min;Oper Curr 600mA
48♦	DGB8523	14	GA$	F160	X Band Gunn diode;Freq 8.2-12.4GHz;Oper Volt 10V;Pol Cathode;Pout 200mW min;Oper Curr 600mA
49♦	DGB8524	14	GA$	F141	X Band Gunn diode;Freq 8.2-12.4GHz;Oper Volt 10V;Pol Cathode;Pout 200mW min;Oper Curr 600mA
50♦	DGB8525	14	GA$	F142	X Band Gunn diode;Freq 8.2-12.4GHz;Oper Volt 10V;Pol Cathode;Pout 200mW min;Oper Curr 600mA
51♦	DGB8531	14	GA$	F143	KU Band Gunn diode;Freq 12.4-18GHz;Oper Volt 8V;Pol Cathode;Pout 200mW min;Oper Curr 700mA
52♦	DGB8532	14	GA$	F144	KU Band Gunn diode;Freq 12.4-16GHz;Oper Volt 8V;Pol Cathode;Pout 200mW min;Oper Curr 700mA
53♦	DGB8533	14	GA$	F160	KU Band Gunn diode;Freq 12.4-16GHz;Oper Volt 8V;Pol Cathode;Pout 200mW min;Oper Curr 700mA
54♦	DGB8534	14	GA$	F141	KU Band Gunn diode;Freq 12.4-18GHz;Oper Volt 8V;Pol Cathode;Pout 200mW min;Oper Curr 700mA
55♦	DGB8535	14	GA$	F142	KU Band Gunn diode;Freq 12.4-18GHz;Oper Volt 8V;Pol Cathode;Pout 200mW min;Oper Curr 700mA
56♦	DGB8544	14	GA$	F141	K Band Gunn diode;Freq 18-26.5GHz;Oper Volt 6V;Pol Cathode; Pout 200mW min;Oper Curr 1.1A
57♦	DGB8545	14	GA$	F142	K Band Gunn diode;Freq 18-26.5GHz;Oper Volt 6V;Pol Cathode; Pout 200mW min;Oper Curr 1.1A
58♦	DGB8554	14	GA$	F141	Ka Band Gunn diode;Freq 26.5-35GHz;Oper Volt 5V;Pol Cathode;Pout 150mW min;Oper Curr 1050mA
59♦	DGB8555	14	GA$	F142	Ka Band Gunn diode;Freq 26.5-35GHz;Oper Volt 5V;Pol Cathode;Pout 150mW min;Oper Curr 1050mA
60♦	DGB8556	14	GA$	F145	Ka Band Gunn diode;Freq 26.5-40GHz;Oper Volt 5V;Pol Cathode;Pout 150mW min;Oper Curr 1050mA
61	DGB8566	14	GA	F145	Gunn diode;Freq 40-50 GHz;Qb-Vb Band;100mW,950mA;4V;Pol cath
62♦	DGB8612	14	GA$	F144	C Band Gunn diode;Freq 4-8.2GHz;Pout 300mW;Oper Curr 700mA;Oper Volt 12V typ;Pol Cathode
63♦	DGB8613	14	GA$	F160	C Band Gunn diode;Freq 4-8.2GHz;Pout 300mW;Oper Curr 700mA;Oper Volt 12V typ;Pol Cathode
64♦	DGB8614	14	GA	F141	C Band Gunn diode;Freq 4-8.2GHz;Pout 300mW;Oper Curr 700mA;Oper Volt 12V typ;Pol Cathode
65♦	DGB8615	14	GA$	F142	C Band Gunn diode;Freq 4-8.2GHz;Pout 300mW;Oper Curr 700mA;Oper Volt 12V typ;Pol Cathode
66♦	DGB8622	14	GA$	F144	X Band Gunn diode;Freq 8.2-12.4GHz;Oper Volt 10V;Pol Cathode;Pout 300mW min;Oper Curr 800mA
67♦	DGB8623	14	GA$	F160	X Band Gunn diode;Freq 8.2-12.4GHz;Oper Volt 10V;Pol Cathode;Pout 300mW min;Oper Curr 800mA
68♦	DGB8624	14	GA$	F141	X Band Gunn diode;Freq 8.2-12.4GHz;Oper Volt 10V;Pol Cathode;Pout 300mW min;Oper Curr 800mA
69♦	DGB8625	14	GA$	F142	X Band Gunn diode;Freq 8.2-12.4GHz;Oper Volt 10V;Pol Cathode;Pout 300mW min;Oper Curr 800mA
70♦	DGB8632	14	GA$	F144	KU Band Gunn diode;Freq 12.4-16GHz;Oper Volt 8V;Pol Cathode;Pout 300mW min;Oper Curr 1.0A
71♦	DGB8633	14	GA$	F160	Ku Band Gunn diode;Freq 12.4-16GHz;Oper Volt 8V;Pol Cathode;Pout 300mW min;Oper Curr 1.0A
72♦	DGB8634	14	GA$	F141	Ku Band Gunn diode;Freq 12.4-18GHz;Oper Volt 8V;Pol Cathode;Pout 300mW min;Oper Curr 1.0A
73♦	DGB8635	14	GA$	F142	Ku Band Gunn diode;Freq 12.4-18GHz;Oper Volt 8V;Pol Cathode;Pout 300mW min;Oper Curr 1.0A
74▼	DGB8645	14	GA	F141	Gunn diode;Freq 26.5-35 GHz;Kr-Kl Band;200mW;1350mA;5V;Pol cath
75	DGB8655	14	GA	F142	gunn diode;Freq 26.5-35 GHz;Kr-Kl Band;200mW;1350mA;5V;Pol cath
76	DGB8656	14	GA	F145	Gunn diode;Freq 26.5-40 GHz;Kr-Qb Band;200mW;1350mA;5V;Pol cath
77	DGB8666	14	GA	F145	Gunn diode;Freq 40-50 GHz;Qb-Vb Band;125mW;1100mA;4V;Pol cath
78	DGB8712	14	GA$	F144	Gunn diode;Freq 5-8.2GHz;C Band;Po 400mw;I 900ma;V 12v;Pol cath
79♦	DGB8713	14	GA$	F160	Gunn diode;Freq 5-8.2GHz;C Band;Po 400mw;I 900ma;V 12v;Pol cath
80	DGB8714	14	GA$	F141	Gunn diode;Freq 5-8.2GHz;C Band;Po 400mw;I 900ma;V 12v;Pol cath
81	DGB8715	14	GA$	F142	Gunn diode;Freq 5-8.2GHz;C Band;Po 400mw;I 900ma;V 12v;Pol cath
82♦	DGB8722	14	GA$	F144	X Band Gunn diode;Freq 8.2-12.4GHz;Oper Volt 10V;Pol Cathode;Pout 400mW min;Oper Curr 1.0A
83	DGB8723	14	GA	P13	Gunn diode:Freq 8.2-12.4 GHz;X Band;400mW;1000mA;10V;Pol cath
84	DGB8723#	14	GA$		Gunn diode;Freq 8-12 GHz;X Band;Po 400mw;I 1000ma;V 10v;Pol cath
85♦	DGB8724	14	GA$	F141	X Band Gunn diode;Freq 8.2-12.4GHz;Oper Volt 10V;Pol Cathode;Pout 400mW min;Oper Curr 1.0A
86♦	DGB8725	14	GA$	F142	X Band Gunn diode;Freq 8.2-12.4GHz;Oper Volt 10V;Pol Cathode;Pout 400mW min;Oper Curr 1.0A
87♦	DGB8732	14	GA$	F144	Ku Band Gunn diode;Freq 12.4-16GHz;Pout 400mW;Oper Curr 1.3A;Oper Volt 8V;Pol Cathode
88♦	DGB8733	14	GA$	F160	Ku Band Gunn diode;Freq 12.4-16GHz;Pout 400mW;Oper Curr 1.3A;Oper Volt 8V;Pol Cathode
89♦	DGB8734	14	GA$	F141	Ku Band Gunn diode;Freq 12.4-16GHz;Pout 400mW;Oper Curr 1.3A;Oper Volt 8V;Pol Cathode
90♦	DGB8735	14	GA$	F142	Ku Band Gunn diode;Freq 12.4-16GHz;Pout 400mW;Oper Curr 1.3A;Oper Volt 8V;Pol Cathode
91	DGB8754	14	GA	F141	Gunn diode;Freq 26.5-35 GHz;Kr-Kl Band;225mW;1450mA;5V;Pol catha
92	DGB8755	14	GA	F142	Gunn diode;Freq 26.5-35 GHz;Kr-Kl Band;225mW;1450mA;5V;Pol cath
93	DGB8756	14	GA	F145	Gunn diode;Freq 26.5-40 GHz;Kr-Qb Band:225mW;1450mA;5V;Pol cath
94	DGB8766	14	GA	F145	Gunn diode;Freq 40-50 GHz;Qb-Vb Band;150mW;1300mA;4V;Pol cath
95	DGB8812	14	GA$	F144	Gunn diode;Freq 6-8.2GHz;C Band;Po 500mw;I 1100ma;V 12v;Pol cath
96♦	DGB8813	14	GA$	F160	Gunn diode;Freq 6-8.2GHz;C Band;Po 500mw;I 1100ma;V 12v;Pol cath
97♦	DGB8822	14	GA$	F144	X Band Gunn diode;Freq 8.2-12.4GHz;Oper Volt 10V;Pol Cathode;Pout 500mW min;Oper Curr 1350mA
98♦	DGB8823	14	GA$	F160	X Band Gunn diode;Freq 8.2-12.4GHz;Oper Volt 10V;Pol Cathode;Pout 500mW min;Oper Curr 1350mA
99	DGB8912	14	GA$	F144	Gunn diode;Freq 6-8.2GHz;C Band;Po 600mw;I 1250ma;V 12v;Pol cath
100♦	DGB8913	14	GA$	F160	Gunn diode;Freq 6-8.2GHz;C Band;Po 600mw;I 1250ma;V 12v;Pol cath
101♦	DGB8922	14	GA$	F144	X Band Gunn diode;Freq 8.2-12.4GHz;Oper Volt 10V;Pol Cathode;Pout 600mW min;Oper Curr 1550mA
102♦	DGB8923	14	GA$	F160	X Band Gunn diode;Freq 8.2-12.4GHz;Oper Volt 10V;Pol Cathode;Pout 600mW min;Oper Curr 1550mA
103♦	DGB9211	14	GA$	F143	C Band Gunn diode;Freq 5-8.2GHz;Pout 20mW;Oper Curr 300mA;Oper Volt 12V typ;Pol Cathode
104♦	DGB9212	14	GA$	F144	C Band Gunn diode;Freq 5-8.2GHz;Pout 20mW;Oper Curr 300mA;Oper Volt 12V typ;Pol Cathode
105♦	DGB9213	14	GA$	F160	C Band Gunn diode;Freq 5-8.2GHz;Pout 20mW;Oper Curr 300mA;Oper Volt 12V typ;Pol Cathode
106♦	DGB9214	14	GA$	F141	C Band Gunn diode;Freq 5-8.2GHz;Pout 20mW;Oper Curr 300mA;Oper Volt 12V typ;Pol Cathode
107♦	DGB9215	14	GA$	F142	C Band Gunn diode;Freq 5-8.2GHz;Pout 20mW;Oper Curr 300mA;Oper Volt 12V typ;Pol Cathode
108♦	DGB9221	14	GA$	F143	X Band Gunn diode;Freq 8.2-12.4GHz;Oper Volt 10V;Pol Cathode;Pout 20mW min;Oper Curr 300mA
109♦	DGB9222	14	GA$	F144	X Band Gunn diode;Freq 8.2-12.4GHz;Oper Volt 10V;Pol Cathode;Pout 20mW min;Oper Curr 300mA
110♦	DGB9223	14	GA$	F160	X Band Gunn diode;Freq 8.2-12.4GHz;Oper Volt 10V;Pol Cathode;Pout 20mW min;Oper Curr 300mA

8. MISCELLANEOUS DEVICES

IN ORDER OF (1) USE and (2) TYPE No.

LINE No.	[2] TYPE No.	[1] USE	DESCRIPTION MAT.	DWG. No.	TECHNICAL DATA
1♦	DGB9224	14	GA$	F141	X Band Gunn diode;Freq 8.2-12.4GHz;Oper Volt 10V;Pol Cathode;Pout 20mW min;Oper Curr 300mA
2♦	DGB9225	14	GA$	F142	X Band Gunn diode;Freq 8.2-12.4GHz;Oper Volt 10V;Pol Cathode;Pout 20mW min;Oper Curr 300mA
3♦	DGB9234	14	GA$	F141	Ku Band Gunn diode;Freq 12.4-18GHz;Oper Volt 8V;Pol Cathode;Pout 20mW min;Oper Curr 360mA
4♦	DGB9235	14	GA$	F142	Ku Band Gunn diode;Freq 12.4-18GHz;Oper Volt 8V;Pol Cathode;Pout 20mW min;Oper Curr 360mA
5♦	DGB9244	14	GA$	F141	K Band Gunn diode;Freq 18-26.5GHz;Oper Volt 6V;Pol Cathode; Pout 20mW min;Oper Curr 420mA
6♦	DGB9245	14	GA$	F142	K Band Gunn diode;Freq 18-26.5GHz;Oper Volt 6V;Pol Cathode; Pout 20mW min;Oper Curr 420mA
7♦	DGB9246	14	GA$	F145	K Band Gunn diode;Freq 18-26.5GHz;Oper Volt 6V;Pol Cathode; Pout 20mW min;Oper Curr 420mA
8♦	DGB9311	14	GA$	F143	C Band Gunn diode;Freq 5-8.2GHz;Pout 50mW;Oper Curr 400mA;Oper Volt 12V typ;Pol Cathode
9♦	DGB9312	14	GA$	F144	C Band Gunn diode;Freq 5-8.2GHz;Pout 50mW;Oper Curr 400mA;Oper Volt 12V typ;Pol Cathode
10♦	DGB9313	14	GA$	F160	C Band Gunn diode;Freq 5-8.2GHz;Pout 50mW;Oper Curr 400mA;Oper Volt 12V typ;Pol Cathode
11♦	DGB9314	14	GA$	F141	C Band Gunn diode;Freq 5-8.2GHz;Pout 50mW;Oper Curr 400mA;Oper Volt 12V typ;Pol Cathode
12♦	DGB9315	14	GA$	F142	C Band Gunn diode;Freq 5-8.2GHz;Pout 50mW;Oper Curr 400mA;Oper Volt 12V typ;Pol Cathode
13♦	DGB9321	14	GA$	F144	X Band Gunn diode;Freq 8.2-12.4GHz;Oper Volt 10V;Pol Cathode;Pout 50mW min;Oper Curr 450mA
14♦	DGB9322	14	GA$	F143	X Band Gunn diode;Freq 8.2-12.4GHz;Oper Volt 10V;Pol Cathode;Pout 50mW min;Oper Curr 450mA
15♦	DGB9323	14	GA$	F160	X Band Gunn diode;Freq 8.2-12.4GHz;Oper Volt 10V;Pol Cathode;Pout 50mW min;Oper Curr 450mA
16♦	DGB9324	14	GA$	F141	X Band Gunn diode;Freq 8.2-12.4GHz;Oper Volt 10V;Pol Cathode;Pout 50mW min;Oper Curr 450mA
17♦	DGB9325	14	GA$	F142	X Band Gunn diode;Freq 8.2-12.4GHz;Oper Volt 10V;Pol Cathode;Pout 50mW min;Oper Curr 450mA
18♦	DGB9334	14	GA$	F141	Ku Band Gunn diode;Freq 12.4-18GHz;Oper Volt 8V;Pol Cathode;Pout 50mW min;Oper Curr 520mA
19♦	DGB9335	14	GA$	F142	Ku Band Gunn diode;Freq 12.4-18GHz;Oper Volt 8V;Pol Cathode;Pout 50mW min;Oper Curr 520mA
20♦	DGB9344	14	GA$	F141	K Band Gunn diode;Freq 18-26.5GHz;Oper Volt 6V;Pol Cathode; Pout 50mW min;Oper Curr 700mA
21♦	DGB9345	14	GA	F142	K Band Gunn diode;Freq 18-26.5GHz;Oper Volt 6V;Pol Cathode; Pout 50mW min;Oper Curr 700mA
22♦	DGB9346	14	GA$	F145	K Band Gunn diode;Freq 18-26.5GHz;Oper Volt 6V;Pol Cathode; Pout 50mW min;Oper Curr 700mA
23♦	DGB9411	14	GA$	F143	C Band Gunn diode;Freq 5-8.2GHz;Pout 100mW;Oper Curr 550mA;Oper Volt 12V typ;Pol Cathode
24♦	DGB9412	14	GA$	F144	C Band Gunn diode;Freq 5-8.2GHz;Pout 100mW;Oper Curr 550mA;Oper Volt 12V typ;Pol Cathode
25♦	DGB9413	14	GA$	F160	C Band Gunn diode;Freq 5-8.2GHz;Pout 100mW;Oper Curr 550mA;Oper Volt 12V typ;Pol Cathode
26♦	DGB9414	14	GA$	F141	C Band Gunn diode;Freq 5-8.2GHz;Pout 100mW;Oper Curr 550mA;Oper Volt 12V typ;Pol Cathode
27♦	DGB9415	14	GA$	F142	C Band Gunn diode;Freq 5-8.2GHz;Pout 100mW;Oper Curr 550mA;Oper Volt 12V typ;Pol Cathode
28♦	DGB9421	14	GA$$	F143	X Band Gunn diode;Freq 8.2-12.4GHz;Oper Volt 10V;Pol Cathode;Pout 100mW min;Oper Curr 600mA
29♦	DGB9422	14	GA$	F144	X Band Gunn diode;Freq 8.2-12.4GHz;Oper Volt 10V;Pol Cathode;Pout 100mW min;Oper Curr 600mA
30♦	DGB9423	14	GA$	F160	X Band Gunn diode;Freq 8.2-12.4GHz;Oper Volt 10V;Pol Cathode;Pout 100mW min;Oper Curr 600mA
31♦	DGB9424	14	GA$	F141	X Band Gunn diode;Freq 8.2-12.4GHz;Oper Volt 10V;Pol Cathode;Pout 100mW min;Oper Curr 600mA
32♦	DGB9425	14	GA$	F142	X Band Gunn diode;Freq 8.2-12.4GHz;Oper Volt 10V;Pol Cathode;Pout 100mW min;Oper Curr 600mA
33♦	DGB9434	14	GA$	F141	Ku Band Gunn diode;Freq 12.4-18GHz;Oper Volt 8V;Pol Cathode;Pout 100mW min;Oper Curr 720mA
34♦	DGB9435	14	GA$	F142	Ku Band Gunn diode;Freq 12.4-18GHz;Oper Volt 8V;Pol Cathode;Pout 100mW min;Oper Curr 720mA
35▾	DMJ3180	14	Si	W305 †	X Band Freq range;7.0dB Typ Noise Fig;20dBm L.O. drive level;Cj 0.3pF max;Rs 14 ohm max
36♦	DMJ3181	14	Si	W305 †	Ku Band Freq range;20dBm L.O. drive level;Cj 0.15pF max;Rs 18 ohm max
37	E9400	14		M1134g	Gunn Osc:Range 60-90GHz,Mech Tuning ±250MHz,Pwr Out 5-20mW,Oper Volt 4±1.5VDC
38	GAO2D-D	14	GA	M1068	GUNN Diode;Vop 8.0V;Iop 30mA;Out Pwr 2.0mW;Freq Rang 9.0GHz
39	GAO5D-D	14	GA	M1068	GUNN Diode;Vop 8.0V;Iop 30mA;Out Pwr 5.0mW;Freq Rang 9.0GHz
40	GAO10C-D	14	GA	F134	GUNN Diode;Vop 13V;Iop 80mA;Pout 10mW;Freq Range 7.0GHz
41	GAO10C-H	14	GA	M1068	GUNN Diode;Vop 13V;Iop 80 mA;Pout 10mW;Freq Range 7.0GHz
42	GAO10D-D	14	GA	F134	GUNN Diode;Vop 10V;Iop 80mA;Pout 10mW;Freq Range 9.0GHz
43	GAO10D-H	14	GA	M1068	GUNN Diode;Vop 10V;Iop 80mA;Pout 10mW;Freq Range 9.0GHz
44	GAO10E-D	14	GA	F134	GUNN Diode;Vop 10V;Iop 80mA;Pout 10mW;Freq Range 10GHz
45	GAO10E-H	14	GA	M1068	GUNN Diode;Vop 10V;Iop 80mA;Pout 10mW;Freq Range 10GHz
46	GAO10F-D	14	GA	F134	GUNN Diode;Vop 9.0V;Iop 90mA;Pout 10mW;Freq Range 11GHz
47	GAO10F-H	14	GA	M1068	GUNN Diode;Vop 9.0V;Iop 90mA;Pout 10mW;Freq Range 11GHz
48	GAO10G-D	14	GA	F134	GUNN Diode;Vop 9.0V;Iop 90mA;Pout 10mW;Freq Range 12GHz
49	GAO10G-H	14	GA	M1068	GUNN Diode;Vop 9.0V;Iop 90mA;Pout 10mW;Freq Range 12GHz
50	GAO10I-D	14	GA	F134	GUNN Diode;Vop 8.0V;Iop 100mA;Pout 10mW;Freq Range 15GHz
51	GAO10I-H	14	GA	M1068	GUNN Diode;Vop 8.0V;Iop 100mA;Pout 10mW;Freq Range 15GHz
52	GAO20C-D	14	GA	F134	GUNN Diode;Vop 14V;Iop 200mA;Pout 20mW;Freq Range 7.0GHz
53	GAO20C-H	14	GA	M1068	GUNN Diode;Vop 14V;Iop 200mA;Pout 20mW;Freq Range 7.0GHz
54	GAO20D-D	14	GA	F134	GUNN Diode;Vop 11V;Iop 200mA;Pout 20mW;Freq Range 9.0 GHz
55	GAO20D-H	14	GA	M1068	GUNN Diode;Vop 11V;Iop 200mA;Pout 20mW;Freq Range 9.0GHz
56	GAO20E-D	14	GA	F134	GUNN Diode;Vop 10.5V;Iop 200mA;Pout 20mW;Freq Range 10GHz
57	GAO20E-H	14	GA	M1068	GUNN Diode;Vop 10.5V;Iop 200mA;Pout 20mW;Freq Range 10GHz
58	GAO20F-H	14	GA	M1068	GUNN Diode;Vop 1OV;Iop 200mA;Pout 20mW;Freq Range 11GHz
59	GAO20G-D	14	GA	F134	GUNN Diode;Vop 9.0V;Iop 200mA;Pout 20mW;Freq Range 12GHz
60	GAO20G-H	14	GA	M1068	GUNN Diode;Vop 9.0V;Iop 200mA;Pout 20mW;Freq Range 12GHz
61	GAO20I-D	14	GA	F134	GUNN Diode;Vop 8.0V;Iop 200mA;Pout 20mW;Freq Range 15GHz
62	GAO20I-H	14	GA	M1068	GUNN Diode;Vop 8.0V;Iop 200mA;Pout 20mW;Freq Range 15GHz
63	GAO50C-D	14	GA	F134	GUNN Diode;VR 14V;IR 250mA;Pout 50mW;Freq Range 7.0GHz
64	GAO50C-H	14	GA	M1068	GUNN Diode;VR 14V;IR 250mA;Pout 50mW;Freq Range 7.0GHz
65	GAO50D-D	14	GA	F134	GUNN Diode;VR 11V;IR 300mA;Pout 50mW;Freq Range 9.0GHz
66	GAO50D-H	14	GA	M1068	GUNN Diode;VR 11V;IR 300mA;Pout 50mW;Freq Range 9.0GHz
67	GAO50E-D	14	GA	F134	GUNN Diode;VR 10.5V;IR 300mA;Pout 50 mW;Freq Range 10GHz
68	GAO50E-H	14	GA	M1068	GUNN Diode;VR 10.5V;IR 300mA;Pout 50mW;Freq Range 10GHz
69	GAO50F-D	14	GA	F134	GUNN Diode;VR 10V;IR 300mA;Pout 50mW;Freq Range 11GHz
70	GAO50F-H	14	GA	M1068	GUNN Diode;VR 10V;IR 300mA;Pout 50mW;Freq Range 11GHz
71	GAO50G-D	14	GA	F134	GUNN Diode;VR 9.0V;IR 300mA;Pout 50mW;Freq Range 12GHz
72	GAO50G-H	14	GA	M1068	GUNN Diode;VR 9.0V;IR 300mA;Pout 50mW;Freq Range 12GHz
73	GAO50I-D	14	GA	F134	GUNN Diode;VR 8.0V;IR 300mA;Pout 50mW;Freq Range 15GHz
74	GAO50I-H	14	GA	M1068	GUNN Diode;VR 8.0V;IR 300mA;Pout 50mW;Freq Range 15GHz
75	GAO100C-D	14	GA	F134	GUNN Diode;VR 14V;IR 500mA;Pout 100mW;Freq Range 7.0GHz
76	GAO100C-H	14	GA	M1068	GUNN Diode;VR 14V;IR 500mA;Pout 100mW;Freq Range 7.0GHz
77	GAO100D-D	14	GA	F134	GUNN Diode;VR 11V;IR 600mA;Pout 100mW;Freq Range 9.0GHz
78	GAO100D-H	14	GA	M1068	GUNN Diode;VR 11V;IR 600mA;Pout 100mW;Freq Range 9.0GHz
79	GAO100E-D	14	GA	F134	GUNN Diode;VR 10.5V;IR 600mA;Pout 100mW;Freq Range 10GHz
80	GAO100E-H	14	GA	M1068	GUNN Diode;VR 10.5V;IR 600mA;Pout 100mW;Freq Range 10GHz
81	GAO100F-D	14	GA	F134	GUNN Diode;VR 10V;IR 600mA;Pout 100mW;Freq Range 11GHz
82	GAO100F-H	14	GA	M1088	GUNN Diode;VR 10V;IR 600mA;Pout 100mW;Freq Range 11GHz
83	GAO100G-D	14	GA	F134	GUNN Diode;VR 9.0V;IR 600mA;Pout 100mW;Freq Range 12GHz
84	GAO100G-H	14	GA	M1068	GUNN Diode;VR 9.0V;IR 600mA;Pout 100mW;Freq Range 12GHz
85	GAO100I-D	14	GA	F134	GUNN Diode;VR 8.0V;IR 650mA;Pout 100mW;Freq Range 15GHz
86	GAO100I-H	14	GA	M1068	GUNN Diode;VR 8.0V;IR 650mA;Pout 100mW;Freq Range 15GHz
87	GAO200C-D	14	GA	F134	GUNN Diode;VR 14V;IR 750mA;Pout 200mW;Freq Range 7.0GHz
88	GAO200C-H	14	GA	M1068	GUNN Diode;VR 14V;IR 750mA;Pout 200mW; Freq Range 7.0GHz
89	GAO200D-D	14	GA	F134	GUNN Diode;VR 11V;IR 800mA;Pout 200mW; Freq Range 9.0GHz
90	GAO200D-H	14	GA	M1068	GUNN Diode;VR 11V;IR 800mA Pout 200 mW; Freq Range 9.0GHz
91	GAO200E-D	14	GA	F134	GUNN Diode;VR 10.5V;IR 800mA; Pout 200mW; Freq Range 10GHzx
92	GAO200E-H	14	GA	M1068	GUNN Diode;VR 10.5V;IR 800mA; Pout 200mW; Freq Range 10GHz
93	GAO200F-D	14	GA	F134	GUNN Diode;VR 10V;IR800mA;Pout 200mW; Freq Range 11GHz
94	GAO200F-H	14	GA	M1068	GUNN Diode;VR 10V;IR 800mA Pout 200mW; Freq Range 11GHz
95	GAO200G-D	14	GA	F134	GUNN Diode;VR 9.0V;IR 800mA; Pout 200mW; Freq Range 12GHz
96	GAO200G-H	14	GA	M1068	GUNN Diode;VR 9.0V;IR 800mA; Pout 200mW; Freq Range 12GHz
97	GAO200I-D	14	GA	F134	GUNN Diode;VR 8.0V;IR 850mA;Pout 200mW;Freq Range 15 GHz
98	GAO200I-E	14	GA	F151	Gunn diode;Freq 15GHz;Po 200mW;Vop 8.0V;Iop 850mW
99	GAO200I-H	14	GA	M1068	GUNN Diode;VR8.0V; IR850mA;Pout 200mW; Freq Range 15GHz
100	GC5601A	14	GA	F111b†	Gunn Diode;Freq 4.0-6.0GHz;Po 10mW min;Vo 15V;Eff 1.0% typ
101	GC5601B	14	GA	F111b†	Gunn Diode;Freq 6.0-8.0GHz;Po 10mW min;Vo 12.5V;Eff 1.0% typ
102	GC5601C	14	GA	F111b†	Gunn Diode;Freq 8.0-10GHz;Po 10mW min;Vo 11V;Eff 1.0% typ
103	GC5601D	14	GA	F111b†	Gunn Diode;Freq. 10-12.5GHz;Po 10mW min;Vo 9.5V;Eff 1.0.
104	GC5601E	14	GA	F111b†	Gunn Diode;Freq. 12.5-16.5GHz;Po 10mW min;Vo 8.0V;Eff 1.0.
105	GC5601F	14	GA	F111b†	Gunn Diode;Freq. 16.5-20.5GHz;Po 10mW min;Vo 6.5V;Eff 1.0.
106	GC5601G	14	GA	F111b†	Gunn Diode;Freq. 20.5-24.5GHz;Po 10mW;Vo 5.5V;Eff 1.0.
107	GC5601H	14	GA	F47b	Gunn Diode;Freq. 24.5-30.0GHz;Po 10mW;Vo 3.5V;Eff 1.0.
108	GC5602A	14	GA	F111b†	Gunn Diode;Freq 4.0-6.0GHz;Po 25mW min;Vo 15V;Eff 1.0% typ
109	GC5602B	14	GA	F111b†	Gunn Diode;Freq 6.0-8.0GHz;Po 25mW min;Vo 12.5V;Eff 1.0% typ
110	GC5602C	14	GA	F111b†	Gunn Diode;Freq 8.0-10GHz;Po 25mW min; Vo 11V;Eff 1.0% typ

8. MISCELLANEOUS DEVICES

IN ORDER OF (1) USE and (2) TYPE No.

LINE No.	2 TYPE No.	1 USE	DESCRIPTION MAT.	DESCRIPTION DWG. No.	TECHNICAL DATA
1	GC5602D	14	GA	F111b†	Gunn Diode;Freq. 10-12.5GHz;Po 25mW min;Vo 9.5V;Eff 1.0.
2	GC5602E	14	GA	F111b†	Gunn Diode;Freq. 12.5-16.5GHz;Po 25mW min;Vo 8.0V;Eff 1.0.
3	GC5602F	14	GA	F111b†	Gunn Diode;Freq. 16.5-20.5GHz;Po 25mW min;Vo 6.5V;Eff 1.0.
4	GC5602G	14	GA	F111b†	Gunn Diode;Freq. 20.5-24.5GHz;Po 25mW;Vo 5.5V;Eff 1.0.
5	GC5602H	14	GA	F47b	Gunn Diode;Freq. 24.5-30.0GHz;Po 25mW;Vo 3.5V;Eff 1.0.
6	GC5605A	14	GA	F111b†	Gunn Diode;Freq 4.0-6.0GHz;Po 50mW min;Vo 15V;Eff 1.5% min
7	GC5605B	14	GA	F111b†	Gunn Diode;Freq 6.0-8.0GHz;Po 50mW min;Vo 12.5V;Eff 1.5% min
8	GC5605C	14	GA	F111b†	Gunn Diode;Freq 8.0-10GHz;Po 50mW min;Vo 11V;Eff 1.5% min
9	GC5605D	14	GA	F111b†	Gunn Diode;Freq. 10-12.5GHz;Po 50mW min;Vo 9.5V;Eff 1.5 min.
10	GC5605E	14	GA	F111b†	Gunn Diode;Freq. 12.5-16.5GHz;Po 50mW min;Vo 8.0V;Eff 1.5 min.
11	GC5605F	14	GA	F111b†	Gunn Diode;Freq. 16.5-20.5GHz;Po 50mW min;Vo 6.5V;Eff 1.5 min.
12	GC5605G	14	GA	F111b†	Gunn Diode;Freq. 20.5-24.5GHz;Po 50mW;Vo 5.5V;Eff 1.5 min.
13	GC5605H	14	GA	F47b	Gunn Diode;Freq. 24.5-30.0GHz;Po 50mW;Vo 3.5V;Eff 1.5 min.
14	GC5607A	14	GA	F111b†	Gunn Diode;Freq 4.0-6.0GHz;Po 75mW min;Vo 15V;Eff 1.75% min
15	GC5607B	14	GA	F111b†	Gunn Diode;Freq 6.0-8.0GHz;Po 75mW min;Vo 12.5V;Eff 1.75% min
16	GC5607C	14	GA	F111b†	Gunn Diode;Freq 8.0-10GHz;Po 75mW min;Vo 11V;Eff 1.75% min
17	GC5607D	14	GA	F111b†	Gunn Diode;Freq. 10-12.5GHz;Po 75mW min;Vo 9.5V;Eff 1.75 min.
18	GC5607E	14	GA	F111b†	Gunn Diode;Freq. 12.5-16.5GHz;Po 75mW min;Vo 8.0V;Eff 1.75 min.
19	GC5607F	14	GA	F111b†	Gunn Diode;Freq. 16.5-20.5GHz;Po 75mW;Vo 6.5V;Eff 1.75 min.
20	GC5607G	14	GA	F111b†	Gunn Diode;Freq. 20.5-24.5GHz;Po 75mW;Vo 5.5V;Eff 1.75 min.
21	GC5610A	14	GA	F111b†	Gunn Diode;Freq 4.0-6.0GHz;Po 100mW min;Vo 15V;Eff 2.0% min
22	GC5610B	14	GA	F111b†	Gunn Diode;Freq 6.0-8.0GHz;Po 100mW min;Vo 12.5V;Eff 2.0% min
23	GC5610C	14	GA	F111b†	Gunn Diode;Freq 8.0-10GHz;Po 100mW min;Vo 11V;Eff 2.0% min
24	GC5610D	14	GA	F111b†	Gunn Diode;Freq. 10-12.5GHz;Po 100mW min;Vo 9.5V;Eff 2.0 min.
25	GC5610E	14	GA	F111b†	Gunn Diode;Freq. 12.5-16.5GHz;Po 100mW min;Vo 8.0V;Eff 2.0 min.
26	GC5610F	14	GA	F111b†	Gunn Diode;Freq. 16.5-20.5GHz;Po 100mW;Vo 6.5V;Eff 2.0 min.
27	GC5610G	14	GA	F111b†	Gunn Diode;Freq 20.5-24.5GHz;Po 100mW min;Vo 5.5V;Eff 2.0% min
28	GC5615A	14	GA	F111b†	Gunn Diode;Freq 4.0-6.0GHz;Po 150mW min;Vo 15V;Eff 2.0% min
29	GC5615B	14	GA	F111b†	Gunn Diode;Freq 6.0-8.0GHz;Po 150mW min;Vo 12.5V;Eff 2.0% min
30	GC5615C	14	GA	F111b†	Gunn Diode;Freq 8.0-10GHz;Po 150mW min;Vo 11V;Eff 2.0% min
31	GC5615D	14	GA	F111b†	Gunn Diode;Freq. 10-12.5GHz;Po 150mW min;Vo 9.5V;Eff 2.0 min.
32	GC5615E	14	GA	F111b†	Gunn Diode;Freq. 12.5-16.5GHz;Po 150mW min;Vo 8.0V;Eff 2.0 min.
33	GC5615F	14	GA	F111b†	Gunn Diode;Freq. 16.5-20.5GHz;Po 150mW;Vo 6.5V;Eff 2.0 min.
34	GC5620A	14	GA	F111b†	Gunn Effect;C Band;Freq 4GHz-6GHz;PO 200mW min;VO 15V;Eff 2.5% min
35	GC5620B	14	GA	F111b†	Gunn Effect;C Band;Freq 6GHz-8GHz;PO 200mW min;VO 12.5V;Eff 2.5% min
36	GC5620C	14	GA	F111b†	Gunn Effect;X Band;Freq 8GHz-10GHz;PO 200mW min;VO 11V;Eff 2.5% min
37	GC5620D	14	GA	F111b†	Gunn Effect;X Band;Freq 10GHz-12.5GHz;PO 200mW min;VO 9.5V;Eff 2.5% min
38	GC5620E	14	GA	F111b†	Gunn Effect;Ku Band;Freq 12.5GHz-16.5GHz;Po 200mW min;Vo 8V;Eff 2.5% min
39	GC5620F	14	GA	F111b†	Gunn Effect;K Band;Freq 16.5GHz-20.5GHz;PO 200mW min;VO 6.5V;Eff 2.5% min
40	GC5625A	14	GA$	M988	Gunn;Freq 4.0-6.0GHz;Vo 15.0V;Po min 250mW;Io 490mA;E(FF) 4% min
41	GC5625B	14	GA$	M988	Gunn;Freq 6.0-8.0GHz;Vo 12.5V;Po min 250mW;Io 590mA;E(FF) 4% min
42	GC5625C	14	GA$	M988	Gunn;Freq 8.0-10GHz;Vo 11.0V;Po min 250mW;Io 670mA;E(FF) 4% min
43	GC5625D	14	GA$	M988	Gunn;Freq 10.0-12.5GHz;Vo 9.5V;Po min 250mW;Io 770mA;E(FF) 4% min
44	GC5625E	14	GA$	M988	Gunn;Freq 12.5-16.5GHz;Vo 8.0V;Po min 250mW;Io 925mA;E(FF) 4% min
45	GC5630A	14	GA	F111b†	Gunn Effect;C Band;Freq 4GHz-6GHz;PO 300mW min;VO 15V;Eff 3% min
46	GC5630B	14	GA	F111b†	Gunn Effect;C Band;Freq 6GHz-8GHz;PO 300mW min;VO 12.5V;Eff 3% min
47	GC5630C	14	GA	F111b†	Gunn Effect;X Band;Freq 8GHz-10GHz;PO 300mW min;VO 11V;Eff 3% min
48	GC5630D	14	GA	F111b†	Gunn Effect;X Band;Freq 10GHz-12.5GHz;PO 300mW min;VO 9.5V;Eff 3% min
49	GC5630E	14	GA	F111b†	Gunn Effect;Ku Band;Freq 12.5GHz-16.5GHz;PO 300mW min;VO 8V;Eff 3% min
50	GC5640A	14	GA	F111b†	Gunn Effect;C Band;Freq 4GHz-6GHz;PO 400mW min;VO 15V;Eff 3% min
51	GC5640B	14	GA	F111b†	Gunn Effect;C Band;Freq 6GHz-8GHz;PO 400mW min;VO 12.5V;Eff 3% min
52	GC5640C	14	GA	F111b†	Gunn Effect;X Band;Freq 8GHz-10GHz;PO 400mW min;VO 11V;Eff 3% min
53	GC5640D	14	GA	F111b†	Gunn Effect;X Band;Freq 10GHz-12.5GHz;Po 400mW;Vo 9.5V;Eff 3% min
54	GC5640E	14	GA	F111b†	Gunn Effect;Ku Band;Freq 12.5GHz-16.5GHz;PO 400mW min;VO 8V;Eff 3% min
55	GC5650A	14	GA	F111b†	Gunn Effect;C Band;Freq 4GHz-6GHz;PO 500mW min;VO 15V;Eff 3.5% min
56	GC5650B	14	GA	F111b†	Gunn Effect;C Band;Freq 6GHz-8GHz;PO 500mW min;VO 12.5V;Eff 3.5% min
57	GC5650C	14	GA	F111b†	Gunn Effect;X Band;Freq 8GHz-10GHz;PO 500mW min;VO 11V;Eff 3.5% min
58	GC5650D	14	GA	F111b†	Gunn Effect;X Band;Freq 10GHz-12.5GHz;PO 500mW min;VO 9.5V;Eff 3.5% min
59	GC5730A	14	GA$	M988	Gunn;Freq 4.0-6.0GHz;Vo 15V;Po min 300mW;Io 335mA;E(FF) 6% min
60	GC5730B	14	GA$	M988	Gunn;Freq 6.0-8.0GHz;Vo 12.5V;Po min 300mW;Io 400mA;E(FF) 6% min
61	GC5730C	14	GA$	M988	Gunn;Freq 8.0-10GHz;Vo 11V;Po min 300mW;Io 455mA;E(FF) 6% min
62	GC5730D	14	GA$	M988	Gunn;Freq 10-12.5GHz;Vo 9.5V;Po min 300mW;Io 530mA;E(FF) 6% min
63	GC5730E	14	GA$	M988	Gunn;Freq 12.5-16.5GHz;Vo 8.0V;Po min 300mW;Io 625mA;E(FF) 6% min
64	GC5740A	14	GA$	M988	Gunn;Freq 4.0-6.0GHz;Vo 15V;Po min 400mW;Io 450mA;E(FF) 6% min
65	GC5740B	14	GA$	M988	Gunn;Freq 6.0-8.0GHz;Vo 12.5V;Po min 400mW;Io 540mA;E(FF) 6% min
66	GC5740C	14	GA$	M988	Gunn;Freq 8.0-10GHz;Vo 11V;Po min 400mW;Io 610mA;E(FF) 6% min
67	GC5740D	14	GA$	M988	Gunn;Freq 10-12.5GHz;Vo 9.5V;Po min 400mW;Io 705mA;E(FF) 6% min
68	GC5740E	14	GA$	M988	Gunn;Freq 12.5-16.5GHz;Vo 8.0V;Po min 400mW;Io 840mA;E(FF) 6% min
69	GC5750A	14	GA$	M988	Gunn;Freq 4.0-6.0GHz;Vo 15V;Po min 500mW;Io 560mA;E(FF) 6% min
70	GC5750B	14	GA$	M988	Gunn;Freq 6.0-8.0GHz;Vo 12.5V;Po min 500mW;Io 665mA;E(FF) 6% min
71	GC5750C	14	GA$	M988	Gunn;Freq 8.0-10GHz;Vo 11V;Po min 500mW;Io 755mA;E(FF) 6% min
72	GC5750D	14	GA$	M988	Gunn;Freq 10-12.5GHz;Vo 9.5V;Po min 500mW;Io 875mA;E(FF) 6% min
73	GC5830A	14	$	M988	Gunn;Freq 4.0-6.0GHz;Vo 15V;Po min 300mW;Io 400mA;E(FF) 5% min
74	GC5830B	14	$	M988	Gunn;Freq 6.0-8.0GHz;Vo 12.5V;Po min 300mW;Io 480mA;E(FF) 5% min
75	GC5830C	14	$	M988	Gunn;Freq 8.0-10.0GHz;Vo 11.0V;Po min 300mW;Io 545mA;E(FF) 5% min
76	GC5830D	14	$	M988	Gunn;Freq 10-12.5GHz;Vo 9.5V;Po min 300mW;Io 630mA;E(FF) 5% min
77	GC5830E	14	$	M988	Gunn;Freq 12.5-16.5GHz;Vo 8.0V;Po min 300mW;Io 750mA;E(FF) 5% min
78	GC5840A	14	$	M988	Gunn;Freq 4.0-6.0GHz;Vo 15V;Po min 400mW;Io 535mA;E(FF) 5% min
79	GC5840B	14	$	M988	Gunn;Freq 6.0-8.0GHz;Vo 12.5V;Po min 400mW;Io 640mA;E(FF) 5% min
80	GC5840C	14	$	M988	Gunn;Freq 8.0-10GHz;Vo 11.0V;Po min 400mW;Io 725mA;E(FF) 5% min
81	GC5840D	14	$	M988	Gunn;Freq 10-12.5GHz;Vo 9.5V;Po min 400mW;Io 840mA;E(FF) 5% min
82	GC5840E	14	$	M988	Gunn;Freq 12.5-16.5GHz;Vo 8.0V;Po min 400mW;Io 1.0A;E(FF) 5% min
83	GC5850A	14	$	M988	Gunn;Freq 4.0-6.0GHz;Vo 15V;Po min 500mW;Io 665mA;E(FF) 5% min
84	GC5850B	14	$	M988	Gunn;Freq 6.0-8.0GHz;Vo 12.5V;Po min 500mW;Io 800mA;E(FF) 5% min
85	GC5850C	14	$	M988	Gunn;Freq 8.0-10GHz;Vo 11.0V;Po min 500mW;Io 910mA;E(FF) 5% min
86	GC5850D	14	$	M988	Gunn;Freq 10-12.5GHz;Vo 9.5V;Po min 500mW;Io 1050mA;E(FF) 5% min
87	GC5901	14	GA$	V7	Gunn;Fo 9.475GHz;Po min 5mW;Vo 7.0-12V;Io 90mA;Ith 135mA
88	GC5902	14	GA$	V7	Gunn;Fo 9.475GHz;Po min 10mW;Vo 7.0-12V;Io 160mA;Ith 245mA
89	GC5903	14	GA$	V7	Gunn;Fo 10.525GHz;Po min 5mW;Vo 7.0-11.0V;Io 90mA;Ith 135mA
90	GC5904	14	GA$	V7	Gunn;Fo 10.525GHz;Po min 10mW;Vo 7.0-11.0V;Io 160mA;Ith 245mA
91	GD408A	14	GA	F58	Gunn Diode;Freq 6.0 to 9.0GHz;Pt 30mW min;n 2.0% typ.
92	GD408B	14	GA	F58	Gunn Diode;Freq 6.0 to 9.0GHz;Pt 60mW min;n 2.0% typ.
93	GD408C	14	GA	F58	Gunn Diode;Freq 6.0 to 9.0GHz;Pt 10W min;n 2.0% typ.
94	GD408D	14	GA	F58	Gunn Diode;Freq 6.0 to 9.0GHz;Pt 15W min;n 2.0% typ.
95	GD411A	14	GA	F58	Gunn Diode;Freq 8 to 126Hz;Pt 30mW min;n 2.0% typ.
96	GD411B	14	GA	F58	Gunn Diode;Freq 8 to 126Hz;Pt 60mW min;n 2.0% typ.
97	GD411C	14	GA	F58	Gunn Diode;Freq 8 to 126Hz;Pt 10W min;n 2.0% typ.
98	GD411D	14	GA	F58	Gunn Diode;Freq 8 to 126Hz;Pt .15W min;n 2.0% typ.
99	GD411E	14	GA	F58	Gunn Diode;Freq 8 to 126Hz;Pt .20W min;n 2.0% typ.
100	GD508A	14	GA	F27ae	Gunn Diode;Freq 6.0 to 9.0GHz;Pt 30mW min;n 2.0% typ.
101	GD508B	14	GA	F27ae	Gunn Diode;Freq 6.0 to 9.0GHz;Pt 60mW min;n 2.0% typ.
102	GD508C	14	GA	F27ae	Gunn Diode;Freq 6.0 to 9.0GHz;Pt .10W min;n 2.0% typ.
103	GD508D	14	GA	F27ae	Gunn Diode;Freq 6.0 to 9.0GHz;Pt .15W min;n 2.0% typ.
104	GD508E	14	GA	F27ae	Gunn Diode;Freq 6.0 to 9.0GHz;Pt .20W min;n 2.0% typ.
105	GD511A	14	GA	F27ac	Gunn Diode;Freq 8 to 126Hz;Pt 30mW min;n 2.0% typ.
106	GD511B	14	GA	F27ac	Gunn Diode;Freq 8 to 126Hz;Pt 60mW min;n 2.0% typ.
107	GD511C	14	GA	F27ae	Gunn Diode;Freq 8 to 126Hz;Pt .10W min;n 2.0% typ.
108	GD511D	14	GA	F27ac	Gunn Diode;Freq 8 to 126Hz;Pt .15W min;n 2.0% typ.
109	GD511E	14	GA	F27ae	Gunn Diode;Freq 8 to 126Hz;Pt .20W min;n 2.0% typ.
110	GD514A	14	GA	F27ae	Gunn Diode;Freq 12 to 16GHz;Pt 30mW min;n 2.0% typ.

8. MISCELLANEOUS DEVICES

IN ORDER OF (1) USE and (2) TYPE No.

LINE No.	[2] TYPE No.	[1] USE	DESCRIPTION MAT.	DWG. No.	TECHNICAL DATA
1	GD514B	14	GA	F27ae	Gunn Diode;Freq 12 to 16GHz;Pt 60mW min;n 2.0% typ.
2	GD514C	14	GA	F27ae	Gunn Diode;Freq 12 to 16GHz;Pt .10W min;n 2.0% typ.
3	GD514D	14	GA	F27ae	Gunn Diode;Freq 12 to 16GHz;Pt 150mW min;n 2.0% typ.
4	GD514E	14	GA	F27ae	Gunn Diode;Freq 12 to 16GHz;Pt .20W min;n 2.0% typ.
5	GD518A	14	GA	F27ae	Gunn Diode;Freq 15 to 21GHz;Pt 30mW min;n 2.0% typ.
6	GD518B	14	GA	F27ae	Gunn Diode;Freq 15 to 21GHz;Pt 60mW min;n 2.0% typ.
7	GD518C	14	GA	F27ae	Gunn Diode;Freq 15 to 21GHz;Pt .10W min;n 2.0% typ.
8	K9300	14		M1136b	Pulsed Gunn OSC:Range 18-26.5GHz,Mech Tuning ±100MHz,Pwr Out 2W peak,Oper Volt 10-20V
9	K9400	14		M1134b	Gunn Osc:Range 18-26.5GHz,Mech Tuning ±250MHz,Pwr Out 10-250mW, Oper Volt 6±1VDC
10	K9500	14		M1135b	Controlled Voltage Gunn Effect OSC:Range 18-26.5GHz,Pwr Out to 150mW,Mech and Elec Tuning
11▼	Ku9300	14		M1136a	Pulsed Gunn OSC;Range 12.4-18GHz;Mech Tuning ±100MHz;Pwr Out 3W peak;Oper Volt 15-25V
12♦	Ku9400	14		M1134a	Gunn Osc;Range 12.4-18GHz;Mech Tuning ±250MHz;Pwr Out 10-300mW;Oper Volt 8±1VDC
13	Ku9500	14		M1135a	Controlled Voltage Gunn Effect OSC:Range 12.4-18GHz,Pwr Out to 200mW,Mech and Elec Tuning
14	MA4980	14	Si	S328	S-Band,Aval.Oscill.;Freq. 8.2-12.4GHz;PO 10mW;EFF. 1.0% typ;Volt.70-100V typ;Cur.20mA typ.
15	MA4984	14	Si	S328	S-Band,Aval.Oscill.;Freq. 8.2-12.4GHz;PO 250mW;EFF. 4.5% typ;Volt.70-100V typ;Cur.90mA typ.
16	MA4985	14	Si	S328	X-Band,Aval.Oscill.;Freq. 12.4-18.0GHz;PO 100mW;EFF. 3.5% typ;Volt 45-75V typ;Cur.70mA typ.
17	MA4986	14	Si	S328	S-Band,Aval.Oscill.;Freq. 8.2-12.4GHz;PO 50mW;EFF. 2.0% typ;Volt.70-100V typ;Cur.30mA typ.
18	MA4987	14	Si	S328	S-Band,Aval.Oscill.;Freq. 8.2-12.4GHz;PO 100mW;EFF. 3.5% typ;Volt.70-100V typ;Cur.50mA typ.
19	MA4988	14	Si	S328	X-Band,Aval.Oscill.;Freq. 12.4-18.0GHz;PO 10mW;EFF. 1.0% typ;Volt.45-75V typ;Cur. 30mA typ.
20	MA4989	14	Si	S328	X-Band,Aval.Oscill.;Freq. 12.4-18.0GHz;PO 50mW;EFF. 2.0% typ;Volt.45-75V typ;Cur. 55mA typ.
21	MA4992	14	Si	S328	Ku-Band,Aval.Oscill.;Freq. 18.0-26.0GHz;PO 10mW;EFF. .75% typ;Volt 30-50V typ;Cur.50mA typ.
22	MA4998	14	Si	S328	Ku-Band,Aval.Oscill.;Freq. 18.0-26.0GHz;PO 50mW;EFF. 1.5% typ;Volt.30-50V typ;Cur.100mA typ
23▼	MA46019	14	GA	F163	Pulsed IMPATT;Oper Freq 9-10GHz;Duty cycle 30%;Pulse Width 1-2uS;Min Peak Pout 24W
24▼	MA46020	14	GA	F162	Pulsed IMPATT;Oper Freq 9-10GHz;Duty cycle 10%;Pulse Width 1-4uS;Min Peak Pout 30W
25♦	MA46036	14	GA	F161	CW IMPATT;Oper Freq 10-12GHz;Min Pout 3.8W;VB 20-30V at 1mA;Junct Cap 20-30pF at 1MHz-0V
26♦	MA46037	14	GA	F161	CW IMPATT;Oper Freq 6-8GHz;Min Pout 4W;VB 35-50V at 1mA;Junct Cap 16-24pF at 1MHz-0V Bias
27♦	MA46038	14	GA	F161	CW IMPATT;Oper Freq 8-10GHz;Min Pout 3.8W;VB 25-35V at 1mA;Junct Cap 20-30pF at 1MHz-0V Bias
28♦	MA46039	14	GA	F161	CW IMPATT;Oper Freq 12-15GHz;Min Pout 2.5W;VB 17-25V at 1mA;Junct Cap 10-15pF at 1MHz-0V
29♦	MA46040	14	GA	F161	CW IMPATT;Oper Freq 6GHz min;Min Pout 1.5W;VB 65-75V at 1mA;Junct Cap 7-10pF at 1MHz-0V Bias
30♦	MA46041	14	GA	S430g	CW IMPATT;Oper Freq 17-19GHz;Min Pout 500mW;VB 22-26V at 1mA;Junct Cap 2-3pF at 1MHz-0V Bias
31▼	MA46042	14	GA	F161	Pulsed IMPATT;Oper Freq 5.5-6.5GHz;Duty cycle 1-10%;Pulse width 5-15us;Min Peak Pout 10W
32▼	MA46044	14	GA	F162	Pulsed IMPATT;Oper Freq 12-16GHz;Duty cycle 15-30%;Pulse width 1-5us;Min Peak Pout 10W
33▼	MA46045	14	GA	F162	Pulsed IMPATT;Oper Freq 8-10GHz;Duty cycle 15-30%;Pulse width 1-5us;Min Peak Pout 12W
34▼	MA46046	14	GA	F161	Pulsed IMPATT;Oper Freq 9-11GHz;Duty cycle 1-10%;Pulse width 5-15uS;Min Peak Pout 10W
35▼	MA46046-275	14	GA	F162	Pulsed IMPATT;Oper Freq 9-11GHz;Duty cycle 1-10%;Pulse width 5-15uS;Min Peak Pout 10W
36▼	MA46047	14	GA	F162	Pulsed IMPATT;Oper Freq 13-16GHz;Duty Cycle 1-10%;Pulse width 5-15uS;Min Peak Pout 10W
37▼	MA46048	14	GA	F162	Pulsed IMPATT;Oper Freq 16.5-17.5GHz;Duty cycle 1-10%;Pulse width 5-15uS;Min Peak Pout 10W
38♦	MA46049	14	GA	F162	CW IMPATT;Oper Freq 14-17GHz;Min Pout 2.5W;VB 13-18V at 1mA;Junct Cap 10-15pF at 1MHz-0V
39▼	MA48182-138	14	GA	S430d	CW Gunn;Freq 50-60GHz;Min Pout 50mW;max Voper 4.5V;max loper 1.2A
40	MA49104	14	GA	S356a	CW Gunn Diode;Freq. 8.0-12.4GHz;PO 25mW;Volt. 12Vdc max;Current 300mA max.
41	MA49106	14	GA	S356a	Gunn Diode;Freq. 8.0-12.4GHz;PO 50mW,Volt. 12Vdc max,Current 450mA max
42	MA49107	14	GA	S356a	Gunn Diode;Freq. 8.0-12.4GHz;PO 100mW,Volt. 12Vdc max,Current 650mA max
43	MA49109	14	GA	S356a	Gunn Diode;Freq. 8.0-12.4GHz;PO 250mW,Volt. 12Vdc max,Current 1.05A max
44	MA49110	14	GA	S356a	CW Gunn;Freq. 8.0-12.4GHz;PO 500mW;Bias 12Vdc max;Thresh. Curr. 2.5A max
45	MA49117-118	14		S430c	Gunn;Freq 8-12.4GHz;Pout 100mW;Vop 8V min-12V max;Iop 450mA min-600mA max.
46	MA49121	14	GA	S356a	CW Gunn;Freq. 12.4-18GHz;PO 25mW;Volt. 10Vdc max;Current 300mA max.
47	MA49122	14	GA	S356a	CW Gunn;Freq. 12.4-18GHz;PO 50mW;Volt. 10Vdc max;Current 500mA max.
48	MA49123	14	GA	S356a	CW Gunn;Freq 12.4-18 GHz;PO 100mW,Volt .10Vdc max,Current 750mA max
49	MA49124	14	GA	S356a	CW Gunn;Freq. 12.4-18GHz;PO 250mW,Volt. 10Vdc max,Current 1.15A max
50	MA49126-118	14		S430c	Gunn;Freq 12.4-18GHz;Pout 100mW;Vop 6V min-10V max;Iop 500mA min-750mA max.
51	MA49126-138	14		S430d	Gunn;Freq 12.4-18GHz;Pout 100mW;Vop 6V min-10V max;Iop 500mA min-750mA max.
52	MA49128-138	14		S430d	Gunn;Freq 18-26.5GHz;Pout 100mW;Vop 4V min-8V max;Iop 500mA min-900mA max.
53	MA49135	14	GA	S356a	CW Gunn;Freq. 5.0-8.0GHz;PO 25mW,Volt. 14Vdc max,Current 250mA max
54	MA49136	14	GA	S428	CW Gunn;Freq 5.0-8.0 GHz;PO 50mW,Volt 14Vdc max,Current 350mA max
55	MA49137	14	GA	S428	CW Gunn;Freq 5.0-8.0 GHz;PO 100mW,Volt 14Vdc max,Current 500mA max
56	MA49138	14	GA	S356a	CW Gunn;Freq. 5.0-8.0GHz;PO 250mW,Volt. 14Vdc max,Current 700mA max
57	MA49139	14	GA	S356a	CW Gunn;Freq. 4.0-8.0GHz;PO 500mW;Bias 14Vdc max;Thresh. Curr. 2.0A max
58	MA49140-118	14		S430c	Gunn;Freq 5-8GHz;Pout 100mW;Vop 10V min-14V max;Iop 350mA min-550mA max.
59	MA49145	14	GA	S490	CW Gunn;Freq. 4.4-5.0GHz;PO 1.0W min;Bias 15Vdc max;Thresh. Curr. 2.8A max
60	MA49146	14	GA	S490	CW Gunn;Freq. 5.9-6.4GHz;PO 1.0W min;Bias 14Vdc max;Thresh Curr. 3.0A max
61	MA49147	14	GA	S490	CW Gunn;Freq. 6.5-7.2GHz;PO 1.0W min;Bias 14Vdc max;Thresh. Curr. 3.0A max
62	MA49148	14	GA	S490	CW Gunn;Freq. 7.1-7.9GHz;PO 1.0W min;Bias 14Vdc max;Thresh. Curr. 3.5A max
63	MA49151	14	GA	F115	CW Gunn;Freq. 5.0-8.0GHz;PO 25mW,Volt. 14Vdc max,Current 250mA max
64	MA49152	14	GA	F115	CW Gunn;Freq. 5.0-8.0GHz;PO 50mW,Volt. 14Vdc max,Current 350mA max
65	MA49153	14	GA	F115	CW Gunn;Freq. 5.0-8.0GHz;PO 100mW,Volt. 14Vdc max,Current 500mA max
66	MA49154	14	GA	F115	CW Gunn;Freq. 5.0-8.0GHz;PO 250mW,Volt. 14Vdc max,Current 700mA max
67	MA49156	14	GA	F115	CW Gunn;Freq. 8.0-12.4GHz;PO 25mW;Volt 12Vdc max;Current 300mA max.
68	MA49157	14	GA	F115	CW Gunn;Freq. 8.0-12.4GHz;PO 50mW,Volt. 12Vdc max,Current 450mA max
69	MA49158	14	GA	F115	CW Gunn;Freq. 8.0-12.4GHz;PO 100mW,Volt. 12Vdc max,Current 650mA max
70	MA49159	14	GA	F115	CW Gunn;Freq. 8.0-12.4GHz;PO 250mW,Volt. 12Vdc max,Current 1.05A max
71	MA49161	14	GA	F115	CW Gunn;Freq. 12.4-18GHz;PO 25mW;Volt. 10Vdc max;Current 300mA max.
72	MA49162	14	GA	F115	CW Gunn;Freq. 12.4-18GHz;PO 50mW;Volt. 10Vdc max;Current 500mA max.
73	MA49163	14	GA	F115	CW Gunn;Freq. 12.4-18GHz;PO 100mW,Volt. 10Vdc max,Current 750mA max
74	MA49164	14	GA	F27f	CW Gunn;Freq. 12.4-15GHz;PO 250mW;Volt 10Vdc max;Current 1.6A max.
75	MA49172-138	14		S430d	Gunn;Freq 26.5-40GHz;Pout 50mW;Vop 3.5V min-6V max;Iop 800mA max.
76	MA49173-138	14		S430d	Gunn;Freq 26-40GHz;Pout 100mW;Vop 3.5V min-6V max;Iop 1.2A max.
77	MA49177-138	14	GA	S430d	Gunn;Freq. 26.5-35GHz;Pout 150mW min;Vop 4.0V min,8.0V max;Iop 1.4A max
78	MA49178-118	14	GA	S430c	Gunn;Freq. 18.-26.5GHz;Pout 250mW min;Vop 5.0V min,8.0V max;Iop 1.6A max
79	MA49179-118	14	GA	S430c	Gunn;K-Ka-Band;Freq 18-26.5GHz;Min CW Power Output 50mW;BW ±5%;Vop 5V min,8Vmax;Iop600mAmax
80	MA49179-138	14	GA	S430d	Gunn;K-Ka-Band;Freq 18-26.5GHz;Min CW Power Output 50mW;BW ±5%;Vop 5V min,8Vmax;Iop600mAmax
81	MA49180-118	14	GA	S430c	Gunn;K-Ka.band;Freq 18-26.5GHz;Min CW Power Output 100mW;BW±5%;Vop 5V min,8Vmax;Iop 1A max
82	MA49180-138	14	GA	S430d	Gunn;K-Ka-Band;Freq 18-26.5GHz;Min CW Power Output 100mW;BW±5%;Vop 5V min,8Vmax;Iop 1A max
83	MA49181-138	14	GA	S430d	Gunn;Freq. 40-50GHz;Pout 50mW min;Vop 2.5V min,4.5V max;Iop 1.5A max
84	MA49182-138	14	GA	S430d	Gunn;Freq. 50-60GHz;Pout 50mW min;Vop 2.5V min,4.5V max;Iop 1.5A max
85	MA49183	14	GA	S490	CW Gunn;Freq. 8.0-10GHz;PO 750mW min;Bias 12Vdc max;Thresh. Curr. 3.0A max
86	MA49184	14	GA	S356a	CW Gunn;Freq. 12.4-14.5GHz;PO 500mW min;Bias 10Vdc max;Thresh. Curr. 3.0A max
87	MA49185	14	GA	S356a	CW Gunn;Freq. 4.4-5.0GHz;PO 500mW min;Bias 14Vdc max;Thresh. Curr. 2.0A max
88	MA49186	14	GA	S356a	CW Gunn;Freq. 5.9-6.4GHz;PO 500mW min;Bias 14Vdc max;Thresh. Curr. 2.0A max
89	MA49187	14	GA	S356a	CW Gunn;Freq. 6.5-7.2GHz;PO 500mW min;Bias 14Vdc max;Thresh. Curr. 2.0A max
90	MA49188	14	GA	S356a	CW Gunn;Freq. 7.1-7.9GHz;PO 500mW min;Bias 14Vdc max;Thresh. Curr. 2.0A max
91	MA49189	14	GA	S356a	CW Gunn;Freq. 10.7-11.7GHz;PO 500mW min;Bias 12Vdc max;Thresh. Curr. 2.5A max
92	MA49190	14	GA	S430c	18-26.5GHz Gunn;Po 10mW typ
93	MA49191	14	GA	S430d	26.5-40GHz Gunn;Po 10mW typ
94♦	MA49191-138	14	GA	S430d $	CW Gunn;Freq 26.5-40GHz;Min Pout 10mW;max Voper 6.0V;max loper 250mA
95	MA49192	14	GA	S430d	40-60GHz Gunn;Po 10mW typ
96♦	MA49192-138	14	GA	S430d $	CW Gunn;Freq 40-60GHz;Min Pout 10mW;max Voper 4.0V;max loper 300mA
97	MA49193	14	GA	S430d	40-50GHz Gunn;Po 75mW typ
98▼	MA49193-138	14	GA	S430d	CW Gunn;Freq 40-50GHz;Min Pout 75mW;max Voper 4.5V;max loper 1.4A
99	MA49195	14	GA	S430d	60-75GHz Gunn;Po 25mW typ
100♦	MA49260	14	GA	S356a	Pulse;Freq 5.0-8.0GHz;PO 5W min;Max Vp 45V;Ip 5-6A typ
101♦	MA49265	14	GA	S356a	Pulse;Freq 8-12GHz;PO 5.0W min;Max Vp 35V;Ip 5-6A typ
102♦	MA49508	14	GA	F115	CW Gunn;Freq 9.4GHz or 10.5GHz;PO 10mW min;Vop 12V max;Iop 160mA max
103	MA49618	14	GA	F115	Gunn;Freq 9.4GHz or 10.525GHz;Min Power 5.0mW;Vop 12V max;Iop 80mA max
104♦	MA49628	14	GA	F115	Gunn;Freq 24.1GHz;Pd 10mW min;Vop 8.0V max;Iop 200mA max
105▼	MA49837-138	14	GA	S430d	CW Gunn;Freq 26.5-35GHz;Min Pout 250mW;max Voper 8.0V;max loper 1.6A
106▼	MA49838-138	14	GA	S430d	CW Gunn;Freq 40-50GHz;Min Pout 100mW;max Voper 4.5V;max loper 1.6A
107	ML4703	14	Si	F27as	Impatt;Po 600mW min;Freq 5.0-8.0GHz;Efficiency 5.0% min;Op Volt. 115V.
108	ML4703S	14	Si	F27at	Impatt;Po 1.0W min;Freq. 5.0-8.0GHz;Efficiency 5.5% min;Vop 125V.
109	ML4704	14	Si	F27as	Impatt;Po 600mW min;Freq 8.0-10.0GHz;Efficiency 6.0% min;Op Volt. 100V.
110	ML4704S	14	Si	F27at	Impatt;Po 900mW min;Freq. 8.0-10GHz;Efficiency 5.5% min;Vop 105V.

8. MISCELLANEOUS DEVICES

IN ORDER OF (1) USE and (2) TYPE No.

LINE No.	[2] TYPE No.	[1] USE	DESCRIPTION MAT.	DESCRIPTION DWG. No.	TECHNICAL DATA
1	ML4705	14	Si	F27as	Impatt;Po 550mW min;Freq 10.0-12.0GHz;Efficiency 5.0% min;Op Volt. 85V.
2	ML4705S	14	Si	F111a†	IMPATT Diode; Freq Range 10-12GHz;VB 70V typ;Vop 92V typ; Iop 160mA typ
3	ML4706	14	Si	F27as	Impatt;Po 300mW min;Freq 12.0-14.0GHz;Efficiency 4.0% min;Op Volt. 65V.
4	ML4707	14	Si	F27as	Impatt;Po 250mW min;Freq 14.0-17.0GHz;Efficiency 3.0% min;Op Volt. 55V.
5	ML4708	14	Si	S430e	Impatt Diode;Freq Rng 17-20GHz;CW Output Power 200mW min;VBR 42V;Io 150mA;Cj 0.3pF
6	ML4709	14	Si	S430e	Impatt Diode;Freq Rng 20-24GHz;CW Output Power 200mW min;VBR 35V;Io 160mA;Cj 0.3pF
7	ML4750	14	Si	F120	IMPATT Diode;Double Drift;Freq10.3GHz;VB 110V
8	ML4803	14	Si	S396	Impatt;Po 1.5W min;Freq 5.0-8.0GHz;Efficiency 5.5% min;Op Volt 135V.
9	ML4804	14	Si	S396	Impatt;Po 1.25W min;Freq 8.0-10.0GHz;Efficiency 5.5% min;Op Volt 100V.
10	ML4805	14	Si	F27as	Impatt;Po 1.0W min;Freq 10.0-12.0GHz;Efficiency 5.0% min;Op Volt 90V.
11	MS805B	14	GA	F27d	Avalanche Diode;10 to 12GHz;Pout 100mW min. CW
12	MS806B	14	GA	F27d	Avalanche Diode;10 to 12GHz;Pout 200mW min. CW
13	MS809B	14	GA	F27d	Avalanche Diode;10 to 12GHz;Pout 500mW min. CW
14	MS811B	14	GA	F27d	Avalanche Diode;10 to 12GHz;Pout 1.0W min. CW
15	MS821A	14	GA	S268†	Impatt Diode;Freq Rng 4.4-5.4GHz;PO 2.3W min;Eff 12% Typ;CT 2.2pf Typ
16	MS821B	14	GA	S268†	Impatt Diode;Freq Rng 4.4-5.4GHz;PO 1.0W min;Eff 10% Typ;CT 2.2pf Typ
17	MS822A	14	GA	S268†	Impatt Diode;Freq Rng 5.4-6.4GHz;PO 2.1W min;Eff 12.5% Typ;CT 2.0pf Typ
18	MS822B	14	GA	S268†	Impatt Diode;Freq Rng 5.4-6.4GHz;PO 1.0W min;Eff 10% Typ;CT 2.0pf Typ
19	MS823A	14	GA	S268†	Impatt Diode;Freq Rng 6.4-7.1GHz;PO 2.0W min;Eff 12.5% Typ;CT 1.6pf Typ
20	MS823B	14	GA	S268†	Impatt Diode;Freq Rng 6.4-7.1GHz;PO 1.0W min;Eff 10% Typ;CT 1.6pf Typ
21	MS824A	14	GA	S268†	Impatt Diode;Freq Rng 7.1-8.5GHz;PO 1.8W min;Eff 12.5% Typ;CT 1.4pf Typ
22	MS824B	14	GA	S268†	Impatt Diode;Freq Rng 7.1-8.5GHz;PO 1.0W min;Eff 10% Typ;CT 1.4pf Typ
23	MS825A	14	GA	S268†	Impatt Diode;Freq Rng 8.5-10.7GHz;PO 1.3W min;Eff 11% Typ;CT 1.2pf Typ
24	MS825B	14	GA	S268†	Impatt Diode;Freq Rng 8.5-10.7GHz;PO 0.6W min;Eff 9.0% Typ;CT 1.2pf Typ
25	MS826A	14	GA	S268†	Impatt Diode;Freq Rng 10.7-11.7GHz;PO 1.0W min;Eff 11% Typ;CT 1.0pf Typ
26	MS826B	14	GA	S268†	Impatt Diode;Freq Rng 10.7-11.7GHz;PO 0.5W min;Eff 9.0% Typ;CT 1.0pf Typ
27	MS827A	14	GA	S268†	Impatt Diode;Freq Rng 11.7-15.3GHz;PO 800mW min;Eff 10% typ;Ct 900ff typ
28	MS827B	14	GA	S268†	Impatt Diode;Freq Rng 11.7-15.3GHz;PO 400mW min;Eff 8.0% typ;Ct 900ff typ
29	MS833B	14	GA	F27d	Avalanche Diode;6 to 8GHz;Pout 100mW min. CW
30	MS834B	14	GA	F27d	Avalanche Diode;6 to 8GHz;Pout 200mW min. CW
31	MS835B	14	GA	F27d	Avalanche Diode;6 to 8GHz;Pout 500mW min. CW
32	MS836B	14	GA	F27d	Avalanche Diode;6 to 8GHz;Pout 1.0W min. CW
33	MS837B	14	GA	F27d	Avalanche Diode;6 to 8GHz;Pout 2.0W min. CW
34	MS855B	14	GA	F27d	Avalanche Diode;15 to 18GHz;Pout 100mW min. CW
35	MS856B	14	GA	F27d	Avalanche Diode;15 to 18GHz;Pout 200mW min. CW
36	MS858B	14	GA	F27d	Avalanche Diode;15 to 18GHz;Pout 500mW min. CW
37	MS871B	14	GA	F27d	Avalanche Diode;22 to 26GHz;Pout 20mW min. CW
38	MS872B	14	GA	F27d	Avalanche Diode;22 to 26GHz;Pout 50mW min. CW
39	MS873B	14	CA	F27d	Avalanche Diode;22 to 26GHz;Pout 100mW min. CW
40	MS891B	14	GA	F27d	Avalanche Diode;33 to 40GHz;Pout 20mW min. CW
41	MS892B	14	GA	F27d	Avalanche Diode;33 to 40GHz;Pout 50mW min. CW
42	MS925A	14		S268	9-11GHz Impatt;Po 3.5W min,eff 20% min at 10GHz,55V,275mA;VBR 40V,Cj 1.8pf typ
43	MS925B	14		S268	9-11GHz Impatt;Po 2.5W min,eff 15% min at 10GHz,55V,235mA;VBR 40V,Cj 1.8pf typ
44	MS927A	14		S268	12-14GHz Impatt;Po 2.5W min,eff 20% min at 10GHz,40V,300mA;VBR 24V,Cj 1.5pf typ
45	MS927B	14		S268	12-14GHz Impatt;Po 1.5W min,eff 15% min at 10GHz,40V,300mA;VBR 24V,Cj 1.5pf typ
46	MS928A	14		S268	14-16GHz Impatt;Po 2.5W min,eff 17% min at 10GHz,36V,330mA;VBR 20V,Cj 1.5pf typ
47	MS928B	14		S268	14-16GHz Impatt;Po 1.5W min,eff 12% min at 10GHz,36V,250mA;VBR 20V,Cj 1.5pf typ
48	ND7D07-1R	14	Si	M1040	GUNN;Freq Range 6-8GHz;Min Pout 15mW;Fout 7GHz;Eff 0.7%;Vop 13V;Iop 200mA
49	ND7D07-5F	14	Si	M1036	GUNN;Freq Range 6 8ghz;Min Pout 15mW;Fout 7GHz;Eff 0.7%;Vop 13V;Iop 200mA
50	ND7D10-1R	14	Si	M1040	GUNN;Freq Range 8-12GHz;Min Pout 15mW;Fout 10GHz;Eff 0.7%;Vop 10V;Iop 200mA
51	ND7D10-5F	14	Si	M1036	GUNN;Freq Range 8-12GHz;Min Pout 15mW;Fout 10GHz;Eff 0.7%;Vop 10V;Iop 200mA
52	ND7D15-1R	14	Si	M1040	GUNN;Freq Range 12-16GHz;Min Pout 15mW;Fout 14GHz;Eff 0.7%;Vop 8.0V;Iop 300mA
53	ND7D15-5F	14	Si	M1036	GUNN;Freq Range 12-16GHz;Min Pout 15mW;Fout 14GHz;Eff 0.7%;Vop 8.0V;Iop 300mA
54	ND7D19-1R	14	Si	M1040	GUNN;Freq Range 16 22GHz;Min Pout 15mW;Fout 19GHz;Eff 0.7%;Vop 6.5;Iop 300mA
55	ND7D19-5F	14	Si	M1036	GUNN;Freq Range 16 22GHz;Min Pout 15mW;Fout 19GHz;Eff 0.7%;Vop 6.5V;Iop 300mA
56	ND7F07-1R	14	Si	M1040	GUNN;Freq Range 6-8GHz;Min Pout 30mW;Fout 7GHz;Eff 1.0%;Vop 13V;Iop 250mA
57	ND7F07-5F	14	Si	M1036	GUNN;Freq Range 6-8GHz;Min Pout 30mW;Fout 7GHz;Eff 1.0%;Vop 13V;Iop250mA
58	ND7F10-1R	14	Si	M1040	GUNN;Freq Range 8-12GHz;Min Pout 30mW;Fout 10GHz;Eff 1.0%;Vop 10V;Iop 300mA
59	ND7F10-5F	14	Si	M1036	GUNN;Freq Range 8-12GHz;Min Pout 30mW;Fout 10GHz;Eff 1.0%;Vop 10V;Iop 300mA
60	ND7F15-1R	14	Si	M1040	GUNN;Freq Range 12-16GHz;Min Pout 30mW;Fout 14GHz;Eff 1.0%;Vop 8.0V;Iop 400mA
61	ND7F15-5F	14	Si	M1036	GUNN;Freq Range 12-16GHz;Min Pout 30mW;Fout 14GHz;Eff 1.0%;Vop 8.0V;Iop 400mA
62	ND7F19-1R	14	Si	M1040	GUNN;Freq Range 16 22GHz;Min Pout 30mW;Fout 19GHz;Eff 1.0%;Vop 6.5%;Iop 400mA
63	ND7F19-5F	14	Si	M1036	GUNN;Freq Range 16 22GHz;Min Pout 30mW;Fout 19GHz;Eff 1.0%;Vop 6.5%;Iop 400mA
64	ND7G07-1R	14	Si	M1040	GUNN;Freq Range 6-8GHz;Min Pout 60mW;Fout 7GHz;Eff 1.5%;Vop 13V;Iop 400mA
65	ND7G07-5F	14	Si	M1036	GUNN;Freq Range 6-8GHz;Min Pout 60mW;Fout 7GHz;Eff 1.5%;Vop 13V;Iop 400mA
66	ND7G07-5G	14	Si	M1036	GUNN;Freq Range 6-8GHz;Min Pout 60mW;Fout 7GHz;Eff 1.5%;Vop 13V;Iop 400mA
67	ND7G10-1R	14	Si	M1040	GUNN;Freq Range 8-12GHz;Min Pout 60mW;Fout 10GHz;Eff 1.5%;Vop 10V;Iop 400mA
68	ND7G10-5F	14	Si	M1036	GUNN;Freq Range 8-12GHz;Min Pout 60mW;Fout 10GHz;Eff 1.5%;Vop 10V;Iop 400mA
69	ND7G15-1R	14	Si	M1040	GUNN;Freq Range 12-16GHz;Min Pout 60mW;Fout 14GHz;Eff 1.5%;Vop 8.0V;Iop 500mA
70	ND7G15-5F	14	Si	M1036	GUNN;Freq Range 12-16GHz;Min Pout 60mW;Fout 14GHz;Eff 1.5%;Vop 8.0V;Iop 500mA
71	ND7G19-1R	14	Si	M1040	GUNN;Freq Range 16 22GHz;Min Pout 60mW;Fout 19GHz;Eff 1.5%;Vop 6.5V;Iop 600mA
72	ND7G19-5F	14	Si	M1036	GUNN;Freq Range 16 22GHz;Min Pout 60mW;Fout 19GHz;Eff 1.5%;Vop 6.5%;Iop 600mA
73	ND7G55-1T	14	Si	M1042	GUNN;Freq Range 50-55GHz;Min Pout 60mW;Fout 50GHz;Eff 2.0%Vop 3.5V;Iop 1.1A
74	ND7G60-1T	14	Si	M1042	GUNN;Freq Range 55-60GHz;Min Pout 60mW;Fout 55GHz;Eff 2.0%;Vop 3.0V;Iop 1.2A
75	ND7H07-1R	14	Si	M1040	GUNN;Freq Range 6-8GHz;Min Pout 100mW;Fout 7GHz;Eff 2.0%;Vop13V;Iop 500mA
76	ND7H07-5F	14	Si	M1036	GUNN;Freq Range 6-8GHz;Min Pout 100mW;Fout 7GHz;Eff 2.0%;Vop13V;Iop 500mA
77	ND7H10-1R	14	Si	M1040	GUNN;Freq Range 8-12GHz;Min Pout 100mW;Fout 10GHz;Eff 2.0%;Vop 10V;Iop 500mA
78	ND7H10-5F	14	Si	M1036	GUNN;Freq Range 8-12GHz;Min Pout 100mW;Fout 10GHz;Eff 2.0%;Vop 10V;Iop 500mA
79	ND7H15-1R	14	Si	M1040	GUNN;Freq Range 12-16GHz;Min Pout 100mW;Fout 14GHz;Eff 2.0%;Vop 8.0V;Iop 700mA
80	ND7H15-5F	14	Si	M1036	GUNN;Freq Range 12-16GHz;Min Pout 100mW;Fout 14GHz;Eff 2.0%;Vop 8.0V;Iop 700mA
81	ND7H45-1T	14	Si	M1042	GUNN;Freq Range 40-45GHz;Min Pout 80mW;Fout 40GHz;Eff 2.3%;Vop 4.0V;Iop 1.1A
82	ND7H50-1T	14	Si	M1042	GUNN;Freq Range 45-50GHz;Min Pout 80mW;Fout 45GHz;Eff 2.3%;Vop 3.5V;Iop 1.1A
83	ND7I19-1R	14	Si	M1040	GUNN;Freq Range 16-22GHz;Min Pout 100mW;Fout 19GHz;Eff 2.0%;Vop 6.5V;Iop 800mA
84	ND7I19-5F	14	Si	M1036	GUNN;Freq Range 16-22GHz;Min Pout 100mW;Fout 19GHz;Eff 2.0%;Vop 6.5V;Iop 800mA
85	ND7J07-1R	14	Si	M1040	GUNN;Freq Range 6-8GHz;Min Pout 150mW;Fout 7GHz;Eff 2.5%;Vop13V;Iop 600mA
86	ND7J07-5F	14	Si	M1036	GUNN;Freq Range 6-8GHz;Min Pout 150mW;Fout 7GHz;Eff 2.5%;Vop 13V;Iop 600mA
87	ND7J10-1R	14	Si	M1040	GUNN;Freq Range 8-12GHz;Min Pout 150mW;Fout 10GHz;Eff 2.5%;Vop 10V;Iop 600mA
88	ND7J10-5F	14	Si	M1036	GUNN;Freq Range 8-12GHz;Min Pout 150mW;Fout 10GHz;Eff 2.5%;Vop 10V;Iop 600mA
89	ND7J15-1R	14	Si	M1040	GUNN;Freq Range 12-16GHz;Min Pout 150mW;Fout 14GHz;Eff 2.5%;Vop 8.0V;Iop 900mA
90	ND7J15-5F	14	Si	M1036	GUNN;Freq Range 12-16GHz;Min Pout 150mW;Fout 14GHz;Eff 2.5%;Vop 8.0V;Iop 900mA
91	ND7J19-1R	14	Si	M1040	GUNN;Freq Range 16-22GHz;Min Pout 150mW;Fout 19GHz;Eff 2.5%;Vop 6.5V;Iop 1.0A
92	ND7J19-5F	14	Si	M1036	GUNN;Freq Range 16-22GHz;Min Pout 150mW;Fout 19GHz;Eff 2.5%;Vop 6.5V;Iop 1.0A
93	ND7K07-1R	14	Si	M1040	GUNN;Freq Range 6-8GHz;Min Pout 200mW;Fout 7GHz;Eff 3.0%;Vop13V;Iop 700mA
94	ND7K07-5F	14	Si	M1036	GUNN;Freq Range 6-8GHz;Min Pout 200mW;Fout 7GHz;Eff 3.0%;Vop13V;Iop 700mA
95	ND7K10-1R	14	Si	M1040	GUNN;Freq Range 8-12GHz;Min Pout 200mW;Fout 10GHz;Eff 30%;Vop 10V;Iop 700mA
96	ND7K10-5F	14	Si	M1036	GUNN;Freq Range 8-12GHz;Min Pout 200mW;Fout 10GHz;Eff 30%;Vop 10V;Iop 700mA
97	ND7K15-1R	14	Si	M1040	GUNN;Freq Range 12-16GHz;Min Pout 200mW;Fout 14GHz;Eff 3.0%;Vop 8.0V;Iop 1.0A
98	ND7K15-5F	14	Si	M1036	GUNN;Freq Range 12-16GHz;Min Pout 200mW;Fout 14GHz;Eff 3.0%;Vop 8.0V;Iop 1.0A
99	ND7N07-1K	14	Si	M1041	GUNN;Freq Range 6-8GHz;Min Pout 500mW;Fout 7.0GHz,E(FF) 3.0%;Vop 11.0V;Iop 1.8A
100	ND7N10-1K	14	Si	M1041	GUNN;Freq Range 8-12GHz;Min Pout 500mW;Fout 10GHz;Eff 3.0%;Vop 8.0V;Iop 2.4A
101	ND8G96W-1T	14	Si	V17	IMPATT Diode;Po .06W;Fo 96GHz;Eff 4.0%;BV at Ir/1.0mA 15V;Vop 20V
102	ND8J80W-1T	14	Si	V17	IMPATT Diode;Po .15W;Fo 80GHz;Eff 4.5%;BV at Ir/1.0mA 16V;Vop 21V
103	ND8L60W-1T	14	Si	V17	IMPATT Diode;Po 0.3W;Fo 60GHz;Eff 6%;BV at Ir/1.0mA 25V;Vop 32V
104	ND8M20-5G	14	Si	V17	IMPATT Diode;Po 0.4W;Fo 20GHz;Eff 5.0%;BV at Ir/1.0mA 38V;Vop 50V
105	ND8M30-1N	14	Si	V17	IMPATT Diode;Po0.35W;Fo 30GHz;Eff 6.5%;BV at Ir/1.0mA 32V;Vop 40V
106	ND8N15-5G	14	Si	V17	IMPATT Diode;Po 0.7W;Fo 15GHz;Eff 7.1%;BV at Ir/1.0mA 52V;Vop 65V
107	ND8N40W-1N	14	Si	V17	IMPATT Diode;Po 0.5W;Fo 40GHz;Eff 8.0%;BV at Ir/1.0mA 42V;Vop 54V
108	ND8O11-5G	14	Si	V17	IMPATT Diode;Po 0.8W;Fo 11GHz;Eff 7.1%;BV at Ir/1.0mA 70V;Vop 85V
109	ND8O20-5H	14	Si	V17	IMPATT Diode;Po 0.8W;Fo 20GHz;Eff 6.9%;BV at Ir/1.0mA 38V;Vop 50V
110	ND8P08-5G	14	Si	V17	IMPATT Diode;Po 1.2W;Fo 8GHz;Eff 7.6%;BV at Ir/1.0mA 95V;Vop120V

8. MISCELLANEOUS DEVICES

IN ORDER OF (1) USE and (2) TYPE No.

LINE No.	[2] TYPE No.	[1] USE	DESCRIPTION MAT.	DWG. No.	TECHNICAL DATA
1	ND8P15-5H	14	Si	V17	IMPATT Diode;Po 1.2W;Fo 15GHz;Eff 7.5%;BV at Ir/1.0mA 52V;Vop 70V
2	ND8P20W-5H	14	Si	V17	IMPATT Diode;Po 1.5W;Fo 20GHz;Eff 10%;BV at Ir/1.0mA 65V;Vop80V
3	ND8R11-5H	14	Si	V17	IMPATT Diode;Po 1.8W;Fo 11GHz;Eff 7.8%;BV at Ir/1.0mA 70V;Vop 95V
4	ND8S08-5H	14	Si	V17	IMPATT Diode;Po 2.2W;Fo 8GHz;Eff 8.0%;BV at Ir/1.0mA 95V;Vop125V
5	ND8S15-1N	14	Si	V17	IMPATT Diode;Po 2.5W;Fo 15GHz;Eff 11%;BV at Ir/1.0mA 80V;Vop100V
6	ND8S15-5H	14	Si	V17	IMPATT Diode;Po 2.5W;Fo 15GHz;Eff 11%;BV at Ir/1.0mA 80V;Vop100V
7	ND8T11W-54	14	Si	V17	IMPATT Diode;Po 3.3W;Fo 11GHz;Eff 11.0%;BV at IR/1.0mA 100V;Vop 125V
8	ND8U08W-5H	14	Si	V17	IMPATT Diode;Po 4.0W;Fo 8GHz;Eff 12%;BV at Ir/1.0mA 135V;Vop170V
9	ND487C1-3P	14	Si	W185	Schottky Quads;N-Type;Use,Lo Power L.O.,Mixer;Pt Max 300mW; Vf Max 0.3V at If 1.0mA
10	ND487C1-3R	14	Si	W186	Schottky Quads;N-Type;Use,Lo Power L.O.,Mixer;Pt Max 300mW; Vf Max 0.3V at If 1.0mA
11	ND487C2-3P	14	Si	W185	Same as ND487C1-3P W/Medium Barr;Use,Low Rs,Low Distortion; Vf Max 0.5V at If 1.0mA
12	ND487C2-3R	14	Si	W186	Same as ND487C1-3P W/Medium Barr;Use,Low Rs,Low Distortion; Vf Max 0.5V at If 1.0mA
13	ND487R1-3P	14	Si	W185	Schottky Quads;N-Type;Use,Lo Power L.O.,Mixer;Pt Max 300mW; Vf Max 0.3V at If 1.0mA
14	ND487R1-3R	14	Si	W186	Schottky Quads;N-Type;Use,Lo Power L.O.,Mixer;Pt Max 300mW; Vf Max 0.3V at If 1.0mA
15	ND487R2-3P	14	Si	W185	Same as ND487C1-3P W/Medium Barr;Use,Low Rs,Low Distortion; Vf Max 0.5V at If 1.0mA
16	ND487R2-3R	14	Si	W186	Same as ND487C1-3P W/Medium Barr;Use,Low Rs,Low Distortion; Vf Max 0.5V at If 1.0mA
17	ND7130-5F	14	Si	M1036	GUNN;Oper Freq 6.0GHz;Min Pout 30mW;Fout 6.0GHz,E(FF) 1.5%;Vop 18V;Iop 140mA
18	ND7131-5F	14	Si	M1036	GUNN;Oper Freq 6.0GHz;Min Pout 30mW;Fout 6.0GHz;E(FF) 1.5%;Vop 19V;Iop 175mA
19	ND7150-5F	14	Si	M1036	GUNN;Oper Freq 10.7GHz;Min Pout 30mW;Fout 10.7GHz;Eff 1.0%;Vop 12V;Iop 210mA
20	ND7160-5F	14	Si	M1036	GUNN;Oper Freq 6.0GHz;Min Pout 100mW;Four 6.0GHz;Eff 2.0%;Vop 17V;Iop 380mA
21	ND7161-5F	14	Si	M1036	GUNN;Oper Freq 6.0GHz;Min Pout 100mW;Fout 6.0GHz;E(FF) 2.0%;Vop 18V;Iop 400mA
22	ND7170-5F	14	Si	M1036	GUNN;Oper Freq 6.0GHz;Min Pout 200mW;Fout 6.0GHz;E(FF) 3.0%;Vop 16V;Iop 540mA
23	ND7180-5F	14	Si	M1036	GUNN;Oper Freq 10.7GHz;Min Pout 150mW;Fout 10.7GHz;Eff 2.5%;Vop 12V;Iop 500mA
24	ND7182-5F	14	Si	M1036	GUNN;Oper Freq 10.7GHz;Min Pout 150mW;Fout 10.7GHz;Eff 2.5%;Vop 12V;Iop 500mA
25	ND7190-5F	14	Si	M1036	GUNN;Oper Freq 14.7GHz;Min Pout 150mW;Fout 14.7GHz;Eff 2.5%;Vop 8.0V;Iop 810mA
26	ND7250-5F	14	Si	M1036	GUNN;Oper Freq 7.1GHz;Min Pout 30mW;Fout 7.1GHz;E(FF) 1.5%;Vop 16V;Iop 160mA
27	ND7251-5F	14	Si	M1036	GUNN;Oper Freq 7.1GHz;Min Pout 30mW;Fout 7.1GHz;E(FF) 1.5%;Vop 17V;Iop 200mA
28	ND7260-5F	14	Si	M1036	GUNN;Oper Freq 7.1GHz;Min Pout 100mW;Fout 7.1GHz;E(FF) 2.0%;Vop 16V;Iop 410mA
29	ND7261-5F	14	Si	M1036	GUNN;Oper Freq 7.1GHz;Min Pout 100mW;Fout 7.1GHz;E(FF) 2.0%;Vop 17V;Iop 430mA
30	ND7270-5F	14	Si	M1036	GUNN;Oper Freq 7.1GHz;Min Pout 200mW;Fout 7.1GHz;E(FF) 3.0%;Vop 15V;Iop 570mA
31	ND7280-5F	14	Si	M1036	GUNN;Oper Freq 14.7GHz;Min Pout 30mW;Fout 14.7GHz;Eff 1.0%; Vop 8.0V;Iop 390mA
32	ND7290-5F	14	Si	M1036	GUNN;Oper Freq 19GHz;Min Pout 30mW;Fout 19GHz;Eff 1.0%;Vop 8.0V;Iop 340mA
33	ND7300-5F	14	Si	M1036	GUNN;Oper Freq 19GHz;Min Pout 150mW;Fout 19GHz;Eff 2.5%;Vop 7.0V;Iop 960mA
34	ND7301-5F	14	Si	M1036	GUNN;Oper Freq 19GHz;Min Pout 150mW;Fout 19GHz;Eff 2.0%;Vop 7.5V;Iop 960mA
35	ND80196-1T	14	Si	V17	IMPATT Diode;Min Po 1.0W;Fo 96GHz;Eff 4%;BV at Ir/1.0mA 15V;Vop 18V;Pulsed
36	ND80535-1P	14	Si	M1043	IMPATT Pulsed;Freq Range 26-40GHz;Min Pout 5.0W;Fo 35GHz;Eff5.0%;BV 44V
37	ND81015-5H	14	Si	V17	IMPATT Diode;Min Po 10W;Fo 15GHz;Eff 10%;BV at Ir/1.0mA 75V;Vop 100V;Pulsed
38	ND81510-5H	14	Si	M1044	IMPATT Pulsed;Freq Range 8-12GHz;Min Pout 15W;Fo 10GHz;Eff 10%;BV 115V
39	ND84010-6K	14	Si	M1045	IMPATT Pulsed;Freq Range 8-12GHz;Min Pout 40W;Fo 10GHz;Eff 10%;BV 115V
40	NJS3301A	14			Solid State Oscillator;S-Band;Center Freq 3088MHz ±25MHz;Pwr Out 30mW;Tuning range 0-20V
41	NJS7901	14			Gunn Oscillator 9300-9500MHz;Pwr Out 10mW;Vin 10V at 200mA
42	PG0112X	14		F27d	X Band Avalanche Oscillator;Pout 4.0mW min;Vin 40V max.
43	PG0113X	14		F27d	X Band Avalanche Oscillator;Pout 10mW min;Vin 40V max.
44	PG0114X	14		F27d	X Band Avalanche Oscillator;Pout 20mW min;Vin 40V max.
45	PG0115X	14		F27d	X Band Avalanche Oscillator;Pout 30mW min;Vin 40V max.
46	PG0122X	14		F27d	X Band Avalanche Oscillator;Pout 4.0mW min;Vin 60V max.
47	PG0123X	14		F27d	X Band Avalanche Oscillator;Pout 10mW min;Vin 60V max.
48	PG0124X	14		F27d	X Band Avalanche Oscillator;Pout 20mW min;Vin 60V max.
49	PG0125X	14		F27d	X Band Avalanche Oscillator;Pout 30mW min;Vin 60V max.
50	PG0132X	14		F27d	X Band Avalanche Oscillator;Pout 4.0mW min;Vin 80V max.
51	PG0133X	14		F27d	X Band Avalanche Oscillator;Pout 10mW min;Vin 80V max.
52	PG0134X	14		F27d	X Band Avalanche Oscillator;Pout 20mW min;Vin 80V max.
53	PG0135X	14		F27d	X Band Avalanche Oscillator;Pout 30mW min;Vin 80V max.
54	PG0142X	14		F27d	X Band Avalanche Oscillator;Pout 4.0mW min;Vin 100V max.
55	PG0143X	14		F27d	X Band Avalanche Oscillator;Pout 10mW min;Vin 100V max.
56	PG0144X	14		F27d	X Band Avalanche Oscillator;Pout 20mW min;Vin 100V max.
57	PG0145X	14		F27d	X Band Avalanche Oscillator;Pout 30mW min;Vin 100V max.
58	PG0152X	14		F27d	X Band Avalanche Oscillator;Pout 4.0mW min;Vin 120V max.
59	PG0153X	14		F27d	X Band Avalanche Oscillator;Pout 10mW min;Vin 120V max.
60	PG0154X	14		F27d	X Band Avalanche Oscillator;Pout 20mW min;Vin 120V max.
61	PG0155X	14		F27d	X Band Avalanche Oscillator;Pout 30mW min;Vin 120V max.
62	PGG200-01	14	Si	F27as	Impatt;RF Po 50mW min;Freq. 6.0-8.0GHz;Efficiency 3.0% typ;Op Volt 110V.
63	PGG200-34	14	Si	F56x	Impatt;RF Po 50mW min;Freq. 6.0-8.0GHz;Efficiency 3.0% typ;Op Volt 110V.
64	PGG200-82	14	Si	S396a	Impatt;RF Po 50mW min;Freq. 6.0-8.0GHz;Efficiency 3.0% typ;Op Volt 110V.
65	PGG200-83	14	Si	S356	Impatt;RF Po 50mW min;Freq. 6.0-8.0GHz;Efficiency 3.0% typ;Op Volt 110V.
66	PGG201-01	14	Si	F27as	Impatt;RF Po 100mW min;Freq. 6.0-8.0GHz;Efficiency 3.5% typ;Op Volt 110V.
67	PGG201-34	14	Si	F56x	Impatt;RF Po 100mW min;Freq. 6.0-8.0GHz;Efficiency 3.5% typ;Op Volt 110V.
68	PGG201-82	14	Si	S396a	Impatt;RF Po 100mW min;Freq. 6.0-8.0GHz;Efficiency 3.5% typ;Op Volt 110V.
69	PGG201-83	14	Si	S356	Impatt;RF Po 100mW min;Freq. 6.0-8.0GHz;Efficiency 3.5% typ;Op Volt 110V.
70	PGG202-01	14	Si	F27as	Impatt;RF Po 200mW min;Freq. 6.0-8.0GHz;Efficiency 4.0% typ;Op Volt 110V.
71	PGG202-34	14	Si	F56x	Impatt;RF Po 200mW min;Freq. 6.0-8.0GHz;Efficiency 4.0% typ;Op Volt 110V.
72	PGG202-82	14	Si	S396a	Impatt;RF Po 200mW min;Freq. 6.0-8.0GHz;Efficiency 4.0% typ;Op Volt 110V.
73	PGG202-83	14	Si	S356	Impatt;RF Po 200mW min;Freq. 6.0-8.0GHz;Efficiency 4.0% typ;Op Volt 110V.
74	PGG203-01	14	Si	F27as	Impatt;RF Po 50mW min;Freq. 8.0-12.4GHz;Efficiency 3.0% typ;Op Volt 80V.
75	PGG203-34	14	Si	F56x	Impatt;RF Po 50mW min;Freq. 8.0-12.4GHz;Efficiency 3.0% typ;Op Volt 80V.
76	PGG203-82	14	Si	S396a	Impatt;RF Po 50mW min;Freq. 8.0-12.4GHz;Efficiency 3.0% typ;Op Volt 80V.
77	PGG203-83	14	Si	S356	Impatt;RF Po 50mW min;Freq. 8.0-12.4GHz;Efficiency 3.0% typ;Op Volt 80V.
78	PGG204-01	14	Si	F27as	Impatt;RF Po 100mW min;Freq. 8.0-12.4GHz;Efficiency 3.5% typ;Op Volt 90V.
79	PGG204-34	14	Si	F56x	Impatt;RF Po 100mW min;Freq. 8.0-12.4GHz;Efficiency 3.5% typ;Op Volt 90V.
80	PGG204-82	14	Si	S396a	Impatt;RF Po 100mW min;Freq. 8.0-12.4GHz;Efficiency 3.5% typ;Op Volt 90V.
81	PGG204-83	14	Si	S356	Impatt;RF Po 100mW min;Freq. 8.0-12.4GHz;Efficiency 3.5% typ;Op Volt 90V.
82	PGG205-01	14	Si	F27as	Impatt;RF Po 200mW min;Freq. 8.0-12.4GHz;Efficiency 4.0% typ;Op Volt 90V.
83	PGG205-34	14	Si	F56x	Impatt;RF Po 200mW min;Freq. 8.0-12.4GHz;Efficiency 4.0% typ;Op Volt 90V.
84	PGG205-82	14	Si	S396a	Impatt;RF Po 200mW min;Freq. 8.0-12.4GHz;Efficiency 4.0% typ;Op Volt 90V.
85	PGG205-83	14	Si	S356	Impatt;RF Po 200mW min;Freq. 8.0-12.4GHz;Efficiency 4.0% typ;Op Volt 90V.
86	PGG206-01	14	Si	F27as	Impatt;RF Po 300mW min;Freq. 8.0-12.4GHz;Efficiency 4.0% typ;Op Volt 100V.
87	PGG206-34	14	Si	F56x	Impatt;RF Po 300mW min;Freq. 8.0-12.4GHz;Efficiency 4.0% typ;Op Volt 100V.
88	PGG206-82	14	Si	S396a	Impatt;RF Po 300mW min;Freq. 8.0-12.4GHz;Efficiency 4.0% typ;Op Volt 100V.
89	PGG206-83	14	Si	S356	Impatt;RF Po 300mW min;Freq. 8.0-12.4GHz;Efficiency 4.0% typ;Op Volt 100V.
90	PGG207-01	14	Si	F27as	Impatt;RF Po 400mW min;Freq. 8.0-12.4GHz;Efficiency 5.0% typ;Op Volt 100V.
91	PGG207-34	14	Si	F56x	Impatt;RF Po 400mW min;Freq. 8.0-12.4GHz;Efficiency 5.0% typ;Op Volt 100V.
92	PGG207-82	14	Si	S396a	Impatt;RF Po 400mW min;Freq. 8.0-12.4GHz;Efficiency 5.0% typ;Op Volt 100V.
93	PGG207-83	14	Si	S356	Impatt;RF Po 400mW min;Freq. 8.0-12.4GHz;Efficiency 5.0% typ;Op Volt 100V.
94	PGG208-01	14	Si	F27as	Impatt;RF Po 500mW min;Freq. 8.0-12.4GHz;Efficiency 6.0% typ;Op Volt 100V.
95	PGG208-34	14	Si	F56x	Impatt;RF Po 500mW min;Freq. 8.0-12.4GHz;Efficiency 6.0% typ;Op Volt 100V.
96	PGG208-82	14	Si	S396a	Impatt;RF Po 500mW min;Freq. 8.0-12.4GHz;Efficiency 6.0% typ;Op Volt 100V.
97	PGG208-83	14	Si	S356	Impatt;RF Po 500mW min;Freq. 8.0-12.4GHz;Efficiency 6.0% typ;Op Volt 100V.
98	PGG209-01	14	Si	F27as	Impatt;RF Po 600mW min;Freq. 8.0-12.4GHz;Efficiency 6.0% typ;Op Volt 105V.
99	PGG209-34	14	Si	F56x	Impatt;RF Po 600mW min;Freq. 8.0-12.4GHz;Efficiency 6.0% typ;Op Volt 105V.
100	PGG209-82	14	Si	S396a	Impatt;RF Po 600mW min;Freq. 8.0-12.4GHz;Efficiency 6.0% typ;Op Volt 105V.
101	PGG209-83	14	Si	S356	Impatt;RF Po 600mW min;Freq. 8.0-12.4GHz;Efficiency 6.0% typ;Op Volt 105V.
102	PGG210-01	14	Si	F27as	Impatt;RF Po 750mW min;Freq. 8.0-12.4GHz;Efficiency 6.0% typ;Op Volt 110V.
103	PGG210-34	14	Si	F56x	Impatt;RF Po 750mW min;Freq. 8.0-12.4GHz;Efficiency 6.0% typ;Op Volt 110V.
104	PGG210-82	14	Si	S396a	Impatt;RF Po 750mW min;Freq. 8.0-12.4GHz;Efficiency 6.0% typ;Op Volt 110V.
105	PGG210-83	14	Si	S356	Impatt;RF Po 750mW min;Freq. 8.0-12.4GHz;Efficiency 6.0% typ;Op Volt 110V.
106	PGG211-01	14	Si	F27as	Impatt;RF Po 1.0W min;Freq. 8.0-12.4GHz;Efficiency 6.5% typ;Op Volt 110V.
107	PGG211-34	14	Si	F56x	Impatt;RF Po 1.0W min;Freq. 8.0-12.4GHz;Efficiency 6.5% typ;Op Volt 110V.
108	PGG211-82	14	Si	S396a	Impatt;RF Po 1.0W min;Freq. 8.0-12.4GHz;Efficiency 6.5% typ;Op Volt 110V.
109	PGG211-83	14	Si	S356	Impatt;RF Po 1.0W min;Freq. 8.0-12.4GHz;Efficiency 6.5% typ;Op Volt 110V.
110	PGG212-01	14	Si	F27as	Impatt;RF Po 25mW min;Freq. 12.4-18GHz;Efficiency 1.5% typ;Op Volt 60V.

8. MISCELLANEOUS DEVICES

IN ORDER OF (1) USE and (2) TYPE No.

LINE No.	[2] TYPE No.	[1] USE	DESCRIPTION MAT.	DWG. No.	TECHNICAL DATA
1	PGG212-34	14	Si	F56x	Impatt;RF Po 25mW min;Freq. 12.4-18GHz;Efficiency 1.5% typ;Op Volt 60V.
2	PGG213-01	14	Si	F27as	Impatt;RF Po 50mW min;Freq. 12.4-18GHz;Efficiency 2.0% typ;Op Volt 60V.
3	PGG213-34	14	Si	F56x	Impatt;RF Po 50mW min;Freq. 12.4-18GHz;Efficiency 2.0% typ;Op Volt 60V.
4	PGG214-01	14	Si	F27as	Impatt;RF Po 100mW min;Freq. 12.4-18GHz;Efficiency 3.0% typ;Op Volt 65V.
5	PGG214-34	14	Si	F56x	Impatt;RF Po 100mW min;Freq. 12.4-18GHz;Efficiency 3.0% typ;Op Volt 65V.
6	PGG215-01	14	Si	F27as	Impatt;RF Po 200mW min;Freq. 12.4-18GHz;Efficiency 4.0% typ;Op Volt 70V.
7	PGG215-34	14	Si	F56x	Impatt;RF Po 200mW min;Freq. 12.4-18GHz;Efficiency 4.0% typ;Op Volt 70V.
8	PGG216-01	14	Si	F27as	Impatt;RF Po 300mW min;Freq. 12.4-18GHz;Efficiency 4.0% typ;Op Volt 70V.
9	PGG216-34	14	Si	F56x	Impatt;RF Po 300mW min;Freq. 12.4-18GHz;Efficiency 4.0% typ;Op Volt 70V.
10	PGG217-01	14	Si	F27as	Impatt;RF Po 400mW min;Freq. 12.4-18GHz;Efficiency 5.0% typ;Op Volt 70V.
11	PGG217-34	14	Si	F56x	Impatt;RF Po 400mW min;Freq. 12.4-18GHz;Efficiency 5.0% typ;Op Volt 70V.
12	PGG218-01	14	Si	F27as	Impatt;RF Po 500mW min;Freq. 12.4-18GHz;Efficiency 6.0% typ;Op Volt 70V.
13	PGG218-34	14	Si	F56x	Impatt;RF Po 500mW min;Freq. 12.4-18GHz;Efficiency 6.0% typ;Op Volt 70V.
14	PGG219-01	14	Si	F27as	Impatt;RF Po 25mW min;Freq. 18-26GHz;Efficiency 1.0% typ;Op Volt 50V.
15	PGG219-34	14	Si	F56x	Impatt;RF Po 25mW min;Freq. 18-26GHz;Efficiency 1.0% typ;Op Volt 50V.
16	PGG220-01	14	Si	F27as	Impatt;RF Po 50mW min;Freq. 18-26GHz;Efficiency 1.0% typ;Op Volt 55V.
17	PGG220-34	14	Si	F56x	Impatt;RF Po 50mW min;Freq. 18-26GHz;Efficiency 1.0% typ;Op Volt 55V.
18	PGG221-01	14	Si	F27as	Impatt;RF Po 100mW min;Freq. 18-26GHz;Efficiency 2.0% typ;Op Volt 60V.
19	PGG221-34	14	Si	F56x	Impatt;RF Po 100mW min;Freq. 18-26GHz;Efficiency 2.0% typ;Op Volt 60V.
20	PGG222-01	14	Si	F27as	Impatt;RF Po 150mW min;Freq. 18-26GHz;Efficiency 2.5% typ;Op Volt 60V.
21	PGG222-34	14	Si	F56x	Impatt;RF Po 150mW min;Freq. 18-26GHz;Efficiency 2.5% typ;Op Volt 60V.
22	PGG223-01	14	Si	F27as	Impatt;RF Po 25mW min;Freq. 26-40GHz;Efficiency 1.0% typ;Op Volt 50V.
23	PGG223-34	14	Si	F56x	Impatt;RF Po 25mW min;Freq. 26-40GHz;Efficiency 1.0% typ;Op Volt 50V.
24	PGG224-01	14	Si	F27as	Impatt;RF Po 50mW min;Freq. 26-40GHz;Efficiency 1.5% typ;Op Volt 55V.
25	PGG224-34	14	Si	F56x	Impatt;RF Po 50mW min;Freq. 26-40GHz;Efficiency 1.5% typ;Op Volt 55V.
26	PGG225-01	14	Si	F27as	Impatt;RF Po 75mW min;Freq. 26-40GHz;Efficiency 2.0% typ;Op Volt 60V.
27	PGG225-34	14	Si	F56x	Impatt;RF Po 75mW min;Freq. 26-40GHz;Efficiency 2.0% typ;Op Volt 60V.
28	S8201A	14	GA§	S420	X Band Gunn Oscillator;Po 100mW(CW)Typ.(at 8.2-10.5GHz).
29	S8202A	14	GA§	F91	X Band Gunn Oscillator;Po 20mW(CW)Typ.(at 8.5-12GHz).
30	U9400	14		M1134e	Gunn Osc:Range 40-60GHz,Mech Tuning ±250MHz,Pwr Out 10-75mW,Oper Volt 3.5±1VDC
31	V9400	14		M1134f	Gunn Osc:Range 50-75GHz,Mech Tuning ±250MHz,Pwr Out 10-50mW,Oper Volt 4±1.5VDC
32	W9400	14		M1134h	Gunn Osc:Range 75-110GHz,Mech Tuning ±250MHz,Pwr Out 5-10mW,Oper Volt 4±1.5VDC
33	YG1101	14			Y1G Tuned Gunn Oscillator;Freq 5-9GHZ;PS 20mW; -5%Freq Acc.
34	YG1103	14			Y1G Tuned Gunn Oscillator;Freq 8-12.4GHZ;PS 100mW; -2% Freq Acc.
35	YG1104	14			Y1G Tuned Gunn Oscillator;Freq 10-15GHZ;PS 30mW; -3% Freq Acc.
36	YG1105	14			Y1G Tuned Gunn Oscillator;Freq 12-18GHZ;PS 30mW; -3% Freq Acc.
37	1SV25/S3015A	15	Si$	F91	Higher Order Multiplier;Pi 1.0W at .84GHz);Po 80mW Typ.(at 7.56GHz).
38	A4S008	15		u2g	Ku Band Mult Chip;VBR 20Vmin;Cap .25 to .50pf;Lifetime 15nS typ;Trans Time 60pS typ
39	A4S015	15		u2g	X Band Comb Gen Chip;VBR 35Vmin;Cap 1.0 to 1.5pf;Lifetime 75nS typ;Trans Time 120pS typ
40	A4S017	15		u2g	S Band Mult Chip;VBR 75Vmin;Cap 3.2 to 5.2pf;Lifetime 200nS typ;Trans Time 275pS typ
41	A4S020	15		u2g	X Band Mult Chip;VBR 30Vmin;Cap .35 to 1.0pf;Lifetime 30nS typ;Trans Time 75pS typ
42	A4S021	15		u2g	X Band Mult Chip;VBR 40Vmin;Cap 1.6 to 3.2pf;Lifetime 85nS typ;Trans Time 120pS typ
43♦	A4S112	15	Si	A416	Cap 1.7pf max;VBR 35V min;Lifetime 50ns min;Trans.Time 175ps;Output Freq. 1.5GHz.
44♦	A4S151	15	Si	A416	Cap 850ff max;VBR 15V min;Lifetime 20ns min;Trans.Time 90ps;Output Freq. 3.0GHz.
45♦	A4S153	15	Si	A416	Cap 600ff max;VBR 25V min;Lifetime 20ns min;Trans.Time 90ps;Output Freq. 3.0GHz.
46♦	A4S180	15	Si	A416	Cap 4.6pf max;VBR 50V min;Lifetime 100ns min;Trans.Time 225ps;Output Freq. 1.5GHz.
47	A4S360	15	Si	S356	Cap 5.5pf max;VBR 100V max;Lifetime 400ns max;Trans.Time 360ps;Output Freq. 2.0GHz.
48♦	A4S365	15	Si	S356	CAP 4.5pf max;VB 60V min;Lifetime 80ns min;Trans.Time 400ps max;Output Freq. 4GHz.
49	A4S370	15	Si	F102d	Cap 3.5pf max;VBR 60V max;Lifetime 150ns max;Trans.Time 160ps;Output Freq. 6.0GHz.
50	A4S374	15	Si	F27ah	CAP 2.0pf max;VB 35V min;Lifetime 30ns min;Trans.Time 175ps max;Output Freq. 8GHz.
51	A4S376	15	Si	F102d	CAP 1.3pf max;VB 25V min;Lifetime 10ns min;Trans.Time 120ps max;Output Freq. 10GHz.
52	A4S386	15	Si	F27ah	Cap 700ff max;VBR 30V max;Lifetime 20ns max;Trans.Time 60ps;Output Freq. 16GHz.
53♦	A5S125	15	Si	F10an	General r.f. control;VBR 150V min;Carrier lifetime;trr 150ns;Ct .32pf max;Rs 1.5Ω .
54♦	A5S127	15	Si	F27ah	General r.f. control;VBR 150V min;Carrier lifetime;trr 150ns;Ct .35pf max;Rs 1.5Ω.
55	A9G100AN	15	Si	S509	STEP RECOVERY DIODE/Co-ax Comb Gen; Freq in 100MHz;Min Out Pwr 10dbm(0-4.0GHz)
56	A9G100AR	15	Si	S509	STEP RECOVERY DIODE/Co-ax Comb Gen;Freq in 100MHz;Min out Pwr -30dbm (8.0-12.4GHz)
57	A9G100BN	15	Si	S509	STEP RECOVERY DIODE/Co-ax Comb Gen;Freq in 100MHz;Min out Pwr -20dbm (4.0-8.0GHz)
58	A9G100BR	15	Si	S509	STEP RECOVERY DIODE/Co-ax Comb Gen;Freq in 100MHz;Min out Pwr -40dbm (12.8-18GHz)
59	A9G200AN	15	Si	S509	STEP RECOVERY DIODE/Co-ax Comb Gen;Freq in 200MHz;Min out Pwr -5dbm (0.2-4.0GHz)
60	A9G200AR	15	Si	S509	STEP RECOVERY DIODE/Co-ax Comb Gen;Freq in 200MHz;Min out Pwr -25dbm (8.0-12.4GHz)
61	A9G200BN	15	Si	S509	STEP RECOVERY DIODE/Co-ax Comb Gen;Freq in 200MHz;Min out Pwr -15dbm (4.0-8.0GHz)
62	A9G200BR	15	Si	S509	STEP RECOVERY DIODE/Co-ax Comb Gen;Freq in 200MHz;Min out Pwr -35dbm (12.4-18GHz)
63	A9G250AN	15	Si	S509	STEP RECOVERY DIODE/Co-ax Comb Gen;Freq in 250MHz;Min out Pwr 0dbm (0.25-4.0GHz)
64	A9G250AR	15	Si	S509	STEP RECOVERY DIODE/Co-ax Comb Gen;Freq in 250MHz;Min Out Pwr -20dbm(8.0-12.4GHz)
65	A9G250BN	15	Si	S509	STEP RECOVERY DIODE/Co-ax Comb Gen;Freq in 250MHz;Min out Pwr -10dbm (4.0-8.0GHz)
66	A9G250BR	15	Si	S509	STEP RECOVERY DIODE/Co-ax Comb Gen;Freq in 250MHz;Min out Pwr -30dbm (12.4-18.0GHz)
67	A9G500AN	15	Si	S509	STEP RECOVERY DIODE/Co-ax Comb Gen; Freq in 500MHz;Min Out Pwr 5dbm (1.0-4.0GHz)
68	A9G500AR	15	Si	S509	STEP RECOVERY DIODE/Co-ax Comb Gen; Freq in 500MHz;Min Out Pwr-15dbm (8.0-12.4GHz)
69	A9G500BN	15	Si	S509	STEP RECOVERY DIODE/Co-ax Comb Gen; Freq in 500MHz;Min Out Pwr -5dbm(4.0-8.0GHz)
70	A9G500BR	15	Si	S509	STEP RECOVERY DIODE/Co-ax Comb Gen; Freq in 500MHz;Min Out Pwr -25dbm(12.8-18GHz)
71	A9G1000AN	15	Si	S509	Stop Recovery Diode/Co-ax Comb Gen;Freq In 1.0GHz;Min Out Pwr 5dbm (1.0-4.0GHz)
72	A9G1000AR	15	Si	S509	Stop Recovery Diode/Co-ax Comb Gen;Freq In 1.0GHz;Min Out Pwr -10dbm (8.0-12.4G;Hz);DC Retur
73	A9G1000BN	15	Si	S509	Stop Recovery Diode/Co-ax Comb Gen;Freq In 1.0GHz;Min Out Pwr 0dbm (4.0-8.0GHz)
74	A9G1000BR	15	Si	S509	Stop Recovery Diode/Co-ax Comb Gen;Freq In 1.0GHz;Min Out Pwr -20dbm (12.4-18GHz);DC Return
75	CVB1015A	15	Si§$	u30d	VB 15V min;Cj 250-500fF;Carrier Lifetime 10ns min;Transition Time 70ps max,VR 10V,IF 10mA
76	CVB1015B	15	Si§$	u30	VB 15V min;Cj .500-1.0pF;Carrier Lifetime 10ns min;Transition Time 70ps max,VR 10V,IF 10mA
77	CVB1015C	15	Si§$	u30	VB 15V min;Cj 1.0-1.5pF;Carrier Lifetime 10ns min;Transition Time 70ps max,VR 10V,IF 10mA
78	CVB1030A	15	Si§$	u30	VB 30V min;Cj 250-500fF;Carrier Lifetime 10ns min;Transition Time 100ps max,VR 10V,IF 10mA
79	CVB1030B	15	Si§$	u30	VB 30V min;Cj .500-1.0pF;Carrier Lifetime 10ns min;Transition Time 100ps max,VR 10V,IF 10mA
80	CVB1030C	15	Si§$	u30	VB 30V min;Cj 1.0-1.5pF;Carrier Lifetime 10ns min;Transition Time 100ps max,VR 10V,IF 10mA
81	CVB1045B	15	Si§$	u30	VB 45V min;Cj .500-1.0pF;Carrier Lifetime 25ns;Transition Time 200ps max,VR 10V,IF 10mA
82	CVB1045D	15	Si§$	u30a	VB 45V min;Cj 1.0-2.0pF;Carrier Lifetime 25ns;Transition Time 200ps max,VR 10V,IF 10mA
83	CVB1045E	15	Si§$	u30a	VB 45V min;Cj 2.0-3.0pF;Carrier Lifetime 25ns;Transition Time 200ps max,VR 10V,IF 10mA
84	CXY13E	15	GA	F27h	Gunn effect device;Po 35mW;Pd 1.3W;Freq. 8.0GHz-12GHz.
85	DS150	15	Si$	F27as	Varactor;VB 15V min;Cj 200-500fF;Min Carrier Lifetime 10ns;Transition Time 60ps
86	DS151	15	Si$	F27as	Varactor;VB 15V min;Cj 500-800fF;Min Carrier Lifetime 10ns;Transition Time 60ps
87	DS152	15	Si$	F27as	Varactor;VB 15V min;Cj 0.8-1.1pF;Min Carrier Lifetime 10ns;Transition Time 60ps
88	DS200	15	Si$	F27as	Varactor;VB 20V min;Cj 200-500fF;Min Carrier Lifetime 11ns;Transition Time 70ps
89	DS201	15	Si$	F27as	Varactor;VB 20V min;Cj 500-800fF;Min Carrier Lifetime 11ns;Transition Time 70ps
90	DS202	15	Si$	F27as	Varactor;VB 20V min;Cj 0.8-1.1pF;Min Carrier Lifetime 11ns;Transition Time 70ps
91	DS300	15	Si$	F27as	Varactor;VB 30V min;Cj 200-500fF;Min Carrier Lifetime 15ns;Transition Time 85ps
92	DS301	15	Si$	F27as	Varactor;VB 30V min;Cj 500-800fF;Min Carrier Lifetime 15ns;Transition Time 85ps
93	DS302	15	Si$	F27as	Varactor;VB 30V min;Cj 0.8-1.1pF;Min Carrier Lifetime 15ns;Transition Time 85ps
94	DS400	15	Si$	F27as	Varactor;VB 40V min;Cj 200-500fF;Min Carrier Lifetime 18ns;Transition Time 100ps
95	DS401	15	Si$	F27as	Varactor;VB 40V min;Cj 500-800fF;Min Carrier Lifetime 18ns;Transitton Time 100ps
96	DS402	15	Si$	F27as	Varactor;VB 40V min;Cj 0.8-1.1pF;Min Carriir Lifetime 18ns;Transition Time 100ps
97	DS500	15	Si$	F27as	Varactor;VB 50V min;Cj 200-500fF;Min Carrier Lifetime 25ns;Transition Time 120ps
98	DS501	15	Si$	F27as	Varactor;VB 50V min;Cj 500-800fF;Min Carrier Lifetime 25ns;Transition Time 120ps
99	DS502	15	Si$	F27as	Varactor;VB 50V min;Cj 0.8-1.1pF;Min Carrier Lifetime 25ns;Transition Time 120ps
100	DVB1015B	15	Si	u30	Step Recovery Diode;Cj 0.5-1.0pF;Fc 300GHz;0.5-3.0input-9.0-18.0output typ
101♦	DVB6100A	15	Si	F143	VB 15V min;Cj at 6.0V .25pf-.50pf;Transition Time 80pS;Carrier Lifetime 10nS.
102♦	DVB6100B	15	Si	F143	VB 15V min;Cj at 6.0V .50pf-1.0pf;Transition Time 80pS;Carrier Lifetime 10nS.
103♦	DVB6100C	15	Si	F143	VB 15V min;Cj at 6.0V 1.0pf-1.5pf;Transition Time 80pS;Carrier Lifetime 10nS.
104♦	DVB6101A	15	Si	F143	VB 30V min;Cj at 6.0V .25pf-.50pf;Transition Time 100pS;Carrier Lifetime 10nS.
105♦	DVB6101B	15	Si	F143	VB 30V min;Cj at 6.0V .50pf-.75pf;Transition Time 100pS;Carrier Lifetime 10nS.
106♦	DVB6101C	15	Si	F143	VB 30V min;Cj at 6.0V .75pf-1.1pf;Transition Time 100pS;Carrier Lifetime 10nS.
107♦	DVB6101D	15	Si	F143	VB 30V min;Cj at 6.0V 1.0pf-1.25pf;Transition Time 100pS;Carrier Lifetime 10nS.
108♦	DVB6101E	15	Si	F143	VB 30V min;Cj at 6.0V 1.25pf-1.50pf;Transition Time 100pS;Carrier Lifetime 10nS.
109♦	DVB6102A	15	Si	F143	VB 45V min;Cj at 6.0V .50pf-1.0pf;Transition Time 200pS;Carrier Lifetime 25nS.
110♦	DVB6102B	15	Si	F143	VB 45V min;Cj at 6.0V 1.0pf-1.50pf;Transition Time 200pS;Carrier Lifetime 25nS.

8. MISCELLANEOUS DEVICES

IN ORDER OF (1) USE and (2) TYPE No.

LINE No.	2 TYPE No.	1 USE	DESCRIPTION MAT.	DWG. No.	TECHNICAL DATA
1♦	DVB6102C	15	Si	F143	VB 45V min;Cj at 6.0V 1.50pf-2.0pf;Transition Time 200pS;Carrier Lifetime 25nS.
2♦	DVB6102D	15	Si	F143	VB 45V min;Cj at 6.0V 2.0pf-3.0pf;Transition Time 200pS;Carrier Lifetime 25nS.
3♦	DVB6103A	15	Si	F143	VB 60V min;Cj at 6.0V .50pf-1.0pf;Transition Time 300pS;Carrier Lifetime 60nS.
4♦	DVB6103B	15	Si	F143	VB 60V min;Cj at 6.0V 1.0pf-1.5pf;Transition Time 300pS;Carrier Lifetime 60nS.
5♦	DVB6103C	15	Si	F143	VB 60V min;Cj at 6.0V 1.5pf-2.0pf;Transition Time 300pS;Carrier Lifetime 60nS.
6♦	DVB6103D	15	Si	F143	VB 60V min;Cj at 6.0V 2.0pf-3.0pf;Transition Time 300pS;Carrier Lifetime 60nS.
7♦	DVB6104A	15	Si	F143	VB 75V min;Cj at 6.0V 1.5pf-3.5pf;Transition Time 400pS;Carrier Lifetime 100nS.
8♦	DVB6104B	15	Si	F143	VB 75V min;Cj at 6.0V 3.5pf-5.5pf;Transition Time 400pS;Carrier Lifetime 100nS.
9♦	DVB6104C	15	Si	F143	VB 75V min;Cj at 6.0V 5.5pf-7.5pf;Transition Time 400pS;Carrier Lifetime 100nS.
10♦	DVB6104D	15	Si	F143	VB 75V min;Cj at 6.0V 7.5pf-10.0pf;Transition Time 400pS;Carrier Lifetime 100nS.
11♦	DVB6850A	15	Si§§	F143	VBR 30V;Cj .25-.50pf;Minority Carrier Lifetime 10nS min;Transistion Time 80pS max.
12♦	DVB6850B	15	Si§§	F143	VBR 30V;Cj .50-1.0pf;Minority Carrier Lifetime 10nS min;Transistion Time 80pS max.
13♦	DVB6850C	15	Si§§	F143	VBR 30V;Cj 1.0-1.5pf;Minority Carrier Lifetime 10nS min;Transistion Time 80pS max.
14♦	DVB6851A	15	Si§§	F143	VBR 60V;Cj .25-.50pf;Minority Carrier Lifetime 10nS min;Transistion Time 100pS max.
15♦	DVB6851B	15	Si§§	F143	VBR 60V;Cj .50-1.0pf;Minority Carrier Lifetime 10nS min;Transistion Time 100pS max.
16♦	DVB6851C	15	Si§§	F143	VBR 60V;Cj 1.0-1.5pf;Minority Carrier Lifetime 10nS min;Transistion Time 100pS max.
17♦	DVB6852A	15	Si§§	F143	VBR 90V;Cj .50-1.0pf;Minority Carrier Lifetime 25nS min;Transistion Time 200pS max.
18♦	DVB6852B	15	Si§§	F143	VBR 90V;Cj 1.0-1.5pf;Minority Carrier Lifetime 25nS min;Transistion Time 200pS max.
19♦	DVB6852C	15	Si§§	F143	VBR 90V;Cj 1.5-2.0pf;Minority Carrier Lifetime 25nS min;Transistion Time 200pS max.
20	DVB6860A	15	Si§§	F98	VBR 90V;Cj .50-1.0pf;Minority Carrier Lifetime 25nS min;Transistion Time 250pS max.
21	DVB6860B	15	Si§§	F98	VBR 90V;Cj 1.0-1.5pf;Minority Carrier Lifetime 25nS min;Transistion Time 250pS max.
22	DVB6860C	15	Si§§	F98	VBR 90V;Cj 1.5-20pf;Minority Carrier Lifetime 25nS min;Transistion Time 250pS max.
23	DVB6861A	15	Si§§	F98	VBR 120V;Cj .50-1.0pf;Minority Carrier Lifetime 60nS min;Transistion Time 350pS max.
24	DVB6861B	15	Si§§	F98	VBR 120V;Cj 1.0-1.5pf;Minority Carrier Lifetime 60nS min;Transistion Time 350pS max.
25	DVB6861C	15	Si§§	F98	VBR 120V;Cj 1.5-2.0pf;Minority Carrier Lifetime 60nS min;Transistion Time 350pS max.
26	DVB6862A	15	Si§§	F98	VBR 150V;Cj 1.5-3.5pf;Minority Carrier Lifetime 100nS min;Transistion Time 450pS max.
27	DVB6862B	15	Si§§	F98	VBR 150V;Cj 3.5-5.5pf;Minority Carrier Lifetime 100nS min;Transistion Time 450pS max.
28	DVB6870A	15	Si§§	F98	VBR 135V;Cj .50-1.0pf;Minority Carrier Lifetime 25nS min;Transistion Time 300pS max.
29	DVB6870B	15	Si§§	F98	VBR 135V;Cj 1.0-1.5pf;Minority Carrier Lifetime 25nS min;Transistion Time 300pS max.
30	DVB6870C	15	Si§§	F98	VBR 135V;Cj 1.5-2.0pf;Minority Carrier Lifetime 25nS min;Transistion Time 300pS max.
31	DVB6871A	15	Si§§	F98	VBR 180V;Cj .50-1.0pf;Minority Carrier Lifetime 60nS min;Transistion Time 400pS max.
32	DVB6871B	15	Si§§	F98	VBR 180V;Cj 1.0-1.5pf;Minority Carrier Lifetime 60nS min;Transistion Time 400pS max.
33	DVB6871C	15	Si§§	F98	VBR 180V;Cj 1.5-2.0pf;Minority Carrier Lifetime 60nS min;Transistion Time 400pS max.
34	DVB6872A	15	Si§§	F98	VBR 225V;Cj 1.5-3.5pf;Minority Carrier Lifetime 100nS min;Transistion Time 500pS max.
35	DVB6872B	15	Si§§	F98	VBR 225V;Cj 3.5-5.5pf;Minority Carrier Lifetime 100nS min;Transistion Time 500pS max.
36	GC2510	15	Si	F111b†	VB at 10uA-15V;Cj .2-.4pF;TL at IR 6mA,IF 10mA-8ns;TT 60ps max;Rs at IF 25mA-1.2Ω max
37	GC2511	15	Si	F111b†	VB at 10uA-15V;Cj .4-.6pF;TL at IR 6mA,IF 10mA-8ns;TT 60ps max;Rs at IF 25mA-1Ω max
38	GC2512	15	Si	F111b†	VB at 10uA-15V;Cj .6-.8pF;TL at IR 6mA,IF 10mA-8ns;TT 60ps max;Rs at IF 25mA-.7Ω max
39	GC2513	15	Si	F111b†	VB at 10uA-15V;Cj .8-1pF;TL at IR 6mA,IF 10mA-8ns;TT 60ps max;Rs at IF 25mA-.5Ω max
40	GC2514	15	Si	F111b†	VB at 10uA-15V;Cj 1-1.4pF;TL at IR 6mA,IF 10mA-8ns;TT 60ps max;Rs at IF 25mA-.4Ω max
41	GC2515	15	Si	F111b†	VB at 10uA-15V;Cj 1.4-2pF;TL at IR 6mA,IF 10mA-8ns;TT 60ps max;Rs at IF 25mA-.3Ω max
42	GC2516	15	Si	F111b†	VB at 10uA-15V;Cj 2-3pF;TL at IR 6mA,IF 10mA-8ns;TT 60ps max;Rs at IF 25mA-.25Ω max
43	GC2520	15	Si	F111b†	VB at 10uA-20V;Cj .2-.4pF;TL at IR 6mA,IF 10mA-11ns;TT 70ps max;Rs at IF 25mA-1Ω max
44	GC2521	15	Si	F111b†	VB at 10uA-20V;Cj .4-.6pF;TL at IR 6mA,IF 10mA-11ns;TT 70ps max;Rs at IF 25mA-.7Ω max
45	GC2522	15	Si	F111b†	VB at 10uA-20V;Cj .6-.8pF;TL at IR 6mA,IF 10mA-11ns;TT 70ps max;Rs at IF 25mA-.6Ω max
46	GC2523	15	Si	F111b†	VB at 10uA-20V;Cj .8-1pF;TL at IR 6mA,IF 10mA-11ns;TT 70ps max;Rs at IF 25mA-.5Ω max
47	GC2524	15	Si	F111b†	VB at 10uA-20V;Cj 1-1.4pF;TL at IR 6mA,IF 10mA-11ns;TT 70ps max;Rs at IF 25mA-.4Ω max
48	GC2525	15	Si	F111b†	VB at 10uA-20V;Cj 1.4-2pF;TL at IR 6mA,IF 10mA-11ns;TT 70ps max;Rs at IF 25mA-.3Ω max
49	GC2526	15	Si	F111b†	VB at 10uA-20V;Cj 2-3pF;TL at IR 6mA,IF 10mA-11ns;TT 70ps max;Rs at IF 25mA-.25Ω max
50	GC2530	15	Si	F111b†	VB at 10uA-30V;Cj .2-.4pF;TL at IR 6mA,IF 10mA-17ns;TT 100ps max;Rs at IF 25mA-.8Ω max
51	GC2531	15	Si	F111b†	VB at 10uA-30V;Cj .4-.6pF;TL at IR 6mA,IF 10mA-17ns;TT 100ps max;Rs at IF 25mA-.6Ω max
52	GC2532	15	Si	F111b†	VB at 10uA-30V;Cj .6-.8pF;TL at IR 6mA,IF 10mA-17ns;TT 100ps max;Rs at IF 25mA-.5Ω max
53	GC2533	15	Si	F111b†	VB at 10uA-30V;Cj .8-1pF;TL at IR 6mA,IF 10mA-17ns;TT 100ps max;Rs at IF 25mA-.4Ω max
54	GC2534	15	Si	F111b†	VB at 10uA-30V;Cj 1-1.4pF;TL at IR 6mA,IF 10mA-17ns;TT 100ps max;Rs at IF 25mA-.3Ω max
55	GC2535	15	Si	F111b†	VB at 10uA-30V;Cj 1.4-2pF;TL at IR 6mA,IF 10mA-17ns;TT 100ps max;Rs at IF 25mA-.25Ω max
56	GC2536	15	Si	F111b†	VB at 10uA-30V;Cj 2-3pF;TL at IR 6mA,IF 10mA-17ns;TT 100ps max;Rs at IF 25mA-.2Ω max
57	GC2540	15	Si	F111b†	VB at 10uA-40V;Cj .2-.4pF;TL at IR 6mA,IF 10mA-21ns;TT 150pS max;Rs at IF 25mA-.80Ω
58	GC2541	15	Si	F111b†	VB at 10uA-40V;Cj .4-.6pF;TL at IR 6mA,IF 10mA-21ns;TT 150pS max;Rs at IF 25mA .60Ω
59	GC2542	15	Si	F111b†	VB at 10uA-40V;Cj .6-.8pF;TL at IR 6mA,IF 10mA-21ns;TT 150pS max;Rs at IF 25mA .50Ω
60	GC2543	15	Si	F111b†	VB at 10uA-40V;Cj .8-1.0pF;TL at IR 6mA,IF 10mA-21ns;TT 150pS max;Rs at IF 25mA .40Ω
61	GC2544	15	Si	F111b†	VB at 10uA-40V;Cj 1.0-1.4pF;TL at IR 6mA,IF 10mA-21ns;TT 150pS max;Rs at IF 25mA .30Ω
62	GC2545	15	Si	F111b†	VB at 10uA-40V;Cj 1.4-2.0pF;TL at IR 6mA,IF 10mA-21ns;TT 150pS max;Rs at IF 25mA .25Ω
63	GC2546	15	Si	F111b†	VB at 10uA-40V;Cj 2.0-3.0pF;TL at IR 6mA,IF 10mA-21ns;TT 150pS max;Rs at IF 25mA .20Ω
64	GC3209	15	Si	F10z	Varactor;Snaptime 80ps;Vb 6.0Vmin;Po 100mW;fo 24GHz max;Cj at 6.0V,1.0MHz 300fF max.
65	HP5082-0008	15		u20b	VBR 20V min;CVR 0.25-0.50pF;Lifetime 10ns typ;Trans.Time 50pS typ.
66	HP5082-0020	15		u20a	VBR 25V min;CVR 0.5-1.0pF;Lifetime 20ns typ;Trans.Time 75pS typ.
67	HP5082-0112	15	Si	DO7	1.5GHz;VBR 35V;CVR 1.7pf;Effective Minority Lifetime 50ns;Transition Time 175ps.
68	HP5082-0113	15	Si	A302	Transition Time 250ps for Stored Charge 1500pC;Lifetime 100ns;Cj 4.85pf;VBR 35V min
69	HP5082-0114	15	Si	DO7	1.5GHz;VBR 35V;CVR 4.0pf;Effective Minority Lifetime 125ns;Transition Time 225ps.
70	HP5082-0132	15	Si	F27d	5.5GHz;VBR 35V;CVR 1.7pf;Effective Minority Lifetime 50ns;Transition Time 175ps.
71	HP5082-0151	15	Si	A1n	3.0GHz;VBR 15V;CVR 850pf;Effective Minority Lifetime 20ns;Transition Time 90ps.
72	HP5082-0153	15	Si	A1ah	Transition Time 90ps for Stored Charge 200pC;Lifetime 20ns;Cj .40pf;VBR 25V min
73	HP5082-0180	15	Si	DO7	1.5GHz;VBR 50V;CVR 4.6pf;Effective Minority Lifetime 100ns;Transition Time 225ps.
74	HP5082-0241	15	Si	F27d	3.5GHz;VBR 65V;CVR 4.8pf;Effective Minority Lifetime 100ns;Transition Time 275ps.
75	HP5082-0243	15	Si	F27d	9.0GHz;VBR 35V;CVR 1.4pf;Effective Minority Lifetime 30ns;Transition Time 110ps.
76	HP5082-0253	15	Si	F27d	13GHz;VBR 25V;CVR 800ff;Effective Minority Lifetime 20ns;Transition Time 80ps.
77	HP5082-0300	15		S268	UHF-KuBand;FO 2.0GHz;PO 2.0W min;Cj 3.2-4.7pF;VBR 75-100V;Lifetime 200ns.
78	HP5082-0310	15		F56p	UHF-KuBand;FO 6.0GHz;PO 0.4W min;Cj 1.6-2.7pF;VBR 40-60V;Lifetime 75ns.
79	HP5082-0320	15		F56p	UHF-KuBand;FO 10GHz;PO 0.23W min;Cj 0.35-1.0pF;VBR 25-40V;Lifetime 40ns.
80	HP5082-0335	15		F27d	UHF-KuBand;FO 16GHz;PO 0.03W min;Cj 0.25-0.5pF;VBR 20-30V;Lifetime 15ns.
81	HP5082-0800	15	$	S428b	VBR 75V min;Cj 3.5-5.0pF;Typ Lifetime 250ns;Transition Time 300pS typ;Out Freq RG 1-3GHz typ
82	HP5082-0803	15	$	A1th	VBR 70V min;Cj 6.0pF;Typ Lifetime 250ns;Transition Time 350pS typ;Min Cutoff Freq 100GHz.
83	HP5082-0805	15	$	F47b	VBR 60V min;Cj 2.5-3.5pF;typ lifetime 60nS;Transistion Time 250pS typ;Out Freq Rg 3-5GHz typ
84	HP5082-0810	15	$	F47b	VBR 60V min;Cj 1.5-2.5pF;Typ Lifetime 60nS;Transistion Time 200pS typ;Out Freq Rg 5-8GHz typ
85	HP5082-0815	15	$	A1th	VBR 50V min;Cj 4.0pF;Typ Lifetime 60ns;Transition Time 225pS typ;Min Cutoff Freq 140GHz.
86	HP5082-0820	15	$	F47b	VBR 45V min;Cj 1.0-1.7pF;Typ Lifetime 30nS;Transistion Time 80pS typ;Out Freq Rg 7-10GHz typ
87	HP5082-0821	15	$	F56p	VBR 45V min;Cj 1.0-1.7pF;Typ Lifetime 30nS;Transistion Time 80pS typ;Out Freq Rg 7-10GHz typ
88	HP5082-0825	15	$	A1th	VBR 40V min;Cj 2.0pF;Typ Lifetime 30ns;Transition Time 150pS typ;Min Cutoff Freq 160GHz.
89	HP5082-0830	15	$	F47b	VBR 25V min;Cj .35-1.2pF;Typ Lifetime 30nS;Transistion Time 80pS typ;Out Freq Rg 8-12GHz typ
90	HP5082-0833	15	$	A1th	VBR 25V min;Cj 1.6pF;Typ Lifetime 30ns;Transition Time 90pS typ;Min Cutoff Freq 175GHz.
91	HP5082-0835	15	$	F47b	VBR 15V min;Cj .1-.45pF;Typ Lifetime 15nS;Transistion Time 50pS typ;Out Freq.Rg 10-20GHz typ
92	HP5082-0840	15	$	A1th	VBR 15V min;Cj 900fF;Typ Lifetime 15ns;Transition Time 70pS typ;Min Cutoff Freq 200GHz.
93	HP5082-0885	15	$	M277e	VBR 15V min;Cj .1-.45pF;Typ Lifetime 15nS;Transistion Time 50pS typ;Out Freq.Rg 10-20GHz typ
94▾	MA44631-287	15		M928a	Vacactor; Min VB 30V;C; 1.0-4.0-F; Typ Transition Time 90ps;Typ carrier Lifetime 20nS-IR 6mA
95♦	MA44632-287	15		M928a	Varactor;Min V8 30V.C; 1.0-4.0pF;Typ Transistion Time 120pS;Typ Carrier Lifetime 20nS-IR 6mA
96♦	MA44642-287	15		M928a	Varactor;Min VB 40V;Cj 2.0-5.0pF;Typ Transition Time 200pS;Typ Carrier Lifetime 20nS-IR 6mA
97▾	MA44643-287	15		M928a	Vacactor;Min VB 40V;C; 5-10pF;Typ Transition Time 300pS;Typ carrier Lifetime 50nS at IR 6mA
98	MD630	15	Si	M785a	Beam-Lead;V(BR) 25V min;Ct 90-150fF at 6V;rs 3.0Ω max;trr 3.0ns.
99	MD631	15	Si	M785a	Beam-Lead;V(BR) 15V min;Ct 140-300fF at 6V;rs 2.5Ω max.
100	MD632	15	Si	M785a	Beam-Lead;V(BR) 15V min;Ct 140-300fF at 6V;rs 2.5Ω max.
101	MD633	15	Si	M785b	Beam-Lead;V(BR) 40V min;Ct 420-520fF at 6V;rs 2.5Ω max.
102	MD634	15	Si	M785b	Beam-Lead;V(BR) 25V min;Ct 500-710fF at 6V;rs 2.0Ω max.
103	MD635	15	Si	M785b	Beam-Lead;V(BR) 40V min;Ct 700-850fF at 6V;rs 2.0Ω max;trr 6.0ns.
104	MD636	15	Si	M785b	Beam-Lead;V(BR) 25V min;Ct 700-900fF at 6V;rs 1.0Ω.
105	ND1142-7F	15	Si	M1037	Step Recovery Diode;Pt 300mW;Min BV at Ir/10uA 30V;Ct Max atVr.0.0V 2.3pF
106	ND1143-7F	15	Si	M1037	Step Recovery Diode;Pt 300mW;Min BV at Ir/10uA 30V;Ct Max atVr.0.0V 4.3pF
107	ND1242-5	15	Si		Step Recovery Diode;Pt 1.0W;Min BV at Ir/10uA 30V;Ct Max at Vr/0.0V 1.15pF
108	ND1243-5F	15	Si	M1036	Step Recovery Diode;Pt 1.0W;Min BV at Ir/10uA 30V;Ct Max at Vr/0.0V 1.95pF
109	ND1363-1G	15	Si	M1035	Step Recovery Diode;Pt 10W;MinBV at Ir/10uA 70V;Ct Max at Vr/6.0V 7.0pF
110	ND1451-5F	15	Si	M1036	Step Recovery Diode;Pt 5.0W;Min BV at Ir/10uA 55V;Ct Max at Vr.0.0V 2.3pF

8. MISCELLANEOUS DEVICES

IN ORDER OF (1) USE and (2) TYPE No.

LINE No.	[2] TYPE No.	[1] USE	DESCRIPTION MAT.	DESCRIPTION DWG. No.	TECHNICAL DATA
1	ND1551-7F	15	Si	M1037	Step Recovery Diode;Pt 300mW;Min BV at Ir/10uA 25V;Ct Max atVr/0.0V 4.0pF
2	ND1561-5F	15	Si	M1036	Step Recovery Diode;Pt 1.0W;Min BV at Ir/10uA 25V;Ct Max at Vr/0.0V 2.0pF
3	ND1571-5F	15	Si	M1036	Step Recovery Diode;Pt 1.0W;Min BV at Ir/10uA 20V;Ct Max at Vr/0.0V 1.2pF
4	BAT31	18	Si	F27h	Avalanche Noise Diode;VBR 22V;Cj 500fF;Ptot 1.0W.
5	BS756	18		M1058	GENERATOR;Noise;C-Band;Fo 5450M-5825MHz;Used w/BS226 TR Limiter
6	KN1201	18	Si#▼	DO7	Noise out 20 to 80 uV per root Hz;Freq 1.0 Hz to 500 KHZ;IB 50 uA;Rs 100 Ω;Pd 300mW max
7	KN1201A	18	Si#▼	DO7	Noise out 30 to 60 uV per root Hz;Freq 1.0 Hz to 500 KHZ;IB 50 uA;Rs 100 Ω;Pd 300mW max
8	KN1301	18	Si#▼	DO7	Noise out 70 to 200 uV per root Hz;Freq 1.0 Hz to 150 KHZ;IB 50 uA;Rs 200 Ω;Pd 300mW max
9	KN1401	18	Si#▼	DO7	Noise out 150 to 400 uV per root Hz;Freq 1.0 Hz to 80 KHZ;IB 50 uA;Rs 400 Ω;Pd 300mW max
10	MD20	18	Si	A1ar	Freq. 20kHz - 200kHz;Spectral Noise Voltage Density 200-900uV/(HzSq.Rt);V(BR)11.5-15.5V.
11	PN100-01	18	Si	F27d	Noise Diode;Freq Rng 500M-18GHz;Excess Noise Output 25dB min;Load Imped 50Ω;ID 10mA Typ
12	PN100-08	18	Si	A1at	Noise Diode;Freq Rng 500M-18GHz;Excess Noise Output 25dB min;Load Imped 50Ω;ID 10mA Typ
13	PN100-11	18	Si	F102e	Noise Diode;Freq Rng 500M-18GHz;Excess Noise Output 25dB min;Load Imped 50Ω;ID 10mA Typ
14	PN100-31	18	Si	F59m	Noise Diode;Freq Rng 500M-18GHz;Excess Noise Output 25dB min;Load Imped 50Ω;ID 10mA Typ
15	1N109	19	GeØ	A1nj	Harmonic Generator;Working V 15 max;IF 1.0mA at 1.0V.
16♦	A936W	19		M1242	Freq Multiplier;Range 26.5-40GHz;Typ Pin 300;Pout X2-50, X3-20
17♦	B936W	19		M1242	Freq Multiplier;Range 33.0-50.0GHz;Typ Pin 200;Pout X2-40,X3-10
18	CVA1116A	19	Si§§Δ	u30	Multiplier Diode(A-Mode);VB 30V min;Cj 250-500fF,fc 200GHz at 6.0V
19	CVA1116B	19	Si§§Δ	u30	Multiplier Diode(A-Mode);VB 30V min;Cj.500-1.0pF,fc 200GHz at 6.0V
20	CVA1116C	19	Si§§Δ	u30a	Multiplier Diode(A-Mode);VB 45V min;Cj.500-1.0pF,fc 175GHz at 6.0V
21	CVA1116D	19	Si§§Δ	u30a	Multiplier Diode(A-Mode);VB 45V min;Cj 1.0-1.5pF,fc 160GHz at 6.0V
22	CVA1116E	19	Si§§Δ	u30a	Multiplier Diode(A-Mode);VB 60V min;Cj 1.5-2.5pF,fc 150GHz at 6.0V
23	CVA1116F	19	Si§§Δ	u30a	Multiplier Diode(A-Mode);VB 75V min;Cj 1.5-3.0pF,fc 150GHz at 6.0V
24	CVA1116G	19	Si§§Δ	u30a	Multiplier Diode(A-Mode);VB 75V min;Cj 3.0-6.0pF,fc 120GHz at 6.0V
25	D2M5001	19	Si$*	V1	Min Vb at 10uA 50V;Cj at -6V 1.6-1.8pf;Tl 25nS;Fc -6 150GHz;Max Tt 110ps;Hi-Power
26	D2M5002	19	Si$*	V1	Min Vb at 10uA 50V;Cj at -6V .45-.55pf;Tl 22nS;Fc -6 200GHz;Max Tt 100ps;Hi Power
27	D2M5003	19	Si$*	V1	Min Vb at 10uA 50V;Cj at -6V .50-1.0pf;Tl 30nS;Fc -6 175GHz;Max Tt 125ps;Hi-Power
28♦	D5002-06	19	GAΔ$	F27ax	Multiplier Diode;Breakdown Voltage 10V min;Cj 300-600fF;PT150mW;Fc 200GHz
29♦	D5002-12	19	GAΔ$	F27ax	Multiplier Diode;Breakdown Voltage 10V min;Cj 300-600fF;PT150mW;Fc 250GHz
30♦	D5002-18	19	GAΔ$	F27ax	Multiplier Diode;Breakdown Voltage 10V min;Cj 300-600fF;PT150mW;Fc 300GHz
31♦	D5002-24	19	GAΔ$	F27ax	Multiplier Diode;Breakdown Voltage 10V min;Cj 300-600fF;PT150mW;Fc 350GHz
32♦	D5002-30	19	GAΔ$	F27ax	Multiplier Diode;Breakdown Voltage 10V min;Cj 300-600fF;PT150mW;Fc 400GHz
33♦	D5002-36	19	GAΔ$	F27ax	Multiplier Diode;Breakdown Voltage 10V min;Cj 300-450fF;PT100mW;Fc 450GHz
34♦	D5002-42	19	GAΔ$	F27ax	Multiplier Diode;Breakdown Voltage 10V min;Cj 300-450fF;PT100mW;Fc 500GHz
35♦	D5002-48	19	GAΔ$	F27ax	Multiplier Diode;Breakdown Voltage 10V min;Cj 300-350fF;PT100mW;Fc 550GHz
36♦	D5005-06	19	GAΔ$	F27ax	Multiplier Diode;Breakdown Voltage 10V min;Cj 0.6-1.0pF;PT200mW;Fc 200GHz
37♦	D5005-12	19	GAΔ$	F27ax	Multiplier Diode;Breakdown Voltage 10V min;Cj 0.6-1.0pF;PT200mW;Fc 250GHz
38♦	D5005-18	19	GAΔ$	F27ax	Multiplier Diode;Breakdown Voltage 10V min;Cj 0.6-1.0pF;PT 200mW;Fc 300GHz
39♦	D5006-06	19	GAΔ$	F27ax	Multiplier Diode;Breakdown Voltage 10V min;Cj 300-600fF;PT 200mW;Fc 200GHz
40♦	D5006-12	19	GAΔ$	F27ax	Multiplier Diode;Breakdown Voltage 10V min;Cj 300-600fF;PT 200mW;Fc 250GHz
41♦	D5006-18	19	GAΔ$	F27ax	Multiplier Diode;Breakdown Voltage 10V min;Cj 300-600fF;PT 200mW;Fc 300GHz
42♦	D5006-24	19	GAΔ$	F27ax	Multiplier Diode;Breakdown Voltage 10V min;Cj 300-600fF;PT 200mW;Fc 350GHz
43♦	D5006-30	19	GAΔ$	F27ax	Multiplier Diode;Breakdown Voltage 10V min;Cj 300-600fF;PT 200mW;Fc 400GHz
44♦	D5006-36	19	GAΔ$	F27ax	Multiplier Diode;Breakdown Voltage 20V min;Cj 300-450fF;PT 150mW;Fc 450GHz
45♦	D5007-06	19	GAΔ$	F27ax	Multiplier Diode;Breakdown Voltage 20V min;Cj 0.6-1.0pF;PT 300mW;Fc 200GHz
46♦	D5007-12	19	GAΔ$	F27ax	Multiplier Diode;Breakdown Voltage 20V min;Cj 0.6-1.0pF;PT 300mW;Fc 250GHz
47♦	D5007-18	19	GAΔ$	F27ax	Multiplier Diode;Breakdown Voltage 20V min;Cj 0.6-1.0pF;PT 300mW;Fc 300GHz
48	D5008-06	19	GAΔ$	F27ax	Multiplier Diode;VB30Vmin;Cj300-600fF at0.0V;PT300mWmax;fc200GHz at 6.0V
49	D5008-12	19	GAΔ$	F27ax	Multiplier Diode;VB30Vmin;Cj300-600fF at0.0V;PT300mWmax;fc250GHz at 6.0V
50	D5008-18	19	GAΔ$	F27ax	Multiplier Diode;VB30Vmin;Cj300-600fF at0.0V;PT300mWmax;fc300GHz at 6.0V
51	D5008-24	19	GAΔ$	F27ax	Multiplier Diode;VB30Vmin;Cj300-600fF at0.0V;PT300mWmax;fc350GHz at 6.0V
52	D5008-30	19	GAΔ$	F27ax	Multiplier Diode;VB30Vmin;Cj300-600fF at0.0V;PT300mWmax;fc400GHz at 6.0V
53	D5009-06	19	GAΔ$	F27ax	Multiplier Diode;VB30Vmin;Cj600-1000fF at0.0V;PT400mWmax;fc200GHz at 6.0V
54	D5009-12	19	GAΔ$	F27ax	Multiplier Diode;VB30Vmin;Cj600-1000fF at0.0V;PT400mWmax;fc250GHz at 6.0V
55♦	D5244-06	19	GAΔ$	F143	Multiplier Diode;VB 10Vmin;Cj 300-600fF;PT 150mW;Fc 200GHz
56♦	D5244-12	19	GAΔ$	F143	Multiplier Diode;VB 10Vmin;Cj 300-600fF;PT 150mW;Fc 250GHz
57♦	D5244-18	19	GAΔ$	F143	Multiplier Diode;VB 10Vmin;Cj 300-600fF;PT 150mW;Fc 300GHz
58♦	D5244-24	19	GAΔ$	F143	Multiplier Diode;VB 10Vmin;Cj 300-600fF;PT 150mW;Fc 350GHz
59♦	D5244-30	19	GAΔ$	F143	Multiplier Diode;VB 10Vmin;Cj 300-600fF;PT 150mW;Fc 400GHz
60♦	D5244-36	19	GAΔ$	F143	Multiplier Diode;VB 10Vmin;Cj 300-450fF;Pt 100mW;Fc 450GHz
61♦	D5244-42	19	GAΔ$	F143	Multiplier Diode;VB 10Vmin;Cj 300-450fF;Pt 100mW;Fc 500GHz
62▼	D5244-48	19		F27aw	Multiplier Diode;VB10Vmin;Cj 300-350fF at 0.0V;PT 100mWmax;Fc 550GHz
63♦	D5245-06	19	GAΔ$	F143	Multiplier Diode;Breakdown Voltage 20V min;Cj 300-600fF;PT 200mW;Fc 200GHz
64♦	D5245-12	19	GAΔ$	F143	Multiplier Diode;Breakdown Voltage 20V min;Cj 300-600fF;PT 200mW;Fc 250GHz
65♦	D5245-18	19	GAΔ$	F143	Multiplier Diode;Breakdown Voltage 20V min;Cj 300-600fF;PT200mW;Fc 300GHz
66♦	D5245-24	19	GAΔ$	F143	Multiplier Diode;Breakdown Voltage 20V min;Cj 300-600fF;PT200mW;Fc 350GHz
67♦	D5245-30	19	GAΔ$	F143	Multiplier Diode;Breakdown Voltage 20V min;Cj 300-600fF;PT200mW;Fc 400GHz
68♦	D5245-36	19	GAΔ$	F143	Multiplier Diode;Breakdown Voltage 20V min;Cj 300-450fF;PT 150mW;Fc 450GHz
69♦	D5246-06	19	GAΔ$	F143	Multiplier Diode;VB30Vmin;Cj300-600fF at0.0V;PT300mWmax;fc200GHz at 6.0V
70♦	D5246-12	19	GAΔ$	F143	Multiplier Diode;VB30Vmin;Cj300-600fF at0.0V;PT300mWmax;fc250GHz at 6.0V
71♦	D5246-18	19	GAΔ$	F143	Multiplier Diode;VB30Vmin;Cj300-600fF at0.0V;PT300mWmax;fc300GHz at 6.0V
72♦	D5246-24	19	GAΔ$	F143	Multiplier Diode;VB30Vmin;Cj300-600fF at0.0V;PT300mWmax;fc350GHz at 6.0V
73♦	D5246-30	19	GAΔ$	F143	Multiplier Diode;VB30Vmin;Cj300-600fF at0.0V;PT300mWmax;fc400GHz at 6.0V
74▼	D5249-06	19		F27aw	Multiplier Diode;VB 40V min;Cj 300-600fF at 0.0V;PT 300mW max;Fc 200GHz
75▼	D5249-12	19		F27aw	Multiplier Diode;VB 40V min;Cj 300-600fF at 0.0V;PT 300mW max;Fc 250GHz
76▼	D5249-18	19		F27aw	Multiplier Diode;VB 40V min;Cj 300-600fF at 0.0V;PT 300mW max;Fc 300GHz
77▼	D5249-24	19		F27aw	Multiplier Diode;VB 40V min;Cj 300-600fF at 0.0V;PT 300mW max;Fc 350GHz
78♦	D5254-06	19	GAΔ$	F143	Multiplier Diode;VB 10Vmin;Cj 0.6-1.0pF;PT 200mW;Fc 200GHz
79♦	D5254-12	19	GAΔ$	F143	Multiplier Diode;VB 10Vmin;Cj 0.6-1.0pF;PT 200mW;Fc 250GHz
80♦	D5254-18	19	GAΔ$	F143	Multiplier Diode;VB 10Vmin;Cj 0.6-1.0pF;PT 200mW;Fc 300GHz
81♦	D5255-06	19	GAΔ$	F143	Multiplier Diode;Breakdown Voltage 20V min;Cj 0.6-1.0pF;PT 300mW;Fc 200GHz
82♦	D5255-12	19	GAΔ$	F143	Multiplier Diode;Breakdown Voltage 20V min;Cj 0.6-1.0pF;PT 300mW;Fc 250GHz
83♦	D5255-18	19	GAΔ$	F143	Multiplier Diode;Breakdown Voltage 20V min;Cj 0.6-1.0pF;PT 300mW;Fc 300GHz
84♦	D5256-06	19	GAΔ$	F143	Multiplier Diode;VB30Vmin;Cj600-1000fF at0.0V;PT400mWmax;fc200GHZ z at 6.0V
85♦	D5256-12	19	GAΔ$	F143	Multiplier Diode;VB30Vmin;Cj600-1000fF at0.0V;PT400mWmax;fc250GHz at 6.0V
86	D5444-48	19	GAΔ$	F27aw	Multiplier Diode;VB10Vmin;Cj300-350fF at0.0V;PT150mWmax;fc550GHz at 6.0V
87	DM250	19	Si$	F27as	Varactor;VB 25V min;Cj 300-600fF;Min Carrier Lifetime 20ns;Transition Time 100ps
88	DM350	19	Si$	F27as	Varactor;VB 35V min;Cj 0.5-1.0pF;Min Carrier Lifetime 30ns;Transition Time 125ps
89	DM450	19	Si$	F27as	Varactor;VB 45V min;Cj 1.0-2.0pF;Min Carrier Lifetime 60ns;Transition Time 150ps
90	DM550	19	Si$	F27as	Varactor;VB 55V min;Cj 2.0-3.0pF;Min Carrier Lifetime 75ns;Transition Time 200ps
91	DM650	19	Si$	F27as	Varactor;VB 65V min;Cj 3.0-4.0pF;Min Carrier Lifetime 130ns;Transition Time 400ps
92	DM750	19	Si$	F27as	Varactor;VB 75V min;Cj 4.0-6.0pF;Min Carrier Lifetime 160ns;Transition Time 500ps
93	DM950	19	Si$	F27as	Varactor;VB 95V min;Cj 5.0-7.0pF;Min Carrier Lifetime 200ns;Transition Time 650ps
94	DM3510	19	Si$*	V1	Min Vb at 10uA 35V;Cj at -6V 1.6-1.8pf;Tl 35nS;Fc -6 200GHz;Max Tt 150ps
95	DM3520	19	Si$*	V1	Min Vb at 10uA 35V;Cj at -6V 1.8-2.2pf;Tl 40nS;Fc -6 200GHz;Max Tt 150ps
96	DM3530	19	Si$*	V1	Min Vb at 10uA 35V;Cj at -6V 2.2-2.5pf;Tl 45nS;Fc -6 175GHz;Max Tt 150ps
97	DM3540	19	Si$*	V1	Min Vb at 10uA 35V;Cj at -6V 2.5-3.0pf;Tl 50nS;Fc -6 175GHz;Max Tt 150ps
98	DM6010	19	Si$*	V1	Min Vb at 10uA 60V;Cj at -6V .67-.82pf;Tl 75nS;Fc -6 150GHz;Max Tt 200ps
99	DM6020	19	Si$*	V1	Min Vb at 10uA 60V;Cj at -6V .91-1.12pf;Tl 80nS;Fc -6 140GHz;Max Tt 200ps
100	DM6030	19	Si$*	V1	Min Vb at 10uA 60V;Cj at -6V 1.0-1.2pf;Tl 85nS;Fc -6 130GHz;Max Tt 200ps
101	DM6040	19	Si$*	V1	Min Vb at 10uA 60V;Cj at -6V 1.4-1.6pf;Tl 90nS;Fc -6 120GHz;Max Tt 300ps
102	DM6050	19	Si$*	V1	Min Vb at 10uA 60V;Cj at -6V 2.3-2.7pf;Tl 150nS;Fc -6 100GHz;Max Tt 500ps
103	DS2016	19	Si$*	V1	Min Vb at 10uA 20v;Cj at -6v .71-.78pf;Tl 22mS;Min Freg 175GHz
104	DS2020	19	Si$*	V1	Min Vb at 10uA 20v;Cj at -6v .45-.55pf;Tl 20mS;Min Freg 200GHz
105	DS2030	19	Si$*	V1	Min Vb at 10uA 20v;Cj at -6v .27-.34pf;Tl 18mS;Min Freg 200GHz
106	DS2040	19	Si$*	V1	Min Vb at 10uA 20v;Cj at -6v .25-.30pf;Tl 16mS;Min Freg 225GHz
107	DS2050	19	Si$*	V1	Min Vb at 10uA 20v;Cj at -6v .20-.30pf;Tl 15mS;Min Freg 225GHz
108	DS2060	19	Si$*	V1	Min Vb at 10uA 20v;Cj at -6v .17-.27pf;Tl14mS;Min Freg 250GHz
109	DS2070	19	Si$*	V1	Min Vb at 10uA 20v;Cj at -6v .16-.25pf;Tl13mS;Min Freg 250GHz
110	DS2080	19	Si$*	V1	Min Vb at 10uA 20v;Cj at -6v .12-.17pf;Tl 12mS;Min Freg 275GHz

8. MISCELLANEOUS DEVICES

IN ORDER OF (1) USE and (2) TYPE No.

LINE No.	2 TYPE No.	1 USE	DESCRIPTION MAT.	DESCRIPTION DWG. No.	TECHNICAL DATA
1	DS3010	19	Si$*	V1	Min Vb at 10uA 30v;Cj at -6v.23-.28pf;Tl 25mS;Min Freg 225GHzz
2	DS3020	19	Si$*	V1	Min Vb at 10uA 30v;Cj at -6v.50-.60pf;Tl 22mS;Min Freg 150GHz
3	DS3030	19	Si$*	V1	Min Vb at 10uA 20V;Cj at -6V .70-.80pf;Tl 30nS;Min Freq 175GHz
4	DS3040	19	Si$*	V1	Min Vb at 10uA 20V;Cj at -6V .80-1.0pf;Tl 26nS;Min Freq 150GHz
5	DS4510	19	Si$*	V1	Min Vb at 10uA 45V;Cj at -6V .30-.50pf;Tl 30nS;Min Freq 150GHz
6	DS4520	19	Si$*	V1	Min Vb at 10uA 45V;Cj at -6V .35-.40pf;Tl 30nS;Min Freq 150GHz
7	DS4530	19	Si$*	V1	Min Vb at 10uA 45V;Cj at -6V .40-.60pf;Tl 30nS;Min Freq 150GHz
8	DS4540	19	Si$*	V1	Min Vb at 10uA 45V;Cj at -6V .42-.72pf;Tl 26nS;Min Freq 150GHz
9	DS4550	19	Si$*	V1	Min Vb at 10uA 45V;Cj at -6V .70-1.0pf;Tl 26nS;Min Freq 150GHz
10	DS4560	19	Si$*	V1	Min Vb at 10uA 45V;Cj at -6V .85-1.1pf;Tl 28nS;Min Freq 125GHz
11	DS4570	19	Si$*	V1	Min Vb at 10uA 45V;Cj at -6V 1.2-1.4pf;Tl 30nS;Min Freq 125GHz
12	DVA4580A	19	Si∆$	F118	Multiplier;VBR 135Vmin;Fo Range 7.0G-9.0GHz;Po 7.0W;Ttr 300ps at IF 10mA
13	DVA4580B	19	Si∆$	F118	Multiplier;VBR 180Vmin;Fo Range 5.5G-9.0GHz;Po 8.0W;Ttr 400ps at IF 10mA
14	DVA4580C	19	Si∆$	F118	Multiplier;VBR 180Vmin;Fo Range 5.0G-8.0GHz;Po 10W;Ttr 500p s at IF 10mA
15	DVA4580D	19	Si∆$	F118	Multiplier;VBR 180Vmin;Fo Range 3.0G-5.0GHz;Po 15W;Ttr 700psat IF 10mA
16	DVA4580E	19	Si∆$	F118	Multiplier;VBR 225Vmin;Fo Range 2.0G-4.0GHz;Po 30W;Ttr 2.0nsat IF 10mA
17	DVA4580F	19	Si∆$	F118	Multiplier;VBR 225Vmin;Fo Range 1.0G-2.5GHz;Po 50W;Ttr 2.0nsat IF 10mA
18♦	DVA6735A	19	Si$§∆	F143	Multiplier Diode(A-Mode);VB 30V min;Cj 250-500fF,fc 200GHz at 6.0V
19♦	DVA6735B	19	Si$§∆	F143	Multiplier Diode(A-Mode);VB 30V min;Cj .500-1.0pF,fc 200GHz at 6.0V
20♦	DVA6735C	19	Si$§∆	F143	Multiplier Diode(A-Mode);VB 45V min;Cj .500-1.0pF,fc 175GHz at 6.0V
21♦	DVA6735D	19	Si$§∆	F143	Multiplier Diode(A-Mode);VB 45V min;Cj 1.0-1.5pF,fc 160GHz at 6.0V
22♦	DVA6736A	19	Si$§∆	F144	Multiplier Diode(A-Mode);VB 60V min;Cj 1.5-2.5pF,fc 150GHz at 6.0V
23♦	DVA6736B	19	Si$§∆	F144	Multiplier Diode(A-Mode);VB 75V min;Cj 1.5-3.0pF,fc 150GHz at 6.0V
24♦	DVA6736C	19	Si$§∆	F144	Multiplier Diode(A-Mode);VB 75V min;Cj 3.0-6.0pF,fc 120GHz at 6.0V
25♦	DVA6736D	19	Si$§∆	F144	Multiplier Diode(A-Mode);VB 100V min;Cj 5.0-10pF,fc 90GHz at 6.0V
26	DVA6737A	19	Si$§∆	S486	Multiplier Dode(A-Mode);VB 100V min;Cj 10-15pF,fc 90GHz at 6.0V
27	DVA6737B	19	Si$§∆	S486	Multiplier Diode(A-Mode);VB 125V min;Cj 5.0-10pF,fc 60GHz at 6.0V
28	DVA6737C	19	Si$§∆	S486	Multiplier Diode(A-Mode);VB 125V min;Cj 10-15pF,fc 60GHz at 6.0V
29	DVA6737D	19	Si$§∆	S486	Multiplier Diode(A-Mode);VB 150V min;Cj 10-20pF,fc 40GHz at 6.0V
30	DVA6737E	19	Si$§∆	S486	Multiplier Diode(A-Mode);VB 175V min;Cj 15-25pF,fc 20GHz at 6.0V
31♦	DVA6738A	19	Si$§∆	F143	Multiplier Diode(A-Mode);VB 60V min;Cj 300-500fF,fc 180GHz at 12V
32♦	DVA6738B	19	Si$§∆	F143	Multiplier Diode(A-Mode);VB 90V min;Cj .500-1.0pF,fc 150GHz at 12V
33♦	DVA6738C	19	Si$§∆	F143	Multiplier Diode(A-Mode);VB 90V min;Cj 1.0-1.5pF,fc 145GHz at 12V
34♦	DVA6738D	19	Si$§∆	F143	Multiplier Diode(A-Mode);VB 120V min;Cj 1.0-1.5pF,fc 140GHz at 12V
35♦	DVA6738E	19	Si$§∆	F143	Multiplier Diode(A-Mode);VB 120V min;Cj 1.5-2.5pF,fc 120GHz at 12V
36♦	DVA6738F	19	Si$§∆	F143	Multiplier Diode(A-Mode);VB 120V min;Cj 2.5-3.5pF,fc 120GHz at 12V
37♦	DVA6738G	19	Si$§∆	F143	Multiplier Diode(A-Mode);VB 150V min;Cj 4.0-5.0pF,fc 70GHz at 12V
38♦	DVA6738H	19	Si$§∆	F143	Multiplier Diode(A-Mode);VB 150V min;Cj 8.0-10pF,fc 50GHz at 12V
39♦	DVA6739A	19	Si$§∆	F98	Multiplier Diode(A-Mode);VB 135V min;Cj .800-1.3pF,fc 150GHz at 18V
40♦	DVA6739B	19	Si$§∆	F98	Multiplier Diodes(A-Mode);VB 180V min;Cj 1.0-1.5pF;fc 140GHz at 18V
41♦	DVA6739C	19	Si$§∆	F98	Multiplier Diode(A-Mode);VB 180V min;Cj 1.5-2.5pF,fc 120GHz at 18V
42♦	DVA6739D	19	Si$§∆	F98	Multiplier Diode(A-Mode);VB 180V min;Cj 2.5-3.5pF,fc 120GHz at 18V
43♦	DVA6739E	19	Si$§∆	F98	Multiplier Diode(A-Mode);VB 225V min;Cj 4.0-5.0pF,fc 70GHz at 18V
44♦	DVA6739F	19	Si$§∆	F98	Multiplier Diode(A-Mode);VB 225V min;Cj 8.0-10pF,fc 50GHz at 18V
45	DVF4559-01	19	GA∆$	F94a	Multiplier Diode;VB10Vmin;Cj100-300fF at0.0V;PT50mWmax;fc400GHz min at 6.0V
46	DVF4559-02	19	GA∆$	F94a	Multiplier Diode;VB10Vmin;Cj100-300fF at0.0V;PT50mWmax;fc450GHz min at 6.0V
47	DVF4559-03	19	GA∆$	F94a	Multiplier Diode;VB10Vmin;Cj100-300fF at0.0V;PT50mWmax;fc500GHz min at 6.0V
48	DVF4559-04	19	GA∆$	F94a	Multiplier Diode;VB10Vmin;Cj100-300fF at0.0V;PT50mWmax;fc550GHz min at 6.0V
49	DVF4559-11	19	GA∆$	F94a	Multiplier Diode;VB10Vmin;Cj300-600fF at0.0V;PT100mWmax;fc400GHz min at 6.0V
50	DVF4559-12	19	GA∆$	F94a	Multiplier Diode;VB10Vmin;Cj300-600fF at0.0V;PT100mWmax;fc450GHz min at 6.0V
51	DVF4559-21	19	GA∆$	F94a	Multiplier Diode;VB20Vmin;Cj100-300fF at0.0V;PT100mWmax;fc400GHz min at 6.0V
52	DVF4559-22	19	GA∆$	F94a	Multiplier Diode;VB20Vmin;Cj100-300fF at0.0V;PT100mWmax;fc450GHz min at 6.0V
53	DVF4559-23	19	GA∆$	F94a	Multiplier Diode;VB20Vmin;Cj100-300fF at0.0V;PT100mWmax;fc500GHz min at 6.0V
54	DVF4559-24	19	GA∆$	F94a	Multiplier Diode;VB20Vmin;Cj100-300fF at0.0V;PT100mWmax;fc550GHz min at 6.0V
55	DVF4559-31	19	GA∆$	F94a	Multiplier Diode;VB20Vmin;Cj300-600fF at0.0V;PT200mWmax;fc400GHz min at 6.0V
56	DVF4559-32	19	GA∆$	F94a	Multiplier Diode;VB20Vmin;Cj300-600fF at0.0V;PT200mWmax;fc450GHz min at 6.0V
57	DVF4559-41	19	GA∆$	F94a	Multiplier Diode;VB30Vmin;Cj100-300fF at0.0V;PT100mWmax;fc400GHz min at 6.0V
58	DVF4559-42	19	GA∆$	F94a	Multiplier Diode;VB30Vmin;Cj100-300fF at0.0V;PT100mWmax;fc450GHz min at 6.0V
59	DVF4559-43	19	GA∆$	F94a	Multiplier Diode;VB30Vmin;Cj100-300fF at0.0V;PT100mWmax;fc500GHz min at 6.0V
60	DVF4559-51	19	GA∆$	F94a	Multiplier Diode;VB30Vmin;Cj300-600fF at0.0V;PT200mWmax;fc200GHz min at 6.0V
61	GC3202	19	Si$	F49a†	150-500MHz Mult;Po 24W typ at X3 Mult;Fco 20GHz min at 6V;Cj 18-25pF at 6V;VBR 180V min
62	GC3203	19	Si$	F49a†	.50-1.2GHz Mult;Po 20W typ at X3 Mult;Fco 60GHz min at 6V;Cj 8-12pF at 6V;VBR 80V min
63	GC3204	19	Si$	F111b†	1.2-2.5GHz Mult;Po 6.0W typ at X4 Mult;Fco 110GHz min at 6V;Cj 3-6pF at 6V;VBR 80V min
64	GC3205	19	Si$	F111b†	2.5-5.0GHz Mult;Po 2.5W typ at X3 Mult;Fco 140GHz min at 6V;Cj 1.5-3pF at 6V;VBR 45V min
65	GC3206	19	Si$	F111b†	5.0-8.0GHz Mult;Po 1.5W typ at X2 Mult;Fco 150GHz min at 6V;Cj 1-2pF at 6V;VBR 40V min
66	GC3207	19	Si$	F111b†	8.0-12GHz Mult;Po 1.0W typ at X2 Mult;Fco 175GHz min at 6V;Cj .50-1pF at 6V;VBR 35V min
67	GC3208	19	Si$	F111b†	12-18GHz Mult;Po 500mW typ at X2 Mult;Fco 200GHz min at 6V;Cj .30-.60pF at 6V;VBR 25V min
68	GC3302	19	Si$	F49a†	.50-1.0GHz Mult;Po 50W typ at X3 Mult;Fco 45GHz min at 6V;Cj 8-12pF at 6V;VBR 180V min
69	GC3303	19	Si$	F49a†	.50-1.2GHz Mult;Po 40W typ at X3 Mult;Fco 60GHz min at 6V;Cj 8-10pF at 6V;VBR 160V min
70	GC3304	19	Si$	F49a†	1.2-3.0GHz Mult;Po 12W typ at X4 Mult;Fco 110GHz min at 6V;Cj 5-8pF at 6V;VBR 140V min
71	GC3304A	19	Si$	F49a†	3.0-5.0GHz Mult;Po 8.0W typ at X3 Mult;Fco 125GHz min at 6V;Cj 3-5pF at 6V;VBR 120V min
72	GC3305	19	Si$	F111b†	5.0-7.0GHz Mult;Po 6.0W typ at X3 Mult;Fco 140GHz min at 6V;Cj 1.5-3pF at 6V;VBR 100V min
73	GC3306	19	Si$	F111b†	7.0-10GHz Mult;Po 4.0W typ at X2 Mult;Fco 155GHz min at 6V;Cj 1.0-1.5pF at 6V;VBR 80V min
74	GC3307	19	Si$	F111b†	7.0-12GHz Mult;Po 3.0W typ at X2 Mult;Fco 175GHz min at 6V;Cj .50-1.0pF at 6V;VBR 70V min
75	GC3307A	19	Si$	F111b†	12-16GHz Mult;Po 2.0W typ at X2 Mult;Fco 185GHz min at 6V;Cj .50-1.0pF at 6V;VBR 60V min
76	GC3308	19	Si$	F111b†	14-18GHz Mult;Po 1.0W typ at X2 Mult;Fco 200GHz min at 6V;Cj .30-.50pF at 6V;VBR 50V min
77♦	K936	19		M1133b	Freq Multiplier;Range 18.0-26.5GHz;Pin 500 typ;Pout X2-200, X3-125
78♦	Ku936	19		M1133a	Freq Multiplier:Range 12.4-18GHz,Self-Bias Mode
79	MA435	19		M15	Harmonic Generator; RF input freq. 26.5-40 Gc; RF output 53-80 Gc.
80	MA4146	19		M15	Harmonic Generator; RF input freq. 50-75 Gc; Con. loss 30 db.
81	MS4109	19	GA	F27as	Parametric Amp;VBR 6.0V min at 1.0uA;CJ 100-400ff at 0.0V
82	MS4110	19	GA	F27as	Parametric Amp;VBR 6.0V min at 1.0uA;CJ 100-400ff at 0.0V
83	MS4111	19	GA	F27as	Parametric Amp;VBR 6.0V min at 1.0uA;CJ 100-300ff at 0.0V
84	MS4112	19	GA	F27as	Parametric Amp;VBR 6.0V min at 1.0uA;CJ 100-300ff at 0.0V
85	MS4409	19	GA		Parametric Amp;VBR 6.0V min at 1.0uA;CJ 100-400ff at 0.0V
86	MS4410	19	GA		Parametric Amp;VBR 6.0V min at 1.0uA;CJ 100-400ff at 0.0V
87	MS4411	19	GA		Parametric Amp;VBR 6.0V min at 1.0uA;CJ 100-300ff at 0.0V
88	MS4412	19	GA		Parametric Amp;VBR 6.0V min at 1.0uA;CJ 100-300ff at 0.0V
89	PFG910A01	19	GA∆$	F27as	Harm.Gen.Var;Min VB 10V;Min-Max Cj at zero bias and 1MHz .30-.60pf;Min fc at 6V 200GHz.
90	PFG910A05	19	GA∆$	F10af	Harm.Gen.Var;Min VB 10V;Min-Max Cj at zero bias and 1MHz .30-.60pf;Min fc at 6V 200GHz.
91	PFG910A45	19	GA∆$	F54c	Harm.Gen.Var;Min VB 10V;Min-Max Cj at zero bias and 1MHz .30-.60pf;Min fc at 6V 200GHz.
92	PFG910B01	19	GA∆$	F27as	Harm.Gen.Var;Min VB 10V;Min-Max Cj at zero bias and 1MHz .30-.60pf;Min fc at 6V 250GHz.
93	PFG910B05	19	GA∆$	F10af	Harm.Gen.Var;Min VB 10V;Min-Max Cj at zero bias and 1MHz .30-.60pf;Min fc at 6V 250GHz.
94	PFG910B45	19	GA∆$	F54c	Harm.Gen.Var;Min VB 10V;Min-Max Cj at zero bias and 1MHz .30-.60pf;Min fc at 6V 250GHz.
95	PFG910C01	19	GA∆$	F27as	Harm.Gen.Var;Min VB 10V;Min-Max Cj at zero bias and 1MHz .30-.60pf;Min fc at 6V 300GHz.
96	PFG910C05	19	GA∆$	F10af	Harm.Gen.Var;Min VB 10V;Min-Max Cj at zero bias and 1MHz .30-.60pf;Min fc at 6V 300GHz.
97	PFG910C45	19	GA∆$	F54c	Harm.Gen.Var;Min VB 10V;Min-Max Cj at zero bias and 1MHz .30-.60pf;Min fc at 6V 300GHz.
98	PFG910D01	19	GA∆$	F27as	Harm.Gen.Var;Min VB 10V;Min-Max Cj at zero bias and 1MHz .30-.60pf;Min fc at 6V 350GHz.
99	PFG910D05	19	GA∆$	F10af	Harm.Gen.Var;Min VB 10V;Min-Max Cj at zero bias and 1MHz .30-.60pf;Min fc at 6V 350GHz.
100	PFG910D45	19	GA∆$	F54c	Harm.Gen.Var;Min VB 10V;Min-Max Cj at zero bias and 1MHz .30-.60pf;Min fc at 6V 350GHz.
101	PFG910E01	19	GA∆$	F27as	Harm.Gen.Var;Min VB 10V;Min-Max Cj at zero bias and 1MHz .30-.60pf;Min fc at 6V 400GHz.
102	PFG910E05	19	GA∆$	F10af	Harm.Gen.Var;Min VB 10V;Min-Max Cj at zero bias and 1MHz .30-.60pf;Min fc at 6V 400GHz.
103	PFG910E45	19	GA∆$	F54c	Harm.Gen.Var;Min VB 10V;Min-Max Cj at zero bias and 1MHz .30-.60pf;Min fc at 6V 400GHz.
104	PFG910F01	19	GA∆$	F27as	Harm.Gen.Var;Min VB 10V;Min-Max Cj at zero bias and 1MHz .30-.45pf;Min fc at 6V 450GHz.
105	PFG910F05	19	GA∆$	F10af	Harm.Gen.Var;Min VB 10V;Min-Max Cj at zero bias and 1MHz .30-.45pf;Min fc at 6V 450GHz.
106	PFG910F45	19	GA∆$	F54c	Harm.Gen.Var;Min VB 10V;Min-Max Cj at zero bias and 1MHz.30-.45pf;Min fc at 6V 450GHz.
107	PFG910G01	19	GA∆$	F27as	Harm.Gen.Var;Min VB 10V;Min-Max Cj at zero bias and 1MHz .30-.45pf;Min fc at 6V 500GHz.
108	PFG910G05	19	GA∆$	F10af	Harm.Gen.Var;Min VB 10V;Min-Max Cj at zero bias and 1MHz .30-.45pf;Min fc at 6V 500GHz.
109	PFG910G45	19	GA∆$	F54c	Harm.Gen.Var;Min VB 10V;Min-Max Cj at zero bias and 1MHz .30-.45pf;Min fc at 6V 500GHz.
110	PFG910H01	19	GA∆$	F27as	Harm.Gen.Var;Min VB 10V;Min-Max Cj at zero bias and 1MHz .30-.45pf;Min fc at 6V 550GHz.

8. MISCELLANEOUS DEVICES

IN ORDER OF (1) USE and (2) TYPE No.

LINE No.	[2] TYPE No.	[1] USE	DESCRIPTION MAT.	DESCRIPTION DWG. No.	TECHNICAL DATA
1	PFG910H05	19	GAAS	F10af	Harm.Gen.Var;Min VB 10V;Min-Max Cj at zero bias and 1MHz .30-.45pf;Min fc at 6V 550GHz.
2	PFG910H45	19	GAAS	F54c	Harm.Gen.Var;Min VB 10V;Min-Max Cj at zero bias and 1MHz .30-.45pf;Min fc at 6V 550GHz.
3	PFG911A01	19	GAAS	F27as	Harm.Gen.Var;Min VB 10V;Min-Max Cj at zero bias and 1MHz .60-1.0pf;Min fc at 6V 200GHz.
4	PFG911A05	19	GAAS	F10af	Harm.Gen.Var;Min VB 10V;Min-Max Cj at zero bias and 1MHz .60-1.0pf;Min fc at 6V 200GHz.
5	PFG911A45	19	GAAS	F54c	Harm.Gen.Var;Min VB 10V;Min-Max Cj at zero bias and 1MHz .60-1.0pf;Min fc at 6V 200GHz.
6	PFG911B01	19	GAAS	F27as	Harm.Gen.Var;Min VB 10V;Min-Max Cj at zero bias and 1MHz .60-1.0pf;Min fc at 6V 250GHz.
7	PFG911B05	19	GAAS	F10af	Harm.Gen.Var;Min VB 10V;Min-Max Cj at zero bias and 1MHz .60-1.0pf;Min fc at 6V 250GHz.
8	PFG911B45	19	GAAS	F54c	Harm.Gen.Var;Min VB 10V;Min-Max Cj at zero bias and 1MHz .60-1.0pf;Min fc at 6V 250GHz.
9	PFG911C01	19	GAAS	F27as	Harm.Gen.Var;Min VB 10V;Min-Max Cj at zero bias and 1MHz .60-1.0pf;Min fc at 6V 300GHz.
10	PFG911C05	19	GAAS	F10af	Harm.Gen.Var;Min VB 10V;Min-Max Cj at zero bias and 1MHz .60-1.0pf;Min fc at 6V 300GHz.
11	PFG911C45	19	GAAS	F54c	Harm.Gen.Var;Min VB 10V;Min-Max Cj at zero bias and 1MHz .60-1.0pf;Min fc at 6V 300GHz.
12	PFG911D01	19	GAAS	F27as	Harm.Gen.Var;Min VB 10V;Min-Max Cj at zero bias and 1MHz .60-1.0pf;Min fc at 6V 350GHz.
13	PFG911D05	19	GAAS	F10af	Harm.Gen.Var;Min VB 10V;Min-Max Cj at zero bias and 1MHz .60-1.0pf;Min fc at 6V 350GHz.
14	PFG911D45	19	GAAS	F54c	Harm.Gen.Var;Min VB 10V;Min-Max Cj at zero bias and 1MHz .60-1.0pf;Min fc at 6V 350GHz.
15	PFG920A01	19	GAAS	F27as	Harm.Gen.Var;Min VB 20V;Min-Max Cj at zero bias and 1MHz .30-.60pf;Min fc at 6V 200GHz.
16	PFG920A05	19	GAAS	F10af	Harm.Gen.Var;Min VB 20V;Min-Max Cj at zero bias and 1MHz .30-.60pf;Min fc at 6V 200GHz.
17	PFG920A45	19	GAAS	F54c	Harm.Gen.Var;Min VB 20V;Min-Max Cj at zero bias and 1MHz .30-.60pf;Min fc at 6V 200GHz.
18	PFG920B01	19	GAAS	F27as	Harm.Gen.Var;Min VB 20V;Min-Max Cj at zero bias and 1MHz .30-.60pf;Min fc at 6V 250GHz.
19	PFG920B05	19	GAAS	F10af	Harm.Gen.Var;Min VB 20V;Min-Max Cj at zero bias and 1MHz .30-.60pf;Min fc at 6V 250GHz.
20	PFG920B45	19	GAAS	F54c	Harm.Gen.Var;Min VB 20V;Min-Max Cj at zero bias and 1MHz .30-.60pf;Min fc at 6V 250GHz.
21	PFG920C01	19	GAAS	F27as	Harm.Gen.Var;Min VB 20V;Min-Max Cj at zero bias and 1MHz .30-.60pf;Min fc at 6V 300GHz.
22	PFG920C05	19	GAAS	F10af	Harm.Gen.Var;Min VB 20V;Min-Max Cj at zero bias and 1MHz.30-.60pf;Min fc at 6V 300GHz.
23	PFG920C45	19	GAAS	F54c	Harm.Gen.Var;Min VB 20V;Min-Max Cj at zero bias and 1MHz .30-.60pf;Min fc at 6V 300GHz.
24	PFG920D01	19	GAAS	F27as	Harm.Gen.Var;Min VB 20V;Min-Max Cj at zero bias and 1MHz .30-.60pf;Min fc at 6V 350GHz.
25	PFG920D05	19	GAAS	F10af	Harm.Gen.Var;Min VB 20V;Min-Max Cj at zero bias and 1MHz .30-.60pf;Min fc at 6V 350GHz.
26	PFG920D45	19	GAAS	F54c	Harm.Gen.Var;Min VB 20V;Min-Max Cj at zero bias and 1MHz .30-.60pf;Min fc at 6V 350GHz.
27	PFG920E01	19	GAAS	F27as	Harm.Gen.Var;Min VB 20V;Min-Max Cj at zero bias and 1MHz .30-.60pf;Min fc at 6V 400GHz.
28	PFG920E05	19	GAAS	F10af	Harm.Gen.Var;Min VB 20V;Min-Max Cj at zero bias and 1MHz .30-.60pf;Min fc at 6V 400GHz.
29	PFG920E45	19	GAAS	F54c	Harm.Gen.Var;Min VB 20V;Min-Max Cj at zero bias and 1MHz .30-.60pf;Min fc at 6V 400GHz.
30	PFG920F01	19	GAAS	F27as	Harm.Gen.Var;Min VB 20V;Min-Max Cj at zero bias and 1MHz .30-.45pf;Min fc at 6V 450GHz.
31	PFG920F05	19	GAAS	F10af	Harm.Gen.Var;Min VB 20V;Min-Max Cj at zero bias and 1MHz .30-.45pf;Min fc at 6V 450GHz.
32	PFG920F45	19	GAAS	F54c	Harm.Gen.Var;Min VB 20V;Min-Max Cj at zero bias and 1MHz .30-.45pf;Min fc at 6V 450GHz.
33	PFG920G01	19	GAAS	F27as	Harm.Gen.Var;Min VB 20V;Min-Max Cj at zero bias and 1MHz .30-.45pf;Min fc at 6V 500GHz.
34	PFG920G05	19	GAAS	F10af	Harm.Gen.Var;Min VB 20V;Min-Max Cj at zero bias and 1MHz .30-.45pf;Min fc at 6V 500GHz.
35	PFG920G45	19	GAAS	F54c	Harm.Gen.Var;Min VB 20V;Min-Max Cj at zero bias and 1MHz .30-.45pf;Min fc at 6V 500GHz.
36	PFG921A01	19	GAAS	F27as	Harm.Gen.Var;Min VB 20V;Min-Max Cj at zero bias and 1MHz .60-1.0pf;Min fc at 6V 200GHz.
37	PFG921A05	19	GAAS	F10af	Harm.Gen.Var;Min VB 20V;Min-Max Cj at zero bias and 1MHz .60-1.0pf;Min fc at 6V 200GHz.
38	PFG921A45	19	GAAS	F54c	Harm.Gen.Var;Min VB 20V;Min-Max Cj at zero bias and 1MHz .60-1.0pf;Min fc at 6V 200GHz.
39	PFG921B01	19	GAAS	F27as	Harm.Gen.Var;Min VB 20V;Min-Max Cj at zero bias and 1MHz .60-1.0pf;Min fc at 6V 250GHz.
40	PFG921B05	19	GAAS	F10af	Harm.Gen.Var;Min VB 20V;Min-Max Cj at zero bias and 1MHz .60-1.0pf;Min fc at 6V 250GHz.
41	PFG921B45	19	GAAS	F54c	Harm.Gen.Var;Min VB 20V;Min-Max Cj at zero bias and 1MHz .60-1.0pf;Min fc at 6V 250GHz.
42	PFG921C01	19	GAAS	F27as	Harm.Gen.Var;MinVB 20V;Min-Max Cj at zero bias and 1MHz.60-1.0pf;Min fc at 6V 300GHz.
43	PFG921C05	19	GAAS	F10af	Harm.Gen.Var;Min VB 20V;Min-Max Cj at zero bias and 1MHz .60-1.0pf;Min fc at 6V 300GHz.
44	PFG921C45	19	GAAS	F54c	Harm.Gen.Var;Min VB 20V;Min-Max Cj at zero bias and 1MHz .60-1.0pf;Min fc at 6V 300GHz.
45	PFG930A01	19	GAAS	F27as	Harm.Gen.Var;Min VB 30V;Min-Max Cj at zero bias and 1MHz .30-.60pf;Min fc at 6V 200GHz.
46	PFG930A05	19	GAAS	F10af	Harm.Gen.Var;Min VB 30V;Min-Max Cj at zero bias and 1MHz .30-.60pf;Min fc at 6V 200GHz.
47	PFG930A45	19	GAAS	F54c	Harm.Gen.Var;Min VB 30V;Min-Max Cj at zero bias and 1MHz .30-.60pf;Min fc at 6V 200GHz.
48	PFG930B01	19	GAAS	F27as	Harm.Gen.Var;Min VB 30V;Min-Max Cj at zero bias and 1MHz .30-.60pf;Min fc at 6V 250GHz.
49	PFG930B45	19	GAAS	F54c	Harm.Gen.Var;Min VB 30V;Min-Max Cj at zero bias and 1MHz .30-.60pf;Min fc at 6V 250GHz.
50	PFG930C01	19	GAAS	F27as	Harm.Gen.Var;Min VB 30V;Min-Max Cj at zero bias and 1MHz .30-.60pf;Min fc at 6V 300GHz.
51	PFG930C05	19	GAAS	F10af	Harm.Gen.Var;Min VB 30V;Min-Max Cj at zero bias and 1MHz .30-.60pf;Min fc at 6V 300GHz.
52	PFG930C45	19	GAAS	F54c	Harm.Gen.Var;Min VB 30V;Min-Max Cj at zero bias and 1MHz .30-.60pf;Min fc at 6V 300GHz.
53	PFG930D01	19	GAAS	F27as	Harm.Gen.Var;Min VB 30V;Min-Max Cj at zero bias and 1MHz .30-.60pf;Min fc at 6V 350GHz.
54	PFG930D05	19	GAAS	F10af	Harm.Gen.Var;Min VB 30V;Min-Max Cj at zero bias and 1MHz .30-.60pf;Min fc at 6V 350GHz.
55	PFG930D45	19	GAAS	F54c	Harm.Gen.Var;Min VB 30V;Min-Max Cj at zero bias and 1MHz .30-.60pf;Min fc at 6V 350GHz.
56	PFG930E01	19	GAAS	F27as	Harm.Gen.Var;Min VB 30V;Min-Max Cj at zero bias and 1MHz .30-.60pf;Min fc at 6V 400GHz.
57	PFG930E05	19	GAAS	F10af	Harm.Gen.Var;Min VB 30V;Min-Max Cj at zero bias and 1MHz .30-.60pf;Min fc at 6V 400GHz.
58	PFG930E45	19	GAAS	F54c	Harm.Gen.Var;Min VB 30V;Min-Max Cj at zero bias and 1MHz .30-.60pf;Min fc at 6V 400GHz.
59	PFG931A01	19	GAAS	F27as	Harm.Gen.Var;Min VB 30V;Min-Max Cj at zero bias and 1MHz .60-1.0pf;Min fc at 6V 200GHz.
60	PFG931A05	19	GAAS	F10af	Harm.Gen.Var;Min VB 30V;Min-Max Cj at zero bias and 1MHz .60-1.0pf;Min fc at 6V 200GHz.
61	PFG931A45	19	GAAS	F54c	Harm.Gen.Var;Min VB 30V;Min-Max Cj at zero bias and 1MHz .60-1.0pf;Min fc at 6V 200GHz.
62	PFG931B01	19	GAAS	F27as	Harm.Gen.Var;Min VB 30V;Min-Max Cj at zero bias and 1MHz .60-1.0pf;Min fc at 6V 250GHz.
63	PFG931B05	19	GAAS	F10af	Harm.Gen.Var;Min VB 30V;Min-Max Cj at zero bias and 1MHz .60-1.0pf;Min fc at 6V 250GHz.
64	PFG931B45	19	GAAS	F54c	Harm.Gen.Var;Min VB 30V;Min-Max Cj at zero bias and 1MHz .60-1.0pf;Min fc at 6V 250GHz.
65	PHR900-03	19	SiAS	S19w	Harmonic Generator Varactors;VB 150V min;Cj 18-25pf at 6V,1MHz;Min fc at 6V 20GHz.
66	PHR900-12	19	SiAS	F49e	Harmonic Generator Varactors;VB 150V min;Cj 18-25pf at 6V,1MHz;Min fc at 6V 20GHz.
67	PHR900-22	19	SiAS	F48f	Harmonic Generator Varactors;VB 150V min;Cj 18-25pf at 6V,1MHz;Min fc at 6V 20GHz.
68	PHR900-82	19	SiAS	S396a	Harmonic Generator Varactors;VB 150V min;Cj 18-25pf at 6V,1MHz;Min fc at 6V 20GHz.
69	PHR901-03	19	SiAS	S19w	Harmonic Generator Varactors;VB 120V min;Cj 10-20pf at 6V,1MHz;Min fc at 6V 30GHz.
70	PHR901-12	19	SiAS	F49e	Harmonic Generator Varactors;VB 120V min;Cj 10-20pf at 6V,1MHz;Min fc at 6V 30GHz.
71	PHR901-22	19	SiAS	F48f	Harmonic Generator Varactors;VB 120V min;Cj 10-20pf at 6V,1MHz;Min fc at 6V 30GHz.
72	PHR901-82	19	SiAS	S396a	Harmonic Generator Varactors;VB 120V min;Cj 10-20pf at 6V,1MHz;Min fc at 6V 30GHz.
73	PHR902-03	19	SiAS	S19w	Harmonic Generator Varactors;VB 100V min;Cj 8.0-12pf at 6V,1MHz;Min fc at 6V 60GHz.
74	PHR902-12	19	SiAS	F49e	Harmonic Generator Varactors;VB 100V min;Cj 8.0-12pf at 6V,1MHz;Min fc at 6V 60GHz.
75	PHR902-22	19	SiAS	F48f	Harmonic Generator Varactors;VB 100V min;Cj 8.0-12pf at 6V,1MHz;Min fc at 6V 60GHz.
76	PHR902-82	19	SiAS	S396a	Harmonic Generator Varactors;VB 100V min;Cj 8.0-12pf at 6V,1MHz;Min fc at 6V 60GHz.
77	PHR903-03	19	SiAS	S19w	Harmonic Generator Varactors;VB 80V min;Cj 3.0-6.0pf at 6V,1MHz;Min fc at 6V 90GHz.
78	PHR903-12	19	SiAS	F49e	Harmonic Generator Varactors;VB 80V min;Cj 3.0-6.0pf at 6V,1MHz;Min fc at 6V 90GHz.
79	PHR903-22	19	SiAS	F48f	Harmonic Generator Varactors;VB 80V min;Cj 3.0-6.0pf at 6V,1MHz;Min fc at 6V 90GHz.
80	PHR903-82	19	SiAS	S396a	Harmonic Generator Varactors;VB 80V min;Cj 3.0-6.0pf at 6V,1MHz;Min fc at 6V 90GHz.
81	PHR904-03	19	SiAS	S19w	Harmonic Generator Varactors;VB 80V min;Cj 3.0-5.0pf at 6V,1MHz;Min fc at 6V 100GHz.
82	PHR904-12	19	SiAS	F49e	Harmonic Generator Varactors;VB 80V min;Cj 3.0-5.0pf at 6V,1MHz;Min fc at 6V 100GHz.
83	PHR904-22	19	SiAS	F48f	Harmonic Generator Varactors;VB 80V min;Cj 3.0-5.0pf at 6V,1MHz;Min fc at 6V 100GHz.
84	PHR904-82	19	SiAS	S356	Harmonic Generator Varactors;VB 80V min;Cj 3.0-5.0pf at 6V,1MHz;Min fc at 6V 100GHz.
85	PHR905-01	19	SiAS	F27as	Harmonic Generator Varactors;VB 60V min;Cj 3.0-5.0pf at 6V,1MHz;Min fc at 6V 90GHz.
86	PHR905-12	19	SiAS	F49e	Harmonic Generator Varactors;VB 60V min;Cj 3.0-5.0pf at 6V,1MHz;Min fc at 6V 90GHz.
87	PHR905-22	19	SiAS	F48f	Harmonic Generator Varactors;VB 60V min;Cj 3.0-5.0pf at 6V,1MHz;Min fc at 6V 90GHz.
88	PHR905-83	19	SiAS	S356	Harmonic Generator Varactors;VB 60V min;Cj 3.0-5.0pf at 6V,1MHz;Min fc at 6V 90GHz.
89	PHR906-01	19	SiAS	F27as	Harmonic Generator Varactors;VB 45V min;Cj 1.5-3.0pf at 6V,1MHz;Min fc at 6V 140GHz.
90	PHR906-12	19	SiAS	F49e	Harmonic Generator Varactors;VB 45V min;Cj 1.5-3.0pf at 6V,1MHz;Min fc at 6V 140GHz.
91	PHR906-22	19	SiAS	F48f	Harmonic Generator Varactors;VB 45V min;Cj 1.5-3.0pf at 6V,1MHz;Min fc at 6V 140GHz.
92	PHR906-83	19	SiAS	S356	Harmonic Generator Varactors;VB 45V min;Cj 1.5-3.0pf at 6V,1MHz;Min fc at 6V 140GHz.
93	PHR907-01	19	SiAS	F27as	Harmonic Generator Varactors;VB 40V min;Cj 1.0-2.0pf at 6V,1MHz;Min fc at 6V 150GHz.
94	PHR907-05	19	SiAS	F10af	Harmonic Generator Varactors;VB 40V min;Cj 1.0-2.0pf at 6V,1MHz;Min fc at 6V 150GHz.
95	PHR907-45	19	SiAS	F54c	Harmonic Generator Varactors;VB 40V min;Cj 1.0-2.0pf at 6V,1MHz;Min fc at 6V 150GHz.
96	PHR907-83	19	SiAS	S356	Harmonic Generator Varactors;VB 40V min;Cj 1.0-2.0pf at 6V,1MHz;Min fc at 6V 150GHz.
97	PHR908-01	19	SiAS	F27as	Harmonic Generator Varactors;VB 35V min;Cj .50-1.0pf at 6V,1MHz;Min fc at 6V 175GHz.
98	PHR908-05	19	SiAS	F10af	Harmonic Generator Varactors;VB 35V min;Cj .50-1.0pf at 6V,1MHz;Min fc at 6V 175GHz.
99	PHR908-45	19	SiAS	F54c	Harmonic Generator Varactors;VB 35V min;Cj .50-1.0pf at 6V,1MHz;Min fc at 6V 175GHz.
100	PHR908-83	19	SiAS	S356	Harmonic Generator Varactors;VB 35V min;Cj .50-1.0pf at 6V,1MHz;Min fc at 6V 175GHz.
101	PHR909-01	19	SiAS	F27as	Harmonic Generator Varactors;VB 25V min;Cj .30-.50pf at 6V,1MHz;Min fc at 6V 200GHz.
102	PHR909-05	19	SiAS	F10af	Harmonic Generator Varactors;VB 25V min;Cj .30-.50pf at 6V,1MHz;Min fc at 6V 200GHz.
103	PHR909-45	19	SiAS	F54c	Harmonic Generator Varactors;VB 25V min;Cj .30-.50pf at 6V,1MHz;Min fc at 6V 200GHz.
104	PHR909-83	19	SiAS	S356	Harmonic Generator Varactors;VB 25V min;Cj .30-.50pf at 6V,1MHz;Min fc at 6V 200GHz.
105	PHR910-01	19	SiAS	F27as	Harmonic Generator Varactors;VB 10V min;Cj .15-.20pf at 6V,1MHz;Min fc at 6V 300GHz.
106	PHR910-05	19	SiAS	F10af	Harmonic Generator Varactors;VB 10V min;Cj .15-.20pf at 6V,1MHz;Min fc at 6V 300GHz.
107	PHR910-45	19	SiAS	F54c	Harmonic Generator Varactors;VB 10V min;Cj .15-.20pf at 6V,1MHz;Min fc at 6V 300GHz.
108	PHR910-83	19	SiAS	S356	Harmonic Generator Varactors;VB 10V min;Cj .15-.20pf at 6V,1MHz;Min fc at 6V 300GHz.
109	PHR1000-01	19	SiAS	F27as	Power Multiplier Varactors;PO 40W typ;VB 150V min;Cj 7.0-10pf at 6V,1MHz;Min fc at 6V 60GHz.
110	PHR1000-22	19	SiAS	F48f	Power Multiplier Varactors;PO 40W typ;VB 150V min;Cj 7.0-10pf at 6V,1MHz;Min fc at 6V 60GHz.

SYMBOLS AND CODES EXPLAINED IN INTERPRETER

8. MISCELLANEOUS DEVICES

IN ORDER OF (1) USE and (2) TYPE No.

LINE No.	[2] TYPE No.	[1] USE	DESCRIPTION MAT.	DWG. No.	TECHNICAL DATA
1	PHR1000-32	19	Si∆$	F10ag	Power Multiplier Varactors;PO 40W typ;VB 150V min;Cj 7.0-10pf at 6V,1MHz;Min fc at 6V 60GHz.
2	PHR1000-83	19	Si∆$	S356	Power Multiplier Varactors;PO 40W typ;VB 150V min;Cj 7.0-10pf at 6V,1MHz;Min fc at 6V 60GHz.
3	PHR1001-01	19	Si∆$	F27as	Power Multiplier Varactors;PO 16W typ;VB150Vmin;Cj 4.0-7.0pf at 6V,1MHz;Min fc at 6V 110GHz.
4	PHR1001-22	19	Si∆$	F48f	Power Multiplier Varactors;PO 16W typ;VB150Vmin;Cj 4.0-7.0pf at 6V,1MHz;Min fc at 6V 110GHz.
5	PHR1001-32	19	Si∆$	F10ag	Power Multiplier Varactors;PO 16W typ;VB150Vmin;Cj 4.0-7.0pf at 6V,1MHz;Min fc at 6V 110GHz.
6	PHR1001-83	19	Si∆$	S356	Power Multiplier Varactors;PO 16W typ;VB150Vmin;Cj 4.0-7.0pf at 6V,1MHz;Min fc at 6V 110GHz.
7	PHR1002-01	19	Si∆$	F27as	Power Multiplier Varactors;PO 6.0Wtyp;VB 100Vmin;Cj 2.0-4.0pf at 6V,1MHz;Min fc at 6V 140GHz
8	PHR1002-22	19	Si∆$	F48f	Power Multiplier Varactors;PO 6.0Wtyp;VB100Vmin;Cj2.0-4.0pf at 6V,1MHz;Min fc at 6V 140GHz.
9	PHR1002-32	19	Si∆$	F10ag	Power Multiplier Varactors;PO 6.0Wtyp;VB100Vmin;Cj2.0-4.0pf at 6V,1MHz;Min fc at 6V 140GHz.
10	PHR1002-83	19	Si∆$	S356	Power Multiplier Varactors;PO 6.0Wtyp;VB100Vmin;Cj2.0-4.0pf at 6V,1MHz;Min fc at 6V 140GHz.
11	PHR1003-01	19	Si∆$	F27as	Power Multiplier Varactors;PO 3.0Wtyp;VB 80Vmin;Cj 1.0-2.0pf at 6V,1MHz;Min fc at 6V 150GHz.
12	PHR1003-22	19	Si∆$	F48f	Power Multiplier Varactors;PO 3.0Wtyp;VB 80Vmin;Cj 1.0-2.0pf at 6V,1MHz;Min fc at 6V 150GHz.
13	PHR1003-32	19	Si∆$	F10ag	Power Multiplier Varactors;PO 3.0Wtyp;VB 80Vmin;Cj 1.0-2.0pf at 6V,1MHz;Min fc at 6V 150GHz.
14	PHR1003-83	19	Si∆$	S356	Power Multiplier Varactors;PO 3.0Wtyp;VB 80Vmin;Cj 1.0-2.0pf at 6V,1MHz;Min fc at 6V 150GHz.
15	PHR1004-01	19	Si∆$	F27as	Power Multiplier Varactors;PO 2.5Wtyp;VB 70Vmin;Cj.50-1.0pf at 6V,1MHz;Min fc at 6V 175GHz.
16	PHR1004-83	19	Si∆$	S356	Power Multiplier Varactors;PO 2.5Wtyp;VB 70Vmin;Cj.50-1.0pf at 6V,1MHz;Min fc at 6V 175GHz.
17	PHR1005-01	19	Si∆$	F27as	Power Multiplier Varactors;PO 1.0Wtyp;VB 55Vmin;Cj.30-.60pf at 6V,1MHz;Min fc at 6V 200GHz.
18	PHR1005-83	19	Si∆$	S356	Power Multiplier Varactors;PO 1.0Wtyp;VB 55Vmin;Cj.30-.60pf at 6V,1MHz;Min fc at 6V 200GHz.
19	PLR300-01	19		F27as	Harm.Gen.Var.(Step Rec)Min-Max VB75-100V;Min-Max Cj3.5-5.0pf at 10V,1MHz;Max.trans.time350ps
20	PLR300-05	19		F10af	Harm.Gen.Var.(Step Rec)Min-Max VB75-100V;Min-Max Cj3.5-5.0pf at 10V,1MHz;Max.trans.time350ps
21	PLR300-45	19		F54c	Harm.Gen.Var.(Step Rec)Min-Max VB75-100V;Min-Max Cj3.5-5.0pf at 10V,1MHz;Max.trans.time350ps
22	PLR300-83	19		S356	Harm.Gen.Var.(Step Rec)Min-Max VB75-100V;Min-Max Cj3.5-5.0pf at 10V,1MHz;Max.trans.time350ps
23	PLR301-01	19		F27as	Harm.Gen.Var.(Step Rec)Min-Max VB45-80V;Min-Max Cj 2.5-4.0pf at 10V,1MHz;Max.trans.time225ps
24	PLR301-05	19		F10af	Harm.Gen.Var.(Step Rec)Min-Max VB45-80V;Min-Max Cj 2.5-4.0pf at 10V,1MHz;Max.trans.time225ps
25	PLR301-45	19		F54c	Harm.Gen.Var.(Step Rec)Min-Max VB45-80V;Min-Max Cj 2.5-4.0pf at 10V,1MHz;Max.trans.time225ps
26	PLR301-83	19		S356	Harm.Gen.Var.(Step Rec)Min-Max VB45-80V;Min-Max Cj 2.5-4.0pf at 10V,1MHz;Max.trans.time225ps
27	PLR302-01	19		F27as	Harm.Gen.Var.(Step Rec)Min-Max VB45-60V;Min-Max Cj1.5-3.0pf at 10V,1MHz;Max.trans.time150ps.
28	PLR302-05	19		F10af	Harm.Gen.Var.(Step Rec)Min-Max VB45-60V;Min-Max Cj1.5-3.0pf at 10V,1MHz;Max.trans.time150ps.
29	PLR302-34	19		F56x	Harm.Gen.Var.(Step Rec)Min-Max VB45-60V;Min-Max Cj1.5-3.0pf at 10V,1MHz;Max.trans.time150ps.
30	PLR302-45	19		F54c	Harm.Gen.Var.(Step Rec)Min-Max VB45-60V;Min-Max Cj1.5-3.0pf at 10V,1MHz;Max.trans.time150ps.
31	PLR302-83	19		S356	Harm.Gen.Var.(Step Rec)Min-Max VB45-60V;Min-Max Cj1.5-3.0pf at 10V,1MHz;Max.trans.time150ps.
32	PLR303-01	19		F27as	Harm.Gen.Var.(Step Rec)Min-Max VB30-50V;Min-Max Cj.50-1.2pf at 10V,1MHz;Max.trans.time110ps.
33	PLR303-05	19		F10af	Harm.Gen.Var.(Step Rec)Min-Max VB30-50V;Min-Max Cj.50-1.2pf at 10V,1MHz;Max.trans.time110ps.
34	PLR303-45	19		F54c	Harm.Gen.Var.(Step Rec)Min-Max VB30-50V;Min-Max Cj.50-1.2pf at 10V,1MHz;Max.trans.time110ps.
35	PLR303-83	19		S356	Harm.Gen.Var.(Step Rec)Min-Max VB30-50V;Min-Max Cj.50-1.2pf at 10V,1MHz;Max.trans.time110ps.
36	PLR304-01	19		F27as	Harm.Gen.Var.(Step Rec)Min-Max VB25-40V;Min-Max Cj.40-.90pf at 10V,1MHz;Max.trans.time 80ps.
37	PLR304-05	19		F10af	Harm.Gen.Var.(Step Rec)Min-Max VB25-40V;Min-Max Cj.40-.90pf at 10V,1MHz;Max.trans.time 80ps.
38	PLR304-45	19		F54c	Harm.Gen.Var.(Step Rec)Min-Max VB25-40V;Min-Max Cj.40-.90pf at 10V,1MHz;Max.trans.time 80ps.
39	PLR304-83	19		S356	Harm.Gen.Var.(Step Rec)Min-Max VB25-40V;Min-Max Cj.40-.90pf at 10V,1MHz;Max.trans.time 80ps.
40	PLR305-01	19		F27as	Harm.Gen.Var.(Step Rec.)Min-Max VB15-30V;Min-Max Cj.20-.45pf at 10V,1MHz;Max trans.time75ps
41	PLR305-05	19		F10af	Harm.Gen.Var.(Step Rec.)Min-Max VB15-30V;Min-Max Cj.20-.45pf at 10V,1MHz;Max trans.time75ps
42	PLR305-45	19		F54c	Harm.Gen.Var.(Step Rec.)Min-Max VB15-30V;Min-Max Cj.20-.45pf at 10V,1MHz;Max trans.time75ps
43	PLR305-83	19		S356	Harm.Gen.Var.(Step Rec.)Min-Max VB15-30V;Min-Max Cj.20-.45pf at 10V,1MHz;Max trans.time75ps
44	S3015A	19	Si§§	F121	Pd 3.5W;V(BR) 30V;C(T) 0.5-1.0pF at 10V, 1MHz;Fin 840MHz at Pin 1.0W;Fout 7.56GHz at Pout 80
45	S3015B	19	Si§§	F120	Pd 3.5W;V(BR) 30V;C(T) 0.5-1.0pF at 10V,1MHz;Fin 840MHz at Pin 1.0W;Fout 7.56GHz at Pout 80m
46	S3046	19	Si$#	S419a	Pin;V(BR) 180V;C(T) 0.35pF at Vr 50V,1MHz;R(S) 0.8Ω at I(F) 100mA
47▼	SD1484-10	19	Si $	TO46	UHF/VHF Communications Transistor;BVCEO 18V min;Freq 175MHz;Pout 1.0W;Gp 10dB min
48	SV14B	19	Si	A1bw	Vr-30V min;Cjo-2.0pf max;Step recovery diode for harmonic generation.
49	VAB1610AN28	19	Si§	F59h	Multiplier Diode;VB 180V min;Cj 8.0-12pF at 6.0V;Carrier Lifetime 200ns min
50♦	X936	19		M1133c	Freq Multiplier;Range 8.2-12.4GHz;Pin 800 typ;Pout X2-400, X3-250
51▼	1SS70	20	Si $	V15	Schottky Mixer/Detectors;N type;Med Barrier;Pi 200mW;Max Freq 12GHz;Top -65 to 150°C
52	A2S251	20	Si ♦	C210	P-Type Schott Barr for Non-Biased Applications;T(SS) min 60.0 (Typ)
53▼	A972	20		M1244	Freq range 26.5-40.0GHz;Full Band BW;VSWR 5.5;Video Sens 300mV/mW;Tang Sens -55dBm;Pos Out
54	ACSM2001N	20	♦	M1057	Diode Module Detector;Freq .5-2GHz;Video Capacity 40-80pf
55	ACSM2001P	20	♦	M1057	Diode Module Detector;Freq .5-2GHz;Video Capacity 40-80pf
56	ACSM2002N	20	♦	M1057	Diode Module Detector;Freq 2-4GHz;Video Capacity 14-24pf
57	ACSM2002P	20	♦	M1057	Diode Module Detector;Freq 2-4GHz;Video Capacity 14-24pf
58	ACSM2003N	20	♦	M1057	Diode Module Detector;Freq 4-8GHz;Video Capacity 14-20pf
59	ACSM2003P	20	♦	M1057	Diode Module Detector;Freq 4-8GHz;Video Capacity 14-20pf
60	ACSM2004N	20	♦	M1058	Diode Module Detector;Freq 8-12GHz;Video Capacity 8-15pf
61	ACSM2004P	20	♦	M1058	Diode Module Detector;Freq 8-12GHz;Video Capacity 8-15pf
62	ACSM2005N	20	♦	M1058	Diode Module Detector;Freq 12-18GHz;Video Capacity 8-15pf
63	ACSM2005P	20	♦	M1058	Diode Module Detector;Freq 12-18GHz;Video Capacity 8-15pf
64	ACSM2006N	20	♦	M1058	Diode Module Detector;Freq 2-18GHz;Video Capacity 8-15pf
65	ACSM2006P	20	♦	M1058	Diode Module Detector;Freq 2-18GHz;Video Capacity 8-15pf
66	ACSM2007N	20	♦	M1058	Diode Module Detector;Freq 2-12GHz;Video Capacity 14-20pf
67	ACSM2007P	20	♦	M1058	Diode Module Detector;Freq 2-12GHz;Video Capacity 14-20pf
68	ACTP1501N	20		S524	Coaxial Tunnel Diode Detector;Freq .5-2GHz;Pin 50mV(17dBm);Video Capacity 70pf
69	ACTP1501P	20		S524	Coaxial Tunnel Diode Detector;Freq .5-2GHz;Pin 50mV(17dBm);Video Capacity 70pf
70	ACTP1502N	20		S524	Coaxial Tunnel Diode Detector;Freq 2-4GHz;Pin 50mV(17dBm);Video Capacity 70pf
71	ACTP1502P	20		S524	Coaxial Tunnel Diode Detector;Freq 2-4GHz;Pin 50mV(17dBm);Video Capacity 70pf
72	ACTP1503N	20		S523	Coaxial Tunnel Diode Detector;Freq 4-8GHz;Pin 50mV(17dBm);Video Capacity 15pf
73	ACTP1503P	20		S523	Coaxial Tunnel Diode Detector;Freq 4-8GHz;Pin 50mV(17dBm);Video Capacity 15pf
74	ACTP1504N	20		S523	Coaxial Tunnel Diode Detector;Freq 8-12GHz;Pin 50mV(17dBm);Video Capacity 15pf
75	ACTP1504P	20		S523	Coaxial Tunnel Diode Detector;Freq 8-12GHz;Pin 50mV(17dBm);Video Capacity 15pf
76	ACTP1505N	20		S523	Coaxial Tunnel Diode Detector;Freq 12-18GHz;Pin 50mV(17dBm);Video Capacity 15pf
77	ACTP1505P	20		S523	Coaxial Tunnel Diode Detector;Freq 12-18GHz;Pin 50mV(17dBm);Video Capacity 15pf
78	ACTP1506N	20		S523	Coaxial Tunnel Diode Detector;Freq 8-18GHz;Pin 50mV(17dBm);Video Capacity 15pf
79	ACTP1506P	20		S523	Coaxial Tunnel Diode Detector;Freq 8-18GHz;Pin 50mV(17dBm);Video Capacity 15pf
80	ACTP1514N	20		S524	Coaxial Tunnel Diode Detector;Freq 2-6GHz;Pin 50mV(17dBm);Video Capacity 20pf
81	ACTP1514P	20		S524	Coaxial Tunnel Diode Detector;Freq 2-6GHz;Pin 50mV(17dBm);Video Capacity 20pf
82	ACTP1523N	20		S524	Coaxial Tunnel Diode Detector;Freq 1-5MHz;Pin 50mV(17dBm);Video Capacity 70pf
83	ACTP1523P	20		S524	Coaxial Tunnel Diode Detector;Freq 1-5MHz;Pin 50mV(17dBm);Video Capacity 70pf
84	ACTP1524N	20		S524	Coaxial Tunnel Diode Detector;Freq .5-1GHz;Pin 50mV(17dBm);Video Capacity 70pf
85	ACTP1524P	20		S524	Coaxial Tunnel Diode Detector;Freq .5-1GHz;Pin 50mV(17dBm);Video Capacity 70pf
86	ACTP1525N	20		S524	Coaxial Tunnel Diode Detector;Freq 1-2GHz;Pin 50mV(17dBm);Video Capacity 70pf
87	ACTP1525P	20		S524	Coaxial Tunnel Diode Detector;Freq 1-2GHz;Pin 50mV(17dBm);Video Capacity 70pf
88▼	B972	20		M1244	Freq range 33.0-50.0GHz;Full Band BW;VSWR 6.0;Vid Sens 200mV/mW;Tang Sens -55dBm;Pos Output
89	BAS46	20	Si♦	DO23	x-BAND MIXER/DETECTOR DIODE:Vofor-90dBm Input Pwr at X-Band 40uVtyp
90▼	BAT16	20	Si ♦	DO35	VRBr 40V;CD 0.4pF max;Vid res. 150kΩ min;T; 150°C max;IF 30mA max at 2.2VF
91	CL7500	20		M1051	X-BAND MIXER/DETECTOR:Center freq 10.687GHz;for Doppler Control Systems
92	CL7520	20		M1051	X-BAND MIXER/DETECTOR:Center freq 9.35GHz;for Doppler Control Systems
93	D102BSM-1	20	Si♦	M1061Ø	D102DSM w/Field Replaceable Mount
94	D102BSZS	20	Si♦	M1061Ø	D102BS w/50% Capacity Reduction
95	D102BSZS-1	20	Si♦	M1061Ø	D102BSZS w/Field Replaceable Mount
96	D110DS-1	20	Si♦	M1061Ø	D110DS w/Field Replaceable Mount
97	D212BSZS	20	Si♦	M1061Ø	D212BS w/50% Reduced Capacity
98	D212BSZS-1	20	Si♦	M1061Ø	D212BSZS w/Field Replaceable Mount
99	D510DSZS	20	Si♦	M1061Ø	D510DS w/50% Capacity Reduction
100	D510DSZS-1	20	Si♦	M1061Ø	D501DSZS w/Field Replaceable Mount
101	D812BSZS	20	Si♦	M1061Ø	D812BS w/50% Reduced Capacity
102	DB104BSxxxx	20	Si♦	M1061bØ	See D104 Series W/Appropriate Suffix;e.g. DB104BS/D104BS Identical Except Drawing
103	DB105Dxxxx	20	GE	M1061bØ	Available in Series Similar to DB105DS(Schott Detect).Consult Mfgr.
104	DB110DSxxxx	20	Si♦	M1061bØ	See D110 Series W/Appropriate Suffix;e.g. DB110DS/D110DS Identical Except Drawing
105	DB112BSxxxx	20	Si♦	M1061bØ	See D112 Series W/Appropriate Suffix;e.g. DB112BS/D112BS Identical Except Drawing
106	DB204BSxxxx	20	Si♦	M1061bØ	See D204 Series W/Appropriate Suffix;e.g. DB204BS/D204BS Identical Except Drawing
107	DB212BSxxxx	20	Si♦	M1061bØ	See D212 Series W/Appropriate Suffix;e.g. DB212BS/D212BS Identical Except Drawing
108	DB408BSxxxx	20	Si♦	M1061bØ	See D408 Series W/Appropriate Suffix;e.g. DB408BS/D408BS Identical Except Drawing
109	DB510DSxxxx	20	Si♦	M1061bØ	See D510 Series W/Appropriate suffix;e.g. DB510DS/D510DS Identical except drawing
110	DB520DSxxxx	20	Si♦	M1061bØ	See D520 Series W/Appropriate Suffix;e.g. DB520DS/D520DS Identical Except Drawing

8. MISCELLANEOUS DEVICES

IN ORDER OF (1) USE and (2) TYPE No.

LINE No.	[2] TYPE No.	[1] USE	DESCRIPTION MAT.	DWG. No.	TECHNICAL DATA
1	DB711BSxxxx	20	Si♦	M1061b☑	See D711 Series W/Appropriate Suffix;e.g. DB711BS/D711BS Identical Except Drawing
2	DB812BSxxxx	20	Si♦	M1061b☑	See D812 Series W/Appropriate Suffix;e.g. DB812BS/D812BS Identical Except Drawing
3	DB816BSxxxx	20	Si♦	M1061b☑	See D816 Series W/Appropriate Suffix;e.g. DB816BS/D816BS Identical Except Drawing
4	DB1724BSxxxx	20	Si♦	M1061b☑	See D1724 Series W/Appropriate Suffix;e.g. DB1724BS/D1724BS Identical Except Drawing
5	DB5459BSxxxx	20	Si♦	M1061b☑	See D5459 Series W/Appropriate Suffix;e.g. DB5459BS/D5459BS Identical Except Drawing
6	DB7585BSxxxx	20	Si♦	M1061b☑	See D7585 Series W/Appropriate Suffix;e.g. DB7585BS/D7585BS Identical Except Drawing
7	DB8596BSxxxx	20	Si♦	M1061b☑	See D8596 Series w/Appropriate Suffix;e.g. DB8596BS/D8596BS Identical Except Drawing
8	DDB5098	20	Si	F151	Schottky Barrier;Bias 50uA;Video B.W. 10MHz,TSS 50(-dBm);2415GHz
9	DDB6673Y	20	Si	F150	Schottky Barrier; Bias 50uA;Video B.W. 10MHz,TSS 50(-dBm);24.15GHz
10	DDB6783	20	Si	F150	Schottky Barrier;Bias 50uA;Video B.W. 10MHz,TSS 50(-dBm);24.15GHz
11♦	DDC6757	20	Si	A426	Zero BIAS Schottky Barrier;Video B.W. 10MHz;TSS 49(-dBm);9.375GHz
12♦	DDC6757A	20	Si	A426	Zero BIAS Schottky Barrier;Video B.W. 10MHz;TSS 49(-dBm);9.375GHz
13♦	DDC6757B	20	Si	A426	Zero BIAS Sxhottky Barrier; Video B.W. 10MHz; TSS 52(-dBm);9.375GHz
14♦	DDC6757C	20	Si	A426	Zero BIAS Schottky Barrier;Video B.W. 10MHz;TSS 55(-dBm);9.375GHz
15♦	DDC6757D	20	Si	A426	Zero BIAS Schottky Barrier;Video B.W. 10MHz;TSS 56(-dBm);9.375GHz
16	DM102BSxxxx	20	Si♦	S507a☑	See D102 Series w/Appropriate suffix;e.g. DM102BS/D102BS Identical except drawing
17	DM104BSxxxx	20	Si♦	S507a☑	See D104 Series W/Appropriate Suffix;e.g. DM104BS/D104BS Identical Except Drawing
18	DM105Dxxxx	20	GE	S507a☑	Available in Series Similar to DM105DS (Schott Detect).Consult Mfgr.
19	DM110DSxxxx	20	Si♦	S507a☑	See D110 Series W/Appropriate Suffix;e.g. DM110DS/D110DS Identical Except Drawing
20	DM112BSxxxx	20	Si♦	S507a☑	See D112 Series W/Appropriate Suffix;e.g. DM112BS/D112BS Identical Except Drawing
21	DM204BSxxxx	20	Si♦	S507a☑	See D204 Series W/Appropriate Suffix;e.g. DM204BS/D204BS Identical Except Drawing
22	DM212BSxxxx	20	Si♦	S507a☑	See D212 Series W/Appropriate Suffix;e.g. DM212BS/D212BS Identical Except Drawing
23	DM218BS	20	Si♦	S507a☑	Schott Detect;2.0-18GHz;Cap 15pf;K 1.5V/mW;Tss -51dbm (Typ)
24	DM218BS-1	20	Si♦	S507a☑	DM218BS w/Field Replaceable Mount
25	DM218BSTZS	20	Si♦	S507a☑	DM218BST w/50% Reduced Capacity
26	DM218BSTZS-1	20	Si♦	S507a☑	DM218BSTZS w/Field Replaceable Mount
27	DM218BSZS	20	Si♦	S507a☑	DM218BS w/50% Reduced Capacity
28	DM218BSZS-1	20	Si♦	S507a☑	DM218BSZS w/Field Replaceable Mount
29	DM408BSxxxx	20	Si♦	S507a☑	See D408 Series W/Appropriate Suffix;e.g. DM408BS/D408BS Identical Except Drawing
30	DM510DSxxxx	20	Si♦	S507a☑	See D510 Series w/Appropriate suffix;e.g. DM510DS/D510DS Identical except drawing
31	DM520DSxxxx	20	Si♦	S507a☑	See D520 Series W/Appropriate Suffix;e.g. DM520DS/D520DS Identical Except Drawing
32	DM711BSxxxx	20	Si♦	S507a☑	See D711 Series W/Appropriate Suffix;e.g. DM711BS/D711BS Identical Except Drawing
33	DM812BSxxxx	20	Si♦	S507a☑	See D812 Series W/Appropriate Suffix;e.g. DM812BS/D812BS Identical Except Drawing
34	DM816BSxxxx	20	Si♦	S507a☑	See D816 Series W/Appropriate Suffix;e.g. DM816BS/D816BS Identical Except Drawing
35	DM1724BSxxxx	20	Si♦	S507a☑	See D1724 Series W/Appropriate Suffix;e.g. DM1724BS/D1724BS Identical Except Drawing
36	DM2223BSxxxx	20	Si♦	S507a☑	See D2223 series w/appropriate suffix;e.g. DM2223BS/D2223BS identical except drawing
37	DM5459BSxxxx	20	Si♦	S507a☑	See D5459 Series W/Appropriate Suffix;e.g. DM5459BS/D5459BS Identical Except Drawing
38	DM7585BSxxxx	20	Si♦	S507a☑	See D7585 Series W/Appropriate Suffix;e.g. DM7585BS/D7585BS Identical Except Drawing
39	DM8596BSxxxx	20	Si♦	S507a☑	See D8596 Series w/Appropriate Suffix;e.g. DM8596BS/D8596BS Identical Except Drawing
40	DMM102BSxxxx	20	Si♦	S506a☑	See D102 Series w/Appropriate suffix;e.g. DMM102BS/D102BS Identical except drawing
41	DMM104BSxxxx	20	Si♦	S506a☑	See D104 Series W/Appropriate Suffix;e.g. DMM104BS/D104BS Identical Except Drawing
42	DMM105Dxxxx	20	GE	S506a☑	Available in Series Similar to DMM105DS (Schott Detect).Consult Mfgr.
43	DMM110DSxxxx	20	Si♦	S506a☑	See D110 Series W/Appropriate Suffix;e.g. DMM110DS/D110DS Identical Except Drawing
44	DMM112BSxxxx	20	Si♦	S506a☑	See D112 Series W/Appropriate Suffix;e.g. DMM112BS/D112BS Identical Except Drawing
45	DMM204BSxxxx	20	Si♦	S506a☑	See D204 Series W/Appropriate Suffix;e.g. DMM204BS/D204BS Identical Except Drawing
46	DMM208FSxxxx	20	Si♦	S506a☑	See DM208 Series W/Appropriate Suffix;e.g. DMM208FS/DM208FS Identical Except Drawing
47	DMM212BSxxxx	20	Si♦	S506a☑	See D212 Series W/Appropriate Suffix;e.g. DMM212BS/D212BS Identical Except Drawing
48	DMM218BSxxxx	20	Si♦	S506a☑	See DM218 Series W/Appropriate Suffix;e.g. DMM218BS/DM218BS Identical Except Drawing
49	DMM408BSxxxx	20	Si♦	S506a☑	See D408 Series W/Appropriate Suffix;e.g. DMM408BS/D408BS Identical Except Drawing
50	DMM510DSxxxx	20	Si♦	S506a☑	See D510 Series w/Appropriate suffix;e.g. DMM510DS/D510DS Identical except drawing
51	DMM520DSxxxx	20	Si♦	S506a☑	See D520 Series W/Appropriate Suffix;e.g. DMM520DS/D520DS Identical Except Drawing
52	DMM711BSxxxx	20	Si♦	S506a☑	See D711 Series W/Appropriate Suffix;e.g. DMM711BS/D711BS Identical Except Drawing
53	DMM812BSxxxx	20	Si♦	S506a☑	See D812 Series W/Appropriate Suffix;e.g. DMM812BS/D812BS Identical Except Drawing
54	DMM816BSxxxx	20	Si♦	S506a☑	See D816 Series W/Appropriate Suffix;e.g. DMM816BS/D816BS Identical Except Drawing
55	DMM1724BSxxxx	20	Si♦	S506a☑	See D1724 Series W/Appropriate Suffix;e.g. DMM1724BS/D1724BS Identical Except Drawingg
56	DMM5459BSxxxx	20	Si♦	S506a☑	See D5459 Series W/Appropriate Suffix;e.g. DMM5459BS/D5459BS Identical Except Drawing
57	DMM7585BSxxxx	20	Si♦	S506a☑	See D7585 Series W/Appropriate Suffix;e.g. DMM7585BS/D7585BS Identical Except Drawing
58	DMM8596BSxxxx	20	Si♦	S506a☑	See D8596 Series w/Appropriate Suffix;e.g. DMM8596BS/D8596BS Identical Except Drawing
59	DO104BSxxxx	20	Si♦	S507☑	See D104 Series W/Appropriate Suffix;e.g. DO104BS/D104BS Identical Except Drawing
60	DO105Dxxxx	20	GE	S507☑	Available in Series Similar to DO105DS (Schott Detect).Consult Mfgr.
61	DO110DSxxxx	20	Si♦	S507☑	See D110 Series W/Appropriate Suffix;e.g. DO110DS/D110DS Identical Except Drawing
62	DO112BSxxxx	20	Si♦	S507☑	See D112 Series W/Appropriate Suffix;e.g. DO112BS/D112BS Identical Except Drawing
63	DO204BSxxxx	20	Si♦	S507☑	See D204 Series W/Appropriate Suffix;e.g. DO204BS/D204BS Identical Except Drawing
64	DO208FSxxxx	20	Si♦	S507a☑	See DM208 Series W/Appropriate Suffix;e.g. DO208FS/DM208FS Identical Except Drawing
65	DO212BSxxxx	20	Si♦	S507☑	See D212 Series W/Appropriate Suffix;e.g. DO212BS/D212BS Identical Except Drawing
66	DO218BSxxxx	20	Si♦	S507☑	See DM218 Series W/Appropriate Suffix;e.g. DO218BS/DM218BS Identical Except Drawing
67	DO408BSxxxx	20	Si♦	S507☑	See D408 Series W/Appropriate Suffix;e.g. DO408BS/D408BS Identical Except Drawing
68	DO510DSxxxx	20	Si♦	S507☑	See D510 Series w/Appropriate suffix;e.g. DO510DS/D510DS Identical except drawing
69	DO520DSxxxx	20	Si♦	S507☑	See D520 Series W/Appropriate Suffix;e.g. DO520DS/D520DS Identical Except Drawing
70	DO711BSxxxx	20	Si♦	S507☑	See D711 Series W/Appropriate Suffix;e.g. DO711BS/D711BS Identical Except Drawing
71	DO812BSxxxx	20	Si♦	S507☑	See D812 Series W/Appropriate Suffix;e.g. DO812BS/D812BS Identical Except Drawing
72	DO816BSxxxx	20	Si♦	S507☑	See D816 Series W/Appropriate Suffix;e.g. DO816BS/D816BS Identical Except Drawing
73	DO1724BSxxxx	20	Si♦	S507☑	See D1724 Series W/Appropriate Suffix;e.g. DO1724BS/D1724BS Identical Except Drawing
74	DO5459BSxxxx	20	Si♦	S507☑	See D5459 Series W/Appropriate Suffix;e.g. DO5459BS/D5459BS Identical Except Drawing
75	DO7585BSxxxx	20	Si♦	S507☑	See D7585 Series W/Appropriate Suffix;e.g. DO7585BS/D7585BS Identical Except Drawing
76	DO8596BSxxxx	20	Si♦	S507☑	See D8596 Series w/Appropriate Suffix;e.g. DO8596BS/D8596BS Identical Except Drawing
77	DOM102BSxxxx	20	Si♦	S506☑	See D102 Series w/Appropriate suffix;e.g. DOM102BS/D102BS Identical except drawing
78	DOM104BSxxxx	20	Si♦	S506☑	See D104 Series W/Appropriate Suffix;e.g. DOM104BS/D104BS Identical Except Drawing
79	DOM105Dxxxx	20	GE	S506☑	Available in Series Similar to DOM105DS (Schott Detect).Consult Mfgr.
80	DOM110DSxxxx	20	Si♦	S506☑	See D110 Series W/Appropriate Suffix;e.g. DOM110DS/D110DS Identical Except Drawing
81	DOM112BSxxxx	20	Si♦	S506☑	See D112 Series W/Appropriate Suffix;e.g. DOM112BS/D112BS Identical Except Drawing
82	DOM204BSxxxx	20	Si♦	S506☑	See D204 Series W/Appropriate Suffix;e.g. DOM204BS/D204BS Identical Except Drawing
83	DOM208FSxxxx	20	Si♦	S506☑	See DM208 Series W/Appropriate Suffix;e.g. DOM208FS/DM208FS Identical Except Drawing
84	DOM212BSxxxx	20	Si♦	S506☑	See D212 Series W/Appropriate Suffix;e.g. DOM212BS/D212BS Identical Except Drawing
85	DOM218BSxxxx	20	Si♦	S506☑	See DM218 Series W/Appropriate Suffix;e.g. DOM218BS/DM218BS Identical Except Drawing
86	DOM408BSxxxx	20	Si♦	S506☑	See D408 Series W/Appropriate Suffix;e.g. DOM408BS/D408BS Identical Except Drawing
87	DOM510DSxxxx	20	Si♦	S506☑	See D510 Series w/Appropriate suffix;e.g. DOM510DS/D510DS Identical except drawing
88	DOM520DSxxxx	20	Si♦	S506☑	See D520 Series W/Appropriate Suffix;e.g. DOM520DS/D520DS Identical Except Drawing
89	DOM711BSxxxx	20	Si♦	S506☑	See D711 Series W/Appropriate Suffix;e.g. DOM711BS/D711BS Identical Except Drawing
90	DOM812BSxxxx	20	Si♦	S506☑	See D812 Series W/Appropriate Suffix;e.g. DOM812BS/D812BS Identical Except Drawing
91	DOM816BSxxxx	20	Si♦	S506☑	See D816 Series W/Appropriate Suffix;e.g. DOM816BS/D816BS Identical Except Drawing
92	DOM1724BSxxxx	20	Si♦	S506☑	See D1724 Series W/Appropriate Suffix;e.g. DOM1724BS/D1724BS Identical Except Drawing
93	DOM5459BSxxxx	20	Si♦	S506☑	See D5459 Series W/Appropriate Suffix;e.g. DOM5459BS/D5459BS Identical Except Drawing
94	DOM7585BSxxxx	20	Si♦	S506☑	See D7585 Series W/Appropriate Suffix;e.g. DOM7585BS/D7585BS Identical Except Drawing
95	DOM8596BSxxxx	20	Si♦	S506☑	See D8596 Series w/Appropriate Suffix;e.g. DOM8596BS/D8596BS Identical Except Drawing
96	DOS118BZS	20	Si♦	S508☑	DOS118B w/50% Reduced Capacity
97	DOZ105Dxxxx	20	GE	S508☑	Available in Series Similar to DOZ105DS (Schott Detect).Consult Mfgr./
98	DT104BSxxxx	20	Si♦	M1061a☑	See D104 Series W/Appropriate Suffix;e.g. DT104BS/D104BS Identical Except Drawing
99	DT105Dxxxx	20	GE	M1061a☑	Available in Series Similar toDT105DS (Schott Detect).Consult Mfgr.
100	DT110DSxxxx	20	Si♦	M1061a☑	See D110 Series W/Appropriate Suffix;e.g. DT110DS/D110DS Identical Except Drawing
101	DT112BSxxxx	20	Si♦	M1061a☑	See D112 Series W/Appropriate Suffix;e.g. DT112BS/D112BS Identical Except Drawing
102	DT204BSxxxx	20	Si♦	M1061a☑	See D204 Series W/Appropriate Suffix;e.g. DT204BS/D204BS Identical Except Drawing
103	DT212BSxxxx	20	Si♦	M1061a☑	See D212 Series W/Appropriate Suffix;e.g. DT212BS/D212BS Identical Except Drawing
104	DT408BSxxxx	20	Si♦	M1061a☑	See D408 Series W/Appropriate Suffix;e.g. DT408BS/D408BS Identical Except Drawing
105	DT510DSxxxx	20	Si♦	M1061a☑	See D510 series w/appropriate suffix;e.g. DT510DS/D510DS identical except drawing
106	DT520DSxxxx	20	Si♦	M1061a☑	See D520 Series W/Appropriate Suffix;e.g. DT520DS/D520DS Identical Except Drawing
107	DT711BSxxxx	20	Si♦	M1061a☑	See D711 Series W/Appropriate Suffix;e.g. DT711BS/D711BS Identical Except Drawing
108	DT816BSxxxx	20	Si♦	M1061a☑	See D816 Series W/Appropriate Suffix;e.g. DT816BS/D816BS Identical Except Drawing
109	DT1724BSxxxx	20	Si♦	M1061a☑	See D1724 Series W/Appropriate Suffix;e.g. DT1724BS/D1724BS Identical Except Drawing
110	DT5459BSxxxx	20	Si♦	M1061a☑	See D5459 Series W/Appropriate Suffix;e.g. DT5459BS/D5459BS Identical Except Drawing

8. MISCELLANEOUS DEVICES

IN ORDER OF (1) USE and (2) TYPE No.

LINE No.	2 TYPE No.	1 USE	DESCRIPTION MAT.	DWG. No.	TECHNICAL DATA
1	DT7585BSxxxx	20	Si♦	M1061a☑	See D7585 Series W/Appropriate Suffix;e.g. DT7585BS/D7585BS Identical Except Drawing
2	DT8596BSxxxx	20	Si♦	M1061a☑	See D8596 Series w/Appropriate Suffix;e.g. DT8596BS/D8596BS Identical Except Drawing
3	GD731	20	Ge	F138	Detector;VR 40V;VF 1.0V max at IF 2.0mA
4	GD732	20	Ge	F138	Detector;VR 40V;VF 1.0V max at IF 2.0mA
5	GD733	20	Ge	F138	Detector;VR 40V;VF 1.0V max at IF 2.0mA
6	GD741	20	Ge	A1zy	Detector;VR 40V;VF 1.0V max at IF 2.0mA
7	GD742	20	Ge	A1zy	Detector;VR 40V;VF 1.0V max at IF 2.0mA
8	GD743	20	Ge	A1zy	Detector;VR 30V;VF .29V max at IF 1.0mA
9	GD744	20	Ge	A1zy	Detector;VR 20V;IR 50uA at VR 20V
10▼	GOS2572	20		M1245b	Preset Freq 10.525GHz;Pos Bias Polarity;Pout 5mW min; Oper Volt 8V;Oper Curr 60mA
11▼	GOS2573	20		M1245b	Preset Freq 10.525GHz;Pos Bias Polarity;Pout 10mW min;Oper Volt 8V;Oper Curr 100mA
12▼	GOS2574	20		M1245b	Preset Freq 10.525GHz;Pos Bias Polarity;Pout 20mW min;Oper Volt 8V;Oper Curr 170mA
13▼	GOS2575	20		M1245b	Preset Freq 10.525GHz;Pos Bias Polarity;Pout 50mW min;Oper Volt 10V;Oper Curr 300mA
14▼	GOS2576	20		M1245b	Preset Freq 10.525GHz;Pos Bias Polarity;Pout 75mW min;Oper Volt 10V;Oper Curr 400mA
15▼	GOS2577	20		M1245b	Preset Freq 10.525GHz;Pos Bias Polarity;Pout 100mW;Oper Volt 10V;Oper Curr 500mA
16▼	GOS2580	20		M1245	Freq range 9.47-10.7GHz;Pout 4mW min;Oper Volt 8V;IF BW Sens -100dBc typ;IF BW Noise 10uVmax
17▼	GOS2581	20		M1245a	Freq range 9.47-10.7GHz;Pout 6mW min;Oper Volt 9V;IF BW Sens -100dBc typ;IF BW Noise 10uVmax
18	MA4E003	20	△♦	A414	Schottky Barrier;Fast Switching;(100ps) Pd 250mW;MinBV 70V;Temp -65 to 200°C
19	MA4E004	20	△♦	A414	Schottky Barrier;Fast Switching;(100ps)Pd 250mW;MinBV 20V;Temp -65 to 200°C
20	MA4E005	20	△♦	A414	Schottky Barrier;Fast Switching;(100ps)Pd 250mW;MinBV 15V;Temp -65 to 200°c
21	MA4850	20			DETECTOR/MIXER;Schottky;Max NF 8.0dB;Max DET. Freq 3.06GHz;TSS-55dBm
22	MA4854	20	♦		Detector/Mixer;Schottky;Max MF 5.0dB;CT:60pF max;IF 20mA min
23	MA7707H	20		M918	DETECTOR;Schottky;Fo .10-18GHz;TSS-52dBm at 18GHz;Dynamic Range 70dB
24	MA7707J	20		M914	DETECTOR;Schottky;Fo .10-18GHz;TSS-52 dBm at 18GHz;dynamic range 70db
25	MA40227	20		M992	DETECTOR;Schottky;Test Freq 10GHz;Pd 100mW
26	MA40228	20		M992	DETECTOR;Schottky;Test Freq 10GHz;Pd 100mW
27	ND4121	20	Si$	V15	Schottky Mixer/Detectors;N-Type;Med Barrier;Pt 200mW;Max Freq 5.0GHz;Top -65 to 150°C
28	ND4131	20	Si$	V15	Schottky Mixer/Detectors;N-Type;Med Barrier;Pt 200mW;Max Freq 12.0GHz;Top -65 to 150°C
29	ND4132	20	Si$	V15	Schottky Mixer/Detectors;P-Type;Med Barrier;Pt 200mW;Max Freq 26GHz;Top -65 to 150°C
30	ND4133	20	Si$	V15	Schottky Mixer/Detectors;N-Type;Low Barrier;Pt 200mW;Max Freq 26GHz;Top -65 to 150°C
31	ND4141	20	Si$	V15	Schottky Mixer/Detectors;P-Type;Low Barrier;Pt 200mW;Max Freq 12GHz;Top -65 to 150°C
32	ND4151	20	Si$	V15	Schottky Mixer/Detectors;P-Type;Low Barrier;Pt 200mW;Max Freq 18GHz;Top -65 to 150°C
33	ND4431	20	Si$	V15	Schottky Mixer/Detectors;N-Type;Med Barrier;Pt 200mW;Max Freq 3.0GHz;Top -65 to 150°C
34	ND4691	20	Si$	V15	Schottky Mixer/Detectors;P-Type;Low Barrier;Pt 200mW;Max Freq 12GHz;Top -65 to 150°C
35	ND4692	20	Si$	V15	Schottky Mixer/Detectors;P-Type;Low Barrier;Pt 200mW;Max Freq 12GHz;Top -65 to 150°C
36	ND4701	20	Si$	V15	Schottky Mixer/Detectors;N-Type;Med Barrier;Pt 200mW;Max Freq 12GHz;Top -65 to 150°C
37	ND4781	20	Si$	V15	Schottky Mixer/Detectors;P-Type;Low Barrier;Pt 200mW;Max Freq 4.0GHz;Top -65 to 150°C
38	ND4991	20	Si$	V15	Schottky Mixer/Detectors;N-Type;Low Barrier;Pt 200mw;Max Freq 3.0GHz;Top -65 TO150°C
39	UM9441	20		A419	PIN radiation detector;VR 100V;photocurrent 1.0A
40▼	UTD1000	20		C16ag	Level Detector;Freq 5-500MHz;Inp Z 50Ω;Diff Volt Tracking ±5mV;Det Volt at Pin -10dBm:-90mV
41▼	UTD1001	20		C16ag	Level Detector;Freq 10-500MHz;Inp Z 300Ω;Diff Volt Track ±5mV;-90mV Det Volt at Pin -10dBm
42	W208FS	20	Si♦	M1063☑	Schott Detect;12-18GHz;Cap 7.0pf;K 2.0V/mW;Tss -52dbm (Typ)
43	W208FSTZS-1	20	Si♦	M1063☑	W208FSTZS w/Field Replaceable Mount
44	W812BS	20	Si♦	M1062☑	Schott Detect;Freq 8.2-12.4GHz;Cap 15pf;K 2.5V/mW;Tss-53dbm (Typ)
45	W812BSTZS	20	Si♦	M1062☑	W812BST w/50% Reduced Capacity
46	A2S630	21	Si♦	C211	Schott Low Barrier Mixer Ring Quads;Max Cap 0.60pF;Max Cap Unbalanced 0.10pF
47	A2S631	21	Si♦	C211	Schott Low Barrier Mixer Ring Quads;Max Cap 0.40pF;Max Cap Unbalanced 0.05pF
48	A2S633	21	Si♦	C213	Schott Low Barrier Mixer Ring Quads;Max Cap 0.60pF;Max Cap Unbalanced 0.10pF
49	A2S634	21	Si♦	C213	Schott Low Barrier Mixer Ring Quads;Max Cap 0.40pF;Max Cap Unbalanced 0.05pF
50	A2S637	21	Si♦	C212	Schott Low Barrier Mixer Ring Quads;Max Cap 0.60pF;Max Cap Unbalanced 0.10pF
51	A2S638	21	Si♦	C212	Schott Low Barrier Mixer Ring Quads;Max Cap 0.40pF;Max Cap Unbalanced 0.05pF
52	A2S730	21	Si♦	C211	Schott Med Barrier Mixer Ring Quads;Max Cap 0.60pF;Max Cap Unbalanced 0.10pF
53	A2S731	21	Si♦	C211	Schott Med Barrier Mixer Ring Quads;Max Cap 0.40pF;Max Cap Unbalanced 0.05pF
54	A2S733	21	Si♦	C213	Schott Med Barrier Mixer Ring Quads;Max Cap 0.60pF;Max Cap Unbalanced 0.10pF
55	A2S734	21	Si♦	C213	Schott Med Barrier Mixer Ring Quads;Max Cap 0.40pF;Max Cap Unbalanced 0.05pF
56	A2S737	21	Si♦	C212	Schott Med Barrier Mixer Ring Quads;Max Cap 0.60pF;Max Cap Unbalanced 0.10pF
57	A2S738	21	Si♦	C212	Schott Med Barrier Mixer Ring Quads;Max Cap 0.40pF;Max Cap Unbalanced 0.05pF
58♦	DME6561	21	Si♦	M1138	S band; Nf 6.0dB;Cj .60pfmax*OV;Rs 7Ω;Vf 450mv*1ma
59♦	DME6562	21	Si♦	M1138	X band; Nf 6.5dB;Cj .35pfmax*OV;Rs12Ω;Vf450mv*1ma
60♦	DME6563	21	Si♦	M1138	Ku band; Nf 7.5dB;Cj .20pfmax*OV;Rs16-;Vf500mv*1ma
61♦	DMJ4759	21	Si♦	W306	UHF,S,X band; Nf-B;Cj .35pfmax*OV;Rs14Ω;Vf1100mv*1ma
62♦	DMJ4771	21	Si♦	W306	Ku band; Nf-dB;Cj .20pf max*OV;Rs18-;Vf1100mv*1ma
63	DMJ4798	21	Si♦		Ku band; Nf 8.0dB;Cj .20pfmax*OV;Rs13Ω;Vf 550mv*1ma
64♦	DMJ6564	21	Si♦	W307	UHF-Ku band; Nf-dB;Cj .20pf max*OV;Rs21Ω;Vf1650mv*1ma
65▼	MA4E400H226	21	Si ♦	W308	Schottky Barrier Beam Lead Bridge Quad;High Barrier;Ku Band; Max Cap .25pf;Typ VF .58V ° 1mA
66▼	MA4E400H227	21	Si ♦	M994	Schottky Barrier Beam Lead Bridge Quad;High Barrier;Ku Band; Max Cap .25pf;Typ VF .58V ° 1mA
67▼	MA4E400H228	21	Si ♦	W309	Schottky Barrier Beam Lead Bridge Quad;High Barrier;ku Band; Max Cap .25pf;Typ VF .58V ° 1mA
68▼	MA4E400H906	21	Si ♦	W310	Schottky Barrier Beam Lead Bridge Quad;High Barrier;ku Band; Max Cap .25pf;Typ VF .58V ° 1mA
69▼	MA4E400L226	21	Si ♦	W308	Schottky Barrier Beam Lead Bridge Quad;Low Barrier;Ku Band;Max Cap .25pf;Typ VF .27V at 1mA
70▼	MA4E400L227	21	Si ♦	M994	Schottky Barrier Beam Lead Bridge Quad;Low Barrier;Ku Band;Max Cap .25pf;Typ VF .27V at 1mA
71▼	MA4E400L228	21	Si ♦	M994	Schottky Barrier Beam Lead Bridge Quad;Low Barrier;Ku Band;Max Cap .25pf;Typ VF .27V at 1mA
72▼	MA4E400L906	21	Si ♦	W310	Schottky Barrier Beam Lead Bridge Quad;Low Barrier;Ku Band;Max Cap .25pf;Typ VF .27V at 1mA
73▼	MA4E400M906	21	Si ♦	W310	Schottky Barrier Beam Lead Bridge Quad;Med Barrier;ku Band;Max Cap .25f;Typ VF .41V at 1mA
74▼	MA4E401H226	21	Si ♦	W308	Schottky Barrier Beam Lead Bridge Quad;High Barrier;X Band; Max Cap .40pf;Typ VF .58V at 1mA
75▼	MA4E401H227	21	Si ♦	M994	Schottky Barrier Beam Lead Bridge Quad;High Barrier;X Band; Max Cap .40pf;Typ VF .58V at 1mA
76▼	MA4E401H228	21	Si ♦	W309	Schottky Barrier Beam Lead Bridge Quad;High Barrier;X Band; Max Cap .40pf;Typ VF .58V at 1mA
77▼	MA4E401H906	21	Si ♦	W310	Schottky Barrier Beam Lead Bridge Quad;High Barrier;X Band; Max Cap .40pf;Typ VF .58V at 1mA
78▼	MA4E401L226	21	Si ♦	W308	Schottky Barrier Beam Lead Bridge Quad;Low Barrier;X Band;Max Cap .40pf;Typ VF .27V at 1mA
79▼	MA4E401L227	21	Si ♦	M994	Schottky Barrier Beam Lead Bridge Quad;Low Barrier;X Band;Max Cap .40pf;Typ VF .27V at 1mA
80▼	MA4E401L228	21	Si ♦	W309	Schottky Barrier Beam Lead Bridge Quad;Low Barrier;X Band;Max Cap .40pf;Typ VF .27V at 1mA
81▼	MA4E401L906	21	Si ♦	W310	Schottky Barrier Beam Lead Bridge Quad;Low Barrier;X Band;Max Cap .40pf;Typ VF .27V at 1mA
82▼	MA4E401M226	21	Si ♦	W308	Schottky Barrier Beam Lead Bridge Quad;Med Barrier;X Band;Max Cap .40pf;Typ VF .41V at 1mA
83▼	MA4E401M227	21	Si ♦	M994	Schottky Barrier Beam Lead Bridge Quad;Med Barrier;X Band;Max Cap .40pf;Typ VF .41V at 1mA
84▼	MA4E401M228	21	Si ♦	W309	Schottky Barrier Beam Lead Bridge Quad;Med Barrier;X Band;Max Cap .40pf;Typ VF .41V at 1mA
85▼	MA4E401M906	21	Si ♦	W310	Schottky Barrier Beam Lead Bridge Quad;Med Barrier;X Band;Max Cap .40pf;Typ VF .41V at 1mA
86▼	MA4E402H226	21	Si ♦	W308	Schottky Barrier Beam Lead Bridge Quad;High Barrier;S Band; Max Cap .60pf;Typ VF .58V at 1mA
87▼	MA4E402H227	21	Si ♦	M994	Schottky Barrier Beam Lead Bridge Quad;High Barrier;S Band; Max Cap .60pf;Typ VF .58V at 1mA
88▼	MA4E402H228	21	Si ♦	W309	Schottky Barrier Beam Lead Bridge Quad;High Barrier;S Band; Max Cap .60pf;Typ VF .58V at 1mA
89▼	MA4E402H906	21	Si ♦	W310	Schottky Barrier Beam Lead Bridge Quad;High Barrier;S Band; Max Cap .60pf;Typ VF .58V at 1mA
90▼	MA4E402L226	21	Si ♦	W308	Schottky Barrier Beam Lead Bridge Quad;Low Barrier;S Band;Max Cap .60pf;Typ VF .27V at 1mA
91▼	MA4E402L227	21	Si ♦	M994	Schottky Barrier Beam Lead Bridge Quad;Low Barrier;S Band;Max Cap .60pf;Typ VF .27V at 1mA
92▼	MA4E402L228	21	Si ♦	W309	Schottky Barrier Beam Lead Bridge Quad;Low Barrier;S Band;Max Cap .60pf;Typ VF .27V at 1mA
93▼	MA4E402L906	21	Si ♦	W310	Schottky Barrier Beam Lead Bridge Quad;Low Barrier;S Band;Max Cap .60pf;Typ VF .27V at 1mA
94▼	MA4E402M226	21	Si ♦	W308	Schottky Barrier Beam Lead Bridge Quad;Med Barrier;S Band;Max Cap .60pf;Typ VF .41V at 1mA
95▼	MA4E402M227	21	Si ♦	M994	Schottky Barrier Beam Lead Bridge Quad;Med Barrier;S Band;Max Cap .60pf;Typ VF .41V at 1mA
96▼	MA4E402M228	21	Si ♦	W309	Schottky Barrier Beam Lead Bridge Quad;Med Barrier;S Band;Max Cap .60pf;Typ VF .41V at 1mA
97▼	MA4E402M906	21	Si ♦	W310	Schottky Barrier Beam Lead Bridge Quad;Med Barrier;S Band;Max Cap .60pf;Typ VF .41V at 1mA
98▼	MA40482-226	21	Si ♦	W308	Schottky Dual Barrier Beam Lead Quad;S Band;Max Cap .6pf w/1MHz Bridge;Typ VF 1.1V at 1.0mA
99▼	MA40482-227	21	Si ♦	M994	Schottky Dual Barrier Beam Lead Quad;S Band;Max Cap .6pf w/1MHz Bridge;Typ VF 1.1V at 1.0mA
100▼	MA40482-905	21	Si ♦	W313	Schottky Dual Barrier Beam Lead Quad;S Band;Max Cap .6pf w/1MHz Bridge;Typ VF 1.1V at 1.0mA
101▼	MA40483-226	21	Si ♦	W308	Schottky Dual Barrier Beam Lead Quad;X Band; Max Cap .4pF w/1MH3 Bridge; TypeVF 1.N at 1.0mA
102▼	MA40483-227	21	Si ♦	M994	Schottky Dual Barrier Beam Lead Quad;X Band; Max Cap .4pF w/1MH3 Bridge; TypeVF 1.N at 1.0mA
103▼	MA40483-905	21	Si ♦	W313	Schottky Dual Barrier Beam Lead Quad;X Band; Max Cap .4pF w/1MH3 Bridge; TypeVF 1.N at 1.0mA
104▼	MA40484-226	21	Si ♦	W308	Schottky Dual Barrier Beam Lead Quad;Ku Band;Max Cap .25pF 2/1MH3 Bridge; TypVF 1.1V at 1mA
105▼	MA40484-227	21	Si ♦	M994	Schottky Dual Barrier Beam Lead Quad;Ku Band;Max Cap .25pF 2/1MH3 Bridge; TypVF 1.1V at 1mA
106▼	MA40484-905	21	Si ♦	W313	Schottky Dual Barrier Beam Lead Quad;Ku Band;Max Cap .25pF 2/1MH3 Bridge; TypVF 1.1V at 1mA
107	BLW32	22	Si#$	S171	P(TOT) 10.8W;BVCES 50V;ICES(VBE 0,VCE 30V) ± 0.5mA;f(T) 3.5GHz;f(T) 3.5GHz;Typ hfe: 40
108	BLW33	22	Si#$	S171	P(TOT) 19.3W;VCESM 50V;Max Ic 1.25A;f(T) 3.4GHz;VCE(SAT) 450mV;Typ hfe: 40
109	BLW34	22	Si#$	S171	P(TOT) 31W;VCESM 50V;Max Ic 2.25A;f(T) 202GHz;VCE(SAT) 450mV;Typ hfe: 40
110	DV2810V	22		†	Power Transistor;FT 175MHz;Po 10W at 28v; Gain 10dB at 28v,175MHz;Vs35v

8. MISCELLANEOUS DEVICES

IN ORDER OF (1) USE and (2) TYPE No.

LINE No.	2 TYPE No.	1 USE	DESCRIPTION MAT.	DWG. No.	TECHNICAL DATA
1	DV2820V	22		†	Power Transistor;FT 175MHz;Po 20W at 28v; Gain 10dB at 28v,175MHz;Vs35v
2	DV2840V	22		†	Power Transistor;FT 175MHz;Po 40W at 28v; Gain 10dB at 28v,175MHz;Vs35v
3	DV2880V	22		†	Power Transistor;Fr 175MHz;Po 80W at 28v; Gain 10dB at 28v,175MHz; Vs35v
4	DV2880X	22		†	Power Transistor;FT 175MHz;Po 80W at 28v; Gain 10dB at 28v,175MHz;Vs35v
5	FLM3742-3	22	GA	W225	RF Matched Power FETS;Fr 3.7-4.2 GHz; Po 35dBm; Gp 6.5dB;Pt 15W
6	FLM3742-5	22	GA	W225	RF Matched Power FETs;Fr 3.7 - 4.2GHz;Po 37.0dBm;Gp 8.5dB;Pt23W
7	FLM4450-3	22	GA	W225	RF Matched Power FETS;Fr 4.4-5.0 GHz;Po 35dBm;Gp 6.0dB;Pt 15W
8	FLM4450-5	22	GA	W225	RF Matched Power FETs;Fr 4.4 - 5.0GHz;Po 37.0dBm;Gp 8.0B;Pt 23W
9	FLM5964-3	22	GA	W225	RF Matched Power FETS;Fr5.9-6.4 GHz; Po 35dBm; Gp 5.0dB;Pt 15W
10	FLM5964-5	22	GA	W225	RF Matched Power FETs;Fr5.9-6.4GHz;Po 37.0dBm;Gp 6.0dB;Pt23W
11	FLM6472-5	22	GA	W225	RF Matched Power FETs;Fr 6.4 - 7.2GHz;Po 37.0dBm;Gp 5.0dB;Pt 23W
12	FLM7177-5	22	GA	W225	RF Matched Power FETs;Fr 7.1 - 7.7GHz;Po 37.0dBm;Gp 4.0dB,Pt 23W
13	FLM7785-4	22	GA	W225	RF Matched Power FETs;Fr 7.7 - 8.5GHz;Po 36.0dBm;Gp 4.0dB;Pt 23W
14	S2737	22	GA	W26	Low Noise Small Signal FET;F Range 8GHz;N(F) 2.3db;Max Gain 24;VDS 3V;I(OSS) 60mA
15	S2740	22	GA	W222	Power FET;freq range 8GHz;pout (8GHz) 0.5W;max gain(8GHz)6;VDS10V
16	S2741	22	GA	W222	Power FET;freq range 8GHz;pout(8GHz)1.0W;max gain(8GHz)5;VDS10V N
17	SD1080-2	22		W210	Config CE;Vcc 7.5V;Pout 0.75W;fo 175MHz;Pin 0.1W;Gp 8.75dB min
18▼	SD1080-6	22	Si $	W192	UHF Communications Transistor;BVCEO 18V min;Freq 470MHz;Pout 500mW;Gp 10dB min
19	SD1135-3	22		W212	Config ;Vcc 7.5V;Pout 2.5W;fo 150MHz;Pin 0.22W;Gp 11dB min
20▼	SD1400-2	22	Si $	W319	Comm Base;Vcc 24V;Pout 14W min;Fo 900MHz;Pin 1.5W;Gp 9.7dB min
21▼	SD1495-1	22	Si $		Comm Base Config;VCC 25V;Pout 50W min;Fo 870MHz;Pin 8.0W;Gp 8.0dB min
22▼	SD1500	22	Si $	W211	L Band Pulse Transistor;Comm Base;Vcc 28V;Pout 5W min;Freq 1.2-1.4GHz;Pin 890mW;GP 7.5dB min
23▼	SD1501	22	Si $	M1075	L Band Pulse Transistor;Comm Base;Vcc 35V;Pout 30W min;Freq 1.2-1.4GHz;Pin 5W;GP 7.8dB min
24▼	SD1502	22	Si $	M1075	L Band Pulse Transistor;Comm Base;Vcc 50V;Pout 100W min;Freq 1.2-1.4GHz;Pin 25W;GP 6.0dB min
25▼	SD1503	22	Si $	M1251	L Band Pulse Transistor;Comm Base;Vcc 50V;Pout 200W min;Freq 1.2-1.4GHz;Pin 50W;GP 6.0dB min
26▼	SD1504	22	Si $	M1252	L Band Pulse Transistor;Comm Base;Vcc 45V;Pout 50W min;Freq 1.2-1.4GHz;Pin 5.6W;GP 9.5dB min
27▼	SD1505	22	Si $	M1075	L Band Pulse Transistor;Comm Base;Vcc 50V;Pout 150W min;Freq 1.2-1.4GHz;Pin 19W;GP 9.0dB min
28▼	SD1506	22	Si $	W325	L Band Pulse Transistor;Comm Base;Vcc 50V;Pout 300W min;Freq 1.2-1.4G;Pin 38W;Gp 9.0dB min
29▼	SD1507	22	Si $	M1076	L Band Pulse Transistor;Comm Base;Vcc 50V;Pout 285W min;Freq 1.2-1.4G;Pin 65W;Gp 6.4dB min
30▼	SD1512	22	Si $	W326	L Band Pulse Transistor;Comm Base;Vcc 50V;Pout 5W min;Freq 960-1215MHz;Pin 1W;Gp 6.5dB min
31▼	SD1513	22	Si $	M1075	L Band Pulse Transistor;Comm Base;Vcc 50V;Pout 30W min;Freq 960-1215MHz;Pin 6.5W;Gp 6.5dBmin
32▼	SD1514	22	Si $	M1075	L Band Pulse Transistor;Comm Base;Vcc 50V;Pout 100W min;Freq 960-1215MHz;Pin 20W;Gp 6.5dBmin
33▼	SD1515	22	Si $	M1251	L Band Pulse Transistor;Comm Base;VCC 50V;Pout 200W min;Freq 960-1215MHz;Pin 40W;Gp 6.5dBmin
34▼	SD1552	22	Si $	M1076	L Band Pulse Transistor;Comm Base;VCC 50V;Pout 350W min;Freq 960-1215MHz;GP 8.0dBmin
35▼	SD1562	22	Si $	M1253	Pulsed Power Transistor;Comm Base;BVCBO 65V min;Pout 400W min;Gp 7.8dB,Freq 780MHz
36▼	SD1562-6	22	Si $	M1076	Pulsed Power Transistor;Comm Base;BVCBO 65V min;Pout 400W min;Gp 7.8dB,Freq 780MHz
37▼	SD1563	22	Si $	M1075	Pulsed Power Transistor;Comm Base;BVCBO 65V min;Pout 300W min;Gp 10dB,Freq 425MHz
38♦	SD1565-1	22	Si $	W323	Comm Base Config;Vcc 40V;Pout 500W min;Freq 400-600MHz;Pin 50W;Gp 10dB min
39▼	TCC20L08	22	Si $	W211	Comm Emitter Config;Bias 20V/120mA;Pout 800mW;Fo 2.0GHz;Pin 127mW;Gp 8.0dB min
40▼	TCC20L15	22	Si $	W211	Comm Emitter Config;Bias 20V/220mA;Pout 1.5W;Fo 2.0GHz;Pin 300mW;Gp 7.0dB min
41▼	TCC20L25	22	Si $	W211	Comm Emitter Config;Bias 20V/440mA;Pout 2.5W;Fo 2.0GHz;Pin 630mW;Gp 6.0dB min
42▼	TCC20L35	22	Si $	W211	Comm Emitter Config;Bias 20V/700mA;Pout 3.5W;Fo 2.0GHz;Pin 990mW;Gp 5.5dB min
43▼	TCC1417-6	22	Si $		Comm Base Config;Vcc 20V;Pout 5W;Freq 1.4-1.7GHz;Pin 1.0W;Gp 7.0dB min;Efficiency 50%
44▼	TCC1417-12	22	Si $		Comm Base Config;Vcc 20V;Pout 11.2W;Freq 1.4-1.7GHz;Pin 2.0W;Gp 7.5dB min;Efficiency 47%
45▼	TCC1417-20	22	Si $		Comm Base Config;Vcc 20V;Pout 17.6W;Freq 1.4-1.7GHz;Pin 4.0W;Gp 6.5dB min;Efficiency 45%
46▼	TCC1618-40	22	Si $		Comm Base Config;Vcc 28V;Pout 40W;Freq 1.6-1.8GHz;Pin 12.5W;Gp 5.2dB min;Efficiency 40%
47▼	TCC1720-3	22	Si $		Comm Base Config;Vcc 24V;Pout 3.0W;Freq 1.7-2.0GHz;Pin 500mW;Gp 7.8dB min;Effciency 50%
48▼	TCC1720-6	22	Si $		Comm Base Config;Vcc 24V;Pout 6.0W;Freq 1.7-2.0GHz;Pin 1.0W;Gp 7.8dB min;Efficiency 45%
49▼	TCC1720-12	22	Si $		Comm Base Config;Vcc 24V;Pout 11.0W;Freq 1.7-2.0GHz;Pin 2.0W;Gp 7.4dB min;Efficiency 45%
50▼	TCC1720-20	22	Si $		Comm Base Config;Vcc 24V;Pout 20.0W;Freq 1.7-2.0GHz;Pin 4.5W;Gp 5.5dB min;Efficiency 42%
51▼	TCC1922-18	22	Si $		Comm Base Config;Vcc 24V;Pout 18.0W;Freq 1.9-2.2GHz;Pin 4.5W;Gp 6.0dB min;Efficiency 40%
52▼	TCC2023-3	22	Si $		Comm Base Config;Vcc 24V;Pout 3.0W;Freq 2.0-2.3GHz;Pin 500mW;Gp 7.8dB min;Efficiency 50%
53▼	TCC2023-3L	22	Si $		Comm Emitter Config;Vcc 24V;Pout 3.0W;Freq 2.0-2.3GHz;Pin 0.5W;Gp 7.8dB min;Efficiency 50%
54▼	TCC2023-6	22	Si $		Comm Base Config;Vcc 24V;Pout 6.0W;Freq 2.0-2.3GHz;Pin 1.0W;Gp 7.8dB min;Efficiency 45%
55▼	TCC2023-6L	22	Si $		Comm Emitter Config;Vcc 24V;Pout 6.0W;Freq 2.0-2.3GHz;Pin 1.0W;Gp 7.8dB min;Efficiency 45%
56▼	TCC2023-10	22	Si $		Comm Base Config;Vcc 24V;Pout 10.0W;Freq 2.0-2.3GHz;Pin 2.2W;Gp 6.5dB min;Efficiency 40%
57▼	TCC2023-16	22	Si $		Comm Base Config;Vcc 24V;Pout 16.0W;Freq 2.0-2.3GHz;Pin 4.0W;Gp 6.0dB min;Efficiency 40%
58▼	TCC2023-18	22	Si $		Comm Base Config;Vcc 24V;Pout 18.0W;Freq 2.0-2.3GHz;Pin 4.5W;Gp 6.0dB min;Efficiency 40%
59♦	TCC2327-10	22	Si $		Comm Base Config;Vcc 24V;Pout 9.0W;Freq 2.3-2.7GHz;Pin 3.0W;Gp 4.8dB min;Efficiency 30%
60▼	TCC2327-15	22	Si $		Comm Base Config;Vcc 24V;Pout 15.0W;Freq 2.3-2.7GHz;Pin 6.0W;Gp 4.0dB min;Efficiency 30%
61▼	TCC82001	22	Si $	W211	Comm Base Config;Vcc 28V;Pout 1.0W;Fo 2.0GHz;Pin 200mW;Gp 7.0dB min;Efficiency 35%
62♦	TCC82003	22	Si $	W211	Comm Base Config;Vcc 28V;Pout 3.0W;Fo 2.0GHz;Pin 500mW;Gp 7.8dB min;Efficiency 35%
63▼	TCC82005	22	Si $	W211	Comm Base Config;Vcc 28V;Pout 5.0W;Fo 2.0GHz;Pin 1.0W;Gp 7.0dB min;Efficiency 35%
64▼	TCC82010	22	Si $	W211	Comm Base Config;Vcc 28V;Pout 10.0W;Fo 2.0GHz;Pin 3.0W;Gp 5.2dB min;Efficiency 35%
65▼	TCC82302	22	Si $	W211	Comm Base Config;Vcc 22V;Pout 1.75W;Fo 2.3GHz;Pin 200mW;Gp 9.4dB min;Efficiency 40%
66▼	TCC82304	22	Si $	W211	Comm Base Config;Vcc 22V;Pout 3.5W;Fo 2.3GHz;Pin 500mW;Gp 8.4dB min;Efficiency 40%
67▼	TCC82307	22	Si $	W211	Comm Base Config;Vcc 22V;Pout 7.0W;Fo 2.3GHz;Pin 1.0W;Gp 8.4dB min;Efficiency 40%
68▼	TCC83001	22	Si $	W211	Comm Base Config;Vcc 28V;Pout 1.0W;Fo 3.0GHz;Pin 200mW;Gp 7.0dB min;Efficiency 35%
69▼	TCC83003	22	Si $	W211	Comm Base Config;Vcc 28V;Pout 2.5W;Fo 3.0GHz;Pin 790mW;Gp 5.0dB min;Efficiency 30%
70▼	TCC83005	22	Si $	W211	Comm Base Config;Vcc 28V;Pout 4.5W;Fo 3.0GHz;Pin 1.59W;Gp 4.5dB min;Efficiency 30%
71▼	TCC0105100	22	Si $		Comm Emitter Config;Vcc 28V;Pout 125W;Freq 225-400MHz;Pin 25W;GP 7.0dB min
72▼	TCC0204130	22	Si $		Comm Emitter Config;Vcc 28V;Pout 100W;Freq 100-500MHz;Pin 17.8W;GP 7.5dB min
73	TH476	22		TO117	Config CE;Vcc 28V;Pout 2.5 Frange 700MHz;Pin 0.4W;Gp min 8dB
74	TH478	22		TO129	Config CE;Vcc 28V;Pout 5;Frange 700MHz;Pin 1W;Gp min 7dB
75	TH480	22		TO129	Config CE;Vcc 28V;Pout 9;Frange 700MHz;Pin 2W;Gp min 6.5dB
76	TH518	22		S512	Config CE;Vcc 28V;Pout 25W;fo 30MHz;Pin 1.25W;Gp min 13dB
77	TH519	22		S513	Config CE;Vcc 28V;Pout 60W;Frange 80 - 500MHz;Pin 12W;Gp min 7dB
78	TH525	22		S514	Config CE;Vcc 28V;Pout 14W;Frange 80 - 500MHz;Pin 2.2W;Gp min 8dB
79	TH526	22		S513	Config CE;Vcc 28V;Pout 30W;Frange 80 - 500MHz;Pin 6W;Gp min 7dB
80▼	TH562	22	Si $	W215	Comm Emitter Config;Vcc 50V;Pout 220W;Freq 30MHz;Pin 12W;GP 13.5dB min
81	TH596	22		S514	Config CE;Bias 20V/220mA;Pout 0.5W;fo 860MHz;Pin 0.04W;Gp min 11dB
82	TH597	22		S514	Config CE;Bias 20V/440mA;Pout 1W;fo 860MHz;Pin 0.1W;Gp min 10dB
83	TH598	22		S514	Config CE;Bias 25V/850mA;Pout 4W;fo 860MHz;Pin 0.63W;Gp min 8dB
84	TH1002	22		W211	Config CB;Vcc 28V;Pout 2W;fo 1GHz;Pin 0.2W;Gp min 10dB
85♦	TH1005	22	Ø	W211	RF Power Transistor;IF 1.0GHz;Po 6.6W;GP 11.2dB;Vcc 28V;efficiency 52%
86	TH1010	22		W211	Config CB;Vcc 28V;Pout 10W; fo1GHz;Pin 1W;Gp △10dB
87♦	TH2001	22	Ø	W211	RF Power Transistor;f 2.0GHz;Po 1.1w;Gp 7.4dB;Vcc 28v;efficiency 40%
88♦	TH2003	22		W211	RF Power Transistor;Freq 2.0GHz;Po 3.3W;Gp 8.2dB;Vcc 28V;Efficiency 40%
89♦	TH2005	22	Ø	W211	RF Power Transistor;f 2.0GHz;Po 5.5w;Gp 7.4dB;Vcc 28v;efficiency 40%
90	TH2302	22		W211	Config CB;Vcc 24V;Pout 1.75W; fo 2.3GHz;Pin 0.2W;Pg 9.4dB
91♦	TH2304	22	Ø	W211	RF Power Transistor;f 2.3GHz;Po 3.5w;Gp 8.5dB;Vcc 24v;efficiency 40%
92	TH2307	22		W211	RF Power Transistor;f 2.3GHz;Po 7.0w;Gp 8.5dB;Vcc 24v; efficiency 40%
93♦	TH3000	22	Ø	W211	RF Power Transistor;f 3.0GHz;Po 0.55w;Gp 7.4dB;Vcc 28;efficiency 25%
94	TH3001	22		W211	RF Power Transistor;f 3.0GHz;Po 1.0w;Gp 7.0dB;Vcc 28v;efficiency 30%
95♦	TH3003	22	Ø	W211	RF Power Transistor;f 3.0GHz;Po 3.0w;Gp 6.0dB;Vcc 28v;efficiency 30%
96♦	TH3005	22		W211	RF Power Transistor;Freq 3.0GHz;Po 5.0W;Gp 5.0dB;Vcc 28V;Efficiency 30%
97	THB598	22		M1091	Config CE;Bias 25v/900ma;Pout 4w;fo860MHZ;Pin 0.25w;Gpmin 12dB
98	THX98	22		S514	Config CE;Bias 25v/850ma;Pout 3.5w;fo 860MHZ;Pin 0.88w;Gpmin 6dB
99	TRW2001	22	Ø	†	Power Transistor;f 2.0 GHz;Po 1.0W;Pgain 9dBmin; Mismatch Tolerance VSWR infinite at VCC 28v
100	TRW2003	22	Ø	†	Power Transistor;f 2.0 GHz;Po 3.0W;Pgain 8dBmin;Mismatch Tolerance VSWR infinite at Vcc 28v
101	TRW2005	22	Ø	†	Power Transistor;f 2.0 GHz;Po 5.0W;Pgain 8dBmin;Mismatch Tolerance VSWR infinite at Vcc 28v
102	TRW2010	22	Ø	†	Power Transistor;f 2.0 GHz;Po 10W;Pgain 7dBmin;Mismatch Tolerance VSWR infinite at Vcc 28v
103	TRW2015	22	Ø	†	Power Transistor;f 2.0 GHz;Po 15W;Pgain 6dBmin;Mismatch Toletance VSWR infinite at Vcc 28v
104	TRW2020	22	Ø	†	Power Transistor;f 2.0 GHz;Po 20W;Pgain 5.2dBmin;Mismatch Tolerance VSWR infinite at Vcc 28v
105	TRW2301	22	Ø	M1098	Power Transistor;f 2.3 GHz;Po 1.5W;Pgain 8.0dBmin;Mismatch Tolerance VSWR infinite at Vce 20
106	TRW2304	22	Ø	M1098	Power Transistor;f 2.3GHz;Po 4.0W;Pgain 8.0dBmin;Mismatch Tolerance VSWR infinite at Vce 20v
107	TRW3001	22	Ø	†	Power Transistor;f 3.0GHz;Po 1.0W;Pgain 7.0dBmin;Mismatch Tolerance VSWR infinite at Vcc 28v
108	TRW3003	22	Ø	†	Power Transistor;f 3.0 GHz;Po 3.0W;Pgain 6.0dBmin;Mismatch Tolerance VSWR infinite at Vcc 28
109	TRW3005	22	Ø	†	Power Transistor;f 3.0 GHz;Po 5.0W;Pgain 5.0dBmin;Mismatch Tolerance VSWR infinite at Vcc 28
110	TRW62601	22	Ø	M1098	Power osc Transistor;ft 3.0GHz;Po 1.25wmin;VSWR mismatch Tolerance infinite:1

8. MISCELLANEOUS DEVICES

IN ORDER OF (1) USE and (2) TYPE No.

LINE No.	2 TYPE No.	1 USE	DESCRIPTION MAT.	DWG. No.	TECHNICAL DATA
1	TRW62602	22	Ø	M1098	Power osc Transistor;ft 3.0GHz;Po 2.5wmin;VSWR mismatch Tolerance infinite:1
2	TRW63601	22	Ø	M1098	Power osc Transistor;ft 3.3GHz;Po 0.6wmin;VSWR mismatch Tolerance infinite:1
3	TRW63602	22	Ø	M1098	Power osc Transistor;ft 3.3GHz;Po 1.2wmin;VSWR mismatch Tolerance infinite:1
4	TRW64601	22	Ø	M1098	Power osc Transistor;ft 4.0GHz;Po 0.3wmin;VSWR mismatch Tolerance infinite:1
5	TRW64602	22	Ø	M1098	Power osc Transistor;ft 4.0GHz;Po 0.55wmin;VSWR mismatch Tolerance infinite:1
6▼	A964	23		M1243	Phase Modulator;Freq range 26.5-40GHz;Pin 200mW;Ins Loss 3.5dB;Switching Speed 600pS
7▼	B964	23		M1243	Phase Modulator;Freq range 33.0-50GHz;Pin 200mW;Ins Loss 4.5dB;Switching Speed 600pS
8	BS766#ai	23		M1109	S-Band noise GEN;VSWR 1.3:1;ENR 36 dB;Freq rng 2900-3500M;Incidnt r.f. pwr:mean 5W;peak 250W
9	BS772	23		M1108	X-Band noise GEN;VSWR 1.25:1;Insertion loss 0.2 dB max;Incident r.f. Pwr:mean 60W,peak 60kW
10	DC1346	23	GA♦		Millimeter wave mixer diode;CT at 0V 0.03pf;Rs 6Ω;Vb 2v at 10uA
11	ND3100-5K	23	GA	M1038	Parametric Amplifier Diode;FcoMin 400GHz;BV Min at Ir/1.0uA 6V;Pt500mW
12	ND3101-5M	23	GA	M1039	Parametric Amplifier Diode;FcoMin 600GHz;BV Min at Ir/1.0uA 5V;Pt500mW
13	PKK500	23	Si$	A1vd†	Hi-Volt Schottky Barrier;Min VB at 500uA/3.0V;Max Cto at F 1MGz/1.0pf
14	PKK501	23	Si$	A1vd†	Hi-Volt Schottky Barrier;Min VB at 500uA/5.0V;Max Cto at F 1MHz/1.0pf
15	PKK502	23	Si$	A1vd†	Hi-Volt Schottky Barrier;Min VB at 500uA/8.0V;Max Cto at F 1MHz/1.0pf
16	PKK503	23	Si$	A1vd†	Hi-Volt Schottky Barrier;Min VB at 500uA/10V;Max Cto at F 1MHz/1.0pf
17	PKK504	23	Si$	A1vd†	Hi-Volt Schottky Barrier;Min VB at 500uA/12V;Max Cto at F 1MHz/1.0pf
18▼	SD1330	23	Si $	W217	BVCEO 12V min;Ft 6GHz/30mA;Ccb 0.65pF;NF 1.8dB/5mA/1GHz
19	T2H/60JA	23			Thermo couples for use in Waveguides;Freq Range 3200M-6.0G
20	T2H/60JB	23			Thermo couples for use in Waveguides;Freq Range 300M-6.0G
21	TH416	23		W215	config CE;Vcc 28V;Pout 130W;fo 30MHz;Pin 8.2W;Gp 12dB min
22	TH417	23		W216	Config CE;Vcc 28V;Pout 130W;fo 30Mhz;Pin 8.2W;Gp 12dB min
23	TH430	23		W214	Config CE;Vcc 50V;Pout 250W;fo 30MHz;Pin 10W;Gp 14dB min
24▼	TRF559	23	Si $		Comm Emitter Config;Vcc 12.5V;Pout 500mW;Fo 870MHz;Pin 79mW;GP 8.0dB min;Efficiency 50%
25▼	U964	23		M1243	Phase Modulator;Freq range 40.0-60GHz;Pin 100mW;Ins Loss 5.0dB;Switching Speed 600pS
26▼	UTL1001	23		C16ag	Signal Limiter;Bias 20V/10mA max;Freq 50-1000MHz;5.2dB max Insertion Loss at 500MHz
27▼	UTL1002	23		C16ag	Signal Limiter;Bias 20V/10mA max;Freq 5-1000MHz;5.2dB max Insertion Loss at 500MHz
28▼	V964	23		M1243	Phase Modulator;Freq range 50.0-75GHz;Pin 50mW;Ins Loss 5.5dB;Switching Speed 600pS
29	VQA415C	23			Tuning diode;Vmv 60V;C 4.7pf;Q min 350 at 50MHz;Tuning ratio 2.8min V (mw)
30	VQA418C	23			Tuning diode;Vmv 60v;C 15.0pf;Qmin 300 at 50mHz;Tuning ratio 3.0minV(mw)
31	VQA419C	23			Tuning diode;Vmv 60V;C 22.0pf;Q min 250 at 50MHz;Tuning ratio 3.0min V (mw)
32	VQA420C	23			Tuning diode;Vmv 60V;C 33.0pf;Q min 200 at 50MHz;Tuning ratio 3.1 min V (mw)
33▼	W964	23		M1243	Phase Modulator;Freq range 75.0-110GHz;Pin 40mW;Ins Loss 6.0dB;Switching Speed 600pS
34	2N3251	24	Si	TO18	ft 300M;BVCBO 50V;IC 200mA;tr 35nS;td 35nS;ts 200nS;tp 50nS;PD 360mW
35	TRW52001	24	Ø	†	Linear Transistor;ft 3.0Ghz;Po 1.5wmin;VSWR mismatch Tolerance infinite at Vce 20v
36	TRW52101	24	Ø	†	Linear Transistor;ft 3.0GHz;Po 1.5W min;VSWR mismatch Tolerance infinite at Vce 20V
37	TRW52201	24	Ø	†	Linear Transistor;ft 3.0GHz;Po 1.5W min;VSWR mismatch Tolerance infinite at Vce 20V
38	TRW52501	24	Ø	†	Linear Transistor;ft 3.0GHz;Po 1.5wmin;VSWR mismatch Tolerance infinite at Vce 20v
39	TRW52502	24	Ø	†	Linear Transistor; ft 3.0GHz; Po 3.0 W min; VSWR mismatch tolerance infinite at Vce 20V
40	TRW52504	24	Ø	†	Linear Transistor; ft 2.6GHz; Po 6.0W min; VSWR mismatch Tolerance 3:1 at Vce 20V
41	TRW52601	24	Ø	†	Linear Transistor;ft 3.0GHz;Po 1.5W min;VSWR mismatch Tolerance infinite at Vce 20V
42	TRW52602	24	Ø	†	Linear Transistor; ft 3.0GHz; Po 3.0W min; VSWR mismatch tolerance infinite at Vce 20V
43	TRW52604	24	Ø	†	Linear Transistor; ft 2.6GHz; Po 6.0W min; VSWR mismatch Tolerance 3:1 at Vce 20V
44	TRW53001	24	Ø	†	Linear Transistor; ft 3.3GHz; Po 0.8W min; VSWR mismatch Tolerance infinite at Vce 20V
45	TRW53101	24	Ø	†	Linear Transistor; ft 3.3GHz; Po 0.8W min; VSWR mismatch Tolerance infinite at Vce 20V
46	TRW53201	24	Ø	†	Linear Transistor; ft 3.3GHz; Po 0.8W min; VSWR mismatch Tolerance infinite at Vce 20V
47	TRW53501	24	Ø	†	Linear Transistor; ft 3.3GHz; Po 0.8W min; VSWR mismatch Tolerance infinite at Vce 20V
48	TRW53502	24	Ø	†	Linear Transistor; ft 3.3 GHz; Po 1.6W min; VSWR mismatch tolerance infinite at Vce 20V
49	TRW53601	24	Ø	†	Linear Transistor; ft 3.3 GHz; Po 0.8W min; VSWR mismatch Tolerance infinite at Vce 20V
50	TRW53602	24	Ø	†	Linear Transistor; ft 3.3 GHz; Po 1.6W min; VSWR mismatch toleranceinfinite at Vce 20V
51	TRW54001	24	Ø	†	Linear Transistor; ft 4.5GHz; Po 0.5W min; VSWR mismatch tolerance infinite at Vce 20V
52	TRW54101	24	Ø	†	Linear Transistor; ft 4.5GHz; Po 0.5W min; VSWR mismatch tolerance infinite at Vce 20V
53	TRW54201	24	Ø	†	Linear Transistor; ft 4.5GHz; Po 0.5W min; VSWR mismatch tolerance infinite at Vce 20V
54	TRW54501	24	Ø	†	Linear Transistor; ft 4.5GHz; Po 0.5W min; VSWR mismatch tolerance infinite at Vce 20V
55	TRW54601	24	Ø	†	Linear Transistor; ft 4.5GHz; Po 0.5W min; VSWR mismatch tolerance infinite at Vce 20V
56▼	40235	25		TO72	PD200mW;VCB 45V;VEB 4.5V;Cob 0.65pF;HFE 40/170 at 1.0mA;Freq 700MHz min
57▼	40236	25		TO72	PD200mW;VCB 45V;VEB 4.5V;Cob 0.65pF;HFE 40/275 at 1.0mA;Freq 700MHz min
58▼	40237	25		TO72	PD200mW;VCB 45V;VEB 4.5V;Cob 0.9pF;HFE 27/275 at 1.0mA;Freq 700MHz min
59▼	40238	25		TO72	PD200mW;VCB 45V;VEB 4.5V;Cob 0.65pF;HFE 40/170 at 1.0mA;Freq 500MHz min
60▼	40239	25		TO72	PD200mW;VCB 45V;VEB 4.5V;Cob 0.65pF;HFE 27/100 at 1.0mA;Freq 500MHz min
61▼	40240	25		TO72	PD200mW;VCB 45V;VEB 4.5V;Cob 0.65pF;HFE 27/275 at 1.0mA;Freq 500MHz min
62▼	40242	25		TO72	PD200mW;VCB 45V;VEB 4.5V;Cob 0.65pF;HFE 40/170 at 1.0mA;Freq 700MHz min
63▼	40243	25		TO72	PD200mW;VCB 45V;VEB 4.5V;Cob 0.8pF;HFE 40/170 at 1.0mA;Freq 700MHz min
64▼	40244	25		TO72	PD200mW;VCB 45V;VEB 4.5V;Cob 0.8pF;HFE 27/270 at 1.0mA;Freq 700MHz min
65▼	40245	25		TO72	PD200mW;VCB 45V;VEB 4.5V;Cob 0.8pF;HFE 70/275 at 1.0mA;Freq 700MHz min
66▼	40246	25		TO72	PD200mW;VCB 45V;VEB 4.5V;Cob 0.8pF;HFE 27/90 at 1.0mA;Freq 700MHz min
67▼	40894	25		TO72	PD 200mW;VCB 20V;VCE 12V;VEB 2.5V;Freq 1.2GHz min;Cob 1.0pF max;HFE 50/250 at 1.0mA
68▼	40895	25		TO72	PD 200mW;VCB 20V;VCE 12V;VEB 2.5V;Freq 1.2GHz min;Cob 1.0pF max;HFE 40/250 at 1.0mA
69▼	40896	25		TO72	PD 200mW;VCB 20V;VCE 12V;VEB 2.5V;Freq 1.2GHz min;Cob 1.0pF max;HFE 27/250 at 1.0mA
70▼	40897	25		TO72	PD 200mW;VCB 20V;VCE 12V;VEB 2.5V;Freq 1.2GHz min;Cob 1.0pF max;HFE 70/250 at 1.0mA
71♦	FP1	25		C258	5-500MHz Freq range;15V DC nom;-54/ 100°C Case;Gp 15dB;max NF 3.5;min Power Out -3.0dBm
72♦	FP3	25		C258	5-500MHz Freq range;15V DC nom;-54/100°C Case;Gp 15dB;max NF 4.5;min Power O ut -3.0dBm
73▼	FP5	25		C258	5-500MHz Freq;15V DC nom;-54/100°C Case;Gp 14.8dB;max NF 6.0dB;min Power Output 7.0dBm
74▼	FP7	25		C258	5-500MHz Freq:24V DC nom;-54/85°C Case;Gp 15.0dB;max NF 6.5dB;min Power Output 12.5dBm
75▼	FP9	25		C258	5-500MHz Freq:24V DC nom;-54/71°C Case;Gp 12.5dB;max NF 10.5dB;min Power Output 20.0dBm
76▼	FP11	25		C258	5M-1.0GHz Freq;15V DC nom;-54/100°C Case;Gp 15.0dB;max NF 4.5dB;min Power Output -4.0dBm
77▼	FP11-1	25		C258	5M-1.0GHz Freq;15V DC nom;-54/100°C Case;Gp 14.7dB;max NF 4.0dB;min Power Output -4.0dBm
78▼	FP11-2	25		C258	5M-1.0GHz Freq;15V DC nom;-54/100°C Case;Gp 16.0dB;max NF 3.5dB;min Power Output -3.5dBm
79▼	FP15	25		C258	5M-1.0GHz Freq;15V DC nom;-54/100°C Case;Gp 14.5dB;max NF 7.0dB;min Power Output 6.5dBm
80▼	FP17	25		C258	10M-1.0GHz Freq;15V DC nom;-54/100°C Case;Gp 13.5dB;max NF 8.0dB;min Power Output 13.5dBm
81▼	FP18	25		C258	10-800MHz Freq;15V DC nom;-54/100°C Case;Gp 15.0dB;max NF 7.0dB;min Power Output 13.5dBm
82▼	FP19	25		C258	10M-1.0GHz Freq;15V DC nom;-54/100°C Case;Gp 10.0dB;max NF 12.5dB;min Power Output 19.0dBm
83▼	FP23	25		C258	5M-1.5GHz Freq;15V DC nom;-54/100°C Case;Gp 12.5dB;NF 6.0dB max;min Power Output 2.0dBm
84▼	FP24	25		C258	5M-1.5GHz Freq;15V DC nom;-54/100°C Case;Gp 20.0dB;NF 5.8dB max;min Power Output 6.5dBm
85▼	FP25	25		C258	5M-1.5GHz Freq;15V DC nom;-54/100°C Case;Gp 12.0dB;NF 8.0dB max;min Power Output 6.5dBm
86▼	FP27	25		C258	10M-1.5GHz Freq;15V DC nom;-54/100°C Case;Gp 8.50dB;NF 9.5dB max;min Power Output 13.5dBm
87▼	FP28	25		C258	10M-1.5GHz Freq;15V DC nom;-54/100°C Case;Gp 12.0dB;NF 7.5dB max;min Power Output 13.5dBm
88▼	FP29	25		C258	10M-1.5GHz Freq;15V DC nom;-54/100°C Case;Gp 10.0dB;NF 13.5dB max;min Power Output 19.0dBm
89▼	FP31	25		C258	10M-2.0GHz Freq;15V DC nom;-54/100°C Case;Gp 13.0dB;NF 4.5dB max;min Power Output -4.5dBm
90▼	FP33	25		C258	10M-2.0GHz Freq;15V DC nom;-54/100°C Case;Gp 12.0dB;NF 6.0dB max;min Power Output 2.0dBm
91▼	FP35	25		C258	10M-2.0GHz Freq;15V DC nom;-54/100°C Case;Gp 13.0dB;NF 7.0dB max;min Power Output 6.5dBm
92▼	FP37	25		C258	10M-2.0GHz Freq;15V DC nom;-54/100°C Case;Gp 11.0dB;NF 8.5dB max;min Power Output 13.5dBm
93▼	FP39	25		C258	10M-2.0GHz Freq;15V DC nom;-54/100°C Case;Gp 10.0dB;NF 10.0dB max;min Power Output 20.0dBm
94♦	FP53	25		C258	10-500MHz Freq Range;15V DC nom;-54/ 100°C Case;Gp 15dB;max NF 4.0;min Power Out 1.5dBm
95♦	FP54	25		C258	5-400MHz Freq range;15V DC nom;-54/ 100°C max Temp;6.0dB max NF;6.0dBm min Power Out
96▼	FP55	25		C258	10-500MHz Freq;15V DC nom;-54/100°C Case;Gp 14.7dB;max NF 6.5dB;min Power Output 8.0dBm
97♦	FP56	25		C258	5-400MHz Freq range;15V DC nom;-54/ 100°C max Temp;7.5dB max NF;12.0dBm min Power Out
98▼	FP57-1	25		C258	10-500MHz Freq;24V DC nom;-54/100°C Case;Gp 11.0dB;max NF 7.0dB;min Power Output 15.0dBm
99▼	FP58	25		C258	5-500MHz Freq;15V DC nom;-54/100°C Case;Gp 11.0dB;max NF 6.5dB;min Power Output 17.5dBm
100▼	FP59	25		C258	5-500MHz Freq;15V DC nom;-54/100°C Case;Gp 11.5dB;max NF 7.0dB;min Power Output 20.0dBm
101▼	FP59-1	25		C258	10-700MHz Freq;15V DC nom;-54/100°C Case;Gp 12.0dB;max NF 8.0dB;min Power Output 20.0dBm
102▼	FP63	25		C258	5M-1.0GHz Freq;15V DC nom;-54/100°C Case;Gp 16.0dB;max NF 5.5dB;min Power Output 2.0dBm
103▼	FP64	25		C258	10M-1.2GHz Freq;15V DC nom;-54/100°C Case;Gp 25.0dB;NF 4.8dB max;min Power Output 6.5dBm
104▼	FP65	25		C258	10M-1.0GHz Freq;15V DC nom;-54/100°C Case;Gp 10.5dB;max NF 8.0dB;min Power Output 8.0dBm
105▼	FP74	25		C258	5-500MHz Freq;15V DC nom;-54/100°C Case;Gp 29.0dB;max NF 6.0dB;min Power Output 7.0dBm
106♦	FP74-1	25		C258	5-250MHz Freq range;15V DC nom;-54/ 100°C max Temp;5.5dB max NF;7.0dBm min Power Out
107♦	FP75	25		C258	5-500MHz Freq range;15V DC nom;-54/ 100°C Case;Gp 15dB;max NF 3.5;min Power Out 7.0dBm
108♦	FP75-2	25		C258	5-250MHz Freq range;15V DC nom;-54/ 100°C max Temp;5.0dB max NF;7.0dBm min Power Out
109▼	FP76	25		C258	5-500MHz Freq;15V DC nom;-54/100°C Case;Gp 28.0dB;max NF 6.0dB;min Power Output 13.5dBm
110▼	FP77	25		C258	5-500MHz Freq;15V DC nom;-54/100°C Case;Gp 16.0dB;max NF 6.5dB;min Power Output 14.5dBm

8. MISCELLANEOUS DEVICES

IN ORDER OF (1) USE and (2) TYPE No.

LINE No.	2 TYPE No.	1 USE	DESCRIPTION MAT.	DWG. No.	TECHNICAL DATA
1▼	FP77-1	25		C258	5-600MHz Freq;15V DC nom;-54/100°C Case;Gp 16.0dB;max NF 7.0dB;min Power Output 14.5dBm
2♦	FP79	25		C258	5-250MHz Freq range;15V DC nom;-54/ 100°C max Temp;7.0dB max NF;19.5dBm min Power Out
3▼	FP401	25		C260	5-400MHz Freq;15V DC nom;-54/100°C Case;Gp 15.0dB;NF 5.0dB max;min Power Output -3.0dBm
4▼	FP402	25		C260	5-400MHz Freq;15V DC nom;-54/100°C Case;Gp 15.0dB;NF 7.5dB max;min Power Output 6.0dBm
5▼	FP404	25		C260	5-400MHz Freq;15V DC nom;-54/100°C Case;Gp 11.0dB;NF 9.0dB max;min Power Output 13.0dBm
6▼	FP521	25		C258	10-500MHz Freq;15V DC nom;-54/100°C Case;Gp 15.0dB;max NF 4.5dB;min Power Output 5.0dBm
7▼	FP522	25		C258	10-500MHz Freq;15V DC nom;-54/100°C Case;Gp 15.0dB;max NF 3.0dB;min Power Output -2.0dBm
8♦	FP591	25		C258	10-400MHz Freq range;15V DC nom;-54/100°C max;Gp 14.0dB;max NF 4.5dB;min Power Output 5.0dBm
9♦	FP592	25		C258	10-400MHz Freq range;15V DC nom;-54/100°C max;Gp 14.0dB;max NF 7.5dB;min Power Out 10dBm
10♦	FP593	25		C258	10-400MHz Freq range;24V DC nom;-54/71°C max;Gp 14.0dB;max NF 7.5dB;min Power Out 17dBm
11♦	FP594	25		C258	10-400MHz Freq range;15V DC nom;-54/100°C max;Gp 14.0dB;max NF 7.5dB;min Power Output 17dBm
12▼	FPF1	25		C259	5-500MHz Freq;15V DC nom;-54/100°C Case;Gp 15.0dB;NF 3.5dB max;min Power Output -3.0dBm
13▼	FPF3	25		C259	5-500MHz Freq;15V DC nom;-54/100°C Case;Gp 15.0dB;NF 4.5dB max;min Power Output -3.0dBm
14▼	FPF5	25		C259	5-500MHz Freq;15V DC nom;-54/100°C Case;Gp 14.8dB;NF 6.0dB max;min Power Output 7.0dBm
15▼	FPF7	25		C259	5-500MHz Freq;24V DC nom;-54/85°C Case;Gp 15.0dB;NF 6.5dB max;min Power Output 12.5dBm
16▼	FPF9	25		C259	5-500MHz Freq;24V DC nom;-54/71°C Case;Gp 12.5dB;NF 10.5dB max;min Power Output 20.0dBm
17▼	FPF11	25		C259	5M-1.0GHz Freq;15V DC nom;-54/100°C Case;Gp 15.0dB;NF 4.5dB max;min Power Output -4.0dBm
18▼	FPF11-1	25		C259	5M-1.0GHz Freq;15V DC nom;-54/100°C Case;Gp 14.7dB;NF 4.0dB max;min Power Output -4.0dBm
19▼	FPF11-2	25		C259	5M-1.0GHz Freq;15V DC nom;-54/100°C Case;Gp 16.0dB;NF 3.5dB max;min Power Output -3.5dBm
20▼	FPF15	25		C259	5M-1.0GHz Freq;15V DC nom;-54/100°C Case;Gp 14.5dB;NF 7.0dB max;min Power Output 6.5dBm
21▼	FPF17	25		C259	10M-1.0GHz Freq;15V DC nom;-54/100°C Case;Gp 13.5dB;NF 8.0dB max;min Power Output 13.5dBm
22▼	FPF18	25		C259	10-800MHz Freq;15V DC nom;-54/100°C Case;Gp 15.0dB;NF 7.0dB max;min Power Output 13.5dBm
23▼	FPF19	25		C259	10M-1.0GHz Freq;15V DC nom;-54/100°C Case;Gp 10.0dB;NF 12.5Db max;min Power Output 19.0dBm
24▼	FPF23	25		C259	5M-1.5GHz Freq;15V DC nom;-54/100°C Case;Gp 12.5dB;NF 6.0dB max;min Power Output 2.0dBm
25▼	FPF24	25		C259	5M-1.5GHz Freq;15V DC nom;-54/100°C Case;Gp 20.0dB;NF 5.8dB max;min Power Output 6.5dBm
26▼	FPF25	25		C259	5M-1.5GHz Freq;15V DC nom;-54/100°C Case;Gp 12.0dB;NF 8.0dB max;min Power Output 6.5dBm
27▼	FPF27	25		C259	10M-1.5GHz Freq;15V DC nom;-54/100°C Case;Gp 8.5dB;NF 9.5dB max;min Power Output 13.5dBm
28▼	FPF28	25		C259	10M-1.5GHz Freq;15V DC nom;-54/100°C Case;Gp 12.0dB;NF 7.5dB max;min Power Output 13.5dBm
29▼	FPF29	25		C259	10M-1.5GHz Freq;15V DC nom;-54/100°C Case;Gp 10.0dB;NF 13.5dB max;min Power Output 19.0dBm
30▼	FPF31	25		C259	10M-2.0GHz Freq;15V DC nom;-54/100°C Case;Gp 13.0dB;NF 4.5dB max;min Power Output 4.5dBm
31▼	FPF33	25		C259	10M-2.0GHz Freq;15V DC nom;-54/100°C Case;Gp 12.0dB;NF 6.0dB max;min Power Output 2.0dBm
32▼	FPF35	25		C259	10M-2.0GHz Freq;15V DC nom;-54/100°C Case;Gp 13.0dB;NF 7.0dB max;min Power Output 6.5dBm
33▼	FPF37	25		C259	10M-2.0GHz Freq;15V DC nom;-54/100°C Case;Gp 11.0dB;NF 8.5dB max;min Power Output 13.5dBm
34▼	FPF39	25		C259	10M-2.0GHz Freq;15V DC nom;-54/100°C Case;Gp 10.0dB;NF 10.0dB max;min Power Output 20.0dBm
35▼	FPF53	25		C259	10-500MHz Freq;15V DC nom;-54/100°C Case;Gp 15.0dB;NF 4.0dB max;min Power Output 1.5dBm
36▼	FPF54	25		C259	5-400MHz Freq;15V DC nom;-54/100°C Case;Gp 27.5dB;NF 6.0dB max;min Power Output 6.0dBm
37▼	FPF55	25		C259	10-500MHz Freq;15V DC nom;-54/100°C Case;Gp 14.7dB;NF 6.5dB max;min Power Output 8.0dBm
38▼	FPF56	25		C259	5-400MHz Freq;15V DC nom;-54/100°C Case;Gp 26.0dB;NF 7.5dB max;min Power Output 12.0dBm
39▼	FPF57-1	25		C259	10-500MHz Freq;24V DC nom;-54/100°C Case;Gp 11.0dB;NF 7.0dB max;min Power Output 15.0dBm
40▼	FPF58	25		C259	5-500MHz Freq;15V DC nom;-54/100°C Case;Gp 11.0dB;NF 6.5dB max;min Power Output 17.5dBm
41▼	FPF59	25		C259	5-500MHz Freq;15V DC nom;-54/100°C Case;Gp 11.5dB;NF 7.0dB max;min Power Output 20.0dBm
42▼	FPF59-1	25		C259	10-700MHz Freq;15V DC nom;-54/100°C Case;Gp 12.0dB;NF 8.0dB max;min Power Output 20.0dBm
43▼	FPF63	25		C259	5M-1.0GHz Freq;15V DC nom;-54/100°C Case;Gp 16.0dB;NF 5.5dB max;min Power Output 2.0dBm
44▼	FPF64	25		C259	10M-1.2GHz Freq;15V DC nom;-54/100°C Case;Gp 25.0dB;NF 4.8dB max;min Power Output 6.5dBm
45▼	FPF65	25		C259	10M-1.0GHz Freq;15V DC nom;-54/100°C Case;Gp 10.5dB;NF 8.0dB max;min Power Output 8.0dBm
46▼	FPF74	25		C259	5-500MHz Freq;15V DC nom;-54/100°C Case;Gp 29.0dB;NF 6.0dB max;min Power Output 7.0dBm
47▼	FPF74-1	25		C259	5-250MHz Freq;15V DC nom;-54/100°C Case;Gp 30.0dB;NF 5.5dB max;min Power Output 7.0dBm
48▼	FPF75	25		C259	5-500MHz Freq;15V DC nom;-54/100°C Case;Gp 21.0dB;NF 3.5dB max;min Power Output 7.0dBm
49▼	FPF75-2	25		C259	5-250MHz Freq;15V DC nom;-54/100°C Case;Gp 21.0dB;NF 5.0dB max;min Power Output 7.0dBm
50▼	FPF76	25		C259	5-500MHz Freq;15V DC nom;-54/100°C Case;Gp 28.0dB;NF 6.0dB max;min Power Output 13.5dBm
51▼	FPF77	25		C259	5-500MHz Freq;15V DC nom;-54/100°C Case;Gp 16.0dB;NF 6.5dB max;min Power Output 14.5dBm
52▼	FPF77-1	25		C259	5-600MHz Freq;15V DC nom;-54/100°C Case;Gp 16.0dB;NF 7.0dB max;min Power Output 14.5dBm
53▼	FPF79	25		C259	5-250MHz Freq;15V DC nom;-54/100°C Case;Gp 15.0dB;NF 7.0dB max;min Power Output 19.5dBm
54▼	FPF521	25		C259	10-500MHz Freq;15V DC nom;-54/100°C Case;Gp 15.0dB;NF 4.5dB max;min Power Output 5.0dBm
55▼	FPF522	25		C259	10-500MHz Freq;15V DC nom;-54/100°C Case;Gp 15.0dB;NF 3.0dB max;min Power Output -2.0dBm
56▼	FPF591	25		C259	10-400MHz Freq;15V DC nom;-54/100°C Case;Gp 14.0dB;NF 4.5dB max;min Power Output 5.0dBm
57▼	FPF592	25		C259	10-400MHz Freq;15V DC nom;-54/100°C Case;Gp 14.0dB;NF 7.5dB max;min Power Output 10.0dBm
58▼	FPF593	25		C259	10-400MHz Freq;24V DC nom;-54/71°C Case;Gp 14.0dB;NF 7.5dB max;min Power Output 17.0dBm
59▼	FPF594	25		C259	10-400MHz Freq;15V DC nom;-54/100°C Case;Gp 14.0dB;NF 7.5dB max;min Power Output 17.0dBm
60	AFP20821	26		V22	YIG Bandpass Filter;2 Stage;2-8GHz;25MHz Bandwidth;20-28VDC*400mA-80mA Heater Power
61	AFP21821	26		V23	YIG Bandpass Filter; 2 Stage; 8-18GHz; 25MHz Bandwidth; 20-28VDC * 400Ma-80mA Heater Po
62	AFP21841	26		V23	YIG Bandpass Filter;2 Stage;2-18GHz;25MHz Bandwidth;20-28VDC*400mA-80mA Heater Power
63	AFP30821	26		V22	YIG Bandpass Filter;3 Stage;2-8GHz;25MHz Bandwidth;20-28VDC*600mA-120mA Heater Power
64	AFP31821	26		V23	YIG Bandpass Filter;3 Stage;8-18GHz;25MHz Bandwidth;20-28VDC*600mA-120mA Heater Power
65	AFP31841	26		V23	YIG Bandpass Filter;3 Stage;2-18GHz;20MHz Bandwidth;20-28VDC*600mA-120mA Heater Power
66	AFP40821	26		V22	YIG Bandpass Filter;4 Stage;2-8GHz;20MHz Bandwidth;20-28VDC*800mA-160mA Heater Power
67	AFP41821	26		V23	YIG Bandpass Filter;4 Stage;8-18GHz;25MHz Bandwidth;20-28VDC*800mA-160mA Heater Power
68	AFP41841	26		V23	YIG Bandpass Filter;4 Stage;2-18GHz;20MHz Bandwidth;20-28VDC*800mA-160mA Heater Power
69	AV7104	26		V18a	YIG Tuned OSC.;1-2.2GHz;PO 40mW into 50Ω;15V/ 150mA Max; 20-28V,2Watts/25°C Max. Heater Po
70	AV7203	26		V18a	YIG Tuned Osc;2-4.0GHz;Po 25mW into 50Ω;15V/100mA Max;20-28V,2Watts/25°C Max Heater Power
71	AV7204	26		V18b	YIG Tuned Osc;2-4.0GHz;Po 40mW into 50Ω;15V/90mA Max;20-28V,2Watts/25° Max Heater Power
72	AV7206	26		V18a	YIG Tuned Osc;2-6.0GHz;Po 10mW into 50Ω;15V/100mA Max;20-28V,2Watts/25°C Max Heater Power
73	AV7216	26		V18f	YIG Tuned Osc;2-6.0GHz;Military;Po,20dBm into 50Ω Max;15V/100mA;2Watts/25°C Heater Power
74	AV7218	26		V18g	YIG Tuned Osc;2-8.0GHz;Military;Po 27dBm into 50Ω Max;15V/120mA;2Watts/25°C Heater Power
75	AV7224	26		V18c	YIG Tuned Osc.;2-4 GHz ; PO 100mW into 50Ω;15V/150mA Max;20-28VDC,2Watts/25°C Heater Power
76	AV7236	26		V18a	YIG Tuned Osc;2-6.0GHz;Po 20mW into 50Ω;15V/175mA Max;20-28VDC,2Watts/25°C Heater Power
77	AV7238	26		V18c	YIG Tuned;FRange 2-8.0GHz min;Po 30mW min;Povari ±3.0dB max
78	AV7248	26	Si	V18j	YIG Tuned Osc with Tracking YIG Filter;2-8GHz;PO 30mW into 50Ω;15V/200mA Max
79	AV7403	26		V18c	YIG Tuned Osc;2-8.0GHz;Po 20mW into 50Ω;15V/40mA Max;20-28VDC,2Watts/25°C Heater Power
80	AV7413	26		V18g	YIG Tuned Osc;4-8.0GHz;Military;Po 20dBm into 50Ω Max;15V/120mA;2Watts/25°C Heater Power
81	AV7443	26		V18C	Osc YIG Tuned; F Range 4.0-8.0GHz min; Po 100mW± 3.0dB
82	AV7453	26		V18C	Osc YIG Tuned; FRange 4.0-8.0 GHz min; Po 50mW± 3.0dB
83	AV7814	26			Military YIG Tuned Osc.; 8.0 to 12.4GHz; 20mW min Po;-54° to 71°C
84	AV7871	26			YIG Tuned Osc.;8-12.4GHz; PO 30mW into 50Ω;15V/125mA Max;20-28VDC,2Watts/25°C Heater Power
85	AV7872	26			YIG Tuned Osc.;8-12.4GHz; PO 60mW into 50Ω;15V/250mA Max;20-28VDC,2Watts/25°C Heater Power
86	AV7873	26			YIG Tuned Osc.;8.0 to 12.4GHz;100mW min Po
87	AV71214	26			Military YIG Tuned Osc.;12 to 18.0GHz; 20mW min Po; -54° to 71° C
88	AV71241	26			YIG Tuned Osc.;12-18 GHz; PO 20mW into 50Ω;15V/125mA Max;20-28VDC,2Watts/25°C Heater Power
89	AV71251	26			YIG Tuned Osc.;12-18 GHz; PO 40mW into 50Ω;15V/150mA Max;20-28VDC,2Watts/25°C Heater Power
90	AV71261	26			YIG Tuned Osc.;12-18 GHz; PO 80mW into 50Ω;15V/200mA Max;20-28VDC,2Watts/25°C Heater Power
91♦	AV71826	26		M1260	YIG Tuned Osc.;18-26.5GHz; PO 20mW into 50Ω;15V/150mA Max;20-28VDC,2Watts/25°C Heater Power
92	AV78218	26			YIG Tuned Osc.;8.0 to 18.0GHz; 30mW min Po
93	AV78318	26			YIG Tuned Osc.;8-18 GHz; PO 10mW into 50Ω;15V/100mA Max;20-28VDC,2Watts/25°C Heater Power
94	AV78418	26			Military YIG Tuned Osc.; 8.0 to 18.0GHz; 20mW min Po;-54° to 71°C
95	AVD7104	26		V20	YIG Tuned Osc.;1-2.2GHz;15V-300mA Max.;40 kHz pk to pk Residual FM
96	AVD7203	26		V20	YIG Tuned Osc.;2-4GHz;15V-350mA Max.;40KHz pk to pk Residual FM
97	AVD7204	26		V20	YIG Tuned Osc.;2-4GHz;15V-375mA Max.;40KHz pk to pk Residual FM
98	AVD7206	26		V20	YIG Tuned Osc.;2-6GHz;15V-450mA Max.;50KHz pk to pk Residual FM
99	AVD7216	26		V21	Military YIG Tuned Osc.;Z-6GHz; 15V-550mA; 50KHz pk to pk Residual FM
100	AVD7218	26		V21	Military YIG Tuned Osc.;2-8GHz;15V-725mA;60KHz pk to pk Residual FM
101	AVD7224	26		V20	YIG Tuned Osc.;2-4GHz;15V-400mA Max.;40KHz pk to pk Residual FM
102	AVD7236	26		V20	YIG Tuned Osc.;2-6GHz;15V-550mA Max.;50KHz pk to pk Residual FM
103	AVD7238	26		V20	YIG Tuned Osc.;2-8GHz;15V-650mA Max.;60KHz pk to pk Residual FM
104	AVD7403	26		V20	YIG Tuned Osc.;4-8GHz;15V-500mA Max.;60KHz pk to pk Residual FM
105	AVD7413	26		V21	Military YIG Tuned Osc.;4-8GHz;15V-725mA;60KHz pk to pk Residual FM
106	AVD7443	26		V20	YIG Tuned Osc; 4-8GHz; 15V-650mA Max.; 60KHz pk to pk Residual FM
107	AVD7453	26		V20	YIG Tuned Osc.;4-8GHz;15V-600mA Max.;60KHz pk to pk Residual FM
108	AVD7814	26		V21	Military YIG Tuned Osc.;8-12.4GHz;15V-925mA;80KHz pk to pk Residual Fm
109	AVD7871	26		V20	YIG Tuned Osc.;8-12.4GHz;15V-800mA Max.;80KHz pk to pk Residual FM
110	AVD7872	26		V20	YIG Tuned Osc.;8-12.4GHz;15V-925mA Max.;80KHz pk to pk Residual FM

8. MISCELLANEOUS DEVICES

IN ORDER OF (1) USE and (2) TYPE No.

LINE No.	2 TYPE No.	1 USE	DESCRIPTION MAT.	DWG. No.	TECHNICAL DATA
1	AVD7873	26		V20	YIG Tuned Osc.;8-12.4GHz;15V-925mA Max.;80KHz pk to pk Residual FM
2	AVD71214	26		V21	Military VIG Tuned Osc.;12-18GHz;15V1225mA;100KHz pk to pk Residual Fm
3	AVD71241	26		V21	YIG Tuned Osc.;12-18GHz;15V-1175mA Max;100KHz pk to pk Residual FM
4	AVD71251	26		V21	YIG Tuned Osc.;12-18GHz;15V-1200mA; 100KHz pk topk Residual FM
5	AVD71261	26		V21	YIG Tuned Osc.;12-18GHz;15V-1250mA;100KHz pk to pk Residual FM
6	AVD71826	26		V21	18-26.5GHz; 15V-1200mA; 150KHz pk to pk ResidualFM
7	AVD78218	26		V21	YIG Tuned Osc.;8-18.0GHz;15V-1225mA Max;100KHz pk to pk Residual FM
8	AVD78318	26		V21	YIG Tuned Osc.;8-18.0GHz;15V-1150mA Max;100KHz pk to pk Residual FM
9	AVD78418	26		V21	Military VIG Tuned Osc.;8-18GHz;15V-1225mA;100KHz pk to pk Residual Fm
10	FPD20821	26		V24	YIG Tuned Filter/Driver Assembly;2-8GHz;15V-450mA max.
11	FPD21821	26		V24	YIG Tuned Filter/Driver Assembly;8-18GHz;15V-950mA max.
12	FPD21841	26		V24	YIG Tuned Filter/Driver Assembly;2-18GHz;15V-950mA max.
13	FPD30821	26		V24	YIG Tuned Filter/Driver Assembly;2-8GHz;15V-450mA max.
14	FPD31821	26		V24	YIG Tuned Filter/Driver Assembly;8-18GHz;15V-950mA max.
15	FPD31841	26		V24	YIG Tuned Filter/Driver Assembly;2-18GHz;15V-950mA max.
16	FPD40821	26		V24	YIG Tuned Filter/Driver Assembly;2-8GHz;15V-450mA max.
17	FPD41821	26		V24	YIG Tuned Filter/Driver Assembly;8-18GHz;15V-950mA max.
18	FPD41841	26		V24	YIG Tuned Filter/Driver Assembly;2-18GHz;15V-950mA max.
19▼	CMA30000	27	GA	M1236	5.4-7.2GHz Freq range;8-50dB Gain;20-37dBm Power Output;15Vdc Oper Bias;7.0dB Max Noise Fig
20▼	CMA40000	27	GA	M1237	7.9-12.2GHz Freq range;8-50dB Gain;20-37dBm Power Output;15Vdc Oper Bias;7.0dB Max Noise Fig
21▼	SD1331	27	Si $	W22	BVCEO 12V min;Ft 6GHz/30mA;Ccb 0.7pF;NF 1.2dB/2mA/5VCE/500MHz;Gp 16dB
22▼	SD1332	27	Si $	W22	BVCEO 15V min;Ft 5GHz/14mA;Ccb 0.5pF;NF 1.5dB/2mA/5VCE/500MHz;Gp 18dB
23▼	SD1333	27	Si $	W22	BVCEO 15V min;Ft 5GHz/50mA;Ccb 1.1pF;NF 1.9dB/10mA/10VCE/500MHz;Gp 15dB
24▼	SD1334	27	Si $	W22	BVCEO 20V min;Ft 3.5GHz/40mA;Ccb 1.2pF;NF 2.0dB/20mA/14VCE/500MHz;Gp 15dB
25♦	TH064	27		W211	Class A Amplifier Transistor;Bias 18V/50mA;Gp 10dB/2.0GHz;Pout at 1dB compression 22dBm
26♦	TH195	27		W211	Class A Amplifier Transistor;Bias 18V/140mA;Gp 9.0dB/2.0GHz;Pout at 1dB compression 28dBm
27♦	TH196	27		W211	Class A Amplifier Transistor;Bias 18V/220mA;Gp 13dB/1.0GHz;Pout at 1dB compression 30.5dBm
28♦	TH197	27		W211	Class A Amplifier Transistor;Bias 18V/360mA;Gp 7.0dB/2.0GHz;Pout at 1dB compression 31.7dBm
29♦	TH264	27		W211	Class A Amplifier Transistor;Bias 12V/60mA;Gp 7.0dB/4.0GHz typ;Pout 0.1W
30♦	SD1546	28	Si $	M1077	Comm Base Config;Vcc 50V;Pout 70W min;Freq range 1030-1090MHz
31▼	SD1840	28	Si $	Y215a	Comm Emitter;Vcc 28V;Pout 1.3W;Fo 2.0GHz;Efficiency 28% min
32♦	SD1845	28	Si $	W211	Comm Coll Config;Vcc 24V;Pout 500mW;Fo 2.0GHz;Efficiency 25% min
33♦	SD1846	28	Si $	W211	Comm Coll Config;Vcc 24V;Pout 1.0W;Fo 2.0GHz;Efficiency 35% min
34♦	SD1847	28	Si $	W211	Comm Coll Config;Vcc 24V;Pout 2.0W;Fo 2.0GHz;Efficiency 30% min
35♦	TH9021	28		W211	Config CC;VEE -24V;Freq 1.2GHz;Pout 1.3W min;Collector Efficiency 40% min
36♦	TH9023	28		W211	Config CC;VEE -24V;Freq 1.2GHz;Pout 4.0W min;Collector Efficiency 40% min
37♦	TH9030	28		W211	Config CC;VEE -24V;Freq 1.5-2.5GHz;Pout 0.55W min;Collector Efficiency 25% min
38♦	TH9031	28		W211	Config CC;VEE -24V;Freq 1.5-2.5GHz;Pout 1.0W min;Collector Efficiency 35% min
39♦	TH9033	28		W211	Config CC;VEE -24V;Freq 1.5-2.5GHz;Pout 1.75W min;Collector Efficiency 30% min
40▼	ABG1250	29		M1253	AMP;Freq 950MHz-1.25GHz;NF 3.5dB max;Po/1dB Comp 20dBm min;Gain 23dB min;Vin 15Vdc/150mA
41▼	ABG2002	29		M1253	Amplifier;Freq 1-2GHz;Vin 15V;Gain 27dB min;Flat ±1dB max;Po/1dB Comp 15dBm(min);Bipolar
42▼	ABG2003	29		M1253	Amplifier;Freq 1-2GHz;Vin 15V;Gain 36dB min;Flat ±1dB max;Po/1dB Comp 20dBm(min);Bipolar
43▼	ABG2010	29		M1253	Amplifier;Freq 1-2GHz;Vin 15V;Gain 9dB min;Flatness±1dB max;Po at 1dB Comp 20dBm(min);Bip
44▼	ABG2011	29		M1253	Amplifier;Freq 1-2GHz;Vin 15V;Gain 18dB min;Flat±1dB max;Po/1dB Comp 20dBm(min;Bipolar
45▼	ABG2012	29		M1253	Amplifier;Freq 1-2GHz;Vin 15V;Gain 27dB min;Flat ±1dB max;Po/1dB Comp 20dBm(min);Bipolar
46▼	ABG2013	29		M1253	Amplifier;Freq 1-2GHz;Vin 15V;Gain 20dB min;Flat ±1dB max;Po/1dB Comp 12dBm(min);Bip/GaAs
47▼	ABG2014	29		M1253	Amplifier;Freq 1-2GHz;Vin 15V;Gain 27dB min;Flat ±1dB max;Po/1dB Comp 12dBm(min);Bip/GaAs
48▼	ABG2015	29		M1253	Amplifier;Freq 1-2GHz;Vin 15V;Gain 36dB min;Flat ±1dB max;Po/1dB Comp 12dBm(min);Bip/GaAs
49▼	ABG2400	29		M1253	AMP;Freq 1.4-2.4GHz;NF 4.5dB max;Po/1dB Comp 20dBm min;Gain 30dB min;Vin 15Vdc/165mA
50▼	ABG2404	29		M1253	AMP;Freq 1.7-2.4GHz;NF 4.5dB max;Po/1dB Comp 20dBm min;Gain 16dB min;Vin 15Vdc/140mA
51▼	ABG4030	29	GA	M1253	AMP;Freq 2-4GHz;NF 3dB max;Po/1dB Comp, 10dBm min;Gain 7dB min;Vin 15Vdc/85mA
52▼	ABG4032	29	GA	M1253	AMP;Freq 2-4GHz;NF 3dB max;Po/1dB Comp, 18dBm min;Gain 14dB min;Vin 15Vdc/190mA
53▼	ABG4033	29	GA	M1253	AMP;Freq 2-4GHz;NF 3dB max;Po/1dB Comp, 18dBm min;Gain 17dB min;Vin 15Vdc/230mA
54▼	ABG4034	29	GA	M1253	AMP;Freq 2-4GHz;NF 3dB max;Po/1dB Comp, 18dBm min;Gain 27dB min;Vin 15Vdc/265mA
55▼	ABG4035	29	GA	M1253	AMP;Freq 2-4GHz;NF 3dB max;Po/1dB Comp, 18dBm min;Gain 36dB min;Vin 15Vdc/290mA
56▼	ABG4036	29	GA	M1253	AMP;Freq 2-4GHz;NF 3dB max;Po/1dB Comp, 18dBm min;Gain 42dB min;Vin 15Vdc/310mA
57	AFT2032	29	GA	M1167b	Modular Amplifier;Freq .50-5.0GHz;Vin 12-15V;Iin 60mA;Gain 16dB
58	AFT4231	29	GA	M1167b	Modular Amplifier;Freq 2-4GHz;Vin 12-15V;Iin 60mA;Gain 11dB
59	AFT4232	29	GA	M1167b	Modular Amplifier;Freq 2-4GHz;Vin 12-15V;Iin 120mA;Gain 22dB
60	AFT6231	29	GA	M1167a	Modular Amplifier;Freq 2-6GHz;Vin 12-15V;Iin 60mA;Gain 9dB
61	AFT6232	29	GA	M1167a	Modular Amplifier;Freq 2-6GHz;Vin 12-15V;Iin 120mA;Gain 18dB
62	AFT8431	29	GA	M1167a	Modular Amplifier;Freq 4-8GHz;Vin 12-15V;Iin 60mA;Gain 9dB
63	AFT8432	29	GA	M1167a	Modular Amplifier;Freq 4-8GHz;Vin 12-15V;Iin 120mA;Gain 18dB
64	AFT12631	29	GA	M1167	Modular Amplifier;Freq 6-12GHz;Vin 12-15V;Iin 60mA;Gain 6dB
65	AFT12632	29	GA	M1167	Modular Amplifier;Freq 6-12GHz;Vin 12-15V;Iin 120mA;Gain 12dB
66	AFT18632	29	GA	M1167	Modular Amplifier;Freq 6-18GHz;Vin 12-15V;Iin 120mA;Gain 9dB
67	AFT18832	29	GA	M1167	Modular Amplifier;Freq 6-18GHz;Vin 12-15V;Iin 120mA;Gain 9dB
68▼	AGC330	29		M1255	AMP;Freq 5-300MHz;Bias Volt 15VDC/25mA;Gain 22dB typ;Po/1dB GCP 1dBm typ
69▼	AGC553	29		C16ag	AMP;Freq 10-500MHz;Bias Volt 15VDC/50mA;Gain 44dB typ;Po/1dB GCP 0.0dBm typ
70▼	AGC1053	29		C16ag	AMP;Freq 10-1000MHz;Bias Volt 15VDC/90mA;Gain 22dB typ;Po/1dB GCP 8.0dBm typ
71	ALD4200	29			Line Extender/Booster Amplifier;3.7-4.2GHz;20dB Gain Min.;8.0dB Noise Fig.Min.;1.75 VSWR Max
72	AM4262	29	GA	M1158	Preamplifiers;Freq 3.7-4.2GHz;Vin 15-24V;In 100mA;Gain 21dB
73	AM4263	29	GA	M1158	Preamplifiers;Freq 3.7-4.2GHz;Vin 15-24V;In 120mA;Gain 28dB
74	AM4264	29	GA	M1158	Preamplifiers;Freq 3.7-4.2GHz;Vin 15-24V;In 140mA;Gain 35dB
75	AM4265	29	GA	M1158	Preamplifiers;Freq 3.7-4.2GHz;Vin 15-24V;In 160mA;Gain 42dB
76	AM4282	29	GA	M1159	Preamplifiers;Freq 3.7-4.2GHz;Vin 15-24V;In 70mA;Gain 20dB
77	AM4283	29	GA	M1159	Preamplifiers;Freq 3.7-4.2GHz;Vin 15-24V;In 90mA;Gain 30dB
78	AM4284	29	GA	M1159	Preamplifiers;Freq 3.7-4.2GHz;Vin 15-24V;In 120mA;Gain 40dB
79	AM4285	29	GA	M1159	Preamplifiers;Freq 3.7-4.2GHz;Vin 15-24V;In 150mA;Gain 50dB
80	AM5001	29	GA	M1157	Preamplifier;Freq 4.4-5.0GHz;Vin 15-28V;In 40mA;Gain 7.5dB
81	AM5002	29	GA	M1157	Preamplifier;Freq 4.4-5.0GHz;Vin 15-28V;In 55mA;Gain 15dB
82	AM5003	29	GA	M1157	Preamplifiers;Freq 4.4-5.0GHz;Vin 15-28V;Iin 70mA;Gain 22dB
83	AM5004	29	GA	M1157	Preamplifiers;Freq 4.4-5.0GHz;Vin 15-28V;Iin 85mA;Gain 29dB
84	AM5005	29	GA	M1157	Preamplifiers;Freq 4.4-5.0GHz;Vin 15-28V;Iin 100mA;Gain 36dB
85	AM5006	29	GA	M1157	Preamplifiers;Freq 4.4-5.0GHz;Vin 15-28V;Iin 115mA;Gain 43dB
86	AM5007	29	GA	M1157	Preamplifiers;Freq 4.4-5.0GHz;Vin 15-28V;Iin 130mA;Gain 50dB
87	AM5022	29	GA	M1160	Preamplifier;Freq 4.4-5.0GHz;Vin 15-28V;Iin 40mA;Gain 18dB
88	AM5023	29	GA	M1160	Preamplifier;Freq 4.4-5.0GHz;Vin 15-28V;Iin 55mA;Gain 27dB
89	AM5024	29	GA	M1160	Preamplifier;Freq 4.4-5.0GHz;Vin 15-28V;Iin 70mA;Gain 36dB
90	AM5025	29	GA	M1160	Preamplifier;Freq 4.4-5.0GHz;Vin 15-28V;Iin 90mA;Gain 45dB
91	AM5026	29	GA	M1160	Preamplifier;Freq 4.4-5.0GHz;Vin 15-28V;Iin 120mA;Gain 54dB
92	AM6001	29	GA	M1157a	Preamplifiers;Freq 5.4-6.0GHz;Vin 15-28V;Iin 40mA;Gain 7.5dB
93	AM6002	29	GA	M1157a	Preamplifiers;Freq 5.4-6.0GHz;Vin 15-28V;Iin 55mA;Gain 15dB
94	AM6003	29	GA	M1157a	Preamplifiers;Freq 5.4-6.0GHz;Vin 15-28V;Iin 70mA;Gain 22dB
95	AM6004	29	GA	M1157a	Preamplifiers;Freq 5.4-6.0GHz;Vin 15-28V;Iin 85mA;Gain 29dB
96	AM6005	29	GA	M1157a	Preamplifiers;Freq 5.4-6.0GHz;Vin 15-28V;Iin 100mA;Gain 36dB
97	AM6006	29	GA	M1157a	Preamplifiers;Freq 5.4-6.0GHz;Vin 15-28V;Iin 115mA;Gain 43dB
98	AM6007	29	GA	M1157a	Preamplifiers;Freq 5.4-6.0GHz;Vin 15-28V;Iin 130mA;Gain 50dB
99	AM6022	29	GA	M1160	Preamplifier;Freq 5.4-6.0GHz;Vin 15-28V;Iin 40mA;Gain 18dB
100	AM6023	29	GA	M1160	Preamplifier;Freq 5.4-6.0GHz;Vin 15-28V;Iin 55mA;Gain 27dB
101	AM6024	29	GA	M1160	Preamplifier;Freq 5.4-6.0GHz;Vin 15-28V;Iin 70mA;Gain 36dB
102	AM6025	29	GA	M1160	Preamplifier;Freq 5.4-6.0GHz;Vin 15-28V;Iin 90mA;Gain 45dB
103	AM6026	29	GA	M1160	Preamplifier;Freq 5.4-6.0GHz;Vin 15-28V;Iin 120mA;Gain 54dB
104	AM7702	29	GA	M1157b	Preamplifier;Freq 7250-7750MHz;Vin 15-28V;Iin 35mA;Gain 15dB
105	AM7703	29	GA	M1157b	Preamplifier;Freq 7250-7750MHz;Vin 15-28V;Iin 50mA;Gain 22dB
106	AM7704	29	GA	M1157b	Preamplifier;Freq 7250-7750MHz;Vin 15-28V;Iin 65mA;Gain 30dB
107	AM7705	29	GA	M1157b	Preamplifier;Freq 7250-7750MHz;Vin 15-28V;Iin 80mA;Gain 37dB
108	AM7706	29	GA	M1157b	Preamplifier;Freq 7250-7750MHz;Vin 15-28V;Iin 95mA;Gain 44dB
109	AM7712	29	GA	M1157b	Preamplifier;Freq 7250-7750MHz;Vin 15-28V;Iin 35mA;Gain 18dB
110	AM7713	29	GA	M1157b	Preamplifier;Freq 7250-7750MHz;Vin 15-28V;Iin 80mA;Gain 27dB

8. MISCELLANEOUS DEVICES

IN ORDER OF (1) USE and (2) TYPE No.

LINE No.	2 TYPE No.	1 USE	DESCRIPTION MAT.	DESCRIPTION DWG. No.	TECHNICAL DATA
1	AM7714	29	GA	M1157b	Preamplifier;Freq 7250-7750MHz;Vin 15-28V;Iin 95mA;Gain 35dB
2	AM7715	29	GA	M1157b	Preamplifier;Freq 7250-7750MHz;Vin 15-28V;Iin 110mA;Gain 42dB
3	AM7716	29	GA	M1157b	Preamplifier;Freq 7250-7750MHz;Vin 15-28V;Iin 125mA;Gain 50dB
4	AM7722	29	GA	M1160	Preamplifier;Freq 7.2-7.7GHz;Vin 15-28V;Iin 40mA;Gain 18dB
5	AM7723	29	GA	M1160	Preamplifier;Freq 7.2-7.7GHz;Vin 15-28V;Iin 55mA;Gain 27dB
6	AM7724	29	GA	M1160	Preamplifier;Freq 7.2-7.7GHz;Vin 15-28V;Iin 70mA;Gain 35dB
7	AM7725	29	GA	M1160	Preamplifier;Freq 7.2-7.7GHz;Vin 15-28V;Iin 90mA;Gain 42dB
8	AM7726	29	GA	M1160	Preamplifier;Freq 7.2-7.7GHz;Vin 15-28V;Iin 120mA;Gain 50dB
9	AM7732	29	GA	M1157b	Preamplifier;Freq 7250-7750MHz;Vin 15-28V;Iin 35mA;Gain 18dB
10	AM7733	29	GA	M1157b	Preamplifier;Freq 7250-7750MHz;Vin 15-28V;Iin 80mA;Gain 27dB
11	AM7734	29	GA	M1157b	Preamplifier;Freq 7250-7750MHz;Vin 15-28V;Iin 95mA;Gain 35dB
12	AM7735	29	GA	M1157b	Preamplifier;Freq 7250-7750MHz;Vin 15-28V;Iin 110mA;Gain 42dB
13	AM8402	29	GA	M1157b	Preamplifier;Freq 7900-8400MHz;Vin 15-28V;Iin 35mA;Gain 10dB
14	AM8403	29	GA	M1157b	Preamplifier;Freq 7900-8400MHz;Vin 15-28V;Iin 50mA;Gain 21dB
15	AM8404	29	GA	M1157b	Preamplifier;Freq 7900-8400MHz;Vin 15-28V;Iin 65mA;Gain 28dB
16	AM8405	29	GA	M1157b	Preamplifier;Freq 7900-8400MHz;Vin 15-28V;Iin 80mA;Gain 35dB
17	AM8406	29	GA	M1157b	Preamplifier;Freq 7900-8400MHz;Vin 15-28V;Iin 95mA;Gain 42dB
18	AM8422	29	GA	M1160	Preamplifier;Freq 7.9-8.4GHz;Vin 15-28V;Iin 40mA;Gain 18dB
19	AM8423	29	GA	M1160	Preamplifier;Freq 7.9-8.4GHz;Vin 15-28V;Iin 55mA;Gain 27dB
20	AM8424	29	GA	M1160	Preamplifier;Freq 7.9-8.4GHz;Vin 15-28V;Iin 70mA;Gain 35dB
21	AM8425	29	GA	M1160	Preamplifier;Freq 7.9-8.4GHz;Vin 15-28V;Iin 90mA;Gain 42dB
22	AM8426	29	GA	M1160	Preamplifier;Freq 7.9-8.4GHz;Vin 15-28V;Iin 120mA;Gain 50dB
23	AM9922	29	GA	M1160	Preamplifier;Freq 9.4-9.9GHz;Vin 15-28V;Iin 40mA;Gain 18dB
24	AM9923	29	GA	M1160	Preamplifier;Freq 9.4-9.9GHz;Vin 15-28V;Iin 55mA;Gain 27dB
25	AM9924	29	GA	M1160	Preamplifier;Freq 9.4-9.9GHz;Vin 15-28V;Iin 70mA;Gain 35dB
26	AM9925	29	GA	M1160	Preamplifier;Freq 9.4-9.9GHz;Vin 15-28V;Iin 90mA;Gain 42dB
27	AM9926	29	GA	M1160	Preamplifier;Freq 9.4-9.9GHz;Vin 15-28V;Iin 120mA;Gain 50dB
28	AM14512	29	GA	M1161	Driver Amplifier;Freq 14-14.5GHz;Vin 15-28V;Iin 90mA;Gain 10dB
29	AM14513	29	GA	M1161	Driver Amplifier;Freq 14-14.5GHz;Vin 15-28V;Iin 110mA;Gain 16dB
30	AM14514	29	GA	M1161	Driver Amplifier;Freq 14-14.5GHz;Vin 15-28V;Iin 130mA;Gain 22dB
31	AM14515	29	GA	M1161	Driver Amplifier;Freq 14-14.5GHz;Vin 15-28V;Iin 150mA;Gain 30dB
32	AM14516	29	GA	M1161	Driver Amplifier;Freq 14-14.5GHz;Vin 15-28V;Iin 170mA;Gain 35dB
33	AM14517	29	GA	M1161	Driver Amplifier;Freq 14-14.5GHz;Vin 15-28V;Iin 190mA;Gain 40dB
34	AMF4556F	29		M1183	TWT Amplifier;Freq 2-4.5GHz;NF 7.0dB;Gain 34dB
35	AMG4000	29		M1163	Octave Band Amplifier;Freq 1.0-4.0GHz;Vin 15V;Iin 165mA;Gain 30dB
36	AMG4003	29		M1163	Octave Band Amplifier;Freq 1.0-4.0GHz;Vin 15V;Iin 65mA;Gain 20dB
37	AMG4010	29		M1163	Octave Band Amplifier;Freq 1.0-4.0GHz;Vin 15V;Iin 160mA;Gain 32dB
38	AMG4030	29		M1163	Octave Band Amplifier;Freq 2.0-4.0GHz;Vin 15V;Iin 85mA;Gain 32dB
39	AMG4031	29		M1163	Octave Band Amplifier;Freq 2.0-4.0GHz;Vin 15V;Iin 130mA;Gain 37dB
40	AMG4032	29		M1163	Octave Band Amplifier;Freq 2.0-4.0GHz;Vin 15V;Iin 115mA;Gain 42dB
41	AMG4033	29		M1163	Octave Band Amplifier;Freq 2.0-4.0GHz;Vin 15V;Iin 75mA;Gain 22dB
42	AMG4034	29		M1163	Octave Band Amplifier;Freq 2.0-4.0GHz;Vin 15V;Iin 85mA;Gain 27dB
43	AMG4045	29		M1163	Octave Band Amplifier;Freq .50-4.0GHz;Vin 15V;Iin 125mA;Gain 22dB
44	AMG4050	29		M1163	Octave Band Amplifier;Freq 1.0-4.0GHz;Vin 15V;Iin 165mA;Gain 32dB
45	AMG4051	29		M1163	Octave Band Amplifier;Freq 1.0-4.0GHz;Vin 15V;Iin 160mA;Gain 35dB
46	AMG4052	29		M1163	Octave Band Amplifier;Freq 1.0-4.0GHz;Vin 15V;Iin 195mA;Gain 40dB
47	AMG4053	29		M1163	Octave Band Amplifier;Freq 1.0-4.0GHz;Vin 15V;Iin 140mA;Gain 25dB
48	AMG4500	29		M1163	Octave Band Amplifier;Freq 1.0-4.5GHz;Vin 15V;Iin 180mA;Gain 36dB
49	AMG4501	29		M1163	Octave Band Amplifier;Freq 1.0-4.5GHz;Vin 15V;Iin 160mA;Gain 40dB
50	AMG4502	29		M1163	Octave Band Amplifier;Freq 1.0-4.5GHz;Vin 15V;Iin 55mA;Gain 20dB
51	AMG4503	29		M1163	Octave Band Amplifier;Freq 1.0-4.5GHz;Vin 15V;Iin 110mA;Gain 25dB
52	AMG4504	29		M1163	Octave Band Amplifier;Freq 1.0-4.5GHz;Vin 15V;Iin 120mA;Gain 30dB
53	AMG5200	29		M1163	Octave Band Amplifier;Freq 2.6-5.2GHz;Vin 15V;Iin 55mA;Gain 27dB
54	AMG5201	29		M1163	Octave Band Amplifier;Freq 2.6-5.2GHz;Vin 15V;Iin 85mA;Gain 31dB
55	AMG5202	29		M1163	Octave Band Amplifier;Freq 2.6-5.2GHz;Vin 15V;Iin 175mA;Gain 36dB
56	AMG5203	29		M1163	Octave Band Amplifier;Freq 2.6-5.2GHz;Vin 15V;Iin 45mA;Gain 18dB
57	AMG5204	29		M1163	Octave Band Amplifier;Freq 2.6-5.2GHz;Vin 15V;Iin 50mA;Gain 22dB
58	AMP6423	29		M1165	Driver Amplifier;Freq 5.9-6.4GHz;Vin 15V;Iin 1.1A;Gain 20dB
59	AMP6424	29		M1165	Driver Amplifier;Freq 5.9-6.4GHz;Vin 15V;Iin 1.2A;Gain 30dB
60	AMP6425	29		M1165	Driver Amplifier;Freq 5.9-6.4GHz;Vin 15V;Iin 1.2A;Gain 40dB
61	AMP6426	29		M1165	Driver Amplifier;Freq 5.9-6.4GHz;Vin 15V;Iin 1.2A;Gain 50dB
62	AMP8422	29		M1165	Driver Amplifier;Freq 7.9-8.4GHz;Vin 15V;Iin 1.1A;Gain 8.0dB
63	AMP8423	29	GA	M1165	Driver Amplifier;Freq 7.9-8.4GHz;Vin 15V;Iin 1.2A;Gain 17dB
64	AMP8424	29	GA	M1165	Driver Amplifier;Freq 7.9-8.4GHz;Vin 15V;Iin 1.3A;Gain 25dB
65	AMP8425	29	GA	M1165	Driver Amplifier;Freq 7.9-8.4GHz;Vin 15V;Iin 1.3A;Gain 35dB
66	AMP8426	29	GA	M1165	Driver Amplifier;Freq 7.9-8.4GHz;Vin 15V;Iin 1.4A;Gain 45dB
67	AMT4012	29	GA	M1168	Limited Amplifier;Freq 2-4GHz;Vin 15V;Iin 45mA;Gain 11dB
68	AMT4013	29	GA	M1168	Limited Amplifier;Freq 2-4GHz;Vin 15V;Iin 65mA;Gain 17dB
69	AMT4014	29	GA	M1171	Limited Amplifier;Freq 2-4GHz;Vin 15V;Iin 90mA;Gain 23dB
70	AMT4015	29	GA	M1171	Limited Amplifier;Freq 2-4GHz;Vin 15V;Iin 150mA;Gain 29dB
71	AMT4016	29	GA	M1171	Limited Amplifier;Freq 2-4GHz;Vin 15V;Iin 170mA;Gain 35dB
72	AMT4017	29	GA	M1171	Limited Amplifier;Freq 2-4GHz;Vin 15V;Iin 190mA;Gain 41dB
73	AMT4018	29	GA	M1171	Limited Amplifier;Freq 2-4GHz;Vin 15V;Iin 210mA;Gain 47dB
74	AMT4022	29	GA	M1168	Limited Amplifier;Freq 2-4GHz;Vin 15V;Iin 80mA;Gain 11dB
75	AMT4023	29	GA	M1168	Limited Amplifier;Freq 2-4GHz;Vin 15V;Iin 100mA;Gain 17dB
76	AMT4024	29	GA	M1171	Limited Amplifier;Freq 2-4GHz;Vin 15V;Iin 125mA;Gain 23dB
77	AMT4051	29	GA	M1166d	Wideband Amplifier;Freq 2-4GHz;Vin 12V;Iin 110mA;Gain 13dB
78	AMT4052	29	GA	M1166d	Wideband Amplifier;Freq 2-4GHz;Vin 12V;Iin 150mA;Gain 26dB
79	AMT4053	29	GA	M1166e	Wideband Amplifier;Freq 2-4GHz;Vin 12V;Iin 170mA;Gain 39dB
80	AMT4054	29	GA	M1166e	Wideband Amplifier;Freq 2-4GHz;Vin 12V;Iin 210mA;Gain 52dB
81	AMT4063	29	GA	M1166e	Wideband Amplifier;Freq 2-4GHz;Vin 12V;Iin 270mA;Gain 40dB max
82	AMT8032	29	GA	M1166g	Wideband Amplifier;Freq 4-8GHz;Vin 12V;Iin 100mA;Gain 17db
83	AMT8033	29	GA	M1166h	Wideband Amplifier;Freq 4-8GHz;Vin 12V;Iin 150mA;Gain 27db
84	AMT8034	29	GA	M1166h	Wideband Amplifier;Freq 4-8GHz;Vin 12V;Iin 200mA;Gain 36db
85	AMT8035	29	GA	M1166j	Wideband Amplifier;Freq 4-8GHz;Vin 12V;Iin 250mA;Gain 45db
86	AMT8045	29	GA	M1166f	Wideband Amplifier;Freq 4-8GHz;Vin 12V;Iin 300mA;Gain 41dB max
87	AMT8052	29	GA	M1166g	Wideband Amplifier;Freq 4-8GHz;Vin 12V;Iin 220mA;Gain 10db
88	AMT8053	29	GA	M1166h	Wideband Amplifier;Freq 4-8GHz;Vin 12V;Iin 270mA;Gain 19db
89	AMT8054	29	GA	M1166h	Wideband Amplifier;Freq 4-8GHz;Vin 12V;Iin 320mA;Gain 28db
90	AMT8055	29	GA	M1166j	Wideband Amplifier;Freq 4-8GHz;Vin 12V;Iin 340mA;Gain 37db
91	AMT10033	29	GA	M1166h	Wideband Amplifier;Freq 5-10GHz;Vin 12V;Iin 160mA;Gain 27db
92	AMT10034	29	GA	M1166h	Wideband Amplifier;Freq 5-10GHz;Vin 12V;Iin 210mA;Gain 37db
93	AMT10035	29	GA	M1166j	Wideband Amplifier;Freq 5-10GHz;Vin 12V;Iin 270mA;Gain 46db
94	AMT10045	29	GA	M1166f	Wideband Amplifier;Freq 5-10GHz;Vin 12V;Iin 300mA;Gain 41dB max
95	AMT12013	29	GA	M1170	Limited Amplifier;Freq 7-12GHz;Vin 15V;Iin 150mA;Gain 22dB
96	AMT12014	29	GA	M1170	Limited Amplifier;Freq 7-12GHz;Vin 12V;Iin 200mA;Gain 30dB
97	AMT12015	29	GA	M1170	Limited Amplifier;Freq 7-12GHz;Vin 12V;Iin 250mA;Gain 37dB
98	AMT12016	29	GA	M1170	Limited Amplifier;Freq 7-12GHz;Vin 12V;Iin 300mA;Gain 44dB
99	AMT12017	29	GA	M1170	Limited Amplifier;Freq 7-12GHz;Vin 12V;Iin 350Ma;Gain 51dB
100	AMT12033	29	GA	M1166	Wideband Amplifier;Freq 7-12GHz;Vin 12V;Iin 150mA;Gain 22db
101	AMT12034	29	GA	M1166	Wideband Amplifier;Freq 7-12GHz;Vin 12V;Iin 200mA;Gain 30db
102	AMT12035	29	GA	M1166a	Wideband Amplifier;Freq 7-12GHz;Vin 12V;Iin 250mA;Gain 37db
103	AMT12036	29	GA	M1166a	Wideband Amplifier;Freq 7-12GHz;Vin 12V;Iin 300mA;Gain 44db
104	AMT12046	29	GA	M1166b	Wideband Amplifier;Freq 7-12GHz;Vin 12V;Iin 300mA;Gain 41dB max
105	AMT12413	29	GA	M1170	Limited Amplifier;Freq 8-12.4GHz;Vin 12V;Iin 150mA;Gain 22dB
106	AMT12414	29	GA	M1170	Limited Amplifier;Freq 8-12.4GHz;Vin 12V;Iin 200mA;Gain 30dB
107	AMT12415	29	GA	M1170	Limited Amplifier;Freq 8-12.4GHz;Vin 12V;Iin 250mA;Gain 37dB
108	AMT12416	29	GA	M1170	Limited Amplifier;Freq 8-12.4GHz;Vin 12V;Iin 300mA;Gain 44dB
109	AMT12417	29	GA	M1170	Limited Amplifier;Freq 8-12.4GHz;Vin 12V;Iin 350mA;Gain 51dB
110	AMT12433	29	GA	M1166	Wideband Amplifier;Freq 8-12.4GHz;Vin 12V;Iin 150mA;Gain 22db

8. MISCELLANEOUS DEVICES

IN ORDER OF (1) USE and (2) TYPE No.

LINE No.	2 TYPE No.	1 USE	DESCRIPTION MAT.	DWG. No.	TECHNICAL DATA
1	AMT12434	29	GA	M1166	Wideband Amplifier;Freq 8-12.4GHz;Vin 12V;Iin 200mA;Gain 30db
2	AMT12435	29	GA	M1166a	Wideband Amplifier;Freq 8-12.4GHz;Vin 12V;Iin 250mA;Gain 37db
3	AMT12436	29	GA	M1166a	Wideband Amplifier;Freq 8-12.4GHz;Vin 12V;Iin 300mA;Gain 44db
4	AMT12466	29	GA	M1166b	Wideband Amplifier;Freq 8-12.4GHz;Vin 12V;Iin 370mA;Gain 40dB max
5	AMT18003	29	GA	M1170	Limited Amplifier;Freq 12-18GHz;Vin 12V;Iin 150mA;Gain 16dB
6	AMT18004	29	GA	M1170	Limited Amplifier;Freq 12-18GHz;Vin 12V;Iin 200mA;Gain 22dB
7	AMT18005	29	GA	M1170	Limited Amplifier;Freq 12-18GHz;Vin 12V;Iin 250mA;Gain 27dB
8	AMT18006	29	GA	M1170	Limited Amplifier;Freq 12-18GHz;Vin 12V;Iin 300mA;Gain 33dB
9	AMT18007	29	GA	M1170	Limited Amplifier;Freq 12-18GHz;Vin 12V;Iin 350mA;Gain 38dB
10	AMT18008	29	GA	M1170	Limited Amplifier;Freq 12-18GHz;Vin 12V;Iin 400mA;Gain 44dB
11	AMT18033	29	GA	M1166	Wideband Amplifier;Freq 12-18GHz;Vin 12V;Iin 150mA;Gain 16dB
12	AMT18034	29	GA	M1166	Wideband Amplifier;Freq 12-18GHz;Vin 12V;Iin 200mA;Gain 22dB
13	AMT18035	29	GA	M1166a	Wideband Amplifier;Freq 12-18GHz;Vin 12V;Iin 250mA;Gain 27dB
14	AMT18036	29	GA	M1166a	Wideband Amplifier;Freq 12-18GHz;Vin 12V;Iin 300mA;Gain 33dB
15	AMT18037	29	GA	M1166b	Wideband Amplifier;Freq 12-18GHz;Vin 12V;Iin 350mA;Gain 38dB
16	AMT18038	29	GA	M1166b	Wideband Amplifier;Freq 12-18GHz;Vin 12V;Iin 400mA;Gain 44dB
17	AMT18048	29	GA	M1166c	Wideband Amplifier;Freq 12-18GHz;Vin 12V;Iin 450mA;Gain 42dB max
18	AMT21044(A)	29	GA	M1166a	Hybrid Amplifier;Freq 20-21GHz;Vin 12-15V;Iin 130mA;Gain 30dB
19	AMT26034	29	GA	M1166	Amplifier;Freq 18-26.5GHz;Vin 12V;Iin 200mA;Gain 17dB
20	AMT26036	29	GA	M1166a	Amplifier;Freq 18-26.5GHz;Vin 12V;Iin 300mA;Gain 26dB
21	AMT26038	29	GA	M1166b	Amplifier;Freq 18-26.5GHz;Vin 12V;Iin 400mA;Gain 35dB
22	AMT26047	29	GA	M1166b	Wideband Amplifier;Freq 18-26.5GHz;Vin 12V;Iin 400mA;Gain 32dB max
23	AMT26048	29	GA	M1166c	Amplifier;Freq 18-26.5GHz;Vin 12V;Iin 450mA;Gain 22dB
24	AMT40048	29	GA	M1185	TWT Amplifier;Freq 26.5-40GHz;NF 14dB;Gain 35dB
25	APG3513	29	GA	M1176	Linear Amplifier;Freq:2.8-3.5GHz;Vin 15V;Iin 3.1A;Gain 20dB
26	APG3514	29	GA	M1176	Linear Amplifier;Freq:2.8-3.5GHz;Vin 15V;Iin 3.2A;Gain 30dB
27	APG3515	29	GA	M1176	Linear Amplifier;Freq:2.8-3.5GHz;Vin 15V;Iin 3.2A;Gain 40dB
28	APG3516	29	GA	M1176	Linear Amplifier;Freq:2.8-3.5GHz;Vin 15V;Iin 3.3A;Gain 50dB
29	APG4001	29	GA	M1174	Med Pwr Amplifier;Freq 2-4GHz;Vin 15V;Iin 900mA;Gain 6dB
30	APG4002	29	GA	M1174	Med Pwr Amplifier;Freq 2-4GHz;Vin 15V;Iin 1.1A;Gain 15dB
31	APG4003	29	GA	M1174	Med Pwr Amplifier;Freq 2-4GHz;Vin 15V;Iin 1.1A;Gain 24dB
32	APG4004	29	GA	M1174	Med Pwr Amplifier;Freq 2-4GHz;Vin 15V;Iin 1.2A;Gain 32dB
33	APT4063	29	GA	M1175	Drive Amplifier;Freq 2-4GHZ;Vin 15V;Iin 800mA;Gain 28dB
34	APT4064	29	GA	M1175	Drive Amplifier;Freq 2-4GHZ;Vin 15V;Iin 850mA;Gain 40dB
35	APT5064	29	GA	M1175b	Drive Amplifier;Freq 2.6-5.2GHZ;Vin 15V;Iin 700mA;Gain 30dB
36	APT5065	29	GA	M1175b	Drive Amplifier;Freq 2.6-5.2GHZ;Vin 15V;Iin 750mA;Gain 38dB
37	APT8066	29	GA	M1175c	Drive Amplifier;Freq 4-8GHZ;Vin 15V;Iin 1.2A;Gain 30dB
38	APT8067	29	GA	M1175c	Drive Amplifier;Freq 4-8GHZ;Vin 15V;Iin 1.3A;Gain 40dB
39	ATR8051MBA	29	GA	M1179	TWT Amplifier;Freq 4-8GHz;NF 6.5dB;Small Gain 25dB min;Pin 7W;SMA/Bendix Pwr(PT07C-8-3-P)
40	ATR8051MDA	29	GA	M1179	TWT Amplifier;Freq 4-8GHz;NF 6.5dB;Small Gain 25dB min;Pin 7W;SMA/Deutsch Pwr(DM9601-3)
41	ATR8055MBA	29	GA	M1179	TWT Amplifier;Freq 4-8GHz;NF 6.5dB;Small Gain 35dB min;Pin 10W;SMA/Bendix Pwr(PT07C-8-3-P)
42	ATR8055MDA	29	GA	M1179	TWT Amplifier;Freq 4-8GHz;NF 6.5dB;Small Gain 35dB min;Pin 10W;SMA/Deutsch Pwr(DM9601-3)
43	ATR8071	29	GA	M1177	TWT Amplifier;Freq 4-8GHz;NF 8dB;Small Gain 36dBmin
44	ATR8081MBA	29	GA	M1180	TWT Amplifier;Freq 4-8GHz;NF 6.5dB;Small Gain 25dB min;Pin 7W;SMA/Bendix Pwr(PT07C-8-3P)
45	ATR8081MDA	29	GA	M1180	TWT Amplifier;Freq 4-8GHz;NF 6.5dB;Small Gain 25dB min;Pin 7W;SMA/Deutsch Pwr(DM9601-3)
46	ATR8081NBA	29	GA	M1180	TWT Amplifier;Freq 4-8GHz;NF 6.5dB;Small Gain 25dB min;Pin 7W;TNC/Bendix Pwr(PT07C-8-3P)
47	ATR8081NDA	29	GA	M1180	TWT Amplifier;Freq 4-8GHz;NF 6.5dB;Small Gain 25dB min;Pin 9W;TNC/Deutsch Pwr(DM9601-3)
48	ATR8081TBA	29	GA	M1180	TWT Amplifier;Freq 4-8GHz;NF 6.5dB;Small Gain 25dB min;Pin 7W;TNC/Bendix Pwr(PT07C-8-3P)
49	ATR8081TDA	29	GA	M1180	TWT Amplifier;Freq 4-8GHz;NF 6.5dB;Small Gain 25dB min;Pin 7W;TNC/Deutsch Pwr(DM9601-3)
50	ATR8085MBA	29	GA	M1180	TWT Amplifier;Freq 4-8GHz;NF 6.5dB;Small Gain 35dB min;Pin 10W;SMA/Bendix Pwr(PT07C-8-3P)
51	ATR8085MDA	29	GA	M1180	TWT Amplifier;Freq 4-8GHz;NF 6.5dB;Small Gain 35dB min;Pin 10W;SMA/Deutsch Pwr(DM9601-3)
52	ATR8085NBA	29	GA	M1180	TWT Amplifier;Freq 4-8GHz;NF 6.5dB;Small Gain 35dB min;Pin 10W;TNC/Bendix Pwr(PT07C-8-3P)
53	ATR8085NDA	29	GA	M1180	TWT Amplifier;Freq 4-8GHz;NF 6.5dB;Small Gain 35dB min;Pin 10W;TNC/Deutsch Pwr(DM9601-3)
54	ATR8085TBA	29	GA	M1180	TWT Amplifier;Freq 4-8GHz;NF 6.5dB;Small Gain 35dB min;Pin 10W;TNC/Bendix Pwr(PT07C-8-3P)
55	ATR8085TDA	29	GA	M1180	TWT Amplifier;Freq 4-8GHz;NF 6.5dB;Small Gain 35dB min;Pin 10W;TNC/Deutsch Pwr(DM9601-3)
56	ATR8091MBA	29	GA	M1181	TWT Amplifier;Freq 4-8GHz;NF 6.5dB;Small Gain 25dB;Pin 7W;SMA/Bendix Pwr(PT07C-8-3P)
57	ATR8091MDA	29	GA	M1181	TWT Amplifier;Freq 4-8GHz;NF 6.5dB;Small Gain 25dB;Pin 7W;SMA/Deutsch Pwr(DM9601-3)
58	ATR8091NBA	29	GA	M1181	TWT Amplifier;Freq 4-8GHz;NF 6.5dB;Small Gain 25db;Pin 7W;TNC/Bendix Pwr(PT07C-8-3P)
59	ATR8091NDA	29	GA	M1181	TWT Amplifier;Freq 4-8GHz;NF 6.5dB;Small Gain 25db;Pin 7W;TNC/Deutsch Pwr(DM9601-3)
60	ATR8091TBA	29	GA	M1181	TWT Amplifier;Freq 4-8GHz;NF 6.5dB;Small Gain 25dB;Pin 7W;TNC/Bedix Pwr(PT07C-8-3P)
61	ATR8091TDA	29	GA	M1181	TWT Amplifier;Freq 4-8GHz;NF 6.5dB;Small Gain 25dB;Pin 7W;TNC/Deutsch Pwr(DM9601-3)
62	ATR8095MBA	29	GA	M1181	TWT Amplifier;Freq 4-8GHz;NF 6.5dB;Small Gain 35dB;Pin 10W;SMA/Bendix Pwr(PT07C-8-3P)
63	ATR8095MDA	29	GA	M1181	TWT Amplifier;Freq 4-8GHz;NF 6.5dB;Small Gain 35dB;Pin 10W;SMA/Deutsch Pwr(DM9601-3)
64	ATR8095NBA	29	GA	M1181	TWT Amplifier;Freq 4-8GHz;NF 6.5dB;Small Gain 35db;Pin 10W;TNC/Bendix Pwr(PT07C-8-3P)
65	ATR8095NDA	29	GA	M1181	TWT Amplifier;Freq 4-8GHz;NF 6.5dB;Small Gain 35db;Pin 10W;TNC/Deutsch Pwr(DM9601-3)
66	ATR8095TBA	29	GA	M1181	TWT Amplifier;Freq 4-8GHz;NF 6.5dB;Small Gain 35dB;Pin 10W;TNC/Bedix Pwr(PT07C-8-3P)
67	ATR8095TDA	29	GA	M1181	TWT Amplifier;Freq 4-8GHz;NF 6.5dB;Small Gain 35dB;Pin 10W;TNC/Deutsch Pwr(DM9601-3)
68	ATR12051MBA	29	GA	M1179	TWT Amplifier;Freq 7-12GHz;NF 7.5dB;Small Gain 25dB min;Pin 9W;SMA/Bendix Pwr(PT07C-8-3-P)
69	ATR12051MDA	29	GA	M1179	TWT Amplifier;Freq 7-12GHz;NF 7.5dB;Small Gain 25dB min;Pin 9W;SMA/Deutsch Pwr(DM9601-3)
70	ATR12055MBA	29	GA	M1179	TWT Amplifier;Freq 7-12GHz;NF 7.5dB;Small Gain 35dB min;Pin 10W;SMA/Bendix Pwr(PT07C-8-3-P)
71	ATR12055MDA	29	GA	M1179	TWT Amplifier;Freq 7-12GHz;NF 7.5dB;Small Gain 35dB min;Pin 10W;SMA/Deutsch Pwr(DM9601-3)
72	ATR12071	29	GA	M1177	TWT Amplifier;Freq 7-12GHz;NF 9dB;Small Gain 37dBmin
73	ATR12081MBA	29	GA	M1180	TWT Amplifier;Freq 7-12GHz;NF 7.5dB;Small Gain 25dB min;Pin 9W;SMA/Bendix Pwr(PT07C-8-3P)
74	ATR12081MDA	29	GA	M1180	TWT Amplifier;Freq 7-12GHz;NF 7.5dB;Small Gain 25dB min;Pin 9W;SMA/Deutsch Pwr(DM9601-3)
75	ATR12081NBA	29	GA	M1180	TWT Amplifier;Freq 7-12GHz;NF 7.5dB;Small Gain 25dB min;Pin 9W;TNC/Bendix Pwr(PT07C-8-3P)
76	ATR12081NDA	29	GA	M1180	TWT Amplifier;Freq 7-12GHz;NF 7.5dB;Small Gain 25dB min;Pin 9W;TNC/Deutsch Pwr(DM9601-3)
77	ATR12081TBA	29	GA	M1180	TWT Amplifier;Freq 7-12GHz;NF 7.5dB;Small Gain 25dB min;Pin 9W;TNC/Bendix Pwr(PT07C-8-3P)
78	ATR12081TDA	29	GA	M1180	TWT Amplifier;Freq 7-12GHz;NF 7.5dB;Small Gain 25dB min;Pin 9W;TNC/Deutsch Pwr(DM9601-3)
79	ATR12085MBA	29	GA	M1180	TWT Amplifier;Freq 7-12GHz;NF 7.5dB;Small Gain 35dB min;Pin 10W;SMA/Bendix Pwr(PT07C-8-3P)
80	ATR12085MDA	29	GA	M1180	TWT Amplifier;Freq 7-12GHz;NF 7.5dB;Small Gain 35dB min;Pin 10W;SMA/Deutsch Pwr(DM9601-3)
81	ATR12085NBA	29	GA	M1180	TWT Amplifier;Freq 7-12GHz;NF 7.5dB;Small Gain 35dB min;Pin 10W;TNC/Bendix Pwr(PT07C-8-3P)
82	ATR12085NDA	29	GA	M1180	TWT Amplifier;Freq 7-12GHz;NF 7.5dB;Small Gain 35dB min;Pin 10W;TNC/Deutsch Pwr(DM9601-3)
83	ATR12085TBA	29	GA	M1180	TWT Amplifier;Freq 7-12GHz;NF 7.5dB;Small Gain 35dB min;Pin 10W;TNC/Bendix Pwr(PT07C-8-3P)
84	ATR12085TDA	29	GA	M1180	TWT Amplifier;Freq 7-12GHz;NF 7.5dB;Small Gain 35dB min;Pin 10W;TNC/Deutsch Pwr(DM9601-3)
85	ATR12091MBA	29	GA	M1181	TWT Amplifier;Freq 7-12GHz;NF 7.5dB;Small Gain 25dB;Pin 9W;SMA/Bendix Pwr(PT07C-8-3P)
86	ATR12091MDA	29	GA	M1181	TWT Amplifier;Freq 7-12GHz;NF 7.5dB;Small Gain 25db;Pin 9W;SMA/Deutsch Pwr(DM9601-3)
87	ATR12091NBA	29	GA	M1181	TWT Amplifier;Freq 7-12GHz;NF 7.5dB;Small Gain 25db;Pin 9W;TNC/Bendix Pwr(PT07C-8-3P)
88	ATR12091NDA	29	GA	M1181	TWT Amplifier;Freq 7-12GHz;NF 7.5dB;Small Gain 25db;Pin 9W;TNC/Deutsch Pwr(DM9601-3)
89	ATR12091TBA	29	GA	M1181	TWT Amplifier;Freq 7-12GHz;NF 7.5dB;Small Gain 25dB;Pin 9W;TNC/Bedix Pwr(PT07C-8-3P)
90	ATR12091TDA	29	GA	M1181	TWT Amplifier;Freq 7-12GHz;NF 7.5dB;Small Gain 25dB;Pin 9W;TNC/DeutschPwr(DM9601-3)
91	ATR12095MBA	29	GA	M1181	TWT Amplifier;Freq 7-12GHz;NF 7.5dB;Small Gain 35dB;Pin 10W;SMA/Bendix Pwr(PT07C-8-3P)
92	ATR12095MDA	29	GA	M1181	TWT Amplifier;Freq 7-12GHz;NF 7.5dB;Small Gain 35db;Pin 10W;SMA/Deutsch Pwr(DM9601-3)
93	ATR12095NBA	29	GA	M1181	TWT Amplifier;Freq 7-12GHz;NF 7.5dB;Small Gain 35db;Pin 10W;TNC/Bendix Pwr(PT07C-8-3P)
94	ATR12095NDA	29	GA	M1181	TWT Amplifier;Freq 7-12GHz;NF 7.5dB;Small Gain 35db;Pin 10W;TNC/Deutsch Pwr(DM9601-3)
95	ATR12095TBA	29	GA	M1181	TWT Amplifier;Freq 7-12GHz;NF 7.5dB;Small Gain 35dB;Pin 10W;TNC/Bedix Pwr(PT07C-8-3P)
96	ATR12095TDA	29	GA	M1181	TWT Amplifier;Freq 7-12GHz;NF 7.5dB;Small Gain 35dB;Pin 10W;TNC/Deutsch Pwr(DM9601-3)
97	ATR12451MBA	29	GA	M1179	TWT Amplifier;Freq 8-12.4GHz;NF 7.5dB;Small Gain 25dB min;Pin 9W;SMA/Bendix Pwr(PT07C-8-3-P)
98	ATR12451MDA	29	GA	M1179	TWT Amplifier;Freq 8-12.4GHz;NF 7.5dB;Small Gain 25dB min;Pin 9W;SMA/Deutsch Pwr(DM9601-3)
99	ATR12455MBA	29	GA	M1179	TWT Amplifier;Freq 8-12.4GHz;NF 7.5dB;Small Gain 35dB min;Pin 10W;SMA/Bendix Pwr(PT07C-8-3P)
100	ATR12455MDA	29	GA	M1179	TWT Amplifier;Freq 8-12.4GHz;NF 7.5dB;Small Gain 35dB min;Pin 10W;SMA/Deutsch Pwr(DM9601-3)
101	ATR12481MBA	29	GA	M1180	TWT Amplifier;Freq 8-12.4GHz;NF 7.5dB;Small Gain 25dB min;Pin 9W;SMA/Bendix Pwr(PT07C-8-3P)
102	ATR12481MDA	29	GA	M1180	TWT Amplifier;Freq 8-12.4GHz;NF 7.5dB;Small Gain 25dB min;Pin 9W;SMA/Deutsch Pwr(DM9601-3)
103	ATR12481NBA	29	GA	M1180	TWT Amplifier;Freq 8-12.4GHz;NF 7.5dB;Small Gain 25dB min;Pin 9W;TNC/Bendix Pwr(PT07C-8-3P)
104	ATR12481NDA	29	GA	M1180	TWT Amplifier;Freq 8-12.4GHz;NF 7.5dB;Small Gain 25dB min;Pin 9W;TNC/Deutsch Pwr(DM9601-3)
105	ATR12481TBA	29	GA	M1180	TWT Amplifier;Freq 8-12.4GHz;NF 7.5dB;Small Gain 25dB min;Pin 9W;TNC/Bendix Pwr(PT07C-8-3P)
106	ATR12481TDA	29	GA	M1180	TWT Amplifier;Freq 8-12.4GHz;NF 7.5dB;Small Gain 25dB min;Pin 9W;TNC/Deutsch Pwr(DM9601-3)
107	ATR12485MBA	29	GA	M1180	TWT Amplifier;Freq 8-12.4GHz;NF 7.5dB;Small Gain 35dB min;Pin 10W;SMA/Bendix Pwr(PT07C-8-3P)
108	ATR12485MDA	29	GA	M1180	TWT Amplifier;Freq 8-12.4GHz;NF 7.5dB;Small Gain 35dB min;Pin 10W;SMA/Deutsch Pwr(DM9601-3)
109	ATR12485NBA	29	GA	M1180	TWT Amplifier;Freq 8-12.4GHz;NF 7.5dB;Small Gain 35dB min;Pin 10W;TNC/Bendix Pwr(PT07C-8-3P)
110	ATR12485NDA	29	GA	M1180	TWT Amplifier;Freq 8-12.4GHz;NF 7.5dB;Small Gain 35dB min;Pin 10W;TNC/Deutsch Pwr(DM9601-3)

8. MISCELLANEOUS DEVICES

IN ORDER OF (1) USE and (2) TYPE No.

LINE No.	[2] TYPE No.	[1] USE	DESCRIPTION MAT.	DESCRIPTION DWG. No.	TECHNICAL DATA
1	ATR12485TBA	29	GA	M1180	TWT Amplifier;Freq 8-12.4GHz;NF 7.5dB;Small Gain 35dB min;Pin 10W;TNC/Bendix Pwr(PT07C-8-3P)
2	ATR12485TDA	29	GA	M1180	TWT Amplifier;Freq 8-12.4GHz;NF 7.5dB;Small Gain 35dB min;Pin 10W;TNC/Deutsch Pwr(DM9601-3)
3	ATR12491MBA	29	GA	M1181	TWT Amplifier;Freq 8-12.4GHz;NF 7.5dB;Small Gain 25dB;Pin 9W;SMA/Bendix Pwr(PT07C-8-3P)
4	ATR12491MDA	29	GA	M1181	TWT Amplifier;Freq 8-12.4GHz;NF 7.5dB;Small Gain 25dB;Pin 9W
5	ATR12491NBA	29	GA	M1181	TWT Amplifier;Freq 8-12.4GHz;NF 7.5dB;Small Gain 25db;Pin 9W;TNC/Bendix Pwr(PT07C-8-3P)
6	ATR12491NDA	29	GA	M1181	TWT Amplifier;Freq 8-12.4GHz;NF 7.5dB;Small Gain 25db;Pin 9W;TNC/Deutsch Pwr(DM9601-3)
7	ATR12491TBA	29	GA	M1181	TWT Amplifier;Freq 8-12.4GHz;NF 7.5dB;Small Gain 25dB;Pin 9W;TNC/Bedix Pwr(PT07C-8-3P)
8	ATR12491TDA	29	GA	M1181	TWT Amplifier;Freq 8-12.4GHz;NF 7.5dB;Small Gain 25dB;Pin 9W;TNC/Deutsch Pwr(DM9601-3)
9	ATR12495MBA	29	GA	M1181	TWT Amplifier;Freq 8-12.4GHz;NF 7.5dB;Small Gain 35dB;Pin 10W;SMA/Bendix Pwr(PT07C-8-3P)
10	ATR12495MDA	29	GA	M1181	TWT Amplifier;Freq 8-12.4GHz;NF 7.5dB;Small Gain 35dB;Pin 10W
11	ATR12495NBA	29	GA	M1181	TWT Amplifier;Freq 8-12.4GHz;NF 7.5dB;Small Gain 35db;Pin 10W;TNC/Bendix Pwr(PT07C-8-3P)
12	ATR12495NDA	29	GA	M1181	TWT Amplifier;Freq 8-12.4GHz;NF 7.5dB;Small Gain 35dB;Pin 10W;TNC/Deutsch Pwr(DM9601-3)
13	ATR12495TBA	29	GA	M1181	TWT Amplifier;Freq 8-12.4GHz;NF 7.5dB;Small Gain 35dB;Pin 10W;TNC/Bedix Pwr(PT07C-8-3P)
14	ATR12495TDA	29	GA	M1181	TWT Amplifier;Freq 8-12.4GHz;NF 7.5dB;Small Gain 35dB;Pin 10W;TNC/Deutsch Pwr(DM9601-3)
15	ATR16051MBA	29	GA	M1179	TWT Amplifier;Freq 8-16GHz;NF 9.5dB;Small Gain 25dB min;Pin 9W;SMA/Bendix Pwr(PT07C-8-3P)
16	ATR16051MDA	29	GA	M1179	TWT Amplifier;Freq 8-16GHz;NF 9.5dB;Small Gain 25dB min;Pin 9W;SMA/Deutsch Pwr(DM9601-3)
17	ATR16055MBA	29	GA	M1179	TWT Amplifier;Freq 8-16GHz;NF 9.5dB;Small Gain 35dB min;Pin 10W;SMA/Bendix Pwr(PT07C-8-3P)
18	ATR16055MDA	29	GA	M1179	TWT Amplifier;Freq 8-16GHz;NF 9.5dB;Small Gain 35dB min;Pin 10W;SMA/Deutsch Pwr(DM9601-3)
19	ATR16081MBA	29	GA	M1180	TWT Amplifier;Freq 8-16GHz;NF 9.5dB;Small Gain 25dB min;Pin 9W;SMA/Bendix Pwr(PT07C-8-3P)
20	ATR16081MDA	29	GA	M1180	TWT Amplifier;Freq 8-16GHz;NF 9.5dB;Small Gain 25dB min;Pin 9W;SMA/Deutsch Pwr(DM9601-3)
21	ATR16081NBA	29	GA	M1180	TWT Amplifier;Freq 8-16GHz;NF 9.5dB;Small Gain 25dB min;Pin 9W;TNC/Bendix Pwr(PT07C-8-3C)
22	ATR16081NDA	29	GA	M1180	TWT Amplifier;Freq 8-16GHz;NF 9.5dB;Small Gain 25dB min;Pin 9W;TNC/Deutsch Pwr(DM9601-3)
23	ATR16081TBA	29	GA	M1180	TWT Amplifier;Freq 8-16GHz;NF 9.5dB;Small Gain 25dB min;Pin 9W;TNC/Bendix Pwr(PT07C-8-3P)
24	ATR16081TDA	29	GA	M1180	TWT Amplifier;Freq 8-16GHz;NF 9.5dB;Small Gain 25dB min;Pin 9W;TNC/Deutsch Pwr(DM9601-3)
25	ATR16085MBA	29	GA	M1180	TWT Amplifier;Freq 8-16GHz;NF 9.5dB;Small Gain 35dB min;Pin 10W;SMA/Bendix Pwr(PT07C-8-3P)
26	ATR16085MDA	29	GA	M1180	TWT Amplifier;Freq 8-16GHz;NF 9.5dB;Small Gain 35dB min;Pin 10W;SMA/Deutsch Pwr(DM9601-3)
27	ATR16085NBA	29	GA	M1180	TWT Amplifier;Freq 8-16GHz;NF 9.5dB;Small Gain 35dB min;Pin 10W;TNC/Bendix Pwr(PT07C-8-3C)
28	ATR16085NDA	29	GA	M1180	TWT Amplifier;Freq 8-16GHz;NF 9.5dB;Small Gain 35dB min;Pin 10W;TNC/Deutsch Pwr(DM9601-3)
29	ATR16085TBA	29	GA	M1180	TWT Amplifier;Freq 8-16GHz;NF 9.5dB;Small Gain 35dB min;Pin 10W;TNC/Bendix Pwr(PT07C-8-3P)
30	ATR16085TDA	29	GA	M1180	TWT Amplifier;Freq 8-16GHz;NF 9.5dB;Small Gain 35dB min;Pin 10W;TNC/Deutsch Pwr(DM9601-3)
31	ATR16091MBA	29	GA	M1181	TWT Amplifier;Freq 8-16GHz;NF 9.5dB;Small Gain 25dB;Pin 9W;SMA/Bendix Pwr(PT07C-8-3P)
32	ATR16091MDA	29	GA	M1181	TWT Amplifier;Freq 8-16GHz;NF 9.5dB;Small Gain 25db;Pin 9W;SMA/Deutsch Pwr(DM9601-3)
33	ATR16091NBA	29	GA	M1181	TWT Amplifier;Freq 8-16GHz;NF 9.5dB;Small Gain 25db;Pin 9W;TNC/Bendix Pwr(PT07C-8-3P)
34	ATR16091NDA	29	GA	M1181	TWT Amplifier;Freq 8-16GHz;NF 9.5dB;Small Gain 25dB;Pin 9W;TNC/Deutsch Pwr(DM9601-3)
35	ATR16091TBA	29	GA	M1181	TWT Amplifier;Freq 8-16GHz;NF 9.5dB;Small Gain 25dB;Pin 9W;TNC/Bedix Pwr(PT07C-8-3P)
36	ATR16091TDA	29	GA	M1181	TWT Amplifier;Freq 8-16GHz;NF 9.5dB;Small Gain 25dB;Pin 9W;TNC/Deutsch Pwr(DM9601-3)
37	ATR16095MBA	29	GA	M1181	TWT Amplifier;Freq 8-16GHz;NF 9.5dB;Small Gain 35dB;Pin 10W;SMA/Bendix Pwr(PT07C-8-3P)
38	ATR16095MDA	29	GA	M1181	TWT Amplifier;Freq 8-16GHz;NF 9.5dB;Small Gain 35db;Pin 10W;SMA/Deutsch Pwr(DM9601-3)
39	ATR16095NBA	29	GA	M1181	TWT Amplifier;Freq 8-16GHz;NF 9.5dB;Small Gain 35db;Pin 10W;TNC/Bendix Pwr(PT07C-8-3P)
40	ATR16095NDA	29	GA	M1181	TWT Amplifier;Freq 8-16GHz;NF 9.5dB;Small Gain 35dB;Pin 10W;TNC/Deutsch Pwr(DM9601-3)
41	ATR16095TBA	29	GA	M1181	TWT Amplifier;Freq 8-16GHz;NF 9.5dB;Small Gain 35dB;Pin 10W;TNC/Bedix Pwr(PT07C-8-3P)
42	ATR16095TDA	29	GA	M1181	TWT Amplifier;Freq 8-16GHz;NF 9.5dB;Small Gain 35dB;Pin 10W;TNC/Deutsch Pwr(DM9601-3)
43	ATR18051MBA	29	GA	M1179	TWT Amplifier;Freq 12-18GHz;NF 9.5dB;Small Gain 25dB min;Pin 9W;SMA/Bendix Pwr(PT07C-8-3P)
44	ATR18051MDA	29	GA	M1179	TWT Amplifier;Freq 12-18GHz;NF 9.5dB;Small Gain 25dB min;Pin 9W;SMA/Deutsch Pwr(DM9601-3)
45	ATR18055MBA	29	GA	M1179	TWT Amplifier;Freq 12-18GHz;NF 9.5dB;Small Gain 35dB min;Pin 10W;SMA/Bendix Pwr(PT07C-8-3P)
46	ATR18055MDA	29	GA	M1179	TWT Amplifier;Freq 12-18GHz;NF 9.5dB;Small Gain 35dB min;Pin 10W;SMA/Deutsch Pwr(DM9601-3)
47	ATR18071	29	GA	M1177	TWT Amplifier;Freq 10.75-18GHz;NF 10dB;Small Gain 37dBmin
48	ATR18081MBA	29	GA	M1180	TWT Amplifier;Freq 12-18GHz;NF 9.5dB;Small Gain 25dB min;Pin 9W;SMA/Bendix Pwr(PT07C-8-3P)
49	ATR18081MDA	29	GA	M1180	TWT Amplifier;Freq 12-18GHz;NF 9.5dB;Small Gain 25dB min;Pin 9W;SMA/Deutsch Pwr(DM9601-3)
50	ATR18081NBA	29	GA	M1180	TWT Amplifier;Freq 12-18GHz;NF 9.5dB;Small Gain 25dB min;Pin 9W;TNC/Bendix Pwr(PT07C-8-3C)
51	ATR18081NDA	29	GA	M1180	TWT Amplifier;Freq 12-18GHz;NF 9.5dB;Small Gain 25dB min;Pin 9W;TNC/Deutsch Pwr(DM9601-3)
52	ATR18081TBA	29	GA	M1180	TWT Amplifier;Freq 12-18GHz;NF 9.5dB;Small Gain 25dB min;Pin 9W;TNC/Bendix Pwr(PT07C-8-3P)
53	ATR18081TDA	29	GA	M1180	TWT Amplifier;Freq 12-18GHz;NF 9.4dB;Small Gain 25dB min;Pin 9W;TNC/Deutsch Pwr(DM9601-3)
54	ATR18085MBA	29	GA	M1180	TWT Amplifier;Freq 12-18GHz;NF 9.5dB;Small Gain 35dB min;Pin 10W;SMA/Bendix Pwr(PT07C-8-3P)
55	ATR18085MDA	29	GA	M1180	TWT Amplifier;Freq 12-18GHz;NF 9.5dB;Small Gain 35dB min;Pin 10W;SMA/Deutsch Pwr(DM9601-3)
56	ATR18085NBA	29	GA	M1180	TWT Amplifier;Freq 12-18GHz;NF 9.5dB;Small Gain 35dB min;Pin 10W;TNC/Bendix Pwr(PT07C-8-3C)
57	ATR18085NDA	29	GA	M1180	TWT Amplifier;Freq 12-18GHz;NF 9.5dB;Small Gain 35dB min;Pin 10W;TNC/Deutsch Pwr(DM9601-3)
58	ATR18085TBA	29	GA	M1180	TWT Amplifier;Freq 12-18GHz;NF 9.5dB;Small Gain 35dB min;Pin 10W;TNC/Bendix Pwr(PT07C-8-3P)
59	ATR18085TDA	29	GA	M1180	TWT Amplifier;Freq 12-18GHz;NF 9.4dB;Small Gain 35dB min;Pin 10W;TNC/Deutsch Pwr(DM9601-3)
60	ATR18091MBA	29	GA	M1181	TWT Amplifier;Freq 12-18GHz;NF 9.5dB;Small Gain 25dB;Pin 9W;SMA/Bendix Pwr(PT07C-8-3P)
61	ATR18091MDA	29	GA	M1181	TWT Amplifier;Freq 12-18GHz;NF 9.5dB;Small Gain 25db;Pin 9W;SMA/Deutsch Pwr(DM9601-3)
62	ATR18091NBA	29	GA	M1181	TWT Amplifier;Freq 12-18GHz;NF 9.5dB;Small Gain 25db;Pin 9W;TNC/Bendix Pwr(PT07C-8-3P)
63	ATR18091NDA	29	GA	M1181	TWT Amplifier;Freq 12-18GHz;NF 9.5dB;Small Gain 25dB;Pin 9W;TNC/Deutsch Pwr(DM9601-3)
64	ATR18091TBA	29	GA	M1181	TWT Amplifier;Freq 12-18GHz;NF 9.5dB;Small Gain 25dB;Pin 9W;TNC/Bedix Pwr(PT07C-8-3P)
65	ATR18091TDA	29	GA	M1181	TWT Amplifier;Freq 12-18GHz;NF 9.5dB;Small Gain 25dB;Pin 9W;TNC/Deutsch Pwr(DM9601-3)
66	ATR18095MBA	29	GA	M1181	TWT Amplifier;Freq 12-18GHz;NF 9.5dB;Small Gain 35dB;Pin 10W;SMA/Bendix Pwr(PT07C-8-3P)
67	ATR18095MDA	29	GA	M1181	TWT Amplifier;Freq 12-18GHz;NF 9.5dB;Small Gain 35db;Pin 10W;SMA/Deutsch Pwr(DM9601-3)
68	ATR18095NBA	29	GA	M1181	TWT Amplifier;Freq 12-18GHz;NF 9.5dB;Small Gain 35db;Pin 10W;TNC/Bendix Pwr(PT07C-8-3P)
69	ATR18095NDA	29	GA	M1181	TWT Amplifier;Freq 12-18GHz;NF 9.5dB;Small Gain 35dB;Pin 10W;TNC/Deutsch Pwr(DM9601-3)
70	ATR18095TBA	29	GA	M1181	TWT Amplifier;Freq 12-18GHz;NF 9.5dB;Small Gain 35dB;Pin 10W;TNC/Bedix Pwr(PT07C-8-3P)
71	ATR18095TDA	29	GA	M1181	TWT Amplifier;Freq 12-18GHz;NF 9.5dB;Small Gain 35dB;Pin 10W;TNC/Deutsch Pwr(DM9601-3)
72▼	ATR26071	29	GA	M1178	TWT Amplifier;Freq 18-26.5GHz;NF 12dB;Small Gain 40dBmin
73	ATR40071	29	GA	M1184	TWT Amplifier;Freq 26.5-40GHz;NF 14dB;Gain 35dB
74▼	ATV5030	29		M1261	Class A TV Trans Amp;GP 7.5dB min;Po 25W min;Imax 4.0A;Vcc 27V max;Freq 470-860MHz
75▼	ATV5080	29		M1262	Class AB TV Transposer Amp;GP 6.0dB min;Po 80W min;Imax 7.5A;Vcc 28.5V max;Freq 470-860MHz
76	AW11700	29	GA	M1186	Waveguide Amplifier;Freq 10.7-11.7GHz;NF 3.5dB;Vin -20/24V;Iin 100mA
77	AW14502	29	GA	M1162	Driver Amplifier;Freq 14-14.5GHz;Vin 15-28V;Iin 90mA;Gain 10dB
78	AW14503	29	GA	M1162	Driver Amplifier;Freq 14-14.5GHz;Vin 15-28V;Iin 110mA;Gain 16dB
79	AW14504	29	GA	M1162	Driver Amplifier;Freq 14-14.5GHz;Vin 15-28V;Iin 130mA;Gain 22dB
80	AW14505	29	GA	M1162	Driver Amplifier;Freq 14-14.5GHz;Vin 15-28V;Iin 150mA;Gain 30dB
81	AW14506	29	GA	M1162	Driver Amplifier;Freq 14-14.5GHz;Vin 15-28V;Iin 170mA;Gain 35dB
82	AW14507	29	GA	M1161	Driver Amplifier;Freq 14-14.5GHz;Vin 15-28V;Iin 190mA;Gain 40dB
83▼	AWT2032	29		M1166d	AMP;Freq 0.5-2.0GHz;NF 4.0dB max;Vin 12VDC/100mA;Gain 22 min;Po/1dB Comp 13dBm min
84▼	AWT2033	29		M1166e	AMP;Freq 0.5-2.0GHz;NF 4.0dB max;Vin 12VDC/160mA;Gain 33 min;Po/1dB Comp 13dBm min
85▼	AWT2034	29		M1166e	AMP;Freq 0.5-2.0GHz;NF 4.0dB max;Vin 12VDC/200mA;Gain 44 min;Po/1dB Comp 13dBm min
86▼	AWT2044	29		M1166f	AMP;Freq 0.5-2.0GHz;NF 4.0dB max;Vin 12VDC/250mA;Gain 39 min;Po/1dB Comp 15dBm min
87	AWT6032	29	GA	M1166g	Wideband Amplifier;Freq 2-6GHz;Vin 12V;Iin 130mA;Gain 17dB
88	AWT6033	29	GA	M1166h	Wideband Amplifier;Freq 2-6GHz;Vin 12V;Iin 190mA;Gain 26dB
89	AWT6034	29	GA	M1166h	Wideband Amplifier;Freq 2-6GHz;Vin 12V;Iin 250mA;Gain 35dB
90	AWT6035	29	GA	M1166j	Wideband Amplifier;Freq 2-6GHz;Vin 12V;Iin 310mA;Gain 44dB
91	AWT6045	29	GA	M1166f	Wideband Amplifier;Freq 2-6GHz;Vin 12V;Iin 300mA;Gain 44dB max
92	AWT6054	29	GA	M1166h	Wideband Amplifier;Freq 2-6GHz;Vin 12V;Iin 350mA;Gain 35dB
93	AWT8032	29	GA	M1166g	Wideband Amplifier;Freq 2-8GHz;Vin 12V;Iin 120mA;Gain 16dB
94	AWT8033	29	GA	M1166h	Wideband Amplifier;Freq 2-8GHz;Vin 12V;Iin 180mA;Gain 24dB
95	AWT8034	29	GA	M1166h	Wideband Amplifier;Freq 2-8GHz;Vin 12V;Iin 230mA;Gain 33db
96	AWT8035	29	GA	M1166j	Wideband Amplifier;Freq 2-8GHz;Vin 12V;Iin 280mA;Gain 41db
97	AWT18014	29	GA	M1170	Limited Amplifier;Freq 8-18GHz;Vin 12V;Iin 200mA;Gain 20dB
98	AWT18015	29	GA	M1170	Limited Amplifier;Freq 8-18GHz;Vin 12V;Iin 250mA;Gain 25dB
99	AWT18016	29	GA	M1170	Limited Amplifier;Freq 8-18GHz;Vin 12V;Iin 300mA;Gain 30dB
100	AWT18017	29	GA	M1170	Limited Amplifier;Freq 8-18GHz;Vin 12V;Iin 350mA;Gain 35dB
101	AWT18018	29	GA	M1170	Limited Amplifier;Freq 8-18GHz;Vin 12V;Iin 400mA;Gain 40dB
102	AWT18033	29	GA	M1166	Wideband Amplifier;Freq 8-18GHz;Vin 12V;Iin 150mA;Gain 15dB
103	AWT18034	29	GA	M1166	Wideband Amplifier;Freq 8-18GHz;Vin 12V;Iin 200mA;Gain 20dB
104	AWT18035	29	GA	M1166a	Wideband Amplifier;Freq 8-18GHz;Vin 12V;Iin 250mA;Gain 25dB
105	AWT18036	29	GA	M1166a	Wideband Amplifier;Freq 8-18GHz;Vin 12V;Iin 300mA;Gain 30dB
106	AWT18037	29	GA	M1166b	Wideband Amplifier;Freq 8-18GHz;Vin 12V;Iin 350mA;Gain 35dB
107	AWT18038	29	GA	M1166b	Wideband Amplifier;Freq 8-18GHz;Vin 12V;Iin 400mA;Gain 40dB
108	AWT18039	29	GA	M1166c	Wideband Amplifier;Freq 8-18GHz;Vin 12V;Iin 450mA;Gain 45dB
109	AWT18057	29	GA	M1166b	Wideband Amplifier;Freq 8-18GHz;Vin 12V;Iin 350mA;Gain 35dB
110	AWT18633	29	GA	M1166	Wideband Amplifier;Freq 6-18GHz;Vin 12V;Iin 160mA;Gain 16db

8. MISCELLANEOUS DEVICES

IN ORDER OF (1) USE and (2) TYPE No.

LINE No.	[2] TYPE No.	[1] USE	DESCRIPTION MAT.	DESCRIPTION DWG. No.	TECHNICAL DATA
1	AWT18634	29	GA	M1166	Wideband Amplifier;Freq 6-18GHz;Vin 12V;Iin 200mA;Gain 22db
2	AWT18635	29	GA	M1166a	Wideband Amplifier;Freq 6-18GHz;Vin 12V;Iin 250mA;Gain 28dB
3	AWT18636	29	GA	M1166a	Wideband Amplifier;Freq 6-18GHz;Vin 12V;Iin 300mA;Gain 34dB
4	AWT18637	29	GA	M1166b	Wideband Amplifier;Freq 6-18GHz;Vin 12V;Iin 350mA;Gain 40dB
5	AWT18638	29	GA	M1166b	Wideband Amplifier;Freq 6-18GHz;Vin 12V;Iin 400mA;Gain 46dB
6	AWT18645	29	GA	M1166a	Wideband Amplifier;Freq 6-18GHz;Vin 12V;Iin 275mA;Gain 25dB max
7	AWT18647	29	GA	M1166b	Wideband Amplifier;Freq 6-18GHz;Vin 12V;Iin 375mA;Gain 36dB max
8	AWT18656	29	GA	M1166a	Wideband Amplifier;Freq 6-18GHz;Vin 12V;Iin 300mA;Gain 34dB
9	AWT18668	29	GA	M1166c	Wideband Amplifier;Freq 6-18GHz;Vin 12V;Iin 450mA;Gain 42dB max
10	CGB374008-01	29	GA		Freq range 3.7-3.95GHz;Pwr Out 39dBm sat,37.0 dBm 1 dB GCP;37dB Gain;Input I 7.0A at 15Vdc
11	CGB394208-01	29	GA		Freq range 3.95-4.2GHz;Pwr Out 39dBm sat,37.0 dBm 1 dB GCP;37dB Gain;Input I 7.0A at 15Vdc
12	CGB596408-02	29	GA	M1116	Freq range 5.9G-6.4GHz;Pwr Out 39dBm sat,37.0 dBm 1 dB GCP;47dB Gain;Input I 7.0A at 15Vdc
13	CGB596410-03	29	GA		Freq range 5.9G-6.4GHz;Pwr Out 40dBm sat,38.5 dBm 1 dB GCP;49dB Gain;Input I 12A at 15Vdc
14	CGB798405-01	29	GA		Freq range 7.9G-8.4GHz;Pwr Out 37dBm sat,35.5 dBm 1 dB GCP;49dB Gain;Input I 8.0A at 15Vdc
15	CGC081201-07	29	GA		Freq rng 8G-12GHz;Pwr Out 31 dBm sat 30dBm 1 dB Gain;Input I 3.0 at 15Vdc
16	CGC101201-03	29	GA		Freq range 10.7-11.7GHz;Pwr Out 31dBm sat,30.0 dBm 1 dB GCP;33dB Gain;Input I 2.7A at 15Vdc
17	DXA3115-01	29	GA	M1104	Freq range 3.7G-4.2GHz;Gain 50 dB;NF 1.5 dB;Gain Flatness ±0.5 dB;Po at 1 dB Comp pnt 10dBm
18	DXA3115-02	29	GA	M1104	Freq range 3.7G-4.2GHz;Gain 50 dB;NF 1.3 dB;Gain Flatness ±0.5 dB;Po at 1 dB Comp pnt 10dBm
19	DXA3115-03	29	GA	M1104	Freq range 3.7G-4.2GHz;Gain 50 dB;NF 1.1 dB;Gain flatness ±0.5 dB;Po at 1 dB Comp pnt 10dBm
20	DXA3157-01	29	GA	M1105	Freq range 3.7G-4.2GHz;Gain 50 dB;NF 1.5 dB;Gain Flatness ±0.5 dB;Po at 1 dB Comp pnt 10dBm
21	DXA3157-02	29	GA	M1105	Freq range 3.7G-4.2GHz;Gain 50 dB;NF 1.3 dB;Gain Flatness ±0.5 dB;Po at 1 dB Comp pnt 10dBm
22	DXA3157-03	29	GA	M1105	Freq range 3.7G-4.2GHz;Gain 50 dB;NF 1.1 dB;Gain Flatness ±0.5 dB;Po at 1 dB Comp pnt 10dBm
23	DXA020401	29	GA	M1106	Freq range 2-4GHz;Small SIG Gain 10 dB;Flatness ±1.0 dB;NF 4.0 dB;Po at 1 dB Comp pnt 10 dBm
24	DXA020402	29	GA	M1106	Freq range 2-4GHz;Small SIG Gain 20 dB;Flatness ±1.0 dB;NF 4.0 dB;Po at 1 dB Comp pnt 10 dBm
25	DXA020403	29	GA	M1106a	Freq range 2-4GHz;Small SIG Gain 30 dB;Flatness ±1.0 dB;NF 4.0 dB;Po at 1 dB Comp pnt 10 dBm
26	DXA020404	29	GA	M1106b	Freq range 2-4GHz;Small SIG Gain 40 dB;Flatness ±1.5 dB;NF 4.0 dB;Po at 1 dB Comp pnt 10 dBm
27	DXA020405	29	GA	M1106	Freq range 2-4GHz;Small SIG Gain 10 dB;Flatness ±1.0 dB;NF 6.0 dB;Po at 1 dB Comp pnt 20 dBm
28	DXA020406	29	GA	M1106	Freq range 2-4GHz;Small SIG Gain 20 dB;Flatness ±1.0 dB;NF 5.0 dB;Po at 1 dB Comp pnt 20 dBm
29	DXA020407	29	GA	M1106a	Freq range 2-4GHz;Small SIG Gain 30 dB;Flatness ±1.0 dB;NF 4.0 dB;Po at 1 dB Comp pnt 20 dBm
30	DXA020408	29	GA	M1106b	Freq range 2-4GHz;Small SIG Gain 40 dB;Flatness ±1.5 dB;NF 4.0 dB;Po at 1 dB Comp pnt 20 dBm
31	DXA020409	29	GA	M1106a	Freq range 2-4GHz;Small SIG Gain 18 dB;Flatness ±1.0 dB;NF 8.0 dB;Po at 1 dB Comp pnt 24 dBm
32	DXA020410	29	GA	M1106b	Freq range 2-4GHz;Small SIG Gain 28 dB;Flatness ±1.0 dB;NF 6.0 dB;Po at 1 dB Comp pnt 24 dBm
33	DXA020411	29	GA	M1106b	Freq range 2-4GHz;Small SIG Gain 38 dB;Flatness ±1.0 dB;NF 4.0 dB;Po at 1 dB Comp pnt 24 dB
34	DXA020412	29	GA	M1106d	Freq range 2-4GHz;Small SIG Gain 48 dB;Flatness ±1.5 dB;NF 4.0 dB;Po at 1 dB Comp pnt 24 dBm
35	DXA020413	29	GA	M1106a	Freq range 2-4GHz;Small SIG Gain 16 dB;Flatness ±1.0 dB;NF 10 dB;Po at 1 dB Comp pnt 27 dBm
36	DXA020414	29	GA	M1106b	Freq range 2-4GHz;Small SIG Gain 26 dB;Flatness ±1.0 dB;NF 8.0 dB;Po at 1 dB Comp pnt 27 dBm
37	DXA020415	29	GA	M1106C	Freq range 2-4GHz;Small SIG Gain 36 dB;Flatness ±1.5 dB;NF 6.0 dB;Po at 1 dB Comp pnt 27 dBm
38	DXA020416	29	GA	M1106d	Freq range 2-4GHz;Small SIG Gain 46 dB;Flatness ±1.5 dB;NF 6.0 dB;Po at 1 dB Comp pnt 27 dBm
39	DXA020417	29	GA	M1106e	Freq range 2-4GHz;Small SIG Gain 14 dB;Flatness ±1.0 dB;NF 15 dB;Po at 1dB Comp pnt 30 dBm
40	DXA020418	29	GA	M1106e	Freq range 2-4GHz;Small SIG Gain 22 dB;Flatness ±1.0 dB;NF 10 dB;Po at 1 dB Comp pnt 30 dBm
41	DXA020419	29	GA	M1106e	Freq range 2-4GHz;Small SIG Gain 32 dB;Flatness ±1.5 dB;NF 8.0 dB;Po at 1 dB Comp pnt 30 dBm
42	DXA020420	29	GA	M1106f	Freq range 2-4GHz;Small SIG Gain 42 dB;Flatness ±1.5 dB;NF 8.0 dB;Po at 1 dB Comp pnt 30 dBm
43	DXA020601	29	GA	M1106	Freq range 2-6GHz;Small SIG Gain 16 dB;Flatness ±1.0 dB;NF 6.0 dB;Po at 1 dB Comp pnt 10 dBm
44	DXA020602	29	GA	M1106a	Freq range 2-6GHz;Small SIG Gain 24 dB;Flatness ±1.5 dB;NF 6.0 dB;Po at 1 dB Comp pnt 10 dBm
45	DXA020603	29	GA	M1106b	Freq range 2-6GHz;Small SIG Gain 32 dB;Flatness ±1.5 dB;NF 6.0 dB;Po at 1 dB Comp pnt 10 dBm
46	DXA020604	29	GA	M1106c	Freq range 2-6GHz;Small SIG Gain 40 dB;Flatness ±2.0 dB;NF 6.0 dB;Po at 1 dB Comp pnt 10 dBm
47	DXA020605	29	GA	M1106	Freq range 2-6GHz;Small SIG Gain 16 dB;Flatness ±1.0 dB;NF 6.5 dB;Po at 1 dB Comp pnt 16 dBm
48	DXA020606	29	GA	M1106a	Freq range 2-6GHz;Small SIG Gain 24 dB;Flatness ±1.5 dB;NF 6.0 dB;Po at 1 dB Comp pnt 16 dBm
49	DXA020607	29	GA	M1106b	Freq range 2-6GHz;Small SIG Gain 32 dB;Flatness ±1.5 dB;NF 6.0 dB;Po at 1 dB Comp pnt 16 dBm
50	DXA020608	29	GA	M1106c	Freq range 2-6GHz;Small SIG Gain 40 dB;Flatness ±2.0 dB;NF 6.0 dB;Po at 1 dB Comp pnt 16 dBm
51	DXA020609	29	GA	M1106a	Freq range 2-6GHz;Small SIG Gain 14 dB;Flatness ±1.5 dB;NF 7.0 dB;Po at 1 dB Comp pnt 20 dBm
52	DXA020610	29	GA	M1106a	Freq range 2-6GHz;Small SIG Gain 22 dB;Flatness ±2.0 dB;NF 6.5 dB;Po at 1 dB Comp pnt 20 dBm
53	DXA020611	29	GA	M1106b	Freq range 2-6GHz;Small SIG Gain 30 dB;Flatness ±2.0 dB;NF 6.0 dB;Po at 1 dB Comp pnt 20 dBm
54	DXA020612	29	GA	M1106c	Freq range 2-6GHz;Small SIG Gain 38 dB;Flatness ±2.5 dB;NF 6.0 dB;Po at 1 dB Comp pnt 20 dBm
55	DXA020613	29	GA	M1106b	Freq range 2-6GHz;Small SIG Gain 12 dB;Flatness ±1.5 dB;NF 10 dB;Po at 1 dB Comp pnt 23 dBm
56	DXA020614	29	GA	M1106b	Freq range 2-6GHz;Small SIG Gain 20 dB;Flatness ±1.5 dB;NF 8.0 dB;Po at 1 dB Comp pnt 23 dBm
57	DXA020615	29	GA	M1106b	Freq range 2-6GHz;Small SIG Gain 28 dB;Flatness ±2.0 dB;NF 7.0 dB;Po at 1 dB Comp pnt 23 dBm
58	DXA020801	29	GA	M1106h	Freq range 4-8GHz;Small SIG Gain 16 dB;Flatness ±1.0 dB;NF 6.0 dB;Po at 1 dB Comp pnt 10 dBm
59	DXA020802	29	GA	M1106a	Freq range 2-8GHz;Small SIG Gain 20 dB;Flatness ±2.0 dB;NF 7.0 dB;Po at 1 dB Comp pnt 10 dBm
60	DXA020803	29	GA	M1106b	Freq range 2-8GHz;Small SIG Gain 27 dB;Flatness ±2.5 dB;NF 7.0 dB;Po at 1 dB Comp pnt 10 dBm
61	DXA020804	29	GA	M1106c	Freq range 2-8GHz;Small SIG Gain 34 dB;Flatness ±2.5 dB;NF 7.0 dB;Po at 1 dB Comp pnt 10 dBm
62	DXA020805	29	GA	M1106	Freq range 2-8GHz;Small SIG Gain 13 dB;Flatness ±1.5 dB;NF 7.0 dB;Po at 1 dB Comp pnt 16 dBm
63	DXA020806	29	GA	M1106a	Freq range 2-8GHz;Small SIG Gain 20 dB;Flatness ±2.0 dB;NF 7.0 dB;Po at 1 dB Comp pnt 16 dBm
64	DXA020807	29	GA	M1106b	Freq range 2-8GHz;Small SIG Gain 27 dB;Flatness ±2.5 dB;NF 7.0 dB;Po at 1 dB Comp pnt 16 dBm
65	DXA020808	29	GA	M1106c	Freq range 2-8GHz;Small SIG Gain 34 dB;Flatness ±2.5 dB;NF 7.0 dB;Po at 1 dB Comp pnt 16 dBm
66	DXA020809	29	GA	M1106	Freq range 2-8GHz;Small SIG Gain 12 dB;Flatness ±1.2 dB;NF 9.0 dB;Po at 1 dB Comp pnt 20 dBm
67	DXA020810	29	GA	M1106a	Freq range 2-8GHz;Small SIG Gain 19 dB;Flatness ±1.5 dB;NF 8.0 dB;Po at 1 dB Comp pnt 20 dBm
68	DXA020811	29	GA	M1106b	Freq range 2-8GHz;Small SIG Gain 26 dB;Flatness ±2.0 dB;NF 7.0 dB;Po at 1 dB Comp pnt 20 dBm
69	DXA020812	29	GA	M1106d	Freq range 2-8GHz;Small SIG Gain 33 dB;Flatness ±2.5 dB;NF 7.0 dB;Po at 1 dB Comp pnt 20 dBm
70	DXA020813	29	GA	M1106a	Freq range 2-8GHz;Small SIG Gain 11 dB;Flatness ±1.5 dB;NF 10 dB;Po at 1dB Comp pnt 23 dBm
71	DXA020814	29	GA	M1106d	Freq range 2-8GHz;Small SIG GAIN 17 dB;Flatness ±2.0 dB;NF 9.0 dB;Po at 1 dB Comp pnt 23 dBm
72	DXA020815	29	GA	M1106d	Freq range 2-8GHz;Small SIG Gain 24 dB;Flatness ±2.5 dB;NF 7.0 dB;Po at 1 dB Comp pnt 23 dBm
73	DXA040801	29	GA	M1106h	Freq range 4-8GHz;Small SIG Gain 16 dB;Flatness ±1.0 dB;NF 6.0 dB;Po at 1 dB Comp pnt 10 dBm
74	DXA040802	29	GA	M1006	Freq range 4-8GHz;Small SIG Gain 24 dB;Flatness ±1.5 dB;NF 6.0 dB;Po at 1 dB Comp pnt 10 dBm
75	DXA040803	29	GA	M1106k	Freq range 4-8GHz;Small SIG Gain 32 dB;Flatness ±2.0 dB;NF 6.0 dB;Po at 1 dB Comp pnt 10 dBm
76	DXA040804	29	GA	M1106l	Freq range 4-8GHz;Small SIG Gain 40 dB;Flatness ±2.5 dB;NF 6.0 dB;Po at 1 dB Comp pnt 16 dBm
77	DXA040805	29	GA	M1106h	Freq range 4-8GHz;Small SIG Gain 15 dB;Flatness ±1.0 dB;NF 8.0 dB;Po at 1 dB Comp pnt 20 dBm
78	DXA040806	29	GA	M1106j	Freq range 4-8GHz;Small SIG Gain 23 dB;Flatness ±1.5 dB;NF 7.0 dB;Po at 1 dB Comp pnt 20 dBm
79	DXA040807	29	GA	M1106k	Freq range 4-8GHz;Small SIG Gain 32 dB;Flatness ±2.0 dB;NF 6.0 dB;Po at 1 dB Comp pnt 20 dBm
80	DXA040808	29	GA	M1106l	Freq range 4-8GHz;Small SIG Gain 40 dB;Flatness ±2.5 dB;NF 6.0 dB;Po at 1 dB Comp pnt 20 dBm
81	DXA040809	29	GA	M1106j	Freq range 4-8GHz;Small SIG Gain 12 dB;Flatness ±1.0 dB;NF 10 dB;Po at 1 dB Comp pnt 24 dBm
82	DXA040810	29	GA	M1106k	Freq range 4-8GHz;Small SIG Gain 20 dB;Flatness ±1.5 dB;NF 8.0 dB;Po at 1 dB Comp pnt 24 dBm
83	DXA040811	29	GA	M1106l	Freq range 4-8GHz;Small SIG Gain 28 dB;Flatness ±2.0 dB;NF 6.5 dB;Po at 1 dB Comp pnt 24 dBm
84	DXA040812	29	GA	M1106m	Freq range 4-8GHz;Small SIG Gain 36 dB;Flatness ±2.5 dB;NF 6.5 dB;Po at 1 dB Comp pnt 24 dBm
85	DXA040813	29	GA	M1106k	Freq range 4-8GHz;Small SIG Gain 10 dB;Flatness ±1.0 dB;NF 15 dB;Po at 1 dB Comp pnt 27 dBm
86	DXA040814	29	GA	M1106k	Freq range 4-8GHz;Small SIG Gain 18 dB;Flatness ±1.5 dB;NF 12 dB; Po at 1 dB Comp pnt 27 dBm
87	DXA040815	29	GA	M1106l	Freq range 4-8GHz;Small SIG Gain 26 dB;Flatness ±2.0 dB;NF 10 dB;Po at 1 dB Comp pnt 27 dBm
88	DXA040816	29	GA	M1106m	Freq range 4-8GHz;Small SIG Gain 34 dB;Flatness ±2.5 dB;NF 10 dB;Po at 1 dB Comp pnt 27 dBm
89	DXA040817	29	GA		Freq range 4-8GHz;Small SIG Gain 16 dB;Flatness ±2.0 dB;NF 15 dB;Po at 1dB Comp pnt 30 dBm
90	DXA040818	29	GA		Freq range 4-8GHz;Small SIG Gain 22 dB;Flatness ±2.0 dB;NF 15 dB;Po at 1 dB Comp pnt 30 dBm
91	DXA040819	29	GA		Freq range 4-8GHz;Small SIG Gain 30 dB;Flatness ±2.0 dB;NF 15 dB;Po at 1 dB Comp pnt 30 dBm
92	DXA040820	29	GA		Freq range 4-8GHz;Small SIG Gain 38 dB;Flatness ±2.0 dB;NF 15 dB;Po at 1 dB Comp pnt 30 dBm
93	DXA040821	29	GA	M1106h	Freq range 4-8GHz;Small SIG Gain 16 dB;Flatness ±0.5 dB;NF 4.5 dB;Po at 1 dB Comp pnt 10 dBm
94	DXA040822	29	GA	M1106j	Freq range 4-8GHz;Small SIG Gain 24 dB;Flatness ±0.5 dB;NF 4.5 dB;Po at 1 dB Comp pnt 10 dBm
95	DXA040823	29	GA	M1106k	Freq range 4-8GHz;Small SIG Gain 32 dB;Flatness ±1.0 dB;NF 4.5 dB;Po at 1 dB Comp pnt 10 dBm
96	DXA040824	29	GA	M1106l	Freq range 4-8GHz;Small SIG Gain 40 dB;Flatness ±1.5 dB;NF 4.5 dB;Po at 1 dB Comp pnt 10 dBm
97	DXA051001	29	GA	M1107a	Freq rnge 5-10GHz;Small SIG Gain 11 dB;Flatness ±1.0 dB;NF 6.0 dB;Po at 1 dB Comp pnt 10 dBm
98	DXA051002	29	GA	M1107b	Freq rnge 5-10GHz;Small SIG Gain 17 dB;Flatness ±1.5 dB;NF 6.0 dB;Po at 1 dB Comp pnt 10 dBm
99	DXA051003	29	GA	M1107c	Freq rnge 5-10GHz;Small SIG Gain 23 dB;Flatness ±1.5 dB;NF 6.0 dB;Po at 1 dB Comp pnt 10 dBm
100	DXA051004	29	GA	M1107d	Freq rnge 5-10GHz;Small SIG Gain 29 dB;Flatness ±2.0 dB;NF 6.0 dB;Po at 1 dB Comp pnt 10 dBm
101	DXA051005	29	GA	M1107a	Freq rnge 5-10GHz;Small SIG Gain 11 dB;Flatness ±1.0 dB;NF 7.0 dB;Po at 1 dB Comp pnt 17 dBm
102	DXA051006	29	GA	M1107b	Freq rnge 5-10GHz;Small SIG Gain 17 dB;Flatness ±1.5 dB;NF 7.0 dB;Po at 1 dB Comp pnt 17 dBm
103	DXA051007	29	GA	M1107c	Freq rnge 5-10GHz;Small SIG Gain 23 dB;Flatness ±1.5 dB;NF 6.0 dB;Po at 1 dB Comp pnt 17 dBm
104	DXA051008	29	GA	M1107d	Freq rnge 5-10GHz;Small SIG Gain 29 dB;Flatness ±2.0 dB;NF 6.0 dB;Po at 1 dB Comp pnt 17 dBm
105	DXA051009	29	GA	M1107b	Freq rnge 5-10GHz;Small SIG Gain 10 dB;Flatness ±1.0 dB;NF 8.0 dB;Po at 1 dB Comp pnt 20 dBm
106	DXA051010	29	GA	M1107b	Freq rnge 5-10GHz;Small SIG Gain 16 dB;Flatness ±1.5 dB;NF 7.0 dB;Po at 1 dB Comp pnt 20 dBm
107	DXA051011	29	GA	M1107c	Freq rnge 5-10GHz;Small SIG Gain 22 dB;Flatness ±1.5 dB;NF 7.0 dB;Po at 1 dB Comp pnt 20 dBm
108	DXA051012	29	GA	M1107d	Freq rnge 5-10GHz;Small SIG Gain 28 dB;Flatness ±2.0 dB;NF 6.0 dB;Po at 1 dB Comp pnt 20 dBm
109	DXA061801	29	GA	M1107g	Freq rng 6-18GHz;Small SIG Gain 9 dB;Flatness ±1.0 dB;NF 8 dB;Po at 1 dB Comp pnt 10 dBm
110	DXA061802	29	GA	M1107h	Freq rng 6-18GHz;Small SIG Gain 18 dB;Flatness ±1.5 dB;NF 8 dB;Po at 1 dB Comp pnt 10 dBm

8. MISCELLANEOUS DEVICES

IN ORDER OF (1) USE and (2) TYPE No.

LINE No.	2 TYPE No.	1 USE	DESCRIPTION MAT.	DESCRIPTION DWG. No.	TECHNICAL DATA
1	DXA061803	29	GA	M1107j	Freq rng 6-18GHz;Small SIG Gain 27 dB;Flatness ±2.0 dB;NF 8 dB;Po at 1 dB Comp pnt 10 dBm
2	DXA061804	29	GA	M1107k	Freq rng 6-18GHz;Small SIG Gain 36 dB;Flatness ±2.5 dB;NF 8 dB;Po at 1 dB Comp pnt 10 dBm
3	DXA061805	29	GA	M1107l	Freq rng 6-18GHz;Small SIG Gain 45 dB;Flatness ±3.0 dB;NF 8 dB;Po at 1 dB Comp pnt 10 dBm
4	DXA061806	29	GA	M1107g	Freq rng 6-18GHz;Small SIG Gain 9 dB;Flatness ±1.0 dB;NF 10 dB;Po at 1 dB Comp pnt 15 dBm
5	DXA061807	29	GA	M1107h	Freq rng 6-18GHz;Small SIG Gain 18 dB;Flatness ±1.5 dB;NF 9 dB;Po at 1 dB Comp pnt 15 dBm
6	DXA061808	29	GA	M1107j	Freq rng 6-18GHz;Small SIG Gain 27 dB;Flatness ±2.0 dB;NF 8 dB;Po at 1 dB Comp pnt 15 dBm
7	DXA061809	29	GA	M1107k	Freq rng 6-18GHz;Small SIG Gain 36 dB;Flatness ±2.5 dB;NF 8 dB;Po at 1 dB Comp pnt 15 dBm
8	DXA061810	29	GA	M1107l	Freq rng 6-18GHz;Small SIG Gain 45 dB;Flatness ±3.0 dB;NF 8 dB;Po at 1 dB Comp pnt 15 dBm
9	DXA061811	29	GA	M1107g	Freq rng 6-18GHz;Small SIG Gain 9 dB;Flatness ±1.0 dB;NF 10 dB;Po at 1 dB Comp pnt 18 dBm
10	DXA061812	29	GA	M1107h	Freq rng 6-18GHz;Small SIG Gain 18 dB;Flatness ±1.5 dB;NF 9 dB;Po at 1 dB Comp pnt 18 dBm
11	DXA061813	29	GA	M1107j	Freq rng 6-18GHz;Small SIG Gain 27 dB;Flatness ±2.0 dB;NF 8 dB;Po at 1 dB Comp pnt 18 dBm
12	DXA061814	29	GA	M1107k	Freq rng 6-18GHz;Small SIG Gain 36 dB;Flatness ±2.5 dB;NF 8 dB;Po at 1 dB Comp pnt 18 dBm
13	DXA061815	29	GA	M1107l	Freq rng 6-18GHz;Small SIG Gain 45 dB;Flatness ±3.0 dB;NF 8 dB;Po at 1 dB Comp pnt 18 dBm
14	DXA081201	29	GA	M1107o	Freq rng 8-12.4GHz;Smll SIG Gain 10 dB;Flatness ±1.0 dB;NF 6 dB;Po at 1 dB Comp pnt 10 dBm
15	DXA081202	29	GA	M1107p	Freq rng 8-12.4GHz;Smll SIG Gain 20 dB;Flatness ±1.5 dB;NF 6 dB;Po at 1 dB Comp pnt 10 dBm
16	DXA081203	29	GA	M1107q	Freq rng 8-12.4GHz;Smll SIG Gain 30 dB;Flatness ±2.0 dB;NF 6 dB;Po at 1 dB Comp pnt 10 dBm
17	DXA081204	29	GA	M1107r	Freq rng 8-12.4GHz;Smll SIG Gain 40 dB;Flatness ±2.5 dB;NF 6 dB;Po at 1 dB Comp pnt 10 dBm
18	DXA081205	29	GA	M1107o	Freq rng 8-12.4GHz;Smll SIG Gain 10 dB;Flatness ±1.0 dB;NF 8 dB;Po at 1 dB Comp pnt 17 dBm
19	DXA081206	29	GA	M1107p	Freq rng 8-12.4GHz;Smll SIG Gain 20 dB;Flatness ±1.5 dB;NF 7 dB;Po at 1 dB Comp pnt 17 dBm
20	DXA081207	29	GA	M1107q	Freq rng 8-12.4GHz;Smll SIG Gain 30 dB;Flatness ±2.0 dB;NF 6 dB;Po at 1 dB Comp pnt 17 dBm
21	DXA081208	29	GA	M1107r	Freq rng 8-12.4GHz;Smll SIG Gain 40 dB;Flatness ±2.5 dB;NF 6 dB;Po at 1 dB Comp pnt 17 dBm
22	DXA081209	29	GA	M1107o	Freq rng 8-12.4GHz;Smll SIG Gain 10 dB;Flatness ±1.0 dB;NF 10 dB;Po at 1 dB Comp pnt 20 dBm
23	DXA081210	29	GA	M1107p	Freq rng 8-12.4GHz;Smll SIG Gain 20 dB;Flatness ±1.5 dB;NF 8 dB;Po at 1 dB Comp pnt 20 dBm
24	DXA081211	29	GA	M1107q	Freq rng 8-12.4GHz;Smll SIG Gain 30 dB;Flatness ±2.0 dB;NF 6 dB;Po at 1 dB Comp pnt 20 dBm
25	DXA081212	29	GA	M1107r	Freq rng 8-12.4GHz;Smll SIG Gain 40 dB;Flatness ±2.5 dB;NF 6 dB;Po at 1 dB Comp pnt 20 dBm
26	DXA081801	29	GA	M1107q	Freq rng 8-18GHz;Small SIG Gain 9 dB;Flatness ±1.0 dB;NF 8 dB;Po at 1 dB Comp pnt 10 dBm
27	DXA081802	29	GA	M1107h	Freq rng 8-18GHz;Small SIG Gain 18 dB;Flatness ±1.0 dB;NF 8 dB;Po at 1 dB Comp pnt 10 dBm
28	DXA081803	29	GA	M1107j	Freq rng 8-18GHz;Small SIG Gain 27 dB;Flatness ±2.0 dB;NF 8 dB;Po at 1 dB Comp pnt 10 dBm
29	DXA081804	29	GA	M1107k	Freq rng 8-18GHz;Small SIG Gain 36 dB;Flatness ±2.5 dB;NF 8 dB;Po at 1 dB Comp pnt 10 dBm
30	DXA081805	29	GA	M1107l	Freq rng 8-18GHz;Small SIG Gain 45 dB;Flatness ±3.0 dB;NF 8 dB;Po at 1 dB Comp pnt 10 dBm
31	DXA081806	29	GA	M1107g	Freq rng 8-18GHz;Small SIG Gain 9 dB;Flatness ±1.0 dB;NF 10 dB;Po at 1 dB Comp pnt 15 dBm
32	DXA081807	29	GA	M1107h	Freq rng 8-18GHz;Small SIG Gain 18 dB;Flatness ±1.0 dB;NF 8 dB;Po at 1 dB Comp pnt 15 dBm
33	DXA081808	29	GA	M1107j	Freq rng 8-18GHz;Small SIG Gain 27 dB;Flatness ±2.0 dB;NF 8 dB;Po at 1 dB Comp pnt 15 dBm
34	DXA081809	29	GA	M1107k	Freq rng 8-18GHz;Small SIG Gain 36 dB;Flatness ±2.5 dB;NF 8 dB;Po at 1 dB Comp pnt 15 dBm
35	DXA081810	29	GA	M1107l	Freq rng 8-18GHz;Small SIG Gain 45 dB;Flatness ±3.0 dB;NF 8 dB;Po at 1 dB Comp pnt 15 dBm
36	DXA081811	29	GA	M1107g	Freq rng 8-18GHz;Small SIG Gain 9 dB;Flatness ±1.0 dB;NF 10 dB;Po at 1 dB Comp pnt 18 dBm
37	DXA081812	29	GA	M1107h	Freq rng 8-18GHz;Small SIG Gain 18 dB;Flatness ±1.0 dB;NF 8 dB;Po at 1 dB Comp pnt 18 dBm
38	DXA081813	29	GA	M1107j	Freq rng 8-18GHz;Small SIG Gain 27 dB;Flatness ±2.0 dB;NF 8 dB;Po at 1 dB Comp pnt 18 dBm
39	DXA081814	29	GA	M1107k	Freq rng 8-18GHz;Small SIG Gain 36 dB;Flatness ±2.5 dB;NF 8 dB;Po at 1 dB Comp pnt 18 dBm
40	DXA081815	29	GA	M1107l	Freq rng 8-18GHz;Small SIG Gain 45 dB;Flatness ±3.0 dB;NF 8 dB;Po at 1 dB Comp pnt 18 dBm
41	DXA081816	29	GA	M1107g	Freq rng 8-18GHz;Small SIG Gain 6 dB;Flatness ±1.0 dB;NF 15 dB;Po at 1 dB Comp pnt 20 dBm
42	DXA081817	29	GA	M1107h	Freq rng 8-18GHz;Small SIG Gain 15 dB;Flatness ±1.5 dB;NF 10 dB;Po at 1 dB Comp pnt 20 dBm
43	DXA081818	29	GA	M1107j	Freq rng 8-18GHz;Small SIG Gain 24 dB;Flatness ±2.0 dB;NF 10 dB;Po at 1 dB Comp pnt 20 dBm
44	DXA081819	29	GA	M1107k	Freq rng 8-18GHz;Small SIG Gain 33 dB;Flatness ±3.0 dB;NF 8 dB;Po at 1 dB Comp pnt 20 dBm
45	DXA081820	29	GA	M1107l	Freq rng 8-18GHz;Small SIG Gain 42 dB;Flatness ±3.5 dB;NF 8 dB;Po at 1 dB Comp pnt 20 dBm
46▼	FDP522	29		M1254	AMP;Freq 10-500MHz;Gain Flatness ±1.0dB;Gain 34dB min;Po/1dB Comp 10dBm min;NF 5.5dB max
47▼	GPD110	29		TO39	AMP;Freq 0.1-400MHz;Po/1dB Comp 2dBm typ;Gain 12dB min;NF 4.0dB typ
48▼	GPD130	29		TO39	AMP;Freq 0.1-400MHz;Po/1dB Comp 17dBm typ;Gain 12dB min;NF 7.0dB typ
49▼	GPD201	29		TO12	AMP;Freq 5-200MHz;Gain Flatness ±1.0dB;Gain 26dB min;Po/1dB Comp 5dBm;NF 3.5dB
50▼	GPD202	29		TO12	AMP;Freq 5-200MHz;Gain Flatness ±1.0dB;Gain 23dB min;Po/1dB Comp 9dBm;NF 5.5dB
51▼	GPD251	29		TO12	AMP;Freq 5-200MHz;Gain Flatness ±1.0dB;Gain 23dB min;Po/1dB Comp 1dBm;NF 4.0dB
52▼	GPD252	29		TO12	AMP;Freq 5-200MHz;Gain Flatness ±1.0dB;Gain 14dB min;Po/1dB Comp 0.0dBm;NF 4.0dB
53▼	GPD310	29		TO39	AMP;Freq 0.1-1000MHz;Po/1dB Comp -1dBm typ;Gain 7dB min;NF 5.0dB typ
54▼	GPD311	29		TO39	AMP;Freq 0.1-1000MHz;Po/1dB Comp 3.0dBm;Gain 11dB min;NF 4.5dB;Gain Flatness ±1.0dB typ
55▼	GPD320	29		TO39	AMP;Freq 0.1-1000MHz;Po/1dB Comp 8.0dBm;Gain 7.0dB min;NF 5.0dB;Flatness ±1.0dB typ
56▼	GPD321	29		TO39	AMP;Freq 0.1-1000MHz;Po/1dB Comp 8.0dBm;Gain 11dB min;NF 4.7dB;Gain Flatness ±1.0dB typ
57▼	GPD330	29		TO39	AMP;Freq 0.1-1000MHz;Po/1dB Comp 16dBm;Gain 6.0dB min;NF 6.5dB;Gain Flatness ±1.0dB typ
58▼	GPD331	29		TO39	AMP;Freq 0.1-1000MHz;Po/1dB Comp 16dBm;Gain 9.0dB min;NF 6.0dB;Gain Flatness ±1.0dB typ
59	LMT4035	29	GA	M1166f	Limited Amplifier;Freq 2-4GHz;Vin 12V;Iin 300mA;Gain 35dB
60	LMT4046	29	GA	M1191	Limited Amplifier;Freq 2-4GHz;Vin 12V;Iin 400mA
61	LMT8035	29	GA	M1166j	Limited Amplifier;Freq 4-8GHz;Vin 12V;Iin 350mA;Gain 35dB
62	LMT8046	29	GA	M1191b	Limited Amplifier;Freq 4-8GHz;Vin 12V;Iin 350mA
63	LMT12037	29	GA	M1166b	Limited Amplifier;Freq 8-12GHz;Vin 12V;Iin 350mA;Gain 35dB
64	LMT12048	29	GA	M1191d	Limited Amplifier;Freq 8-12GHz;Vin 12V;Iin 500mA
65	LMT18038	29	GA	M1166b	Limited Amplifier;Freq 12-18GHz;Vin 12V;Iin 450mA;Gain 35db
66	LMT18049	29	GA	M1191f	Limited Amplifier;Freq 12-18GHz;Vin 12V;Iin 650mA
67	LWT6034	29	GA	M1166j	Limited Amplifier;Freq 2-6GHz;Vin 12V;Iin 300mA;Gain 35dB
68	LWT6048	29	GA	M1191c	Limited Amplifier;Freq 2-6GHz;Vin 12V;Iin 450mA
69	LWT8036	29	GA	M1166j	Limited Amplifier;Freq 2-8GHz;Vin 12V;Iin 300mA;Gain 35dB
70	LWT8049	29	GA	M1191c	Limited Amplifier;Freq 2-8GHz;Vin 12V;Iin 690mA
71	LWT18038	29	GA	M1166b	Limited Amplifier;Freq 8-18GHz;Vin 12V;Iin 280mA;Gain 35db
72	LWT18049	29	GA	M1191e	Limited Amplifier;Freq 8-18GHz;Vin 12V;Iin 680mA
73	MHW2172	29		M1088	Wide Band Amp; 35 Channel KTV Trunk Amp; Freq Range 40-300MHz
74	MRA0610-3	29	Ø	M1099	Micro Amp;Broadband 600-1000MHz;Po 3.0w;Pg 7.8dB at Vcb 28v;Tj 200°C
75	MRA0610-9	29	Ø	M1099	MicroAmp;Broadband 600-1000MHz;Po 9.0w;Pg 7.8 dB at VcB 28v;Tj 200°C
76	MRA0610-18	29	Ø	M1099	MicroAmp;Broadband 600-1000MHz;Po 18.0w;Pg 7.8 dB at VcB 28v;Tj 200°C
77	MRA0610-40	29	Ø	M1099	MicroAmp;Broadband 600-1000MHz;Po 40.0w;Pg 7.0 dB at VcB 28v;Tj 200°C
78	MRA1014-2	29	Ø	M1099	MicroAmp;Broadband 1000-1400MHz;Po 2.0w;Pg 8.2 dB at VcB 28v;Tj 200°C
79	MRA1014-6	29	Ø	M1099	MicroAmp;Broadband 1000-1400MHz;Po 6.0w;Pg 7.4 dB at VcB 28v;Tj 200°c
80	MRA1014-12	29	Ø	M1099	MicroAmp;Broadband 1000-1400MHz;Po 12.0w;Pg 7.8 dB at VcB 28v;Tj 200°C
81	MRA1014-35	29	Ø	M1099	MicroAmp;Broadband 1000-1400MHz;Po 35.0w;Pg 7.0 dB at VcB 28v;Tj 200°C
82	MRA1417-2	29	Ø	M1099	MicroAmp;Broadband 1400-1700MHz;Po 2.0w;Pg 8.0 dB at VcB 28v;Tj 200°C
83	MRA1417-2H	29	Ø	M1099	MicroAmp;Broadband 1400-1700mHz;Po 2.0w;PG 8.0 dB at Vcb 28V;T;200°C
84	MRA1417-6	29	Ø	M1099	MicroAmp;Broadband 1400-1700MHz;Po 6.0w;Pg 7.4 dB at VcB 28v;Tj 200°C
85	MRA1417-6H	29	Ø	M1099	Micro Amp;Broadband 1400-1700MHz;Po 6.0W;Pg 7.4 dB at Vcb 28V;Tj 200°C
86	MRA1417-11	29	Ø	M1099	MicroAmp;Broadband 1400-1700MHz;Po 11.0w;Pg 7.4 dB at VcB 28v;Tj 200°C
87	MRA1417-11H	29	Ø	M1099	Micro Amp;Broadband 1400-1700MHz;Po 11W;Pg 7.4 dB at Vcv 28V;Tj 200°C
88	MRA1417-25	29	Ø	M1099	MicroAmp;Broadband 1400-1700MHz;Po 25.0w;Pg 7.0 dB at VcB 28v;Tj 200°C
89	MRA1417-25H	29	Ø	M1099	Micro Amp;Broadband 14001700MHz;Po 25W;Pg 7.0 dB at Vcb 28V;Tj 200°C
90	MRA1720-2	29	Ø	M1099	MicroAmp;Broadband 1700-2000MHz;Po 2.0W;Pg 7.5dB at Vcb 28V;Tj 200°C
91	MRA1720-5	29	Ø	M1099	MicroAmp;Broadband 1700-2000MHz;Po 5.0W;Pg 6.5dB at Vcb 28V;Tj 200°C
92	MRA1720-9	29	Ø	M1099	MicroAmp;Broadband 1700-2000MHz;Po 9.0W;Pg 6.5dB at Vcb 28V;Tj 200°C
93	MRA1720-20	29	Ø	M1099	MicroAmp;Broadband 1700-2000MHz;Po 20.0W;Pg 6.0dB at Vcb 28V;Tj 200°C
94	MRAL1417-2	29	Ø	†	MicroAmp;Broadband 1.4-1.7GHz;Po 2.0W;Pg 8.0dB at Vcb 22V
95	MRAL1417-6	29	Ø	†	MicroAmp;Broadband 1.4-1.7GHz;Po 6.0W;Pg 7.4dB at Vcb 22V
96	MRAL1417-11	29	Ø	†	MicroAmp;Broadband 1.4-1.7GHz;Po 11.0W;Pg 7.4dB at Vcb 22V
97	MRAL1417-25	29	Ø	†	MicroAmp;Broadband 1.4-1.7GHz;Po 25.0W;Pg 7.0dB at Vcb 22V
98	MRAL1720-2	29	Ø	†	MicroAmp;Broadband 1700-2000MHz;Po 2.0W;Pg 7.5dB at Vcb 22V;T;200°C
99	MRAL1720-5	29	Ø	†	MicroAmp;Broadband 1700-2000MHz;Po 5.0W;Pg 6.5dB at Vcb 22V;T;200°C
100	MRAL1720-9	29	Ø	†	MicroAmp;Broadband 1700-2000MHz;Po 9.0W;Pg 6.5dB at Vcb 22V;T;200°C
101	MRAL1720-20	29	Ø	†	MicroAmp;Broadband 1700-2000MHz;Po 20.0W;Pg 6.0dB at Vcb 22V;T;200°C
102	MRAL2023-1.5	29	Ø	M1099	MicroAmp;Broadband 1000-1400MHz;Po 1.5w;Pg 8.0dB at Vcb 22v;Tj 200°C
103	MRAL2023-1.5H	29	Ø	†	MicroAmp;Broadband 2000-2300MHz;Po 1.5w;Pg 8.0dB at VcB 22V;Tj 200°C
104	MRAL2023-3	29	Ø	M1099	MicroAmp;Broadband 1000-1400MHz;Po 3.0W;Pg 8.0dB at Vcb 22v;Tj 200°C
105	MRAL2023-3H	29	Ø	†	Micro Amp;Broadband 2000-2300MHz;Po 3.0W;PG 8.0db at Vcb 22V;Tj 200°C
106	MRAL2023-6	29	Ø	M1099	MicroAmp;Broadband 1000-1400MHz;Po 6.0W;Pg 7.0dB at Vcb 22V;Tj 200°C
107	MRAL2023-6H	29	Ø	†	Micro Amp;Broadband 2000-2300MHz;Po 6.0W;PG 7.0db at Vcb 22V;Tj 200°C
108	MRAL2023-12	29	Ø	M1099	Micro Amp;Broadband 1000-1400 MHz;Po 12.0W;Pg 7.0dBat VcB 22V;Tj 200°C
109	MRAL2023-12H	29	Ø	†	Micro Amp;Broadband 2000-2300MHz;Po 12.0W;PG 7.0dB at Vcb 22V;Tj 200°C
110	MRAL2327-3	29	Ø	†	Micor Amp;Broadband 2.3-2.7GHz 3.0W;PG 6.5dB at Vcc 22V

SYMBOLS AND CODES EXPLAINED IN INTERPRETER

8. MISCELLANEOUS DEVICES

IN ORDER OF (1) USE and (2) TYPE No.

LINE No.	[2] TYPE No.	[1] USE	DESCRIPTION MAT.	DWG. No.	TECHNICAL DATA
1	MRAL2327-6	29	Ø	†	Micro Amp;Broadband 2.3-2.7GHz 6.0W;PG 6.5dB at Vcc 22V
2▼	UTM1053	29		C16ah	AMP;Freq 5-1000MHz;Gain Flatness ±2.0dB;Gain 25dB min;Po/1dB Comp 4.0dBm min;NF 9.0dB max
3▼	UTM1055(A)	29		C16ah	AMP;Freq 10-1000MHz;Gain Flatness ±0.7dB;Gain 15dB min;Po/1dB Comp 13.5dBm min;NF 8.0dB max
4▼	UTM1056(A)	29		C16ah	AMP;Freq 10-1000MHz;Gain Flatness ±0.7dB;Gain 25dB min;Po/1dB Comp 10.5dBm min;NF 7.0dB max
5▼	UTM1057(A)	29		C16ah	AMP;Freq 10-1000MHz;Gain Flatness ±0.7dB;Gain 26dB min;Po/1dB Comp 12.5dBm min;NF 7.0dB max
6▼	UTO221	29		C16ah	AMP;Freq 10-200MHz;Gain Flatness ±1.0dB;Gain 26dB min;Po/1dB Comp 13dBm min;NF 2.7dB max
7▼	UTO222	29		C16ag	AMP;Freq 20-200MHz;Gain Flatness ±1.0dB;Gain 27dB min;Po/1dB Comp 17dBm min;NF 4.0dB max
8▼	UTO1021	29		C16ag	AMP;Freq 5-1000MHz;Gain Flatness ±1.0dB;Gain 21dB min;Po/1dB Comp 11dBm min;NF 5.0dB max
9▼	UTO2024	29		C16ah	AMP;Freq 2-2000MHz;Gain Flatness ±1.0dB;Gain 14dB min;Po/1dB Comp 4.0dBm min:NF 6.0dB max
10	DN0700A	30			Sw/Attenuating Diode;VB 70Vmin;Cj-10 .05pf max;Rs 2.55Ω at 100mA
11	DN1000A	30			Sw/Attenuating Diode;VB 100Vmin;Cj-10 .05pf max;Rs 2.0Ω at 100mA
12	DP1000A	30			Sw/Attenuating diode;VB 100V min;Cj -10 .05pf max;RS 2.0Ω at 100mA
13♦	A921	31		M1131a	Harmonic Mixer;L.O. Pwr 10mW;RF Range sel to obtain X2 or X3 mixing;L.O. Range 26.5-40.0GHz
14♦	B921	31		M1131a	Harmonic Mixer;L.O. Pwr 10mW;RF Range sel to obtain X2 or X3 mixing;L.O. Range 33.0-50.0GHz
15♦	E921	31		M1131b	Harmonic Mixer;L.O. Pwr 10mW;RF Range sel to obtain X2 or X3 mixing;L.O. Range 60.0-90.0GHz
16♦	F921	31		M1131c	Harmonic Mixer;L.O. Pwr 10mW;RF Range sel to obtain X2 or X3 mixing;L.O. Range 90.0-140.0GHz
17♦	K920A	31		M1130h	Harmonic Mixer:L.O. Frequency Band K;Signal Frequency Band A
18♦	K920B	31		M1130i	Harmonic Mixer:L.O. Frequency Band K;Signal Frequency Band B
19♦	K920E	31		M1130m	Harmonic Mixer:L.O. Frequency Band K;Signal Frequency Band E
20♦	K920F	31		M1130o	Harmonic Mixer:L.O. Frequency Band K;Signal Frequency Band F
21♦	K920U	31		M1130j	Harmonic Mixer:L.O. Frequency Band K;Signal Frequency Band U
22♦	K920V	31		M1130k	Harmonic Mixer:L.O. Frequency Band K;Signal Frequency Band V
23♦	K920W	31		M1130n	Harmonic Mixer:L.O. Frequency Band K;Signal Frequency Band W
24♦	Ku920A	31		M1130a	Harmonic Mixer:L.O. Frequency Band Ku;Signal Frequency Band A
25♦	Ku920B	31		M1130b	Harmonic Mixer:L.O. Frequency Band Ku;Signal Frequency Band B
26♦	Ku920E	31		M1130e	Harmonic Mixer:L.O. Frequency Band Ku;Signal Frequency Band E
27♦	Ku920F	31		M1130g	Harmonic Mixer:L.O. Frequency Band Ku;Signal Frequency Band F
28♦	Ku920U	31		M1130c	Harmonic Mixer:L.O. Frequency Band Ku;Signal Frequency Band U
29♦	Ku920V	31		M1130d	Harmonic Mixer:L.O. Frequency Band Ku;Signal Frequency Band V
30♦	Ku920W	31		M1130f	Harmonic Mixer:L.O. Frequency Band Ku;Signal Frequency Band W
31▼	MA40278H	31	Si ♦	W312	Schottky Barrier Beam Lead Anti-Parallel Pairs;Hi Barrier;Ku Band;Max Cap .3pf w/1MHz Bridge
32▼	MA40278L	31	Si ♦	W312	Schottky Barrier Beam Lead Anti-Parallel Pairs;Low Barrier;Ku Band;Max Cap .3pf w/1MHz Brdge
33▼	MA40279H	31	Si ♦	W312	Schottky Barrier Beam Lead Anti-Parallel Pairs;Hi Barrier;S-X Band;Max Cap .6pf w/1MHz Brdge
34▼	MA40279L	31	Si ♦	W312	Schottky Barrier Beam Lead Anti-Parallel Pairs;Low Barrier;S-x Band;Max Cap .6pf w/1MHz Brdg
35▼	MA40279M	31	Si ♦	W312	Schottky Barrier Beam Lead Anti-Parallel Pairs;Med Barrier;S-X Band;Max Cap .6pf w/1MHz Brdg
36	TVO8370	31		TO8	Varactor-Tuned Osc.;3.6-4.2GHz;10Mw Output into 50Ω;1-14V Tuning Voltage;15VDCinput;50mAMax
37♦	V921	31		M1131b	Harmonic Mixer;L.O. Pwr 10mW;RF Range sel to obtain X2 or X3 mixing;L.O. Range 50.0-75.0GHz
38♦	W921	31		M1131b	Harmonic Mixer;L.O. Pwr 10mW;RF Range sel to obtain X2 or X3 mixing;L.O. Range 75.0-110.0GHz
39▼	X922A	31		M1132	Millimerter Wave Broadband Harmonic Mixer;RF Freq 26.5-40GHz;Conversion Loss 12dB typ
40▼	X922B	31		M1132	Millimeter Wave Broadband Harmonic Mixer;RF Freq 33-50GHz;Conversion Loss 15dB typ
41▼	X922E	31		M1132	Millimeter Wave Broadband Harmonic Mixer;RF Freq 60-90GHz;Conversion Loss 22dB typ
42♦	X922F	31		M1132	Millimeter Wave Brodband Harmonic Mixer;RF Freq 90-140GHz;Conversion Loss 40dB typ
43▼	X922U	31		M1132	Millimeter Wave Broadband Harmonic Mixer;RF Freq 40-60GHz;Conversion Loss 18dB typ
44▼	X922V	31		M1132	Millimeter Wave Broadband Harmonic Mixer;RF Freq 50-75GHz;Conversion Loss 20dB typ
45▼	X922W	31		M1132	Millimeter Wave Broadband Harmonic Mixer;RF Freq 75-110GHz;Conversion Loss 30dB typ
46	DBX72H	32		M1078	Microwave Mixer;2.0-7.0GHzRF FLO;IF DC-1.3GHz;17dBm Min.LO Drive;25dBm Intercept Point
47	DBX72M	32		M1078	Microwave Mixer;2.0-7, OGHzRF/FLO;IF DC-1.3GHz;10dBm Min.LO Drive;20dBmInterecept Point
48	DBX72S	32		M1078	Microwave Mixer;2.0-7, OGHzRF/FLO;IF DC-1.3GHz;21dBm Min.LO Drive;30dBmIntercept Point
49	DBX158H	32		M1078	Microwave Mixer;8.0-15.0GHzRF/FLO;IF DC-1.0GHz; 17dBm Min.LO Drive;25dBmIntercept Point
50	DBX158S	32		M1078	Microwave Mixer;8.0-15.0GHzRF/FLO;IF DC-1.0GHz; 21dBm Min.LO Drive;30dBmIntercept Point
51	DBX167H	32		M1078	Microwave Mixer;7.0-16.0GHzRF/FLO;IF DC-4.0GHz; 17dBm Min.LO Drive;25dBmIntercept Point
52	DBX167S	32		M1078	Microwave Mixer;7.0-16.0GHzRF/FLO;IF DC-4.0GHz;221dBm Min.LO Drive;30dBmIntercept Point
53	DBX184H	32		M1078	Microwave Mixer;4.0-18.0GHzRF/FLO;IF DC-4.0GHz;17dBm Min.LO Drive;25dBm Intercept Point
54	DBX184HS	32		M1078	Microwave Mixer;4.0-18.0GHzRF/FLO;IF DC-1.5GHz; 17dBm Min.LO Drive;25dBmIntercept Pointz
55	DBX184L	32		M1078	Microwave Mixer;4.0-18.0GHzRF/FLO;IF DC-4.0GHz;7dBm Min.LO Drive;15dBm Intercept Point
56	DBX184M	32		M1078	Microwave Mixer;4.0-18.0GHzRF/FLO;IF DC-4.0GHz;10dBm Min.LO Drive;20dBm Intercept Point
57	DBX184S	32		M1078	Microwave Mixer;4.0-18.0GHzRF/FLO;IF DC-4.0GHz;21dBm Min.LO Drive;30dBm Intercept Point
58	DBX185H	32		M1078	Microwave Mixer;5.0-18.0GHzRF/FLO;IF DC-6.0GHz;17dBm Min.LO Drive;25dBm Intercept Point
59	DBX185S	32		M1078	Microwave Mixer;5.0-18.0GHzRF/FLO;IF DC-6.0GHz;21dBm Min.LO Drive;30dBm Intercept Point
60	DBX186H	32		M1078	Microwave Mixer;6.0-18.0GHzRF/FLO;IF DC-7.0GHz;17dBm Min.LO Drive;25dBm Intercept Point
61	DBX186L	32		M1078	Microwave Mixer;6.0-18.0GHzRF/FLO;IF DC-7.0GHz;7dBm Min.LO Drive;15dBm Intercept Point
62	DBX186M	32		M1078	Microwave Mixer;6.0-18.0GHzRF/FLO;IF DC-7.0GHz;10dBm Min.LO Drive;20dBm Intercept Point
63	DBX186S	32		M1078	Microwave Mixer;6.0-18.0GHzRF/FLO;IF DC-7.0GHz;21dBm Min.LO Drive;30dBm Intercept Point
64	DBX824H	32		M1078	Microwave Mixer;2.0-8.0GHzRF/FLO;IF.005-4.0GHz;13dBm Min.LO Drive;22dBm Intercept Point
65	DBX824M	32		M1078	Microwave Mixer;2.0-8.0GHzRF/FLO;IF.005-4.0GHz;10dBm Min.LO Drive;20dBm Intercept Point
66	DBX824S	32		M1078	Microwave Mixer;2.0-8.0GHzRF/FLO;IF.005-4.0GHz;21dBm Min.LO Drive;27dBm Intercept Point
67	DBX824SS	32		M1078	Microwave Mixer;2.0-8.0GHzRF/FLO;IF.005-4.0GHz;23dBm Min.LO Drive;22dBm Intercept Point
68	DBX1221H	32		M1078	Microwave Mixer;2.0-12.0GHzRF/FLO;IF DC-1.3GHz; 17dBm Min.LO Drive;25dBmIntercept Point
69	DBX1221L	32		M1078	Microwave Mixer;2.0-12.0GHzRF/FLO;IF DC-1.3GHz;7dBm Min.LO Drive;15dBm Intercept Point
70	DBX1221M	32		M1078	Microwave Mixer;2.0-12.0GHzRF/FLO;IF DC-1.3GHz; 10dBm Min.LO Drive;20dBmIntercept Point
71	DBX1221S	32		M1078	Microwave Mixer;2.0-12.0GHzRF/FLO;IF DC-1.3GHz; 21dBm Min.LO Drive;30dBmIntercept Point
72	DBX1824H	32		M1078	Microwave Mixer;2.0-18.0GHzRF/FLO;IF .005-4.0GHz;13dBm Min.LO Drive;22dBm Intercept Point
73	DBX1824M	32		M1078	Microwave Mixer;2.0-18.0GHzRF/FLO;IF .005-4.0GHz;10dBm Min.LO Drive;20dBm Intercept Point
74	DBX18212H	32		M1078	Microwave Mixer;2.0-18.0GHzRF;2.0-26.0GHzLO;IF1-12GHz;13dBm Min.LO Drive;22dBm Intercept Pt.
75	DBX18212M	32		M1078	Microwave Mixer;2.0-18.0GHzRF;2.0-26.0GHzLO;IF1-12GHz;10dBm Min.LO Drive;20dBm Intercept Pt.
76	DBY72H	32		M1145	Microwave Mixer;2.0-7.0 GHzRF/FLO;IF DC-1.3GHz; 17dBm Min.LO Drive;25dBmIntercept Point
77	DBY72L	32		M1145	Microwave Mixer;2.0-7.0 GHzRF/FLO;IF DC-1.3GHz; 7dBm Min.LO Drive;15dBm Intercept Point
78	DBY72M	32		M1145	Microwave Mixer;2.0-7.0 GHzRF/FLO;IF DC-1.3GHz; 10dBm Min.LO Drive;20dBmIntercept Point
79	DBY72S	32		M1145	Microwave Mixer;2.0-7.0 GHzRF/FLO;IF DC-1.3GHz;221dBm Min.LO Drive;30dBmIntercept Pointt
80	DBY158H	32		M1145	Microwave Mixer;8.0-15.0GHzRF/FLO;IF DC-1.3GHz; 17dBm Min.LO Drive;25dBmIntercept Point
81	DBY158L	32		M1145	Microwave Mixer;8.0-15.0GHzRF/FLO;IF DC-1.3GHz; 7dBm Min.LO Drive;15dBm Intercept Point
82	DBY158M	32		M1145	Microwave Mixer;8.0-15.0GHzRF/FLO;IF DC-1.3GHz; 10dBm Min.LO Drive;20dBmIntercept Point
83	DBY158S	32		M1145	Microwave Mixer;8.0-15.0GHzRF/FLO;IF DC-1.3GHz;21dBm Min.LO Drive;30dBm Intercept Point
84	DBY167H	32		M1145	Microwave Mixer;7.0-16.0GHzRF/FLO;IF DC-4.0GHz;17dBm Min.LO Drive;25dBm Intercept Point
85	DBY167L	32		M1145	Microwave Mixer;7.0-16.0GHzRF/FLO;IF DC-4.0GHz;7dBm Min.LO Drive;15dBm Intercept Point
86	DBY167M	32		M1145	Microwave Mixer;7.0-16.0GHzRF/FLO;IF DC-4.0GHz;10dBm Min.LO Drive;20dBm Intercept Point
87	DBY167S	32		M1145	Microwave Mixer;7.0-16.0GHzRF/FLO;IF DC-4.0GHz;21dBm Min.LO Drive;30dBm Intercept Point
88	DBY184H	32		M1145	Microwave Mixer;4.0-18.0GHzRF/FLO;IF DC-4.0GHz;17dBm Min.LO Drive;25dBm Intercept Point
89	DBY184HS	32		M1145	Microwave Mixer;4.0-18.0GHzRF/FLO;IF DC-1.5GHz;17dBm Min.LO Drive;25dBm Intercept Point
90	DBY184L	32		M1145	Microwave Mixer;4.0-18.0GHzRF/FLO;IF DC-4.0GHz;7dBm Min.LO Drive;15dBm Intercept Point
91	DBY184LS	32		M1145	Microwave Mixer;4.0-18.0GHzRF/FLO;IF DC-1.5GHz;7dBm Min.LO Drive;15dBm Intercept Point
92	DBY184M	32		M1145	Microwave Mixer;4.0-18.0GHzRF/FLO;IF DC-4.0GHz;10dBm Min.LO Drive;20dBm Intercept Point
93	DBY184MS	32		M1145	Microwave Mixer;4.0-18.0GHzRF/FLO;IF DC-1.5GHz;10dBm Min.LO Drive;20dBm Intercept Point
94	DBY184S	32		M1145	Microwave Mixer;4.0-18.0GHzRF/FLO;IF DC-4.0GHz;21dBm Min.LO Drive;30dBm Intercept Point
95	DBY185H	32		M1145	Microwave Mixer;5.0-18.0GHzRF/FLO;IF DC-6.0GHz;17dBm Min.LO Drive;25dBm Intercept Point
96	DBY185L	32		M1145	Microwave Mixer;5.0-18.0GHzRF/FLO;IF DC-6.0GHz;7dBm Min.LO Drive;15dBm Intercept Point
97	DBY185M	32		M1145	Microwave Mixer;5.0-18.0GHzRF/FLO;IF DC-6.0GHz;10dBm Min.LO Drive;20dBm Intercept Point
98	DBY185S	32		M1145	Microwave Mixer;5.0-18.0GHzRF/FLO;IF DC-6.0GHz;21dBm Min.LO Drive;30dBm Intercept Point
99	DBY186H	32		M1145	Microwave Mixer;6.0-18.0GHzRF/FLO;IF DC-7.0GHz;17dBM Min.LO Drive;25dBm Intercept Point
100	DBY186L	32		M1145	Microwave Mixer;6.0-18.0GHzRF/FLO;IF DC-7.0GHz;7dBm Min.LO Drive;15dBm Intercept Point
101	DBY186M	32		M1145	Microwave Mixer;6.0-18.0GHzRF/FLO;IF DC-7.0GHz;10dBm Min.LO Drive;20dBm Intercept Point
102	DBY186S	32		M1145	Microwave Mixer;6.0-18.0GHzRF/FLO;IF DC-7.0GHz;21dBm Min.LO Drive;30dBm Intercept Point
103	DBY1221H	32		M1145	Microwave Mixer;2.0-12.0GHzRF/FLO;IF DC-1.3GHz; 17dBm MiN.LO Drive;25dBmIntercept Point
104	DBY1221L	32		M1145	Microwave Mixer;2.0-12.0GHzRF/FLO;IF DC-1.3GHz; 7dBm Min.LO Drive;15dBm Intercept Point
105	DBY1221M	32		M1145	Microwave Mixer;2.0-12.0GHzRF/FLO;IF DC-1.3GHz; 10dBm Min.LO Drive;20dBmIntercept Point
106	DBY1221S	32		M1145	Microwave Mixer;2.0-12.0GHzRF/FLO;IF DC-1.3GHz; 21dBm Min.LO Drive;30dBmIntercept Point
107	DBY1824H	32		M1145	Microwave Mixer;2.0-18.0GHzRF/FLO;IF.005-4.0GHz;13dBm Min.LO Drive;22dBm Intercept Point
108	DBY1824M	32		M1145	Microwave Mixer;2.0-18.0GHzRF/FLO;IF.005-4.0GHz;10dBm Min.LO Drive;20dBm Intercept Point
109	DBY18212M	32		M1145	Microwave Mixer;2.0-18.0GHzRF;2.0-26.0GHzLO;IF1-12GHz;10dBm Min.LO Drive;20dBm Intercept Pt.
110	UMX4220	32		TO8M	Microwave Mixer;3.7-4.2GHzRF;2.4-5.5GHzLO;IF Port Range DC-1.3GHz;6dB SSB Conv.Loss;NF 6dB

8. MISCELLANEOUS DEVICES

IN ORDER OF (1) USE and (2) TYPE No.

LINE No.	2 TYPE No.	1 USE	DESCRIPTION MAT.	DWG. No.	TECHNICAL DATA
1▼	CME1207	33		M1238	85-95GHz Freq range;±100MHz Tuning:6.0V max Oper;5.0mW Min Power Output;1.2A Max Oper Cur
2▼	CME1210	33		M1238	85-95GHz Freq range;±100MHz Tuning:6.0V max Oper;10mW Min Power Output;1.2A Max Oper Current
3▼	CME1212	33		M1238	85-95GHz Freq range;±100MHz Tuning:6.0V max Oper;15mW Min Power Output;1.5A Max Oper Current
4▼	CME1213	33		M1238	85-95GHz Freq range;±100MHz Tuning:6.0V max Oper;20mW Min Power Output;1.5A Max Oper Current
5▼	CMW907	33		M1239	54-61GHz Freq range;±2GHz Elec Tuning;6.0V max Oper;5.0mW Min Power Out;750mA Max Oper Cur
6▼	CMW910	33		M1239	54-61GHz Freq range;±2GHz Elec Tuning;6.0V max Oper;10mW Min Power Out;900mA Max Oper Cur
7♦	HTO2000	33		C16ag	Hyperabrupt Varactor-Tuned Osc.;2.0 to 4.0GHz;10mW min;max tuning voltage 20
8♦	HTO2600	33	Si	C16ag	Osc Varactor-Tuned; F Range 2.6-5.2GHz
9♦	HTO4000	33	Si	C16ag	Osc Varactor-Tuned; F Range 4.0-8.0GHz
10▼	HTO7500	33		C16ag	Osc Varactor-Tuned;Freq 7.5-11.0GHz;Tuning Volt 20Vdc max;Inp Cap 50pF;Po ±2.5dB max
11♦	MTO8060	33		C16ag	Varactor-Tuned Osc.;600-900MHz;10mW Output into 50Ω;3-26V Tuning Voltage;15VDCinput;50mAMax
12♦	MTO8090	33		C16ag	Varactor-Tuned Osc.;.9-1.5GHz;10mW Output into 50Ω;2-30V Tuning Voltage;15VDCinput;50mAMax
13♦	MTO8240	33		C16ag	Varactor-Tuned Osc.;2.4-3.6GHz;10mW Output into 50Ω;2-30V Tuning Voltage;15VDCinput;50mAMax
14♦	MTO8360	33		C16ag	Varactor-Tuned Osc.;3.6-4.3GHz;10mW Output into 50Ω;8-24V Tuning Voltage;15VDCinput;50mAMax
15	VTD600	33	Ø	M1054	Osc Var-Tuned w/Buf Amp;F range .60-1.0GHz;In Cap 180pF;Povari 1.5dB
16	VTD2000	33	Ø	M1054	Osc Var-Tuned w/Buf Amp;F range 2.0-2.8GHz;In Cap 45pF;Povari 2.0dB
17	VTD2800	33	Ø	M1054	Osc Var-Tuned w/Buf Amp;F range 2.8-3.8GHz;In Cap 45pF;Povari 2.0dB
18	VTD3800	33	Ø	M1054	Osc Var-Tuned w/Buf Amp;F range 3.8-4.9GHz;In Cap 45pF;Povari 2.0dB
19	VTD4900	33	Ø	M1054	Osc Var-Tuned w/Buf Amp;FRange 4.9-6.1GHz;In Cap 45pF;Povari 2.0dB
20♦	VTO8040	33		C16ag	Varactor-Tuned OSC.;400-600MHz;20mW output into 50Ω;3-40V Tuning Voltage;15VDL input;50mAMax
21♦	VTO8060	33	Ø	C16ag	Osc Varactor-Tuned;F Range 600-1000MHz;In Cap 180pF;Povari ±1.5dB
22♦	VTO8090	33	Ø	C16ag	Osc Varactor-Tuned;F Range 900-1600MHz;In Cap 180pF;Povari ±1.5dB
23♦	VTO8150	33	Ø	C16ag	Osc Varactor-Tuned;F Range 1500-2500MHz;In Cap 90pF;Povari ±1.5dB
24♦	VTO8240	33	Ø	C16ag	Osc Varactor-Tuned;F Range 2400-3700MHz;In Cap 45pF;Povari ±1.5dB
25♦	VTO8360	33	Ø	C16ag	Osc Varactor-Tuned;F Range 3600-4300MHz;In Cap 45pF;Povari ±1.5dB
26▼	VTO8370	33		C16ag	Osc Varactor-Tuned;Freq 3600-4200MHz;Inp Cap 45pF;Po ±0.5dB typ
27♦	VTO8420	33	Ø	C16ag	Osc Varactor-Tuned;F Range 4200-5000MHz;In Cap 45pF;Povari ±1.5dB
28♦	VTO8490	33	Ø	C16ag	Osc Varactor-Tuned;F Range 4900-5900MHz;In Cap 45pF;Povari ±1.5dB
29♦	VTO8580	33	Ø	C16ag	Osc Varactor-Tuned;F Range 5800-6600MHz;In Cap 45pF;Povari ±1.5dB
30♦	VTO8850	33		C16ag	Varactor-Tuned Osc.;8.5-9.6GHz;10mW Output into 50Ω;13-30V Tuning Voltage;15VDCinput;.1AMax
31	MO1706A1	34		M951	SPDT Diode Switch Module;Freq .5-1GHz;Ins Loss .50dBmax;Isol 60dBmin;VSWR 1.5max
32	MO1706A3	34		M951	SPDT Diode Switch Module;Freq 1-2GHz;Ins Loss .70dBmax;Isol 60dBmin;VSWR 1.5max
33	MO1706A4	34		M951	SPDT Diode Switch Module;Freq 2-4GHz;Ins Loss .70dBmax;Isol 60dBmin;VSWR 1.6max
34	MO1706B	34		M951	SPDT Diode Switch Module;Freq 4-8GHz;Ins Loss 1.0dBmax;Isol 60dBmin;VSWR 1.7max
35	MO1706C	34		M951	SPDT Diode Switch Module;Freq 8-12.4GHz;Ins Loss 1.5dBmax;Isol 55dBmin;VSWR 1.8max
36	MO1706F	34		M951	SPDT Diode Switch Module;Freq 1-12.4GHz;Ins Loss 1.5dBmax;Isol 55dBmin;VSWR 1.8max
37	MO1706H3	34		M951	SPDT Diode Switch Module;Freq 8-18GHz;Ins Loss 2.0dBmax;Isol 55dBmin;VSWR 2.0max
38	MO1706H4	34		M951	SPDT Diode Switch Module;Freq 12.4-18GHz;Ins Loss 2.0dBmax;Isol 55dBmin;VSWR 2.0max
39	MO1707A1	34		M951	SPDT Diode Switch Module;Freq .5-1GHz;Ins Loss .50dBmax;Isol 60dBmin;VSWR 1.5max
40	MO1707A3	34		M951	SPDT Diode Switch Module;Freq 1-2GHz;Ins Loss .70dBmax;Isol 60dBmin;VSWR 1.5max
41	MO1707A4	34		M951	SPDT Diode Switch Module;Freq 2-4GHz;Ins Loss .70dBmax;Isol 60dBmin;VSWR 1.6max
42	MO1707B	34		M951	SPDT Diode Switch Module;Freq 4-8GHz;Ins Loss 1.0dBmax;Isol 60dBmin;VSWR 1.7max
43	MO1707C	34		M951	SPDT Diode Switch Module;Freq 8-12.4GHz;Ins Loss 1.5dBmax;Isol 55dBmin;VSWR 1.8max
44	MO1707F	34		M951	SPDT Diode Switch Module;Freq 1-12.4GHz;Ins Loss 1.5dBmax;Isol 55dBmin;VSWR 1.8max
45	MO1707H3	34		M951	SPDT Diode Switch Module;Freq 8-18GHz;Ins Loss 2.0dBmax;Isol 55dBmin;VSWR 2.0max
46	MO1707H4	34		M951	SPDT Diode Switch Module;Freq 12.4-18GHz;Ins Loss 2.0dBmax;Isol 55dBmin;VSWR 2.0max
47	MO1708A1	34		M951	SPDT Diode Switch Module;Freq .5-1GHz;Ins Loss .50dBmax;Isol 55dBmin;VSWR 1.5max
48	MO1708A3	34		M951	SPDT Diode Switch Module;Freq 1-2GHz;Ins Loss .65dBmax;Isol 55dBmin;VSWR 1.5max
49	MO1708A4	34		M951	SPDT Diode Switch Module;Freq 2-4GHz;Ins Loss .70dBmax;Isol 55dBmin;VSWR 1.6max
50	MO1708B	34		M951	SPDT Diode Switch Module;Freq 4-8GHz;Ins Loss .90dBmax;Isol 55dBmin;VSWR 1.6max
51	MO1708C	34		M951	SPDT Diode Switch Module;Freq 8-12.4GHz;Ins Loss 1.2dBmax;Isol 55dBmin;VSWR 1.7max
52	MO1708F	34		M951	SPDT Diode Switch Module;Freq 1-12.4GHz;Ins Loss 1.2dBmax;Isol 55dBmin;VSWR 1.7max
53	MO1708H3	34		M951	SPDT Diode Switch Module;Freq 8-18GHz;Ins Loss 1.7dBmax;Isol 50dBmin;VSWR 2.0max
54	MO1708H4	34		M951	SPDT Diode Switch Module;Freq 12.4-18GHz;Ins Loss 1.7dBmax;Isol 50dBmin;VSWR 2.0max
55	MO1709A1	34		M951	SPDT Diode Switch Module;Freq .5-1GHz;Ins Loss .50dBmax;Isol 55dBmin;VSWR 1.5max
56	MO1709A3	34		M951	SPDT Diode Switch Module;Freq 1-2GHz;Ins Loss .65dBmax;Isol 55dBmin;VSWR 1.5max
57	MO1709A4	34		M951	SPDT Diode Switch Module;Freq 2-4GHz;Ins Loss .70dBmax;Isol 55dBmin;VSWR 1.6max
58	MO1709B	34		M951	SPDT Diode Switch Module;Freq 4-8GHz;Ins Loss .90dBmax;Isol 55dBmin;VSWR 1.6max
59	MO1709C	34		M951	SPDT Diode Switch Module;Freq 8-12.4GHz;Ins Loss 1.2dBmax;Isol 55dBmin;VSWR 1.7max
60	MO1709F	34		M951	SPDT Diode Switch Module;Freq 1-12.4GHz;Ins Loss 1.2dBmax;Isol 55dBmin;VSWR 1.7max
61	MO1709H3	34		M951	SPDT Diode Switch Module;Freq 8-18GHz;Ins Loss 1.7dBmax;Isol 50dBmin;VSWR 2.0max
62	MO1709H4	34		M951	SPDT Diode Switch Module;Freq 12.4-18GHz;Ins Loss 1.7dBmax;Isol 50dBmin;VSWR 2.0max
63	MO1710A	34	§	M914	SPST Diode Module;Freq .5-4GHz;Ins Loss .50dBmax;Isol 40dBmin;VSWR 1.5max
64	MO1710B2	34		M914	SPST Diode Module;Freq 2-8GHz;Ins Loss .80dBmax;Isol 50dBmin;VSWR 1.7max
65	MO1710E	34		M914	SPST Diode Module;Freq 4-12.4GHz;Ins Loss 1.1dBmax;Isol 50dBmin;VSWR 1.8max
66	MO1710H3	34		M914	SPST Diode Module;Freq 8-18GHz;Ins Loss 1.4dBmax;Isol 45dBmin;VSWR 1.8max
67	MO1710H	34		M914	SPST Diode Module;Freq 2-18GHz;Ins Loss .90dBmax;Isol 45dBmin;VSWR 1.9max
68	MO1712A	34		M914	SPST Diode Module;Freq .5-4GHz;Ins Loss .50dBmax;Isol 35dBmin;VSWR 1.5max
69	MO1712B2	34		M914	SPST Diode Module;Freq 2-8GHz;Ins Loss .80dBmax;Isol 45dBmin;VSWR 1.7max
70	MO1712E	34		M914	SPST Diode Module;Freq 4-12.4GHz;Ins Loss 1.0dBmax;Isol 45dBmin;VSWR 1.8max
71	MO1712H3	34		M914	SPST Diode Module;Freq 8-18GHz;Ins Loss 1.4dBmax;Isol 45dBmin;VSWR 1.8max
72	MO1712H	34		M914	SPST Diode Module;Freq 2-18GHz;Ins Loss .90dBmax;Isol 45dBmin;VSWR 1.9max
73	MO1713A	34		M914	SPST Diode Module;Freq .5-4GHz;Ins Loss .50dBmax;Isol 35dBmin;VSWR 1.5max
74	MO1713B2	34		M914	SPST Diode Module;Freq 2-8GHz;Ins Loss .80dBmax;Isol 45dBmin;VSWR 1.7max
75	MO1713E	34		M914	SPST Diode Module;Freq 4-12.4GHz;Ins Loss 1.0dBmax;Isol 45dBmin;VSWR 1.8max
76	MO1713H3	34		M914	SPST Diode Module;Freq 8-18GHz;Ins Loss 1.2dBmax;Isol 45dBmin;VSWR 1.8max
77	MO1713H	34		M914	SPST Diode Module;Freq 2-18GHz;Ins Loss .90dBmax;Isol 45dBmin;VSWR 1.9max
78	MO1720A	34		M914a	SPST Diode Module;Freq .5-4GHz;Ins Loss .70dBmax;Isol 55dBmin;VSWR 1.6max
79	MO1720B2	34		M914a	SPST Diode Module;Freq 2-8GHz;Ins Loss .90dBmax;Isol 70dBmin;VSWR 1.8max
80	MO1720E	34		M914a	SPST Diode Module;Freq 4-12.4GHz;Ins Loss 1.5dBmax;Isol 70dBmin;VSWR 1.9max
81	MO1720H3	34		M914a	SPST Diode Module;Freq 8-18GHz;Ins Loss 1.8dBmax;Isol 70dBmin;VSWR 2.0max
82	MO1720H	34		M914a	SPST Diode Module;Freq 2-18GHz;Ins Loss 1.2dBmax;Isol 70dBmin;VSWR 2.0max
83	MO1722A	34		M914a	SPST Diode Module;Freq .5-4GHz;Ins Loss .70dBmax;Isol 55dBmin;VSWR 1.6max
84	MO1722B2	34		M914a	SPST Diode Module;Freq 2-8GHz;Ins Loss .90dBmax;Isol 70dBmin;VSWR 1.8max
85	MO1722E	34		M914a	SPST Diode Module;Freq 4-12.4GHz;Ins Loss 1.4dBmax;Isol 70dBmin;VSWR 1.9max
86	MO1722H3	34		M914a	SPST Diode Module;Freq 8-18GHz;Ins Loss 1.8dBmax;Isol 70dBmin;VSWR 2.0max
87	MO1722H	34		M914a	SPST Diode Module;Freq 2-18GHz;Ins Loss 1.2dBmax;Isol 70dBmin;VSWR 2.0max
88	MO1723A	34		M914a	SPST Diode Module;Freq .5-4GHz;Ins Loss .60dBmax;Isol 55dBmin;VSWR 1.6max
89	MO1723B2	34		M914a	SPST Diode Module;Freq 2-8GHZ;Ins Loss .90dBmax;Isol 65dBmin;VSWR 1.8max
90	MO1723E	34		M914a	SPST Diode Module;Freq 4-12.4GHz;Ins Loss 1.2dBmax;Isol 65dBmin;VSWR 1.9max
91	MO1723H3	34		M914a	SPST Diode Module;Freq 8-18GHz;Ins Loss 1.7dBmax;Isol 65dBmin;VSWR 2.0max
92	MO1723H	34		M914a	SPST Diode Module;Freq 2-18GHz;Ins Loss 1.2dBmax;Isol 65dBmin;VSWR 2.0max
93	MO1730A	34		M951	SPST Diode Module;Freq .5-4GHz;Ins Loss 1.0dBmax;Isol 50dBmin;VSWR 1.7max
94	MO1730B2	34		M951	SPST Diode Module;Freq 2-8GHz;Ins Loss 1.5dBmax;Isol 55dBmin;VSWR 1.9max
95	MO1730E	34		M951	SPST Diode Module;Freq 4-12.4GHz;Ins Loss 1.8dBmax;Isol 55dBmin;VSWR 2.0max
96	MO1730H3	34		M951	SPST Diode Module;Freq 8-18GHz;Ins Loss 2.7dBmax;Isol 50dBmin;VSWR 1.9max
97	MO1732A	34		M951	SPST Diode Module;Freq .5-4GHz;Ins Loss 1.0dBmax;Isol 45dBmin;VSWR 1.7max
98	MO1732B2	34		M951	SPST Diode Module;Freq 2-8GHz;Ins Loss 1.5dBmax;Isol 55dBmin;VSWR 1.9max
99	MO1732E	34		M951	SPST Diode Module;Freq 4-12.4GHz;Ins Loss 1.8dBmax;Isol 50dBmin;VSWR 2.0max
100	MO1732H3	34		M951	SPST Diode Module;Freq 8-18GHz;Ins Loss 2.7dBmax;Isol 50dBmin;VSWR 1.9max
101	MO1733A	34		M951	SPST Diode Module;Freq .5-4GHz;Ins Loss .90dBmax;Isol 45dBmin;VSWR 1.7max
102	MO1733B2	34		M951	SPST Diode Module;Freq 2-8GHz;Ins Loss 1.5dBmax;Isol 55dBmin;VSWR 1.9max
103	MO1733E	34		M951	SPST Diode Module;Freq 4-12.4GHz;Ins Loss 1.6dBmax;Isol 50dBmin;VSWR 2.0max
104	MO1733H3	34		M951	SPST Diode Module;Freq 8-18GHz;Ins Loss 2.4dBmax;Isol 50dBmin;VSWR 1.9max
105	MO1806A1	34		M951a	SPDT Diode Switch Module;Freq .5-1GHz;Ins Loss .60dBmax;Isol 40dBmin;VSWR 1.5max
106	MO1806A3	34		M951a	SPDT Diode Switch Module;Freq 1-2GHz;Ins Loss .80dBmax;Isol 40dBmin;VSWR 1.5max
107	MO1806A4	34		M951a	SPDT Diode Switch Module;Freq 2-4GHz;Ins Loss .80dBmax;Isol 40dBmin;VSWR 1.6max
108	MO1806B	34		M951a	SPDT Diode Switch Module;Freq 4-8GHz;Ins Loss 1.0dBmax;Isol 40dBmin;VSWR 1.7max
109	MO1806C	34		M951a	SPDT Diode Switch Module;Freq 8-12.4GHz;Ins Loss 1.2dBmax;Isol 35dBmin;VSWR 1.9max
110	MO1806F	34		M951a	SPDT Diode Switch Module;Freq 1-12.4GHz;Ins Loss 1.2dBmax;Isol 35dBmin;VSWR 1.9max

8. MISCELLANEOUS DEVICES

IN ORDER OF (1) USE and (2) TYPE No.

LINE No.	2 TYPE No.	1 USE	DESCRIPTION MAT.	DESCRIPTION DWG. No.	TECHNICAL DATA
1	MO1806H3	34		M951a	SPDT Diode Switch Module;Freq 8-18GHz;Ins Loss 1.6dBmax;Isol 35dBmin;VSWR 2.0max
2	MO1806H4	34		M951a	SPDT Diode Switch Module;Freq 12.4-18GHz;Ins Loss 1.6dBmax;Isol 35dBmin;VSWR 2.0max
3	MO1807A1	34		M951a	SPDT Diode Switch Module;Freq .5-1GHz;Ins Loss .60dBmax;Isol 40dBmin;VSWR 1.5max
4	MO1807A3	34		M951a	SPDT Diode Switch Module;Freq 1-2GHz;Ins Loss .80dBmax;Isol 40dBmin;VSWR 1.5max
5	MO1807A4	34		M951a	SPDT Diode Switch Module;Freq 2-4GHz;Ins Loss .80dBmax;Isol 40dBmin;VSWR 1.6max
6	MO1807B	34		M951a	SPDT Diode Switch Module;Freq 4-8GHz;Ins Loss 1.0dBmax;Isol 40dBmin;VSWR 1.7max
7	MO1807C	34		M951a	SPDT Diode Switch Module;Freq 8-12.4GHz;Ins Loss 1.2dBmax;Isol 35dBmin;VSWR 1.9max
8	MO1807F	34		M951a	SPDT Diode Switch Module;Freq 1-12.4GHz;Ins Loss 1.2dBmax;Isol 35dBmin;VSWR 1.9max
9	MO1807H3	34		M951a	SPDT Diode Switch Module;Freq 8-18GHz;Ins Loss 1.6dBmax;Isol 35dBmin;VSWR 2.0max
10	MO1807H4	34		M951a	SPDT Diode Switch Module;Freq 12.4-18GHz;Ins Loss 1.6dBmax;Isol 35dBmin;VSWR 2.0max
11	MO1808A1	34		M951a	SPDT Diode Switch Module;Freq .5-1GHz;Ins Loss .50dBmax;Isol 40dBmin;VSWR 1.5max
12	MO1808A3	34		M951a	SPDT Diode Switch Module;Freq 1-2GHz;Ins Loss .60dBmax;Isol 40dBmin;VSWR 1.5max
13	MO1808A4	34		M951a	SPDT Diode Switch Module;Freq 2-4GHz;Ins Loss .70dBmax;Isol 40dBmin;VSWR 1.6max
14	MO1808B	34		M951a	SPDT Diode Switch Module;Freq 4-8GHz;Ins Loss .90dBmax;Isol 40dBmin;VSWR 1.6max
15	MO1808C	34		M951a	SPDT Diode Switch Module;Freq 8-12.4GHz;Ins Loss 1.1dBmax;Isol 35dBmin;VSWR 1.7max
16	MO1808F	34		M951a	SPDT Diode Switch Module;Freq 1-12.4GHz;Ins Loss 1.1dBmax;Isol 35dBmin;VSWR 1.7max
17	MO1808H3	34		M951a	SPDT Diode Switch Module;Freq 8-18GHz;Ins Loss 1.5dBmax;Isol 35dBmin;VSWR 2.0max
18	MO1808H4	34		M951a	SPDT Diode Switch Module;Freq 12.4-18GHz;Ins Loss 1.5dBmax;Isol 35dBmin;VSWR 2.0max
19	MO1809A1	34		M951a	SPDT Diode Switch Module;Freq .5-1GHz;Ins Loss .50dBmax;Isol 60dBmin;VSWR 1.5max
20	MO1809A3	34		M951a	SPDT Diode Switch Module;Freq 1-2GHz;Ins Loss .60dBmax;Isol 60dBmin;VSWR 1.5max
21	MO1809A4	34		M951a	SPDT Diode Switch Module;Freq 2-4GHz;Ins Loss .70dBmax;Isol 60dBmin;VSWR 1.6max
22	MO1809B	34		M951a	SPDT Diode Switch Module;Freq 4-8GHz;Ins Loss .90dBmax;Isol 60dBmin;VSWR 1.6max
23	MO1809C	34		M951a	SPDT Diode Switch Module;Freq 8-12.4GHz;Ins Loss 1.1dBmax;Isol 60dBmin;VSWR 1.7max
24	MO1809F	34		M951a	SPDT Diode Switch Module;Freq 1-12.4GHz;Ins Loss 1.1dBmax;Isol 60dBmin;VSWR 1.7max
25	MO1809H3	34		M951a	SPDT Diode Switch Module;Freq 8-18GHz;Ins Loss 1.5dBmax;Isol 55dBmin;VSWR 2.0max
26	MO1809H4	34		M951a	SPDT Diode Switch Module;Freq 12.4-18GHz;Ins Loss 1.5dBmax;Isol 55dBmin;VSWR 2.0max
27	MO1838-00	34		M941	SPST Switch Module;Freq .1-.5GHz;Ins Loss 1.0dBmax;Isol 55dBmin;VSWR 1.3max
28	MO1838-01	34		M941	SPST Switch Module;Freq .1-18GHz;Ins Loss 1.6dBmax;Isol 35dBmin;VSWR 1.8max
29	MO1838A	34		M941	SPST Switch Module;Freq .5-4GHz;Ins Loss 1.0dBmax;Isol 45dBmin;VSWR 1.5max
30	MO1838B	34		M941	SPST Switch Module;Freq 4-8GHz;Ins Loss 1.2dBmax;Isol 40dBmin;VSWR 1.6max
31	MO1838C	34		M941	SPST Switch Module;Freq 8-12.4GHz;Ins Loss 1.4dBmax;Isol 40dBmin;VSWR 1.8max
32	MO1838H4	34		M941	SPST Switch Module;Freq 12.4-18GHz;Ins Loss 1.6dBmax;Isol 35dBmin;VSWR 1.8max
33	MO1839-00	34		M941c	SPST Switch Module;Freq .1-.5GHz;Ins Loss 1.2dBmax;Isol 65dBmin;VSWR 1.3max
34	MO1839-01	34		M914c	SPST Switch Module;Freq .1-18GHz;Ins Loss 2.1dBmax;Isol 50dBmin;VSWR 1.8max
35	MO1839A	34		M941c	SPST Switch Module;Freq .5-4GHz;Ins Loss 1.5dBmax;Isol 60dBmin;VSWR 1.5max
36	MO1839B	34		M941c	SPST Switch Module;Freq 4-8GHz;Ins Loss 1.6dBmax;Isol 55dBmin;VSWR 1.7max
37	MO1839C	34		M914c	SPST Switch Module;Freq 8-12.4GHz;Ins Loss 1.9dBmax;Isol 50dBmin;VSWR 1.8max
38	MO1839H4	34		M914c	SPST Switch Module;Freq 12.4-18GHz;Ins Loss 2.1dBmax;Isol 50dBmin;VSWR 1.8max
39	MO1840-00	34		M951	SPDT Switch Module;Freq .1-.5GHz;Ins Loss 1.0dBmax;Isol 55dBmin;VSWR 1.3max
40	MO1840-01	34		M951	SPDT Switch Module;Freq .1-18GHz;Ins Loss 1.6dBmax;Isol 35dBmin;VSWR 1.8max
41	MO1840A	34		M951	SPDT Switch Module;Freq .5-4GHz;Ins Loss 1.0dBmax;Isol 45dBmin;VSWR 1.5max
42	MO1840B	34		M951	SPDT Switch Module;Freq 4-8GHz;Ins Loss 1.2dBmax;Isol 40dBmin;VSWR 1.6max
43	MO1840C	34		M951	SPDT Switch Module;Freq 8-12.4GHz;Ins Loss 1.4dBmax;Isol 40dBmin;VSWR 1.8max
44	MO1840H4	34		M951	SPDT Switch Module;Freq 12.4-18GHz;Ins Loss 1.6dBmax;Isol 35dBmin;VSWR 1.8max
45	MO1841-00	34		M951	SPDT Switch Module;Freq .1-.5GHz;Ins Loss 1.2dBmax;Isol 65dBmin;VSWR 1.3max
46	MO1841-01	34		M951	SPDT Switch Module;Freq .1-18GHz;Ins Loss 2.1dBmax;Isol 50dBmin;VSWR 1.8max
47	MO1841A	34		M951	SPDT Switch Module;Freq .5-4GHz;Ins Loss 1.5dBmax;Isol 60dBmin;VSWR 1.5max
48	MO1841B	34		M951	SPDT Switch Module;Freq 4-8GHz;Ins Loss 1.6dBmax;Isol 55dBmin;VSWR 1.7max
49	MO1841C	34		M951	SPDT Switch Module;Freq 8-12.4GHz;Ins Loss 1.9dBmax;Isol 50dBmin;VSWR 1.8max
50	MO1841H4	34		M951	SPDT Switch Module;Freq 12.4-18GHz;Ins Loss 2.1dBmax;Isol 50dBmin;VSWR 1.8max
51	MO1842-00	34		M951	SPDT Switch Module;Freq .1-.5GHz;Ins Loss 1.1dBmax;Isol 55dBmin;VSWR 1.3max
52	MO1842-01	34		M951	SPDT Switch Module;Freq .1-18GHz;Ins Loss 1.7dBmax;Isol 35dBmin;VSWR 1.8max
53	MO1842A	34		M951	SPDT Switch Module;Freq .5-4GHz;Ins Loss 1.1dBmax;Isol 50dBmin;VSWR 1.5max
54	MO1842B	34		M951	SPDT Switch Module;Freq 4-8GHz;Ins Loss 1.3dBmax;Isol 50dBmin;VSWR 1.6max
55	MO1842C	34		M951	SPDT Switch Module;Freq 8-12.4GHz;Ins Loss 1.4dBmax;Isol 45dBmin;VSWR 1.8max
56	MO1842H4	34		M951	SPDT Switch Module;Freq 12.4-18GHz;Ins Loss 1.7dBmax;Isol 35dBmin;VSWR 1.8max
57	MO1843-00	34		M951	SPDT Switch Module;Freq .1-.5GHz;Ins Loss 1.2dBmax;Isol 65dBmin;VSWR 1.3max
58	MO1843-01	34		M951	SPDT Switch Module;Freq .1-18GHz;Ins Loss 2.2dBmax;Isol 50dBmin;VSWR 2.2max
59	MO1843A	34		M951	SPDT Switch Module;Freq .5-4GHz;Ins Loss 1.5dBmax;Isol 65dBmin;VSWR 1.5max
60	MO1843B	34		M951	SPDT Switch Module;Freq 4-8GHz;Ins Loss 1.6dBmax;Isol 60dBmin;VSWR 1.6max
61	MO1843C	34		M951	SPDT Switch Module;Freq 8-12.4GHz;Ins Loss 1.9dBmax;Isol 55dBmin;VSWR 1.9max
62	MO1843H4	34		M951	SPDT Switch Module;Freq 12.4-18GHz;Ins Loss 2.2dBmax;Isol 50dBmin;VSWR 2.2max
63	MO1852-00	34		M1224	Transfer Switch Module;Freq .1-.5GHz;Ins Loss .80dBmax;Isol 50dBmin;VSWR 1.3max
64	MO1852-01	34		M1224	Transfer Switch Module;Freq .1-18GHz;Ins Loss 2.3dBmax;Isol 2.3dBmin;VSWR 35max
65	MO1852A	34		M1224	Transfer Switch Module;Freq .5-4GHz;Ins Loss 1.0dBmax;Isol 1.5dBmin;VSWR 40max
66	MO1852B	34		M1224	Transfer Switch Module;Freq 4-8GHz;Ins Loss 1.3dBmax;Isol 1.7dBmin;VSWR 40max
67	MO1852C	34		M1224	Transfer Switch Module;Freq 8-12.4GHz;Ins Loss 1.7dBmax;Isol 1.8dBmin;VSWR 40max
68	MO1852H4	34		M1224	Transfer Switch Module;Freq 12.4-18GHz;Ins Loss 2.3dBmax;Isol 2.3dBmin;VSWR 35max
69	MO1875-00	34		M1055	SP3T Switch Unmatch Isol 1 series Diode;Freq .1-.5GHz;Ins Loss .50dBmax;Isol 35dBmin
70	MO1875-01	34		M1055	SP3T Switch Unmatch Isol 1 series Diode;Freq .1-18GHz;Ins Loss 1.6dBmax;Isol 13dBmin
71	MO1875A	34		M1055	SP3T Switch Unmatch Isol 1 series Diode;Freq .5-4GHz;Ins Loss .70dBmax;Isol 25dBmin
72	MO1875B	34		M1055	SP3T Switch Unmatch Isol 1 series Diode;Freq 4-8GHz;Ins Loss .90dBmax;Isol 20dBmin
73	MO1875C	34		M1055	SP3T Switch Unmatch Isol 1 series Diode;Freq 8-12.4GHz;Ins Loss 1.2dBmax;Isol 15dBmin
74	MO1875H4	34		M1055	SP3T Switch Unmatch Isol 1 series Diode;Freq 12.4-18GHz;Ins Loss 1.6dBmax;Isol 13dBmin
75	MO1876-00	34		M1055	SP4T Switch Unmatch Isol 1 series Diode;Freq .1-.5GHz;Ins Loss .50dBmax;Isol 35dBmin
76	MO1876-01	34		M1055	SP4T Switch Unmatch Isol 1 Series Diode;Freq .1-18GHZ;Ins Loss 1.7dBmax;Isol 13dBmin
77	MO1876A	34		M1055	SP4T Switch Unmatch Isol 1 Series Diode;Freq .5-4GHZ;Ins Loss .70dBmax;Isol 25dBmin
78	MO1876B	34		M1055	SP4T Switch Unmatch Isol 1 Series Diode;Freq 4-8GHZ;Ins Loss 1.0dBmax;Isol 20dBmin
79	MO1876C	34		M1055	SP4T Switch Unmatch Isol 1 Series Diode;Freq 8-12.4GHZ;Ins Loss 1.3dBmax;Isol 15dBmin
80	MO1876H4	34		M1055	SP4T Switch Unmatch Isol 1 Series Diode;Freq 12.4-18GHZ;Ins Loss 1.7dBmax;Isol 13dBmin
81	MO1877-00	34		M1055	SP5T Switch Unmatch Isol 1 Series Diode;Freq .1-.5GHZ;Ins Loss .50dBmax;Isol 35dBmin
82	MO1877-01	34		M1055	SP5T Switch Unmatch Isol 1 Series Diode;Freq .1-18GHZ;Ins Loss 1.9dBmax;Isol 13dBmin
83	MO1877A	34		M1055	SP5T Switch Unmatch Isol 1 Series Diode;Freq .5-4GHZ;Ins Loss .70dBmax;Isol 25dBmin
84	MO1877B	34		M1055	SP5T Switch Unmatch Isol 1 Series Diode;Freq 4-8GHZ;Ins Loss 1.0dBmax;Isol 20dBmin
85	MO1877C	34		M1055	SP5T Switch Unmatch Isol 1 Series Diode;Freq 8-12.4GHZ;Ins Loss 1.4dBmax;Isol 15dBmin
86	MO1877H4	34		M1055	SP5T Switch Unmatch Isol 1 Series Diode;Freq 12.4-18GHZ;Ins Loss 1.9dBmax;Isol 13dBmin
87	MO1878-00	34		M1055	SP6T Switch Unmatch Isol 1 Series Diode;Freq .1-.5GHz;Ins Loss .60dBmax;Isol 35dBmin
88	MO1878-01	34		M1055	SP6T Switch Unmatch Isol 1 Series Diode;Freq .1-18GHz;Ins Loss 2.0dBmax;Isol 13dBmin
89	MO1878A	34		M1055	SP6T Switch Unmatch Isol 1 Series Diode;Freq .5-4GHz;Ins Loss .80dBmax;Isol 25dBmin
90	MO1878B	34		M1055	SP6T Switch Unmatch Isol 1 Series Diode;Freq 4-8GHz;Ins Loss 1.0dBmax;Isol 20dBmin
91	MO1878C	34		M1055	SP6T Switch Unmatch Isol 1 Series Diode;Freq 8-12.4GHz;Ins Loss 1.4dBmax;Isol 15dBmin
92	MO1878H4	34		M1055	SP6T Switch Unmatch Isol 1 Series Diode;Freq 12.4-18GHz;Ins Loss 2.0dBmax;Isol 13dBmin
93	MO1879-00	34		M1055	SP7T Switch Unmatch Isol 1 Series Diode;Freq .1-.5GHz;Ins Loss .60dBmax;Isol 35dBmin
94	MO1879-01	34		M1055	SP7T Switch Unmatch Isol 1 Series Diode;Freq .1-18GHz;Ins Loss 2.1dBmax;Isol 13dBmin
95	MO1879A	34		M1055	SP7T Switch Unmatch Isol 1 Series Diode;Freq .5-4GHz;Ins Loss .80dBmax;Isol 25dBmin
96	MO1879B	34		M1055	SP7T Switch Unmatch Isol 1 Series Diode;Freq 4-8GHz;Ins Loss 1.1dBmax;Isol 20dBmin
97	MO1879C	34		M1055	SP7T Switch Unmatch Isol 1 Series Diode;Freq 8-12.4GHz;Ins Loss 1.5dBmax;Isol 15dBmin
98	MO1879H4	34		M1055	SP7T Switch Unmatch Isol 1 Series Diode;Freq 12.4-18GHz;Ins Loss 2.1dBmax;Isol 13dBmin
99	MO1880-00	34		M1055	SP3T Switch Unmatch Isol 2 series Diode;Freq .1-.5GHz;Ins Loss .90dBmax;Isol 50dBmin
100	MO1880-01	34		M1055	SP3T Switch Unmatch Isol 2 series Diode;Freq .1-18GHz;Ins Loss 2.2dBmax;Isol 35dBmin
101	MO1880A	34		M1055	SP3T Switch Unmatch Isol 2 series Diode;Freq .5-4GHz;Ins Loss 1.1dBmax;Isol 45dBmin
102	MO1880B	34		M1055	SP3T Switch Unmatch Isol 2 series Diode;Freq 4-8GHz;Ins Loss 1.4dBmax;Isol 40dBmin
103	MO1880C	34		M1055	SP3T Switch Unmatch Isol 2 series Diode;Freq 8-12.4GHz;Ins Loss 1.8dBmax;Isol 35dBmin
104	MO1880H4	34		M1055	SP3T Switch Unmatch Isol 2 series Diode;Freq 12.4-18GHz;Ins Loss 2.2dBmax;Isol 35dBmin
105	MO1881-00	34		M1055	SP4T Switch Unmatch Isol 2 Series Diode;Freq .1-.5GHZ;Ins Loss .90dBmax;Isol 50dBmin
106	MO1881-01	34		M1055	SP4T Switch Unmatch Isol 2 Series Diode;Freq .1-18GHZ;Ins Loss 2.3dBmax;Isol 35dBmin
107	MO1881A	34		M1055	SP4T Switch Unmatch Isol 2 Series Diode;Freq .5-4GHZ;Ins Loss 1.1dBmax;Isol 45dBmin
108	MO1881B	34		M1055	SP4T Switch Unmatch Isol 2 Series Diode;Freq 4-8GHZ;Ins Loss 1.4dBmax;Isol 40dBmin
109	MO1881C	34		M1055	SP4T Switch Unmatch Isol 2 Series Diode;Freq 8-12.4GHZ;Ins Loss 1.8dBmax;Isol 35dBmin
110	MO1881H4	34		M1055	SP4T Switch Unmatch Isol 2 Series Diode;Freq 12.4-18GHZ;Ins Loss 2.3dBmax;Isol 35dBmin

8. MISCELLANEOUS DEVICES

IN ORDER OF (1) USE and (2) TYPE No.

LINE No.	[2] TYPE No.	[1] USE	DESCRIPTION MAT.	DESCRIPTION DWG. No.	TECHNICAL DATA
1	MO1882-00	34		M1055	SP5T Switch Unmatch Isol 2 Series Diode;Freq .1-.5GHz;Ins Loss .90dBmax;Isol 50dBmin
2	MO1882-01	34		M1055	SP5T Switch Unmatch Isol 2 Series Diode;Freq .1-18GHZ;Ins Loss 2.4dBmax;Insol 35dBmin
3	MO1882A	34		M1055	SP5T Switch Unmatch Isol 2 Series Diode;Freq .5-4GHz;Ins Loss 1.1dBmax;Isol 45dBmin
4	MO1882B	34		M1055	SP5T Switch Unmatch Isol 2 Series Diode;Freq 4-8GHz;Ins Loss 1.5dBmax;Isol 40dBmin
5	MO1882C	34		M1055	SP5T Switch Unmatch Isol 2 Series Diode;Freq 8-12.4GHz;Ins Loss 1.9dBmax;Isol 35dBmin
6	MO1882H4	34		M1055	SP5T Switch Unmatch Isol 2 Series Diode;Freq 12.4-18GHz;Ins Loss 2.4dBmax;Isol 35dBmin
7	MO1883-00	34		M1055	SP6T Switch Unmatch Isol 2 Series Diode;Freq .1-.5GHz;Ins Loss .90dBmax;Isol 50dBmin
8	MO1883-01	34		M1055	SP6T Switch Unmatch Isol 2 Series Diode;Freq .1-18GHz;Ins Loss 2.6dBmax;Isol 35dBmin
9	MO1883A	34		M1055	SP6T Switch Unmatch Isol 2 Series Diode;Freq .5-4GHz;Ins Loss 1.2dBmax;Isol 45dBmin
10	MO1883B	34		M1055	SP6T Switch Unmatch Isol 2 Series Diode;Freq 4-8GHz;Ins Loss 1.5dBmax;Isol 40dBmin
11	MO1883C	34		M1055	SP6T Switch Unmatch Isol 2 Series Diode;Freq 8-12.4GHz;Ins Loss 2.0dBmax;Isol 35dBmin
12	MO1883H4	34		M1055	SP6T Switch Unmatch Isol 2 Series Diode;Freq 12.4-18GHz;Ins Loss 2.6dBmax;Isol 35dBmin
13	MO1884-00	34		M1055	SP7T Switch Unmatch Isol 2 Series Diode;Freq .1-.5GHz;Ins Loss .90dBmax;Isol 50dBmin
14	MO1884-01	34		M1055	SP7T Switch Unmatch Isol 2 Series Diode;Freq .1-18GHz;Ins Loss 2.7dBmax;Isol 35dBmin
15	MO1884A	34		M1055	SP7T Switch Unmatch Isol 2 Series Diode;Freq .5-4GHz;Ins Loss 1.2dBmax;Isol 45dBmin
16	MO1884B	34		M1055	SP7T Switch Unmatch Isol 2 Series Diode;Freq 4-8GHz;Ins Loss 1.5dBmax;Isol 40dBmin
17	MO1884C	34		M1055	SP7T Switch Unmatch Isol 2 Series Diode;Freq 8-12.4GHz;Ins Loss 2.0dBmax;Isol 35dBmin
18	MO1884H4	34		M1055	SP7T Switch Unmatch Isol 2 Series Diode;Freq 12.4-18GHz;Ins Loss 2.7dBmax;Isol 35dBmin
19	MO1885-00	34		M1055	SP3T Switch Unmatch Isol 3 series Diode;Freq .1-.5GHz;Ins Loss 1.2dBmax;Isol 55dBmin
20	MO1885-01	34		M1055	SP3T Switch Unmatch Isol 3 series Diode;Freq .1-18GHz;Ins Loss 2.8dBmax;Isol 40dBmin
21	MO1885A	34		M1055	SP3T Switch Unmatch Isol 3 series Diode;Freq .5-4GHz;Ins Loss 1.5dBmax;Isol 50dBmin
22	MO1885B	34		M1055	SP3T Switch Unmatch Isol 3 series Diode;Freq 4-8GHz;Ins Loss 1.9dBmax;Isol 45dBmin
23	MO1885C	34		M1055	SP3T Switch Unmatch Isol 3 series Diode;Freq 8-12.4GHz;Ins Loss 2.3dBmax;Isol 40dBmin
24	MO1885H4	34		M1055	SP3T Switch Unmatch Isol 3 series Diode;Freq 12.4-18GHz;Ins Loss 2.8dBmax;Isol 40dBmin
25	MO1886-00	34		M1055	SP4T Switch Unmatch Isol 3 Series Diode;Freq .1-.5GHZ;Ins Loss 1.3dBmax;Isol 55dBmin
26	MO1886-01	34		M1055	SP4T Switch Unmatch Isol 3 Series Diode;Freq .1-18GHZ;Ins Loss 2.9dBmax;Isol 40dBmin
27	MO1886A	34		M1055	SP4T Switch Unmatch Isol 3 Series Diode;Freq .5-4GHZ;Ins Loss 1.5dBmax;Isol 50dBmin
28	MO1886B	34		M1055	SP4T Switch Unmatch Isol 3 Series Diode;Freq 4-8GHZ;Ins Loss 1.9dBmax;Isol 45dBmin
29	MO1886C	34		M1055	SP4T Switch Unmatch Isol 3 Series Diode;Freq 8-12.4GHZ;Ins Loss 2.4dBmax;Isol 40dBmin
30	MO1886H4	34		M1055	SP4T Switch Unmatch Isol 3 Series Diode;Freq 12.4-18GHZ;Ins Loss 2.9dBmax;Isol 40dBmin
31	MO1887-00	34		M1055	SP5T Switch Unmatch Isol 3 Series Diode;Freq .1-.5GHz;Ins Loss 1.3dBmax;Isol 55dBmin
32	MO1887-01	34		M1055	SP5T Switch Unmatch Isol 3 Series Diode;Freq .1-18GHz;Ins Loss 3.0dBmax;Isol 40dBmin
33	MO1887A	34		M1055	SP5T Switch Unmatch Isol 3 Series Diode;Freq .5-4GHz;Ins Loss 1.6dBmax;Isol 50dBmin
34	MO1887B	34		M1055	SP5T Switch Unmatch Isol 3 Series Diode;Freq 4-8GHz;Ins Loss 1.9dBmax;Isol 45dBmin
35	MO1887C	34		M1055	SP5T Switch Unmatch Isol 3 Series Diode;Freq 8-12.4GHz;Ins Loss 2.4dBmax;Isol 40dBmin
36	MO1887H4	34		M1055	SP5T Switch Unmatch Isol 3 Series Diode;Freq 12.4-18GHz;Ins Loss 3.0dBmax;Isol 40dBmin
37	MO1888-00	34		M1055	SP6T Switch Unmatch Isol 3 Series Diode;Freq .1-.5GHz;Ins Loss 1.3dBmax;Isol 55dBmin
38	MO1888-01	34		M1055	SP6T Switch Unmatch Isol 3 Series Diode;Freq .1-18GHz;Ins Loss 3.2dBmax;Isol 40dBmin
39	MO1888A	34		M1055	SP6T Switch Unmatch Isol 3 Series Diode;Freq .5-4GHz;Ins Loss 1.6dBmax;Isol 50dBmin
40	MO1888B	34		M1055	SP6T Switch Unmatch Isol 3 Series Diode;Freq 4-8GHz;Ins Loss 2.0dBmax;Isol 45dBmin
41	MO1888C	34		M1055	SP6T Switch Unmatch Isol 3 Series Diode;Freq 8-12.4GHz;Ins Loss 2.5dBmax;Isol 40dBmin
42	MO1888H4	34		M1055	SP6T Switch Unmatch Isol 3 Series Diode;Freq 12.4-18GHz;Ins Loss 3.2dBmax;Isol 40dBmin
43	MO1889-00	34		M1055	SP7T Switch Unmatch Isol 3 Series Diode;Freq .1-.5GHz;Ins Loss 1.3dBmax;Isol 55dBmin
44	MO1889-01	34		M1055	SP7T Switch Unmatch Isol 3 Series Diode;Freq .1-18GHz;Ins Loss 3.3dBmax;Isol 40dBmin
45	MO1889A	34		M1055	SP7T Switch Unmatch Isol 3 Series Diode;Freq .5-4GHz;Ins Loss 1.6dBmax;Isol 50dBmin
46	MO1889B	34		M1055	SP7T Switch Unmatch Isol 3 Series Diode;Freq 4-8GHz;Ins Loss 2.0dBmax;Isol 45dBmin
47	MO1889C	34		M1055	SP7T Switch Unmatch Isol 3 Series Diode;Freq 8-12.4GHz;Ins Loss 2.6dBmax;Isol 40dBmin
48	MO1889H4	34		M1055	SP7T Switch Unmatch Isol 3 Series Diode;Freq 12.4-18GHz;Ins Loss 3.3dBmax;Isol 40dBmin
49	MO1890-00	34		M1055	SP3T Switch Intern Terminate 2 Series Diode;Freq .1-.5GHz;Ins Loss .90dBmax
50	MO1890-01	34		M1055	SP3T Switch Intern Terminate 2 Series Diode;Freq .1-18GHz;Ins Loss 2.3dBmax
51	MO1890A	34		M1055	SP3T Switch Intern Terminate 2 Series Diode;Freq .5-4GHz;Ins Loss 1.0dBmax
52	MO1890B	34		M1055	SP3T Switch Intern Terminate 2 Series Diode;Freq 4-8GHz;Ins Loss 1.4dBmax
53	MO1890C	34		M1055	SP3T Switch Intern Terminate 2 Series Diode;Freq 8-12.4GHz;Ins Loss 1.8dBmax
54	MO1890H4	34		M1055	SP3T Switch Intern Terminate 2 Series Diode;Freq 12.4-18GHz;Ins Loss 2.3dBmax
55	MO1891-00	34		M1055	SP4T Switch Intern Terminate 2 Series Diode;Freq .1-.5GHz;Ins Loss .90dBmax
56	MO1891-01	34		M1055	SP4T Switch Intern Terminate 2 Series Diode;Freq .1-18GHz;Ins Loss 2.4dBmax
57	MO1891A	34		M1055	SP4T Switch Intern Terminate 2 Series Diode;Freq .5-4GHz;Ins Loss 1.1dBmax
58	MO1891B	34		M1055	SP4T Switch Intern Terminate 2 Series Diode;Freq 4-8GHz;Ins Loss 1.5dBBmax
59	MO1891C	34		M1055	SP4T Switch Intern Terminate 2 Series Diode;Freq 8-12.4GHz;Ins Loss 1.9dBmax
60	MO1891H4	34		M1055	SP4T Switch Intern Terminate 2 Series Diode;Freq 12.4-18GHz;Ins Loss 2.4dBmax
61	MO1892-00	34		M1055	SP5T Switch Intern Terminate 2 Series Diode;Freq .1-.5GHz;Ins Loss .90dBmax
62	MO1892-01	34		M1055	SP5T Switch Intern Terminate 2 Series Diode;Freq .1-18GHz;Ins Loss 2.6dBmax
63	MO1892A	34		M1055	SP5T Switch Intern Terminate 2 Series Diode;Freq .5-4GHz;Ins Loss 1.2dBmax
64	MO1892B	34		M1055	SP5T Switch Intern Terminate 2 Series Diode;Freq 4-8GHz;Ins Loss 1.5dBmax
65	MO1892C	34		M1055	SP5T Switch Intern Terminate 2 Series Diode;Freq 8-12.4GHz;Ins Loss 2.0dBmax
66	MO1892H4	34		M1055	SP5T Switch Intern Terminate 2 Series Diode;Freq 12.4-18GHz;Ins Loss 2.6dBmax
67	MO1893-00	34		M1055	SP6T Switch Intern Terminate 2 Series Diode;Freq .1-.5GHz;Ins Loss .90dBmax
68	MO1893-01	34		M1055	SP6T Switch Intern Terminate 2 Series Diode;Freq .1-18GHz;Ins Loss 2.7dBmax
69	MO1893A	34		M1055	SP6T Switch Intern Terminate 2 Series Diode;Freq .5-4GHz;Ins Loss 1.2dBmax
70	MO1893B	34		M1055	SP6T Switch Intern Terminate 2 Series Diode;Freq 4-8GHz;Ins Loss 1.5dBmax
71	MO1893C	34		M1055	SP6T Switch Intern Terminate 2 Series Diode;Freq 8-12.4GHz;Ins Loss 2.0dBmax
72	MO1893H4	34		M1055	SP6T Switch Intern Terminate 2 Series Diode;Freq 12.4-18GHz;Ins Loss 2.7dBmax
73	MO1894-00	34		M1055	SP7T Switch Intern Terminate 2 Series Diode;Freq .1-.5GHz;Ins Loss .90dBmax
74	MO1894-01	34		M1055	SP7T Switch Intern Terminate 2 Series Diode;Freq .1-18GHz;Ins Loss 2.7dBmax
75	MO1894A	34		M1055	SP7T Switch Intern Terminate 2 Series Diode;Freq .5-4GHz;Ins Loss 1.2dBmax
76	MO1894B	34		M1055	SP7T Switch Intern Terminate 2 Series Diode;Freq 4-8GHz;Ins Loss 1.5dBmax
77	MO1894C	34		M1055	SP7T Switch Intern Terminate 2 Series Diode;Freq 8-12.4GHz;Ins Loss 2.0dBmax
78	MO1894H4	34		M1055	SP7T Switch Intern Terminate 2 Series Diode;Freq 12.4-18GHz;Ins Loss 2.7dBmax
79	MO1895-00	34		M1055	SP3T Switch Intern Terminate 3 Series Diode;Freq .1-.5GHz;Ins Loss 1.3dBmax
80	MO1895-01	34		M1055	SP3T Switch Intern Terminate 3 Series Diode;Freq .1-18GHz;Ins Loss 2.9dBmax
81	MO1895A	34		M1055	SP3T Switch Intern Terminate 3 Series Diode;Freq .5-4GHz;Ins Loss 1.5dBmax
82	MO1895B	34		M1055	SP3T Switch Intern Terminate 3 Series Diode;Freq 4-8GHz;Ins Loss 1.9dBmax
83	MO1895C	34		M1055	SP3T Switch Intern Terminate 3 Series Diode;Freq 8-12.4GHz;Ins Loss 2.4dBmax
84	MO1895H4	34		M1055	SP3T Switch Intern Terminate 3 Series Diode;Freq 12.4-18GHz;Ins Loss 2.9dBmax
85	MO1896-00	34		M1055	SP4T Switch Intern Terminate 3 Series Diode;Freq .1-.5GHz;Ins Loss 1.3dBmax
86	MO1896-01	34		M1055	SP4T Switch Intern Terminate 3 Series Diode;Freq .1-18GHz;Ins Loss 3.0dBmax
87	MO1896A	34		M1055	SP4T Switch Intern Terminate 3 Series Diode;Freq .5-4GHz;Ins Loss 1.6dBmax
88	MO1896B	34		M1055	SP4T Switch Intern Terminate 3 Series Diode;Freq 4-8GHz;Ins Loss 1.9dBmax
89	MO1896C	34		M1055	SP4T Switch Intern Terminate 3 Series Diode;Freq 8-12.4GHz;Ins Loss 2.4dBmax
90	MO1896H4	34		M1055	SP4T Switch Intern Terminate 3 Series Diode;Freq 12.4-18GHz;Ins Loss 3.0dBmax
91	MO1897-00	34		M1055	SP5T Switch Intern Terminate 3 Series Diode;Freq .1-.5GHz;Ins Loss 1.3dBmax
92	MO1897-01	34		M1055	SP5T Switch Intern Terminate 3 Series Diode;Freq .1-18GHz;Ins Loss 3.2dBmax
93	MO1897A	34		M1055	SP5T Switch Intern Terminate 3 Series Diode;Freq .5-4GHz;Ins Loss 1.6dBmax
94	MO1897B	34		M1055	SP5T Switch Intern Terminate 3 Series Diode;Freq 4-8GHz;Ins Loss 2.0dBmax
95	MO1897C	34		M1055	SP5T Switch Intern Terminate 3 Series Diode;Freq 8-12.4GHz;Ins Loss 2.5dBmax
96	MO1897H4	34		M1055	SP5T Switch Intern Terminate 3 Series Diode;Freq 12.4-18GHz;Ins Loss 3.2dBmax
97	MO1898-00	34		M1055	SP6T Switch Intern Terminate 3 Series Diode;Freq .1-.5GHz;Ins Loss 1.3dBmax
98	MO1898-01	34		M1055	SP6T Switch Intern Terminate 3 Series Diode;Freq .1-18GHz;Ins Loss 3.2dBmax
99	MO1898A	34		M1055	SP6T Switch Intern Terminate 3 Series Diode;Freq .5-4GHz;Ins Loss 1.6dBmax
100	MO1898B	34		M1055	SP6T Switch Intern Terminate 3 Series Diode;Freq 4-8GHz;Ins Loss 2.0dBmax
101	MO1898C	34		M1055	SP6T Switch Intern Terminate 3 Series Diode;Freq 8-12.4GHz;Ins Loss 2.5dBmax
102	MO1898H4	34		M1055	SP6T Switch Intern Terminate 3 Series Diode;Freq 12.4-18GHz;Ins Loss 3.2dBmax
103	MO1899-00	34		M1055	SP7T Switch Intern Terminate 3 Series Diode;Freq .1-.5GHz;Ins Loss 1.3dBmax
104	MO1899-01	34		M1055	SP7T Switch Intern Terminate 3 Series Diode;Freq .1-18GHz;Ins Loss 3.3dBmax
105	MO1899A	34		M1055	SP7T Switch Intern Terminate 3 Series Diode;Freq .5-4GHz;Ins Loss 1.6dBmax
106	MO1899B	34		M1055	SP7T Switch Intern Terminate 3 Series Diode;Freq 4-8GHz;Ins Loss 2.0dBmax
107	MO1899C	34		M1055	SP7T Switch Intern Terminate 3 Series Diode;Freq 8-12.4GHz;Ins Loss 2.6dBmax
108	MO1899H4	34		M1055	SP7T Switch Intern Terminate 3 Series Diode;Freq 12.4-18GHz;Ins Loss 3.3dBmax
109	MO1930A2	34		M914	Limiter Module;Freq .5-2GHz;Ins Loss .40dBmax;VSWR 1.4max
110	MO1930A4	34		M914	Limiter Module;Freq 2-4GHz;Ins Loss .50dBmax;VSWR 1.4max

8. MISCELLANEOUS DEVICES

IN ORDER OF (1) USE and (2) TYPE No.

LINE No.	[2] TYPE No.	[1] USE	DESCRIPTION MAT.	DWG. No.	TECHNICAL DATA
1	MO1930A	34		M914	Limiter Module;Freq .5-4GHz;Ins Loss .50dBmax;VSWR 1.4max
2	MO1930B	34		M914	Limiter Module;Freq 4-8GHz;Ins Loss .70dBmax;VSWR 1.5max
3	MO1930C	34		M914	Limiter Module;Freq 8-12.4GHz;Ins Loss 1.0dBmax;VSWR 1.7max
4	MO1930E	34		M914	Limiter Module;Freq 4-12.4GHz;Ins Loss 1.0dBmax;VSWR 1.7max
5	MO1930H3	34		M914	Limiter Module;Freq 8-18GHz;Ins Loss 1.4dBmax;VSWR 1.9max
6	MO1930H4	34		M914	Limiter Module;Freq 12.4-18GHz;Ins Loss 1.3dBmax;VSWR 1.8max
7	MO1930H5	34		M914	Limiter Module;Freq .5-18GHz;Ins Loss 1.4dBmax;VSWR 1.9max
8	MO1947-95	34		M914a	Limiter Module;Freq 2-18GHz;Ins Loss 3.0dBmax;VSWR 2.0max
9	MO1948A2	34		M914	Limiter Module;Freq .5-2GHz;Ins Loss .40dBmax;VSWR 1.4max
10	MO1948A4	34		M914	Limiter Module;Freq 2-4GHz;Ins Loss .50dBmax;VSWR 1.4max
11	MO1948A	34		M914	Limiter Module;Freq .5-4GHz;Ins Loss .50dBmax;VSWR 1.4max
12	MO1948B	34		M914	Limiter Module;Freq 4-8GHz;Ins Loss .80dBmax;VSWR 1.5max
13	MO1948C	34		M914	Limiter Module;Freq 8-12.4GHz;Ins Loss .50dBmax;VSWR 1.4max
14	MO1948H4	34		M914	Limiter Module;Freq 12.4-18GHz;Ins Loss .80dBmax;VSWR 1.5max
15	MO1948H	34		M914	Limiter Module;Freq 2-18GHz;Ins Loss .80dBmax;VSWR 1.5max
16	MO1949A2	34		M914a	Limiter Module;Freq .5-2GHz;Ins Loss 1.2dBmax;VSWR 1.8max
17	MO1949A4	34		M914a	Limiter Module;Freq 2-4GHz;Ins Loss 1.6dBmax;VSWR 1.9max
18	MO1949A	34		M914a	Limiter Module;Freq .5-4GHz;Ins Loss 1.2dBmax;VSWR 1.7max
19	MO1949B	34		M914a	Limiter Module;Freq 4-8GHz;Ins Loss 1.5dBmax;VSWR 1.9max
20	MO1949C	34		M914a	Limiter Module;Freq 8-12.4GHz;Ins Loss 2.2dBmax;VSWR 2.0max
21	MO1949H4	34		M914a	Limiter Module;Freq 12.4-18GHz;Ins Loss 1.5dBmax;VSWR 1.9max
22	MO1949H	34		M914a	Limiter Module;Freq 2-18GHz;Ins Loss 2.2dBmax;VSWR 2.0max
23	MO1950A2	34		M914a	Limiter Module;Freq .5-2GHz;Ins Loss .50dBmax;VSWR 1.4max
24	MO1950A4	34		M914a	Limiter Module;Freq 2-4GHz;Ins Loss .80dBmax;VSWR 1.5max
25	MO1950A	34		M914a	Limiter Module;Freq .5-4GHz;Ins Loss .80dBmax;VSWR 1.5max
26	MO1950B	34		M914a	Limiter Module;Freq 4-8GHz;Ins Loss 1.2dBmax;VSWR 1.8max
27	MO1950C	34		M914a	Limiter Module;Freq 8-12.4GHz;Ins Loss 1.6dBmax;VSWR 1.9max
28	MO1950H4	34		M914a	Limiter Module;Freq 12.4-18GHz;Ins Loss 2.2dBmax;VSWR 2.0max
29	MO1950H	34		M914a	Limiter Module;Freq 2-18GHz;Ins Loss 2.2dBmax;VSWR 2.0max
30	MO1951A2	34		M914	Limiter Module;Freq .5-2GHz;Ins Loss .50dBmax;VSWR 1.4max
31	MO1951A4	34		M914	Limiter Module;Freq 2-4GHz;Ins Loss .80dBmax;VSWR 1.5max
32	MO1951A	34		M914	Limiter Module;Freq .5-4GHz;Ins Loss .80dBmax;VSWR 1.5max
33	MO1951B	34		M914	Limiter Module;Freq 4-8GHz;Ins Loss 1.2dBmax;VSWR 1.8max
34	MO1951C	34		M914	Limiter Module;Freq 8-12.4GHz;Ins Loss 1.6dBmax;VSWR 1.9max
35	MO1951H4	34		M914	Limiter Module;Freq 12.4-18GHz;Ins Loss 2.2dBmax;VSWR 2.0max
36	MO1951H	34		M914	Limiter Module;Freq 2-18GHz;Ins Loss 2.2dBmax;VSWR 2.0max
37	MO1967-94	34		M914a	Limiter Module;Freq 5-10.4GHz;Ins Loss 1.0dBmax;VSWR 1.8max
38	MO1970A2	34		M1222	Limiter Module Freq .5-2GHz;Ins Loss .40dBmax;VSWR 1.4max
39	MO1970A4	34		M1222	Limiter Module Freq 2-4GHz;Ins Loss .50dBmax;VSWR 1.5max
40	MO1970B	34		M1222	Limiter Module Freq 4-8GHz;Ins Loss .60dBmax;VSWR 1.7max
41	MO1970C	34		M1222	Limiter Module Freq 8-12.4GHz;Ins Loss .70dBmax;VSWR 1.8max
42	MO1970H4	34		M1222	Limiter Module Freq 12.4-18GHz;Ins Loss .80dBmax;VSWR 1.9max
43	MO1970H5	34		M1222	Limiter Module Freq .5-18GHz;Ins Loss .90dBmax;VSWR 2.0max
44	MO1971A2	34		S347	Limiter Module;Freq .5-4GHz;Ins Loss .40dBmax;VSWR 1.4max
45	MO1971A4	34		S347	Limiter Module;Freq 2-4GHz;Ins Loss .50dBmax;VSWR 1.5max
46	MO1971B	34		S347	Limiter Module;Freq 4-8GHz;Ins Loss .60dBmax;VSWR 1.7max
47	MO1971C	34		S347	Limiter Module;Freq 8-12.4GHz;Ins Loss .70dBmax;VSWR 1.8max
48	MO1971H4	34		S347	Limiter Module;Freq 12.4-18GHz;Ins Loss .80dBmax;VSWR 1.9max
49	MO1971H5	34		S347	Limiter Module;Freq .5-18GHz;Ins Loss .90dBmax;VSWR 2.0max
50	MO1972A2	34		M1223	Limiter Module;Freq .5-4GHz;Ins Loss .40dBmax;VSWR 1.4max
51	MO1972A4	34		M1223	Limiter Module;Freq 2-4GHz;Ins Loss .50dBmax;VSWR 1.5max
52	MO1972B	34		M1223	Limiter Module;Freq 4-8GHz;Ins Loss .60dBmax;VSWR 1.7max
53	MO1972C	34		M1223	Limiter Module;Freq 8-12.4GHz;Ins Loss .70dBmax;VSWR 1.8max
54	MO1972H4	34		M1223	Limiter Module;Freq 12.4-18GHz;Ins Loss .80dBmax;VSWR 1.9max
55	MO1972H5	34		M1223	Limiter Module;Freq .5-18GHz;Ins Loss .90dBmax;VSWR 2.0max
56	MO2352A	34		M1227	SPST Switch w/Driver;Freq .5-4GHz;Ins Loss .70dBmax;Isol 30dBmin;VSWR 1.5max
57	MO2352B2	34		M1227	SPST Switch w/Driver;Freq 2-8GHz;Ins Loss .90dBmax;Isol 40dBmin;VSWR 1.5max
58	MO2352E	34		M1227	SPST Switch w/Driver;Freq 4-12.4GHz;Ins Loss 1.0dBmax;Isol 40dBmin;VSWR 1.7max
59	MO2352H3	34		M1227	SPST Switch w/Driver;Freq 8-18GHz;Ins Loss 1.4dBmax;Isol 50dBmin;VSWR 2.0max
60	MO2352H	34		M1227	SPST Switch w/Driver;Freq 2-18GHz;Ins Loss 1.3dBmax;Isol 60dBmin;VSWR 1.7max
61	MO2353A	34		M1227	SPST Switch w/Driver;Freq .5-4GHz;Ins Loss 1.7dBmax;Isol 70dBmin;VSWR 2.0max
62	MO2353B2	34		M1227	SPST Switch w/Driver;Freq 2-8GHz;Ins Loss 1.8dBmax;Isol 40dBmin;VSWR 2.0max
63	MO2353E	34		M1227	SPST Switch w/Driver;Freq 4-12.4GHz;Ins Loss 2.2dBmax;Isol 60dBmin;VSWR 2.0max
64	MO2353H3	34		M1227	SPST Switch w/Driver;Freq 8-18GHz;Ins Loss 2.0dBmax;Isol 60dBmin;VSWR 2.0max
65	MO2353H	34		M1227	SPST Switch w/Driver;Freq 2-18GHz;Ins Loss 1.6dBmax;Isol 45dBmin;VSWR 2.0max
66	MO2362A	34		M1228	SPDT Switch w/Driver;Freq .5-4GHz;Ins Loss .90dBmax;Isol 60dBmin;VSWR 1.5max
67	MO2362B2	34		M1228	SPDT Switch w/Driver;Freq 2-8GHz;Ins Loss 1.5dBmax;Isol 60dBmin;VSWR 1.8max
68	MO2362E	34		M1228	SPDT Switch w/Driver;Freq 4-12GHz;Ins Loss 1.9dBmax;Isol 60dBmin;VSWR 2.0max
69	MO2362H3	34		M1228	SPDT Switch w/Driver;Freq 8-18GHz;Ins Loss 2.3dBmax;Isol 60dBmin;VSWR 2.0max
70	MO2362H	34		M1228	SPDT Switch w/Driver;Freq 2-18GHz;Ins Loss 2.5dBmax;Isol 60dBmin;VSWR 2.0max
71	MO2372A	34	Si	M1229	SP3T Switch w/Driver;Freq .5-4GHz;Ins Loss 1.1dBmax;Isol 55dBmin;VSWR 1.6max
72	MO2372B2	34	Si	M1229	SP3T Switch w/Driver;Freq 2-8GHz;Ins Loss 1.5dBmax;Isol 55dBmin;VSWR 1.8max
73	MO2372E	34	Si	M1229	SP3T Switch w/Driver;Freq 4-12.4GHz;Ins Loss 2.0dBmax;Isol 55dBmin;VSWR 1.9max
74	MO2372H3	34	Si	M1229	SP3T Switch w/Driver;Freq 8-18GHz;Ins Loss 2.6dBmax;Isol 50dBmin;VSWR 2.0max
75	MO2372H	34	Si	M1229	SP3T Switch w/Driver;Freq 2-18GHz;Ins Loss 2.9dBmax;Isol 50dBmin;VSWR 2.0max
76	MO2382A	34	Si	M1230	SP4T Switch w/Driver;Freq .5-4GHz;Ins Loss 1.1dBmax;Isol 55dBmin;VSWR 1.7max
77	MO2382B2	34	Si	M1230	SP4T Switch w/Driver;Freq 2-8GHz;Ins Loss 1.6dBmax;Isol 55dBmin;VSWR 1.9max
78	MO2382E	34	Si	M1230	SP4T Switch w/Driver;Freq 4-12.4GHz;Ins Loss 2.2dBmax;Isol 55dBmin;VSWR 2.0max
79	MO2382H3	34	Si	M1230	SP4T Switch w/Driver;Freq 8-18GHz;Ins Loss 2.8dBmax;Isol 50dBmin;VSWR 2.1max
80	MO2382H	34	Si	M1230	SP4T Switch w/Driver;Freq 2-18GHz;Ins Loss 3.1dBmax;Isol 50dBmin;VSWR 2.1max
81	MO3740A1	34		M1055	SP3T Diode Switch Module;Freq .5-1GHz;Ins Loss .80dBmax;Isol 60dBmin;VSWR 1.6max
82	MO3740A3	34		M1055	SP3T Diode Switch Module;Freq 1-2GHz;Ins Loss .80dBmax;Isol 60dBmin;VSWR 1.6max
83	MO3740A4	34		M1055	SP3T Diode Switch Module;Freq 2-4GHz;Ins Loss 1.0dBmax;Isol 60dBmin;VSWR 1.7max
84	MO3740B	34		M1055	SP3T Diode Switch Module;Freq 4-8GHz;Ins Loss 1.3dBmax;Isol 60dBmin;VSWR 1.7max
85	MO3740C	34		M1055	SP3T Diode Switch Module;Freq 8-12.4GHz;Ins Loss 1.7dBmax;Isol 60dBmin;VSWR 1.8max
86	MO3740F	34		M1055	SP3T Diode Switch Module;Freq 1-12.4GHz;Ins Loss 1.7dBmax;Isol 60dBmin;VSWR 1.8max
87	MO3740H3	34		M1055	SP3T Diode Switch Module;Freq 8-18GHz;Ins Loss 2.1dBmax;Isol 55dBmin;VSWR 1.9max
88	MO3740H4	34		M1055	SP3T Diode Switch Module;Freq 12.4-18GHz;Ins Loss 2.1dBmax;Isol 55dBmin;VSWR 1.9max
89	MO3741A1	34		M1055	SP3T Diode Switch Module;Freq .5-1GHz;Ins Loss .80dBmax;Isol 60dBmin;VSWR 1.6max
90	MO3741A3	34		M1055	SP3T Diode Switch Module;Freq 1-2GHz;Ins Loss .80dBmax;Isol 60dBmin;VSWR 1.6max
91	MO3741A4	34		M1055	SP3T Diode Switch Module;Freq 2-4GHz;Ins Loss 1.0dBmax;Isol 60dBmin;VSWR 1.7max
92	MO3741B	34		M1055	SP3T Diode Switch Module;Freq 4-8GHz;Ins Loss 1.3dBmax;Isol 60dBmin;VSWR 1.7max
93	MO3741C	34		M1055	SP3T Diode Switch Module;Freq 8-12.4GHz;Ins Loss 1.7dBmax;Isol 60dBmin;VSWR 1.8max
94	MO3741F	34		M1055	SP3T Diode Switch Module;Freq 1-12.4GHz;Ins Loss 1.7dBmax;Isol 60dBmin;VSWR 1.8max
95	MO3741H3	34		M1055	SP3T Diode Switch Module;Freq 8-18GHz;Ins Loss 2.1dBmax;Isol 55dBmin;VSWR 1.9max
96	MO3741H4	34		M1055	SP3T Diode Switch Module;Freq 12.4-18GHz;Ins Loss 2.1dBmax;Isol 55dBmin;VSWR 1.9max
97	MO3742A1	34		M1055	SP4T Diode Switch Module;Freq .5-1GHz;Ins Loss .80dBmax;Isol 60dBmin;VSWR 1.6max
98	MO3742A3	34		M1055	SP4T Diode Switch Module;Freq 1-2GHz;Ins Loss .90dBmax;Isol 60dBmin;VSWR 1.6max
99	MO3742A4	34		M1055	SP4T Diode Switch Module;Freq 2-4GHz;Ins Loss 1.1dBmax;Isol 60dBmin;VSWR 1.7max
100	MO3742B	34		M1055	SP4T Diode Switch Module;Freq 4-8GHz;Ins Loss 1.4dBmax;Isol 60dBmin;VSWR 1.8max
101	MO3742C	34		M1055	SP4T Diode Switch Module;Freq 8-12.4GHz;Ins Loss 1.8dBmax;Isol 60dBmin;VSWR 1.9max
102	MO3742F	34		M1055	SP4T Diode Switch Module;Freq 1-12.4GHz;Ins Loss 1.8dBmax;Isol 60dbmin;VSWR 1.9max
103	MO3742H3	34		M1055	SP4T Diode Switch Module;Freq 8-18GHz;Ins Loss 2.4dBmax;Isol 55dbmin;VSWR 2.0max
104	MO3742H4	34		M1055	SP4T Diode Switch Module;Freq 12.4-18GHz;Ins Loss 2.4dBmax;Isol 55dBmin;VSWR 2.0max
105	MO3743A1	34		M1055	SP4T Diode Switch Module;Freq .5-1GHz;Ins Loss .80dBmax;Isol 60dbmin;VSWR 1.6max
106	MO3743A3	34		M1055	SP4T Diode Switch Module;Freq 1-2GHz;Ins Loss .90dBmax;Isol 60dbmin;VSWR 1.6max
107	MO3743A4	34		M1055	SP4T Diode Switch Module;Freq 2-4GHz;Ins Loss 1.1dBmax;Isol 60dbmin;VSWR 1.7max
108	MO3743B	34		M1055	SP4T Diode Switch Module;Freq 4-8GHz;Ins Loss 1.4dBmax;Isol 60dbmin;VSWR 1.8max
109	MO3743C	34		M1055	SP4T Diode Switch Module;Freq 8-12.4GHz;Ins Loss 1.8dBmax;Isol 60dBmin;VSWR 1.9max
110	MO3743F	34		M1055	SP4T Diode Switch Module;Freq 1-12.4GHz;Ins Loss 1.8dBmax;Isol 60dBmin;VSWR 1.9max

8. MISCELLANEOUS DEVICES

IN ORDER OF (1) USE and (2) TYPE No.

LINE No.	2 TYPE No.	1 USE	DESCRIPTION MAT.	DWG. No.	TECHNICAL DATA
1	MO3743H3	34		M1055	SP4T Diode Switch Module;Freq 8-18GHz;Ins Loss 2.4dBmax;Isol 55dBmin;VSWR 2.0max
2	MO3743H4	34		M1055	SP4T Diode Switch Module;Freq 12.4-18GHz;Ins Loss 2.4dBmax;Isol 55dBmi;VSWR 2.0max
3	MO3744A1	34		M1055	SP5T Diode Switch Module;Freq .5-1GHz;Ins Loss .80dBmax;Isol 60dBmin;VSWR 1.6max
4	MO3744A3	34		M1055	SP5T Diode Switch Module;Freq 1-2GHz;Ins Loss .90dBmax;Isol 60dBmin;VSWR 1.7max
5	MO3744A4	34		M1055	SP5T Diode Switch Module;Freq 2-4GHz;Ins Loss 1.1dBmax;Isol 60dBmin;VSWR 1.7max
6	MO3744B	34		M1055	SP5T Diode Switch Module;Freq 4-8GHZ;Ins Loss 1.5dBmax;Isol 60dBmin;VSWR 1.8max
7	MO3744C	34		M1055	SP5T Diode Switch Module;Freq 8-12.4GHZ;Ins Loss 2.0dBmax;Isol 60dBmin;VSWR 2.0max
8	MO3744F	34		M1055	SP5T Diode Switch Module;Freq 1-12.4GHZ;Ins Loss 2.0dBmax;Isol 60dBmin;VSWR 2.0max
9	MO3744H3	34		M1055	SP5T Diode Switch Module;Freq 8-18GHz;Ins Loss 2.6dBmax;Isol 55dBmin;VSWR 2.1max
10	MO3744H4	34		M1055	SP5T Diode Switch Module;Freq 12.4-18GHZ;Ins Loss 2.6dBmax;Isol 55dBmin;VSWR 2.1max
11	MO3745A1	34		M1055	SP5T Diode Switch Module;Freq .5-1GHz;Ins Loss .80dBmax;Isol 60dBmin;VSWR 1.6max
12	MO3745A3	34		M1055	SP5T Diode Switch Module;Freq 1-2GHz;Ins Loss .90dBmax;Isol 60dBmin;VSWR 1.7max
13	MO3745A4	34		M1055	SP5T Diode Switch Module;Freq 2-4GHz;Ins Loss 1.1dBmax;Isol 60dBmin;VSWR 1.7max
14	MO3745B	34		M1055	SP5T Diode Switch Module;Freq 4-8GHz;Ins Loss 1.5dBmax;Isol 60dBmin;VSWR 1.8max
15	MO3745C	34		M1055	SP5T Diode Switch Module;Freq 8-12.4GHz;Ins Loss 2.0dBmax;Isol 60dBmin;VSWR 2.0max
16	MO3745F	34		M1055	SP5T Diode Switch Module;Freq 1-12.4GHz;Ins Loss 2.0dBmax;Isol 60dBmin;VSWR 2.0max
17	MO3745H3	34		M1055	SP5T Diode Switch Module;Freq 8-18GHz;Ins Loss 2.6dBmax;Isol 55dBmin;VSWR 2.1max
18	MO3745H4	34		M1055	SP5T Diode Switch Module;Freq 12.4-18GHz;Ins Loss 2.6dBmax;Isol 55dBmin;VSWR 2.1max
19	MO3746A1	34		M1055	SP6T Diode Switch Module;Freq .5-1GHz;Ins Loss .80dBmax;Isol 60dBmin;VSWR 1.6max
20	MO3746A3	34		M1055	SP6T Diode Switch Module;Freq 1-2GHz;Ins Loss .90dBmax;Isol 60dBmin;VSWR 1.7max
21	MO3746A4	34		M1055	SP6T Diode Switch Module;Freq 2-4GHz;Ins Loss 1.2dBmax;Isol 60dBmin;VSWR 1.7max
22	MO3746B	34		M1055	SP6T Diode Switch Module;Freq 4-8GHz;Ins Loss 1.7dBmax;Isol 60dBmin;VSWR 1.9max
23	MO3746C	34		M1055	SP6T Diode Switch Module;Freq 8-12.4GHz;Ins Loss 2.2dBmax;Isol 60dBmin;VSWR 2.0max
24	MO3746F	34		M1055	SP6T Diode Switch Module;Freq 1-12.4GHz;Ins Loss 2.2dBmax;Isol 60dBmin;VSWR 2.0max
25	MO3746H3	34		M1055	SP6T Diode Switch Module;Freq 8-18GHz;Ins Loss 2.9dBmax;Isol 55dBmin;VSWR 2.2max
26	MO3746H4	34		M1055	SP6T Diode Switch Module;Freq 12.4-18GHz;Ins Loss 2.9dBmax;Isol 55dBmin;VSWR 2.2max
27	MO3747A1	34		M1055	SP6T Diode Switch Module;Freq .5-1GHz;Ins Loss .80dBmax;Isol 60dBmin;VSWR 1.6max
28	MO3747A3	34		M1055	SP6T Diode Switch Module;Freq 1-2GHz;Ins Loss .90dBmax;Isol 60dBmin;VSWR 1.7max
29	MO3747A4	34		M1055	SP6T Diode Switch Module;Freq 2-4GHz;Ins Loss 1.2dBmax;Isol60dBmin;VSWR 1.7max
30	MO3747B	34		M1055	SP6T Diode Switch Module;Freq 4-8GHz;Ins Loss 1.7dBmax;Isol60dBmin;VSWR 1.9max
31	MO3747C	34		M1055	SP6T Diode Switch Module;Freq 8-12.4GHz;Ins Loss 2.2dBmax;Isol60dBmin;VSWR 2.0max
32	MO3747F	34		M1055	SP6T Diode Switch Module;Freq 1-12.4GHz;Ins Loss 2.2dBmax;Isol 60dBmin;VSWR 2.0max
33	MO3747H3	34		M1055	SP6T Diode Switch Module;Freq 8-18GHz;Ins Loss 2.9dBmax;Isol 55dBmin;VSWR 2.2max
34	MO3747H4	34		M1055	SP6T Diode Switch Module;Freq 12.4-18GHz;Ins Loss 2.9dBmax;Isol 55dbmin;VSWR 2.2max
35	MO3748A1	34		M1055	SP7T Diode Switch Module;Freq .5-1GH3;Ins Loss,.80dBmax;Isol 60dBmin;VSWR 1.5max
36	MO3748A3	34		M1055	SP7T Diode Switch Module;Freq 1-2GH3;Ins Loss,1.0dBmax;Isol 60dBmin;VSWR 1.7 max
37	MO3748A4	34		M1055	SP7T Diode Switch Module;Freq 2-4GH3;Ins Loss,1.2dBmax;Isol 60dBmin;VSWR 1.8 max
38	MO3748B	34		M1055	SP7T Diode Switch Module;Freq 4-8GHz;Ins Loss 1.8dBmax;Isol 60dBmin;V SWR 1.9max
39	MO3748C	34		M1055	SP7T Diode Switch Module;Freq 8-12.4GHz;Ins Loss 2.4dBmax;Isol 60dBmin;VSWR 2.1max
40	MO3748F	34		M1055	SP7T Diode Switch Module;Freq 1-12.4GHz;Ins Loss 2.4dBmax;Isol 60dBmin;VSWR 2.1max
41	MO3748H3	34		M1055	SP7T Diode Switch Module;Freq 8-18GH3;Ins Loss 3.1dBmax;Isol 55dBmin;VSWR 2.3max
42	MO3748H4	34		M1055	SP7T Diode Switch Module;Freq 12.4-18GHz;Ins Loss 3.1dBmax;Isol 55dBmin;VSWR 2.3max
43	MO3749A1	34		M1055	SP7T Diode Switch Module;Freq .5-1GH3;Ins Loss .80dBmax;Isol 60dBmin;VSWR 1.5max
44	MO3749A3	34		M1055	SP7T Diode Switch Module;Freq 1-2GHz;Ins Loss 1.0dBmax;Isol 60dBmin;VSWR 1.7max
45	MO3749A4	34		M1055	SP7T Diode Switch Module;Freq 2-4GHz;Ins Loss 1.2dBmax;Isol 60dBmin;VSWR 1.8max
46	MO3749B	34		M1055	SP7T Diode Switch Module;Freq 4-8GHz;Ins Loss 1.8dBmax;Isol 60dBmin;VSWR 1.9max
47	MO3749C	34		M1055	SP7T Diode Switch Module;Freq 8-12.4GHz;Ins Loss 2.4dBmax;Isol 60dBmin;VSWR 2.1max
48	MO3749F	34		M1055	SP7T Diode Switch Module;Freq 1-12.4GH3;Ins Loss 2.4dBmax;Isol 60dBminVSNR 2.1max
49	MO3749H3	34		M1055	SP7T Diode Switch Module;Freq 8-18.4GH3;Ins Loss 3.1dBmax;Isol 55dBminVSNR 2.3max
50	MO3749H4	34		M1055	SP7T Diode Switch Module;Freq 12.4-18GHz;Ins Loss 3.1dBmax;Isol 55dBmin;VSWR 2.3max
51	MO3754	34	§	M1222	SPST Diode Module;Freq .1-.5GHz;Ins Loss .10dBmax;Isol 25dBmin;VSWR 1.1max
52	MO3754A	34	§	M1222	SPST Diode Module;Freq .5-4GHz;Ins Loss .30dBmax;Isol 25dBmin;VSWR 1.3max
53	MO3754B	34	§	M1222	SPST Diode Module;Freq 4-8GHz;Ins Loss .50dBmax;Isol 25dBmin;VSWR 1.5max
54	MO3754C	34	§	M1222	SPST Diode Module;Freq 8-12.4GHz;Ins Loss .60dBmax;Isol 25dBmin;VSWR 1.6max
55	MO3754H4	34	§	M1222	SPST Diode Module;Freq 12.4-18GHz;Ins Loss .70dBmax;Isol 20dBmin;VSWR 1.7max
56	MO3754H5	34	§	M1222	SPST Diode Module;Freq .5-18GHz;Ins Loss .80dBmax;Isol 20dBmin;VSWR 1.8max
57	MO3755	34	§	M1222	SPST Diode Module;Freq .1-.5GHz;Ins Loss .30dBmax;Isol 25dBmin;VSWR 1.3max
58♦	MO3755A	34	§	M1222	SPST Diode Module;Freq .5-4GHz;Ins Loss .30dBmax;Isol 25dBmin;VSWR 1.3max
59	MO3755B	34	§	M1222	SPST Diode Module;Freq 4-8GHz;Ins Loss .50dBmax;Isol 25dBmin;VSWR 1.5max
60	MO3755C	34	§	M1222	SPST Diode Module;Freq 8-12.4GHz;Ins Loss .60dBmax;Isol 25dBmin;VSWR 1.6max
61	MO3755H4	34	§	M1222	SPST Diode Module;Freq 12.4-18GHz;Ins Loss .70dBmax;Isol 20dBmin;VSWR 1.7max
62	MO3755H5	34	§	M1222	SPST Diode Module;Freq .5-18GHz;Ins Loss .80dBmax;Isol 20dBmin;VSWR 1.8max
63	MO3756	34	§	S347	SPST Diode Module;Freq .1-.5GHz;Ins Loss .10dBmax;Isol 25dBmin;VSWR 1.1max
64	MO3756A	34	§	S347	SPST Diode Module;Freq .5-4GHz;Ins Loss .30dBmax;Isol 25dBmin,VSWR 1.3max
65	MO3756B	34	§	S347	SPST Diode Module;Freq 4-8GHz;Ins Loss .50dBmax;Isol 25dBmin;VSWR 1.5max
66	MO3756C	34	§	S347	SPST Diode Module;Freq 8-12.4GHz;Ins Loss .60dBmax;Isol 25dBmin;VSWR 1.6max
67	MO3756H4	34	§	S347	SPST Diode Module;Freq 12.4-18GHz;Ins Loss .70dBmax;Isol 20dBmin;VSWR 1.7max
68	MO3756H5	34	§	S347	SPST Diode Module;Freq .5-18GHz;Ins Loss .80dBmax;Isol 20dBmin;VSWR 1.8max
69	MO3757	34	§	S347	SPST Diode Module;Freq .1-.5GHz;Ins Loss .10dBmax;Isol 25dBmin;VSWR 1.1max
70	MO3757A	34	§	S347	SPST Diode Module;Freq .5-4GHz;Ins Loss .30dBmax;Isol 25dBmin;VSWR 1.3max
71	MO3757B	34	§	S347	SPST Diode Module;Freq 4-8GHz;Ins Loss .50dBmax;Isol 25dBmin;VSWR 1.5max
72	MO3757C	34	§	S347	SPST Diode Module;Freq 8-12.4GHz;Ins Loss .60dBmax;Isol 25dBmin;VSWR 1.6max
73	MO3757H4	34	§	S347	SPST Diode Module;Freq 12.4-18GHz;Ins Loss .70dBmax;Isol 20dBmin;VSWR 1.7max
74	MO3757H5	34	§	S347	SPST Diode Module;Freq .5-18GHz;Ins Loss .80dBmax;Isol 20dBmin;VSWR 1.8max
75	MO3758	34	§	M1223	SPST Diode Module;Freq .1-.5GHz;Ins Loss .10dBmax;Isol 25dBmin;VSWR 1.1max
76	MO3758A	34	§	M1223	SPST Diode Module;Freq .5-4GHz;Ins Loss .30dBmax;Isol 25dBmin;VSWR 1.3max
77	MO3758B	34	§	M1223	SPST Diode Module;Freq 4-8GHz;Ins Loss .50dBmax;Isol 25dBmin;VSWR 1.5max
78	MO3758C	34	§	M1223	SPST Diode Module;Freq 8-12.4GHz;Ins Loss .60dBmax;Isol 25dBmin;VSWR 1.6max
79	MO3758H4	34	§	M1223	SPST Diode Module;Freq 12.4-18GHz;Ins Loss .70dBmax;Isol 20dBmin;VSWR 1.7max
80	MO3758H5	34	§	M1223	SPST Diode Module;Freq .5-18GHz;Ins Loss .80dBmax;Isol 20dBmin;VSWR 1.8max
81	MO3759	34	§	M1223	SPST Diode Module;Freq .1-.5GHz;Ins Loss .10dBmax;Isol 25dBmin;VSWR 1.1max
82	MO3759A	34	§	M1223	SPST Diode Module;Freq .5-4GHz;Ins Loss .30dBmax;Isol 25dBmin;VSWR 1.3max
83	MO3759B	34	§	M1223	SPST Diode Module;Freq 4-8GHz;Ins Loss .50dBmax;Isol 25dBmin;VSWR 1.5max
84	MO3759C	34	§	M1223	SPST Diode Module;Freq 8-12.4GHz;Ins Loss .60dBmax;Isol 25dBmin;VSWR 1.6max
85	MO3759H4	34	§	M1223	SPST Diode Module;Freq 12.4-18GHz;Ins Loss .70dBmax;Isol 20dBmin;VSWR 1.7max
86	MO3759H5	34	§	M1223	SPST Diode Module;Freq .5-18GHz;Ins Loss .80dBmax;Isol 20dBmin;VSWR 1.8max
87	MO7132-97	34		M914a	Limiter/Switch Module;Freq 12-18GHz;Ins Loss 3.0dBmax;VSWR 2.0max
88▼	MO7200A	34		M1056	SPDT Switch w/Intern Bias;Freq .5-4GHz;Ins Loss 1.2dBmax;Isol 40dBmin;VSWR 1.5max
89▼	MO7200B2	34		M1056	SPDT Switch w/Intern Bias;Freq 2-8GHz;Ins Loss 1.4dBmax;Isol 40dBmin;VSWR 1. 7max
90▼	MO7200E	34		M1056	SPDT Switch w/Intern Bias;Freq 4-12.4GHz;Ins Loss 1.7dBmax;Isol 35dBmin;VSWR 1.9 max
91♦	MO7200H3	34		M1056	SPDT Switch w/Intern Bias;Freq 8-18GHz;Ins Loss 2.1dBmax.Isol 35dBmin;VSWR 1.9max
92▼	MO7200H	34		M1056	SPDT Switch w/Intern Bias;Freq 2-18GHz;Ins Loss 2.3dBmax;Isol 35dBmin;VSWR 1.9max
93▼	MO7201A	34		M1056	SPDT Switch w/Intern Bias;Freq .5-4GHz;Ins Loss 1.5dBmax;Isol 50dBmin;VSWR 1.5max
94▼	MO7201B2	34		M1056	SPDT Switch w/Intern Bias;Freq 2-8GHz;Ins Loss 1.8dBmax;Isol 50dBmin;VSWR 1.7max
95▼	MO7201E	34		M1056	SPDT Switch w/Intern Bias;Freq 4-12.4GHz;Ins Loss 2.2dBmax;Isol 45dBmin;VSWR 1.9max
96▼	MO7201H3	34		M1056	SPDT Switch w/Intern Bias;Freq 8-18GHz;Ins Loss 2.6dBmax;Isol 45dBmin;VSWR 1.9max
97▼	MO7201H	34		M1056	SPDT Switch w/Intern Bias;Freq 2-18GHz;Ins Loss 2.7dBmax;Isol 45dBmin;VSWR 1.9max
98▼	MO7202A	34		M1055	SP3T Switch w/Intern Bias;Freq .5-4GHz;Ins Loss 1.2dBmax;Isol 40dBmin;VSWR 1.5max
99▼	MO7202B2	34		M1055	SP3T Switch w/Intern Bias;Freq 2-8GHz;Ins Loss 1.4dBmax;Isol 40dBmin;VSWR 1.7max
100▼	MO7202E	34		M1055	SP3T Switch w/Intern Bias;Freq 4-12.4GHz;Ins Loss 1.7dBmax;Isol 35dBmin;VSWR 1.9max
101▼	MO7202H3	34		M1055	SP3T Switch w/Intern Bias;Freq 8-18GHz;Ins Loss 2.1dBmax;Isol 35dBmin;VSWR 1.9max
102▼	MO7202H	34		M1055	SP3T Switch w/Intern Bias;Freq 2-18GHz;Ins Loss 2.3dBmax;Isol 35dBmin;VSWR 1.9max
103▼	MO7203A	34		M1055	SP3T Switch w/Intern Bias;Freq .5-4GHz;Ins Loss 1.5dBmax;Isol 50dBmin;VSWR 1.5max
104▼	MO7203B2	34		M1055	SP3T Switch w/Intern Bias;Freq 2-8GHz;Ins Loss 1.8dBmax;Isol 50dBmin;VSWR 1.7max
105▼	MO7203E	34		M1055	SP3T Switch w/Intern Bias;Freq 4-12.4GHz;Ins Loss 2.2dBmax;Isol 45dBmin;VSWR 1.9max
106	MO7203H3	34		M1055	SP3T Switch w/Intern Bias;Freq 8-18GHz;Ins Loss 2.7dBmax;Isol 45dBmin;VSWR 1.9max
107	MO7203H	34		M1055	SP3T Switch w/Intern Bias;Freq 2-18GHz;Ins Loss 2.8dBmax;Isol 45dBmin;VSWR 1.9max
108	MO7204A	34		M1226	SP3T Switch w/Intern Bias;Freq .5-4GHz;Ins Loss 1.2dBmax;Isol 40dBmin;VSWR 1.5max
109	MO7204B2	34		M1226	SP3T Switch w/Intern Bias;Freq 2-8GHz;Ins Loss 1.4dBmax;Isol 40dBmin;VSWR 1.7max
110	MO7204E	34		M1226	SP3T Switch w/Intern Bias;Freq 4-12.4GHz;Ins Loss 1.74dBmax;Isol 35dBmin;VSWR 1.9max

8. MISCELLANEOUS DEVICES

IN ORDER OF (1) USE and (2) TYPE No.

LINE No.	2 TYPE No.	1 USE	DESCRIPTION MAT.	DESCRIPTION DWG. No.	TECHNICAL DATA
1	MO7204H3	34		M1226	SP3T Switch w/Intern Bias;Freq 8-18GHz;Ins Loss 2.1dBmax;Isol 35dBmin;VSWR 1.9max
2	MO7204H	34		M1226	SP3T Switch w/Intern Bias;Freq 2-18GHz;Ins Loss 2.3dBmax;Isol 35dBmin;VSWR 1.9max
3	MO7205A	34		M1226	SP3T Switch w/Intern Bias;Freq .5-4GHz;Ins Loss 1.5dBmax;Isol 50dBmin;VSWR 1.5max
4	MO7205B2	34		M1226	SP3T Switch w/Intern Bias;Freq 2-8GHz;Ins Loss 1.8dBmax;Isol 50dBmin;VSWR 1.7max
5	MO7205E	34		M1226	SP3T Switch w/Intern Bias;Freq 4-12.4GHz;Ins Loss 2.2dBmax;Isol 45dBmin;VSWR 1.9max
6	MO7205H3	34		M1226	SP3T Switch w/Intern Bias;Freq 8-18GHz;Ins Loss 2.7dBmax;Isol 45dBmin;VSWR 1.9max
7	MO7205H	34		M1226	SP3T Switch w/Intern Bias;Freq 2-18GHz;Ins Loss 2.8dBmax;Isol 45dBmin;VSWR 1.9max
8	MO7206A	34		M1226	SP4T Switch w/Intern Bias;Freq .5-4GHz;Ins Loss 1.3dBmax;Isol 40dBmin;VSWR 1.5max
9	MO7206B2	34		M1226	SP4T Switch w/Intern Bias;Freq 2-8GHz;Ins Loss 1.5dBmax;Isol 40dBmin;VSWR 1.7max
10	MO7206E	34		M1226	SP4T Switch w/Intern Bias;Freq 4-12.4GHz;Ins Loss 1.9dBmax;Isol 35dBmin;VSWR 1.9max
11	MO7206H3	34		M1226	SP4T Switch w/Intern Bias;Freq 8-18GHz;Ins Loss 2.4dBmax;Isol 35dBmin;VSWR 1.9max
12	MO7206H	34		M1226	SP4T Switch w/Intern Bias;Freq 2-18GHz;Ins Loss 2.5dBmax;Isol 35dBmin;VSWR 1.9max
13	MO7207A	34		M1226	SP4T Switch w/Intern Bias;Freq .5-4GHz;Ins Loss 1.5dBmax;Isol 50dBmin;VSWR 1.5max
14	MO7207B2	34		M1226	SP4T Switch w/Intern Bias;Freq 2-8GHz;Ins Loss 1.8dBmax;Isol 50dBmin;VSWR 1.7max
15	MO7207E	34		M1226	SP4T Switch s/Intern Bias;Freq 4-12.4GH3;Ins Loss 2.3dBmax Isol 45dBmin;VSWR 1.9max
16	MO7207H3	34		M1226	SP4T Switch s/Intern Bias;Freq 8-18GH3;Ins Loss 2.8dBmax Isol 45dBmin;VSWR 1.9max
17	MO7207H	34		M1226	SP4T Switch s/Intern Bias;Freq 2-18GH3;Ins Loss 3.0dBmax Isol 45dBmin;VSWR 1.9max
18	MO7208A	34		M1225	SP4T Switch s/Intern Bias;Freq .5-4GH3;Ins Loss 1.3dBmax Isol 40dBmin;VSWR 1.5max
19	MO7208B2	34		M1225	SP4T Switch w/Intern Bias;Freq 2-8GHz;Ins Loss 1.5dBmax;Isol 40dBmin;VSWR 1.7max
20	MO7208E	34		M1225	SP4T Switch w/Intern Bias;Freq 4-12.4GHz;Ins Loss 1.9dBmax;Isol 35dBmin;VSWR 1.9max
21	MO7208H3	34		M1225	SP4T Switch w/Intern Bias;Freq 8-18GHz;Ins Loss 2.4dBmax;Isol 35dBmin;VSWR 1.9max
22	MO7208H	34		M1225	SP4T Switch w/Intern Bias;Freq 2-18GHz;Ins Loss 2.5dBmax;Isol 35dBmin;VSWR 1.9max
23	MO7209A	34		M1225	SP4T Switch w/Intern Bias;Freq .5-4GHz;Ins Loss 1.5dBmax;Isol 50dBmin;VSWR 1.5max
24	MO7209B2	34		M1225	SP4T Switch w/Intern Bias;Freq 2-8GHz;Ins Loss 1.8dBmax;Isol 50dBmin;VSWR 1.7max
25	MO7209E	34		M1225	SP4T Switch w/Intern Bias;Freq 4-12.4GHz;Ins Loss 2.3dBmax;Isol 45dBmin;VSWR 1.9max
26	MO7209H3	34		M1225	SP4T Switch w/Intern Bias;Freq 8-18GHz;Ins Loss 2.8dBmax;Isol 45dBmin;VSWR 1.9max
27	MO7209H	34		M1225	SP4T Switch w/Intern Bias;Freq 2-18GHz;Ins Loss 3.0dBmax;Isol 45dBmin;VSWR 1.9max
28	MO7210A	34		M1226	SP5T Switch w/Intern Bias;Freq .5-4GHz;Ins Loss 1.3dBmax;Isol 40dBmin;VSWR 1.6max
29	MO7210B2	34		M1226	SP5T Switch w/Intern Bias;Freq 2-8GHz;Ins Loss 1.7dBmax;Isol 40dBmin;VSWR 1.8max
30	MO7210E	34		M1226	SP5T Switch w/Intern Bias;Freq 4-12.4GHz;Ins Loss 2.1dBmax;Isol 35dBmin;VSWR 2.0max
31	MO7210H3	34		M1226	SP5T Switch w/Intern Bias;Freq 8-18GHz;Ins Loss 2.6dBmax;Isol 35dBmin;VSWR 2.0max
32	MO7210H	34		M1226	SP5T Switch w/Intern Bias;Freq 2-18GHz;Ins Loss 2.8dBmax;Isol 35dBmin;VSWR 2.0max
33	MO7211A	34		M1226	SP5T Switch w/Intern Bias;Freq .5-4GHz;Ins Loss 1.6dBmax;Isol 50dBmin;VSWR 1.6max
34	MO7211B2	34		M1226	SP5T Switch w/Intern Bias;Freq 2-8GHz;Ins Loss 2.0dBmax;Isol 50dBmin;VSWR 1.8max
35	MO7211E	34		M1226	SP5T Switch w/Intern Bias;Freq 4-12.4GHz;Ins Loss 2.4dBmax;Isol 45dBmin;VSWR 2.0max
36	MO7211H3	34		M1226	SP5T Switch w/Intern Bias;Freq 8-18GHz;Ins Loss 2.9dBmax;Isol 45dBmin;VSWR 2.0max
37	MO7211H	34		M1226	SP5T Switch w/Intern Bias;Freq 2-18GHz;Ins Loss 3.1dBmax;Isol 45dBmin;VSWR 2.0max
38	MO7212A	34		M1226	SP6T Switch w/Intern Bias;Freq .5-4GHz;Ins Loss 1.4dBmax;Isol 40dBmin;VSWR 1.6max
39	MO7212B2	34		M1226	SP6T Switch w/Intern Bias;Freq 2-8GHz;Ins Loss 1.8dBmax;Isol 40dBmin;VSWR 1.8max
40	MO7212E	34		M1226	SP6T Switch w/Intern Bias;Freq 4-12.4GHz;Ins Loss 2.3dBmax;Isol 35dBmin;VSWR 2.0max
41	MO7212H3	34		M1226	SP6T Switch w/Intern Bias;Freq 8-18GHz;Ins Loss 2.9dBmax;Isol 35dBmin;VSWR 2.1max
42	MO7212H	34		M1226	SP6T Switch w/Intern Bias;Freq 2-18GHz;Ins Loss 3.0dBmax;Isol 35dBmin;VSWR 2.1max
43	MO7213A	34		M1226	SP6T Switch w/Intern Bias;Freq .5-4GHz;Ins Loss 1.6dBmax;Isol 50dBmin;VSWR 1.6max
44	MO7213B2	34		M1226	SP6T Switch w/Intern Bias;Freq 2-8GHz;Ins Loss 2.1dBmax;Isol 50dBmin;VSWR 1.8max
45	MO7213E	34		M1226	SP6T Switch w/Intern Bias;Freq 4-12.4GHz;Ins Loss 2.6dBmax;Isol 45dBmin;VSWR 2.0max
46	MO7213H3	34		M1226	SP6T Switch w/Intern Bias;Freq 8-18GHz;Ins Loss 3.2dBmax;Isol 45dBmin;VSWR 2.1max
47	MO7213H	34		M1226	SP6T Switch w/Intern Bias;Freq 2-18GHz;Ins Loss 3.4dBmax;Isol 45dBmin;VSWR 2.1max
48	MO7214A	34		M1226	SP7T Switch w/Intern Bias;Freq .5-4GHz;Ins Loss 1.4dBmax;Isol 40dBmin;VSWR 1.6max
49	MO7214B2	34		M1226	SP7T Switch w/Intern Bias;Freq 2-8GHz;Ins Loss 1.9dBmax;Isol 40dBmin;VSWR 1.8max
50	MO7214E	34		M1226	SP7T Switch w/Intern Bias;Freq 4-12.4GHz;Ins Loss 2.4dBmax;Isol 35dBmin;VSWR 2.0max
51	MO7214H3	34		M1226	SP7T Switch w/Intern Bias;Freq 8-18GHz;Ins Loss 3.2dBmax;Isol 35dBmin;VSWR 2.1max
52	MO7214H	34		M1226	SP7T Switch w/Intern Bias;Freq 2-18GHz;Ins Loss 3.4dBmax;Isol 35dBmin;VSWR 2.1max
53	MO7215A	34		M1226	SP7T Switch w/Intern Bias;Freq .5-4GHz;Ins Loss 1.7dBmax;Isol 50dBmin;VSWR 1.6max
54	MO7215B2	34		M1226	SP7T Switch w/Intern Bias;Freq 2-8GHz;Ins Loss 2.2dBmax;Isol 50dBmin;VSWR 1.8max
55	MO7215E	34		M1226	SP7T Switch w/Intern Bias;Freq 4-12.4GHz;Ins Loss 2.7dBmax;Isol 45dBmin;VSWR 2.0max
56	MO7215H3	34		M1226	SP7T Switch w/Intern Bias;Freq 8-18GHz;Ins Loss 3.6dBmax;Isol 45dBmin;VSWR 2.1max
57	MO7215H	34		M1226	SP7T Switch w/Intern Bias;Freq 2-18GHz;Ins Loss 3.8dBmax;Isol 45dBmin;VSWR 2.1max
58♦	MT3057A2	34		M1204	Coaxial SPST Diode Switch;Freq Band .5-2GHz;Insert Loss .50dB;Switch Speed 10nS
59♦	MT3057A4	34		M1204	Coaxial SPST Diode Switch;Freq Band 2-4GHz;Insert Loss .70dB;Switch Speed 10nS
60♦	MT3057B	34		M1204	Coaxial SPST Diode Switch;Freq Band 4-8GHz;Insert Loss .80dB;Switch Speed 10nS
61♦	MT3057C	34		M1204	Coaxial SPST Diode Switch;Freq Band 8-12.4GHz;Insert Loss 1.1dB;Switch Speed 10nS
62♦	MT3057D1	34		M1204	Coaxial SPST Diode Switch;Freq Band .5-12.4GHz;Insert Loss 1.4dB;Switch Speed 10nS
63♦	MT3057H3	34		M1204	Coaxial SPST Diode Switch;Freq Band 8-18GHz;Insert Loss 1.7dB;Switch Speed 10nS
64♦	MT3057H	34		M1204	Coaxial SPST Diode Switch;Freq Band 2-18GHz;Insert Loss 2.0dB;Switch Speed 10nS
65♦	MT3058A2	34		M1204	Coaxial SPST Diode Switch;Freq Band .5-2GHz;Insert Loss .50dB;Switch Speed 20nS
66♦	MT3058A4	34		M1204	Coaxial SPST Diode Switch;Freq Band 2-4GHz;Insert Loss .70dB;Switch Speed 20nS
67♦	MT3058B	34		M1204	Coaxial SPST Diode Switch;Freq Band 4-8GHz;Insert Loss .70dB;Switch Speed 20nS
68♦	MT3058C	34		M1204	Coaxial SPST Diode Switch;Freq Band 8-12.4GHz;Insert Loss 1.1dB;Switch Speed 20nS
69♦	MT3058D1	34		M1204	Coaxial SPST Diode Switch;Freq Band .5-12.4GHz;Insert Loss 1.5db;Switch Speed 20nS
70♦	MT3058H3	34		M1204	Coaxial SPST Diode Switch;Freq Band 8-18GHz;Insert Loss 1.6db;Switch Speed 20nS
71♦	MT3058H	34		M1204	Coaxial SPST Diode Switch;Freq Band 2-18GHz;Insert Loss 1.9db;Switch Speed 20nS
72♦	MT3059A2	34		M1204	Coaxial SPST Diode Switch;Freq Band .5-2GHz;Insert Loss .50dB;Switch Speed 40nS
73♦	MT3059A4	34		M1204	Coaxial SPST Diode Switch;Freq Band 2-4GHz;Insert Loss .70dB;Switch Speed 40nS
74♦	MT3059B	34		M1204	Coaxial SPST Diode Switch;Freq Band 4-8GHz;Insert Loss .70dB;Switch Speed 40nS
75♦	MT3059C	34		M1204	Coaxial SPST Diode Switch;Freq Band 8-12.4GHz;Insert Loss 1.0dB;Switch Speed 40nS
76♦	MT3059D1	34		M1204	Coaxial SPST Diode Switch;Freq Band .5-12.4GHz:Insert Loss 1.3dB;Switch Speed 40nS
77♦	MT3059H3	34		M1204	Coaxial SPST Diode Switch;Freq Band 8-18GHz;Insert Loss 1.5dB;Switch Speed 40nS
78♦	MT3059H	34		M1204	Coaxial SPST Diode Switch;Freq Band 2-18GHz;Insert Loss 1.8dB;Switch Speed 40nS
79♦	MT3060A2	34		M1204	Coaxial SPST Diode Switch;Freq Band .5-2GHz;Insert Loss .50dB;Switch Speed 200nS
80♦	MT3060A4	34		M1204	Coaxial SPST Diode Switch;Freq Band 2-4GHz;Insert Loss .70dB;Switch Speed 200nS
81♦	MT3060B	34		M1204	Coaxial SPST Diode Switch;Freq Band 4-8GHz;Insert Loss .70dB;Switch Speed 200nS
82♦	MT3060C	34		M1204	Coaxial SPST Diode Switch;Freq Band 8-12.4GHz;Insert Loss .90dB;Switch Speed 200nS
83♦	MT3060D1	34		M1204	Coaxial SPST Diode Switch;Freq Band .5-12.4GHz;Insert Loss 1.2dB;Switch Speed 200nS
84♦	MT3060H3	34		M1204	Coaxial SPST Diode Switch;Freq Band 8-18GHz;Insert Loss 1.4dB;Switch Speed 200nS
85♦	MT3060H	34		M1204	Coaxial SPST Diode Switch;Freq Band 2-18GHz;Insert Loss 1.7dB;Switch Speed 200nS
86♦	MT3061A2	34		M1204	Coaxial SPST Diode Switch;Freq Band .5-2GHz;Insert Loss .50dB;Switch Speed 500nS
87♦	MT3061A4	34		M1204	Coaxial SPST Diode Switch;Freq Band 2-4GHz;Insert Loss .70dB;Switch Speed 500nS
88♦	MT3061B	34		M1204	Coaxial SPST Diode Switch;Freq Band 4-8GHz;Insert Loss .70dB;Switch Speed 500nS
89♦	MT3061C	34		M1204	Coaxial SPST Diode Switch;Freq Band 8-12.4GHz;Insert Loss .90dB;Switch Speed 500nS
90♦	MT3061D1	34		M1204	Coaxial SPST Diode Switch;Freq Band .5-12.4GHz;Insert Loss 1.2dB;Switch Speed 500nS
91♦	MT3061H3	34		M1204	Coaxial SPST Diode Switch;Freq Band 8-18GHz;Insert Loss 1.3dB;Switch Speed 500nS
92♦	MT3061H	34		M1204	Coaxial SPST Diode Switch;Freq Band 2-18GHz;Insert Loss 1.6dB;Switch Speed 500nS
93♦	MT3062A2	34		M1204	Coaxial SPST Diode Switch;Freq Band .5-2GHz;Insert Loss .60dB;Switch Speed 10nS
94♦	MT3062A4	34		M1204	Coaxial SPST Diode Switch;Freq Band 2-4GHz;Insert Loss .80dB;Switch Speed 10nS
95♦	MT3062B	34		M1204	Coaxial SPST Diode Switch;Freq Band 4-8GHz;Insert Loss 1.0dB;Switch Speed 10nS
96♦	MT3062C	34		M1204	Coaxial SPST Diode Switch;Freq Band 8-12.4GHz;Insert Loss 1.4dB;Switch Speed 10nS
97♦	MT3062D1	34		M1204	Coaxial SPST Diode Switch;Freq Band .5-12.4GHz;Insert Loss 1.7dB;Switch Speed 10nS
98♦	MT3062H3	34		M1204	Coaxial SPST Diode Switch;Freq Band 8-18GHz;Insert Loss 2.0dB;Switch Speed 10nS
99♦	MT3062H	34		M1204	Coaxial SPST Diode Switch;Freq Band 2-18GHz;Insert Loss 2.3dB;Switch Speed 10nS
100♦	MT3063A2	34		M1204	Coaxial SPST Diode Switch;Freq Band .5-2GHz;Insert Loss .60dB;Switch Speed 20nS
101♦	MT3063A4	34		M1204	Coaxial SPST Diode Switch;Freq Band 2-4GHz;Insert Loss .80dB;Switch Speed 20nS
102♦	MT3063B	34		M1204	Coaxial SPST Diode Switch;Freq Band 4-8GHz;Insert Loss .90dB;Switch Speed 20nS
103♦	MT3063C	34		M1204	Coaxial SPST Diode Switch;Freq Band 8-12.4GHz;Insert Loss 1.3dB;Switch Speed 20nS
104♦	MT3063D1	34		M1204	Coaxial SPST Diode Switch;Freq Band .5-12.4GHz;Insert Loss 1.6dB;Switch Speed 20nS
105♦	MT3063H3	34		M1204	Coaxial SPST Diode Switch;Freq Band 8-18GHz;Insert Loss 1.9dB;Switch Speed 20nS
106♦	MT3063H	34		M1204	Coaxial SPST Diode Switch;Freq Band 2-18GHz;Insert Loss 2.2dB;Switch Speed 20nS
107♦	MT3064A2	34		M1204	Coaxial SPST Diode Switch;Freq Band .5-2GHz;Insert Loss .60dB;Switch Speed 40nS
108♦	MT3064A4	34		M1204	Coaxial SPST Diode Switch;Freq Band 2-4GHz;Insert Loss .80dB;Switch Speed 40nS
109♦	MT3064B	34		M1204	Coaxial SPST Diode Switch;Freq Band 4-8GHz;Insert Loss .90dB;Switch Speed 40nS
110♦	MT3064C	34		M1204	Coaxial SPST Diode Switch;Freq Band 8-12.4GHz;Insert Loss 1.1dB;Switch Speed 40nS

8. MISCELLANEOUS DEVICES

IN ORDER OF (1) USE and (2) TYPE No.

LINE No.	2 TYPE No.	1 USE	DESCRIPTION MAT.	DWG. No.	TECHNICAL DATA
1♦	MT3064D1	34		M1204	Coaxial SPST Diode Switch;Freq Band .5-12.4GHz:Insert Loss 1.4dB;Switch Speed 40nS
2♦	MT3064H3	34		M1204	Coaxial SPST Diode Switch;Freq Band 8-18GHz;Insert Loss 1.8dB;Switch Speed 40nS
3♦	MT3064H	34		M1204	Coaxial SPST Diode Switch;Freq Band 2-18GHz:Insert Loss 2.1dB;Switch Speed 40nS
4♦	MT3065A2	34		M1204	Coaxial SPST Diode Switch;Freq Band .5-2GHz;Insert Loss .60dB;Switch Speed 200nS
5♦	MT3065A4	34		M1204	Coaxial SPST Diode Switch;Freq Band 2-4GHz;Insert Loss .80dB;Switch Speed 200nS
6♦	MT3065B	34		M1204	Coaxial SPST Diode Switch;Freq Band 4-8GHz;Insert Loss .90dB;Switch Speed 200nS
7♦	MT3065C	34		M1204	Coaxial SPST Diode Switch;Freq Band 8-12.4GHz;Insert Loss 1.1dB;Switch Speed 200nS
8♦	MT3065D1	34		M1204	Coaxial SPST Diode Switch;Freq Band .5-12.4GHz;Insert Loss 1.4dB;Switch Speed 200nS
9♦	MT3065H3	34		M1204	Coaxial SPST Diode Switch;Freq Band 8-18GHz;Insert Loss 1.7dB;Switch Speed 200ns
10♦	MT3065H	34		M1204	Coaxial SPST Diode Switch;Freq Band 2-18GHz;Insert Loss 2.0dB;Switch Speed 200nS
11♦	MT3066A2	34		M1204	Coaxial SPST Diode Switch;Freq Band .5-2GHz;Insert Loss .60dB;Switch Speed 500nS
12♦	MT3066A4	34		M1204	Coaxial SPST Diode Switch;Freq Band 2-4GHz;Insert Loss .80dB;Switch Speed 500nS
13♦	MT3066B	34		M1204	Coaxial SPST Diode Switch;Freq Band 4-8GHz;Insert Loss .90dB;Switch Speed 500nS
14♦	MT3066C	34		M1204	Coaxial SPST Diode Switch;Freq Band 8-12GHz;Insert Loss 1.1dB;Switch Speed 500nS
15♦	MT3066D1	34		M1204	Coaxial SPST Diode Switch;Freq Band .5-12.4GHz;Insert Loss 1.4dB;Switch Speed500nS
16♦	MT3066H3	34		M1204	Coaxial SPST Diode Switch;Freq Band 8-18GHz;Insert Loss 1.6dB;Switch Speed 500nS
17♦	MT3066H	34		M1204	Coaxial SPST Diode Switch;Freq Band 2-18GHz;Insert Loss 1.9dB;Switch Speed 500nS
18♦	MT3085A2P1	34		M1201	SPST Switch;Freq .5-2GHz;Insertion Loss .50dB;VSWR 1.5;SMA Jack
19♦	MT3085A2P2	34		M1201	SPST Switch;Freq .5-2GHz;Insertion Loss .50dB;VSWR 1.5;SMC Jack
20	MT3085A2P3	34		M1201	SPST Switch;Freq .5-2GHz;Insertion Loss .50dB;VSWR 1.5;Solder Pin
21♦	MT3085A4P1	34		M1201	SPST Switch;Freq 2-4GHz;Insertion Loss .70dB;VSWR 1.5;SMA Jack
22♦	MT3085A4P2	34		M1201	SPST Switch;Freq 2-4GHz;Insertion Loss .70dB;VSWR 1.5;SMC Jack
23	MT3085A4P3	34		M1201	SPST Switch;Freq 2-4GHz;Insertion Loss .70dB;VSWR 1.5;Solder Pin
24♦	MT3085A-P1	34		M1201	SPST Switch;Freq .5-4GHz;Insertion Loss .70dB;VSWR 1.7;SMA Jack
25♦	MT3085A-P2	34		M1201	SPST Switch;Freq .5-4GHz;Insertion Loss .70dB;VSWR 1.7;SMC Jack
26	MT3085A-P3	34		M1201	SPST Switch;Freq .5-4GHz;Insertion Loss .70dB;VSWR 1.7;Solder Pin
27♦	MT3085B2P1	34		M1201	SPST Switch;Freq 2-8GHz;Insertion Loss 1.0dB;VSWR 1.8;SMA Jack
28♦	MT3085B2P2	34		M1201	SPST Switch;Freq 2-8GHz;Insertion Loss 1.0dB;VSWR 1.8;SMC Jack
29	MT3085B2P3	34		M1201	SPST Switch;Freq 2-8GHz;Insertion Loss 1.0dB;VSWR 1.8;Solder Pin
30♦	MT3085B-P1	34		M1201	SPST Switch;Freq 4-8GHz;Insertion Loss 1.0dB;VSWR 1.7;SMA Jack
31♦	MT3085B-P2	34		M1201	SPST Switch;Freq 4-8GHz;Insertion Loss 1.0dB;VSWR 1.7;SMA Jack
32	MT3085B-P3	34		M1201	SPST Switch;Freq,4-8GHz;Insertion Loss 1.0dB;VSWR 1.7;Solder Pin
33♦	MT3085C-P1	34		M1201	SPST Switch;Freq 8-12.4GHz;Insertion Loss 1.2dB;VSWR 1.8;SMA Jack
34	MT3085C-P2	34		M1201	SPST Switch;Freq 8-12.4GHz;Insertion Loss 1.2dB;VSWR 1.8;SMC Jack
35♦	MT3085C-P3	34		M1201	SPST Switch;Freq 8-12.4GHz;Insertion Loss 1.2dB;VSWR 1.8;Solder Pin
36	MT3085D1P1	34		M1201	SPST Switch;Freq .5-12.4GHZ;Insertion Loss 1.2dB;VSWR 2.0;SMA Jack
37♦	MT3085D1P2	34		M1201	SPST Switch;Freq .5-12.4GHz;Insertion Loss 1.2dB;VSWR 2.0;SMC Jack
38	MT3085D1P3	34		M1201	SPST Switch;Freq .5-12.4GHz;Insertion Loss 1.2dB;VSWR 2.0;Solder Pin
39♦	MT3085D-P1	34		M1201	SPST Switch;Freq .5-8GHz;Insertion Loss 1.0dB;VSWR 2.0;SMA Jack
40♦	MT3085D-P2	34		M1201	SPST Switch;Freq .5-8GHz;Insertion Loss 1.0dB;VSWR 2.0;SMC Jack
41	MT3085D-P3	34		M1201	SPST Switch;Freq .5-8GHz;Insertion Loss 1.0dB;VSWR 2.0;Solder Pin
42♦	MT3085E-P1	34		M1201	SPST Switch;Freq 4-12.4GHz;Insertion Loss 1.2dB;VSWR 2.0;Sma Jack
43	MT3085E-P2	34		M1201	SPST Switch;Freq 4-12.4GHz;Insertion Loss 1.2dB;VSWR 2.0;SMC Jack
44	MT3085E-P3	34		M1201	SPST Switch;Freq,4-12.4GHz;Insertion Loss 1.2dB;VSWR 2.0;Solder Pin
45♦	MT3085F1P1	34		M1201	SPST Switch;Freq 2-12.4GHz;Insertion Loss 1.2dB;VSWR 2.0;SMA Jack
46♦	MT3085F1P2	34		M1201	SPST Switch;Freq 2-12.4GHz;Insertion Loss 1.5dB;VSWR 2.0;SMA Jack
47	MT3085F1P3	34		M1201	SPST Switch;Freq 2-12.4GHz;Insertion Loss 1.2dB;VSWR 2.0;Solder Pin
48♦	MT3085H1P1	34		M1201	SPST Switch;Freq 4-18GHz;Insertion Loss 1.4dB;VSWR 2.0;Sma Jack
49	MT3085H1P2	34		M1201	SPST Switch;Freq 4-18GHz;Insertion Loss 1.4dB;VSWR 2.0;SMC Jack
50	MT3085H1P3	34		M1201	SPST Switch;Freq,4-18GHz;Insertion Loss 1.4dB;VSWR 2.0;Solder Pin
51♦	MT3085H3P1	34		M1201	SPST Switch;Freq 12.4-18GHz;Insertion Loss 1.4dB;VSWR 2.0;SMA Jack
52♦	MT3085H3P2	34		M1201	SPST Switch;Freq 8-18 GHz;Insertion Loss 1.4dB;VSWR 2.0;SMC Jack
53♦	MT3085H3P3	34		M1201	SPST Switch;Freq 8-18GHz;Insertion Loss 1.4dB;VSWR 2.0;Solder Pin
54	MT3085H4P1	34		M1201	SPST Switch;Freq 12.4-18GHZ;Insertion Loss 1.4dB;VSWR 2.0;SMA Jack
55	MT3085H4P2	34		M1201	SPST Switch;Freq 12.4-18GHz;Insertion Loss 1.4dB;VSWR 2.0;SMC Jack
56♦	MT3085H4P3	34		M1201	SPST Switch;Freq 12.4-18GHz;Insertion Loss 1.4dB;VSWR 2.0;Solder Pin
57♦	MT3085H-P1	34		M1201	SPST Switch;Freq 2-18GHz;Insertion Loss 1.6dB;VSWR 2.0;SMA Jack
58♦	MT3085H-P2	34		M1201	SPST Switch;Freq 2-18GHz;Insertion Loss 1.6dB;VSWR 2.0;SMA Jack
59	MT3085H-P3	34		M1201	SPST Switch;Freq,2-18GHz;Insertion Loss 1.6dB;VSWR 2.0;Solder Pin
60♦	MT3086A2P1	34		M1201	SPST Switch;Freq .5-2GHz;Insertion Loss .60dB;VSWR 1.5;SMA Jack
61♦	MT3086A2P2	34		M1201	SPST Switch;Freq .5-2GHz;Insertion Loss .60dB;VSWR 1.5;SMC Jack
62	MT3086A2P3	34		M1201	SPST Switch;Freq .5-2GHz;Insertion Loss .60dB;VSWR 1.5;Solder Pin
63♦	MT3086A4P1	34		M1201	SPST Switch;Freq 2-4GHz;Insertion Loss .90dB;VSWR 1.5;SMA Jack
64♦	MT3086A4P2	34		M1201	SPST Switch;Freq 2-4GHz;Insertion Loss .90dB;VSWR 1.5;SMC Jack
65	MT3086A4P3	34		M1201	SPST Switch;Freq 2-4GHz;Insertion Loss .90dB;VSWR 1.5;Solder Pin
66♦	MT3086A-P1	34		M1201	SPST Switch;Freq .5-4GHz;Insertion Loss .90dB;VSWR 1.7;SMA Jack
67♦	MT3086A-P2	34		M1201	SPST Switch;Freq .5-4GHz;Insertion Loss .90dB;VSWR 1.7;SMC Jack
68	MT3086A-P3	34		M1201	SPST Switch;Freq .5-4GHz;Insertion Loss .90dB;VSWR 1.7;Solder Pin
69♦	MT3086B2P1	34		M1201	SPST Switch;Freq 2-8GHz;Insertion Loss 1.3dB;VSWR 1.8;SMA Jack
70♦	MT3086B2P2	34		M1201	SPST Switch;Freq 2-8GHz;Insertion Loss 1.3dB;VSWR 1.8;SMC Jack
71	MT3086B2P3	34		M1201	SPST Switch;Freq 2-8GHz;Insertion Loss 1.3dB;VSWR 1.8;Solder Pin
72♦	MT3086B-P1	34		M1201	SPST Switch;Freq 4-8GHz;Insertion Loss 1.3dB;VSWR 1.7;SMA Jack
73♦	MT3086B-P2	34		M1201	SPST Switch;Freq 4-8GHz;Insertion Loss 1.3dB;VSWR 1.7;SMA Jack
74	MT3086B-P3	34		M1201	SPST Switch;Freq,4-8GHz;Insertion Loss 1.3dB;VSWR 1.7;Solder Pin
75♦	MT3086C-P1	34		M1201	SPST Switch;Freq 8-12.4GHz;Insertion Loss 1.5dB;VSWR 1.8;SMA Jack
76	MT3086C-P2	34		M1201	SPST Switch;Freq 8-12.4GHz;Insertion Loss 1.5dB;VSWR 1.8;SMC Jack
77♦	MT3086C-P3	34		M1201	SPST Switch;Freq 8-12.4GHz;Insertion Loss 1.5dB;VSWR 1.8;Solder Pin
78♦	MT3086D1P1	34		M1201	SPST Switch;Freq .5-.12.4GHz;Insertion Loss 1.5dB;VSWR 2.0;SMA Jack
79♦	MT3086D1P2	34		M1201	SPST Switch;Freq .5-12.4GHz;Insertion Loss 1.2dB;VSWR 2.0;SMC Jack
80	MT3086D1P3	34		M1201	SPST Switch;Freq .5-12.4GHz;Insertion Loss 1.5dB;VSWR 2.0;Solder Pin
81♦	MT3086D-P1	34		M1201	SPST Switch;Freq .5-8GHz;Insertion Loss 1.3dB;VSWR 2.0;SMA Jack
82♦	MT3086D-P2	34		M1201	SPST Switch;Freq .5-8GHz;Insertion Loss 1.3dB;VSWR 2.0;SMC Jack
83	MT3086D-P3	34		M1201	SPST Switch;Freq .5-8GHz;Insertion Loss 1.3dB;VSWR 2.0;Solder Pin
84♦	MT3086E-P1	34		M1201	SPST Switch;Freq 4-12.4GHz;Insertion Loss 1.5dB;VSWR 2.0;Sma Jack
85	MT3086E-P2	34		M1201	SPST Switch;Freq 4-12.4GHz;Insertion Loss 1.5dB;VSWR 2.0;SMC Jack
86	MT3086E-P3	34		M1201	SPST Switch;Freq,4-12.4GHz;Insertion Loss 1.5dB;VSWR 2.0;Solder Pin
87♦	MT3086F1P1	34		M1201	SPST Switch;Freq 2-12.4GHz;Insertion Loss 1.5dB;VSWR 1.9;SMA Jack
88♦	MT3086F1P2	34		M1201	SPST Switch;Freq 2-12.4GHz;Insertion Loss 1.5dB;VSWR 1.9;SMA Jack
89	MT3086F1P3	34		M1201	SPST Switch;Freq,2-12.4GHz;Insertion Loss 1.5dB;VSWR 1.9;Solder Pin
90♦	MT3086H1P1	34		M1201	SPST Switch;Freq 4-18GHz;Insertion Loss 1.8dB;VSWR 2.0;Sma Jack
91	MT3086H1P2	34		M1201	SPST Switch;Freq 4-18GHz;Insertion Loss 1.8dB;VSWR 2.0;SMC Jack
92♦	MT3086H1P3	34		M1201	SPST Switch;Freq 4-18GHz;Insertion Loss 1.8dB;VSWR 2.0;Solder Pin
93♦	MT3086H3P1	34		M1201	SPST Switch;Freq 8-18GHz;Insertion Loss 1.8dB;VSWR 2.0;SMA Jack
94♦	MT3086H3P2	34		M1201	SPST Switch;Freq 8-18 GHz;Insertion Loss 1.8dB;VSWR 2.0;SMC Jack
95♦	MT3086H3P3	34		M1201	SPST Switch;Freq 8-18GHz;Insertion Loss 1.8dB;VSWR 2.0;Solder Pin
96♦	MT3086H4P1	34		M1201	SPST Switch;Freq 12.4-18GHz;Insertion Loss 1.8dB;VSWR 2.0;SMA Jack
97	MT3086H4P2	34		M1201	SPST Switch;Freq 12.4-18GHz;Insertion Loss 1.8dB;VSWR 2.0;SMC Jack
98♦	MT3086H4P3	34		M1201	SPST Switch;Freq 12.4-18GHz;Insertion Loss 1.8dB;VSWR 2.0;Solder Pin
99♦	MT3086H-P1	34		M1201	SPST Switch;Freq 2-18GHz;Insertion Loss 2.0dB;VSWR 2.0;SMA Jack
100♦	MT3086H-P2	34		M1201	SPST Switch;Freq 2-18GHz;Insertion Loss 2.0dB;VSWR 2.0;SMA Jack
101	MT3086H-P3	34		M1201	SPST Switch;Freq,2-18GHz;Insertion Loss 2.0dB;VSWR 2.0;Solder Pin
102	MT3121A2	34	Si	M1209	SPDT Coaxial Pin Diode Switch;Freq .5-2GHz;VSWR 1.5max;Sw Speed 20ns max
103	MT3121A4	34	Si	M1209	SPDT Coaxial Pin Diode Switch;Freq 2-4GHz;VSWR 1.5max;Sw Speed 20ns max
104	MT3121B	34	Si	M1209	SPDT Coaxial Pin Diode Switch;Freq 4-8GHz;VSWR 1.8max;Sw Speed 20ns max
105	MT3121C	34	Si	M1209	SPDT Coaxial Pin Diode Switch;Freq 8-12.4GHz;VSWR 1.8max;Sw Speed 20ns max
106▼	MT3121D1	34	Si	M1209	SPDT Coaxial Pin Diode Switch;Freq .5-12.4GHz;VSWR 2.0max;Sw Speed 20ns max
107	MT3121H3	34	Si	M1209	SPDT Coaxial Pin Diode Switch;Freq 8-18GHz;VSWR 2.0max;Sw Speed 20ns max
108	MT3121H	34	Si	M1209	SPDT Coaxial Pin Diode Switch;Freq 2-18GHz;VSWR 2.0max;Sw Speed 20ns max
109	MT3124A2	34	Si	M1210	SPDT Coaxial Pin Diode Switch;Freq .5-2GHz;VSWR 1.5max;Sw Speed 20ns max
110	MT3124A4	34	Si	M1210	SPDT Coaxial Pin Diode Switch;Freq 2-4GHz;VSWR 1.5max;Sw Speed 20ns max

8. MISCELLANEOUS DEVICES

IN ORDER OF (1) USE and (2) TYPE No.

LINE No.	[2] TYPE No.	[1] USE	DESCRIPTION MAT.	DWG. No.	TECHNICAL DATA
1	MT3124B	34	Si	M1210	SPDT Coaxial Pin Diode Switch;Freq 4-8GHz;VSWR 1.8max;Sw Speed 20ns max
2	MT3124C	34	Si	M1210	SPDT Coaxial Pin Diode Switch;Freq 8-12.4GHz;VSWR 1.8max;Sw Speed 20ns max
3	MT3124D1	34	Si	M1210	SPDT Coaxial Pin Diode Switch;Freq .5-12.4GHz;VSWR 2.0max;Sw Speed 20ns max
4	MT3124G1	34	Si	M1210	SPDT Coaxial Pin Diode Switch;Freq 8-18GHz;VSWR 2.0max;Sw Speed 20ns max
5	MT3124G	34	Si	M1210	SPDT Coaxial Pin Diode Switch;Freq 2-18GHz;VSWR 2.0max;Sw Speed 20ns max
6	MT3125A2	34	Si	M1210	SPDT Coaxial Pin Diode Switch;Freq .5-2GHz;VSWR 1.5max;Sw Speed 150ns max
7	MT3125A4	34	Si	M1210	SPDT Coaxial Pin Diode Switch;Freq 2-4GHz;VSWR 1.5max;Sw Speed 150ns max
8	MT3125B	34	Si	M1210	SPDT Coaxial Pin Diode Switch;Freq 4-8GHz;VSWR 1.8max;Sw Speed 150ns max
9	MT3125C	34	Si	M1210	SPDT Coaxial Pin Diode Switch;Freq 8-12.4GHz;VSWR 1.8max;Sw Speed 150ns max
10	MT3125D1	34	Si	M1210	SPDT Coaxial Pin Diode Switch;Freq .5-12.4GHz;VSWR 2.0max;Sw Speed 150ns max
11	MT3125H3	34	Si	M1210	SPDT Coaxial Pin Diode Switch;Freq 8-18GHz;VSWR 2.0max;Sw Speed 150ns max
12	MT3125H	34	Si	M1210	SPDT Coaxial Pin Diode Switch;Freq 2-18GHz;VSWR 2.0max;Sw Speed 150ns max
13	MT3127A2	34	Si	M1209	SPDT Coaxial Pin Diode Switch;Freq .5-2GHz;VSWR 1.5max;Sw Speed 150ns max
14	MT3127A4	34	Si	M1209	SPDT Coaxial Pin Diode Switch;Freq 2-4GHz;VSWR 1.5max;Sw Speed 150ns max
15	MT3127B	34	Si	M1209	SPDT Coaxial Pin Diode Switch;Freq 4-8GHz;VSWR 1.8max;Sw Speed 150ns max
16	MT3127C	34	Si	M1209	SPDT Coaxial Pin Diode Switch;Freq 8-12.4GHz;VSWR 1.8max;Sw Speed 150ns max
17	MT3127D1	34	Si	M1209	SPDT Coaxial Pin Diode Switch;Freq .5-12.4GHz;VSWR 2.0max;Sw Speed 150ns max
18	MT3127H3	34	Si	M1209	SPDT Coaxial Pin Diode Switch;Freq 8-18GHz;VSWR 2.0max;Sw Speed 150ns max
19	MT3127H	34	Si	M1209	SPDT Coaxial Pin Diode Switch;Freq 2-18GHz;VSWR 2.0max;Sw Speed 150ns max
20	MT3260A2	34		M1235	Coaxial Limiter;Freq .5-2GHz;Ins Loss .50dBmax;VSWR 1.4max
21	MT3260A4	34		M1235	Coaxial Limiter;Freq 2-4GHz;Ins Loss .60dBmax;VSWR 1.4max
22	MT3260A	34		M1235	Coaxial Limiter;Freq .5-4GHz;Ins Loss .60dBmax;VSWR 1.4max
23▼	MT3260B	34		M1235	Coaxial Limiter;Freq 4-8GHz;Ins Loss .90dBmax;VSWR 1.5max
24▼	MT3260C	34		M1235	Coaxial Limiter;Freq 8-12.4GHz;Ins Loss 1.3dBmax;VSWR 1.7max
25	MT3260H4	34		M1235	Coaxial Limiter;Freq 12.4-18GHz;Ins Loss 1.8dBmax;VSWR 1.9max
26	MT3260H5	34		M1235	Coaxial Limiter;Freq .5-18GHz;Ins Loss 2.4dBmax;VSWR 2.0max
27	MT3280A2	34		M1235	Coaxial Limiter;Freq .5-2GHz;Ins Loss .60dBmax;VSWR 1.4max
28	MT3280A4	34		M1235	Coaxial Limiter;Freq 2-4GHz;Ins Loss .90dBmax;VSWR 1.5max
29	MT3280A	34		M1235	Coaxial Limiter;Freq .5-4GHz;Ins Loss .90dBmax;VSWR 1.5max
30	MT3280B	34		M1235	Coaxial Limiter;Freq 4-8GHz;Ins Loss 1.4dBmax;VSWR 1.8max
31	MT3280C	34		M1235	Coaxial Limiter;Freq 8-12.4GHz;Ins Loss 1.8dBmax;VSWR 1.9max
32	MT3280H4	34		M1235	Coaxial Limiter;Freq 12.4-18GHz;Ins Loss 2.3dBmax;VSWR 2.0max
33	MT3280H	34		M1235	Coaxial Limiter;Freq 2-18GHz;Ins Loss 2.3dBmax;VSWR 2.0max
34	MT3281A2	34		M1235	Coaxial Limiter;Freq .5-2GHz;Ins Loss .60dBmax;VSWR 1.4max
35	MT3281A4	34		M1235	Coaxial Limiter;Freq 2-4GHz;Ins Loss .90dBmax;VSWR 1.5max
36	MT3281A	34		M1235	Coaxial Limiter;Freq .5-4GHz;Ins Loss .90dBmax;VSWR 1.5max
37	MT3281B	34		M1235	Coaxial Limiter;Freq 4-8GHz;Ins Loss 1.4dBmax;VSWR 1.8max
38	MT3281C	34		M1235	Coaxial Limiter;Freq 8-12.4GHz;Ins Loss 1.8dBmax;VSWR 1.9max
39	MT3281H4	34		M1235	Coaxial Limiter;Freq 12.4-18GHz;Ins Loss 2.3dBmax;VSWR 2.0max
40	MT3281H	34		M1235	Coaxial Limiter;Freq 2-18GHz;Ins Loss 2.3dBmax;VSWR 2.0max
41	MT3282A2	34		M1235	Coaxial Limiter;Freq .5-2GHz;Ins Loss .50dBmax;VSWR 1.4max
42	MT3282A4	34		M1235	Coaxial Limiter;Freq 2-4GHz;Ins Loss .60dBmax;VSWR 1.4max
43	MT3282A	34		M1235	Coaxial Limiter;Freq .5-4GHz;Ins Loss .60dBmax;VSWR 1.4max
44	MT3282B	34		M1235	Coaxial Limiter;Freq 4-8GHz;Ins Loss 1.0dBmax;VSWR 1.5max
45	MT3282C	34		M1235	Coaxial Limiter;Freq 8-12.4GHz;Ins Loss 1.4 dBmax;VSWR 1.8max
46	MT3282H4	34		M1235	Coaxial Limiter;Freq 12.4-18GHz;Ins Loss 1.9dBmax;VSWR 1.9max
47	MT3282H	34		M1235	Coaxial Limiter;Freq 2-18GHz;Ins Loss 1.9dBmax;VSWR 1.9max
48	MT3283A2	34		M1235	Coaxial Limiter;Freq .5-2GHz;Ins Loss .60dBmax;VSWR 1.4max
49	MT3283A4	34		M1235	Coaxial Limiter;Freq 2-4GHz;Ins Loss .90dBmax;VSWR 1.5max
50	MT3283A	34		M1235	Coaxial Limiter;Freq .5-4GHz;Ins Loss .90dBmax;VSWR 1.5max
51	MT3283B	34		M1235	Coaxial Limiter;Freq 4-8GHz;Ins Loss 1.4dBmax;VSWR 1.8max
52	MT3283C	34		M1235	Coaxial Limiter;Freq 8-12.4GHz;Ins Loss 1.8dBmax;VSWR 1.9max
53	MT3283H4	34		M1235	Coaxial Limiter;Freq 12.4-18GHz;Ins Loss 2.3dBmax;VSWR 2.0max
54	MT3283H	34		M1235	Coaxial Limiter;Freq 2-18GHz;Ins Loss 2.3dBmax;VSWR 2.0max
55	MT3358A-P1I	34		M1213	SP8T Switch INV;Freq .5-4GHz;Ins Loss 1.4dBmax;Isol 45dBmin;SMA Jack
56	MT3358A-P1N	34		M1213	SP8T Switch NINV;Freq .5-4GHz;Ins Loss 1.4dBmax;Isol 45dBmin;SMA Jack
57	MT3358A-P2I	34		M1213	SP8T Switch INV;Freq .5-4GHz;Ins Loss 1.4dBmax;Isol 45dBmin;SMC Jack
58	MT3358A-P2N	34		M1213	SP8T Switch NINV;Freq .5-4GHz;Ins Loss 1.4dBmax;Isol 45dBmin;SMC Jack
59	MT3358A-P3I	34		M1213	SP8T Switch INV;Freq .5-4GHz;Ins Loss 1.4dBmax;Isol 45dBmin;Solder Pin
60	MT3358A-P3N	34		M1213	SP8T Switch NINV;Freq .5-4GHz;Ins Loss 1.4dBmax;Isol 45dBmin;Solder Pin
61	MT3358B2P1I	34		M1213	SP8T Switch INV;Freq 2-8GHz;Ins Loss 1.9dBmax;Isol 40dBmin;SMA Jack
62	MT3358B2P1N	34		M1213	SP8T Switch NINV;Freq 2-8GHz;Ins Loss 1.9dBmax;Isol 40dBmin;SMA Jack
63	MT3358B2P2I	34		M1213	SP8T Switch INV;Freq 2-8GHz;Ins Loss 1.9dBmax;Isol 40dBmin;SMC Jack
64	MT3358B2P2N	34		M1213	SP8T Switch NINV;Freq 2-8GHz;Ins Loss 1.9dBmax;Isol 40dBmin;SMC Jack
65	MT3358B2P3I	34		M1213	SP8T Switch INV;Freq 2-8GHz;Ins Loss 1.9dBmax;Isol 40dBmin;Solder Pin
66	MT3358B2P3N	34		M1213	SP8T Switch NINV;Freq 2-8GHz;Ins Loss 1.9dBmax;Isol 40dBmin;Solder Pin
67	MT3358E-P1I	34		M1213	SP8T Switch INV;Freq 4-12.4GHz;Ins Loss 2.4dBmax;Isol 40dBmin;SMA Jack
68	MT3358E-P1N	34		M1213	SP8T Switch NINV;Freq 4-12.4GHz;Ins Loss 2.4dBmax;Isol 40dBmin;SMA JACK
69	MT3358E-P2I	34		M1213	SP8T Switch INV;Freq 4-12.4GHz;Ins Loss 2.4dBmax;Isol 40dBmin;SMC Jack
70	MT3358E-P2N	34		M1213	SP8T Switch NINV;Freq 4-12.4GHz;Ins Loss 2.4dBmax;Isol 40dBmin;SMC JACK
71	MT3358E-P3I	34		M1213	SP8T Switch INV;Freq 4-12.4GHz;Ins Loss 2.4dBmax;Isol 40dBmin;Solder Pin
72	MT3358E-P3N	34		M1213	SP8T Switch NINV;Freq 4-12.4GHz;Ins Loss 2.4dBmax;Isol 40dBmin;Solder Pin
73	MT3358H3P1I	34		M1213	SP8T Switch INV;Freq 8-18GHz;Ins Loss 3.0dBmax;Isol 35dBmin;SMA Jack
74	MT3358H3P1N	34		M1213	SP8T Switch NINV;Freq 8-18GHz;Ins Loss 3.0dBmax;Isol 35dBmin;SMA Jack
75	MT3358H3P2I	34		M1213	SP8T Switch INV;Freq 8-18GHz;Ins Loss 3.0dBmax;Isol 35dBmin;SMC Jack
76	MT3358H3P2N	34		M1213	SP8T Switch NINV;Freq 8-18GHz;Ins Loss 3.0dBmax;Isol 35dBmin;SMC Jack
77	MT3358H3P3I	34		M1213	SP8T Switch INV;Freq 8-18GHz;Ins Loss 3.0dBmax;Isol 35dBmin;Solder Pin
78	MT3358H3P3N	34		M1213	SP8T Switch NINV;Freq 8-18GHz;Ins Loss 3.0dBmax;Isol 35dBmin;Solder Pin
79	MT3358H-P1I	34		M1213	SP8T Switch INV;Freq 2-18GHz;Ins Loss 3.2dBmax;Isol 35dBmin;SMA Jack
80	MT3358H-P1N	34		M1213	SP8T Switch NINV;Freq 2-18GHz;Ins Loss 3.2dBmax;Isol 35dBmin;SMA Jack
81	MT3358H-P2I	34		M1213	SP8T Switch INV;Freq 2-18GHz;Ins Loss 3.2dBmax;Isol 35dBmin;SMC Jack
82	MT3358H-P2N	34		M1213	SP8T Switch NINV;Freq 2-18GHz;Ins Loss 3.2dBmax;Isol 35dBmin;SMC Jack
83	MT3358H-P3I	34		M1213	SP8T Switch INV;Freq 2-18GHz;Ins Loss 3.2dBmax;Isol 35dBmin;Solder Pin
84	MT3358H-P3N	34		M1213	SP8T Switch NINV;Freq 2-18GHz;Ins Loss 3.2dBmax;Isol 35dBmin;Solder Pin
85	MT3359A-P1I	34		M1213	SP9T Switch INV;Freq .5-4GHz;Ins Loss 1.4dBmax;Isol 45dBmin;SMA Jack
86	MT3359A-P1N	34		M1213	SP9T Switch NINV;Freq .5-4GHz;Ins Loss 1.4dBmax;Isol 45dBmin;SMA Jack
87	MT3359A-P2I	34		M1213	SP9T Switch INV;Freq .5-4GHz;Ins Loss 1.4dBmax;Isol 45dBmin;SMC Jack
88	MT3359A-P2N	34		M1213	SP9T Switch NINV;Freq .5-4GHz;Ins Loss 1.4dBmax;Isol 45dBmin;SMC Jack
89	MT3359A-P3I	34		M1213	SP9T Switch INV;Freq .5-4GHz;Ins Loss 1.4dBmax;Isol 45dBmin;Solder Pin
90	MT3359A-P3N	34		M1213	SP9T Switch NINV;Freq .5-4GHz;Ins Loss 1.4dBmax;Isol 45dBmin;Solder Pin
91	MT3359B2P1I	34		M1213	SP9T Switch INV;Freq 2-8GHz;Ins Loss 1.9dBmax;Isol 40dBmin;SMA Jack
92	MT3359B2P1N	34		M1213	SP9T Switch NINV;Freq 2-8GHz;Ins Loss 1.9dBmax;Isol 40dBmin;SMA Jack
93	MT3359B2P2I	34		M1213	SP9T Switch INV;Freq 2-8GHz;Ins Loss 1.9dBmax;Isol 40dBmin;SMC Jack
94	MT3359B2P2N	34		M1213	SP9T Switch NINV;Freq 2-8GHz;Ins Loss 1.9dBmax;Isol 40dBmin;SMC Jack
95	MT3359B2P3I	34		M1213	SP9T Switch INV;Freq 2-8GHz;Ins Loss 1.9dBmax;Isol 40dBmin;Solder Pin
96	MT3359B2P3N	34		M1213	SP9T Switch NINV;Freq 2-8GHz;Ins Loss 1.9dBmax;Isol 40dBmin;Solder Pin
97	MT3359E-P1I	34		M1213	SP9T Switch INV;Freq 4-12.4GHz;Ins Loss 2.5dBmax;Isol 40dBmin;SMA Jack
98	MT3359E-P1N	34		M1213	SP9T Switch NINV;Freq 4-12.4GHz;Ins Loss 2.5dBmax;Isol 40dBmin;SMA Jack
99	MT3359E-P2I	34		M1213	SP9T Switch INV;Freq 4-12.4GHz;Ins Loss 2.5dBmax;Isol 40dBmin;SMC Jack
100	MT3359E-P2N	34		M1213	SP9T Switch NINV;Freq 4-12.4GHz;Ins Loss 2.5dBmax;Isol 40dBmin;SMC Jack
101	MT3359E-P3I	34		M1213	SP9T Switch INV;Freq 4-12.4GHz;Ins Loss 2.5dBmax;Isol 40dBmin;Solder Pin
102	MT3359E-P3N	34		M1213	SP9T Switch NINV;Freq 4-12.4GHz;Ins Loss 2.5dBmax;Isol 40dBmin;Solder Pin
103	MT3359H3P1I	34		M1213	SP9T Switch INV;Freq 8-18GHz;Ins Loss 3.2dBmax;Isol 35dBmin;SMA Jack
104	MT3359H3P1N	34		M1213	SP9T Switch NINV;Freq 8-18GHz;Ins Loss 3.2dBmax;Isol 35dBmin;SMA Jack in
105	MT3359H3P2I	34		M1213	SP9T Switch INV;Freq 8-18GHz;Ins Loss 3.2dBmax;Isol 35dBmin;SMC Jack
106	MT3359H3P2N	34		M1213	SP9T Switch NINV;Freq 8-18GHz;Ins Loss 3.2dBmax;Isol 35dBmin;SMC Jack in
107	MT3359H3P3I	34		M1213	SP9T Switch INV;Freq 8-18GHz;Ins Loss 3.2dBmax;Isol 35dBmin;Solder Pin
108	MT3359H3P3N	34		M1213	SP9T Switch NINV;Freq 8-18GHz;Ins Loss 3.2dBmax;Isol 35dBmin;Solder Pin
109	MT3359H-P1I	34		M1213	SP9T Switch INV;Freq 2-18GHz;Ins Loss 3.4dBmax;Isol 35dBmin;SMA Jack
110	MT3359H-P1N	34		M1213	SP9T Switch NINV;Freq 2-18GHz;Ins Loss 3.4dBmax;Isol 35dBmin;SMA Jack

8. MISCELLANEOUS DEVICES

IN ORDER OF (1) USE and (2) TYPE No.

LINE No.	2 TYPE No.	1 USE	DESCRIPTION MAT.	DWG. No.	TECHNICAL DATA
1	MT3359H-P2I	34		M1213	SP9T Switch INV;Freq 2-18GHz;Ins Loss 3.4dBmax;Isol 35dBmin;SMC Jack
2	MT3359H-P2N	34		M1213	SP9T Switch NINV;Freq 2-18GHz;Ins Loss 3.4dBmax;Isol 35dBmin;SMC Jack
3	MT3359H-P3I	34		M1213	SP9T Switch INV;Freq 2-18GHz;Ins Loss 3.4dBmax;Isol 35dBmin;Solder Pin
4	MT3359H-P3N	34		M1213	SP9T Switch NINV;Freq 2-18GHz;Ins Loss 3.4dBmax;Isol 35dBmin;Solder Pin
5	MT3360A-P1I	34		M1213	SP10T Switch INV;Freq .5-4GHz;Ins Loss 1.5dBmax;Isol 45dBmin;SMA Jack
6	MT3360A-P1N	34		M1213	SP10T Switch NINV;Freq .5-4GHz;Ins Loss 1.5dBmax;Isol 45dBmin;SMA Jack
7	MT3360A-P2I	34		M1213	SP10T Switch INV;Freq .5-4GHz;Ins Loss 1.5dBmax;Isol 45dBmin;SMC Jack
8	MT3360A-P2N	34		M1213	SP10T Switch NINV;Freq .5-4GHz;Ins Loss 1.5dBmax;Isol 45dBmin;SMC Jack
9	MT3360A-P3I	34		M1213	SP10T Switch INV;Freq .5-4GHz;Ins Loss 1.5dBmax;Isol 45dBmin;Solder Pin
10	MT3360A-P3N	34		M1213	SP10T Switch NINV;Freq .5-4GHz;Ins Loss 1.5dBmax;Isol 45dBmin;Solder Pin
11	MT3360B2P1I	34		M1213	SP10T Switch INV;Freq 2-8GHz;Ins Loss 2.0dBmax;Isol 40dBmin;SMA Jack
12	MT3360B2P1N	34		M1213	SP10T Switch NINV;Freq 2-8GHz;Ins Loss 2.0dBmax;Isol 40dBmin;SMA Jack
13	MT3360B2P2I	34		M1213	SP10T Switch INV;Freq 2-8GHz;Ins Loss 2.0dBmax;Isol 40dBmin;SMC Jack
14	MT3360B2P2N	34		M1213	SP10T Switch NINV;Freq 2-8GHz;Ins Loss 2.0dBmax;Isol 40dBmin;SMC Jack
15	MT3360B2P3I	34		M1213	SP10T Switch INV;Freq 2-8GHz;Ins Loss 2.0dBmax;Isol 40dBmin;Solder Jack
16	MT3360B2P3N	34		M1213	SP10T Switch NINV;Freq 2-8GHz;Ins Loss 2.0dBmax;Isol 40dBmin;Solder Pin
17	MT3360E-P1I	34		M1213	SP10T Switch INV;Freq 4-12.4GHz;Ins Loss 2.6dBmax;Isol 40dBmin;SMA Jack
18	MT3360E-P1N	34		M1213	SP10T Switch NINV;Freq 4-12.4GHz;Ins Loss 2.6dBmax;Isol 40dBmin;SMA Jack
19	MT3360E-P2I	34		M1213	SP10T Switch INV;Freq 4-12.4GHz;Ins Loss 2.6dBmax;Isol 40dBmin;SMC Jack
20	MT3360E-P2N	34		M1213	SP10T Switch NINV;Freq 4-12.4GHz;Ins Loss 2.6dBmax;Isol 40dBmin;SMC Jack
21	MT3360E-P3I	34		M1213	SP10T Switch INV;Freq 4-12.4GHz;Ins Loss 2.6dBmax;Isol 40dBmin;Solder Pin
22	MT3360E-P3N	34		M1213	SP10T Switch NINV;Freq 4-12.4GHz;Ins Loss 2.6dBmax;Isol 40dBmin;Solder Pin
23	MT3360H3P1I	34		M1213	SP10T Switch INV;Freq 8-18GHz;Ins Loss 3.4dBmax;Isol 35dBmin;SMA Jack
24	MT3360H3P1N	34		M1213	SP10T Switch NINV;Freq 8-18GHz;Ins Loss 3.4dBmax;Isol 35dBmin;SMA Jack
25	MT3360H3P2I	34		M1213	SP10T Switch INV;Freq 8-18GHz;Ins Loss 3.4dBmax;Isol 35dBmin;SMC Jack
26	MT3360H3P2N	34		M1213	SP10T Switch NINV;Freq 8-18GHz;Ins Loss 3.4dBmax;Isol 35dBmin;SMC Jack
27	MT3360H3P3I	34		M1213	SP10T Switch INV;Freq 8-18GHz;Ins Loss 3.4dBmax;Isol 35dBmin;Solder Pin
28	MT3360H3P3N	34		M1213	SP10T Switch NINV;Freq 8-18GHz;Ins Loss 3.4dBmax;Isol 35dBmin;Solder Pin
29	MT3360H-P1I	34		M1213	SP10T Switch INV;Freq 2-18GHz;Ins Loss 3.6dBmax;Isol 35dBmin;SMA Jack
30	MT3360H-P1N	34		M1213	SP10T Switch NINV;Freq 2-18GHz;Ins Loss 3.6dBmax;Isol 35dBmin;SMA Jack
31	MT3360H-P2I	34		M1213	SP10T Switch INV;Freq 2-18GHz;Ins Loss 3.6dBmax;Isol 35dBmin;SMC Jack
32	MT3360H-P2N	34		M1213	SP10T Switch NINV;Freq 2-18GHz;Ins Loss 3.6dBmax;Isol 35dBmin;SMC Jack
33	MT3360H-P3I	34		M1213	SP10T Switch INV;Freq 2-18GHz;Ins Loss 3.6dBmax;Isol 35dBmin;Solder Pin
34	MT3360H-P3N	34		M1213	SP10T Switch NINV;Freq 2-18GHz;Ins Loss 3.6dBmax;Isol 35dBmin;Solder Pin
35	MT3361A-P1I	34		M1213	SP10T Switch INV;Freq .5-4GHz;Ins Loss 1.5dBmax;Isol 45dBmin;SMA Jack
36	MT3361A-P1N	34		M1213	SP10T Switch NINV;Freq .5-4GHz;Ins Loss 1.5dBmax;Isol 45dBmin;SMA Jack
37	MT3361A-P2I	34		M1213	SP10T Switch INV;Freq .5-4GHz;Ins Loss 1.5dBmax;Isol 45dBmin;SMC Jack
38	MT3361A-P2N	34		M1213	SP10T Switch NINV;Freq .5-4GHz;Ins Loss 1.5dBmax;Isol 45dBmin;SMC Jack
39	MT3361A-P3I	34		M1213	SP10T Switch INV;Freq .5-4GHz;Ins Loss 1.5dBmax;Isol 45dBmin;Solder Pin
40	MT3361A-P3N	34		M1213	SP10T Switch NINV;Freq .5-4GHz;Ins Loss 1.5dBmax;Isol 45dBmin;Solder Pin
41	MT3361B2P1I	34		M1213	SP10T Switch INV;Freq 2-8GHz;Ins Loss 2.1dBmax;Isol 40dBmin;SMA Jack
42	MT3361B2P1N	34		M1213	SP10T Switch NINV;Freq 2-8GHz;Ins Loss 2.1dBmax;Isol 40dBmin;SMA Jack
43	MT3361B2P2I	34		M1213	SP11T Switch INV;Freq 2-8GHz;Ins Loss 2.1dBmax;Isol 40dBmin;SMC Jack
44	MT3361B2P2N	34		M1213	SP10T Switch NINV;Freq 2-8GHz;Ins Loss 2.1dBmax;Isol 40dBmin;SMC Jack
45	MT3361B2P3I	34		M1213	SP11T Switch INV;Freq 2-8GHz;Ins Loss 2.1dBmax;Isol 40dBmin;Solder Pin
46	MT3361B2P3N	34		M1213	SP10T Switch NINV;Freq 2-8GHz;Ins Loss 2.1dBmax;Isol 40dBmin;Solder Pin
47	MT3361E-P1I	34		M1213	SP11T Switch INV;Freq 4-12.4GHz;Ins Loss 2.7dBmax;Isol 40dBmin;SMA Jack
48	MT3361E-P1N	34		M1213	SP11T Switch NINV;Freq 4-12.4GHz;Ins Loss 2.7dBmax;Isol 40dBmin;SMA Jack
49	MT3361E-P2I	34		M1213	SP11T Switch INV;Freq 4-12.4GHz;Ins Loss 2.7dBmax;Isol 40dBmin;SMC Jack
50	MT3361E-P2N	34		M1213	SP11T Switch NINV;Freq 4-12.4GHz;Ins Loss 2.7dBmax;Isol 40dBmin;SMC Jack
51	MT3361E-P3I	34		M1213	SP11T Switch INV;Freq 4-12.4GHz;Ins Loss 2.7dBmax;Isol 40dBmin;Solder Pin
52	MT3361E-P3N	34		M1213	SP11T Switch NINV;Freq 4-12.4GHz;Ins Loss 2.7dBmax;Isol 40dBmin;Solder Pin
53	MT3361H3P1I	34		M1213	SP11T Switch INV;Freq 8-18GHz;Ins Loss 3.5dBmax;Isol 35dBmin;SMA Jack
54	MT3361H3P1N	34		M1213	SP11T Switch NINV;Freq 8-18GHz;Ins Loss 3.5dBmax;Isol 35dBmin;SMA Jack
55	MT3361H3P2I	34		M1213	SP11T Switch INV;Freq 8-18GHz;Ins Loss 3.5dBmax;Isol 35dBmin;SMC Jack
56	MT3361H3P2N	34		M1213	SP11T Switch NINV;Freq 8-18GHz;Ins Loss 3.5dBmax;Isol 35dBmin;SMC Jack
57	MT3361H3P3I	34		M1213	SP11T Switch INV;Freq 8-18GHz;Ins Loss 3.5dBmax;Isol 35dBmin;Solder Pin
58	MT3361H3P3N	34		M1213	SP11T Switch NINV;Freq 8-18GHz;Ins Loss 3.5dBmax;Isol 35dBmin;Solder Pin
59	MT3361H-P1I	34		M1213	SP11T Switch INV;Freq 2-18GHz;Ins Loss 3.8dBmax;Isol 35dBmin;SMA Jack
60	MT3361H-P1N	34		M1213	SP11T Switch NINV;Freq 2-18GHz;Ins Loss 3.8dBmax;Isol 35dBmin;SMA Jack
61	MT3361H-P2I	34		M1213	SP11T Switch INV;Freq 2-18GHz;Ins Loss 3.8dBmax;Isol 35dBmin;SMC Jack
62	MT3361H-P2N	34		M1213	SP11T Switch NINV;Freq 2-18GHz;Ins Loss 3.8dBmax;Isol 35dBmin;SMC Jack
63	MT3361H-P3I	34		M1213	SP11T Switch INV;Freq 2-18GHz;Ins Loss 3.8dBmax;Isol 35dBmin;Solder Pin
64	MT3361H-P3N	34		M1213	SP11T Switch NINV;Freq 2-18GHz;Ins Loss 3.8dBmax;Isol 35dBmin;Solder Pin
65	MT3363A	34		M1211	SP3T Switch;Freq .5-4GHz;Ins Loss 1.5dB max;Isol 60dB min;VSWR 1.5max
66	MT3363B2	34		M1211	SP3T Switch;Freq 2-8GHz;Ins Loss 1.8dB max;Isol 60dB min;VSWR1.6max
67	MT3363E	34		M1211	SP3T Switch;Freq 4-12.4GHz;Ins Loss 2.1dB max;Isol 55dB min;VSWR 1.7max
68	MT3363H3	34		M1211	SP3T Switch;Freq 8-18GHz;Ins Loss 2.5dB max;Isol 50dB min;VSWR 1.8max
69	MT3363H	34		M1211	SP3T Switch;Freq 2-18GHz;Ins Loss 2.7dB max;Isol 50dB min;VSWR 1.9max
70	MT3364A	34		M1212	SP4T Switch;Freq .5-4GHz;Ins Loss 1.5dB max;Isol 60dB min;VSWR 1.5max
71	MT3364B2	34		M1212	SP4T Switch;Freq 2-8GHz;Ins Loss 1.8dB max;Isol 60dB min;VSWR 1.6max
72	MT3364E	34		M1212	SP4T Switch;Freq 4-12.4GHz;Ins Loss 2.2dB max;Isol 55dB min;VSWR 1.8max
73	MT3364H3	34		M1212	SP4T Switch;Freq 8-18GHz;Ins Loss 2.6dB max;Isol 50dB min;VSWR 1.9max
74	MT3364H	34		M1212	SP4T Switch;Freq 2-18GHz;Ins Loss 2.8dB max;Isol 50dB min;VSWR 2.0max
75	MT3365A	34		M1212	SP5T Switch;Freq .5-4GHz;Ins Loss 1.6dB max;Isol 60dB min;VSWR 1.5max
76	MT3365B2	34		M1212	SP5T Switch;Freq 2-8GHz;Ins Loss 2.0dB max;Isol 60dB min;VSWR 1.7max
77	MT3365E	34		M1212	SP5T Switch;Freq 4-12.4GHz;Ins Loss 2.4dB max;Isol 55dB min;VSWR 1.8max
78▼	MT3365H3	34		M1212	SP5T Switch;Freq 8-18GHz;Ins Loss 2.9dB max;Isol 50dB min;VSWR2.0max
79	MT3365H	34		M1212	SP5T Switch;Freq 2-18GHz;Ins Loss 3.1dB max;Isol 50dB min;VSWR 2.1 max
80	MT3366A	34		M1212	SP6T Switch;Freq .5-4GHz;Ins Loss 1.6dB max;Isol 60dB min;VSWR 1.6 max
81	MT3366B2	34		M1212	SP6T Switch;Freq 2-8GHz;Ins Loss 2.1dB max;Isol 60dB min;VSWR 1.7max
82	MT3366E	34		M1212	SP6T Switch;Freq 4-12.4GHz;Ins Loss 2.6dB max;Isol 55dB min;VSWR 1.9max
83	MT3366H3	34		M1212	SP6T Switch;Freq 8-18GHz;Ins Loss 3.2dB max;Isol 50dB min;VSWR 2.1max
84	MT3366H	34		M1212	SP6T Switch;Freq 2-18GHz;Ins Loss 3.4dB max;Isol 50dB min;VSWR 2.2max
85	MT3367A	34		M1212	SP7T Switch;Freq .5-4GHz;Ins Loss 1.7dB max;Isol 60dB min;VSWR 1.6max
86	MT3367B2	34		M1212	SP7T Switch;Freq 2-8GHz;Ins Loss 2.2dB max;Isol 60dB min;VSWR 1.8max
87	MT3367E	34		M1212	SP7T Switch;Freq 4-12.4GHz;Ins Loss 2.7dB max;Isol 55dB min;VSWR 2.0max
88	MT3367H3	34		M1212	SP7T Switch;Freq 8-18GHz;Ins Loss 3.4dB max;Isol 50dB min;VSWR 2.2max
89	MT3367H	34		M1212	SP7T Switch;Freq 2-18GHz;Ins Loss 3.6dB max;Isol 50dB min;VSWR 2.3max
90	MT3368A-P1I	34		M1213	SP8T Switch INV;Freq .5-4GHz;Ins Loss 1.8dBmax;Isol 55dBmin;SMA Jack
91	MT3368A-P1N	34		M1213	SP8T Switch NINV;Freq .5-4GHz;Ins Loss 1.8dBmax;Isol 55dBmin;SMA Jack
92	MT3368A-P2I	34		M1213	SP8T Switch INV;Freq .5-4GHz;Ins Loss 1.8dBmax;Isol 55dBmin;SMC Jack
93	MT3368A-P2N	34		M1213	SP8T Switch NINV;Freq .5-4GHz;Ins Loss 1.8dBmax;Isol 55dBmin;SMC Jack
94	MT3368A-P3I	34		M1213	SP8T Switch INV;Freq .5-4GHz;Ins Loss 1.8dBmax;Isol 55dBmin;Solder Pin
95	MT3368A-P3N	34		M1213	SP8T Switch NINV;Freq .5-4GHz;Ins Loss 1.8dBmax;Isol 55dBmin;Solder Pin
96	MT3368B2P1I	34		M1213	SP8T Switch INV;Freq 2-8GHz;Ins Loss 2.3dBmax;Isol 55dBmin;SMA Jack
97	MT3368B2P1N	34		M1213	SP8T Switch NINV;Freq 2-8GHz;Ins Loss 2.3dBmax;Isol 55dBmin;SMA Jack
98	MT3368B2P2I	34		M1213	SP8T Switch INV;Freq 2-8GHz;Ins Loss 2.3dBmax;Isol 55dBmin;SMC Jack
99	MT3368B2P2N	34		M1213	SP8T Switch NINV;Freq 2-8GHz;Ins Loss 2.3dBmax;Isol 55dBmin;SMC Jack
100	MT3368B2P3I	34		M1213	SP8T Switch INV;Freq 2-8GHz;Ins Loss 2.3dBmax;Isol 55dBmin;Solder Pin
101	MT3368B2P3N	34		M1213	SP8T Switch NINV;Freq 2-8GHz;Ins Loss 2.3dBmax;Isol 55dBmin;Solder Pin
102	MT3368E-P1I	34		M1213	SP8T Switch INV;Freq 4-12.4GHz;Ins Loss 2.8dBmax;Isol 50dBmin;SMA Jack
103	MT3368E-P1N	34		M1213	SP8T Switch NINV;Freq 4-12.4GHz;Ins Loss 2.8dBmax;Isol 50dBmin;SMA Jack
104	MT3368E-P2I	34		M1213	SP8T Switch INV;Freq 4-12.4GHz;Ins Loss 2.8dBmax;Isol 50dBmin;SMC Jack
105	MT3368E-P2N	34		M1213	SP8T Switch NINV;Freq 4-12.4GHz;Ins Loss 2.8dBmax;Isol 50dBmin;SMC Jack
106	MT3368E-P3I	34		M1213	SP8T Switch INV;Freq 4-12.4GHz;Ins Loss 2.8dBmax;Isol 50dBmin;Solder Pin
107	MT3368E-P3N	34		M1213	SP8T Switch NINV;Freq 4-12.4GHz;Ins Loss 2.8dBmax;Isol 50dBmin;Solder Pin
108	MT3368H3P1I	34		M1213	SP8T Switch INV;Freq 8-18GHz;Ins Loss 3.5dBmax;Isol 50dBmin;SMA Jack
109	MT3368H3P1N	34		M1213	SP8T Switch NINV;Freq 8-18GHz;Ins Loss 3.5dBmax;Isol 50dBmin;SMA Jack
110	MT3368H3P2I	34		M1213	SP8T Switch INV;Freq 8-18GHz;Ins Loss 3.5dBmax;Isol 50dBmin;SMC Jack

SYMBOLS AND CODES EXPLAINED IN INTERPRETER

8. MISCELLANEOUS DEVICES

IN ORDER OF (1) USE and (2) TYPE No.

LINE No.	2 TYPE No.	1 USE	DESCRIPTION MAT.	DESCRIPTION DWG. No.	TECHNICAL DATA
1	MT3368H3P2N	34		M1213	SP8T Switch NINV;Freq 8-18GHz;Ins Loss 3.5dBmax;Isol 50dBmin;SMC Jack
2	MT3368H3P3I	34		M1213	SP8T Switch INV;Freq 8-18GHz;Ins Loss 3.5dBmax;Isol 50dBmin;Solder Pin
3	MT3368H3P3N	34		M1213	SP8T Switch NINV;Freq 8-18GHz;Ins Loss 3.5dBmax;Isol 50dBmin;Solder Pin
4	MT3368H-P1I	34		M1213	SP8T Switch INV;Freq 2-18GHz;Ins Loss 3.7dBmax;Isol 50dBmin;SMA Jack
5	MT3368H-P1N	34		M1213	SP8T Switch NINV;Freq 2-18GHz;Ins Loss 3.7dBmax;Isol 50dBmin;SMA Jack
6	MT3368H-P2I	34		M1213	SP8T Switch INV;Freq 2-18GHz;Ins Loss 3.7dBmax;Isol 50dBmin;SMC Jack
7	MT3368H-P2N	34		M1213	SP8T Switch NINV;Freq 2-18GHz;Ins Loss 3.7dBmax;Isol 50dBmin;SMC Jack
8	MT3368H-P3I	34		M1213	SP8T Switch INV;Freq 2-18GHz;Ins Loss 3.7dBmax;Isol 50dBmin;Solder Pin
9	MT3368H-P3N	34		M1213	SP8T Switch NINV;Freq 2-18GHz;Ins Loss 3.7dBmax;Isol 50dBmin;Solder Pin
10	MT3369A-P1I	34		M1213	SP9T Switch INV;Freq .5-4GHz;Ins Loss 1.9dBmax;Isol 55dBmin;SMA Jack
11	MT3369A-P1N	34		M1213	SP9T Switch NINV;Freq .5-4GHz;Ins Loss 1.9dBmax;Isol 55dBmin;SMA Jack
12	MT3369A-P2I	34		M1213	SP9T Switch INV;Freq .5-4GHz;Ins Loss 1.9dBmax;Isol 55dBmin;SMC Jack
13	MT3369A-P2N	34		M1213	SP9T Switch NINV;Freq .5-4GHz;Ins Loss 1.9dBmax;Isol 55dBmin;SMC Jack
14	MT3369A-P3I	34		M1213	SP9T Switch INV;Freq .5-4GHz;Ins Loss 1.9dBmax;Isol 55dBmin;Solder Pin
15	MT3369A-P3N	34		M1213	SP9T Switch NINV;Freq .5-4GHz;Ins Loss 1.9dBmax;Isol 55dBmin;Solder Pin
16	MT3369B2P1I	34		M1213	SP9T Switch INV;Freq 2-8GHz;Ins Loss 2.4dBmax;Isol 55dBmin;SMA Jack
17	MT3369B2P1N	34		M1213	SP9T Switch NINV;Freq 2-8GHz;Ins Loss 2.4dBmax;Isol 55dBmin;SMA Jack
18	MT3369B2P2I	34		M1213	SP9T Switch INV;Freq 2-8GHz;Ins Loss 2.4dBmax;Isol 55dBmin;SMC Jack
19	MT3369B2P2N	34		M1213	SP9T Switch NINV;Freq 2-8GHz;Ins Loss 2.4dBmax;Isol 55dBmin;SMC Jack
20	MT3369B2P3I	34		M1213	SP9T Switch INV;Freq 2-8GHz;Ins Loss 2.4dBmax;Isol 55dBmin;Solder Pin
21	MT3369B2P3N	34		M1213	SP9T Switch NINV;Freq 2-8GHz;Ins Loss 2.4dBmax;Isol 55dBmin;Solder Pin
22	MT3369E-P1I	34		M1213	SP9T Switch INV;Freq 4-12.4GHz;Ins Loss 2.9dBmax;Isol 50dBmin;SMA Jack
23	MT3369E-P1N	34		M1213	SP9T Switch NINV;Freq 4-12.4GHz;Ins Loss 2.9dBmax;Isol 50dBmin;SMA Jack
24	MT3369E-P2I	34		M1213	SP9T Switch INV;Freq 4-12.4GHz;Ins Loss 2.9dBmax;Isol 50dBmin;SMC Jack
25	MT3369E-P2N	34		M1213	SP9T Switch NINV;Freq 4-12.4GHz;Ins Loss 2.9dBmax;Isol 50dBmin;SMC Jack
26	MT3369E-P3I	34		M1213	SP9T Switch INV;Freq 4-12.4GHz;Ins Loss 2.9dBmax;Isol 50dBmin;Solder Pin
27	MT3369E-P3N	34		M1213	SP9T Switch NINV;Freq 4-12.4GHz;Ins Loss 2.9dBmax;Isol 50dBmin;Solder Pin
28	MT3369H3P1I	34		M1213	SP9T Switch INV;Freq 8-18GHz;Ins Loss 3.7dBmax;Isol 50dBmin;SMA Jack
29	MT3369H3P1N	34		M1213	SP9T Switch NINV;Freq 8-18GHz;Ins Loss 3.7dBmax;Isol 50dBmin;SMA Jack
30	MT3369H3P2I	34		M1213	SP9T Switch INV;Freq 8-18GHz;Ins Loss 3.7dBmax;Isol 50dBmin;SMC Jack
31	MT3369H3P2N	34		M1213	SP9T Switch NINV;Freq 8-18GHz;Ins Loss 3.7dBmax;Isol 50dBmin;SMC Jack
32	MT3369H3P3I	34		M1213	SP9T Switch INV;Freq 8-18GHz;Ins Loss 3.7dBmax;Isol 50dBmin;Solder Pin
33	MT3369H3P3N	34		M1213	SP9T Switch NINV;Freq 8-18GHz;Ins Loss 3.7dBmax;Isol 50dBmin;Solder Pin
34	MT3369H-P1I	34		M1213	SP9T Switch INV;Freq 2-18GHz;Ins Loss 3.9dBmax;Isol 50dBmin;SMA Jack
35	MT3369H-P1N	34		M1213	SP9T Switch NINV;Freq 2-18GHz;Ins Loss 3.9dBmax;Isol 50dBmin;SMA Jack
36	MT3369H-P2I	34		M1213	SP9T Switch INV;Freq 2-18GHz;Ins Loss 3.9dBmax;Isol 50dBmin;SMC Jack
37	MT3369H-P2N	34		M1213	SP9T Switch NINV;Freq 2-18GHz;Ins Loss 3.9dBmax;Isol 50dBmin;SMC Jack
38	MT3369H-P3I	34		M1213	SP9T Switch INV;Freq 2-18GHz;Ins Loss 3.9dBmax;Isol 50dBmin;Solder Pin
39	MT3369H-P3N	34		M1213	SP9T Switch NINV;Freq 2-18GHz;Ins Loss 3.9dBmax;Isol 50dBmin;Solder Pin
40	MT3370A-P1I	34		M1213	SP10T Switch INV;Freq .5-4GHz;Ins Loss 1.9dBmax;Isol 55dBmin;SMA Jack
41	MT3370A-P1N	34		M1213	SP10T Switch NINV;Freq .5-4GHz;Ins Loss 1.9dBmax;Isol 55dBmin;SMA Jack
42	MT3370A-P2I	34		M1213	SP10T Switch INV;Freq .5-4GHz;Ins Loss 1.9dBmax;Isol 55dBmin;SMC Jack
43	MT3370A-P2N	34		M1213	SP10T Switch NINV;Freq .5-4GHz;Ins Loss 1.9dBmax;Isol 55dBmin;SMC Jack
44	MT3370A-P3I	34		M1213	SP10T Switch INV;Freq .5-4GHz;Ins Loss 1.9dBmax;Isol 55dBmin;Solder Pin
45	MT3370A-P3N	34		M1213	SP10T Switch NINV;Freq .5-4GHz;Ins Loss 1.9dBmax;Isol 55dBmin;Solder Pin
46	MT3370B2P1I	34		M1213	SP10T Switch INV;Freq 2-8GHz;Ins Loss 2.5dBmax;Isol 55dBmin;SMA Jack
47	MT3370B2P1N	34		M1213	SP10T Switch NINV;Freq 2-8GHz;Ins Loss 2.5dBmax;Isol 55dBmin;SMA Jack
48	MT3370B2P2I	34		M1213	SP10T Switch INV;Freq 2-8GHz;Ins Loss 2.5dBmax;Isol 55dBmin;SMC Jack
49	MT3370B2P2N	34		M1213	SP10T Switch NINV;Freq 2-8GHz;Ins Loss 2.5dBmax;Isol 55dBmin;SMC Jack
50	MT3370B2P3I	34		M1213	SP10T Switch INV;Freq 2-8GHz;Ins Loss 2.5dBmax;Isol 55dBmin;Solder Pin
51	MT3370B2P3N	34		M1213	SP10T Switch NINV;Freq 2-8GHz;Ins Loss 2.5dBmax;Isol 55dBmin;Solder Pin
52	MT3370E-P1I	34		M1213	SP10T Switch INV;Freq 4-12.4GHz;Ins Loss 3.1dBmax;Isol 50dBmin;SMA Jack
53	MT3370E-P1N	34		M1213	SP10T Switch NINV;Freq 4-12.4GHz;Ins Loss 3.1dBmax;Isol 50dBmin;SMA Jack
54	MT3370E-P2I	34		M1213	SP10T Switch INV;Freq 4-12.4GHz;Ins Loss 3.1dBmax;Isol 50dBmin;SMC Jack
55	MT3370E-P2N	34		M1213	SP10T Switch NINV;Freq 4-12.4GHz;Ins Loss 3.1dBmax;Isol 50dBmin;SMC Jack
56	MT3370E-P3I	34		M1213	SP10T Switch INV;Freq 4-12.4GHz;Ins Loss 3.1dBmax;Isol 50dBmin;Solder Pin
57	MT3370E-P3N	34		M1213	SP10T Switch NINV;Freq 4-12.4GHz;Ins Loss 3.1dBmax;Isol 50dBmin;Solder Pin
58	MT3370H3P1I	34		M1213	SP10T Switch INV;Freq 8-18GHz;Ins Loss 3.9dBmax;Isol 50dBmin;SMA Jack
59	MT3370H3P1N	34		M1213	SP10T Switch NINV;Freq 8-18GHz;Ins Loss 3.9dBmax;Isol 50dBmin;SMA Jack
60	MT3370H3P2I	34		M1213	SP10T Switch INV;Freq 8-18GHz;Ins Loss 3.9dBmax;Isol 50dBmin;SMC Jack
61	MT3370H3P2N	34		M1213	SP10T Switch NINV;Freq 8-18GHz;Ins Loss 3.9dBmax;Isol 50dBmin;SMC Jack
62	MT3370H3P3I	34		M1213	SP10T Switch INV;Freq 8-18GHz;Ins Loss 3.9dBmax;Isol 50dBmin;Solder Pin
63	MT3370H3P3N	34		M1213	SP10T Switch NINV;Freq 8-18GHz;Ins Loss 3.9dBmax;Isol 50dBmin;Solder Pin
64	MT3370H-P1I	34		M1213	SP10T Switch INV;Freq 2-18GHz;Ins Loss 4.1dBmax;Isol 50dBmin;SMA Jack
65	MT3370H-P1N	34		M1213	SP10T Switch NINV;Freq 2-18GHz;Ins Loss 4.1dBmax;Isol 50dBmin;SMA Jack
66	MT3370H-P2I	34		M1213	SP10T Switch INV;Freq 2-18GHz;Ins Loss 4.1dBmax;Isol 50dBmin;SMC Jack
67	MT3370H-P2N	34		M1213	SP10T Switch NINV;Freq 2-18GHz;Ins Loss 4.1dBmax;Isol 50dBmin;SMC Jack
68	MT3370H-P3I	34		M1213	SP10T Switch INV;Freq 2-18GHz;Ins Loss 4.1dBmax;Isol 50dBmin;Solder Pin
69	MT3370H-P3N	34		M1213	SP10T Switch NINV;Freq 2-18GHz;Ins Loss 4.1dBmax;Isol 50dBmin;Solder Pin
70	MT3371A-P1I	34		M1213	SP11T Switch INV;Freq .5-4GHz;Ins Loss 1.9dBmax;Isol 55dBmin;SMA Jack
71	MT3371A-P1N	34		M1213	SP11T Switch NINV;Freq .5-4GHz;Ins Loss 1.9dBmax;Isol 55dBmin;SMA Jack
72	MT3371A-P2I	34		M1213	SP11T Switch INV;Freq .5-4GHz;Ins Loss 1.9dBmax;Isol 55dBmin;SMC Jack
73	MT3371A-P2N	34		M1213	SP11T Switch NINV;Freq .5-4GHz;Ins Loss 1.9dBmax;Isol 55dBmin;SMC Jack
74	MT3371A-P3I	34		M1213	SP11T Switch INV;Freq .5-4GHz;Ins Loss 1.9dBmax;Isol 55dBmin;Solder Pin
75	MT3371A-P3N	34		M1213	SP11T Switch NINV;Freq .5-4GHz;Ins Loss 1.9dBmax;Isol 55dBmin;Solder Pin
76	MT3371B2P1I	34		M1213	SP11T Switch INV;Freq 2-8GHz;Ins Loss 2.5dBmax;Isol 55dBmin;SMA Jack
77	MT3371B2P1N	34		M1213	SP11T Switch NINV;Freq 2-8GHz;Ins Loss 2.5dBmax;Isol 55dBmin;SMA Jack
78	MT3371B2P2I	34		M1213	SP11T Switch INV;Freq 2-8GHz;Ins Loss 2.5dBmax;Isol 55dBmin;SMC Jack
79	MT3371B2P2N	34		M1213	SP11T Switch NINV;Freq 2-8GHz;Ins Loss 2.5dBmax;Isol 55dBmin;SMC Jack
80	MT3371B2P3I	34		M1213	SP11T Switch INV;Freq 2-8GHz;Ins Loss 2.5dBmax;Isol 55dBmin;Solder Pin
81	MT3371B2P3N	34		M1213	SP11T Switch NINV;Freq 2-8GHz;Ins Loss 2.5dBmax;Isol 55dBmin;Solder Pin
82	MT3371E-P1I	34		M1213	SP11T Switch INV;Freq 4-12.4GHz;Ins Loss 3.2dBmax;Isol 50dBmin;SMA Jack
83	MT3371E-P1N	34		M1213	SP11T Switch NINV;Freq 4-12.4GHz;Ins Loss 3.2dBmax;Isol 50dBmin;SMA Jack
84	MT3371E-P2I	34		M1213	SP11T Switch INV;Freq 4-12.4GHz;Ins Loss 3.2dBmax;Isol 50dBmin;SMC Jack
85	MT3371E-P2N	34		M1213	SP11T Switch NINV;Freq 4-12.4GHz;Ins Loss 3.2dBmax;Isol 50dBmin;SMC Jack
86	MT3371E-P3I	34		M1213	SP11T Switch INV;Freq 4-12.4GHz;Ins Loss 3.2dBmax;Isol 50dBmin;Solder Pin
87	MT3371E-P3N	34		M1213	SP11T Switch NINV;Freq 4-12.4GHz;Ins Loss 3.2dBmax;Isol 50dBmin;Solder Pin
88	MT3371H3P1I	34		M1213	SP11T Switch INV;Freq 8-18GHz;Ins Loss 4.0dBmax;Isol 50dBmin;SMA Jack
89	MT3371H3P1N	34		M1213	SP11T Switch NINV;Freq 8-18GHz;Ins Loss 4.0dBmax;Isol 50dBmin;SMA Jack
90	MT3371H3P2I	34		M1213	SP11T Switch INV;Freq 8-18GHz;Ins Loss 4.0dBmax;Isol 50dBmin;SMC Jack
91	MT3371H3P2N	34		M1213	SP11T Switch NINV;Freq 8-18GHz;Ins Loss 4.0dBmax;Isol 50dBmin;SMC Jack
92	MT3371H3P3I	34		M1213	SP11T Switch INV;Freq 8-18GHz;Ins Loss 4.0dBmax;Isol 50dBmin;Solder Pin
93	MT3371H3P3N	34		M1213	SP11T Switch NINV;Freq 8-18GHz;Ins Loss 4.0dBmax;Isol 50dBmin;Solder Pin
94	MT3371H-P1I	34		M1213	SP11T Switch INV;Freq 2-18GHz;Ins Loss 4.2dBmax;Isol 50dBmin;SMA Jack
95	MT3371H-P1N	34		M1213	SP11T Switch NINV;Freq 2-18GHz;Ins Loss 4.2dBmax;Isol 50dBmin;SMA Jack
96	MT3371H-P2I	34		M1213	SP11T Switch INV;Freq 2-18GHz;Ins Loss 4.2dBmax;Isol 50dBmin;SMC Jack
97	MT3371H-P2N	34		M1213	SP11T Switch NINV;Freq 2-18GHz;Ins Loss 4.2dBmax;Isol 50dBmin;SMC Jack
98	MT3371H-P3I	34		M1213	SP11T Switch INV;Freq 2-18GHz;Ins Loss 4.2dBmax;Isol 50dBmin;Solder Pin
99	MT3371H-P3N	34		M1213	SP11T Switch NINV;Freq 2-18GHz;Ins Loss 4.2dBmax;Isol 50dBmin;Solder Pin
100	MT3485A2P1I-S1	34		M1202	SPST Switch w/Driver INV;Freq .5-2GHz;Vcc 5,-12V;Insert Loss .50dB;SMA Jack
101	MT3485A2P1I-S2	34		M1202	SPST Switch w/Driver INV;Freq .5-2GHz;Vcc ±12V;Insert Loss .50db;SMA Jack
102	MT3485A2P1I-S3	34		M1202	SPST Switch w/Driver INV;Freq .5-2GHz;Vcc ±15V;Insert Loss .50dB;SMA Jack
103	MT3485A2P1I-S9	34		M1202	SPST Switch w/Driver INV;Freq .5-2GHz;Vcc 5,-15V;Insert Loss .50dB;SMA Jack
104	MT3485A2P1N-S1	34		M1202	SPST Switch w/Driver NINV;Freq, .5-2GHz;Vcc 5,-12V;Insert Loss .50dB;SMA Jack
105	MT3485A2P1N-S2	34		M1202	SPST Switch w/Driver NINV;Freq .5-2GHz;Vcc ±12V;Insert Loss .50dB;SMA Jack
106	MT3485A2P1N-S3	34		M1202	SPST Switch w/Driver NINV;Freq .5-2GHz;Vcc ±15V;Insert Loss .50dB;SMA Jack
107	MT3485A2P1N-S9	34		M1202	SPST Switch w/Driver NINV;Freq .5-2GHz;Vcc 5,-15V;Insert Loss .50dB;SMA Jack
108	MT3485A2P2I-S1	34		M1202	SPST Switch w/Driver INV;Freq .5-2GHz;Vcc 5,-12V;Insert Loss .50dB;SMC Jack
109	MT3485A2P2I-S2	34		M1202	SPST Switch w/Driver INV;Freq .5-2GHz;Vcc ±12V;Insert Loss .50dB;SMC Jack
110	MT3485A2P2I-S3	34		M1202	SPST Switch w/Driver INV;Freq .5-2GHz;Vcc ±15V;Insert Loss .50dB;SMC Jack

SYMBOLS AND CODES EXPLAINED IN INTERPRETER

8. MISCELLANEOUS DEVICES

IN ORDER OF (1) USE and (2) TYPE No.

LINE No.	2 TYPE No.	1 USE	DESCRIPTION MAT.	DESCRIPTION DWG. No.	TECHNICAL DATA
1	MT3485A2P2I-S9	34		M1202	SPST Switch w/Driver INV;Freq .5-2GHz;Vcc 5,-15V;Insert Loss .50dB;SMC Jack
2	MT3485A2P2N-S1	34		M1202	SPST Switch w/Driver NINV;Freq .5-2GHz;Vcc 5,-12V;Insert Loss .50dB;SMC Jack
3	MT3485A2P2N-S2	34		M1202	SPST Switch w/Driver NINV;Freq .5-2GHz;Vcc ±12V;Insert Loss .50dB;SMC Jack
4	MT3485A2P2N-S3	34		M1202	SPST Switch w/Driver NINV;Freq .5-2GHz;Vcc ±15V;Insert Loss .50dB;SMC Jack
5▼	MT3485A2P2N-S9	34		M1202	SPST Switch w/Driver NINV;Freq .5-2GHz;Vcc 5,-15V;Insert Loss .50dB;SMC Jack
6	MT3485A2P3I-S1	34		M1202	SPST Switch w/Driver INV;Freq .5-2GHz;Vcc 5,-12V;Insert Loss .50dB;Solder Pin
7	MT3485A2P3I-S2	34		M1202	SPST Switch w/Driver INV;Freq .5-2GHz;Vcc ±12V;Insert Loss .50dB;Solder Pin
8	MT3485A2P3I-S3	34		M1202	SPST Switch w/Driver INV;Freq .5-2GHz;Vcc ±15V;Insert Loss .50dB;Solder Pin
9	MT3485A2P3I-S9	34		M1202	SPST Switch w/Driver INV;Freq .5-2GHz;Vcc 5,-15V;Insert Loss .50dB;Solder Pin
10	MT3485A2P3N-S1	34		M1202	SPST Switch w/Driver NINV;Freq .5-2GHz;Vcc 5,-12V;Insert Loss .50dB;Solder Pin
11	MT3485A2P3N-S2	34		M1202	SPST Switch w/Driver NINV;Freq .5-2GHz;Vcc ±12V;Insert Loss .50dB;Solder Pin
12	MT3485A2P3N-S3	34		M1202	SPST Switch w/Driver NINV;Freq .5-2GHz;Vcc ±15V;Insert Loss .50dB;Solder Pin
13	MT3485A2P3N-S9	34		M1202	SPST Switch w/Driver NINN;Freq .5-2GHz;Vcc 5,-15V;Insert Loss .50dB;Solder Pin
14	MT3485A4P1I-S1	34		M1202	SPST Switch w/Driver INV;Freq 2-4GHz;Vcc 5,-12V;Insert Loss .70dB;SMA Jack
15	MT3485A4P1I-S2	34		M1202	SPST Switch w/Driver INV;Freq 2-4GHz;Vcc ±12V;Insert Loss .70db;SMA Jack
16	MT3485A4P1I-S3	34		M1202	SPST Switch w/Driver INV;Freq 2-4GHz;Vcc ±15V;Insert Loss .70dB;SMA Jack
17	MT3485A4P1I-S9	34		M1202	SPST Switch w/Driver INV;Freq 2-4GHz;Vcc 5-15V;Insert Loss .70dB;SMA Jack
18	MT3485A4P1N-S1	34		M1202	SPST Switch w/Driver NINV;Freq 2-4GHz;Vcc 5,-12V;Insert Loss .70dB;SMA Jack
19	MT3485A4P1N-S2	34		M1202	SPST Switch w/Driver NINV;Freq 2-4GHz;Vcc ±12V;Insert Loss .70dB;SMA Jack
20	MT3485A4P1N-S3	34		M1202	SPST Switch w/Driver NINV;Freq 2-4GHz;Vcc ±15V;Insert Loss .70dB;SMA Jack
21	MT3485A4P1N-S9	34		M1202	SPST Switch w/Driver NINV;Freq 2-4GHz;Vcc 5,-15V;Insert Loss .70dB;SMA Jack
22	MT3485A4P2I-S1	34		M1202	SPST Switch w/Driver INV;Freq 2-4GHz;Vcc 5,-12V;Insert Loss .70dB;SMC Jack
23	MT3485A4P2I-S2	34		M1202	SPST Switch w/Driver INV;Freq 2-4GHz;Vcc ±12V;Insert Loss .70dB;SMC Jack
24	MT3485A4P2I-S3	34		M1202	SPST Switch w/Driver INV;Freq 2-4GHz;Vcc ±15V;Insert Loss .70dB;SMC Jack
25	MT3485A4P2I-S9	34		M1202	SPST Switch w/Driver INV;Freq 2-4GHz;Vcc 5,-15V;Insert Loss .70dB;SMC Jack
26	MT3485A4P2N-S1	34		M1202	SPST Switch w/Driver NINV;Freq 2-4GHz;Vcc 5,-12V;Insert Loss .70dB;SMC Jack
27	MT3485A4P2N-S2	34		M1202	SPST Switch w/Driver NINV;Freq 2-4GHz;Vcc ±12V;Insert Loss .70dB;SMC Jack
28	MT3485A4P2N-S3	34		M1202	SPST Switch w/Driver NINV;Freq 2-4GHz;Vcc ±15V;Insert Loss .70dB;SMC Jack
29	MT3485A4P2N-S9	34		M1202	SPST Switch w/Driver NINV;Freq .5-2GHz;Vcc 5,-15V;Insert Loss .50 dB;SMC Jack
30	MT3485A4P3I-S1	34		M1202	SPST Switch w/Driver INV;Freq 2-4GHz;Vcc 5,-12V;Insert Loss .70dB;Solder Pin
31	MT3485A4P3I-S2	34		M1202	SPST Switch w/Driver INV;Freq 2-4GHz;Vcc ±12V;Insert Loss .70dB;Solder Pin
32	MT3485A4P3I-S3	34		M1202	SPST Switch w/Driver INV;Freq 2-4GHz;Vcc ±15V;Insert Loss .70dB;Solder Pin
33	MT3485A4P3I-S9	34		M1202	SPST Switch w/Driver INV;Freq 2-4GHz;Vcc 5,-15V;Insert Loss .70dB;Solder Pin
34	MT3485A4P3N-S1	34		M1202	SPST Switch w/Driver NINV;Freq 2-4GHz;Vcc 5,-12V;Insert Loss .70dB;Solder Pin
35	MT3485A4P3N-S2	34		M1202	SPST Switch w/Driver NINV;Freq 2-4GHz;Vcc ±12V;Insert Loss .70dB;Solder Pin
36	MT3485A4P3N-S3	34		M1202	SPST Switch w/Driver NINV;Freq 2-4GHz;Vcc ±15V;Insert Loss .70dB Solder Pin
37	MT3485A4P3N-S9	34		M1202	SPST Switch w/Driver NINV;Freq 2-4GHz;Vcc 5,-15V;Insert Loss .70dB;Solder Pin
38	MT3485A-P1I-S1	34		M1202	SPST Switch w/Driver INV;Freq .5-4GHz;Vcc 5,-12V;Insert Loss .70dB;SMA Jack
39	MT3485A-P1I-S2	34		M1202	SPST Switch w/Driver INV;Freq .5-4GHz;Vcc ±12V;Insert Loss .70db;SMA Jack
40	MT3485A-P1I-S3	34		M1202	SPST Switch w/Driver INV;Freq .5-4GHz;Vcc ±15V;Insert Loss .70dB;SMA Jack
41	MT3485A-P1I-S9	34		M1202	SPST Switch w/Driver INV;Freq .5-4GHz;Vcc 5-15V;Insert Loss .70dB;SMA Jack
42▼	MT3485A-P1N-S1	34		M1202	SPST Switch w/Driver NINV;Freq .5-4GHz;Vcc 5,-12V;Insert Loss .70dB;SMA Jack
43	MT3485A-P1N-S2	34		M1202	SPST Switch w/Driver NINV;Freq .5-4GHz;Vcc ±12V;Insert Loss .70dB;SMA Jack
44	MT3485A-P1N-S3	34		M1202	SPST Switch w/Driver NINV;Freq .5-4GHz;Vcc ±15V;Insert Loss .70dB;SMA Jack
45	MT3485A-P1N-S9	34		M1202	SPST Switch w/Driver NINV;Freq .5-4GHz;Vcc 5,-15V;Insert Loss .70dB;SMA Jack
46	MT3485A-P2I-S1	34		M1202	SPST Switch w/Driver INV;Freq .5-4GHz;Vcc 5,-12V;Insert Loss .70dB;SMC Jack
47	MT3485A-P2I-S2	34		M1202	SPST Switch w/Driver INV;Freq .5-4GHz;Vcc ±12V;Insert Loss .70dB;SMC Jack
48	MT3485A-P2I-S3	34		M1202	SPST Switch w/Driver INV;Freq .5-4GHz;Vcc ±15V;Insert Loss .70dB;SMC Jack
49	MT3485A-P2I-S9	34		M1202	SPST Switch w/Driver INV;Freq .5-4GHz;Vcc 5,-15V;Insert Loss .70dB;SMC Jack
50	MT3485A-P2N-S1	34		M1202	SPST Switch w/Driver NINV;Freq .5-4GHz;Vcc 5,-12V;Insert Loss .70dB;SMC Jack
51	MT3485A-P2N-S2	34		M1202	SPST Switch w/Driver NINV;Freq .5-4GHz;Vcc ±12V;Insert Loss .70dB;SMC Jack
52	MT3485A-P2N-S3	34		M1202	SPST Switch w/Driver NINV;Freq .5-4GHz;Vcc ±15V;Insert Loss .70dB;SMC Jack
53	MT3485A-P2N-S9	34		M1202	SPST Switch w/Driver NINV;Freq .5-4GHz;Vcc 5,-15V;Insert Loss .70 dB;SMC Jack
54	MT3485A-P3I-S1	34		M1202	SPST Switch w/Driver INV;Freq .5-4GHz;Vcc 5,-12V;Insert Loss .70dB;Solder Pin
55	MT3485A-P3I-S2	34		M1202	SPST Switch w/Driver INV;Freq .5-4GHz;Vcc ±12V;Insert Loss .70dB;Solder Pin
56	MT3485A-P3I-S3	34		M1202	SPST Switch w/Driver INV;Freq .5-4GHz;Vcc ±15V;Insert Loss .70dB;Solder Pin
57	MT3485A-P3I-S9	34		M1202	SPST Switch w/Driver INV;Freq .5-4GHz;Vcc 5,-15V;Insert Loss .70dB;Solder Pin
58	MT3485A-P3N-S1	34		M1202	SPST Switch w/Driver NINV;Freq .5-4GHz;Vcc 5,-12V;Insert Loss .70dB;Solder Pin
59	MT3485A-P3N-S2	34		M1202	SPST Switch w/Driver NINV;Freq .5-4GHz;Vcc ±12V;Insert Loss .70dB;Solder Pin
60	MT3485A-P3N-S3	34		M1202	SPST Switch w/Driver NINV;Freq .5-4GHz;Vcc ±15V;Insert Loss .70dB;Solder Pin
61	MT3485A-P3N-S9	34		M1202	SPST Switch w/Driver NINV;Freq .5-4GHz;Vcc 5,-15V;Insert Loss .70dB;Solder Pin
62	MT3485B2P1I-S1	34		M1202	SPST Switch w/Driver INV;Freq 2-8GHz;Vcc 5,-12V;Insert Loss 1.0dB;SMA Jack
63	MT3485B2P1I-S2	34		M1202	SPST Switch w/Driver INV;Freq 2-8GHz;Vcc ±12V;Insert Loss 1.0db;SMA Jack
64	MT3485B2P1I-S3	34		M1202	SPST Switch w/Driver INV;Freq 2-8GHz;Vcc ±15V;Insert Loss 1.0dB;SMA Jack
65	MT3485B2P1I-S9	34		M1202	SPST Switch w/Driver INV;Freq 2-8GHz;Vcc 5-15V;Insert Loss 1.0dB;SMA Jack
66	MT3485B2P1N-S1	34		M1202	SPST Switch w/Driver NINV;Freq 2-8GHz;Vcc 5,-12V;Insert Loss 1.0dB;SMA Jack
67	MT3485B2P1N-S2	34		M1202	SPST Switch w/Driver NINV;Freq 2-8GHz;Vcc ±12V;Insert Loss 1.0dB;SMA Jack
68	MT3485B2P1N-S3	34		M1202	SPST Switch w/Driver NINV;Freq 2-8GHz;Vcc ±15V;Insert Loss 1.0dB;SMA Jack
69	MT3485B2P1N-S9	34		M1202	SPST Switch w/Driver NINV;Freq 2-8GHz;Vcc 5,-15V;Insert Loss 1.0dB;SMA Jack
70	MT3485B2P2I-S1	34		M1202	SPST Switch w/Driver INV;Freq 2-8GHz;Vcc 5,-12V;Insert Loss 1.0dB;SMC Jack
71	MT3485B2P2I-S2	34		M1202	SPST Switch w/Driver INV;Freq 2-8GHz;Vcc ±12V;Insert Loss 1.0dB;SMC Jack
72	MT3485B2P2I-S3	34		M1202	SPST Switch w/Driver INV;Freq 2-8GHz;Vcc ±15V;Insert Loss 1.0dB;SMC Jack
73	MT3485B2P2I-S9	34		M1202	SPST Switch w/Driver INV;Freq 2-8GHz;Vcc 5,-15V;Insert Loss 1.0dB;SMC Jack
74	MT3485B2P2N-S1	34		M1202	SPST Switch w/Driver NINV;Freq 2-8GHz;Vcc 5,-12V;Insert Loss 1.0dB;SMC Jack
75	MT3485B2P2N-S2	34		M1202	SPST Switch w/Driver NINV;Freq 2-8GHz;Vcc ±12V;Insert Loss 1.0dB;SMC Jack
76	MT3485B2P2N-S3	34		M1202	SPST Switch w/Driver NINV;Freq 2-8GHz;Vcc ±15V;Insert Loss 1.0dB;SMC Jack
77	MT3485B2P2N-S9	34		M1202	SPST Switch w/Driver NINV;Freq 2-8GHz;Vcc 5,-15V;Insert Loss 1.0 dB;SMC Jack
78	MT3485B2P3I-S1	34		M1202	SPST Switch w/Driver INV;Freq 2-8GHz;Vcc 5,-12V;Insert Loss 1.0dB;Solder Pin
79	MT3485B2P3I-S2	34		M1202	SPST Switch w/Driver INV;Freq 2-8GHz;Vcc ±12V;Insert Loss 1.0dB;Solder Pin
80	MT3485B2P3I-S3	34		M1202	SPST Switch w/Driver INV;Freq 2-8GHz;Vcc ±15V;Insert Loss 1.0dB;Solder Pin
81	MT3485B2P3I-S9	34		M1202	SPST Switch w/Driver INV;Freq 2-8GHz;Vcc 5,-15V;Insert Loss 1.0dB;Solder Pin
82	MT3485B2P3N-S1	34		M1202	SPST Switch w/Driver NINV;Freq 2-8GHz;Vcc 5,-12V;Insert Loss 1.0dB;Solder Pin
83	MT3485B2P3N-S2	34		M1202	SPST Switch w/Driver NINV;Freq 2-8GHz;Vcc ±12V;Insert Loss 1.0dB;Solder Pin
84	MT3485B2P3N-S3	34		M1202	SPST Switch w/Driver NINV;Freq 2-8GHz;Vcc ±15V;Insert Loss 1.0dB;Solder Pin
85	MT3485B2P3N-S9	34		M1202	SPST Switch w/Driver NINV;Freq 2-8GHz;Vcc 5,-15V;Insert Loss 1.0dB;Solder Pin
86	MT3485B-P1I-S1	34		M1202	SPST Switch w/Driver INV;Freq 4-8GHz;Vcc 5,-12V;Insert Loss 1.0dB;SMA Jack
87	MT3485B-P1I-S2	34		M1202	SPST Switch w/Driver INV;Freq 4-8GHz;Vcc ±12V;Insert Loss 1.0dB;SMA Jack
88	MT3485B-P1I-S3	34		M1202	SPST Switch w/Driver INV;Freq 4-8GHz;Vcc ±15V;Insert Loss 1.0dB;SMA Jack
89	MT3485B-P1I-S9	34		M1202	SPST Switch w/Driver INV;Freq 4-8GHz;Vcc 5-15V;Insert Loss 1.0dB;SMA Jack
90	MT3485B-P1N-S1	34		M1202	SPST Switch w/Driver NINV;Freq 4-8GHz;Vcc 5,-12V;Insert Loss 1.0dB;SMA Jack
91	MT3485B-P1N-S2	34		M1202	SPST Switch w/Driver NINV;Freq 4-8GHz;Vcc ±12V;Insert Loss 1.0dB;SMA Jack
92	MT3485B-P1N-S3	34		M1202	SPST Switch w/Driver NINV;Freq 4-8GHz;Vcc ±15V;Insert Loss 1.0dB;SMA Jack
93	MT3485B-P1N-S9	34		M1202	SPST Switch w/Driver NINV;Freq 4-8GHz;Vcc 5,-15V;Insert Loss 1.0dB;SMA Jack
94	MT3485B-P2I-S1	34		M1202	SPST Switch w/Driver INV;Freq 4-8GHz;Vcc 5,-12V;Insert Loss 1.0dB;SMC Jack
95	MT3485B-P2I-S2	34		M1202	SPST Switch w/Driver INV;Freq 4-8GHz;Vcc ±12V;Insert Loss 1.0dB;SMC Jack
96	MT3485B-P2I-S3	34		M1202	SPST Switch w/Driver INV;Freq 4-8GHz;Vcc ±15V;Insert Loss 1.0dB;SMC Jack
97	MT3485B-P2I-S9	34		M1202	SPST Switch w/Driver INV;Freq 4-8GHz;Vcc 5,-15V;Insert Loss 1.0dB;SMC Jack
98	MT3485B-P2N-S1	34		M1202	SPST Switch w/Driver NINV;Freq 4-8GHz;Vcc 5,-12V;Insert Loss 1.0dB;SMC Jack
99	MT3485B-P2N-S2	34		M1202	SPST Switch w/Driver NINV;Freq 4-8GHz;Vcc ±12V;Insert Loss 1.0dB;SMC Jack
100	MT3485B-P2N-S3	34		M1202	SPST Switch w/Driver NINV;Freq 4-8GHz;Vcc ±15V;Insert Loss 1.0dB;SMC Jack
101	MT3485B-P2N-S9	34		M1202	SPST Switch w/Driver NINV;Freq 4-8GHz;Vcc 5,-15V;Insert Loss 1.0dB;SMC Jack
102	MT3485B-P3I-S1	34		M1202	SPST Switch w/Driver INV;Freq 4-8GHz;Vcc 5,-12V;Insert Loss 1.0dB;Solder Pin
103	MT3485B-P3I-S2	34		M1202	SPST Switch w/Driver INV;Freq 4-8GHz;Vcc ±12V;Insert Loss 1.0dB;Solder Pin
104	MT3485B-P3I-S3	34		M1202	SPST Switch w/Driver INV;Freq 4-8GHz;Vcc ±15V;Insert Loss 1.0dB;Solder Pin
105	MT3485B-P3I-S9	34		M1202	SPST Switch w/Driver INV;Freq 4-8GHz;Vcc 5,-15V;Insert Loss 1.0dB;Soldder Pin
106	MT3485B-P3N-S1	34		M1202	SPST Switch w/Driver NINV;Freq 4-8GHz;Vcc 5,-12V;Insert Loss 1.0dB;Solder Pin
107	MT3485B-P3N-S2	34		M1202	SPST Switch w/Driver NINV;Freq 4-8GHz;Vcc ±12V;Insert Loss 1.0dB;Solder Pin
108	MT3485B-P3N-S3	34		M1202	SPST Switch w/Driver NINV;Freq 4-8GHz;Vcc ±15V;Insert Loss 1.0dB;Solder Pin
109	MT3485B-P3N-S9	34		M1202	SPST Switch w/Driver NINV;Freq 4-8GHz;Vcc 5,-15V;Insert Loss 1.0dB;Solder Pin
110♦	MT3485C-P1I-S1	34		M1202	SPST Switch w/Driver INV;Freq 8-12.4GHz;Vcc 5,-12V;Insert Loss 1.2dB;SMA Jack

8. MISCELLANEOUS DEVICES

IN ORDER OF (1) USE and (2) TYPE No.

LINE No.	2 TYPE No.	1 USE	DESCRIPTION MAT.	DESCRIPTION DWG. No.	TECHNICAL DATA
1	MT3485C-P1I-S2	34		M1202	SPST Switch w/Driver INV;Freq 8-12.4GHz;Vcc ±12V;Insert Loss 1.2dB;SMA Jack
2	MT3485C-P1I-S3	34		M1202	SPST Switch w/Driver INV;Freq 8-12.4GHz;Vcc ±15V;Insert Loss 1.2dB;SMA Jack
3	MT3485C-P1I-S9	34		M1202	SPST Switch w/Driver INV;Freq 8-12.4GHz;Vcc 5-15V;Insert Loss 1.2dB;SMA Jack
4	MT3485C-P1N-S1	34		M1202	SPST Switch w/Driver NINV;Freq 8-12.4GHz;Vcc 5,-12V;Insert Loss 1.2dB;SMA Jack
5	MT3485C-P1N-S2	34		M1202	SPST Switch w/Driver NINV;Freq 8-12.4GHz;Vcc ±12V;Insert Loss 1.2dB;SMA Jack
6	MT3485C-P1N-S3	34		M1202	SPST Switch w/Driver NINV;Freq 8-12.4GHz;Vcc ±15V;Insert Loss 1.2dB;SMA Jack
7	MT3485C-P1N-S9	34		M1202	SPST Switch w/Driver NINV;Freq 8-12.4GHz;Vcc 5,-15V;Insert Loss 1.2dB;SMA Jack
8	MT3485C-P2I-S1	34		M1202	SPST Switch w/Driver INV;Freq 8-12.4GHz;Vcc 5,-12V;Insert Loss 1.2dB;SMC Jack
9	MT3485C-P2I-S2	34		M1202	SPST Switch w/Driver INV;Freq 8-12.4GHz;Vcc ±12V;Insert Loss 1.2dB;SMC Jack
10	MT3485C-P2I-S3	34		M1202	SPST Switch w/Driver INV;Freq 8-12.4GHz;Vcc ±15V;Insert Loss 1.2dB;SMC Jack
11	MT3485C-P2I-S9	34		M1202	SPST Switch w/Driver INV;Freq 8-12.4GHz;Vcc 5,-15V;Insert Loss 1.2dB;SMC Jack
12	MT3485C-P2N-S1	34		M1202	SPST Switch w/Driver NINV;Freq 8-12.4GHz;Vcc 5,-12V;Insert Loss 1.2dB;SMC Jack
13	MT3485C-P2N-S2	34		M1202	SPST Switch w/Driver NINV;Freq 8-12.4GHz;Vcc ±12V;Insert Loss 1.2dB;SMC Jack
14	MT3485C-P2N-S3	34		M1202	SPST Switch w/Driver NINV;Freq 8-12.4GHz;Vcc ±15V;Insert Loss 1.2dB;SMC Jack
15	MT3485C-P2N-S9	34		M1202	SPST Switch w/Driver NINV;Freq 8-12.4GHz;Vcc 5,-15V;Insert Loss 1.2dB;SMC Jack
16	MT3485C-P3I-S1	34		M1202	SPST Switch w/Driver INV;Freq 8-12.4GHz;Vcc 5,-12V;Insert Loss 1.2dB;Solder Pin
17	MT3485C-P3I-S2	34		M1202	SPST Switch w/Driver INV;Freq 8-12.4GHz;Vcc ±12V;Insert Loss 1.2dB;Solder Pin
18	MT3485C-P3I-S3	34		M1202	SPST Switch w/Driver INV;Freq 8-12.4GHz;Vcc ±15V;Insert Loss 1.2dB;Solder Pin
19	MT3485C-P3I-S9	34		M1202	SPST Switch w/Driver INV;Freq 8-12.4GHz;Vcc 5,-15V;Insert Loss 1.2dB;Solder Pin
20	MT3485C-P3N-S1	34		M1202	SPST Switch w/Driver NINV;Freq 8-12.4GHz;Vcc 5,-12V;Insert Loss 1.2dB;Solder Pin
21	MT3485C-P3N-S2	34		M1202	SPST Switch w/Driver NINV;Freq 8-12.4GHz;Vcc ±12V;Insert Loss 1.2dB;Solder Pin
22	MT3485C-P3N-S3	34		M1202	SPST Switch w/Driver NINV;Freq 8-12.4GHz;Vcc ±15V;Insert Loss 1.2dB;Solder Pin
23	MT3485C-P3N-S9	34		M1202	SPST Switch w/Driver NINV;Freq 8-12.4GHz;Vcc 5,-15V;Insert Loss 1.2dB;Solder Pin
24	MT3485D1P1I-S1	34		M1202	SPST Switch w/Driver INV;Freq .5-12.4GHz;Vcc 5,-12V;Insert Loss 1.2dB;SMA Jack
25	MT3485D1P1I-S2	34		M1202	SPST Switch w/Driver INV;Freq .5-12.4GHz;Vcc ±12V;Insert Loss 1.2db;SMA Jack
26	MT3485D1P1I-S3	34		M1202	SPST Switch w/Driver INV;Freq .5-12.4GHz;Vcc ±15V;Insert Loss 1.2dB;SMA Jack
27	MT3485D1P1I-S9	34		M1202	SPST Switch w/Driver INV;Freq .5-12.4GHz;Vcc 5-15V;Insert Loss 1.2dB;SMA Jack
28	MT3485D1P1N-S1	34		M1202	SPST Switch w/Driver NINV;Freq, .5-12.4GHz;Vcc 5,-12V;Insert Loss 1.2dB;SMA Jack
29	MT3485D1P1N-S2	34		M1202	SPST Switch w/Driver NINV;Freq .5-12.4GHz;Vcc ±12V;Insert Loss 1.2dB;SMA Jack
30	MT3485D1P1N-S3	34		M1202	SPST Switch w/Driver NINV;Freq .5-12.4GHz;Vcc ±15V;Insert Loss 1.2dB;SMA Jack
31	MT3485D1P1N-S9	34		M1202	SPST Switch w/Driver NINV;Freq .5-12.4GHz;Vcc 5,-15V;Insert Loss 1.2dB;SMA Jack
32	MT3485D1P2I-S1	34		M1202	SPST Switch w/Driver INV;Freq .5-12.4GHz;Vcc 5,-12V;Insert Loss 1.2dB;SMC Jack
33	MT3485D1P2I-S2	34		M1202	SPST Switch w/Driver INV;Freq .5-12.4GHz;Vcc ±12V;Insert Loss 1.2dB;SMC Jack
34	MT3485D1P2I-S3	34		M1202	SPST Switch w/Driver INV;Freq .5-12.4GHz;Vcc ±15V;Insert Loss 1.2dB;SMC Jack
35	MT3485D1P2I-S9	34		M1202	SPST Switch w/Driver INV;Freq .5-12.4GHz;Vcc 5,-15V;Insert Loss 1.2dB;SMC Jack
36	MT3485D1P2N-S1	34		M1202	SPST Switch w/Driver NINV;Freq .5-12.4GHz;Vcc 5,-12V;Insert Loss 1.2dB;SMC Jack
37	MT3485D1P2N-S2	34		M1202	SPST Switch w/Driver NINV;Freq .5-12.4GHz;Vcc ±12V;Insert Loss 1.2dB;SMC Jack
38	MT3485D1P2N-S3	34		M1202	SPST Switch w/Driver NINV;Freq .5-12.4GHz;Vcc ±15V;Insert Loss 1.2dB; SMC Jack
39	MT3485D1P2N-S9	34		M1202	SPST Switch w/Driver NINV;Freq .5-12.4GHz;Vcc 5,-15V;Insert Loss 1.2 dB;SMC Jack
40	MT3485D1P3I-S1	34		M1202	SPST Switch w/Driver INV;Freq .5-12.4GHz;Vcc 5,-12V;Insert Loss 1.2dB;Solder Pin
41	MT3485D1P3I-S2	34		M1202	SPST Switch w/Driver INV;Freq .5-12.4GHz;Vcc ±12V;Insert Loss 1.2dB;Solder Pin
42	MT3485D1P3I-S3	34		M1202	SPST Switch w/Driver INV;Freq .5-12.4GHz;Vcc ±15V;Insert Loss 1.2dB;Solder Pin
43	MT3485D1P3I-S9	34		M1202	SPST Switch w/Driver INV;Freq .5-12.4GHz;Vcc 5,-15V;Insert Loss 1.2dB;Solder Pin
44	MT3485D1P3N-S1	34		M1202	SPST Switch w/Driver NINV;Freq .5-12.4GHz;Vcc 5,-12V;Insert Loss 1.2dB;Solder Pin
45	MT3485D1P3N-S2	34		M1202	SPST Switch w/Driver NINV;Freq .5-12.4GHz;Vcc ±12V;Insert Loss 1.2dB;Solder Pin
46	MT3485D1P3N-S3	34		M1202	SPST Switch w/Driver NINV;Freq .5-12.4GHz;Vcc ±15V;Insert Loss 1.2dB Solder Pin
47	MT3485D1P3N-S9	34		M1202	SPST Switch w/Driver NINV;Freq .5-12.4GHz;Vcc 5,-15V;Insert Loss 1.2dB;Solder Pin
48	MT3485D-P1I-S1	34		M1202	SPST Switch w/Driver INV;Freq .5-8GHz;Vcc 5,-12V;Insert Loss 1.0dB;SMA Jack
49	MT3485D-P1I-S2	34		M1202	SPST Switch w/Driver INV;Freq .5-8GHz;Vcc ±12V;Insert Loss 1.0db;SMA Jack
50	MT3485D-P1I-S3	34		M1202	SPST Switch w/Driver INV;Freq .5-8GHz;Vcc ±15V;Insert Loss 1.0dB;SMA Jack
51	MT3485D-P1I-S9	34		M1202	SPST Switch w/Driver INV;Freq .5-8GHz;Vcc 5-15V;Insert Loss 1.0dB;SMA Jack
52	MT3485D-P1N-S1	34		M1202	SPST Switch w/Driver NINV;Freq, .5-8GHz;Vcc 5,-12V;Insert Loss 1.0dB;SMA Jack
53	MT3485D-P1N-S2	34		M1202	SPST Switch w/Driver NINV;Freq .5-8GHz;Vcc ±12V;Insert Loss 1.0dB;SMA Jack
54	MT3485D-P1N-S3	34		M1202	SPST Switch w/Driver NINV;Freq .5-8GHz;Vcc ±15V;Insert Loss 1.0dB;SMA Jack
55	MT3485D-P1N-S9	34		M1202	SPST Switch w/Driver NINV;Freq .5-8GHz;Vcc 5,-15V;Insert Loss 1.0dB;SMA Jack
56	MT3485D-P2I-S1	34		M1202	SPST Switch w/Driver INV;Freq .5-8GHz;Vcc 5,-12V;Insert Loss 1.0dB;SMC Jack
57	MT3485D-P2I-S2	34		M1202	SPST Switch w/Driver INV;Freq .5-8GHz;Vcc ±12V;Insert Loss 1.0dB;SMC Jack
58	MT3485D-P2I-S3	34		M1202	SPST Switch w/Driver INV;Freq .5-8GHz;Vcc ±15V;Insert Loss 1.0dB;SMC Jack
59	MT3485D-P2I-S9	34		M1202	SPST Switch w/Driver INV;Freq .5-8GHz;Vcc 5,-15V;Insert Loss 1.0dB;SMC Jack
60	MT3485D-P2N-S1	34		M1202	SPST Switch w/Driver NINV;Freq .5-8GHz;Vcc 5,-12V;Insert Loss 1.0dB;SMC Jack
61	MT3485D-P2N-S2	34		M1202	SPST Switch w/Driver NINV;Freq .5-8GHz;Vcc ±12V;Insert Loss 1.0dB;SMC Jack
62	MT3485D-P2N-S3	34		M1202	SPST Switch w/Driver NINV;Freq .5-8GHz;Vcc ±15V;Insert Loss 1.0dB;SMC Jack
63	MT3485D-P2N-S9	34		M1202	SPST Switch w/Driver NINV;Freq .5-8GHz;Vcc 5,-15V;Insert Loss 1.0 dB;SMC Jack
64	MT3485D-P3I-S1	34		M1202	SPST Switch w/Driver INV;Freq .5-8GHz;Vcc 5,-12V;Insert Loss 1.0dB;Solder Pin
65	MT3485D-P3I-S2	34		M1202	SPST Switch w/Driver INV;Freq .5-8GHz;Vcc ±12V;Insert Loss 1.0dB;Solder Pin
66	MT3485D-P3I-S3	34		M1202	SPST Switch w/Driver INV;Freq .5-8GHz;Vcc ±15V;Insert Loss 1.0dB;Solder Pin
67	MT3485D-P3I-S9	34		M1202	SPST Switch w/Driver INV;Freq .5-8GHz;Vcc 5,-15V;Insert Loss 1.0dB;Solder Pin
68	MT3485D-P3N-S1	34		M1202	SPST Switch w/Driver NINV;Freq .5-8GHz;Vcc 5,-12V;Insert Loss 1.0dB;Solder Pin
69	MT3485D-P3N-S2	34		M1202	SPST Switch w/Driver NINV;Freq .5-8GHz;Vcc ±12V;Insert Loss 1.0dB;Solder Pin
70	MT3485D-P3N-S3	34		M1202	SPST Switch w/Driver NINV;Freq .5-8GHz;Vcc ±15V;Insert Loss 1.0dB;Solder Pin
71	MT3485D-P3N-S9	34		M1202	SPST Switch w/Driver NINV;Freq .5-8GHz;Vcc 5,-15V;Insert Loss 1.0dB;Solder Pin
72	MT3485E-P1I-S1	34		M1202	SPST Switch w/Driver INV;Freq 4-12.4GHz;Vcc 5,-12V;Insert Loss 1.2dB;SMA Jack
73	MT3485E-P1I-S2	34		M1202	SPST Switch w/Driver INV;Freq 4-12.4GHz;Vcc ±12V;Insert Loss 1.2dB;SMA Jack
74	MT3485E-P1I-S3	34		M1202	SPST Switch w/Driver INV;Freq 4-12.4GHz;Vcc ±15V;Insert Loss 1.2dB;SMA Jack
75	MT3485E-P1I-S9	34		M1202	SPST Switch w/Driver INV;Freq 4-12.4GHz;Vcc 5-15V;Insert Loss 1.2dB;SMA Jack
76	MT3485E-P1N-S1	34		M1202	SPST Switch w/Driver NINV;Freq 4-12.4GHz;Vcc 5,-12V;Insert Loss 1.2dB;SMA Jack
77	MT3485E-P1N-S2	34		M1202	SPST Switch w/Driver NINV;Freq 4-12.4GHz;Vcc ±12V;Insert Loss 1.2dB;SMA Jack
78	MT3485E-P1N-S3	34		M1202	SPST Switch w/Driver NINV;Freq 4-12.4GHz;Vcc ±15V;Insert Loss 1.2dB;SMA Jack
79	MT3485E-P1N-S9	34		M1202	SPST Switch w/Driver NINV;Freq 4-12.4GHz;Vcc 5,-15V;Insert Loss 1.2dB;SMA Jack
80	MT3485E-P2I-S1	34		M1202	SPST Switch w/Driver INV;Freq 4-12.4GHz;Vcc 5,-12V;Insert Loss 1.2dB;SMC Jack
81	MT3485E-P2I-S2	34		M1202	SPST Switch w/Driver INV;Freq 4-12.4GHz;Vcc ±12V;Insert Loss 1.2dB;SMC Jack
82	MT3485E-P2I-S3	34		M1202	SPST Switch w/Driver INV;Freq 4-12.4GHz;Vcc ±15V;Insert Loss 1.2dB;SMC Jack
83	MT3485E-P2I-S9	34		M1202	SPST Switch w/Driver INV;Freq 4-12.4GHz;Vcc 5,-15V;Insert Loss 1.2dB;SMC Jack
84	MT3485E-P2N-S1	34		M1202	SPST Switch w/Driver NINV;Freq 4-12.4GHz;Vcc 5,-12V;Insert Loss 1.2dB;SMC Jack
85	MT3485E-P2N-S2	34		M1202	SPST Switch w/Driver NINV;Freq 4-12.4GHz;Vcc ±12V;Insert Loss 1.2dB;SMC Jack
86	MT3485E-P2N-S3	34		M1202	SPST Switch w/Driver NINV;Freq 4-12.4GHz;Vcc ±15V;Insert Loss 1.2dB;SMC Jack
87	MT3485E-P2N-S9	34		M1202	SPST Switch w/Driver NINV;Freq 4-12.4GHz;Vcc 5,-15V;Insert Loss 1.2dB;SMC Jack
88	MT3485E-P3I-S1	34		M1202	SPST Switch w/Driver INV;Freq 4-12.4GHz;Vcc 5,-12V;Insert Loss 1.2dB;Solder Pin
89	MT3485E-P3I-S2	34		M1202	SPST Switch w/Driver INV;Freq 4-12.4GHz;Vcc ±12V;Insert Loss 1.2dB;Solder Pin
90	MT3485E-P3I-S3	34		M1202	SPST Switch w/Driver INV;Freq 4-12.4GHz;Vcc ±15V;Insert Loss 1.2dB;Solder Pin
91	MT3485E-P3I-S9	34		M1202	SPST Switch w/Driver INV;Freq 4-12.4GHz;Vcc 5,-15V;Insert Loss 1.2dB;Solder Pin
92	MT3485E-P3N-S1	34		M1202	SPST Switch w/Driver NINV;Freq 4-12.4GHz;Vcc 5,-12V;Insert Loss 1.2dB;Solder Pin
93	MT3485E-P3N-S2	34		M1202	SPST Switch w/Driver NINV;Freq 4-12.4GHz;Vcc ±12V;Insert Loss 1.2dB;Solder Pin
94	MT3485E-P3N-S3	34		M1202	SPST Switch w/Driver NINV;Freq 4-12.4GHz;Vcc ±15V;Insert Loss 1.2dB;Solder Pin
95	MT3485E-P3N-S9	34		M1202	SPST Switch w/Driver NINV;Freq 4-12.4GHz;Vcc 5,-15V;Insert Loss 1.2dB;Solder Pin
96	MT3485F1P1I-S1	34		M1202	SPST Switch w/Driver INV;Freq 2-12.4GHz;Vcc 5,-12V;Insert Loss 1.2dB; SMA Jack
97	MT3485F1P1I-S2	34		M1202	SPST Switch w/Driver INV;Freq 2-12.4GHz;Vcc ±12V;Insert Loss 1.2dB;SMA Jack
98	MT3485F1P1I-S3	34		M1202	SPST Switch w/Driver INV;Freq 2-12.4GHz;Vcc ±15V;Insert Loss 1.2dB;SMA Jack
99	MT3485F1P1I-S9	34		M1202	SPST Switch w/Driver INV;Freq 2-12.4GHz;Vcc 5-15V;Insert Loss 1.2dB;SMA Jack
100	MT3485F1P1N-S1	34		M1202	SPST Switch w/Driver NINV;Freq 2-12.4GHz;Vcc 5,-12V;Insert Loss 1.2dB;SMA Jack
101	MT3485F1P1N-S2	34		M1202	SPST Switch w/Driver NINV;Freq 2-12.4GHz;Vcc ±12V;Insert Loss 1.2dB;SMA Jack
102	MT3485F1P1N-S3	34		M1202	SPST Switch w/Driver NINV;Freq 2-12.4GHz;Vcc ±15V;Insert Loss 1.2dB;SMA Jack
103	MT3485F1P1N-S9	34		M1202	SPST Switch w/Driver NINV;Freq 2-12.4GHz;Vcc 5,-15V;Insert Loss 1.2dB;SMA Jack
104	MT3485F1P2I-S1	34		M1202	SPST Switch w/Driver INV;Freq 2-12.4GHz;Vcc 5,-12V;Insert Loss 1.2dB;SMC Jack
105	MT3485F1P2I-S2	34		M1202	SPST Switch w/Driver INV;Freq 2-12.4GHz;Vcc ±12V;Insert Loss 1.2dB;SMC Jack
106	MT3485F1P2I-S3	34		M1202	SPST Switch w/Driver INV;Freq 2-12.4GHz;Vcc ±15V;Insert Loss 1.2dB;SMC Jack
107	MT3485F1P2I-S9	34		M1202	SPST Switch w/Driver INV;Freq 2-12.4GHz;Vcc 5,-15V;Insert Loss 1.2dB;SMC Jack
108	MT3485F1P2N-S1	34		M1202	SPST Switch w/Driver NINV;Freq 2-12.4GHz;Vcc 5,-12V;Insert Loss 1.2dB;SMC Jack
109	MT3485F1P2N-S2	34		M1202	SPST Switch w/Driver NINV;Freq 2-12.4GHz;Vcc ±12V;Insert Loss 1.2dB;SMC Jack
110	MT3485F1P2N-S3	34		M1202	SPST Switch w/Driver NINV;Freq 2-12.4GHz;Vcc ±15V;Insert Loss 1.2dB;SMC Jack

8. MISCELLANEOUS DEVICES

IN ORDER OF (1) USE and (2) TYPE No.

LINE No.	2 TYPE No.	1 USE	DESCRIPTION MAT.	DESCRIPTION DWG. No.	TECHNICAL DATA
1	MT3485F1P2N-S9	34		M1202	SPST Switch w/Driver NINV;Freq 2-12.4GHz;Vcc 5,-15V;Insert Loss 1.2dB;SMC Jack
2	MT3485F1P3I-S1	34		M1202	SPST Switch w/Driver INV;Freq 2-12.4GHz;Vcc 5,-12V;Insert Loss 1.2dB;Solder Pin
3	MT3485F1P3I-S2	34		M1202	SPST Switch w/Driver INV;Freq 2-12.4GHz;Vcc ±12V;Insert Loss 1.2dB;Solder Pin
4	MT3485F1P3I-S3	34		M1202	SPST Switch w/Driver INV;Freq 2-12.4GHz;Vcc ±15V;Insert Loss 1.2dB;Solder Pin
5	MT3485F1P3I-S9	34		M1202	SPST Switch w/Driver INV;Freq 2-12.4GHz;Vcc 5,-15V;Insert Loss 1.2dB;Solder Pin
6	MT3485F1P3N-S1	34		M1202	SPST Switch w/Driver NINV;Freq 2-12.4GHz;Vcc 5,-12V;Insert Loss 1.2dB;Solder Pin
7	MT3485F1P3N-S2	34		M1202	SPST Switch w/Driver NINV;Freq 2-12.4GHz;Vcc ±12V;Insert Loss 1.2dB;Solder Pin
8	MT3485F1P3N-S3	34		M1202	SPST Switch w/Driver NINV;Freq 2-12.4GHz;Vcc ±15V;Insert Loss 1.2dB;Solder Pin
9	MT3485F1P3N-S9	34		M1202	SPST Switch w/Driver NINV;Freq 2-12.4GHz;Vcc 5,-15V;Insert Loss 1.2dB;Solder Pin
10	MT3485H1P1I-S1	34		M1202	SPST Switch w/Driver INV;Freq 4-18GHz;Vcc 5,-12V;Insert Loss 1.4dB;SMA Jack
11	MT3485H1P1I-S2	34		M1202	SPST Switch w/Driver INV;Freq 4-18GHz;Vcc ±12V;Insert Loss 1.4dB;SMA Jack
12	MT3485H1P1I-S3	34		M1202	SPST Switch w/Driver INV;Freq 4-18GHz;Vcc ±15V;Insert Loss 1.4dB;SMA Jack
13	MT3485H1P1I-S9	34		M1202	SPST Switch w/Driver INV;Freq 4-18GHz;Vcc 5-15V;Insert Loss 1.4dB;SMA Jack
14	MT3485H1P1N-S1	34		M1202	SPST Switch w/Driver NINV;Freq 4-18GHz;Vcc 5,-12V;Insert Loss 1.4dB;SMA Jack
15	MT3485H1P1N-S2	34		M1202	SPST Switch w/Driver NINV;Freq 4-18GHz;Vcc ±12V;Insert Loss 1.4dB;SMA Jack
16	MT3485H1P1N-S3	34		M1202	SPST Switch w/Driver NINV;Freq 4-18GHz;Vcc ±15V;Insert Loss 1.4dB;SMA Jack
17	MT3485H1P1N-S9	34		M1202	SPST Switch w/Driver NINV;Freq 4-18GHz;Vcc 5,-15V;Insert Loss 1.4dB;SMA Jack
18	MT3485H1P2I-S1	34		M1202	SPST Switch w/Driver INV;Freq 4-18GHz;Vcc 5,-12V;Insert Loss 1.4dB;SMC Jack
19	MT3485H1P2I-S2	34		M1202	SPST Switch w/Driver INV;Freq 4-18GHz;Vcc ±12V;Insert Loss 1.4dB;SMC Jack
20	MT3485H1P2I-S3	34		M1202	SPST Switch w/Driver INV;Freq 4-18GHz;Vcc ±15V;Insert Loss 1.4dB;SMC Jack
21	MT3485H1P2I-S9	34		M1202	SPST Switch w/Driver INV;Freq 4-18GHz;Vcc 5,-15V;Insert Loss 1.4dB SMC Jack
22	MT3485H1P2N-S1	34		M1202	SPST Switch w/Driver NINV;Freq 4-18GHz;Vcc 5,-12V;Insert Loss 1.4dB;SMC Jack
23	MT3485H1P2N-S2	34		M1202	SPST Switch w/Driver NINV;Freq 4-18GHz;Vcc ±12V;Insert Loss 1.4dB;SMC Jack
24	MT3485H1P2N-S3	34		M1202	SPST Switch w/Driver NINV;Freq 4-18GHz;Vcc ±15V;Insert Loss 1.4dB;SMC Jack
25	MT3485H1P2N-S9	34		M1202	SPST Switch w/Driver NINV;Freq 4-18GHz;Vcc 5,-15V;Insert Loss 1.4dB;SMC Jack
26	MT3485H1P3I-S1	34		M1202	SPST Switch w/Driver INV;Freq 4-18GHz;Vcc 5,-12V;Insert Loss 1.4dB;Solder Pin
27	MT3485H1P3I-S2	34		M1202	SPST Switch w/Driver INV;Freq 4-18GHz;Vcc ±12V;Insert Loss 1.4dB;Solder Pin
28	MT3485H1P3I-S3	34		M1202	SPST Switch w/Driver INV;Freq 4-18GHz;Vcc ±15V;Insert Loss 1.4dB;Solder Pin
29	MT3485H1P3I-S9	34		M1202	SPST Switch w/Driver INV;Freq 4-18GHz;Vcc 5,-15V;Insert Loss 1.4dB;Solder Pin
30	MT3485H1P3N-S1	34		M1202	SPST Switch w/Driver NINV;Freq 4-18GHz;Vcc 5,-12V;Insert Loss 1.4dB;Solder Pin
31	MT3485H1P3N-S2	34		M1202	SPST Switch w/Driver NINV;Freq 4-18GHz;Vcc ±12V;Insert Loss 1.4dB;Solder Pin
32	MT3485H1P3N-S3	34		M1202	SPST Switch w/Driver NINV;Freq 4-18GHz;Vcc ±15V;Insert Loss 1.4dB;Solder Pin
33	MT3485H1P3N-S9	34		M1202	SPST Switch w/Driver NINV;Freq 4-18GHz;Vcc 5,-15V;Insert Loss 1.4dB;Solder Pin
34	MT3485H3P1I-S1	34		M1202	SPST Switch w/Driver INV;Freq 8-18GHz;Vcc 5,-12V;Insert Loss 1.4dB;SMA Jack
35	MT3485H3P1I-S2	34		M1202	SPST Switch w/Driver INV;Freq 8-18GHz;Vcc ±12V;Insert Loss 1.4dB;SMA Jack
36	MT3485H3P1I-S3	34		M1202	SPST Switch w/Driver INV;Freq 8-18GHz;Vcc ±15V;Insert Loss 1.4dB;SMA Jack
37	MT3485H3P1I-S9	34		M1202	SPST Switch w/Driver INV;Freq 8-18GHz;Vcc 5-15V;Insert Loss 1.4dB;SMA Jack
38	MT3485H3P1N-S1	34		M1202	SPST Switch w/Driver NINV;Freq 8-18GHz;Vcc 5,-12V;Insert Loss 1.4dB;SMA Jack
39	MT3485H3P1N-S2	34		M1202	SPST Switch w/Driver NINV;Freq 8-18GHz;Vcc ±12V;Insert Loss 1.4dB;SMA Jack
40	MT3485H3P1N-S3	34		M1202	SPST Switch w/Driver NINV;Freq 8-18GHz;Vcc ±15V;Insert Loss 1.4dB;SMA Jack
41	MT3485H3P1N-S9	34		M1202	SPST Switch w/Driver NINV;Freq 8-18GHz;Vcc 5,-15V;Insert Loss 1.4dB;SMA Jack
42	MT3485H3P2I-S1	34		M1202	SPST Switch w/Driver INV;Freq 8-18GHz;Vcc 5,-12V;Insert Loss 1.4dB;SMC Jack
43	MT3485H3P2I-S2	34		M1202	SPST Switch w/Driver INV;Freq 8-18GHz;Vcc ±12V;Insert Loss 1.4dB;SMC Jack
44	MT3485H3P2I-S3	34		M1202	SPST Switch w/Driver INV;Freq 8-18GHz;Vcc ±15V;Insert Loss 1.4dB;SMC Jack
45	MT3485H3P2I-S9	34		M1202	SPST Switch w/Driver INV;Freq 8-18GHz;Vcc 5,-15V;Insert Loss 1.4dB;SMC Jack
46	MT3485H3P2N-S1	34		M1202	SPST Switch w/Driver NINV;Freq 8-18GHz;Vcc 5,-12V;Insert Loss 1.4dB;SMC Jack
47	MT3485H3P2N-S2	34		M1202	SPST Switch w/Driver NINV;Freq 8-18GHz;Vcc ±12V;Insert Loss 1.4dB;SMC Jack
48	MT3485H3P2N-S3	34		M1202	SPST Switch w/Driver NINV;Freq 8-18GHz;Vcc ±15V;Insert Loss 1.4dB;SMC Jack
49	MT3485H3P2N-S9	34		M1202	SPST Switch w/Driver NINV;Freq 8-18GHz;Vcc 5,-15V;Insert Loss 1.4dB;SMC Jack
50	MT3485H3P3I-S1	34		M1202	SPST Switch w/Driver INV;Freq 8-18GHz;Vcc 5,-12V;Insert Loss 1.4dB;Solder Pin
51	MT3485H3P3I-S2	34		M1202	SPST Switch w/Driver INV;Freq 8-18GHz;Vcc ±12V;Insert Loss 1.4dB;Solder Pin
52	MT3485H3P3I-S3	34		M1202	SPST Switch w/Driver INV;Freq 8-18GHz;Vcc ±15V;Insert Loss 1.4dB;Solder Pin
53	MT3485H3P3I-S9	34		M1202	SPST Switch w/Driver INV;Freq 8-18GHz;Vcc 5,-15V;Insert Loss 1.4dB;Solder Pin
54	MT3485H3P3N-S1	34		M1202	SPST Switch w/Driver NINV;Freq 8-18GHz;Vcc 5,-12V;Insert Loss 1.4dB;Solder Pin
55	MT3485H3P3N-S2	34		M1202	SPST Switch w/Driver NINV;Freq 8-18GHz;Vcc ±12V;Insert Loss 1.4dB;Solder Pin
56	MT3485H3P3N-S3	34		M1202	SPST Switch w/Driver NINV;Freq 8-18GHz;Vcc ±15V;Insert Loss 1.4dB;Solder Pin
57	MT3485H3P3N-S9	34		M1202	SPST Switch w/Driver NINV;Freq 8-18GHz;Vcc 5,-15V;Insert Loss 1.4dB;Solder Pin
58	MT3485H4P1I-S1	34		M1202	SPST Switch w/Driver INV;Freq 12.4-18GHz;Vcc 5,-12V;Insert Loss 1.4dB;SMA Jack
59	MT3485H4P1I-S2	34		M1202	SPST Switch w/Driver INV;Freq 12.4-18GHz;Vcc ±12V;Insert Loss 1.4dB;SMA Jack
60	MT3485H4P1I-S3	34		M1202	SPST Switch w/Driver INV;Freq 12.4-18GHz;Vcc ±15V;Insert Loss 1.4dB;SMA Jack
61	MT3485H4P1I-S9	34		M1202	SPST Switch w/Driver INV;Freq 12.4-18GHz;Vcc 5,-15V;Insert Loss 1.4dB;SMA Jack
62	MT3485H4P1N-S1	34		M1202	SPST Switch w/Driver NINV;Freq 12.4-18GHz;Vcc 5,-12V;Insert Loss 1.4dB;SMA Jack
63	MT3485H4P1N-S2	34		M1202	SPST Switch w/Driver NINV;Freq 12.4-18GHz;Vcc ±12V;Insert Loss 1.4dB;SMA Jack
64	MT3485H4P1N-S3	34		M1202	SPST Switch w/Driver NINV;Freq 12.4-18GHz;Vcc ±15V;Insert Loss 1.4dB;SMA Jack
65	MT3485H4P1N-S9	34		M1202	SPST Switch w/Driver NINV;Freq 12.4-18GHz;Vcc 5,-15V;Insert Loss 1.4dB;SMA Jack
66	MT3485H4P2I-S1	34		M1202	SPST Switch w/Driver INV;Freq 12.4-18GHz;Vcc 5,-12V;Insert Loss 1.4dB;SMC Jack
67	MT3485H4P2I-S2	34		M1202	SPST Switch w/Driver INV;Freq 12.4-18GHz;Vcc ±12V;Insert Loss 1.4dB;SMC Jack
68	MT3485H4P2I-S3	34		M1202	SPST Switch w/Driver INV;Freq 12.4-18GHz;Vcc ±15V;Insert Loss 1.4dB;SMC Jack
69	MT3485H4P2I-S9	34		M1202	SPST Switch w/Driver INV;Freq 12.4-18GHz;Vcc 5,-15V;Insert Loss 1.4dB;SMC Jack
70	MT3485H4P2N-S1	34		M1202	SPST Switch w/Driver NINV;Freq 12.4-18GHz;Vcc 5,-12V;Insert Loss 1.4dB;SMC Jack
71	MT3485H4P2N-S2	34		M1202	SPST Switch w/Driver NINV;Freq 12.4-18GHz;Vcc ±12V;Insert Loss 1.4dB;SMC Jack
72	MT3485H4P2N-S3	34		M1202	SPST Switch w/Driver NINV;Freq 12.4-18GHz;Vcc ±15V;Insert Loss 1.4dB; SMC Jack
73	MT3485H4P2N-S9	34		M1202	SPST Switch w/Driver NINV;Freq 12.4-18GHz;Vcc 5,-15V;Insert Loss 1.4dB;SMC Jack
74	MT3485H4P3I-S1	34		M1202	SPST Switch w/Driver INV;Freq 12.4-18GHz;Vcc 5,-12V;Insert Loss 1.4dB;Solder Pin
75	MT3485H4P3I-S2	34		M1202	SPST Switch w/Driver INV;Freq 12.4-18GHz;Vcc ±12V;Insert Loss 1.4dB;Solder Pin
76	MT3485H4P3I-S3	34		M1202	SPST Switch w/Driver INV;Freq 12.4-18GHz;Vcc ±15V;Insert Loss 1.4dB;Solder Pin
77	MT3485H4P3I-S9	34		M1202	SPST Switch w/Driver INV;Freq 12.4-18GHz;Vcc 5,-15V;Insert Loss 1.4dB;Solder Pin
78	MT3485H4P3N-S1	34		M1202	SPST Switch w/Driver NINV;Freq 12.4-18GHz;Vcc 5,-12V;Insert Loss 1.4dB;Solder Pin
79	MT3485H4P3N-S2	34		M1202	SPST Switch w/Driver NINV;Freq 12.4-18GHz;Vcc ±12V;Insert Loss 1.4dB;Solder Pin
80	MT3485H4P3N-S3	34		M1202	SPST Switch w/Driver NINV;Freq 12.4-18GHz;Vcc ±15V;Insert Loss 1.4dB;Solder Pin
81	MT3485H4P3N-S9	34		M1202	SPST Switch w/Driver NINV;Freq 12.4-18GHz;Vcc 5,-15V;Insert Loss 1.4dB;Solder Pin
82	MT3485H-P1I-S1	34		M1202	SPST Switch w/Driver INV;Freq 2-18GHz;Vcc 5,-12V;Insert Loss 1.6dB;SMA Jack
83	MT3485H-P1I-S2	34		M1202	SPST Switch w/Driver INV;Freq 2-18GHz;Vcc ±12V;Insert Loss 1.6dB;SMA Jack
84	MT3485H-P1I-S3	34		M1202	SPST Switch w/Driver INV;Freq 2-18GHz;Vcc ±15V;Insert Loss 1.6dB;SMA Jack
85	MT3485H-P1I-S9	34		M1202	SPST Switch w/Driver INV;Freq 2-18GHz;Vcc 5-15V;Insert Loss 1.6dB;SMA Jack
86	MT3485H-P1N-S1	34		M1202	SPST Switch w/Driver NINV;Freq 2-18GHz;Vcc 5,-12V;Insert Loss 1.6dB;SMA Jack
87	MT3485H-P1N-S2	34		M1202	SPST Switch w/Driver NINV;Freq 2-18GHz;Vcc ±12V;Insert Loss 1.6dB;SMA Jack
88	MT3485H-P1N-S3	34		M1202	SPST Switch w/Driver NINV;Freq 2-18GHz;Vcc ±15V;Insert Loss 1.6dB;SMA Jack
89	MT3485H-P1N-S9	34		M1202	SPST Switch w/Driver NINV;Freq 2-18GHz;Vcc 5,-15V;Insert Loss 1.6dB;SMA Jack
90	MT3485H-P2I-S1	34		M1202	SPST Switch w/Driver INV;Freq 2-18GHz;Vcc 5,-12V;Insert Loss 1.6dB;SMC Jack
91	MT3485H-P2I-S2	34		M1202	SPST Switch w/Driver INV;Freq 2-18GHz;Vcc ±12V;Insert Loss 1.6dB;SMC Jack
92	MT3485H-P2I-S3	34		M1202	SPST Switch w/Driver INV;Freq 2-18GHz;Vcc ±15V;Insert Loss 1.6dB;SMC Jack
93	MT3485H-P2I-S9	34		M1202	SPST Switch w/Driver INV;Freq 2-18GHz;Vcc 5,-15V;Insert Loss 1.6dB;SMC Jack
94	MT3485H-P2N-S1	34		M1202	SPST Switch w/Driver NINV;Freq 2-18GHz;Vcc 5,-12V;Insert Loss 1.6dB;SMC Jack
95	MT3485H-P2N-S2	34		M1202	SPST Switch w/Driver NINV;Freq 2-18GHz;Vcc ±12V;Insert Loss 1.6dB;SMC Jack
96	MT3485H-P2N-S3	34		M1202	SPST Switch w/Driver NINV;Freq 2-18GHz;Vcc ±15V;Insert Loss 1.6dB;SMC Jack
97	MT3485H-P2N-S9	34		M1202	SPST Switch w/Driver NINV;Freq 2-18GHz;Vcc 5,-15V;Insert Loss 1.6dB;SMC Jack
98	MT3485H-P3I-S1	34		M1202	SPST Switch w/Driver INV;Freq 2-18GHz;Vcc 5,-12V;Insert Loss 1.6dB;Solder Pin
99	MT3485H-P3I-S2	34		M1202	SPST Switch w/Driver INV;Freq 2-18GHz;Vcc ±12V;Insert Loss 1.6dB;Solder Pin
100	MT3485H-P3I-S3	34		M1202	SPST Switch w/Driver INV;Freq 2-18GHz;Vcc ±15V;Insert Loss 1.6dB;Solder Pin
101	MT3485H-P3I-S9	34		M1202	SPST Switch w/Driver INV;Freq 2-18GHz;Vcc 5,-15V;Insert Loss 1.6dB;Solder Pin
102	MT3485H-P3N-S1	34		M1202	SPST Switch w/Driver NINV;Freq 2-18GHz;Vcc 5,-12V;Insert Loss 1.6dB;Solder Pin
103	MT3485H-P3N-S2	34		M1202	SPST Switch w/Driver NINV;Freq 2-18GHz;Vcc ±12V;Insert Loss 1.6dB;Solder Pin
104	MT3485H-P3N-S3	34		M1202	SPST Switch w/Driver NINV;Freq 2-18GHz;Vcc ±15V;Insert Loss 1.6dB;Solder Pin
105	MT3485H-P3N-S9	34		M1202	SPST Switch w/Driver NINV;Freq 2-18GHz;Vcc 5,-15V;Insert Loss 1.6dB;Solder Pin
106	MT3486A2P1I-S1	34		M1202	SPST Switch w/Driver INV;Freq .5-2GHz;Vcc 5,-12V;Insert Loss .60dB;SMA Jack
107	MT3486A2P1I-S2	34		M1202	SPST Switch w/Driver INV;Freq .5-2GHz;Vcc ±12V;Insert Loss .60db;SMA Jack
108	MT3486A2P1I-S3	34		M1202	SPST Switch w/Driver INV;Freq .5-2GHz;Vcc ±15V;Insert Loss .60dB;SMA Jack
109	MT3486A2P1I-S9	34		M1202	SPST Switch w/Driver INV;Freq .5-2GHz;Vcc 5,-15V;Insert Loss .60dB;SMA Jack
110	MT3486A2P1N-S1	34		M1202	SPST Switch w/Driver NINV;Freq, .5-2GHz;Vcc 5,-12V;Insert Loss .60dB;SMA Jack

8. MISCELLANEOUS DEVICES

IN ORDER OF (1) USE and (2) TYPE No.

LINE No.	2 TYPE No.	1 USE	DESCRIPTION MAT.	DWG. No.	TECHNICAL DATA
1	MT3486A2P1N-S2	34		M1202	SPST Switch w/Driver NINV;Freq .5-2GHz;Vcc ±12V;Insert Loss .60dB;SMA Jack
2	MT3486A2P1N-S3	34		M1202	SPST Switch w/Driver NINV;Freq .5-2GHz;Vcc ±15V;Insert Loss .60dB;SMA Jack
3	MT3486A2P1N-S9	34		M1202	SPST Switch w/Driver NINV;Freq .5-2GHz;Vcc 5,-15V;Insert Loss .60dB;SMA Jack
4	MT3486A2P2I-S1	34		M1202	SPST Switch w/Driver INV;Freq .5-2GHz;Vcc 5,-12V;Insert Loss .60dB;SMC Jack
5	MT3486A2P2I-S2	34		M1202	SPST Switch w/Driver INV;Freq .5-2GHz;Vcc ±12V;Insert Loss .60dB;SMC Jack
6	MT3486A2P2I-S3	34		M1202	SPST Switch w/Driver INV;Freq .5-2GHz;Vcc ±15V;Insert Loss .60dB;SMC Jack
7	MT3486A2P2I-S9	34		M1202	SPST Switch w/Driver INV;Freq .5-2GHz;Vcc 5,-15V;Insert Loss .60dB;SMC Jack
8	MT3486A2P2N-S1	34		M1202	SPST Switch w/Driver NINV;Freq .5-2GHz;Vcc 5,-12V;Insert Loss .60dB;SMC Jack
9	MT3486A2P2N-S2	34		M1202	SPST Switch w/Driver NINV;Freq .5-2GHz;Vcc ±12V;Insert Loss .60dB;SMC Jack
10	MT3486A2P2N-S3	34		M1202	SPST Switch w/Driver NINV;Freq .5-2GHz;Vcc ±15V;Insert Loss .60dB;SMC Jack
11	MT3486A2P2N-S9	34		M1202	SPST Switch w/Driver NINV;Freq .5-2GHz;Vcc 5,-15V;Insert Loss .60 dB;SMC Jack
12	MT3486A2P3I-S1	34		M1202	SPST Switch w/Driver INV;Freq .5-2GHz;Vcc 5,-12V;Insert Loss .60dB;Solder Pin
13	MT3486A2P3I-S2	34		M1202	SPST Switch w/Driver INV;Freq .5-2GHz;Vcc ±12V;Insert Loss .60dB;Solder Pin
14	MT3486A2P3I-S3	34		M1202	SPST Switch w/Driver INV;Freq .5-2GHz;Vcc ±15V;Insert Loss .60dB;Solder Pin
15	MT3486A2P3I-S9	34		M1202	SPST Switch w/Driver INV;Freq .5-2GHz;Vcc 5,-15V;Insert Loss .60dB;Solder Pin
16	MT3486A2P3N-S1	34		M1202	SPST Switch w/Driver NINV;Freq .5-2GHz;Vcc 5,-12V;Insert Loss .60dB;Solder Pin
17	MT3486A2P3N-S2	34		M1202	SPST Switch w/Driver NINV;Freq .5-2GHz;Vcc ±12V;Insert Loss .60dB;Solder Pin
18	MT3486A2P3N-S3	34		M1202	SPST Switch w/Driver NINV;Freq .5-2GHz;Vcc ±15V;Insert Loss .60dB;Solder Pin
19	MT3486A2P3N-S9	34		M1202	SPST Switch w/Driver NINN;Freq .5-2GHz;Vcc 5,-15V;Insert Loss .60dB;Solder Pin
20	MT3486A4P1I-S1	34		M1202	SPST Switch w/Driver INV;Freq 2-4GHz;Vcc 5,-12V;Insert Loss .90dB;SMA Jack
21	MT3486A4P1I-S2	34		M1202	SPST Switch w/Driver INV;Freq 2-4GHz;Vcc ±12V;Insert Loss .90db;SMA Jack
22	MT3486A4P1I-S3	34		M1202	SPST Switch w/Driver INV;Freq 2-4GHz;Vcc ±15V;Insert Loss .90dB;SMA Jack
23	MT3486A4P1I-S9	34		M1202	SPST Switch w/Driver INV;Freq 2-4GHz;Vcc 5-15V;Insert Loss .90dB;SMA Jack
24	MT3486A4P1N-S1	34		M1202	SPST Switch w/Driver NINV;Freq 2-4GHz;Vcc 5,-12V;Insert Loss .90dB;SMA Jack
25	MT3486A4P1N-S2	34		M1202	SPST Switch w/Driver NINV;Freq 2-4GHz;Vcc ±12V;Insert Loss .90dB;SMA Jack
26	MT3486A4P1N-S3	34		M1202	SPST Switch w/Driver NINV;Freq 2-4GHz;Vcc ±15V;Insert Loss .90dB;SMA Jack
27	MT3486A4P1N-S9	34		M1202	SPST Switch w/Driver NINV;Freq 2-4GHz;Vcc 5,-15V;Insert Loss .90dB;SMA Jack
28	MT3486A4P2I-S1	34		M1202	SPST Switch w/Driver INV;Freq 2-4GHz;Vcc 5,-12V;Insert Loss .90dB;SMC Jack
29	MT3486A4P2I-S2	34		M1202	SPST Switch w/Driver INV;Freq 2-4GHz;Vcc ±12V;Insert Loss .90dB;SMC Jack
30	MT3486A4P2I-S3	34		M1202	SPST Switch w/Driver INV;Freq 2-4GHz;Vcc ±15V;Insert Loss .90dB;SMC Jack
31	MT3486A4P2I-S9	34		M1202	SPST Switch w/Driver INV;Freq 2-4GHz;Vcc 5,-15V;Insert Loss .90dB;SMC Jack
32	MT3486A4P2N-S1	34		M1202	SPST Switch w/Driver NINV;Freq 2-4GHz;Vcc 5,-12V;Insert Loss .90dB;SMC Jack
33	MT3486A4P2N-S2	34		M1202	SPST Switch w/Driver NINV;Freq 2-4GHz;Vcc ±12V;Insert Loss .90dB;SMC Jack
34	MT3486A4P2N-S3	34		M1202	SPST Switch w/Driver NINV;Freq 2-4GHz;Vcc ±15V;Insert Loss .90dB;SMC Jack
35	MT3486A4P2N-S9	34		M1202	SPST Switch w/Driver NINV;Freq 2-4GHz;Vcc 5,-15V;Insert Loss .90 dB;SMC Jack
36	MT3486A4P3I-S1	34		M1202	SPST Switch w/Driver INV;Freq 2-4GHz;Vcc 5,-12V;Insert Loss .90dB;Solder Pin
37	MT3486A4P3I-S2	34		M1202	SPST Switch w/Driver INV;Freq 2-4GHz;Vcc ±12V;Insert Loss .90dB;Solder Pin
38	MT3486A4P3I-S3	34		M1202	SPST Switch w/Driver INV;Freq 2-4GHz;Vcc ±15V;Insert Loss .90dB;Solder Pin
39	MT3486A4P3I-S9	34		M1202	SPST Switch w/Driver INV;Freq 2-4GHz;Vcc 5,-15V;Insert Loss .90dB;Solder Pin
40	MT3486A4P3N-S1	34		M1202	SPST Switch w/Driver NINV;Freq 2-4GHz;Vcc 5,-12V;Insert Loss .90dB;Solder Pin
41	MT3486A4P3N-S2	34		M1202	SPST Switch w/Driver NINV;Freq 2-4GHz;Vcc ±12V;Insert Loss .90dB;Solder Pin
42	MT3486A4P3N-S3	34		M1202	SPST Switch w/Driver NINV;Freq 2-4GHz;Vcc ±15V;Insert Loss .90dB;Solder Pin
43	MT3486A4P3N-S9	34		M1202	SPST Switch w/Driver NINV;Freq 2-4GHz;Vcc 5,-15V;Insert Loss .90dB;Solder Pin
44	MT3486A-P1I-S1	34		M1202	SPST Switch w/Driver INV;Freq .5-4GHz;Vcc 5,-12V;Insert Loss .90dB;SMA Jack
45	MT3486A-P1I-S2	34		M1202	SPST Switch w/Driver INV;Freq .5-4GHz;Vcc ±12V;Insert Loss .90db;SMA Jack
46	MT3486A-P1I-S3	34		M1202	SPST Switch w/Driver INV;Freq .5-4GHz;Vcc ±15V;Insert Loss .90dB;SMA Jack
47	MT3486A-P1I-S9	34		M1202	SPST Switch w/Driver INV;Freq .5-4GHz;Vcc 5-15V;Insert Loss .90dB;SMA Jack
48	MT3486A-P1N-S1	34		M1202	SPST Switch w/Driver NINV;Freq, .5-4GHz;Vcc 5,-12V;Insert Loss .90dB;SMA Jack
49	MT3486A-P1N-S2	34		M1202	SPST Switch w/Driver NINV;Freq .5-4GHz;Vcc ±12V;Insert Loss .90dB;SMA Jack
50	MT3486A-P1N-S3	34		M1202	SPST Switch w/Driver NINV;Freq .5-4GHz;Vcc ±15V;Insert Loss .90dB;SMA Jack
51	MT3486A-P1N-S9	34		M1202	SPST Switch w/Driver NINV;Freq .5-4GHz;Vcc 5,-15V;Insert Loss .90dB;SMA Jack
52	MT3486A-P2I-S1	34		M1202	SPST Switch w/Driver INV;Freq .5-4GHz;Vcc 5,-12V;Insert Loss .90dB;SMC Jack
53	MT3486A-P2I-S2	34		M1202	SPST Switch w/Driver INV;Freq .5-4GHz;Vcc ±12V;Insert Loss .90dB;SMC Jack
54	MT3486A-P2I-S3	34		M1202	SPST Switch w/Driver INV;Freq .5-4GHz;Vcc ±15V;Insert Loss .90dB;SMC Jack
55	MT3486A-P2N-S1	34		M1202	SPST Switch w/Driver NINV;Freq .5-4GHz;Vcc 5,-12V;Insert Loss .90dB;SMC Jack
56	MT3486A-P2N-S2	34		M1202	SPST Switch w/Driver NINV;Freq .5-4GHz;Vcc ±12V;Insert Loss .90dB;SMC Jack
57	MT3486A-P2N-S3	34		M1202	SPST Switch w/Driver NINV;Freq .5-4GHz;Vcc ±15V;Insert Loss .90dB;SMC Jack
58	MT3486A-P2N-S9	34		M1202	SPST Switch w/Driver NINV;Freq .5-4GHz;Vcc 5,-15V;Insert Loss .90 dB;SMC Jack
59	MT3486A-P3I-S1	34		M1202	SPST Switch w/Driver INV;Freq .5-4GHz;Vcc 5,-12V;Insert Loss .90dB;Solder Pin
60	MT3486A-P3I-S2	34		M1202	SPST Switch w/Driver INV;Freq .5-4GHz;Vcc ±12V;Insert Loss .90dB;Solder Pin
61	MT3486A-P3I-S3	34		M1202	SPST Switch w/Driver INV;Freq .5-4GHz;Vcc ±15V;Insert Loss .90dB;Solder Pin
62	MT3486A-P3I-S9	34		M1202	SPST Switch w/Driver INV;Freq .5-4GHz;Vcc 5,-15V;Insert Loss .90dB;Solder Pin
63	MT3486A-P3N-S1	34		M1202	SPST Switch w/Driver NINV;Freq .5-4GHz;Vcc 5,-12V;Insert Loss .90dB;Solder Pin
64	MT3486A-P3N-S2	34		M1202	SPST Switch w/Driver NINV;Freq .5-4GHz;Vcc ±12V;Insert Loss .90dB;Solder Pin
65	MT3486A-P3N-S3	34		M1202	SPST Switch w/Driver NINV;Freq .5-4GHz;Vcc ±15V;Insert Loss .90dB;Solder Pin
66	MT3486A-P3N-S9	34		M1202	SPST Switch w/Driver NINV;Freq .5-4GHz;Vcc 5,-15V;Insert Loss .90dB;Solder Pin
67	MT3486B2P1I-S1	34		M1202	SPST Switch w/Driver INV;Freq 2-8GHz;Vcc 5,-12V;Insert Loss 1.3dB;SMA Jack
68	MT3486B2P1I-S2	34		M1202	SPST Switch w/Driver INV;Freq 2-8GHz;Vcc ±12V;Insert Loss 1.3db;SMA Jack
69	MT3486B2P1I-S3	34		M1202	SPST Switch w/Driver INV;Freq 2-8GHz;Vcc ±15V;Insert Loss 1.3dB;SMA Jack
70	MT3486B2P1I-S9	34		M1202	SPST Switch w/Driver INV;Freq 2-8GHz;Vcc 5-15V;Insert Loss 1.3dB;SMA Jack
71	MT3486B2P1N-S1	34		M1202	SPST Switch w/Driver NINV;Freq 2-8GHz;Vcc 5,-12V;Insert Loss 1.3dB;SMA Jack
72	MT3486B2P1N-S2	34		M1202	SPST Switch w/Driver NINV;Freq 2-8GHz;Vcc ±12V;Insert Loss 1.3dB;SMA Jack
73	MT3486B2P1N-S3	34		M1202	SPST Switch w/Driver NINV;Freq 2-8GHz;Vcc ±15V;Insert Loss 1.3dB;SMA Jack
74	MT3486B2P1N-S9	34		M1202	SPST Switch w/Driver NINV;Freq 2-8GHz;Vcc 5,-15V;Insert Loss 1.3dB;SMA Jack
75	MT3486B2P2I-S1	34		M1202	SPST Switch w/Driver INV;Freq 2-8GHz;Vcc 5,-12V;Insert Loss 1.3dB;SMC Jack
76	MT3486B2P2I-S2	34		M1202	SPST Switch w/Driver INV;Freq 2-8GHz;Vcc ±12V;Insert Loss 1.3dB;SMC Jack
77	MT3486B2P2I-S3	34		M1202	SPST Switch w/Driver INV;Freq 2-8GHz;Vcc ±15V;Insert Loss 1.3dB;SMC Jack
78	MT3486B2P2I-S9	34		M1202	SPST Switch w/Driver INV;Freq 2-8GHz;Vcc 5,-15V;Insert Loss 1.3dB;SMC Jack
79	MT3486B2P2N-S1	34		M1202	SPST Switch w/Driver NINV;Freq 2-8GHz;Vcc 5,-12V;Insert Loss 1.3dB;SMC Jack
80	MT3486B2P2N-S2	34		M1202	SPST Switch w/Driver NINV;Freq 2-8GHz;Vcc ±12V;Insert Loss 1.3dB;SMC Jack
81	MT3486B2P2N-S3	34		M1202	SPST Switch w/Driver NINV;Freq 2-8GHz;Vcc ±15V;Insert Loss 1.3dB;SMC Jack
82	MT3486B2P2N-S9	34		M1202	SPST Switch w/Driver NINV;Freq 2-8GHz;Vcc 5,-15V;Insert Loss 1.3dB;SMC Jack
83	MT3486B2P3I-S1	34		M1202	SPST Switch w/Driver INV;Freq 2-8GHz;Vcc 5,-12V;Insert Loss 1.3dB;Solder Pin
84	MT3486B2P3I-S2	34		M1202	SPST Switch w/Driver INV;Freq 2-8GHz;Vcc ±12V;Insert Loss 1.3dB;Solder Pin
85	MT3486B2P3I-S3	34		M1202	SPST Switch w/Driver INV;Freq 2-8GHz;Vcc ±15V;Insert Loss 1.3dB;Solder Pin
86	MT3486B2P3I-S9	34		M1202	SPST Switch w/Driver INV;Freq 2-8GHz;Vcc 5,-15V;Insert Loss 1.3dB;Solder Pin
87	MT3486B2P3N-S1	34		M1202	SPST Switch w/Driver NINV;Freq 2-8GHz;Vcc 5,-12V;Insert Loss 1.3dB;Solder Pin
88	MT3486B2P3N-S2	34		M1202	SPST Switch w/Driver NINV;Freq 2-8GHz;Vcc ±12V;Insert Loss 1.3dB;Solder Pin
89	MT3486B2P3N-S3	34		M1202	SPST Switch w/Driver NINV;Freq 2-8GHz;Vcc ±15V;Insert Loss 1.3dB;Solder Pin
90	MT3486B2P3N-S9	34		M1202	SPST Switch w/Driver NINV;Freq 2-8GHz;Vcc 5,-15V;Insert Loss 1.3dB;Solder Pin
91	MT3486B-P1I-S1	34		M1202	SPSI Switch w/Driver INV;Freq 4-8GHz;Vcc 5,-12V;Insert Loss 1.3dB;SMA Jack
92	MT3486B-P1I-S2	34		M1202	SPST Switch w/Driver INV;Freq 4-8GHz;Vcc ±12V;Insert Loss 1.3dB;SMA Jack
93	MT3486B-P1I-S3	34		M1202	SPST Switch w/Driver INV;Freq 4-8GHz;Vcc ±15V;Insert Loss 1.3dB;SMA Jack
94	MT3486B-P1I-S9	34		M1202	SPST Switch w/Driver INV;Freq 4-8GHz;Vcc 5-15V;Insert Loss 1.3dB;SMA Jack
95	MT3486B-P1N-S1	34		M1202	SPST Switch w/Driver NINV;Freq 4-8GHz;Vcc 5,-12V;Insert Loss 1.3dB;SMA Jack
96	MT3486B-P1N-S2	34		M1202	SPST Switch w/Driver NINV;Freq 4-8GHz;Vcc ±12V;Insert Loss 1.3dB;SMA Jack
97	MT3486B-P1N-S3	34		M1202	SPST Switch w/Driver NINV;Freq 4-8GHz;Vcc ±15V;Insert Loss 1.3dB;SMA Jack
98	MT3486B-P1N-S9	34		M1202	SPST Switch w/Driver NINV;Freq 4-8GHz;Vcc 5,-15V;Insert Loss 1.3dB;SMA Jack
99	MT3486B-P2I-S1	34		M1202	SPST Switch w/Driver INV;Freq 4-8GHz;Vcc 5,-12V;Insert Loss 1.3dB;SMC Jack
100	MT3486B-P2I-S2	34		M1202	SPST Switch w/Driver INV;Freq 4-8GHz;Vcc ±12V;Insert Loss 1.3dB;SMC Jack
101	MT3486B-P2I-S3	34		M1202	SPST Switch w/Driver INV;Freq 4-8GHz;Vcc ±15V;Insert Loss 1.3dB;SMC Jack
102	MT3486B-P2I-S9	34		M1202	SPST Switch w/Driver INV;Freq 4-8GHz;Vcc 5,-15V;Insert Loss 1.3dB;SMC Jack
103	MT3486B-P2N-S1	34		M1202	SPST Switch w/Driver NINV;Freq 4-8GHz;Vcc 5,-12V;Insert Loss 1.3dB;SMC Jack
104	MT3486B-P2N-S2	34		M1202	SPST Switch w/Driver NINV;Freq 4-8GHz;Vcc ±12V;Insert Loss 1.3dB;SMC Jack
105	MT3486B-P2N-S3	34		M1202	SPST Switch w/Driver NINV;Freq 4-8GHz;Vcc ±15V;Insert Loss 1.3dB;SMC Jack
106	MT3486B-P2N-S9	34		M1202	SPST Switch w/Driver NINV;Freq 4-8GHz;Vcc 5,-15V;Insert Loss 1.3dB;SMC Jack
107	MT3486B-P3I-S1	34		M1202	SPST Switch w/Driver INV;Freq 4-8GHz;Vcc 5,-12V;Insert Loss 1.3dB;Solder Pin
108	MT3486B-P3I-S2	34		M1202	SPST Switch w/Driver INV;Freq 4-8GHz;Vcc ±12V;Insert Loss 1.3dB;Solder Pin
109	MT3486B-P3I-S3	34		M1202	SPST Switch w/Driver INV;Freq 4-8GHz;Vcc ±15V;Insert Loss 1.3dB;Solder Pin
110	MT3486B-P3I-S9	34		M1202	SPST Switch w/Driver INV;Freq 4-8GHz;Vcc 5,-15V;Insert Loss 1.3dB;Soldder Pin

8. MISCELLANEOUS DEVICES

IN ORDER OF (1) USE and (2) TYPE No.

LINE No.	2 TYPE No.	1 USE	DESCRIPTION MAT.	DWG. No.	TECHNICAL DATA
1	MT3486B-P3N-S1	34		M1202	SPST Switch w/Driver NINV;Freq 4-8GHz;Vcc 5,-12V;Insert Loss 1.3dB;Solder Pin
2	MT3486B-P3N-S2	34		M1202	SPST Switch w/Driver NINV;Freq 4-8GHz;Vcc ±12V;Insert Loss 1.3dB;Solder Pin
3	MT3486B-P3N-S3	34		M1202	SPST Switch w/Driver NINV;Freq 4-8GHz;Vcc ±15V;Insert Loss 1.3dB;Solder Pin
4	MT3486B-P3N-S9	34		M1202	SPST Switch w/Driver NINV;Freq 4-8GHz;Vcc 5,-15V;Insert Loss 1.3dB;Solder Pin
5	MT3486C-P1I-S1	34		M1202	SPST Switch w/Driver INV;Freq 8-12.4GHz;Vcc 5,-12V;Insert Loss 1.5dB;SMA Jack
6	MT3486C-P1I-S2	34		M1202	SPST Switch w/Driver INV;Freq 8-12.4GHz;Vcc ±12V;Insert Loss 1.5dB;SMA Jack
7	MT3486C-P1I-S3	34		M1202	SPST Switch w/Driver INV;Freq 8-12.4GHz;Vcc ±15V;Insert Loss 1.5dB;SMA Jack
8	MT3486C-P1I-S9	34		M1202	SPST Switch w/Driver INV;Freq 8-12.4GHz;Vcc 5-15V;Insert Loss 1.5dB;SMA Jack
9	MT3486C-P1N-S1	34		M1202	SPST Switch w/Driver NINV;Freq 8-12.4GHz;Vcc 5,-12V;Insert Loss 1.5dB;SMA Jack
10	MT3486C-P1N-S2	34		M1202	SPST Switch w/Driver NINV;Freq 8-12.4GHz;Vcc ±12V;Insert Loss 1.5dB;SMA Jack
11	MT3486C-P1N-S3	34		M1202	SPST Switch w/Driver NINV;Freq 8-12.4GHz;Vcc ±15V;Insert Loss 1.5dB;SMA Jack
12	MT3486C-P1N-S9	34		M1202	SPST Switch w/Driver NINV;Freq 8-12.4GHz;Vcc 5,-15V;Insert Loss 1.5dB;SMA Jack
13	MT3486C-P2I-S1	34		M1202	SPST Switch w/Driver INV;Freq 8-12.4GHz;Vcc 5,-12V;Insert Loss 1.5dB;SMC Jack
14	MT3486C-P2I-S2	34		M1202	SPST Switch w/Driver INV;Freq 8-12.4GHz;Vcc ±12V;Insert Loss 1.5dB;SMC Jack
15	MT3486C-P2I-S3	34		M1202	SPST Switch w/Driver INV;Freq 8-12.4GHz;Vcc ±15V;Insert Loss 1.5dB;SMC Jack
16	MT3486C-P2I-S9	34		M1202	SPST Switch w/Driver INV;Freq 8-12.4GHz;Vcc 5,-15V;Insert Loss 1.5dB;SMC Jack
17	MT3486C-P2N-S1	34		M1202	SPST Switch w/Driver NINV;Freq 8-12.4GHz;Vcc 5,-12V;Insert Loss 1.5dB;SMC Jack
18	MT3486C-P2N-S2	34		M1202	SPST Switch w/Driver NINV;Freq 8-12.4GHz;Vcc ±12V;Insert Loss 1.5dB;SMC Jack
19	MT3486C-P2N-S3	34		M1202	SPST Switch w/Driver NINV;Freq 8-12.4GHz;Vcc ±15V;Insert Loss 1.5dB;SMC Jack
20	MT3486C-P2N-S9	34		M1202	SPST Switch w/Driver NINV;Freq 8-12.4GHz;Vcc 5,-15V;Insert Loss 1.5dB;SMC Jack
21	MT3486C-P3I-S1	34		M1202	SPST Switch w/Driver INV;Freq 8-12.4GHz;Vcc 5,-12V;Insert Loss 1.5dB;Solder Pin
22	MT3486C-P3I-S2	34		M1202	SPST Switch w/Driver INV;Freq 8-12.4GHz;Vcc ±12V;Insert Loss 1.5dB;Solder Pin
23	MT3486C-P3I-S3	34		M1202	SPST Switch w/Driver INV;Freq 8-12.4GHz;Vcc ±15V;Insert Loss 1.5dB;Solder Pin
24	MT3486C-P3I-S9	34		M1202	SPST Switch w/Driver INV;Freq 8-12.4GHz;Vcc 5,-15V;Insert Loss 1.5dB;Solder Pin
25	MT3486C-P3N-S1	34		M1202	SPST Switch w/Driver NINV;Freq 8-12.4GHz;Vcc 5,-12V;Insert Loss 1.5dB;Solder Pin
26	MT3486C-P3N-S2	34		M1202	SPST Switch w/Driver NINV;Freq 8-12.4GHz;Vcc ±12V;Insert Loss 1.5dB;Solder Pin
27	MT3486C-P3N-S3	34		M1202	SPST Switch w/Driver NINV;Freq 8-12.4GHz;Vcc ±15V;Insert Loss 1.5dB;Solder Pin
28	MT3486C-P3N-S9	34		M1202	SPST Switch w/Driver NINV;Freq 8-12.4GHz;Vcc 5,-15V;Insert Loss 1.5dB;Solder Pin
29	MT3486D1P1I-S1	34		M1202	SPST Switch w/Driver INV;Freq .5-12.4GHz;Vcc 5,-12V;Insert Loss 1.5dB;SMA Jack
30	MT3486D1P1I-S2	34		M1202	SPST Switch w/Driver INV;Freq .5-12.4GHz;Vcc ±12V;Insert Loss 1.5db;SMA Jack
31	MT3486D1P1I-S3	34		M1202	SPST Switch w/Driver INV;Freq .5-12.4GHz;Vcc ±15V;Insert Loss 1.5dB;SMA Jack
32	MT3486D1P1I-S9	34		M1202	SPST Switch w/Driver INV;Freq .5-12.4GHz;Vcc 5-15V;Insert Loss 1.5dB;SMA Jack
33	MT3486D1P1N-S1	34		M1202	SPST Switbhuw/Driver NINV;Freq, .5-12.4GHz;Vcc 5,-12V;Insert Loss 1.5dB;SMA Jack
34	MT3486D1P1N-S2	34		M1202	SPST Switch w/Driver NINV;Freq .5-12.4GHz;Vcc ±12V;Insert Loss 1.5dB;SMA Jack
35	MT3486D1P1N-S3	34		M1202	SPST Switch w/Driver NINV;Freq .5-12.4GHz;Vcc ±15V;Insert Loss 1.5dB;SMA Jack
36	MT3486D1P1N-S9	34		M1202	SPST Switch w/Driver NINV;Freq .5-12.4GHz;Vcc 5,-15V;Insert Loss 1.5dB;SMA Jack
37	MT3486D1P2I-S1	34		M1202	SPST Switch w/Driver INV;Freq .5-12.4GHz;Vcc 5,-12V;Insert Loss 1.5dB;SMC Jack
38	MT3486D1P2I-S2	34		M1202	SPST Switch w/Driver INV;Freq .5-12.4GHz;Vcc ±12V;Insert Loss 1.5dB;SMC Jack
39	MT3486D1P2I-S3	34		M1202	SPST Switch w/Driver INV;Freq .5-12.4GHz;Vcc ±15V;Insert Loss 1.5dB;SMC Jack
40	MT3486D1P2I-S9	34		M1202	SPST Switch w/Driver INV;Freq .5-12.4GHz;Vcc 5,-15V;Insert Loss 1.5dB;SMC Jack
41	MT3486D1P2N-S1	34		M1202	SPST Switch w/Driver NINV;Freq .5-12.4GHz;Vcc 5,-12V;Insert Loss 1.5dB;SMC Jack
42	MT3486D1P2N-S2	34		M1202	SPST Switch w/Driver NINV;Freq .5-12.4GHz;Vcc ±12V;Insert Loss 1.5dB;SMC Jack
43	MT3486D1P2N-S3	34		M1202	SPST Switch w/Driver NINV;Freq .5-12.4GHz;Vcc ±15V;Insert Loss 1.5dB; SMC Jack
44	MT3486D1P2N-S9	34		M1202	SPST Switch w/Driver NINV;Freq .5-12.4GHz;Vcc 5,-15V;Insert Loss 1.5 dB;SMC Jack
45	MT3486D1P3I-S1	34		M1202	SPST Switch w/Driver INV;Freq .5-12.4GHz;Vcc 5,-12V;Insert Loss 1.5dB;Solder Pin
46	MT3486D1P3I-S2	34		M1202	SPST Switch w/Driver INV;Freq .5-12.4GHz;Vcc ±12V;Insert Loss 1.5dB;Solder Pin
47	MT3486D1P3I-S3	34		M1202	SPST Switch w/Driver INV;Freq .5-12.4GHz;Vcc ±15V;Insert Loss 1.5dB;Solder Pin
48	MT3486D1P3I-S9	34		M1202	SPST Switch w/Driver INV;Freq .5-12.4GHz;Vcc 5,-15V;Insert Loss 1.5dB;Solder Pin
49	MT3486D1P3N-S1	34		M1202	SPST Switch w/Driver NINV;Freq .5-12.4GHz;Vcc 5,-12V;Insert Loss 1.5dB;Solder Pin
50	MT3486D1P3N-S2	34		M1202	SPST Switch w/Driver NINV;Freq .5-12.4GHz;Vcc ±12V;Insert Loss 1.5dB;Solder Pin
51	MT3486D1P3N-S3	34		M1202	SPST Switch w/Driver NINV;Freq .5-12.4GHz;Vcc ±15V;Insert Loss 1.5dB Solder Pin
52	MT3486D1P3N-S9	34		M1202	SPST Switch w/Driver NINV;Freq .5-12.4GHz;Vcc 5,-15V;Insert Loss 1.5dB;Solder Pin
53	MT3486D-P1I-S1	34		M1202	SPST Switch w/Driver INV;Freq .5-8GHz;Vcc 5,-12V;Insert Loss 1.3dB;SMA Jack
54	MT3486D-P1I-S2	34		M1202	SPST Switch w/Driver INV;Freq .5-8GHz;Vcc ±12V;Insert Loss 1.3db;SMA Jack
55	MT3486D-P1I-S3	34		M1202	SPST Switch w/Driver INV;Freq .5-8GHz;Vcc ±15V;Insert Loss 1.3dB;SMA Jack
56	MT3486D-P1I-S9	34		M1202	SPST Switch w/Driver INV;Freq .5-8GHz;Vcc 5-15V;Insert Loss 1.3dB;SMA Jack
57	MT3486D-P1N-S1	34		M1202	SPST Switch w/Driver NINV;Freq, .5-8GHz;Vcc 5,-12V;Insert Loss 1.3dB;SMA Jack
58	MT3486D-P1N-S2	34		M1202	SPST Switch w/Driver NINV;Freq .5-8GHz;Vcc ±12V;Insert Loss 1.3dB;SMA Jack
59	MT3486D-P1N-S3	34		M1202	SPST Switch w/Driver NINV;Freq .5-8GHz;Vcc ±15V;Insert Loss 1.3dB;SMA Jack
60	MT3486D-P1N-S9	34		M1202	SPST Switch w/Driver NINV;Freq .5-8GHz;Vcc 5,-15V;Insert Loss 1.3dB;SMA Jack
61	MT3486D-P2I-S1	34		M1202	SPST Switch w/Driver INV;Freq .5-8GHz;Vcc 5,-12V;Insert Loss 1.3dB;SMC Jack
62	MT3486D-P2I-S2	34		M1202	SPST Switch w/Driver INV;Freq .5-8GHz;Vcc ±12V;Insert Loss 1.3dB;SMC Jack
63	MT3486D-P2I-S3	34		M1202	SPST Switch w/Driver INV;Freq .5-8GHz;Vcc ±15V;Insert Loss 1.3dB;SMC Jack
64	MT3486D-P2I-S9	34		M1202	SPST Switch w/Driver INV;Freq .5-8GHz;Vcc 5,-15V;Insert Loss 1.3dB;SMC Jack
65	MT3486D-P2N-S1	34		M1202	SPST Switch w/Driver NINV;Freq .5-8GHz;Vcc 5,-12V;Insert Loss 1.3dB;SMC Jack
66	MT3486D-P2N-S2	34		M1202	SPST Switch w/Driver NINV;Freq .5-8GHz;Vcc ±12V;Insert Loss 1.3dB;SMC Jack
67	MT3486D-P2N-S3	34		M1202	SPST Switch w/Driver NINV;Freq .5-8GHz;Vcc ±15V;Insert Loss 1.3dB;SMC Jack
68	MT3486D-P2N-S9	34		M1202	SPST Switch w/Driver NINV;Freq .5-8GHz;Vcc 5,-15V;Insert Loss 1.3 dB;SMC Jack
69	MT3486D-P3I-S1	34		M1202	SPST Switch w/Driver INV;Freq .5-8GHz;Vcc 5,-12V;Insert Loss 1.3dB;Solder Pin
70	MT3486D-P3I-S2	34		M1202	SPST Switch w/Driver INV;Freq .5-8GHz;Vcc ±12V;Insert Loss 1.3dB;Solder Pin
71	MT3486D-P3I-S3	34		M1202	SPST Switch w/Driver INV;Freq .5-8GHz;Vcc ±15V;Insert Loss 1.3dB;Solder Pin
72	MT3486D-P3I-S9	34		M1202	SPST Switch w/Driver INV;Freq .5-8GHz;Vcc 5,-15V;Insert Loss 1.3dB;Solder Pin
73	MT3486D-P3N-S1	34		M1202	SPST Switch w/Driver NINV;Freq .5-8GHz;Vcc 5,-12V;Insert Loss 1.3dB;Solder Pin
74	MT3486D-P3N-S2	34		M1202	SPST Switch w/Driver NINV;Freq .5-8GHz;Vcc ±12V;Insert Loss 1.3dB;Solder Pin
75	MT3486D-P3N-S3	34		M1202	SPST Switch w/Driver NINV;Freq .5-8GHz;Vcc ±15V;Insert Loss 1.3dB;Solder Pin
76	MT3486D-P3N-S9	34		M1202	SPST Switch w/Driver NINV;Freq .5-8GHz;Vcc 5,-15V;Insert Loss 1.3dB;Solder Pin
77	MT3486E-P1I-S1	34		M1202	SPST Switch w/Driver INV;Freq 4-12.4GHz;Vcc 5,-12V;Insert Loss 1.5dB;SMA Jack
78	MT3486E-P1I-S2	34		M1202	SPST Switch w/Driver INV;Freq 4-12.4GHz;Vcc ±12V;Insert Loss 1.5dB;SMA Jack
79	MT3486E-P1I-S3	34		M1202	SPST Switch w/Driver INV;Freq 4-12.4GHz;Vcc ±15V;Insert Loss 1.5dB;SMA Jack
80	MT3486E-P1I-S9	34		M1202	SPST Switch w/Driver INV;Freq 4-12.4GHz;Vcc 5-15V;Insert Loss 1.5dB;SMA Jack
81	MT3486E-P1N-S1	34		M1202	SPST Switch w/Driver NINV;Freq 4-12.4GHz;Vcc 5,-12V;Insert Loss 1.5dB;SMA Jack
82	MT3486E-P1N-S2	34		M1202	SPST Switch w/Driver NINV;Freq 4-12.4GHz;Vcc ±12V;Insert Loss 1.5dB;SMA Jack
83	MT3486E-P1N-S3	34		M1202	SPST Switch w/Driver NINV;Freq 4-12.4GHz;Vcc ±15V;Insert Loss 1.5dB;SMA Jack
84	MT3486E-P1N-S9	34		M1202	SPST Switch w/Driver NINV;Freq 4-12.4GHz;Vcc 5,-15V;Insert Loss 1.5dB;SMA Jack
85	MT3486E-P2I-S1	34		M1202	SPST Switch w/Driver INV;Freq 4-12.4GHz;Vcc 5,-12V;Insert Loss 1.5dB;SMC Jack
86	MT3486E-P2I-S2	34		M1202	SPST Switch w/Driver INV;Freq 4-12.4GHz;Vcc ±12V;Insert Loss 1.5dB;SMC Jack
87	MT3486E-P2I-S3	34		M1202	SPST Switch w/Driver INV;Freq 4-12.4GHz;Vcc ±15V;Insert Loss 1.5dB;SMC Jack
88	MT3486E-P2I-S9	34		M1202	SPST Switch w/Driver INV;Freq 4-12.4GHz;Vcc 5,-15V;Insert Loss 1.5dB;SMC Jack
89	MT3486E-P2N-S1	34		M1202	SPST Switch w/Driver NINV;Freq 4-12.4GHz;Vcc 5,-12V;Insert Loss 1.5dB;SMC Jack
90	MT3486E-P2N-S2	34		M1202	SPST Switch w/Driver NINV;Freq 4-12.4GHz;Vcc ±12V;Insert Loss 1.5dB;SMC Jack
91	MT3486E-P2N-S3	34		M1202	SPST Switch w/Driver NINV;Freq 4-12.4GHz;Vcc ±15V;Insert Loss 1.5dB;SMC Jack
92	MT3486E-P2N-S9	34		M1202	SPST Switch w/Driver NINV;Freq 4-12.4GHz;Vcc 5,-15V;Insert Loss 1.5dB;SMC Jack
93	MT3486E-P3I-S1	34		M1202	SPST Switch w/Driver INV;Freq 4-12.4GHz;Vcc 5,-12V;Insert Loss 1.5dB;Solder Pin
94	MT3486E-P3I-S2	34		M1202	SPST Switch w/Driver INV;Freq 4-12.4GHz;Vcc ±12V;Insert Loss 1.5dB;Solder Pin
95	MT3486E-P3I-S3	34		M1202	SPST Switch w/Driver INV;Freq 4-12.4GHz;Vcc ±15V;Insert Loss 1.5dB;Solder Pin
96	MT3486E-P3I-S9	34		M1202	SPST Switch w/Driver INV;Freq 4-12.4GHz;Vcc 5,-15V;Insert Loss 1.5dB;Solder Pin
97	MT3486E-P3N-S1	34		M1202	SPST Switch w/Driver NINV;Freq 4-12.4GHz;Vcc 5,-12V;Insert Loss 1.5dB;Solder Pin
98	MT3486E-P3N-S2	34		M1202	SPST Switch w/Driver NINV;Freq 4-12.4GHz;Vcc ±12V;Insert Loss 1.5dB;Solder Pin
99	MT3486E-P3N-S3	34		M1202	SPST Switch w/Driver NINV;Freq 4-12.4GHz;Vcc ±15V;Insert Loss 1.5dB;Solder Pin
100	MT3486E-P3N-S9	34		M1202	SPST Switch w/Driver NINV;Freq 4-12.4GHz;Vcc 5,-15V;Insert Loss 1.5dB;Solder Pin
101	MT3486F1P1I-S1	34		M1202	SPST Switch w/Driver INV;Freq 2-12.4GHz;Vcc 5,-12V;Insert Loss 1.5dB; SMA Jack
102	MT3486F1P1I-S2	34		M1202	SPST Switch w/Driver INV;Freq 2-12.4GHz;Vcc ±12V;Insert Loss 1.5dB;SMA Jack
103	MT3486F1P1I-S3	34		M1202	SPST Switch w/Driver INV;Freq 2-12.4GHz;Vcc ±15V;Insert Loss 1.5dB;SMA Jack
104	MT3486F1P1I-S9	34		M1202	SPST Switch w/Driver INV;Freq 2-12.4GHz;Vcc 5-15V;Insert Loss 1.5dB;SMA Jack
105	MT3486F1P1N-S1	34		M1202	SPST Switch w/Driver NINV;Freq 2-12.4GHz;Vcc 5,-12V;Insert Loss 1.5dB;SMA Jack
106	MT3486F1P1N-S2	34		M1202	SPST Switch w/Driver NINV;Freq 2-12.4GHz;Vcc ±12V;Insert Loss 1.5dB;SMA Jack
107	MT3486F1P1N-S3	34		M1202	SPST Switch w/Driver NINV;Freq 2-12.4GHz;Vcc ±15V;Insert Loss 1.5dB;SMA Jack
108	MT3486F1P1N-S9	34		M1202	SPST Switch w/Driver NINV;Freq 2-12.4GHz;Vcc 5,-15V;Insert Loss 1.5dB;SMA Jack
109	MT3486F1P2I-S1	34		M1202	SPST Switch w/Driver INV;Freq 2-12.4GHz;Vcc 5,-12V;Insert Loss 1.5dB;SMC Jack
110	MT3486F1P2I-S2	34		M1202	SPST Switch w/Driver INV;Freq 2-12.4GHz;Vcc ±12V;Insert Loss 1.5dB;SMC Jack

LINE No.	[2] TYPE No.	[1] USE	DESCRIPTION MAT.	DESCRIPTION DWG. No.	TECHNICAL DATA
1	MT3486F1P2I-S3	34		M1202	SPST Switch w/Driver INV;Freq 2-12.4GHz;Vcc ±15V;Insert Loss 1.5dB;SMC Jack
2	MT3486F1P2I-S9	34		M1202	SPST Switch w/Driver INV;Freq 2-12.4GHz;Vcc 5,-15V;Insert Loss 1.5dB;SMC Jack
3	MT3486F1P2N-S1	34		M1202	SPST Switch w/Driver NINV;Freq 2-12.4GHz;Vcc 5,-12V;Insert Loss 1.5dB;SMC Jack
4	MT3486F1P2N-S2	34		M1202	SPST Switch w/Driver NINV;Freq 2-12.4GHz;Vcc ±12V;Insert Loss 1.5dB;SMC Jack
5	MT3486F1P2N-S3	34		M1202	SPST Switch w/Driver NINV;Freq 2-12.4GHz;Vcc ±15V;Insert Loss 1.5dB;SMC Jack
6	MT3486F1P2N-S9	34		M1202	SPST Switch w/Driver NINV;Freq 2-12.4GHz;Vcc 5,-15V;Insert Loss 1.5dB;SMC Jack
7	MT3486F1P3I-S1	34		M1202	SPST Switch w/Driver INV;Freq 2-12.4GHz;Vcc 5,-12V;Insert Loss 1.5dB;Solder Pin
8	MT3486F1P3I-S2	34		M1202	SPST Switch w/Driver INV;Freq 2-12.4GHz;Vcc ±12V;Insert Loss 1.5dB;Solder Pin
9	MT3486F1P3I-S3	34		M1202	SPST Switch w/Driver INV;Freq 2-12.4GHz;Vcc ±15V;Insert Loss 1.5dB;Solder Pin
10	MT3486F1P3I-S9	34		M1202	SPST Switch w/Driver INV;Freq 2-12.4GHz;Vcc 5,-15V;Insert Loss 1.5dB;Solder Pin
11	MT3486F1P3N-S1	34		M1202	SPST Switch w/Driver NINV;Freq 2-12.4GHz;Vcc 5,-12V;Insert Loss 1.5dB;Solder Pin
12	MT3486F1P3N-S2	34		M1202	SPST Switch w/Driver NINV;Freq 2-12.4GHz;Vcc ±12V;Insert Loss 1.5dB;Solder Pin
13	MT3486F1P3N-S3	34		M1202	SPST Switch w/Driver NINV;Freq 2-12.4GHz;Vcc ±15V;Insert Loss 1.5dB;Solder Pin
14	MT3486F1P3N-S9	34		M1202	SPST Switch w/Driver NINV;Freq 2-12.4GHz;Vcc 5,-15V;Insert Loss 1.5dB;Solder Pin
15	MT3486H1P1I-S1	34		M1202	SPST Switch w/Driver INV;Freq 4-18GHz;Vcc 5,-12V;Insert Loss 1.8dB;SMA Jack
16	MT3486H1P1I-S2	34		M1202	SPST Switch w/Driver INV;Freq 4-18GHz;Vcc ±12V;Insert Loss 1.8dB;SMA Jack
17	MT3486H1P1I-S3	34		M1202	SPST Switch w/Driver INV;Freq 4-18GHz;Vcc ±15V;Insert Loss 1.8dB;SMA Jack
18	MT3486H1P1I-S9	34		M1202	SPST Switch w/Driver INV;Freq 4-18GHz;Vcc 5-15V;Insert Loss 1.8dB;SMA Jack
19	MT3486H1P1N-S1	34		M1202	SPST Switch w/Driver NINV;Freq 4-18GHz;Vcc 5,-12V;Insert Loss 1.8dB;SMA Jack
20	MT3486H1P1N-S2	34		M1202	SPST Switch w/Driver NINV;Freq 4-18GHz;Vcc ±12V;Insert Loss 1.8dB;SMA Jack
21	MT3486H1P1N-S3	34		M1202	SPST Switch w/Driver NINV;Freq 4-18GHz;Vcc ±15V;Insert Loss 1.8dB;SMA Jack
22	MT3486H1P1N-S9	34		M1202	SPST Switch w/Driver NINV;Freq 4-18GHz;Vcc 5,-15V;Insert Loss 1.8dB;SMA Jack
23	MT3486H1P2I-S1	34		M1202	SPST Switch w/Driver INV;Freq 4-18GHz;Vcc 5,-12V;Insert Loss 1.8dB;SMC Jack
24	MT3486H1P2I-S2	34		M1202	SPST Switch w/Driver INV;Freq 4-18GHz;Vcc ±12V;Insert Loss 1.8dB;SMC Jack
25	MT3486H1P2I-S3	34		M1202	SPST Switch w/Driver INV;Freq 4-18GHz;Vcc ±15V;Insert Loss 1.8dB;SMC Jack
26	MT3486H1P2I-S9	34		M1202	SPST Switch w/Driver INV;Freq 4-18GHz;Vcc 5,-15V;Insert Loss 1.8dB SMC Jack
27	MT3486H1P2N-S1	34		M1202	SPST Switch w/Driver NINV;Freq 4-18GHz;Vcc 5,-12V;Insert Loss 1.8dB;SMC Jack
28	MT3486H1P2N-S2	34		M1202	SPST Switch w/Driver NINV;Freq 4-18GHz;Vcc ±12V;Insert Loss 1.8dB;SMC Jack
29	MT3486H1P2N-S3	34		M1202	SPST Switch w/Driver NINV;Freq 4-18GHz;Vcc ±15V;Insert Loss 1.8dB;SMC Jack
30	MT3486H1P2N-S9	34		M1202	SPST Switch w/Driver NINV;Freq 4-18GHz;Vcc 5,-15V;Insert Loss 1.8dB;SMC Jack
31	MT3486H1P3I-S1	34		M1202	SPST Switch w/Driver INV;Freq 4-18GHz;Vcc 5,-12V;Insert Loss 1.8dB;Solder Pin
32	MT3486H1P3I-S2	34		M1202	SPST Switch w/Driver INV;Freq 4-18GHz;Vcc ±12V;Insert Loss 1.8dB;Solder Pin
33	MT3486H1P3I-S3	34		M1202	SPST Switch w/Driver INV;Freq 4-18GHz;Vcc ±15V;Insert Loss 1.8dB;Solder Pin
34	MT3486H1P3I-S9	34		M1202	SPST Switch w/Driver INV;Freq 4-18GHz;Vcc 5,-15V;Insert Loss 1.8dB;Solder Pin
35	MT3486H1P3N-S1	34		M1202	SPST Switch w/Driver NINV;Freq 4-18GHz;Vcc 5,-12V;Insert Loss 1.8dB;Solder Pin
36	MT3486H1P3N-S2	34		M1202	SPST Switch w/Driver NINV;Freq 4-18GHz;Vcc ±12V;Insert Loss 1.8dB;Solder Pin
37	MT3486H1P3N-S3	34		M1202	SPST Switch w/Driver NINV;Freq 4-18GHz;Vcc ±15V;Insert Loss 1.8dB;Solder Pin
38	MT3486H1P3N-S9	34		M1202	SPST Switch w/Driver NINV;Freq 4-18GHz;Vcc 5,-15V;Insert Loss 1.8dB;Solder Pin
39	MT3486H3P1I-S1	34		M1202	SPST Switch w/Driver INV;Freq 8-18GHz;Vcc 5,-12V;Insert Loss 1.8dB;SMA Jack
40	MT3486H3P1I-S2	34		M1202	SPST Switch w/Driver INV;Freq 8-18GHz;Vcc ±12V;Insert Loss 1.8dB;SMA Jack
41	MT3486H3P1I-S3	34		M1202	SPST Switch w/Driver INV;Freq 8-18GHz;Vcc ±15V;Insert Loss 1.8dB;SMA Jack
42	MT3486H3P1I-S9	34		M1202	SPST Switch w/Driver INV;Freq 8-12.4GHz;Vcc 5,-15V;Insert Loss 1.8dB;SMA Jack
43	MT3486H3P1N-S1	34		M1202	SPST Switch w/Driver NINV;Freq 8-18GHz;Vcc 5,-12V;Insert Loss 1.8dB;SMA Jack
44	MT3486H3P1N-S2	34		M1202	SPST Switch w/Driver NINV;Freq 8-18GHz;Vcc ±12V;Insert Loss 1.8dB;SMA Jack
45	MT3486H3P1N-S3	34		M1202	SPST Switch w/Driver NINV;Freq 8-18GHz;Vcc ±15V;Insert Loss 1.8dB;SMA Jack
46	MT3486H3P1N-S9	34		M1202	SPST Switch w/Driver NINV;Freq 8-18GHz;Vcc 5,-15V;Insert Loss 1.8dB;SMA Jack
47	MT3486H3P2I-S1	34		M1202	SPST Switch w/Driver INV;Freq 8-18GHz;Vcc 5,-12V;Insert Loss 1.8dB;SMC Jack
48	MT3486H3P2I-S2	34		M1202	SPST Switch w/Driver INV;Freq 8-18GHz;Vcc ±12V;Insert Loss 1.8dB;SMC Jack
49	MT3486H3P2I-S3	34		M1202	SPST Switch w/Driver INV;Freq 8-18GHz;Vcc ±15V;Insert Loss 1.8dB;SMC Jack
50	MT3486H3P2I-S9	34		M1202	SPST Switch w/Driver INV;Freq 8-18GHz;Vcc 5,-15V;Insert Loss 1.8dB;SMC Jack
51	MT3486H3P2N-S1	34		M1202	SPST Switch w/Driver NINV;Freq 8-18GHz;Vcc 5,-12V;Insert Loss 1.8dB;SMC Jack
52	MT3486H3P2N-S2	34		M1202	SPST Switch w/Driver NINV;Freq 8-18GHz;Vcc ±12V;Insert Loss 1.8dB;SMC Jack
53	MT3486H3P2N-S3	34		M1202	SPST Switch w/Driver NINV;Freq 8-18GHz;Vcc ±15V;Insert Loss 1.8dB;SMC Jack
54	MT3486H3P2N-S9	34		M1202	SPST Switch w/Driver NINV;Freq 8-18GHz;Vcc 5,-15V;Insert Loss 1.8dB;SMC Jack
55	MT3486H3P3I-S1	34		M1202	SPST Switch w/Driver INV;Freq 8-18GHz;Vcc 5,-12V;Insert Loss 1.8dB;Solder Pin
56	MT3486H3P3I-S2	34		M1202	SPST Switch w/Driver INV;Freq 8-18GHz;Vcc ±12V;Insert Loss 1.8dB;Solder Pin
57	MT3486H3P3I-S3	34		M1202	SPST Switch w/Driver INV;Freq 8-18GHz;Vcc ±15V;Insert Loss 1.8dB;Solder Pin
58	MT3486H3P3I-S9	34		M1202	SPST Switch w/Driver INV;Freq 8-18GHz;Vcc 5,-15V;Insert Loss 1.8dB;Solder Pin
59	MT3486H3P3N-S1	34		M1202	SPST Switch w/Driver NINV;Freq 8-18GHz;Vcc 5,-12V;Insert Loss 1.8dB;Solder Pin
60	MT3486H3P3N-S2	34		M1202	SPST Switch w/Driver NINV;Freq 8-18GHz;Vcc ±12V;Insert Loss 1.8dB;Solder Pin
61	MT3486H3P3N-S3	34		M1202	SPST Switch w/Driver NINV;Freq 8-18GHz;Vcc ±15V;Insert Loss 1.8dB;Solder Pin
62	MT3486H3P3N-S9	34		M1202	SPST Switch w/Driver NINV;Freq 8-18GHz;Vcc 5,-15V;Insert Loss 1.8dB;Solder Pin
63	MT3486H4P1I-S1	34		M1202	SPST Switch w/Driver INV;Freq 12.4-18GHz;Vcc 5,-12V;Insert Loss 1.8dB;SMA Jack
64	MT3486H4P1I-S2	34		M1202	SPST Switch w/Driver INV;Freq 12.4-18GHz;Vcc ±12V;Insert Loss 1.8dB;SMA Jack
65	MT3486H4P1I-S3	34		M1202	SPST Switch w/Driver INV;Freq 12.4-18GHz;Vcc ±15V;Insert Loss 1.8dB;SMA Jack
66	MT3486H4P1I-S9	34		M1202	SPST Switch w/Driver INV;Freq 12.4-18GHz;Vcc 5,-15V;Insert Loss 1.8dB;SMA Jack
67	MT3486H4P1N-S1	34		M1202	SPST Switch w/Driver NINV;Freq 12.4-18GHz;Vcc 5,-12V;Insert Loss 1.8dB;SMA Jack
68	MT3486H4P1N-S2	34		M1202	SPST Switch w/Driver NINV;Freq 12.4-18GHz;Vcc ±12V;Insert Loss 1.8dB;SMA Jack
69	MT3486H4P1N-S3	34		M1202	SPST Switch w/Driver NINV;Freq 12.4-18GHz;Vcc ±15V;Insert Loss 1.8dB;SMA Jack
70	MT3486H4P1N-S9	34		M1202	SPST Switch w/Driver NINV;Freq 12.4-18GHz;Vcc 5,-15V;Insert Loss 1.8dB;SMA Jack
71	MT3486H4P2I-S1	34		M1202	SPST Switch w/Driver iNV;Freq 12.4-18GHz;Vcc 5,-12V;Insert Loss 1.8dB;SMC Jack
72	MT3486H4P2I-S2	34		M1202	SPST Switch w/Driver INV;Freq 12.4-18GHz;Vcc ±12V;Insert Loss 1.8dB;SMC Jack
73	MT3486H4P2I-S3	34		M1202	SPST Switch w/Driver INV;Freq 12.4-18GHz;Vcc ±15V;Insert Loss 1.8dB;SMC Jack
74	MT3486H4P2I-S9	34		M1202	SPST Switch w/Driver INV;Freq 12.4-18GHz;Vcc 5,-15V;Insert Loss 1.8dB;SMC Jack
75	MT3486H4P2N-S1	34		M1202	SPST Switch w/Driver NINV;Freq 12.4-18GHz;Vcc 5,-12V;Insert Loss 1.4dB;SMC Jack
76	MT3486H4P2N-S2	34		M1202	SPST Switch w/Driver NINV;Freq 12.4-18GHz;Vcc ±12V;Insert Loss 1.8dB;SMC Jack
77	MT3486H4P2N-S3	34		M1202	SPST Switch w/Driver NINV;Freq 12.4-18GHz;Vcc ±15V;Insert Loss 1.8dB; SMC Jack
78	MT3486H4P2N-S9	34		M1202	SPST Switch w/Driver NINV;Freq 12.4-18GHz;Vcc 5,-15V;Insert Loss 1.8dB;SMC Jack
79	MT3486H4P3I-S1	34		M1202	SPST Switch w/Driver INV;Freq 12.4-18GHz;Vcc 5,-12V;Insert Loss 1.8dB;Solder Pin
80	MT3486H4P3I-S2	34		M1202	SPST Switch w/Driver INV;Freq 12-4-18GHz;Vcc ±12V;Insert Loss 1.8dB;Solder Pin
81	MT3486H4P3I-S3	34		M1202	SPST Switch w/Driver INV;Freq 12.4-18GHz;Vcc ±15V;Insert Loss 1.8dB;Solder Pin
82	MT3486H4P3I-S9	34		M1202	SPST Switch w/Driver INV;Freq 12.4-18GHz;Vcc 5,-15V;Insert Loss 1.8dB;Solder Pin
83	MT3486H4P3N-S1	34		M1202	SPST Switch w/Driver NINV;Freq 12.4-18GHz;Vcc 5,-12V;Insert Loss 1.8dB;Solder Pin
84	MT3486H4P3N-S2	34		M1202	SPST Switch w/Driver NINV;Freq 12.4-18GHz;Vcc ±12V;Insert Loss 1.8dB;Solder Pin
85	MT3486H4P3N-S3	34		M1202	SPST Switch w/Driver NINV;Freq 12.4-18GHz;Vcc ±15V;Insert Loss 1.8dB;Solder Pin
86	MT3486H4P3N-S9	34		M1202	SPST Switch w/Driver NINV;Freq 12.4-18GHz;Vcc 5,-15V;Insert Loss 1.8dB;Solder Pin
87	MT3486H-P1I-S1	34		M1202	SPST Switch w/Driver INV;Freq 2-18GHz;Vcc 5,-12V;Insert Loss 2.0dB;SMA Jack
88	MT3486H-P1I-S2	34		M1202	SPST Switch w/Driver INV;Freq 2-18GHz;Vcc ±12V;Insert Loss 2.0dB;SMA Jack
89	MT3486H-P1I-S3	34		M1202	SPST Switch w/Driver INV;Freq 2-18GHz;Vcc ±15V;Insert Loss 2.0dB;SMA Jack
90	MT3486H-P1I-S9	34		M1202	SPST Switch w/Driver INV;Freq 2-18GHz;Vcc 5-15V;Insert Loss 2.0dB;SMA Jack
91	MT3486H-P1N-S1	34		M1202	SPST Switch w/Driver NINV;Freq 2-18GHz;Vcc 5,-12V;Insert Loss 2.0dB;SMA Jack
92	MT3486H-P1N-S2	34		M1202	SPST Switch w/Driver NINV;Freq 2-18GHz;Vcc ±12V;Insert Loss 2.0dB;SMA Jack
93	MT3486H-P1N-S3	34		M1202	SPST Switch w/Driver NINV;Freq 2-18GHz;Vcc ±15V;Insert Loss 2.0dB;SMA Jack
94	MT3486H-P1N-S9	34		M1202	SPST Switch w/Driver NINV;Freq 2-18GHz;Vcc 5,-15V;Insert Loss 2.0dB;SMA Jack
95	MT3486H-P2I-S1	34		M1202	SPST Switch w/Driver INV;Freq 2-18GHz;Vcc 5,-12V;Insert Loss 2.0dB;SMC Jack
96	MT3486H-P2I-S2	34		M1202	SPST Switch w/Driver INV;Freq 2-18GHz;Vcc ±12V;Insert Loss 2.0dB;SMC Jack
97	MT3486H-P2I-S3	34		M1202	SPST Switch w/Driver INV;Freq 2-18GHz;Vcc ±15V;Insert Loss 2.0dB;SMC Jack
98	MT3486H-P2I-S9	34		M1202	SPST Switch w/Driver INV;Freq 2-18GHz;Vcc 5,-15V;Insert Loss 2.0dB;SMC Jack
99	MT3486H-P2N-S1	34		M1202	SPST Switch w/Driver NINV;Freq 2-18GHz;Vcc 5,-12V;Insert Loss 2.0dB;SMC Jack
100	MT3486H-P2N-S2	34		M1202	SPST Switch w/Driver NINV;Freq 2-18GHz;Vcc ±12V;Insert Loss 2.0dB;SMC Jack
101	MT3486H-P2N-S3	34		M1202	SPST Switch w/Driver NINV;Freq 2-18GHz;Vcc ±15V;Insert Loss 2.0dB;SMC Jack
102	MT3486H-P2N-S9	34		M1202	SPST Switch w/Driver NINV;Freq 2-18GHz;Vcc 5,-15V;Insert Loss 2.0dB;SMC Jack
103	MT3486H-P3I-S1	34		M1202	SPST Switch w/Driver INV;Freq 2-18GHz;Vcc 5,-12V;Insert Loss 2.0dB;Solder Pin
104	MT3486H-P3I-S2	34		M1202	SPST Switch w/Driver INV;Freq 2-18GHz;Vcc ±12V;Insert Loss 2.0dB;Solder Pin
105	MT3486H-P3I-S3	34		M1202	SPST Switch w/Driver INV;Freq 2-18GHz;Vcc ±15V;Insert Loss 2.0dB;Solder Pin
106	MT3486H-P3I-S9	34		M1202	SPST Switch w/Driver INV;Freq 2-18GHz;Vcc 5,-15V;Insert Loss 2.0dB;Solder Pin
107	MT3486H-P3N-S1	34		M1202	SPST Switch w/Driver NINV;Freq 2-18GHz;Vcc 5,-12V;Insert Loss 2.0dB;Solder Pin
108	MT3486H-P3N-S2	34		M1202	SPST Switch w/Driver NINV;Freq 2-18 GHz;Vcc ±12V;Insert Loss 2.0dB;Solder Pin
109	MT3486H-P3N-S3	34		M1202	SPST Switch w/Driver NINV;Freq 2-18GHz;Vcc ±15V;Insert Loss 2.0dB;Solder Pin
110	MT3486H-P3N-S9	34		M1202	SPST Switch w/Driver NINV;Freq 2-18GHz;Vcc 5,-15V;Insert Loss 2.0dB;Solder Pin

8. MISCELLANEOUS DEVICES

IN ORDER OF (1) USE and (2) TYPE No.

LINE No.	[2] TYPE No.	[1] USE	DESCRIPTION MAT.	DESCRIPTION DWG. No.	TECHNICAL DATA
1	MT3497A-P1I	34		M1203	SPST Switch w/TTL Driver INV;Freq .5-4GHz;Vcc 5V/50mA;Insert Loss .70dB;SMA Jack
2	MT3497A-P1N	34		M1203	SPST Switch w/TTL Driver NINV;Freq .5-4GHz;Vcc 5V/50mA;Insert Loss .70dB;SMA Jack
3	MT3497A-P2I	34		M1203	SPST Switch w/TTL Driver INV;Freq .5-4GHz;Vcc 5V/50mA;Insert Loss .70dB;SMC Jack
4	MT3497A-P2N	34		M1203	SPST Switch w/TTL Driver NINV;Freq .5-4GHz;Vcc 5V/50mA;Insert Loss .70dB;SMC Jack
5	MT3497A-P3I	34		M1203	SPST Switch w/TTL Driver INV;Freq.5-2,GHz;Vcc 5v/50mA;Insert Loss .70dB;Solder Pin
6	MT3497A-P3N	34		M1203	SPST Switch w/TTL Driver NINV;Freq .5-4GHz;Vcc 5V/50mA;Insert Loss .70dB;Solder Pin
7	MT3497D1P1I	34		M1203	SPST Switch w/TTL Driver INV;Freq .5-12.4GHz;Vcc 5V/50mA;Insert Loss 1.4dB;SMA Jack
8	MT3497D1P1N	34		M1203	SPST Switch w/TTL Driver NINV;Freq .5-12.4GHz;Vcc 5V/50mA;Insert Loss 1.4dB;SMA Jack
9	MT3497D1P2I	34		M1203	SPST Switch w/TTL Driver INV;Freq .5-12.4GHz;Vcc 5V/50mA;Insert Loss 1.4dB;SMC Jack
10	MT3497D1P2N	34		M1203	SPST Switch w/TTL Driver NINV;Freq .5-12.4GHz;Vcc 5V/50mA;Insert Loss 1.4dB;SMC Jack
11	MT3497D1P3I	34		M1203	SPST Switch w/TTL Driver INV;Freq.5-12.4GHz;Vcc 5V/50mA;Insert Loss 1.4dB;Solder Pin
12	MT3497D1P3N	34		M1203	SPST Switch w/TTL Driver NINV;Freq .5-12.4GHz;Vcc 5V/50mA;Insert Loss 1.4dB;Solder Pin
13	MT3497E-P1I	34		M1203	SPST Switch w/TTL Driver INV;Freq 4-12.4GHz;Vcc 5V/50mA;Insert Loss 1.4dB;SMA Jack
14	MT3497E-P1N	34		M1203	SPST Switch w/TTL Driver NINV;Freq 4-12.4GHz;Vcc 5V/50mA;Insert Loss 1.4dB;SMA Jack
15	MT3497E-P2I	34		M1203	SPST Switch w/TTL Driver INV;Freq 4-12.4GHz;Vcc 5V/50mA;Insert Loss 1.4dB;SMC Jack
16	MT3497E-P2N	34		M1203	SPST Switch w/TTL Driver NINV;Freq 4-12.4GHz;Vcc 5V/50mA;Insert Loss 1.4dB;SMC Jack
17	MT3497E-P3I	34		M1203	SPST Switch w/TTL Driver INV;Freq 4-12.4GHz;Vcc 5v/50mA;Insert Loss 1.4dB;Solder Pin
18	MT3497E-P3N	34		M1203	SPST Switch w/TTL Driver NINV;Freq 4-12.4GHz;Vcc 5V/50mA;Insert Loss 1.4dB;Solder Pin
19	MT3497H3P1I	34		M1203	SPST Switch w/TTL Driver INV;Freq 8-18GHz;Vcc 5V/50mA;Insert Loss 1.6dB;SMA Jack
20	MT3497H3P1N	34		M1203	SPST Switch w/TTL Driver NINV;Freq 8-18GHz;Vcc 5V/50mA;Insert Loss 1.6dB;SMA Jack
21	MT3497H3P2I	34		M1203	SPST Switch w/TTL Driver INV;Freq 8-18GHz;Vcc 5V/50mA;Insert Loss 1.6dB;SMC Jack
22	MT3497H3P2N	34		M1203	SPST Switch w/TTL Driver NINV;Freq 8-18GHz;Vcc 5V/50mA;Insert Loss 1.6dB;SMC Jack
23	MT3497H3P3I	34		M1203	SPST Switch w/TTL Driver INV;Freq 8-18GHz;Vcc 5V/50mA;Insert Loss 1.6dB;Solder Pin
24	MT3497H3P3N	34		M1203	SPST Switch w/TTL Driver NINV;Freq 8-18GHz;Vcc 5V/50mA;Insert Loss 1.6dB;Solder Pin
25	MT3497H-P1I	34		M1203	SPST Switch w/TTL Driver INV;Freq 2-18GHz;Vcc 5V/50mA;Insert Loss 1.8dB;SMA Jack
26	MT3497H-P1N	34		M1203	SPST Switch w/TTL Driver NINV;Freq 2-18GHz;Vcc 5V/50mA;Insert Loss 1.8dB;SMA Jack
27	MT3497H-P2I	34		M1203	SPST Switch w/TTL Driver INV;Freq 2-18GHz;Vcc 5V/50mA;Insert Loss 1.8dB;SMC Jack
28	MT3497H-P2N	34		M1203	SPST Switch w/TTL Driver NINV;Freq 2-18GHz;Vcc 5V/50mA;Insert Loss 1.8dB;SMC Jack
29	MT3497H-P3I	34		M1203	SPST Switch w/TTL Driver INV;Freq 2-18GHz;Vcc 5V/50mA;Insert Loss 1.8dB;Solder Pin
30	MT3497H-P3N	34		M1203	SPST Switch w/TTL Driver NINV;Freq 2-18GHz;Vcc 5V/50mA;Insert Loss 1.8dB;Solder Pin
31	MT3498A-P1I	34		M1203	SPST Switch w/TTL Driver INV;Freq .5-4GHz;Vcc 5V/50mA;Insert Loss .90dB;SMA Jack
32	MT3498A-P1N	34		M1203	SPST Switch w/TTL Driver NINV;Freq .5-4GHz;Vcc 5V/50mA;Insert Loss .90dB;SMA Jack
33	MT3498A-P2I	34		M1203	SPST Switch w/TTL Driver INV;Freq .5-4GHz;Vcc 5V/50mA;Insert Loss .90dB;SMC Jack
34	MT3498A-P2N	34		M1203	SPST Switch w/TTL Driver NINV;Freq .5-4GHz;Vcc 5V/50mA;Insert Loss .90dB;SMC Jack
35	MT3498A-P3I	34		M1203	SPST Switch w/TTL Driver INV;Freq.5-2,GHz;Vcc 5v/50mA;Insert Loss .90dB;Solder Pin
36	MT3498A-P3N	34		M1203	SPST Switch w/TTL Driver NINV;Freq .5-4GHz;Vcc 5V/50mA;Insert Loss .90dB;Solder Pin
37	MT3498D1P1I	34		M1203	SPST Switch w/TTL Driver INV;Freq .5-12.4GHz;Vcc 5V/50mA;Insert Loss 1.7dB;SMA Jack
38	MT3498D1P1N	34		M1203	SPST Switch w/TTL Driver NINV;Freq .5-12.4GHz;Vcc 5V/50mA;Insert Loss 1.7dB;SMA Jack
39	MT3498D1P2I	34		M1203	SPST Switch w/TTL Driver INV;Freq .5-12.4GHz;Vcc 5V/50mA;Insert Loss 1.7dB;SMC Jack
40	MT3498D1P2N	34		M1203	SPST Switch w/TTL Driver NINV;Freq .5-12.4GHz;Vcc 5V/50mA;Insert Loss 1.7dB;SMC Jack
41	MT3498D1P3I	34		M1203	SPST Switch w/TTL Driver INV;Freq.5-12.4GHz;Vcc 5V/50mA;Insert Loss 1.7dB;Solder Pin
42	MT3498D1P3N	34		M1203	SPST Switch w/TTL Driver NINV;Freq .5-12.4GHz;Vcc 5V/50mA;Insert Loss 1.7dB;Solder Pin
43	MT3498E-P1I	34		M1203	SPST Switch w/TTL Driver INV;Freq 4-12.4GHz;Vcc 5V/50mA;Insert Loss 1.7dB;SMA Jack
44	MT3498E-P1N	34		M1203	SPST Switch w/TTL Driver NINV;Freq 4-12.4GHz;Vcc 5V/50mA;Insert Loss 1.7dB;SMA Jack
45	MT3498E-P2I	34		M1203	SPST Switch w/TTL Driver INV;Freq 4-12.4GHz;Vcc 5V/50mA;Insert Loss 1.7dB;SMC Jack
46	MT3498E-P2N	34		M1203	SPST Switch w/TTL Driver NINV;Freq 4-12.4GHz;Vcc 5V/50mA;Insert Loss 1.7dB;SMC Jack
47▼	MT3498E-P3I	34		M1203	SPST Switch w/TTL Driver INV;Freq 4-12.4GHz;Vcc 5V/50ma;Insert Loss 1.7dB;Solder Pin
48	MT3498E-P3N	34		M1203	SPST Switch w/TTL Driver NINV;Freq 4-12.4GHz;Vcc 5V/50mA;Insert Loss 1.7dB;Solder Pin
49	MT3498H3P1I	34		M1203	SPST Switch w/TTL Driver INV;Freq 8-18GHz;Vcc 5V/50mA;Insert Loss 2.0dB;SMA Jack
50	MT3498H3P1N	34		M1203	SPST Switch w/TTL Driver NINV;Freq 8-18GHz;Vcc 5V/50mA;Insert Loss 2.0dB;SMA Jack
51	MT3498H3P2I	34		M1203	SPST Switch w/TTL Driver INV;Freq 8-18GHz;Vcc 5V/50mA;Insert Loss 2.0dB;SMC Jack
52	MT3498H3P2N	34		M1203	SPST Switch w/TTL Driver NINV;Freq 8-18GHz;Vcc 5V/50mA;Insert Loss 2.0dB;SMC Jack
53	MT3498H3P3I	34		M1203	SPST Switch w/TTL Driver INV;Freq 8-18GHz;Vcc 5V/50mA;Insert Loss 2.0dB;Solder Pin
54	MT3498H3P3N	34		M1203	SPST Switch w/TTL Driver NINV;Freq 8-18GHz;Vcc 5V/50mA;Insert Loss 2.0dB;Solder Pin
55	MT3498H-P1I	34		M1203	SPST Switch w/TTL Driver INV;Freq 2-18GHz;Vcc 5V/50mA;Insert Loss 2.2dB;SMA Jack
56	MT3498H-P1N	34		M1203	SPST Switch w/TTL Driver NINV;Freq 2-18GHz;Vcc 5V/50mA;Insert Loss 2.2dB;SMA Jack
57	MT3498H-P2I	34		M1203	SPST Switch w/TTL Driver INV;Freq 2-18,GHz;Vcc 5v/50mA;Insert Loss 2.2dB;SMC jack
58	MT3498H-P2N	34		M1203	SPST Switch w/TTL Driver NINV;Freq 2-18GHz;Vcc 5V/50mA;Insert Loss 2.2dB;SMC Jack
59	MT3498H-P3I	34		M1203	SPST Switch w/TTL Driver INV;Freq 2-18GHz;Vcc 5V/50mA;Insert Loss 2.2db;Solder Pin
60	MT3498H-P3N	34		M1203	SPST Switch w/TTL Driver NINV;Freq 2-18GHz;Vcc 5V/50mA;Insert Loss 2.2dB;Solder Pin
61	MT3580A4P1C1S1	34		M1208	SPDT Switch w/Driver;Vcc 5/-12V;Freq 2-4GHz;Insert Loss .80dB;SMC Jack
62	MT3580A4P1C1S2	34		M1208	SPDT Switch w/Driver;Vcc ±12V;Freq 2-4GHz;Insert Loss .80dB;SMA Jack
63	MT3580A4P1C1S3	34		M1208	SPDT Switch w/Driver;Vcc ±15V;Freq 2-4GHz;Insert Loss .80dB;SMA Jack
64	MT3580A4P1C2S1	34		M1206	SPDT Switch w/Driver;Vcc 5/-12V;Freq 2-4GHz;Insert Loss .80dB;SMA Jack
65	MT3580A4P1C2S2	34		M1206	SPDT Switch w/Driver;Vcc ±12V;Freq 2-4GHz;Insert Loss .80dB;SMA Jack
66	MT3580A4P1C2S3	34		M1206	SPDT Switch w/Driver;Vcc ±15V;Freq 2-4GHz;Insert Loss .80dB;SMA Jack
67	MT3580A4P2C1S1	34		M1208	SPDT Switch w/Driver;Vcc 5/-12V;Freq 2-4GHz;Insert Loss .80dB;SMC Jack
68	MT3580A4P2C1S2	34		M1208	SPDT Switch w/Driver;Vcc ±12V;Freq 2-4GHz;Insert Loss .80dB;SMC Jack
69	MT3580A4P2C1S3	34		M1208	SPDT Switch w/Driver;Vcc ±15V;Freq 2-4GHz;Insert Loss .80dB;SMC Jack
70	MT3580A4P2C2S1	34		M1206	SPDT Switch w/Driver;Vcc 5/-12;Freq 2-4GHz;Insert Loss .80dB;SMC Jack
71	MT3580A4P2C2S2	34		M1206	SPDT Switch w/Driver;Vcc ±12V;Freq 2-4GHz;Insert Loss .80dB;SMC Jack
72	MT3580A4P2C2S3	34		M1206	SPDT Switch w/Driver;Vcc ±15V;Freq 2-4GHz;Insert Loss .80dB;SMC Jack
73	MT3580A4P3C1S1	34		M1208	SPDT Switch w/Driver;Vcc 5/-12V;Freq 2-4GHz;Insert Loss .80dB;Solder Pin
74	MT3580A4P3C1S2	34		M1208	SPDT Switch w/Driver;Vcc ±12V;Freq 2-4GHZ;Insert Loss .80dB;Solder Pin
75	MT3580A4P3C1S3	34		M1208	SPDT Switch w/Driver;Vcc ±15V;Freq 2-4GHz;Insert Loss .80dB;Solder Pin
76	MT3580A4P3C2S1	34		M1206	SPDT Switch w/Driver;Vcc 5/-12V;Freq 2-4GHz;Insert Loss .80dB;Solder Pin
77	MT3580A4P3C2S2	34		M1206	SPDT Switch w/Driver;Vcc ±12V;Freq 2-4GHz;Insert Loss .80dB;Solder Pin
78	MT3580A4P3C2S3	34		M1206	SPDT Switch w/Driver;Vcc ±15V;Freq 2-4GHz;Insert Loss .80dB;Solder Pin
79	MT3580A-P1C1S1	34		M1208	SPDT Switch w/Driver;Vcc 5/-12V;Freq .5-4GHz;Insert Loss .80dB;SMC Jack
80	MT3580A-P1C1S2	34		M1208	SPDT Switch w/Driver;Vcc ±12V;Freq .5-4GHz;Insert Loss .80dB;SMA Jack
81	MT3580A-P1C1S3	34		M1208	SPDT Switch w/Driver;Vcc ±15V;Freq .5-4GHz;Insert Loss .80dB;SMA Jack
82	MT3580A-P1C2S1	34		M1206	SPDT Switch w/Driver;Vcc 5/-12V;Freq .5-4GHz;Insert Loss .80dB;SMA Jack
83	MT3580A-P1C2S2	34		M1206	SPDT Switch w/Driver;Vcc ±12V;Freq .5-4GHz;Insert Loss .80dB;SMA Jack
84	MT3580A-P1C2S3	34		M1206	SPDT Switch w/Driver;Vcc ±15V;Freq .5-4GHz;Insert Loss .80dB;SMA Jack
85	MT3580A-P2C1S1	34		M1208	SPDT Switch w/Driver;Vcc 5/-12V;Freq .5-4GHz;Insert Loss .80dB;SMC Jack
86	MT3580A-P2C1S2	34		M1208	SPDT Switch w/Driver;Vcc 5/±12V;Freq .5-4GHz;Insert Loss .80dB;SMC Jack
87	MT3580A-P2C1S3	34		M1208	SPDT Switch w/Driver;Vcc ±15V;Freq .5-4GHz;Insert Loss .80dB;SMC Jack
88	MT3580A-P2C2S1	34		M1206	SPDT Switch w/Driver;Vcc 5/-12;Freq .5-4GHz;Insert Loss .80dB;SMC Jack
89	MT3580A-P2C2S2	34		M1206	SPDT Switch w/Driver;Vcc ±12V;Freq .5-4GHz;Insert Loss .80dB;SMC Jack
90	MT3580A-P2C2S3	34		M1206	SPDT Switch w/Driver;Vcc ±15V;Freq .5-4GHz;Insert Loss .80dB;SMC Jack
91	MT3580A-P3C1S1	34		M1208	SPDT Switch w/Driver;Vcc 5/-12V;Freq .5-4GHz;Insert Loss .80dB;Solder Pin
92	MT3580A-P3C1S2	34		M1208	SPDT Switch w/Driver;Vcc ±12V;Freq .5-4GHz;Insert Loss .80dB;Solder Pin
93	MT3580A-P3C1S3	34		M1208	SPDT Switch w/Driver;Vcc ±15V;Freq .5-4GHz;Insert Loss .80dB;Solder Pin
94	MT3580A-P3C2S1	34		M1206	SPDT Switch w/Driver;Vcc 5/-12V;Freq .5-4GHz;Insert Loss .80dB;Solder Pin
95	MT3580A-P3C2S2	34		M1206	SPDT Switch w/Driver;Vcc ±12V;Freq .5-4GHz;Insert Loss .80dB;Solder Pin
96	MT3580A-P3C2S3	34		M1206	SPDT Switch w/Driver;Vcc ±15V;Freq .5-4GHz;Insert Loss .80dB;Solder Pin
97	MT3580B2P1C1S1	34		M1208	SPDT Switch w/Driver;Vcc 5/-12V;Freq 2-8GHz;Insert Loss 1.5dB;SMC Jack
98	MT3580B2P1C1S2	34		M1208	SPDT Switch w/Driver;Vcc ±12V;Freq 2-8GHz;Insert Loss 1.5dB;SMA Jack
99	MT3580B2P1C1S3	34		M1208	SPDT Switch w/Driver;Vcc ±15V;Freq 2-8GHz;Insert Loss 1.5dB;SMA Jack
100	MT3580B2P1C2S1	34		M1206	SPDT Switch w/Driver;Vcc 5/-12V;Freq 2-8GHz;Insert Loss 1.5dB;SMA Jack
101	MT3580B2P1C2S2	34		M1206	SPDT Switch w/Driver;Vcc ±12V;Freq 2-8GHz;Insert Loss 1.5dB;SMA Jack
102	MT3580B2P1C2S3	34		M1206	SPDT Switch w/Driver;Vcc ±15V;Freq 2-8GHz;Insert Loss 1.5dB;SMA Jack
103	MT3580B2P2C1S1	34		M1208	SPDT Switch w/Driver;Vcc 5/-12V;Freq 2-8GHz;Insert Loss 1.5dB;SMC Jack
104	MT3580B2P2C1S2	34		M1208	SPDT Switch w/Driver;Vcc ±12V;Freq 2-8GHz;Insert Loss 1.5dB;SMC Jack
105	MT3580B2P2C1S3	34		M1208	SPDT Switch w/Driver;Vcc ±15V;Freq 2-8GHz;Insert Loss 1.5dB;SMC Jack
106	MT3580B2P2C2S1	34		M1206	SPDT Switch w/Driver;Vcc 5/-12;Freq 2-8GHz;Insert Loss 1.5dB;SMC Jack
107	MT3580B2P2C2S2	34		M1206	SPDT Switch w/Driver;Vcc ±12V;Freq 2-8GHz;Insert Loss 1.5dB;SMC Jack
108	MT3580B2P2C2S3	34		M1206	SPDT Switch w/Driver;Vcc ±15V;Freq 2-8GHz;Insert Loss 1.5dB;SMC Jack
109	MT3580B2P3C1S1	34		M1208	SPDT Switch w/Driver;Vcc 5/-12V;Freq 2-8GHz;Insert Loss 1.5dB;Solder Pin
110	MT3580B2P3C1S2	34		M1208	SPDT Switch w/Driver;Vcc ±12V;Freq 2-8GHz;Insert Loss 1.5dB;Solder Pin

8. MISCELLANEOUS DEVICES

IN ORDER OF (1) USE and (2) TYPE No.

LINE No.	[2] TYPE No.	[1] USE	DESCRIPTION MAT.	DESCRIPTION DWG. No.	TECHNICAL DATA
1	MT3580B2P3C1S3	34		M1208	SPDT Switch w/Driver;Vcc ±15V;Freq 2-8GHz;Insert Loss 1.5dB;Solder Pin
2	MT3580B2P3C2S1	34		M1206	SPDT Switch w/Driver;Vcc 5/-12V;Freq 2-8GHz;Insert Loss 1.5dB;Solder Pin
3	MT3580B2P3C2S2	34		M1206	SPDT Switch w/Driver;Vcc ±12V;Freq 2-8GHz;Insert Loss 1.5dB;Solder Pin
4	MT3580B2P3C2S3	34		M1206	SPDT Switch w/Driver;Vcc ±15V;Freq 2-8GHz;Insert Loss 1.5dB;Solder Pin
5	MT3580B-P1C1S1	34		M1208	SPDT Switch w/Driver;Vcc 5/-12V;Freq 4-8GHz;Insert Loss 1.4dB;SMC Jack
6	MT3580B-P1C1S2	34		M1208	SPDT Switch w/Driver;Vcc ±12V;Freq 4-8GHz;Insert Loss 1.4dB;SMA Jack
7	MT3580B-P1C1S3	34		M1208	SPDT Switch w/Driver;Vcc ±15V;Freq 4-8GHz;Insert Loss 1.4dB;SMA Jack
8	MT3580B-P1C2S1	34		M1206	SPDT Switch w/Driver;Vcc 5/-12V;Freq 4-8GHz;Insert Loss 1.4dB;SMA Jack
9	MT3580B-P1C2S2	34		M1206	SPDT Switch w/Driver;Vcc ±12V;Freq 4-8GHz;Insert Loss 1.4dB;SMA Jack
10	MT3580B-P1C2S3	34		M1206	SPDT Switch w/Driver;Vcc ±15V;Freq 4-8GHz;Insert Loss 1.4dB;SMA Jack
11	MT3580B-P2C1S1	34		M1208	SPDT Switch w/Driver;Vcc 5/-12V;Freq 4-8GHz;Insert Loss 1.4dB;SMC Jack
12	MT3580B-P2C1S2	34		M1208	SPDT Switch w/Driver;Vcc ±12V;Freq 4-8GHz;Insert Loss 1.4dB;SMC Jack
13	MT3580B-P2C1S3	34		M1208	SPDT Switch w/Driver;Vcc ±15V;Freq 4-8GHz;Insert Loss 1.4dB;SMC Jack
14	MT3580B-P2C2S1	34		M1206	SPDT Switch w/Driver;Vcc 5/-12V;Freq 4-8GHz;Insert Loss 1.4dB;SMC Jack
15	MT3580B-P2C2S2	34		M1206	SPDT Switch w/Driver;Vcc ±12V;Freq 4-8GHz;Insert Loss 1.4dB;SMC Jack
16	MT3580B-P2C2S3	34		M1206	SPDT Switch w/Driver;Vcc ±15V;Freq 4-8GHz;Insert Loss 1.4dB;SMC Jack
17	MT3580B-P3C1S1	34		M1208	SPDT Switch w/Driver;Vcc 5/-12V;Freq 4-8GHz;Insert Loss 1.4dB;Solder Pin
18	MT3580B-P3C1S2	34		M1208	SPDT Switch w/Driver;Vcc ±12V;Freq 4-8GHz;Insert Loss 1.4dB;Solder Pin
19	MT3580B-P3C1S3	34		M1208	SPDT Switch w/Driver;Vcc ±15V;Freq 4-8GHz;Insert Loss 1.4dB;Solder Pin
20	MT3580B-P3C2S1	34		M1206	SPDT Switch w/Driver;Vcc 5/-12V;Freq 4-8GHz;Insert Loss 1.4dB;Solder Pin
21	MT3580B-P3C2S2	34		M1206	SPDT Switch w/Driver;Vcc ±12V;Freq 4-8GHz;Insert Loss 1.4dB;Solder Pin
22	MT3580B-P3C2S3	34		M1206	SPDT Switch w/Driver;Vcc ±15V;Freq 4-8GHz;Insert Loss 1.4dB;Solder Pin
23	MT3580C-P1C1S1	34		M1208	SPDT Switch w/Driver;Vcc 5/-12V;Freq 8-12.4GHz;Insert Loss 1.7dB;SMA Jack
24	MT3580C-P1C1S2	34		M1208	SPDT Switch w/Driver;Vcc ±12V;Freq 8-12.4GHz;Insert Loss 1.7dB;SMA Jack
25	MT3580C-P1C1S3	34		M1208	SPDT Switch w/Driver;Vcc ±15V;Freq 8-12.4GHz;Insert Loss 1.7dB;SMA Jack
26	MT3580C-P1C2S1	34		M1206	SPDT Switch w/Driver;Vcc 5/-12V;Freq 8-12.4GHz;Insert Loss 1.7dB;SMA Jack
27	MT3580C-P1C2S2	34		M1206	SPDT Switch w/Driver;Vcc ±12V;Freq 8-12.4GHz;Insert Loss 1.7dB;SMA Jack
28	MT3580C-P1C2S3	34		M1206	SPDT Switch w/Driver;Vcc ±15V;Freq 8-12.4GHz;Insert Loss 1.7dB;SMA Jack
29	MT3580C-P2C1S1	34		M1208	SPDT Switch w/Driver;Vcc 5/-12V;Freq 8-12.4GHz;Insert Loss 1.7dB;SMC Jack
30	MT3580C-P2C1S2	34		M1208	SPDT Switch w/Driver;Vcc ±12V;Freq 8-12.4GHz;Insert Loss 1.7dB;SMC Jack
31	MT3580C-P2C1S3	34		M1208	SPDT Switch w/Driver;Vcc ±15V;Freq 8-12.4GHz;Insert Loss 1.7dB;SMC Jack
32	MT3580C-P2C2S1	34		M1206	SPDT Switch w/Driver;Vcc 5/-12V;Freq 8-12.4GHz;Insert Loss 1.7dB;SMC Jack
33	MT3580C-P2C2S2	34		M1206	SPDT Switch w/Driver;Vcc ±12V;Freq 8-12.4GHz;Insert Loss 1.7dB;SMC Jack
34	MT3580C-P2C2S3	34		M1206	SPDT Switch w/Driver;Vcc ±15V;Freq 8-12.4GHz;Insert Loss 1.7dB;SMC Jack
35	MT3580C-P3C1S1	34		M1208	SPDT Switch w/Driver;Vcc 5/-12V;Freq 8-12.4GHz;Insert Loss 1.7dB;Solder Pin
36	MT3580C-P3C1S2	34		M1208	SPDT Switch w/Driver;Vcc ±12V;Freq 8-12.4GHz;Insert Loss 1.7dB;Solder Pin
37	MT3580C-P3C1S3	34		M1208	SPDT Switch w/Driver;Vcc ±15V;Freq 8-12.4GHz;Insert Loss 1.7dB;Solder Pin
38	MT3580C-P3C2S1	34		M1206	SPDT Switch w/Driver;Vcc 5/-12V;Freq 8-12.4GHz;Insert Loss 1.7dB;Solder Pin
39	MT3580C-P3C2S2	34		M1206	SPDT Switch w/Driver;Vcc ±12V;Freq 8-12.4GHz;Insert Loss 1.7dB;Solder Pin
40	MT3580C-P3C2S3	34		M1206	SPDT Switch w/Driver;Vcc ±15V;Freq 8-12.4GHz;Insert Loss 1.7dB;Solder Pin
41	MT3580D1P1C1S1	34		M1208	SPDT Switch w/Driver;Vcc 5/-12V;Freq .5-12.4GHz;Insert Loss 2.0dB;SMC Jack
42	MT3580D1P1C1S2	34		M1208	SPDT Switch w/Driver;Vcc ±12V;Freq .5-12.4GHz;Insert Loss 2.0dB;SMA Jack
43	MT3580D1P1C1S3	34		M1208	SPDT Switch w/Driver;Vcc ±15V;Freq .5-12.4GHz;Insert Loss 2.0dB;SMA Jack
44	MT3580D1P1C2S1	34		M1206	SPDT Switch w/Driver;Vcc 5/-12V;Freq .5-12.4GHz;Insert Loss 2.0dB;SMA Jack
45	MT3580D1P1C2S2	34		M1206	SPDT Switch w/Driver;Vcc ±12V;Freq .5-12.4GHz;Insert Loss 2.0dB;SMA Jack
46	MT3580D1P1C2S3	34		M1206	SPDT Switch w/Driver;Vcc ±15V;Freq .5-12.4GHz;Insert Loss 2.0dB;SMA Jack
47	MT3580D1P2C1S1	34		M1208	SPDT Switch w/Driver;Vcc 5/-12V;Freq .5-12.4GHz;Insert Loss 2.0dB;SMC Jack
48	MT3580D1P2C1S2	34		M1208	SPDT Switch w/Driver;Vcc 5/±12V;Freq .5-12.4GHz;Insert Loss 2.0dB;SMC Jack
49	MT3580D1P2C1S3	34		M1208	SPDT Switch w/Driver;Vcc ±15V;Freq .5-12.4GHz;Insert Loss 2.0dB;SMC Jack
50	MT3580D1P2C2S1	34		M1206	SPDT Switch w/Driver;Vcc 5/-12;Freq .5-12.4GHz;Insert Loss 2.0dB;SMC Jack
51	MT3580D1P2C2S2	34		M1206	SPDT Switch w/Driver;Vcc ±12V;Freq .5-12.4GHz;Insert Loss 2.0dB;SMC Jack
52	MT3580D1P2C2S3	34		M1206	SPDT Switch w/Driver;Vcc ±15V;Freq .5-12.4GHz;Insert Loss 2.0dB;SMC Jack
53	MT3580D1P3C1S1	34		M1208	SPDT Switch w/Driver;Vcc 5/-12V;Freq .5-12.4GHz;Insert Loss 2.0dB;Solder Pin
54	MT3580D1P3C1S2	34		M1208	SPDT Switch w/Driver;Vcc ±12V;Freq .5-12.4GHz;Insert Loss 2.0dB;Solder Pin
55	MT3580D1P3C1S3	34		M1208	SPDT Switch w/Driver;Vcc ±15V;Freq .5-12.4GHz;Insert Loss 2.0dB;Solder Pin
56	MT3580D1P3C2S1	34		M1206	SPDT Switch w/Driver;Vcc 5/-12V;Freq .5-12.4GHz;Insert Loss 2.0dB;Solder Pin
57	MT3580D1P3C2S2	34		M1206	SPDT Switch w/Driver;Vcc ±12V;Freq .5-12.4GHZ;Insert Loss 2.0dB Solder Pin
58	MT3580D1P3C2S3	34		M1206	SPDT Switch w/Driver;Vcc ±15V;Freq .5-12.4GHz;Insert Loss 2.0dB;Solder Pin
59	MT3580D-P1C1S1	34		M1208	SPDT Switch w/Driver;Vcc 5/-12V;Freq .5-8GHz;Insert Loss 1.5dB;SMC Jack
60	MT3580D-P1C1S2	34		M1208	SPDT Switch w/Driver;Vcc ±12V;Freq .5-8GHz;Insert Loss 1.5dB;SMA Jack
61	MT3580D-P1C1S3	34		M1208	SPDT Switch w/Driver;Vcc ±15V;Freq .5-8GHz;Insert Loss 1.5dB;SMA Jack
62	MT3580D-P1C2S1	34		M1206	SPDT Switch w/Driver;Vcc 5/-12V;Freq .5-8GHz;Insert Loss 1.5dB;SMA Jack
63	MT3580D-P1C2S2	34		M1206	SPDT Switch w/Driver;Vcc ±12V;Freq .5-8GHz;Insert Loss 1.5dB;SMA Jack
64	MT3580D-P1C2S3	34		M1206	SPDT Switch w/Driver;Vcc ±15V;Freq .5-8GHz;Insert Loss 1.5dB;SMA Jack
65	MT3580D-P2C1S1	34		M1208	SPDT Switch w/Driver;Vcc 5/-12V;Freq .5-8GHz;Insert Loss 1.5dB;SMC Jack
66	MT3580D-P2C1S2	34		M1208	SPDT Switch w/Driver;Vcc 5/±12V;Freq .5-8GHz;Insert Loss 1.5dB;SMC Jack
67	MT3580D-P2C1S3	34		M1208	SPDT Switch w/Driver;Vcc ±15V;Freq .5-8GHz;Insert Loss 1.5dB;SMC Jack
68	MT3580D-P2C2S1	34		M1206	SPDT Switch w/Driver;Vcc 5/-12;Freq .5-8GHz;Insert Loss 1.5dB;SMC Jack
69	MT3580D-P2C2S2	34		M1206	SPDT Switch w/Driver;Vcc ±12V;Freq .5-8GHz;Insert Loss 1.5dB;SMC Jack
70	MT3580D-P2C2S3	34		M1206	SPDT Switch w/Driver;Vcc ±15V;Freq .5-8GHz;Insert Loss 1.5dB;SMC Jack
71	MT3580D-P3C1S1	34		M1208	SPDT Switch w/Driver;Vcc 5/-12V;Freq .5-8GHz;Insert Loss 1.5dB;Solder Pin
72	MT3580D-P3C1S2	34		M1208	SPDT Switch w/Driver;Vcc ±12V;Freq .5-8GHz;Insert Loss 1.5dB;Solder Pin
73	MT3580D-P3C1S3	34		M1208	SPDT Switch w/Driver;Vcc ±15V;Freq .5-8GHz;Insert Loss 1.5dB;Solder Pin
74	MT3580D-P3C2S1	34		M1206	SPDT Switch w/Driver;Vcc 5/-12V;Freq .5-8GHz;Insert Loss 1.5dB;Solder Pin
75	MT3580D-P3C2S2	34		M1206	SPDT Switch w/Driver;Vcc ±12V;Freq .5-8GHz;Insert Loss 1.5dB;Solder Pin
76	MT3580D-P3C2S3	34		M1206	SPDT Switch w/Driver;Vcc ±15V;Freq .5-8GHz;Insert Loss 1.5dB;Solder Pin
77	MT3580E-P1C1S1	34		M1208	SPDT Switch w/Driver;Vcc 5/-12V;Freq 4-12.4GHz;Insert Loss 1.8dB;SMA Jack
78	MT3580E-P1C1S2	34		M1208	SPDT Switch w/Driver;Vcc ±12V;Freq 4-12.4GHz;Insert Loss 1.8dB;SMA Jack
79	MT3580E-P1C1S3	34		M1208	SPDT Switch w/Driver;Vcc ±15V;Freq 4-12.4GHz;Insert Loss 1.8dB;SMA Jack
80	MT3580E-P1C2S1	34		M1206	SPDT Switch w/Driver;Vcc 5/-12V;Freq 4-12.4GHz;Insert Loss 1.8dB;SMA Jack
81	MT3580E-P1C2S2	34		M1206	SPDT Switch w/Driver;Vcc ±12V;Freq 4-12.4GHz;Insert Loss 1.8dB;SMA Jack
82	MT3580E-P1C2S3	34		M1206	SPDT Switch w/Driver;Vcc ±15V;Freq 4-12.4GHz;Insert Loss 1.8dB;SMA Jack
83	MT3580E-P2C1S1	34		M1208	SPDT Switch w/Driver;Vcc 5/-12V;Freq 4-12.4GHz;Insert Loss 1.8dB;SMC Jack
84	MT3580E-P2C1S2	34		M1208	SPDT Switch w/Driver;Vcc ±12V;Freq 4-12.4GHz;Insert Loss 1.8dB;SMC Jack
85	MT3580E-P2C1S3	34		M1208	SPDT Switch w/Driver;Vcc ±15V;Freq 4-12.4GHz;Insert Loss 1.8dB;SMC Jack
86	MT3580E-P2C2S1	34		M1206	SPDT Switch w/Driver;Vcc 5/-12V;Freq 4-12.4GHz;Insert Loss 1.8dB;SMC Jack
87	MT3580E-P2C2S2	34		M1206	SPDT Switch w/Driver;Vcc ±12V;Freq 4-12.4GHz;Insert Loss 1.8dB;SMC Jack
88	MT3580E-P2C2S3	34		M1206	SPDT Switch w/Driver;Vcc ±15V;Freq 4-12.4GHz;Insert Loss 1.8dB;SMC Jack
89	MT3580E-P3C1S1	34		M1208	SPDT Switch w/Driver;Vcc 5/-12V;Freq 4-12.4GHz;Insert Loss 1.8dB;Solder Pin
90	MT3580E-P3C1S2	34		M1208	SPDT Switch w/Driver;Vcc ±12V;Freq 4-12.4GHz;Insert Loss 1.8dB;Solder Pin
91	MT3580E-P3C1S3	34		M1208	SPDT Switch w/Driver;Vcc ±15V;Freq 4-12.4GHz;Insert Loss 1.8dB;Solder Pin
92	MT3580E-P3C2S1	34		M1206	SPDT Switch w/Driver;Vcc 5/-12V;Freq 4-12.4GHz;Insert Loss 1.8dB;Solder Pin
93	MT3580E-P3C2S2	34		M1206	SPDT Switch w/Driver;Vcc ±12V;Freq 4-12.4GHz;Insert Loss 1.8dB;Solder Pin
94	MT3580E-P3C2S3	34		M1206	SPDT Switch w/Driver;Vcc ±15V;Freq 4-12.4GHz;Insert Loss 1.8dB;Solder Pin
95	MT3580F1P1C1S1	34		M1208	SPDT Switch w/Driver;Vcc 5/-12V;Freq 2-12.4GHz;Insert Loss 1.8dB;SMC Jack
96	MT3580F1P1C1S2	34		M1208	SPDT Switch w/Driver;Vcc ±12V;Freq 2-12.4GHz;Insert Loss 1.8dB;SMA Jack
97	MT3580F1P1C1S3	34		M1208	SPDT Switch w/Driver;Vcc ±15V;Freq 2-12.4GHz;Insert Loss 1.8dB;SMA Jack
98	MT3580F1P1C2S1	34		M1206	SPDT Switch w/Driver;Vcc 5/-12V;Freq 2-12.4GHz;Insert Loss 1.8dB;SMA Jack
99	MT3580F1P1C2S2	34		M1206	SPDT Switch w/Driver;Vcc ±12V;Freq 2-12.4GHz;Insert Loss 1.8dB;SMA Jack
100	MT3580F1P1C2S3	34		M1206	SPDT Switch w/Driver;Vcc ±15V;Freq 2-12.4GHz;Insert Loss 1.8dB;SMA Jack
101	MT3580F1P2C1S1	34		M1208	SPDT Switch w/Driver;Vcc 5/-12V;Freq 2-12.4GHz;Insert Loss 1.8dB;SMC Jack
102	MT3580F1P2C1S2	34		M1208	SPDT Switch w/Driver;Vcc ±12V;Freq 2-12.4GHz;Insert Loss 1.8dB;SMC Jack
103	MT3580F1P2C1S3	34		M1208	SPDT Switch w/Driver;Vcc ±15V;Freq 2-12.4GHz;Insert Loss 1.8dB;SMC Jack
104	MT3580F1P2C2S1	34		M1206	SPDT Switch w/Driver;Vcc 5/-12;Freq 2-12.4GHz;Insert Loss 1.8dB;SMC Jack
105	MT3580F1P2C2S2	34		M1206	SPDT Switch w/Driver;Vcc ±12V;Freq 2-12.4GHz;Insert Loss 1.8dB;SMC Jack
106	MT3580F1P2C2S3	34		M1206	SPDT Switch w/Driver;Vcc ±15V;Freq 2-12.4GHz;Insert Loss 1.8dB;SMC Jack
107	MT3580F1P3C1S1	34		M1208	SPDT Switch w/Driver;Vcc 5/-12V;Freq 2-12.4GHz;Insert Loss 1.8dB;Solder Pin
108	MT3580F1P3C1S2	34		M1208	SPDT Switch w/Driver;Vcc ±12V;Freq 2-12.4GHz;Insert Loss 1.8dB;Solder Pin
109	MT3580F1P3C1S3	34		M1208	SPDT Switch w/Driver;Vcc ±15V;Freq 2-12.4GHz;Insert Loss 1.8dB;Solder Pin
110	MT3580F1P3C2S1	34		M1206	SPDT Switch w/Driver;Vcc 5/-12V;Freq 2-12.4GHz;Insert Loss 1.8dB;Solder Pin

8. MISCELLANEOUS DEVICES

IN ORDER OF (1) USE and (2) TYPE No.

LINE No.	2 TYPE No.	1 USE	DESCRIPTION MAT.	DESCRIPTION DWG. No.	TECHNICAL DATA
1	MT3580F1P3C2S2	34		M1206	SPDT Switch w/Driver;Vcc ±12V;Freq 2-12.4GHz;Insert Loss 1.8dB;Solder Pin
2	MT3580F1P3C2S3	34		M1206	SPDT Switch w/Driver;Vcc ±15V;Freq 2-12.4GHz;Insert Loss 1.8dB;Solder Pin
3	MT3580H1P1C1S1	34		M1208	SPDT Switch w/Driver;Vcc 5/-12V;Freq 4-18GHz;Insert Loss 2.4dB;SMA Jack
4	MT3580H1P1C1S2	34		M1208	SPDT Switch w/Driver;Vcc ±12V;Freq 4-18GHz;Insert Loss 2.4dB;SMA Jack
5	MT3580H1P1C1S3	34		M1208	SPDT Switch w/Driver;Vcc ±15V;Freq 4-18GHz;Insert Loss 2.4dB;SMA Jack
6	MT3580H1P1C2S1	34		M1206	SPDT Switch w/Driver;Vcc 5/-12V;Freq 4-18GHz;Insert Loss 2.4dB;SMA Jack
7	MT3580H1P1C2S2	34		M1206	SPDT Switch w/Driver;Vcc ±12V;Freq 4-18GHz;Insert Loss 2.4dB;SMA Jack
8	MT3580H1P1C2S3	34		M1206	SPDT Switch w/Driver;Vcc ±15V;Freq 4-18GHz;Insert Loss 2.4dB;SMA Jack
9	MT3580H1P2C1S1	34		M1208	SPDT Switch w/Driver;Vcc 5/-12V;Freq 4-18GHz;Insert Loss 2.4dB;SMC Jack
10	MT3580H1P2C1S2	34		M1208	SPDT Switch w/Driver;Vcc ±12V;Freq 4-18GHz;Insert Loss 2.4dB;SMC Jack
11	MT3580H1P2C1S3	34		M1208	SPDT Switch w/Driver;Vcc ±15V;Freq 4-18GHz;Insert Loss 2.4dB;SMC Jack
12	MT3580H1P2C2S1	34		M1206	SPDT Switch w/Driver;Vcc 5/-12V;Freq 4-18GHz;Insert Loss 2.4dB;SMC Jack
13	MT3580H1P2C2S2	34		M1206	SPDT Switch w/Driver;Vcc ±12V;Freq 4-18GHz;Insert Loss 2.4dB;SMC Jack
14	MT3580H1P2C2S3	34		M1206	SPDT Switch w/Driver;Vcc ±15V;Freq 4-18GHz;Insert Loss 2.4dB;SMC Jack
15	MT3580H1P3C1S1	34		M1208	SPDT Switch w/Driver;Vcc 5/-12V;Freq 4-18GHz;Insert Loss 2.4dB;Solder Pin
16	MT3580H1P3C1S2	34		M1208	SPDT Switch w/Driver;Vcc ±12V;Freq 4-18GHz;Insert Loss 2.4dB;Solder Pin
17	MT3580H1P3C1S3	34		M1208	SPDT Switch w/Driver;Vcc ±15V;Freq 4-18GHz;Insert Loss 2.4dB;Solder Pin
18	MT3580H1P3C2S1	34		M1206	SPDT Switch w/Driver;Vcc 5/-12V;Freq 4-18GHz;Insert Loss 2.4dB;Solder Pin
19	MT3580H1P3C2S2	34		M1206	SPDT Switch w/Driver;Vcc ±12V;Freq 4-18GHz;Insert Loss 2.4dB;Solder Pin
20	MT3580H1P3C2S3	34		M1206	SPDT Switch w/Driver;Vcc ±15V;Freq 4-18GHz;Insert Loss 2.4dB;Solder Pin
21	MT3580H3P1C1S1	34		M1208	SPDT Switch w/Driver;Vcc 5/-12V;Freq 8-18GHz;Insert Loss 2.3dB;SMA Jack
22	MT3580H3P1C1S2	34		M1208	SPDT Switch w/Driver;Vcc ±12V;Freq 8-18GHz;Insert Loss 2.3dB;SMA Jack
23	MT3580H3P1C1S3	34		M1208	SPDT Switch w/Driver;Vcc ±15V;Freq 8-18GHz;Insert Loss 2.3dB;SMA Jack
24	MT3580H3P1C2S1	34		M1206	SPDT Switch w/Driver;Vcc 5/-12V;Freq 8-18GHz;Insert Loss 2.3dB;SMA Jack
25	MT3580H3P1C2S2	34		M1206	SPDT Switch w/Driver;Vcc ±12V;Freq 8-18GHz;Insert Loss 2.3dB;SMA Jack
26	MT3580H3P1C2S3	34		M1206	SPDT Switch w/Driver;Vcc ±15V;Freq 8-18GHz;Insert Loss 2.3dB;SMA Jack
27	MT3580H3P2C1S1	34		M1208	SPDT Switch w/Driver;Vcc 5/-12V;Freq 8-18GHz;Insert Loss 2.3dB;SMC Jack
28	MT3580H3P2C1S2	34		M1208	SPDT Switch w/Driver;Vcc ±12V;Freq 8-18GHz;Insert Loss 2.3dB;SMC Jack
29	MT3580H3P2C1S3	34		M1208	SPDT Switch w/Driver;Vcc ±15V;Freq 8-18GHz;Insert Loss 2.3dB;SMC Jack
30	MT3580H3P2C2S1	34		M1206	SPDT Switch w/Driver;Vcc 5/-12V;Freq 8-18GHz;Insert Loss 2.3dB;SMC Jack
31	MT3580H3P2C2S2	34		M1206	SPDT Switch w/Driver;Vcc ±12V;Freq 8-18GHz;Insert Loss 2.3dB;SMC Jack
32	MT3580H3P2C2S3	34		M1206	SPDT Switch w/Driver;Vcc ±15V;Freq 8-18GHz;Insert Loss 2.3dB;SMC Jack
33	MT3580H3P3C1S1	34		M1208	SPDT Switch w/Driver;Vcc 5/-12V;Freq 8-18GHz;Insert Loss 2.3dB;Solder Pin
34	MT3580H3P3C1S2	34		M1208	SPDT Switch w/Driver;Vcc ±12V;Freq 8-18GHz;Insert Loss 2.3dB;Solder Pin
35	MT3580H3P3C1S3	34		M1208	SPDT Switch w/Driver;Vcc ±15V;Freq 8-18GHz;Insert Loss 2.3dB;Solder Pin
36	MT3580H3P3C2S1	34		M1206	SPDT Switch w/Driver;Vcc 5/-12V;Freq 8-18GHz;Insert Loss 2.3dB;Solder Pin
37	MT3580H3P3C2S2	34		M1206	SPDT Switch w/Driver;Vcc ±12V;Freq 8-18GHz;Insert Loss 2.3dB;Solder Pin
38	MT3580H3P3C2S3	34		M1206	SPDT Switch w/Driver;Vcc ±15V;Freq 8-18GHz;Insert Loss 2.3dB;Solder Pin
39	MT3580H4P1C1S1	34		M1208	SPDT Switch w/Driver;Vcc 5/-12V;Freq 12.4-18GHz;Insert Loss 2.2dB;SMA Jack
40	MT3580H4P1C1S2	34		M1208	SPDT Switch w/Driver;Vcc ±12V;Freq 12.4-18GHz;Insert Loss 2.2dB;SMA Jack
41	MT3580H4P1C1S3	34		M1208	SPDT Switch w/Driver;Vcc ±15V;Freq 12.4-18GHz;Insert Loss 2.2dB;SMA Jack
42	MT3580H4P1C2S1	34		M1206	SPDT Switch w/Driver;Vcc 5/-12V;Freq 12.4-18GHz;Insert Loss 2.2dB;SMA Jack
43	MT3580H4P1C2S2	34		M1206	SPDT Switch w/Driver;Vcc ±12V;Freq 12.4-18GHz;Insert Loss 2.2dB;SMA Jack
44	MT3580H4P1C2S3	34		M1206	SPDT Switch w/Driver;Vcc ±15V;Freq 12.4-18GHz;Insert Loss 2.2 dB;SMA Jack
45	MT3580H4P2C1S1	34		M1208	SPDT Switch w/Driver;Vcc 5/-12V;Freq 12.4-18GHz;Insert Loss 2.2dB;SMC Jack
46	MT3580H4P2C1S2	34		M1208	SPDT Switch w/Driver;Vcc ±12V;Freq 12.4-18GHz;Insert Loss 2.2dB;SMC Jack
47	MT3580H4P2C1S3	34		M1208	SPDT Switch w/Driver;Vcc ±15V;Freq 12.4-18GHz;Insert Loss 2.2dB;SMC Jack
48	MT3580H4P2C2S1	34		M1206	SPDT Switch w/Driver;Vcc 5/-12V;Freq 12.4-18GHz;Insert Loss 2.2dB;SMC Jack
49	MT3580H4P2C2S2	34		M1206	SPDT Switch w/Driver;Vcc ±12V;Freq 12.4-18GHz;Insert Loss 2.2dB;SMC Jack
50	MT3580H4P2C2S3	34		M1206	SPDT Switch w/Driver;Vcc ±15V;Freq 12.4-18GHz;Insert Loss 2.2dB;SMC Jack
51	MT3580H4P3C1S1	34		M1208	SPDT Switch w/Driver;Vcc 5/-12V;Freq 12.4-18GHz;Insert Loss 2.2dB;Solder Pin
52	MT3580H4P3C1S2	34		M1208	SPDT Switch w/Driver;Vcc ±12V;Freq 12.4-18GHz;Insert Loss 2.2dB;Solder Pin
53	MT3580H4P3C1S3	34		M1208	SPDT Switch w/Driver;Vcc ±15V;Freq 12.4-18GHz;Insert Loss 2.2dB;Solder Pin
54	MT3580H4P3C2S1	34		M1206	SPDT Switch w/Driver;Vcc 5/-12V;Freq 12.4-18GHz;Insert Loss 2.2dB;Solder Pin
55	MT3580H4P3C2S2	34		M1206	SPDT Switch w/Driver;Vcc ±12V;Freq 12.4-18GHz;Insert Loss 2.2dB;Solder Pin
56	MT3580H4P3C2S3	34		M1206	SPDT Switch w/Driver;Vcc ±15V;Freq 12.4-18GHz;Insert Loss 2.2dB;Solder Pin
57	MT3580H-P1C1S1	34		M1208	SPDT Switch w/Driver;Vcc 5/-12V;Freq 2-18GHz;Insert Loss 2.5dB;SMC Jack
58	MT3580H-P1C1S2	34		M1208	SPDT Switch w/Driver;Vcc ±12V;Freq 2-18GHz;Insert Loss 2.5dB;SMA Jack
59	MT3580H-P1C1S3	34		M1208	SPDT Switch w/Driver;Vcc ±15V;Freq 2-18GHz;Insert Loss 2.5dB;SMA Jack
60	MT3580H-P1C2S1	34		M1206	SPDT Switch w/Driver;Vcc 5/-12V;Freq 2-18GHz;Insert Loss 2.5dB;SMA Jack
61	MT3580H-P1C2S2	34		M1206	SPDT Switch w/Driver;Vcc ±12V;Freq 2-18GHz;Insert Loss 2.5dB;SMA Jack
62	MT3580H-P1C2S3	34		M1206	SPDT Switch w/Driver;Vcc ±15V;Freq 2-18GHz;Insert Loss 2.5dB;SMA Jack
63	MT3580H-P2C1S1	34		M1208	SPDT Switch w/Driver;Vcc 5/-12V;Freq 2-18GHz;Insert Loss 2.5dB;SMC Jack
64	MT3580H-P2C1S2	34		M1208	SPDT Switch w/Driver;Vcc ±12V;Freq 2-18GHz;Insert Loss 2.5dB;SMC Jack
65	MT3580H-P2C1S3	34		M1208	SPDT Switch w/Driver;Vcc ±15V;Freq 2-18GHz;Insert Loss 2.5dB;SMC Jack
66	MT3580H-P2C2S1	34		M1206	SPDT Switch w/Driver;Vcc 5/-12V;Freq 2-18GHz;Insert Loss 2.5dB;SMC Jack
67	MT3580H-P2C2S2	34		M1206	SPDT Switch w/Driver;Vcc ±12V;Freq 2-18GHz;Insert Loss 2.5dB;SMC Jack
68	MT3580H-P2C2S3	34		M1206	SPDT Switch w/Driver;Vcc ±15V;Freq 2-18GHz;Insert Loss 2.5dB;SMC Jack
69	MT3580H-P3C1S1	34		M1208	SPDT Switch w/Driver;Vcc 5/-12V;Freq 2-18GHz;Insert Loss 2.5dB;Solder Pin
70	MT3580H-P3C1S2	34		M1208	SPDT Switch w/Driver;Vcc ±12V;Freq 2-18GHz;Insert Loss 2.5dB;Solder Pin
71	MT3580H-P3C1S3	34		M1208	SPDT Switch w/Driver;Vcc ±15V;Freq 2-18GHz;Insert Loss 2.5dB;Solder Pin
72	MT3580H-P3C2S1	34		M1206	SPDT Switch w/Driver;Vcc 5/-12V;Freq 2-18GHz;Insert Loss 2.5dB;Solder Pin
73	MT3580H-P3C2S2	34		M1206	SPDT Switch w/Driver;Vcc ±12V;Freq 2-18GHz;Insert Loss 2.5dB;Solder Pin
74	MT3580H-P3C2S3	34		M1206	SPDT Switch w/Driver;Vcc ±15V;Freq 2-18GHz;Insert Loss 2.5dB;Solder Pin
75	MT3581A4P1C1S1	34		M1208	SPDT Switch w/Driver;Vcc 5/-12V;Freq 2-4GHz;Insert Loss .80dB;SMA Jack
76	MT3581A4P1C1S2	34		M1208	SPDT Switch w/Driver;Vcc ±12V;Freq 2-4GHz;Insert Loss .80dB;SMA Jack
77	MT3581A4P1C1S3	34		M1208	SPDT Switch w/Driver;Vcc ±15V;Freq 2-4GHz;Insert Loss .80dB;SMA Jack
78	MT3581A4P1C2S1	34		M1206	SPDT Switch w/Driver;Vcc 5/-12V;Freq 2-4GHz;Insert Loss .80dB;SMA Jack
79	MT3581A4P1C2S2	34		M1206	SPDT Switch w/Driver;Vcc ±12V;Freq 2-4GHz;Insert Loss .80dB;SMA Jack
80	MT3581A4P1C2S3	34		M1206	SPDT Switch w/Driver;Vcc ±15V;Freq 2-4GHz;Insert Loss .80dB;SMA Jack
81	MT3581A4P2C1S1	34		M1208	SPDT Switch w/Driver;Vcc 5/-12V;Freq 2-4GHz;Insert Loss .80dB;SMC Jack
82	MT3581A4P2C1S2	34		M1208	SPDT Switch w/Driver;Vcc ±12V;Freq 2-4GHz;Insert Loss .80dB;SMC Jack
83	MT3581A4P2C1S3	34		M1206	SPDT Switch w/Driver;Vcc ±15V;Freq 2-4GHz;Insert Loss .80dB;SMC Jack
84	MT3581A4P2C2S1	34		M1206	SPDT Switch w/Driver;Vcc 5/-12V;Freq 2-4GHz;Insert Loss .80dB;SMC Jack
85	MT3581A4P2C2S2	34		M1206	SPDT Switch w/Driver;Vcc ±12V;Freq 2-4GHz;Insert Loss .80dB;SMC Jack
86	MT3581A4P2C2S3	34		M1206	SPDT Switch w/Driver;Vcc ±15V;Freq 2-4GHz;Insert Loss .80dB;SMC Jack
87	MT3581A4P3C1S1	34		M1208	SPDT Switch w/Driver;Vcc 5/-12V;Freq 2-4GHz;Insert Loss .80dB;Solder Pin
88	MT3581A4P3C1S2	34		M1208	SPDT Switch w/Driver;Vcc ±12V;Freq 2-4GHz;Insert Loss .80dB;Solder Pin
89	MT3581A4P3C1S3	34		M1208	SPDT Switch w/Driver;Vcc ±15V;Freq 2-4GHz;Insert Loss .80dB;Solder Pin
90	MT3581A4P3C2S1	34		M1206	SPDT Switch w/Driver;Vcc 5/-12V;Freq 2-4GHz;Insert Loss .80dB;Solder Pin
91	MT3581A4P3C2S2	34		M1206	SPDT Switch w/Driver;Vcc ±12V;Freq 2-4GHz;Insert Loss .80dB;Solder Pin
92	MT3581A4P3C2S3	34		M1206	SPDT Switch w/Driver;Vcc ±15V;Freq 2-4GHz;Insert Loss .80dB;Solder Pin
93	MT3581A-P1C1S1	34		M1208	SPDT Switch w/Driver;Vcc 5/-12V;Freq .5-4GHz;Insert Loss .80dB;SMA Jack
94	MT3581A-P1C1S2	34		M1208	SPDT Switch w/Driver;Vcc ±12V;Freq .5-4GHz;Insert Loss .80dB;SMA Jack
95	MT3581A-P1C1S3	34		M1208	SPDT Switch w/Driver;Vcc ±15V;Freq .5-4GHz;Insert Loss .80dB;SMA Jack
96	MT3581A-P1C2S1	34		M1206	SPDT Switch w/Driver;Vcc 5/-12V;Freq .5-4GHz;Insert Loss .80dB;SMA Jack
97	MT3581A-P1C2S2	34		M1206	SPDT Switch w/Driver;Vcc ±12V;Freq .5-4GHz;Insert Loss .80dB;SMA Jack
98	MT3581A-P1C2S3	34		M1206	SPDT Switch w/Driver;Vcc ±15V;Freq .5-4GHz;Insert Loss .80dB;SMA Jack
99	MT3581A-P2C1S1	34		M1208	SPDT Switch w/Driver;Vcc 5/-12V;Freq .5-4GHz;Insert Loss .80dB;SMC Jack
100	MT3581A-P2C1S2	34		M1208	SPDT Switch w/Driver;Vcc ±12V;Freq .5-4GHz;Insert Loss .80dB;SMC Jack
101	MT3581A-P2C1S3	34		M1206	SPDT Switch w/Driver;Vcc ±15V;Freq .5-4GHz;Insert Loss .80dB;SMC Jack
102	MT3581A-P2C2S1	34		M1206	SPDT Switch w/Driver;Vcc 5/-12V;Freq .5-4GHz;Insert Loss .80dB;SMC Jack
103	MT3581A-P2C2S2	34		M1206	SPDT Switch w/Driver;Vcc ±12V;Freq .5-4GHz;Insert Loss .80dB;SMC Jack
104	MT3581A-P2C2S3	34		M1206	SPDT Switch w/Driver;Vcc ±15V;Freq .5-4GHz;Insert Loss .80dB;SMC Jack
105	MT3581A-P3C1S1	34		M1208	SPDT Switch w/Driver;Vcc 5/-12V;Freq .5-4GHz;Insert Loss .80dB;Solder Pin
106	MT3581A-P3C1S2	34		M1208	SPDT Switch w/Driver;Vcc ±12V;Freq .5-4GHz;Insert Loss .80dB;Solder Pin
107	MT3581A-P3C1S3	34		M1208	SPDT Switch w/Driver;Vcc ±15V;Freq .5-4GHz;Insert Loss .80dB;Solder Pin
108	MT3581A-P3C2S1	34		M1206	SPDT Switch w/Driver;Vcc 5/-12V;Freq .5-4GHz;Insert Loss .80dB;Solder Pin
109	MT3581A-P3C2S2	34		M1206	SPDT Switch w/Driver;Vcc ±12V;Freq .5-4GHz;Insert Loss .80dB;Solder Pin
110	MT3581A-P3C2S3	34		M1206	SPDT Switch w/Driver;Vcc ±15V;Freq .5-4GHz;Insert Loss .80dB;Solder Pin

8. MISCELLANEOUS DEVICES

IN ORDER OF (1) USE and (2) TYPE No.

LINE No.	2 TYPE No.	1 USE	DESCRIPTION MAT.	DWG. No.	TECHNICAL DATA
1	MT3581B2P1C1S1	34		M1208	SPDT Switch w/Driver;Vcc 5/-12V;Freq 2-8GHz;Insert Loss 1.4dB;SMA Jack
2	MT3581B2P1C1S2	34		M1208	SPDT Switch w/Driver;Vcc ±12V;Freq 2-8GHz;Insert Loss 1.4dB;SMA Jack
3	MT3581B2P1C1S3	34		M1208	SPDT Switch w/Driver;Vcc ±15V;Freq 2-8GHz;Insert Loss 1.4dB;SMA Jack
4	MT3581B2P1C2S1	34		M1206	SPDT Switch w/Driver;Vcc 5/-12V;Freq 2-8GHz;Insert Loss 1.4dB;SMA Jack
5	MT3581B2P1C2S2	34		M1206	SPDT Switch w/Driver;Vcc ±12V;Freq 2-8GHz;Insert Loss 1.4dB;SMA Jack
6	MT3581B2P1C2S3	34		M1206	SPDT Switch w/Driver;Vcc ±15V;Freq 2-8GHz;Insert Loss 1.4dB;SMA Jack
7	MT3581B2P2C1S1	34		M1208	SPDT Switch w/Driver;Vcc 5/-12V;Freq 2-8GHz;Insert Loss 1.4dB;SMC Jack
8	MT3581B2P2C1S2	34		M1208	SPDT Switch w/Driver;Vcc ±12V;Freq 2-8GHz;Insert Loss 1.4dB;SMC Jack
9	MT3581B2P2C1S3	34		M1206	SPDT Switch w/Driver;Vcc ±15V;Freq 2-8GHz;Insert Loss 1.4dB;SMC Jack
10	MT3581B2P2C2S1	34		M1206	SPDT Switch w/Driver;Vcc 5/-12V;Freq 2-8GHz;Insert Loss 1.4dB;SMC Jack
11	MT3581B2P2C2S2	34		M1206	SPDT Switch w/Driver;Vcc ±12V;Freq 2-8GHz;Insert Loss 1.4dB;SMC Jack
12	MT3581B2P2C2S3	34		M1206	SPDT Switch w/Driver;Vcc ±15V;Freq 2-8GHz;Insert Loss 1.4dB;SMC Jack
13	MT3581B2P3C1S1	34		M1208	SPDT Switch w/Driver;Vcc 5/-12V;Freq 2-8GHz;Insert Loss 1.4dB;Solder Pin
14	MT3581B2P3C1S2	34		M1208	SPDT Switch w/Driver;Vcc ±12V;Freq 2-8GHz;Insert Loss 1.4dB;Solder Pin
15	MT3581B2P3C1S3	34		M1208	SPDT Switch w/Driver;Vcc ±15V;Freq 2-8GHz;Insert Loss 1.4dB;Solder Pin
16	MT3581B2P3C2S1	34		M1206	SPDT Switch w/Driver;Vcc 5/-12V;Freq 2-8GHz;Insert Loss 1.4dB;Solder Pin
17	MT3581B2P3C2S2	34		M1206	SPDT Switch w/Driver;Vcc ±12V;Freq 2-8GHz;Insert Loss 1.4dB;Solder Pin
18	MT3581B2P3C2S3	34		M1206	SPDT Switch w/Driver;Vcc ±15V;Freq 2-8GHz;Insert Loss 1.4dB;Solder Pin
19	MT3581B-P1C1S1	34		M1208	SPDT Switch w/Driver;Vcc 5/-12V;Freq 4-8GHz;Insert Loss 1.3dB;SMA Jack
20	MT3581B-P1C1S2	34		M1208	SPDT Switch w/Driver;Vcc ±12V;Freq 4-8GHz;Insert Loss 1.3dB;SMA Jack
21	MT3581B-P1C1S3	34		M1208	SPDT Switch w/Driver;Vcc ±15V;Freq 4-8GHz;Insert Loss 1.3dB;SMA Jack
22	MT3581B-P1C2S1	34		M1206	SPDT Switch w/Driver;Vcc 5/-12V;Freq 4-8GHz;Insert Loss 1.3dB;SMA Jack
23	MT3581B-P1C2S2	34		M1206	SPDT Switch w/Driver;Vcc ±12V;Freq 4-8GHz;Insert Loss 1.3dB;SMA Jack
24	MT3581B-P1C2S3	34		M1206	SPDT Switch w/Driver;Vcc ±15V;Freq 4-8GHz;Insert Loss 1.3dB;SMA Jack
25	MT3581B-P2C1S1	34		M1208	SPDT Switch w/Driver;Vcc 5/-12V;Freq 4-8GHz;Insert Loss 1.3dB;SMC Jac k
26	MT3581B-P2C1S2	34		M1206	SPDT Switch w/Driver;Vcc ±12V;Freq 4-8GHz;Insert Loss 1.3dB;SMC Jack
27	MT3581B-P2C1S3	34		M1206	SPDT Switch w/Driver;Vcc ±15V;Freq 4-8GHz;Insert Loss 1.3dB;SMC Jack
28	MT3581B-P2C2S1	34		M1206	SPDT Switch w/Driver;Vcc 5/-12V;Freq 4-8GHz;Insert Loss 1.3dB;SMC Jack
29	MT3581B-P2C2S2	34		M1206	SPDT Switch w/Driver;Vcc ±12V;Freq 4-8GHz;Insert Loss 1.3dB;SMC Jack
30	MT3581B-P2C2S3	34		M1206	SPDT Switch w/Driver;Vcc ±15V;Freq 4-8GHz;Insert Loss 1.3dB;SMC Jack
31	MT3581B-P3C1S1	34		M1208	SPDT Switch w/Driver;Vcc 5/-12V;Freq 4-8GHz;Insert Loss 1.3dB;Solder Pin
32	MT3581B-P3C1S2	34		M1208	SPDT Switch w/Driver;Vcc ±12V;Freq 4-8GHz;Insert Loss 1.3dB;Solder Pin
33	MT3581B-P3C1S3	34		M1208	SPDT Switch w/Driver;Vcc ±15V;Freq 4-8GHz;Insert Loss 1.3dB;Solder Pin
34	MT3581B-P3C2S1	34		M1206	SPDT Switch w/Driver;Vcc 5/-12V;Freq 4-8GHz;Insert Loss 1.3dB;Solder Pin
35	MT3581B-P3C2S2	34		M1206	SPDT Switch w/Driver;Vcc ±12V;Freq 4-8GHz;Insert Loss 1.3dB;Solder Pin
36	MT3581B-P3C2S3	34		M1206	SPDT Switch w/Driver;Vcc ±15V;Freq 4-8GHz;Insert Loss 1.3dB;Solder Pin
37	MT3581C-P1C1S1	34		M1208	SPDT Switch w/Driver;Vcc 5/-12V;Freq 8-12.4GHz;Insert Loss 1.6dB;SMA Jack
38	MT3581C-P1C1S2	34		M1208	SPDT Switch w/Driver;Vcc ±12V;Freq 8-12.4GHz;Insert Loss 1.6dB;SMA Jack
39	MT3581C-P1C1S3	34		M1208	SPDT Switch w/Driver;Vcc ±15V;Freq 8-12.4GHz;Insert Loss 1.6dB;SMA Jack
40	MT3581C-P1C2S1	34		M1206	SPDT Switch w/Driver;Vcc 5/-12V;Freq 8-12.4GHz;Insert Loss 1.6dB;SMA Jack
41	MT3581C-P1C2S2	34		M1206	SPDT Switch w/Driver;Vcc ±12V;Freq 8-12.4GHZ;Insert Loss 1.6dB;SMA Jack
42	MT3581C-P1C2S3	34		M1206	SPDT Switch w/Driver;Vcc ±15V;Freq 8-12.4GHz;Insert Loss 1.6dB;SMA Jack
43	MT3581C-P2C1S1	34		M1208	SPDT Switch w/Driver;Vcc 5/-12V;Freq 8-12.4GHz;Insert Loss 1.6dB;SMC Jack
44	MT3581C-P2C1S2	34		M1206	SPDT Switch w/Driver;Vcc ±12V;Freq 8-12.4GHz;Insert Loss 1.6dB;SMC Jack
45	MT3581C-P2C1S3	34		M1206	SPDT Switch w/Driver;Vcc ±15V;Freq 8-12.4GHz;Insert Loss 1.6dB;SMC Jack
46	MT3581C-P2C2S1	34		M1206	SPDT Switch w/Driver;Vcc 5/-12V;Freq 8-12.4GHz;Insert Loss 1.6dB;SMC Jack
47	MT3581C-P2C2S2	34		M1206	SPDT Switch w/Driver;Vcc ±12V;Freq 8-12.4GHz;Insert Loss 1.6dB;SMC Jack
48	MT3581C-P2C2S3	34		M1206	SPDT Switch w/Driver;Vcc ±15V;Freq 8-12.4GHz;Insert Loss 1.6dB;SMC Jack
49	MT3581C-P3C1S1	34		M1208	SPDT Switch w/Driver;Vcc 5/-12V;Freq 8-12.4GHz;Insert Loss 1.6dB;Solder Pin
50	MT3581C-P3C1S2	34		M1208	SPDT Switch w/Driver;Vcc ±12V;Freq 8-12.4GHz;Insert Loss 1.6dB;Solder Pin
51	MT3581C-P3C1S3	34		M1208	SPDT Switch w/Driver;Vcc ±15V;Freq 8-12.4GHz;Insert Loss 1.6dB;Solder Pin
52	MT3581C-P3C2S1	34		M1206	SPDT Switch w/Driver;Vcc 5/-12V;Freq 8-12.4GHz;Insert Loss 1.6dB;Solder Pin
53	MT3581C-P3C2S2	34		M1206	SPDT Switch w/Driver;Vcc ±12V;Freq 8-12.4GHz;Insert Loss 1.6dB;Solder Pin
54	MT3581C-P3C2S3	34		M1206	SPDT Switch w/Driver;Vcc ±15V;Freq 8-12.4GHz;Insert Loss 1.6dB;Solder Pin
55	MT3581D1P1C1S1	34		M1208	SPDT Switch w/Driver;Vcc 5/-12V;Freq .5-12.4GHz;Insert Loss 1.9dB;SMA Jack
56	MT3581D1P1C1S2	34		M1208	SPDT Switch w/Driver;Vcc ±12V;Freq .5-12.4GHz;Insert Loss 1.9dB;SMA Jack
57	MT3581D1P1C1S3	34		M1208	SPDT Switch w/Driver;Vcc ±15V;Freq .5-12.4GHz;Insert Loss 1.9dB;SMA Jack
58	MT3581D1P1C2S1	34		M1206	SPDT Switch w/Driver;Vcc 5/-12V;Freq .5-12.4GHz;Insert Loss 1.9dB;SMA Jack
59	MT3581D1P1C2S2	34		M1206	SPDT Switch w/Driver;Vcc ±12V;Freq .5-12.4GHz;Insert Loss 1.9dB;SMA Jack
60	MT3581D1P1C2S3	34		M1206	SPDT Switch w/Driver;Vcc ±15V;Freq .5-12.4GHz;Insert Loss 1.9dB;SMA Jack
61	MT3581D1P2C1S1	34		M1208	SPDT Switch w/Driver;Vcc 5/-12V;Freq .5-12.4GHz;Insert Loss 1.9dB;SMC Jack
62	MT3581D1P2C1S2	34		M1208	SPDT Switch w/Driver;Vcc ±12V;Freq .5-12.4GHz;Insert Loss 1.9dB;SMC Jack
63	MT3581D1P2C1S3	34		M1206	SPDT Switch w/Driver;Vcc ±15V;Freq .5-12.4GHz;Insert Loss 1.9dB;SMC Jack
64	MT3581D1P2C2S1	34		M1206	SPDT Switch w/Driver;Vcc 5/-12V;Freq .5-12.4GHz;Insert Loss 1.9dB;SMC Jack
65	MT3581D1P2C2S2	34		M1206	SPDT Switch w/Driver;Vcc ±12V;Freq .5-12.4GHz;Insert Loss 1.9dB;SMC Jack
66	MT3581D1P2C2S3	34		M1206	SPDT Switch w/Driver;Vcc ±15V;Freq .5-12.4GHz;Insert Loss 1.9dB;SMC Jack
67	MT3581D1P3C1S1	34		M1208	SPDT Switch w/Driver;Vcc 5/-12V;Freq .5-12.4GHz;Insert Loss 1.9dB;Solder Pin
68	MT3581D1P3C1S2	34		M1208	SPDT Switch w/Driver;Vcc ±12V;Freq .5-12.4GHz;Insert Loss 1.9dB;Solder Pin
69	MT3581D1P3C1S3	34		M1208	SPDT Switch w/Driver;Vcc ±15V;Freq .5-12.4GHz;Insert Loss 1.9dB;Solder Pin
70	MT3581D1P3C2S1	34		M1206	SPDT Switch w/Driver;Vcc 5/-12V;Freq .5-12.4GHz;Insert Loss 1.9dB;Solder Pin
71	MT3581D1P3C2S2	34		M1206	SPDT Switch w/Driver;Vcc ±12V;Freq .5-12.4GHz;Insert Loss 1.9dB;Solder Pin
72	MT3581D1P3C2S3	34		M1206	SPDT Switch w/Driver;Vcc ±15V;Freq .5-12.4GHz;Insert Loss 1.9dB;Solder Pin
73	MT3581D-P1C1S1	34		M1208	SPDT Switch w/Driver;Vcc 5/-12V;Freq .5-8GHz;Insert Loss 1.4dB;SMA Jack
74	MT3581D-P1C1S2	34		M1208	SPDT Switch w/Driver;Vcc ±12V;Freq .5-8GHz;Insert Loss 1.4dB;SMA Jack
75	MT3581D-P1C1S3	34		M1208	SPDT Switch w/Driver;Vcc ±15V;Freq .5-8GHz;Insert Loss 1.4dB;SMA Jack
76	MT3581D-P1C2S1	34		M1206	SPDT Switch w/Driver;Vcc 5/-12V;Freq .5-8GHz;Insert Loss 1.4dB;SMA Jack
77	MT3581D-P1C2S2	34		M1206	SPDT Switch w/Driver;Vcc ±12V;Freq .5-8GHz;Insert Loss 1.4dB;SMA Jack
78	MT3581D-P1C2S3	34		M1206	SPDT Switch w/Driver;Vcc ±15V;Freq .5-8GHz;Insert Loss 1.4dB;SMA Jack
79	MT3581D-P2C1S1	34		M1208	SPDT Switch w/Driver;Vcc 5/-12V;Freq .5-8GHz;Insert Loss 1.4dB;SMC Jack
80	MT3581D-P2C1S2	34		M1208	SPDT Switch w/Driver;Vcc ±12V;Freq .5-8GHz;Insert Loss 1.4dB;SMC Jack
81	MT3581D-P2C1S3	34		M1206	SPDT Switch w/Driver;Vcc ±15V;Freq .5-8GHz;Insert Loss 1.4dB;SMC Jack
82	MT3581D-P2C2S1	34		M1206	SPDT Switch w/Driver;Vcc 5/-12V;Freq .5-8GHz;Insert Loss 1.4dB;SMC Jack
83	MT3581D-P2C2S2	34		M1206	SPDT Switch w/Driver;Vcc ±12V;Freq .5-8GHz;Insert Loss 1.4dB;SMC Jack
84	MT3581D-P2C2S3	34		M1206	SPDT Switch w/Driver;Vcc ±15V;Freq .5-8GHz;Insert Loss 1.4dB;SMC Jack
85	MT3581D-P3C1S1	34		M1208	SPDT Switch w/Driver;Vcc 5/-12V;Freq .5-8GHz;Insert Loss 1.4dB;Solder Pin
86	MT3581D-P3C1S2	34		M1208	SPDT Switch w/Driver;Vcc ±12V;Freq .5-8GHz;Insert Loss 1.4dB;Solder Pin
87	MT3581D-P3C1S3	34		M1208	SPDT Switch w/Driver;Vcc ±15V;Freq .5-8GHz;Insert Loss 1.4dB;Solder Pin
88	MT3581D-P3C2S1	34		M1206	SPDT Switch w/Driver;Vcc 5/-12V;Freq .5-8GHz;Insert Loss 1.4dB;Solder Pin
89	MT3581D-P3C2S2	34		M1206	SPDT Switch w/Driver;Vcc ±12V;Freq .5-8GHz;Insert Loss 1.4dB;Solder Pin
90	MT3581D-P3C2S3	34		M1206	SPDT Switch w/Driver;Vcc ±15V;Freq .5-8GHz;Insert Loss 1.4dB;Solder Pin
91	MT3581E-P1C1S1	34		M1208	SPDT Switch w/Driver;Vcc 5/-12V;Freq 4-12.4GHz;Insert Loss 1.7dB;SMA Jack
92	MT3581E-P1C1S2	34		M1208	SPDT Switch w/Driver;Vcc ±12V;Freq 4-12.4GHz;Insert Loss 1.7dB;SMA Jack
93	MT3581E-P1C1S3	34		M1208	SPDT Switch w/Driver;Vcc ±15V;Freq 4-12.4GHz;Insert Loss 1.7dB;SMA Jack
94	MT3581E-P1C2S1	34		M1206	SPDT Switch w/Driver;Vcc 5/-12V;Freq 4-12.4GHz;Insert Loss 1.7dB;SMA Jack
95	MT3581E-P1C2S2	34		M1206	SPDT Switch w/Driver;Vcc ±12V;Freq 4-12.4GHz;Insert Loss 1.7dB;SMA Jack
96	MT3581E-P1C2S3	34		M1206	SPDT Switch w/Driver;Vcc ±15V;Freq 4-12.4GHz;Insert Loss 1.7dB;SMA Jack
97	MT3581E-P2C1S1	34		M1208	SPDT Switch w/Driver;Vcc 5/-12V;Freq 4-12.4GHz;Insert Loss 1.7dB;SMC Jack
98	MT3581E-P2C1S2	34		M1206	SPDT Switch w/Driver;Vcc ±12V;Freq 4-12.4GHz;Insert Loss 1.7dB;SMC Jack
99♦	MT3581E-P2C1S3	34		M1206	SPDT Switch w/Driver;Vcc ±15V;Freq 4-12.4GHz;Insert Loss 1.7dB SMC Jack
100	MT3581E-P2C2S1	34		M1206	SPDT Switch w/Driver;Vcc 5/-12V;Freq 4-12.4GHz;Insert Loss 1.7dB;SMC Jack
101	MT3581E-P2C2S2	34		M1206	SPDT Switch w/Driver;Vcc ±12V;Freq 4-12.4GHz;Insert Loss 1.7dB;SMC Jack
102	MT3581E-P2C2S3	34		M1206	SPDT Switch w/Driver;Vcc ±15V;Freq 4-12.4GHz;Insert Loss 1.7dB;SMC Jack
103	MT3581E-P3C1S1	34		M1208	SPDT Switch w/Driver;Vcc 5/-12V;Freq 4-12.4GHz;Insert Loss 1.7dB;Solder Pin
104	MT3581E-P3C1S2	34		M1208	SPDT Switch w/Driver;Vcc ±12V;Freq 4-12.4GHz;Insert Loss 1.7dB;Solder Pin
105	MT3581E-P3C1S3	34		M1208	SPDT Switch w/Driver;Vcc ±15V;Freq 4-12.4GHz;Insert Loss 1.7dB;Solder Pin
106	MT3581E-P3C2S1	34		M1206	SPDT Switch w/Driver;Vcc 5/-12V;Freq 4-12.4GHz;Insert Loss 1.7dB;Solder Pin
107	MT3581E-P3C2S2	34		M1206	SPDT Switch w/Driver;Vcc ±12V;Freq 4-12.4GHz;Insert Loss 1.7dB;Solder Pin
108	MT3581E-P3C2S3	34		M1206	SPDT Switch w/Driver;Vcc ±15V;Freq 4-12.4GHz;Insert Loss 1.7dB;Solder Pin
109	MT3581F1P1C1S1	34		M1208	SPDT Switch w/Driver;Vcc 5/-12V;Freq 2-12.4GHz;Insert Loss 1.7dB;SMA Jack
110	MT3581F1P1C1S2	34		M1208	SPDT Switch w/Driver;Vcc ±12V;Freq 2-12.4GHz;Insert Loss 1.7dB;SMA Jack

8. MISCELLANEOUS DEVICES

IN ORDER OF (1) USE and (2) TYPE No.

LINE No.	2 TYPE No.	1 USE	DESCRIPTION MAT.	DWG. No.	TECHNICAL DATA
1	MT3581F1P1C1S3	34		M1208	SPDT Switch w/Driver;Vcc ±15V;Freq 2-12.4GHz;Insert Loss 1.7dB;SMA Jack
2	MT3581F1P1C2S1	34		M1206	SPDT Switch w/Driver;Vcc 5/-12V;Freq 2-12.4GHz;Insert Loss 1.7dB;SMA Jack
3	MT3581F1P1C2S2	34		M1206	SPDT Switch w/Driver;Vcc ±12V;Freq 2-12.4GHz;Insert Loss 1.7dB;SMA Jack
4	MT3581F1P1C2S3	34		M1206	SPDT Switch w/Driver;Vcc ±15V;Freq 2-12.4GHz;Insert Loss 1.7dB;SMA Jack
5	MT3581F1P2C1S1	34		M1208	SPDT Switch w/Driver;Vcc 5/-12V;Freq 2-12.4GHz;Insert Loss 1.7dB;SMC Jack
6	MT3581F1P2C1S2	34		M1206	SPDT Switch w/Driver;Vcc ±12V;Freq 2-12.4GHz;Insert Loss 1.7dB;SMC Jack
7	MT3581F1P2C1S3	34		M1206	SPDT Switch w/Driver;Vcc ±15V;Freq 2-12.4GHz;Insert Loss 1.7dB;SMC Jack
8	MT3581F1P2C2S1	34		M1206	SPDT Switch w/Driver;Vcc 5/-12V;Freq 2-12.4GHz;Insert Loss 1.7dB;SMC Jack
9	MT3581F1P2C2S2	34		M1206	SPDT Switch w/Driver;Vcc ±12V;Freq 2-12.4GHz;Insert Loss 1.7dB;SMC Jack
10	MT3581F1P2C2S3	34		M1206	SPDT Switch w/Driver;Vcc ±15V;Freq 2-12.4GHz;Insert Loss 1.7dB;SMC Jack
11	MT3581F1P3C1S1	34		M1208	SPDT Switch w/Driver;Vcc 5/-12V;Freq 2-12.4GHz;Insert Loss 1.7dB;Solder Pin
12	MT3581F1P3C1S2	34		M1208	SPDT Switch w/Driver;Vcc ±12V;Freq 2-12.4GHz;Insert Loss 1.7dB;Solder Pin
13	MT3581F1P3C1S3	34		M1208	SPDT Switch w/Driver;Vcc ±15V;Freq 2-12.4GHz;Insert Loss 1.7dB;Solder Pin
14	MT3581F1P3C2S1	34		M1206	SPDT Switch w/Driver;Vcc 5/-12V;Freq 2-12.4GHz;Insert Loss 1.7dB;Solder Pin
15	MT3581F1P3C2S2	34		M1206	SPDT Switch w/Driver;Vcc ±12V;Freq 2-12.4GHz;Insert Loss 1.7dB;Solder Pin
16	MT3581F1P3C2S3	34		M1206	SPDT Switch w/Driver;Vcc ±15V;Freq 2-12.4GHz;Insert Loss 1.7dB;Solder Pin
17	MT3581H1P1C1S1	34		M1208	SPDT Switch w/Driver;Vcc 5/-12V;Freq 4-18GHz;Insert Loss 2.2dB;SMA Jack
18	MT3581H1P1C1S2	34		M1208	SPDT Switch w/Driver;Vcc ±12V;Freq 4-18GHz;Insert Loss 2.2dB;SMA Jack
19	MT3581H1P1C1S3	34		M1208	SPDT Switch w/Driver;Vcc ±15V;Freq 4-18GHz;Insert Loss 2.2dB;SMA Jack
20	MT3581H1P1C2S1	34		M1206	SPDT Switch w/Driver;Vcc 5/-12V;Freq 4-18GHz;Insert Loss 2.2dB;SMA Jack
21	MT3581H1P1C2S2	34		M1206	SPDT Switch w/Driver;Vcc ±12V;Freq 4-18GHz;Insert Loss 2.2dB;SMA Jack
22	MT3581H1P1C2S3	34		M1206	SPDT Switch w/Driver;Vcc ±15V;Freq 4-18GHz;Insert Loss 2.2dB;SMA Jack
23	MT3581H1P2C1S1	34		M1208	SPDT Switch w/Driver;Vcc 5/-12V;Freq 4-18GHz;Insert Loss 2.2dB;SMC Jack
24	MT3581H1P2C1S2	34		M1206	SPDT Switch w/Driver;Vcc ±12V;Freq 4-18GHz;Insert Loss 2.2dB;SMC Jack
25	MT3581H1P2C1S3	34		M1206	SPDT Switch w/Driver;Vcc ±15V;Freq 4-18GHz;Insert Loss 2.2dB;SMC Jack
26	MT3581H1P2C2S1	34		M1206	SPDT Switch w/Driver;Vcc 5/-12V;Freq 4-18GHz;Insert Loss 2.2dB;SMC Jack
27	MT3581H1P2C2S2	34		M1206	SPDT Switch w/Driver;Vcc ±12V;Freq 4-18GHz;Insert Loss 2.2dB;SMC Jack
28	MT3581H1P2C2S3	34		M1206	SPDT Switch w/Driver;Vcc ±15V;Freq 4-18GHz;Insert Loss 2.2dB;SMC Jack
29	MT3581H1P3C1S1	34		M1208	SPDT Switch w/Driver;Vcc 5/-12V;Freq 4-18GHz;Insert Loss 2.2dB;Solder Pin
30	MT3581H1P3C1S2	34		M1208	SPDT Switch w/Driver;Vcc ±12V;Freq 4-18GHz;Insert Loss 2.2dB;Solder Pin
31	MT3581H1P3C1S3	34		M1208	SPDT Switch w/Driver;Vcc ±15V;Freq 4-18GHz;Insert Loss 2.2dB;Solder Pin
32	MT3581H1P3C2S1	34		M1206	SPDT Switch w/Driver;Vcc 5/-12V;Freq 4-18GHz;Insert Loss 2.2dB;Solder Pin
33	MT3581H1P3C2S2	34		M1206	SPDT Switch w/Driver;Vcc ±12V;Freq 4-18GHz;Insert Loss 2.2dB;Solder Pin
34	MT3581H1P3C2S3	34		M1206	SPDT Switch w/Driver;Vcc ±15V;Freq 4-18GHz;Insert Loss 2.2dB;Solder Pin
35	MT3581H3P1C1S1	34		M1208	SPDT Switch w/Driver;Vcc 5/-12V;Freq 8-18GHz;Insert Loss 2.1dB;SMA Jack
36	MT3581H3P1C1S2	34		M1208	SPDT Switch w/Driver;Vcc ±12V;Freq 8-18GHz;Insert Loss 2.1dB;SMA Jack
37	MT3581H3P1C1S3	34		M1208	SPDT Switch w/Driver;Vcc ±15V;Freq 8-18GHz;Insert Loss 2.1dB;SMA Jack
38	MT3581H3P1C2S1	34		M1206	SPDT Switch w/Driver;Vcc 5/-12V;Freq 8-18GHz;Insert Loss 2.1dB;SMA Jack
39	MT3581H3P1C2S2	34		M1206	SPDT Switch w/Driver;Vcc ±12V;Freq 8-18GHz;Insert Loss 2.1dB;SMA Jack
40	MT3581H3P1C2S3	34		M1206	SPDT Switch w/Driver;Vcc ±15V;Freq 8-18GHz;Insert Loss 2.1dB;SMA Jack
41	MT3581H3P2C1S1	34		M1208	SPDT Switch w/Driver;Vcc 5/-12V;Freq 8-18GHz;Insert Loss 2.1dB;SMC Jack
42	MT3581H3P2C1S2	34		M1206	SPDT Switch w/Driver;Vcc ±12V;Freq 8-18GHz;Insert Loss 2.1dB;SMC Jack
43	MT3581H3P2C1S3	34		M1206	SPDT Switch w/Driver;Vcc ±15V;Freq 8-18GHz;Insert Loss 2.1dB;SMC Jack
44	MT3581H3P2C2S1	34		M1206	SPDT Switch w/Driver;Vcc 5/-12V;Freq 8-18GHz;Insert Loss 2.1dB;SMC Jack
45	MT3581H3P2C2S2	34		M1206	SPDT Switch w/Driver;Vcc ±12V;Freq 8-18GHz;Insert Loss 2.1dB;SMC Jack
46	MT3581H3P2C2S3	34		M1206	SPDT Switch w/Driver;Vcc ±15V;Freq 8-18GHz;Insert Loss 2.1dB;SMC Jack
47	MT3581H3P3C1S1	34		M1208	SPDT Switch w/Driver;Vcc 5/-12V;Freq 8-18GHz;Insert Loss 2.1dB;Solder Pin
48	MT3581H3P3C1S2	34		M1208	SPDT Switch w/Driver;Vcc ±12V;Freq 8-18GHz;Insert Loss 2.1dB;Solder Pin
49	MT3581H3P3C1S3	34		M1208	SPDT Switch w/Driver;Vcc ±15V;Freq 8-18GHz;Insert Loss 2.1dB;Solder Pin
50	MT3581H3P3C2S1	34		M1206	SPDT Switch w/Driver;Vcc 5/-12V;Freq 8-18GHz;Insert Loss 2.1dB;Solder Pin
51	MT3581H3P3C2S2	34		M1206	SPDT Switch w/Driver;Vcc ±12V;Freq 8-18GHz;Insert Loss 2.1dB;Solder Pin
52	MT3581H3P3C2S3	34		M1206	SPDT Switch w/Driver;Vcc ±15V;Freq 8-18GHz;Insert Loss 2.1dB;Solder Pin
53	MT3581H4P1C1S1	34		M1208	SPDT Switch w/Driver;Vcc 5/-12V;Freq 12.4-18GHz;Insert Loss 2.0dB;SMA Jack
54	MT3581H4P1C1S2	34		M1208	SPDT Switch w/Driver;Vcc ±12V;Freq 12.4-18GHz;Insert Loss 2.0dB;SMA Jack
55	MT3581H4P1C1S3	34		M1208	SPDT Switch w/Driver;Vcc ±15V;Freq 12.4-18GHz;Insert Loss 2.0dB;SMA Jack
56	MT3581H4P1C2S1	34		M1206	SPDT Switch w/Driver;Vcc 5/-12V;Freq 12.4-18GHz;Insert Loss 2.0dB;SMA Jack
57	MT3581H4P1C2S2	34		M1206	SPDT Switch w/Driver;Vcc ±12V;Freq 12.4-18GHz;Insert Loss 2.0dB;SMA Jack
58	MT3581H4P1C2S3	34		M1206	SPDT Switch w/Driver;Vcc ±15V;Freq 12.4-18GHz;Insert Loss 2.0dB;SMA Jack
59	MT3581H4P2C1S1	34		M1208	SPDT Switch w/Driver;Vcc 5/-12V;Freq 12.4-18GHz;Insert Loss 2.0dB;SMC Jack
60	MT3581H4P2C1S2	34		M1206	SPDT Switch w/Driver;Vcc ±12V;Freq 12.4-18GHz;Insert Loss 2.0dB;SMC Jack
61	MT3581H4P2C1S3	34		M1206	SPDT Switch w/Driver;Vcc ±15V;Freq 12.4-18GHz;Insert Loss 2.0dB;SMC Jack
62	MT3581H4P2C2S1	34		M1206	SPDT Switch w/Driver;Vcc 5/-12V;Freq 12.4-18GHz;Insert Loss 2.0dB;SMC Jack
63	MT3581H4P2C2S2	34		M1206	SPDT Switch w/Driver;Vcc ±12V;Freq 12.4-18GHz;Insert Loss 2.0dB;SMC Jack
64	MT3581H4P2C2S3	34		M1206	SPDT Switch w/Driver;Vcc ±15V;Freq 12.4-18GHz;Insert Loss 2.0dB;SMC Jack
65	MT3581H4P3C1S1	34		M1208	SPDT Switch w/Driver;Vcc 5/-12V;Freq 12.4-18GHz;Insert Loss 2.0dB;Solder Pin
66	MT3581H4P3C1S2	34		M1208	SPDT Switch w/Driver;Vcc ±12V;Freq 12.4-18GHz;Insert Loss 2.0dB;Solder Pin
67	MT3581H4P3C1S3	34		M1208	SPDT Switch w/Driver;Vcc ±15V;Freq 12.4-18GHz;Insert Loss 2.0dB;Solder Pin
68	MT3581H4P3C2S1	34		M1206	SPDT Switch w/Driver;Vcc 5/-12V;Freq 12.4-18GHz;Insert Loss 2.0dB;Solder Pin
69	MT3581H4P3C2S2	34		M1206	SPDT Switch w/Driver;Vcc ±12V;Freq 12.4-18GHz;Insert Loss 2.0dB;Solder Pin
70	MT3581H4P3C2S3	34		M1206	SPDT Switch w/Driver;Vcc ±15V;Freq 12.4-18GHz;Insert Loss 2.0dB;Solder Pin
71	MT3581H-P1C1S1	34		M1208	SPDT Switch w/Driver;Vcc 5/-12V;Freq 2-18GHz;Insert Loss 2.3dB;SMA Jack
72	MT3581H-P1C1S2	34		M1208	SPDT Switch w/Driver;Vcc ±12V;Freq 2-18GHz;Insert Loss 2.3dB;SMA Jack
73	MT3581H-P1C1S3	34		M1208	SPDT Switch w/Driver;Vcc ±15V;Freq 2-18GHz;Insert Loss 2.3dB;SMA Jack
74	MT3581H-P1C2S1	34		M1206	SPDT Switch w/Driver;Vcc 5/-12V;Freq 2-18GHz;Insert Loss 2.3dB;SMA Jack
75	MT3581H-P1C2S2	34		M1206	SPDT Switch w/Driver;Vcc ±12V;Freq 2-18GHz;Insert Loss 2.3dB;SMA Jack
76	MT3581H-P1C2S3	34		M1206	SPDT Switch w/Driver;Vcc ±15V;Freq 2-18GHz;Insert Loss 2.3dB;SMA Jack
77	MT3581H-P2C1S1	34		M1208	SPDT Switch w/Driver;Vcc 5/-12V;Freq 2-18GHz;Insert Loss 2.3dB;SMC Jack
78	MT3581H-P2C1S3	34		M1206	SPDT Switch w/Driver;Vcc ±15V;Freq 2-18GHz;Insert Loss 2.3dB;SMC Jack
79	MT3581H-P2C2S1	34		M1206	SPDT Switch w/Driver;Vcc 5/-12V;Freq 2-18GHz;Insert Loss 2.3dB;SMC Jack
80	MT3581H-P2C2S2	34		M1206	SPDT Switch w/Driver;Vcc ±12V;Freq 2-18GHz;Insert Loss 2.3dB;SMC Jack
81	MT3581H-P2C2S3	34		M1206	SPDT Switch w/Driver;Vcc ±15V;Freq 2-18GHz;Insert Loss 2.3dB;SMC Jack
82	MT3581H-P3C1S1	34		M1208	SPDT Switch w/Driver;Vcc 5/-12V;Freq 2-18GHz;Insert Loss 2.3dB;Solder Pin
83	MT3581H-P3C1S2	34		M1208	SPDT Switch w/Driver;Vcc ±12V;Freq 2-18GHz;Insert Loss 2.3dB;Solder Pin
84	MT3581H-P3C1S3	34		M1208	SPDT Switch w/Driver;Vcc ±15V;Freq 2-18GHz;Insert Loss 2.3dB;Solder Pin
85	MT3581H-P3C2S1	34		M1206	SPDT Switch w/Driver;Vcc 5/-12V;Freq 2-18GHz;Insert Loss 2.3dB;Solder Pin
86	MT3581H-P3C2S2	34		M1206	SPDT Switch w/Driver;Vcc ±12V;Freq 2-18GHz;Insert Loss 2.3dB;Solder Pin
87	MT3581H-P3C2S3	34		M1206	SPDT Switch w/Driver;Vcc ±15V;Freq 2-18GHz;Insert Loss 2.3dB;Solder Pin
88	MT3583A-P1S1	34		M1208 Ø	Reflective SPDT Switch;w/Driver;Vcc 5/-12V;Freq .5-4GHz;Insert Loss 1.1dB;SMA Jack
89	MT3583A-P1S2	34		M1208 Ø	Reflective SPDT Switch;w/Driver;Vcc ±12V;Freq .5-4GHz;Insert Loss 1.1dB;SMA Jack
90	MT3583A-P1S3	34		M1208 Ø	Reflective SPDT Switch;w/Driver;Vcc ±15V;Freq .5-4GHz;Insert Loss 1.1dB;SMA Jack
91	MT3583A-P2S1	34		M1208 Ø	Reflective SPDT Switch w/Driver;Vcc 5/-12V;Freq .5-4GHz;Insert Loss 1.1dB;SMC Jack
92	MT3583A-P2S2	34		M1208 Ø	Reflective SPDT Switch w/Driver;Vcc ±12V;Freq .5-4GHz;Insert Loss 1.1dB;SMC Jack
93	MT3583A-P2S3	34		M1208 Ø	Reflective SPDT Switch w/Driver;Vcc ±15V;Freq .5-4GHz;Insert Loss 1.1dB;SMC Jack
94	MT3583A-P3S1	34		M1208 Ø	Reflective SPDT Switch w/Driver;Vcc 5/-12V;Freq .5-4GHz;Insert Loss 1.1dB;Solder Pin
95	MT3583A-P3S2	34		M1208 Ø	Reflective SPDT Switch w/Driver;Vcc ±12V;Freq .5-4GHz;Insert Loss 1.1dB;Solder Pin
96	MT3583A-P3S3	34		M1208 Ø	Reflective SPDT Switch w/Driver;Vcc ±15V;Freq .5-4GHz;Insert Loss 1.1dB;Solder Pin
97	MT3583B-P1S1	34		M1208 Ø	Reflective SPDT Switch;w/Driver;Vcc 5/-12V;Freq 4-8GHz;Insert Loss 1.3dB;SMA Jack
98	MT3583B-P1S2	34		M1208 Ø	Reflective SPDT Switch;w/Driver;Vcc ±12V;Freq 4-8GHz;Insert Loss 1.3dB;SMA Jack
99	MT3583B-P1S3	34		M1208 Ø	Reflective SPDT Switch;w/Driver;Vcc ±15V;Freq 4-8GHz;Insert Loss 1.3d B;SMA Jack
100	MT3583B-P2S1	34		M1208 Ø	Reflective SPDT Switch w/Driver;Vcc 5/-12V;Freq 4-8GHz;Insert Loss 1.3dB;SMC Jack
101	MT3583B-P2S2	34		M1208 Ø	Reflective SPDT Switch w/Driver;Vcc ±12V;Freq 4-8GHz;Insert Loss 1.3dB;SMC Jack
102	MT3583B-P2S3	34		M1208 Ø	Reflective SPDT Switch w/Driver;Vcc ±15V;Freq 4-8GHz;Insert Loss 1.3dB;SMC Jack
103	MT3583B-P3S1	34		M1208 Ø	Reflective SPDT Switch w/Driver;Vcc 5/-12V;Freq 4-8GHz;Insert Loss 1.3dB;Solder Pin
104	MT3583B-P3S2	34		M1208 Ø	Reflective SPDT Switch w/Driver;Vcc ±12V;Freq 4-8GHz;Insert Loss 1.3dB;Solder Pin
105	MT3583B-P3S3	34		M1208 Ø	Reflective SPDT Switch w/Driver;Vcc ±15V;Freq 4-8GHz;Insert Loss 1.3dB;Solder Pin
106	MT3583C-P1S1	34		M1208 Ø	Reflective SPDT Switch;w/Driver;Vcc 5/-12V;Freq 8-12.4GHz;Insert Loss 1.5dB;SMA Jack
107	MT3583C-P1S2	34		M1208 Ø	Reflective SPDT Switch;w/Driver;Vcc ±12V;Freq 8-12.4GHz;Insert Loss 1.5dB;SMA Jack
108	MT3583C-P1S3	34		M1208 Ø	Reflective SPDT Switch;w/Driver;Vcc ±15V;Freq 8-12.4GHz;Insert Loss 1.5dB;SMA Jack
109	MT3583C-P2S1	34		M1208 Ø	Reflective SPDT Switch w/Driver;Vcc 5/-12V;Freq 8-12.4GHz;Insert Loss 1.5dB;SMC Jack
110	MT3583C-P2S2	34		M1208 Ø	Reflective SPDT Switch w/Driver;Vcc ±12V;Freq 8-12.4GHz;Insert Loss 1.5dB;SMC Jack

SYMBOLS AND CODES EXPLAINED IN INTERPRETER

8. MISCELLANEOUS DEVICES

IN ORDER OF (1) USE and (2) TYPE No.

LINE No.	[2] TYPE No.	[1] USE	DESCRIPTION MAT.	DESCRIPTION DWG. No.	TECHNICAL DATA
1	MT3583C-P2S3	34		M1208 ☑	Reflective SPDT Switch w/Driver;Vcc ±15V;Freq 8-12.4GHz;Insert Loss 1.5dB;SMC Jack
2	MT3583C-P3S1	34		M1208 ☑	Reflective SPDT Switch w/Driver;Vcc 5/-12V;Freq 8-12.4GHz;Insert Loss 1.5dB;Solder Pin
3	MT3583C-P3S2	34		M1208 ☑	Reflective SPDT Switch w/Driver;Vcc ±12V;Freq 8-12.4GHz;Insert Loss 1.5dB;Solder Pin
4	MT3583C-P3S3	34		M1208 ☑	Reflective SPDT Switch w/Driver;Vcc ±15V;Freq 8-12.4GHz;Insert Loss 1.5dB;Solder Pin
5	MT3583H4P1S1	34		M1208 ☑	Reflective SPDT Switch;w/Driver;Vcc 5/-12V;Freq 12.4-18GHz;Insert Loss 1.9dB;SMA Jack
6	MT3583H4P1S2	34		M1208 ☑	Reflective SPDT Switch;w/Driver;Vcc ±12V;Freq 12.4-18GHz;Insert Loss 1.9dB;SMA Jack
7	MT3583H4P1S3	34		M1208 ☑	Reflective SPDT Switch w/Driver;Vcc ±15V;Freq 12.4-18GHz;Insert Loss 1.9dB;SMA Jack
8	MT3583H4P2S1	34		M1208 ☑	Reflective SPDT Switch w/Driver;Vcc 5/-12V;Freq 12.4-18GHz;Insert Loss 1.9dB;SMC Jack
9	MT3583H4P2S2	34		M1208 ☑	Reflective SPDT Switch w/Driver;Vcc ±12V;Freq 12.4-18GHz;Insert Loss 1.9dB;SMC Jack
10	MT3583H4P2S3	34		M1208 ☑	Reflective SPDT Switch w/Driver;Vcc ±15V;Freq 12.4-18GHz;Insert Loss 1.9dB;SMC Jack
11	MT3583H4P3S1	34		M1208 ☑	Reflective SPDT Switch w/Driver;Vcc 5/-12V;Freq 12.4-18GHz;Insert Loss 1.9dB;Solder Pin
12	MT3583H4P3S2	34		M1208 ☑	Reflective SPDT Switch w/Driver;Vcc ±12V;Freq 12.4-18GHz;Insert Loss 1.9dB;Solder Pin
13	MT3583H4P3S3	34		M1208 ☑	Reflective SPDT Switch w/Driver;Vcc ±15V;Freq 12.4-18GHz;Insert Loss 1.9dB;Solder Pin
14	MT3583H-P1S1	34		M1208 ☑	Reflective SPDT Switch;w/Driver;Vcc 5/-12V;Freq 2-18GHz;Insert Loss 2.0dB;SMA Jack
15	MT3583H-P1S2	34		M1208 ☑	Reflective SPDT Switch;w/Driver;Vcc ±12V;Freq 2.18GHz;Insert Loss 2.0dB;SMA Jack
16	MT3583H-P1S3	34		M1208 ☑	Reflective SPDT Switch w/Driver;Vcc ±15V;Freq 2-18GHz;Insert Loss 2.0dB;SMA Jack
17	MT3583H-P2S1	34		M1208 ☑	Reflective SPDT Switch w/Driver;Vcc 5/-12V;Freq 2-18GHz;Insert Loss 2.0dB;SMC Jack
18	MT3583H-P2S2	34		M1208 ☑	Reflective SPDT Switch w/Driver;Vcc ±12V;Freq 2-18GHz;Insert Loss 2.0dB;SMC Jack
19	MT3583H-P2S3	34		M1208 ☑	Reflective SPDT Switch w/Driver;Vcc ±15V;Freq 2.18GHz;Insert Loss 2.0dB;SMC Jack
20	MT3583H-P3S1	34		M1208 ☑	Reflective SPDT Switch w/Driver;Vcc 5/-12V;Freq 2.18GHz;Insert Loss 2.0dB;Solder Pin
21	MT3583H-P3S2	34		M1208 ☑	Reflective SPDT Switch w/Driver;Vcc ±12V;Freq 2-18GHz;Insert Loss 2.0dB;Solder Pin
22	MT3583H-P3S3	34		M1208 ☑	Reflective SPDT Switch w/Driver;Vcc ±15V;Freq 2-18GHz;Insert Loss 2.0dB;Solder Pin
23	MT3584A-P1S1	34		M1208 ☑	Reflective SPDT Switch w/Driver;Vcc 5/-12V;Freq .5-4GHz;Insert Loss 1.5dB;SMA Jack
24	MT3584A-P1S2	34		M1208 ☑	Reflective SPDT Switch w/Driver;Vcc ±12V;Freq .5-4GHz;Insert Loss 1.5dB;SMA Jack
25	MT3584A-P1S3	34		M1208 ☑	Reflective SPDT Switch w/Driver;Vcc ±15V;Freq .5-4GHz;Insert Loss 1.5dB;SMA Jack
26	MT3584A-P2S1	34		M1208 ☑	Reflective SPDT Switch w/Driver;Vcc 5/12V;Freq .5-4GHz;Insert Loss 1.5dB;SMC Jack
27	MT3584A-P2S2	34		M1208 ☑	Reflective SPDT Switch w/Driver;Vcc ±12V;Freq .5-4GHz;Insert Loss 1.5dB;SMC Jack
28	MT3584A-P2S3	34		M1208 ☑	Reflective SPDT Switch w/Driver;Vcc ±15V;Freq .5-4GHz;Insert Loss 1.5dB;SMC Jack
29	MT3584A-P3S1	34		M1208 ☑	Reflective SPDT Switch w/Driver;Vcc 5/-12V;Freq 5-4GHz;Insert Loss 1.5dB;Solder Pin
30	MT3584A-P3S2	34		M1208 ☑	Reflective SPDT Switch w/Driver;Vcc ±12V;Freq .5-4GHz;Insert Loss 1.5dB;Solder Pin
31	MT3584A-P3S3	34		M1208 ☑	Reflective SPDT Switch w/Driver;Vcc ±15V;Freq .5-4GHz;Insert Loss 1.5dB;Solder Pin
32	MT3584B-P1S1	34		M1208 ☑	Reflective SPDT Switch w/Driver;Vcc 5/-12V;Freq 4-8GHz;Insert Loss 1.7dB;SMA Jack
33	MT3584B-P1S2	34		M1208 ☑	Reflective SPDT Switch w/Driver;Vcc ±12V;Freq 4-8GHz;Insert Loss 1.7dB;SMA Jack
34	MT3584B-P1S3	34		M1208 ☑	Reflective SPDT Switch w/Driver;Vcc ±15V;Freq 4-8GHz;Insert Loss 1.7dB;SMA Jack
35	MT3584B-P2S1	34		M1208 ☑	Reflective SPDT Switch w/Driver;Vcc 5/12V;Freq 4-8GHz;Insert Loss 1.7dB;SMC Jack
36	MT3584B-P2S2	34		M1208 ☑	Reflective SPDT Switch w/Driver;Vcc ±12V;Freq 4-8GHz;Insert Loss 1.7dB;SMC Jack
37	MT3584B-P2S3	34		M1208 ☑	Reflective SPDT Switch w/Driver;Vcc ±15V;Freq 4-8GHz;Insert Loss 1.7dB;SMC Jack
38	MT3584B-P3S1	34		M1208 ☑	Reflective SPDT Switch w/Driver;Vcc 5/-12V;Freq 4-8GHz;Insert Loss 1.7dB;Solder Pin
39	MT3584B-P3S2	34		M1208 ☑	Reflective SPDT Switch w/Driver;Vcc ±12V;Freq 4-8GHz;Insert Loss 1.7dB;Solder Pin
40	MT3584B-P3S3	34		M1208 ☑	Reflective SPDT Switch w/Driver;Vcc ±15V;Freq 4-8GHz;Insert Loss 1.7dB;Solder Pin
41	MT3584C-P1S1	34		M1208 ☑	Reflective SPDT Switch w/Driver;Vcc 5/-12V;Freq 8-12.4GHz;Insert Loss 2.0dB;SMA Jack
42	MT3584C-P1S2	34		M1208 ☑	Reflective SPDT Switch w/Driver;Vcc ±12V;Freq 8-12.4GHz;Insert Loss 2.0dB;SMA Jack
43▼	MT3584C-P1S3	34		M1208 ☑	Reflective SPDT Switch w/Driver;Vcc ±15V;Freq 8-12.4GHz;Insertion Loss 2.0dB;SMA Jack
44	MT3584C-P2S1	34		M1208 ☑	Reflective SPDT Switch w/Driver;Vcc 5/12V;Freq 8-12.4GHz;Insert Loss 2.0dB;SMC Jack
45	MT3584C-P2S2	34		M1208 ☑	Reflective SPDT Switch w/Driver;Vcc ±12V;Freq 8-12.4GHz;Insert Loss 2.0dB;SMC Jack
46	MT3584C-P2S3	34		M1208 ☑	Reflective SPDT Switch w/Driver;Vcc ±15V;Freq 8-12.4GHz;Insert Loss 2.0dB;SMC Jack
47	MT3584C-P3S1	34		M1208 ☑	Reflective SPDT Switch w/Driver;Vcc 5/-12V;Freq 8-12.4GHz;Insert Loss 2.0dB;Solder Pin
48	MT3584C-P3S2	34		M1208 ☑	Reflective SPDT Switch w/Driver;Vcc ±12V;Freq 8-12.4GHz;Insert Loss 2.0dB;Solder Pin
49	MT3584C-P3S3	34		M1208 ☑	Reflective SPDT Switch w/Driver;Vcc ±15V;Freq 8-12.4GHz;Insert Loss 2.0dB;Solder Pin
50	MT3584H4P1S1	34		M1208 ☑	Reflective SPDT Switch w/Driver;Vcc 5/-12V;Freq 12.4-18GHz;Insert Loss 2.4dB;SMA Jack
51	MT3584H4P1S2	34		M1208 ☑	Reflective SPDT Switch w/Driver;Vcc ±12V;Freq 12.4-18GHz;Insert Loss 2.4dB;SMA Jack
52♦	MT3584H4P1S3	34		M1208 ☑	Reflective SPDT Switch w/Driver;Vcc ±15V;Freq 8-12.4GHz;Insertion Loss 2.0dB;SMA Jack
53	MT3584H4P2S1	34		M1208 ☑	Reflective SPDT Switch w/Driver;Vcc 5/-12V;Freq 12.4-18GHz;Insert Loss 2.4dB;SMC Jack
54	MT3584H4P2S2	34		M1208 ☑	Reflective SPDT Switch w/Driver;Vcc ±12V;Freq 12.4-18GHz;Insert Loss 2.4dB;SMC Jack
55	MT3584H4P2S3	34		M1208 ☑	Reflective SPDT Switch w/Driver;Vcc ±15V;Freq 12.4-18GHz;Insert Loss 2.4dB;SMC Jack
56	MT3584H4P3S1	34		M1208 ☑	Reflective SPDT Switch w/Driver;Vcc 5/-12V;Freq 12.4-18GHz;Insert Loss 2.4dB;Solder Pin
57	MT3584H4P3S2	34		M1208 ☑	Reflective SPDT Switch w/Driver;Vcc ±12V;Freq 12.4-18GHz;Insert Loss 2.4dB;Solder Pin
58	MT3584H4P3S3	34		M1208 ☑	Reflective SPDT Switch w/Driver;Vcc ±15V;Freq 12.4-18GHz;Insert Loss 2.4dB;Solder Pin
59	MT3584H-P1S1	34		M1208 ☑	Reflective SPDT Switch w/Driver;Vcc 5/-12V;Freq 2-18GHz;Insert Loss2. 5dB;SMA Jack
60	MT3584H-P1S2	34		M1208 ☑	Reflective SPDT Switch w/Driver;Vcc ±12V;Freq 2-18GHz;Insert Loss 2.5dB;SMA Jack
61	MT3584H-P1S3	34		M1208 ☑	Reflective SPDT Switch w/Driver;Vcc ±15V;Freq 2-18GHz;Insert Loss 2.5dB;SMA Jack
62	MT3584H-P2S1	34		M1208 ☑	Reflective SPDT Switch w/Driver;Vcc 5/-12V;Freq 2-18GHz;Insert Loss 2.5dB; SMC Jack
63	MT3584H-P2S2	34		M1208 ☑	Reflective SPDT Switch w/Driver;Vcc ±12V;Freq 2-18GHz;Insert Loss 2.5dB;SMC Jack
64	MT3584H-P2S3	34		M1208 ☑	Reflective SPDT Switch w/Driver;Vcc ±15V;Freq 2-18GHz;Insert Loss 2.5dB;SMC Jack
65	MT3584H-P3S1	34		M1208 ☑	Reflective SPDT Switch w/Driver;Vcc 5/-12V;Freq 2-18GHz;Insert Loss 2.5dB;Solder Pin
66	MT3584H-P3S2	34		M1208 ☑	Reflective SPDT Switch w/Driver;Vcc ±12V;Freq 2-18GHz;Insert Loss 2.5dB;Solder Pin
67	MT3584H-P3S3	34		M1208 ☑	Reflective SPDT Switch w/Driver;Vcc ±15V;Freq 2-18GHz;Insert Loss 2.5dB;Solder Pin
68	MT3585A-P1S1	34		M1208 ☑	Non-Reflective SPDT Switch w/Driver;Vcc 5/-12V;Freq .5-4GHz;Insert Loss 1.1dB;SMA Jack
69	MT3585A-P1S2	34		M1208 ☑	Non-Reflective SPDT Switch w/Driver;Vcc ±12V;Freq .5-4GHz;Insert Loss 1.1dB;SMA Jack
70	MT3585A-P1S3	34		M1208 ☑	Non-Reflective SPDT Switch w/Driver;Vcc ±15V;Freq .5-4GHz;Insert Loss 1.1dB;SMA Jack
71	MT3585A-P2S1	34		M1208 ☑	Non-Reflective SPDT Switch w/Driver;Vcc 5/-12V;Freq .5-4GHz;Insert Loss 1.1dB;SMC Jack
72	MT3585A-P2S2	34		M1208 ☑	Non-Reflective SPDT Switch w/Driver;Vcc ±12V;Freq .5-4GHz;Insert Loss 1.1dB;SMC Jack
73	MT3585A-P2S3	34		M1208 ☑	Non-Reflective SPDT Switch w/Driver;Vcc ±15V;Freq .5-4GHz;Insert Loss 1.1dB;SMC Jack
74	MT3585A-P3S1	34		M1208 ☑	Non-Reflective SPDT Switch w/Driver;Vcc 5/-12V;Freq .5-4GHz;Insert Loss 1.1dB;Solder Pin
75	MT3585A-P3S2	34		M1208 ☑	Non-Reflective SPDT Switch w/Driver;Vcc ±12V;Freq .5-4GHz;Insert Loss 1.1dB;Solder Pin
76	MT3585A-P3S3	34		M1208 ☑	Non-Reflective SPDT Switch w/Driver;Vcc ±15V;Freq .5-4GHz;Insert Loss 1.1dB;Solder Pin
77	MT3585B-P1S1	34		M1208 ☑	Non-Reflective SPDT Switch w/Driver;Vcc 5/-12V;Freq 4-8GHz;Insert Loss 1.3dB;SMA Jack
78	MT3585B-P1S2	34		M1208 ☑	Non-Reflective SPDT Switch w/Driver;Vcc ±12V;Freq 4-8GHz;Insert Loss 1.3dB;SMA Jack
79	MT3585B-P1S3	34		M1208 ☑	Non-Reflective SPDT Switch w/Driver;Vcc ±15V;Freq 4-8GHz;Insert Loss 1.3dB;SMA Jack
80	MT3585B-P2S1	34		M1208 ☑	Non-Reflective SPDT Switch w/Driver;Vcc 5/-12V;Freq 4-8GHz;Insert Loss 1.3dB;SMC Jack
81	MT3585B-P2S2	34		M1208 ☑	Non-Reflective SPDT Switch w/Driver;Vcc ±12V;Freq 4-8GHz;Insert Loss 1.3dB;SMC Jack
82	MT3585B-P2S3	34		M1208 ☑	Non-Reflective SPDT Switch w/Driver;Vcc ±15V;Freq 4-8GHz;Insert Loss 1.3dB;SMC Jack
83	MT3585B-P3S1	34		M1208 ☑	Non-Reflective SPDT Switch w/Driver;Vcc 5/-12V;Freq 4-8GHz;Insert Loss 1.3dB;Solder Pin
84	MT3585B-P3S2	34		M1208 ☑	Non-Reflective SPDT Switch w/Driver;Vcc ±12V;Freq 4-8GHz;Insert Loss 1.3dB;Solder Pin
85	MT3585B-P3S3	34		M1208 ☑	Non-Reflective SPDT Switch w/Driver;Vcc ±15V;Freq 4-8GHz;Insert Loss 1.3dB;Solder Pin
86	MT3585C-P1S1	34		M1208 ☑	Non-Reflective SPDT Switch w/Driver;Vcc 5/-12V;Freq 8-12.4GHz;Insert Loss 1.6dB;SMA Jack
87	MT3585C-P1S2	34		M1208 ☑	Non-Reflective SPDT Switch w/Driver;Vcc ±12V;Freq 8-12.4GHz;Insert Loss 1.6dB;SMA Jack
88	MT3585C-P1S3	34		M1208 ☑	Non-Reflective SPDT Switch w/Driver;Vcc ±15V;Freq 8-12.4GHz;Insert Loss 1.6dB;SMA Jack
89	MT3585C-P2S1	34		M1208 ☑	Non-Reflective SPDT Switch w/Driver;Vcc 5/-12V;Freq 8-12.4GHz;Insert Loss 1.6dB;SMC Jack
90	MT3585C-P2S2	34		M1208 ☑	Non-Reflective SPDT Switch w/Driver;Vcc ±12V;Freq 8-12.4GHz;Insert Loss 1.6dB;SMC Jack
91	MT3585C-P2S3	34		M1208 ☑	Non-Reflective SPDT Switch w/Driver;Vcc ±15V;Freq 8-12.4GHz;Insert Loss 1.6dB;SMC Jack
92	MT3585C-P3S1	34		M1208 ☑	Non-Reflective SPDT Switch w/Driver;Vcc 5/-12V;Freq 8-12.4GHz;Insert Loss 1.6dB;Solder Pin
93	MT3585C-P3S2	34		M1208 ☑	Non-Reflective SPDT Switch w/Driver;Vcc ±12V;Freq 8-12.4GHz;Insert Loss 1.6dB;Solder Pin
94	MT3585C-P3S3	34		M1208 ☑	Non-Reflective SPDT Switch w/Driver;Vcc ±15V;Freq 8-12.4GHz;Insert Loss 1.6dB;Solder Pin
95	MT3585H4P1S1	34		M1208 ☑	Non-Reflective SPDT Switch w/Driver;Vcc 5/-12V;Freq 12.4-18GHz;Insert Loss 2.1dB;SMA Jack
96	MT3585H4P1S2	34		M1208 ☑	Non-Reflective SPDT Switch w/Driver;Vcc ±12V;Freq 12.4-18GHz;Insert Loss 2.1dB;SMA Jack
97	MT3585H4P1S3	34		M1208 ☑	Non-Reflective SPDT Switch w/Driver;Vcc ±15V;Freq 12.4-18GHz;Insert Loss 2.1dB;SMA Jack
98	MT3585H4P2S1	34		M1208 ☑	Non-Reflective SPDT Switch w/Driver;Vcc 5/-12V;Freq 12.4-18GHz;Insert Loss 2.1dB;SMC Jack
99	MT3585H4P2S2	34		M1208 ☑	Non-Reflective SPDT Switch w/Driver;Vcc ±12V;Freq 12.4-18GHz;Insert Loss 2.1dB;SMC Jack
100	MT3585H4P2S3	34		M1208 ☑	Non-Reflective SPDT Switch w/Driver;Vcc ±15V;Freq 12.4-18GHz;Insert Loss 2.1dB;SMC Jack
101	MT3585H4P3S1	34		M1208 ☑	Non-Reflective SPDT Switch w/Driver;Vcc 5/-12V;Freq 12.4-18GHz;Insert Loss 2.1dB;Solder Pin
102	MT3585H4P3S2	34		M1208 ☑	Non-Reflective SPDT Switch w/Driver;Vcc ±12V;Freq 12.4-18GHz;Insert Loss 2.1dB;Solder Pin
103	MT3585H4P3S3	34		M1208 ☑	Non-Reflective SPDT Switch w/Driver;Vcc ±15V;Freq 12.4-18GHz;Insert Loss 2.1dB;Solder Pin
104	MT3585H-P1S1	34		M1208 ☑	Non-Reflective SPDT Switch w/Driver;Vcc 5/-12V;Freq 2-18GHz;Insert Loss 2.2dB;SMA Jack
105	MT3585H-P1S2	34		M1208 ☑	Non-Reflective SPDT Switch w/Driver;Vcc ±12V;Freq 2-18GHz;Insert Loss 2.2dB;SMA Jack
106	MT3585H-P1S3	34		M1208 ☑	Non-Reflective SPDT Switch w/Driver;Vcc ±15V;Freq 2-18GHz;Insert Loss 2.2dB;SMA Jack
107	MT3585H-P2S1	34		M1208 ☑	Non-Reflective SPDT Switch w/Driver;Vcc 5/-12V;Freq 2-18GHz;Insert Loss 2.2dB;SMC Jack
108	MT3585H-P2S2	34		M1208 ☑	Non-Reflective SPDT Switch w/Driver;Vcc ±12V;Freq 2-18GHz;Insert Loss 2.2dB;SMC Jack
109	MT3585H-P2S3	34		M1208 ☑	Non-Reflective SPDT Switch w/Driver;Vcc ±15V;Freq 2-18GHz;Insert Loss 2.2dB;SMC Jack
110	MT3585H-P3S1	34		M1208 ☑	Non-Reflective SPDT Switch w/Driver;Vcc 5/-12V;Freq 2-18GHz;Insert Loss 2.2dB;Solder Pin

SYMBOLS AND CODES EXPLAINED IN INTERPRETER

8. MISCELLANEOUS DEVICES

IN ORDER OF (1) USE and (2) TYPE No.

LINE No.	2 TYPE No.	1 USE	DESCRIPTION MAT.	DESCRIPTION DWG. No.	TECHNICAL DATA
1	MT3585H-P3S2	34		M1208 ☑	Non-Reflective SPDT Switch w/Driver;Vcc ±12V;Freq 2-18GHz;Insert Loss 2.2dB;Solder Pin
2	MT3585H-P3S3	34		M1208 ☑	Non-Reflective SPDT Switch w/Driver;Vcc ±15V;Freq 2-18GHz;Insert Loss 2.2dB;Solder Pin
3	MT3586A-P1S1	34		M1208 ☑	Non-Reflective SPDT Switch w/Driver;Vcc 5/-12V;Freq .5-4GHz;Insert Loss 1.6dB;SMA Jack
4	MT3586A-P1S2	34		M1208 ☑	Non-Reflective SPDT Switch w/Driver;Vcc ±12V;Freq .5-4GHz;Insert Loss 1.6dB;SMA Jack
5	MT3586A-P1S3	34		M1208 ☑	Non-Reflective SPDT Switch w/Driver;Vcc ±15V;Freq .5-4GHz;Insert Loss 1.6dB;SMA Jack
6	MT3586A-P2S1	34		M1208 ☑	Non-Reflective SPDT Switch w/Driver;Vcc 5/-12V;Freq .5-4GHz;Insert Loss 1.6dB;SMC Jack
7	MT3586A-P2S2	34		M1208 ☑	Non-Reflective SPDT Switch w/Driver;Vcc ±12V;Freq .5-4GHz;Insert Loss 1.6dB;SMC Jack
8	MT3586A-P2S3	34		M1208 ☑	Non-Reflective SPDT Switch w/Driver;Vcc ±15V;Freq .5-4GHz;Insert Loss 1.6dB;SMC Jack
9	MT3586A-P3S1	34		M1208 ☑	Non-Reflective SPDT Switch w/Driver;Vcc 5/12V;Freq .5-4GHz;Insert Loss1.6dB;Solder Pin
10	MT3586A-P3S2	34		M1208 ☑	Non-Reflective SPDT Switch w/Driver;Vcc ±12V;Freq .5-4GHz;Insert Loss 1.6dB;Solder Pin
11	MT3586A-P3S3	34		M1208 ☑	Non-Reflective SPDT Switch w/Driver;Vcc ±15V;Freq .5-4GHz;Insert Loss 1.6dB;Solder Pin
12	MT3586B-P1S1	34		M1208 ☑	Non-Reflective SPDT Switch w/Driver;Vcc 5/-12V;Freq 4-8GHz;Insert Loss 1.8dB;SMA Jack
13	MT3586B-P1S2	34		M1208 ☑	Non-Reflective SPDT Switch w/Driver;Vcc ±12V;Freq 4-8GHz;Insert Loss 1.8dB;SMA Jack
14	MT3586B-P1S3	34		M1208 ☑	Non-Reflective SPDT Switch w/Driver;Vcc ±15V;Freq 4-8GHz;Insert Loss 1.8dB;SMA Jack
15	MT3586B-P2S1	34		M1208 ☑	Non-Reflective SPDT Switch w/Driver;Vcc 5/-12V;Freq 4-8GHz;Insert Loss 1.8dB;SMC Jack
16	MT3586B-P2S2	34		M1208 ☑	Non-Reflective SPDT Switch w/Driver;Vcc ±12V;Freq 4-8GHz;Insert Loss 1.8dB;SMC Jack
17	MT3586B-P2S3	34		M1208 ☑	Non-Reflective SPDT Switch w/Driver;Vcc ±15V;Freq 4-8GHz;Insert Loss 1.8dB;SMC Jack
18	MT3586B-P3S1	34		M1208 ☑	Non-Reflective SPDT Switch w/Driver;Vcc 5/12V;Freq 4-8GHz;Insert Loss 1.8dB;Solder Pin
19	MT3586B-P3S2	34		M1208 ☑	Non-Reflective SPDT Switch w/Driver;Vcc ±12V;Freq 4-8GHz;Insert Loss 1.8dB;Solder Pin
20	MT3586B-P3S3	34		M1208 ☑	Non-Reflective SPDT Switch w/Driver;Vcc ±15V;Freq 4-8GHz;Insert Loss 1.8dB;Solder Pin
21	MT3586C-P1S1	34		M1208 ☑	Non-Reflective SPDT Switch w/Driver;Vcc 5/-12V;Freq 8-12.4GHz;Insert Loss 2.0dB;SMA Jack
22	MT3586C-P1S2	34		M1208 ☑	Non-Reflective SPDT Switch w/Driver;Vcc ±12V;Freq 8-12.4GHz;Insert Loss 2.0dB;SMA Jack
23	MT3586C-P1S3	34		M1208 ☑	Non-Reflective SPDT Switch w/Driver;Vcc ±15V;Freq 8-12.4GHz;Insert Loss 2.0dB;SMA Jack
24	MT3586C-P2S1	34		M1208 ☑	Non-Reflective SPDT Switch w/Driver;Vcc 5/-12V;Freq 8-12.4GHz;Insert Loss 2.0dB;SMC Jack
25	MT3586C-P2S2	34		M1208 ☑	Non-Reflective SPDT Switch w/Driver;Vcc ±12V;Freq 8-12.4GHz;Insert Loss 2.0dB;SMC Jack
26	MT3586C-P2S3	34		M1208 ☑	Non-Reflective SPDT Switch w/Driver;Vcc ±15V;Freq 8-12.4GHz;Insert Loss 2.0dB;SMC Jack
27	MT3586C-P3S1	34		M1208 ☑	Non-Reflective SPDT Switch w/Driver;Vcc 5/12V;Freq 8-12.4GHz;Insert Loss 2.0dB;Solder Pin
28	MT3586C-P3S2	34		M1208 ☑	Non-Reflective SPDT Switch w/Driver;Vcc ±12V;Freq 8-12.4GHz;Insert Loss 2.0dB;Solder Pin
29	MT3586C-P3S3	34		M1208 ☑	Non-Reflective SPDT Switch w/Driver;Vcc ±15V;Freq 8-12.4GHz;Insert Loss 2.0dB;Solder Pin
30	MT3586H4P1S1	34		M1208 ☑	Non-Reflective SPDT Switch w/Driver;Vcc 5/-12V;Freq 12.4-18GHz;Insert Loss 2.6dB;SMA Jack
31	MT3586H4P1S2	34		M1208 ☑	Non-Reflective SPDT Switch w/Driver;Vcc ±12V;Freq 12.4-18GHz;Insert Loss 2.6dB;SMA Jack
32	MT3586H4P1S3	34		M1208 ☑	Non-Reflective SPDT Switch w/Driver;Vcc ±15V;Freq 12.4-18GHz;Insert Loss 2.6dB;SMA Jack
33	MT3586H4P2S1	34		M1208 ☑	Non-Reflective SPDT Switch w/Driver;Vcc 5/-12V;Freq 12.4-18GHz;Insert Loss 2.60dB;SMC Jack
34	MT3586H4P2S2	34		M1208 ☑	Non-Reflective SPDT Switch w/Driver;Vcc ±12V;Freq 12.4-18GHz;Insert Loss 2.6dB;SMC Jack
35	MT3586H4P2S3	34		M1208 ☑	Non-Reflective SPDT Switch w/Driver;Vcc ±15V;Freq 12.4-18GHz;Insert Loss 2.0dB;SMC Jack
36	MT3586H4P3S1	34		M1208 ☑	Non-Reflective SPDT Switch w/Driver;Vcc 5/12V;Freq 12.4-18GHz;Insert Loss 2.6dB;Solder Pin
37	MT3586H4P3S2	34		M1208 ☑	Non-Reflective SPDT Switch w/Driver;Vcc ±12V;Freq 12.4-18GHz;Insert Loss 2.6dB;Solder Pin
38	MT3586H4P3S3	34		M1208 ☑	Non-Reflective SPDT Switch w/Driver;Vcc ±15V;Freq 12.4-18GHz;Insert Loss 2.6dB;Solder Pin
39	MT3586H-P1S1	34		M1208 ☑	Non-Reflective SPDT Switch w/Driver;Vcc 5/-12V;Freq 2-18GHz;Insert Loss 2.7dB;SMA Jack
40	MT3586H-P1S2	34		M1208 ☑	Non-Reflective SPDT Switch w/Driver;Vcc ±12V;Freq 2-18GHz;Insert Loss 2.7dB;SMA Jack
41	MT3586H-P1S3	34		M1208 ☑	Non-Reflective SPDT Switch w/Driver;Vcc ±15V;Freq 2-18GHz;Insert Loss 2.7dB;SMA Jack
42	MT3586H-P2S1	34		M1208 ☑	Non-Reflective SPDT Switch w/Driver;Vcc 5/-12V;Freq 2-18GHz;Insert Loss 2.7dB;SMC Jack
43	MT3586H-P2S2	34		M1208 ☑	Non-Reflective SPDT Switch w/Driver;Vcc ±12V;Freq 2-18GHz;Insert Loss 2.7dB;SMC Jack
44	MT3586H-P2S3	34		M1208 ☑	Non-Reflective SPDT Switch w/Driver;Vcc ±15V;Freq 2-18GHz;Insert Loss 2.7dB;SMC Jack
45	MT3586H-P3S1	34		M1208 ☑	Non-Reflective SPDT Switch w/Driver;Vcc 5/12V;Freq 2-18GHz;Insert Loss 2.7dB;Solder Pin
46	MT3586H-P3S2	34		M1208 ☑	Non-Reflective SPDT Switch w/Driver;Vcc ±12V;Freq 2-18GHz;Insert Loss 2.7dB;SMC Jack
47	MT3586H-P3S3	34		M1208 ☑	Non-Reflective SPDT Switch w/Driver;Vcc ±15V;Freq 2-18GHz;Insert Loss 2.7dB;Solder Pin
48	MT3653A	34		M1211	SP3T Switch;Freq .5-4GHz;Ins Loss 1.1dBmax;Isol 55dBmin;VSWR 1.6max
49	MT3653B2	34		M1211	SP3T Switch;Freq 2-8GHz;Ins Loss 1.5dBmax;Isol 55dBmin;VSWR 1.8max
50	MT3653E	34		M1211	SP3T Switch;Freq 4.12.4GHz;Ins Loss 2.0dBmax;Isol 55dBmin;VSWR 1.9max
51	MT3653H3	34		M1211	SP3T Switch;Freq 8-18GHz;Ins Loss 2.6dBmax;Isol 50dBmin;VSWR 2.0max
52	MT3653H	34		M1211	SP3T Switch;Freq 2-18GHz;Ins Loss 2.9dBmax;Isol 50dBmin;VSWR 2.0max
53	MT3654A	34		M1212	SP4T Switch;Freq .5-4GHz;Ins Loss 1.1dBmax;Isol 55dBmin;VSWR 1.7max
54	MT3654B2	34		M1212	SP4T Switch;Freq 2-8GHz;Ins Loss 1.6dBmax;Isol 55dBmin;VSWR 1.9max
55	MT3654E	34		M1212	SP4T Switch;Freq 4-12.4GHz;Ins Loss 2.2dBmax;Isol 55dBmin;VSWR 2.0max
56	MT3654H3	34		M1212	SP4T Switch;Freq 8-18GHz;Ins Loss 2.8dBmax;Isol 50dBmin;VSWR 2.1max
57	MT3654H	34		M1212	SP4T Switch;Freq 2-18GHz;Ins Loss 3.1dBmax;Isol 50dBmin;VSWR 2.1max
58	MT3655A	34		M1212	SP5T Switch;Freq .5-4GHz;Ins Loss 1.2dBmax;Isol 55dBmin;VSWR 1.8max
59	MT3655B2	34		M1212	SP5T Switch;Freq 2-8GHz;Ins Loss 1.7dBmax;Isol 55dBmin;VSWR 2.0max
60	MT3655E	34		M1212	SP5T Switch;Freq 4-12.4GHz;Ins Loss 2.3dBmax;Isol 55dBmin;VSWR 2.1max
61	MT3655H3	34		M1212	SP5T Switch;Freq 8-18GHz;Ins Loss 3.1dBmax;Isol 50dBmin;VSWR 2.2max
62	MT3655H	34		M1212	SP5T Switch;Freq 2-18GHz;Ins Loss 3.4dBmax;Isol 50dBmin;VSWR 2.2max
63	MT3656A	34		M1212	SP6T Switch;Freq .5-4GHz;Ins Loss 1.3dBmax;Isol 55dBmin;VSWR 1.9max
64	MT3656B2	34		M1212	SP6T Switch;Freq 2-8GHz;Ins Loss 1.9dBmax;Isol 55dBmin;VSWR 2.1max
65	MT3656E	34		M1212	SP6T Switch;Freq 4-12.4GHz;Ins Loss 2.5dBmax;Isol 55dBmin;VSWR 2.2max
66	MT3656H3	34		M1212	SP6T Switch;Freq 8-18GHz;Ins Loss 3.3dBmax;Isol 50dBmin;VSWR 2.3max
67	MT3656H	34		M1212	SP6T Switch;Freq 2-18GHz;Ins Loss 3.6dBmax;Isol 50dBmin;VSWR 2.3max
68	MT3657A	34		M1212	SP7T Switch;Freq .5-4GHz;Ins Loss 1.3dBmax;Isol 55dBmin;VSWR 2.0max
69	MT3657B2	34		M1212	SP7T Switch;Freq 2-8GHz;Ins Loss 2.0dBmax;Isol 55dBmin;VSWR 2.2max
70	MT3657E	34		M1212	SP7T Switch;Freq 4-12.4GHz;Ins Loss 2.7dBmax;Isol 55dBmin;VSWR 2.3max
71	MT3657H3	34		M1212	SP7T Switch;Freq 8-18GHz;Ins Loss 3.6dBmax;Isol 50dBmin;VSWR 2.4max
72	MT3657H	34		M1212	SP7T Switch;Freq 2-18GHz;Ins Loss 3.9dBmax;Isol 50dBmin;VSWR 2.4max
73	MT3666A	34		M1220	Transfer Switch;Freq 2-8GHz;Ins Loss 1.7dBmax;Isol 40dBmin;VSWR 1.7max
74♦	MT3666B2	34		M1220	Transfer Switch;Freq 2-8GHz;Ins Loss 1.7dBmax;Isol 40dBmin;VSWR 1.7max
75	MT3666E	34		M1220	Transfer Switch;Freq 4-12.4GHz;Ins Loss 2.1dBmax;Isol 40dbmin;VSWR 1.8max
76	MT3666H3	34		M1220	Transfer Switch;Freq 8-18GHz;Ins Loss 2.6dBmax;Isol 38dbmin;VSWR 1.9max
77	MT3666H	34		M1220	Transfer Switch;Freq 2-18GHz;Ins Loss 2.8dBmax;Isol 38dbmin;VSWR 2.0max
78	MT3673A-P1I	34		M1211	SP3T Switch INV;Freq .5-4GHz;Ins Loss 1.2dBmax;SMA JACK
79	MT3673A-P1N	34		M1211	SP3T Switch NINV;Freq .5-4GHz;Ins Loss 1.2dBmax;SMA Jack
80	MT3673A-P2I	34		M1211	SP3T Switch INV;Freq .5-4GHz;Ins Loss 1.2dBmax;SMC JACK
81	MT3673A-P2N	34		M1211	SP3T Switch NINV;Freq .5-4GHz;Ins Loss 1.2dBmax;SMC Jack
82	MT3673A-P3I	34		M1211	SP3T Switch INV;Freq .5-4GHz;Ins Loss 1.2dBmax;Solder Pin
83	MT3673A-P3N	34		M1211	SP3T Switch NINV;Freq .5-4GHz;Ins Loss 1.2dBmax;Solder Pin
84	MT3673B2P1I	34		M1211	SP3T Switch INV;Freq 2-8GHz;Ins Loss 1.4dBmax;SMA Jack
85	MT3673B2P1N	34		M1211	SP3T Switch NINV;Freq 2-8GHz;Ins Loss 1.4dBmax;SMA Jack
86	MT3673B2P2I	34		M1211	SP3T Switch INV;Freq 2-8GHz;Ins Loss 1.4dBmax;SMC Jack
87	MT3673B2P2N	34		M1211	SP3T Switch NINV;Freq 2-8GHz;Ins Loss 1.4dBmax;SMC Jack
88	MT3673B2P3I	34		M1211	SP3T Switch INV;Freq 2-8GHz;Ins Loss 1.4dBmax;Solder Pin
89	MT3673B2P3N	34		M1211	SP3T Switch NINV;Freq 2-8GHz;Ins Loss 1.4dBmax;Solder PIN
90	MT3673E-P1I	34		M1211	SP3T Switch INV;Freq 4-12.4GHz;Ins Loss 1.7dBmax;SMA Jack
91	MT3673E-P1N	34		M1211	SP3T Switch NINV;Freq 4-12.4GHz;Ins Loss 1.7dBmax;SMA Jack
92	MT3673E-P2I	34		M1211	SP3T Switch INV;Freq 4-12.4GHz;Ins Loss 1.7dBmax;SMC Jack
93	MT3673E-P2N	34		M1211	SP3T Switch NINV;Freq 4-12.4GHz;Ins Loss 1.7dBmax;SMC Jack
94	MT3673E-P3I	34		M1211	SP3T Switch INV;Freq 4-12.4GHz;Ins Loss 1.7dBmax;Solder Pin
95	MT3673E-P3N	34		M1211	SP3T Switch NINV;Freq 4-12.4GHz;Ins Loss 1.7dBmax;Solder Pin
96	MT3673H3P1I	34		M1211	SP3T Switch INV;Freq 8-18GHz;Ins Loss 2.1dBmax;SMA Jack
97	MT3673H3P1N	34		M1211	SP3T Switch NINV;Freq 8-18GHz;Ins Loss 2.1dBmax;SMA Jack
98	MT3673H3P2I	34		M1211	SP3T Switch INV;Freq 8-18GHz;Ins Loss 2.1dBmax;SMC Jack
99	MT3673H3P2N	34		M1211	SP3T Switch NINV;Freq 8-18GHz;Ins Loss 2.1dBmax;SMC Jack
100	MT3673H3P3I	34		M1211	SP3T Switch INV;Freq 8-18GHz;Ins Loss 2.1dBmax;Solder Pin
101	MT3673H3P3N	34		M1211	SP3T Switch NINV;Freq 8-18GHz;Ins Loss 2.1dBmax;Solder Pin
102	MT3673H-P1I	34		M1211	SP3T Switch INV;Freq 2-18GHz;Ins Loss 2.3dBmax;SMA Jack
103	MT3673H-P1N	34		M1211	SP3T Switch NINV;Freq 2-18GHz;Ins Loss 2.3dBmax;SMA Jack
104	MT3673H-P2I	34		M1211	SP3T Switch INV;Freq 2-18GHz;Ins Loss 2.3dBmax;SMC Jack
105	MT3673H-P2N	34		M1211	SP3T Switch NINV;Freq 2-18GHz;Ins Loss 2.3dBmax;SMC Jack
106	MT3673H-P3I	34		M1211	SP3T Switch INV;Freq 2-18GHz;Ins Loss 2.3dBmax;Solder Pin
107	MT3673H-P3N	34		M1211	SP3T Switch NINV;Freq 2-18GHz;Ins Loss 2.3dBmax;Solder Pin
108	MT3674A-P1I	34		M1212	SP4T Switch INV;Freq .5-4GHz;Ins Loss 1.2dBmax;SMA Jack
109	MT3674A-P1N	34		M1212	SP4T Switch NINV;Freq .5-4GHz;Ins Loss 1.2dBmax;SMA Jack
110	MT3674A-P2I	34		M1212	SP4T Switch INV;Freq .5-4GHz;Ins Loss 1.2dBmax;SMC Jack

SYMBOLS AND CODES EXPLAINED IN INTERPRETER

8. MISCELLANEOUS DEVICES

IN ORDER OF (1) USE and (2) TYPE No.

LINE No.	[2] TYPE No.	[1] USE	DESCRIPTION MAT.	DWG. No.	TECHNICAL DATA
1	MT3674A-P2N	34		M1212	SP4T Switch NINV;Freq .5-4GHz;Ins Loss 1.2dBmax;SMC Jack
2	MT3674A-P3I	34		M1212	SP4T Switch INV;Freq .5-4GHz;Ins Loss 1.2dBmax;Solder pin
3	MT3674A-P3N	34		M1212	SP4T Switch NINV;Freq .5-4GHz;Ins Loss 1.2dBmax;Solder Pin
4	MT3674B2P1I	34		M1212	SP4T Switch INV;Freq 2-8GHz;Ins Loss 1.5dBmax;SMA Jack
5	MT3674B2P1N	34		M1212	SP4T Switch NINV;Freq 2-8GHz;Ins Loss 1.5dBmax;SMA Jack
6	MT3674B2P2I	34		M1212	SP4T Switch INV;Freq 2-8GHz;Ins Loss 1.5dBmax;SMC Jack
7	MT3674B2P2N	34		M1212	SP4T Switch NINV;Freq 2-8GHz;Ins Loss 1.5dBmax;SMC Jack
8	MT3674B2P3I	34		M1212	SP4T Switch INV;Freq 2-8GHz;Ins Loss 1.5dBmax;Solder Pin
9	MT3674B2P3N	34		M1212	SP4T Switch NINV;Freq 2-8GHz;Ins Loss 1.5dBmax;Solder Pin
10	MT3674E-P1I	34		M1212	SP4T Switch INV;Freq 4-12.4GHz;Ins Loss 1.9dBmax;SMA Jack
11	MT3674E-P1N	34		M1212	SP4T Switch NINV;Freq 4-12.4GHz;Ins Loss 1.9dBmax;SMA Jack
12	MT3674E-P2I	34		M1212	SP4T Switch INV;Freq 4-12.4GHz;Ins Loss 1.9dBmax;SMC Jack
13	MT3674E-P2N	34		M1212	SP4T Switch NINV;Freq 4-12.4GHz;Ins Loss 1.9dBmax;SMC Jack
14	MT3674E-P3I	34		M1212	SP4T Switch INV;Freq 4-12.4GHz;Ins Loss 1.9dBmax;Solder Pin
15	MT3674E-P3N	34		M1212	SP4T Switch NINV;Freq 4-12.4GHz;Ins Loss 1.9dBmax;Solder Pin
16	MT3674H3P1I	34		M1212	SP4T Switch INV;Freq 8-18GHz;INs Loss 2.4dBmax;SMA Jack
17	MT3674H3P1N	34		M1212	SP4T Switch NINV;Freq 8-18GHz;INs Loss 2.4dBmax;SMA Jack
18	MT3674H3P2I	34		M1212	SP4T Switch INV;Freq 8-18GHz;INs Loss 2.4dBmax;SMC Jack
19	MT3674H3P2N	34		M1212	SP4T Switch NINV;Freq 8-18GHz;INs Loss 2.4dBmax;SMC Jack
20	MT3674H3P3I	34		M1212	SP4T Switch INV;Freq 8-18GHz;INs Loss 2.4dBmax;Solder Pin
21	MT3674H3P3N	34		M1212	SP4T Switch NINV;Freq 8-18GHz;INs Loss 2.4dBmax;Solder Pin
22	MT3674H-P1I	34		M1212	SP4T Switch INV;Freq 2-18GHz;Ins Loss 2.5dBmax;SMA Jack
23	MT3674H-P1N	34		M1212	SP4T Switch NINV;Freq 2-18GHz;INs Loss 2.5dBmax;SMA Jack
24	MT3674H-P2I	34		M1212	SP4T Switch INV;Freq 2-18GHz;Ins Loss 2.5dBmax;SMC Jack
25	MT3674H-P2N	34		M1212	SP4T Switch NINV;Freq 2-18GHz;Ins Loss 2.5dBmax;SMC Jack
26	MT3674H-P3I	34		M1212	SP4T Switch INV;Freq 2-18GHz;Ins Loss 2.5dBmax;Solder Pin
27	MT3674H-P3N	34		M1212	SP4T Switch NINV;Freq 2-18GHz;Ins Loss 2.5dBmax;Solder Pin
28	MT3675A-P1I	34		M1212	SP5T Switch INV;Freq .5-4GHz;Ins Loss 1.3dBmax;Isol 45dBmin;SMA JACK
29	MT3675A-P1N	34		M1212	SP5T Switch NINV;Freq .5-4GHz;Ins Loss 1.3dBmax;Isol 45dBmin;SMA Jack
30	MT3675A-P2I	34		M1212	SP5T Switch INV;Freq .5-4GHz;Ins Loss 1.3dBmax;Isol 45dBmin;SMC Jack
31	MT3675A-P2N	34		M1212	SP5T Switch NINV;Freq .5-4GHz;Ins Loss 1.3dBmax;Isol 45dBmin;SMC Jack
32	MT3675A-P3I	34		M1212	SP5T Switch INV;Freq .5-4GHz;Ins Loss 1.3dBmax;Isol 45dBmin;Solder Pin
33	MT3675A-P3N	34		M1212	SP5T Switch NINV;Freq .5-4GHz;Ins Loss 1.3dBmax;Isol 45dBmin;Solder Pin
34	MT3675B2P1I	34		M1212	SP5T Switch INV;Freq 2-8GHz;Ins Loss 1.7dBmax;Isol 40dBmin;SMA Jack
35	MT3675B2P1N	34		M1212	SP5T Switch NINV;Freq 2-8GHz;Ins Loss 1.7dBmax;Isol 40dBmin;SMA Jack
36	MT3675B2P2I	34		M1212	SP5T Switch INV;Freq 2-8GHz;Ins Loss 1.7dBmax;Isol 40dBmin;SMC Jack
37	MT3675B2P2N	34		M1212	SP5T Switch NINV;Freq 2-8GHz;Ins Loss 1.7dBmax;Isol 40dBmin;SMC JAck
38	MT3675B2P3I	34		M1212	SP5T Switch INV;Freq 2-8GHz;Ins Loss 1.7dBmax;Isol 40dBmin;Solder Pin
39	MT3675B2P3N	34		M1212	SP5T Switch NINV;Freq 2-8GHz;Ins Loss 1.7dBmax;Isol 40dBmin;Solder PIN
40	MT3675E-P1I	34		M1212	SP5T Switch INV;Freq 4-12.4GHz;Ins Loss 2.1dBmax;Isol 40dBmin;SMA Jack
41	MT3675E-P1N	34		M1212	SP5T Switch NINV;Freq 4-12.4GHz;Ins Loss 2.1dBmax;Isol 40dBmin;SMA Jack
42	MT3675E-P2I	34		M1212	SP5T Switch INV;Freq 4-12.4GHz;Ins Loss 2.1dBmax;Isol 40dBmin;SMC Jack
43	MT3675E-P2N	34		M1212	SP5T Switch NINV;Freq 4-12.4GHz;Ins Loss 2.1dBmax;Isol 40dBmin;SMC Jack
44	MT3675E-P3I	34		M1212	SP5T Switch INV;Freq 4-12.4GHz;Ins Loss 2.1dBmax;Isol 40dBmin;Solder Pin
45	MT3675E-P3N	34		M1212	SP5T Switch NINV;Freq 4-12.4GHz;Ins Loss 2.1dBmax;Isol 40dBmin;Solder Pin
46	MT3675H3P1I	34		M1212	SP5T Switch INV;Freq 8-18GHz;Ins Loss 2.6dBmax;Isol 37dBmin;SMA Jack
47	MT3675H3P1N	34		M1212	SP5T Switch NINV;Freq 8-18GHz;Ins Loss 2.6dBmax;Isol 37dBmin;SMA Jack
48	MT3675H3P2I	34		M1212	SP5T Switch INV;Freq 8-18GHz;Ins Loss 2.6dBmax;Isol 37dBmin;SMC Jack
49	MT3675H3P2N	34		M1212	SP5T Switch NINV;Freq 8-18GHz;Ins Loss 2.6dBmax;Isol 37dBmin;SMC Jack
50	MT3675H3P3I	34		M1212	SP5T Switch INV;Freq 8-18GHz;Ins Loss 2.6dBmax;Isol 37dBmin;Solder Pin
51	MT3675H3P3N	34		M1212	SP5T Switch NINV;Freq 8-18GHz;Ins Loss 2.6dBmax;Isol 37dBmin;Solder Pin
52	MT3675H-P1I	34		M1212	SP5T Switch INV;Freq 2-18GHz;Ins Loss 2.8dBmax;Isol 37dBmin;SMA Jack
53	MT3675H-P1N	34		M1212	SP5T Switch NINV;Freq 2-18GHz;Ins Loss 2.8dBmax;Isol 37dBmin;SMA Jack
54	MT3675H-P2I	34		M1212	SP5T Switch INV;Freq 2-18GHz;Ins Loss 2.8dBmax;Isol 37dBmin;SMC Jack
55	MT3675H-P2N	34		M1212	SP5T Switch NINV;Freq 2-18GHz;Ins Loss 2.8dBmax;Isol 37dBmin;SMC Jack
56	MT3675H-P3I	34		M1212	SP5T Switch INV;Freq 2-18GHz;Ins Loss 2.8dBmax;Isol 37dBmin;Solder Pin
57	MT3675H-P3N	34		M1212	SP5T Switch NINV;Freq 2-18GHz;Ins Loss 2.8dBmax;Isol 37dBmin;Solder Pin
58	MT3676A-P1I	34		M1212	SP6T Switch INV;Freq .5-4GHz;Ins Loss 1.3dBmax;Isol 45dBmin;SMA Jack
59	MT3676A-P1N	34		M1212	SP6T Switch NINV;Freq .5-4GHz;Ins Loss 1.3dBmax;Isol 45dBmin;SMA Jack
60	MT3676A-P2I	34		M1212	SP6T Switch INV;Freq .5-4GHz;Ins Loss 1.3dBmax;Isol 45dBmin;SMC Jack
61	MT3676A-P2N	34		M1212	SP6T Switch NINV;Freq .5-4GHz;Ins Loss 1.3dBmax;Isol 45dBmin;SMC Jack
62	MT3676A-P3I	34		M1212	SP6T Switch INV;Freq .5-4GHz;Ins Loss 1.3dBmax;Isol 45dBmin;Solder Pin
63	MT3676A-P3N	34		M1212	SP6T Switch NINV;Freq .5-4GHz;Ins Loss 1.3dBmax;Isol 45dBmin;Solder Pin
64	MT3676B2P1I	34		M1212	SP6T Switch INV;Freq 2-8GHz;Ins Loss 1.8dBmax;Isol 40dBmin;SMA Jack
65	MT3676B2P1N	34		M1212	SP6T Switch NINV;Freq 2-8GHz;Ins Loss 1.8dBmax;Isol 40dBmin;SMA Jack
66	MT3676B2P2I	34		M1212	SP6T Switch INV;Freq 2-8GHz;Ins Loss 1.8dBmax;Isol 40dBmin;SMC Jack
67	MT3676B2P2N	34		M1212	SP6T Switch NINV;Freq 2-8GHz;Ins Loss 1.8dBmax;Isol 40dBmin;SMC Jack
68	MT3676B2P3I	34		M1212	SP6T Switch INV;Freq 2-8GHz;Ins Loss 1.8dBmax;Isol 40dBmin;Solder Pin
69	MT3676B2P3N	34		M1212	SP6T Switch NINV;Freq 2-8GHz;Ins Loss 1.8dBmax;Isol 40dBmin;Solder Pin
70	MT3676E-P1I	34		M1212	SP6T Switch INV;Freq 4-12.4GHz;Ins Loss 2.3dBmax;Isol 40dBmin;SMA Jack
71	MT3676E-P1N	34		M1212	SP6T Switch NINV;Freq 4-12.4GHz;Ins Loss 2.3dBmax;Isol 40dBmin;SMA Jack
72	MT3676E-P2I	34		M1212	SP6T Switch INV;Freq 4-12.4GHz;Ins Loss 2.3dBmax;Isol 40dBmin;SMC Jack
73	MT3676E-P2N	34		M1212	SP6T Switch NINV;Freq 4-12.4GHz;Ins Loss 2.3dBmax;Isol 40dBmin;SMC Jack
74	MT3676E-P3I	34		M1212	SP6T Switch INV;Freq 4-12.4GHz;Ins Loss 2.3dBmax;Isol 40dBmin;Solder Pin
75	MT3676E-P3N	34		M1212	SP6T Switch NINV;Freq 4-12.4GHz;Ins Loss 2.3dBmax;Isol 40dBmin;Solder Pin
76	MT3676H3P1I	34		M1212	SP6T Switch INV;Freq 8-18GHz;Ins Loss 2.9dBmax;Isol 37dBmin;SMA Jack
77	MT3676H3P1N	34		M1212	SP6T Switch NINV;Freq 8-18GHz;Ins Loss 2.9dBmax;Isol 37dBmin;SMA Jack
78	MT3676H3P2I	34		M1212	SP6T Switch INV;Freq 8-18GHz;Ins Loss 2.9dBmax;Isol 37dBmin;SMC Jack
79	MT3676H3P2N	34		M1212	SP6T Switch NINV;Freq 8-18GHz;Ins Loss 2.9dBmax;Isol 37dBmin;SMC Jack
80	MT3676H3P3I	34		M1212	SP6T Switch INV;Freq 8-18GHz;Ins Loss 2.9dBmax;Isol 37dBmin;Solder Pin
81	MT3676H3P3N	34		M1212	SP6T Switch NINV;Freq 8-18GHz;Ins Loss 2.9dBmax;Isol 37dBmin;Solder Pin
82	MT3676H-P1I	34		M1212	SP6T Switch INV;Freq 2-18GHz;Ins Loss 3.0dBmax;Isol 37dBmin;SMA Jack
83	MT3676H-P1N	34		M1212	SP6T Switch NINV;Freq 2-18GHz;Ins Loss 3.0dBmax;Isol 37dBmin;SMA Jack
84	MT3676H-P2I	34		M1212	SP6T Switch INV;Freq 2-18GHz;Ins Loss 3.0dBmax;Isol 37dBmin;SMC Jack
85	MT3676H-P2N	34		M1212	SP6T Switch NINV;Freq 2-18GHz;Ins Loss 3.0dBmax;Isol 37dBmin;SMC Jack
86	MT3676H-P3I	34		M1212	SP6T Switch INV;Freq 2-18GHz;Ins Loss 3.0dBmax;Isol 37dBmin;Solder Pin
87	MT3676H-P3N	34		M1212	SP6T Switch NINV;Freq 2-18GHz;Ins Loss 3.0dBmax;Isol 37dBmin;Solder Pin
88	MT3677A-P1I	34		M1212	SP7T Switch INV;Freq .5-4GHz;Ins Loss 1.4dBmax;Isol 45dBmin;SMA Jack
89	MT3677A-P1N	34		M1212	SP7T Switch NINV;Freq .5-4GHz;Ins Loss 1.4dBmax;Isol 45dBmin;SMA Jack
90	MT3677A-P2I	34		M1212	SP7T Switch INV;Freq .5-4GHz;Ins Loss 1.4dBmax;Isol 45dBmin;SMC Jack
91	MT3677A-P2N	34		M1212	SP7T Switch NINV;Freq .5-4GHz;Ins Loss 1.4dBmax;Isol 45dBmin;SMC Jack
92	MT3677A-P3I	34		M1212	SP7T Switch INV;Freq .5-4GHz;Ins Loss 1.4dBmax;Isol 45dBmin;Solder Pin
93	MT3677A-P3N	34		M1212	SP7T Switch NINV;Freq .5-4GHz;Ins Loss 1.4dBmax;Isol 45dBmin;Solder Pin
94	MT3677B2P1I	34		M1212	SP7T Switch INV;Freq 2-8Hz;Ins Loss 1.9dBmax;Isol 40dBmin;SMA Jack
95	MT3677B2P1N	34		M1212	SP7T Switch NINV;Freq 2-8Hz;Ins Loss 1.9dBmax;Isol 40dBmin;SMA Jack
96	MT3677B2P2I	34		M1212	SP7T Switch INV;Freq 2-8Hz;Ins Loss 1.9dBmax;Isol 40dBmin;SMC Jack
97	MT3677B2P2N	34		M1212	SP7T Switch NINV;Freq 2-8Hz;Ins Loss 1.9dBmax;Isol 40dBmin;SMC Jack
98	MT3677B2P3I	34		M1212	SP7T Switch INV;Freq 2-8Hz;Ins Loss 1.9dBmax;Isol 40dBmin;Solder Pin
99	MT3677B2P3N	34		M1212	SP7T Switch NINV;Freq 2-8Hz;Ins Loss 1.9dBmax;Isol 40dBmin;Solder Pin
100	MT3677E-P1I	34		M1212	SP7T Switch INV;Freq 4-12.4GHz;Ins Loss 2.4dBmax;Isol 40dBmin;SMA Jack
101	MT3677E-P1N	34		M1212	SP7T Switch NINV;Freq 4-12.4GHz;Ins Loss 2.4dBmax;Isol 40dBmin;SMA Jack
102	MT3677E-P2I	34		M1212	SP7T Switch INV;Freq 4-12.4GHz;Ins Loss 2.4dBmax;Isol 40dBmin;SMC Jack
103	MT3677E-P2N	34		M1212	SP7T Switch NINV;Freq 4-12.4GHz;Ins Loss 2.4dBmax;Isol 40dBmin;SMC Jack
104	MT3677E-P3I	34		M1212	SP7T Switch INV;Freq 4-12.4GHz;Ins Loss 2.4dBmax;Isol 40dBmin;Solder Pin
105	MT3677E-P3N	34		M1212	SP7T Switch NINV;Freq 4-12.4GHz;Ins Loss 2.4dBmax;Isol 40dBmin;Solder Pin
106	MT3677H3P1I	34		M1212	SP7T Switch INV;Freq 8-18GHz;Ins Loss 3.1dBmax;Isol 37dBmin;SMA Jack
107	MT3677H3P1N	34		M1212	SP7T Switch NINV;Freq 8-18GHz;Ins Loss 3.1dBmax;Isol 37dBmin;SMA Jack
108	MT3677H3P2I	34		M1212	SP7T Switch INV;Freq 8-18GHz;Ins Loss 3.1dBmax;Isol 37dBmin;SMC Jack
109	MT3677H3P2N	34		M1212	SP7T Switch NINV;Freq 8-18GHz;Ins Loss 3.1dBmax;Isol 37dBmin;SMC Jack
110	MT3677H3P3I	34		M1212	SP7T Switch INV;Freq 8-18GHz;Ins Loss 3.1dBmax;Isol 37dBmin;Solder Pin

SYMBOLS AND CODES EXPLAINED IN INTERPRETER

8. MISCELLANEOUS DEVICES

IN ORDER OF (1) USE and (2) TYPE No.

LINE No.	2 TYPE No.	1 USE	DESCRIPTION MAT.	DWG. No.	TECHNICAL DATA
1	MT3677H3P3N	34		M1212	SP7T Switch NINV;Freq 8-18GHz;Ins Loss 3.1dBmax;Isol 37dBmin;Solder Pin
2	MT3677H-P1I	34		M1212	SP7T Switch INV;Freq 2-18GHz;Ins Loss 3.3dBmax;Isol 37dBmin;SMA Jack
3	MT3677H-P1N	34		M1212	SP7T Switch NINV;Freq 2-18GHz;Ins Loss 3.3dBmax;Isol 37dBmin;SMA Jack
4	MT3677H-P2I	34		M1212	SP7T Switch INV;Freq 2-18GHz;Ins Loss 3.3dBmax;Isol 37dBmin;SMC Jack
5	MT3677H-P2N	34		M1212	SP7T Switch NINV;Freq 2-18GHz;Ins Loss 3.3dBmax;Isol 37dBmin;SMC Jack
6	MT3677H-P3I	34		M1212	SP7T Switch INV;Freq 2-18GHz;Ins Loss 3.3dBmax;Isol 37dBmin;Solder Pin
7	MT3677H-P3N	34		M1212	SP7T Switch NINV;Freq 2-18GHz;Ins Loss 3.3dBmax;Isol 37dBmin;Solder Pin
8	MT3680A4P1	34		M1207	SPDT Switch;Freq 2-4GHz;Insert Loss .80dB;VSWR 1.5;SMA Jack
9	MT3680A4P2	34		M1207	SPDT Switch;Freq 2-4GHz;Insert Loss .80dB;VSWR 1.5;SMC Jack
10	MT3680A4P3	34		M1207	SPDT Switch;Freq 2-4GHz;Insert Loss .80dB;VSWR 1.5;Solder Pin
11	MT3680A-P1	34		M1207	SPDT Switch;Freq .5-4GHz;Insert Loss .80dB;VSWR 1.5;SMA Jack
12	MT3680A-P2	34		M1207	SPDT Switch;Freq .5-4GHz;Insert Loss .80dB;VSWR 1.5;SMC Jack
13	MT3680A-P3	34		M1207	SPDT Switch;Freq .5-4GHz;Insert Loss .80dB;VSWR 1.5;Solder Pin
14	MT3680B2P1	34		M1207	SPDT Switch;Freq 2-8GHz;Insert Loss 1.4dB;VSWR 1.8;SMA Jack
15	MT3680B2P2	34		M1207	SPDT Switch;Freq 2-8GHz;Insert Loss 1.4dB;VSWR 1.8;SMC Jack
16	MT3680B2P3	34		M1207	SPDT Switch;Freq 2-8GHz;Insert Loss 1.4dB;VSWR 1.8;Solder Pin
17	MT3680B-P1	34		M1207	SPDT Switch;Freq 4-8GHz;Insert Loss 1.4dB;VSWR 1.8;SMA Jack
18	MT3680B-P2	34		M1207	SPDT Switch;Freq 4-8GHz;Insert Loss 1.4dB;VSWR 1.8;SMC Jack
19	MT3680B-P3	34		M1207	SPDT Switch;Freq 4-8GHz;Insert Loss 1.4dB;VSWR 1.8;Solder Pin
20	MT3680C-P1	34		M1207	SPDT Switch;Freq 8-12.4GHz;Insert Loss 1.8dB;VSWR 1.8;SMA Jack
21	MT3680C-P2	34		M1207	SPDT Switch;Freq 8-12.4GHz;Insert Loss 1.8dB;VSWR 1.8;SMC Jack
22	MT3680C-P3	34		M1207	SPDT Switch;Freq 8-12.4GHz;Insert Loss 1.8dB;VSWR 1.8;Solder Pin
23	MT3680D1P1	34		M1207	SPDT Switch;Freq .5-12.4GHz;Insert Loss 2.0dB;VSWR 2.0;SMA Jack
24	MT3680D1P2	34		M1207	SPDT Switch;Freq .5-12.4GHz;Insert Loss 2.0dB;VSWR 2.0;SMC Jack
25	MT3680D1P3	34		M1207	SPDT Switch;Freq .5-12.4GHz;Insert Loss 2.0dB;VSWR 2.0;Solder Pin
26	MT3680D-P1	34		M1207	SPDT Switch;Freq .5-8GHz;Insert Loss 1.4dB;VSWR 1.8;SMA Jack
27	MT3680D-P2	34		M1207	SPDT Switch;Freq .5-8GHz;Insert Loss 1.4dB;VSWR 1.8;SMC Jack
28	MT3680D-P3	34		M1207	SPDT Switch;Freq .5-8GHz;Insert Loss 1.4dB;VSWR 1.8;Solder Pin
29	MT3680E-P1	34		M1207	SPDT Switch;Freq 4-12.4GHz;Insert Loss 1.8dB;VSWR 2.0;SMA Jack
30	MT3680E-P2	34		M1207	SPDT Switch;Freq 4-12.4GHz;Insert Loss 1.8dB;VSWR 2.0;SMC Jack
31	MT3680E-P3	34		M1207	SPDT Switch;Freq 4-12.4GHz;Insert Loss 1.8dB;VSWR 2.0;Solder Pin
32	MT3680F1P1	34		M1207	SPDT Switch;Freq 2-12.4GHz;Insert Loss 1.8dB;VSWR 2.0;SMA Jack
33	MT3680F1P2	34		M1207	SPDT Switch;Freq 2-12.4GHz;Insert Loss 1.8dB;VSWR 2.0;SMC Jack
34	MT3680F1P3	34		M1207	SPDT Switch;Freq 2-12.4GHz;Insert Loss 1.8dB;VSWR 2.0;Solder Pin
35♦	MT3680H1P1	34		M1207	SPDT Switch;Freq 4-18GHz;Insert Loss 2.5dB;VSWR 2.0;SMA Jack
36	MT3680H1P2	34		M1207	SPDT Switch;Freq 4-18GHz;Insert Loss 2.5dB;VSWR 2.0;SMC Jack
37	MT3680H1P3	34		M1207	SPDT Switch;Freq 4-18GHz;Insert Loss 2.5dB;VSWR 2.0;Solder Pin
38	MT3680H3P1	34		M1207	SPDT Switch;Freq 8-18GHz;Insert Loss 2.5dB;VSWR 2.0;SMA Jack
39	MT3680H3P2	34		M1207	SPDT Switch;Freq 8-18GHz;Insert Loss 2.5dB;VSWR 2.0;SMC Jack
40	MT3680H3P3	34		M1207	SPDT Switch;Freq 8-18GHz;Insert Loss 2.5dB;VSWR 2.0;Solder Pin
41	MT3680H4P1	34		M1207	SPDT Switch;Freq 12.4-18GHz;Insert Loss 2.5dB;VSWR 2.0;SMA Jack
42	MT3680H4P2	34		M1207	SPDT Switch;Freq 12.4-18GHz;Insert Loss 2.5dB;VSWR 2.0;SMC Jack
43	MT3680H4P3	34		M1207	SPDT Switch;Freq 12.4-18GHz;Insert Loss 2.5dB;VSWR 2.0;Solder Pin
44	MT3680H-P1	34		M1207	SPDT Switch;Freq 2-18GHz;Insert Loss 2.5dB;VSWR 2.0;SMA Jack
45	MT3680H-P2	34		M1207	SPDT Switch;Freq 2-18GHz;Insert Loss 2.5dB;VSWR 2.0;SMC Jack
46	MT3680H-P3	34		M1207	SPDT Switch;Freq 2-18GHZ;Insert Loss 2.5dB;VSWR 2.0;Solder Pin
47	MT3681A4P1	34		M1207	SPDT Switch;Freq 2-4GHz;Insert Loss .80dB;VSWR 1.5;SMA Jack
48	MT3681A4P2	34		M1207	SPDT Switch;Freq 2-4GHz;Insert Loss .80dB;VSWR 1.5;SMA Jack
49	MT3681A4P3	34		M1207	SPDT Switch;Freq 2-4GHz;Insert Loss .80dB;VSWR 1.5;Solder Pin
50	MT3681A-P1	34		M1207	SPDT Switch;Freq .5-4GHz;Insert Loss .80dB;VSWR 1.5;SMA Jack
51	MT3681A-P2	34		M1207	SPDT Switch;Freq .5-4GHz;Insert Loss .80dB;VSWR 1.5;SMA Jack
52	MT3681A-P3	34		M1207	SPDT Switch;Freq .5-4GHz;Insert Loss .80dB;VSWR 1.5;Solder Pin
53	MT3681B2P1	34		M1207	SPDT Switch;Freq 2-8GHz;Insert Loss 1.4dB;VSWR 1.8;SMA Jack
54	MT3681B2P2	34		M1207	SPDT Switch;Freq 2-8GHz;Insert Loss 1.4dB;VSWR 1.8;SMA Jack
55	MT3681B2P3	34		M1207	SPDT Switch;Freq 2-8GHz;Insert Loss 1.4dB;VSWR 1.8;Solder Pin
56	MT3681B-P1	34		M1207	SPDT Switch;Freq 4-8GHz;Insert Loss 1.4dB;VSWR 1.8;SMA Jack
57	MT3681B-P2	34		M1207	SPDT Switch;Freq 4-8GHz;Insert Loss 1.4dB;VSWR 1.8;SMA Jack
58	MT3681B-P3	34		M1207	SPDT Switch;Freq 4-8GHz;Insert Loss 1.4dB;VSWR 1.8;Solder Pin
59	MT3681C-P1	34		M1207	SPDT Switch;Freq 8-12.4GHz;Insert Loss 1.8dB;VSWR 1.8;SMA Jack
60	MT3681C-P2	34		M1207	SPDT Switch;Freq 8-12.4GHz;Insert Loss 1.8dB;VSWR 1.8;SMA Jack
61	MT3681C-P3	34		M1207	SPDT Switch;Freq 8-12.4GHz;Insert Loss 1.8dB;VSWR 1.8;Solder Pin
62	MT3681D1P1	34		M1207	SPDT Switch;Freq .5-12.4GHz;Insert Loss 2.0dB;VSWR 2.0;SMA Jack
63	MT3681D1P2	34		M1207	SPDT Switch;Freq .5-12.4GHz;Insert Loss 2.0dB;VSWR 2.0;SMA Jack
64	MT3681D1P3	34		M1207	SPDT Switch;Freq .5-12.4GHz;Insert Loss 2.0dB;VSWR 2.0;Solder Pin
65	MT3681D-P1	34		M1207	SPDT Switch;Freq .5-8GHz;Insert Loss 1.4dB;VSWR 1.8;SMA Jack
66	MT3681D-P2	34		M1207	SPDT Switch;Freq .5-8GHz;Insert Loss 1.4dB;VSWR 1.8;SMA Jack
67	MT3681D-P3	34		M1207	SPDT Switch;Freq .5-8GHz;Insert Loss 1.4dB;VSWR 1.8;Solder Pin
68	MT3681E-P1	34		M1207	SPDT Switch;Freq 4-12.4GHz;Insert Loss 1.8dB;VSWR 2.0;SMA Jack
69	MT3681E-P2	34		M1207	SPDT Switch;Freq 4-12.4GHz;Insert Loss 1.8dB;VSWR 2.0;SMA Jack
70	MT3681E-P3	34		M1207	SPDT Switch;Freq 4-12.4GHz;Insert Loss 1.8dB;VSWR 2.0;Solder Pin
71	MT3681F1P1	34		M1207	SPDT Switch;Freq 2-12.4GHz;Insert Loss 1.8dB;VSWR 2.0;SMA Jack
72	MT3681F1P2	34		M1207	SPDT Switch;Freq 2-12.4GHz;Insert Loss 1.8dB;VSWR 2.0;SMA Jack
73	MT3681F1P3	34		M1207	SPDT Switch;Freq 2-12.4GHz;Insert Loss 1.8dB;VSWR 2.0;Solder Pin
74	MT3681H1P1	34		M1207	SPDT Switch;Freq 4-18GHz;Insert Loss 2.2dB;VSWR 2.0;SMA Jack
75	MT3681H1P2	34		M1207	SPDT Switch;Freq 4-18GHz;Insert Loss 2.2dB;VSWR 2.0;SMA Jack
76	MT3681H1P3	34		M1207	SPDT Switch;Freq 4-18GHz;Insert Loss 2.2dB;VSWR 2.0;Solder Pin
77	MT3681H3P1	34		M1207	SPDT Switch;Freq 8-18GHz;Insert Loss 2.2dB;VSWR 2.0;SMA Jack
78	MT3681H3P2	34		M1207	SPDT Switch;Freq 8-18GHz;Insert Loss 2.2dB;VSWR 2.0;SMC Jack
79	MT3681H3P3	34		M1207	SPDT Switch;Freq 8-18GHz;Insert Loss 2.2dB;VSWR 2.0;Solder Pin
80	MT3681H4P1	34		M1207	SPDT Switch;Freq 12.4-18GHz;Insert Loss 2.2dB;VSWR 2.0;SMA Jack
81	MT3681H4P2	34		M1207	SPDT Switch;Freq 12.4-18GHz;Insert Loss 2.2dB;VSWR 2.0;SMC Jack
82	MT3681H4P3	34		M1207	SPDT Switch;Freq 12.4-18GHz;Insert Loss 2.2dB;VSWR 2.0;Solder Pin
83	MT3681H-P1	34		M1207	SPDT Switch;Freq 2-18GHz;Insert Loss 2.2dB;VSWR 2.0;SMA Jack
84	MT3681H-P2	34		M1207	SPDT Switch;Freq 2-18GHz;Insert Loss 2.2dB;VSWR 2.0;SMA Jack
85	MT3681H-P3	34		M1207	SPDT Switch;Freq 2-18GHz;Insert Loss 2.2dB;VSWR 2.0;Solder Pin
86	MT3683A-P1Q1	34		M1207 ☑	Reflective SPDT Switch;Freq .5-4GHz;Insert Loss 1.1dB;SMA Jack
87	MT3683A-P1Q2	34		M1207 ☑	Reflective SPDT Switch;Freq .5-4GHz;Insert Loss 1.1dB;SMA Jack
88	MT3683A-P1Q3	34		M1207 ☑	Reflective SPDT Switch;Freq .5-4GHz;Insert Loss 1.1dB;SMA Jack
89	MT3683A-P2Q1	34		M1207 ☑	Reflective SPDT Switch;Freq .5-4GHz;Insert Loss 1.1dB;SMC Jack
90	MT3683A-P2Q2	34		M1207 ☑	Reflective SPDT Switch;Freq .5-4GHz;Insert Loss 1.1dB;SMC Jack
91	MT3683A-P2Q3	34		M1207 ☑	Reflective SPDT Switch;Freq .5-4GHz;Insert Loss 1.1dB;SMC Jack
92	MT3683A-P3Q1	34		M1207 ☑	Reflective SPDT Switch;Freq .5-4GHz;Insert Loss 1.1dB;Solder Pin
93	MT3683A-P3Q2	34		M1207 ☑	Reflective SPDT Switch;Freq .5-4GHz;Insert Loss 1.1dB;Solder Pin
94	MT3683A-P3Q3	34		M1207 ☑	Reflective SPDT Switch;Freq .5-4GHz;Insert Loss 1.1dB;Solder Pin
95	MT3683B-P1Q1	34		M1207 ☑	Reflective SPDT Switch;Freq 4-8GHz;Insert Loss 1.3dB;SMA Jack
96	MT3683B-P1Q2	34		M1207 ☑	Reflective SPDT Switch;Freq 4-8GHz;Insert Loss 1.3dB;SMA Jack
97	MT3683B-P1Q3	34		M1207 ☑	Reflective SPDT Switch;Freq 4-8GHz;Insert Loss 1.3dB;SMA Jack
98	MT3683B-P2Q1	34		M1207 ☑	Reflective SPDT Switch;Freq 4-8GHz;Insert Loss 1.3dB;SMC Jack
99	MT3683B-P2Q2	34		M1207 ☑	Reflective SPDT Switch;Freq 4-8GHz;Insert Loss 1.3dB;SMC Jack
100	MT3683B-P2Q3	34		M1207 ☑	Reflective SPDT Switch;Freq 4-8GHz;Insert Loss 1.3dB;SMC Jack
101	MT3683B-P3Q1	34		M1207 ☑	Reflective SPDT Switch;Freq 4-8GHz;Insert Loss 1.3dB;Solder Pin
102	MT3683B-P3Q2	34		M1207 ☑	Reflective SPDT Switch;Freq 4-8GHz;Insert Loss 1.3dB;Solder Pin
103	MT3683B-P3Q3	34		M1207 ☑	Reflective SPDT Switch;Freq 4-8GHz;Insert Loss 1.3dB;Solder Pin
104	MT3683C-P1Q1	34		M1207 ☑	Reflective SPDT Switch;Freq 8-12.4GHz;Insert Loss 1.5dB;SMA Jack
105	MT3683C-P1Q2	34		M1207 ☑	Reflective SPDT Switch;Freq 8-12.4GHz;Insert Loss 1.5dB;SMA Jack
106	MT3683C-P1Q3	34		M1207 ☑	Reflective SPDT Switch;Freq 8-12.4GHz;Insert Loss 1.5dB;SMA Jack
107	MT3683C-P2Q1	34		M1207 ☑	Reflective SPDT Switch;Freq 8-12.4GHz;Insert Loss 1.5dB;SMC Jack
108	MT3683C-P2Q2	34		M1207 ☑	Reflective SPDT Switch;Freq 8-12.4GHz;Insert Loss 1.5dB;SMC Jack
109	MT3683C-P2Q3	34		M1207 ☑	Reflective SPDT Switch;Freq 8-12.4GHz;Insert Loss 1.5dB;SMC Jack
110	MT3683C-P3Q1	34		M1207 ☑	Reflective SPDT Switch;Freq 8-12.4GHz;Insert Loss 1.5dB;Solder Pin

8. MISCELLANEOUS DEVICES

IN ORDER OF (1) USE and (2) TYPE No.

LINE No.	2 TYPE No.	1 USE	DESCRIPTION MAT.	DESCRIPTION DWG. No.	TECHNICAL DATA
1	MT3683C-P3Q2	34		M1207 Ø	Reflective SPDT Switch;Freq 8-12.4GHz;Insert Loss 1.5dB;Solder Pin
2	MT3683C-P3Q3	34		M1207 Ø	Reflective SPDT Switch;Freq 8-12.4GHz;Insert Loss 1.5dB;Solder Pin
3	MT3683H4P1Q1	34		M1207 Ø	Reflective SPDT Switch;Freq 12.4-18GHz;Insert Loss 1.7dB;SMA Jack
4	MT3683H4P1Q2	34		M1207 Ø	Reflective SPDT Switch;Freq 12.4-18GHz;Insert Loss 1.7dB;SMA Jack
5	MT3683H4P1Q3	34		M1207 Ø	Reflective SPDT Switch;Freq 12.4-18GHz;Insert Loss 1.7dB;SMA Jack
6	MT3683H4P2Q1	34		M1207 Ø	Reflective SPDT Switch;Freq 12.4-18GHz;Insert Loss 1.7dB;SMC Jack
7	MT3683H4P2Q2	34		M1207 Ø	Reflective SPDT Switch;Freq 12.4-18GHz;Insert Loss 1.7dB;SMC Jack
8	MT3683H4P2Q3	34		M1207 Ø	Reflective SPDT Switch;Freq 12.4-18GHz;Insert Loss 1.7dB;SMC Jack
9	MT3683H4P3Q1	34		M1207 Ø	Reflective SPDT Switch;Freq 12.4-18GHz;Insert Loss 1.7dB;Solder Pin
10	MT3683H4P3Q2	34		M1207 Ø	Reflective SPDT Switch;Freq 12.4-18GHz;Insert Loss 1.7dB;Solder Pin
11	MT3683H4P3Q3	34		M1207 Ø	Reflective SPDT Switch;Freq 12.4-18GHz;Insert Loss 1.7dB;Solder Pin
12	MT3683H-P1Q1	34		M1207 Ø	Reflective SPDT Switch;Freq 2-18GHz;Insert Loss 1.9dB;SMA Jack
13	MT3683H-P1Q2	34		M1207 Ø	Reflective SPDT Switch;Freq 2-18GHz;Insert Loss 1.9dB;SMA Jack
14	MT3683H-P1Q3	34		M1207 Ø	Reflective SPDT Switch;Freq 2-18GHz;Insert Loss 1.9dB;SMA Jack
15	MT3683H-P2Q1	34		M1207 Ø	Reflective SPDT Switch;Freq 2-18GHz;Insert Loss 1.9dB;SMC Jack
16	MT3683H-P2Q2	34		M1207 Ø	Reflective SPDT Switch;Freq 2-18GHz;Insert Loss 1.9dB;SMC Jack
17	MT3683H-P2Q3	34		M1207 Ø	Reflective SPDT Switch;Freq 2-18GHz;Insert Loss 1.9dB;SMC Jack
18	MT3683H-P3Q1	34		M1207 Ø	Reflective SPDT Switch;Freq 2-18GHz;Insert Loss 1.9dB;Solder Pin
19	MT3683H-P3Q2	34		M1207 Ø	Reflective SPDT Switch;Freq 2-18GHz;Insert Loss 1.9dB;Solder Pin
20	MT3683H-P3Q3	34		M1207 Ø	Reflective SPDT Switch;Freq 2-18GHz;Insert Loss 1.9dB;Solder Pin
21	MT3684A-P1Q1	34		M1207 Ø	Reflective SPDT Switch;Freq .5-4GHz;Insert Loss 1.5dB;SMA Jack
22	MT3684A-P1Q2	34		M1207 Ø	Reflective SPDT Switch;Freq .5-4GHz;Insert Loss 1.5dB;SMA Jack
23	MT3684A-P1Q3	34		M1207 Ø	Reflective SPDT Switch;Freq .5-4GHz;Insert Loss 1.5dB;SMA Jack
24	MT3684A-P2Q1	34		M1207 Ø	Reflective SPDT Switch;Freq .5-4GHz;Insert Loss 1.5dB;SMC Jack
25	MT3684A-P2Q2	34		M1207 Ø	Reflective SPDT Switch;Freq .5-4GHz;Insert Loss 1.5dB;SMC Jack
26	MT3684A-P2Q3	34		M1207 Ø	Reflective SPDT Switch;Freq .5-4GHz;Insert Loss 1.5dB;SMC Jack
27	MT3684A-P3Q1	34		M1207 Ø	Reflective SPDT Switch;Freq .5-4GHz;Insert Loss 1.5dB;Solder Pin
28	MT3684A-P3Q2	34		M1207 Ø	Reflective SPDT Switch;Freq .5-4GHz;Insert Loss 1.5dB;Solder Pin
29	MT3684A-P3Q3	34		M1207 Ø	Reflective SPDT Switch;Freq .5-4GHz;Insert Loss 1.5dB;Solder Pin
30	MT3684B-P1Q1	34		M1207 Ø	Reflective SPDT Switch;Freq 4-8GHz;Insert Loss 1.7dB;SMA Jack
31	MT3684B-P1Q2	34		M1207 Ø	Reflective SPDT Switch;Freq 4-8GHz;Insert Loss 1.7dB;SMA Jack
32	MT3684B-P1Q3	34		M1207 Ø	Reflective SPDT Switch;Freq 4-8GHz;Insert Loss 1.7dB;SMA Jack
33	MT3684B-P2Q1	34		M1207 Ø	Reflective SPDT Switch;Freq 4-8GHz;Insert Loss 1.7dB;SMC Jack
34	MT3684B-P2Q2	34		M1207 Ø	Reflective SPDT Switch;Freq 4-8GHz;Insert Loss 1.7dB;SMC Jack
35	MT3684B-P2Q3	34		M1207 Ø	Reflective SPDT Switch;Freq 4-8GHz;Insert Loss 1.7dB;SMC Jack
36	MT3684B-P3Q1	34		M1207 Ø	Reflective SPDT Switch;Freq 4-8GHz;Insert Loss 1.7dB;Solder Pin
37	MT3684B-P3Q2	34		M1207 Ø	Reflective SPDT Switch;Freq 4-8GHz;Insert Loss 1.7dB;Solder Pin
38	MT3684B-P3Q3	34		M1207 Ø	Reflective SPDT Switch;Freq 4-8GHz;Insert Loss 1.7dB;Solder Pin
39	MT3684C-P1Q1	34		M1207 Ø	Reflective SPDT Switch;Freq 8-12.4GHz;Insert Loss 2dB;SMA Jack
40	MT3684C-P1Q2	34		M1207 Ø	Reflective SPDT Switch;Freq 8-12.4GHz;Insert Loss 2dB;SMA Jack
41	MT3684C-P1Q3	34		M1207 Ø	Reflective SPDT Switch;Freq 8-12.4GHz;Insert Loss 2dB;SMA Jack
42	MT3684C-P2Q1	34		M1207 Ø	Reflective SPDT Switch;Freq 8-12.4GHz;Insert Loss 2dB;SMC Jack
43	MT3684C-P2Q2	34		M1207 Ø	Reflective SPDT Switch;Freq 8-12.4GHz;Insert Loss 2dB;SMC Jack
44	MT3684C-P2Q3	34		M1207 Ø	Reflective SPDT Switch;Freq 8-12.4GHz;Insert Loss 2dB;SMC Jack
45	MT3684C-P3Q1	34		M1207 Ø	Reflective SPDT Switch;Freq 8-12.4GHz;Insert Loss 2dB;Solder Pin
46	MT3684C-P3Q2	34		M1207 Ø	Reflective SPDT Switch;Freq 8-12.4GHz;Insert Loss 2dB;Solder Pin
47	MT3684C-P3Q3	34		M1207 Ø	Reflective SPDT Switch;Freq 8-12.4GHz;Insert Loss 2dB;Solder Pin
48	MT3684H4P1Q1	34		M1207 Ø	Reflective SPDT Switch;Freq 12.4-18GHz;Insert Loss 2.3dB;SMA Jack
49	MT3684H4P1Q2	34		M1207 Ø	Reflective SPDT Switch;Freq 12.4-18GHz;Insert Loss 2.3dB;SMA Jack
50	MT3684H4P1Q3	34		M1207 Ø	Reflective SPDT Switch;Freq 12.4-18GHz;Insert Loss 2.3dB;SMA Jack
51	MT3684H4P2Q1	34		M1207 Ø	Reflective SPDT Switch;Freq 12.4-18GHz;Insert Loss 2.3dB;SMC Jack
52	MT3684H4P2Q2	34		M1207 Ø	Reflective SPDT Switch;Freq 12.4-18GHz;Insert Loss 2.3dB;SMC Jack
53	MT3684H4P2Q3	34		M1207 Ø	Reflective SPDT Switch;Freq 12.4-18GHz;Insert Loss 2.3dB;SMC Jack
54	MT3684H4P3Q1	34		M1207 Ø	Reflective SPDT Switch;Freq 12.4-18GHz;Insertion Loss 2.3dB;Solder Pin
55	MT3684H4P3Q2	34		M1207 Ø	Reflective SPDT Switch;Freq 12.4-18GHz;Insertion Loss 2.3dB;Solder Pin
56	MT3684H4P3Q3	34		M1207 Ø	Reflective SPDT Switch;Freq 12.4-18GHz;Insertion Loss 2.3dB;Solder Pin
57	MT3684H-P1Q1	34		M1207 Ø	Reflective SPDT Switch;Freq 2-18GHz;Insert Loss 2.4dB;SMA Jack
58	MT3684H-P1Q2	34		M1207 Ø	Reflective SPDT Switch;Freq 2-18GHz;Insert Loss 2.4dB;SMA Jack
59	MT3684H-P1Q3	34		M1207 Ø	Reflective SPDT Switch;Freq 2-18GHz;Insert Loss 2.4dB;SMA Jack
60	MT3684H-P2Q1	34		M1207 Ø	Reflective SPDT Switch;Freq 2-18GHz;Insert Loss 2.4dB;SMC Jack
61	MT3684H-P2Q2	34		M1207 Ø	Reflective SPDT Switch;Freq 2-18GHz;Insert Loss 2.4dB;SMC Jack
62	MT3684H-P2Q3	34		M1207 Ø	Reflective SPDT Switch;Freq 2-18GHz;Insert Loss 2.4dB;SMC Jack
63	MT3684H-P3Q1	34		M1207 Ø	Reflective SPDT Switch;Freq 2-18GHz;Insert Loss 2.4dB;Solder Pin
64	MT3684H-P3Q2	34		M1207 Ø	Reflective SPDT Switch;Freq 2-18GHz;Insert Loss 2.4dB;Solder Pin
65	MT3684H-P3Q3	34		M1207 Ø	Reflective SPDT Switch;Freq 2-18GHz;Insert Loss 2.4dB;Solder Pin
66	MT3685A-P1Q1	34		M1207 Ø	Non-Reflective SPDT Switch;Freq .5-4GHz;Insert Loss 1.1dB;SMA Jack
67	MT3685A-P1Q2	34		M1207 Ø	Non-Reflective SPDT Switch;Freq .5-4GHz;Insert Loss 1.1dB;SMA Jack
68	MT3685A-P1Q3	34		M1207 Ø	Non-Reflective SPDT Switch;Freq .5-4GHz;Insert Loss 1.1dB;SMA Jack
69	MT3685A-P2Q1	34		M1207 Ø	Non-Reflective SPDT Switch;Freq .5-4GHz;Insert Loss 1.1dB;SMC Jack
70	MT3685A-P2Q2	34		M1207 Ø	Non-Reflective SPDT Switch;Freq .5-4GHz;Insert Loss 1.1dB;SMC Jack
71	MT3685A-P2Q3	34		M1207 Ø	Non-Reflective SPDT Switch;Freq .5-4GHz;Insert Loss 1.1dB;SMC Jack
72	MT3685A-P3Q1	34		M1207 Ø	Non-Reflective SPDT Switch;Freq .5-4GHz;Insert Loss 1.1dB;Solder Pin
73	MT3685A-P3Q2	34		M1207 Ø	Non-Reflective SPDT Switch;Freq .5-4GHz;Insert Loss 1.1dB;Solder Pin
74	MT3685A-P3Q3	34		M1207 Ø	Non-Reflective SPDT Switch;Freq .5-4GHz;Insert Loss 1.1dB;Solder Pin
75	MT3685B-P1Q1	34		M1207 Ø	Non-Reflective SPDT Switch;Freq 4-8GHz;Insert Loss 1.3dB;SMA Jack
76	MT3685B-P1Q2	34		M1207 Ø	Non-Reflective SPDT Switch;Freq 4-8GHz;Insert Loss 1.3dB;SMA Jack
77	MT3685B-P1Q3	34		M1207 Ø	Non-Reflective SPDT Switch;Freq 4-8GHz;Insert Loss 1.3dB;SMA Jack
78	MT3685B-P2Q1	34		M1207 Ø	Non-Reflective SPDT Switch;Freq 4-8GHz;Insert Loss 1.3dB;SMC Jack
79	MT3685B-P2Q2	34		M1207 Ø	Non-Reflective SPDT Switch;Freq 4-8GHz;Insert Loss 1.3dB;SMC Jack
80	MT3685B-P2Q3	34		M1207 Ø	Non-Reflective SPDT Switch;Freq 4-8GHz;Insert Loss 1.3dB;SMC Jack
81	MT3685B-P3Q1	34		M1207 Ø	Non-Reflective SPDT Switch;Freq 4-8GHz;Insert Loss 1.3dB;Solder Pin
82	MT3685B-P3Q2	34		M1207 Ø	Non-Reflective SPDT Switch;Freq 4-8GHz;Insert Loss 1.3dB;Solder Pin
83	MT3685B-P3Q3	34		M1207 Ø	Non-Reflective SPDT Switch;Freq 4-8GHz;Insert Loss 1.3dB;Solder Pin
84	MT3685C-P1Q1	34		M1207 Ø	Non-Reflective SPDT Switch;Freq 8-12.4GHz;Insert Loss 1.6dB;SMA Jack
85	MT3685C-P1Q2	34		M1207 Ø	Non-Reflective SPDT Switch;Freq 8-12.4GHz;Insert Loss 1.6dB;SMA Jack
86	MT3685C-P1Q3	34		M1207 Ø	Non-Reflective SPDT Switch;Freq 8-12.4GHz;Insert Loss 1.6dB;SMA Jack
87	MT3685C-P2Q1	34		M1207 Ø	Non-Reflective SPDT Switch;Freq 8-12.4GHz;Insert Loss 1.6dB;SMC Jack
88	MT3685C-P2Q2	34		M1207 Ø	Non-Reflective SPDT Switch;Freq 8-12.4GHz;Insert Loss 1.6dB;SMC Jack
89	MT3685C-P2Q3	34		M1207 Ø	Non-Reflective SPDT Switch;Freq 8-12.4GHz;Insert Loss 1.6dB;SMC Jack
90	MT3685C-P3Q1	34		M1207 Ø	Non-Reflective SPDT Switch;Freq 8-12.4GHz;Insert Loss 1.6dB;Solder Pin
91	MT3685C-P3Q2	34		M1207 Ø	Non-Reflective SPDT Switch;Freq 8-12.4GHz;Insert Loss 1.6dB;Solder Pin
92	MT3685C-P3Q3	34		M1207 Ø	Non-Reflective SPDT Switch;Freq 8-12.4GHz;Insert Loss 1.6dB;Solder Pin
93	MT3685H4P1Q1	34		M1207 Ø	Non-Reflective SPDT Switch;Freq 12.4-18GHz;Insert Loss 1.9dB;SMA Jack
94	MT3685H4P1Q2	34		M1207 Ø	Non-Reflective SPDT Switch;Freq 12.4-18GHz;Insert Loss 1.9dB;SMA Jack
95	MT3685H4P1Q3	34		M1207 Ø	Non-Reflective SPDT Switch;Freq 12.4-18GHz;Insert Loss 1.9dB;SMA Jack
96	MT3685H4P2Q1	34		M1207 Ø	Non-Reflective SPDT Switch;Freq 12.4-18GHz;Insert Loss 1.9dB;SMC Jack
97	MT3685H4P2Q2	34		M1207 Ø	Non-Reflective SPDT Switch;Freq 12.4-18GHz;Insert Loss 1.9dB;SMC Jack
98	MT3685H4P2Q3	34		M1207 Ø	Non-Reflective SPDT Switch;Freq 12.4-18GHz;Insert Loss 1.9dB;SMC Jack
99	MT3685H4P3Q1	34		M1207 Ø	Non-Reflective SPDT Switch;Freq 12.4-18GHz;Insert Loss 1.9dB;Solder Pin
100	MT3685H4P3Q2	34		M1207 Ø	Non-Reflective SPDT Switch;Freq 12.4-18GHz;Insert Loss 1.9dB;Solder Pin
101	MT3685H4P3Q3	34		M1207 Ø	Non-Reflective SPDT Switch;Freq 12.4-18GHz;Insert Loss 1.9dB;Solder Pin
102	MT3685H-P1Q1	34		M1207 Ø	Non-Reflective SPDT Switch;Freq 2-18GHz;Insert Loss 2.1dB;SMA Jack
103	MT3685H-P1Q2	34		M1207 Ø	Non-Reflective SPDT Switch;Freq 2-18GHz;Insert Loss 2.1dB;SMA Jack
104	MT3685H-P1Q3	34		M1207 Ø	Non-Reflective SPDT Switch;Freq 2-18GHz;Insert Loss 2.1dB;SMA Jack
105	MT3685H-P2Q1	34		M1207 Ø	Non-Reflective SPDT Switch;Freq 2-18GHz;Insert Loss 2.1dB;SMC Jack
106	MT3685H-P2Q2	34		M1207 Ø	Non-Reflective SPDT Switch;Freq 2-18GHz;Insert Loss 2.1dB;SMC Jack
107	MT3685H-P2Q3	34		M1207 Ø	Non-Reflective SPDT Switch;Freq 2-18GHz;Insert Loss 2.1dB;SMC Jack
108	MT3685H-P3Q1	34		M1207 Ø	Non-Reflective SPDT Switch;Freq 2-18GHz;Insert Loss 2.1dB;Solder Pin
109	MT3685H-P3Q2	34		M1207 Ø	Non-Reflective SPDT Switch;Freq 2-18GHz;Insert Loss 2.1dB;Solder Pin
110	MT3685H-P3Q3	34		M1207 Ø	Non-Reflective SPDT Switch;Freq 2-18GHz;Insert Loss 2.1dB;Solder Pin

SYMBOLS AND CODES EXPLAINED IN INTERPRETER

8. MISCELLANEOUS DEVICES

IN ORDER OF (1) USE and (2) TYPE No.

LINE No.	[2] TYPE No.	[1] USE	DESCRIPTION MAT.	DESCRIPTION DWG. No.	TECHNICAL DATA
1	MT3686A-P1Q1	34		M1207 Ø	Non-Reflective SPDT Switch;Freq .5-4GHz;Insert Loss 1.6dB;SMA Jack
2	MT3686A-P1Q2	34		M1207 Ø	Non-Reflective SPDT Switch;Freq .5-4GHz;Insert Loss 1.6dB;SMA Jack
3	MT3686A-P1Q3	34		M1207 Ø	Non-Reflective SPDT Switch;Freq .5-4GHz;Insert Loss 1.6dB;SMA Jack
4	MT3686A-P2Q1	34		M1207 Ø	Non-Reflective SPDT Switch;Freq .5-4GHz;Insert Loss 1.6dB;SMC Jack
5	MT3686A-P2Q2	34		M1207 Ø	Non-Reflective SPDT Switch;Freq .5-4GHz;Insert Loss 1.6dB;SMC Jack
6	MT3686A-P2Q3	34		M1207 Ø	Non-Reflective SPDT Switch;Freq .5-4GHz;Insert Loss 1.6dB;SMC Jack
7	MT3686A-P3Q1	34		M1207 Ø	Non-Reflective SPDT Switch;Freq .5-4GHz;Insert Loss 1.6dB;Solder Pin
8	MT3686A-P3Q2	34		M1207 Ø	Non-Reflective SPDT Switch;Freq .5-4GHz;Insert Loss 1.6dB;Solder Pin
9	MT3686A-P3Q3	34		M1207 Ø	Non-Reflective SPDT Switch;Freq .5-4GHz;Insert Loss 1.6dB;Solder Pin
10	MT3686B-P1Q1	34		M1207 Ø	Non-Reflective SPDT Switch;Freq 4.8GHz;Insert Loss 1.8dB;SMA Jack
11	MT3686B-P1Q2	34		M1207 Ø	Non-Reflective SPDT Switch;Freq 4.8GHz;Insert Loss 1.8dB;SMA Jack
12	MT3686B-P1Q3	34		M1207 Ø	Non-Reflective SPDT Switch;Freq 4.8GHz;Insert Loss 1.8dB;SMA Jack
13	MT3686B-P2Q1	34		M1207 Ø	Non-Reflective SPDT Switch;Freq 4-8GHz;Insert Loss 1.8dB;SMC Jack
14	MT3686B-P2Q2	34		M1207 Ø	Non-Reflective SPDT Switch;Freq 4-8GHz;Insert Loss 1.8dB;SMC Jack
15	MT3686B-P2Q3	34		M1207 Ø	Non-Reflective SPDT Switch;Freq 4-8GHz;Insert Loss 1.8dB;SMC Jack
16	MT3686B-P3Q1	34		M1207 Ø	Non-Reflective SPDT Switch;Freq 4-8GHz;Insert Loss 1.8dB;Solder Pin
17	MT3686B-P3Q2	34		M1207 Ø	Non-Reflective SPDT Switch;Freq 4-8GHz;Insert Loss 1.8dB;Solder Pin
18	MT3686B-P3Q3	34		M1207 Ø	Non-Reflective SPDT Switch;Freq 4-8GHz;Insert Loss 1.8dB;Solder Pin
19	MT3686C-P1Q1	34		M1207 Ø	Non-Reflective SPDT Switch;Freq 8-12.4GHz;Insert Loss 2dB;SMA Jack
20	MT3686C-P1Q2	34		M1207 Ø	Non-Reflective SPDT Switch;Freq 8-12.4GHz;Insert Loss 2dB;SMA Jack
21	MT3686C-P1Q3	34		M1207 Ø	Non-Reflective SPDT Switch;Freq 8-12.4GHz;Insert Loss 2dB;SMA Jack
22	MT3686C-P2Q1	34		M1207 Ø	Non-Reflective SPDT Switch;Freq 8-12.4GHz;Insert Loss 2dB;SMC Jack
23	MT3686C-P2Q2	34		M1207 Ø	Non-Reflective SPDT Switch;Freq 8-12.4GHz;Insert Loss 2dB;SMC Jack
24	MT3686C-P2Q3	34		M1207 Ø	Non-Reflective SPDT Switch;Freq 8-12.4GHz;Insert Loss 2dB;SMC Jack
25	MT3686C-P3Q1	34		M1207 Ø	Non-Reflective SPDT Switch;Freq 8-12.4GHz;Insert Loss 2dB;Solder Pin
26	MT3686C-P3Q2	34		M1207 Ø	Non-Reflective SPDT Switch;Freq 8-12.4GHz;Insert Loss 2dB;Solder Pin
27	MT3686C-P3Q3	34		M1207 Ø	Non-Reflective SPDT Switch;Freq 8-12.4GHz;Insert Loss 2dB;Solder Pin
28	MT3686H4P1Q1	34		M1207 Ø	Non-Reflective SPDT Switch;Freq 12.4-18GHz;Insert Loss 2.4dB;SMA Jack
29	MT3686H4P1Q2	34		M1207 Ø	Non-Reflective SPDT Switch;Freq 12.4-18GHz;Insert Loss 2.4dB;SMA Jack
30	MT3686H4P1Q3	34		M1207 Ø	Non-Reflective SPDT Switch;Freq 12.4-18GHz;Insert Loss 2.4dB;SMA Jack
31	MT3686H4P2Q1	34		M1207 Ø	Non-Reflective SPDT Switch;Freq 12.4-18GHz;Insert Loss 2.4dB;SMC Jack
32	MT3686H4P2Q2	34		M1207 Ø	Non-Reflective SPDT Switch;Freq 12.4-18GHz;Insert Loss 2.4dB;SMC Jack
33	MT3686H4P2Q3	34		M1207 Ø	Non-Reflective SPDT Switch;Freq 12.4-18GHz;Insert Loss 2.4dB;SMC Jack
34	MT3686H4P3Q1	34		M1207 Ø	Non-Reflective SPDT Switch;Freq 12.4-18GHz;Insert Loss 2.4dB;Solder Pin
35	MT3686H4P3Q2	34		M1207 Ø	Non-Reflective SPDT Switch;Freq 12.4-18GHz;Insert Loss 2.4dB;Solder Pin
36	MT3686H4P3Q3	34		M1207 Ø	Non-Reflective SPDT Switch;Freq 12.4-18GHz;Insert Loss 2.4dB;Solder Pin
37	MT3686H-P1Q1	34		M1207 Ø	Non-Reflective SPDT Switch;Freq 2-18GHz;Insert Loss 2.6dB;SMA Jack
38	MT3686H-P1Q2	34		M1207 Ø	Non-Reflective SPDT Switch;Freq 2-18GHz;Insert Loss 2.6dB;SMA Jack
39	MT3686H-P1Q3	34		M1207 Ø	Non-Reflective SPDT Switch;Freq 2-18GHz;Insert Loss 2.6dB;SMA Jack
40	MT3686H-P2Q1	34		M1207 Ø	Non-Reflective SPDT Switch;Freq 2-18GHz;Insert Loss 2.6dB;SMC Jack
41	MT3686H-P2Q2	34		M1207 Ø	Non-Reflective SPDT Switch;Freq 2-18GHz;Insert Loss 2.6dB;SMC Jack
42	MT3686H-P2Q3	34		M1207 Ø	Non-Reflective SPDT Switch;Freq 2-18GHz;Insert Loss 2.6dB;SMC Jack
43	MT3686H-P3Q1	34		M1207 Ø	Non-Reflective SPDT Switch;Freq 2-18GHz;Insert Loss 2.6dB;Solder Pin
44	MT3686H-P3Q2	34		M1207 Ø	Non-Reflective SPDT Switch;Freq 2-18GHz;Insert Loss 2.6dB;Solder Pin
45	MT3686H-P3Q3	34		M1207 Ø	Non-Reflective SPDT Switch;Freq 2-18GHz;Insert Loss 2.6dB;Solder Pin
46	MT3693A	34		M1211	SP3T Switch Freq .5-4GHz;Ins Loss 1.2dBmax;Isol 45dBmin;VSWR 1.6max
47	MT3693B2	34		M1211	SP3T Switch Freq 2-8GHz;Ins Loss 1.5dBmax;Isol 45dBmin;VSWR 1.7max
48	MT3693E	34		M1211	SP3T Switch Freq 4-12.4GHz;Ins Loss 1.9dBmax;Isol 40dBmin;VSWR 1.7max
49	MT3693H3	34		M1211	SP3T Switch Freq 8-18GHz;Ins Loss 2.3dBmax;Isol 40dBmin;VSWR 1.8max
50	MT3693H	34		M1211	SP3T Switch Freq 2-18GHz;Ins Loss 2.5dBmax;Isol 40dBmin;VSWR 1.9max
51	MT3694A	34		M1212	SP4T Switch Freq .5-4GHz;Ins Loss 1.3dBmax;Isol 45dBmin;VSWR 1.6max
52	MT3694B2	34		M1212	SP4T Switch Freq 2-8GHz;Ins Loss 1.6dBmax;Isol 45dBmin;VSWR 1.7max
53	MT3694E	34		M1212	SP4T Switch;Freq 4-12.4GHz;Ins Loss 2.0dBmax;Isol 40dBmin;VSWR 1.8max
54	MT3694H3	34		M1212	SP4T Switch;Freq 8-18GHz;Ins Loss 2.5dBmax;Isol 40dBmin;VSWR 1.9max
55	MT3694H	34		M1212	SP4T Switch;Freq 2-18GHz;Ins Loss 2.7dBmax;Isol 40dBmin;VSWR 2.0max
56	MT3695A	34		M1212	SP5T Switch;Freq .5-4GHz;Ins Loss 1.3dBmax;Isol 45dBmin;VSWR 1.6max
57	MT3695B2	34		M1212	SP5T Switch;Freq 2-8GHz;Ins Loss 1.7dBmax;Isol 45dBmin;VSWR 1.7max
58	MT3695E	34		M1212	SP5T Switch;Freq 4-12.4GHz;Ins Loss 2.2dBmax;Isol 40dBmin;VSWR 1.9max
59	MT3695H3	34		M1212	SP5T Switch;Freq 8-18GHz;Ins Loss 2.8dBmax;Isol 40dBmin;VSWR 2.0max
60	MT3695H	34		M1212	SP5T Switch;Freq 2-18GHz;Ins Loss 3.0dBmax;Isol 40dBmin;VSWR 2.1max
61	MT3696A	34		M1212	SP6T Switch;Freq .5-4GHz;Ins Loss 1.4dBmax;Isol 45dBmin;VSWR 1.7max
62	MT3696B2	34		M1212	SP6T Switch;Freq 2-8GHz;Ins Loss 1.8dBmax;Isol 45dBmin;VSWR 1.8max
63	MT3696E	34		M1212	SP6T Switch;Freq 4-12.4GHz;Ins Loss 2.4dBmax;Isol 40dBmin;VSWR 2.0max
64	MT3696H3	34		M1212	SP6T Switch;Freq 8-18GHz;Ins Loss 3.0dBmax;Isol 40dBmin;VSWR 2.1max
65	MT3696H	34		M1212	SP6T Switch;Freq 2-18GHz;Ins Loss 3.2dBmax;Isol 40dBmin;VSWR 2.2max
66	MT3697A	34		M1212	SP7T Switch;Freq .5-4GHz;Ins Loss 1.4dBmax;Isol 45dBmin;VSWR 1.7max
67	MT3697B2	34		M1212	SP7T Switch;Freq 2-8GHz;Ins Loss 2.0dBmax;Isol 40dBmin;VSWR 1.9max
68	MT3697E	34		M1212	SP7T Switch;Freq 4-12.4GHz;Ins Loss 2.5dBmax;Isol 40dBmin;VSWR 2.0max
69	MT3697H3	34		M1212	SP7T Switch;Freq 8-18GHz;Ins Loss 3.3dBmax;Isol 40dBmin;VSWR 2.2max
70	MT3697H	34		M1212	SP7T Switch;Freq 2-18GHz;Ins Loss 3.5dBmax;Isol 40dBmin;VSWR 2.3max
71	MT3860A-P1C1I-S5	34		M1206	SPDT Switch w/TTL Driver;Single Control INV;Freq .5-4GHz;Vcc 5/12V 90/15mA;SMA Jack
72	MT3860A-P1C1I-S6	34		M1206	SPDT Switch w/TTL Driver;Single Control INV;Freq .5-4GHz;Vcc 12V/110 mA;SMA Jack
73	MT3860A-P1C1N-S10	34		M1206	SPDT Switch w/TTL Driver;Single Control NINV;Freq .5-4GHz;Vcc 5V/120mA;SMA Jack
74	MT3860A-P1C1N-S11	34		M1206	SPDT Switch w/TTL Driver;Single Control NINV;Freq .5-4GHz;Vcc 5/28V 90/15mA;SMA Jack
75	MT3860A-P1C1N-S5	34		M1206	SPDT Switch w/TTL Driver;Single Control NINV;Freq .5-4GHz;Vcc 5/12V at 90/15mA;SMA Jack
76	MT3860A-P1C1N-S6	34		M1206	SPDT Switch w/TTL Driver;Single Control NINV;Freq .5-4GHz;Vcc 12V at 110mA;SMA Jack
77	MT3860A-P1C1N-S7	34		M1206	SPDT Switch w/TTL Driver;Single Control NINV;Freq .5-4GHz;Vcc 15V/110mA;SMA Jack
78	MT3860A-P1C1N-S8	34		M1206	SPDT Switch w/TTL Driver;Single Control NINV;Freq .5-4GHz;Vcc 5/15V,90/15mA;SMA Jack
79	MT3860A-P1C2I-S10	34		M1206	SPDT Switch w/TTL Driver;Dual Control INV;Freq .5-4GHz;Vcc 5V/120mA;SMA Jack
80	MT3860A-P1C2I-S11	34		M1206	SPDT Switch w/TTL Driver;Dual Control INV;Freq .5-4GHz;Vcc 5/28V 90/15mA;SMA Jack
81	MT3860A-P1C2I-S5	34		M1206	SPDT Switch w/TTL Driver;Dual Control INV;Freq .5-4GHz;Vcc 5/12V 90/15mA;SMA Jack
82	MT3860A-P1C2I-S6	34		M1206	SPDT Switch w/TTL Driver;Dual Control INV;Freq .5-4GHz;Vcc 12V/110mA;SMA Jack
83	MT3860A-P1C2I-S7	34		M1206	SPDT Switch w/TTL Driver;Dual Control INV;Freq .5-4GHz;Vcc 15V/110mA;SMA Jack
84	MT3860A-P1C2I-S8	34		M1206	SPDT Switch w/TTL Driver;Dual Control INV;Freq .5-4GHz;Vcc 5/15V 90/15mA;SMA Jack
85	MT3860A-P1C2N-S10	34		M1206	SPDT Switch w/TTL Driver;Dual Control NINV;Freq .5-4GHz;Vcc 5V/120mA;SMA Jack
86	MT3860A-P1C2N-S11	34		M1206	SPDT Switch w/TTL Driver;Dual Control NINV;Freq .5-4GHz;Vcc 5/28V 90/15mA;SMA Jack
87	MT3860A-P1C2N-S5	34		M1206	SPDT Switch w/TTL Driver;Dual Control NINV;Freq .5-4GHz;Vcc 5/12V 90/15mA;SMA Jack
88	MT3860A-P1C2N-S6	34		M1206	SPDT Switch w/TTL Driver;Dual Control NINV;Freq .5-4GHz;Vcc 12V/110mA;SMA Jack
89	MT3860A-P1C2N-S7	34		M1206	SPDT Switch w/TTL Driver;Dual Control NINV;Freq .5-4GHz;Vcc 15V/110mA;SMA Jack
90	MT3860A-P1C2N-S8	34		M1206	SPDT Switch w/TTL Driver;Dual Control NINV;Freq .5-4GHz;Vcc 5/15V 90/15mA;SMA Jack

LINE No.	[2] TYPE No.	[1] USE	DESCRIPTION MAT.	DESCRIPTION DWG. No.	TECHNICAL DATA
1	MT3860A-P2C1I-S10	34		M1206	SPDT Switch w/TTL Driver;Single Control INV;Freq .5-4GHz;Vcc 5V/120mA;SMC Jack
2	MT3860A-P2C1I-S11	34		M1206	SPDT Switch w/TTL Driver;Single Control INV;Freq .5-4GHz;Vcc 5/28V 90/15mA;SMC Jack
3	MT3860A-P2C1I-S5	34		M1206	SPDT Switch w/TTL Driver;Single Control INV;Freq .5-4GHz;Vcc 5/12V 90/15mA;SMC Jack
4	MT3860A-P2C1I-S6	34		M1206	SPDT Switch w/TTL Driver;Single Control INV;Freq .5-4GHz;Vcc 12V/110mA;SMC Jack
5	MT3860A-P2C1I-S7	34		M1206	SPDT Switch w/TTL Driver;Single Control INV;Freq .5-4GHz;Vcc 15V/110mA;SMC Jack
6	MT3860A-P2C1I-S8	34		M1206	SPDT Switch w/TTL Driver;Single Control INV;Freq .5-4GHz;Vcc 5/15V 90/15mA;SMC Jack
7	MT3860A-P2C1N-S10	34		M1206	SPDT Switch w/TTL Driver;Single Control NINV;Freq .5-4GHz;Vcc 5V/120mA;SMC Jack
8	MT3860A-P2C1N-S11	34		M1206	SPDT Switch w/TTL Driver;Single Control NINV;Freq .5-4GHz;Vcc 5/28V 90/15mA;SMC Jack
9	MT3860A-P2C1N-S5	34		M1206	SPDT Switch w/TTL Driver;Single Control NINV;Freq .5-4GHz;Vcc 5/12V 90/15mA;SMC Jack
10	MT3860A-P2C1N-S6	34		M1206	SPDT Switch w/TTL Driver;Single Control NINV;Freq .5-4GHz;Vcc 12V/110mA;SMC Jack
11	MT3860A-P2C1N-S7	34		M1206	SPDT Switch w/TTL Driver;Single Control NINV;Freq .5-4GHz;Vcc 15V/110mA;SMC Jack
12	MT3860A-P2C1N-S8	34		M1206	SPDT Switch w/TTL Driver;Single Control NINV;Freq .5-4GHz;Vcc 5/15V 90/15mA
13	MT3860A-P2C2I-S10	34		M1206	SPDT Switch w/TTL Driver;Dual Control INV;Freq .5-4GHz;Vcc 5V/120mA;SMC Jack
14	MT3860A-P2C2I-S11	34		M1206	SPDT Switch w/TTL Driver;Dual Control INV;Freq .5-4GHz;Vcc 5/28V 90/15mA;SMC Jack
15	MT3860A-P2C2I-S5	34		M1206	SPDT Switch w/TTL Driver;Dual Control INV;Freq .5-4GHz;Vcc 5/12V 90/15mA;SMC Jack
16	MT3860A-P2C2I-S6	34		M1206	SPDT Switch w/TTL Driver;Dual Control INV;Freq .5-4GHz;Vcc 12V/110mA;SMC Jack
17	MT3860A-P2C2I-S7	34		M1206	SPDT Switch w/TTL Driver;Dual Control INV;Freq .5-4GHz;Vcc 15V/110mA;SMC Jack
18♦	MT3860A-P2C2I-S8	34		M1206	SPDT Switch w/TTL Driver;Dual Control INV;Freq,5-4GHz;Vcc 5/15V 90/15mA;SMC Jack
19	MT3860A-P2C2N-S10	34		M1206	SPDT Switch w/TTL Driver;Dual Control NINV;Freq .5-4GHz;Vcc 5V/120mA;SMC Jack
20	MT3860A-P2C2N-S11	34		M1206	SPDT Switch w/TTL Driver;Dual Control NINV;Freq .5-4GHz;Vcc 5/28V 90/15mA;SMC Jack
21	MT3860A-P2C2N-S5	34		M1206	SPDT Switch w/TTL Driver;Dual Control NINV;Freq .5-4GHz;Vcc 5/12V 90/15mA;SMC Jack
22	MT3860A-P2C2N-S6	34		M1206	SPDT Switch w/ttl Driver;Dual Control NINV;Freq .5-4GHz;Vcc 12V/110mA;SMC Jack
23	MT3860A-P2C2N-S7	34		M1206	SPDT Switch w/TTL Driver;Dual Control NINV;Freq .5-4GHz;Vcc 15V/110mA;SMC Jack
24	MT3860A-P2C2N-S8	34		M1206	SPDT Switch w/TTL Driver;Dual Control NINV;Freq .5-4GHz;Vcc 5/15V 90/15mA;SMC Jack
25	MT3860A-P3C1I-S10	34		M1206	SPDT Switch w/TTL Driver;Single Control INV;Freq .5-4GHz;Vcc 5V/120mA;Solder Pin
26	MT3860A-P3C1I-S11	34		M1206	SPDT Switch w/TTL Driver;Single Control INV;Freq .5-4GHz;Vcc 5/28V 90/15mA;Solder Pin
27	MT3860A-P3C1I-S5	34		M1206	SPDT Switch w/TTL Driver;Single Control INV;Freq .5-4GHz;Vcc 5/12V 90/15mA;Solder Pin
28	MT3860A-P3C1I-S6	34		M1206	SPDT Switch w/TTL Driver;Single Control INV;Freq .5-4GHz;Vcc 12V/110mA;Solder Pin
29	MT3860A-P3C1I-S7	34		M1206	SPDT Switch w/TTL Driver;Single Control INV;Freq .5-4GHz;Vcc 15V/110mA;Solder Pin
30	MT3860A-P3C1I-S8	34		M1206	SPDT Switch w/TTL Driver;Single Control INV;Freq .5-4GHz;Vcc 5/15V 90/15mA;Solder Pin
31	MT3860A-P3C1N-S10	34		M1206	SPDT Switch w/TTL Driver;Single Control NINV;Freq .5-4GHz;Vcc 5V/120mA;Solder Pin
32	MT3860A-P3C1N-S11	34		M1206	SPDT Switch w/TTL Driver;Single Control NINV;Freq .5-4GHz;Vcc 5/28V 90/15mA;Solder Pin
33	MT3860A-P3C1N-S5	34		M1206	SPDT Switch w/TTL Driver;Single Control NINV;Freq .5-4GHz;Vcc 5/12V 90/15mA;Solder Pin
34	MT3860A-P3C1N-S6	34		M1206	SPDT Switch w/TTL Driver;Single Control NINV;Freq .5-4GHz;Vcc 12V/110mA;Solder Pin
35	MT3860A-P3C1N-S7	34		M1206	SPDT Switch w/TTL Driver;Single Control NINV;Freq .5-4GHz;Vcc 15V/110mA;Solder Pin
36	MT3860A-P3C1N-S8	34		M1206	SPDT Switch w/TTL Driver;Single Control NINV;Freq .5-4GHz;Vcc 5/15V 90/15mA;Solder Pin
37	MT3860A-P3C2I-S10	34		M1206	SPDT Switch w/TTL Driver;Dual Control INV;Freq .5-4GHz;Vcc 5V/120mA;Solder Pin
38	MT3860A-P3C2I-S11	34		M1206	SPDT Switch w/TTL Driver;Dual Control INV;Freq .5-4GHz;Vcc 5/28V 90/15mA;Solder Pin
39	MT3860A-P3C2I-S5	34		M1206	SPDT Switch w/TTL Driver;Dual Control INV;Freq .5-4GHz;Vcc 5/12V 90/15mA;Solder Pin
40	MT3860A-P3C2I-S6	34		M1206	SPDT Switch w/TTL Driver;Dual Control INV;Freq .5-4GHz;Vcc 12V/110mA;Solder Pin
41	MT3860A-P3C2I-S7	34		M1206	SPDT Switch w/TTL Driver;Dual Control INV;Freq .5-4GHz;Vcc 15V/110mA;Solder Pin
42	MT3860A-P3C2I-S8	34		M1206	SPDT Switch w/TTL Driver;Dual Control INV;Freq .5-4GHz;Vcc 5/15V 90/15mA;Solder Pin
43	MT3860A-P3C2N-S10	34		M1206	SPDT Switch w/TTL Driver;Dual Control NINV;Freq .5-4GHz;Vcc 5V/120mA;Solder Pin
44	MT3860A-P3C2N-S11	34		M1206	SPDT Switch w/TTL Driver;Dual Control NINV;Freq .5-4GHz;Vcc 5/28V 90/15mA;Solder Pin
45	MT3860A-P3C2N-S5	34		M1206	SPDT Switch w/TTL Driver;Dual Control NINV;Freq .5-4GHz;Vcc 5/12V 90/15mA;Solder Pin
46	MT3860A-P3C2N-S6	34		M1206	SPDT Switch w/TTL Driver;Dual Control NINV;Freq .5-4GHz;Vcc 12V/110mA;Solder Pin
47	MT3860A-P3C2N-S7	34		M1206	SPDT Switch w/TTL Driver;Dual Control NINV;Freq .5-4GHz;Vcc 15V/110mA;Solder Pin
48	MT3860A-P3C2N-S8	34		M1206	SPDT Switch w/TTL Driver;Dual Control NINV;Freq .5-4GHz;Vcc 5/15V 90/15mA;Solder Pin
49	MT3860D1P1C1I-S10	34		M1206	SPDT Switch w/TTL Driver;Single Control INV;Freq .5-12.4GHz;Vcc 5V/120mA;SMA Jack
50	MT3860D1P1C1I-S11	34		M1206	SPDT Switch w/TTL Driver;Single Control INV;Freq .5-12.4GHz;Vcc 5/28V 90/15mA;SMA Jack
51	MT3860D1P1C1I-S5	34		M1206	SPDT Switch w/TTL Driver;Single Control INV;Freq .5-12.4GHz;Vcc 5/12V 90/15mA;SMA Jack
52	MT3860D1P1C1I-S6	34		M1206	SPDT Switch w/TTL Driver;Single Control INV;Freq 5-12.4GHz;Vcc 12V/110ma;SMA Jack
53	MT3860D1P1C1I-S7	34		M1206	SPDT Switch w/TTL Driver;Single Control INV;Freq .5-12.4GHz;Vcc 15V/110mA;SMA Jack
54	MT3860D1P1C1I-S8	34		M1206	SPDT Switch w/TTL Driver;Single Control INV;Freq .5-12.4GHz;Vcc 5/15V 90/15mA;SMA Jack
55	MT3860D1P1C1N-S10	34		M1206	SPDT Switch w/TTL Driver;Single Control NINV;Freq .5-12.4GHz;Vcc 5V/120mA;SMA Jack

8. MISCELLANEOUS DEVICES

IN ORDER OF (1) USE and (2) TYPE No.

LINE No.	2 TYPE No.	1 USE	DESCRIPTION MAT.	DESCRIPTION DWG. No.	TECHNICAL DATA
1	MT3860D1P1C1N-S11	34		M1206	SPDT Switch w/TTL Driver;Single Control NINV;Freq .5-12.4GHz;Vcc 5/28V 90/15mA;SMA Jack
2	MT3860D1P1C1N-S5				
3	MT3860D1P1C1N-S6	34		M1206	SPDT Switch w/TTL Driver;Single Control NINV;Freq .5-12.4GHz;Vcc 5/12V at 90/15mA;SMA Jack
		34		M1206	SPDT Switch w/TTL Driver;Single Control NINV;Freq .5-12.4GHz;Vcc 12V at 110mA;SMA Jack
4	MT3860D1P1C1N-S7	34		M1206	SPDT Switch w/TTL Driver;Single Control NINV;Freq .5-12.4GHz;Vcc 15V/110mA;SMA Jack
5	MT3860D1P1C1N-S8				
6	MT3860D1P1C2I-S10	34		M1206	SPDT Switch w/TTL Driver;Single Control NINV;Freq .5-12.4GHz;Vcc 5/15V,90/15mA;SMA Jack
		34		M1206	SPDT Switch w/TTL Driver;Dual Control INV;Freq .5-12.4GHz;Vcc 5V/120mA;SMA Jack
7	MT3860D1P1C2I-S11	34		M1206	SPDT Switch w/TTL Driver;Dual Control INV;Freq .5-12.4GHz;Vcc 5/28V 90/15mA;SMA Jack
8	MT3860D1P1C2I-S5				
9	MT3860D1P1C2I-S6	34		M1206	SPDT Switch w/TTL Driver;Dual Control INV;Freq .5-12.4GHz;Vcc 5/12V 90/15mA;SMA Jack
		34		M1206	SPDT Switch w/TTL Driver;Dual Control INV;Freq .5-12.4GHz;Vcc 12V/110mA;SMA Jack
10	MT3860D1P1C2I-S7	34		M1206	SPDT Switch w/TTL Driver;Dual Control INV;Freq .5-12.4GHz;Vcc 15V/110mA;SMA Jack
11	MT3860D1P1C2I-S8				
12	MT3860D1P1C2N-S10	34		M1206	SPDT Switch w/TTL Driver;Dual Control INV;Freq .5-12.4GHz;Vcc 5/15V 90/15mA;SMA Jack
		34		M1206	SPDT Switch w/TTL Driver;Dual Control NINV;Freq .5-12.4GHz;Vcc 5V/120mA;SMA Jack
13	MT3860D1P1C2N-S11	34		M1206	SPDT Switch w/TTL Driver;Dual Control NINV;Freq .5-12.4GHz;Vcc 5/28V 90/15mA;SMA Jack
14	MT3860D1P1C2N-S5				
15	MT3860D1P1C2N-S6	34		M1206	SPDT Switch w/TTL Driver;Dual Control NINV;Freq .5-12.4GHz;Vcc 5/12V 90/15mA;SMA Jack
		34		M1206	SPDT Switch w/TTL Driver;Dual Control NINV;Freq .5-12.4GHz;Vcc 12V/110mA;SMA Jack
16	MT3860D1P1C2N-S7	34		M1206	SPDT Switch w/TTL Driver;Dual Control NINV;Freq .5-12.4GHz;Vcc 15V/110mA;SMA Jack
17	MT3860D1P1C2N-S8				
18	MT3860D1P2C1I-S10	34		M1206	SPDT Switch w/TTL Driver;Dual Control NINV;Freq .5-12.4GHz;Vcc 5/15V 90/15mA;SMA Jack
		34		M1206	SPDT Switch w/TTL Driver;Single Control INV;Freq .5-12.4GHz;Vcc 5V/120mA;SMC Jack
19	MT3860D1P2C1I-S11	34		M1206	SPDT Switch w/TTL Driver;Single Control INV;Freq .5-12.4GHz;Vcc 5/28V 90/15mA;SMC Jack
20	MT3860D1P2C1I-S5				
21	MT3860D1P2C1I-S6	34		M1206	SPDT Switch w/TTL Driver;Single Control INV;Freq .5-12.4GHz;Vcc 5/12V 90/15mA;SMC Jack
		34		M1206	SPDT Switch w/TTL Driver;Single Control INV;Freq .5-12.4GHz;Vcc 12V/110mA;SMC Jack
22	MT3860D1P2C1I-S7	34		M1206	SPDT Switch w/TTL Driver;Single Control INV;Freq .5-12.4GHz;Vcc 15V/110mA;SMC Jack
23	MT3860D1P2C1I-S8				
24	MT3860D1P2C1N-S10	34		M1206	SPDT Switch w/TTL Driver;Single Control INV;Freq .5-12.4GHz;Vcc 5/15V 90/15mA;SMC Jack
		34		M1206	SPDT Switch w/TTL Driver;Single Control NINV;Freq .5-12.4GHz;Vcc 5V/120mA;SMC Jack
25	MT3860D1P2C1N-S11	34		M1206	SPDT Switch w/TTL Driver;Single Control NINV;Freq .5-12.4GHz;Vcc 5/28V 90/15mA;SMC Jack
26	MT3860D1P2C1N-S5				
27	MT3860D1P2C1N-S6	34		M1206	SPDT Switch w/TTL Driver;Single Control NINV;Freq .5-12.4GHz;Vcc 5/12V 90/15mA;SMC Jack
		34		M1206	SPDT Switch w/TTL Driver;Single Control NINV;Freq .5-12.4GHz;Vcc 12V/110mA;SMC Jack
28	MT3860D1P2C1N-S7	34		M1206	SPDT Switch w/TTL Driver;Single Control NINV;Freq .5-12.4GHz;Vcc 15V/110mA;SMC Jack
29	MT3860D1P2C1N-S8				
30	MT3860D1P2C2I-S10	34		M1206	SPDT Switch w/TTL Driver;Single Control NINV;Freq .5-12.4GHz;Vcc 5/15V 90/15mA;SMC Jack
		34		M1206	SPDT Switch w/TTL Driver;Dual Control INV;Freq .5-12.4GHz;Vcc 5V/120mA;SMC Jack
31	MT3860D1P2C2I-S11	34		M1206	SPDT Switch w/TTL Driver;Dual Control INV;Freq .5-12.4GHz;Vcc 5/28V 90/15mA;SMC Jack
32	MT3860D1P2C2I-S5				
33	MT3860D1P2C2I-S6	34		M1206	SPDT Switch w/TTL Driver;Dual Control INV;Freq .5-12.4GHz;Vcc 5/12V 90/15mA;SMC Jack
		34		M1206	SPDT Switch w/TTL Driver;Dual Control INV;Freq .5-12.4GHz;Vcc 12V/110mA;SMC Jack
34	MT3860D1P2C2I-S7	34		M1206	SPDT Switch w/TTL Driver;Dual Control INV;Freq .5-12.4GHz;Vcc 15V/110mA;SMC Jack
35	MT3860D1P2C2I-S8				
36	MT3860D1P2C2N-S10	34		M1206	SPDT Switch w/TTL Driver;Dual Control INV;Freq .5-12.4GHz;Vcc 5/15V 90/15mA;SMC Jack
		34		M1206	SPDT Switch w/TTL Driver;Dual Control NINV;Freq .5-12.4GHz;Vcc 5V/120mA;SMC Jack
37	MT3860D1P2C2N-S11	34		M1206	SPDT Switch w/TTL Driver;Dual Control NINV;Freq .5-12.4GHz;Vcc 5/28V 90/15mA;SMC Jack
38	MT3860D1P2C2N-S5				
39	MT3860D1P2C2N-S6	34		M1206	SPDT Switch w/ttl Driver;Dual Control NINV;Freq .5-12.4GHz;Vcc 5/12V 90/15mA;SMC Jack
		34		M1206	SPDT Switch w/ttl Driver;Dual Control NINV;Freq .5-12.4GHz;Vcc 12V/110mA;SMC Jack
40	MT3860D1P2C2N-S7	34		M1206	SPDT Switch w/TTL Driver;Dual Control NINV;Freq .5-12.4GHz;Vcc 15V/110mA;SMC Jack
41	MT3860D1P2C2N-S8				
42	MT3860D1P3C1I-S10	34		M1206	SPDT Switch w/TTL Driver;Dual Control NINV;Freq .5-12.4GHz;Vcc 5/15V 90/15mA;SMC Jack
		34		M1206	SPDT Switch w/TTL Driver;Single Control INV;Freq .5-12.4GHz;Vcc 5V/120mA;Solder Pin
43	MT3860D1P3C1I-S11	34		M1206	SPDT Switch w/TTL Driver;Single Control INV;Freq .5-12.4GHz;Vcc 5/28V 90/15mA;Solder Pin
44	MT3860D1P3C1I-S5				
45	MT3860D1P3C1I-S6	34		M1206	SPDT Switch w/TTL Driver;Single Control INV;Freq .5-12.4GHz;Vcc 5/12V 90/15mA;Solder Pin
		34		M1206	SPDT Switch w/TTL Driver;Single Control INV;Freq .5-12.4GHz;Vcc 12V/110mA;Solder Pin
46	MT3860D1P3C1I-S7	34		M1206	SPDT Switch w/TTL Driver;Single Control INV;Freq .5-12.4GHz;Vcc 15V/110mA;Solder Pin
47	MT3860D1P3C1I-S8				
48	MT3860D1P3C1N-S10	34		M1206	SPDT Switch w/TTL Driver;Single Control INV;Freq .5-12.4GHz;Vcc 5/15V 90/15mA;Solder Pin
		34		M1206	SPDT Switch w/TTL Driver;Single Control NINV;Freq .5-12.4GHz;Vcc 5V/120mA;Solder Pin
49	MT3860D1P3C1N-S11	34		M1206	SPDT Switch w/TTL Driver;Single Control NINV;Freq .5-12.4GHz;Vcc 5/28V 90/15mA;Solder Pin
50	MT3860D1P3C1N-S5				
51	MT3860D1P3C1N-S6	34		M1206	SPDT Switch w/TTL Driver;Single Control NINV;Freq .5-12.4GHz;Vcc 5/12V 90/15mA;Solder Pin
		34		M1206	SPDT Switch w/TTL Driver;Single Control NINV;Freq .5-12.4GHz;Vcc 12V/110mA;Solder Pin
52	MT3860D1P3C1N-S7	34		M1206	SPDT Switch w/TTL Driver;Single Control NINV;Freq .5-12.4GHz;Vcc 15V/110mA;Solder Pin
53	MT3860D1P3C1N-S8				
54	MT3860D1P3C2I-S10	34		M1206	SPDT Switch w/TTL Driver;Single Control NINV;Freq .5-12.4GHz;Vcc 5/15V 90/15mA;Solder Pin
		34		M1206	SPDT Switch w/TTL Driver;Dual Control INV;Freq .5-12.4GHz;Vcc 5V/120mA;Solder Pin
55	MT3860D1P3C2I-S11	34		M1206	SPDT Switch w/TTL Driver;Dual Control INV;Freq .5-12.4GHz;Vcc 5/28V 90/15mA;Solder Pin

8. MISCELLANEOUS DEVICES

IN ORDER OF (1) USE and (2) TYPE No.

LINE No.	2 TYPE No.	1 USE	DESCRIPTION MAT.	DESCRIPTION DWG. No.	TECHNICAL DATA
1	MT3860D1P3C2I-S5	34		M1206	SPDT Switch w/TTL Driver;Dual Control INV;Freq .5-12.4GHz;Vcc 5/12V 90/15mA;Solder Pin
2	MT3860D1P3C2I-S6				
3	MT3860D1P3C2I-S7	34		M1206	SPDT Switch w/TTL Driver;Dual Control INV;Freq .5-12.4GHz;Vcc 12V/110mA;Solder Pin
		34		M1206	SPDT Switch w/TTL Driver;Dual Control INV;Freq .5-12.4GHz;Vcc 15V/110mA;Solder Pin
4	MT3860D1P3C2I-S8	34		M1206	SPDT Switch w/TTL Driver;Dual Control INV;Freq .5-12.4GHz;Vcc 5/15V 90/15mA;Solder Pin
5	MT3860D1P3C2N-S10				
6	MT3860D1P3C2N-S11	34		M1206	SPDT Switch w/TTL Driver;Dual Control NINV;Freq .5-12.4GHz;Vcc 5V/120mA;Solder Pin
		34		M1206	SPDT Switch w/TTL Driver;Dual Control NINV;Freq .5-12.4GHz;Vcc 5/28V 90/15mA;Solder Pin
7	MT3860D1P3C2N-S5	34		M1206	SPDT Switch w/TTL Driver;Dual Control NINV;Freq .5-12.4GHz;Vcc 5/12V 90/15mA;Solder Pin
8	MT3860D1P3C2N-S6				
9	MT3860D1P3C2N-S7	34		M1206	SPDT Switch w/TTL Driver;Dual Control NINV;Freq .5-12.4GHz;Vcc 12V/110mA;Solder Pin
		34		M1206	SPDT Switch w/TTL Driver;Dual Control NINV;Freq .5-12.4GHz;Vcc 15V/110mA;Solder Pin
10	MT3860D1P3C2N-S8	34		M1206	SPDT Switch w/TTL Driver;Dual Control NINV;Freq .5-12.4GHz;Vcc 5/15V 90/15mA;Solder Pin
11	MT3860E-P1C1I-S10				
12	MT3860E-P1C1I-S11	34		M1206	SPDT Switch w/TTL Driver;Single Control INV;Freq 4-12.4GHz;Vcc 5V/120mA;SMA Jack
		34		M1206	SPDT Switch w/TTL Driver;Single Control INV;Freq 4-12.4GHz;Vcc 5/28V 90/15mA;SMA Jack
13	MT3860E-P1C1I-S5	34		M1206	SPDT Switch w/TTL Driver;Single Control INV;Freq 4-12.4GHz;Vcc 5/12V 90/15mA;SMA Jack
14	MT3860E-P1C1I-S6				
15	MT3860E-P1C1I-S7	34		M1206	SPDT Switch w/TTL Driver;Single Control INV;Freq 4-12.4GHz;Vcc 12V/110mA;SMA Jack
		34		M1206	SPDT Switch w/TTL Driver;Single Control INV;Freq 4-12.4GHz;Vcc 15V/110mA;SMA Jack
16	MT3860E-P1C1I-S8	34		M1206	SPDT Switch w/TTL Driver;Single Control INV;Freq 4-12.4GHz;Vcc 5/15V 90/15mA;SMA Jack
17	MT3860E-P1C1N-S10				
18	MT3860E-P1C1N-S11	34		M1206	SPDT Switch w/TTL Driver;Single Control NINV;Freq 4-12.4GHz;Vcc 5V/120mA;SMA Jack
		34		M1206	SPDT Switch w/TTL Driver;Single Control NINV;Freq 4-12.4GHz;Vcc 5/28V 90/15mA;SMA Jack
19	MT3860E-P1C1N-S5	34		M1206	SPDT Switch w/TTL Driver;Single Control NINV;Freq 4-12.4GHz;Vcc 5/12V at 90/15mA;SMA Jack
20	MT3860E-P1C1N-S6				
21	MT3860E-P1C1N-S7	34		M1206	SPDT Switch w/TTL Driver;Single Control NINV;Freq 4-12.4GHz;Vcc 12V at 110mA;SMA Jack
		34		M1206	SPDT Switch w/TTL Driver;Single Control NINV;Freq 4-12.4GHz;Vcc 15V/110mA;SMA Jack
22	MT3860E-P1C1N-S8	34		M1206	SPDT Switch w/TTL Driver;Single Control NINV;Freq 4-12.4GHz;Vcc 5/15V,90/15mA;SMA Jack
23	MT3860E-P1C2I-S10				
24	MT3860E-P1C2I-S11	34		M1206	SPDT Switch w/TTL Driver;Dual Control INV;Freq 4-12.4GHz;Vcc 5V/120mA;SMA Jack
		34		M1206	SPDT Switch w/TTL Driver;Dual Control INV;Freq 4-12.4GHz;Vcc 5/28V 90/15mA;SMA Jack
25	MT3860E-P1C2I-S5	34		M1206	SPDT Switch w/TTL Driver;Dual Control INV;Freq 4-12.4GHz;Vcc 5/12V 90/15mA;SMA Jack
26	MT3860E-P1C2I-S6				
27	MT3860E-P1C2I-S7	34		M1206	SPDT Switch w/TTL Driver;Dual Control INV;Freq 4-12.4GHz;Vcc 12V/110mA;SMA Jack
		34		M1206	SPDT Switch w/TTL Driver;Dual Control INV;Freq 4-12.4GHz;Vcc 15V/110mA;SMA Jack
28	MT3860E-P1C2I-S8	34		M1206	SPDT Switch w/TTL Driver;Dual Control INV;Freq 4-12.4GHz;Vcc 5/15V 90/15mA;SMA Jack
29	MT3860E-P1C2N-S10				
30	MT3860E-P1C2N-S11	34		M1206	SPDT Switch w/TTL Driver;Dual Control NINV;Freq 4-12.4GHz;Vcc 5V/120mA;SMA Jack
		34		M1206	SPDT Switch w/TTL Driver;Dual Control NINV;Freq 4-12.4GHz;Vcc 5/28V 90/15mA;SMA Jack
31	MT3860E-P1C2N-S5	34		M1206	SPDT Switch w/TTL Driver;Dual Control NINV;Freq 4-12.4GHz;Vcc 5/12V 90/15mA;SMA Jack
32	MT3860E-P1C2N-S6				
33	MT3860E-P1C2N-S7	34		M1206	SPDT Switch w/TTL Driver;Dual Control NINV;Freq 4-12.4GHz;Vcc 12V/110mA;SMA Jack
		34		M1206	SPDT Switch w/TTL Driver;Dual Control NINV;Freq 4-12.4GHz;Vcc 15V/110mA;SMA Jack
34	MT3860E-P1C2N-S8	34		M1206	SPDT Switch w/TTL Driver;Dual Control NINV;Freq 4-12.4GHz;Vcc 5/15V 90/15mA;SMA Jack
35	MT3860E-P2C1I-S10				
36	MT3860E-P2C1I-S11	34		M1206	SPDT Switch w/TTL Driver;Single Control INV;Freq 4-12.4GHz;Vcc 5V/120mA;SMC Jack
		34		M1206	SPDT Switch w/TTL Driver;Single Control INV;Freq 4-12.4GHz;Vcc 5/28V 90/15mA;SMC Jack
37	MT3860E-P2C1I-S5	34		M1206	SPDT Switch w/TTL Driver;Single Control INV;Freq 4-12.4GHz;Vcc 5/12V 90/15mA;SMC Jack
38	MT3860E-P2C1I-S6				
39	MT3860E-P2C1I-S7	34		M1206	SPDT Switch w/TTL Driver;Single Control INV;Freq 4-12.4GHz;Vcc 12V/110mA;SMC Jack
		34		M1206	SPDT Switch w/TTL Driver;Single Control INV;Freq 4-12.4GHz;Vcc 15V/110mA;SMC Jack
40	MT3860E-P2C1I-S8	34		M1206	SPDT Switch w/TTL Driver;Single Control INV;Freq 4-12.4GHz;Vcc 5/15V 90/15mA;SMC Jack
41	MT3860E-P2C1N-S10				
42	MT3860E-P2C1N-S11	34		M1206	SPDT Switch w/TTL Driver;Single Control NINV;Freq 4-12.4GHz;Vcc 5V/120mA;SMC Jack
		34		M1206	SPDT Switch w/TTL Driver;Single Control NINV;Freq 4-12.4GHz;Vcc 5/28V 90/15mA;SMC Jack
43	MT3860E-P2C1N-S5	34		M1206	SPDT Switch w/TTL Driver;Single Control NINV;Freq 4-12.4GHz;Vcc 5/12V 90/15mA;SMC Jack
44▼	MT3860E-P2C1N-S6				
45	MT3860E-P2C1N-S7	34		M1206	SPDT Switch w/TTL Driver;Single Control NINV;Freq 4-12.4GHz;Vcc 12V/110mA;SMC Jack
		34		M1206	SPDT Switch w/TTL Driver;Single Control NINV;Freq 4-12.4GHz;Vcc 15V/110mA;SMC Jack
46	MT3860E-P2C1N-S8	34		M1206	SPDT Switch w/TTL Driver;Single Control NINV;Freq 4-12.4GHz;Vcc 5/15V 90/15mA
47	MT3860E-P2C2I-S10				
48	MT3860E-P2C2I-S11	34		M1206	SPDT Switch w/TTL Driver;Dual Control INV;Freq 4-12.4GHz;Vcc 5V/120mA;SMC Jack
		34		M1206	SPDT Switch w/TTL Driver;Dual Control INV;Freq 4-12.4GHz;Vcc 5/28V 90/15mA;SMC Jack
49	MT3860E-P2C2I-S5	34		M1206	SPDT Switch w/TTL Driver;Dual Control INV;Freq 4-12.4GHz;Vcc 5/12V 90/15mA;SMC Jack
50	MT3860E-P2C2I-S6				
51	MT3860E-P2C2I-S7	34		M1206	SPDT Switch w/TTL Driver;Dual Control INV;Freq 4-12.4GHz;Vcc 12V/110mA;SMC Jack
		34		M1206	SPDT Switch w/TTL Driver;Dual Control INV;Freq 4-12.4GHz;Vcc 15V/110mA;SMC Jack
52	MT3860E-P2C2I-S8	34		M1206	SPDT Switch w/TTL Driver;Dual Control INV;Freq 4-12.4GHz;Vcc 5V/15mA;SMC Jack
53	MT3860E-P2C2N-S10				
54	MT3860E-P2C2N-S11	34		M1206	SPDT Switch w/TTL Driver;Dual Control NINV;Freq 4-12.4GHz;Vcc 5V/120mA;SMC Jack
		34		M1206	SPDT Switch w/TTL Driver;Dual Control NINV;Freq 4-12.4GHz;Vcc 5/28V 90/15mA;SMC Jack
55	MT3860E-P2C2N-S5	34		M1206	SPDT Switch w/TTL Driver;Dual Control NINV;Freq 4-12.4GHz;Vcc 5/12V 90/15mA;SMC Jack

8. MISCELLANEOUS DEVICES

IN ORDER OF (1) USE and (2) TYPE No.

LINE No.	2 TYPE No.	1 USE	DESCRIPTION MAT.	DWG. No.	TECHNICAL DATA
1	MT3860E-P2C2N-S6	34		M1206	SPDT Switch w/ttl Driver;Dual Control NINV;Freq 4-12.4GHz;Vcc 12V/110mA;SMC Jack
2	MT3860E-P2C2N-S7	34		M1206	SPDT Switch w/TTL Driver;Dual Control NINV;Freq 4-12.4GHz;Vcc 15V/110mA;SMC Jack
3	MT3860E-P2C2N-S8	34		M1206	SPDT Switch w/TTL Driver;Dual Control NINV;Freq 4-12.4GHz;Vcc 5/15V 90/15mA;SMC Jack
4	MT3860E-P3C1I-S10	34		M1206	SPDT Switch w/TTL Driver;Single Control INV;Freq 4-12.4GHz;Vcc 5V/120mA;Solder Pin
5	MT3860E-P3C1I-S11	34		M1206	SPDT Switch w/TTL Driver;Single Control INV;Freq 4-12.4GHz;Vcc 5/28V 90/15mA;Solder Pin
6	MT3860E-P3C1I-S5	34		M1206	SPDT Switch w/TTL Driver;Single Control INV;Freq 4-12.4GHz;Vcc 5/12V 90/15mA;Solder Pin
7	MT3860E-P3C1I-S6	34		M1206	SPDT Switch w/TTL Driver;Single Control INV;Freq 4-12.4GHz;Vcc 12V/110mA;Solder Pin
8	MT3860E-P3C1I-S7	34		M1206	SPDT Switch w/TTL Driver;Single Control INV;Freq 4-12.4GHz;Vcc 15V/110mA;Solder Pin
9	MT3860E-P3C1I-S8	34		M1206	SPDT Switch w/TTL Driver;Single Control INV;Freq 4-12.4GHz;Vcc 5/15V 90/15mA;Solder Pin
10	MT3860E-P3C1N-S10	34		M1206	SPDT Switch w/TTL Driver;Single Control NINV;Freq 4-12.4GHz;Vcc 5V/120mA;Solder Pin
11	MT3860E-P3C1N-S11	34		M1206	SPDT Switch w/TTL Driver;Single Control NINV;Freq 4-12.4GHz;Vcc 5/28V 90/15mA;Solder Pin
12	MT3860E-P3C1N-S5	34		M1206	SPDT Switch w/TTL Driver;Single Control NINV;Freq 4-12.4GHz;Vcc 5/12V 90/15mA;Solder Pin
13	MT3860E-P3C1N-S6	34		M1206	SPDT Switch w/TTL Driver;Single Control NINV;Freq 4-12.4GHz;Vcc 12V/110mA;Solder Pin
14	MT3860E-P3C1N-S7	34		M1206	SPDT Switch w/TTL Driver;Single Control NINV;Freq 4-12.4GHz;Vcc 15V/110mA;Solder Pin
15	MT3860E-P3C1N-S8	34		M1206	SPDT Switch w/TTL Driver;Single Control NINV;Freq 4-12.4GHz;Vcc 5/15V 90/15mA;Solder Pin
16	MT3860E-P3C2I-S10	34		M1206	SPDT Switch w/TTL Driver;Dual Control INV;Freq 4-12.4GHz;Vcc 5V/120mA;Solder Pin
17	MT3860E-P3C2I-S11	34		M1206	SPDT Switch w/TTL Driver;Dual Control INV;Freq 4-12.4GHz;Vcc 5/28V 90/15mA;Solder Pin
18	MT3860E-P3C2I-S5	34		M1206	SPDT Switch w/TTL Driver;Dual Control INV;Freq 4-12.4GHz;Vcc 5/12V 90/15mA;Solder Pin
19	MT3860E-P3C2I-S6	34		M1206	SPDT Switch w/TTL Driver;Dual Control INV;Freq 4-12.4GHz;Vcc 12V/110mA;Solder Pin
20	MT3860E-P3C2I-S7	34		M1206	SPDT Switch w/TTL Driver;Dual Control INV;Freq 4-12.4GHz;Vcc 15V/110mA;Solder Pin
21	MT3860E-P3C2I-S8	34		M1206	SPDT Switch w/TTL Driver;Dual Control INV;Freq 4-12.4GHz;Vcc 5/15V 90/15mA;Solder Pin
22	MT3860E-P3C2N-S10	34		M1206	SPDT Switch w/TTL Driver;Dual Control NINV;Freq 4-12.4GHz;Vcc 5V/120mA;Solder Pin
23	MT3860E-P3C2N-S11	34		M1206	SPDT Switch w/TTL Driver;Dual Control NINV;Freq 4-12.4GHz;Vcc 5/28V 90/15mA;Solder Pin
24	MT3860E-P3C2N-S5	34		M1206	SPDT Switch w/TTL Driver;Dual Control NINV;Freq 4-12.4GHz;Vcc 5/12V 90/15mA;Solder Pin
25	MT3860E-P3C2N-S6	34		M1206	SPDT Switch w/TTL Driver;Dual Control NINV;Freq 4-12.4GHz;Vcc 12V/110mA;Solder Pin
26	MT3860E-P3C2N-S7	34		M1206	SPDT Switch w/TTL Driver;Dual Control NINV;Freq 4-12.4GHz;Vcc 15V/110mA;Solder Pin
27	MT3860E-P3C2N-S8	34		M1206	SPDT Switch w/TTL Driver;Dual Control NINV;Freq 4-12.4GHz;Vcc 5/15V 90/15mA;Solder Pin
28	MT3860H3P1C1I-S10	34		M1206	SPDT Switch w/TTL Driver;Single Control INV;Freq 8-18GHz;Vcc 5V/120mA;SMA Jack
29	MT3860H3P1C1I-S11	34		M1206	SPDT Switch w/TTL Driver;Single Control INV;Freq 8-18GHz;Vcc 5/28V 90/15mA;SMA Jack
30	MT3860H3P1C1I-S5	34		M1206	SPDT Switch w/TTL Driver;Single Control INV;Freq 8-18GHz;Vcc 5/12V 90/15mA;SMA Jack
31	MT3860H3P1C1I-S6	34		M1206	SPDT Switch w/TTL Driver;Single Control INV;Freq 8-18GHz;Vcc 12V/110mA;SMA Jack
32	MT3860H3P1C1I-S7	34		M1206	SPDT Switch w/TTL Driver;Single Control INV;Freq 8-18GHz;Vcc 15V/110mA;SMA Jack
33♦	MT3860H3P1C1I-S8	34		M1206	SPDT Switch w/TTL Driver;Single Control INV;Freq 8-18GHz;Vcc 15V/110mA;SMA Jack
34	MT3860H3P1C1N-S10	34		M1206	SPDT Switch w/TTL Driver;Single Control NINV;Freq 8-18GHz;Vcc 5V/120mA;SMA Jack
35	MT3860H3P1C1N-S11	34		M1206	SPDT Switch w/TTL Driver;Single Control NINV;Freq 8-18GHz;Vcc 5/28V 90/15mA;SMA Jack
36	MT3860H3P1C1N-S5	34		M1206	SPDT Switch w/TTL Driver;Single Control NINV;Freq 8-18GHz;Vcc 5/12V at 90/15mA;SMA Jack
37	MT3860H3P1C1N-S6	34		M1206	SPDT Switch w/TTL Driver;Single Control NINV;Freq 8-18GHz;Vcc 12V at 110mA;SMA Jack
38	MT3860H3P1C1N-S7	34		M1206	SPDT Switch w/TTL Driver;Single Control NINV;Freq 8-18GHz;Vcc 15V/110mA;SMA Jack
39	MT3860H3P1C1N-S8	34		M1206	SPDT Switch w/TTL Driver;Single Control NINV;Freq 8-18GHz;Vcc 5/15V,90/15mA;SMA Jack
40	MT3860H3P1C2I-S10	34		M1206	SPDT Switch w/TTL Driver;Dual Control INV;Freq 8-18GHz;Vcc 5V/120mA;SMA Jack
41	MT3860H3P1C2I-S11	34		M1206	SPDT Switch w/TTL Driver;Dual Control INV;Freq 8-18GHz;Vcc 5/28V 90/15mA;SMA Jack
42	MT3860H3P1C2I-S5	34		M1206	SPDT Switch w/TTL Driver;Dual Control INV;Freq 8-18GHz;Vcc 5/12V 90/15mA;SMA Jack
43	MT3860H3P1C2I-S6	34		M1206	SPDT Switch w/TTL Driver;Dual Control INV;Freq 8-18GHz;Vcc 12V/110mA;SMA Jack
44	MT3860H3P1C2I-S7	34		M1206	SPDT Switch w/TTL Driver;Dual Control INV;Freq 8-18GHz;Vcc 15V/110mA;SMA Jack
45	MT3860H3P1C2I-S8	34		M1206	SPDT Switch w/TTL Driver;Dual Control INV;Freq 8-18GHz;Vcc 5/15V 90/15mA;SMA Jack
46	MT3860H3P1C2N-S10	34		M1206	SPDT Switch w/TTL Driver;Dual Control NINV;Freq 8-18GHz;Vcc 5V/120mA;SMA Jack
47	MT3860H3P1C2N-S11	34		M1206	SPDT Switch w/TTL Driver;Dual Control NINV;Freq 8-18GHz;Vcc 5/28V 90/15mA;SMA Jack
48	MT3860H3P1C2N-S5	34		M1206	SPDT Switch w/TTL Driver;Dual Control NINV;Freq 8-18GHz;Vcc 5/12V 90/15mA;SMA Jack
49	MT3860H3P1C2N-S6	34		M1206	SPDT Switch w/TTL Driver;Dual Control NINV;Freq 8-18GHz;Vcc 12V/110mA;SMA Jack
50	MT3860H3P1C2N-S7	34		M1206	SPDT Switch w/TTL Driver;Dual Control NINV;Freq 8-18GHz;Vcc 15V/110mA;SMA Jack
51	MT3860H3P1C2N-S8	34		M1206	SPDT Switch w/TTL Driver;Dual Control NINV;Freq 8-18GHz;Vcc 5/15V 90/15mA;SMA Jack
52	MT3860H3P2C1I-S10	34		M1206	SPDT Switch w/TTL Driver;Single Control INV;Freq 8-18GHz;Vcc 5V/120mA;SMC Jack
53	MT3860H3P2C1I-S11	34		M1206	SPDT Switch w/TTL Driver;Single Control INV;Freq 8-18GHz;Vcc 5/28V 90/15mA;SMC Jack
54	MT3860H3P2C1I-S5	34		M1206	SPDT Switch w/TTL Driver;Single Control INV;Freq 8-18GHz;Vcc 5/12V 90/15mA;SMC Jack
55	MT3860H3P2C1I-S6	34		M1206	SPDT Switch w/TTL Driver;Single Control INV;Freq 8-18GHz;Vcc 12V/110mA;SMC Jack

8. MISCELLANEOUS DEVICES

IN ORDER OF (1) USE and (2) TYPE No.

LINE No.	2 TYPE No.	1 USE	DESCRIPTION MAT.	DESCRIPTION DWG. No.	TECHNICAL DATA
1	MT3860H3P2C1I-S7	34		M1206	SPDT Switch w/TTL Driver;Single Control INV;Freq 8-18GHz;Vcc 15V/110mA;SMC Jack
2	MT3860H3P2C1I-S8				
3	MT3860H3P2C1N-S10	34		M1206	SPDT Switch w/TTL Driver;Single Control INV;Freq 8-18GHz;Vcc 5/15V 90/15mA;SMC Jack
		34		M1206	SPDT Switch w/TTL Driver;Single Control NINV;Freq 8-18GHz;Vcc 5V/120mA;SMC Jack
4	MT3860H3P2C1N-S11	34		M1206	SPDT Switch w/TTL Driver;Single Control NINV;Freq 8-18GHz;Vcc 5/28V 90/15mA;SMC Jack
5	MT3860H3P2C1N-S5				
6	MT3860H3P2C1N-S6	34		M1206	SPDT Switch w/TTL Driver;Single Control NINV;Freq 8-18GHz;Vcc 5/12V 90/15mA;SMC Jack
		34		M1206	SPDT Switch w/TTL Driver;Single Control NINV;Freq 8-18GHz;Vcc 12V/110mA;SMC Jack
7	MT3860H3P2C1N-S7	34		M1206	SPDT Switch w/TTL Driver;Single Control NINV;Freq 8-18GHz;Vcc 15V/110mA;SMC Jack
8	MT3860H3P2C1N-S8				
9	MT3860H3P2C2I-S10	34		M1206	SPDT Switch w/TTL Driver;Single Control NINV;Freq 8-18GHz;Vcc 5/15V 90/mA;SMC Jack
		34		M1206	SPDT Switch w/TTL Driver;Dual Control INV;Freq 8-18GHz;Vcc 5V/120mA;SMC Jack
10	MT3860H3P2C2I-S11	34		M1206	SPDT Switch w/TTL Driver;Dual Control INV;Freq 8-18GHz;Vcc 5/28V 90/15mA;SMC Jack
11	MT3860H3P2C2I-S5				
12	MT3860H3P2C2I-S6	34		M1206	SPDT Switch w/TTL Driver;Dual Control INV;Freq 8-18GHz;Vcc 5/12V 90/15mA;SMC Jack
		34		M1206	SPDT Switch w/TTL Driver;Dual Control INV;Freq 8-18GHz;Vcc 12V/110mA;SMC Jack
13	MT3860H3P2C2I-S7	34		M1206	SPDT Switch w/TTL Driver;Dual Control INV;Freq 8-18GHz;Vcc 15V/110mA;SMC Jack
14	MT3860H3P2C2I-S8				
15	MT3860H3P2C2N-S10	34		M1206	SPDT Switch w/TTL Driver;Dual Control INV;Freq 8-18GHz;Vcc 5/15V 90/15mA;SM C Jack
		34		M1206	SPDT Switch w/TTL Driver;Dual Control NINV;Freq 8-18GHz;Vcc 5V/120mA;SMC Jack
16	MT3860H3P2C2N-S11	34		M1206	SPDT Switch w/TTL Driver;Dual Control NINV;Freq 8-18GHz;Vcc 5/28V 90/15mA;SMC Jack
17	MT3860H3P2C2N-S5				
18	MT3860H3P2C2N-S6	34		M1206	SPDT Switch w/TTL Driver;Dual Control NINV;Freq 8-18GHz;Vcc 5/12V 90/15mA;SMC Jack
		34		M1206	SPDT Switch w/ttl Driver;Dual Control NINV;Freq 8-18GHz;Vcc 12V/110mA;SMC Jack
19▼	MT3860H3P2C2N-S7	34		M1206	SPDT Switch w/TTL Driver;Dual Control NINV;Freq 8-18GHz;Vcc 15V/110mA;SMC Jack
20	MT3860H3P2C2N-S8				
21	MT3860H3P3C1I-S10	34		M1206	SPDT Switch w/TTL Driver;Dual Control NINV;Freq 8-18GHz;Vcc 5/15V 90/15mA;SMC Jack
		34		M1206	SPDT Switch w/TTL Driver;Single Control INV;Freq 8-18GHz;Vcc 5V/120mA;Solder Pin
22	MT3860H3P3C1I-S11	34		M1206	SPDT Switch w/TTL Driver;Single Control INV;Freq 8-18GHz;Vcc 5/28V 90/15mA;Solder Pin
23	MT3860H3P3C1I-S5				
24	MT3860H3P3C1I-S6	34		M1206	SPDT Switch w/TTL Driver;Single Control INV;Freq 8-18GHz;Vcc 5/12V 90/15mA;Solder Pin
		34		M1206	SPDT Switch w/TTL Driver;Single Control INV;Freq 8-18GHz;Vcc 12V/110mA;Solder Pin
25	MT3860H3P3C1I-S7	34		M1206	SPDT Switch w/TTL Driver;Single Control INV;Freq 8-18GHz;Vcc 15V/110mA;Solder Pin
26	MT3860H3P3C1I-S8				
27	MT3860H3P3C1N-S10	34		M1206	SPDT Switch w/TTL Driver;Single Control INV;Freq 8-18GHz;Vcc 5/15V 90/15mA;Solder Pin
		34		M1206	SPDT Switch w/TTL Driver;Single Control NINV;Freq 8-18GHz;Vcc 5V/120mA;Solder Pin
28	MT3860H3P3C1N-S11	34		M1206	SPDT Switch w/TTL Driver;Single Control NINV;Freq 8-18GHz;Vcc 5/28V 90/15mA;Solder Pin
29	MT3860H3P3C1N-S5				
30	MT3860H3P3C1N-S6	34		M1206	SPDT Switch w/TTL Driver;Single Control NINV;Freq 8-18GHz;Vcc 5/12V 90/15mA;Solder Pin
		34		M1206	SPDT Switch w/TTL Driver;Single Control NINV;Freq 8-18GHz;Vcc 12V/110mA;Solder Pin
31	MT3860H3P3C1N-S7	34		M1206	SPDT Switch w/TTL Driver;Single Control NINV;Freq 8-18GHz;Vcc 15V/110mA;Solder Pin
32	MT3860H3P3C1N-S8				
33	MT3860H3P3C2I-S10	34		M1206	SPDT Switch w/TTL Driver;Single Control NINV;Freq 8-18GHz;Vcc 5/15V 90/15mA;Solder Pin
		34		M1206	SPDT Switch w/TTL Driver;Dual Control INV;Freq 8-18GHz;Vcc 5V/120mA;Solder Pin
34	MT3860H3P3C2I-S11	34		M1206	SPDT Switch w/TTL Driver;Dual Control INV;Freq 8-18GHz;Vcc 5/28V 90/15mA;Solder Pin
35	MT3860H3P3C2I-S5				
36	MT3860H3P3C2I-S6	34		M1206	SPDT Switch w/TTL Driver;Dual Control INV;Freq 8-18GHz;Vcc 5/12V 90/15mA;Solder Pin
		34		M1206	SPDT Switch w/TTL Driver;Dual Control INV;Freq 8-18GHz;Vcc 12V/110mA;Solder Pin
37	MT3860H3P3C2I-S7	34		M1206	SPDT Switch w/TTL Driver;Dual Control INV;Freq 8-18GHz;Vcc 15V/110mA;Solder Pin
38	MT3860H3P3C2I-S8				
39	MT3860H3P3C2N-S10	34		M1206	SPDT Switch w/TTL Driver;Dual Control INV;Freq 8-18GHz;Vcc 5/15V 90/15mA;Solder Pin
		34		M1206	SPDT Switch w/TTL Driver;Dual Control NINV;Freq 8-18GHz;Vcc 5V/120mA;Solder Pin
40	MT3860H3P3C2N-S11	34		M1206	SPDT Switch w/TTL Driver;Dual Control NINV;Freq 8-18GHz;Vcc 5/28V 90/15mA;Solder Pin
41	MT3860H3P3C2N-S5				
42	MT3860H3P3C2N-S6	34		M1206	SPDT Switch w/TTL Driver;Dual Control NINV;Freq 8-18GHz;Vcc 5/12V 90/15mA;Solder Pin
		34		M1206	SPDT Switch w/TTL Driver;Dual Control NINV;Freq 8-18GHz;Vcc 12V/110mA;Solder Pin
43	MT3860H3P3C2N-S7	34		M1206	SPDT Switch w/TTL Driver;Dual Control NINV;Freq 8-18GHz;Vcc 15V/110mA;Solder Pin
44	MT3860H3P3C2N-S8				
45	MT3860H-P1C1I-S10	34		M1206	SPDT Switch w/TTL Driver;Dual Control NINV;Freq 8-18GHz;Vcc 5/15V 90/15mA;Solder Pin
		34		M1206	SPDT Switch w/TTL Driver;Single Control INV;Freq 2-18GHz;Vcc 5V/120mA;SMA Jack
46	MT3860H-P1C1I-S11	34		M1206	SPDT Switch w/TTL Driver;Single Control INV;Freq 2-18GHz;Vcc 5/28V 90/15mA;SMA Jack
47	MT3860H-P1C1I-S5				
48	MT3860H-P1C1I-S6	34		M1206	SPDT Switch w/TTL Driver;Single Control INV;Freq 2-18GHz;Vcc 5/12V 90/15mA;SMA Jack
		34		M1206	SPDT Switch w/TTL Driver;Single Control INV;Freq 2-18GHz;Vcc 12V/110mA;SMA Jack
49	MT3860H-P1C1I-S7	34		M1206	SPDT Switch w/TTL Driver;Single Control INV;Freq 2-18GHz;Vcc 15V/110mA;SMA Jack
50	MT3860H-P1C1N-S10				
51	MT3860H-P1C1N-S11	34		M1206	SPDT Switch w/TTL Driver;Single Control NINV;Freq 2-18GHz;Vcc 5V/120mA;SMA Jack
		34		M1206	SPDT Switch w/TTL Driver;Single Control NINV;Freq 2-18GHz;Vcc 5/28V 90/15Ma;SMA Jack
52	MT3860H-P1C1N-S5	34		M1206	SPDT Switch w/TTL Driver;Single Control NINV;Freq 2-18GHz;Vcc 5/12V at 90/15mA;SMA Jack
53	MT3860H-P1C1N-S6				
54	MT3860H-P1C1N-S7	34		M1206	SPDT Switch w/TTL Driver;Single Control NINV;Freq 2-18GHz;Vcc 12V at 110mA;SMA Jack
		34		M1206	SPDT Switch w/TTL Driver;Single Control NINV;Freq 2-18GHz;Vcc 15V/110mA;SMA Jack
55	MT3860H-P1C1N-S8	34		M1206	SPDT Switch w/TTL Driver;Single Control NINV;Freq 2-18GHz;Vcc 5/15V,90/15mA;SMA Jack

8. MISCELLANEOUS DEVICES

IN ORDER OF (1) USE and (2) TYPE No.

LINE No.	[2] TYPE No.	[1] USE	DESCRIPTION MAT.	DESCRIPTION DWG. No.	TECHNICAL DATA
1	MT3860H-P1C2I-S10	34		M1206	SPDT Switch w/TTL Driver;Dual Control INV;Freq 2-18GHz;Vcc 5V/120mA;SMA Jack
2	MT3860H-P1C2I-S11				
3	MT3860H-P1C2I-S5	34		M1206	SPDT Switch w/TTL Driver;Dual Control INV;Freq 2-18GHz;Vcc 5/28V 90/15mA;SMA Jack
		34		M1206	SPDT Switch w/TTL Driver;Dual Control INV;Freq 2-18GHz;Vcc 5/12V 90/15mA;SMA Jack
4	MT3860H-P1C2I-S6	34		M1206	SPDT Switch w/TTL Driver;Dual Control INV;Freq 2-18GHz;Vcc 12V/110mA;SMA Jack
5	MT3860H-P1C2I-S7				
6	MT3860H-P1C2I-S8	34		M1206	SPDT Switch w/TTL Driver;Dual Control INV;Freq 2-18GHz;Vcc 15V/110mA;SMA Jack
		34		M1206	SPDT Switch w/TTL Driver;Dual Control INV;Freq 2-18GHz;Vcc 5/15V 90/15mA;SMA Jack
7	MT3860H-P1C2N-S10	34		M1206	SPDT Switch w/TTL Driver;Dual Control NINV;Freq 2-18GHz;Vcc 5V/120mA;SMA Jack
8	MT3860H-P1C2N-S11				
9	MT3860H-P1C2N-S5	34		M1206	SPDT Switch w/TTL Driver;Dual Control NINV;Freq 2-18GHz;Vcc 5/28V 90/15mA;SMA Jack
		34		M1206	SPDT Switch w/TTL Driver;Dual Control NINV;Freq 2-18GHz;Vcc 5/12V 90/15mA;SMA Jack
10	MT3860H-P1C2N-S6	34		M1206	SPDT Switch w/TTL Driver;Dual Control NINV;Freq 2-18GHz;Vcc 12V/110mA;SMA Jack
11	MT3860H-P1C2N-S7				
12	MT3860H-P1C2N-S8	34		M1206	SPDT Switch w/TTL Driver;Dual Control NINV;Freq 2-18GHz;Vcc 15V/110mA;SMA Jack
		34		M1206	SPDT Switch w/TTL Driver;Dual Control NINV;Freq 2-18GHz;Vcc 5/15V 90/15mA;SMA Jack
13	MT3860H-P2C1I-S10	34		M1206	SPDT Switch w/TTL Driver;Single Control INV;Freq 2-18GHz;Vcc 5V/120mA;SMC Jack
14	MT3860H-P2C1I-S11				
15	MT3860H-P2C1I-S5	34		M1206	SPDT Switch w/TTL Driver;Single Control INV;Freq 2-18GHz;Vcc 5/28V 90/15mA;SMC Jack
		34		M1206	SPDT Switch w/TTL Driver;Single Control INV;Freq 2-18GHz;Vcc 5/12V 90/15mA;SMC Jack
16	MT3860H-P2C1I-S6	34		M1206	SPDT Switch w/TTL Driver;Single Control INV;Freq 2-18GHz;Vcc 12V/110mA;SMC Jack
17	MT3860H-P2C1I-S7				
18	MT3860H-P2C1I-S8	34		M1206	SPDT Switch w/TTL Driver;Single Control INV;Freq 2-18GHz;Vcc 15V/110mA;SMC Jack
		34		M1206	SPDT Switch w/TTL Driver;Single Control INV;Freq 2-18GHz;Vcc 5/15V 90/15mA;SMC Jack
19	MT3860H-P2C1N-S10	34		M1206	SPDT Switch w/TTL Driver;Single Control NINV;Freq 2-18GHz;Vcc 5V/120mA;SMC Jack
20	MT3860H-P2C1N-S11				
21	MT3860H-P2C1N-S5	34		M1206	SPDT Switch w/TTL Driver;Single Control NINV;Freq 2-18GHz;Vcc 5/28V 90/15mA;SMC Jack
		34		M1206	SPDT Switch w/TTL Driver;Single Control NINV;Freq 2-18GHz;Vcc 5/12V 90/15mA;SMC Jack
22	MT3860H-P2C1N-S6	34		M1206	SPDT Switch w/TTL Driver;Single Control NINV;Freq 2-18GHz;Vcc 12V/110mA;SMC JACK
23	MT3860H-P2C1N-S7				
24	MT3860H-P2C1N-S8	34		M1206	SPDT Switch w/TTL Driver;Single Control NINV;Freq 2-18GHz;Vcc 15V/110mA;SMC Jack
		34		M1206	SPDT Switch w/TTL Driver;Single Control NINV;Freq 2-18GHz;Vcc 5/15V 90/15mA;SMC Jack
25	MT3860H-P2C2I-S10	34		M1206	SPDT Switch w/TTL Driver;Dual Control INV;Freq 2-18GHz;Vcc 5V/120mA;SMC Jack
26	MT3860H-P2C2I-S11				
27	MT3860H-P2C2I-S5	34		M1206	SPDT Switch w/TTL Driver;Dual Control INV;Freq 2-18GHz;Vcc 5/28V 90/15mA;SMC Jack
		34		M1206	SPDT Switch w/TTL Driver;Dual Control INV;Freq 2-18GHz;Vcc 5/12V 90/15mA;SMC Jack
28	MT3860H-P2C2I-S6	34		M1206	SPDT Switch w/TTL Driver;Dual Control INV;Freq 2-18GHz;Vcc 12V/110mA;SMC Jack
29	MT3860H-P2C2I-S7				
30	MT3860H-P2C2I-S8	34		M1206	SPDT Switch w/TTL Driver;Dual Control INV;Freq 2-18GHz;Vcc 15V/110mA;SMC Jack
		34		M1206	SPDT Switch w/TTL Driver;Dual Control INV;Freq 2-18GHz;Vcc 5V/15mA;SMC Jack
31	MT3860H-P2C2N-S10	34		M1206	SPDT Switch w/TTL Driver;Dual Control NINV;Freq 2-18GHz;Vcc 5V/120mA;SMC Jack
32	MT3860H-P2C2N-S11				
33	MT3860H-P2C2N-S5	34		M1206	SPDT Switch w/TTL Driver;Dual Control NINV;Freq 2-18GHz;Vcc 5/28V 90/15mA;SMC Jack
		34		M1206	SPDT Switch w/ttl Driver;Dual Control NINV;Freq 2-18GHz;Vcc 5/12V 90/15mA;SMC Jack
34	MT3860H-P2C2N-S6	34		M1206	SPDT Switch w/ttl Driver;Dual Control NINV;Freq 2-18GHz;Vcc 12V/110mA;SMC Jack
35	MT3860H-P2C2N-S7				
36	MT3860H-P2C2N-S8	34		M1206	SPDT Switch w/TTL Driver;Dual Control NINV;Freq 2-18GHz;Vcc 15V/110mA;SMC Jack
		34		M1206	SPDT Switch w/TTL Driver;Dual Control NINV;Freq 2-18GHz;Vcc 5/15V 90/15mA;SMC Jack
37	MT3860H-P3C1I-S10	34		M1206	SPDT Switch w/TTL Driver;Single Control INV;Freq 2-18GHz;Vcc 5V/120mA;Solder Pin
38	MT3860H-P3C1I-S11				
39	MT3860H-P3C1I-S5	34		M1206	SPDT Switch w/TTL Driver;Single Control INV;Freq 2-18GHz;Vcc 5/28V 90/15mA;Solder Pin
		34		M1206	SPDT Switch w/TTL Driver;Single Control INV;Freq 2-18GHz;Vcc 5/12V 90/15mA;Solder Pin
40	MT3860H-P3C1I-S6	34		M1206	SPDT Switch w/TTL Driver;Single Control INV;Freq 2-18GHz;Vcc 12V/110mA;Solder Pin
41	MT3860H-P3C1I-S7				
42	MT3860H-P3C1I-S8	34		M1206	SPDT Switch w/TTL Driver;Single Control INV;Freq 2-18GHz;Vcc 15V/110mA;Solder Pin
		34		M1206	SPDT Switch w/TTL Driver;Single Control INV;Freq 2-18GHz;Vcc 5/15V 90/15mA;Solder Pin
43	MT3860H-P3C1N-S10	34		M1206	SPDT Switch w/TTL Driver;Single Control NINV;Freq 2-18GHz;Vcc 5V/120mA;Solder Pin
44	MT3860H-P3C1N-S11				
45♦	MT3860H-P3C1N-S5	34		M1206	SPDT Switch w/TTL Driver;Single Control NINV;Freq 2-18GHz;Vcc 5/28V 90/15mA;Solder Pin
		34		M1206	SPDT Switch w/TTL Driver;Single Control NINV;Freq 2-18GHz;Vcc 5/12V 90/15mA;Solder Pin
46	MT3860H-P3C1N-S6	34		M1206	SPDT Switch w/TTL Driver;Single Control NINV;Freq 2-18GHz;Vcc 12V/110mA;Solder Pin
47	MT3860H-P3C1N-S7				
48	MT3860H-P3C1N-S8	34		M1206	SPDT Switch w/TTL Driver;Single Control NINV;Freq 2-18GHz;Vcc 15V/110mA;Solder Pin
		34		M1206	SPDT Switch w/TTL Driver;Single Control NINV;Freq 2-18GHz;Vcc 5/15V 90/15mA;Solder Pin
49	MT3860H-P3C2I-S10	34		M1206	SPDT Switch w/TTL Driver;Dual Control INV;Freq 2-18GHz;Vcc 5V/120mA;Solder Pin
50	MT3860H-P3C2I-S11				
51	MT3860H-P3C2I-S5	34		M1206	SPDT Switch w/TTL Driver;Dual Control INV;Freq 2-18GHz;Vcc 5/28V 90/15mA;Solder Pin
		34		M1206	SPDT Switch w/TTL Driver;Dual Control INV;Freq 2-18GHz;Vcc 5/12V 90/15mA;Solder Pin
52	MT3860H-P3C2I-S6	34		M1206	SPDT Switch w/TTL Driver;Dual Control INV;Freq 2-18GHz;Vcc 12V/110mA;Solder Pin
53	MT3860H-P3C2I-S7				
54	MT3860H-P3C2I-S8	34		M1206	SPDT Switch w/TTL Driver;Dual Control INV;Freq 2-18GHz;Vcc 15V/110mA;Solder Pin
		34		M1206	SPDT Switch w/TTL Driver;Dual Control INV;Freq 2-18GHz;Vcc 5/15V 90/15mA;Solder Pin
55	MT3860H-P3C2N-S10	34		M1206	SPDT Switch w/TTL Driver;Dual Control NINV;Freq 2-18GHz;Vcc 5V/120mA;Solder Pin

8. MISCELLANEOUS DEVICES

IN ORDER OF (1) USE and (2) TYPE No.

LINE No.	2 TYPE No.	1 USE	DESCRIPTION MAT.	DESCRIPTION DWG. No.	TECHNICAL DATA
1	MT3860H-P3C2N-S11	34		M1206	SPDT Switch w/TTL Driver;Dual Control NINV;Freq 2-18GHz;Vcc 5/28V 90/15mA;Solder Pin
2	MT3860H-P3C2N-S5	34		M1206	SPDT Switch w/TTL Driver;Dual Control NINV;Freq 2-18GHz;Vcc 5/12V 90/15mA;Solder Pin
3	MT3860H-P3C2N-S6	34		M1206	SPDT Switch w/TTL Driver;Dual Control NINV;Freq 2-18GHz;Vcc 12V/110mA;Solder Pin
4	MT3860H-P3C2N-S7	34		M1206	SPDT Switch w/TTL Driver;Dual Control NINV;Freq 2-18GHz;Vcc 15V/110mA;Solder Pin
5	MT3860H-P3C2N-S8	34		M1206	SPDT Switch w/TTL Driver;Dual Control NINV;Freq 2-18GHz;Vcc 5/15V 90/15mA;Solder Pin
6	MT3861A-P1C1I-S10	34		M1206	SPDT Switch w/TTL Driver;Single Control INV;Freq .5-4GHz;Vcc 5V/120mA;SMA Jack
7	MT3861A-P1C1I-S11	34		M1206	SPDT Switch w/TTL Driver;Single Control INV;Freq .5-4GHz;Vcc 5/28V 90/15mA;SMA Jack
8	MT3861A-P1C1I-S5	34		M1206	SPDT Switch w/TTL Driver;Single Control INV;Freq .5-4GHz;Vcc 5/12V 90/15mA;SMA Jack
9	MT3861A-P1C1I-S6	34		M1206	SPDT Switch w/TTL Driver;Single Control INV;Freq .5-4GHz;Vcc 12V/110 mA;SMA Jack
10	MT3861A-P1C1I-S7	34		M1206	SPDT Switch w/TTL Driver;Single Control INV;Freq .5-4GHz;Vcc 15V/110mA;SMA Jack
11	MT3861A-P1C1I-S8	34		M1206	SPDT Switch w/TTL Driver;Single Control INV;Freq .5-4GHz;Vcc 5/15V 90/15mA;SMA Jack
12	MT3861A-P1C1N-S10	34		M1206	SPDT Switch w/TTL Driver;Single Control NINV;Freq .5-4GHz;Vcc 5V/120mA;SMA Jack
13	MT3861A-P1C1N-S11	34		M1206	SPDT Switch w/TTL Driver;Single Control NINV;Freq .5-4GHz;Vcc 5/28V 90/15mA;SMA Jack
14	MT3861A-P1C1N-S5	34		M1206	SPDT Switch w/TTL Driver;Single Control NINV;Freq .5-4GHz;Vcc 5/12V at 90/15mA;SMA Jack
15	MT3861A-P1C1N-S6	34		M1206	SPDT Switch w/TTL Driver;Single Control NINV;Freq .5-4GHz;Vcc 12V at 110mA;SMA Jack
16	MT3861A-P1C1N-S7	34		M1206	SPDT Switch w/TTL Driver;Single Control NINV;Freq .5-4GHz;Vcc 15V/110mA;SMA Jack
17	MT3861A-P1C1N-S8	34		M1206	SPDT Switch w/TTL Driver;Single Control NINV;Freq .5-4GHz;Vcc 5/15V,90/15mA;SMA Jack
18	MT3861A-P1C2I-S10	34		M1206	SPDT Switch w/TTL Driver;Dual Control INV;Freq .5-4GHz;Vcc 5V/120mA;SMA Jack
19	MT3861A-P1C2I-S11	34		M1206	SPDT Switch w/TTL Driver;Dual Control INV;Freq .5-4GHz;Vcc 5/28V 90/15mA;SMA Jack
20	MT3861A-P1C2I-S5	34		M1206	SPDT Switch w/TTL Driver;Dual Control INV;Freq .5-4GHz;Vcc 5/12V 90/15mA;SMA Jack
21	MT3861A-P1C2I-S6	34		M1206	SPDT Switch w/TTL Driver;Dual Control INV;Freq .5-4GHz;Vcc 12V/110mA;SMA Jack
22	MT3861A-P1C2I-S7	34		M1206	SPDT Switch w/TTL Driver;Dual Control INV;Freq .5-4GHz;Vcc 15V/110mA;SMA Jack
23	MT3861A-P1C2I-S8	34		M1206	SPDT Switch w/TTL Driver;Dual Control INV;Freq .5-4GHz;Vcc 5/15V 90/15mA;SMA Jack
24	MT3861A-P1C2N-S10	34		M1206	SPDT Switch w/TTL Driver;Dual Control NINV;Freq .5-4GHz;Vcc 5V/120mA;SMA Jack
25	MT3861A-P1C2N-S11	34		M1206	SPDT Switch w/TTL Driver;Dual Control NINV;Freq .5-4GHz;Vcc 5/28V 90/15mA;SMA Jack
26	MT3861A-P1C2N-S5	34		M1206	SPDT Switch w/TTL Driver;Dual Control NINV;Freq .5-4GHz;Vcc 5/12V 90/15mA;SMA Jack
27	MT3861A-P1C2N-S6	34		M1206	SPDT Switch w/TTL Driver;Dual Control NINV;Freq .5-4GHz;Vcc 12V/110mA;SMA Jack
28	MT3861A-P1C2N-S7	34		M1206	SPDT Switch w/TTL Driver;Dual Control NINV;Freq .5-4GHz;Vcc 15V/110mA;SMA Jack
29	MT3861A-P1C2N-S8	34		M1206	SPDT Switch w/TTL Driver;Dual Control NINV;Freq .5-4GHz;Vcc 5/15V 90/15mA;SMA Jack
30	MT3861A-P2C1I-S10	34		M1206	SPDT Switch w/TTL Driver;Single Control INV;Freq .5-4GHz;Vcc 5V/120mA;SMC Jack
31	MT3861A-P2C1I-S11	34		M1206	SPDT Switch w/TTL Driver;Single Control INV;Freq .5-4GHz;Vcc 5/28V 90/15mA;SMC Jack
32	MT3861A-P2C1I-S5	34		M1206	SPDT Switch w/TTL Driver;Single Control INV;Freq .5-4GHz;Vcc 5/12V 90/15mA;SMC Jack
33	MT3861A-P2C1I-S6	34		M1206	SPDT Switch w/TTL Driver;Single Control INV;Freq .5-4GHz;Vcc 12V/110mA;SMC Jack
34	MT3861A-P2C1I-S7	34		M1206	SPDT Switch w/TTL Driver;Single Control INV;Freq .5-4GHz;Vcc 15V/110mA;SMC Jack
35	MT3861A-P2C1I-S8	34		M1206	SPDT Switch w/TTL Driver;Single Control INV;Freq .5-4GHz;Vcc 5/15V 90/15mA;SMC Jack
36	MT3861A-P2C1N-S10	34		M1206	SPDT Switch w/TTL Driver;Single Control NINV;Freq .5-4GHz;Vcc 5V/120mA;SMC Jack
37	MT3861A-P2C1N-S11	34		M1206	SPDT Switch w/TTL Driver;Single Control NINV;Freq .5-4GHz;Vcc 5/28V 90/15mA;SMC Jack
38	MT3861A-P2C1N-S5	34		M1206	SPDT Switch w/TTL Driver;Single Control NINV;Freq .5-4GHz;Vcc 5/12V 90/15mA;SMC Jack
39	MT3861A-P2C1N-S6	34		M1206	SPDT Switch w/TTL Driver;Single Control NINV;Freq .5-4GHz;Vcc 12V/110mA;SMC Jack
40	MT3861A-P2C1N-S7	34		M1206	SPDT Switch w/TTL Driver;Single Control NINV;Freq .5-4GHz;Vcc 15V/110mA;SMC Jack
41	MT3861A-P2C1N-S8	34		M1206	SPDT Switch w/TTL Driver;Single Control NINV;Freq .5-4GHz;Vcc 5/15V 90/15mA
42	MT3861A-P2C2I-S10	34		M1206	SPDT Switch w/TTL Driver;Dual Control INV;Freq .5-4GHz;Vcc 5V/120mA;SMC Jack
43	MT3861A-P2C2I-S11	34		M1206	SPDT Switch w/TTL Driver;Dual Control INV;Freq .5-4GHz;Vcc 5/28V 90/15mA;SMC Jack
44	MT3861A-P2C2I-S5	34		M1206	SPDT Switch w/TTL Driver;Dual Control INV;Freq .5-4GHz;Vcc 5/12V 90/15mA;SMC Jack
45	MT3861A-P2C2I-S6	34		M1206	SPDT Switch w/TTL Driver;Dual Control INV;Freq .5-4GHz;Vcc 12V/110mA;SMC Jack
46	MT3861A-P2C2I-S7	34		M1206	SPDT Switch w/TTL Driver;Dual Control INV;Freq .5-4GHz;Vcc 15V/110mA;SMC Jack
47	MT3861A-P2C2I-S8	34		M1206	SPDT Switch w/TTL Driver;Dual Control INV;Freq .5-4GHz;Vcc 5/15V 90/15mA;SMC Jack
48	MT3861A-P2C2N-S10	34		M1206	SPDT Switch w/TTL Driver;Dual Control NINV;Freq .5-4GHz;Vcc 5V/120mA;SMC Jack
49	MT3861A-P2C2N-S11	34		M1206	SPDT Switch w/TTL Driver;Dual Control NINV;Freq .5-4GHz;Vcc 5/28V 90/15mA;SMC Jack
50	MT3861A-P2C2N-S5	34		M1206	SPDT Switch w/TTL Driver;Dual Control NINV;Freq .5-4GHz;Vcc 5/12V 90/15mA;SMC Jack
51	MT3861A-P2C2N-S6	34		M1206	SPDT Switch w/ttl Driver;Dual Control NINV;Freq .5-4GHz;Vcc 12V/110mA;SMC Jack
52	MT3861A-P2C2N-S7	34		M1206	SPDT Switch w/TTL Driver;Dual Control NINV;Freq .5-4GHz;Vcc 15V/110mA;SMC Jack
53	MT3861A-P2C2N-S8	34		M1206	SPDT Switch w/TTL Driver;Dual Control NINV;Freq .5-4GHz;Vcc 5/15V 90/15mA;SMC Jack
54	MT3861A-P3C1I-S10	34		M1206	SPDT Switch w/TTL Driver;Single Control INV;Freq .5-4GHz;Vcc 5V/120mA;Solder Pin
55	MT3861A-P3C1I-S11	34		M1206	SPDT Switch w/TTL Driver;Single Control INV;Freq .5-4GHz;Vcc 5/28V 90/15mA;Solder Pin

8. MISCELLANEOUS DEVICES

IN ORDER OF (1) USE and (2) TYPE No.

LINE No.	2 TYPE No.	1 USE	DESCRIPTION MAT.	DESCRIPTION DWG. No.	TECHNICAL DATA
1	MT3861A-P3C1I-S5	34		M1206	SPDT Switch w/TTL Driver;Single Control INV;Freq .5-4GHz;Vcc 5/12V 90/15mA;Solder Pin
2	MT3861A-P3C1I-S6				
3	MT3861A-P3C1I-S7	34		M1206	SPDT Switch w/TTL Driver;Single Control INV;Freq .5-4GHz;Vcc 12V/110mA;Solder Pin
		34		M1206	SPDT Switch w/TTL Driver;Single Control INV;Freq .5-4GHz;Vcc 15V/110mA;Solder Pin
4	MT3861A-P3C1I-S8	34		M1206	SPDT Switch w/TTL Driver;Single Control INV;Freq .5-4GHz;Vcc 5/15V 90/15mA;Solder Pin
5	MT3861A-P3C1N-S10				
6	MT3861A-P3C1N-S11	34		M1206	SPDT Switch w/TTL Driver;Single Control NINV;Freq .5-4GHz;Vcc 5V/120mA;Solder Pin
		34		M1206	SPDT Switch w/TTL Driver;Single Control NINV;Freq .5-4GHz;Vcc 5/28V 90/15mA;Solder Pin
7	MT3861A-P3C1N-S5	34		M1206	SPDT Switch w/TTL Driver;Single Control NINV;Freq .5-4GHz;Vcc 5/12V 90/15mA;Solder Pin
8	MT3861A-P3C1N-S6				
9	MT3861A-P3C1N-S7	34		M1206	SPDT Switch w/TTL Driver;Single Control NINV;Freq .5-4GHz;Vcc 12V/110mA;Solder Pin
		34		M1206	SPDT Switch w/TTL Driver;Single Control NINV;Freq .5-4GHz;Vcc 15V/110mA;Solder Pin
10	MT3861A-P3C1N-S8	34		M1206	SPDT Switch w/TTL Driver;Single Control NINV;Freq .5-4GHz;Vcc 5/15V 90/15mA;Solder Pin
11	MT3861A-P3C2I-S10				
12	MT3861A-P3C2I-S11	34		M1206	SPDT Switch w/TTL Driver;Dual Control INV;Freq .5-4GHz;Vcc 5V/120mA;Solder Pin
		34		M1206	SPDT Switch w/TTL Driver;Dual Control INV;Freq .5-4GHz;Vcc 5/28V 90/15mA;Solder Pin
13	MT3861A-P3C2I-S5	34		M1206	SPDT Switch w/TTL Driver;Dual Control INV;Freq .5-4GHz;Vcc 5/12V 90/15mA;Solder Pin
14	MT3861A-P3C2I-S6				
15	MT3861A-P3C2I-S7	34		M1206	SPDT Switch w/TTL Driver;Dual Control INV;Freq .5-4GHz;Vcc 12V/110mA;Solder Pin
		34		M1206	SPDT Switch w/TTL Driver;Dual Control INV;Freq .5-4GHz;Vcc 15V/110mA;Solder Pin
16	MT3861A-P3C2I-S8	34		M1206	SPDT Switch w/TTL Driver;Dual Control INV;Freq .5-4GHz;Vcc 5/15V 90/15mA;Solder Pin
17	MT3861A-P3C2N-S10				
18	MT3861A-P3C2N-S11	34		M1206	SPDT Switch w/TTL Driver;Dual Control NINV;Freq .5-4GHz;Vcc 5V/120mA;Solder Pin
		34		M1206	SPDT Switch w/TTL Driver;Dual Control NINV;Freq .5-4GHz;Vcc 5/28V 90/15mA;Solder Pin
19	MT3861A-P3C2N-S5	34		M1206	SPDT Switch w/TTL Driver;Dual Control NINV;Freq .5-4GHz;Vcc 5/12V 90/15mA;Solder Pin
20	MT3861A-P3C2N-S6				
21	MT3861A-P3C2N-S7	34		M1206	SPDT Switch w/TTL Driver;Dual Control NINV;Freq .5-4GHz;Vcc 12V/110mA;Solder Pin
		34		M1206	SPDT Switch w/TTL Driver;Dual Control NINV;Freq .5-4GHz;Vcc 15V/110mA;Solder Pin
22	MT3861A-P3C2N-S8	34		M1206	SPDT Switch w/TTL Driver;Dual Control NINV;Freq .5-4GHz;Vcc 5/15V 90/15mA;Solder Pin
23	MT3861D1P1C1I-S10				
24	MT3861D1P1C1I-S11	34		M1206	SPDT Switch w/TTL Driver;Single Control INV;Freq .5-12.4GHz;Vcc 5V/120mA;SMA Jack
		34		M1206	SPDT Switch w/TTL Driver;Single Control INV;Freq .5-12.4GHz;Vcc 5/28V 90/15mA;SMA Jack
25	MT3861D1P1C1I-S5	34		M1206	SPDT Switch w/TTL Driver;Single Control INV;Freq .5-12.4GHz;Vcc 5/12V 90/15mA;SMA Jack
26	MT3861D1P1C1I-S6				
27	MT3861D1P1C1I-S7	34		M1206	SPDT Switch w/TTL Driver;Single Control INV;Freq 5-12.4GHz;Vcc 12V/110ma;SMA Jack
		34		M1206	SPDT Switch w/TTL Driver;Single Control INV;Freq .5-12.4GHz;Vcc 15V/110mA;SMA Jack
28	MT3861D1P1C1I-S8	34		M1206	SPDT Switch w/TTL Driver;Single Control INV;Freq .5-12.4GHz;Vcc 5/15V 90/15mA;SMA Jack
29	MT3861D1P1C1N-S10				
30	MT3861D1P1C1N-S11	34		M1206	SPDT Switch w/TTL Driver;Single Control NINV;Freq .5-12.4GHz;Vcc 5V/120mA;SMA Jack
		34		M1206	SPDT Switch w/TTL Driver;Single Control NINV;Freq .5-12.4GHz;Vcc 5/28V 90/15mA;SMA Jack
31	MT3861D1P1C1N-S5	34		M1206	SPDT Switch w/TTL Driver;Single Control NINV;Freq .5-12.4GHz;Vcc 5/12V at 90/15mA;SMA Jack
32	MT3861D1P1C1N-S6				
33	MT3861D1P1C1N-S7	34		M1206	SPDT Switch w/TTL Driver;Single Control NINV;Freq .5-12.4GHz;Vcc 12V at 110mA;SMA Jack
		34		M1206	SPDT Switch w/TTL Driver;Single Control NINV;Freq .5-12.4GHz;Vcc 15V/110mA;SMA Jack
34	MT3861D1P1C1N-S8	34		M1206	SPDT Switch w/TTL Driver;Single Control NINV;Freq .5-12.4GHz;Vcc 5/15V,90/15mA;SMA Jack
35	MT3861D1P1C2I-S10				
36	MT3861D1P1C2I-S11	34		M1206	SPDT Switch w/TTL Driver;Dual Control INV;Freq .5-12.4GHz;Vcc 5V/120mA;SMA Jack
		34		M1206	SPDT Switch w/TTL Driver;Dual Control INV;Freq .5-12.4GHz;Vcc 5/28V 90/15mA;SMA Jack
37	MT3861D1P1C2I-S5	34		M1206	SPDT Switch w/TTL Driver;Dual Control INV;Freq .5-12.4GHz;Vcc 5/12V 90/15mA;SMA Jack
38	MT3861D1P1C2I-S6				
39	MT3861D1P1C2I-S7	34		M1206	SPDT Switch w/TTL Driver;Dual Control INV;Freq .5-12.4GHz;Vcc 12V/110mA;SMA Jack
		34		M1206	SPDT Switch w/TTL Driver;Dual Control INV;Freq .5-12.4GHz;Vcc 15V/110mA;SMA Jack
40	MT3861D1P1C2I-S8	34		M1206	SPDT Switch w/TTL Driver;Dual Control INV;Freq .5-12.4GHz;Vcc 5/15V 90/15mA;SMA Jack
41	MT3861D1P1C2N-S10				
42	MT3861D1P1C2N-S11	34		M1206	SPDT Switch w/TTL Driver;Dual Control NINV;Freq .5-12.4GHz;Vcc 5V/120mA;SMA Jack
		34		M1206	SPDT Switch w/TTL Driver;Dual Control NINV;Freq .5-12.4GHz;Vcc 5/28V 90/15mA;SMA Jack
43	MT3861D1P1C2N-S5	34		M1206	SPDT Switch w/TTL Driver;Dual Control NINV;Freq .5-12.4GHz;Vcc 5/12V 90/15mA;SMA Jack
44	MT3861D1P1C2N-S6				
45	MT3861D1P1C2N-S7	34		M1206	SPDT Switch w/TTL Driver;Dual Control NINV;Freq .5-12.4GHz;Vcc 12V/110mA;SMA Jack
		34		M1206	SPDT Switch w/TTL Driver;Dual Control NINV;Freq .5-12.4GHz;Vcc 15V/110mA;SMA Jack
46	MT3861D1P1C2N-S8	34		M1206	SPDT Switch w/TTL Driver;Dual Control NINV;Freq .5-12.4GHz;Vcc 5/15V 90/15mA;SMA Jack
47	MT3861D1P2C1I-S10				
48	MT3861D1P2C1I-S11	34		M1206	SPDT Switch w/TTL Driver;Single Control INV;Freq .5-12.4GHz;Vcc 5V/120mA;SMC Jack
		34		M1206	SPDT Switch w/TTL Driver;Single Control INV;Freq .5-12.4GHz;Vcc 5/28V 90/15mA;SMC Jack
49	MT3861D1P2C1I-S5	34		M1206	SPDT Switch w/TTL Driver;Single Control INV;Freq .5-12.4GHz;Vcc 5/12V 90/15mA;SMC Jack
50	MT3861D1P2C1I-S6				
51	MT3861D1P2C1I-S7	34		M1206	SPDT Switch w/TTL Driver;Single Control INV;Freq .5-12.4GHz;Vcc 12V/110mA;SMC Jack
		34		M1206	SPDT Switch w/TTL Driver;Single Control INV;Freq .5-12.4GHz;Vcc 15V/110mA;SMC Jack
52	MT3861D1P2C1I-S8	34		M1206	SPDT Switch w/TTL Driver;Single Control INV;Freq .5-12.4GHz;Vcc 5/15V 90/15mA;SMC Jack
53	MT3861D1P2C1N-S10				
54	MT3861D1P2C1N-S11	34		M1206	SPDT Switch w/TTL Driver;Single Control NINV;Freq .5-12.4GHz;Vcc 5V/120mA;SMC Jack
		34		M1206	SPDT Switch w/TTL Driver;Single Control NINV;Freq .5-12.4GHz;Vcc 5/28V 90/15mA;SMC Jack
55	MT3861D1P2C1N-S5	34		M1206	SPDT Switch w/TTL Driver;Single Control NINV;Freq .5-12.4GHz;Vcc 5/12V 90/15mA;SMC Jack

8. MISCELLANEOUS DEVICES

IN ORDER OF (1) USE and (2) TYPE No.

LINE No.	2 TYPE No.	1 USE	DESCRIPTION MAT.	DESCRIPTION DWG. No.	TECHNICAL DATA
1	MT3861D1P2C1N-S6	34		M1206	SPDT Switch w/TTL Driver;Single Control NINV;Freq .5-12.4GHz;Vcc 12V/110mA;SMC Jack
2	MT3861D1P2C1N-S7				
3	MT3861D1P2C1N-S8	34		M1206	SPDT Switch w/TTL Driver;Single Control NINV;Freq .5-12.4GHz;Vcc 15V/110mA;SMC Jack
		34		M1206	SPDT Switch w/TTL Driver;Single Control NINV;Freq .5-12.4GHz;Vcc 5/15V 90/15mA;SMC Jack
4	MT3861D1P2C2I-S10	34		M1206	SPDT Switch w/TTL Driver;Dual Control INV;Freq .5-12.4GHz;Vcc 5V/120mA;SMC Jack
5	MT3861D1P2C2I-S11				
6	MT3861D1P2C2I-S5	34		M1206	SPDT Switch w/TTL Driver;Dual Control INV;Freq .5-12.4GHz;Vcc 5/28V 90/15mA;SMC Jack
		34		M1206	SPDT Switch w/TTL Driver;Dual Control INV;Freq .5-12.4GHz;Vcc 5/12V 90/15mA;SMC Jack
7	MT3861D1P2C2I-S6	34		M1206	SPDT Switch w/TTL Driver;Dual Control INV;Freq .5-12.4GHz;Vcc 12V/110mA;SMC Jack
8	MT3861D1P2C2I-S7				
9	MT3861D1P2C2I-S8	34		M1206	SPDT Switch w/TTL Driver;Dual Control INV;Freq .5-12.4GHz;Vcc 15V/110mA;SMC Jack
		34		M1206	SPDT Switch w/TTL Driver;Dual Control INV;Freq .5-12.4GHz;Vcc 5/15V 90/15mA;SMC Jack
10	MT3861D1P2C2N-S10	34		M1206	SPDT Switch w/TTL Driver;Dual Control NINV;Freq .5-12.4GHz;Vcc 5V/120mA;SMC Jack
11	MT3861D1P2C2N-S11				
12	MT3861D1P2C2N-S5	34		M1206	SPDT Switch w/TTL Driver;Dual Control NINV;Freq .5-12.4GHz;Vcc 5/28V 90/15mA;SMC Jack
		34		M1206	SPDT Switch w/ttl Driver;Dual Control NINV;Freq .5-12.4GHz;Vcc 5/12V 90/15mA;SMC Jack
13	MT3861D1P2C2N-S6	34		M1206	SPDT Switch w/ttl Driver;Dual Control NINV;Freq .5-12.4GHz;Vcc 12V/110mA;SMC Jack
14	MT3861D1P2C2N-S7				
15	MT3861D1P2C2N-S8	34		M1206	SPDT Switch w/TTL Driver;Dual Control NINV;Freq .5-12.4GHz;Vcc 15V/110mA;SMC Jack
		34		M1206	SPDT Switch w/TTL Driver;Dual Control NINV;Freq .5-12.4GHz;Vcc 5/15V 90/15mA;SMC Jack
16	MT3861D1P3C1I-S10	34		M1206	SPDT Switch w/TTL Driver;Single Control INV;Freq .5-12.4GHz;Vcc 5V/120mA;Solder Pin
17	MT3861D1P3C1I-S11				
18	MT3861D1P3C1I-S5	34		M1206	SPDT Switch w/TTL Driver;Single Control INV;Freq .5-12.4GHz;Vcc 5/28V 90/15mA;Solder Pin
		34		M1206	SPDT Switch w/TTL Driver;Single Control INV;Freq .5-12.4GHz;Vcc 5/12V 90/15mA;Solder Pin
19	MT3861D1P3C1I-S6	34		M1206	SPDT Switch w/TTL Driver;Single Control INV;Freq .5-12.4GHz;Vcc 12V/110mA;Solder Pin
20	MT3861D1P3C1I-S7				
21	MT3861D1P3C1I-S8	34		M1206	SPDT Switch w/TTL Driver;Single Control INV;Freq .5-12.4GHz;Vcc 15V/110mA;Solder Pin
		34		M1206	SPDT Switch w/TTL Driver;Single Control INV;Freq .5-12.4GHz;Vcc 5/15V 90/15mA;Solder Pin
22	MT3861D1P3C1N-S10	34		M1206	SPDT Switch w/TTL Driver;Single Control NINV;Freq .5-12.4GHz;Vcc 5V/120mA;Solder Pin
23	MT3861D1P3C1N-S11				
24	MT3861D1P3C1N-S5	34		M1206	SPDT Switch w/TTL Driver;Single Control NINV;Freq .5-12.4GHz;Vcc 5/28V 90/15mA;Solder Pin
		34		M1206	SPDT Switch w/TTL Driver;Single Control NINV;Freq .5-12.4GHz;Vcc 5/12V 90/15mA;Solder Pin
25	MT3861D1P3C1N-S6	34		M1206	SPDT Switch w/TTL Driver;Single Control NINV;Freq .5-12.4GHz;Vcc 12V/110mA;Solder Pin
26	MT3861D1P3C1N-S7				
27	MT3861D1P3C1N-S8	34		M1206	SPDT Switch w/TTL Driver;Single Control NINV;Freq .5-12.4GHz;Vcc 15V/110mA;Solder Pin
		34		M1206	SPDT Switch w/TTL Driver;Single Control NINV;Freq .5-12.4GHz;Vcc 5/15V 90/15mA;Solder Pin
28	MT3861D1P3C2I-S10	34		M1206	SPDT Switch w/TTL Driver;Dual Control INV;Freq .5-12.4GHz;Vcc 5V/120mA;Solder Pin
29	MT3861D1P3C2I-S11				
30	MT3861D1P3C2I-S5	34		M1206	SPDT Switch w/TTL Driver;Dual Control INV;Freq .5-12.4GHz;Vcc 5/28V 90/15mA;Solder Pin
		34		M1206	SPDT Switch w/TTL Driver;Dual Control INV;Freq .5-12.4GHz;Vcc 5/12V 90/15mA;Solder Pin
31	MT3861D1P3C2I-S6	34		M1206	SPDT Switch w/TTL Driver;Dual Control INV;Freq .5-12.4GHz;Vcc 12V/110mA;Solder Pin
32	MT3861D1P3C2I-S7				
33	MT3861D1P3C2I-S8	34		M1206	SPDT Switch w/TTL Driver;Dual Control INV;Freq .5-12.4GHz;Vcc 15V/110mA;Solder Pin
		34		M1206	SPDT Switch w/TTL Driver;Dual Control INV;Freq .5-12.4GHz;Vcc 5/15V 90/15mA;Solder Pin
34	MT3861D1P3C2N-S10	34		M1206	SPDT Switch w/TTL Driver;Dual Control NINV;Freq .5-12.4GHz;Vcc 5V/120mA;Solder Pin
35	MT3861D1P3C2N-S11				
36	MT3861D1P3C2N-S5	34		M1206	SPDT Switch w/TTL Driver;Dual Control NINV;Freq .5-12.4GHz;Vcc 5/28V 90/15mA;Solder Pin
		34		M1206	SPDT Switch w/TTL Driver;Dual Control NINV;Freq .5-12.4GHz;Vcc 5/12V 90/15mA;Solder Pin
37	MT3861D1P3C2N-S6	34		M1206	SPDT Switch w/TTL Driver;Dual Control NINV;Freq .5-12.4GHz;Vcc 12V/110mA;Solder Pin
38	MT3861D1P3C2N-S7				
39	MT3861D1P3C2N-S8	34		M1206	SPDT Switch w/TTL Driver;Dual Control NINV;Freq .5-12.4GHz;Vcc 15V/110mA;Solder Pin
		34		M1206	SPDT Switch w/TTL Driver;Dual Control NINV;Freq .5-12.4GHz;Vcc 5/15V 90/15mA;Solder Pin
40	MT3861E-P1C1I-S10	34		M1206	SPDT Switch w/TTL Driver;Single Control INV;Freq 4-12.4GHz;Vcc 5V/120mA;SMA Jack
41	MT3861E-P1C1I-S11				
42	MT3861E-P1C1I-S5	34		M1206	SPDT Switch w/TTL Driver;Single Control INV;Freq 4-12.4GHz;Vcc 5/28V 90/15mA;SMA Jack
		34		M1206	SPDT Switch w/TTL Driver;Single Control INV;Freq 4-12.4GHz;Vcc 5/12V 90/15mA;SMA Jack
43	MT3861E-P1C1I-S6	34		M1206	SPDT Switch w/TTL Driver;Single Control INV;Freq 4-12.4GHz;Vcc 12V/110mA;SMA Jack
44	MT3861E-P1C1I-S7				
45	MT3861E-P1C1I-S8	34		M1206	SPDT Switch w/TTL Driver;Single Control INV;Freq 4-12.4GHz;Vcc 15V/110mA;SMA Jack
		34		M1206	SPDT Switch w/TTL Driver;Single Control INV;Freq 4-12.4GHz;Vcc 5/15V 90/15mA;SMA Jack
46	MT3861E-P1C1N-S10	34		M1206	SPDT Switch w/TTL Driver;Single Control NINV;Freq 4-12.4GHz;Vcc 5V/120mA;SMA Jack
47	MT3861E-P1C1N-S11				
48	MT3861E-P1C1N-S5	34		M1206	SPDT Switch w/TTL Driver;Single Control NINV;Freq 4-12.4GHz;Vcc 5/28V 90/15mA;SMA Jack
		34		M1206	SPDT Switch w/TTL Driver;Single Control NINV;Freq 4-12.4GHz;Vcc 5/12V at 90/15mA;SMA Jack
49	MT3861E-P1C1N-S6	34		M1206	SPDT Switch w/TTL Driver;Single Control NINV;Freq 4-12.4GHz;Vcc 12V at 110mA;SMA Jack
50	MT3861E-P1C1N-S7				
51	MT3861E-P1C1N-S8	34		M1206	SPDT Switch w/TTL Driver;Single Control NINV;Freq 4-12.4GHz;Vcc 15V/110mA;SMA Jack
		34		M1206	SPDT Switch w/TTL Driver;Single Control NINV;Freq 4-12.4GHz;Vcc 5/15V,90/15mA;SMA Jack
52	MT3861E-P1C2I-S10	34		M1206	SPDT Switch w/TTL Driver;Dual Control INV;Freq 4-12.4GHz;Vcc 5V/120mA;SMA Jack
53	MT3861E-P1C2I-S11				
54	MT3861E-P1C2I-S5	34		M1206	SPDT Switch w/TTL Driver;Dual Control INV;Freq 4-12.4GHz;Vcc 5/28V 90/15mA;SMA Jack
		34		M1206	SPDT Switch w/TTL Driver;Dual Control INV;Freq 4-12.4GHz;Vcc 5/12V 90/15mA;SMA Jack
55	MT3861E-P1C2I-S6	34		M1206	SPDT Switch w/TTL Driver;Dual Control INV;Freq 4-12.4GHz;Vcc 12V/110mA;SMA Jack

8. MISCELLANEOUS DEVICES

IN ORDER OF (1) USE and (2) TYPE No.

LINE No.	2 TYPE No.	1 USE	DESCRIPTION MAT.	DWG. No.	TECHNICAL DATA
1	MT3861E-P1C2I-S7	34		M1206	SPDT Switch w/TTL Driver;Dual Control INV;Freq 4-12.4GHz;Vcc 15V/110mA;SMA Jack
2	MT3861E-P1C2I-S8				
3	MT3861E-P1C2N-S10	34		M1206	SPDT Switch w/TTL Driver;Dual Control INV;Freq 4-12.4GHz;Vcc 5/15V 90/15mA;SMA Jack
		34		M1206	SPDT Switch w/TTL Driver;Dual Control NINV;Freq 4-12.4GHz;Vcc 5V/120mA;SMA Jack
4	MT3861E-P1C2N-S11	34		M1206	SPDT Switch w/TTL Driver;Dual Control NINV;Freq 4-12.4GHz;Vcc 5/28V 90/15mA;SMA Jack
5	MT3861E-P1C2N-S5				
6	MT3861E-P1C2N-S6	34		M1206	SPDT Switch w/TTL Driver;Dual Control NINV;Freq 4-12.4GHz;Vcc 5/12V 90/15mA;SMA Jack
		34		M1206	SPDT Switch w/TTL Driver;Dual Control NINV;Freq 4-12.4GHz;Vcc 12V/110mA;SMA Jack
7	MT3861E-P1C2N-S7	34		M1206	SPDT Switch w/TTL Driver;Dual Control NINV;Freq 4-12.4GHz;Vcc 15V/110mA;SMA Jack
8	MT3861E-P1C2N-S8				
9	MT3861E-P2C1I-S10	34		M1206	SPDT Switch w/TTL Driver;Dual Control NINV;Freq 4-12.4GHz;Vcc 5/15V 90/15mA;SMA Jack
		34		M1206	SPDT Switch w/TTL Driver;Single Control INV;Freq 4-12.4GHz;Vcc 5V/120mA;SMC Jack
10	MT3861E-P2C1I-S11	34		M1206	SPDT Switch w/TTL Driver;Single Control INV;Freq 4-12.4GHz;Vcc 5/28V 90/15mA;SMC Jack
11	MT3861E-P2C1I-S5				
12	MT3861E-P2C1I-S6	34		M1206	SPDT Switch w/TTL Driver;Single Control INV;Freq 4-12.4GHz;Vcc 5/12V 90/15mA;SMC Jack
		34		M1206	SPDT Switch w/TTL Driver;Single Control INV;Freq 4-12.4GHz;Vcc 12V/110mA;SMC Jack
13	MT3861E-P2C1I-S7	34		M1206	SPDT Switch w/TTL Driver;Single Control INV;Freq 4-12.4GHz;Vcc 15V/110mA;SMC Jack
14	MT3861E-P2C1I-S8				
15	MT3861E-P2C1N-S10	34		M1206	SPDT Switch w/TTL Driver;Single Control INV;Freq 4-12.4GHz;Vcc 5/15V 90/15mA;SMC Jack
		34		M1206	SPDT Switch w/TTL Driver;Single Control NINV;Freq 4-12.4GHz;Vcc 5V/120mA;SMC Jack
16	MT3861E-P2C1N-S11	34		M1206	SPDT Switch w/TTL Driver;Single Control NINV;Freq 4-12.4GHz;Vcc 5/28V 90/15mA;SMC Jack
17	MT3861E-P2C1N-S5				
18▼	MT3861E-P2C1N-S6	34		M1206	SPDT Switch w/TTL Driver;Single Control NINV;Freq 4-12.4GHz;Vcc 5/12V 90/15mA;SMC Jack
		34		M1206	SPDT Switch w/TTL Driver;Single Control NINV;Freq 4-12.4GHz;Vcc 12V/110mA;SMCJack
19	MT3861E-P2C1N-S7	34		M1206	SPDT Switch w/TTL Driver;Single Control NINV;Freq 4-12.4GHz;Vcc 15V/110mA;SMC Jack
20	MT3861E-P2C1N-S8				
21	MT3861E-P2C2I-S10	34		M1206	SPDT Switch w/TTL Driver;Single Control NINV;Freq 4-12.4GHz;Vcc 5/15V 90/15mA
		34		M1206	SPDT Switch w/TTL Driver;Dual Control INV;Freq 4-12.4GHz;Vcc 5V/120mA;SMC Jack
22	MT3861E-P2C2I-S11	34		M1206	SPDT Switch w/TTL Driver;Dual Control INV;Freq 4-12.4GHz;Vcc 5/28V 90/15mA;SMC Jack
23	MT3861E-P2C2I-S5				
24	MT3861E-P2C2I-S6	34		M1206	SPDT Switch w/TTL Driver;Dual Control INV;Freq 4-12.4GHz;Vcc 5/12V 90/15mA;SMC Jack
		34		M1206	SPDT Switch w/TTL Driver;Dual Control INV;Freq 4-12.4GHz;Vcc 12V/110mA;SMC Jack
25	MT3861E-P2C2I-S7	34		M1206	SPDT Switch w/TTL Driver;Dual Control INV;Freq 4-12.4GHz;Vcc 15V/110mA;SMC Jack
26	MT3861E-P2C2I-S8				
27	MT3861E-P2C2N-S10	34		M1206	SPDT Switch w/TTL Driver;Dual Control INV;Freq 4-12.4GHz;Vcc 5/15V 90/15mA;SMC Jack
		34		M1206	SPDT Switch w/TTL Driver;Dual Control NINV;Freq 4-12.4GHz;Vcc 5V/120mA;SMC Jack
28	MT3861E-P2C2N-S11	34		M1206	SPDT Switch w/TTL Driver;Dual Control NINV;Freq 4-12.4GHz;Vcc 5/28V 90/15mA;SMC Jack
29	MT3861E-P2C2N-S5				
30	MT3861E-P2C2N-S6	34		M1206	SPDT Switch w/TTL Driver;Dual Control NINV;Freq 4-12.4GHz;Vcc 5/12V 90/15mA;SMC Jack
		34		M1206	SPDT Switch w/ttl Driver;Dual Control NINV;Freq 4-12.4GHz;Vcc 12V/110mA;SMC Jack
31	MT3861E-P2C2N-S7	34		M1206	SPDT Switch w/TTL Driver;Dual Control NINV;Freq 4-12.4GHz;Vcc 15V/110mA;SMC Jack
32	MT3861E-P2C2N-S8				
33	MT3861E-P3C1I-S10	34		M1206	SPDT Switch w/TTL Driver;Dual Control NINV;Freq 4-12.4GHz;Vcc 5/15V 90/15mA;SMC Jack
		34		M1206	SPDT Switch w/TTL Driver;Single Control INV;Freq 4-12.4GHz;Vcc 5V/120mA;Solder Pin
34	MT3861E-P3C1I-S11	34		M1206	SPDT Switch w/TTL Driver;Single Control INV;Freq 4-12.4GHz;Vcc 5/28V 90/15mA;Solder Pin
35	MT3861E-P3C1I-S5				
36	MT3861E-P3C1I-S6	34		M1206	SPDT Switch w/TTL Driver;Single Control INV;Freq 4-12.4GHz;Vcc 5/12V 90/15mA;Solder Pin
		34		M1206	SPDT Switch w/TTL Driver;Single Control INV;Freq 4-12.4GHz;Vcc 12V/110mA;Solder Pin
37	MT3861E-P3C1I-S7	34		M1206	SPDT Switch w/TTL Driver;Single Control INV;Freq 4-12.4GHz;Vcc 15V/110mA;Solder Pin
38	MT3861E-P3C1I-S8				
39	MT3861E-P3C1N-S10	34		M1206	SPDT Switch w/TTL Driver;Single Control INV;Freq 4-12.4GHz;Vcc 5/15V 90/15mA;Solder Pin
		34		M1206	SPDT Switch w/TTL Driver;Single Control NINV;Freq 4-12.4GHz;Vcc 5V/120mA;Solder Pin
40	MT3861E-P3C1N-S11	34		M1206	SPDT Switch w/TTL Driver;Single Control NINV;Freq 4-12.4GHz;Vcc 5/28V 90/15mA;Solder Pin
41	MT3861E-P3C1N-S5				
42	MT3861E-P3C1N-S6	34		M1206	SPDT Switch w/TTL Driver;Single Control NINV;Freq 4-12.4GHz;Vcc 5/12V 90/15mA;Solder Pin
		34		M1206	SPDT Switch w/TTL Driver;Single Control NINV;Freq 4-12.4GHz;Vcc 12V/110mA;Solder Pin
43	MT3861E-P3C1N-S7	34		M1206	SPDT Switch w/TTL Driver;Single Control NINV;Freq 4-12.4GHz;Vcc 15V/110mA;Solder Pin
44	MT3861E-P3C1N-S8				
45	MT3861E-P3C2I-S10	34		M1206	SPDT Switch w/TTL Driver;Single Control NINV;Freq 4-12.4GHz;Vcc 5/15V 90/15mA;Solder Pin
		34		M1206	SPDT Switch w/TTL Driver;Dual Control INV;Freq 4-12.4GHz;Vcc 5V/120mA;Solder Pin
46	MT3861E-P3C2I-S11	34		M1206	SPDT Switch w/TTL Driver;Dual Control INV;Freq 4-12.4GHz;Vcc 5/28V 90/15mA;Solder Pin
47	MT3861E-P3C2I-S5				
48	MT3861E-P3C2I-S6	34		M1206	SPDT Switch w/TTL Driver;Dual Control INV;Freq 4-12.4GHz;Vcc 5/12V 90/15mA;Solder Pin
		34		M1206	SPDT Switch w/TTL Driver;Dual Control INV;Freq 4-12.4GHz;Vcc 12V/110mA;Solder Pin
49	MT3861E-P3C2I-S7	34		M1206	SPDT Switch w/TTL Driver;Dual Control INV;Freq 4-12.4GHz;Vcc 15V/110mA;Solder Pin
50	MT3861E-P3C2I-S8				
51	MT3861E-P3C2N-S10	34		M1206	SPDT Switch w/TTL Driver;Dual Control INV;Freq 4-12.4GHz;Vcc 5/15V 90/15mA;Solder Pin
		34		M1206	SPDT Switch w/TTL Driver;Dual Control NINV;Freq 4-12.4GHz;Vcc 5V/120mA;Solder Pin
52	MT3861E-P3C2N-S11	34		M1206	SPDT Switch w/TTL Driver;Dual Control NINV;Freq 4-12.4GHz;Vcc 5/28V 90/15mA;Solder Pin
53	MT3861E-P3C2N-S5				
54	MT3861E-P3C2N-S6	34		M1206	SPDT Switch w/TTL Driver;Dual Control NINV;Freq 4-12.4GHz;Vcc 5/12V 90/15mA;Solder Pin
		34		M1206	SPDT Switch w/TTL Driver;Dual Control NINV;Freq 4-12.4GHz;Vcc 12V/110mA;Solder Pin
55	MT3861E-P3C2N-S7	34		M1206	SPDT Switch w/TTL Driver;Dual Control NINV;Freq 4-12.4GHz;Vcc 15V/110mA;Solder Pin

8. MISCELLANEOUS DEVICES

IN ORDER OF (1) USE and (2) TYPE No.

LINE No.	2 TYPE No.	1 USE	DESCRIPTION MAT.	DESCRIPTION DWG. No.	TECHNICAL DATA
1	MT3861E-P3C2N-S3				
2	MT3861H3P1C1I-S10	34		M1206	SPDT Switch w/TTL Driver;Dual Control NINV;Freq 4-12.4GHz;Vcc 5/15V 90/15mA;Solder Pin
3	MT3861H3P1C1I-S11	34		M1206	SPDT Switch w/TTL Driver;Single Control INV;Freq 8-18GHz;Vcc 5V/120mA;SMA Jack
		34		M1206	SPDT Switch w/TTL Driver;Single Control INV;Freq 8-18GHz;Vcc 5/28V 90/15mA;SMA Jack
4	MT3861H3P1C1I-S5				
5	MT3861H3P1C1I-S6	34		M1206	SPDT Switch w/TTL Driver;Single Control INV;Freq 8-18GHz;Vcc 5/12V 90/15mA;SMA Jack
6	MT3861H3P1C1I-S7	34		M1206	SPDT Switch w/TTL Driver;Single Control INV;Freq 8-18GHz;Vcc 12V/110mA;SMA Jack
		34		M1206	SPDT Switch w/TTL Driver;Single Control INV;Freq 8-18GHz;Vcc 15V/110mA;SMA Jack
7▾	MT3861H3P1C1I-S8				
8	MT3861H3P1C1N-S10	34		M1206	SPDT Switch w/TTL Driver;Single Control INV;Freq 8-18GHz;Vcc 5/15V 90/15mA;SMA Jack
9	MT3861H3P1C1N-S11	34		M1206	SPDT Switch w/TTL Driver;Single Control NINV;Freq 8-18GHz;Vcc 5V/120mA;SMA Jack
		34		M1206	SPDT Switch w/TTL Driver;Single Control NINV;Freq 8-18GHz;Vcc 5/28V 90/15mA;SMA Jack
10	MT3861H3P1C1N-S5				
11	MT3861H3P1C1N-S6	34		M1206	SPDT Switch w/TTL Driver;Single Control NINV;Freq 8-18GHz;Vcc 5/12V at 90/15mA;SMA Jack
12	MT3861H3P1C1N-S7	34		M1206	SPDT Switch w/TTL Driver;Single Control NINV;Freq 8-18GHz;Vcc 12V at 110mA;SMA Jack
		34		M1206	SPDT Switch w/TTL Driver;Single Control NINV;Freq 8-18GHz;Vcc 15V/110mA;SMA Jack
13	MT3861H3P1C1N-S8				
14	MT3861H3P1C2I-S10	34		M1206	SPDT Switch w/TTL Driver;Single Control NINV;Freq 8-18GHz;Vcc 5/15V,90/15mA;SMA Jack
15	MT3861H3P1C2I-S11	34		M1206	SPDT Switch w/TTL Driver;Dual Control INV;Freq 8-18GHz;Vcc 5V/120mA;SMA Jack
		34		M1206	SPDT Switch w/TTL Driver;Dual Control INV;Freq 8-18GHz;Vcc 5/28V 90/15mA;SMA Jack
16	MT3861H3P1C2I-S5				
17	MT3861H3P1C2I-S6	34		M1206	SPDT Switch w/TTL Driver;Dual Control INV;Freq 8-18GHz;Vcc 5/12V 90/15mA;SMA Jack
18	MT3861H3P1C2I-S7	34		M1206	SPDT Switch w/TTL Driver;Dual Control INV;Freq 8-18GHz;Vcc 12V/110mA;SMA Jack
		34		M1206	SPDT Switch w/TTL Driver;Dual Control INV;Freq 8-18GHz;Vcc 15V/110mA;SMA Jack
19	MT3861H3P1C2I-S8				
20	MT3861H3P1C2N-S10	34		M1206	SPDT Switch w/TTL Driver;Dual Control INV;Freq 8-18GHz;Vcc 5/15V 90/15mA;SMA Jack
21	MT3861H3P1C2N-S11	34		M1206	SPDT Switch w/TTL Driver;Dual Control NINV;Freq 8-18GHz;Vcc 5V/120mA;SMA Jack
		34		M1206	SPDT Switch w/TTL Driver;Dual Control NINV;Freq 8-18GHz;Vcc 5/28V 90/15mA;SMA Jack
22	MT3861H3P1C2N-S5				
23	MT3861H3P1C2N-S6	34		M1206	SPDT Switch w/TTL Driver;Dual Control NINV;Freq 8-18GHz;Vcc 5/12V 90/15mA;SMA Jack
24	MT3861H3P1C2N-S7	34		M1206	SPDT Switch w/TTL Driver;Dual Control NINV;Freq 8-18GHz;Vcc 12V/110mA;SMA Jack
		34		M1206	SPDT Switch w/TTL Driver;Dual Control NINV;Freq 8-18GHz;Vcc 15V/110mA;SMA Jack
25	MT3861H3P1C2N-S8				
26	MT3861H3P2C1I-S10	34		M1206	SPDT Switch w/TTL Driver;Dual Control NINV;Freq 8-18GHz;Vcc 5/15V 90/15mA;SMA Jack
27	MT3861H3P2C1I-S11	34		M1206	SPDT Switch w/TTL Driver;Single Control INV;Freq 8-18GHz;Vcc 5V/120mA;SMC Jack
		34		M1206	SPDT Switch w/TTL Driver;Single Control INV;Freq 8-18GHz;Vcc 5/28V 90/15mA;SMC Jack
28	MT3861H3P2C1I-S5				
29	MT3861H3P2C1I-S6	34		M1206	SPDT Switch w/TTL Driver;Single Control INV;Freq 8-18GHz;Vcc 5/12V 90/15mA;SMC Jack
30	MT3861H3P2C1I-S7	34		M1206	SPDT Switch w/TTL Driver;Single Control INV;Freq 8-18GHz;Vcc 12V/110mA;SMC Jack
		34		M1206	SPDT Switch w/TTL Driver;Single Control INV;Freq 8-18GHz;Vcc 15V/110mA;SMC Jack
31	MT3861H3P2C1I-S8				
32	MT3861H3P2C1N-S10	34		M1206	SPDT Switch w/TTL Driver;Single Control INV;Freq 8-18GHz;Vcc 5/15V 90/15mA;SMC Jack
33	MT3861H3P2C1N-S11	34		M1206	SPDT Switch w/TTL Driver;Single Control NINV;Freq 8-18GHz;Vcc 5V/120mA;SMC Jack
		34		M1206	SPDT Switch w/TTL Driver;Single Control NINV;Freq 8-18GHz;Vcc 5/28V 90/15mA;SMC Jack
34	MT3861H3P2C1N-S5				
35	MT3861H3P2C1N-S6	34		M1206	SPDT Switch w/TTL Driver;Single Control NINV;Freq 8-18GHz;Vcc 5/12V 90/15mA;SMC Jack
36	MT3861H3P2C1N-S7	34		M1206	SPDT Switch w/TTL Driver;Single Control NINV;Freq 8-18GHz;Vcc 12V/110mA;SMC Jack
		34		M1206	SPDT Switch w/TTL Driver;Single Control NINV;Freq 8-18GHz;Vcc 15V/110mA;SMC Jack
37	MT3861H3P2C1N-S8				
38	MT3861H3P2C2I-S10	34		M1206	SPDT Switch w/TTL Driver;Single Control NINV;Freq 8-18GHz;Vcc 5/15V 90/mA;SMC Jack
39	MT3861H3P2C2I-S11	34		M1206	SPDT Switch w/TTL Driver;Dual Control INV;Freq 8-18GHz;Vcc 5V/120mA;SMC Jack
		34		M1206	SPDT Switch w/TTL Driver;Dual Control INV;Freq 8-18GHz;Vcc 5/28V 90/15mA;SMC Jack
40	MT3861H3P2C2I-S5				
41	MT3861H3P2C2I-S6	34		M1206	SPDT Switch w/TTL Driver;Dual Control INV;Freq 8-18GHz;Vcc 5/12V 90/15mA;SMC Jack
42	MT3861H3P2C2I-S7	34		M1206	SPDT Switch w/TTL Driver;Dual Control INV;Freq 8-18GHz;Vcc 12V/110mA;SMC Jack
		34		M1206	SPDT Switch w/TTL Driver;Dual Control INV;Freq 8-18GHz;Vcc 15V/110mA;SMC Jack
43	MT3861H3P2C2I-S8				
44	MT3861H3P2C2N-S10	34		M1206	SPDT Switch w/TTL Driver;Dual Control INV;Freq 8-18GHz;Vcc 5/15V 90/15mA;SM C Jack
45	MT3861H3P2C2N-S11	34		M1206	SPDT Switch w/TTL Driver;Dual Control NINV;Freq 8-18GHz;Vcc 5V/120mA;SMC Jack
		34		M1206	SPDT Switch w/TTL Driver;Dual Control NINV;Freq 8-18GHz;Vcc 5/28V 90/15mA;SMC Jack
46	MT3861H3P2C2N-S5				
47	MT3861H3P2C2N-S6	34		M1206	SPDT Switch w/ttl Driver;Dual Control NINV;Freq 8-18GHz;Vcc 5/12V 90/15mA;SMC Jack
48	MT3861H3P2C2N-S7	34		M1206	SPDT Switch w/ttl Driver;Dual Control NINV;Freq 8-18GHz;Vcc 12V/110mA;SMC Jack
		34		M1206	SPDT Switch w/TTL Driver;Dual Control NINV;Freq 8-18GHz;Vcc 15V/110mA;SMC Jack
49	MT3861H3P2C2N-S8				
50	MT3861H3P3C1I-S10	34		M1206	SPDT Switch w/TTL Driver;Dual Control NINV;Freq 8-18GHz;Vcc 5/15V 90/15mA;SMC Jack
51	MT3861H3P3C1I-S11	34		M1206	SPDT Switch w/TTL Driver;Single Control INV;Freq 8-18GHz;Vcc 5V/120mA;Solder Pin
		34		M1206	SPDT Switch w/TTL Driver;Single Control INV;Freq 8-18GHz;Vcc 5/28V 90/15mA;Solder Pin
52	MT3861H3P3C1I-S5				
53	MT3861H3P3C1I-S6	34		M1206	SPDT Switch w/TTL Driver;Single Control INV;Freq 8-18GHz;Vcc 5/12V 90/15mA;Solder Pin
54	MT3861H3P3C1I-S7	34		M1206	SPDT Switch w/TTL Driver;Single Control INV;Freq 8-18GHz;Vcc 12V/110mA;Solder Pin
		34		M1206	SPDT Switch w/TTL Driver;Single Control INV;Freq 8-18GHz;Vcc 15V/110mA;Solder Pin
55	MT3861H3P3C1I-S8				
		34		M1206	SPDT Switch w/TTL Driver;Single Control INV;Freq 8-18GHz;Vcc 5/15V 90/15mA;Solder Pin

8. MISCELLANEOUS DEVICES

IN ORDER OF (1) USE and (2) TYPE No.

LINE No.	[2] TYPE No.	[1] USE	DESCRIPTION MAT.	DESCRIPTION DWG. No.	TECHNICAL DATA
1	MT3861H3P3C1N-S10	34		M1206	SPDT Switch w/TTL Driver;Single Control NINV;Freq 8-18GHz;Vcc 5V/120mA;Solder Pin
2	MT3861H3P3C1N-S11				
3	MT3861H3P3C1N-S5	34		M1206	SPDT Switch w/TTL Driver;Single Control NINV;Freq 8-18GHz;Vcc 5/28V 90/15mA;Solder Pin
		34		M1206	SPDT Switch w/TTL Driver;Single Control NINV;Freq 8-18GHz;Vcc 5/12V 90/15mA;Solder Pin
4	MT3861H3P3C1N-S6	34		M1206	SPDT Switch w/TTL Driver;Single Control NINV;Freq 8-18GHz;Vcc 12V/110mA;Solder Pin
5	MT3861H3P3C1N-S7				
6	MT3861H3P3C1N-S8	34		M1206	SPDT Switch w/TTL Driver;Single Control NINV;Freq 8-18GHz;Vcc 15V/110mA;Solder Pin
		34		M1206	SPDT Switch w/TTL Driver;Single Control NINV;Freq 8-18GHz;Vcc 5/15V 90/15mA;Solder Pin
7	MT3861H3P3C2I-S10	34		M1206	SPDT Switch w/TTL Driver;Dual Control INV;Freq 8-18GHz;Vcc 5V/120mA;Solder Pin
8	MT3861H3P3C2I-S11				
9	MT3861H3P3C2I-S5	34		M1206	SPDT Switch w/TTL Driver;Dual Control INV;Freq 8-18GHz;Vcc 5/28V 90/15mA;Solder Pin
		34		M1206	SPDT Switch w/TTL Driver;Dual Control INV;Freq 8-18GHz;Vcc 5/12V 90/15mA;Solder Pin
10	MT3861H3P3C2I-S6	34		M1206	SPDT Switch w/TTL Driver;Dual Control INV;Freq 8-18GHz;Vcc 12V/110mA;Solder Pin
11	MT3861H3P3C2I-S7				
12	MT3861H3P3C2I-S8	34		M1206	SPDT Switch w/TTL Driver;Dual Control INV;Freq 8-18GHz;Vcc 15V/110mA;Solder Pin
		34		M1206	SPDT Switch w/TTL Driver;Dual Control INV;Freq 8-18GHz;Vcc 5/15V 90/15mA;Solder Pin
13	MT3861H3P3C2N-S10	34		M1206	SPDT Switch w/TTL Driver;Dual Control NINV;Freq 8-18GHz;Vcc 5V/120mA;Solder Pin
14	MT3861H3P3C2N-S11				
15	MT3861H3P3C2N-S5	34		M1206	SPDT Switch w/TTL Driver;Dual Control NINV;Freq 8-18GHz;Vcc 5/28V 90/15mA;Solder Pin
		34		M1206	SPDT Switch w/TTL Driver;Dual Control NINV;Freq 8-18GHz;Vcc 5/12V 90/15mA;Solder Pin
16	MT3861H3P3C2N-S6	34		M1206	SPDT Switch w/TTL Driver;Dual Control NINV;Freq 8-18GHz;Vcc 12V/110mA;Solder Pin
17	MT3861H3P3C2N-S7				
18	MT3861H3P3C2N-S8	34		M1206	SPDT Switch w/TTL Driver;Dual Control NINV;Freq 8-18GHz;Vcc 15V/110mA;Solder Pin
		34		M1206	SPDT Switch w/TTL Driver;Dual Control NINV;Freq 8-18GHz;Vcc 5/15V 90/15mA;Solder Pin
19	MT3861H-P1C1I-S10	34		M1206	SPDT Switch w/TTL Driver;Single Control INV;Freq 2-18GHz;Vcc 5V/120mA;SMA Jack
20	MT3861H-P1C1I-S11				
21	MT3861H-P1C1I-S5	34		M1206	SPDT Switch w/TTL Driver;Single Control INV;Freq 2-18GHz;Vcc 5/28V 90/15mA;SMA Jack
		34		M1206	SPDT Switch w/TTL Driver;Single Control INV;Freq 2-18GHz;Vcc 5/12V 90/15mA;SMA Jack
22	MT3861H-P1C1I-S6	34		M1206	SPDT Switch w/TTL Driver;Single Control INV;Freq 2-18GHz;Vcc 12V/110mA;SMA Jack
23	MT3861H-P1C1I-S7				
24	MT3861H-P1C1I-S8	34		M1206	SPDT Switch w/TTL Driver;Single Control INV;Freq 2-18GHz;Vcc 15V/110mA;SMA Jack
		34		M1206	SPDT Switch w/TTL Driver;Single Control INV;Freq 2-18GHz;Vcc 5/15V 90/15mA;SMA Jack
25	MT3861H-P1C1N-S10	34		M1206	SPDT Switch w/TTL Driver;Single Control NINV;Freq 2-18GHz;Vcc 5V/120mA;SMA Jack
26	MT3861H-P1C1N-S11				
27	MT3861H-P1C1N-S5	34		M1206	SPDT Switch w/TTL Driver;Single Control NINV;Freq 2-18GHz;Vcc 5/28V 90/15Ma;SMA Jack
		34		M1206	SPDT Switch w/TTL Driver;Single Control NINV;Freq 2-18GHz;Vcc 5/12V at 90/15mA;SMA Jack
28	MT3861H-P1C1N-S6	34		M1206	SPDT Switch w/TTL Driver;Single Control NINV;Freq 2-18GHz;Vcc 12V at 110mA;SMA Jack
29	MT3861H-P1C1N-S7				
30	MT3861H-P1C1N-S8	34		M1206	SPDT Switch w/TTL Driver;Single Control NINV;Freq 2-18GHz;Vcc 15V/110mA;SMA Jack
		34		M1206	SPDT Switch w/TTL Driver;Single Control NINV;Freq 2-18GHz;Vcc 5/15V 90/15mA;SMA Jack
31	MT3861H-P1C2I-S10	34		M1206	SPDT Switch w/TTL Driver;Dual Control INV;Freq 2-18GHz;Vcc 5V/120mA;SMA Jack
32	MT3861H-P1C2I-S11				
33	MT3861H-P1C2I-S5	34		M1206	SPDT Switch w/TTL Driver;Dual Control INV;Freq 2-18GHz;Vcc 5/28V 90/15mA;SMA Jack
		34		M1206	SPDT Switch w/TTL Driver;Dual Control INV;Freq 2-18GHz;Vcc 5/12V 90/15mA;SMA Jack
34	MT3861H-P1C2I-S6	34		M1206	SPDT Switch w/TTL Driver;Dual Control INV;Freq 2-18GHz;Vcc 12V/110mA;SMA Jack
35	MT3861H-P1C2I-S7				
36	MT3861H-P1C2I-S8	34		M1206	SPDT Switch w/TTL Driver;Dual Control INV;Freq 2-18GHz;Vcc 15V/110mA;SMA Jack
		34		M1206	SPDT Switch w/TTL Driver;Dual Control INV;Freq 2-18GHz;Vcc 5/15V 90/15mA;SMA Jack
37	MT3861H-P1C2N-S10	34		M1206	SPDT Switch w/TTL Driver;Dual Control NINV;Freq 2-18GHz;Vcc 5V/120mA;SMA Jack
38	MT3861H-P1C2N-S11				
39	MT3861H-P1C2N-S5	34		M1206	SPDT Switch w/TTL Driver;Dual Control NINV;Freq 2-18GHz;Vcc 5/28V 90/15mA;SMA Jack
		34		M1206	SPDT Switch w/TTL Driver;Dual Control NINV;Freq 2-18GHz;Vcc 5/12V 90/15mA;SMA Jack
40	MT3861H-P1C2N-S6	34		M1206	SPDT Switch w/TTL Driver;Dual Control NINV;Freq 2-18GHz;Vcc 12V/110mA;SMA Jack
41	MT3861H-P1C2N-S7				
42	MT3861H-P1C2N-S8	34		M1206	SPDT Switch w/TTL Driver;Dual Control NINV;Freq 2-18GHz;Vcc 15V/110mA;SMA Jack
		34		M1206	SPDT Switch w/TTL Driver;Dual Control NINV;Freq 2-18GHz;Vcc 5/15V 90/15mA;SMA Jack
43	MT3861H-P2C1I-S10	34		M1206	SPDT Switch w/TTL Driver;Single Control INV;Freq 2-18GHz;Vcc 5V/120mA;SMC Jack
44	MT3861H-P2C1I-S11				
45	MT3861H-P2C1I-S5	34		M1206	SPDT Switch w/TTL Driver;Single Control INV;Freq 2-18GHz;Vcc 5/28V 90/15mA;SMC Jack
		34		M1206	SPDT Switch w/TTL Driver;Single Control INV;Freq 2-18GHz;Vcc 5/12V 90/15mA;SMC Jack
46	MT3861H-P2C1I-S6	34		M1206	SPDT Switch w/TTL Driver;Single Control INV;Freq 2-18GHz;Vcc 12V/110mA;SMC Jack
47	MT3861H-P2C1I-S7				
48	MT3861H-P2C1I-S8	34		M1206	SPDT Switch w/TTL Driver;Single Control INV;Freq 2-18GHz;Vcc 15V/110mA;SMC Jack
		34		M1206	SPDT Switch w/TTL Driver;Single Control INV;Freq 2-18GHz;Vcc 5/15V 90/15mA;SMC Jack
49	MT3861H-P2C1N-S10	34		M1206	SPDT Switch w/TTL Driver;Single Control NINV;Freq 2-18GHz;Vcc 5V/120mA;SMC Jack
50	MT3861H-P2C1N-S11				
51	MT3861H-P2C1N-S5	34		M1206	SPDT Switch w/TTL Driver;Single Control NINV;Freq 2-18GHz;Vcc 5/28V 90/15mA;SMC Jack
		34		M1206	SPDT Switch w/TTL Driver;Single Control NINV;Freq 2-18GHz;Vcc 5/12V 90/15mA;SMC Jack
52	MT3861H-P2C1N-S6	34		M1206	SPDT Switch w/TTL Driver;Single Control NINV;Freq 2-18GHz;Vcc 12V/110mA;SMC Jack
53	MT3861H-P2C1N-S7				
54	MT3861H-P2C1N-S8	34		M1206	SPDT Switch w/TTL Driver;Single Control NINV;Freq 2-18GHz;Vcc 15V/110mA;SMC Jack
		34		M1206	SPDT Switch w/TTL Driver;Single Control NINV;Freq 2-18GHz;Vcc 5/15V 90/15mA;SMC Jack
55	MT3861H-P2C2I-S10	34		M1206	SPDT Switch w/TTL Driver;Dual Control INV;Freq 2-18GHz;Vcc 5V/120mA;SMC Jack

8. MISCELLANEOUS DEVICES

IN ORDER OF (1) USE and (2) TYPE No.

LINE No.	[2] TYPE No.	[1] USE	DESCRIPTION MAT.	DESCRIPTION DWG. No.	TECHNICAL DATA
1	MT3861H-P2C2I-S11	34		M1206	SPDT Switch w/TTL Driver;Dual Control INV;Freq 2-18GHz;Vcc 5/28V 90/15mA;SMC Jack
2	MT3861H-P2C2I-S5				
3	MT3861H-P2C2I-S6	34		M1206	SPDT Switch w/TTL Driver;Dual Control INV;Freq 2-18GHz;Vcc 5/12V 90/15mA;SMC Jack
		34		M1206	SPDT Switch w/TTL Driver;Dual Control INV;Freq 2-18GHz;Vcc 12V/110mA;SMC Jack
4♦	MT3861H-P2C2I-S7	34		M1206	SPDT Switch w/TTL Driver;Dual Control INV;Freq,2-18GHz;Vcc 15V/110mA;SMC Jack
5	MT3861H-P2C2I-S8				
6	MT3861H-P2C2N-S10	34		M1206	SPDT Switch w/TTL Driver;Dual Control INV;Freq 2-18GHz;Vcc 5/15V 90/15mA;SMC Jack
		34		M1206	SPDT Switch w/TTL Driver;Dual Control NINV;Freq 2-18GHz;Vcc 5V/120mA;SMC Jack
7	MT3861H-P2C2N-S11	34		M1206	SPDT Switch w/TTL Driver;Dual Control NINV;Freq 2-18GHz;Vcc 5/28V 90/15mA;SMC Jack
8	MT3861H-P2C2N-S5				
9	MT3861H-P2C2N-S6	34		M1206	SPDT Switch w/ttl Driver;Dual Control NINV;Freq 2-18GHz;Vcc 5/12V 90/15mA;SMC Jack
		34		M1206	SPDT Switch w/TTL Driver;Single Control NINV;Freq 2-18GHz;Vcc 12V/110mA:SMC Jack
10	MT3861H-P2C2N-S7	34		M1206	SPDT Switch w/TTL Driver;Dual Control NINV;Freq 2-18GHz;Vcc 15V/110mA;SMC Jack
11	MT3861H-P2C2N-S8				
12	MT3861H-P3C1I-S10	34		M1206	SPDT Switch w/TTL Driver;Dual Control NINV;Freq 2-18GHz;Vcc 5/15V 90/15mA;SMC Jack
		34		M1206	SPDT Switch w/TTL Driver;Single Control INV;Freq 2-18GHz;Vcc 5V/120mA;Solder Pin
13	MT3861H-P3C1I-S11	34		M1206	SPDT Switch w/TTL Driver;Single Control INV;Freq 2-18GHz;Vcc 5/28V 90/15mA;Solder Pin
14	MT3861H-P3C1I-S5				
15	MT3861H-P3C1I-S6	34		M1206	SPDT Switch w/TTL Driver;Single Control INV;Freq 2-18GHz;Vcc 5/12V 90/15mA;Solder Pin
		34		M1206	SPDT Switch w/TTL Driver;Single Control INV;Freq 2-18GHz;Vcc 12V/110mA;Solder Pin
16	MT3861H-P3C1I-S7	34		M1206	SPDT Switch w/TTL Driver;Single Control INV;Freq 2-18GHz;Vcc 15V/110mA;Solder Pin
17	MT3861H-P3C1I-S8				
18	MT3861H-P3C1N-S10	34		M1206	SPDT Switch w/TTL Driver;Single Control INV;Freq 2-18GHz;Vcc 5/15V 90/15mA;Solder Pin
		34		M1206	SPDT Switch w/TTL Driver;Single Control NINV;Freq 2-18GHz;Vcc 5V/120mA;Solder Pin
19	MT3861H-P3C1N-S11	34		M1206	SPDT Switch w/TTL Driver;Single Control NINV;Freq 2-18GHz;Vcc 5/28V 90/15mA;Solder Pin
20♦	MT3861H-P3C1N-S5				
21	MT3861H-P3C1N-S6	34		M1206	SPDT Switch w/TTL Driver;Single Control NINV;Freq 2-18GHz;Vcc 5/12V 90/15mA;Solder Pin
		34		M1206	SPDT Switch w/TTL Driver;Single Control NINV;Freq 2-18GHz;Vcc 12V/110mA;Solder Pin
22	MT3861H-P3C1N-S7	34		M1206	SPDT Switch w/TTL Driver;Single Control NINV;Freq 2-18GHz;Vcc 15V/110mA;Solder Pin
23	MT3861H-P3C1N-S8				
24	MT3861H-P3C2I-S10	34		M1206	SPDT Switch w/TTL Driver;Single Control NINV;Freq 2-18GHz;Vcc 5/15V 90/15mA;Solder Pin
		34		M1206	SPDT Switch w/TTL Driver;Dual Control INV;Freq 2-18GHz;Vcc 5V/120mA;Solder Pin
25	MT3861H-P3C2I-S11	34		M1206	SPDT Switch w/TTL Driver;Dual Control INV;Freq 2-18GHz;Vcc 5/28V 90/15mA;Solder Pin
26	MT3861H-P3C2I-S5				
27	MT3861H-P3C2I-S6	34		M1206	SPDT Switch w/TTL Driver;Dual Control INV;Freq 2-18GHz;Vcc 5/12V 90/15mA;Solder Pin
		34		M1206	SPDT Switch w/TTL Driver;Dual Control INV;Freq 2-18GHz;Vcc 12V/110mA;Solder Pin
28	MT3861H-P3C2I-S7	34		M1206	SPDT Switch w/TTL Driver;Dual Control INV;Freq 2-18GHz;Vcc 15V/110mA;Solder Pin
29	MT3861H-P3C2I-S8				
30	MT3861H-P3C2N-S10	34		M1206	SPDT Switch w/TTL Driver;Dual Control INV;Freq 2-18GHz;Vcc 5/15V 90/15mA;Solder Pin
		34		M1206	SPDT Switch w/TTL Driver;Dual Control NINV;Freq 2-18GHz;Vcc 5V/120mA;Solder Pin
31	MT3861H-P3C2N-S11	34		M1206	SPDT Switch w/TTL Driver;Dual Control NINV;Freq 2-18GHz;Vcc 5/28V 90/15mA;Solder Pin
32	MT3861H-P3C2N-S5				
33	MT3861H-P3C2N-S6	34		M1206	SPDT Switch w/TTL Driver;Dual Control NINV;Freq 2-18GHz;Vcc 5/12V 90/15mA;Solder Pin
		34		M1206	SPDT Switch w/TTL Driver;Dual Control NINV;Freq 2-18GHz;Vcc 12V/110mA;Solder Pin
34	MT3861H-P3C2N-S7	34		M1206	SPDT Switch w/TTL Driver;Dual Control NINV;Freq 2-18GHz;Vcc 15V/110mA;Solder Pin
35	MT3861H-P3C2N-S8				
		34		M1206	SPDT Switch w/TTL Driver;Dual Control NINV;Freq 2-18GHz;Vcc 5/15V 90/15mA;Solder Pin
36	MT3883A	34		M1214	SP3T Switch w/TTL Logic;Freq .5-4GHz;Ins Loss 1.2dBmax;Isol 45dBmin;VSWR 1.6max
37	MT3883B2	34		M1214	SP3T Switch w/TTL Logic;Freq 2-8GHz;Ins Loss 1.4dBmax;Isol 40dBmin;VSWR 1.7max
38	MT3883E	34		M1214	SP3T Switch w/TTL Logic;Freq 4-12.4GHz;Ins Loss 1.7dBmax;Isol 40dBmin;VSWR 1.7max
39	MT3883H3	34		M1214	SP3T Switch w/TTL Logic;Freq 8-18GHz;Ins Loss 2.1dBmax;Isol 37dBmin;VSWR 1.8max
40	MT3883H	34		M1214	SP3T Switch w/TTL Logic;Freq 2-18GHz;Ins Loss 2.3dBmax;Isol 37dBmin;VSWR 1.9max
41	MT3884A	34		M1215	SP4T Switch w/TTL Logic;Freq .5-4GHz;Ins Loss 1.2dBmax;Isol 45dBmin;VSWR 1.6max
42	MT3884B2	34		M1215	SP4T Switch w/TTL Logic;Freq 2-8GHz;Ins Loss 1.5dBmax;Isol 40dBmin;VSWR 1.7max
43	MT3884E	34		M1215	SP4T Switch w/TTL Logic;Freq 4-12.4GHz;Ins Loss 1.9dBmax;Isol 40dBmin;VSWR 1.8max
44	MT3884H3	34		M1215	SP4T Switch w/TTL Logic;Freq 8-18GHz;Ins Loss 2.4dBmax;Isol 37dBmin;VSWR 1.9max
45	MT3884H	34		M1215	SP4T Switch w/TTL Logic;Freq 2-18GHz;Ins Loss 2.5dBmax;Isol 37dBmin;VSWR 2.0max
46	MT3885A	34		M1215	SP5T Switch w/TTL Logic;Freq .5-4GHz;Ins Loss 1.3dBmax;Isol 45dBmin;VSWR 1.6max
47	MT3885B2	34		M1215	SP5T Switch w/TTL Logic;Freq 2-8GHz;Ins Loss 1.7dBmax;Isol 40dBmin;VSWR 1.7max
48	MT3885E	34		M1215	SP5T Switch w/TTL Logic;Freq 4-12.4GHz;Ins Loss 2.1dBmax;Isol 40dBmin;VSWR 1.9max
49	MT3885H3	34		M1215	SP5T Switch w/TTL Logic;Freq 8-18GHz;Ins Loss 2.6dBmax;Isol 37dBmin;VSWR 2.0max
50	MT3885H	34		M1215	SP5T Switch w/TTL Logic;Freq 2-18GHz;Ins Loss 2.8dBmax;Isol 37dBmin;VSWR 2.1max
51	MT3886A	34		M1215	SP6T Switch w/TTL Logic;Freq .5-4GHz;Ins Loss 1.3dBmax;Isol 45dBmin;VSWR 1.7max
52	MT3886B2	34		M1215	SP6T Switch w/TTL Logic;Freq 2-8GHz;Ins Loss 1.8dBmax;Isol 40dBmin;VSWR 1.8max
53	MT3886E	34		M1215	SP6T Switch w/TTL Logic;Freq 4-12.4GHz;Ins Loss 2.3dBmax;Isol 40dBmin;VSWR 2.0max
54	MT3886H3	34		M1215	SP6T Switch w/TTL Logic;Freq 8-18GHz;Ins Loss 2.9dBmax;Isol 37dBmin;VSWR 2.1max
55	MT3886H	34		M1215	SP6T Switch w/TTL Logic;Freq 2-18GHz;Ins Loss 3.0dBmax;Isol 37dBmin;VSWR 2.2 max
56	MT3887A	34		M1215	SP7T Switch w/TTL Logic;Freq .5-4GHz;Ins Loss 1.4dBmax;Isol 45dBmin;VSWR 1.7 max
57	MT3887B2	34		M1215	SP7T Switch w/TTL Logic;Freq 2-8GHz;Ins Loss 1.9dBmax;Isol 40dBmin;VSWR 1.9 max
58	MT3887E	34		M1215	SP7T Switch w/TTL Logic;Freq 4-12.4GHz;Ins Loss 2.4dBmax;Isol 40dBmin;VSWR 2.0 max
59	MT3887H3	34		M1215	SP7T Switch w/TTL Logic;Freq 8-18GHz;Ins Loss 3.1dBmax;Isol 37dBmin;VSWR 2.2 max
60	MT3887H	34		M1215	SP7T Switch w/TTL Logic;Freq 2-18GHz;Ins Loss 3.3dBmax;Isol 37dBmin;VSWR 2.3 max
61	MT3888A	34		M1221	Transfer Switch w/Driver;Freq .5-4GHz;Ins Loss 1.4dBmax;Isol 40dBmin;VSWR 1.6max;TTL Logic
62	MT3888B2	34		M1221	Transfer Switch w/Driver;Freq 2-8GHz;Ins Loss 1.7dBmax;Isol 40dBmin;VSWR 1.7max;TTL Logic
63	MT3888E	34		M1221	Transfer Switch w/Driver;Freq 4-12.4GHz;Ins Loss 2.1dBmax;Isol 40dBminVSWR 1.8max;TTL Logic
64	MT3888H3	34		M1221	Transfer Switch w/Driver;Freq 8-18GHz;Ins Loss 2.6dBmax;Isol 38dBmin;VSWR 1.9max;TTL Logic
65	MT3888H	34		M1221	Transfer Switch w/Driver;Freq 2-18GHz;Ins Loss 2.8dBmax;Isol 38dBmin;VSWR 2.0max;TTL Logic
66	MT3893A	34		M1214	SP3T Switch w/Driver;Freq .5-4GHz;Ins Loss 1.2dBmax;Isol 45dBmin;VSWR 1.6max;TTL Logic
67	MT3893B2	34		M1214	SP3T Switch w/Driver;Freq 2-8GHz;Ins Loss 1.5dBmax;Isol 45dBmin;VSWR 1.7max;TTL Logic
68	MT3893E	34		M1214	SP3T Switch w/Driver;Freq 4-12.4GHz;Ins Loss 1.9dBmax;Isol 40dBmin;VSWR 1.7max;TTL Logic
69	MT3893H3	34		M1214	SP3T Switch w/Driver;Freq 8-18GHz;Ins Loss 2.3dBmax;Isol 40dBmin;VSWR 1.8max;TTL Logic
70	MT3893H	34		M1214	SP3T Switch w/Driver;Freq 2-18GHz;Ins Loss 2.5dBmax;Isol 40dBmin;VSWR 1.9max;TTL Logic
71	MT3894A	34		M1215	SP4T Switch w/Driver;Freq .5-4GHz;Ins Loss 1.3dBmax;Isol 45dBmin;VSWR 1.6max;TTL Logic
72	MT3894B2	34		M1215	SP4T Switch w/Driver;Freq 2-8GHz;Ins Loss 1.6dBmax;Isol 45dBmin;VSWR 1.7max;TTL Logic
73	MT3894E	34		M1215	SP4T Switch w/Driver;Freq 4-12.4GHz;Ins Loss 2.0dBmax;Isol 40dBmin;VSWR 1.8max;TTL Logic
74	MT3894H3	34		M1215	SP4T Switch w/Driver;Freq 8-18GHz;Ins Loss 2.5dBmax;Isol 40dBmin;VSWR 1.9max;TTL Logic
75	MT3894H	34		M1215	SP4T Switch w/Driver;Freq 2-18GHz;Ins Loss 2.7dBmax;Isol 40dBmin;VSWR 2.0max;TTL Logic

8. MISCELLANEOUS DEVICES

IN ORDER OF (1) USE and (2) TYPE No.

LINE No.	2 TYPE No.	1 USE	DESCRIPTION MAT.	DESCRIPTION DWG. No.	TECHNICAL DATA
1	MT3895A	34		M1215	SP5T Switch w/Driver;Freq .5-4GHz;Ins Loss 1.3dBmax;Isol 45dBmin;VSWR 1.6max;TTL Logic
2	MT3895B2	34		M1215	SP5T Switch w/Driver;Freq 2-8GHz;Ins Loss 1.7dBmax;Isol 45dBmin;VSWR 1.7max;TTL Logic
3	MT3895E	34		M1215	SP5T Switch w/Driver;Freq 4-12.4GHz;Ins Loss 2.2dBmax;Isol 40dBmin;VSWR 1.9max;TTL Logic
4	MT3895H3	34		M1215	SP5T Switch w/Driver;Freq 8-18GHz;Ins Loss 2.8dBmax;Isol 40dBmin;VSWR 2.0max;TTL Logic
5	MT3895H	34		M1215	SP5T Switch w/Driver;Freq 2-18GHz;Ins Loss 3.0dBmax;Isol 40dBmin;VSWR 2.1max;TTL Logic
6	MT3896A	34		M1215	SP6T Switch w/Driver;Freq .5-4GHz;Ins Loss 1.4dBmax;Isol 45dBmin;VSWR 1.7max;TTL Logic
7	MT3896B2	34		M1215	SP6T Switch w/Driver;Freq 2-8GHz;Ins Loss 1.8dBmax;Isol 45dBmin;VSWR 1.8max;TTL Logic
8	MT3896E	34		M1215	SP6T Switch w/Driver;Freq 4-12.4GHz;Ins Loss 2.4dBmax;Isol 40dBmin;VSWR 2.0max;TTL Logic
9	MT3896H3	34		M1215	SP6T Switch w/Driver;Freq 8-18GHz;Ins Loss 3.0dBmax;Isol 40dBmin;VSWR 2.1max;TTL Logic
10	MT3896H	34		M1215	SP6T Switch w/Driver;Freq 2-18GHz;Ins Loss 3.2dBmax;Isol 40dBmin;VSWR 2.2max;TTL Logic
11	MT3897A	34		M1215	SP7T Switch w/Driver;Freq .5-4GHz;Ins Loss 1.4dBmax;Isol 45dBmin;VSWR 1.7max;TTL Logic
12	MT3897B2	34		M1215	SP7T Switch w/Driver;Freq 2-8GHz;Ins Loss 2.0dBmax;Isol 45dBmin;VSWR 1.9max;TTL Logic
13	MT3897E	34		M1215	SP7T Switch w/Driver;Freq 4-12.4GHz;Ins Loss 2.5dBmax;Isol 40dBmin;VSWR 2.0max;TTL Logic
14	MT3897H3	34		M1215	SP7T Switch w/Driver;Freq 8-18GHz;Ins Loss 3.3dBmax;Isol 40dBmin;VSWR 2.2max;TTL Logic
15	MT3897H	34		M1215	SP7T Switch w/Driver;Freq 2-18GHz;Ins Loss 3.5dBmax;Isol 40dBmin;VSWR 2.3max;TTL Logic
16	MT7643A	34		M1217	SP3T Switch w/Driver;Freq .5-4GHz;Ins Loss 1.1dBmax;Isol 55dBmin;VSWR 1.6max;TTL Logic
17	MT7643B2	34		M1217	SP3T Switch w/Driver;Freq 2-8GHz;Ins Loss 1.5dBmax;Isol 55dBmin;VSWR 1.8max;TTL Logic
18	MT7643E	34		M1217	SP3T Switch w/Driver;Freq 4-12.4GHz;Ins Loss 2.0dBmax;Isol 55dBmin;VSWR 1.9max;TTL Logic
19	MT7643H3	34		M1217	SP3T Switch w/Driver;Freq 8-18GHz;Ins Loss 2.6dBmax;Isol 50dBmin;VSWR 2.0max;TTL Logic
20	MT7643H	34		M1217	SP3T Switch w/Driver;Freq 2-18GHz;Ins Loss 2.9dBmax;Isol 50dBmin;VSWR 2.0max;TTL Logic
21	MT7644A	34		M1218	SP4T Switch w/Driver;Freq .5-4GHz;Ins Loss 1.1dBmax;Isol 55dBmin;VSWR 1.7max;TTL Logic
22	MT7644B2	34		M1218	SP4T Switch w/Driver;Freq 2-8GHz;Ins Loss 1.6dBmax;Isol 55dBmin;VSWR 1.9max;TTL Logic
23	MT7644E	34		M1218	SP4T Switch w/Driver;Freq 4-12.4GHz;Ins Loss 2.2dBmax;Isol 55dBmin;VSWR 2.0max;TTL Logic
24	MT7644H3	34		M1218	SP4T Switch w/Driver;Freq 8-18GHz;Ins Loss 2.8dBmax;Isol 50dBmin;VSWR 2.1max;TTL Logic
25	MT7644H	34		M1218	SP4T Switch w/Driver;Freq 2-18GHz;Ins Loss 3.1dBmax;Isol 50dBmin;VSWR 2.1max;TTL Logic
26	MT7645A	34		M1218	SP5T Switch w/Driver;Freq .5-4GHz;Ins Loss 1.2dBmax;Isol 55dBmin;VSWR 1.8max;TTL Logic
27	MT7645B2	34		M1218	SP5T Switch w/Driver;Freq 2-8GHz;Ins Loss 1.7dBmax;Isol 55dBmin;VSWR 2.0max;TTL Logic
28	MT7645E	34		M1218	SP5T Switch w/Driver;Freq 4-12.4GHz;Ins Loss 2.3dBmax;Isol 55dBmin;VSWR 2.1max;TTL Logic
29	MT7645H3	34		M1218	SP5T Switch w/Driver;Freq 8-18GHz;Ins Loss 3.1dBmax;Isol 50dBmin;VSWR 2.2max;TTL Logic
30	MT7645H	34		M1218	SP5T Switch w/Driver;Freq 2-18GHz;Ins Loss 3.4dBmax;Isol 50dBmin;VSWR 2.2max;TTL Logic
31	MT7646A	34		M1218	SP6T Switch w/Driver;Freq .5-4GHz;Ins Loss 1.3dBmax;Isol 55dBmin;VSWR 1.9max;TTL Logic
32	MT7646B2	34		M1218	SP6T Switch w/Driver;Freq 2-8GHz;Ins Loss 1.9dBmax;Isol 55dBmin;VSWR 2.1max;TTL Logic
33	MT7646E	34		M1218	SP6T Switch w/Driver;Freq 4-12.4GHz;Ins Loss 2.5dBmax;Isol 55dBmin;VSWR 2.2max;TTL Logic
34	MT7647A	34		M1218	SP7T Switch w/Driver;Freq .5-4GHz;Ins Loss 1.3dBmax;Isol 55dBmin;VSWR 2.0max;TTL Logic
35	MT7647B2	34		M1218	SP7T Switch w/Driver;Freq 2-8GHz;Ins Loss 2.0dBmax;Isol 55dBmin;VSWR 2.2max;TTL Logic
36	MT7647E	34		M1218	SP7T Switch w/Driver;Freq 4-12.4GHz;Ins Loss 2.7dBmax;Isol 55dBmin;VSWR 2.3max;TTL Logic
37	MT7693A	34		M1217	SP3T Switch w/Driver;Freq .5-4GHz;Ins Loss 1.9dBmax;Isol 50dBmin;VSWR 1.7max;TTL Logic
38	MT7693B2	34		M1217	SP3T Switch w/Driver;Freq 2-8GHz;Ins Loss 2.1dBmax;Isol 45dBmin;VSWR 1.7max;TTL Logic
39	MT7693E	34		M1217	SP3T Switch w/Driver;Freq 4-12.4GHz;Ins Loss 2.4dBmax;Isol 40dBmin;VSWR 1.8max;TTL Logic
40	MT7693H3	34		M1217	SP3T Switch w/Driver;Freq 8-18GHz;Ins Loss 3.0dBmax;Isol 40dBmin;VSWR 1.9max;TTL Logic
41	MT7693H	34		M1217	SP3T Switch w/Driver;Freq 2-18GHz;Ins Loss 3.3dBmax;Isol 40dBmin;VSWR 2.1max;TTL Logic
42	MT7694A	34		M1218	SP4T Switch w/Driver;Freq .5-4GHz;Ins Loss 1.9dBmax;Isol 50dBmin;VSWR 1.7max;TTL Logic
43	MT7694B2	34		M1218	SP4T Switch w/Driver;Freq 2-8GHz;Ins Loss 2.1dBmax;Isol 45dBmin;VSWR 1.7max;TTL Logic
44	MT7694E	34		M1218	SP4T Switch w/Driver;Freq 4-12.4GHz;Ins Loss 2.5dBmax;Isol 40dBmin;VSWR 1.9max;TTL Logic
45	MT7694H3	34		M1218	SP4T Switch w/Driver;Freq 4-18GHz;Ins Loss 3.1dBmax;Isol 40dBmin;VSWR 2.0max;TTL Logic
46	MT7694H	34		M1218	SP4T Switch w/Driver;Freq 2-18GHz;Ins Loss 3.4dBmax;Isol 40dBmin;VSWR 2.3max;TTL Logic
47	MT7695A	34		M1218	SP5T Switch w/Driver;Freq .5-4GHz;Ins Loss 2.0dBmax;Isol 50dBmin;VSWR 1.7max;TTL Logic
48	MT7695B2	34		M1218	SP5T Switch w/Driver;Freq 2-8GHz;Ins Loss 2.3dBmax;Isol 45dBmin;VSWR 1.7max;TTL Logic
49	MT7695E	34		M1218	SP5T Switch w/Driver;Freq 4-12.4GHz;Ins Loss 2.7dBmax;Isol 40dBmin;VSWR 2.0max;TTL Logic
50	MT7695H3	34		M1218	SP5T Switch w/Driver;Freq 8-18GHz;Ins Loss 3.4dBmax;Isol 40dBmin;VSWR 2.1max;TTL Logic
51	MT7695H	34		M1218	SP5T Switch w/Driver;Freq 2-18GHz;Ins Loss 3.7dBmax;Isol 40dBmin;VSWR 2.3max;TTL Logic
52	MT7696A	34		M1218	SP6T Switch w/Driver;Freq .5-4GHz;Ins Loss 2.0dBmax;Isol 50dBmin;VSWR 1.8max;TTL Logic
53	MT7696B2	34		M1218	SP6T Switch w/Driver;Freq 2-8GHz;Ins Loss 2.4dBmax;Isol 45dBmin;VSWR 1.8max;TTL Logic
54	MT7696E	34		M1218	SP6T Switch w/Driver;Freq 4-12.4GHz;Ins Loss 2.9dBmax;Isol 40dBmin;VSWR 2.1max;TTL Logic
55	MT7697A	34		M1218	SP7T Switch w/Driver;Freq .5-4GHz;Ins Loss 2.1dBmax;Isol 50dBmin;VSWR 1.8max;TTL Logic
56	MT7697B2	34		M1218	SP7T Switch w/Driver;Freq 2-8GHz;Ins Loss 2.5dBmax;Isol 45dBmin;VSWR 1.9max;TTL Logic
57	MT7697E	34		M1218	SP7T Switch w/Driver;Freq 4-12.4GHz;Ins Loss 3.0dBmax;Isol 40dBmin;VSWR 2.1max;TTL Logic
58	MT7820A	34		M1216	SP10T Switch w/Driver/Freq .5-4GHz;Ins Loss 1.5dB max;Isol 45dB min;VSWR 1.7 max;TTL Logic
59	MT7820B2	34		M1216	SP10T Switch w/Driver/Freq 2-8GHz;Ins Loss 2.0dB max;Isol 40dB min;VSWR 1.9 max;TTL Logic
60	MT7820E	34		M1216	SP10T Switch w/Driver/Freq 4-12.4GHz;Ins Loss 2.6dB max;Isol 40dB min;VSWR 2.2 max;TTL Logic
61	MT7820H3	34		M1216	SP10T Switch w/Driver/Freq 8-18GHz;Ins Loss 3.4dB max;Isol 35dB min;VSWR 2.5 max;TTL Logic
62	MT7820H	34		M1216	SP10T Switch w/Driver/Freq 2-18GHz;Ins Loss 3.6dB max;Isol 35dB min;VSWR 2.6 max;TTL Logic
63	MT7821A	34		M1216	SP11T Switch w/Driver;Freq .5-4GHz;Ins Loss 1.5dB max;Isol 45dB min;VSWR 1.7 max;TTL Logic
64	MT7821B2	34		M1216	SP11T Switch w/Driver;Freq 2-8GHz;Ins Loss 2.1dB max;Isol 40dB min;VSWR 2.0 max;TTL Logic
65	MT7821E	34		M1216	SP11T Switch w/Driver;Freq 4-12.4GHz;Ins Loss 2.7dB max;Isol 40dB min;VSWR 2.3 max;TTL Logic
66	MT7821H3	34		M1216	SP11T Switch w/Driver;Freq 8-18GHz;Ins Loss 3.5dB max;Isol 35dB min;VSWR 2.6 max;TTL Logic
67	MT7821H	34		M1216	SP11T Switch w/Driver;Freq 2-18GHz;Ins Loss 3.8dB max;Isol 35dB min;VSWR 2.7 max;TTL Logic
68	MT7823A	34		M1214	SP3T Switch w/Driver;Freq .5-4GHz;Ins Loss 1.5dBmax;Isol 60dBmin;VSWR 1.5max;TTL Logic
69	MT7823B2	34		M1214	SP3T Switch w/Driver;Freq 2-8GHz;Ins Loss 1.8dBmax;Isol 60dBmin;VSWR 1.6max;TTL Logic
70	MT7823E	34		M1214	SP3T Switch w/Driver;Freq 4-12.4GHz;Ins Loss 2.1dBmax;Isol 55dBmin;VSWR 1.7max;TTL Logic
71	MT7823H3	34		M1214	SP3T Switch w/Driver;Freq 8-18GHz;Ins Loss 2.5dBmax;Isol 50dBmin;VSWR 1.8max;TTL Logic
72	MT7823H	34		M1214	SP3T Switch w/Driver;Freq 2-18GHz;Ins Loss 2.7dBmax;Isol 50dBmin;VSWR 1.9max;TTL Logic
73	MT7824A	34		M1215	SP4T Switch w/Driver;Freq .5-4GHz;Ins Loss 1.5dBmax;Isol 60dBmin;VSWR 1.5max;TTL Logic
74	MT7824B2	34		M1215	SP4T Switch w/Driver;Freq 2-8GHz;Ins Loss 1.8dBmax;Isol 60dBmin;VSWR 1.6max;TTL Logic
75	MT7824E	34		M1215	SP4T Switch w/Driver;Freq 4-12.4GHz;Ins Loss 2.2dBmax;Isol 55dBmin;VSWR 1.8max;TTL Logic
76	MT7824H3	34		M1215	SP4T Switch w/Driver;Freq 8-18GHz;Ins Loss 2.6dBmax;Isol 50dBmin;VSWR 1.9max;TTL Logic
77	MT7824H	34		M1215	SP4T Switch w/Driver;Freq 2-18GHz;Ins Loss 2.8dBmax;Isol 50dBmin;VSWR 2.0max;TTL Logic
78	MT7825A	34		M1215	SP5T Switch w/Driver;Freq .5-4GHz;Ins Loss 1.6dBmax;Isol 60dBmin;VSWR 1.5max;TTL Logic
79	MT7825B2	34		M1215	SP5T Switch w/Driver;Freq 2-8GHz;Ins Loss 2.0dBmax;Isol 60dBmin;VSWR 1.7max;TTL Logic
80	MT7825E	34		M1215	SP5T Switch w/Driver;Freq 4-12.4GHz;Ins Loss 2.4dBmax;Isol 55dBmin;VSWR 1.8max;TTL Logic
81	MT7825H3	34		M1215	SP5T Switch w/Driver;Freq 8-18GHz;Ins Loss 2.9dBmax;Isol 50dBmin;VSWR 2.0max;TTL Logic
82	MT7825H	34		M1215	SP5T Switch w/Driver;Freq 2-18GHz;Ins Loss 3.1dBmax;Isol 50dBmin;VSWR 2.1max;TTL Logic
83	MT7826A	34		M1215	SP6T Switch w/Driver;Freq .5-4GHz;Ins Loss 1.6dBmax;Isol 60dBmin;VSWR 1.6max;TTL Logic
84	MT7826B2	34		M1215	SP6T Switch w/Driver;Freq 2-8GHz;Ins Loss 2.1dBmax;Isol 60dBmin;VSWR 1.7max;TTL Logic
85	MT7826E	34		M1215	SP6T Switch w/Driver;Freq 4-12.4GHz;Ins Loss 2.6dBmax;Isol 55dBmin;VSWR 1.9max;TTL Logic
86	MT7826H3	34		M1215	SP6T Switch w/Driver;Freq 8-18GHz;Ins Loss 3.2dBmax;Isol 50dBmin;VSWR 2.1max;TTL Logic
87	MT7826H	34		M1215	SP6T Switch w/Driver;Freq 2-8GHz;Ins Loss 3.4dBmax;Isol 50dBmin;VSWR 2.2max;TTL Logic
88	MT7827A	34		M1215	SP7T Switch w/Driver;Freq .5-4GHz;Ins Loss 1.7dBmax;Isol 60dBmin;VSWR 1.6max;TTL Logic
89	MT7827B2	34		M1215	SP7T Switch w/Driver;Freq 2-8GHz;Ins Loss 2.2dBmax;Isol 60dBmin;VSWR 1.8max;TTL Logic
90	MT7827E	34		M1215	SP7T Switch w/Driver;Freq 4-12.4GHz;Ins Loss 2.7dBmax;Isol 55dBmin;VSWR 2.0max;TTL Logic
91	MT7827H3	34		M1215	SP7T Switch w/Driver;Freq 8-18GHz;Ins Loss 3.4dBmax;Isol 50dBmin;VSWR 2.2max;TTL Logic
92	MT7827H	34		M1215	SP7T Switch w/Driver;Freq 2-18GHz;Ins Loss 3.6dBmax;Isol 50dBmin;VSWR 2.3max;TTL Logic
93	MT7828A	34		M1216	SP8T Switch w/TTL Logic;Freq .5-4GHz;Ins Loss 1.8dBmax;Isol 55dBmin;VSWR 1.6 max
94	MT7828B2	34		M1216	SP8T Switch w/TTL Logic;Freq 2-8GHz;Ins Loss 2.3dBmax;Isol 55dBmin;VSWR 1.9 max
95	MT7828E	34		M1216	SP8T Switch w/TTL Logic;Freq 4-12.4GHz;Ins Loss 2.8dBmax;Isol 50dBmin;VSWR 2.1 max
96	MT7828H3	34		M1216	SP8T Switch w/TTL Logic;Freq 8-18GHz;Ins Loss 3.5dBmax;Isol 50dBmin;VSWR 2.3 max
97	MT7828H	34		M1216	SP8T Switch w/TTL Logic;Freq 2-18GHz;Ins Loss 3.7dBmax;Isol 50dBmin;VSWR 2.4 max
98	MT7829A	34		M1216	SP9T Switch w/TTL Logic;Freq .5-4GHz;Ins Loss 1.9dBmax;Isol 55dBmin;VSWR 1.7 max
99	MT7829B2	34		M1216	SP9T Switch w/TTL Logic;Freq 2-8GHz;Ins Loss 2.4dBmax;Isol 55dBmin;VSWR 1.9 max
100	MT7829E	34		M1216	SP9T Switch w/Driver;Freq 4-12.4GHz;Ins Loss 2.9dB max;Isol 50dB min;VSWR 2.1 max;TTL Logic
101	MT7829H3	34		M1216	SP9T Switch w/Driver;Freq 8-18GHz;Ins Loss 3.7dB max;Isol 50dB min;VSWR 2.4 max;TTL Logic
102	MT7829H	34		M1216	SP9T Switch w/Driver;Freq 2-18GHz;Ins Loss 3.9dB max;Isol 50dB min;VSWR 2.5 max;TTL Logic
103	MT7830A	34		M1216	SP10T Switch w/Driver/Freq .5-4GHz;Ins Loss 1.9dB max;Isol 55dB min;VSWR 1.7 max;TTL Logic
104	MT7830B2	34		M1216	SP10T Switch w/Driver/Freq 2-8GHz;Ins Loss 2.5dB max;Isol 55dB min;VSWR 1.9 max;TTL Logic
105	MT7830E	34		M1216	SP10T Switch w/Driver/Freq 4-12.4GHz;Ins Loss 3.1dB max;Isol 50dB min;VSWR 2.2 max;TTL Logic
106	MT7830H3	34		M1216	SP10T Switch w/Driver;Freq 8-18GHz;Ins Loss 3.9dB max;Isol 50dB min;VSWR 2.5 max;TTL Logic
107	MT7830H	34		M1216	SP10T Switch w/Driver;Freq 2-18GHz;Ins Loss 4.1dB max;Isol 50dB min;VSWR 2.6 max;TTL Logic
108	MT7831A	34		M1216	SP11T Switch w/Driver;Freq .5-4GHz;Ins Loss 1.9dB max;Isol 55dB min;VSWR 1.7 max;TTL Logic
109	MT7831B2	34		M1216	SP11T Switch w/Driver;Freq 2-8GHz;Ins Loss 2.5dB max;Isol 55dB min;VSWR 2.0 max;TTL Logic
110	MT7831E	34		M1216	SP11T Switch w/Driver;Freq 4-12.4GHz;Ins Loss 3.2dB max;Isol 50dB min;VSWR 2.3 max;TTL Logic

8. MISCELLANEOUS DEVICES

IN ORDER OF (1) USE and (2) TYPE No.

LINE No.	[2] TYPE No.	[1] USE	DESCRIPTION MAT.	DWG. No.	TECHNICAL DATA
1	MT7831H3	34		M1216	SP11T Switch w/Driver;Freq 8-18GHz;Ins Loss 4.0dB max;Isol 50dB min;VSWR 2.6 max;TTL Logic
2	MT7831H	34		M1216	SP11T Switch w/Driver;Freq 2-18GHz;Ins Loss 4.2dB max;Isol 50dB min;VSWR 2.7 max;TTL Logic
3	MT7838A	34		M1216	SP8T Switch w/TTL Logic;Freq .5-4GHz;Ins Loss 1.4dBmax;Isol 45dBmin;VSWR 1.6 max
4	MT7838B2	34		M1216	SP8T Switch w/TTL Logic;Freq 2-8GHz;Ins Loss 1.9dBmax;Isol 40dBmin;VSWR 1.9 max
5	MT7838E	34		M1216	SP8T Switch w/TTL Logic;Freq 4-12.4GHz;Ins Loss 2.4dBmax;Isol 40dBmin;VSWR 2.1 max
6	MT7838H3	34		M1216	SP8T Switch w/TTL Logic;Freq 8-18GHz;Ins Loss 3.0dBmax;Isol 35dBmin;VSWR 2.3 max
7	MT7838H	34		M1216	SP8T Switch w/TTL Logic;Freq 2-18GHz;Ins Loss 3.2dBmax;Isol 35dBmin;VSWR 2.4 max
8	MT7839A	34		M1216	SP9T Switch w/TTL Logic;Freq .5-4GHz;Ins Loss 1.4dBmax;Isol 45dBmin;VSWR 1.7 max
9	MT7839B2	34		M1216	SP9T Switch w/TTL Logic;Freq 2-8GHz;Ins Loss 1.9dBmax;Isol 40dBmin;VSWR 1.9 max
10	MT7839E	34		M1216	SP9T Switch w/TTL Logic;Freq 4-12.4GHz;Ins Loss 2.5dBmax;Isol 40dBmin;VSWR 2.1 max
11	MT7839H3	34		M1216	SP9T Switch w/TTL Logic;Freq 8-18GHz;Ins Loss 3.2dBmax;Isol 35dBmin;VSWR 2.4 max
12	MT7839H	34		M1216	SP9T Switch w/TTL Logic;Freq 2-18GHz;Ins Loss 3.4dBmax;Isol 35dBmin;VSWR 2.5 max
13	MT8103A	34		M1219	SP3T Switch w/Driver;Freq .5-4GHz;Ins Loss 1.6dBmax;Isol 45dBmin;VSWR 1.5max;TTL Logic
14	MT8103B2	34		M1219	SP3T Switch w/Driver;Freq 2-8GHz;Ins Loss 1.9dBmax;Isol 40dBmin;VSWR 1.6max;TTL Logic
15	MT8103E	34		M1219	SP3T Switch w/Driver;Freq 4-12.4GHz;Ins Loss 2.2dBmax;Isol 40dBmin;VSWR 1.7max;TTL Logic
16	MT8103H3	34		M1219	SP3T Switch w/Driver;Freq 8-18GHz;Ins Loss 2.6dBmax;Isol 38dBmin;VSWR 1.8max;TTL Logic
17	MT8103H	34		M1219	SP3T Switch w/Driver;Freq 2-18GHz;Ins Loss 2.7dBmax;Isol 38dBmin;VSWR 1.9max;TTL Logic
18	MT8104A	34		M1219	SP4T Switch w/Driver;Freq .5-4GHz;Ins Loss 1.7dBmax;Isol 45dBmin;VSWR 1.6max;TTL Logic
19	MT8104B2	34		M1219	SP4T Switch w/Driver;Freq 2-8GHz;Ins Loss 2.0dBmax;Isol 40dBmin;VSWR 1.7max;TTL Logic
20	MT8104E	34		M1219	SP4T Switch w/Driver;Freq 4-12.4GHz;Ins Loss 2.3dBmax;Isol 40dBmin;VSWR 1.8max;TTL Logic
21	MT8104H3	34		M1219	SP4T Switch w/Driver;Freq 8-18GHz;Ins Loss 2.8dBmax;Isol 38dBmin;VSWR 1.9max;TTL Logic
22	MT8104H	34		M1219	SP4T Switch w/Driver;Freq 2-18GHz;Ins Loss 2.9dBmax;Isol 38dBmin;VSWR 2.0max;TTL Logic
23	MT8105A	34		M1219	SP5T Switch w/Driver;Freq .5-4GHz;Ins Loss 1.7dBmax;Isol 45dBmin;VSWR 1.6max;TTL Logic
24	MT8105B2	34		M1219	SP5T Switch w/Driver;Freq 2-8GHz;Ins Loss 2.1dBmax;Isol 40dBmin;VSWR 1.7max;TTL Logic
25	MT8105E	34		M1219	SP5T Switch w/Driver;Freq 4-12.4GHz;Ins Loss 2.5dBmax;Isol 40dBmin;VSWR 1.9max;TTL Logic
26	MT8105H3	34		M1219	SP5T Switch w/Driver;Freq 8-18GHz;Ins Loss 3.0dBmax;Isol 38dBmin;VSWR 2.0max;TTL Logic
27	MT8105H	34		M1219	SP5T Switch w/Driver;Freq 2-18GHz;Ins Loss 3.1dBmax;Isol 38dBmin;VSWR 2.1max;TTL Logic
28	MT8106A	34		M1219	SP6T Switch w/Driver;Freq .5-4GHz;Ins Loss 1.8dBmax;Isol 45dBmin;VSWR 1.6max;TTL Logic
29	MT8106B2	34		M1219	SP6T Switch w/Driver;Freq 2-8GHz;Ins Loss 2.2dBmax;Isol 40dBmin;VSWR 1.8max;TTL Logic
30	MT8106E	34		M1219	SP6T Switch w/Driver;Freq 4-12.4GHz;Ins Loss 2.6dBmax;Isol 40dBmin;VSWR 1.9max;TTL Logic
31	MT8106H3	34		M1219	SP6T Switch w/Driver;Freq 8-18GHz;Ins Loss 3.1dBmax;Isol 38dBmin;VSWR 2.1max;TTL Logic
32	MT8106H	34		M1219	SP6T Switch w/Driver;Freq 2-18GHz;Ins Loss 3.2dBmax;Isol 38dBmin;VSWR 2.2max;TTL Logic
33	MT8107A	34		M1219	SP7T Switch w/Driver;Freq .5-4GHz;Ins Loss 1.8dBmax;Isol 45dBmin;VSWR 1.6max;TTL Logic
34	MT8107B2	34		M1219	SP7T Switch w/Driver;Freq 2-8GHz;Ins Loss 2.2dBmax;Isol 40dBmin;VSWR 1.8max;TTL Logic
35	MT8107E	34		M1219	SP7T Switch w/Driver;Freq 4-12.4GHz;Ins Loss 2.7dBmax;Isol 40dBmin;VSWR 2.0max;TTL Logic
36	MT8107H3	34		M1219	SP7T Switch w/Driver;Freq 8-18GHz;Ins Loss 3.3dBmax;Isol 38dBmin;VSWR 2.2max;TTL Logic
37	MT8107H	34		M1219	SP7T Switch w/Driver;Freq 2-18GHz;Ins Loss 3.4dBmax;Isol 38dBmin;VSWR 2.3max;TTL Logic
38	MT8108A	34		M1219	SP8T Switch w/Driver;Freq .5-4GHz;Ins Loss 1.8dBmax;Isol 45dBmin;VSWR 1.7max;TTL Logic
39	MT8108B2	34		M1219	SP8T Switch w/Driver;Freq 2-8GHz;Ins Loss 2.3dBmax;Isol 40dBmin;VSWR 1.9max;TTL Logic
40	MT8108E	34		M1219	SP8T Switch w/Driver;Freq 4-12.4GHz;Ins Loss 2.8dBmax;Isol 40dBmin;VSWR 2.1max;TTL Logic
41	MT8108H3	34		M1219	SP8T Switch w/Driver;Freq 8-18GHz;Ins Loss 3.5dBmax;Isol 38dBmin;VSWR 2.3max;TTL Logic
42	MT8108H	34		M1219	SP8T Switch w/Driver;Freq 2-18GHz;Ins Loss 3.6dBmax;Isol 38dBmin;VSWR 2.4max;TTL Logic
43	MT8109A	34		M1219	SP9T Switch w/Driver;Freq .5-4GHz;Ins Loss 1.9dBmax;Isol 45dBmin;VSWR 1.7max;TTL Logic
44	MT8109B2	34		M1219	SP9T Switch w/Driver;Freq 2-8GHz;Ins Loss 2.4dBmax;Isol 40dBmin;VSWR 1.9max;TTL Logic
45	MT8109E	34		M1219	SP9T Switch w/Driver;Freq 4-12.4GHz;Ins Loss 2.9dBmax;Isol 40dBmin;VSWR 2.1max;TTL Logic
46	MT8109H3	34		M1219	SP9T Switch w/Driver;Freq 8-18GHz;Ins Loss 3.7dBmax;Isol 38dBmin;VSWR 2.4max;TTL Logic
47	MT8109H	34		M1219	SP9T Switch w/Driver;Freq 2-18GHz;Ins Loss 3.8dBmax;Isol 38dBmin;VSWR 2.5max;TTL Logic
48	MT8194A	34		M1231	SP4T Switch w/Driver;Freq .5-4GHz;Ins Loss 1.3dBmax;Isol 60dBmin;VSWR 1.5max
49	MT8194F1	34		M1231	SP4T Switch w/Driver;Freq 2-12.4GHz;Ins Loss 2.3dBmax;Isol 60dBmin;VSWR 1.7max
50	MT8194H1	34		M1231	SP4T Switch w/Driver;Freq 4-18GHz;Ins Loss 2.8dBmax;Isol 60dBmin;VSWR 1.9max
51	MT8194H	34		M1231	SP4T Switch w/Driver;Freq 2-18GHz;Ins Loss 3.1dBmax;Isol 60dBmin;VSWR 2.0max
52	MT8195A	34		M1231	SP5T Switch w/Driver;Freq .5-4GHz;Ins Loss 1.3dBmax;Isol 60dBmin;VSWR 1.5max
53	MT8195F1	34		M1231	SP5T Switch w/Driver;Freq 2-12.4GHz;Ins Loss 2.5dBmax;Isol 60dBmin;VSWR 1.8max
54	MT8195H1	34		M1231	SP5T Switch w/Driver;Freq 4-18GHz;Ins Loss 3.1dBmax;Isol 60dBmin;VSWR 1.9max
55	MT8195H	34		M1231	SP5T Switch w/Driver;Freq 2-18GHz;Ins Loss 3.4dBmax;Isol 60dBmin;VSWR 2.1max
56	MT8196A	34		M1231	SP6T Switch w/Driver;Freq .5-4GHz;Ins Loss 1.4dBmax;Isol 60dBmin;VSWR 1.6max
57	MT8196F1	34		M1231	SP6T Switch w/Driver;Freq 2-12.4GHz;Ins Loss 1.9dBmax;Isol 60dBmin;VSWR 1.9max
58	MT8196H1	34		M1231	SP6T Switch w/Driver;Freq 4-18GHz;Ins Loss 3.3dBmax;Isol 60dBmin;VSWR 2.0max
59	MT8196H	34		M1231	SP6T Switch w/Driver;Freq 2-18GHz;Ins Loss 3.6dBmax;Isol 60dBmin;VSWR 2.1max
60	MT8197A	34		M1231	SP7T Switch w/Driver;Freq .5-4GHz;Ins Loss 1.5dBmax;Isol 60dBmin;VSWR 1.7max
61	MT8197F1	34		M1231	SP7T Switch w/Driver;Freq 2-12.4GHz;Ins Loss 2.0dBmax;Isol 60dBmin;VSWR 2.0max
62	MT8197H1	34		M1231	SP7T Switch w/Driver;Freq 4-18GHz;Ins Loss 3.6dBmax;Isol 60dBmin;VSWR 2.2max
63	MT8197H	34		M1231	SP7T Switch w/Driver;Freq 2-18GHz;Ins Loss 3.9dBmax;Isol 60dBmin;VSWR 2.3max
64	MT8532A	34		M1205a	SPST Switch w/Driver;Freq .5-4GHz;Ins Loss .70dBmax;Isol 35dBmin;VSWR 1.6max
65	MT8532F1	34		M1205a	SPST Switch w/Driver;Freq 2-12.4GHz;Ins Loss 1.5dBmax;Isol 45dBmin;VSWR 1.8max
66	MT8532H1	34		M1205a	SPST Switch w/Driver;Freq 4-18GHz;Ins Loss 1.8dBmax;Isol 45dBmin;VSWR 1.9max
67	MT8532H	34		M1205a	SPST Switch w/Driver;Freq 2-18GHz;Ins Loss 2.0dBmax;Isol 45dBmin;VSWR 2.0max
68	MT8533A	34		M1205a	SPST Switch w/Driver;Freq .5-4GHz;Ins Loss .90dBmax;Isol 50dBmin;VSWR 1.6max
69	MT8533F1	34		M1205a	SPST Switch w/Driver;Freq 2-12.4GHz;Ins Loss 1.8dBmax;Isol 70dBmin;VSWR 1.8max
70	MT8533H1	34		M1205a	SPST Switch w/Driver;Freq 4-18GHz;Ins Loss 2.2dBmax;Isol 70dBmin;VSWR 1.9max
71	MT8533H	34		M1205a	SPST Switch w/Driver;Freq 2-18GHz;Ins Loss 2.4dBmax;Isol 70dBmin;VSWR 2.0max
72	MT8536A	34		M1232	SPDT Switch w/Driver;Freq .5-4GHz;Ins Loss 1.3dBmax;Isol 45dBmin;VSWR 1.6max
73	MT8536F1	34		M1232	SPDT Switch w/Driver;Freq 2-12.4GHz;Ins Loss 2.2dBmax;Isol 40dBmin;VSWR 1.8max
74	MT8536H1	34		M1232	SPDT Switch w/Driver;Freq 4-18GHz;Ins Loss 2.7dBmax;Isol 40dBmin;VSWR 1.8max
75	MT8536H	34		M1232	SPDT Switch w/Driver;Freq 2-18GHz;Ins Loss 2.9dBmax;Isol 40dBmin;VSWR 1.9max
76	MT8537A	34		M1232	SPDT Switch w/Driver;Freq .5-4GHz;Ins Loss 1.7dBmax;Isol 60dBmin;VSWR 1.6max
77	MT8537F1	34		M1232	SPDT Switch w/Driver;Freq 2-12.4GHz;Ins Loss 2.7dBmax;Isol 55dBmin;VSWR 1.8max
78	MT8537H1	34		M1232	SPDT Switch w/Driver;Freq 4-18GHz;Ins Loss 3.2dBmax;Isol 55dBmin;VSWR 1.8max
79	MT8537H	34		M1232	SPDT Switch w/Driver;Freq 2-18GHz;Ins Loss 3.4dBmax;Isol 55dBmin;VSWR 1.9max
80	MT8538A	34		M1232	SPDT Switch w/Driver;Freq .5-4GHz;Ins Loss 1.2dBmax;Isol 45dBmin;VSWR 1.6max
81	MT8538F1	34		M1232	SPDT Switch w/Driver;Freq 2-12.4GHz;Ins Loss 1.9dBmax;Isol 40dBmin;VSWR 1.8max
82	MT8538H1	34		M1232	SPDT Switch w/Driver;Freq 4-18GHz;Ins Loss 2.1dBmax;Isol 37dBmin;VSWR 1.8max
83	MT8538H	34		M1232	SPDT Switch w/Driver;Freq 2-18GHz;Ins Loss 2.3dBmax;Isol 37dBmin;VSWR 1.9max
84	MT8539A	34		M1232	SPDT Switch w/Driver;Freq .5-4GHz;Ins Loss 1.6dBmax;Isol 60dBmin;VSWR 1.6max
85	MT8539F1	34		M1232	SPDT Switch w/Driver;Freq 2-12.4GHz;Ins Loss 2.3dBmax;Isol 55dBmin;VSWR 1.8max
86	MT8539H1	34		M1232	SPDT Switch w/Driver;Freq 4-18GHz;Ins Loss 2.6dBmax;Isol 50dBmin;VSWR 1.8max
87	MT8539H	34		M1232	SPDT Switch w/Driver;Freq 2-18GHz;Ins Loss 2.8dBmax;Isol 50dBmin;VSWR 1.9max
88	MT8540A	34		M1233	SP3T Switch w/Driver;Freq .5-4GHz;Ins Loss 1.4dBmax;Isol 45dBmin;VSWR 1.5max
89	MT8540F1	34		M1233	SP3T Switch w/Driver;Freq 2-12.4GHz;Ins Loss 2.3dBmax;Isol 40dBmin;VSWR 1.8max
90	MT8540H1	34		M1233	SP3T Switch w/Driver;Freq 4-18GHz;Ins Loss 2.9dBmax;Isol 40dBmin;VSWR 1.9max
91	MT8540H	34		M1233	SP3T Switch w/Driver;Freq 2-18GHz;Ins Loss 3.1dBmax;Isol 40dBmin;VSWR 1.9max
92	MT8541A	34		M1233	SP3T Switch w/Driver;Freq .5-4GHz;Ins Loss 1.8dBmax;Isol 60dBmin;VSWR 1.5max
93	MT8541F1	34		M1233	SP3T Switch w/Driver;Freq 2-12.4GHz;Ins Loss 2.7dBmax;Isol 55dBmin;VSWR 1.8max
94	MT8541H1	34		M1233	SP3T Switch w/Driver;Freq 4-18GHz;Ins Loss 3.3dBmax;Isol 55dBmin;VSWR 1.9max
95	MT8541H	34		M1233	SP3T Switch w/Driver;Freq 2-18GHz;Ins Loss 3.5dBmax;Isol 55dBmin;VSWR 1.9max
96	MT8542A	34		M1232	SPDT Switch w/Driver;Freq .5-4GHz;Ins Loss .90dBmax;Isol 60dBmin;VSWR 1.5max
97	MT8542F1	34		M1232	SPDT Switch w/Driver;Freq 2-12.4GHz;Ins Loss 2.0dBmax;Isol 55dBmin;VSWR 1.8max
98	MT8542H1	34		M1232	SPDT Switch w/Driver;Freq 4-18GHz;Ins Loss 2.8dBmax;Isol 55dBmin;VSWR 1.9max
99	MT8542H	34		M1232	SPDT Switch w/Driver;Freq 2-18GHz;Ins Loss 2.9dBmax;Isol 55dBmin;VSWR 1.9max
100	MT8543A	34		M1232	SPDT Switch w/Driver;Freq .5-4GHz;Ins Loss 1.1dBmax;Isol 70dBmin;VSWR 1.5max
101	MT8543F1	34		M1232	SPDT Switch w/Driver;Freq 2-12.4GHz;Ins Loss 2.3dBmax;Isol 80dBmin;VSWR 1.8max
102	MT8543H1	34		M1232	SPDT Switch w/Driver;Freq 4-18GHz;Ins Loss 3.2dBmax;Isol 80dBmin;VSWR 1.9max
103	MT8543H	34		M1232	SPDT Switch w/Driver;Freq 2-18GHz;Ins Loss 3.3dBmax;Isol 80dBmin;VSWR 1.9max
104	MT8546A	34		M1233	SP3T Switch w/Driver;Freq .5-4GHz;Ins Loss 1.3dBmax;Isol 45dBmin;VSWR 1.5max
105	MT8546F1	34		M1233	SP3T Switch w/Driver;Freq 2-12.4GHz;Ins Loss 1.7dBmax;Isol 40dBmin;VSWR 1.8max
106	MT8546H1	34		M1233	SP3T Switch w/Driver;Freq 4-18GHz;Ins Loss 2.5dBmax;Isol 37dBmin;VSWR 1.9max
107	MT8546H	34		M1233	SP3T Switch w/Driver;Freq 2-18GHz;Ins Loss 2.7dBmax;Isol 37dBmin;VSWR 1.9max
108	MT8547A	34		M1233	SP3T Switch w/Driver;Freq .5-4GHz;Ins Loss 1.7dBmax;Isol 60dBmin;VSWR 1.5max
109	MT8547F1	34		M1233	SP3T Switch w/Driver;Freq 2-12.4GHz;Ins Loss 2.1dBmax;Isol 55dBmin;VSWR 1.8max
110	MT8547H1	34		M1233	SP3T Switch w/Driver;Freq 4-18GHz;Ins Loss 3.0dBmax;Isol 50dBmin;VSWR 1.9max

8. MISCELLANEOUS DEVICES

IN ORDER OF (1) USE and (2) TYPE No.

LINE No.	2 TYPE No.	1 USE	DESCRIPTION MAT.	DWG. No.	TECHNICAL DATA
1	MT8547H	34		M1233	SP3T Switch w/Driver;Freq 2-18GHz;Ins Loss 3.2dBmax;Isol 50dBmin;VSWR 1.9max
2	MT8548A	34		M1233	SP3T Switch w/Driver;Freq .5-4GHz;Ins Loss 1.1dBmax;Isol 60dBmin;VSWR 1.5max
3	MT8548F1	34		M1233	SP3T Switch w/Driver;Freq 2-12.4GHz;Ins Loss 2.1dBmax;Isol 55dBmin;VSWR 1.8max
4	MT8548H1	34		M1233	SP3T Switch w/Driver;Freq 4-18GHz;Ins Loss 2.8dBmax;Isol 55dBmin;VSWR 1.9max
5	MT8548H	34		M1233	SP3T Switch w/Driver;Freq 2-18GHz;Ins Loss 3.0dBmax;Isol 55dBmin;VSWR 1.9max
6	MT8549A	34		M1233	SP3T Switch w/Driver;Freq .5-4GHz;Ins Loss 1.3dBmax;Isol 70dBmin;VSWR 1.5max
7	MT8549F1	34		M1233	SP3T Switch w/Driver;Freq 2-12.4GHz;Ins Loss 2.4dBmax;Isol 80dBmin;VSWR 1.8max
8	MT8549H1	34		M1233	SP3T Switch w/Driver;Freq 4-18GHz;Ins Loss 3.2dBmax;Isol 80dBmin;VSWR 1.9max
9	MT8549H	34		M1233	SP3T Switch w/Driver;Freq 2-18GHz;Ins Loss 3.4dBmax;Isol 80dBmin;VSWR 1.9max
10	MT8612A	34		M1234	SP4T Switch w/Driver;Freq .5-4GHz;Ins Loss 1.3dBmax;Isol 60dBmin;VSWR 1.5max
11	MT8612F1	34		M1234	SP4T Switch w/Driver;Freq 2-12.4GHz;Ins Loss 2.5dBmax;Isol 55dBmin;VSWR 1.8max
12	MT8612H1	34		M1234	SP4T Switch w/Driver;Freq 4-18GHz;Ins Loss 3.1dBmax;Isol 55dBmin;VSWR 1.9max
13	MT8612H	34		M1234	SP4T Switch w/Driver;Freq 2-18GHz;Ins Loss 3.4dBmax;Isol 55dBmin;VSWR 1.9max
14	MT8613A	34		M1234	SP4T Switch w/Driver;Freq .5-4GHz;Ins Loss 1.5dBmax;Isol 70dBmin;VSWR 1.5max
15	MT8613F1	34		M1234	SP4T Switch w/Driver;Freq 2-12.4GHz;Ins Loss 2.8dBmax;Isol 80dBmin;VSWR 1.8max
16	MT8613H1	34		M1234	SP4T Switch w/Driver;Freq 4-18GHz;Ins Loss 3.5dBmax;Isol 80dBmin;VSWR 1.9max
17	MT8613H	34		M1234	SP4T Switch w/Driver;Freq 2-18GHz;Ins Loss 3.8dBmax;Isol 80dBmin;VSWR 1.9max
18	MT8614A	34		M1231	SP4T Switch w/Driver;Freq .5-4GHz;Ins Loss 1.5dBmax;Isol 75dBmin;VSWR 1.5max
19	MT8614F1	34		M1231	SP4T Switch w/Driver;Freq 2-12.4GHz;Ins Loss 1.7dBmax;Isol 80dBmin;VSWR 1.7max
20	MT8614H1	34		M1231	SP4T Switch w/Driver;Freq 4-18GHz;Ins Loss 3.3dBmax;Isol 80dBmin;VSWR 1.9max
21	MT8614H	34		M1231	SP4T Switch w/Driver;Freq 2-18GHz;Ins Loss 3.6dBmax;Isol 80dBmin;VSWR 2.0max
22	MT8615A	34		M1231	SP5T Switch w/Driver;Freq .5-4GHz;Ins Loss 1.5dBmax;Isol 75dBmin;VSWR 1.5max
23	MT8615F1	34		M1231	SP5T Switch w/Driver;Freq 2-12.4GHz;Ins Loss 1.8dBmax;Isol 80dBmin;VSWR 1.8max
24	MT8615H1	34		M1231	SP5T Switch w/Driver;Freq 4-18GHz;Ins Loss 3.5dBmax;Isol 80dBmin;VSWR 1.9max
25	MT8615H	34		M1231	SP5T Switch w/Driver;Freq 2-18GHz;Ins Loss 3.8dBmax;Isol 80dBmin;VSWR 2.1max
26	MT8616A	34		M1231	SP6T Switch w/Driver;Freq .5-4GHz;Ins Loss 1.6dBmax;Isol 75dBmin;VSWR 1.6max
27	MT8616F1	34		M1231	SP6T Switch w/Driver;Freq 2-12.4GHz;Ins Loss 1.9dBmax;Isol 80dBmin;VSWR 1.9max
28	MT8616H1	34		M1231	SP6T Switch w/Driver;Freq 4-18GHz;Ins Loss 3.8dBmax;Isol 80dBmin;VSWR 2.0max
29	MT8616H	34		M1231	SP6T Switch w/Driver;Freq 2-18GHz;Ins Loss 4.1dBmax;Isol 80dBmin;VSWR 2.1max
30	MT8617A	34		M1231	SP7T Switch w/Driver;Freq .5-4GHz;Ins Loss 1.7dBmax;Isol 75dBmin;VSWR 1.7max
31	MT8617F1	34		M1231	SP7T Switch w/Driver;Freq 2-12.4GHz;Ins Loss 3.2dBmax;Isol 80dBmin;VSWR 2.0max
32	MT8617H1	34		M1231	SP7T Switch w/Driver;Freq 4-18GHz;Ins Loss 4.0dBmax;Isol 80dBmin;VSWR 2.2max
33	MT8617H	34		M1231	SP7T Switch w/Driver;Freq 2-18GHz;Ins Loss 4.3dBmax;Isol 80dBmin;VSWR 2.3max
34	MT8624A	34		M1231	SP4T Switch w/Driver;Freq .5-4GHz;Ins Loss 1.5dBmax;Isol 45dBmin;VSWR 1.5max
35	MT8624F1	34		M1231	SP4T Switch w/Driver;Freq 2-12.4GHz;Ins Loss 2.5dBmax;Isol 40dBmin;VSWR 1.7max
36	MT8624H1	34		M1231	SP4T Switch w/Driver;Freq 4-18GHz;Ins Loss 3.1dBmax;Isol 40dBmin;VSWR 1.9max
37	MT8624H	34		M1231	SP4T Switch w/Driver;Freq 2-18GHz;Ins Loss 3.4dBmax;Isol 40dBmin;VSWR 2.0max
38	MT8625A	34		M1231	SP5T Switch w/Driver;Freq .5-4GHz;Ins Loss 1.5dBmax;Isol 45dBmin;VSWR 1.5max
39	MT8625F1	34		M1231	SP5T Switch w/Driver;Freq 2-12.4GHz;Ins Loss 2.6dBmax;Isol 40dBmin;VSWR 1.8max
40	MT8625H1	34		M1231	SP5T Switch w/Driver;Freq 4-18GHz;Ins Loss 3.3dBmax;Isol 40dBmin;VSWR 1.9max
41	MT8625H	34		M1231	SP5T Switch w/Driver;Freq 2-18GHz;Ins Loss 3.6dBmax;Isol 40dBmin;VSWR 2.1max
42	MT8626A	34		M1231	SP6T Switch w/Driver;Freq .5-4GHz;Ins Loss 1.6dBmax;Isol 45dBmin;VSWR 1.6max
43	MT8626F1	34		M1231	SP6T Switch w/Driver;Freq 2-12.4GHz;Ins Loss 2.8dBmax;Isol 40dBmin;VSWR 1.9max
44	MT8626H1	34		M1231	SP6T Switch w/Driver;Freq 4-18GHz;Ins Loss 3.5dBmax;Isol 40dBmin;VSWR 2.0max
45	MT8626H	34		M1231	SP6T Switch w/Driver;Freq 2-18GHz;Ins Loss 3.8dBmax;Isol 40dBmin;VSWR 2.1max
46	MT8627A	34		M1231	SP7T Switch w/Driver;Freq .5-4GHz;Ins Loss 1.6dBmax;Isol 45dBmin;VSWR 1.7max
47	MT8627F1	34		M1231	SP7T Switch w/Driver;Freq 2-12.4GHz;Ins Loss 3.0dBmax;Isol 40dBmin;VSWR 2.0max
48	MT8627H1	34		M1231	SP7T Switch w/Driver;Freq 4-18GHz;Ins Loss 3.7dBmax;Isol 40dBmin;VSWR 2.2max
49	MT8627H	34		M1231	SP7T Switch w/Driver;Freq 2-18GHz;Ins Loss 4.0dBmax;Isol 40dBmin;VSWR 2.3max
50	MT8634A	34		M1231	SP4T Switch w/Driver;Freq .5-4GHz;Ins Loss 1.9dBmax;Isol 60dBmin;VSWR 1.5max
51	MT8634F1	34		M1231	SP4T Switch w/Driver;Freq 2-12.4GHz;Ins Loss 3.0dBmax;Isol 55dBmin;VSWR 1.7max
52	MT8634H1	34		M1231	SP4T Switch w/Driver;Freq 4-18GHz;Ins Loss 3.6dBmax;Isol 55dBmin;VSWR 1.9max
53	MT8634H	34		M1231	SP4T Switch w/Driver;Freq 2-18GHz;Ins Loss 3.9dBmax;Isol 55dBmin;VSWR 2.0max
54	MT8635A	34		M1231	SP5T Switch w/Driver;Freq .5-4GHz;Ins Loss 1.9dBmax;Isol 60dBmin;VSWR 1.5max
55	MT8635F1	34		M1231	SP5T Switch w/Driver;Freq 2-12.4GHz;Ins Loss 3.0dBmax;Isol 55dBmin;VSWR 1.8max
56	MT8635H1	34		M1231	SP5T Switch w/Driver;Freq 4-18GHz;Ins Loss 3.8dBmax;Isol 55dBmin;VSWR 1.9max
57	MT8635H	34		M1231	SP5T Switch w/Driver;Freq 2-18GHz;Ins Loss 4.1dBmax;Isol 55dBmin;VSWR 2.1max
58	MT8636A	34		M1231	SP5T Switch w/Driver;Freq .5-4GHz;Ins Loss 2.0dBmax;Isol 60dBmin;VSWR 1.6max
59	MT8636F1	34		M1231	SP5T Switch w/Driver;Freq 2-12.4GHz;Ins Loss 3.2dBmax;Isol 55dBmin;VSWR 1.9max
60	MT8636H1	34		M1231	SP5T Switch w/Driver;Freq 4-18GHz;Ins Loss 4.0dBmax;Isol 55dBmin;VSWR 2.0max
61	MT8636H	34		M1231	SP5T Switch w/Driver;Freq 2-18GHz;Ins Loss 4.3dBmax;Isol 55dBmin;VSWR 2.1max
62	MT8637A	34		M1231	SP7T Switch w/Driver;Freq .5-4GHz;Ins Loss 2.0dBmax;Isol 60dBmin;VSWR 1.7max
63	MT8637F1	34		M1231	SP7T Switch w/Driver;Freq 2-12.4GHz;Ins Loss 3.5dBmax;Isol 55dBmin;VSWR 2.0max
64	MT8637H1	34		M1231	SP7T Switch w/Driver;Freq 4-18GHz;Ins Loss 4.2dBmax;Isol 55dBmin;VSWR 2.2max
65	MT8637H	34		M1231	SP7T Switch w/Driver;Freq 2-18GHz;Ins Loss 4.5dBmax;Isol 55dBmin;VSWR 2.3max
66	MT8644A	34		M1231	SP4T Switch w/Driver;Freq .5-4GHz;Ins Loss 1.4dBmax;Isol 45dBmin;VSWR 1.5max
67	MT8644F1	34		M1231	SP4T Switch w/Driver;Freq 2-12.4GHz;Ins Loss 1.7dBmax;Isol 40dBmin;VSWR 1.7max
68	MT8644H1	34		M1231	SP4T Switch w/Driver;Freq 4-18GHz;Ins Loss 2.7dBmax;Isol 37dBmin;VSWR 1.9max
69	MT8644H	34		M1231	SP4T Switch w/Driver;Freq 2-18GHz;Ins Loss 3.0dBmax;Isol 37dBmin;VSWR 2.0max
70	MT8645A	34		M1231	SP5T Switch w/Driver;Freq .5-4GHz;Ins Loss 1.4dBmax;Isol 45dBmin;VSWR 1.5max
71	MT8645F1	34		M1231	SP5T Switch w/Driver;Freq 2-12.4GHz;Ins Loss 2.4dBmax;Isol 40dBmin;VSWR 1.8max
72	MT8645H1	34		M1231	SP5T Switch w/Driver;Freq 4-18GHz;Ins Loss 2.9dBmax;Isol 37dBmin;VSWR 1.9max
73	MT8645H	34		M1231	SP5T Switch w/Driver;Freq 2-18GHz;Ins Loss 3.2dBmax;Isol 37dBmin;VSWR 2.1max
74	MT8646A	34		M1231	SP6T Switch w/Driver;Freq .5-4GHz;Ins Loss 1.5dBmax;Isol 45dBmin;VSWR 1.6max
75	MT8646F1	34		M1231	SP6T Switch w/Driver;Freq 2-12.4GHz;Ins Loss 2.5dBmax;Isol 40dBmin;VSWR 1.9max
76	MT8646H1	34		M1231	SP6T Switch w/Driver;Freq 4-18GHz;Ins Loss 3.1dBmax;Isol 37dBmin;VSWR 2.0max
77	MT8646H	34		M1231	SP6T Switch w/Driver;Freq 2-18GHz;Ins Loss 3.4dBmax;Isol 37dBmin;VSWR 2.1max
78	MT8647A	34		M1231	SP7T Switch w/Driver;Freq .5-4GHz;Ins Loss 1.6dBmax;Isol 45dBmin;VSWR 1.7max
79	MT8647F1	34		M1231	SP7T Switch w/Driver;Freq 2-12.4GHz;Ins Loss 2.7dBmax;Isol 40dBmin;VSWR 2.0max
80	MT8647H1	34		M1231	SP7T Switch w/Driver;Freq 4-18GHz;Ins Loss 3.3dBmax;Isol 37dBmin;VSWR 2.2max
81	MT8647H	34		M1231	SP7T Switch w/Driver;Freq 2-18GHz;Ins Loss 3.6dBmax;Isol 37dBmin;VSWR 2.3max
82	MT8654A	34		M1231	SP4T Switch w/Driver;Freq .5-4GHz;Ins Loss 1.8dBmax;Isol 60dBmin;VSWR 1.5max
83	MT8654F1	34		M1231	SP4T Switch w/Driver;Freq 2-12.4GHz;Ins Loss 2.8dBmax;Isol 55dBmin;VSWR 1.7max
84	MT8654H1	34		M1231	SP4T Switch w/Driver;Freq 4-18GHz;Ins Loss 3.2dBmax;Isol 50dBmin;VSWR 1.9max
85	MT8654H	34		M1231	SP4T Switch w/Driver;Freq 2-18GHz;Ins Loss 3.5dBmax;Isol 50dBmin;VSWR 2.0max
86	MT8655A	34		M1231	SP5T Switch w/Driver;Freq .5-4GHz;Ins Loss 1.8dBmax;Isol 60dBmin;VSWR 1.5max
87	MT8655F1	34		M1231	SP5T Switch w/Driver;Freq 2-12.4GHz;Ins Loss 2.9dBmax;Isol 55dBmin;VSWR 1.8max
88	MT8655H1	34		M1231	SP5T Switch w/Driver;Freq 4-18GHz;Ins Loss 3.4dBmax;Isol 50dBmin;VSWR 1.9max
89	MT8655H	34		M1231	SP5T Switch w/Driver;Freq 2-18GHz;Ins Loss 3.7dBmax;Isol 50dBmin;VSWR 2.1max
90	MT8656A	34		M1231	SP6T Switch w/Driver;Freq .5-4GHz;Ins Loss 1.9dBmax;Isol 60dBmin;VSWR 1.6max
91	MT8656F1	34		M1231	SP6T Switch w/Driver;Freq 2-12.4GHz;Ins Loss 3.0dBmax;Isol 55dBmin;VSWR 1.9max
92	MT8656H1	34		M1231	SP6T Switch w/Driver;Freq 4-18GHz;Ins Loss 3.6dBmax;Isol 50dBmin;VSWR 2.0max
93	MT8656H	34		M1231	SP6T Switch w/Driver;Freq 2-18GHz;Ins Loss 3.9dBmax;Isol 50dBmin;VSWR 2.1max
94	MT8657A	34		M1231	SP7T Switch w/Driver;Freq .5-4GHz;Ins Loss 2.0dBmax;Isol 60dBmin;VSWR 1.7max
95	MT8657F1	34		M1231	SP7T Switch w/Driver;Freq 2-12.4GHz;Ins Loss 3.2dBmax;Isol 55dBmin;VSWR 2.0max
96	MT8657H1	34		M1231	SP7T Switch w/Driver;Freq 4-18GHz;Ins Loss 3.8dBmax;Isol 50dBmin;VSWR 2.2max
97	MT8657H	34		M1231	SP7T Switch w/Driver;Freq 2-18GHz;Ins Loss 4.3dBmax;Isol 50dBmin;VSWR 2.3max
98	MT8674F1P1	34		M1205	SPST Switch w/ECL Driver;Freq 2-12.4GHz;Insert Loss 1.5dB;SMA Jack
99	MT8674F1P2	34		M1205	SPST Switch w/ECL Driver;Freq 2-12.4GHz;Insert Loss 1.5dB;SMC Jack
100	MT8674F1P3	34		M1205	SPST Switch w/ECL Driver;Freq 2-12.4GHz;Insert Loss 1.5dB;Solder Pin
101	MT8674H1P1	34		M1205	SPST Switch w/ECL Driver;Freq 4-18GHz;Insert Loss 1.8dB;SMA Jack
102	MT8674H1P2	34		M1205	SPST Switch w/ECL Driver;Freq 4-18GHz;Insert Loss 1.8dB;SMC Jack
103	MT8674H1P3	34		M1205	SPST Switch w/ECL Driver;Freq 4-18GHz;Insert Loss 1.8dB;Solder Pin
104	MT8674H-P1	34		M1205	SPST Switch w/ECL Driver;Freq 2-18GHz;Insert Loss 2.4dB;SMA Jack
105	MT8674H-P2	34		M1205	SPST Switch w/ECL Driver;Freq 2-18GHz;Insert Loss 2.4dB;SMC Jack
106	MT8674H-P3	34		M1205	SPST Switch w/ECL Driver;Freq 2-18GHz;Insert Loss 2.4dB;Solder Pin
107	MT8675F1P1	34		M1205	SPST Switch w/ECL Driver;Freq 2-12.4GHz;Insert Loss 1.8dB;SMA Jack
108	MT8675F1P2	34		M1205	SPST Switch w/ECL Driver;Freq 2-12.4GHz;Insert Loss 1.8dB;SMC Jack
109	MT8675F1P3	34		M1205	SPST Switch w/ECL Driver;Freq 2-12.4GHz;Insert Loss 1.8dB;Solder Pin
110	MT8675H1P1	34		M1205	SPST Switch w/ECL Driver;Freq 4-18GHz;Insert Loss 2.2dB;SMA Jack

8. MISCELLANEOUS DEVICES

IN ORDER OF (1) USE and (2) TYPE No.

LINE No.	2 TYPE No.	1 USE	DESCRIPTION MAT.	DWG. No.	TECHNICAL DATA
1	MT8675H1P2	34		M1205	SPST Switch w/ECL Driver;Freq 4-18GHz;Insert Loss 2.2dB;SMC Jack
2	MT8675H1P3	34		M1205	SPST Switch w/ECL Driver;Freq 4-18GHz;Insert Loss 2.2dB;Solder Pin
3	MT8675H-P1	34		M1205	SPST Switch w/ECL Driver;Freq 2-18GHz;Insert Loss 2.4dB;SMA Jack
4	MT8675H-P2	34		M1205	SPST Switch w/ECL Driver;Freq 2-18GHz;Insert Loss 2.4dB;SMC Jack
5	MT8675H-P3	34		M1205	SPST Switch w/ECL Driver;Freq 2-18GHz;Insert Loss 2.4dB;Solder Pin

10. UHF/MICROWAVE TRANSISTORS

IN ORDER OF:(1)MAX. OSCILLATOR FREQUENCY (2)MAX. TOTAL PWR(PT) & (3)TYPE No.

LINE No.	3 TYPE No.	1 MAX. OSC. FREQ Fmax (Hz)	MAXIMUM RATINGS 2 PT (W)	BVCBO (V)	IC (A)	TEMP CODE	POL & MAT	TYPE & TECH	NOISE FIGURE @ STATED CONDITIONS NF (dB)	@ FREQ (Hz)	@ VCE (V)	@ IC (A)	TYPICAL OPERATING GAIN (S21)2 (dB)	Pout (W)	TYPICAL REFLECTION COEFFICIENTS S11 (Mag)	S11 (deg)	S22 (Mag)	S22 (deg)	@ FREQ (Hz)	@ VCE (V)	@ IC (A)	DWG No.	LEAD CODE
1	3SK113				80m#	♦S	GA	F	3.0	900M	5.0#	10m#	15♦									W178	FD
2	ALF3000			5.0 %		$	GA		1.5†	8.0G	3.5#	15m%	14*	10 *	0.82	-101	0.65	-42	7.0G	3.5#	40m#		
3	ALF3003			5.0 %		$	GA		1.5†	8.0G	3.5#	15m%	14*	10 *	0.73	-164	0.50	-112	7.0G	3.5#	40m#	W100	EY
4	AT12570-5																						
5	DC1311								7.0														
6	DC1340					$			7.0														
7	DC5108			70	100m	$A	NSi	BPL			10											TO18Ø	A
8	FLM5964-5IM																						
9	MS6075B800Z																						
10	NE020791-07																						
11	NE41612-1																						
12	TPV508			45		§J							8.0♦									W301	RU
13	TPV5051			45		§J			50%				7.0♦									W301	RU
14♦	MGF-C34M		15m		3.0 %	$S		FGA					7.0	2.5							m#	W225a	
15	2SA1245		150m	-15	-30	♦J	PSi	B	3.0†	1.0G	-5	-3m	9.5									TO236	A
16▼	2SC3547		150m	20	30m	♦J	NSi	B	2.0	1.0G	10	5.0m	9.0									Y236a	A
17▼	2SC3606		150m	20	80m	♦J	NSi	B	1.1	1.0G	10	5.0m	11									Y236a	A
18	2SC1607		180m	40	100m	§J	NSi	EP														TO72	G
19▼	2SC3548		200m	20	30m	♦J	NSi	B	2.0	1.0G	10	5.0m	9.5									W178	R
20▼	2SC3608		200m	20	80m	♦J	NSi	B	1.1	1.0G	10	5.0m	12									W178	R
21	BF960		200m		10m#	$C	NGA	MF	2.8	800M	15#	7.0m#										TO120	
22	BF989		200m		20m#	$J	NSi	F	2.8	800M	10*	7.0m#										W174	ET
23	BF990		200m		30m#	$J	NSi	F	2.8	800M	10*	10m#										W174	ET
24	BF994		200m		30m#	$J	NSi	F	1.5	200M	15*	10m#	25									W174	ET
25	BF996		200m		30m#	$J	NSi	F	2.8	800M	10*	10m#	18									W174	ET
26▼	MA42260-287																						
			200m	15	50m	♦	N		1.2	60M		1.0m										M928b	A
27▼	MA42261-287																						
			200m	15	50m	♦	N		2.0	450M		1.0m										M928b	A
28▼	MA42262-287																						
			200m	12	60m	♦	N		1.0	600M		5.0m										M928b	A
29▼	MA42263-287																						
			200m	12	60m	♦	N		3.0	60M		60m										M928b	A
30▼	MA42264-287																						
			200m	12	60m	♦	N		2.0	450M		5.0m										M928b	A
31▼	MA42265-287																						
			200m	12	60m	♦	N		5.0	450M		60m										M928b	A
32	MGF1404-11-07																						
			200m		80m%	$S		FGA	.70	4.0G	3.0#	10m#	12		.950	-70	.749	-54	4.0G	3.0#	10m#	W69e	DE
33	MGF1404-61-16		200m		80m%	$S		FGA	1.6	12G	3.0#	10m#	9.0		.780	156	.683	-173	12G	3.0#	10m#	W69e	DE
34	MGF1404-61-17																						
			200m		80m%	$S		FGA	1.7	12G	3.0#	10m#	9.0		.780	156	.683	-173	12G	3.0#	10m#	W69e	DE
35	2SC2368		250m	30	50m	$S	NSi	EP	2.3	500M	10	3.0m										W178	R
36	2SC2369		250m	25	70m	$S	NSi	EP	1.5	1.0G	10	5.0m										W178	R
37▼	MA42161-512																						
			250m	20	20m			B	2.1	2.0G	10	3.0m										W29f	
38▼	MA42161-535																						
39▼	MA42162-512		250m	20	20m			B	2.1	2.0G	10	3.0m											
			250m	20	20m			B	2.6	2.0G	10	3.0m										W29f	
40	2SK138		300m		100m#	♦S	NGA	JST	2.6†	8.0G	3.0#	10m#										W175	EX
41	2SK140		300m		100m#	♦S	NGA	JST	2.7†	12G	3.0#	10m#										W175	EX
42▼	MA42029-509																						
			300m	30	50m			B														TO72	
43	KT612A4		360m	12	120m	#J		B						200m								M1147	♦
44▼	MA42008-509																						
			450m	20	125m	§J	NSi	BPL	2.0	450M	10	5.0m	18§									TO72	G
45▼	MA42012-509																						
			450m	20	125m	§J	NSi	BPL	5.0	450M	10	60m	20§									TO72	G
46▼	MA42015-509																						
			450m	20	125m	§J	NSi	BPL	4.0	450M	10	60m	20§									TO72	G
47▼	MA42016-509																						
			450m	20	125m	§J	NSi	BPL	4.5	450M	10	60m	20§									TO72	G
48	ALF1020		500m	5.0 %		♦	GA		1.6†	4.0G	3.5#	10m%	15*	10 *	0.59	-81	.57	-15	5.0G	3.5#	10m#		
49	ALF1025		500m	5.0 %		♦	GA		1.6†	4.0G	3.5#	10m%	15*	10 *	0.40	-134	.34	-49	5.0G	3.5#	10m#	W220	
50▼	MA42217		525m	30 Δ		§J	NSi	BPL	1.7	100M	10	3.0m			.25	-107	.60	-26	500M	6.0	3.0m	TO92	
51▼	MA42217-524																						
			525m	30	50m			B	1.0	100M	6.0	1.0m										TO92	
52▼	MA42218		525m	30 Δ		§J	NSi	BPL	2.9	450M	10	3.0m			.25	-107	.60	-26	500M	6.0	3.0m	TO92	
53▼	MA42218-524																						
			525m	30	50m			B	1.1	100M	6.0	1.0m										TO92	
54▼	2SC3605		600m	20	80m	♦J	NSi	B	1.1	1.0G	10	5.0m	10									TO92	
55	NE56708		600m	25	60m	§J	NSi						10#									M1000	
56▼	MA42197		625m	20	125m	§J	NSi	BPL	1.7	450M	10	5.0m			.34	-173	.34	-26	500M	6.0	10m	TO92	
57▼	MA42197-524																						
			625m	20	125m			B	0.9	100M	10	5.0m										TO92	
58▼	MA42001-511																						
			750m	20	125m	§J	NSi	BPL	1.0Ø	60M	10	5.0m	28§		.85	-161	.56	-32	500M	10	5.0m	W29e	R
59▼	MA42002-511																						
			750m	20	125m	§J	NSi	BPL	1.5Ø	60M	10	5.0m	28§									W29e	R
60▼	MA42003-511																						
			750m	20	125m	§J	NSi	BPL	2.0Ø	60M	10	5.0m	30§									W29e	R
61▼	MA42004-511																						
			750m	20	125m	§J	NSi	BPL	1.5Ø	60M	10	15m	30§									W29e	R
62▼	MA42005-511																						
			750m	20	125m	§J	NSi	BPL	2.0Ø	60M	10	20m	30§									W29e	R
63▼	MA42006-511																						
			750m	20	125m	§J	NSi	BPL	4.0Ø	60M	10	40m	35§									W29e	R
64▼	MA42009-511																						
			750m	20	125m	§J	NSi	BPL	2.5	450M	10	5.0m	14§									W29e	R
65▼	MA42010-511																						
			750m	20	125m	§J	NSi	BPL	3.5	450M	10	40m	20§									W29e	R
66▼	MA42011-511																						
			750m	20	125m	§J	NSi	BPL	4.0	450M	10	40m	20§									W29e	R
67▼	MA42012-511																						
			750m	20	125m	§J	NSi	BPL	5.0	450M	10	60m	20§									W29e	R
68▼	MA42014-511																						
			750m	20	125m	§J	NSi	BPL	1.3Ø	60M	10	5.0m	28§									W29e	R
69▼	MA42015-511																						
			750m	20	125m	§J	NSi	BPL	4.0	450M	10	60m	20§									W29e	R
70▼	MA42016-511																						
			750m	20	125m	§J	NSi	BPL	4.5	450M	10	60m	20§									W29e	R
71▼	2SC3607		800m	20	80m	♦J	NSi	B	1.1	1.0G	10	5.0m	9.5									M166	D
72	KT624AM		1.0	30	1.0	♦J	NSi	BEP														M1147	♦
73	KT625AM		1.0	60	1.0	♦J	NSi	BEP														M1147	♦

10. UHF/MICROWAVE TRANSISTORS

IN ORDER OF:(1)MAX. OSCILLATOR FREQUENCY (2)MAX. TOTAL PWR(PT) & (3)TYPE No.

LINE No.	3 TYPE No.	1 MAX. OSC. FREQ Fmax (Hz)	MAXIMUM RATINGS 2 PT (W)	BVCBO (V)	IC (A)	TEMP CODE	POL & MAT	TYPE & TECH	NOISE FIGURE @ STATED CONDITIONS NF (dB)	@ FREQ (Hz)	@ VCE (V)	@ IC (A)	TYPICAL OPERATING GAIN (S21)2	Pout	TYPICAL REFLECTION COEFFICIENTS S11 (Mag)	S11 (deg)	S22 (Mag)	S22 (deg)	@ FREQ (Hz)	@ VCE (V)	@ IC (A)	DWG No.	LEAD CODE
1▼	MA42120-509		1.0	35	80m			B														TO72	
2▼	MA42121-509		1.0	35	80m			B														TO72	
3▼	MA42122-508		1.0	35	80m			B	1.5	100M	10	1.5m										TO46	
4▼	MA42123-508		1.0	35	80m			B	1.3	100M	10	1.5m										TO46	
5▼	MA42001-510		1.2	20	125m	§J	NSi	BPL	1.0Ø	60M	10	5.0m	28§									W115	R
6▼	MA42002-510		1.2	20	125m	§J	NSi	BPL	1.5Ø	60M	10	5.0m	28§									W115	R
7▼	MA42003-510		1.2	20	125m	§J	NSi	BPL	2.0Ø	60M	10	5.0m	30§									W115	R
8▼	MA42004-510		1.2	20	125m	§J	NSi	BPL	1.5Ø	60M	10	15m	30§									W115	R
9▼	MA42005-510		1.2	20	125m	§J	NSi	BPL	2.0Ø	60M	10	20m	30§									W115	R
10▼	MA42008-510		1.2	20	125m	§J	NSi	BPL	2.0	450M	10	5.0m	18§									W115	R
11▼	MA42009-510		1.2	20	125m	§J	NSi	BPL	2.5	450M	10	5.0m	14§									W115	R
12▼	MA42014-510		1.2	20	125m	§J	NSi	BPL	1.3Ø	60M	10	5.0m	28§									W115	R
13	NE69489		1.2			§S	GA	J						100m*								M1001	
14	NEM69406		1.2			§S	GA	J						100m*									
15	NEM69489		1.2			§S	GA	J						100m*									
16	NE69589		1.3			§S	GA	J						200m*								M1146	♦
17	NEM69589		1.3			§S	GA	J						200m*									
18	KT607A4		1.5	40	150m	§J		B					2.5	1.0									
19	KT607B4		1.5	30	150m	§J		B					2.0	1.0								M1146	♦
20	MGF1802		1.5	-6 #		§S	NGA	FST		12G	6#	10m#	7	150	.6	104	.6	-178	14G	6#	100m#	W223	
21	NE69506		1.5			§S	GA	J						200m*								M1001	
22	NE869177-14		1.5			§S	GA							100m*								M1029	
23	NE869177-X		1.5			§S	GA							125m*								M1029	
24	NEM69506		1.5			§S	GA	J						200m*								M1001	
25	NE869277-14		2.5			§S	GA							200m*								M1029	
26	NE869277-X		2.5			§S	GA							250m*								M1029	
27	2SC1820		3.0	55	500m	§J	NSi	EP						1.6								TO39	A
28	MGF2117		3	-9 #		§S	NGA	FST		12G	7#	200m#	6	.4	.61	94	.42	165	14G	7#	200m#	W227	
29	NE56953		4.5	25	300m	§J	NSi							300mØ	2							M1022	
30	NE56953B		4.5	25	300m	§J	NSi						12	500m								M1022	
31	NE869477-14		5.0			§S	GA							400m*								M1029	
32	NE869477-X		5.0			§S	GA							500m*								M1029	
33	NE020214-07		7.5	25	750m	§J	NSi		70%					2.0								TO39	A
34	NE020214-12		7.5	38	750m	§J	NSi		70%					2.8								TO39	A
35	NE080190-12		8.3	35	250m	§J	NSi		60%					1.3								M1015	
36	NE080191-12		8.3	35	250m	§J	NSi		60%					1.3								M1016	
37	NE050290-07		8.7	25	750m	§J	NSi		60%					1.4								M1015	
38	NE050291-07		8.7	25	750m	§J	NSi		60%					1.4								M1016	
39	DXL3680-4(A)		10	20 %	2.6 %										.41	45			4.2G			u63	
40	DXL3680-6(A)		10	20 %	2.6 %										.63	158			6.5G			u63	
41	NE020320-12		10	38	750m	§J	NSi		65%					3.5								M1012	
42	NE020320-28		10	55	750m	§J	NSi		60%					4.0								M1012	
43	NE020390-12		10	38	750m	§J	NSi		65%					3.5								M1015	
44	NE020391-12		10	38	750m	§J	NSi		65%					3.5								M1016	
45	NE050320-12		10	38	750m	§J	NSi		60%					3.2								M1012	
46	NE050390-12		10	38	750m	§J	NSi		60%					3.5								M1015	
47	NE050391-12		10	38	750m	§J	NSi		60%					3.5								M1016	
48	NE868495-X		10			§S	GA							1.5 *								M1027	
49	NEX2301		11	45	600m	§J	NSi							1.0									
50	IM3742-3		12	8 #	1.2 %	§J	NGA	FST		4G	9.0#	1.0 #	10Δ	34 *	.13	179	.69	40	4G	9#	1.0 #	W247	
51	IM4450-3		12	8 #	1.2 %	§J	NGA	FST		5G	9.0#	1.0 #	8.0Δ	34 *								W247	
52	IM5459-3		12	8 #	1.2 %	§J	NGA	FST		5.5G	9.0#	1.0 #	8.0Δ	34 *								W247	
53	IM5964-3		12	8 #	1.2 %	§J	NGA	FST		6.0G	9.0#	1.0 #	8.0Δ	34 *	.37	118	.66	-36	6G	9#	1.0 #	W247	
54	IM6471-3		12	8 #	1.2 %	§J	NGA	FST		7.0G	9.0#	1.0 #	8.0Δ	34 *								W247	
55	IM7178-3		12	8 #	1.2 %	§J	NGA	FST		7.5G	9.0#	1.0 #	6.0Δ	34 *								W247	
56	IM7984-3		12	8 #	1.2 %	§J	NGA	FST		8.0G	9.0#	1.0 #	7.0Δ	34 *								W247	
57	MGF-C34MA		12		3.0 %	§S		FGA	17%				6.0	2.5								W225a	DF
58	MGF2205		13	-9 #		§S	NGA	FST		6G	8#	1 #	6	3.0 *	.811	89.1	.622	94.4	8G	8#	1 #	W251	
59	MGF-X34M#ai		13	9.0 #	2.3 #	§S	NGA	FST					6.0♦	2.3 *								W230	DE
60	NE050320-28		13	55	750m	§J	NSi		65%					4.0								M1012	
61	DXL36120-4(A)		15	20 %	3.9 %				2	4G	4	10m%	16Ø		.56	102			4.2G			463	
62	DXL36120-6(A)		15	20 %	3.9 %										.41	103			6.5G			u63	
63	NE020620-07		17	25	1.5	§J	NSi		70%					6.3								M1012	
64	NE020790-07		17	25	1.5	§J	NSi		70%					7.1								M1015	
65	NE021020-12		17	38	1.5	§J	NSi		65%					8.2								M1012	
66	NE021020-28		17	55	1.5	§J	NSi		60%					12								M1012	
67	NE021090-12		17	38	1.5	§J	NSi		65%					8.9								M1015	

10. UHF/MICROWAVE TRANSISTORS

IN ORDER OF:(1)MAX. OSCILLATOR FREQUENCY
(2)MAX. TOTAL PWR(PT) & (3)TYPE No.

LINE No.	3 TYPE No.	1 MAX. OSC. FREQ Fmax (Hz)	MAXIMUM RATINGS 2 PT (W)	BVCBO (V)	IC (A)	TEMP CODE	POL & MAT	TYPE & TECH	NOISE FIGURE @ STATED CONDITIONS NF (dB)	@ FREQ (Hz)	@ VCE (V)	@ IC (A)	TYPICAL OPERATING GAIN (S21)2 (dB)	Pout (W)	TYPICAL REFLECTION COEFFICIENTS S11 (Mag)	S11 (deg)	S22 (Mag)	S22 (deg)	@ FREQ (Hz)	@ VCE (V)	@ IC (A)	DWG No.	LEAD CODE
1	NE021091-12		17	38	1.5	§J	NSi		65%					8.9								M1016	
2	NE050490-07		17	25	1.5	§J	NSi		60%					4.0								M1015	
3	NE050491-07		17	25	1.5	§J	NSi		60%					4.0								M1016	
4	NE051090-12		17	38	2.2	§J	NSi		65%					8.9								M1015	
5	NE051091-12		17	38	2.2	§J	NSi		65%					8.9								M1016	
6	NE080490-12		17	35	1.5	§J	NSi		65%					5.0								M1015	
7	NE080491-12		17	35	1.5	§J	NSi		65%					5.0								M1016	
8	MGF2260		18		4.8 %	§S	N	FGA	20%				5.0	5.0								W296	DF
9	MGF-C37MA		18		4.8 %	§S		FGA	15%				5.0	5.0								W225a	DF
10	NEX2302		18	45	1.1	§J	NSi							2.0 Ø								M1006	
11	NE868898-X																						
12	NE051020-28		20			§S	GA							3.0 *								M1028	
13	NE051025-12		22	55	1.5	§J	NSi		65%					100								M1012	
14	NEX2303		25	38	2.2	§J	NSi		70%					8.9								M1017	
15	NE022025-12		29	45	2.0	§J	NSi							3.0 Ø								M1003	
16	NE022025-28		34	38	3.0	§J	NSi		65%					20								M1017	
17	NE022090-12		34	55	3.0	§J	NSi		70%					25								M1017	
18	NE022091-12		34	38	3.0	§J	NSi		65%					20								M1015	
19	NE051525-12		34	38	3.0	§J	NSi		65%					20								M1016	
20	NE052090-12		34	38	3.0	§J	NSi		75%					15								M1017	
21	NE052091-12		34	38	3.0	§J	NSi		60%					17								M1015	
22	NE081090-12		34	38	3.0	§J	NSi		60%					17								M1016	
23	NE081091-12		35	35	3.0	§J	NSi		70%					11								M1015	
24	NEM2015B20		35	35	3.0	§J	NSi		70%					11								M1016	
25	DV1210S		39	45	4.5	§J	NSi	BEP					60†	42 ♦								W151	A
26	DV1210W		40	50 #	2.0 #	§J	NSi	FVM					10	10								W52k	
27	NE052025-28		40	50 #	2.0 #	§J	NSi	FVM					10	10								W194	
28	NE023592-12		44	55	3.0	§J	NSi		70%					22								M1017	
29	NE024029-28		70	38	6.0	§J	NSi		75%					37								M1018	
30	DV1220S		70	55	6.0	§J	NSi		70%					50								M1020	
31	DV1220W		80	50 #	4.0 #	§J	NSi	FVM					10	20								W52k	
32	NE053592-12		80	50 #	4.0 #	§J	NSi	FVM					10	20								W194	
33	NEM054029-28		83	35	6.0	§J		65	%					36								M1018	
34	DV1230T		84	55	6	§J	NSi		65%					39								M1020	
35▼	MA42266-287		120	50 #	6.0 #	§J	NSi	FVM					10	30								W65d	
36▼	MA42267-287		150	12	60m	♦	N		1.2	200M		5.0m										M928b	A
37▼	MA42268-287		150	12	50m	♦	N		1.5	450M		5.0m										M928b	A
38	DV1240T		150	12	50m	♦	N		2.0	800M		5.0m										M928b	A
39	DV1240W		160	50 #	8.0 #	§J	NSi	FVM					10	40								W65d	
40	NE028024-28		160	50 #	8.0 #	§J	NSi	FVM					10	40								W194	
41	NEM056029-28		200	55	12	§J	NSi		60%					100								M1019	
42	NEM050C29-28		200	55	12	§J	NSi		62%					63								M1020	
43♦	PKB12005U	1.2 #	220	55	15	§J	NSi		60%					100								M1020	
44▼	LZ1418E100R		18	40	1.2	§J	NSi	B	45%	1.2G	28§		10	6								W256	E
45	LWE2015R	1.8	36	40	4.0	§J	NSi	B					11	11								W260	
46▼	ESM796	2.3	6.0	35	450m	§J	NSi	B		2.3	16	250m	7.5	1.2								W264	F
47	ZT2708	4.5 △	400m	20	90m	§J	NSi	BPL	2.5	500M	10	10m	21♦									TO92	E
48	MS1011B800Y	1.2k§	200m	35		§J	NSi	BPL	8.5	200M	15	2.0m	22									TO18	A
49	PT9784A	1.9k	2.0	65	50	§J	NSi	B		1.1G	50§	7	800									W258	H
50	PT9784	30M	175	40	15	$S		B					15♦	75								S519	♦
51	PT9785	30M	200	40	15	$S		B					15♦	75								W276	♦
52▼	2SC2754	30M	350	40	25	$S		B					13♦	100								W275	♦
53	FM150	100MΔ	200m*	35	100m	♦J	NSi	BEP					400%									TO92	B
54▼	S1420	108M	165	35 Ø	16	§J	N		70%	108M	28§		10									W276	V
55	FJ0230-12	150MΔ	625m*	60	200m	$J	NSi	BEP					150%									TO92	A
56	FJ0230-12FF	160M#	60 *	36	6.0	§J	NSi	BPE	60%	160M	13§	3.0 §	9.0Ø	33								M1120	V
57	FJ0240-12GG	160M	60 *	36	6.0	§J	Si	B					9.0♦	33								M1120	♦
58	FJ0204-12AA	160M	70 *	36	7.0	§J	Si	B					8.8♦	45								M1121	♦
59▼	TPV385	175M	7.0 *	36	2.0	§J	Si	B					13♦	4.8								TO39	A
60▼	TPV386	225M#		65	10	§J	N	B					14♦	14								W65d	S
61▼	TPV376	225M#		65	16	§J	N	B					11♦	90 *								W138b	V
62	0461	260M#	150	65	16	§J	N	B					7.5♦	75	0.11Ø	.035Ø	0.72Ø	-.43Ø	260M	28	3.5 *	S538	
63	2N708	300MΔ	250m	60			P	B					200†									TO106	A
64	0462	300M§	360mØ	40		§J	NSi	B														TO18	A
65	PH2222A	300MΔ	360m	50			P	B					300†									TO106	A
66	PH2222AR	300M▼	625m	75	800m	$J	NSi	BPE	4.0Ø	1.0k	10	100u	3.0†									TO92	A
67	2N914	300M▼	625m	75	800m	$J	NSi	BPE	4.0Ø	1.0k	10	100u	3.0†									TO92	A
68▼	BF450	300M§	1.2	40		§J	NSi	BPE														TO18	A
69▼	BF451	325M▼	250m	40	25m	$J	PSi	BPE	2.0	100k	10	1.0m										TO92	E
70	BF536	325M▼	250m	40	25m	$J	PSi	BPE	2.0													TO92	E
71	BF536#	350M§	180m	30	25m	$J	PSi	BPL	5.0	200M	10*	1.0m*		180m								W174	A
72♦	BF241	350M§	180m	30	25m	§J	PSi	BPL	5†		10*	1.0m	17▼									W174	A
73♦	BF240	350M▼	250m	40	25m	♦J	NSi	BPE	3.5Ø	0.2M	10	1.0m										TO92	
74	JO2015A	380M▼	250m	40	25m	♦J	NSi	BPE	3.5Ø	0.2M	10	1.0m										TO92	
		400M		65	10	§J	NSi	B	55%	400M	28	70 Ø	8.4♦	70								W243	

SYMBOLS AND CODES EXPLAINED IN INTERPRETER

10. UHF/MICROWAVE TRANSISTORS

IN ORDER OF:(1)MAX. OSCILLATOR FREQUENCY
(2)MAX. TOTAL PWR(PT) & (3)TYPE No.

LINE No.	3 TYPE No.	1 MAX. OSC. FREQ Fmax (Hz)	MAXIMUM RATINGS 2 PT (W)	BVCBO (V)	IC (A)	TEMP CODE	POL & MAT	TYPE & TECH	NOISE FIGURE @ STATED CONDITIONS NF (dB)	@ FREQ (Hz)	@ VCE (V)	@ IC (A)	TYPICAL OPERATING GAIN (S21)2 (dB)	Pout (W)	TYPICAL REFLECTION COEFFICIENTS S11 (Mag)	S11 (deg)	S22 (Mag)	S22 (deg)	@ FREQ (Hz)	@ VCE (V)	@ IC (A)	DWG No.	LEAD CONFIG
1	PT9701B	400M		30 *	750m	§J		B	55%	400M	28	4.0 Ø	9.0♦	4.0								S518	
2	PT9702B	400M		30 *	2.0	§J		B	60%	400M	28	20 Ø	7.0♦	20								S518	
3	PT9703B	400M		30 *	1.3	§J		B	60%	400M	28	10 Ø	9.0♦	10								S518	
4	PT9704B	400M		30 *	5.0	§J		B	60%	400M	28	30 Ø	6.3♦	30								S518	
5	2N2997	400M§	75m	30	50m	#S	PGe		4.5Ø	200M	12*	4.0m*										TO72	G
6	2N3371	400M§	150m	25	100m	♦S	PGe		3.0Ø	30M	6.0*	4.0m*	30%									TO18	GØ
7	BF167	400M	150m	40	25m	§J	NSi	BPE														TO72	J
8▼	2SC2465	400MΔ	200m*	20 Δ	20m	♦J	NSi	BEP	2.4†	200M	10	2.0m	23♦									W250	Y
9	BF160	400M▼	200m	30	50m		N	B					30†									TO106	A
10	BF160C	400MΔ	200m	30	50m		N	B					50†									TO106	A
11	BFX19	400MΔ	200m	30			N	B					20†									TO72	
12	BFX20	400MΔ	200m	30			N	B					20†									TO72	
13	BSS65	400M§	200m	12	100m	$S	PSi	BPL														W149	A
14	BSS65R	400M§	200m	12	100m	$S	PSi	BPL														W149	A
15	2SA1005	400M§	250m	40	30m	♦J	PSi	EP	3.5	1.0M	10	1.0m		250m								218d	B
16	2SC922	400MΔ	250m	20 *	20m		N	B	5.0Ø				180†									TO92	B
17	9001	400M▼	250m	40			N	B					120†									TO106	
18	9002	400M▼	250m	30			N	B					150†									TO106	
19	9003	400M▼	250m	18			N	B					200†									TO106	
20	CX918	400MΔ	250m	20 *	50m		N	B					150†									TO92	A
21	FJ0480-28	400M#	250m*	60	16	§J	NSi	BPE	55%	400M	28§	14 §	7.3Ø	85								M1121	V
22	BFY79	400MΔ	300m	30			N	B					30†									TO72	
23	BSX28	400M▼	300m	30	100m		N	B					120†									TO18	
24	BFX48	400MΔ	360m	30	100m		P	B					90†									TO18	A
25	BSX29	400M▼	360mØ	12	200m		P	B					120†									TO18	A
26▼	TEC9016	400MΔ	400m*	40	25m	$J	NSi	BPE	2.5	100M	6.0	1.0m*	18♦		34Ø	8.2 Ø	.045Ø	.925Ø	100M	6.0	1.0m*	TO92	A
27	BF198	400M	500m	40	25m		N	B	3.0	35M			42§									TO92	
28	2SA1153	400M§	600m	60	500m	♦J	PSi	EP															
29	2N1142A	400M§	750m	30	100m	#S	PGe															TO5	GØ
30	2N4034	400MΔ	1.0	40	100m	§J	PSi	B	6.0Ø	100M	5.0	1.0m										TO18	A
31♦	MRF313	400M#	2.5	35 Δ	150m	§S	NSi	B	45%	400M	28§	1.0 Ø	16♦	1.0	6.4Ø	-4.8Ø	75Ø	-45Ø	400M	28§	1.0 Ø	W124	R
32♦	MRF313A	400M#	2.5	35 Δ	150m	§S	NSi	B	45%	400M	28§	1.0 Ø	16♦	1.0	6.4Ø	-4.8Ø	75Ø	-45Ø	400M	28§	1.0 Ø	S123	R
33♦	MRF525	400M#	2.5	35 Δ	150m	§S	NSi	B	4.0Ø	400M	26		14♦	19 ♦	.233	156	.534	-36	500M	26	100m	TO39	F
34	C1-28	400M	5.0	60 Ø	.25	§J	N		60%	400M	28§			1.0								W286	
35	CD2035	400M#	10	50 Ø	500m	§J	NSi	B	60%	400M	28§	3.0 Ø	13Δ	3.0 Δ	4.0Ø	1.0Ø			400M	28§	3.0 Ø	S111	R
36	CD2087	400M#	10	50 Ø	500m	§J	NSi	B	60%	400M	28§	3.0 Ø	10Δ	3.0 Δ	4.4Ø	1.3Ø			400M	28§	3.0 Ø	T111b	R
37	CD5916	400M#	10	50 Ø	500m	§J	NSi	B	60%	400M	28§	3.0 Ø	10Ø	3.0 Δ	4.4Ø	1.3Ø			400M	28§	3.0 Ø		
38▼	TH550	400M	10	55	750m	§J	NSi	BPL	55%	400M	28	400m§	10♦	4.0 †								S532	
39	A5916	400M	11	55 Ø	.70	§J	N		60%	400M	28§			3.0								S520	V
40	UMIL3	400M	11	55 Ø	700m	§J	N		60%	400M	28§			3.0								S520	
41♦	MRF134	400M	17		900m#	$S	N	F	2.0	150M	28#	200m#	14	5.0	.654	-127	.772	-124	400M	28#	100m#	W294	EF
42▼	TH552	400M	19	55	1.2	§J	NSi	BPL	60%	400M	28	1.0 §	10♦	10 †								S532	
43	CD5918	400M#	20	60 Ø	1.0	§J	NSi	B	60%	400M	28§	10 Ø	10Ø	10 Δ	1.5Ø	1.5Ø			400M	28§	10 Ø	S111	R
44	CM10-28	400M#	20	60 Ø	1.0	§J	NSi	B	50%	400M	28§	10 Ø	9.0Δ	10 Δ	3.5Ø	4.0Ø			400M	28§	10 Ø	S91	R
45	CD2088	400M#	25	50 Ø	1.2	§J	NSi	B	60%	400M	28§	10 Ø	10Δ	10 Δ	1.7Ø	1.5Ø			400M	28§	10 Ø	S111	R
46	CF4-28	400M	25	65 Ø	1.6		NSi	F						4.0								S155	EY
47▼	TH553	400M	25	60	4.5	§J	NSi	BPL	65%	400M	28	3.2 §	7.0♦	16 †								S532	
48♦	MRF321	400M#	27	60	1.1	§S	NSi	B	60%	400M	28§	10 Ø	13Ø	10	.89Ø	2.7Ø	9.8Ø	-14Ø	400M	28§	10 Ø	S527	R
49♦	MRF331	400M#	27	60 Δ	1.1	$S	NSi	B	65%	400M	28§	10 Ø	10♦	10	1.3Ø	3.5Ø	16Ø	17Ø	400M	28§	10 Ø	W527	R
50	A5918	400M	28	55 Ø	1.5	§J	N		60%	400M	28§			10								S520	V
51	UMIL10	400M	28	55 Ø	1.5	§J	N		60%	400M	28§			10								S520	
52	2N5637	400M§	30	60	3.0	§S	NSi		60%	400M	28§	1.2	4.6♦									S111	R
53	CD2089	400M#	40	50 Ø	2.0	§J	NSi	B	60%	400M	28§	20 Ø	8.0Δ	20 Δ	1.3Ø	1.7Ø			400M	28§	20 Ø	S111	R
54	CD5919	400M	40	60 Ø	2.0	§J	N	B					7.0Δ	16 Δ								S114	
55	CD5919A	400M#	40	60 Ø	2.0	§J	NSi	B	60%	400M	28§	20 Ø	7.0Ø	20 Δ	1.3Ø	1.7Ø			400M	28§	20 Ø	S111	R
56	A5919	400M	45	55 Ø	2.5	§J	N		60%	400M	28§			20								S520	V
57	MRF136	400M	55		2.5m#	$S	N	F	1.0	150M	28#	500m#	13	15	.774	-179	.783	-163	400M	28#	500m#	W294	EF
58♦	MRF323	400M#	55	60 Δ	2.2	§S	NSi	B	60%	400M	28§	20 Ø	11♦	20	.71Ø	1.79Ø	6.0Ø	-6.9Ø	400M	28§	20 Ø	S527	R
59▼	MRF5177	400M	58	35 *	4.0	§S	NSi	B	60%	400M	28§	30 Ø	100%	30								W317	R
60▼	MRF5177A	400M	58	35 *	4.0	§S	NSi	B	60%	400M	28§	30 Ø	100%	30								S525	C
61	TPM4040	400M	65	45			Si		50%				10♦									W300	RV
62	CD6105	400M#	70	65 Ø	5.0	§J	NSi	B	70%	400M	28§	30 Ø	6.3Ø	30 Δ	1.2Ø	1.7Ø			400M	28§	30 Ø	T111b	R
63	CD6105A	400M#	70	65 Ø	5.0	§J	NSi	B	65%	400M	28§	30 Ø	8.0Ø	30 Δ	1.0Ø	1.7Ø			400M	28§	30 Ø	S111	R
64	CM25-28	400M#	70	60 Ø	3.0	§J	NSi	B	57%	400M	28§	25 Ø	8.5Δ	25 Δ	2.0Ø	3.2Ø			400M	28§	25 Ø	W55	R
65	CM25-28A	400M#	70	60 Ø	3.0			B						15								S91	
66▼	TH531	400M	70	55	5.0	§J	NSi	BPE	60%	400M	28	5.0 §	7.8♦	30 †								S532	
67▼	TH532	400M	70	55	5.0	§J	NSi	BPE	60%	400M	28	5.0 §	7.8♦	30 †								W319	
68♦	MRF325	400M#	82	60 Δ	3.4	§S	NSi	B	60%	400M	28§	30 Ø	9.5Ø	30	1.0Ø	3.9Ø	5.5Ø	-2.4Ø	400M	28§	30 Ø	W65c	S
69▼	MRF137	400M	100	65 Δ	4.0m%	§J	N	F	1.5†	150M	28#	1.0 #	16Ø		.865	178	.856	-174	400M	28#	750m#	W294	EY
70	CM45-28	400M	110	60 Ø	6.0			B						45								W55	
71♦	MRF326	400M#	110	60 Δ	4.5	§S	NSi	B	50%	400M	28§	40 Ø	11♦	40	1.3Ø	.90Ø	3.7Ø	0.0Ø	400M	28§	40 Ø	W65c	S
72	2N6439	400M	140	60 Ø	8.0	§J		B						60								W55	R
73	BAL0004-50	400M	140	60 Ø	6.0			B						50								W134	RL
74	BAL0204-50	400M#	140	60 Ø	6.0			B						50								W134	RL
75	C2M70-28R	400M#	140	60 Ø	8.0	§J	NSi	B	60%	400M	28§	70 Ø	8.5Δ	70 Δ	1.7Ø	1.0Ø			400M	28§	70 Ø	W65b	S
76▼	SD1468	400M#	140	30 *	8.0	♦J	NSi	BPE					8.4#	70 †	1.29Ø	0.87Ø	3.0Ø	0.87	400M	28	70 Ø	W65a	
77	UMIL60	400M	140	60 Ø	8.0	§J	N		60%	400M	28§			60								W243	
78	UMIL70	400M	140	60 Ø	8.0	§J	N		60%	400M	28§			70								W243	
79	TPM4100	400M	175	65	10		Si		50%				7.5♦									W300	RV
80	TPM4130	400M	210	65	10		Si		60%				7.2♦									W300	RV
81	BAL0004-100	400M#	250	60 Ø	12	§J	NSi	B	57%	400M	28§	100 Ø	8.0Ø	100								W134	RL
82	C2M100-28A	400M	250	60 Ø	12			B						100									
83	CM80-28R	400M#	250	60 Ø	12	§J	NSi	B	55%	400M	28§	80 Ø	7.6Δ	80 Δ	1.3Ø	1.5Ø	1.8§	0.0§	400M	28§	80 Ø	W55	R
84	FJ0480-28GG	400M	250	60	16	§J	Si	B					7.0♦	85								M1121	♦
85	GM0104-100	400M	250	60 Ø	16	§J	N		50%	400M	28§			100								W288	
86♦	MRF327	400M#	250	60 Δ	9.0	§S	NSi	B	60%	400M	28§	80 Ø	9.0♦	80	1.3Ø	3.3Ø	1.27Ø	1.0Ø	400M	28§	80 Ø	W65C	S
87	UMIL100	400M	250	60 Ø	12	§J	N		55%	400M	28§			100								W243	
88	UMIL100A	400M	250	60 Ø	12	§J	N		55%	400M	28§			100								W292	
89	0104-100	400M	270	60 Ø	16	§J	N		50%	400M	28§			100								W283	
90	0204-125	400M	270	60 Ø	16	§J	N		60%	400M	28§			125								W283	
91	BAL0204-125	400M	270	60 Ø	16			B						125								W134	RL
92	FJ04A2-28	400M#	375 *	60	20	§J	NSi	BPE	65%	400M	28§	20 §	7.2Ø	130								M1121	V
93	FJ04A2-28GG	400M	375	60	20	§J	Si	B					7.0♦	130								M1121	♦
94▼	SD1563	425M	875	65	21	§J	NSi	BPA	50%	425M	40	30 §	10♦	300 †								M1075	
95	MMT2857	450M#	225mØ	30	40m	†J	NSi	BAN	4.2	450M	6.0	1.5m	12$		.43	-94	.80	-20	500M	6.0	1.5m	W6a	C
96	MMT2857A	450M#	225mØ	30	40m	†J	NSi	BAN	5.0Ø	450M	6.0	1.5m	12$		.43	-94	.80	-20	500M	6.0	1.5m	W6a	C
97	MMT5031	450M#	225mØ	15	20m	†J	NSi	BAN	3.5Ø	450M	6.0	1.0m	17$		.58	-108	.87	-15	500M	6.0	1.0m	W6a	C
98	MMT5031A	450M#	225mØ	20	20m	†J	NSi	BAN	3.5Ø	450M	10	1.5m	17$		.58	-108	.87	-15	500M	10	1.5m	W6a	C
99	2SC2718	450M§	250m	60	200m	♦S	N	EP	15	1.0k	6.0	0.1m										C218d	B
100	BF271	450MΔ	250m	30	50m		N	B					30†									TO72	
101	MA42020-509	450M#	300m	30	50m	§J	NSi	BPL	1.6Ø	60M	6.0	1.5m	10	4.0m*	.32	-117	.72	-23	450M	6.0	5.0m	TO72	G

SYMBOLS AND CODES EXPLAINED IN INTERPRETER

10. UHF/MICROWAVE TRANSISTORS

IN ORDER OF:(1)MAX. OSCILLATOR FREQUENCY (2)MAX. TOTAL PWR(PT) & (3)TYPE No.

LINE No.	[3] TYPE No.	[1] MAX. OSC. FREQ Fmax (Hz)	MAXIMUM RATINGS [2] PT (W)	BVCBO (V)	IC (A)	TEMP CODE	POL & MAT	TYPE & TECH	NOISE FIGURE @ STATED CONDITIONS NF (dB)	@ FREQ (Hz)	@ VCE (V)	@ IC (A)	TYPICAL OPERATING GAIN (S21)2 (dB)	Pout (W)	TYPICAL REFLECTION COEFFICIENTS S11 (Mag)	S11 (deg)	S22 (Mag)	S22 (deg)	@ FREQ (Hz)	@ VCE (V)	@ IC (A)	DWG No.	LEAD CODE
1	MA42021-509	450M#	300m	30	50m	§J	NSi	BPL	2.0Ø	60M	6.0	1.5m	10	4.0m*	.32	-117	.72	-23	450M	6.0	5.0m	TO72	G
2	MA42022-509	450M#	300m	30	50m	§J	NSi	BPL	2.5Ø	60M	6.0	1.5m	10	4.0m*	.32	-117	.72	-23	450M	6.0	5.0m	TO72	G
3	MA42023-509	450M#	300m	30	50m	§J	NSi	BPL	2.0Ø	60M	6.0	1.5m	10	4.0m*	.32	-117	.72	-23	450M	6.0	5.0m	TO72	G
4	MA42024-509	450M#	300m	30	50m	§J	NSi	BPL	3.0Ø	60M	6.0	1.5m	10	4.0m*	.32	-117	.72	-23	450M	6.0	5.0m	TO72	G
5	MA42025-509	450M#	300m	30	50m	§J	NSi	BPL	2.5Ø	450M	6.0	1.0m	10	4.0m*	.32	-117	.72	-23	450M	6.0	5.0m	TO72	G
6	MA42026-509	450M#	300m	30	50m	§J	NSi	BPL	3.0Ø	450M	6.0	1.0m	10	4.0m*	.32	-117	.72	-23	450M	6.0	5.0m	TO72	G
7	MA42027-509	450M#	300m	30	50m	§J	NSi	BPL	3.5Ø	450M	6.0	1.0m	10	4.0m*	.32	-117	.72	-23	450M	6.0	5.0m	TO72	G
8	MA42028-509	450M#	300m	30	50m	§J	NSi	BPL	4.0Ø	450M	6.0	1.0m	10	4.0m*	.32	-117	.72	-23	450M	6.0	5.0m	TO72	G
9	MA42051-509	450M#	300m	20	40m	§J	NSi	BPL	2.0Ø	450M	6.0	3.0m	11	1.2m*	.621	-70	.818	-26	500M	6.0	1.5m	TO72	G
10	MA42052-509	450M#	300m	20	40m	§J	NSi	BPL	2.5Ø	450M	6.0	3.0m	11	1.2m*								TO72	G
11	MA42051-511	450M#	350m	20	40m	§J	NSi	BPL	2.0Ø	450M	6.0	3.0m	11	1.2m*								W29e	R
12	MA42052-511	450M#	350m	20	40m	§J	NSi	BPL	2.5Ø	450M	6.0	3.0m	11	1.2m*								W29e	R
13	MA42143-509	450M#	400m	27	50m	§J	NSi	BPL	1.7Ø	450M	10	3.0m	20	10m*								TO72	G
14	MA42001-509	450M#	450m	20	125m	§J	NSi	BPL	1.0Ø	60M	10	5.0m	28*	1.0m*	.466	-167	.570	-32	500M	10	5.0m	TO72	G
15	MA42002-509	450M#	450m	20	125m	§J	NSi	BPL	1.5Ø	60M	10	5.0	28*	1.0m*								TO72	G
16	MA42003-509	450M#	450m	20	125m	§J	NSi	BPL	2.0Ø	60M	10	5.0m	30*	1.0m*								TO72	G
17	MA42004-509	450M#	450m	20	125m	§J	NSi	BPL	1.5Ø	60M	10	15m	30*	1.0m*								TO72	G
18	MA42005-509	450M#	450m	20	125m	§J	NSi	BPL	2.0Ø	60M	10	20m	30*	1.0m*								TO72	G
19	MA42009-509	450M#	450m	20	125m	§J	NSi	BPL	2.5Ø	450M	10	5.0m	14*	630u*								TO72	G
20	MA42010-509	450M#	450m	20	125m	§J	NSi	BPL	3.0Ø	450M	10	20m	15*	12m*								TO72	G
21	MA42011-509	450M#	450m	20	125m	§J	NSi	BPL	3.5Ø	450M	10	20m	15*	12m*								TO72	G
22	MA42014-509	450M#	450m	20	125m	§J	NSi	BPL	1.3Ø	60M	10	5.0m	28*	1.0m*								TO72	G
23	MA42051-510	450M#	450m	20	40m	§J	NSi	BPL	2.0Ø	450M	6.0	3.0m	11	1.2m*	.691	-141	.781	-21	500M	6.0	1.5m	W115	R
24	MA42052-510	450M#	450m	20	40m	§J	NSi	BPL	2.5Ø	450M	6.0	3.0m	11	1.2m*								W115	R
25	MA42008-511	450M#	700m	20	125m	§J	NSi	BPL	2.0Ø	450M	10	5.0m	18*	630u*	.85	-161	.56	-32	500M	10	5.0m	W29e	R
26	MA42143-510	450M#	700m	27	50m	§J	NSi	BPL	1.7Ø	450M	10	3.0m	20	10m*								W115	R
27	MA42143-511	450M#	700m	27	50m	§J	NSi	BPL	1.7Ø	450M	10	3.0m	20	10m*								W29e	R
28	MA42006-510	450M#	1.2	20	125m	§J	NSi	BPL	4.0Ø	60M	10	40m	35*	50m*								W115	R
29	MA42010-510	450M#	1.2	20	125m	§J	NSi	BPL	4.0Ø	450M	10	60m	20*	158m*	.84	178	.31	-23	500M	10	60m	W115	R
30	MA42011-510	450M#	1.2	20	125m	§J	NSi	BPL	4.5Ø	450M	10	60m	20*	158m*								W115	R
31	MA42012-510	450M#	1.2	20	125m	§J	NSi	BPL	5.0Ø	450M	10	60m	20*	158m*								W115	R
32	MA42015-510	450M#	1.2	20	125m	§J	NSi	BPL	4.0Ø	450M	10	60m	10	120m*								W115	R
33	MA42016-510	450M#	1.2	20	125m	§J	NSi	BPL	4.5Ø	450M	10	60m	10	120m*								W115	R
34	2N5636	450M§	15	60	1.5	§S	NSi		50%	400M	28§	535m	5.7♦									S505b	R
35♦	MRF309	450M#	146	60 Ø		§S	NSi	B	50%	450M	28§	50 Ø	8.0♦	50	.70Ø	1.6Ø	1.9Ø	.90Ø	450M	28§	50 Ø	W65c	S
36	BAL0305-P300	450M#	500 ▼	60	18	§J	NSi	B	60%	450M	40*	300 Ø	7.5Δ	300 #			7.0§	.50§	400M	40*	300 Ø	W134	RL
37▼	SD1564	450M	1.1k	65	28	§J	NSi	BPA	50%	425M	40	70 §	7.5♦	400 †								W320	
38▼	SD1565	450M	1.1k	65	43	§J	NSi	BPA	50%	425M	40	50 §	10♦	500 †								W321	
39	PT8809	470M		16 *	750m	§J		B	60%	470M	13	2.0 Ø	10♦	2.0								W243	
40	PT8810	470M		16 *	1.7	§J		B	55%	470M	13	5.0 Ø	8.5♦	5.0								W243	
41	MRF630	470M§	8.7m	16 *	1.0m#	§S	NSi		55%	470M	12§	3.0mØ	10Ø	3.0				-152	1.0G	5.0#	m#	C257	F
42♦	MRF515	470M#	2.5	35 Δ	150m	§S	NSi	B	70%	470M	12§	750mØ	8.5♦	750m	0.39	30	.85	-116	400M	12	50m	TO39	A
43	MRF626	470M#	2.5	30	150m	§S	NSi	B	60%	470M	12§	500mØ	12☑	500m	6.0Ø	4.0Ø	45Ø	-28Ø	470M	12§	500mØ	S123	R
44♦	MRF627	470M#	2.5	30 Δ	150m	§S	NSi	B	60%	470M	12§	500mØ	12♦	500m	.118	30	.96	-138	470M	12	100m	W124	R
45	SD1132-4	470M#	2.5	28	400m	§J	NSi	PE					11#	250m								W192	
46	MRF628	470M#	3.0	36	200m	§S	NSi	B	50%	470M	12§	500mØ	10Δ	500m	2.5Ø	.60Ø	5.9Ø	-24Ø	450M	12§	500mØ	W147	R
47♦	2SC1001	470M#	5.0 *	40	500m	§J	NSi	BPE	60%	470M	12§	300m§	7.0☑	1.5								TO39	A
48♦	2SC1165	470M#	5.0 *	40	500m	§J	NSi	BPE	60%	470M	12§	300m§	5.2☑	1.0								TO39	A
49	2SC1608	470M	5.0 *	40	500m	§J	NSi	BPE					7.3☑	1.6								W80	V
50♦	SD1134	470M#	5.0	36	750m	§J	NSi	BPE					10#	2.0 †	2.6Ø	1.3 Ø	12.2Ø	13.5Ø	470M	12	2.0 Ø	S532	
51	SD1234	470M#	5.0	25	750m	§J	NSi	BPE					10Δ	3.0 Δ	2.0Ø	6.0Ø	8.2Ø	15.2Ø	470M	12	250m§	S90	S
52	SD1444	470M#	5.0	36	400m	§J	NSi	BPE					8.0Δ	2.0 Δ	2.9Ø	.60Ø	15.6Ø	10.2Ø	470M	12	2.0 Ø	TO39	F
53	2SC1821	470M	7.0 *	55	500m	§J	NSi	BPE					11☑	4.0								M1123	V
54♦	FJ0403-28	470M#	7.0	55	500m	§J	NSi	BPE	55%	400M	28§	300m§	11☑	4.0								S502	V
55♦	FJ0403-28RR	470M	7.0	55	500m	§J	NSi	B					11♦	4.0 Δ								S502	V
56♦	2SC1765	470M#	7.5 *	35	800m	§J	NSi	BPE	60%	470M	12§	600m§	7.3☑	3.2								M17	A
57	2SC2031	470M#	7.5 *	45	500m	§J	NSi	BPE					9.2☑	2.5								M1120	V
58♦	2SC2104	470M#	7.5 *	35	800m	§J	NSi	BPE	50%	470M	12§	400m§	8.7Δ	3.0 Δ								S151	R
59♦	2SC2391	470M#	7.5 *	35	800m	§J	NSi	BPE	50%	470M	12§	400m§	4.7Δ	3.0 Δ								W52s	R
60♦	FJ0402-12	470M#	8.0 *	36	1.5	§J	NSi	BPE					12☑	2.5								S536	V
61♦	MRF629	470M#	8.0	36 Ø	400m	§S	NSi	B	50%	470M	12§	2.0 Ø	8.0♦	2.0	2.8Ø	.60Ø	13Ø	-10Ø	450M	12§	2.0 Ø	TO39	F
62	2N5915	470M#	10 †	36	1.5	§S	NSi	B	65%	470M	12§	743m	4.8#	6.0 Δ								S78	R
63♦	2SC3006	470M#	10 *	35	1.0	§J	NSi	BPE	50%	470M	12	400m§	8.7Δ	3.0 Δ								W221	R
64	2SC1822	470M	12 *	55	1.0	§J	NSi	BPE					8.8☑	7.5								M1123	V
65♦	FJ0406-28	470M#	12	55	1.0	§J	NSi	BPE	55%	470M	28§	1.0 §	8.8☑	7.5								S502	V
66♦	FJ0406-28RR	470M	12	55	1.0	§J	NSi	B					8.8♦	7.5 Δ								S502	V
67	2SC2032	470M#	13	45	1.0	§J	NSi	BPE					7.4☑	5.5								M1120	V
68♦	2SC2105	470M#	15 *	35	1.4	§J	NSi	BPE	60%	470M	12§	1.0 §	7.7Δ	6.0 Δ								S151	R
69♦	2SC2379	470M#	15 *	35	1.4	§J	NSi	BPE	60%	470M	12§	1.0 §	7.7Δ	6.0 Δ								W52s	R
70♦	SD1135	470M#	15	36	1.7	§J	NSi	BPE					8.5#	5.0 †	1.4Ø	2.9 Ø	11.4Ø	-5.8Ø	470M	12	5.0 Ø	S532	
71♦	SD1482	470M#	15	28	1.0	§J	NSi	BPE					8.0♦	3.0 †								S532	
72♦	FJ0408-12	470M#	16 *	36	3.0	§J	NSi	BPE					7.0☑	10								S536	V
73	2SC1823	470M	25 *	55	2.0	§J	NSi	BPE					7.0☑	15								M1123	V
74♦	FJ0410-28	470M#	25	55	2.0	§J	NSi	BPE	55%	470M	28§	3.0 §	7.0☑	15								S502	V

SYMBOLS AND CODES EXPLAINED IN INTERPRETER

10. UHF/MICROWAVE TRANSISTORS

IN ORDER OF:(1)MAX. OSCILLATOR FREQUENCY
(2)MAX. TOTAL PWR(PT) & (3)TYPE No.

LINE No.	[3] TYPE No.	[1] MAX. OSC. FREQ Fmax (Hz)	MAXIMUM RATINGS [2] PT (W)	BVCBO (V)	IC (A)	TEMP CODE	POL & MAT	TYPE & TECH	NOISE FIGURE @ STATED CONDITIONS NF (dB)	@ FREQ (Hz)	@ VCE (V)	@ IC (A)	TYPICAL OPERATING GAIN (S21)2 (dB)	Pout (W)	TYPICAL REFLECTION COEFFICIENTS S11 (Mag)	S11 (deg)	S22 (Mag)	S22 (deg)	@ FREQ (Hz)	@ VCE (V)	@ IC (A)	DWG No.	LEAD CODE
1♦	FJ0410-28RR																					
		470M	25	55	2.0	§J	NSi	B					7.0♦	15 △								S502	V
2♦	MRF660	470M	25	36 Ø	2.4	$S	NSi	B	60%	470M	12§	7.0 Ø	6.0♦	7.0 △								Y220b	Y
3	2SC2033	470M#	30 *	45	3.0	§J	NSi	BPE					4.8☑	18								M1120	V
4♦	2SC2106	470M#	30 *	35	2.8	§J	NSi	BPE	60%	470M	12§	3.0 §	6.0△	12 △								S151	R
5♦	2SC2380	470M#	30 *	35	2.8	§J	NSi	BPE	60%	470M	12§	3.0 §	7.7△	12 △								W52s	R
6♦	2SC2642	470M#	30 *	35	2.8	§J	NSi	BPE	60%	470M	12	3.0 §	6.0△	12 △								W221	R
7	2SC2969	470M#	30 *	36	4.0	§J	NSi	BPE					4.8☑	15								M1122	RMØ
8♦	FJ0415-12	470M#	33 *	36	5.0	§J	NSi	BPE					5.6☑	18								S536	V
9	CM10-12A#	470M#	35	36 Ø	2.5	§J	NSi	B	60%	470M	12§	10 Ø	7.3☑	10 △	1.5Ø	3.5Ø	3.2§	-.90	470M	12§	10 Ø	W131	RM
10♦	SD1136	470M#	37	36	3.4	§J	NSi	BPE					6.0#	10 †	1.5Ø	0.4 Ø	6.6Ø	-3.6Ø	470M	12	10 Ø	S532	
11	SD1429	470M#	37	36	3.4	§J	NSi	BPE					7.8△	12 △	.80Ø	-1.0Ø	2.4Ø	1.8Ø	470M	12	2.0 §	W55	R
12♦	SD1429-3	470M#	37	36	3.4	§J	NSi	BPE					7.5#	15 †	1.0Ø	-1.0Ø	2.5Ø	1.0 Ø	470M	12	2.0 Ø	W65a	
13	2SC1824	470M#	40 *	55	4.0	§J	NSi	BPE					6.0☑	30								M1123	V
14♦	FJ0425-28	470M#	40	55	4.0	§J	NSi	BPE	55%	470M	28§	7.5 §	6.0☑	30	.928	150	.762	165	1.0G	20	500m	S502	V
15♦	FJ0425-28RR																						
		470M	40	55	4.0	§J	NSi	B					6.0♦	30 △								S502	V
16♦	2SC2173	470M#	50 *	35	6.0	§J	NSi	BPE	60%	470M	12§	10 §	4.5☑	28								S151	R
17♦	2SC2381	470M#	50 *	35	6.0	§J	NSi	BPE	60%	470M	12§	10 §	4.5☑	28								W52s	R
18♦	2SC2643	470M#	50 *	35	6.0	§J	NSi	BPE	60%	470M	12	8.0 §	4.9△	25 △								W221	R
19	FJ0430-12	470M#	50 *	45	10	§J	NSi	BPE	60%	470M	12§	10 §	4.8☑	30								M1121	Y
20	FJ0430-12GG																						
		470M	50 *	45	10	§J	Si	B					4.8♦	30								M1121	♦
21♦	MRF641	470M#	50	36 Ø	3.0	$S	NSi	B	60%	470M	12§	15 Ø	8.5☑	15	1.2Ø	5.2Ø	2.7Ø	1.2Ø	480M	12§	15 Ø	W65c	S
22♦	SD1433	470M#	58	36	2.5	§J	NSi	BPE					8.0△	10 △	1.15Ø	-2.7Ø	5.7Ø	1.5Ø	470M	12	1.5 §	S532	
23▼	BLU20(A)	470M#	65	17 *	4.0	§J	NSi	PE					6.5	20								M1249	
24	CM20-12A#	470M#	67	36 Ø	5.0	§J	NSi	B	60%	470M	12§	20 Ø	6.5☑	20 △	2.3Ø	5.2Ø	2.5§	-2.4	470M	12§	20 Ø	W131	RM
25▼	SD1422	470M	70	36	4.8	$J	NSi	BPE					6.2♦	25 †								W65a	
26▼	BLU30(A)	470M#	90	17	6.0	§J	NSi	PE					6.0	30								M1249	
27	CM30-12A#	470M#	92	36 Ø	7.5	§J	NSi	B	60%	470M	12§	30 Ø	6.0☑	30 △	1.0Ø	3.3Ø	1.8§	-2.1	470M	12§	30 Ø	W131	RM
28	CME30-12	470M	100	36 Ø	9.0		N	B					5.5△	30 △								W180	
29♦	MRF644	470M#	103	36 Ø	4.0	$S	NSi	B	60%	470M	12§	25 Ø	7.0☑	25	1.21Ø	3.25Ø	1.90Ø	2.14Ø	470M	12§	25 Ø	W65c	S
30	CM45-12A#	470M#	117	36 Ø	10	§J	NSi	B	60%	470M	12§	45 Ø	5.3☑	45 △	1.15Ø	3.4Ø	1.2§	-2.7	470M	12§	45 Ø	W131	RM
31♦	MRF646	470M#	117	36 Ø	9.0	§S	NSi	B	60%	470M	12§	45 Ø	5.4♦	45	1.41Ø	3.75Ø	1.20Ø	2.80Ø	470M	12§	45 Ø	W65c	S
32	CM60-12A#	470M#	145	36 Ø	15	§J	NSi	B	60%	470M	12§	60 Ø	5.0☑	60 △	.91Ø	3.0Ø	.90§	-2.6	470M	12§	60 Ø	W131	RM
33	2SC2783	470M#	150 *	36	8.0	§J	NSi	B					6.9△	40 △								W65c	R
34♦	MRF648	470M#	175	36 Ø	11	$S	NSi	B	65%	470M	12§	60 Ø	5.0♦	60	1.0Ø	3.4Ø	1.1Ø	2.9Ø	470M	12§	60 Ø	W65c	S
35♦	SD1434	470M#	175	36	10	§J	NSi	BPE					5.5♦	45 †	2.2Ø	-4.8Ø	1.1Ø	-3.5Ø	470M	12	15 Ø	W65a	
36▼	SD1499-1	470M	218	36	13	§J	NSi	BPE					4.7♦	65 †								W65a	
37▼	MRF338	470M#	250	60 △	9.0	$S	NSi	B	60%	470M	28§	80 Ø	8.8♦	80	1.53Ø	2.98Ø	1.6Ø	0.45Ø	470M	28§	80 Ø	M1101	S
38	BLW89	470M	906	30 *	1.0	§J	NSi	BPE	50%				12	2.0								S171	V
39	2SC2066	475M#	7.0	35	450m	§J	NSi	BEP	60%	475M	7.0§	1.6 Ø	6.0☑	1.6								S136	S
40	BGY22A	480M	150m			#C	NSi	B	40%					3.5								W103	
41	BGY23A	480M	3.5			#C	NSi	B	60%					9.5								W103	
42	2SC1603	485M		18	600m	$S	N							1.5								S174	
43	2SC1604	485M		18	300m	$S								350m								W128	
44▼	BF370	490M▼	500m	40	100m	$J	NSi	BPE					20									TO92	F
45	2N6595	500M#	200mØ	20	25m	§S	NSi	B	3.2☑	200M	10	2.0m	12#									TO72	G
46	2N6596	500M#	200mØ	20	25m	§S	NSi	B	2.0☑	200M	10	2.0m	13#									TO72	G
47	2N6597	500M#	200mØ	15	35m	§S	NSi	B	3.2☑	200M	5.0	2.0m	12#									TO72	G
48	2N6598	500M#	200mØ	15	35m	§S	NSi	B	2.0☑	200M	5.0	2.0m	12#									TO72	G
49	BSV52	500M§	200m	20	100m	$S	NSi	BPL														M984	A
50	BSV52R	500M§	200m	20	100m	$S	NSi	BPL														M984	A
51	NTM2369	500M▼	200m	40	200m	$J	NSi	BEP															
52	0491	500M▼	250m	30			P	B					120†									TO106	
53	0492	500M▼	250m	25			P	B					150†									TO106	
54	0493	500M▼	250m	15			P	B					150†									TO106	
55	BF926	500M§	250m	30	25m	§J	PSi	PE	5.0	200M	10*	1.0m*										C221	E
56	2N6599	500M#	300mØ	20	75m	§S	NSi	B	4.0☑	200M	10	5.0m	11#									TO72	G
57	2N6600	500M#	300mØ	20	75m	§S	NSi	B	4.0☑	200M	10	5.0m	12#									TO72	G
58	BFY78	500MΔ	300m	25	50m		N	B					20†									TO18	A
59	2N6665	500M*	450m	20	125m	§S	NSi	B	1.0☑	60M	10	5.0m	27Ø		.67	-85	.75	-23	110M	10	5.0m	TO72	G
60	2N4257	500MΔ	500m	6.0	50m	♦J	PSi	B	6.0													TO106	A
61	2SK125♦	500M#	500m*	25 #	100m#	♦S	NSi	J	4.0	500M	10*	10m#	7.0Ø		20☑	10☑	1.15☑	10☑	500M	10*	10m#	C218c	DA
62	PH2369	500M▼	500m†	40 △	500m		NSi	PES														TO92	A
63	2N1141A	500M§	750m	35	100m	#S	PGe															TO5	GØ
64	MS510	500M*	1.0	35	50m	§S	NSi	B	2.5☑	500M	5.0	3.0m							500M	5.0	3.0m	W21	RØ
65	MS1010	500M*	1.0	35	50m	§S	NSi	B	1.8☑	500M	5.0	3.0m	21*		.80	-130	.80	-37	500M	5.0	3.0m	W21	RØ
66	2N834A	500M§	1.2	40	200m	▼S	NSi	S														TO18	AØ
67▼	MRF531	500MΔ	2.5	100 △		§S	NSi	B					25%									TO39	A
68	2SC890	500M#	3.0	40	400m	§J	NSi	BEP	63%	500M	18§	4.0 §	6.4☑	1.3								TO39	A
69	2N5635	500M§	7.5	60	1.0	§S	NSi		50%	400M	28§	180m	6.2♦									S505b	R
70	2SC891	500M#	10	40	600m	§J	S59	BEP	63%	500M	18§	500m§	6.0☑	4.0								T59m	SØ
71	2N3375	500M§	11	65	1.5	§J	NSi	BPL						2.5 Ø								TO60	A
72	2SC1040	500M#	15	45	1.2	§J	NSi	BEP	50%	500M	18§	16 Ø	6.0☑	8.0								S59	S
73	CD2505	500M	16	50 Ø	800m			B						5.0								S155	R
74	2SC892	500M#	18	40	1.2	§J	S59	BEP	60%	500M	18§	1.0 §	4.3☑	8.0								T59m	SØ
75	0105-12	500M	22	55 Ø	1.4	§J	N		60%	500M	28§			12								W284	
76	2SC1118	500M#	27	45	2.0	§J	NSi	BEP	67%	500M	18§	12 Ø	4.6☑	14								S59	S
77	UMIL25	500M	70	60 Ø	3.0	§J	N		50%	400M	28§			25								W243	
78	C2M50-28	500M	110	60 Ø	6.0			B						50								W55	R
79	0105-50	500M	140	60 Ø	7.0	§J	N		55%	500M	28§			50								W283	
80	BAL0105-50																						
		500M#	140	60 Ø	6.0			B						50								W134	RL
81▼	MRF390(A)	500M	140	60 △	7.0	§J	NSi	B	55%	400M	28§	60 Ø	9.5♦	60								W134	RL
82	BAL0105-100																						
		500M#	250	60 Ø	12	§J	NSi	B	52%	500M	28§	100 Ø	7.0☑	100								W134	rl
83	CM80-28	500M	250	60 Ø	12	§J		B						80								W55	R
84	0105-100	500M	270	60 Ø	16	§J	N		50%	500M	28§			100								W283	
85	MRF652	512M§	25m	36 *	2.0m#	§J	NSi		65%	512M	12§	5.0mØ	11Ø	5.0				-152	1.0G	5.0#	m#	S517	R
86	BGY22	512M	150m			#C	NSi	B	40%					3.5								W103	
87▼	MRF750	512M	2.5	13 *	200m	$S	NSi	B	55%	470M	7.5§	0.5 Ø	11♦	0.5 △								W124	R
88	BGY23	512M	3.5			#C	NSi	B	60%					9.5								W103	
89▼	PT8880	512M#	3.5	36	500m	$S	N	B	60%	470M	12	25m§	9.0♦	200m								TO39	A
90	C1/2-12	512M	5.0	50 Ø	250m	§J		B						500m								S114	R
91	CD5944	512M	9.0	36 Ø	1.0	§J		B						2.0								S155	R
92▼	MRF752	512M	15	13 *	1.2	§S	SNi	B	55%	470M	7.5§	2.5 Ø	8.0♦	2.5								W147	R
93	CP5-12	512M	18	36 Ø	2.0	§J	N							5.0								TO220	C
94	CD5945	512M	20	36 Ø	1.5									4.0								S155	R
95	CD3285	512M	25	36 Ø	1.0	§J		B						10								S155	R
96♦	SD1410-1	512M#	28	36	3.0	§J	NSi	BPE					6.0△	10 △	1.0Ø	-6.0Ø	5.5Ø	-.50Ø	512M	12	2.5 Ø	W327	
97	CD3025	512M	35	36 Ø	1.0	§J		B						10								S155	R
98	CP10-12	512M	35	36 Ø	2.5	§J	N	B	55%	470M	12§			10 †								TO220	C
99▼	MRF754	512M	37	13 *	3.0	§J	NSi	B	55%	470M	7.5§	8.0 Ø	85%	8.0								W147	R
100▼	J03020	512M#	39	36	3.0	§S	N	B	60%	470M	12	20 Ø	7.6♦	20								W65d	S
101	CMP18-12	512M	67	36 Ø	5.0	§J	N		55%	470M	12§			18								TO220	C
102	J03037	512M	83	36	5.0	§S			60%				4.9♦									W243	R
103	J03050	512M	100	36	8.0	§S			55%				5.9♦									W243	R
104	J03055	512M	100	36	8.0	§S			60%				4.4♦									W243	R
105	CME50-12	512M	117	36 Ø	10									50								W197	

SYMBOLS AND CODES EXPLAINED IN INTERPRETER

10. UHF/MICROWAVE TRANSISTORS

IN ORDER OF:(1)MAX. OSCILLATOR FREQUENCY (2)MAX. TOTAL PWR(PT) & (3)TYPE No.

LINE No.	TYPE No. [3]	MAX. OSC. FREQ Fmax (Hz) [1]	MAXIMUM RATINGS [2] PT (W)	BVCBO (V)	IC (A)	TEMP CODE	POL & MAT	TYPE & TECH	NOISE FIGURE @ STATED CONDITIONS NF (dB)	@ FREQ (Hz)	@ VCE (V)	@ IC (A)	TYPICAL OPERATING GAIN (S21)2 (dB)	Pout (W)	TYPICAL REFLECTION COEFFICIENTS S11 (Mag)	S11 (deg)	S22 (Mag)	S22 (deg)	@ FREQ (Hz)	@ VCE (V)	@ IC (A)	DWG No.	LEAD CODE
1	UMOB55	512M	125	36 Ø	9.0	§J			60%	470M	12§			55								W243	
2	CME70-12	512M	200	36 Ø	16		N	B						70 Δ								W180	
3▼	2SC3103	520M	10	20	1.5	§J	NSi	BPE	60%	520M	7.2§	600m§	50%	3.2								W329	V
4▼	2SC3379	520M	10	20	1.5	§J	NSi	BPE	60%	520M	7.2§	600m§	50%	3.2	1.8Ø	-1.9Ø	6.0Ø	-3.0Ø	520M	7.2§	2.8 Ø	W330	V
5▼	2SC3104	520M	20	20	3.0	§J	NSi	BPE	65%	520M	7.2§	2.0 §	50%	7.0								W329	V
6▼	2SC3102	520M	170	35	18	§J	NSi	BPE	65%	520M	12§	20 §	50%	65	1.0Ø	1.0 Ø	1.25Ø	0.8 Ø	520M	12§	60 Ø	W328	RM
7	BLW50F	540M▼	94	55 *	7.5	§J	NSi	BPE	45%	28G	50	1.4	18♦	16								W206	S
8	AF280S	550M§	60m	20	10m	#J	PSi		7.0	800M												TO119	
9	2N2996	550M§	75m	15	50m	#S	PGe		4.5Ø	200M	12*	4.0m*										TO72	G
10	BF599	550M§	110m	40	25m	$J	NSi	PLE														TO236	
11	2SC817	550MΔ	120m	15 *	20m		N	B					300†									TO72	
12	K928	550MΔ	250m	20 *	50m		N	B	2.0†				120†									TO92	A
13▼	TED1502	550M▼	250m*	40	30m	♦J	NSi	BPE	2.5	100M	6.0	1.0m*	18♦		34Ø	8.2 Ø	.045Ø	.925Ø	100M	6.0	1.0m*	TO92	F
14	BF173	550MΔ	260m	40	25m		N	B					38†									TO72	
15▼	BF496	550M▼	300m	30	20m	$J	NSi	BPE	2.0	100M	10*	2.0m*	27									TO92	F
16	BFX60	550M§	370m	40	25m	§J	NSi	BPE	5.0	200M	10	2.0m										TO72	J
17♦	BF199	550M▼	500m	40	25m	$J	NSi	BPE					41§									TO92	E
18	2N3014	550M§	1.2	40		§J	NSi	BPE														TO52	A
19	BF568	600M	110m	40	30m	$J	PSi	PL	2.5	200M	10	3.0m										TO236	
20	2SC2223	600M§	150m	30	20m	♦J	NSi	EP	3.0	100M	6.0	1.0m*										W177	A
21▼	2SC2733	600MΔ	150m*	30 Δ	50m	§J	NSi	BEP	4.0†	200M	12§	2.0m	21									W177	A
22▼	2SC2735	600MΔ	150m*	30 Δ	50m	$J	NSi	BEP	6.5†	200M	12§	2.0m	21									W177	A
23	2SC2755	600M§	150m	30	20m	♦J	NSi	B	2.0†	200M		3.0m	23♦									W177	A
24▼	2SC3119	600MΔ	150m*	25	20m	♦J	NSi	BPL	4.0	800M	12§		12♦		30Ø	-58 Ø	3.1Ø	5.5 Ø	1.0G	10*	-2m*	Y236a	C
25	BF181	600M§	150m	30	20m	§J	NSi	BPL	6.8	900M	10*	2.0m*	8.0		13Ø	-23Ø	0.9Ø		900M	10*	2.0m*	TO72	G
26▼	2SC2467	600MΔ	200m*	30 Δ	50m	♦J	NSi	BEP	3.6†	260M	12§	2.0m	23									W250	Y
27▼	2SC2469	600MΔ	200m*	30 Δ	50m	♦J	NSi	BPE					40%									W250	T
28▼	2SC2806	600MΔ	200m*	30	50m	♦J	NSi	BPE					100%									W350	D
29	BF158	600M▼	200m	30	50m		N	B					20†									TO106	A
30	BF159	600M▼	200m	40	50m		N	B					20†									TO106	A
31	BF273	600MΔ	200m	40	50m		N	B					40†									TO106	
32	BF274	600MΔ	200m	40	50m		N	B					70†									TO106	
33	BFQ31AR	600M§	200m	30	100m	$J	NSi	BPL	6.0	60M	6.0	1.0m	100%									M156a	C
34	BFQ31R	600M§	200m	30	100m	$J	NSi	BPL	6.0	60M	6.0	1.0m	20%									M156a	C
35	BFW41	600MΔ	200m	15 *			N	B	4.0Ø				80†									TO72	
36	CS9018	600MΔ	200m	12 *			N	B					198†									TO92	A
37	ME3001	600M▼	200m	30			N	B					200†									TO106	
38	ME3011	600M▼	200m	20			N	B					20†									TO106	
39▼	MRF501	600MΔ	200m	25 Δ	50m	§J	NSi	B	4.5	200M	6.0	1.5m	15♦									TO72	G
40▼	2SC2512	600MΔ	300m*	30 Δ	50m	$J	NSi	BEP	3.8†	260M	12§	2.0m	20									TO92	C
41	BSX27	600M▼	300m	15	100m		N	B					125†									TO18	
42♦	SD1080-7	600MΔ	1.3	36	150m	§J	NSi	BPE					10♦	500m†								S533	
43♦	MRF5174	600M	5.0	60 Ø	500m	$S	NSi	B	50%	400M	28§	2.0 Ø	12♦	2.0	3.5Ø	4.0Ø	24Ø	-45	600M	28§	2.0 Ø	W527	R
44	2N4430	600MΔ	10	55	1.0	§J	NSi	B														TO129	R
45	2N4431	600MΔ	18	55	2.0	§J	NSi	B														TO129	R
46	BF660	650M§	110m	40	25m	$J	PSi	PLE														TO236	
47	BF182	650M§	150m	25	15m	§J	NSi	BPL	7.4	800M	10*	2.0m*	10		24Ø	30Ø	.26Ø	3.2Ø	500M	10*	2.0m*	TO72	G
48	BF606A	650M§	300m	40	25m	§J	PSi	PE														C221	E
49♦	2SC2732	700MΔ	150m*	30 Δ	20m	§J	NSi	BEP	10†	900M	12§	1.0m	7.0									W177	A
50▼	2SC2727	700MΔ	200m*	15 Δ	20m	♦J	NSi	BEP	2.3†	200M	6.0§	2.0m	21♦									W250	Y
51	2SC1393	700M▼	250m	30	20m				3.0	200M													
52	ZT2938	700M§	300m	25	500m	§J	NSi	B														TO18	A
53▼	BF502S(A)	700MΔ	400m	30 Δ	30m	$J	NSi	BPL	2.5†	200M	10	3.0m	22♦									TO92	E
54	2N4313	700MΔ	500m	12	100m	♦J	PSi	B														TO106	A
55	BFX55	700M§	2.2	60	400m	§J	NSi	BPE					16									TO39	A
56▼	MM8000	700MΔ	3.5	40 Δ	400m	§J	NSi	B	2.7	200M	15	10m	11♦									TO39	A
57	2N4429	700MΔ	5.0	55	425m	§J	NSi	B														TO117	R
58	2SC1082	700M	7.0 *	50	500m	§J	NSi	BPE					7.8Ø	3.0								M1123	V
59	2SC1355	700M	7.0 *	40	700m	§J	NSi	BPE					5.6Ø	1.8								M1123	V
60	2SC1465	700M	7.0 *	50	500m	§J	NSi	BPE					7.8Ø	1.8								W80	V
61	2SC1533	700M	7.0 *	45	500m	§J	NSi	BPE					6.4Ø	2.2								M1123	V
62	2SC1561	700M	7.0 *	55	500m	§J	NSi	BPE					7.8Ø	3.0								M1123	V
63	2SC1356	700M	12 *	40	1.0	§J	NSi	BPE					4.8Ø	6.0								M1123	V
64	2SC1524	700M	12 *	50	1.0	§J	NSi	BPE					6.0Ø	8.0								M1123	V
65	2SC1534	700M	12 *	45	1.0	§J	NSi	BPE					5.4Ø	7.0								M1123	V
66	2SC1562	700M	12 *	55	1.0	§J	NSi	BPE					6.5Ø	9.0								M1123	V
67	2SC1414	700M	20 *	40	2.0	§J	NSi	BPE					4.0Ø	10								M1123	V
68	2SC1525	700M	20 *	50	2.0	§J	NSi	BPE					5.1Ø	13								M1123	V
69	2SC1415	700M	25 *	40	3.0	§J	NSi	BPE					3.3Ø	16								M1123	V
70	2SC1526	700M	25 *	50	3.0	§J	NSi	BPE					4.3Ø	20								M1123	V
71	2SC1535	700M	25 *	45	2.0	§J	NSi	BPE					4.8Ø	12								M1123	V
72	2SC1563	700M	25 *	55	2.0	§J	NSi	BPE					5.7Ø	15								M1123	V
73	2SC1536	700M	40 *	45	4.0	§J	NSi	BPE					3.8Ø	24								M1123	V
74	2SC1564	700M	40 *	55	4.0	§J	NSi	BPE					4.8Ø	30								M1123	V
75	BF939	750M▼	225m	30 Δ	20m	$J	PSi	BPL	2.5	200M	-10*	2.0m*										TO92	A
76	2SC2901	750M§	600m	40	200m	$J	NSi	EP														TO92	A
77	2N4428	750MΔ	3.5	55	425m	§J	NSi	B														TO39	
78	M06075B200Z																						
		750M#	444 ▼				N	B	45%				9.0	200									
79	MO6075B210Z																						
		750M	500	60	10	§J	NSi	B		750M	48§		8.1	160									E
80	MO6075B400Z																						
		750M	1.2k	60	32	§J	NSi	B		750M	48§		6.8	380								W259	E
81	3SK48	770M#	240m*		30m#	♦S	NSi	F	5.0Ø	770M	10#	10m#	13Ø		2.55Ø	13.6Ø	.65Ø	4.89Ø	800M	10#	10m#	C176	DXØ
82	2NJ770A	770M	25 *	55	2.0	§J	NSi	BPE					7.8Ø	6.0								M1123	V
83	2NJ771A	770M	40 *	55	4.0	§J	NSi	BPE					10Ø	3.5								M1123	V
84	2SC2490	770M#	90 *	55	10	§J	NSi	BPE	65%	770M	28§§		4.4Ø	55								W201	C
85▼	SD1560	780M	350	65	5.0	§J	NSi	BPA	60%	780M	45§	12 §	8.0♦	90 †								w322	
86▼	SD1561	780M	438	65	21	§J	NSi	BPA	52%	780M	45§	30 §	7.8♦	180 †								M1075	
87▼	SD1562	780M	875	65	36	§J	NSi	BPA	50%	780M	45§	70 §	7.8♦	400 †								M1263	
88▼	SD1562-6	780M	875	65	36	§J	NSi	BPA	50%	780M	45§	70 §	7.8♦	400 †								M1076	
89▼	2SC3015	800MΔ	150m*	10 Δ	50m	§J	NSi	BEP	4.0†	200M	6.0§	2.0m	21									W177	A
90	BF183	800M§	150m	25	15m	§J	NSi	BPL					12		17Ø	35Ø	.33Ø	3.1Ø	500M	10*	3.0m*	TO72	G
91	BF907	800M#	150mØ	20 %	40m#	$S	NSi	F	3.7	800M	15#		20									W97	ET
92	2N6619	800M#	200mØ	12 *	30m	♦S	NSi	B	2.8Ø	800M	6.0	2.0m	10#									W149	E
93	2N6620	800M#	200mØ	12 *	30m	♦S	NSi	B	2.8Ø	800M	6.0	2.0m	10#									W150	E
94	2N6621	800M#	200m	15 *	25m	♦S	NSi	B	6.5Ø	800M	5.0	2.5m	7.5#									W150	E
95♦	2SC2729	800MΔ	200m*	15 Δ	50m	♦J	NSi	BEP	4.0†	200M	6.0§	2.0m	21									W250	Y
96▼	MRF502	800MΔ	200m	35 Δ	50m	§J	NSi	B	4.0	200M	6.0	1.5m	17♦									TO72	G
97	3SK76	800M#	210m*		30m#	$S	NSi	F	4.7Ø	800M	6.0#	10m#	12Ø		10Ø	18Ø	2.5Ø	8.0Ø	800M	6.0#	10m#	C176	DXØ
98	2N918	800M§	300m	30	50m	§J	NSi	BPE	3.0	600M	6.0	1.0m										TO72	G
99	3SK53	800M#	330mØ	20 %	35m#	§J	NSi	F	6.0Ø	800M	10#	20m#	10Ø		3.5Ø	16Ø	2.0Ø	10Ø	800M	10#	20m#	TO72	DXØ
100	ZTX327M	800M§	500m	55	400m	$S	NSi	BPL						350m								S15	A
101	2N3866	800M§	5.0	55	.40	§J	NSi	BPL						0.7								TO39	A
102	D1-12E	800M	5.8	36 Ø	250m	§J		B						1.0								S114	R
103▼	BLW75	800M▼	60	60	12	§J	NSi	PE					8.0	19								S526	
104	8MOB15E	800M	75	36 Ø	8.5	§J	N		50%					15								W282	
105	8MOB25	800M	95	36 Ø	12	§J	N		50%					25								W282	
106♦	SD1410♦	836M#	28	36	5.0	§J	NSi	BPE					8.0Δ	6.0 Δ	2.8Ø	-9.7Ø	2.1Ø	-1.3Ø	836M	12	6.0 Ø	W327	
107▼	SD1410-3	836M#	46	36	7.0	♦J	NSi	BPE					5.2#	15 †	3.0Ø	-4.8Ø	1.6	-2.5Ø	836M	12	15 Ø	W319	

SYMBOLS AND CODES EXPLAINED IN INTERPRETER

10. UHF/MICROWAVE TRANSISTORS

IN ORDER OF:(1)MAX. OSCILLATOR FREQUENCY
(2)MAX. TOTAL PWR(PT) & (3)TYPE No.

LINE No.	[3] TYPE No.	[1] MAX. OSC. FREQ Fmax (Hz)	MAXIMUM RATINGS [2] PT (W)	BVCBO (V)	IC (A)	TEMP CODE	POL & MAT	TYPE & TECH	NOISE FIGURE @ STATED CONDITIONS NF (dB)	@ FREQ (Hz)	@ VCE (V)	@ IC (A)	TYPICAL OPERATING GAIN (S21)2 (dB)	Pout (W)	TYPICAL REFLECTION COEFFICIENTS S11 (Mag)	S11 (deg)	S22 (Mag)	S22 (deg)	@ FREQ (Hz)	@ VCE (V)	@ IC (A)	DWG No.	L E A D	C O D E
1♦	SD1412♦	836M#	46	36	7.0	§J	NSi	BPE					6.0#	18 †	3.0Ø	-4.8Ø	1.6Ø	-2.5Ø	836M	12	15 Ø	W327		
2♦	SD1412-3	836M#	46	36	7.0	§J	NSi	BPE					6.0#	18 †	3.0Ø	-4.8Ø	1.6Ø	-2.5Ø	836M	12	15 Ø	W319		
3♦	SD1418	836M#	46	36	7.0	§J	NSi	BPE					5.2#	15 †	3.0Ø	-4.8Ø	1.6Ø	-2.5Ø	836M	12	15 Ø	W319		
4♦	SD1421♦	836M#	70	36	7.5	§J	NSi	BPE					5.5Δ	25 Δ	3.6Ø	-4.0Ø	2.0Ø	-.40Ø	836M	12	6.5 Ø	W319		
5♦	SD1098	836M#	75	36	10	§J	NSi	BPE					5.0#	25 †	4.9Ø	-5.8Ø	1.4Ø	-3.5Ø	836M	12	25 Ø	W327		
6▼	SD1414	836M	150	36	9.0	§J	NSi	BPE					5.5♦	45 †								W319		
7	DM3-7E	850M		36 Ø	1.0			B						3.0										
8	BF569	850M§	110m	40	30m	§J	PSi	PL	4.5	800M	10	3.0m										TO236		
9	2SC2756	850M§	150m	30	30m	♦J	NSi	BEP	6.5†	200M	10	-3m*	120†									W177	A	
10	BF970	850M§	160m	40	30m	§J	PSi	PL														TO119		
11	2SC2352	850M§	250m	30	30m	♦J	NSi	BEP														TO92	C	
12	TPV593	860M		45		§J							9.0♦		.92	162	.65	-169	860M	25	450m	S518	V	
13▼	CGY20	860M#	1.0		130m	$C	NGA	F	5.5	860M	4.5§	105m	10									TO39		
14▼	CGY20B	860M#	1.0		150m	$C	NGA	F	6.5	860M	4.5§	105m	10									TO39		
15▼	CGY21	860M#	2.0		260m	$C	NGA	F	6.0	860M	4.5§	215m	20♦	20 ♦								TO12		
16▼	CGY21B	860M#	2.0		300m	$C	NGA	F	7.0	860M	4.5§	215m	17♦									TO12		
17	FJ0801-12LL	860M	4.0 *	36	500m	§J	Si	B					11♦	1.2								M1122	♦	
18	UTV005	860M	8.7	45	750m	§J							12									S520		
19	FJ0804-12LL	860M	16 *	36	3.0	§J	Si	B					7.0♦	5.0								M1122	♦	
20	FJ0807B12LL	860M	16 *	36	3.0	§J	Si	B					9.5♦	9.0								M1122	♦	
21	UTV010	860M	17	45	1.5	§J							11									S520		
22	UTV020	860M	19	45	1.2	§J							12									S520		
23♦	BLW98	860M#	21	50	2.0	§J	NSi	BPE					7.0	4.4	1.3Ø	3.7Ø			650M	25	850m	S171	R	
24	UTV040	860M	30	45	2.5	§J							9.0									S520		
25	FJ0812-12LL	860M	33 *	36	5.0	§J	Si	B					5.0♦	13								M1122	♦	
26	FJ0820B12LL	860M	50 *	36	12	§J	Si	B					7.0♦	25								M1122	♦	
27▼	FJ0830-28	860M#	55	55	6.0		NSi	B					7.0Ø	30								W343	RP	
28▼	FJ0850-28	860M#	90	55	12		NSi	B					6.0Ø	50								W343	RP	
29▼	FJ0880-28	860M#	175	55	20		NSi	B					5.0Ø	80								W343	RP	
30	CD3449	866M	5.0	36 Ø	250m	§J		B						300m								W132		
31	D1-12B	866M	5.8	36 Ø	250m	§J		B						1.0								S114	R	
32	D1-7E	866M	6.0	36 Ø	400m	§J		B						1.0								W132		
33	D2-12B	866M	14	36 Ø	600m	§J		B						2.0								S114	R	
34	D2-12E	866M	14	36 Ø	600m	§J		B						2.0								S114	R	
35	DMB5-12	866M	29	36 Ø	2.0	§J		B						5.0									♦	
36	DMB15-12	866M	70	36 Ø	6.0	§J		B						15									♦	
37	DBL45-12*	866M	75	36 Ø	12	§J								45								W198		
38	DBL60-12	866M	97	36 Ø	4.0	§J		B						60										
39	DMB20-12	866M	97	36 Ø	6.0	§J		B						20									♦	
40	DMB30-12	866M	109	36 Ø	10	§J		B						30									♦	
41	MRF841	870M§	25m	36 *	2.0m#	§J	NSi		65%	870M	12§	5.0mØ	10Ø	5.0				-152	1.0G	5.0#	m#	S517	R	
42♦	MRF838	870M#	2.5	36 Ø	300m	$S	NSi	B	60%	870M	12§	1.0 Ø	7.5Ø	1.0	2.4Ø	5.6Ø	16.1Ø	-17 Ø	870M	12§	1.0 Ø	W124	R	
43♦	MRF838A	870M#	2.5	36 Ø	300m	$S	NSi	B	60%	870M	12§	1.0 Ø	7.5Ø	1.0	2.4Ø	5.6Ø	16.1Ø	-17 Ø	870M	12§	1.0 Ø	S123	R	
44▼	SD1402	870M	3.0	36	300m	§J	NSi	BPE					8.0♦	300m†								W192		
45♦	SD1409	870M#	8.7	36	600m	§J	NSi	BPE					8.0#	2.0 †	2.97Ø	-13 Ø	6.6Ø	4.3 Ø	870M	12	2.0 Ø	S533		
46♦	MRF870	870M#	10	36 Ø	750M	$S	NSi	B	60%	870M	12§	3.0 Ø	5.6♦	3.0 Δ	2.1Ø	5.7 Ø	14.2Ø	-12 Ø	870M	12§	3.0 Ø	W124	R	
47♦	MRF870A	870M#	10	36 Ø	750M	$S	NSi	B	60%	870M	12§	3.0 Ø	5.6♦	3.0 Δ	2.1Ø	5.7 Ø	14.2Ø	-12 Ø	870M	12§	3.0 Ø	S123	R	
48	J03401	870M	25	36	1.8	$S			55%				7.0♦									W193	RK	
49♦	MRF840♦	870M#	40	36 Ø	3.8	$S	NSi	B	55%	870M	12§	10 Ø	7.0♦	10	2.1Ø	6.4 Ø	2.5Ø	0.0Ø	870M	12§	10 Ø	W237	RK	
50	J03402	870M	55	36	3.5	$S			55%				6.5♦									W193	RK	
51♦	MRF842♦	870M#	80	36 Ø	7.6	$S	NSi	B	55%	870M	12§	20 Ø	7.0♦	20	1.4Ø	4.4Ø	1.8Ø	1.7Ø	870M	12§	20 Ø	W237	RK	
52	J03403	870M	100	36	6.5	$S			55%				5.4♦									W193	RK	
53♦	MRF844♦	870M#	115	36 Ø	10	$S	NSi	B	55%	870M	12§	30 Ø	6.0♦	30	1.0Ø	4.4Ø	1.3Ø	2.6Ø	870M	12§	30 Ø	W237	RK	
54	J03404	870M	150	36	9.0	$S			55%				4.8♦									W193	RK	
55♦	MRF846♦	870M#	150	36 Ø	14	$S	NSi	B	55%	870M	12§	40 Ø	5.2♦	40	1.1Ø	5.0Ø	1.1Ø	2.7Ø	870M	12§	40 Ø	W237	RK	
56	J02058	870M	200	30 *	14	§J			60%					100								W299	A	
57▼	SD1401	875M	83	55	5.0	§J	NSi	BPL					8.5♦	30 †								W319		
58	2SC1070-B	900M§	20m	30	20m	♦J	NSi	EP	4.5	900M	10*	3.0m*	14*									W183	Z	
59	AF367	900M#	60m	15 *	10m	#J	PGe		6.0	900M	10*	2.0m*	12		18Ø	27Ø	0.5Ø	3.5Ø	900M	10*	2.0m*	W49	A	
60	2N2998	900M§	75m	15	200m	#S	PGe		8.0Ø	1.0G	6.0*	3.0m*										TO72	G	
61	2SC1070♦	900M§	150mØ	30	20m	§J	NSi	B	4.5	900M	10	3.0m	15Ø		26Ø	-44Ø	1.2Ø	2.3Ø	900M	10*	3.0m	W102	U	
62♦	BF967	900M▼	160m	30	20m	§J	PSi	BPL	4.0	800M	10*	3.0m*	13									W181		
63	BF970#	900M§	160m	40	30m	§J	PSi	PE	2.6	200M	10*	3.0m*										W181	A	
64▼	2SC2468	900MΔ	200m*	30 Δ	50m	♦J	NSi	BPE					40%									W250	Γ	
65▼	3SK80	900M	200m	20 %	50m#	♦	NSi	F	6	900G	15#	7m#	10♦									W350		
66♦	BF767	900M▼	200m	30	20m	§J	PSi	PL	4.0	800M	10*	3.0m*	13▼									W174	A	
67	ME3002	900M▼	200m	30			N	B					200†									TO106		
68	2SC1812	900M#	210m*	22	20m	#J	NSi	B	3.7†	800M	10*	3.0	21%		40Ø		1200Ø					TO131	AC	
69♦	2SC1907▼	900MΔ	300m*	30 Δ	50m	♦J	NSi	BPE					40%	8.0mØ	10Ø	-16Ø	1.8Ø	7.4Ø	900M	10*	10m	TO92	A	
70	3SK70	900M#	360mØ	20 %	50m#	§J	NSi	F	6.0Ø	900M	15#	7.0m#	18Ø		2.0Ø	10Ø	.50Ø	6.0Ø	900M	15#	7.0m#	TO72	DXØ	
71▼	MM8001	900MΔ	3.5	40 Δ	400m	§J	NSi	B	2.7	200M	15	10m	11♦									TO39	A	
72	BLW17	900M§	5.5	36	500m	§J	NSi	BPL	70%	470M	12§	400m§		2.1								TO131		
73	BLW39	900M§	5.5	50	500m	§J	NSi	BPL	70%	470M	12§	400m§		2.1								TO131		
74♦	MRF890	900M#	7.0	55 Ø	500m	$S	NSi	BAL	60%	900M	24§	2.0 Ø	10♦	2.0	2.9Ø	6.2 Ø	20.0Ø	-46 Ø	900M	24§	2.0 Ø	S123	R	
75▼	9BSE2	900M	8.0	45	750m	§J	N	BPA	55%	900M	25*		10%	2.0 †								S535		
76▼	LEE0030X(A)	900M#	20	45	1.0	§J	NSi	PE					8.5	3.0								S90c		
77▼	9BSE10	900M	27	50	3.0	§J	N	BPA	55%	900M	25*		20%	10 †								W332		
78	CD2434	900M#	30	50 Ø	1.0	§J	S55	B	30%	900M	25§	400m	10Δ	3.0 Δ	3.0Ø	6.0Ø	10§	12§	900M	25§	400m	T155	R	
79▼	LEE0060X(A)	900M#	30	45	2.0	§J	NSi	PE					7.5	6.0								S90c		
80♦	MRF892	900M#	50	50 Ø	2.5	$S	NSi	BAL	60%	900M	24§	14 Ø	9.5♦	14	1.0Ø	4.63Ø	3.20Ø	-3.6Ø	900M	24§	14 Ø	W237	RK	
81♦	BLX95	900M▼	76	65	3.0	§J	NSi	PE	60%				11	40								S173		
82▼	9BSE35	900M	100	45	6.0	§J	N	BPA	55%	900M	25*		10%	35 †								W332		
83♦	MRF894	900M#	115	50 Ø	7.0	$S	NSi	BAL	60%	900M	24§	30 Ø	8.5♦	30	1.6Ø	4.4 Ø	1.2Ø	1.1 Ø	900M	24§	30 Ø	W237	RK	
84▼	9BSE55	900M	145	50	18	§J	N	BPA	55%	900M	25*		20%	55 †								W333		
85▼	SD1560-1	900M	350	65	5.0	§J	NSi	BPA	55%	900M	45§	16 §	7.2♦	80 †								W322		
86▼	SD1561-1	900M	438	65	21	§J	NSi	BPA	52%	900M	45§	25 §	7.0♦	150 †								M1075		
87▼	SD1562-1	900M	875	65	36	§J	NSi	BPA	45%	900M	45§	60 §	7.6♦	350 †								M1075		
88▼	SD1562-7	900M	875	65	36	§J	NSi	BPA	45%	900M	45§	60 §	7.6♦	350 †								M1076		
89	MA42057-510	1.0G#		20	40m		NSi	BPL	3.7	1.0G		3.0m	10#									W115	R	
90	MA42057-511	1.0G#		20	40m		NSi	BPL	3.7	1.0G		3.0m	10#									W29e	R	
91♦	SD1546	1.0G		65	11	§J	NSi	BPA					100%	75 †								S503		
92♦	SD1546-1	1.0G		65	11	§J	NSi	BPA					100%	75 †								W323		
93♦	SD1546-2	1.0G		65	11	§J	NSi	BPA					100%	75 †								W326		
94♦	SD1547	1.0G		65	11	§J	NSi	BPA					6.3#	150 †								S503		
95▼	SD1547-1	1.0G		65	11	§J	NSi	BPA					6.3♦	150 †								W323		
96	2SC800	1.0G§	100mØ	30	10m	§J	NSi	BEP	5.0	900M	6.0	2.0m			55Ø	-10Ø	2.2Ø	4.7Ø	900M	5.0	2.0m*	W106	E	
97	2SC2758	1.0G§	150m	30	20m	♦J	NSi	B	2.8†	900M	10*	-3m*	14♦									W177	A	
98♦	2SC3098	1.0G*	150m*	30	50m	♦J	NSi	BPE	3.0†	1.0G	10	5.0m	9.0		35	1.0	90	-35	1.0G	10	10m	Y236a	C	
99♦	2SC3099	1.0G*	150m*	20	30m	♦J	NSi	BPE	2.5†	1.0G	10	3.0m	9.5		33	8.0	97	-50	1.0G	10	10m	Y236a	C	
100	2N3572	1.0GΔ	200mØ	25	50m	§S	NSi	B	6.0	450M	6.0*	2.0m*										TO722	G	
101	2N6304	1.0G#	200m	30	50m	§S	NSi	B	4.5Ø	450M	5.0	2.0m	24†									TO72	G	

10. UHF/MICROWAVE TRANSISTORS

IN ORDER OF:(1)MAX. OSCILLATOR FREQUENCY (2)MAX. TOTAL PWR(PT) & (3)TYPE No.

LINE No.	[3] TYPE No.	[1] MAX. OSC. FREQ Fmax (Hz)	MAXIMUM RATINGS [2] PT (W)	BVCBO (V)	IC (A)	TEMP CODE	POL & MAT	TYPE & TECH	NOISE FIGURE @ STATED CONDITIONS NF (dB)	@ FREQ (Hz)	@ VCE (V)	@ IC (A)	TYPICAL OPERATING GAIN (S21)2 (dB)	Pout (W)	TYPICAL REFLECTION COEFFICIENTS S11 (Mag)	S11 (deg)	S22 (Mag)	S22 (deg)	@ FREQ (Hz)	@ VCE (V)	@ IC (A)	DWG No.	LEAD CODE
1	2N6305	1.0G#	200m	30	50m	§S	NSi	B	5.5Ø	450M	5.0	2.0m	24†									TO72	G
2	2SA983	1.0G§	200m	30	20m	♦J	PSi		4.5	900M	12	3.0m*	14#									W183	Z
3	2SC1070-1	1.0G§	200m	30	20m	♦J	NSi	B	2.8†	900M	10*	-3m*	14♦									W183	Z
4	2SC1070-2	1.0G§	200m	30	20m	♦J	NSi	B	2.8†	900M	10*	-3m*	14♦									W183	Z
5	2N1195	1.0G	225m	30		#S	PGe	DF														TO29	A
6	MMT8006	1.0G§	225mØ	15		†J	NSi	BAN	3.5Ø	200M	1.0	1.0m	18Ø		1.9Ø	3.2Ø	.35Ø	1.6Ø	300M	1.0	1.0m	W6a	C
7	MMT8007	1.0G§	225mØ	15		†J	NSi	BAN	4.0Ø	200M	1.0	1.0m	18Ø		1.9Ø	3.2Ø	.35Ø	1.6Ø	300M	1.0	1.0m	W6a	C
8	MMT8008	1.0G§	225mØ	8.0		†J	NSi	BAN	4.0Ø	200M	1.0	1.0m	18Ø		1.9Ø	3.2Ø	.35Ø	1.6Ø	300M	1.0	1.0m	W6a	C
9	2SA1223	1.0G	250m	-20	-50m	§J	PSi	BEP	4.0	1.0G	-10	3.0m			.022	148	.42	-122	1.0G	-10	15m	W185	S
10▼	2SC387AGTM																						
		1.0G▼	250m*	30	50m	♦J	NSi	BPE					20%									TO92	B
11	2SC1254	1.0G§	250mØ	45	30m	§J	NSi	BEP	3.5	500M	6.0	2.0m	13*									TO72	G
12♦	2SC2753	1.0G*	300m*	17	70m	$J	NSi	BPE	1.7	1.0G	10	5.0m	16		42	7.0	70	-45	1.0G	10	20m	TO92	C
13	NE71111	1.0G§	300m	50	100m	$J	PSi	S					6									TO18	A
14▼	2SC2471	1.0GΔ	310m*	30 Δ	50m	$J	NSi	BEP					20%									TO92	C
15	MA42055-511																						
		1.0G#	350m	20	40m	§J	NSi	BPL	4.5Ø	1.0G	6.0	3.0m	5.0	1.0m*								W29e	R
16	MA42056-511																						
		1.0G#	350m	20	40m	§J	NSi	BPL	4.5Ø	1.0G	6.0	3.0m	5.0	1.0m*								W29e	R
17	BFX59	1.0G§	370m	30	100m	§J	NSi	BPE	3.4	200M	10	3.0m	200%									TO72	G
18	BFX59F	1.0G§	370m	30	100m	§J	NSi	BPE	3.4	200M	10	3.0m	200%									TO72	G
19	2N6603	1.0G#	400m†	25	30m	§S	NSi	B	2.5Ø	1.0G	10	5.0m	15#									W29a	RØ
20▼	MD4957	1.0GΔ	400m	30 Δ	30m	§J	PSi	B	5.0†	1.0G	10	2.0m	13♦									M1247	F
21	MA42055-510																						
		1.0G#	450m	20	40m	§J	NSi	BPL	4.5Ø	1.0G	6.0	3.0m	5.0	1.0m*								W115	R
22	MA42056-510																						
		1.0G#	450m	20	40m	§J	NSi	BPL	4.5Ø	1.0G	6.0	3.0m	5.0	1.0m*								W115	R
23	2N6604	1.0G#	500m†	25	50m	§S	NSi	B	3.0Ø	1.0G	10	5.0m	15#									W29a	RØ
24	BFS85	1.0G§	550m	25	50m	§J	NSi	BPL	6.0	500M	5.0	2.0m										M156f	C
25	BFS88	1.0G§	550m	30	50m	§J	NSi	BPL	5.0	500M	5.0	2.0m	9.0*	175m					500M	13	22m	M156f	C
26	2SC1044	1.0G§	700mØ	45	30m	§J	NSi	BEP	3.4	500M	6.0	1.5m	12*									TO72	G
27	LBE1001T	1.0G	720m	35	160m	§J	NSi	B		1.0G	20	35m	10	100m								W263	F
28♦	LCE1001T	1.0G	720m	35	160m	§J	NSi	B		1.0G	20	35m	10	100m								S530	F
29♦	MM8009	1.0G#	1.0	45 Δ	400m	§S	NSi	B	35%	1.0G	28	316m§	20%	900m†								TO39	A
30	MS175JE	1.0G*	1.0	30	100m	§S	NSi	B	2.5	500M	9.0	30m	14		.80	-153	.61	-24	500M	9.0	5.0m	W21	RØ
31	MS175TE	1.0G*	1.0	30	100m	§S	NSi	B	2.5	500M	9.0	30m	14		.80	-153	.61	-24	500M	9.0	5.0m	W5b	CØ
32	HXTR-3002	1.0G	1.4	45	100m	▼J	N	B	29%	1.0G	18	30m	14▼	22 *	.629	-111	.641	-43	1.0G	18	30m	u53	
33	PEE1000U	1.0G#	1.9 ▼				S75	B	52%				8.0	1.0								T75h	
34	PDE1000U	1.0G#	2.5	35	0.5m	§J	NSi	DF	52%	1.0G	28											T75h	
35	LBE1004R	1.0G	3.0	30	400m	§J	NSi	B		1.0G	15	100m	8	400m								W263	F
36♦	LCE1004R	1.0G	3.0	30	400m	§J	NSi	B		1.0G	15	100m	8	400m								S530	F
37	LKE1004R	1.0G	3.0	30	400m	§J	NSi	B		1.0G	15	100m	8	310m								W256	F
38▼	LT1839	1.0G§	3.0	120	300m	§J	NSi	BPA					45%									TO39	A
39	PEE1001U	1.0G#	3.3 ▼				N	B	60%				6.4	2.0								S75	
40	2N5943	1.0G#	3.5	40	400m	§S	NSi	B	8.0Ø	200M	15	35m	12†									TO39	A
41	41024$	1.0G#	3.5	55	400m	§J	NSi	BOV					6.0%	1.0								TO39	AØ
42▼	MM8002	1.0GΔ	3.5	40 Δ	400m	§J	NSi	B	2.7	200M	15	10m	11♦									TO39	A
43♦	PDE1001T	1.0G#	3.5	45	250m	§J	NSi	B		1.0G	18§		5	1								S90c	V
44	PEE1001T	1.0G	3.5	45	250m	§J	NSi	B		1.0G	18§		5	1.0								W267	V
45	2N5944	1.0G	5.0	36	400m	§S	NSi		60%	470M	12§		9.0♦									S90	R
46	D1/2-12	1.0G	5.0	50 Ø	250m	§J		B						500m								S114	R
47♦	PDE1001U	1.0G#	5.0	39	1.0m	§J	NSi	DF	60%	1.0G	28		6.4	2.0								S90c	
48	46101	1.0G	5.5	60 Ø	.40	§J	N		50%	1.0G	28§			1.0								S520	V
49▼	SD1520	1.0G	5.8	40	250m	♦J	NSi	BPA	45%	900M	45§	60 §	7.6♦	350 †								W213	
50	LBE1010R	1.0G	6.0	30	800m	§J	NSi	B		1.0G	15	200m	7	800m								W263	F
51♦	LCE1010R	1.0G	6.0	30	800m	§J	NSi	B		1.0G	15	200m	7	800m								S530	F
52	PDE1003U	1.0G#	7.0	39	2.0m	§J	NSi	DF	54%	1.0G	28											T75h	
53	PEE1003U	1.0G#	8.0 ▼				N	B	52%				6.2	4.2								S75	
54	2SC1333	1.0G#	10	45	1.0	§J	S59	BDE	47%	1.0G	18§	1.0 §	5.0Ø	3.0								T59m	S
55	46104	1.0G	10	50 Ø	.50	§J	N		60%					4.0								S520	V
56	CD3872	1.0G	10	50 Ø	500m			B						4.0								S155	R
57	D4-28G	1.0G	10	50 Ø	500m			B					7.5	4.0								W24	A
58	2SC1334	1.0G#	11	50	1.0	§J	NSi	BDE	57%	1.0G	24§	5.0 Ø	4.0Ø	5.0								S59	S
59	2SC1425	1.0G#	11	45	1.0	§J	NSi	BDE	47%	1.0G	18§	3.0 Ø	5.0Ø	3.0								S59	S
60	NE1005E	1.0G#	11	45	1.0	§J	NSi	BE	70%	1.0G	18§	2.0 §	4.8Ø	5.0	3.0Ø	13Ø	10Ø	5.0Ø	1.0G	18§	2.0 §	T160	R
61	PEE1005U	1.0G#	13 ▼				S75	B	58%				5.8	7.6								T75h	
62	2N5945	1.0G	15	36	800m	§S	NSi		60%	470M	12§		8.0♦									S90	R
63	PDE1010U	1.0G#	20	45	10m	§J	NSi	DF	68%	1.0G	28											T75h	
64	PEE1010U	1.0G#	20	45	10m	§J	NSi	DF	68%	1.0G	28											T75h	
65	NE1010E	1.0G#	22	45	2.0	§J	NSi	BE	70%	1.0G	18§	4.0 §	4.5Ø	10	2.0Ø	12Ø	8.0Ø	1.0Ø	1.0G	18§	4.0 §	S160	R
66	0510-10	1.0G	30	50 Ø	1.0	§J	N		50%	1.0G	28§			10								W285	
67	46110	1.0G	30	50 Ø	1.0	§J	N		60%					10								S520	V
68	D12-28G	1.0G	30	50 Ø	1.5			B						12								W24	A
69	PKB12010U	1.0G#	30 ▼				N	B	50%				12	15								W145a	
70	NEM1020♦	1.0G#	35	40	3.6	§J	NSi	BE	50%	890M	20§	5.0 §	6.0Ø	20								W151	A
71	2N5946	1.0G	37	36	2.0	§S	NSi		60%	470M	12§		6.0♦									S90	R
72♦	BLX69A	1.0G§	50	36	3.5	§J	NSi	B	65%	470M	12§	17 Ø	4.0	20	1.2Ø	4.5Ø	163Ø	-35Ø	470M	13§	2.2	S72m	V
73	46120	1.0G	60	50 Ø	2.0	§J	N		60%	1.0G	28§			20								S520	V
74	CD2435	1.0G	60	50 Ø	2.0			B						22								S155	R
75	0510-25	1.0G	65	60 Ø	3.0	§J	N		50%	1.0G	28§			30								W285	
76	MKB12040W	1.0G#	80				N	B	47%				11	38								W145a	
77	NEM1040♦	1.0G#	80	40	7.2	§J	NSi	BE	50%	890M	20§	10 §	6.0Ø	40	3.0Ø	1.0Ø	2.0Ø	1.0Ø	890M	20§	10 §	W151	A
78	BAL0710-50																						
		1.0G	117	50 Ø	10			B						50									
79	PDE1005U	1.0G#	125	39	4.0m	§J	NSi	DF	58%	1.0G	28											T75h	
80	BAL0710-75																						
		1.0G	175	50 Ø	15			B						75									
81	FJ101E	1.0GΔ	200 *	20	70m	§J	NSi	BPE	3.0†	1.0G	6.0	10m	13*		.618	-178	.382	-56	1.0G	6.0	10m	W238	V
82	MKB12100W	1.0G#	209 ▼				N	B	43%				8.5	90								W145a	
83	CDR075	1.0G	225	60 Ø	7.0	§J	N		45%	1.0G	50*		7.0	75								W287	
84	DME300	1.0G	900	60 Ø	18			B						350									
85♦	SD1541	1.0G	1.4k	65	22	§J	NSi	BPA					7.5♦	500								M1075	
86	CDR500	1.0G	1.5k	60 Ø	35	§J	N		40%	1.0G	50*			500								W287	
87	BLX94C	1.1G▼		30 *	6.0	§J	NSi	BPE	55%	470M	28		6.5♦	25								S171	S
88	2SC287A-B	1.1G§	20m	35	20m	♦J	PSi															W184	C
89	2N2999	1.1G§	75m	15	200m	#S	PGe		7.0Ø	1.0G	6.0*	2.0m*										TO72	G
90	2SC288A1▼	1.1G§	150mØ	35	20m	$J	NSi	BEP							26Ø	-33Ø	.44Ø	3.3Ø	300M	10*	5.0m*	W106	E
91	2SC288A▼	1.1G§	150mØ	35	20m	$J	NSi	BEP							25Ø	-35Ø	.15Ø	1.8Ø	300M	10*	5.0m*	W106	E
92▼	2SC3016	1.1GΔ	150m*	10 Δ	50m	$J	NSi	BEP	4.0†	200M	6.0§	2.0m	90									W177	A
93♦	2SC3121	1.1GΔ	150m*	30	50m	♦J	NSi	BPE					150%		18Ø	-12 Ø	1.3Ø	5.7 Ø	900M	10	-2m	Y236a	C
94	BF968	1.1G	160m	40	30m	$J	PSi	PL														TO119	
95	2SC288A1B	1.1G§	200m	35	20m	♦J	NSi	BEP														W219	C
96	2SC2757	1.1G▼	200m	30	50m	$J	NSi	BEP															
97▼	2SC2805	1.1GΔ	200m*	30	50m	♦J	NSi	BPE					150%									W350	D
98	BF799	1.1G▼	220m	30	50m	$J	NSi	BPL	4.5Ø	200M	10	20m										TO236	A
99	2SC1395	1.1G§	250m	30	20m	♦J	NSi	BEP														TO92	B
100	2SC1730▼	1.1G§	250mØ	30	50m	♦J	NSi	BEP							27Ø	-38Ø	.65Ø	4.2Ø	400M	10*	5.0m	TO92	B
101	JE7001	1.1G§	400m	30	50m	$S	NSi	EP														218d	C
102	D10P	1.1G	11	50 Ø	1.0	§J		B						10								W127	C
103♦	BLX94A	1.1G▼	50	30 *	2.5	§J	NSi	PE	55%				6.0*	25								S89	R

10. UHF/MICROWAVE TRANSISTORS

IN ORDER OF:(1)MAX. OSCILLATOR FREQUENCY
(2)MAX. TOTAL PWR(PT) & (3)TYPE No.

LINE No.	3 TYPE No.	1 MAX. OSC. FREQ Fmax (Hz)	MAXIMUM RATINGS 2 PT (W)	BVCBO (V)	IC (A)	TEMP CODE	POL & MAT	TYPE & TECH	NOISE FIGURE @ STATED CONDITIONS NF (dB)	@ FREQ (Hz)	@ VCE (V)	@ IC (A)	TYPICAL OPERATING GAIN (S21)2 (dB)	Pout (W)	TYPICAL REFLECTION COEFFICIENTS S11 (Mag)	S11 (deg)	S22 (Mag)	S22 (deg)	@ FREQ (Hz)	@ VCE (V)	@ IC (A)	DWG No.	LEAD CODE
1	MK312040WD																						
		1.1G	60	55	3	§J	NSi	B		1.1G	45§		8.5	32								W256	E
2	MKB12040WD																						
		1.1G	60	55	3	§J	NSi	B		1.1G	45§		9	38								W256	
3	MKB12040WS																						
		1.1G	60	55	3.0	§J	NSi	B		1.1G	45§		11	37								W256	E
4	MR1011B40W																						
		1.1G	60	55	3	§J	NSi	B		1.1G	45§		8.5	32								W271	E
5	MKB12100WS																						
		1.1G	140	50	6.0	§J	NSi	B		1.1G	45§		7.2	65								W256	E
6	MKB12140W	1.1G	190	55	8.0	§J	NSi	B		1.1G	45§		9	100								W256	E
7	MO1011B150Y																						
		1.1G	400	65	10	§J	NSi		40%				7.5♦									W259	
8	TPR175	1.1G	400	5.5 Ø	10	§J	N		40%	1.1G	50§			175								W291	
9	MR1011B150Y																						
		1.1G	500	65	13	§J	NSi	B		1.1G	50§		7	150								W271	E
10	MRB12175YR																						
		1.1G	500	65	12	§J	NSi	B		1.1G	50§		8.5	175								W271	E
11	TSP150	1.1G	500	60 Ø	10			B						150								W127	C
12♦	MRF1150M	1.1G	583	70 Δ	12	$S	NSi	B	33%	1.0G	50§	150 Ø	8.7♦	150	3.5Ø	5.7 Ø	8.1Ø	8.1 Ø	1.0G	50§	150 Ø	W255	E
13	MO1011B250Y																						
		1.1G	800	65	20	§J	NSI		40%				6.6♦									W259	
14	DME375A	1.1G	875	55 Ø	30	§J	N		40%	1.0G	50§			375								W285	
15	TPR400	1.1G	875	55 Ø	30	§J	N		40%	1.1G	50§			400								W291	
16	TPR400A	1.1G	875	55 Ø	30	§J	N		40%	1.1G	50§			400								W291	
17	MR1011B375Y																						
		1.1G	950	65	25	§J	NSi	B		1.1G	50§		7	375								W257	E
18	MRB12375Y	1.1G	950	65	25	§J	NSi	B		1.1G	50§		7.5	400								W257	E
19	DME250*	1.1G	1.0k	60 Ø	20									250								W127	A
20	MR1011B300Y																						
		1.1G	1.0k	65	25	§J	NSi	B		1.1G	50§		6	280								W271	E
21	MRB12350YR																						
		1.1G	1.0k	65	25	§J	NSi	B		1.1G	50§		7	350								W271	E
22♦	MRF1250M	1.1G	1.1k	70 Δ	24	$S	NSi	B	33%	1.0G	50§	250 Ø	7.2♦	250	5.2Ø	6.2 Ø	2.0Ø	7.5 Ø	1.0G	50§	250 Ø	W255	E
23♦	MRF1325M	1.1G	1.1k	70 Δ	24	$S	NSi	B	33%	1.0G	50§	325 Ø	7.2♦	325	5.2Ø	6.2 Ø	2.0Ø	7.5 Ø	1.0G	50§	325 Ø	W255	E
24▼	SD1542	1.1G	1.3k	65	40	§J	NSi	BPA					6.7♦	700								M1076	
25♦	SD1541-1	1.1G#	1.4k	65	22	§J	NSi	BPA					6.5#	400 †	3.5Ø	-2.2Ø	1.5Ø	-1.5Ø	1.1G	50§	440 Ø	M1076	
26	TSP400	1.1G	1.4k	60 Ø	27			B						400								W127	C
27	DME500	1.1G	1.7k	55 Ø	40	§J	N		35%	1.0G	50§			500								W285	
28	TPR500A	1.1G	1.7k	55 Ø	40	§J	N		35%	1.1G	50§			500								W289	
29	MRB12900Y	1.1G	2.0k	65	50	§J	NSi	B		1.1G	50§		7.3	800								W258	H
30	MS1011B700Y																						
		1.1G	2.0k	65	50	§J	NSi	B		1.1G	50§		6	600								W258	H
31♦	MSB12900Y	1.1G	2.0k	35 *	50	§J	NSi	B		1.1G	50§		7.3	800								W258	H
32▼	SD1543	1.1G	2.7k	65	80	§J	NSi	BPA					6.7♦	1.3k								W325	
33	TSP1000A	1.1G	2.7k	60 Ø	54		N	B						1.0kΔ								W179	
34	TSP1000B	1.1G	2.7k	60 Ø	54		N	B						1.0kΔ								W179	
35	SD1522	1.2G		45	500m		NSi	PA					9.0#	750m								S503	
36▼	SD1522-1	1.2G#		45	5.8	§J	NSi	BPA					9.0♦	1.2 †								W323	
37▼	SD1522-8	1.2G#		45	5.8	§J	NSi	BPA					8.0♦	1.2 †								W322	
38▼	SD1522-9	1.2G#		45	5.8	§J	NSi	BPA					9.0♦	1.2 †								W322	
39	SD1538-3	1.2G#		65	11	§J	NSi	PA					8.6♦	220								M1075	A
40	SD1538#	1.2G#		65	11	§J	NSi	PA					7.5♦	175								M1075	A
41	SD1540	1.2G#		65	22	§J	NSi	PA					7.2♦	365								M1075	A
42	SD1540-1	1.2G#		65	22	§J	NSi	PA					7.2♦	365								M1075	A
43	2N3571	1.2GΔ	200mØ	25	50m	§S	NSi	B	4.0	450M	6.0*	2.0m*										TO72	G
44♦	2SC2730	1.2GΔ	200m*	15 Δ	50m	♦J	NSi	BEP					110%									W250	T
45♦	BFX89	1.2G▼	200m	15 *	50m	§J	NSi	BEP	6.5☑	500M	5.0	2.0m	19#		0.18	154	0.76	-35	1.0G	10	25m	TO72	G
46	SD1375#	1.2GΔ	200m	30 *			P		3.5☑	450M		2.0m	17♦									TO72	
47	2SC2144♦	1.2G*	210m*	15	20m	#J	NSi	B	1.4	800M	4.0*	3.0m*	4.5		.75	140	1.03	33	1.2G	4.0*	3.0m*	W66b	Z
48	BFQ17	1.2G§	1.0	40	300m	$J	NSi	PL					16§									M166	A
49	MZZ0912B300Y																						
		1.2G	1.2	65	28	§J	NSi	B		1.2G	50§		7	300								W269	E
50	A210	1.2G§	1.5	20 *	150m		N	B	6.0	200M		30m	16*									TO39	A
51♦	BFW16A	1.2G§	1.5	40	150m	§J	NSi	BPE	6.0	200M	15	30m	1.6#									TO39	A
52♦	BLX91A	1.2G▼	4.0	65	400m	§J	NSi	PE	60%				4.0	1.4								S89	R
53	D1-28	1.2G	5.0	50 Ø	250m			B						1.0								W52†	R
54▼	SD1520-1	1.2G#	5.8	40	250m	§J	NSi	BPA					9.5♦	250m†								W323	
55▼	SD1520-8	1.2G#	5.8	40	250m	§J	NSi	BPA					9.5♦	250m†								W322	
56♦	BLX92A	1.2G▼	6.0	65	700m	§J	NSi	PE	66%				11*	3.0								S89	R
57♦	BLX96	1.2G▼	6.0	40	400m	§J	NSi	PE					6.0*	500m								S89	R
58♦	MRF1000MA	1.2G	7.0	50 Δ	200m	$S	NSi	B					12♦	200m	0.78	159	0.59	-103	1.2G	18	100m	S165	R
59♦	MRF1000MB	1.2G	7.0	50 Δ	200m	$S	NSi	B					12♦	200m	0.78	159	0.59	-103	1.2G	18	100m	W170	R
60▼	MRF1000MC	1.2G	7.0	50 Δ	200m	$S	NSi	B					10Δ	200mΔ	0.78	159	0.59	-123	1.2G	18	100m	W318	E
61♦	MRF1002MA	1.2G	7.0	50 Δ	250m	$S	NSi	B	45%	1.0G	35§	2.0	12♦	2.0	14Ø	27 Ø	37Ø	32.5Ø	1.2G	35§	2.0 Ø	S165	Z
62♦	MRF1002MB	1.2G	7.0	50 Δ	250m	$S	NSi	B	45%	1.0G	35§	2.0	12♦	2.0	14Ø	27 Ø	37Ø	32.5Ø	1.2G	35§	2.0 Ø	W170	Z
63▼	MRF1002MC	1.2G	7.0	50 Δ	250m	$S	NSi	B					10Δ	2.0 #								W318	E
64♦	MRF1004MA	1.2G	7.0	50 Δ	250m	$S	NSi	B	45%	1.0G	35§	4.0 Ø	11♦	4.0	16Ø	29.5Ø	11Ø	23 Ø	1.2G	35§	4.0 Ø	S165	Z
65♦	MRF1004MB	1.2G	7.0	50 Δ	250m	$S	NSi	B	45%	1.0G	35§	4.0 Ø	11♦	4.0	16Ø	29.5Ø	11Ø	23 Ø	1.2G	35§	4.0 Ø	W170	Z
66▼	MRF1004MC	1.2G	7.0	50 Δ	250m	$S	NSi	B	45%	1.0G	35§	4.0 Ø	10Δ	4.0 #								W318	E
67♦	SD1522-2	1.2G#	8.0	45	500m	§J	NSi	BPA					9.0#	750m†								S503	
68▼	SD1522-3	1.2G#	8.0	45	500m	§J	NSi	BPA					10♦	1.2 †								W323	
69	D3-28	1.2G	10	50 Ø	500m			B						3.0								S155	R
70♦	SD1007-1	1.2GΔ	10	40	800m	§J	NSi	BPE					150%									TO117	
71♦	MRF1008MA	1.2G	11	50 Δ	500m	$S	NSi	B	45%	1.0G	35§	8.0 Ø	12♦	8.0	3.0Ø	20 Ø	23Ø	-20 Ø	1.2G	35§	8.0 Ø	S165	Z
72♦	MRF1008MB	1.2G	11	50 Δ	500m	$S	NSi	B	45%	1.0G	35§	8.0 Ø	12♦	8.0	3.0Ø	20 Ø	23Ø	-20 Ø	1.2G	35§	8.0 Ø	W170	Z
73▼	MRF1008MC	1.2G	11	50 Δ	500m	$S	NSi	B	45%	1.0G	35§	8.0 Ø	10Δ	8.0 #								W318	E
74♦	SD1524	1.2G#	11	45	500m	§J	NSi	BPA					9.0#	2.0 †								S503	
75▼	SD1524-1	1.2G#	11	45	500m	§J	NSi	BPA					10♦	3.0 †								W323	
76♦	BLX93A	1.2G▼	12	65	1.0	§J	NSi	PE	75%				9.0*	8.0								S89	Y
77♦	BLX97	1.2G▼	12	40	800m	§J	NSi	PE					5.0*	1.0								S89	R
78♦	MRF1015MA	1.2G	17	60 Δ	1.0	$S	NSi	B	35%	1.0G	50§	15 Ø	12♦	15	5.5Ø	11.5Ø	12.4Ø	-12 Ø	1.0G	50§	15 Ø	S165	Z
79♦	MRF1015MB	1.2G	17	60 Δ	1.0	$S	NSi	B	35%	1.0G	50§	15 Ø	12♦	15	5.5Ø	11.5Ø	12.4Ø	-12 Ø	1.0G	50§	15 Ø	W170	Z
80▼	MRF1015MC	1.2G	17	60 Δ	1.0	$S	NSi	B	35%	1.0G	50§	15 Ø	10Δ	15 #								W318	E
81♦	BLW90	1.2G▼	18	30 *	620m	§J	NSi	PE	55%				11	4.0								S171	
82	D10-28	1.2G	20	50 Ø	1.0			B						10								S155	R
83♦	SD1526	1.2G#	21	45	1.0	§J	NSi	BPA					9.0#	4.0 †								S503	
84▼	SD1526-1	1.2G#	21	45	1.0	§J	NSi	BPA					10♦	7.0 †								W323	
85▼	SD1526-8	1.2G#	21	45	1.0	§J	NSi	BPA					10♦	7.0 †								W322	
86	DME6L	1.2G	28	40 Ø	1.0			B						6.0								W127	C
87♦	BLW91	1.2G▼	30	30 *	1.5	§J	NSi	PE	60%	470M	28		9.0	10								S171	
88	MK0912B15Y																						
		1.2G	35	55	1.0	§J	NSI		45%				11♦									W256	
89♦	MRF1035MA	1.2G	35	60 Δ	2.0	$S	NSi	B	34%	1.0G	50§	35 Ø	12♦	35	6.0Ø	8.2 Ø	9.0Ø	0.0 Ø	1.0G	50§	35 Ø	S165	Z
90♦	MRF1035MB	1.2G	35	60 Δ	2.0	$S	NSi	B	34%	1.0G	50§	35 Ø	12♦	35	6.0Ø	8.2 Ø	9.0Ø	0.0 Ø	1.0G	50§	35 Ø	W170	Z
91▼	MRF1035MC	1.2G	35	60 Δ	2.0	$S	NSi	B	34%	1.0G	50§	35 Ø	10Δ	35 #								W318	E
92	D20-28	1.2G	40	50 Ø	2.0			B						20								S155	R
93	0912-7	1.2G	50	60 Ø	1.0			B						7.0								W127	C
94	DME7	1.2G	50	60 Ø	1.0			B						7.0								W127	C
95♦	SD1528	1.2G#	87	65	1.5	§J	NSi	BPA					9.2#	12 †	5.0	-17	16	12	1.2G	50§	16 Ø	S503	

SYMBOLS AND CODES
EXPLAINED IN INTERPRETER

10. UHF/MICROWAVE TRANSISTORS

IN ORDER OF:(1)MAX. OSCILLATOR FREQUENCY
(2)MAX. TOTAL PWR(PT) & (3)TYPE No.

LINE No.	[3] TYPE No.	[1] MAX. OSC. FREQ Fmax (Hz)	MAXIMUM RATINGS [2] PT (W)	BVCBO (V)	IC (A)	TEMP CODE	POL & MAT	TYPE & TECH	NOISE FIGURE @ STATED CONDITIONS NF (dB)	@ FREQ (Hz)	@ VCE (V)	@ IC (A)	TYPICAL OPERATING GAIN (S21)2 (dB)	Pout (W)	TYPICAL REFLECTION COEFFICIENTS S11 (Mag)	S11 (deg)	S22 (Mag)	S22 (deg)	@ FREQ (Hz)	@ VCE (V)	@ IC (A)	DWG No.	LEAD CODE
1♦	SD1528-1	1.2G#	87	65	1.5	§J	NSi	BPA					9.2#	12 †	5.0	-17	16	12	1.2G	50§	16 Ø	W323	
2▼	SD1528-8	1.2G#	87	65	1.5	§J	NSi	BPA					11♦	23								W322	
3♦	SD1530	1.2G#	87	65	2.6	§J	NSi	BPA					8.5#	25 †								S503	
4▼	SD1530-1	1.2G#	87	65	2.6	§J	NSi	BPA					9.0♦	40 †								W323	
5▼	SD1530-8	1.2G#	87	65	2.6	§J	NSi	BPA					9.0♦	40 †								W322	
6	0912-25	1.2G	125	60 Ø	2.5			B						25								W127	C
7	DME25	1.2G	125	60 Ø	2.5			B						25								W127	C
8	DME30L	1.2G	140	40 Ø	5.0			B						30								W127	C
9	JTDB50(A)	1.2G	145	50		§J	N		40%					50								W285	
10♦	SD1532	1.2G#	175	65	3.7	§J	NSi	BPA					8.5#	40 †								S503	
11▼	SD1532-1	1.2G#	175	65	3.7	§J	NSi	BPA					9.5♦	55 †								W323	
12▼	SD1532-8	1.2G#	175	65	3.7	§J	NSi	BPA					9.5♦	55 †								W322	
13♦	SD1534	1.2G#	218	65	5.5	§J	NSi	BPA					7.0#	50 †								S503	
14▼	SD1534-1	1.2G#	218	65	5.5	§J	NSi	BPA					8.0♦	80 †								W323	
15▼	SD1534-8	1.2G#	218	65	5.5	§J	NSi	BPA					8.0♦	80 †								W322	
16	0912-45	1.2G	225	60 Ø	4.5			B						45								W127	A
17	DME50	1.2G	225	60 Ø	4.5			B						50								W127	C
18	JTDB100	1.2G	233	50		§J	N		40%					100								W289	
19♦	MRF1090MA	1.2G	290	70 Δ	6.0	$S	NSi	B	40%	1.0G	50§	90 Ø	10♦	90	7.4Ø	11.4Ø	7.6Ø	4.0 Ø	1.0G	50§	90 Ø	S165	Z
20♦	MRF1090MB	1.2G	290	70 Δ	6.0	$S	NSi	B	40%	1.0G	50§	90 Ø	10♦	90	7.4Ø	11.4Ø	7.6Ø	4.0 Ø	1.0G	50§	90 Ø	W170	Z
21▼	MRF1090MC	1.2G	290	70 Δ	6.0	$S	NSi	B	40%	1.0G	50§	90 Ø	8.4	90 #								W318	E
22♦	SD1536	1.2G#	292	65	10	§J	NSi	BPA					7.8#	80 †								S503	
23♦	SD1536-1	1.2G#	292	65	10	§J	NSi	BPA					7.8#	80 †								S503	
24▼	SD1536-8	1.2G#	292	65	10	§J	NSi	BPA					9.2♦	110								W322	
25	MZ0912B75Y	1.2G	300	65	7	§J	NSi	B		1.2G	50§		8	75								W260	E
26	0912-125A*	1.2G	500	60 Ø	10									125								W127	
27	0912-125B*	1.2G	500	60 Ø	10									125								W127	
28	DME120L	1.2G	500	40 Ø	10			B						120								W127	C
29	DME150	1.2G	500	60 Ø	10			B						150								W127	C
30♦	MRF1150MA	1.2G	583	70 Δ	12	$S	NSi	B	40%	1.0G	50§	150 Ø	9.8♦	150	5.0Ø	7.5 Ø	2.7Ø	4.6 Ø	1.0G	50§	150 Ø	S165	Z
31♦	MRF1150MB	1.2G	583	70 Δ	12	$S	NSi	B	40%	1.0G	50§	150 Ø	9.8♦	150	5.0Ø	7.5 Ø	2.7Ø	4.6 Ø	1.0G	50§	150 Ø	W170	Z
32▼	MRF1150MC	1.2G	583	70 Δ	12	$S	NSi	B	40%	1.0G	50§	150 Ø	7.8	150 #								W318	E
33♦	SD1538	1.2G#	583	65	11	§J	NSi	BPA					6.5#	125 †								S534	
34▼	SD1538-1	1.2G#	583	65	11	§J	NSi	BPA					7.5♦	175 †								W324	
35▼	SD1538-8	1.2G#	583	65	11	§J	NSi	BPA					8.6♦	220	4.25Ø	1.25Ø	10.5Ø	-6.0Ø	1.2G	50§	15 Ø	M1075	
36	TAN150	1.2G	583	55		§J	N		38%					150								W290	
37	MZ0912B150Y	1.2G	600	65	14	§J	NSi	B		1.2G	50§		7	150								W260	E
38▼	MZ0912B200Y(A)	1.2G	650	35 *	20	§J	NSi	B					8.0	200								W260	E
39	0912P200	1.2G	750	60 Ø	25			B						200									
40	0912P250	1.2G	750	60 Ø	25			B						250									
41	DMEG250	1.2G	875	55 Ø	30	§J	N		35%	1.2G	50§			250								W285	
42▼	SD1540-3	1.2G#	875	65	22	§J	NSi	BPA					7.2♦	365	5.0Ø	-1.0Ø	2.5Ø	-5.0Ø	1.2G	50§	280 Ø	W324	
43▼	SD1540-8	1.2G#	875	65	22	§J	NSi	BPA					7.2♦	365	5.0Ø	-1.0Ø	2.5Ø	-5.0Ø	1.2G	50§	280 Ø	M1075	
44	TAN250A	1.2G	875	50 Ø	30	§J	N		40%	1.2G	50§			250								W285	
45	0912P250A	1.2G	900	60 Ø	18			B						250									
46	0912P250B*	1.2G	900	60 Ø	18									250								W127	
47	DME375	1.2G	1.4k	60 Ø	27			B						375								W127	C
48	0912P400A*	1.2G	1.8k	60 Ø	36									400								W179	
49	0912P400B*	1.2G	1.8k	60 Ø	36									400								W179	
50	DME600	1.2G	1.8k	60 Ø	36			B						550									
51	0912P600A*	1.2G	2.7k	60 Ø	54									600								W179	
52	0912P600B*	1.2G	2.7k	60 Ø	54									600								W179	
53	DME800	1.2G	2.7k	60 Ø	54			B						800									
54	2SC288A5-B	1.3G§	20m	30	20m	♦J	NSi	EP														W184	C
55♦	BF979	1.3G▼	140m	20	30m	♦J	PSi	PL	4.5	800M	10*	10m*	16									W181	A
56♦	BF579	1.3G▼	150m	20	25m	§J	PSi	BPL	4.5	800M	10*	10m*	16▼	130m								W174	A
57	A590	1.3G§	180m	15 *	25m		N	B	3.5	500M		2.0m	10									W29h	RØ
58	A486	1.3G§	190m	15 *	25m		N	B	4.0	500M		2.0m	9.0									W15	C
59	A485	1.3G§	200m	15 *	25m		N	B	5.0	500M		2.0m	22									TO72	G
60♦	BFY90	1.3GΔ	200m	30	50m	§J	NSi	BPL	5.0	500M	5.0	2.0m	21#	10m†								TO72	G
61▼	BFY90%	1.3G	200m	30	25m	§J	NSi	BPE	5.0	500M	5.0	2.0m	22									TO72	A
62	BFS17	1.3G§	250m	25	50m	§J	NSi	PE	4.5	500M	5.0	2.0m										W174	A
63	BFS17R	1.3G§	250m	25	50m	§J	NSi	PE	4.5	500M	5.0	2.0m										W174	C
64	A591	1.3G§	300m	15 *	25m		N	B	3.5	500M		2.0m	10									W29j	RØ
65	MA42122-509	1.3G§	500m	30	80m	§J	NSi	BPE	2.7	450M	10	1.5m	14§	63u*	.56	-124	.83	-25	450M	10	1.5m	TO72	G
66	2SC824	1.3G§	650mØ	50	120m	§J	NSi	BEP	4.3Ø	150M	15	25m*	11		.42*	0.0*	1.9*	-.80*	300M	10	30m	TO33	G
67	2SC1464	1.3G§	4.0 *	50	500m	§J	NSi	BPE					14Ø	1.2								TO39	A
68	BLY38	1.3G§	5.5	36	800m	§J	NSi	BPL	70%	470M	13§	300m§	8.0*	1.8					470M	13§	300m§	TO117	R
69♦	BLX68	1.3G▼	10	36	1.0	§J	NSi	B	66%				12	7.0								S89	
70♦	2SC2641	1.3G§	15 *	35	1.4	§J	NSi	BPE					7.7Δ	6.0 Δ								W221	R
71♦	BLW81	1.3G▼	40	17 *	2.5	§J	NSi	PE	60%				6.0*	10	1.4Ø	0.9Ø			300M	12§		S171	
72▼	MRA1214-55H	1.4G#		58	120m	§J	NSi	BPA	50	1.4G	28§	55 Ø	6.5♦	55 †								W348	
73▼	MRP1214-55A(A)	1.4G		60 Ø	60m	§J		B	50%				6.5♦	55								W244	
74▼	2SC2734	1.4GΔ	150m*	20 Δ	50m	$J	NSi	BEP	9.0†	900M	6.0§	2.0m	15									W177	A
75▼	2SC2736	1.4GΔ	150m*	30 Δ	50m	$J	NSi	BEP	4.0†	200M	12§	2.0m	22									W177	A
76♦	BFY90#	1.4G§	200m	30	25m	§J	NSi	BPE	5.5	800m	5.0	2.0m	8.0	12m	16Ø		.19Ø		500M	5.0	2.0m	TO72	G
77♦	BFR99	1.4GΔ	225m	30	50m	§J	PSi	BPE	4.0Ø	800M	15	10m	10♦									TO72	G
78	2SC2212♦	1.4G§	250m*	15	20m	#J	NSi	B	1.4	800M	4.0*	3.0m*	4.5		1.0	107	1.05	-48	1.2G	4.0*	3.0m*	C218c	A
79♦	BLX65	1.4G▼	3.0	36	700m	§J	N	B	75%				12	2.0								TO39	A
80♦	BLX66	1.4G▼	4.0	36	700m	§J	N	B	84%				20	2.0								A434	
81♦	BLX67	1.4G▼	4.5	36	700m	§J	NSi	B	84%				20	2.5								S89	
82	LDR10SB	1.4G	56	50 Ø	1.0	§J	N		40%	1.4G	36§			10								W285	
83	LDR40SB	1.4G	140	50 Ø	3.0	§J	N		40%	1.4G	36§			40								W285	
84	RZ1214B60W	1.4G	275	50	7.5	§J	NSi	B		1.4G	42§		7.0	50								W260	E
85	LDR100SB	1.4G	340	50 Ø	10	§J	N		40%	1.4G	36§			100								W285	
86	RZ1214B125W	1.4G	550	50	15	§J	NSi	B		1.4G	42§		5.8	110								W260	E
87▼	RZ1214B150W(A)	1.4G	650	15 *	20	§J	NSi	B					6.0	150								W260	E
88▼	2SC3120	1.5GΔ	150m*	30	50m	♦J	NSi	BPE	8.0	800M	10§	2.0m	100%		24	-6	62	-55	1.2G	10	2.0m	Y236a	C
89	HXTR6104	1.5G#	150m†	25	10m	§J	NSi	B	1.6Ø	1.5G	10	3.0m	14Ø		.537	-134	.747	-38	1.5G	10	3.0m	W26a	V
90♦	BFW92#	1.5G§	190m	25	50m	$J	NSi	BPE	2.0	500M	5.0	2.0m	13#									W22	E
91	2N3570	1.5GΔ	200mØ	30	50m	§S	NSi	B	7.0	1.0G	6.0*	2.0m*										TO72	G
92	2N4957	1.5G#	200m	30	30m	§S	PSi	B	3.0Ø	450M	10	2.0m	25†									TO72	G
93	2N4958	1.5G#	200m	30	30m	§S	PSi	B	3.3Ø	450M	10	2.0m	25†									TO72	G

SYMBOLS AND CODES EXPLAINED IN INTERPRETER

10. UHF/MICROWAVE TRANSISTORS

IN ORDER OF:(1)MAX. OSCILLATOR FREQUENCY (2)MAX. TOTAL PWR(PT) & (3)TYPE No.

LINE No.	[3] TYPE No.	[1] MAX. OSC. FREQ Fmax (Hz)	MAXIMUM RATINGS [2] PT (W)	BVCBO (V)	IC (A)	TEMP CODE	POL & MAT	TYPE & TECH	NOISE FIGURE @ STATED CONDITIONS NF (dB)	@ FREQ (Hz)	@ VCE (V)	@ IC (A)	TYPICAL OPERATING GAIN (S21)2 (dB)	Pout (W)	TYPICAL REFLECTION COEFFICIENTS S11 (Mag)	S11 (deg)	S22 (Mag)	S22 (deg)	@ FREQ (Hz)	@ VCE (V)	@ IC (A)	DWG No.	LEAD CODE
1	2N4959	1.5G#	200m	30	30m	§S	PSi	B	3.8Ø	450M	10	2.0m	25†									TO72	G
2	2N5829	1.5G#	200m	30	30m	§S	PSi	B	2.5Ø	450M	10	2.0m	12†									TO72	G
3▼	2SC2466	1.5GΔ	200m*	30 Δ	50m	♦J	NSi	BEP					18♦									W250	AC
4▼	2SC2470	1.5GΔ	200m*	30 Δ	50m	♦J	NSi	BEP	4.0†	200M	10§	7.0m	16♦									W250	Y
5▼	2SC2728	1.5GΔ	200m*	15 Δ	50m	♦J	NSi	BEP	6.0†	900M	6.0§	5.0m	14♦									W250	AC
6▼	2SC3137	1.5GΔ	200m*	30	50m	♦J	NSi	BPE	8.0	800M	10§	2.0m	100%									W350	AC
7♦	SD1375	1.5G▼	200m	30	30m	§J	PSi	B	3.5Ø	450M	10	2.0m	17#									TO72	
8	ZTX326AK	1.5G§	200m	25	50m	$J	NSi	BPL	6.0	500M	5.0	2.0m	26									TO5	A
9	ZTX326AL	1.5G§	200m	25	50m	$J	NSi	BPL	6.0	500M	5.0	2.0m	26									TO18	A
10	ZTX326AM	1.5G§	200m	25	50m	$J	NSi	BPL	6.0	500M	5.0	2.0m	26									S15	A
11	ZTX326K	1.5G§	200m	25	50m	$J	NSi	BPL	6.0	500M	5.0	2.0m	26									TO5	A
12	ZTX326L	1.5G§	200m	25	50m	$J	NSi	BPL	6.0	500M	5.0	2.0m	26									TO18	A
13	ZTX326M	1.5G§	200m	25	50m	$J	NSi	BPL	6.0	500M	5.0	2.0m	26									S15	A
14	MA42123-509																						
		1.5G§	500m	30	80m	§J	NSi	BPE	2.3	450M	10	1.5m	14§	63u*	.58	-114	.79	-27	450M	10	1.5m	TO72	G
15	2SC823	1.5G§	600mØ	30	60m	$J	NSi	BEP	3.5Ø	150M	10	10m*	12		.49*	-.19*	2.0*	-1.6*	300M	10	10m	TO33	G
16♦	MRF559	1.5G*	2.0	36 Δ	150m	$S	NSi	B	70%	870M	7.5§	500mØ	6.5♦	500m	0.83	137	0.34	-129	1.5G	10	150m	W252	V
17▼	SD1006	1.5GΔ	3.5	50	400m	§J	NSi	B	2.7	200M	10	10m	7.2									TO39	
18♦	MRF511	1.5GΔ	5.0	35 Δ	250m	§S	NSi	B	7.3†	200M	20	50m	11♦		.18*	.09*	.84*	-.95*	400M	20	80m	S517	R
19▼	SD1005	1.5GΔ	5.0	50	400m	§J	NSi	B	2.7	200M	10	10m	11									TO117	
20♦	BLW79	1.5G▼	8.5	17 *	500m	§J	NSi	PE	60%				9.0*	2.0	2.7Ø	-1.5Ø			300M	12§		S171	
21♦	PZB16035U	1.5G#	45	40	4	§J	NSi	B	50%	1.5G	28§		9.8	38								W260	E
22	0915-40	1.5G	135	50 Ø	12	§J	N		36%					40								W285	
23▼	BFW92%	1.6G	130m	25	25m	♦J	NSi	BPL	4.0	500M	5.0	2.0m	23									TO50	C
24	BF979S	1.6G	160m	30	50m	$J	PSi	PL														TO119	
25♦	BFW92	1.6G▼	190m	25	25m	$J	NSi	BPE	4.0	500M	5.0	2.0m	11	8.0m								W181	C
26	A430	1.6G§	250m	10 *	50m		N	B	5.0	500M		2.0m	21*									TO72	G
27	BFW30	1.6G§	250m	20	50m	§J	NSi	BPE	5.0	500M	5.0	2.0m	7.5									TO72	G
28	LDA412	1.6G§	360m	10 *	50m		N	B	5.0	500M		2.0m	21									TO122	
29	LBE2005Q	1.6G	1.5	30	400m	§J	NSi	B		1.6G	12	80m	7	300m								W263	F
30♦	LCE2005Q	1.6G	1.5	30	400m	§J	NSi	B		1.6G	12	80m	7	300m								S530	F
31	2SC1083	1.6G§	3.0	40	500m	§J	NSi	EP						1.2								TO39	AA
32	41038$	1.6G#	3.1 †	45	2.0	§J	NSi	BOV	20%	1.6G	20§	250mØ		750mØ								TO46	AØ
33	LBE2008T	1.6G	3.5	30	300m	§J	NSi	B		1.6G	20	150m	6	800m								W263	F
34♦	LCE2008T	1.6G	3.5	30	300m	§J	NSi	B		1.6G	20	150m	6	800m								S530	F
35	CD2810	1.6G§	15	60 Ø	500m	§J	NSi	B	18%	800M	25§	200m	9.2Ø	900m	3.5Ø	3.7Ø	20§	37§	800M	25§	200m	S111	R
36	CD2811	1.6G§	25	60 Ø	1.0	§J	NSi	B	18%	800M	25§	400m	8.4Ø	1.8	2.4Ø	3.1Ø	9.5§	20§	800M	25§	400m	S111	R
37	CD2812	1.6G§	35	60 Ø	1.5	§J	NSi	B	20%	800M	25§	600m	7.8Ø	3.0	2.5Ø	4.0Ø	9.0§	12§	800M	25§	600m	T111b	R
38	CD2813	1.6G§	44	60 Ø	2.0	§J	NSi	B	18%	800M	25§	850m	7.5Ø	3.8	7.0Ø	8.0Ø	2.4§	3.7§	800M	25§	850m	S111	R
39▼	RT5108(A)	1.7G▼					NSi	B														TO39	
40♦	BFW93	1.7G▼	190m	18	50m	$J	NSi	BPE	5.0	500m	5.0	2.0m	10§		.50Ø	1.5Ø	1.8Ø	-1.3Ø	800M	5.0	30m	W181	C
41	LDA407	1.7G§	360m	15 *	25m		N	B	5.0	500M		2.0m	15									TO122	
42	NE74113	1.7G§	5.0	45	300m	§J	NSi		3.0	0.2G	15	30m	17*									TO39	A
43	NE74114	1.7G§	5.0	45	300m	§J	NSi		3.0	0.2G	15	30m	17*									TO39	A
44♦	BLW80	1.7G▼	17	17 *	1.0	§J	NSi	PE	60%				8.0*	4.0	1.5Ø	0.0Ø			300M	12§		S171	
45	NEM1706B20																						
		1.7G	21	45	1.8	§J	NSi	B	54%	1.7G	20§											W281	A
46▼	NEM1712B20																						
		1.7G	35	45	3.6	§J	NSi	B	54%	1.7G	20§											W281	A
47	NEM1725B20																						
		1.7G	72	45	7.2	§J	NSi	B	54%	1.7G	20§											W281	A
48▼	BF763	1.8G▼	500m	15	25m	$J	NSi	BPE	5.0	800M	10*	5.0m										TO92	C
49▼	CGY30	1.8G#	1.0		130m	$C	NGA	F	4.0	1.8G	4.5§	105m	8.0									TO39	
50▼	CGY31	1.8G#	2.0		260m	$C	NGA	F	5.0	1.8G	4.5§	215m	17♦									TO12	
51♦	PZ1418B15U																						
		1.8G	27	40	2.0	§J	NSi	B					7.0	12								W260	E
52▼	LZ1418E100T																						
		1.8G	36	40	4.0	$J	NSi	B					10	9.0								W260	F
53♦	PZ1418B30U																						
		1.8G	45	40	4.0	§J	NSi	B					7.3	27								W260	E
54	1618-35	1.8G	135	50 Ø	12	§J	N		40%					35								W285	
55	2N2857	1.9G	200mØ	30	40m	§S	NSi	B		450M	6.0	1.5m	10%	30mØ								TO72	G
56	NEM2003B20																						
		1.9G	12	45	0.9	§J	NSi	BEP					60†	36 ♦								W151	A
57	NEM2010B20																						
		1.9G	32	45	2.7	§J	NSi	BEP					60†	41 ♦								W151	A
58▼	2015M(A)	2.0G		50 Ø		§J	N	B	35%	2.0G	28*	15 Ø	6.0Δ	15 Δ	2.0Ø	3.5 Ø	0.3Ø	0.57Ø	2.0G	28§	15 Ø	W331	
59	TPV598	2.0G§		45		§J							7.0♦		.955	164	.813	180	1.0G	25	850m	S518	V
60	2N2415	2.0G	75mØ	15	20m	#J	PGc	BDM	2.6	200M	6.0*	1.5m*										TO18	G
61	2N2416	2.0G	75mØ	15	20m	#J	PGc	BDM	3.4	200M	6.0*	1.5m*										TO18	G
62	2N6618	2.0G#	150m†	25	10m	§S	NSi	B	2.2Ø	2.0G	10	3.0m	11Ø									W26a	R
63	HXTR6103	2.0G#	150m†	25	10m	§J	NSi	B	2.2Ø	2.0G	10	3.0m	12Ø		.515	-154	.718	-45	2.0G	10	3.0m	W26a	V
64♦	LAE6000Q	2.0G	150m	25	15m	§J	NSi	B	1.8†	2.0G	10	4m	12									W265	V
65	NE59333	2.0G§	150m	20	30m	§J	PSi		3.0	0.5G	10	3.0m	12									M1011	
66	NE73433	2.0G§	150mØ	30	50m	♦C	NSi	B	3.0	500M	10	3.0m										M15Gb	A
67	2N5031	2.0G#	200m	15	20m	§S	NSi	B	2.5Ø	450M	6.0	1.0m	35†									TO72	G
68	2N5032	2.0G#	200m	15	20m	§S	NSi	B	3.0Ø	450M	6.0	1.0m	35†									TO72	G
69▼	2SC2731	2.0GΔ	200m*	20 Δ	50m	♦J	NSi	BEP	9.5†	900M	10§	3.0m	17									W250	AC
70	BF480	2.0G§	200m	20	20m	$J	NSi	BPL	3.8	800M	10*	10m*	15		85Ø	-105Ø	107Ø		300M	10*	10m*	W104	A
71	2SC1275	2.0G§	250mØ	30	50m	§J	NSi	BEP	3.0	500M	10	3.0m	6.0		.300	160	.650	-30	1.0G	10	10m	TO72	G
72	2SC2026	2.0G§	250m	30	50m	§J	NSi	B	3.0†	500M	10	3.0m	15♦									TO92	C
73	2SC2037	2.0G§	250m	30	50m	§J	NSi	BEP	3.0†	500M	10	3.0m	13♦									TO92	A
74♦	BFR53R	2.0G▼	250m	18	50m	§J	NSi	PE	5.0	500M			10									W174	
75	NE59312	2.0G§	250m	20	30m	§J	PSi		3.0	0.5G	10	3.0m	12*									TO72	G
76	NE59335	2.0G§	250m	20	30m	§J	PSi		3.0	0.5G	10	3.0m	12*									M999	
77	NE73412	2.0G§	250mØ	30	50m	§J	NSi	B	3.0	500M	10	3.0m	6.0		.070	-162	.640	-38	1.0G	10	10m	TO72	G
78	NE73432B	2.0G§	250mØ	30	50m	§C	NSi	B	2.7	500M	10	3.0m	7.0		.136	-143	.480	-17	1.0G	10	10m	TO92	A
79	NE73432E	2.0G§	250mØ	30	50m	§C	NSi	B	2.7	500M	10	3.0m	8.0		.370	133	.480	-53	1.0G	10	10m	TO92	C
80	NE73435	2.0G§	250mØ	30	50m	§C	NSi	B	2.1	500M	10	3.0m	9.3		.610	173	.53	-29	1.0G	10	10m	W100	S
81	NE87112	2.0G§	250m	45	30m	§J	NSi		3.0	0.5G	6	2.0m	13*									TO72	G
82	JAN2N6603	2.0G#	300mØ	25	30m	§J	NSi	B	2.5Ø	1.0G	10	5.0m	12#		.65	180	.37	-55	1.0G	10	15m	W29a	RØ
83	NE73416	2.0G§	300mØ	30	50m	§J	NSi	B	3.0	500M	10	3.0m	6.0									C120	RE
84	NE73440A	2.0G§	300mØ	30	50m	§J	NSi	B	3.0	500M	10	3.0m	6.0									W109	RA
85	NE73440B	2.0G§	300mØ	30	50m	§J	NSi	B	3.0	500M	10	3.0m	6.0									W109	RE
86	JAN2N6604	2.0G#	350mØ	25	50m	§J	NSi	B	3.0Ø	1.0G	10	5.0m	11#		.60	170	.30	-55	1.0G	10	30m	W29a	RØ
87▼	MRF966	2.0G*	350m	10 %	60m#	♦J	N	F	1.2†	1.0G	5.0#	10m%	15Δ	10 *	0.61	-54	0.87	-34	2.0G	5.0#	20m%	W252	DD
88▼	MRF967	2.0G*	350m	10 %	60m#	♦J	N	F	1.2†	1.0G	5.0#	10m%	13Δ	10 *	0.75	-62	0.86	-36	2.0G	5.0#	20m%	W295	DD
89▼	MRFC966	2.0G*	350m	10 %	60m#	♦J	N	F	1.2†	1.0G	5.0#	10m%	15Δ	10 *	0.61	-54	0.87	-34	2.0G	5.0#	20m%	U67	
90	MS12H	2.0G	360m	20 *	200m	§S	NSi		1.7	100M	6.0	10m	1.7*									TO72	G
91	MS175H	2.0G§	360mØ	30	100m	§S	NSi	B	1.5Ø	200M	9.0	5.0m	16									TO72	G
92	2N6602	2.0G#	375m†	20	25m	§S	NSi	B	5.0Ø	2.0G	10	5.0m	7.0#									W29	RØ
93	2SC2273	2.0G	400m	25	65m	§J	NSi	BEP	2.0	2.0G	8	7.0m										W280	S
94	DC5125	2.0G	400m	25	40m		NSi	BPE	2.5	30M	5.0	3.0m	18$									TO72	G
95	MA42141-509																						
		2.0G#	400m	27	50m	§J	NSi	BPL	2.5Ø	1.0G	10	5.0m	13	10 *								TO72	G
96	MA42142-509																						
		2.0G#	400m	27	50m	§J	NSi	BPL	3.0Ø	1.0G	10	5.0m	13	10 *								TO72	G
97	BFT12	2.0G	700m	25	150m	$J	NSi	BPE	6.5	800M	7.5	40m	8.0		.66	153	.20	-116	800M	7.5	80m	W22	E
98	MA42141-510																						
		2.0G#	700m†	27	50m	§J	NSi	BPL	2.5Ø	1.0G	10	5.0m	13	10m*	.517	170	.499	-40	1.0G	15	15m	W115	R

SYMBOLS AND CODES EXPLAINED IN INTERPRETER

10. UHF/MICROWAVE TRANSISTORS

IN ORDER OF:(1)MAX. OSCILLATOR FREQUENCY (2)MAX. TOTAL PWR(PT) & (3)TYPE No.

LINE No.	3 TYPE No.	1 MAX. OSC. FREQ Fmax (Hz)	MAXIMUM RATINGS 2 PT (W)	BVCBO (V)	IC (A)	TEMP CODE	POL & MAT	TYPE & TECH	NOISE FIGURE @ STATED CONDITIONS NF (dB)	@ FREQ (Hz)	@ VCE (V)	@ IC (A)	TYPICAL OPERATING GAIN (S21)2 (dB)	Pout (W)	TYPICAL REFLECTION COEFFICIENTS S11 (Mag)	S11 (deg)	S22 (Mag)	S22 (deg)	@ FREQ (Hz)	@ VCE (V)	@ IC (A)	DWG No.	LEAD CODE
1	MA42141-511																					
		2.0G#	700m	27	50m	§J	NSi	BPL	2.5Ø	1.0G	10	5.0m	13	10m*	.546	-178	.541	-36	1.0G	15	15m	W29e	R
2	MA42142-510																						
		2.0G#	700m†	27	50m	§J	NSi	BPL	3.0Ø	1.0G	10	5.0m	13	10m*								W115	R
3	MA42142-511																						
		2.0G#	700m	27	50m	§J	NSi	BPL	3.0Ø	1.0G	10	5.0m	13	10m*								W29e	R
4	AT00135	2.0G	800m	20	150m	§J	Si	B	3.6	2.0G	10	10m	12*	20 *	0.77	144	0.29	-89	2.0G	10	10m	W239	C
5	LAE2001R	2.0G	800m	35	60m	§J	NSi	B		2.0G	15	35m	8	80m								W265	E
6	HXTR-3001	2.0G	900m	30	70m	▼J	N	B	2.2†	2.0G	10	7.0m	16*	19 *	.769	-174	.364	-43	2.0G	15	15m	u53	
7	MS300JE	2.0G*	1.0	30	100m	§S	NSi	B	4.0Ø	2.0G	10	15m	12	125m*	.70	173	.24	-49	1.0G	10	50m	W21	RØ
8	LBE2003S	2.0G	1.4	40	90m	§J	NSi	B		2.0G	18	30m	10	200m								W263	F
9♦	LCE2003S	2.0G	1.4	40	90m	§J	NSi	B		2.0G	18	30m	10	200m								S530	F
10	2L02	2.0G	1.5	24 Ø	125m		N	B					9.0Δ	.20 Δ								S154	
11	LKE2002T	2.0G	1.5	45	80m	§J	NSi	B		2.0G	15	70m	7	150m								W256	F
12	NE64310	2.0G§	2.0	40	150m	§J	NSi							300mØ								TO46	A
13	LKE2004T	2.0G	3.0	45	160m	§J	NSi	B		2.0G	15	140m	6.5	300m								W256	F
14	MA42191-510▼																						
		2.0G#	3.0	30	300m	§J	NSi	BPL						390mØ	1.15	132	1.16	-106	2.0G	20*	50m	W115	R
15	JAN2N5470	2.0G#	3.5	20 *	200m	§J	NSi	B	30%	2.0G	28§	316m§	5.0Ø	1.0 Δ	10Ø				2.0G	28§	300m§	Y215a	A
16▼	2SC2318	2.0GΔ	3.5 *	40	350m	§J	NSi	BPE					16§									TO33	G
17	FHE5	2.0G	3.5	50	.12	§	N	B					8.0Δ	.25 Δ								S114	
18	FHE6	2.0G	3.5	50	.12	§	N	B					8.0Δ	.25 Δ								S114a	
19	FHE7	2.0G	3.5	50	.12	§	N	B					8.0Δ	.25 Δ								S114a	
20	FHE8	2.0G	3.5	50	.12	§	N	B					8.0Δ	.25 Δ								S114a	
21	FHE9	2.0G	3.5	50	.12	§	N	B					8.0Δ	.25 Δ								S114a	
22	LBE2009S	2.0G	3.5	40	250m	§J	NSi	B		2.0G	18	110m	9	700m								W263	F
23♦	LCE2009S	2.0G	3.5	40	250m	§J	NSi	B		2.0G	18	110m	9	700m								S530	F
24▼	SD1316	2.0GΔ	3.5	40 Δ	200m	§J	NSi	B	2.0†	200M	14	20m	16♦									TO39	
25♦	PKB23001U	2.0G#	4.0	45	300m	§J	NSi	B	32%	2.0G	28		7.0	1.5	8.0Ø	0.0Ø	10§	14§	2.0G	28		W256	A
26	NE64320	2.0G§	4.3	40	150m	§J	NSi							500mØ								M1012	
27	NE57510	2.0G§	4.4	40	250m	§J	NSi							700mØ								TO46	A
28	NE64360	2.0G§	4.4	40	150m	§J	NSi							400mØ								M1031	
29	DC5653	2.0GØ	4.5	30	375m	$S	NSi	BPE					11$	1.5 *								W16	F
30	NE56987	2.0G§	4.5	25	300m	§J	NSi							300m								M996	
31♦	PWB2001U	2.0G#	4.5	45	300m	§J	NSi	B	40%	2.0G	28§		11	1.2								W264	E
32	2SC1952	2.0G§	5.0	45	300m	§J	NSi	BEP	3.5†	200M	15	30m	18Ø									TO39	A
33	2001	2.0G#	5.0	50 *	250m	§J	NSi	B	33%	2.0G	28§	1.0 Ø	8.2Ø	1.0	10Ø	32Ø	4.0§	16§	2.0G	28§	200m§	W24	A
34	2001A	2.0G	5.0	50 Ø	.25	§J	N	B					7.0Δ	1.0 Δ									
35	E1B5	2.0G#	5.0	50 Ø	250m	§J	NSi	B	35%	2.0G	28§	1.0 Ø	10Δ	1.0 Δ	12Ø	26Ø	12§	24§	2.0G	28§	1.0 Ø	S114	R
36	E1B6	2.0G#	5.0	50 Ø	250m	§J	NSi	B	35%	2.0G	28§	1.0 Ø	10Δ	1.0 Δ	12Ø	26Ø	12§	24§	2.0G	28§	1.0 Ø	S150	A
37	E1B7	2.0G#	5.0	50 Ø	250m	§J	NSi	B	35%	2.0G	28§	1.0 Ø	10Δ	1.0 Δ	12Ø	26Ø	12§	24§	2.0G	28§	1.0 Ø	W132	Z
38	E1B8	2.0G#	5.0	50 Ø	250m	§J	NSi	B	35%	2.0G	28§	1.0 Ø	10Δ	1.0 Δ	12Ø	26Ø	12§	24§	2.0G	28§	1.0 Ø	W132	Z
39	E1B9	2.0G#	5.0	50 Ø	250m	§J	NSi	B	35%	2.0G	28§	1.0 Ø	10Δ	1.0 Δ	12Ø	26Ø	12§	24§	2.0G	28§	1.0 Ø	W133	A
40	F1B5	2.0G	5.0	50 Ø	.25		N	B					11Δ	1.5 Δ								S114a	
41	F1B6	2.0G	5.0	50 Ø	.25		N	B					11Δ	1.5 Δ								S114a	
42	F1B7	2.0G	5.0	50 Ø	.25		N	B					11Δ	1.5 Δ								S114a	
43	F1B8	2.0G	5.0	50 Ø	.25		N	B					11Δ	1.5 Δ								S114a	
44	F1B9	2.0G	5.0	50 Ø	.25		N	B					11Δ	1.5 Δ								S114a	
45	FIB5	2.0G	5.0	50 Ø	.25		N	B					11Δ	1.5 Δ								S114a	
46	FIB6	2.0G	5.0	50 Ø	.25		N	B					11Δ	1.5 Δ								S114a	
47	FIB7	2.0G	5.0	50 Ø	.25		N	B					11Δ	1.5 Δ								S114a	
48	FIB8	2.0G	5.0	50 Ø	.25		N	B					11Δ	1.5 Δ								S114a	
49	FIB9	2.0G	5.0	50 Ø	.25		N	B					11Δ	1.5 Δ								S114a	
50▼	LT1817	2.0G	5.0	120	400m	§J	NSi	BPA					45%									TO117	Z
51	NE74014	2.0G§	5.0	45	300m		NSi		3.5	0.2G	15	50m	18*									TO39	
52♦	SD1544	2.0G	5.8	50	250m	§J	NSi	BPA					5.0#	1.0 †								S504	
53	NE2001♦	2.0G#	6.0	50	300m	§J	NSi	BE	33%	2.0G	28§	200m§	9.0Ø	1.6	3.5Ø	23Ø	3.5Ø	6.5Ø	2.0G	28§	200m§	W24	AC
54♦	MRF2001♦	2.0G#	7.0	45 Δ	250m	§S	NSi	B	35%	2.0G	28§	1.0 Ø	10♦	1.0	11.5Ø	19.5Ø	3.5Ø	-7.0Ø	2.0G	28§	1.0 Ø	W173	B
55♦	MRF2001B♦	2.0G#	7.0	45 Δ	250m	§S	NSi	B	35%	2.0G	28§	1.0 Ø	10♦	1.0	11.5Ø	19.5Ø	3.5Ø	-7.0Ø	2.0G	28§	1.0 Ø	W172	B
56♦	MRF2001M♦	2.0G#	7.0	45 Δ	250m	§S	NSi	B	40%	2.0G	24§	1.0 Ø	9.5♦	1.0	7.5Ø	11.0Ø	4.0Ø	12.0Ø	2.0G	24§	1.0 Ø	W171	B
57	NE57520	2.0G§	7.5	40	250m	§J	NSi							1.6								M1012	
58♦	PKB23003U	2.0G#	7.5	45	600m	§J	NSi	B	50%	2.0G	28		9.3	3.4	7.0Ø	5.0Ø	4.0§	2.0§	2.0G	28		W256	A
59	LKE2015T	2.0G	8.0	45	800m	§J	NSi	B		2.0G	20	200m	7.5	1.3								W256	F
60	2003(A)	2.0G#	11	50 *	500m	§J	NSi	B	33%	2.0G	28§	2.5 Ø	7.5Ø	2.8	3.5Ø	13.5Ø	4.0§	0.0§	2.0G	28§	500m§	W24	A
61♦	MRF2003	2.0G#	11	45 Δ	500M	§S	NSi	B	35%	2.0G	28§	3.0 Ø	8.9♦	3.0	4.0Ø	23 Ø	5.0Ø	0.0 Ø	2.0G	28§	3.0 Ø	W173	B
62♦	MRF2003B	2.0G#	11	45 Δ	500M	§S	NSi	B	35%	2.0G	28§	3.0 Ø	8.9♦	3.0	4.0Ø	23 Ø	5.0Ø	0.0 Ø	2.0G	28§	3.0 Ø	W172	B
63♦	MRF2003M	2.0G#	11	45 Δ	500m	§S	NSi	B	40%	2.0G	24§	3.0 Ø	8.5♦	3.0	35Ø	20 Ø	4.0Ø	5.0 Ø	2.0G	24§	3.0 Ø	W171	B
64	NE2003♦	2.0G#	11	50	1.0	§J	NSi	BE	35%	2.0G	28§	500m§	8.0Ø	3.2	23Ø	60Ø	10Ø	-8.0Ø	2.0G	28§	500m§	W24	AC
65	NEM200394	2.0G	11 #	45	900m	§J	NSi		48%				9.0	3.2								M1025	
66♦	SD1545	2.0G	16	50	500m	§J	NSi	BPA					5.0#	2.5 †								S504	
67	2005(A)	2.0G#	17	50 *	1.0	§J	NSi	B	35%	2.0G	28§	5.0 Ø	7.4Ø	5.5	2.2Ø	13.5Ø	3.0§	-2.0§	2.0G	28§	1.0 §	W24	A
68♦	PKB23005U	2.0G#	18	45	1.5	§J	NSi	B	53%	2.0G	28		7.2	8.0	6.0Ø	8.0Ø	3.0§	-1.5§	2.0G	28		W256	A
69	NE2005♦	2.0G#	19	50	2.0	§J	NSi	BE	33%	2.0G	28§	1.0 §	8.0Ø	6.3	2.0Ø	18Ø	3.0Ø	17Ø	2.0G	28§	1.0 §	W24	AC
70♦	MRF2005M♦	2.0G	22	45 Δ	1.0	§S	NSi	B	40%	2.0G	24§	5.0 Ø	8.0♦	5.0	10Ø	25 Ø	1.75Ø	-1.3Ø	2.0G	24§	5.0 Ø	W171	B
71♦	MRF2005♦	2.0G#	25	45 Δ	1.0	§S	NSi	B	35%	2.0G	28§	5.0 Ø	9.0♦	5.0	2.0Ø	17Ø	2.3Ø	10.6Ø	2.0G	28§	5.0 Ø	W173	B
72♦	MRF2005B♦	2.0G#	25	45 Δ	1.0	§S	NSi	B	35%	2.0G	28§	5.0 Ø	9.0♦	5.0	2.0Ø	17Ø	2.3Ø	10.6Ø	2.0G	28§	5.0 Ø	W172	B
73♦	PKB20010U	2.0G#	25	40	2.0	§J	NSi	B	42%	2.0G	28§		6.0	10								W256	
74♦	PWB2010U	2.0G#	25	45	2.0	§J	NSi	B	32%	2.0G	28§		10	10								W264	E
75	NE2010♦	2.0G#	29	50	3.0	§J	NSi	BE	35%	2.0G	28§	3.2 §	5.0Ø	10	1.0Ø	19Ø	1.0Ø	13.5Ø	2.0G	28§	3.2 §	W24	AC
76	NEM201094	2.0G	31 #	45	2.7	§J	NSi		48%				7.5	11								M1025	
77	2010	2.0G#	32	50 *	2.5	§J	NSi	B	33%	2.0G	28§	10 Ø	5.8Ø	9.5	1.2Ø	10Ø	2.3§	-7.0§	2.0G	28§	2.5 §	W24	A
78	NEM2010♦	2.0G#	32	40	3.6	§J	NSi	BE	45%	1.9G	20§	2.0 §	7.0Ø	11	13Ø	11Ø	8.0§	-10§	1.9G	20§	2.0 §	W151	A
79♦	MRF2010♦	2.0G#	35	45 Δ	2.0	§S	NSi	B	35%	2.0G	28§	10 Ø	7.0♦	10	1.5Ø	13Ø	1.4Ø	6.5Ø	2.0G	28§	10 Ø	W173	B
80♦	MRF2010B♦	2.0G#	35	45 Δ	2.0	§S	NSi	B	35%	2.0G	28§	10 Ø	7.0♦	10	1.5Ø	13Ø	1.4Ø	6.5Ø	2.0G	28§	10 Ø	W172	B
81♦	MRF2010M♦	2.0G#	35	45 Δ	2.0	§S	NSi	B	40%	2.0G	24§	10 Ø	8.0♦	10	7.0Ø	9.5 Ø	2.0Ø	1.6 Ø	2.0G	24§	12 Ø	W171	B
82	NEM2015♦	2.0G#	39	40	4.5	§J	NSi	BE	45%	1.9G	20§	3.2 §	8.0Ø	15	6.0Ø	2.0Ø	5.0§	-10§	2.0G	20§	250m§	W151	A
83	NEM201594	2.0G	39 #	45	4.5	§J	NSi		45%				6.7	14								M1025	
84♦	MRF2016M	2.0G#	50	45 Δ	3.0	§S	NSi	B	40%	2.0G	24§	16 Ø	7.0♦	16	2.4Ø	9.2 Ø	1.0Ø	2.6 Ø	2.0G	24§	16 Ø	W171	B
85	NEM2020♦	2.0G#	70	40	7.2	§J	NSi	BE	45%	1.9G	20§	5.7 §	5.5Ø	20								W151	A
86	LKE21004R	2.1G	2.8	30	600m	§J	NSi	B		2.1G	15	140m	8	400m								W256	F
87	LKE21015T	2.1G	8	45	800m	§J	NSi	B		2.1G	20	300m	8	1.5								W256	F
88	PKB21004U	2.1G	9	45	800m	§J	NSi	B		2.1G	28§		5.2	5								W256	E
89	LV1721E50R																						
		2.1G	18	40	2.0	§J	NSi	B		2.1G	16	1.0	7	5.0								W261	F
90♦	PZ1721B12U																						
		2.1G	27	40	2.0	§J	NSi	B					6.8	12								W260	E
91	LKE21050T	2.1G	30	45	3.0	§J	NSi	B		2.1G	20	1.2	7	5.0								W256	F
92♦	PZ1721B25U																						
		2.1G	45	40	4.0	§J	NSi	B					7.0	25								W260	E
93♦	MRF517	2.2GΔ	2.5	35 Δ	150m	§J	NSi	B	7.5Ø	300M	15	50m	10♦		.566	123	.507	-134	1.0G	15	90m	TO39	A
94▼	2SC2319	2.2GΔ	5.0 *	40	350m	§J	NSi	BPE					16§									S151a	R
95	NE74003	2.2G§	5.8	45	300m	§J	NSi						18*									M1003	
96	2SC1043	2.2G§	6.0	45	300m	§J	NSi	BEP	4.5Ø	200M	15	50m	15*		7.0Ø	0.0Ø	25Ø	-14Ø	500M	15	50m	S136	S
97	NE74020	2.2G§	7.0	45	300m	§J	NSi						18*									M1012	
98	NE74054	2.2G§	7.0	45	300m	§J	NSi						18*									M1014	
99♦	BLW82	2.2G▼	70	17 *	7.0	$J	NSi	PE	60%				5.0	30								M1249	
100	CD1979	2.2G§	90	60 Ø	5.0	§J	S91	B	30%	400M	28§	1.8	7.5Ø	15 Δ	1.0Ø	4.0Ø	5.0§	3.0§	400M	28§	1.8	T91	R
101▼	2023-1.5(A)																						
		2.3G		45 Ø	100m	§J	N	B	35%	2.3G	22§	1.5 Ø	8.0Δ	1.5 Δ								W334	

SYMBOLS AND CODES EXPLAINED IN INTERPRETER

10. UHF/MICROWAVE TRANSISTORS

IN ORDER OF:(1)MAX. OSCILLATOR FREQUENCY
(2)MAX. TOTAL PWR(PT) & (3)TYPE No.

LINE No.	3 TYPE No.	1 MAX. OSC. FREQ Fmax (Hz)	MAXIMUM RATINGS 2 PT (W)	BVCBO (V)	IC (A)	TEMP CODE	POL & MAT	TYPE & TECH	NOISE FIGURE @ STATED CONDITIONS NF (dB)	@ FREQ (Hz)	@ VCE (V)	@ IC (A)	TYPICAL OPERATING GAIN (S21)2 (dB)	Pout (W)	TYPICAL REFLECTION COEFFICIENTS S11 (Mag)	S11 (deg)	S22 (Mag)	S22 (deg)	@ FREQ (Hz)	@ VCE (V)	@ IC (A)	DWG No.	LEAD CODE
1▼	2023-1.5T(A)	2.3G		45 Ø	100m	§J	N	B	35%	2.3G	22§	1.5 Ø	8.0Δ	1.5 Δ								W331	
2▼	2023-3(A)	2.3G		45 Ø	200m	§J	N	B	35%	2.3G	22§	3.0 Ø	8.0Δ	3.0 Δ								W334	
3▼	2023-3T(A)	2.3G		45 Ø	200m	§J	N	B	35%	2.3G	22§	3.0 Ø	8.0Δ	3.0 Δ								W331	
4▼	2023-6(A)	2.3G		45 Ø	500m	§J	N	B	35%	2.3G	24§	6.0 Ø	7.0Δ	6.0 Δ								W335	
5▼	2023-12(A)	2.3G		45 Ø	1.0	§J	N	B	35%	2.3G	24§	24 §	7.0Δ	12 Δ								W285	
6♦	2023-16(A)	2.3G		45 Ø	1.6	§J	N	B	35%	2.3G	24§	3.6 §	6.5Δ	16 Δ								W285	
7	MRAL2023-18H	2.3G		42 Ø	8.0	§J		B					7.0♦	18 †									
8♦	BFT24	2.3G▼	30m	8.0	2.5m	$J	NSi	BPE	3.8	500M	1.0	1.0m	17§		1.8Ø	-2.4Ø	2.0Ø	-6.0Ø	500M	1.0	1.0m	W181	C
9	LDA424	2.3G§	30m	5.0 *	25m		N	B	3.8	500M		1.0m	17									TO122	
10	A424	2.3G§	50m	5.0 *	2.5m		N	B	3.8	500M		1.0m	17									TO72	G
11	BFT25	2.3G§	50m	8.0	6.5m	$J	NSi	PE	3.8	500M	1.0	1.0m	18§									W174	A
12	BFT25R	2.3G§	50m	8.0	6.5m	$J	NSi	PE	3.8	500M	1.0	1.0m	18§									W174	C
13	2SC2353	2.3G§	200m	30	50m	♦J	NSi	BEP	4.0†	900M	10*	-5m*	100†									W183	Z
14♦	FJ9203BB	2.3G#	2.5 *	30	150m	§J	NSi	BPE					10♦	300mΔ								W232	V
15♦	FJ9203CC	2.3G#	2.5 *	30	150m	§J	NSi	BPE					10♦	300mΔ								M1125	E
16♦	FJ9203DD	2.3G#	2.5 *	30	150m	§J	NSi	BPE					10♦	300mΔ								S537	V
17♦	FJ9208BB	2.3G#	3.0 *	35	250m	§J	NSi	BPE					9.5♦	700mΔ								W232	V
18♦	FJ9208CC	2.3G#	3.0 *	35	250m	§J	NSi	BPE					9.5♦	700mΔ								M1125	E
19♦	FJ9208DD	2.3G#	3.0 *	35	250m	§J	NSi	BPE					9.5♦	700mΔ	.577	116	.709	-134	2.3G	18	100m	S537	V
20▼	FLL10ME	2.3G#	3.0 %	15	350m%		NGA	F	45%	2.3G	8.5#		12♦	28 *								W163	DF
21	2SC2701	2.3G#	3.5 *	35	6.0	§J	NSi	BPE					5.6Ø	1.1								W77	EØ
22♦	FJ2301B-24	2.3G#	3.5 *	35	300m	§J	NSi	B					10	1.1								W232	V
23	2SC1038	2.3G§	3.8	40	150m	§J	NSi	BEP	50%	2.3G	18§	1.0 Ø	5.0Ø	800m	7.5Ø	33Ø	15Ø	-8.0Ø	2.5G	10	60m	S136	S
24	2SC2702	2.3G#	6.0 *	35	500m	§J	NSi	BPE					5.0Ø	2.2								W232	VØ
25	2SC2781	2.3G#	6.0 *	35	500m	§J	NSi	BPE						900m								W232	BØ
26	FJ2302B-24	2.3G#	6.0 *	35	500m	§J	NSi	BPE					9.0♦	2.0								W232	U§
27♦	FJ7201BB	2.3G#	6.0 *	35	500m	§J		B	33%	2.3G	18	150m	50%	29 Ø								W232	V
28♦	FJ7201CC	2.3G#	6.0 *	35	500m	§J		B	33%	2.3G	18	150m	50%	29 Ø								M1125	E
29♦	FJ9215BB	2.3G#	6.0 *	35	500m	§J	NSi	BPE					8.0♦	1.5 Δ								W232	V
30♦	FJ9215CC	2.3G#	6.0 *	35	500m	§J	NSi	BPE					8.0♦	1.5 Δ								M1125	E
31♦	FJ9215DD	2.3G#	6.0 *	35	500m	§J	NSi	BPE					8.0♦	1.5 Δ	.879	124	.552	157	2.3G	18	220m	S537	V
32▼	FLL17ME	2.3G#	6.0	15 %	700m%		NGA	F	43%	2.3G	8.5#		11♦	31 *								W163	DF
33	2SC1039	2.3G§	7.5	40	250m	§J	NSi	BEP	50%	2.3G	18§	1.8 Ø	3.5Ø	1.4	4.5Ø	31Ø	11Ø	5.0Ø	2.5G	10	100m	S136	S
34	LWE2025R	2.3G	8.0	35	800m	§J	NSi	B		2.3G	16	400m	7	2								W264	F
35	2.3L15	2.3G	8.5	45 Ø	0.5								7.0Δ	1.5								W127	A
36	FJ2304B-24	2.3G#	10 *	35	800m	§J	NSi	BPE					8.0♦	4.0								W232	U§
37♦	FJ9225BB	2.3G#	10 *	35	800m	§J	NSi	BPE					6.0♦	2.5 Δ								W232	V
38♦	FJ9225CC	2.3G#	10 *	35	800m	§J	NSi	BPE					6.0♦	2.5 Δ								M1125	E
39♦	FJ9225DD	2.3G#	10 *	35	800m	§J	NSi	BPE					6.0♦	2.5 Δ	.918	130	.670	134	2.3G	18	380m	S537	V
40▼	FLL35ME	2.3G#	11	15 %	1.4 %		NGA	F	42%	2.3G	8.5#		10♦	34 *								W163	DF
41	NEM230394	2.3G	11 #	45	900m	§J	NSi		40%				8.0	3.2								M1025	
42♦	PKB23007T	2.3G#	17	35	1.7	§J	NSi	B	35%	2.3G	22§		8.8	7.5								W256	E
43♦	PKB25006T	2.3G#	17	35	1.7	§J	NSi	B	40%	2.3G	21§		10	9.0								W256	E
44	2.3L30	2.3G	18	45 Ø	1.0			B					7.0	3.0 Δ								W127	C
45▼	FLL50MK	2.3G#	18	15 %	1.8 %		NGA	F	40%	2.3G	10#		10♦	36 *								W337	DE
46	FJ2306B-24#ai	2.3G#	22 *	35	1.5	§J	NSi	BPE	30%	2.3G	24	10 §	8.0♦									W232	U
47♦	FJ9235BB	2.3G#	22 *	35	1.5	§J	NSi	BPE					5.5♦	3.5 Δ	.975	166	.696	163	2.0G	18	700m	W232	V
48♦	FJ9235CC	2.3G#	22 *	35	1.5	§J	NSi	BPE					5.5♦	3.5 Δ	.975	166	.696	163	2.0G	18	700m	M1125	E
49▼	FLL100MK	2.3G#	30	15 %	3.6 %		NGA	F	37%	2.3G	10#		8.0♦	39 *								W337	DE
50	NEM231094	2.3G	31 #	45	2.7	§J	NSi		40%				6.5	10								M1025	
51	2.3L60	2.3G	35	45 Ø	2.0			B					6.0Δ	5.5 Δ								W127	C
52	MA42060♦	2.4G#	450m	20	40m		NSi	BPL						150m								W115	R
53	NE200153	2.4G	6.0	50	300m	§J	NSi		33%				9.0	1.3								M1022	
54	NE200157	2.4G	6.0	50	300m	§J	NSi		33%				9.0	1.3								M1024	
55	NE200353	2.4G	11	50	1.0	§J	NSi		35%				8.0	3.2								M1022	
56	NE200357	2.4G	11	50	1.0	§J	NSi		35%				8.0	3.2								M1024	
57	NEL230120	2.4G§	11	45	600m	§J	NSi						7.0	1.1 *								M1012	
58	NEL230153	2.4G§	11	45	600m	§J	NSi						8.5	1.1 *								M1022	
59	NEL230154	2.4G§	11	45	600m	§J	NSi						8.5	1.1 *								M1014	
60	NEL230163	2.4G§	11	45	600m	§J	NSi						8.5	1.1 *								M1021	
61	NEL230197	2.4G§	11	45	600m	§J	NSi						8.5	1.1 *								M1023	
62▼	LV2024E45R	2.4G	18	40	2.0	§J	NSi	B					7.0	4.5								W261	F
63	NEL230220	2.4G§	18	45	1.1	§J	NSi						6.0	2.0 *								M1012	
64	NEL230253	2.4G§	18	45	1.1	§J	NSi						7.5	2.0 *								M1022	
65	NEL230257	2.4G§	18	45	1.1	§J	NSi						7.5	2.0 *								M1024	
66	NEL230263	2.4G§	18	45	1.1	§J	NSi						7.5	2.0 *								M1021	
67	NEL230297	2.4G§	18	45	1.1	§J	NSi						7.5	2.0 *								M1023	
68	NE200553	2.4G	19	50	2.0	§J	NSi		33%				8.0	6.3								M1022	
69	NE200557	2.4G	19	50	2.0	§J	NSi		33%				8.0	6.3								M1024	
70♦	PZ2024B10U	2.4G	27	40	2.0	§J	NSi	B					5.6	9.0								W260	E
71	NE201053	2.4G	29	50	3.0	§J	NSi		35%				5.4	11								M1022	
72	NEL230320	2.4G§	29	45	2.0	§J	NSi						5.5	3.2 *								M1012	
73	NEL230353	2.4G§	29	45	2.0	§J	NSi						7.0	3.2 *								M1022	
74	NEL230357	2.4G§	29	45	2.0	§J	NSi						7.0	3.2 *								M1024	
75	NEL230363	2.4G§	29	45	2.0	§J	NSi						7.0	3.2 *								M1021	
76	NEL230397	2.4G§	29	45	2.0	§J	NSi						7.0	3.2 *								M1023	
77♦	PZ2024B20U	2.4G	45	40	4.0	§J	NSi	B					6.0	20								W260	E
78	LT3204	2.5GΔ		40	150m	$J	N	B	2.5	300M	8.0	40m	15§	23 ♦	-1.8	160	-6.5	-112	1.3G	8.0	20m	W273	♦
79	2N5044	2.5G§	30m	15	30m	♦S	PGe		3.5Ø	400M	5.0*	3.0m	6.5									TO72	G
80	SD1303#	2.5GΔ	200m	15 *			N		4.0Ø	450M		1.5m	15♦									TO72	
81	2SC2213▼	2.5G	250m*	30	50m	#J	NSi	B					3.1		.72	60	1.03	-65	1.2G	10*	5.0m*	R210c	A
82	NE90120	2.5G§	300m	40	200m		PSi						16*									M1012	
83	MA42061♦	2.5G#	450m	20	40m		NSi	BPL						100m								W115	R
84	MA42062♦	2.5G#	450m	20	40m		NSi	BPL						80m								W115	R
85	MA42063♦	2.5G#	450m	20	40m		NSi	BPL						50m								W115	R
86	LT3203	2.5G▼	600m	35 Δ	200m	§J	NSi	B	3.5†	500M	10	20m	12									W52	
87	MS173JE	2.5G§	1.0	30	50m	§S	NSi	B	3.0Ø	1.0G	9.0	5.0m	11		.660	166	.646	-38	1.5G	9.0	10m	W21	RØ
88	MS173TE	2.5G§	1.0	30	50m	§S	NSi	B	3.0Ø	1.0G	9.0	5.0m	11		.660	166	.646	-38	1.5G	9.0	10m	W5b	CØ
89♦	MRF905$	2.5G§	2.5	35 Δ	150m	§S	NSi	B	23%	1.7G	20	110m	60%	500mØ								TO46	A
90♦	PT4579	2.5G§	2.5	40 Δ	200m	§J	NSi	B	2.3	300M	8.0	50m	13§	26 *	-6.2	134	-8.0	-118	1.0G	14	90m	TO39	A
91	DC5652	2.5GØ	3.0	30	250m	$S	NSi	BPE					11$	1.0 *								W16	F
92	NE77310	2.5G	4.4	35	300m	§J	NSi							1.2								TO46	A
93	2SC1594	2.5G§	7.0	35	200m	§J	NSi	BEP					10♦									S136	S
94	2SC1673	2.5G§	7.0	35	300m	§J	NSi	BEP					4.0		.866	153	.533	173	1.0G	10	100m	S136	S
95	NE77320M	2.5G§	7.0	35	300m	§J	NSi						10*	2.2								M1012	
96	NE77320T	2.5G§	7.0	35	250m	§J	NSi		2.6	0.2G	10	30m	10*									M1012	
97	NE77360	2.5G	7.0	40	300m	§J	NSi							1.2								M1031	
98	NE77362	2.5G	7.0	40	300m	§J	NSi							1.2								M1034	

SYMBOLS AND CODES EXPLAINED IN INTERPRETER

10. UHF/MICROWAVE TRANSISTORS

IN ORDER OF:(1)MAX. OSCILLATOR FREQUENCY
(2)MAX. TOTAL PWR(PT) & (3)TYPE No.

LINE No.	3 TYPE No.	1 MAX. OSC. FREQ Fmax (Hz)	MAXIMUM RATINGS 2 PT (W)	BVCBO (V)	IC (A)	TEMP CODE	POL & MAT	TYPE & TECH	NOISE FIGURE @ STATED CONDITIONS NF (dB)	@ FREQ (Hz)	@ VCE (V)	@ IC (A)	TYPICAL OPERATING GAIN (S21)2 (dB)	Pout (W)	TYPICAL REFLECTION COEFFICIENTS S11 (Mag)	S11 (deg)	S22 (Mag)	S22 (deg)	@ FREQ (Hz)	@ VCE (V)	@ IC (A)	DWG No.	LEAD CODE
1	TPV596	2.5G§	8.7	45	700m	§J							12♦									S518	V
2	TPV597	2.5G§	19	45	1.4m	§J							11♦									S518	V
3♦	BLX98	2.5G▼	21	27 *	2.0m	§J	NSi	PE					5.0*	3.5								S72m	V
4	MRAL2327-1.3	2.7G		38 Δ	250u			B					5.4♦	1.3									
5	NE41612	2.7G§	500m	35	150m	§J	NSi		2.3	0.2G	5	25m	20*									TO72	G
6	2SC1457	2.7G§	800mØ	35	150m	§J	NSi	BEP	3.2Ø	200M	10	20m			.64*	0.0*	1.52*	-1.1*	500M	10	20m	TO33	G
7	2SC1803	2.7G§	1.0 †	30	130m	§J	NSi	BEP	1.5	200M	10	3.0m	9.0	160m	.17*	.13*	1.1*	-.37*	1.0G	10	30m	W116	S
8	2SC1949	2.7G§	1.0 †	30	130m	§J	NSi	BEP	1.5	200M	10	3.0m	9.0	160m	.17*	.13*	1.1*	-.37*	1.0G	10	30m	W116	S
9	2SC1426	2.7G§	3.5	35	150m	§J	NSi	BEP	2.4†	200m	10	30m	100†									TO33	G
10	LKE27010R	2.7G	5	35	550m	§J	NSi	B		2.7G	16	200m	7	630m								W256	F
11	NEM2701B20	2.7G	11	45	0.6	§J	NSi	BEP					70†	33 ♦								W151	A
12	NEM270194	2.7G	11 #	45	600m	§J	NSi		43%				9.0	1.6								M1025	
13	LKE27025R	2.7G	15	35	1.5	§J	NSi	B		2.7G	16	650m	6.5	2.2								W256	F
14	NEM270394	2.7G	17 #	45	1.2	§J	NSi		43%				8.5	3.5								M1025	
15♦	PKB27005U	2.7G#	17	45	1.7	§J	NSi	B	27%	2.7G	28§		7.0	5.0								W256	E
16	LV2327E40R	2.7G	18	40	2.0	§J	NSi	B		2.7G	16	1.0	7	4.5								W261	F
17	NEM2703B20	2.7G	18	45	1.2	§J	NSi	BEP					70†	36 ♦								W151	A
18	NEM2705B20	2.7G	29	45	2.4	§J	NSi	BEP					70†	38 ♦								W151	A
19	NEM270594	2.7G	29 #	45	2.4	§J	NSi		43%				7.5	5.6								M1025	
20	CD1984	2.7G§	30	60 Ø	1.0	§J	NSi	B	30%	900M	25§	400m	9.0Ø	3.0 Δ	2.0Ø	5.0Ø	8.0§	8.0§	900M	25§	400m	S111	R
21	NEM2708B20	2.7G	39	45	3.6	§J	NSi	BEP	40%	2.7G	20§											W281	A
22	NEM270894	2.7G	39 #	45	3.6	§J	NSi		43%				7.0	10								M1025	
23	CD1985	2.7G§	60	60 Ø	2.0	§J	NSi	B	30%	900M	25§	800m	7.5Ø	6.0 Δ	1.5Ø	5.0Ø	5.0§	2.0§	900M	25§	800m	S111	R
24♦	BFW92A#	2.8G▼	200m	25	25m	§J	NSi	BPE	2.5	800M	5.0	2.0m	13§									W181	
25	2SC2350	2.8G▼	250m	30	50m	§J	NSi	BEP															
26	2SC2148	2.9GØ	250mØ	30	50m	§J	NSi	BEP	2.1	500M	10	3.0m	9.3									W100	S
27	PKB38002UC	2.9G	6.5	45	800m	§J	NSi	B		2.9G	25§		7	1.6								W256	E
28▼	2301#(A)	3.0G#		42 Ø	100	§J	N	B	40%	3.0G	28§	200m§	8.0Δ	1.5 Δ	0.25Ø	0.5 Ø	0.07Ø	-.1 Ø	3.0G	28§	1.5 Ø	W336	
29	LT3772	3.0G		25	50m	§J	NSi	B	3.6	1.0G	8.0	5.0m	6.0		-19	-172	-4.5	-32	1.0G	8.0	5.0m	TO72	
30	TPV590	3.0G§		45	400m	§J							14♦		.776	160	.266	280	1.0G	20	100m	W203	
31	TPV591	3.0G§		45	800m	§J							14♦		.876	158	.376	214	1.0G	20	150m	W203	
32	2N5043	3.0G§	30m	15	30m	♦S	PGe		2.5Ø	400M	5.0*	3.0m*	8.5#									TO72	G
33♦	MRF931	3.0G§	50mØ	10 Δ	5.0m	$S	NSi	B	4.3	1.0G	1.0	250u*	18*									W252	V
34	2SC988	3.0G§	200mØ	20	30m	§J	NSi	BEP	2.5Ø	500M	10	3.0m	12		45Ø	-55Ø	100Ø	-150Ø	500M	10	3.0m	TO72	G
35	2SC988A	3.0G§	200mØ	20	30m	§J	NSi	BEP	2.0Ø	500M	10	3.0m	12		45Ø	-55Ø	100Ø	-150Ø	500M	10	3.0m	TO72	G
36	2SC988B	3.0G§	200mØ	20	30m	§J	NSi	BEP	1.5Ø	500M	10	3.0m	12		45Ø	-55Ø	100Ø	-150Ø	500M	10	3.0m	TO72	G
37	FJ002B	3.0G§	200mØ	20	30m	§J	NSi	BPE	1.5	500M	10	3.0m	20*		.158	-97	.763	-25	500M	10	10m	TO72	G
38	NE32730	3.0G§	200m	20	50m	§J	NSi	S					10									M1007	
39♦	SD1303	3.0G▼	200m	30	50m	§J	NSi	B	3.0	450M	6.0	1.5m	18♦									TO72	
40♦	SD1309	3.0G▼	200m	25	50m	§J	NSi	B	3.5Ø	470M	.98	2.0m	25%									TO72	
41	NE32707	3.0G§	250m	20	50m	§J	NSi	S					10									M1004	
42	2SC1458	3.0G§	300mØ	20	50m	§J	NSi	BEP	3.5	1.0G	5.0	3.0m	6.5		.375	-140	.490	-51	1.0G	5.0	3.0m	W116a	S
43	2SC1731	3.0G§	300mØ	20	50m	§J	NSi	BEP	3.5	1.0G	5.0	3.0m	6.5		.375	-140	.490	-51	1.0G	5.0	3.0m	W109	RE
44	2SC1732	3.0G§	300mØ	20	50m	§J	NSi	BEP	3.5	1.0G	5.0	3.0m	6.5		.375	-140	.490	-51	1.0G	5.0	3.0m	W109	RE
45	2SC2498	3.0GØ	300mØ	30	50m	♦J	NSi	BPE	4.0	1.0G	1.0	5.0m	9.0		.216	152	.267	-47	1.0G	10	10m	TO92	C
46	FJ101M	3.0G#	300m*	20	70m	§J	NSi	S	3.0	1.0G	6.0	3.0m	13*		.618	-178	.382	-56	1.0G	6.0	10m	W84	RU
47	FJ101R	3.0G#	300m*	20	70m	§J	NSi	S	3.0	1.0G	6.0	3.0m	13*		.618	-178	.382	-56	1.0G	6.0	10m	W85	QG
48	NE32702	3.0G§	300m	20	50m	§J	NSi	S					10									M1006	
49	NE32708	3.0G§	300m	20	50m	§J	NSi	S					10									M1000	
50	NE32740A	3.0G§	300m	20	50m	§J	NSi	S														M1008	
51	NE32740B	3.0G§	300m	20	50m	§J	NSi	S														M1008	
52	MA42151-511▼	3.0G#	700m	27	50m	§J	NSi	BPL						40mØ	.92	107	1.11	-89	3.0G	15*	20m	W29e	R
53	BFQ64	3.0G▼	1.5	30	200m	$J	NSi	B					10♦									M166	B
54	LKE32001QC	3.0G	1.5	45	400	§J	NSi	B		3.0G	12	50m	7	90m								W256	F
55	LKE32002T	3.0G	1.5	45	400	§J	NSi	B		3.0G	20	65m	8	200m								W256	F
56▼	BLW27	3.0G	1.6	30	200m	§J	N						8.0♦	22 †	1.1	1.2	0.75	-0.5	3.0G	10	70m	W211	
57	PKB3000U	3.0G#	2.0 ▼				N	B	29%				8.5	600m								W145a	
58♦	PKB32000U	3.0G#	2.2	45	200m	§J	NSi	B	27%	3.0G	28§		8.0	500m								W256	
59▼	BFT51	3.0G▼	2.8	30	400m	§J	NSi	PE														TO39	A
60	LKE32004T	3.0G	3	45	800	§J	NSi	B		3.0G	20	130m	8	630m								W256	F
61	BFT98	3.0G§	3.5	20 *	250m	§J	NSi	BPE					11									S157	R
62	FHB5	3.0G	3.5	50	.12	§	N	B					7.0Δ	500m	.95	161	1.01	-19	500M	20	50m	S114	
63	FHB6	3.0G	3.5	50	.12	§	N	B					7.0Δ	500m	.95	161	1.01	-19	500M	20	50m	S114a	
64	FHB7	3.0G	3.5	50	.12	§	N	B					7.0Δ	500m	.95	161	1.01	-19	500M	20	50m	S114a	
65	FHB8	3.0G	3.5	50	.12	§	N	B					7.0Δ	500m	.95	161	1.01	-19	500M	20	50m	S114a	
66	FHB9	3.0G	3.5	50	.12	§	N	B					7.0Δ	500m	.95	161	1.01	-19	500M	20	50m	S114a	
67	LT1001A	3.0G▼	3.5	40 Δ	200m	§S	NSi	B	6.5†	200M	14§	50m	10♦	72 *								TO399	
68	LT3046	3.0G▼	3.5	40 Δ	200m	§S	NSi	B	6.5†	200M	14§	50m	9.0♦	23 *								TO46	
69♦	PKB32001U	3.0G#	3.8 ▼	45	400m	§J	NSi	B	34%	3.0G	28§		8.1	1.3								W256	
70	3000	3.0G	3.9	50 Ø	125m	§J	NSi	B						.50								W24	A
71♦	PKB3001U	3.0G#	4.5	45	160m	§J	NSi	B	33%	3.0G	28§		10	1.2								W145a	
72	3001(A)	3.0G	5.0	50 Ø	250m	§J	NSi	B						1.0								W24	A
73	BFT99	3.0G§	5.0	20 *	500m	§J	NSi	BPE					9.0									S157	R
74	LT2001	3.0G▼	5.0	40 Δ	200m	§S	NSi	B	6.5†	300m	14§	90m	14♦	26 *								TO117	
75♦	PKB35002U	3.0G#	6.5	45	800m	§J	NSi	B	33%	3.0G	28§		7.5	2.8								W256	E
76	NE3001♦	3.0G#	8.7	40	600m	§J	NSi	B	35%	3.0G	20§	200m§	9.0Ø	1.6	4.0Ø	30Ø	7.0§	-7.0§	3.0G	20§	200m§	W24	AC
77	3003(A)	3.0G	10	50 Ø	500m	§J	NSi	B						2.5								W24	A
78♦	PKB32003U	3.0G#	10 ▼	45	800m	§J	NSi	B	33%	3.0G	28§		6.3	3.2								W256	
79	NE3001B20	3.0G	11	45	600m	§J	NSi	BEP	35%	3.0G	20§											W232	E
80	NEM3001B20	3.0G	11	45	0.6	§J	NSi	BEP					70†	33 ♦								W151	A
81	NEM300194	3.0G	11 #	45	600m	§J	NSi		38%				9.0	1.6								M1025	
82♦	PKB3003U	3.0G#	11	45	900m	§J	NSi	B	35%	3.0G	28§		7.0	3.5								W145a	
83♦	PKB32005U	3.0G#	15 ▼	45	2.0	§J	NSi	B	31%	3.0G	28§		5.2	5.0								W256	
84	NE3003♦	3.0G#	17	40	1.2	§J	NSi	B	32%	3.0G	20§	500m§	8.0Ø	3.2	4.0Ø	28Ø	2.0§	-11§	3.0G	20§	500m§	W24	AC
85	NEM300394	3.0G	17 #	45	1.2	§J	NSi		38%				8.5	3.2								M1025	
86	NE3003B20	3.0G	18	45	1.2	§J	NSi	BEP	32%	3.0G	20§											W232	E
87	NEM3003B20	3.0G	18	45	1.2	§J	NSi	BEP					70†	36 ♦								W151	A
88♦	PKB3005U	3.0G#	18	45	1.5	§J	NSi	B	29%	3.0G	28§		5.2	5.0								W145a	
89	3005	3.0G	20	50 Ø	1.0	§J	NSi	B						5.0								W24	A
90	NEM3005♦	3.0G#	22	40	2.4	§J	NSi	B	32%	3.0G	20§	1.2 §	6.0Ø	5.0	10Ø	33Ø	15§	-8.0§	3.0G	20§	1.2 §	W151	A
91	NE3005B20	3.0G	29	45	2.4	§J	NSi	BEP	28%	3.0G	20§											W232	E
92	NEM3008♦	3.0G#	29	40	4.8	§J	NSi	B	30%	3.0G	20§	2.5 §	5.0Ø	8.0	15Ø	45Ø	7.0§	-12§	3.0G	20§	2.5 §	W151	A
93	NEM300594	3.0G	29 #	45	2.4	§J	NSi		38%				6.3	5.6								M1025	
94	NEM3005B20	3.0G	30	45	2.4	§J	NSi	BEP					70†	38 ♦								W151	A
95	NEM3008B20	3.0G	39	45	3.6	§J	NSi	BEP					70†	40 ♦								W151	A
96	NEM300894	3.0G	39 #	45	3.6	§J	NSi		38%				5.0	7.9								M1025	
97▼	TRW2307	3.0G#	42 Ø	42 Ø	500m	§J	NSi	B	40%	2.3G	20	7.0 Ø	8.0♦	7.0 †	0.12Ø	0.34Ø	0.07Ø	0.17Ø	3.0G	20	7.0 Ø	W173	D

SYMBOLS AND CODES EXPLAINED IN INTERPRETER

10. UHF/MICROWAVE TRANSISTORS

IN ORDER OF:(1)MAX. OSCILLATOR FREQUENCY (2)MAX. TOTAL PWR(PT) & (3)TYPE No.

LINE No.	3 TYPE No.	1 MAX. OSC. FREQ Fmax (Hz)	MAXIMUM RATINGS 2 PT (W)	BVCBO (V)	IC (A)	TEMP CODE	POL & MAT	TYPE & TECH	NOISE FIGURE @ STATED CONDITIONS NF (dB)	@ FREQ (Hz)	@ VCE (V)	@ IC (A)	TYPICAL OPERATING GAIN (S21)2 (dB)	Pout (W)	TYPICAL REFLECTION COEFFICIENTS S11 (Mag)	S11 (deg)	S22 (Mag)	S22 (deg)	@ FREQ (Hz)	@ VCE (V)	@ IC (A)	DWG No.	LEAD CODE
1	BFT98T	3.2G§	800m	20 *	150m	§J	NSi	BPE					12♦									W297	A
2▼	BLX37	3.2G▼	4.0	30	400m	§J	NSi	PE														S531	
3▼	BLX37C	3.2G▼	4.0	30	400m	§J	NSi	PE														S90c	
4▼	BLX37D	3.2G▼	4.0	30	400m	§J	NSi	PE														S90c	
5	2SC2065	3.2G§	6.0	35	250m	§J	NSi	BEP														S136	S
6	NE22154	3.2G§	6.0	40	250m	§J	NSi						14*									M1014	
7▼	BLX38	3.2G▼	7.0	30	800m	§J	NSi	PE					5.7	800m								S531	
8▼	BLX38C	3.2G▼	7.0	30	800m	§J	NSi	PE					5.7	800m								S90c	
9▼	BLX38D(A)	3.2G▼	7.0	30	800m	§J	NSi	PE					5.7	800m								S90c	
10	NE22120	3.2G§	7.0	40	250m	§J	NSi						14*									M1012	
11	BFT99A	3.3G§	4.0m	20 *	350m	§J	NSi	BPE					12♦		.842	106	.451	150	2.0G	15	160m	W298	R
12	BFQ78	3.3G▼	700m	25	50m	§J	PSi	BPE	3.2†	800M	10	2.0m	12♦									TO120	S
13♦	BLW34	3.3G▼	31	30 *	2.2	§J	NSi	PE					10									S171	
14♦	BLW32	3.4G▼	11	30 *	650m		NSi	PE					12									S171	
15♦	BLW33	3.4G▼	19	30 *	1.2	§J	NSi	PE					10*	1.0								S171	
16	LT3703	3.5GΔ		25	50m	§J	NSi	B	1.5	300M	8.0	5.0m	21Ø		-5.3	-114	-3.4	-23	300M	8.0	5.0m	W278	
17	LT3704	3.5GΔ		25	50m	§J	NSi	B	1.5	300M	8.0	5.0m	21Ø		-3.2	-115	-3.4	-28	300M	8.5	5.0m	W278	
18	LT3746	3.5G		25	50m	§J	NSi	B	3.6	1.0G	8.0	5.0m	6.0		-13	-172	9.1	-41	1.0G	8.0	5.0m	TO46	
19▼	2SC3127	3.5GΔ	150m*	15 Δ	50m	§J	NSi	BEP	2.2†	900M	5.0§	5.0m	10♦									W177	A
20	2SA1161	3.5G§	200mØ	15	30m	♦J	PSI	BPE	3.5	1.0G	5.0	3.0m	8.0									TO92	C
21▼	2SC3126	3.5GΔ	200m*	15 Δ	50m	§J	NSi	BEP	2.2†	900M	5.0§	5.0m	10♦									W250	Y
22	AT0017	3.5G§	200m	20	100m	§J	NSi	BPE	1.5Ø	60M	10*	5.0m	25		.360	-151	.413	-43	500M	10	5.0m	TO72	G
23	AT0017A	3.5G§	200m	20	100m	§J	NSi	BPE	1.2Ø	60M	10*	5.0m	25		.435	-161	.463	-41	500M	10	5.0m	TO72	G
24	AT0025	3.5G§	200m	20	50m	§J	NSi	BPE	2.5Ø	500M	10*	3.0m	11*		.193	-59	.634	-24	500M	10	10m	TO72	G
25	AT0025A	3.5G§	200m	20	50m	§J	NSi	BPE	2.0Ø	500M	10*	3.0m	11*		.193	-59	.634	-24	500M	10	10m	TO72	G
26	AT0045	3.5G§	200m	20	50m	§J	NSi	BPE	1.5Ø	500M	10*	3.0m	11*		.250	-60	.625	-23	500M	10	10m	TO72	G
27♦	BFT50	3.5G▼	250m	35	60m	§J	NSi	BPL	1.8	500M	5.0	2.0m	22♦		-20	-172	-4.5	-20	500M	5.0	30m	TO72	G
28♦	ESM691	3.5G§	250m	25	50m	§J	NSi	BPL	1.9	500M	10	3.0m	15§									TO92	E
29	FJ001B	3.5G§	250mØ	30	150m	§J	NSi	BPE	1.5	200M	10	5.0m	8.0*		.791	170	.162	-137	1.0G	10	30m	TO72	G
30▼	2SC3128	3.5GΔ	350m*	15 Δ	50m	§J	NSi	BEP	2.2†	900M	5.0§	5.0m	10♦									TO92	C
31♦	ESM269	3.5G§	360m	30	100m	§S	NSi	BPE	1.0	200M	9.0	5.0m	23§		-11	150	-8.9	-48	1.0G	5.0	50m	TO72	G
32	MS300H	3.5G	360m	30	100m	§S	NSi	B	0.9	200M	9.0§	10m	22*									TO72	G
33	MA42111-509																						
		3.5GØ	450m	20	125m	§J	NSi	BPL	1.5Ø	450M	10	5.0m	13Ø	1.0m*	.625	-68	.725	-28	450M	10	5.0m	TO72	G
34	MA42112-509																						
		3.5GØ	450m	20	125m	§J	NSi	BPL	1.8Ø	450M	10	5.0m	13Ø	1.0m*								TO72	G
35	MA42113-509																						
		3.5GØ	450m	20	125m	§J	NSi	BPL	2.1Ø	450M	10	5.0m	13Ø	1.0m*								TO72	G
36	NE41603	3.5G	580m	35	130m	§J	NSi	B	1.5	0.5G	10	5m	20*									M1003	
37	NE41607	3.5G	580m	35	150m	§J	NSi	B	1.5	0.5G	10	5m	20*									M1004	
38	NE41635	3.5G	580m	35	150m	§J	NSi	B	1.5	0.5G	5	10m	20*									M999	
39	2SC2408	3.5G§	600m	35	150m	§J	NSi	B	2.4†	200M	10	30m	21									TO92	C
40▼	2SC3510	3.5GΔ	600m*	15 Δ	50m	§J	NSi	BEP	2.2†	900M	5.0	5.0m	10♦									TO92	C
41	NE41632	3.5G	600m	35	150m	§J	NSi	B	2.4	0.2G	5	10m	15*									TO92	C
42	NE41632E/B																						
		3.5G§	600m	35	150m	§J	NSi		2.4	0.2G	5	30m	22*									TO92	C
43	MA42111-511																						
		3.5GØ	750m	20	125m	§J	NSi	BPL	1.5Ø	450M	10	5.0m	15Ø	1.0m*	.692	-151	.430	-46	500M	10	5.0m	W29e	R
44	MA42112-511																						
		3.5GØ	750m	20	125m	§J	NSi	BPL	1.8Ø	450M	10	5.0m	15Ø	1.0m*								W29e	R
45	MA42113-511																						
		3.5GØ	750m	20	125m	§J	NSi	BPL	2.1Ø	450M	10	5.0m	15Ø	1.0m*								W29e	R
46	FJ001A	3.5G§	800mØ	30	150m	§J	NSi	BPE	1.5	200M	10	5.0m	9.0*		.791	170	.162	-137	1.0G	10	30m	TO33	G
47	BFQ18	3.5G§	1.0	30	150m	§J	NSi	BPE	8.0	200M	20	90m	30%									M166	B
48	MA42111-510																						
		3.5GØ	1.2	20	125m	§J	NSi	BPL	1.5Ø	450M	10	5.0m	15Ø	1.0m*	.665	-155	.418	-51	500M	10	5.0m	W115	R
49	MA42112-510																						
		3.5GØ	1.2	20	125m	§J	NSi	BPL	1.8Ø	450M	10	5.0m	15Ø	1.0m*								W115	R
50	MA42113-510																						
		3.5GØ	1.2	20	125m	§J	NSi	BPL	2.1Ø	450M	10	5.0m	15Ø	1.0m*								W115	R
51♦	BFR95	3.5G▼	1.5	30	150m	§J	NSL	BPE	8.0	200M	20	80m	9.0									S89	A
52	BFR95#	3.5G§	1.5	30	300m	§J	NSi	PE	9.0	200M	18	80m										TO39	A
53♦	BFQ34	3.5G▼	2.2	25	150m	§J	NSi	BPE	8.0	500M	15	120m	16§									S171	R
54♦	BFR94	3.5G▼	3.5	30	150m	§J	NSi	BPE	5.0	500M	20	90m	13§		.55	-165	.30	-130	500M	20	90m	S89	R
55	MS120KE	3.5G§	3.5	35	300m	§S	NSi	B					10	1.0 *								W45a	V
56	NE41610	3.5G§	3.5	35	150m	§J	NSi							200mØ								TO46	A
57	NE41615	3.5G§	3.5	35	150m	§J	NSi						15*	200m								TO33	A
58	NE41620	3.5G§	3.5	35	150m	§J	NSi						12*	200m								M1012	
59	NE41654	3.5G§	3.5	35	100m	§J	NSi						10	300m*								M1014	
60	NE41660	3.5G§	3.5	35	150m	§J	NSi							200mØ								M1031	
61	LT3005	3.5G▼	5.0	40 Δ	200m	§S	NSi	B	7.5†	300m	14§	90m	16♦	27 *								W203	R
62	LT3014	3.5G▼	5.0	40 Δ	200m	§S	NSi	B	7.5†	300m	14§	90m	16♦	26 *								W204	V
63	NE300153	3.5G	11	45	600m	§J	NSi		35%				9.0	1.6								M1022	
64	NE300157	3.5G	11	45	600m	§J	NSi		35%				9.0	1.6								M1024	
65	NEM3501B20																						
		3.5G	11	45	0.6	§J	NSi	BEP					70†	32 ♦								W151	A
66	NEM350194	3.5G	11 #	45	600m	§J	NSi		36%				9.0	1.6								M1025	
67	NE300353	3.5G	17	45	1.2	§J	NSi		32%				8.7	3.7								M1022	
68	NE300357	3.5G	17	45	1.2	§J	NSi		32%				8.7	3.7								M1024	
69	NEM350394	3.5G	17 #	45	1.2	§J	NSi		36%				8.5	3.2								M1025	
70	NEM3503B20																						
		3.5G	18	45	1.2	§J	NSi	BEP					70†	36 ♦								W151	A
71	RV3135B5X	3.5G	25	35	1	§J	NSi	B		3.5G	24§		4.3	4								W261	E
72	NE300553	3.5G	29	45	2.4	§J	NSi		28%				6.3	5.5								M1022	
73	NE300557	3.5G	29	45	2.4	§J	NSi		28%				6.3	5.5								M1024	
74	NEM350594	3.5G	29 #	45	2.4	§J	NSi		33%				6.3	5.6								M1025	
75	NEM3505B20																						
		3.5G	30	45	2.4	§J	NSi	BEP					70†	38 ♦								W151	A
76	NEM3508B20																						
		3.5G	39	45	3.6	§J	NSi	BEP					70†	39 ♦								W151	A
77	NEM350894	3.5G	39 #	45	3.6	§J	NSi		33%				5.0	7.9								M1025	
78	RZ3135B15U																						
		3.5G	53	40	2	§J	NSi	B		3.5G	3.0§		4.0	12								W260	E
79	RZ3135B25U																						
		3.5G	105	40	4	§J	NSi	B		3.5G	3.0§		4.0	25								W260	E
80▼	RZ3135B40U(A)																						
		3.5G	150	25 *	6.0	§J	NSi	B					5.0	45								W260	E
81♦	BFQ32	3.6G▼	500m	20	75m	§J	PSi	BPE	3.7	500M	10*	50m*	14§									W181	C
82	BFQ34T	3.7G§	1.0m	25	150m	§J	NSi	PE					20§									W181	C
83♦	BFG34	3.7G▼	1.0	25	150m	§J	NSi	BPE				14 §										A433	
84	PGB38001UT																						
		3.7G	5.0	35	400m	§J	NSi	B		3.7G	28§		4.7	1.2								W270	E
85	PKB38001U	3.7G	5.0	35	400m	§J	NSi	B		3.7G	26§		4.7	1.2								W270	E
86	MA42120-508																						
		3.8G	1.0	30	80m	§J	NSi	BPE					13§		.64	-123	.77	-30	450M	10	1.5m	TO46	G
87♦	PJC4003T	3.8G	6.0	40	800m	§J	NSi	B						1.4								W266	C
88	PV3539B3X	3.9G	15	40	750m	§J	NSi	B		3.9G	22§		6	3								W261	E
89	HP35831EOpt005																						
		4.0G*	1.6m†	35	80m	§J	NSi	B					4.0		.67	132	.34	-97	2.0G	18	60m	W17	S
90	BLU99	4.0G§	12m	36	800m	§J	NSi	PE					7.0§									S171	Y

SYMBOLS AND CODES EXPLAINED IN INTERPRETER

10. UHF/MICROWAVE TRANSISTORS

IN ORDER OF:(1)MAX. OSCILLATOR FREQUENCY
(2)MAX. TOTAL PWR(PT) & (3)TYPE No.

LINE No.	3 TYPE No.	1 MAX. OSC. FREQ Fmax (Hz)	MAXIMUM RATINGS 2 PT (W)	BVCBO (V)	IC (A)	TEMP CODE	POL & MAT	TYPE & TECH	NOISE FIGURE @ STATED CONDITIONS NF (dB)	@ FREQ (Hz)	@ VCE (V)	@ IC (A)	TYPICAL OPERATING GAIN (S21)2 (dB)	Pout (W)	TYPICAL REFLECTION COEFFICIENTS S11 (Mag)	S11 (deg)	S22 (Mag)	S22 (deg)	@ FREQ (Hz)	@ VCE (V)	@ IC (A)	DWG No.	LEAD CODE
1	2N6617	4.0G#	150m†	25	10m	§S	NSi	B	3.0Ø	4.0G	10	4.0m	8.0Ø									W69a	Y
2	BFQ29	4.0G§	150m	20	30m	$J	NSi	BPE	1.8	800M	6.0	4.0m	70%									M156c	A
3	DC5141	4.0G	150m	25	20m		NSi	BPE	1.7	30M	5.0	3.0m	20$									TO72	G
4	DC5142	4.0G	150m	15	20m		NSi	B	1.5	2.0G	5.0	3.0m	20*									TO72	G
5	DC5143	4.0G	150m	15	20m		NSi	B	1.2	2.0G	5.0	3.0m	20*									TO72	G
6	FJ902F	4.0GΔ	150m*	20	30m	§J	NSi	BPE														W234	V
7	HXTR6101	4.0G#	150m†	25	10m	§J	NSi	B	3.0Ø	4.0G	10	4.0m	9.0Ø		.548	173	.816	-71	4.0G	10	4.0m	W69a	Y
8	MGF1100	4.0G	150m		60m#	$S	N	FGA	2.5	4.0G			9.0		-1.8	-54	-.60	-40	4.0G	5.0#	7.5m#	W69e	FD
9	HXTR6102	4.0G#	180m†	30	10m	§J	NSi	B	2.7Ø	4.0G	10	4.0m	9.0Ø		.589	-149	.754	-43	4.0G	10	4.0m	W69a	Y
10	BFQ28	4.0G§	200m	20	15m	§J	NSi	B	3.0	2.0G	10	3.0m	9.5						2.0G	10	10m	W14c	R
11	BFT97	4.0G§	200m	20	30m	$J	NSi	BPE	2.5	800M	6.0	2.0m	70%		.19	171	.50	-32	1.0G	10	10m	W22	E
12	FJ902E	4.0GΔ	200m*	20	30m	§J	NSi	BPE														W238	V
13♦	MRF904	4.0G§	200mØ	25 Δ	30m	§S	NSi	B	2.5	1.0G	6.0	5.0m	16§		.055	-36	.699	-38	1.0G	10	30m	TO72	G
14	2SC2548	4.0G§	250mØ	20	30m	♦J	NSi	BPE	3.5	1.0G	5.0	5.0m	10									TO92	C
15▼	FSC10FA	4.0G#	250m	8.0 %	60m%		NGA	F	0.6	4.0G	3.0#	10m#	13									W341	DB
16▼	FSC10LF	4.0G#	250m	8.0 %	60m%		NGA	F	0.6	4.0G	3.0#	10m#	13									W342	DB
17▼	FSC11FA	4.0G#	250m	8.0 %	60m%		NGA	F	1.0	4.0G	3.0#	10m#	17Ø	15 *								W341	DB
18▼	FSC11LF	4.0G#	250m	8.0 %	60m%		NGA	F	1.0	4.0G	3.0#	10m#	17Ø	15 *								W342	DB
19	NE88935	4.0G	250m	20	50m	§J	PSi	B	2.5	0.5G	10	3m	18*									M999	
20	BFQ70	4.0G▼	290m	20	30m	§J	NSi	BPE	2.1	800M	6.0	4.0m										TO120	S
21	2SC2499	4.0G§	300mØ	20	30m	♦J	NSi	BPE	2.5	1.0G	10	3.0m	9.5									TO92	C
22	HXTR-6001	4.0G#	300m	35	20m	▼J	N	B	2.7	4.0G	10	4.0m			0.55	-159	0.76	-18	4.0G	10	4.0m	u53	
23▼	MM4049	4.0GΔ	300m	15 Δ	30m	§J	PSi	B	3.5Ø	1.0G	5.0	3.0m	13*		.445	-47	.532	-38	1.0G	10	20m	Y206f	A
24▼	MMC4049	4.0GΔ	300m	15 Δ	30m	§J	PSi	B	3.5Ø	1.0G	5.0	3.0m	13*		.445	-47	.532	-38	1.0G	10	20m	u68	
25▼	MRF534	4.0GΔ	300m	15 Δ	30m	§J	PSi	B	4.7Ø	1.0G	5.0	3.0m	12*		.290	-50	.288	-68	1.0G	10	20m	Y206a	A
26	NE88902	4.0G§	300m	20	50m		PSi		2.7	0.5G	10	3.0m	12*									M1006	
27	NE88912	4.0G§	300m	20	50m		PSi		3.0	0.5G	10	3.0m	9*									TO72	G
28	BFT66	4.0G§	325m	20	30m	§J	NSi	BPE	1.8	800M	6.0	4.0m	70%		.25	175	.52	-42	800M	6.0	5.0m	TO72	J
29	BFT67	4.0G§	325m	20	30m	§J	NSi	BPE	2.3	800M	6.0	4.0m	70%		.25	175	.52	-42	800M	6.0	5.0m	TO72	J
30♦	BFP10	4.0G▼	350m	25	100m	§J	NSi	BPL	1.6	500M	5.0	5.0m	19§		-3.4	168	-10	-42	1.0G	10	50m	W217	R
31	FJ450E	4.0G#	400mØ	25	60m	§J	NSi	BPE	3.0	4.0G	12	7.0m	10		.810	126	.411	-109	4.0G	12	30m	W18b	S
32	FJ451LE	4.0G#	400mØ	25	40m	§J	NSi	BPE	4.0†	4.0G	12	5.0m	10*	19 *					4.0G			W231	V
33	HXTR6105	4.0G#	400m†	25	30m	§J	NSi	B	4.2Ø	4.0G	15	15m	9.0Ø	25m*	.615	132	.570	-85	4.0G	15	15m	W26a	V
34	HXTR2101	4.0G#	450m†	25	35m	§J	NSi	B					10$	65m*	.617	131	.552	-84	4.0G	15	25m	W26a	V
35	HXTR2102	4.0G#	450m†	25	35m	§J	NSi	B					11	18 *	.64	-170	.47	-35	1.0G	15	25m	W69a	V
36	HXTR6106	4.0G#	450m†	25	35m	§J	NSi	B	2.7	2.0G	15	10m	10	15 *	.66	-159	.53	-36	1.0G	15	10m	W69a	V
37	LAE4001R	4.0G	480m	30	80m	§J	N	B		4.0G	15	25m	3.8		.76	104	.50	105	4.0G	15	25m	W279	
38	2SC2644	4.0G§	500mØ	25	120m	♦J	NSi	BPE	3.0	1.0G	10	10m	8.5		.295	156	.347	-94	1.0G	10	30m	TO92	C
39♦	LAE4002S	4.0G	625m	40	90m	§J	NSi	B		4.0G	18	30m	7.5	125m								W265	V
40	BFQ59	4.0G	700m	27	35m	§J	NSi	PLE	3.4	2.0k	10	15m										TO120	
41	BFQ60	4.0G	700m	27	35m	§J	NSi	PLE	3.4	2.0k	10	15m										TO120	
42	HXTR5101	4.0G#	700m	40	50m	§J	NSi	B	8.0†	4.0G	18	30m	7.5Ø	160m*	.54	148	.58	-96	4.0G	18	30m	W26a	V
43	LAE4000Q	4.0G	700m	30	140m	§J	NSi	B		4.0G	15	30m	4.7	70m								W265	E
44	2N6679	4.0G	900m	30	70m	▼J	NSi	B		4.0G			10$	18 *								W16	F
45	HXTR-2001	4.0G	900m	30	70m	▼J	N	B	3.8†	4.0G	15	15m	12*	19 *	0.76	-179	0.44	-32	4.0G	15	25m	u53	
46	MS175JB▼	4.0G*	1.0	30	100m	§S	NSi	B	17%	4.0G	20*	30m	5.0%	100mØ	.993	107	1.04	.127	4.0G	20*	30m*	W21	Z§
47	MS175TB▼	4.0G*	1.0	30	100m	§S	NSi	B	17%	4.0G	20*	30m	5.0%	100mØ	.993	107	1.04	.127	4.0G	20*	30m*	W5b	E§
48	MS250JE	4.0G*	1.0	25	100m	§S	NSi	B					7		.69	154	.35	-62	2.0G	12	40m	W21	RØ
49	MS2110JE	4.0G*	1.0	30	50m	§S	NSi	B	3.5Ø	2.0G	10	10m	6.0*	63m*	.64	134	.55	-82	4.0G	10	20m	W21	RØ
50	NE59503	4.0G§	1.0	20	100m	§J	NSi						4.0*	100m								M1003	
51	NE59560	4.0G§	1.0	20	100m	§J	NSi							100mØ								M1031	
52	SCA0005	4.0G	1.2	50	400m	§J	NSi	B					5.0		.15*	165*	.80*	-135*	1.0G	10	100m	W146	R
53	LJE42002T	4.0G	1.5	45	400	§J	NSi	B		4.0G	20	65m	5.8	150m								W266	F
54♦	BFQ34#	4.0G▼	2.2	25	150m	§J	NSi	PE	8.0	500M	15	120m	16§									S171	V
55	HXTR5102	4.0G#	2.7 †	40	150m	§J	NSi	B	6.7†	2.0G	18	110m	11Ø	800m*	.64	153	.51	-119	2.0G	18	110m	W16	F
56▼	FLC08ME	4.0G#	3.0	15 %	350m%	§J	NGA	F	35	4.0G	8.5#		9.0♦	28 *								W163	DF
57	FLS09	4.0G#	3.0	15 %	380m	♦S	NGA	ST					9.0♦	28 ♦	.726	155	.759	-101	4.0G	10#	150m	W222	DEØ
58	FLS09ME	4.0G#	3.0	15 %	450m%	§J	NGA	ST	32%	4.0G	10#	50 %	9.0♦	28 ♦	.726	155	.759	-101	4.0G	10#	150m#	W233	♦
59	FLS09MM	4.0G#	3.0	15 %	450m%	§J	NGA	ST	32%	4.0G	10#	50 %	9.0♦	28 ♦								W222	DF
60▼	LEE1010T	4.0G▼	4.0	30	400m	§J	NSi	PE														S90c	
61♦	BFQ68	4.0G▼	4.5	25	300m	§J	NSi	PE					13§									S171	V
62♦	PJB4001U	4.0G#	4.5	40	400m	§J	NSi	BPE	30%				6.0	1.2								W266	
63	NE33353B	4.0G	5.0	28	200m	§J	NSi		57%				9.0	1.2								M1022	
64▼	FLC15ME	4.0G#	6.0	15 %	750m%	§J	NGA	F	35	4.0G	8.5#		7.5♦	31 *								W163	DF
65	FLS16	4.0G#	6.0	15 %	700m	♦S	NGA	ST					7.0♦	31 ♦	.773	142	.590	-119	4.0G	10#	300m	W222	DEØ
66	FLS16ME	4.0G#	6.0	15 %	900m%	§J	NGA	ST	29%	4.0G	10#	50 %	7.5♦	31 ♦	.773	142	.590	-119	4.0G	10#	300m#	W233	♦
67	FLS16MM	4.0G#	6.0	15 %	900m%	§J	NGA	ST	29%	4.0G	10#	50 %	7.5♦	31 ♦								W222	DF
68▼	FLC30ME	4.0G#	11	15 %	1.4 %	§J	NGA	F	35	4.0G	8.5#		6.5♦	34 *								W163	DF
69	FLS31	4.0G#	12	15 %	1.4	♦S	NGA	ST					5.5♦	2.8								W163	DF
70	FLS31ME	4.0G#	12	15 %	1.8 %	§J	NGA	ST	28%	4.0G	10#	50 %	6.5♦	34 ♦	.853	147	.610	-144	4.0G	10#	600m#	W233	♦
71	FLS31MM	4.0G#	12	15 %	1.8 %	§J	NGA	ST	28%	4.0G	10#	50 %	6.5♦	34 ♦								W222	DF
72	FLS50	4.0G#	15	15 %	2.4 %	§J	NGA	ST	32%	4.0G	10#	50 %	5.5♦	36 ♦	.872	144	.588	-174	4.0G	10#	800m#	W163	DF
73♦	FLS50ME	4.0G#	15	15 %	2.4 %	§J	NGA	ST	32%	4.0G	10#	50 %	5.5♦	36 ♦	.872	144	.588	-174	4.0G	10#	800m#	W163	DF
74	FJ954E	4.0G#	500 *	25	90m	§J	NSi	BPE	3.5	4.0G	12	10m	9.0*		.829	124	.333	-133	4.0G	12	40m	W18b	S
75♦	PGB4001U	4.0G	4.5G	40	400m	§J	NSi	B	30%				4.4	1.1								W144	
76	LJE42004T	4.1G	2.8	45	400	§J	NSi	B		4.1G	20	125m	6	300m								W266	F
77♦	BFQ32#	4.2G▼	500m	20	150m	§J	PSi	PE	3.7	500M	10	50m	14§									W181	A
78	MA42121-508																						
		4.2G	1.0	30	80m	§J	NSi	BPE					13§		.65	-106	.75	-33	450M	10	1.5m	TO46	G
79	PGB42001U	4.2G#	3.3 ▼				N	B	30%				6.5	1.0								W144	
80	LTE42005S	4.2G	4	40	250	§J	NSi	B		4.2G	18	110m	6.6	450m								W266	F
81	LTE42008R	4.2G	6	40	450	§J	NSi	B		4.2G	16	250m	7	800m								W266	F
82	LTE42012R	4.2G	8	40	800	§J	NSi	B		4.2G	16	400m	6	1.0								W266	F
83	NE4201♦	4.2G#	8.7	40	600m	§J	NSi	B	30%	4.2G	20§	250m§	8.0Ø	1.6	130Ø	100Ø	8.0§	-32§	4.2G	20§	250m§	W24	AC
84	NEM4201♦	4.2G#	8.7	40	600m	§J	NSi	B	25%	4.2G	20§	250m§	7.5Ø	1.4	35Ø	-5.0Ø	70§	-25§	4.2G	20§	250m§	W151	A
85	PGB42002U	4.2G#	10 ▼				N	B	20%				6.0	2.0								W144	
86	NE4201B20	4.2G	11	45	0.6	§J	NSi	BEP	30%	4.2G	20§											W232	E
87	NEM4201B20																						
		4.2G	11	45	0.6	§J	NSi	BEP					70†	32 ♦								W151	A
88	NEM20194	4.2G	11 #	45	600m	§J	NSi		30%				8.0	1.6								M1025	
89	NEM420194	4.2G	11 #	45	600m	§J	NSi		30%				8.0	1.6								M1025	
90	LV3742E16R																						
		4.2G	12	40	1.0	§J	NSi	B		4.2G	16	500m	5.5	1.3								W261	F
91♦	FLC301MG-4																						
		4.2G#	15	15 %	16 %	§J	NGA	ST	22%	4.2G	10#		8.5♦	32 *	.656	93	.567	-179	4.0G	10#	800m#	W235	DE
92	FLM3742-3	4.2G#	15	15 %	1.8 %	§S	NGA	ST					6.5♦	36 ♦	.30	136	.38	-80	4.2G	10#	800m#	W225	DEØ
93	LV3742E24R																						
		4.2G	15	40	1.5	§J	NSi	B		4.2G	16	800m	5	2.0								W261	F
94♦	PTB42001X	4.2G#	15	40	250m	§J	NSi	B	33%	4.2	24§		7.5	1.3								W266	E
95♦	PTB42002X	4.2G#	15	40	500m	§J	NSi	B	35%	4.2	24§		7.0	2.3								W266	E
96♦	PTB42003X	4.2G#	15	40	750m	§J	NSi	B	33%	4.2	24§		7.0	3.0								W266	E
97	NE4203♦	4.2G#	17	40	1.2	§J	NSi	B	30%	4.2G	20§	1.0 §	5.0Ø	3.2	13Ø	65Ø	5.0§	-28§	4.2G	20§	1.0 §	W24	AC
98	NEM4203♦	4.2G#	17	40	1.2	§J	NSi	B	25%	4.2G	20§	1.0 §	5.0Ø	3.2	80Ø	-50Ø	32§	-65§	4.2G	20§	1.0 §	W151	A
99	NEM420394	4.2G	17 #	45	1.2	§J	NSi		30%				5.0	3.2								M1025	
100▼	FLM3742-3D																						
		4.2G#	18	15 %	1.8 %		NGA	F	32%	4.2G	10#		7.5♦	35 *								W209	DE
101	NE4203B20	4.2G	18	45	1.2	§J	NSi	BEP	30%	4.2G	20§											W232	E
102	NEM4203B20																						
		4.2G	18	45	1.2	§J	NSi	BEP					70†	35 ♦								W151	A
103♦	PV3742B4X	4.2G#	18	40	1.0	§J	NSi	B	32%	4.2G	24§		7.4	4.5								W261	E

10. UHF/MICROWAVE TRANSISTORS

IN ORDER OF:(1)MAX. OSCILLATOR FREQUENCY
(2)MAX. TOTAL PWR(PT) & (3)TYPE No.

LINE No.	3 TYPE No.	1 MAX. OSC. FREQ Fmax (Hz)	MAXIMUM RATINGS 2 PT (W)	BVCBO (V)	IC (A)	TEMP CODE	POL & MAT	TYPE & TECH	NOISE FIGURE @ STATED CONDITIONS NF (dB)	@ FREQ (Hz)	@ VCE (V)	@ IC (A)	TYPICAL OPERATING GAIN (S21)2 (dB)	Pout (W)	TYPICAL REFLECTION COEFFICIENTS S11 (Mag)	S11 (deg)	S22 (Mag)	S22 (deg)	@ FREQ (Hz)	@ VCE (V)	@ IC (A)	DWG No.	LEAD CODE
1	FLM3742-5	4.2G#	23	15 %	3.2 %	$S	NGA	ST					8.5♦	37 ♦	.23	160	.51	-81	4.2G	10#	1.5 #	W225	DEØ
2	FLM3742-5IM	4.2G#	26	15 %	4.4 %	§J	NGA	ST					11♦	36 *	.23	160	.51	-81	4.2G	10#	1.5 #	W225	♦
3	NEM4205♦	4.2G#	29	40	2.4	§J	NSi	B	25%	4.2G	20§	2.0 §	4.0Ø	5.0	40Ø	18Ø	3.0§	-25§	4.2G	20§	2.0 §	W151	A
4	NEM420594	4.2G	29 #	45	1.4	§J	NSi		25%				4.0	5.0								M1025	
5	NEM4205B20	4.2G	30	45	2.4	§J	NSi	BEP					70†	37 ♦								W151	A
6♦	FLM3742-6#ai	4.2G#	37	15 %	4.4 %	§J	NGA	ST	20%	4.2G	10#		9.5♦	37 *								W209	DE
7	FLM3642-6(A)	4.2G	38	15 %	4.4 %	$S	NGA						8.0♦	38 ♦	.308	139	.516	-117	4.2G	10#	2.0 #	W248	
8	2SC2149	4.3GØ	290mØ	25	70m	§J	NSi	BEP	2.6	2.0G	10	5.0m	6.7									W100	S
9	BFR14C	4.3G§	700m	27	35m	§J	NSi	BPE	3.6	2.0G	10	5.0m	8.0		.36*	.30*	.80*	-1.3*	2.0G	10	15m	W36	R
10♦	PJC4001T	4.3G	2.8	40	400m	§J	NSi	B						450m								W266	C
11	NE420153	4.4G	11	45	600m	§J	NSi		30%				8.0	1.6								M1022	
12	NE420157	4.4G	11	45	600m	§J	NSi		30%				8.0	1.6								M1024	
13	NE420353	4.4G	17	45	1.2	§J	NSi		30%				5.0	3.2								M1022	
14	NE420357	4.4G	17	45	1.2	§J	NSi		30%				5.0	3.2								M1024	
15	MA42100-509	4.5G§		20	50m		NSi	BPL	2.3†	1.0G	10	5.0m	7.0									TO72	G
16	MA42100-510	4.5G§		20	50m		NSi	BPL	2.3†	1.0G	10	5.0m	7.0									W115	R
17	MA42100-511	4.5G§		20	50m		NSi	BPL	2.3†	1.0G	10	5.0m	7.0									W29e	R
18	MA42100-512	4.5G§		20	50m		NSi	BPL	2.3†	1.0G	10	5.0m	7.0									W29f	R
19	MA42110-509	4.5G§		20	125m		NSi	BPL	1.2†	450M	10	5.0m	12									TO72	G
20	MA42110-510	4.5G§		20	125m		NSi	BPL	1.2†	450M	10	5.0m	12									W115	R
21	MA42110-511	4.5G§		20	125m		NSi	BPL	1.2†	450M	10	5.0m	12									W29e	R
22	MA42110-512	4.5G§		20	125m		NSi	BPL	1.2†	450M	10	5.0m	12									W29f	R
23	MRF586	4.5G§	2.5m	34	200m#	§J	NSi		5.5	300M	15§	90m#	11Ø		.42	131	.38	-138	1.0G	5.0#	30m#	C256	A
24	BFT65	4.5G§	50m	15 *	50m	§J	NSi	BPE	2.8	800M	8.0	10m	12		.33	.33	.30	-38	800M	8.0	30m	W22	E
25	NE02133	4.5G§	150mØ	25	70m	§J	NSi	B	3.0	2.0G	10	5.0m	4.0									X156b	A
26	2SC2142	4.5G#	165m	15	30m	#J	NSi	BEP	1.0†	500M	10	3m	11									TO72	
27♦	BFW92A	4.5G§	180m	25 Δ	35m	$S	NSi	BAL	2.7†	0.5G	10	10m	16		0.13	144	0.46	-30	1.0G	10	25m	W253	E
28	BFR15A	4.5G§	200m	12 *	30m	§J	NSi	BPE	2.0	800M	6.0	2.0m	12									TO72	J
29	BFR35A	4.5G§	200m	12 *	30m	♦J	NSi	BPE	2.0	800M	6.0	2.0m	13		.20	-175	.50	-20	800M	6.0	15m	M156c	A
30♦	MRF914	4.5G§	200mØ	20 Δ	40m	§S	NSi	B	2.5	1.0G	10	5.0m	15*		0.13	-80	0.58	-35	1.0G	10	30m	TO72	G
31	2SC2143	4.5G§	210m*	15	30m	#J	NSi	B	2.0Ø	500M	10	3.0m	14		0.56	-102	0.70	-31	500M	10	3.0m	W156	Y
32	2SC987A	4.5G§	250mØ	20	30m	§J	NSi	BEP	4.0Ø	2.0G	10	3.0m	6.0		.28*	.07*	.72*	-1.2*	2.0G	10	3.0m	W118	S
33	2SC1119	4.5G§	250mØ	20	30m	§J	NSi	BEP	4.0Ø	2.0G	10	3.0m	6.0									W116a	S
34	2SC1336	4.5G§	250mØ	20	30m	§J	NSi	BEP	4.0Ø	2.0G	10	3.0m	6.0		.28*	.08*	.92*	-1.2*	2.0G	10	3.0m	W116	S
35	2SC2351	4.5G▼	250m	25	70m	$J	NSi	BEP															
36	2SC2549	4.5G#	250m	15	30m	#J	NSi	BEP	1.0†	500M	10	3m	13									TO92	
37♦	BFQ63	4.5G▼	250m	20	75m	§J	NSi	BPL	2.3	500M	5.0	10m	11§		-21	116	-14	-56	1.0G	5.0	70m	TO72	G
38	NE02132E	4.5G§	250m	25	70m	§J	NSi		1.5	0.5G	10	3.0m	17*									TO92	C
39	NE02136	4.5G§	250m	25	70m	§J	NSi		1.8	1.0G	10	3.0m	14*									M1013	
40	NE41741	4.5G§	250m	20	30m	§J	NSi	S														M1009	
41	BFQ71	4.5G▼	290m	20	30m	§J	NSi	BPE	3.0	800M	6.0	2.0m	12♦									TO120	S
42	BFQ72	4.5G▼	290m	20	50m	§J	NSi	BPE	3.9	800M	8.0	10m	10♦									TO120	S
43	NE02135	4.5G§	290mØ	25	70m	§J	NSi	B	2.7	2.0G	10	5.0m	6.5		.670	150	.160	-122	2.0G	10	15m	W100	S
44	BFS55A	4.5G§	325m	15 *	50m	§J	NSi	B	2.9	800M	8.0	10m	12		.06	180	.51	-38	800M	8.0	25m	TO72	J
45	BFR34A	4.5G§	350m	12 *	30m	§J	NSi	BPE	2.0	800M	6.0	2.0m	13		.20	-175	.50	-20	800M	6.0	15m	W22	E
46	NE02107	4.5G§	350mØ	25	70m	§J	NSi	B	2.7	2.0G	10	5.0m	6.5		.730	143	.170	-117	2.0G	10	25m	W29c	S
47	NE02112	4.5G§	350mØ	25	70m	§J	NSi	B	1.5	500M	10	3.0m	4.0		.156	-120	.711	-89	2.0G	10	30m	TO72	G
48♦	MRF901	4.5G§	375m	25 Δ	30m	$S	NSi	B	2.0	1.0G	6.0	5.0m	12♦	2.5m*	0.62	122	0.39	-68	2.0G	10	30m	W252	V
49♦	BFP96	4.5G▼	500m	25	120m	§J	NSi	BPL	2.5	500M	5.0	10m	18§		-2.9	162	-11	-152	1.0G	5.0	100m	W217	R
50♦	MRF961	4.5G§	500m†	20 Δ	100m	$S	NSi	B	2.0	500M	10	10m	15		0.67	141	0.12	-158	1.5G	10	50m	W252	V
51	NE02103	4.5G§	580mØ	25	70m	§J	NSi	B	2.7	2.0G	10	5.0m	6.5		.670	146	.209	-81	2.0G	10	25m	W116	S
52	NE02108	4.5G§	580mØ	25	70m	§J	NSi	B	2.7	2.0G	10	5.0m	6.5		.670	150	.160	-122	2.0G	10	15m	W18	S
53	NE02160	4.5G§	580mØ	25	70m	§J	NSi	B						100mØ								W32	A
54♦	BFQ32S	4.5G▼	700m	20	100m	§J	PSi	BPE														W181	
55♦	BFRC96	4.5G§	750m†	20 Δ	100m	§S	NSi	BAL	2.0†	0.5G	10	10m	14*		0.42	119	0.08	-72	1.5G	10	50m	u72	
56♦	MRF962	4.5G§	750m†	20 Δ	100m	§J	NSi	B	2.0	500M	10	10m	16		0.79	165	0.27	-159	1.5G	10	50m	W254	V
57♦	MRF965	4.5G§	750m†	20 Δ	100m	§J	NSi	B	2.0	500M	10	10m	13		0.45	146	0.35	-126	1.5G	10	50m	TO46	A
58	DC5651	4.5G	1.5	30	125m	$C	NSi	BPE					12$	500m*								W16	F
59♦	PPC4001T	4.5G	4.0	40	400m	§J	NSi	B						450m								M1250	C
60▼	PQC4001T	4.5G	4.0	40	400m	§J	NSi	B						450m								W274	C
61	NE33353E	4.5G§	5.0	28	200m	§J	NSi						9.5*	500m								M998	
62	NE33354	4.5G§	5.0	28	200m	§J	NSi						9.0	450m*								M1014	
63	NE33387	4.5G§	5.0	28	200m	§J	NSi							550mØ								M1032	
64	LT4403	5.0GΔ		30	70m	§J	NSi	B	1.7	500M	8.0	10m	17§	18 *	-6.1	179	-14	-115	500M	8.0	40m	W278	
65	LT4404	5.0GΔ		30	70m	§J	NSi	B	1.7	500M	8.0	10m	17§	18 *	-3.0	-178	-11	-138	500M	8.0	40m	W278	
66	LT4446	5.0G		30	70m	§J	NSi	B	2.0	500M	8.0	10m	11	18 *	-8.4	171	-13	-115	1.0G	8.0	10m	TO46	
67	MRF580	5.0G§	2.5m	36	200m#	§J	NSi		2.0	500M	10#	50m#	14Ø		.56	125	.19	-172	1.5G	5.0#	25m#	W253	E
68	MRF581	5.0G§	2.5m	36	200m#	§J	NSi		2.0	500M	10#	50m#	15Ø		.76	139	.33	-172	1.5G	5.0#	25m#	W252	V
69▼	2SC3429	5.0G▼	150m*	17	70m	♦J	NSi	BPE	1.7	1.0G	10	5.0m	10		37Ø	5.0 Ø	78Ø	-21 Ø	1.0G	10	20m	Y236a	C
70	BFQ22#	5.0G§	150m	15	50m	§J	NSi	PE	1.9	500M	5.0	2.0m										TO72	G
71♦	BFQ24	5.0G▼	150m	15	35m	§J	PSi	BPE	2.4	500M	5.0	2.0m	15§									TO72	G
72♦	BFQ52	5.0G▼	150m	20	25m	§J	PSi	BEP	2.7	500M	10	2.0m	17§	180m								TO72	
73♦	BFQ52#	5.0G▼	150m	20	25m	§J	PSi	PE	2.7	500M	10	2.0m	17§									TO72	G
74♦	BFQ53	5.0G▼	150m	20	25m	§J	NSi	PE	2.4	500M	10	2.0m	18§	150m								TO72	A
75♦	BFQ53#	5.0G▼	150m	20	25m	§J	NSi	PE	2.4	500M	10	2.0m	18§									TO72	G
76	A500	5.0G§	180m	15 *	25m		N	B	2.5	1.0G		2.0m	16									W29h	RØ
77	A510	5.0G§	180m	12 *	35m		N	B	2.0	1.0G		2.0m	13									W29h	RØ
78	BFG90A	5.0G§	180m	20	25m	§J	NSi	PE					18§									W293	Y
79	BFQ23	5.0G§	180m	15	35m	§J	PSi	BPE	2.4	500M	5.0	2.0m	20%									W104	C
80♦	BFQ23#	5.0G▼	180m	15	50m	§J	PSi	PE	2.4	500M	5.0	2.0m	16									W181	A
81♦	BFQ51	5.0G▼	180m	20	35m	§J	PSi	PE	2.7	500M	10	2.0m	19§									W181	A
82♦	BFR49	5.0G▼	180m	20	25m	§J	NSi	B	6.5	4.0G	10	2.0m	3.5		.35Ø	.35Ø	.45Ø	-.70Ø	4.0G	10	14m	W265	
83▼	BFR90%	5.0G	180m	20	30m	§J	NSi	BPL	2.4	500M	10	2.0m	19									TO50	C
84♦	BFR90A	5.0G▼	180m	20	25m	§J	NSi	BEP	3.6	2.0G	10	4.0m		180m								W181	
85▼	BFR90A%	5.0G	180m	20	25m	§J	NSi	BPL	1.9	500M	10	2.0m	19									TO50	C
86	BFR90A#	5.0G§	180m	20	25m	§J	NSi	PE	1.8	800M	10	4.0m										W181	A
87	LDA490	5.0G§	180m	15 *	25m		N	B	2.4	500M		2.0m	19									TO122	
88	LDA491	5.0G§	180m	12 *	35m		N	B	1.9	500M		2.0m	16									TO122	
89	ON586	5.0G§	180m	15 *	25m		P	N	2.4	500M		2.0m	13									W15	C
90	2SC3302	5.0G§	200mØ	17	70m	♦J	NSI	BPE	1.7	1.0G	10	5.0m	11									W186	R
91	A400	5.0G§	200m	15 *	25m		N	B	2.3	200M		2.0m	18									TO72	G
92	A401	5.0G§	200m	12 *	35m		N	B	1.8	200M		2.0m	14									TO72	G
93	A440	5.0G§	200m	20	25m	§J	PSi	BPE	2.3	200M	10	2.0m	18§									TO72	G
94	A441	5.0G§	200m	12 *	35m		P	B	2.4	200M		2.0m	18									TO72	G
95	BFR92	5.0G§	200m	20	25m	$J	NSi	PE	2.4	500M	10	2.0m	18§									W174	A
96	BFR92A	5.0G§	200m	20	25m	§J	NSi	PE	1.8	800M	10	4.0m	15§									W174	A
97	BFR92AR	5.0G§	200m	20	25m	§J	NSi	PE	1.8	800M	10	4.0m	15§									W174	C
98	BFR92R	5.0G§	200m	20	25m	§J	NSi	PE	2.4	500M	10	2.0m	18§									W174	C

10. UHF/MICROWAVE TRANSISTORS

IN ORDER OF:(1)MAX. OSCILLATOR FREQUENCY (2)MAX. TOTAL PWR(PT) & (3)TYPE No.

LINE No.	3 TYPE No.	1 MAX. OSC. FREQ Fmax (Hz)	MAXIMUM RATINGS 2 PT (W)	BVCBO (V)	IC (A)	TEMP CODE	POL & MAT	TYPE & TECH	NOISE FIGURE @ STATED CONDITIONS NF (dB)	@ FREQ (Hz)	@ VCE (V)	@ IC (A)	TYPICAL OPERATING GAIN (S21)2 (dB)	Pout (W)	TYPICAL REFLECTION COEFFICIENTS S11 (Mag)	S11 (deg)	S22 (Mag)	S22 (deg)	@ FREQ (Hz)	@ VCE (V)	@ IC (A)	DWG No.	LEAD CODE
1	BFR93	5.0G§	200m	15	35m	$J	NSi	PE	1.9	500M	5.0	2.0m	16§									W174	A
2	BFR93R	5.0G§	200m	15	35m	$J	NSi	PE	1.9	500M	5.0	2.0m	16§									W174	C
3	BFT92	5.0G§	200m	20	25m	$J	PSi	PE	2.7	500M	10	2.0m	18§									W174	A
4	BFT92R	5.0G§	200m	20	25m	$J	PSi	PE	2.7	500M	10	2.0m	18§									W174	C
5	BFT93	5.0G§	200m	15	35m	$J	PSi	PE	2.4	500M	5.0	2.0m	16§									W174	A
6	BFT93R	5.0G§	200m	15	35m	$J	PSi	PE	2.4	500M	5.0	2.0m	16§									W174	C
7	FJ902M	5.0G#	200m*	20	30m	§J	NSi	S														W84	RU
8	FJ902R	5.0G#	200m*	20	30m	§J	NSi	S														W85	QG
9	2SC2570	5.0G§	250m	25	70m	$S			1.5	1.0G	10	5.0m	8.0#									C218d	C
10	BFP90A	5.0G§	250m	20	30m	§J	NSi	PE					19§									W185	Y
11	BFR14A	5.0G▾	250m	20	30m	§J	NSi	BPE	3.8	2.0G	10	3.0m	12♦									TO120	R
12	BFR93A	5.0G§	250m	15	35m	§J	NSi	PE	1.6	800M	8.0	4.0m	14§									W174	A
13	BFR93AR	5.0G§	250m	15	35m	§J	NSi	PE	1.6	800M	8.0	4.0m	14§									W174	C
14♦	FJ201M	5.0GΔ	250m*	20	70m	§J	NSi	S	4.0	2.0G	6.0	3.0m	10*		.522	159	.331	-86	2.0G	6.0	20m	W346	RU
15♦	FJ201R	5.0GΔ	250m*	20	70m	§J	NSi	S	4.0	2.0G	6.0	3.0m	10*		.522	159	.331	-86	2.0G	6.0	20m	W347	QG
16	MA42161-511																						
		5.0GØ	250m	20	20m	§J	NSi	BPE	2.5Ø	2.0G	10	3.0m	8.0		.557	-171	.667	-52	2.0G	10	3.0m	W29e	R
17	MA42162-511																						
		5.0GØ	250m	20	20m	§J	NSi	BPE	3.0Ø	2.0G	10	3.0m	8.0									W29e	R
18	BFQ73	5.0G▾	290m	20	90m	§J	NSi	BPE	4.5	800M	8.0	60m	9.0♦									TO120	S
19▾	2SC3037	5.0G	300m	20	70m		N	B	1.8	1.0G	10	7.0m	1.5		0.23	-154	0.41	-37	500M	10	10m	TO92	E
20	A501	5.0G§	300mØ	20	25m	§J	NSi	B	2.5	1.0G	10	5.0m	15		.49	-170	.50	-35	1.0G	10	14m	W26e	VØ
21	A511	5.0G§	300m	12 *	35m		N	B	2.0	1.0G		2.0m	13									W29j	RØ
22	FJ951E	5.0G	300m*	25	90m	§J		B						18 ♦								W238	♦
23▾	MRF536	5.0GΔ	300m	15 Δ	30m	$J	PSi	B	4.5Ø	1.0G	5.0	3.0m	10*		.201	130	.171	-104	2.0G	10	20m	W252	V
24	LDA496	5.0G§	360m	15 *	75m		N	B	3.3	500M		50m	15									TO122	
25	AT1825	5.0G§	400m	20	50m	§J	NSi	BPE	3.0Ø	1.0G	10	5.0m	16		.585	116	.410	-118	4.0G	10	15m	W26f	C
26♦	MRF911	5.0G§	400m†	20 Δ	40m	$S	NSi	B	4.0	2.0G	10	5.0m	12*		0.61	130	0.24	-80	2.0G	10	30m	W252	V
27	A406	5.0G§	500m	15 *	75m		N	B	5.5	200M		50m	13									TO72	G
28	BFG96	5.0G§	500m	20	150m	§J	NSi	PE					14§									W293	Y
29	BFQ19	5.0G§	500m	20	75m	§J	NSi	PE	3.3	500M	10	50m	11§									M166	A
30▾	BFR96%	5.0G	500m	20	90m	§J	NSi	BPL	3.8	800M	10	50m	16									TO50	C
31	HXTR3615	5.0G	500m	25	55m	§J	NSi	B	1.4	1.0G	10	10m	16	80m	.52	-175	.52	-29	1.0G	10	10m	W100	
32	2SC2570A	5.0G§	600m	25	70m	§J	NSi	B	1.5†	1.0G	10	5.0m	10									TO92	C
33	NE02132	5.0G§	600m	25	70m	§J	NSi		1.5	1.0G	10	5.0m	10									TO92	C
34♦	BFR96S	5.0G▾	700m	20	100m	§J	NSi	PE	4.0	800M	10	70m										W181	C
35▾	BFR96S%	5.0G	700m	20	100m	§J	NSi	BPL	4.0	800M	10	70m	11									TO50	C
36	2SC3268	5.0G§	800mØ	17	70m	♦J	NSi	BPE	2.0	1.0G	10	5.0m	9.5									X166	B
37	HXTR-5001	5.0G	1.4	45	100m	▾J	B		25%	4.0G				22 *	0.60	-161	0.49	-38	4.0G	18	30m	U53	
38	FJ954DD	5.0G	1.5 *	25	90m	§J		B	3.5	4.0G	12	10m										M1124	♦
39▾	MRF580A	5.0G	2.5	30 Δ	200m	$J	NSi	B	2.5†	500M	10	50m	14Ø		0.49	125	0.11	-158	1.5G	10	100m	W253	E
40▾	MRF581A	5.0G	2.5	30 Δ	200m	$J	NSi	B	2.5†	500M	10	50m	15Ø		0.72	139	0.27	-177	1.5G	10	100m	W252	V
41▾	MRFC581	5.0G§	2.5	36	200m	$J	NSi	B	3.0	500M	10	50m	15*		0.70	140	0.21	-160	1.5G	15	100m	u77	
42▾	MRFC581A	5.0G§	2.5	30	200m	$J	NSi	B	2.5	500M	10	50m	15*		0.70	140	0.21	-160	1.5G	15	100m	u77	
43	HXTR-5002	5.0G	4.0	45	400m	▾J	N	B	23%	4.0G				28 *	0.83	-176	0.28	-120	4.0G	18	110m	u53a	
44▾	PPC5001T	5.0G	4.0	40	250m	§J	NSi	B						450m								M1250	C
45▾	PQC5001T	5.0G	4.0	40	250m	§J	NSi	B						450m								W274	C
46	2SC1950$	5.0G#	5.0	28	200m	§J	NSi	BEP	16%	5.0G	11	250mØ	4.0	250mØ								W101	A
47	2SC2093$	5.0G#	5.0	28	200m	§J	NSi	BEP	16%	5.0G	11	250mØ	4.0	250mØ								W101	A
48▾	FLM4450-3	5.0G#	18	15 %	1.8 %		NGA	F	27%	5.0G	10#		6.5♦	35 *								W209	DE
49	FLM4450-5	5.0G#	23	15 %	3.2 %	$S	NGA	ST					8.0♦	37 ♦	.49	104	.34	-105	5.0G	10#	1.5 #	W225	DEØ
50	FLM4450-5IM																						
		5.0G#	26	15 %	4.4 %	§J	NGA	ST					9.5♦	36 *	.49	104	.34	-105	5.0G	10#	1.5 #	N225	♦
51♦	FLM4450-6#ai																						
		5.0G#	37	15 %	4.4 %		NGA	F	20%	5.0G	10#		9.0♦	37 *								W209	DE
52♦	FJ201F	5.0G▾	150 *	20	70m	§J	NSi	BPE	4.0†	2.0G	6.0	3.0m	10*		.522	159	.331	-86	2.0G	6.0	20m	W345	V
53	FJ402F	5.0G	150 *	20	20m	§J	NSi	BPE	2.7†	4.0G	8.0	3.0m	11*		.496	120	.669	-105	4.0G	8.0	7.0m	W234	V
54	FJ402J	5.0G	150 *	20	20m	§J	NSi	BPE	2.7†	4.0G	8.0	3.0m	11*		.496	120	.669	-105	4.0G	8.0	7.0m	W69	C
55♦	FJ201E	5.0G▾	200 *	20	70m	§J	NSi	BPE	4.0†	2.0G	6.0	3.0m	10*		.522	159	.331	-86	2.0G	6.0	20m	W344	V
56	FJ402E	5.0G	200 *	20	20m	§J	NSi	BPE	2.7†	4.0G	8.0	3.0m	11*		.496	120	.669	-105	4.0G	8.0	7.0m	W238	V
57	LT4700	5.5G▾		12 *					1.6†	1.0G	8.0	5.0m	15									W205	
58	LT4703	5.5GΔ		20	50m	$J	NSi	B	1.5	500M	8.0	5.0m	18§		-7.4	-114	-5.2	-35	500M	8.0	6.0m	W278	
59	LT4704	5.5GΔ		20	50m	$J	NSi	B	1.5	500M	8.0	5.0m	19§		-4.5	-125	-5.8	-46	500M	8.0	6.0m	W278	
60	MRF587	5.5G§	5.0m	34	200m#	§J	NSi		6.3	300M	15§	90m#	13Ø		.70	155	.44	-152	1.0G	5.0#	30m#	S517	R
61	BFQ69	5.5G▾	200m	25	30m	$J	NSi	B	1.6†	800M	10	15m	11♦									TO119	C
62	DC5445	5.5G§	200m	15	25m	$S	NSi	BPE	5.0	2.0G	10	15m	10$	60m*								W14a	V
63	2SC2150	5.5GØ	250mØ	20	30m	§J	NSi	BEP	2.4	2.0G	8.0	3.0m	8.7									W100	S
64	AT1845	5.5G§	400m	20	50m	§J	NSi	BPE	2.5Ø	1.0G	10	5.0m	14		.711	114	.580	-103	4.0G	10	5.0m	W26f	C
65	AT1845A	5.5G§	400m	20	50m	§J	NSi	BPE	2.2Ø	1.0G	10	5.0m	14		.711	114	.580	-103	4.0G	10	5.0m	W26f	C
66▾	ESM791	5.5GΔ	400m	20	50m	§J	NSi	BPL	1.9	500M	10	3.0m	24♦		-8.1	130	-15	-52	1.0G	5.0	70m	TO92	E
67	2N6839	5.5G§	500m	30	50m	§J	N▾*	BAL					13	21 *								W236	V
68	A561	5.5G§	500m	15 *	75m		N	B	3.3	500M		50m	11									W29j	RØ
69♦	BFR96	5.5G§	500m	20	90m	§J	NSi	BPL	3.3	500M	8.0	40m	15§		.45Ø	.10Ø	1.2Ø	-.30Ø	500M	10	50m	W22	E
70▾	HXTR3104	5.5G§	700m	35	100m	▾J	N▾	B	1.7†	1.0G	10	10m	16Ø	21 *	.548	-126	.598	-45	1.0G	15	20m	W236	
71	DC5441	5.8G	200m	15	20m	$S	NSi	BPE	1.7	30M	5.0	3.0m	20$									W14a	E
72	DC5442	5.8G	200m	15	20m	$S	NSi	BPE	1.3	30M	5.0	3.0m	20$									W14a	E
73	DC5443	5.8G	200m	15	20m	$S	NSi	BPE	1.0	30M	5.0	3.0M	20$									W14a	E
74	DC5021	5.8G	250m	25	40m	♦C	NSi	BPE	5.0	2.0G	5.0	5.0m*	9.0$	70m*	.58	150	.28	-95	2.0G	10	20m*	W17	S
75	DC5022	5.8G	250m	25	40m	♦C	NSi	BPE	4.0	2.0G	5.0	5.0m*	10$	70m*	.58	150	.28	-95	2.0G	10	20m*	W17	S
76	DC5421	5.8G	250m	20	40m	♦C	NSi	BPE	5.0	2.0G	5.0	5.0m*	9.0$	70m*	.25*	.15*	.95*	-.70*	2.0G	10	20m*	W14a	V
77	DC5422	5.8G	250m	20	40m	♦C	NSi	BPE	4.0	2.0G	5.0	5.0m*	10$	70m*	.25*	.15*	.95*	-.70*	2.0G	10	20m*	W14a	V
78	DC5423	5.8G	400m	25	70m	$S	NSi	BPE					9$	100m*								W14a	V
79	DC5424	5.8G	400m	25	40m	♦C	NSi	BPE	2.5	500M	10	10M	15$		.30*	-.16*	1.3*	-1.2*	500M	5.0	15m*	W14a	E
80	DC5425	5.8G	400m	25	40m	♦C	NSi	BPE	2.5	30M	10	10M	18$									W14a	E
81	DC5023	5.8G	800m	25	70m	♦A	NSi	BPE					9.0$	150m*	.33*	.30*	.67*	-.72*	2.0G	15	40m*	W17	S
82	DC5623	5.8G	800m	25	70m	♦A	NSi	BPE					8.5$	150m*	.48*	.46*	.58*	-.63*	2.0G	15	40m*	W16	F
83	DC5631	5.8G	1.2	25	70m	$S	NSi	BPE					8.0$	300m*	.20*	.43*	.38*	-.08*	2.0G	15	80m*	W16	F
84	LT3700	6.0G		25	50m	§J	NSi	B	3.4	1.0G	8.0	5.0m	12		-3.2	-166	-4.4	-31	1.0G	8.0	5.0m	W245	
85	LT3785	6.0G		25	50m	§J	NSi	B	3.5	1.0G	8.0	5.0m	11		-3.6	-174	-4.7	-32	1.0G	8.0	5.0m	W246	
86	LT4400	6.0G		30	70m	§J	NSi	B	3.2	1.0G	8.0	10m	11	18 *	-2.2	-179	-8.4	-106	1.0G	8.0	10m	W245	
87	LT4485	6.0G		30	70m	§J	NSi	B	3.4	1.0G	8.0	10m	10	18 *	-2.6	174	-9.2	-121	1.0G	8.0	10m	W246	
88	LT4746	6.0G		20	50m	§J	NSi	B	2.7	1.0G	8.0	5.0m	7.0		-23	-153	-12	-61	1.0G	8.0	5.0m	TO46	
89	LT4772	6.0G		20	50m	§J	NSi	B	2.7	1.0G	8.0	5.0m	7.0		-13	-43	-5.3	-27	1.0G	8.0	5.0m	TO72	
90♦	BFQ22	6.0G▾	150m	15	35m	§J	NSi	BPE	1.9	500M	5.0	2.0m	14§		-14	-28	-6.3	-40	1.0G	5.0	30m	TO72	G
91	BFQ22Ø	6.0G	150m	12 *	30m		N		2	500M		5.0m										TO72	
92	DC5411	6.0G	175m	20	20m	$A	NSi	BPE	3.2	2.0G	5.0	2.0m*	12$		.23*	.10*	.90*	-1.3*	2.0G	10	10m*	W14a	V
93♦	BFR90	6.0G§	180m	20	25m	$J	NSi	BPE	2.4	500M	10	2.0m	19§		1.1Ø	-.35Ø	2.2Ø	-2.0Ø	500M	10	14m	W22	E
94♦	BFR91	6.0G§	180m	15	35m	$J	NSi	BPE	1.9	500M	5.0	2.0m	18§		.66Ø	-.01Ø	1.3Ø	-.70Ø	500M	5.0	30m	W22	E
95▾	BFR91A%	6.0G	180m	20	50m	$J	NSi	BPL	1.6	800M	5.0	4.0m	16									TO50	C
96	2SC1268	6.0G§	250mØ	25	50m	§J	NSi	BEP	4.3	4.0G	8.0	3.0m	3.0		20Ø	31Ø	30Ø	-32Ø	4.0G	8.0	10m	W116	S
97	2SC1269	6.0G§	250mØ	25	50m	§J	NSi	BEP	4.8	4.0G	8.0	3.0m	3.0		20Ø	31Ø	30Ø	-32Ø	4.0G	8.0	10m	W116	S
98	2SC1270	6.0G§	250mØ	25	50m	§J	NSi	BEP	5.5	4.0G	8.0	3.0m	3.0		20Ø	31Ø	30Ø	-32Ø	4.0G	8.0	10m	W116	S
99	2SC1271	6.0G§	250mØ	20	30m	§J	NSi	BEP	2.5	2.0G	8.0	3.0m	9.0		21Ø	9.0Ø	70Ø	-60Ø	2.0G	8.0	10m	W116	S
100	2SC1271A	6.0G§	250mØ	20	30m	§J	NSi	BEP	2.5	2.0G	8.0	3.0m	9.0		21Ø	9.0Ø	70Ø	-60Ø	2.0G	8.0	10m	W116	S
101	BFP90	6.0G	250m	15 *	15m		N															W217	
102	BFR14B	6.0G§	250m	20	30m	§J	NSi	BPE	3.2	2.0G	10	3.0m	12		.43	-175	0.48	-50	2.0G	10	15m	W14c	R
103▾	ESM690	6.0GΔ	250m	20	25m	§J	NSi	BPL	2.2	500M	10	2.0m	17♦									TO92	E
104	NE57803	6.0G§	250mØ	25	50m	§J	NSi	B	5.0	4.0G	8.0	3.0m	2.7		.470	124	.520	-117	4.0G	8.0	10m	W116	S
105	NE57807	6.0G§	250mØ	25	50m	§J	NSi	B	5.0	4.0G	8.0	3.0m	2.7		.580	144	.490	-104	4.0G	8.0	10m	W29c	S
106	NE57808	6.0G§	250mØ	25	50m	§J	NSi	B	5.0	4.0G	8.0	3.0m	2.7		.580	144	.490	-104	4.0G	8.0	10m	W18	S

SYMBOLS AND CODES EXPLAINED IN INTERPRETER

10. UHF/MICROWAVE TRANSISTORS

IN ORDER OF:(1)MAX. OSCILLATOR FREQUENCY
(2)MAX. TOTAL PWR(PT) & (3)TYPE No.

LINE No.	[3] TYPE No.	[1] MAX. OSC. FREQ Fmax (Hz)	MAXIMUM RATINGS [2] PT (W)	BVCBO (V)	IC (A)	TEMP CODE	POL & MAT	TYPE & TECH	NOISE FIGURE @ STATED CONDITIONS NF (dB)	@ FREQ (Hz)	@ VCE (V)	@ IC (A)	TYPICAL OPERATING GAIN (S21)2 (dB)	Pout (W)	TYPICAL REFLECTION COEFFICIENTS S11 (Mag)	S11 (deg)	S22 (Mag)	S22 (deg)	@ FREQ (Hz)	@ VCE (V)	@ IC (A)	DWG No.	LEAD CODE
1	NE57835	6.0G§	250mØ	25	50m	$C	NSi	B	5.0	4.0G	8.0	3.0m	2.7		.630	128	.220	-128	4.0G	8.0	10m	W100	S
2	V913B	6.0G§	250mØ	25	50m	§J	NSi	BEP	4.8	4.0G	8.0	3.0m	3.0									W18	S
3	V913C	6.0G§	250mØ	25	50m	§J	NSi	BEP	5.5	4.0G	8.0	3.0m	3.0									W18	S
4	BFG91A	6.0G§	300m	15	35m	$J	NSi	BPE					17§									W293	R
5♦	BFR91A	6.0G▼	300m	15	35m	$J	NSi	PE	1.7	800M	8.0	4.0m	14§									W181	C
6	HP35861EOpt100																						
7	HP35866EOpt100	6.0GØ	300m†	20	20m	§J	NSi	B	4.5Ø	4.0G	10	5.0m	9.5		.40	163	.64	-55	2.0G	10	10m	W17	S
		6.0GØ	300m†	20	20m	§J	NSi	B	4.5Ø	4.0G	10	5.0m	9.5		.55	146	.62	-86	4.0G	10	5.0m	W26a	V
8	BFP91A	6.0G§	350m	15	50m	§J	NSi	PE					18§									W185	Y
9♦	FJ451E	6.0G▼	400m*	25	40m	§J	NSi	BPE	4.0†	4.0G	12	5.0m	10*		.657	129	.442	-90	4.0G	12	25m	W344	V
10♦	FJ451J	6.0G▼	400m*	25	40m	§J	NSi	BPE	4.0†	4.0G	12	5.0m	10*		.657	129	.442	-90	4.0G	12	25m	W69e	Y
11	AT41435-3	6G	500m	20	65m	§J	Si	B	1.3†	1.0G	8.0	10m	19Ø		.72	74	.37	-157	6G	8	10m	W239	
12	AT41435-5	6G	500m	12	65m	§J	Si	B	3.1	4.0G	8.0	25m	19Ø		.72	74	.37	-157	6G	8	10m	W239	
13	AT41470	6G	500m	20	65m	§	Si	B	1.3†	1.0G	8.0	10m	19Ø		.70	101	.50	-153	6G	8	10m	W240	
14♦	FJ952E	6.0G▼	600m*	20	100m	§J	NSi	BPE	3.0	500M	6.0	35m	9.5*		.697	122	.342	148	2.0G	6.0	35m	W344	V
15	HXTR3645	6.0G	600m	30	65m	§J	NSi	B	1.7	2.0G	10	10m	9.8	80m	.50	155	.50	-45	2.0G	10	10m	W100	
16	HXTR3675	6.0G	600m	30	65m	§J	NSi	B	2.8	4.0G	10	10m	4.3	55m	.61	108	.49	-83	4.0G	10	10m	W100	
17	HXTR7011	6.0G	600m	30	65m	§J	NSi	B	2.8	4.0G	10	10m	4.8	65m	.72	143	.47	-24	4.0G	10	10m	W196	
18	HXTR7111	6.0G	600m	30	65m	§J	NSi	B	2.8	4.0G	10	10m	4.5	70m	.61	141	.56	-92	4.0G	10	10m	W26a	V
19	HXTR-3101	6.0G§	600m	30	50m	§J	N	B	1.8	1.0G	10	10m	15		.571	-169	.408	-43	1.0G	10	10m	W236	
20	HXTR-3102	6.0G	700m	35	100m	§J	N	B					13	21 *	.548	-126	.598	-45	1.0G	15	20m	W236	
21	AT7510	6.0G	2.2	40	150m	§J			35%	4.0G	15	110m	9.5	27 *	.381	158	.938	151	4.0G	10	50m	W86	
22	2L08	6.0G	3.8	45	250m	§J	NSi	B					8.0△	800m*	.81	129	.59	-144	2.0G	18	120m	S154	
23	2L15A	6.0G	7.0	45	500m	§J	N	B					7.0#	1.5	.91	174	.30	-147	500M	18	250m	S154	R
24	2L15B	6.0G	7.0	45	500m	§J	N	B					7.0#	1.5	.91	174	.30	-147	500M	18	250m	S154	R
25	2L15C	6.0G	7.0	45	500m	§J	N	B					7.0#	1.5	.91	174	.30	-147	500M	18	250m	S154	R
26	MRF597#ai	6.0G§	7.0	40	250m	$S	NSi	BAL	2.8†	0.5G	15	150m	16♦		0.66	155	0.44	-151	1.0G	10	50m	S517	♦
27	FLM5964-3	6.4G#	15	15 %	1.8	$S	NGA	ST					5.0♦	36 ♦	.32	86	.33	-141	6.4G	10#	800m	W225	DEØ
28	FLM5964-3IM																						
		6.4G#	19	15 %	2.4 %	§J	NGA	ST					5.0♦	36 ♦	.32	86	.33	-141	6.4G	10#	800m#	W225	♦
29	S8814	6.4G#	20	15 %	4.0 %	§	NGA	MF		6.4G	10#	1.5 #	6.0♦									W225a	♦
30	FLM5964-3B#ai																						
		6.4G#	21	15 %	2.8 %	§J	NGA	ST					8.0♦	35 *								W225	♦
31▼	FLM5964-4C																						
		6.4G#	21	15 %	1.8 %		NGA	F	32%	6.4G	10#		9.0♦	36 *								W225	DE
32	FLM5964-5	6.4G#	23	15 %	3.2	$S	NGA	ST					6.0♦	37 ♦	.38	81	.29	-147	6.4G	10#	1.5	W225	DEØ
33	FLM5964-6(A)																						
		6.4G#	37	15 %	4.4 %	$S	NGA	ST					6.0♦	38 ♦	.316	85.5	.366	148	6.4G	10#	1.9 #	W225	DEØ
34♦	FLM5964-8C																						
		6.4G#	37	15 %	3.6 %		NGA	F	30%	6.4G	10#		8.0♦	39 *								W225	DE
35	FLM5964-6#ai																						
		6.4G#	38	15 %	4.4 %	§J	NGA	ST					7.0♦	37 *								W225	♦
36	2SC3011	6.5G§	150mØ	20	30m	♦J	NSI	BPE	2.3	1.0G	5.0	5.0m	12									X156b	A
37	FJ202F	6.5G§	150mØ	20	30m	§J	NSi	BPE	3.0	2.0G	6.0	3.0m	12*		.425	154	.475	-67	2.0G	6.0	15m	W18a	S
38	FJ202E	6.5G§	200mØ	20	30m	§J	NSi	BPE	3.0	2.0G	6.0	3.0m	12*		.425	154	.475	-67	2.0G	6.0	15m	W18b	S
39	BFQ74	6.5G▼	290m	25	30m	§J	NSi	B	2.2	2.0G	15	15m	9.0♦									TO120	S
40♦	BFP91	6.5G▼	350m	15	80m	§J	NSi	BPL	2.3	1.0G	5.0	5.0m	21§		-3.9	97	-10	-151	4.0G	10	10m	W217	R
41	BFQ57	6.5G	450m	25	35m	§J	NSi	PLE	4.0	4.0k	15	25m										TO120	
42	BFQ58	6.5G	450m	16	30m		NSi	PE	3.6	4.0G	15	15	4.0									W100	R
43	MA42181-510																						
		6.5G	3.0	30	300m	§J	NSi	BPL					8.0	100m*	.825	154	.171	-86	1.0G	15	60m	W115	R
44	LT4785	7.0G		20	50m	§J	NSi	B	3.2	2.0G	8.0	5.0m	9.0		-5.1	163	-8.7	-59	2.0G	8.0	5.0m	W246	
45▼	2SC3445	7.0G▼	150m*	15	80m	♦J	NSi	BPE	2.3	1.0G	5.0	10m	10		29Ø	9.0 Ø	50Ø	-5.0Ø	1.0G	5.0	30m	Y236a	C
46	NE98108	7.0G§	150m	16	30m	§J	NSi	S														M1000	
47	2SC2876	7.0G§	200mØ	15	80m	♦J	NSI	BPE	2.3	1.0G	5.0	10m	10									W186	R
48	DC5414	7.0G	200m	15	25m	$S	NSi	BPE	1.7	500M	5.0	3.0m	19$	60m*	.40*	-.25*	1.9*	-1.2*	500M	5.0	15m	W14a	E
49	DC5415	7.0G	200m	15	25m	$S	NSi	BPE	1.4	500M	5.0	3.0m	19$	60m*	.40*	-.25*	1.9*	-1.2*	500M	5.0	15m	W14a	E
50	DC5416	7.0G	200m	15	25m	$S	NSi	BPG	1.1	500M	5.0	3.0m	19$	60m*	.40*	-.25*	1.9*	-1.2*	500M	5.0	15m	W14a	E
51	BFQ77	7.0G§	250m	25	20m	§J	NSi		1.8	2.0G	10	4.0m	13♦		.622	121	.576	-121	6.0G	6.0	2.5m	W217	S
52	NE98141	7.0G§	300m	16	30m	§J	NSi	S														M1009	
53	2N6838	7.0G§	400m	25	30m	§J	N▼*	BAL	1.7†	1.0G	10	10m	15	16 *								W236	V
54	NE98241	7.0G§	400m	20	80m	§J	NSi	S														M1009	
55	2SC1659	7.0G§	500mØ	20	80m	§J	NSi	BEP					13		.605	168	.140	-99	1.0G	6.0	30m	W116	S
56	NE98203	7.0G§	500m	20	80m	§J	NSi	S					13									M1003	
57	NE98208	7.0G§	500m	20	80m	§J	NSi	S					13									M1000	
58▼	HXTR3103	7.0G§	600m	30	50m	▼J	N▼	B	2.1	1.0G	10	10m	16Ø	16 *	.571	-169	.408	-40	1.0G	10	10m	W236	
59	NE98243	7.0G§	600m	20	80m	§J	NSi	S														M1010	
60	2SC3301	7.0G§	800mØ	15	80m	♦J	NSI	BPE	2.3	1.0G	5.0	10m	9.0									X166	B
61▼	FJ952DD	7.0G▼	1.3 *	18	1.3		NSi	B					80%	21 ♦								S537	V
62	NE56854	7.0G§	1.5	25	150m	§J	NSi							200mØ								M1014	
63	NE56855	7.0G§	1.5	25	150m	§J	NSi							200mØ								M1030	
64	NE56963E	7.0G§	4.5	25	300m	§J	NSi						9.0	420m*								M1021	
65♦	FLC301MG-6																						
		7.2G#	15	15 %	1.6 %	§J	NGA	ST	21%	7.2G	10#	50 %	7.0♦	32 *	.228	-81	.809	114	7.2G	10#	800m#	W235	DE
66	S8815	7.2G#	20	15 %	4.0 %	§	NGA	MF		7.2G	10#	1.5 #	5.0♦									W225a	♦
67	FLM6472-3B#ai																						
		7.2G#	21	15 %	2.8 %	§J	NGA	ST					7.0♦	35 *								W225	♦
68▼	FLM6472-4C																						
		7.2G#	21	15 %	1.8 %		NGA	F	30%	7.2G	10#		8.0♦	36 *								W225	DE
69	FLM6472-5	7.2G#	23	15 %	3.2	$S	NGA	ST					5.0♦	37 ♦	.34	67	.47	82	7.2G	10#	1.5	W225	DEØ
70	FLM6472-5IM																						
		7.2G#	26	15 %	4.4 %	§J	NGA	ST					6.5♦	36 *	.34	67	.47	82	7.2G	10#	1.5 #	W225	♦
71	FLM6472-6(A)																						
		7.2G#	37	15 %	4.4 %	$S	NGA	ST					5.0♦	38 ♦								W225	DEØ
72♦	FLM6472-8C																						
		7.2G#	37	15 %	3.6 %		NGA	F	29%	7.2G	10#		7.0♦	39 *								W225	DE
73	FLM6472-6#ai																						
		7.2G#	38	15 %	4.4 %	§J	NGA	ST					6.0♦	37 *								W225	♦
74♦	BFG65	7.5G▼	300m	20	50m	§J	NSi	BPE	2.5	2.0G	8.0	5.0m	11									A433	
75	BFQ65	7.5G§	300m	20	50m	§J	N	PE					8.0§									W181	C
76♦	BFQ66	7.5G▼	350m	20	50m	§J	NSi	PE	2.5	2.0G	8.0	5.0m	12§									W100	S
77♦	FJ401F	7.5G▼	150 *	20	30m	§J	NSi	BPE	3.5†	4.0G	8.0	3.0m	8.5*		.469	110	.586	-110	4.0G	8.0	10m	W345	V
78♦	FJ401J	7.5G▼	150 *	20	30m	§J	NSi	BPE	3.5†	4.0G	8.0	3.0m	8.5*		.469	110	.586	-110	4.0G	8.0	10m	W69e	Y
79♦	FJ401E	7.5G▼	200 *	20	30m	§J	NSi	BPE	3.5†	4.0G	8.0	3.0m	8.5*		.469	110	.586	-110	4.0G	8.0	10m	W344	V
80	FLM7177-3B#ai																						
		7.7G#	21	15 %	2.8 %	§J	NGA	ST					6.5♦	35 *								W225	♦
81▼	FLM7177-4C																						
		7.7G#	21	15 %	1.8 %		NGA	F	30%	7.7G	10#		8.0♦	36 *								W225	DE
82	FLM7177-5	7.7G#	23	15 %	3.2	$S	NGA	ST					4.0♦	37 ♦	.32	102	.35	116	7.7G	10#	1.5	W225	DEØ
83	FLM7177-5IM																						
		7.7G#	26	15 %	4.4 %	§J	NGA	ST					5.5♦	36 *	.32	102	.35	116	7.7G	10#	1.5 #	W225	♦
84	FLM7177-6(A)																						
		7.7G#	37	15 %	4.4 %	$S	NGA	ST					4.5♦	38 ♦								W225	DEØ
85♦	FLM7177-8C																						
		7.7G#	37	15 %	3.6 %		NGA	F	29%	7.7G	10#		7.0♦	39 *								W225	DE
86	FLM7177-6#ai																						
		7.7G#	38	15 %	4.4 %	§J	NGA	ST					5.5♦	37 *								W225	♦
87	S8816	7.9G#	20	15 %	4.0 %	§	NGA	MF		7.9G	10#	1.5 #	4.0♦									W225a	♦
88	MRFC592	8.0G§		20	30m	§S	NSi	B	2.2	1.0G	10	10m			.63	-160	.42	-90	1.0G	8	5m	W255	

10. UHF/MICROWAVE TRANSISTORS

IN ORDER OF:(1)MAX. OSCILLATOR FREQUENCY (2)MAX. TOTAL PWR(PT) & (3)TYPE No.

LINE No.	3 TYPE No.	1 MAX. OSC. FREQ Fmax (Hz)	MAXIMUM RATINGS 2 PT (W)	BVCBO (V)	IC (A)	TEMP CODE	POL & MAT	TYPE & TECH	NOISE FIGURE @ STATED CONDITIONS NF (dB)	@ FREQ (Hz)	@ VCE (V)	@ IC (A)	TYPICAL OPERATING GAIN (S21)2 (dB)	Pout (W)	TYPICAL REFLECTION COEFFICIENTS S11 (Mag)	S11 (deg)	S22 (Mag)	S22 (deg)	@ FREQ (Hz)	@ VCE (V)	@ IC (A)	DWG No.	LEAD CODE
1	DC5402	8.0G	120m	20	10m	♦A	NSi	BPE	3.5	2.0G	5.0	2.0m*	12$		.28*	-.22*	.80*	-1.9*	2.0G	5.0	2.0m*	W14a	V
2	DC5403	8.0G	120m	20	10m	♦A	NSi	BPE	3.0	2.0G	5.0	2.0m*	12$		.28*	-.22*	.80*	-1.9*	2.0G	5.0	2.0m*	W14a	V
3	DC5404	8.0G	120m	20	10m	♦A	NSi	BPE	2.5	2.0G	5.0	2.0m*	12$		.28*	-.22*	.80*	-1.9*	2.0G	5.0	2.0m*	W14a	V
4	2SC1655	8.0G§	150mØ	16	30m	§J	NSi	BEP					8.0		.252	156	.241	-79	2.0G	6.0	10m	W18	S
5	2SC1655A	8.0G§	150mØ	16	30m	§J	NSi	BEP	3.0Ø	500M	6.0	5.0m	8.0		.252	156	.241	-79	2.0G	6.0	10m	W18	S
6	2SC1948-1	8.0G§	150mØ	15	20m	§J	NSi	BEP	3.5Ø	4.0G	8.0	3.0m	4.5		.36*	.64*	.56*	-.27*	4.0G	8.0	10m	W29c	S
7	2SC1948-2	8.0G§	150mØ	15	20m	§J	NSi	BEP	4.0Ø	4.0G	8.0	3.0m	4.5		.36*	.64*	.56*	-.27*	4.0G	8.0	10m	W29c	S
8	2SC1948-5	8.0G§	150mØ	15	20m	§J	NSi	BEP	2.3Ø	1.8G	8.0	3.0m	4.5		.36*	.64*	.56*	-.27*	4.0G	8.0	10m	W29c	S
9	FJ203F	8.0G§	150mØ	20	20m	§J	NSi	BPE	1.7	2.0G	6.0	3.0m	13*		.500	174	.458	-76	2.0G	6.0	10m	W18a	S
10♦	FJ901F	8.0G▼	150m*	16	30m	§J	NSi	BPE					80%									W345	V
11	FJ203E	8.0G§	200mØ	20	20m	§J	NSi	BPE	1.7	2.0G	6.0	3.0m	13*		.500	174	.458	-76	2.0G	6.0	10m	W18b	S
12♦	FJ901E	8.0G▼	200m*	16	30m	§J	NSi	BPE					80%									W344	V
13♦	FJ901M	8.0GΔ	200m*	16	30m	§J	NSi	S														W346	RU
14♦	FJ901R	8.0GΔ	200m*	16	30m	§J	NSi	S														W347	QG
15	JS2737AS	8.0G	200m	5.0 %	200m%	♦J	NGA	MF	2.5Ø	8.0G	3.0#	10m#	10Ø										
16	NE21932E	8.0G§	250m	20	80m	§J	NSi		1.2	1.0G	8.0	5.0m	12*									TO92	C
17	NE21936	8.0G§	250m	20	80m	§J	NSi		1.2	1.0G	8.0	5.0m	6*									M1013	
18	2SC1657	8.0G§	300mØ	16	30m	§J	NSi	BEP					8.0		.252	156	.241	-79	2.0G	6.0	10m	W108	QM
19	2SC2869	8.0G§	400m	20	80m	$J	NSi	B	1.2†	1.0G	8.0	5.0m	13									W183	R
20	2SC2367	8.0G§	580m	20	80m	§J	NSi	BEP	1.2	1.0G	8.0	5.0m	9.0									W100	S
21	NE21935	8.0G§	580m	20	80m	§J	NSi	B	1.0	0.5G	8	5.0m	25									M999	
22	2SC2737	8.0G§	600m	20	80m	$J	NSi	B	2.5†	1.0G	8.0	5.0m	11									TO92	C
23	NE21912	8.0G§	600m	20	80m	§J	NSi	B	1.0	0.5G	8	5.0m	23									TO72	G
24	NE21903	8.0G§	700m	20	80m	§J	NSi	B	1.3	1.0G	8	5.0m	16									M1003	
25	NE21907	8.0G§	700m	20	80m	§J	NSi	B	1.3	1.0G	8	5.0m	16									M1004	
26	NE21908	8.0G§	700m	20	80m	§J	NSi	B	1.3	1.0G	8	5.0m	16									M1000	
27	NE21955	8.0G§	700m	20	80m	§J	NSi							100mØ								M1030	
28	NE21960	8.0G§	700m	20	80m	§J	NSi							100mØ								M1031	
29	MRF571	8.0G§	750m	20	70m#	§S	NSi		2.8	2.0G	6.0#	5.0m#	12Ø		.69	141	.29	-91	2.0G	8.0#	5.0m#	W252	V
30	MRF572	8.0G§	750m	20	70m#	§S	NSi		2.5	2.0G	6.0#	5.0m#	12Ø		.66	163	.30	-94	2.0G	8.0#	5.0m#	W254	V
31	MRF573	8.0G§	750m	20	70m#	§S	NSi		2.5	2.0G	6.0#	5.0m#	12Ø		.62	151	.19	-100	2.0G	8.0#	5.0m#	W295	Y
32▼	MRFC572	8.0G§	750m	20	70m	§S	NSi	B	1.5†	1.0G	6.0	5.0m	12Ø		0.70	147	0.15	-140	2.0G	8.0	50m	u78	
33	FSX51X	8.0G#	1.0	12 %	60m	§J	NGA	ST	24%	8.0G	8.0#	50 %	10♦	18 ♦	.668	-101	.687	-38	8.0G	8.0#	30m	u	
34	NE243187	8.0G	1.0	25	110m	§J	NSi								.47	164	.35	153	5G	12	80m	M996	
35	FLC02WF	8.0G#	1.5	12 %	250m%	§J	NGA	JST					8.0Ø	200m	.839	143	.704	-141	8.0G	10#	80m#	W161	DF
36	FSX52X	8.0G#	1.5	12 %	150m	§J	NGA	ST	28%	8.0G	8.0#	50 %	10♦	23 ♦	.787	-137	.605	-56	8.0G	8.0#	75m	u	
37	S8812	8.0G#	1.5	15 %	125m%	§	NGA	MF		8.0G	10#	40m#	9.5♦									W223a	♦
38	NE243287	8.0G	2.0	25	220m	§J	NSi								.50	174	.42	178	5G	12	150m	M996	
39	S8803	8.0G	2.5	15 %	250m%	♦J	NGA	MF		8.0G	10#	125m#	7.0♦	23 ♦									
40	AT8151	8.0G	2.7		300m#	$C	NGA	JØ					6.4	29 *	.849	-153	.327	-132	4.0G	6.0	275m	U40	
41	FSX53W	8.0G#	3.0	12 %	300m	§J	NGA	ST	24%	8.0G	3.0#	50 %	8.0♦	25 ♦	.825	151	.594	-143	8.0G	8.0#	150m	W160	DF
42	FSX53WF	8.0G#	3.0	12 %	300m	§J	NGA	ST	24%	8.0G	8.0#	50 %	8.0♦	25 ♦	.825	151	.594	-143	8.0G	8.0#	150m	W223	DEØ
43	FSX53X	8.0G#	3.0	12 %	300m	§J	NGA	ST	24%	8.0G	8.0#	50 %	8.0♦	25 ♦	.831	-167	.507	-111	8.0G	8.0#	150m	u	
44	FLC081X	8.0G#	3.3		550m%	§S	GA	F	27%	8.0G	10#	225m#	6.5♦	29 ♦								u	
45▼	FLC053WG	8.0G#	3.7	15 %	200m%		NGA	F	38%	8.0G	10#		9.0♦	27 *								W339	DE
46	NE243496	8.0G	4.0	25	440m	§J	NSi								1.00	165	.73	127	5G	12	300m	M997	
47♦	FLC081WF	8.0G#	4.1	15 %	400m	§J	NGA	ST	27%	8.0G	10#	50 %	6.8♦	28 *	.819	119	.439	-165	8.0G	10#	200m	W338	DE
48	NE56953E	8.0G	4.5	25	300m	§J	NSi	B					13*		.45	59	.61	172	3.5G	12	200m	M998	
49	FLC151MF	8.0G#	6.5		1.1 %	§J	GA	F	24%	8.0G	10#	400m%	6.0♦	31 ♦								S163	DF
50	FLC151X	8.0G#	6.5	15 %	800m%	§J	NGA	ST	24%	8.0G	10#	400m%	5.5♦	31 ♦	.903	174	.617	-169	8.0G	10#	400m#	u	DF
51▼	FLC103WG	8.0G#	7.5	15 %	400m%		NGA	F	36%	8.0G	10#		8.0♦	30 *								W339	DE
52♦	FLC151WF	8.0G#	7.5	15 %	800m%	§J	NGA	ST	22%	8.0G	10#	50 %	5.5♦	30 *	.866	118	.558	160	8.0G	10#	400m#	W338	DE
53	NE64535	8.5G§	290mØ	25	65m	$C	NSi	B	1.6	2.0G	8.0	7.0m	12									W100	S
54	NE64508	8.5G	400m	25	65m	§J	NSi	B	1.3	1.5G	8	7m	16*									M1000	
55	NE64580	8.5G§	400mØ	25	65m	§J	NSi	B	1.6	2.0G	8.0	7.0m	12		.300	-177	.420	-40	2.0G	8.0	10m	W18c	S
56	NE64587$	8.5G§	400m	25	65m	§J	NSi								.60	175	.64	-4	7.0G	8.0	20m	M996	
57	CFX32	8.5G	2.5	15 %	500m%	§S	GA			8.5G	3#	1.0 #	7♦	500m								W274	DF
58	NE464199	8.5G	2.5			§S	GA	J						300m*								M1026	
59	NE868199	8.5G	2.5			§S	GA							400m*								M1026	
60	NEM464199	8.5G	2.5			§S	GA	J						300m*								M1026	
61	CFX33	8.5G	4	15 %	1.2 %	§S	GA			8.5G	3#	1.0 #	6♦	1.0								W274	DF
62	NE464299	8.5G	5.0			§S	GA	J						600m*								M1026	
63	NE868299	8.5G	5.0			§S	GA							800m*								M1026	
64	NEM464299	8.5G	5.0			§S	GA	J						600m*								M1026	
65	NE464499	8.5G	10			§S	GA	J						1.0 *								M1026	
66	NEM464499	8.5G	10			§S	GA	J						1.0 *								M1026	
67▼	FLC253MH8	8.5G#	15	15 %	1.0 %		NGA	F	35%	8.5G	10#		8.0♦	34 *								W248	DE
68	FLC301MG-8	8.5G#	15	15 %	2.2 %	§J	NGA	ST	20%	8.5G	10#	50 %	6.0♦	33 ♦	.148	117	.821	80	8.5G	10#	800m#	W235	♦
69	FLM7785-3B(A)	8.5G#	21	15 %	2.2 %	$S	NGA	ST					5.0♦	36 ♦								W225	DEØ
70	FLM7785-3B#ai	8.5G#	21	15 %	2.8 %	§J	NGA	ST					6.0♦	35 *								W225	♦
71▼	FLM7785-4C	8.5G#	21	15 %	1.8 %		NGA	F	29%	8.5G	10#		7.0♦	36 *								W225	DE
72	FLM7785-4	8.5G#	23	15 %	3.2	$S	NGA	ST					4.0♦	37 ♦	.40	39	.45	103	8.5G	10#	1.5	W225	DEØ
73▼	FLM7785-8C	8.5G#	37	15 %	3.6 %		NGA	F	27%	8.5G	10#		6.0♦	39 *								W225	DE
74	FLM7785-6#ai	8.5G#	38	15 %	4.4 %	§J	NGA	ST					5.0♦	37 *								W225	♦
75	DC5405	9.0G	120m	20	10m	♦A	NSi	BPE	2.0	2.0G	5.0	2.0m*	13$	5.0m*	.25*	-.28*	.80*	-1.9*	2.0G	5.0	2.0m*	W14a	V
76▼	MA42151-510	9.0G	700m	27	50m			B	4.0	100M	6.0	2.0m										W115	
77	AT8150	9GØ	2.7		300m%	$C	NGA	JØ					6.5	29 *	.75	-155	.38	-144	4G	9	275m	W202	
78	NE64408	10G	260m	20	30m	§J	NSi	B	1.7	2.0G	6	5m	17*									M1000	
79	NE64480	10G	260m	20	30m	§J	NSi	B	1.7	2.0G	6	5m	17*									M1005	
80	AT2645	10G	400m	20	50m	§J	NSi	BPE	3.5Ø	2.0G	10	5.0m	11Ø		.671	173	.581	-52	2.0G	10	5.0m	W26	C
81	AT2645A	10G	400m	20	50m	§J	NSi	BPE	3.0Ø	2.0G	10	5.0m	11Ø		.671	173	.581	-52	2.0G	10	5.0m	W26	C
82	CFY12	10G	500m	5.0 %	100m#			F	3.0	8.0G	4.0#	9.0m%	8.0*	12 *								TO120	EY
83	NE56755	10G§	600m	25	60m	§J	NSi							140m								M1030	
84▼	HXTR4101	10G	900m	30	70m	▼J	N▼	B		1.0G	10	10m		12 Ø	.986	88	1.21	-143	5.0G	15*	30m	W29g	
85	HXTR-4101	10G	900m	30	70m	▼J	B							12 Ø	.786	49	.893	135	8.0G	15	30m	W26a	
86	AT8160	10GØ	1.6		250m%	$C	NGA	JØ					5.0	26 *	.69	-179	.42	-101	6G	6	145m	W202	
87	AT8141	10G	4.5		500m#	$C	NGA	JØ					3.0	32 *	.858	-169	.228	-107	4.0G	9.0	425m	U41	
88▼	FLM0910-2	10G#	15	15 %	1.0 %		NGA	F	30%	10G	10#		7.5♦	33 *								W340	DE
89▼	FLM0910-4	10G#	27	15 %	2.0 %		NGA	F	27%	10G	10#		7.5♦	36 *								W340	DE
90♦	CFX21	11G#	500m	8 %	110m%	§S	NGA			11G	3#	200m#	7♦	50m								W272	K
91	CFX30	11G	800m	15 %	130m%	§S	GA			11G	3#	1.0 #	7♦	100m								W274	DF
92	CFX31	11G	1.3	15 %	300m%	§S	GA			11G	3#	1.0 #	7♦	250m								W274	DF
93▼	FLM1011-2	11G#	15	15 %	1.0 %		NGA	F	26%	11G	10#		6.0♦	33 *								W340	DE
94▼	FLM1011-4	11G#	27	15 %	2.0 %		NGA	F	22%	11G	10#		6.0♦	35 *								W340	DE
95	AT8251	12G			100m#	$S	NGA	FST	.90	4.0G	3.0#	20m#		21 ♦	.642	-99	.366	-42	5.0G	3.0#	20m#	U42	DE
96▼	HFET1001	12G		11 %	120m%	▼J	GA	JST	3.2	10G	3.5#	12m%	9.1Ø	15 *	.72	-132	.73	-42	10G	5.0#	60m%	n70	
97	HFET1102	12G				$S	GA	FST	1.4†	4.0G			16	15 Δ								W164	EY
98▼	HFET2001	12G#		10 %	90m%	▼J	GA	JST	3.4	18G	3.5#	13m%	8.9Ø	14 *	.79	-101	.66	-37	10G	4.0#	45m%	u71	
99	HFET2202	12G				♦S	GA	FST	1.4Ø	4.0G			13Ø	14 Δ								W164	EY
100	JS8804AS	12G	100m	5.0 %	100m#	§J	NGA	MF	2.2	12G	3.0#	10m#	8.5Ø									u64	♦
101▼	499BFY(A)	12G▼	140m	9.0	20m	§J	NSi	PE	2.5	2.0G	5.0	5.0m	13Ø									W265	R
102♦	BFQ33#	12G▼	140m	9.0	20m	§J	NSi	PE	2.5	2.0G	5.0	5.0m	13§									W265	V
103	DC5412	12G	175m	20	15m	♦A	NSi	BPE	2.1	2.0G	10	3.0m*	14$	22m*	.20*	-.10*	.70*	-1.6*	2.0G	10	3.0m*	W14a	V

10. UHF/MICROWAVE TRANSISTORS

IN ORDER OF:(1)MAX. OSCILLATOR FREQUENCY (2)MAX. TOTAL PWR(PT) & (3)TYPE No.

LINE No.	3 TYPE No.	1 MAX. OSC. FREQ Fmax (Hz)	MAXIMUM RATINGS 2 PT (W)	BVCBO (V)	IC (A)	TEMP CODE	POL & MAT	TYPE & TECH	NOISE FIGURE @ STATED CONDITIONS NF (dB)	@ FREQ (Hz)	@ VCE (V)	@ IC (A)	TYPICAL OPERATING GAIN (S21)2 (dB)	Pout (W)	TYPICAL REFLECTION COEFFICIENTS S11 (Mag)	S11 (deg)	S22 (Mag)	S22 (deg)	@ FREQ (Hz)	@ VCE (V)	@ IC (A)	DWG No.	LEAD CODE
1♦	CFX13	12G#	300m	5 %	100m%	§S	NGA	F	3	12G	3#	200m#	6.5									W272	K
2▼	DXL1503A	12G#	300m	6.0 %	70m%	§J	NGA	FPA	2.1	12G	3.5#	15m%	10*	10 *	0.68	-134	0.48	-70	12G	3.5#	12m%	u45	
3▼	DXL1503A-P70																						
		12G#	300m	6.0 %	70m%	§J	NGA	FPA	2.2	12G	3.5#	15m%	10*	10 *	0.68	-130	0.88	-65	12G	3.5#	12m%	W226	FE
4▼	HFET2204	12G#	360m	10 %	90m%	▼J	GA	JST	1.1	4G	3.5#	7.5m%	13Ø	15 *					10G			W29g	EX
5	CFY10	12G	500m		100m#	♦S	GA	F	1.6	6.0G	4.0#	15m#	10Ø		.51	107	.59	173	12G	4.0#	10m#	C212	EF
6	CFY13	12G	500m		100m#	♦S	GA	F	1.9	6.0G	4.0#	15m#	10Ø		.56	60	.40	118	12G	4.0#	10m#	W217	FE
7	CFY14	12G	500m		100m#	♦S	GA	F	2.2	6.0G	4.0#	15m#	8.5Ø		.56	60	.40	118	12G	4.0#	10m#	W217	FE
8	CFY20	12G	500m	8.0 %	100m#			F	1.8	4.0G	5.0#	10m%	18*	12 *								TO120	
9♦	DXL2502A-P70																						
		12G*	500m	4.0 %	90m%	§S	NGA	FPA	1.4	4.0G	3.5#	15m%	17*	10 *	.66	-151	.94	-126	12G	3.5#	30m%	W226	FE
10	HFET1101	12G#	500m	5.0 %	120m§	♦J	NGA	JST	3.6	10G	3.5#	15 %	3.0	25m*	.627	108	.609	-176	10G	4.0#	50 %	W29g	EY
11	FSX100FA	12G#	550m	12 %	60m	§J	NGA	ST					8.0♦	12 *								W234	DE
12♦	DXL3501A	12G*	800m	8.0 %	160m%	§S	NGA	FPA					8.0♦	23 *	.65	-157	.76	-75	12G	8.0#	500m%	u43	
13♦	DXL3501A-P100F																						
		12G*	800m	8.0 %	200m%	§S	NGA	FPA					8.0♦	23 *	0.68	178	0.81	-119	12G	8.0#	500m%	M1103	DDØ
14	FSX100X	12G#	1.0	12 %	60m	§J	NGA	ST					8.5♦	12 *									
15♦	DXL3615A	12G*	2.4	8.0 %	600m	§J	NGA	FPA					10♦	26 *	0.78	161	0.68	-128	12G	8.0#	200m%	u46	
16♦	DXL3615A-P100F																						
		12G*	2.4	8.0 %	600m	§J	NGA	FPA					10♦	26 *	0.62	140	0.71	-159	12G	8.0#	200m%	M1103	DD
17♦	DXL3630A	12G*	2.5	9.0 %	600m	§J	NGA	FPA					6.0♦	28 *	0.89	170	0.65	-126	12G	9.0#	200m%	u47	
18♦	DXL3630A-P100F																						
		12G*	2.5	9.0 %	700m	§J	NGA	FPA					6.0♦	28 *	0.81	161	0.73	-140	12G	9.0#	200m%	M1103	DD
19	FLX03MB	12G#	2.5	12 %	450m%	§J	NGA	ST	13%	12G	10#	50 %	8.0♦	24 ♦	.685	49.3	.673	163	12G	10#	150m#	W166	DF
20	FLX03X	12G#	2.5	15 %	450m%	§J	NGA	ST	13%	12G	10#	50 %	7.0♦	23 ♦	.861	156	.501	-136	12G	10#	150m#	u	
21♦	DXL3640A	12G*	4.0	9.0 %	850m	§S	NGA	FPA					9.0♦	31 *	0.91	155	0.71	177	12G	8.0#	350m%	u48	
22♦	DXL3640A-P100F																						
		12G*	4.0	9.0 %	1.4	§S	NGA	FPA					9.0♦	31 *	0.80	122	0.58	174	12G	8.0#	350m%	M1103	DD
23	FLX03WG	12G#	4	15 %	300m	§J	NGA	ST					7.5♦	26 ♦								W249	
24▼	HMF1202(A)																						
		12G	4.0		400m%	§S	NGA	F	35%	8.0G	8.0#	200m%	9.5*	27 *	.762	79.7	.695	117	14G	8.0#	200m%	W223	FE
25	FLX06MB	12G#	5.0	12 %	900m%	§J	NGA	ST	12%	12G	10#	50 %	7.0♦	27 ♦	.800	29	.613	129	12G	10#	300m#	W166	DF
26	FLX06X	12G#	5.0	15 %	900m%	§J	NGA	ST	12%	12G	10#	50 %	6.0♦	26 ♦	.899	161	.674	-175	12G	10#	300m#	u	
27	FLX06MH12(A)																						
		12G#	7.5	15 %	600m	§J	NGA	ST					7.0♦	29 ♦								W248	
28	FLX06WG	12G#	7.5	15 %	600m	§J	NGA	ST					6.5♦	29 ♦								W249	
29▼	FLX102MH12																						
		12G#	7.5	15 %	400m%		NGA	F	33%	12G	10#		7.5♦	30 *								W248	DE
30	FLX12MB	12G#	8.8	15 %	1.2	§J	NGA	ST	12%	12G	10#	50 %	5.5♦	31 ♦	.843	68.8	.67	105	12G	10#	600m	W166	DEØ
31▼	FLX202MH12																						
		12G#	10	15 %	800m%		NGA	F	28%	12G	10#		7.0♦	32 *								W248	DE
32	FLX12MH12(A)																						
		12G#	11	15 %	1.2	§J	NGA	ST					6.5♦	31 ♦								W248	
33	HFET5001	14G				$S	GA	FST		8.0G			11Ø	100								W164	EY
34	A551	14G§	180m	8.0 *	20m		N	B	2.5	2.0G		5.0m	19									W29j	RØ
35	BFQ33	14G§	180m	9.0	20m	$J	NSi	BPE	2.5	2.0G	5.0	5.0m	8.2§		.30	166	.41	-100	4.0G	5.0	14m	W29	R
36	AT4641	14G	200m	20	50m	§J	NSi	BPE	3.5Ø	4.0G	10	5.0m	8.0Ø									W26	C
37	AT4642	14G	200m	20	50m	§J	NSi	BPE	4.0Ø	4.0G	10	5.0m	7.0Ø									W26	C
38	AT4841	14G	200m	20	50m	§J	NSi	BPE	3.5Ø	4.0G	10	5.0m	8.0Ø		.600	156	.459	-68	2.0G	10	10m	W26f	C
39	AT4842	14G	200m	20	50m	§J	NSi	BPE	4.0Ø	4.0G	10	5.0m	7.0Ø									W26f	C
40♦	DXL2704A	14G*	300m	12 %	100m%		NGA	FPA	2.0	4.0G	4.0#	10m%	20*		.62	-107	.90	-70	14G	4#	25m%	u59	
41	CFY11	14G	500m	5.0 %	100m#		GA	F	2.5	8.0G	4.0#	9.0m%	11*	12 *								TO120	EY
42▼	HMF0301(A)																						
		14G	900m		100m%	§S	NGA	F	35%	8.0G	8.0#	50m%	11*	21 *	.699	95.1	.729	151	14G	8.0#	50m%	W205	EF
43▼	DXL2608A	14G*	1.0	10 %	250m%	§J	NGA	F					8.0♦	22 *	0.81	172	0.75	-89	14G	6.0#	100m%	u61	
44▼	HMF0302(A)																						
		14G	1.0		100m%	§S	NGA	F	35%	8.0G	8.0#	50m%	18*	21 *	.793	144	.890	176	14G	8.0#	50m%	W223	FE
45▼	HMF0620	14G	1.0		180m%	§S	NGA	F	1.2	4.0G	4.0#	36m%	17*	20 *	.829	-167	.480	-147	14G	4.0#	90m%	u74	
46▼	FLK022WG	14G#	1.8	15 %	100m%		NGA	F	32%	14G	10#		7.0♦	24 *								W339	DE
47▼	HMF0602(A)																						
		14G	2.0		200m%	§S	NGA	F	35%	8.0G	8.0#	100m%	10*	24 *	.774	106	.691	161	14G	8.0#	100m%	W223	FE
48▼	FLK052WG	14G#	3.7	15 %	200m%		NGA	F	32%	14G	10#		7.0♦	27 *								W339	DE
49	FLK03WG	14G#	4	15 %	300m	§J	NGA	ST					6.5♦	26 ♦								W248	
50▼	FLK06MH14(A)																						
		14G#	7.5	15 %	600m	§J	NGA	ST					6.0♦	29 ♦								W248	
51	FLK06WG	14G#	7.5	15 %	600m	§J	NGA	ST					5.5♦	29 ♦								W248	
52▼	FLK102MH14																						
		14G#	7.5	15 %	400m%		NGA	F	31%	14G	10#		6.5♦	30 *								W248	DE
53▼	HMF2400	14G	8.0		760m%	§S	NGA	F	30%	8.0G	8.0#	380m%	8.5*	30 *	.930	176	.864	175	16G	8.0#	380m%	u76	
54▼	HMF2402(A)																						
		14G*	8.0		760m%	§S	NGA	F	30%	8.0G	8.0#	380m%	8.0*	30 *	.746	73.2	.783	106	14G	8.0#	380m%	W223	FE
55▼	FLK202MH14																						
		14G#	10	15 %	800m%		NGA	F	27%	14G	10#		6.0♦	32 *								W248	DE
56▼	FLK12MH14(A)																						
		14G#	11		1.2 %	§J	NGA	ST					5.5♦	31 ♦								W248	
57▼	FLM1414-2	14G#	15	15 %	1.0 %		NGA	F	22%	14G	10#		4.5♦	33 *								W340	DE
58▼	FLM1414-4	14G#	27	15 %	2.0 %		NGA	F	18%	14G	10#		4.5♦	35 *								W340	DE
59	AT4680	15G	120m	20	50m	§J	NSi	BPE	2.8Ø	4.0G	10	3.0m	8.8Ø									W26	C
60	AT4880	15G	120m	20	50m	§J	NSi	BPE	2.8Ø	4.0G	10	3.0m	8.8Ø		.525	130	.656	-100	4.0G	10	3.0m	W26f	C
61	AT4690	15G	200m	2.0	50m	§J	NSi	BPE	3.0Ø	4.0G	10	5.0m	9.5Ø									W26	C
62	AT4890	15G	200m	2.0	50m	§J	NSi	BPE	3.0Ø	4.0G	10	5.0m	9.5Ø		.648	122	.679	-114	4.0G	10	5.0m	W26f	C
63	AT8161	15GØ	1.6		500m%	§J	NGA	JØ					3.5	25 *	.81	-171	.40	-84	8G	6	125m	U39	
64	CFX14	16G	300m	5 %	100m%	§S	GA		3	16G	3#	200m#	6.0									W272	K
65	AT11200	16G	400m	9.0 %	140m%	▼J	GA	FST	5.5	12G	6.0#	60m%	16Ø	20 *	0.72	147	0.97	-122	12G	4.0#	40m%	u51	
66▼	HMF1200	16G	4.0		400m%	§S	NGA	F	35%	8.0G	8.0#	200m%	10*	27 *	.902	173	.755	172	16G	8.0#	200m%	u75	
67	AT8061	18G	200m	5.0 %	50m%	§J	NGA	FST	3.3	18G	3.0#	10m%	12*	10 *	.704	126	.127	-104	17G	3.0#	10m%	u49	
68	AT10600	18G	200m	7.0 %	90m%	§J	NGA	FST	2.8	18G	3.0#	10m%	6.0Ø	17 *	0.70	112	0.12	-132	18G	3.0#	20m%	u49	
69	HFET2201	18G#	360m†	4.0 #	90m%	♦J	NGA	JST	2.8Ø	10G	3.5#	15 %	9.2Ø	16m*	.87	159	.66	-162	10G	3.5#	15 %	W157	DD
70	JS8818AS(A)																						
		18G#	400m	5.0 %	100m%	§S	NGA	MF	1.5†	12G	3.0#	10m#	9.0Ø									u64	♦
71	JS8819AS(A)																						
		18G#	400m	5.0 %	100m%	§S	NGA	MF	1.8†	12G	3.0#	10m#	9.0Ø										
72	CFY15	18G	500m		100m#	♦S	GA	F	1.2	6.0G	4.0#	15m#	12Ø		.69	112	.57	-178	15G	4.0#	10m#	W226	FE
73	CFY16	18G	500m		100m#	♦S	GA	F	1.4	6.0G	4.0#	15m#	11Ø		.69	112	.57	-178	15G	4.0#	10m#	W226	FE
74♦	DXL2501A	18G*	500m	6.0 %	100m%	§S	NGA	FPA	1.5	4.0G	3.5#	15m%	16*	18 *	.598	171	.541	-132	18G	3.5#	15m%	u43	
75♦	DXL2501A-P70																						
		18G*	500m	6.0 %	100m%	§S	NGA	FPA	1.5	4.0G	3.5#	15m%	16*	16 *	.58	169	.90	-139	18G	3.5#	15m%	W226	FE
76♦	DXL2502A	18G*	500m	4.0 %	90m%	§S	NGA	FPA	1.4	4.0G	3.5#	15m%	17*	10 *	.41	166	.73	-82	18G	3.5#	30m%	u44	
77♦	DXL2503A	18G*	500m	4.0 %	100m%	§S	NGA	FPA	1.9	8.0G	3.5#	10m%	13*	10 *	.66	-143	.68	-84	18G	3.5#	30m%	u45	
78♦	DXL2503A-CR																						
		18G*	500m	4.0 %	100m%	§S	NGA	FPA	1.9	8.0G	3.5#	10m%	13*	10 *	.66	-143	.68	-84	18G		30m%	M1102	
79♦	DXL2503A-CRES																						
		18G*	500m	4.0 %	100m%	§S	NGA	FPA	1.9	8.0G	3.5#	10m%	13*	10 *	.66	-143	.68	-84	18G		30m%	M1102	
80♦	DXL3503A	18G*	500m	6.0 %	130m%	§S	NGA	FPA					9.0♦	50m	0.64	-160	0.77	-78	18G	6.0#	500m%	u45	
81♦	DXL3503A-CR																						
		18G*	500m	6.0 %	130m%	§S	NGA	FPA					9.0♦	50m	0.64	-160	0.77	-78	18G			M1102	
82♦	DXL3503A-CRES																						
		18G*	500m	6.0 %	130m%	§S	NGA	FPA					9.0♦	50m	0.64	-160	0.77	-78	18G			M1102	
83♦	DXL3504A	18G*	580m	6.0 %	150m	§S	NGA	FPA					9.0♦	100m	0.64	-160	0.77	-78	18G	6.0#	500m%	u45	

10. UHF/MICROWAVE TRANSISTORS

IN ORDER OF:(1)MAX. OSCILLATOR FREQUENCY
(2)MAX. TOTAL PWR(PT) & (3)TYPE No.

LINE No.	3 TYPE No.	1 MAX. OSC. FREQ Fmax (Hz)	MAXIMUM RATINGS 2 PT (W)	BVCBO (V)	IC (A)	TEMP CODE	POL & MAT	TYPE & TECH	NOISE FIGURE @ STATED CONDITIONS NF (dB)	@ FREQ (Hz)	@ VCE (V)	@ IC (A)	TYPICAL OPERATING GAIN (S21)2 (dB)	Pout (W)	TYPICAL REFLECTION COEFFICIENTS S11 (Mag)	S11 (deg)	S22 (Mag)	S22 (deg)	@ FREQ (Hz)	@ VCE (V)	@ IC (A)	DWG No.	LEAD CODE
1♦	DXL3504A-CR																						
		18G*	580m	6.0 %	150m	§S	NGA	FPA					9.0♦	100m	0.64	-160	0.77	-78	18G			M1102	
2♦	DXL3504A-CRES																						
		18G*	580m	6.0 %	150m	§S	NGA	FPA					9.0♦	100m	0.64	-160	0.77	-78	18G			M1102	
3♦	DXL3605A	18G*	1.0	12 %	200m%	§J	NGA	FPA					4.5♦	21 *	.81	-165	.50	-67	18G	6#	80m%	u60	
4▼	HMF0300	18G	1.0		100m%	§S	NGA	F	35%	8.0G	8.0#	50m%	12*	18 ♦	.765	-164	.584	-117	18G	8.0#	50m%	u73	
5♦	DXL3608A	18G*	1.2	20 %	275m%	§J	NGA	FPA					8.0♦	24 *	.86	-159	.74	-110	18G	5#	115m%	u61	
6♦	DXL3610A	18G*	1.5	12 %	400m%	§J	NGA	FPA					4.0♦	23 *	.87	-169	.60	-110	18G	6#	150m%	u62	
7▼	HMF0600	18G	2.0		200m%	§S	NGA	F	35%	8.0G	8.0#	100m%	10*	24 *	.860	-179	.652	-157	18G	8.0#	100m%	u74	
8▼	HMF0310	20G	750m		110m%	§S	NGA	F	1.2	8.0G	4.0#	22m%	15*	18 *	.815	-170	.537	-115	18G	4.0#	55m%	u73	
9♦	HMF0610	20G	1.4		200m%	§S	NGA	F					13*	22 *	.849	-178	.700	-162	18G	6.0#	100m%	u74	
10	AT12000	24G	200m	9.0 %	40m%	▼J	GA	FST	4.5	12G	4.0#	20m%	16Ø	13 *	0.69	-162	0.96	-57	12	4.0#	20m%	u52	
11	AT8111	25G	500m	7.0 %	120m#	♦S	GA	FST	1.5	4.0G	3.0#	20m#	12	17 *	.727	-168	.290	-120	4.0G	3.0#	20m#	Ø	♦
12	AT8041	26G	150m		40m%	$C	NGA	JØ	2.0	12G	3	8.0m		8 *	.57	-114	.73	-29	13G	3	9m	U38	
13	MGF2172	27G	12	11		$	GA	MF					6.0♦	2.8 *								W151	DE
14	AT8110	30G	500m	7.0 %	120m#	♦S	GA	FST	1.5	4.0G	3.0#	20m#	12	17 *	.727	-168	.290	-120	4.0G	3.0#	20m#	W26	DE
15	MGF2148F#ai																						
		30G	8.0	9.0 #	1.6 #	$S	NGA	FST					5.2♦	1.6 *								W228	DE
16	MGF2148G#ai																						
		30G	8.0	9.0 #	1.6 #	$S	NGA	FST					5.2♦	1.6 *								W229	DE
17	MGF2148	30G	8.3	11		$	GA	MF					5.0♦	1.6 *								W151	DE
18	AT11671	35G	400u	4 #	100u%	§J	NGA	FST					125Ø	25 *	.78	-136	.51	-63	4G	3#	20m#	W242	
19	AT12535	35G	400u	4 #	100u%	§J	NGA	FST	1.5Ø	4G	3.0#	20m	125Ø	100m	.63	97	.18	153	4G	3#	20m#	W26	
20	AT11571	35G	4.0	4 #	500m%	§J	NGA	FST					125Ø	28 *	.82	-165	.41	-104	4G	3#	250m#	W242	
21	MGF2124F#ai																						
		35G	4.0	9.0 #	800m#	$S	NGA	FST					6.3♦	1.0 *								W228	DE
22	MGF2124G#ai																						
		35G	4.0	9.0 #	800m#	$S	NGA	FST					6.3♦	1.0 *								W229	DE
23	MGF2124	35G	4.2	11		$	GA	MF					6.0♦	1.0 *								W151	DE
24	AT8250	40G	100m	4.0 #	100m%	§J	NGA	FST	1.0Ø	4.0G	3.0#	20m#	120Ø	20 *	.78	.126	.38	-97	4G	3.0#	20m#	W26	DE
25	NE69406	40G	1.0			§S	GA	J	2.5	8.0G	7.0*	10m%	11*									M1001	
26	MGF2116	40G	3	-9 #	550 #	$S	NGA	FST		12G	7#	200m#	7	.4	.667	-.4	.532	98	14G	7#	200m#	W227	
27	AT10650-1	45G	200u	4 #	50u%	§J	NGA	FST	2.5Ø	12G	3.0#	10m	8.0Ø	50m	.67	103	.50	142	12G	3#	10m#	W26g	
28	AT10650-3	45G	200u	4 #	50u%	§J	NGA	FST	2.5Ø	12G	3.0#	10m	8.0Ø	50m	.67	103	.50	142	12G	3#	10m#	W26g	
29	AT10650-5	45G	200u	4 #	50u%	§J	NGA	FST	2.8Ø	12G	3.0#	10u#	8.0Ø	65m*	.70	108	.65	179	12G	3#	10m#	W26g	
30	MGFC1801	45G	1.0m	-6 #	250m#	$S	N	FGA					9.0	200m	.891	175	.422	-131	12G	6.0#	100m#	u68	
31	MGF1200	45G	300m	-6 #	100m#	$S	NGA	ST	2.2†	4.0G	3.0#	10m#	14*		-0.6	-73	-2.6	-43	4.0G	3.0#	10m#	W218	DE
32	NE46385	45G	500m			§S	GA	J	3.0	8.0G	4.0*	10m%	14*									M1002	
33	MGF1801	45G	1.0	6.0 #	250m#	$	NGA	FST	3.2	8.0G	5.0#	30m#	9.0♦	200m*	.815	-88	.492	-52	2.0G	6.0#	100m#	W26a	DE
34	MGF1400	50G	300m	6.0 #	100m#	$	NGA	FST	2.0	4.0G	3.0#	10m#	15*		.966	-46	.676	-40	2.0G	3.0#	10m#	W26a	DE
35	MGF1202	55G	300m	-6 #	100m#	$S	NGA	FST	1.4	4G	3#	10m#	11		.737	-150	.627	-83	8G	3#	10m#	W218	DE
36	NE24483	55G	300m			§S	GA	J	2.0†	8.0G	3.0*	10m%	11*									W183	
37	NE24406	55G	500m			§S	GA	J	2.0†	8.0G	3.0#	10m%	11*									M1001	
38	DC5632	58G	2.5	25	250m	$S	NSi	BPE					7.5$	600m*								W16	F
39	NE21889	60G	300m			§S	GA	J	0.9†	4.0G	3.0#	10m%	16*										
40	MGF1402	70G	300m	6.0 #	100m#	$	NGA	FST	1.1	4.0G	3.0#	10m#	18*		.935	-47	.758	-33	2.0G	3.0#	10m#	W26a	DE
41	MGF1412	70G	300m	6.0 #	100m#	$	NGA	FST	0.8	4.0G	3.0#	10m#	18*		.835	-88	.710	-63	4.0G	3.0#	10m#	W26a	DE
42	MGFC1402	70G	300m	-6 #	100m#	$S	N	FGA	1.1%	4.0G	3.0#	10m#	18		.724	174	.325	-107	12G	3.0#	10m#	u66	
43	MGFC1412	70G	300m	-6 #	100m#	$S	N	FGA	.80	4.0G	3.0#	10m#	18		.724	174	.325	-107	12G	3.0#	10m#	u66	
44	AT8140	75G	4.5		500m#	$C	NGA	JØ					3.0	32 *	.862	-175	.448	-163	4.0G	6.0	490m	W202	
45	NE13783	80G	270m				GA	J	1.1†	8.0G	3.0#	10m%	10*									W183	
46	NE38883	80G	300m			§S	GA	J	1.7†	8.0G	3.0*	10m%	13*									W183	
47	NE38806	80G	500m			§S	GA	J	1.7†	8.0G	3.0*	10m%	13*									M1001	
48	MGF1403	90G	200m	-6 #	80m#	$	NGA	FST	1.8	12G	3.0#	10m#	19*		.861	-154	.676	-111	8.0G	3.0#	30m#	M1060	DE
49	MGFC1403	90G	200m	-6 #	80m#	$S	N	FGA	.80	4.0G	3.0#	10m#	19		.745	137	.730	-161	18G	3.0#	10m#	u67	

11. TYPES WITH U.S. MILITARY SPECIFICATIONS

IN TYPE NUMBER SEQUENCE

TYPE No.	MFRS	MIL-S-19500/
1B23	VET	21B
1B24A	OWE	609E
	VET	
1B27	VET	208F
		AMEND
		1
1B35A	OWE	22H
	VET	AMEND
		1
1B37A	OWE	22H
	VET	AMEND
		1
1B54	VET	25D
1B58A	MIC	970D
	VET	
1B63A	MIC	26C
	OWE	
	VET	
2J30	none	1676A
2J31	none	1676A
2J32	none	1676A
2J33	none	1676A
2J34	none	1676A
2J42	LIT	667G
	TOSJ	
2J42H	LIT	1002E
2J49	none	945D
2J50	none	945D
2J51A	none	846J
2J55	none	297C
		AMEND
		1
2K22	none	1638A
		Ø
2K25	none	982B
2K28	none	496C
		AMEND
		1
2K41	none	730B
2K45	none	732D
2K48	BTC	374D
		Ø
		AMEND
		1
4J38	none	766C
4J52A	LIT	800E
		AMEND
		1
4J57	none	40D
		AMEND
		1
4J58	none	40D
		AMEND
		1
4J59	none	40D
		AMEND
		1
5J26	APX	205G
		AMEND
		1
6BL6	LIT	745G
6BM6	LIT	744G
6BM6A	LIT	746G
		Ø
417C	VAR	1537B
721B	VET	1432A
726B	none	500B
726C	none	981C
5586	APX	770C
5657	APX	770C
5721	BTC	135D
5780	LIT	851G
5795	none	1522C
		AMEND
		1
5836	none	601D
5837#1	none	602D
		Ø
5837#2	none	602D
		Ø
5837#3	none	602D
		Ø
5837#4	none	602D
		Ø
5863	MIC	298E
	OWE	
	VET	
5864	OWE	22H
	VET	AMEND
		1
5865	MIC	368E
	VET	
5921	OWE	607B
	VET	
5922	OWE	607B
	VET	
5927	OWE	299E
	VET	
5981	none	936C
6002	none	373C
		AMEND
		1
6024	VET	796B
		NAVY
6081	OWE	384B
	VET	AMEND
		1
6115A	none	845D
6133	none	200C
		Ø
6162	OWE	22H
	VET	AMEND
		1
6177A	none	666F
6236	BTC	264F
6310	OWE	605D
	VARC	
	VET	
6312	VARC	669D
	VET	
6315	none	553B
		USAF
6322	OWE	370E
	VET	AMEND
		1
6344A	LIT	383C
		NAVY
6378	OWE	964C
	VET	
6390	BTC	840E
		Ø
6402	none	805A
		NAVY
6410A	none	665D
6460	VAR	923C
6510	LIT	835B
6543	LIT	849E
		AMEND
		1
6560	MIC	837D
	OWE	
	VET	
6584	OWE	1338B
		AMEND
		3
		NAVY
6781	OWE	1180C
	VET	Ø
6975	BTC	1081D
	EEVB	
	VARC	
	VET	
6995	none	901
		AMEND
		B
7111	LIT	1243A
7156A	LIT	1570C
		NAVY
7256	none	1618A
7381	MIC	1254C
	OWE	
	VET	
7417	OWE	1588
		NAVY
7460	LIT	1600
		NAVY
7471	VAR	1283A
		Ø
7529	none	1036D
7640	none	1405C
7829A	VAR	1622A
		AMEND
		1
		USAF
8129D	none	1742
		AMEND
		1
		NAVY
8315	none	1290D
		Ø
		AMEND
		2
		NAVY
8316	VAR	1288E
8362	none	1653A
		Ø
		NAVY
8364	none	1654A
		Ø
		NAVY
8405	VAR	1292D
		AMEND
		1
		NAVY
8406	none	1650A
		NAVY
8467	VAR	1571B
		Ø
8493	ITT	1112E
		AMEND
		2
8682	VET	1624A
		NAVY
8742	none	1712A
8798	APX	168A
		USAF
8821	VAR	1668A
		AMEND
		1
8827	VET	1664
		NAVY
8849	none	1668A
		AMEND
		1
8855	LIT	1640B
	VET	
8880	none	1694A
		USAF
8881	none	1695A
		USAF
8882	none	1696A
		USAF
8939	VET	1738B
8979	VAR	1762
8982	VET	1769
		AMEND
		1
		NAVY
DOD001	none	1687
DOD002	none	485E
DOD003	VET	1697A
DOD004	VET	1701B
DOD005	VET	1703
		AMEND
		1
DOD031	VET	1753
		NAVY
DOD032	VET	1754
		NAVY
DOD033	VET	1755
		NAVY
DOD039	ITT	1712B
	VAR	
M5058A	none	1531A
		NAVY
VA220B	VAR	1631A
		Ø

TYPE No.	MFRS	MIL-S-19500/
1N21WE,WEM,WEMR		232B
	ALP	AMEND
	MIC	2
	PII	
1N21WG,WGM,WGMR		321A
	ALP	AMEND
	MIC	3
	PII	
1N23WE,WEM,WEMR		322B
	ALP	AMEND
	MIC	2
	PII	
1N23WG,WGM,WGMR		322B
	ALP	AMEND
	MIC	2
	PII	
1N25	none	234A
1N25WA	ALP	183A
		AMEND
		2
1N26B,BM,BMR,BR		128A
	ALP	
	MIC	
1N31	none	236A
1N32	none	237A
		AMEND
		2
1N53	none	238A
1N53B,BM,BMR,BR		186B
	ALP	
	MIC	
1N78C,CM,CMR,CR		130C
	ALP	
	MIC	
1N78F,FM,FMR,FR		130C
	ALP	
	MIC	
1N263	MIC	191A
		AMEND
		1
1N358A,AM,AMR,AR		339
	ALP	
1N831A	MIC	352
		AMEND
		1
		EL
1N832B	Δnone	353A
		USAF
1N1132,R	ALP	362
1N1838	MIC	364
		AMEND
		2
1N3655A,AM,AMR		334A
	ALP	AMEND
	MIC	1
	PII	
1N3713	GESY	269
		AMEND
		1
		NAVY
1N3715	GESY	269
		AMEND
		1
		NAVY
1N3717	GESY	269
		AMEND
		1
		NAVY
1N3719	GESY	269
		AMEND
		1
		NAVY
1N3721	GESY	269
		AMEND
		1
		NAVY
1N4801A	Δnone	329B
		AMEND
		1
		USAF
1N4801B	Δnone	329B
		Ø
		AMEND
		1
		USAF
1N4802A	Δnone	329B
		AMEND
		1
		USAF
1N4802B	Δnone	329B
		Ø
		AMEND
		1
		USAF
1N4803A	Δnone	329B
		AMEND
		1
		USAF
1N4803B	Δnone	329B
		Ø
		AMEND
		1
		USAF
1N4804A	Δnone	329B
		AMEND
		1
		USAF
1N4804B	Δnone	329B
		Ø
		AMEND
		1
		USAF
1N4805A	Δnone	329B
		AMEND
		1
		USAF
1N4805B	Δnone	329B
		Ø
		AMEND
		1
		USAF
1N4806A	Δnone	329B
		AMEND
		1
		USAF
1N4806B	Δnone	329B
		Ø
		AMEND
		1
		USAF
1N4807A	Δnone	329B
		AMEND
		1
		USAF
1N4807B	Δnone	329B
		Ø
		AMEND
		1
		USAF
1N4808A	Δnone	329B
		AMEND
		1
		USAF
1N4808B	Δnone	329B
		Ø
		AMEND
		1
		USAF
1N4809A	Δnone	329B
		AMEND
		1
		USAF
1N4809B	Δnone	329B
		Ø
		AMEND
		1
		USAF
1N4810A	Δnone	329B
		AMEND
		1
		USAF
1N4810B	Δnone	329B
		Ø
		AMEND
		1
		USAF
1N4811A	Δnone	329B
		AMEND
		1
		USAF
1N4811B	Δnone	329B
		Ø
		AMEND
		1
		USAF
1N4812A	Δnone	329B
		AMEND
		1
		USAF
1N4812B	Δnone	329B
		Ø
		AMEND
		1
		USAF
1N4813A	Δnone	329B
		AMEND
		1
		USAF
1N4813B	Δnone	329B
		Ø
		AMEND
		1
		USAF
1N4814A	Δnone	329B
		AMEND
		1
		USAF
1N4814B	Δnone	329B
		Ø
		AMEND
		1
		USAF
1N4815A	Δnone	329B
		AMEND
		1
		USAF
1N4815B	Δnone	329B
		Ø
		AMEND
		1
		USAF
1N5139A	ΔCODI	383
	ΔTCY	Ø
		AMEND
		4
		NAVY
1N5140A	ΔCODI	383
	ΔTCY	Ø
		AMEND
		4
		NAVY

† - Qualification included TX Devices
Δ - TX and TXV Devices

§ - NATO
☑ - USAF Preferred (TX Type Only)
Ø - Mil-Std-701 Device

11. TYPES WITH U.S. MILITARY SPECIFICATIONS

IN TYPE NUMBER SEQUENCE

TYPE No.	MFRS	MIL-S-19500/	TYPE No.	MFRS	MIL-S-19500/	TYPE No.	MFRS	MIL-S-19500/	TYPE No.	MFRS	MIL-S-19500/	TYPE No.	MFRS	MIL-S-19500/
1N5141A	ΔCODI ΔTCY	383 Ø AMEND 4 NAVY	1N5469B	†TCY	436 Ø AMEND 4 USAF									
1N5142A	ΔCODI ΔTCY	383 Ø AMEND 4 NAVY	1N5469C	†TCY	436 AMEND 4 USAF									
1N5143A	ΔCODI ΔTCY	383 Ø AMEND 4 NAVY	1N5470B	†TCY	436 Ø AMEND 4 USAF									
1N5144A	ΔCODI ΔTCY	383 Ø AMEND 4 NAVY	1N5470C	†TCY	436 AMEND 4 USAF									
1N5145A	ΔCODI ΔTCY	383 Ø AMEND 4 NAVY	1N5471B	†TCY	436 Ø AMEND 4 USAF									
1N5146A	ΔCODI ΔTCY	383 Ø AMEND 4 NAVY	1N5471C	†TCY	436 AMEND 4 USAF									
1N5147A	ΔCODI ΔTCY	383 Ø AMEND 4 NAVY	1N5472B	†TCY	436 Ø AMEND 4 USAF									
1N5148A	ΔCODI ΔTCY	383 Ø AMEND 4 NAVY	1N5472C	†TCY	436 AMEND 4 USAF									
1N5461B	†TCY	436 Ø AMEND 4 USAF	1N5473B	†TCY	436 Ø AMEND 4 USAF									
1N5461C	†TCY	436 AMEND 4 USAF	1N5473C	†TCY	436 AMEND 4 USAF									
1N5462B	†TCY	436 Ø AMEND 4 USAF	1N5474B	†TCY	436 Ø AMEND 4 USAF									
1N5462C	†TCY	436 AMEND 4 USAF	1N5474C	†TCY	436 AMEND 4 USAF									
1N5463B	†TCY	436 Ø AMEND 4 USAF	1N5475B	†TCY	436 Ø AMEND 4 USAF									
1N5463C	†TCY	436 AMEND 4 USAF	1N5475C	†TCY	436 AMEND 4 USAF									
1N5464B	†TCY	436 Ø AMEND 4 USAF	1N5476B	†TCY	436 Ø AMEND 4 USAF									
1N5464C	†TCY	436 AMEND 4 USAF	1N5476C	†TCY	436 AMEND 4 USAF									
1N5465B	†TCY	436 Ø AMEND 4 USAF	1N5711	Δnone HPA MIC TRWM	444 AMEND 5 USAF									
1N5465C	†TCY	436 AMEND 4 USAF	1N5712	Δnone HPA MIC TRWM	445 AMEND 5 USAF									
1N5466B	†TCY	436 Ø AMEND 4 USAF	1N5719	†none HPA TRWM	443 AMEND 2 USAF									
1N5466C	†TCY	436 AMEND 4 USAF	1N5764,M,MR 2N5470	none Δnone	460 482 AMEND 2 USAF									
1N5467B	†TCY	436 Ø AMEND 4 USAF	2N6603	Δnone	522 AMEND 4 EL									
1N5467C	†TCY	436 AMEND 4 USAF	2N6604	Δnone	522									
1N5468B	†TCY	436 Ø AMEND 4 USAF												
1N5468C	†TCY	436 AMEND 4 USAF												

† - Qualification included TX Devices
Δ - TX and TXV Devices
§ - NATO
☑ - USAF Preferred (TX Type Only)
Ø - Mil-Std-701 Device

MILITARY DOCUMENTS

Department of Defense Index of Specifications and Standards. Device Manufacturers Qualifications on Test Reference Letter.

MICROWAVE

MIL-E-1H—Military Specifications Electron Tube, General Specifications for, dated 9 May 1974, Supplement 6, dated 12 October 1979.

MIL-STD-200K—Military Standard, Electron Tube, Selection and Use of, dated 13 September 1974, Notice 1, dated 7 November 1977.

QPL-1-81 Qualified Products List of Products, Qualified under Military Specification, MIL-E-1, dated 18 April 1980.

SEMICONDUCTOR

MIL-S-19500F Military Specification, General Specifications for Semiconductor Devices, dated 15 December 1977, Amendment 2 dated 9 June 1980.

MIL-STD-701K Military Standard, List of Standard Semiconductor Devices, dated 19 June 1980.

QPL-19500-78 Qualified Products List of Products Qualified under Military Specification MIL-S-19500, dated 18 August 1980.

12. OUTLINE DRAWINGS

THE PREFIX LETTERS OF THE OUTLINE DRAWING NUMBERS INDICATE THE FOLLOWING:

- A — AXIAL LEAD Type
- C — CASE Type
- DO— JEDEC Type
- F — FUSE Type
- M — MISCELLANEOUS Type
- P — PLUG-IN Type
- S — SCREW BASE Type
- TO— JEDEC Type
- u — MICROMINIATURE (CHIP) Type
- V — MULTIPLE VARIATION Type
- W — BEAM LEAD
- Z — DRAWING REFERENCE INFORMATION

NOTES:

These outline drawings are intended as a guide for the user. They should not be used for construction purposes without first checking with the appropriate manufacturer.

These drawings are referenced in the Technical Sections of this D.A.T.A.BOOK in accordance with information supplied by the manufacturers.

The DO and TO drawings have been reproduced from JEDEC Registration Data Files with the permission of the National Electrical Manufacturer's Association — Electronic Industries Association. JEDEC designations are assigned only to outlines submitted by the JC-11 Committee on Mechanical Standardization. The procedure of assigning and announcing the JEDEC designation constitutes registration.

The DO200 and TO200 Series (DO200, TO200 and higher) are JEDEC-registered outlines, and are referenced in the technical sections with the prefices DO and TO replaced by E and Y, respectively. Suffices such as AA, AB or MA, MB following the DO and TO Series number indicate dimensional variations of the basic outline. For commercial outlines, the suffices start with AA replaced by a; for military outlines, the suffices start with MA replaced by a. JEDEC type numbers which have letter S suffices indicate a device that is manufactured with leads shorter than specified in the registered data of the device, but not shorter than 12.7 mm (.5 inch). The suffix letter S need not be marked on individual devices.

All dimensions are in inches except where noted.

A1

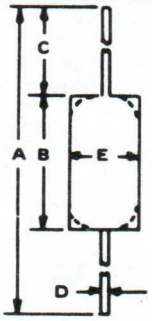

MAY SHOW COLOR BANDS TO DENOTE POLARITY.

	A	B	C	D	E	CHAMFERED EDGES
Al		.300 MAX	1.00 MIN	.018 .022	.125 .150	NO
Aln		.150 .170	1.08 MIN	.022	.106	YES
Als		.157 MAX	.196 MIN	.020 MAX	.047 MAX	NO
Alac		.165 MAX	1.00 MIN	.015	.075 MAX	YES
Alad		.165	1.00 1.50	.016	.075	YES
Alag		.170 MAX	1.00 MIN	.014 .016	.070 MAX	YES
Alah		.170 MAX	1.00 MIN	.016 MAX	.076 MAX	YES
Alak		.175 MAX	1.00 MIN	.015	.075 MAX	NO
Alam		.175 MAX	1.00	.016	.075	NO
Alar		.180 MAX	1.00 MIN	.016	.078 MAX	YES
Alat		.185 MAX	1.00 MIN	.020	.075 MAX	NO
Alau		.190 MAX	1.00 MIN	.015	.073 MAX	YES
Alba	18.0 MIN	4.3 MAX	– –	0.71 MAX	2.2 MAX	NO
Albb	54.3 MIN	4.3 MAX	– –	0.71 MAX	2.2 MAX	NO
Albw		.260	1.00 MIN	.020	.118	YES
Alcy		.300 MAX	1.00 MIN	.020	.104 MAX	YES
Alda		.300 MAX	1.00	.021	.105	NO
Aldd		230 .300	1.00 1.50	.018 .022	.092 .130	NO
Alfz		.500	1.00 MIN	.200	.325	NO
Alnj		.720 .780	1.00 MIN	.030	.240 .260	NO
Alsk	3.30	.300	1.50	.020	.130	NO
Alst	2.30	.300 MAX	1.00 MIN	.019 .021	.092 .104	YES
Altc		.140 .250	1.00 1.50	.027 .033	.065 .150	NO
Altg		.150 .175	1.00 MIN	.014 .016	.065 .075	NO
Alth		.150 .170	1.00 MIN	.014 .016	.068 .076	NO
Aluc	.270 .310	.150 .170	.060 .070	.035 .037	.068 .076	YES
Aluu		.100 .170	.975 1.50	.014 .016	.045 .076	YES
Alvd	2.18	.185 MAX	1.00 MIN	.014 .016	.070 MAX	YES
Alzw	2.00 2.50	.135 .165	1.000 1.250	.017 .023	.050 .070	YES
Alzx Alzy	2.00 2.50 1.06	.200 .240 .287	1.000 1.250 .393	.027 .033 .002	.085 .105 .102	YES

A2

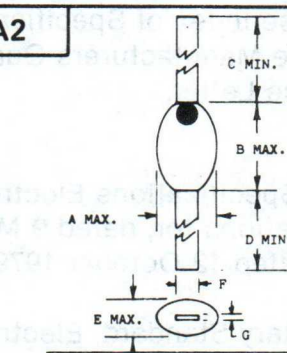

	A	B	C	D	E	F	G
A2d	.060	.150	.500	.500		.045	.005
A2g	.050	.100	.500	.500		.018	.004
A2s	.065	.125				.045	.005
A2u	.070	.150	.500	.500		.047	.005
A2x	.325	.425	.500	.500		.080	.004

A3ag

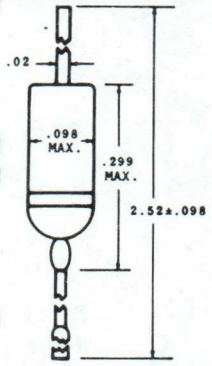

	A	B	C	D	E	F	G
A3ag		.071 .087	.300 MIN		.022 .028	.150 .170	

A24

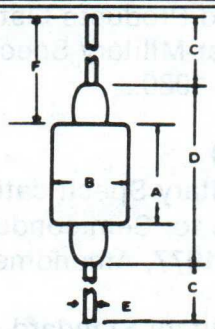

	A	B	C	L	E	F
A24	.354	.197	1.30	.690		
A24a		.256	1.00	.690		
A24b	.134	.083	1.00	.276	.020	
A24c		.106	.078	.377	.019	
A24d	.177	.073 MAX			.022 MAX	.945 MIN

A31

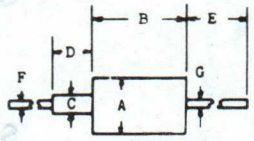

INSULATED SLEEVE — CHAMFERED EDGES

	A	B	C	D	E	F	G
A31e	.105 MAX	.300 MAX	.040		1.00 MIN	.018 .022	.018 .022

INSULATED SLEEVE	CHAMFERED EDGES
NO	YES

A32

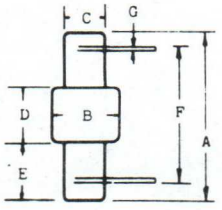

	A	B	C	D	E	F	G
A32	.260	.105	.060	.080			
A32a	.238	.087	.060	.080			
A32b	.540	.142	.093	.170	.185		
A32c	.560	.240	.130	.360	.100	.500	.020
A32d	.500	.240	.130	.300	.200	.420	.020

A60

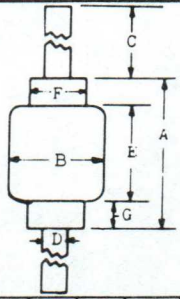

	A	B	C	D	E	F	G
A60j	.180 MAX	.085 MAX	1.00 MIN	.031	.165 MAX		
A60k	.180 MAX	.100 MAX	1.00 MIN	.059	.165 MAX		
A60m	.196 MAX	.086 MAX	1.37 TYP	.019			
A60p	.300 MAX	.125 MAX	1.25 MIN	.020			

12. OUTLINE DRAWINGS

A82

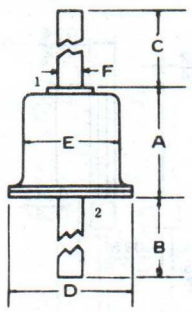

	A	B	C	D	E	F	1	2
A82	.100 MAX		1.00 MIN	.110 MAX	.085 MAX	.019 .022	A	C
A82a	.100 MAX		1.00 MIN	.110 MAX	.085 MAX	.019 .022	C	A
A82f	.080	1.25	1.25	.100	.075	.020		

A83

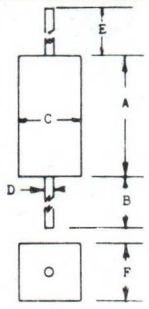

	A	B	C	D	E	F
A83cj	.325 MAX	1.00 MIN		.028 .032	1.00 MIN	.255 MAX
A83ck	.500 MAX	1.00 MIN	.500 MAX	.028 .032	1.00 MIN	.255 MAX
A83cm	.325 MAX	1.00 MIN	.325 MAX	.028 .032	1.00 MIN	

A90

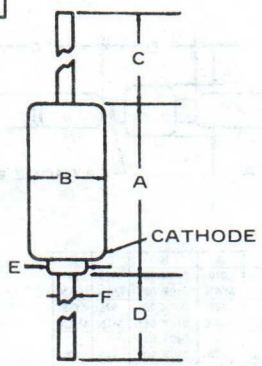

	A	B	C	D	E	F
A90	.300 MAX	.105 MAX	1.00 MIN	1.00 MIN	.040	.018 .022
A90a	.230 .300	.085 .105	1.00 MIN	1.00 MIN		.019 .021

A109

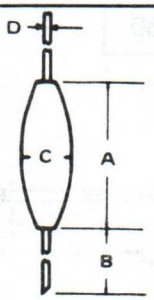

	A	B	C	D
A109	.130	.500	.055	.020x.004
A109a	.100	.500	.050	.020x.004
A109b	.100		.085	
A109c	.165 MAX	1.29 MAX	.110 MAX	
A109d	.080		.065	.014
A109e	.188 MAX	.100 .125	.177 MAX	
A109f	.271 MAX	.100 .125	.267 MAX	
A109g	.085	.500 MIN	.065	

A146

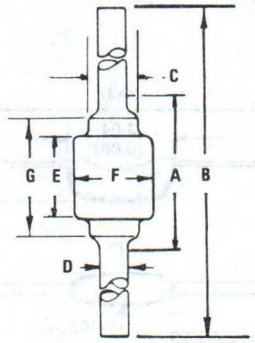

	A	B	C	D	E	F	G
A146		1.562 1.688		.026 .030	.080 .110	.080 .110	.125 .161
A146a			.035	.020	.080	.070	
A146b			.055	.028	.085	.085	
A146c			.115	.040	.050	.145	
A146d		1.63		.028		.075	
A146e		2.03		.040		.120	
A146f	.250 MAX	1.68	.055	.028	.085	.085	
A146g	.250	2.25	.035	.020	.070	.080	
A146h	.260	2.30				.104	.160
A146j	.275	1.62		.028	.085	.085	
A146k	.300	2.30		.039 .041		.134 .136	
A146m	.350 MAX	2.300 MIN	.115 TYP	.039 .041	.100 TYP	.145 MAX	.175 TYP
A146n	.280	2.28		.039 .041			
A146p	.350 MAX	2.30 MIN		.039 .041	.100 .140	.100 .140	.150 .200
A146q	.236	2.41	.059	.043 MAX	.118 MAX	.112 MAX	
A146r	.250 MAX	1.625 1.675		.027 .029	.065 .085	.065 .085	
A146s	.170 MAX	2.122 MIN		.014 .021	.076 MAX	.076 MAX	
A146t	.300 MAX	2.300 2.400		.040	.115 .140	.115 .140	
A146u	.200 .275	1.62 MIN		.027 .031	.085 TYP	.085 MAX	

A196

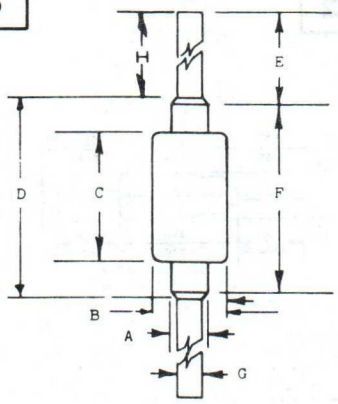

	A	B	C	D	E	F	G	H
A196	.040	.072	.090		.800 MIN	.160 MAX	.030* .002	
A196a	.055	.100	.100		.800 MIN	.160 MAX	.030* .002	
A196b		.105 MAX		.300 MAX	1.00 MIN	.265 MAX	.021 MAX	
A196c	.040	.085 MAX	.100 MAX		1.0 MIN	.160 MAX	.020	
A196d	.038 .042	.060 .090	.130 MAX	.225 .260	1.0 MIN	.125 .160	.028 .032	
A196e		.100 MAX	.085		1.0 MIN	1.60 MAX	.028 .032	
A196f		.150		.280 MIN			.040	1.00 MIN
A196g	.040 MAX	.070 MAX		.250 MAX			.019 .021	.975 MIN
A196h	.055 MAX	.090 MAX		.250 MAX			.027 .029	.975 MIN
A196j	.055	.085	.085 MAX	.250 MAX		.155	.027 .029	.700 MIN
A196k	.115	.145 MAX	.105	.300 MAX		.175	.039 .041	.975 MIN
A196m	.062 MAX	.118 MAX	.181	.224 MAX			.041 MAX	1.10 MIN
A196n		.090		.200 MAX			.014 .021	.975 MIN
A196p	.040 MAX	.070 MAX		.155 MAX	.975 MIN		.019 .021	.975 MIN

A246

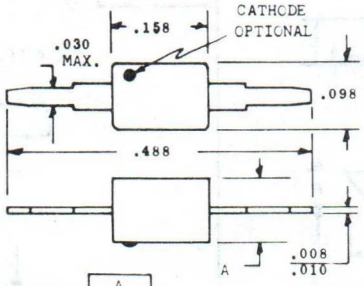

	A
A246	.094
A246a	.080

12. OUTLINE DRAWINGS

A276

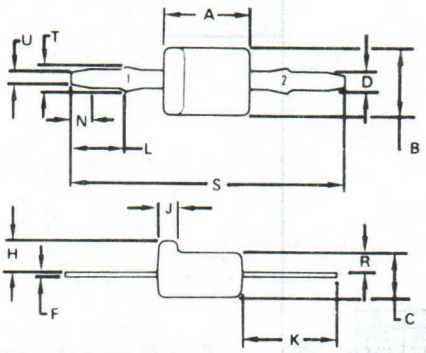

	A	B	C	D	F	H	J	K	L	N	R	S	T	U
A276	.152 / .162	.115 / .125	.075 / .085	.025 / .035	.003 / .007	.051 / .061	.025 / .035	.160 / .170	.093 / .103	.044 / .054	.031 / .041	.472 / .502	.045 / .055	.017 / .027
A276a	.152 / .162	.115 / .125	.075 / .085	.025 / .035	.006 / .010	.051 / .061	.025 / .034		.093 / .103	.044 / .054	.031 / .041	.483 / .493	.045 / .055	.017 / .027

A278

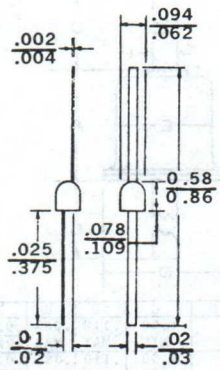

A285

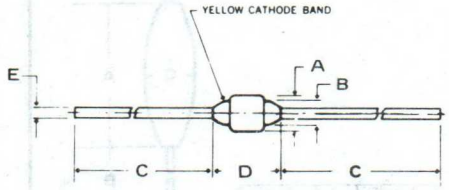

	A	B	C	D	E
A285	.130	.092	.975	.250	.040
A285a	.070	.040	.975	.200	.040
A285b	.090	.055	.975	.250	.028

A286

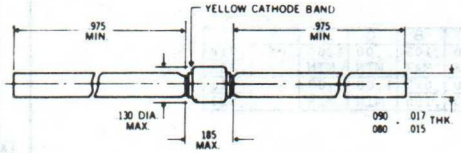

A287

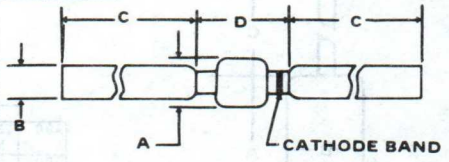

	A	B	C	D
A287	.070 MAX	.040X.007 / .050X.009	.975 MIN	.155 MAX
A287a	.090 MAX	.060X.009 / .070X.011	.975 MIN	.155 MAX
A287b	.070	.040X.007 / .050X.009	.975	.200
A287c	.090	.060X.009 / .070X.011	.975	.250

A298

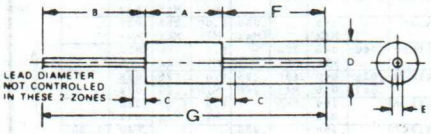

	A	B	C	D	E	F	G
A298t	.120 MAX	1.00	NA	.070	.014 / .016		

A302

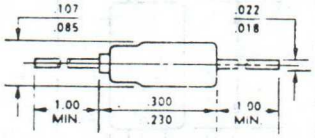

A316

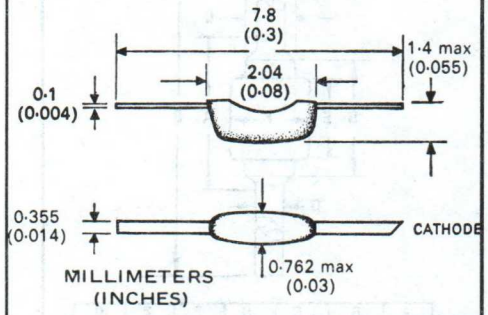

A317

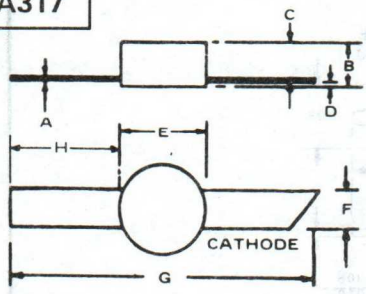

	A	B	C	D	E	F	G	H
A317	.004	.050		.008	.100	.037	.354	
A317a	.004	.050		.008	.100	.037	.177	
A317b	.003 / .004	.048 / .052		.007 / .009	.098 / .102	.013 / .017	.180 / .350	
A317c	.002	.079	.059		.149	.020	.307	.079

A320

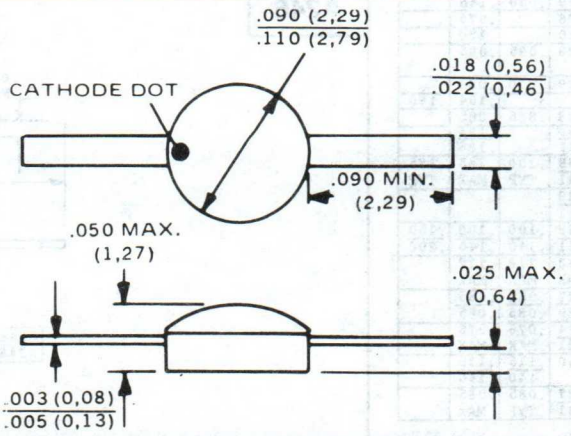

12. OUTLINE DRAWINGS

A324

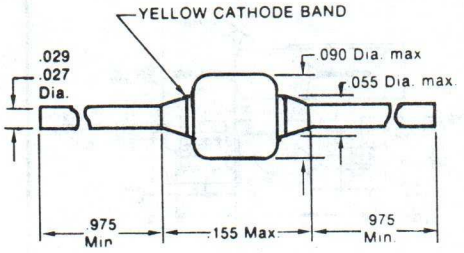

A325

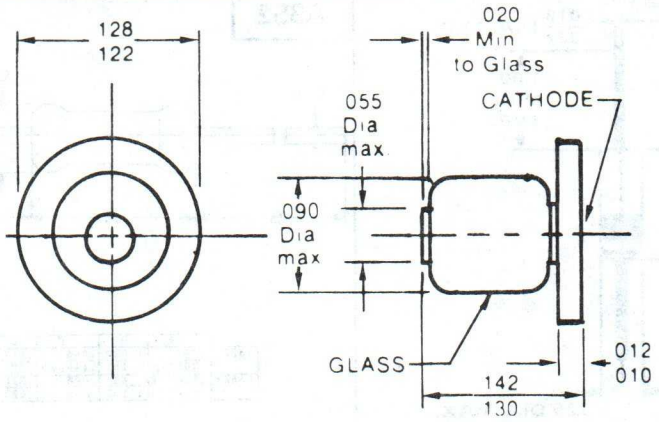

A329

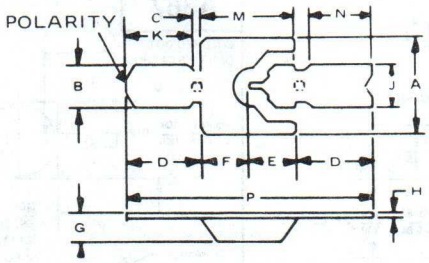

	A	B	C	D	E	F	G	H	J	K	M	N	P	POLARITY
A329	.007 .009						.003 .004	.0003 .0005	.004 .005	.007 .008	.008 .010	.007 .008	.026 .028	Cathode
A329a	.010 .012	.0045 .0055	.001	.0085 .0095	.005 .006	.005 .006	.0025 .0035	.0003 .0005					.027 .031	Cathode
A329b	.010 .012	.0045 .0055	.001	.0085 .0095	.005 .006	.005 .006	.0025 .0035	.0003 .0003					.027 .031	Anode

A332

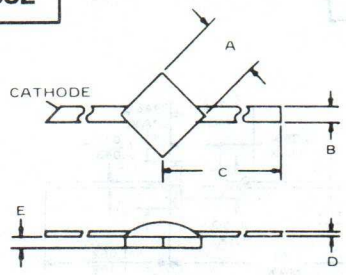

	A	B	C	D	E
A332	.045 .055	.012 .018	.150 MIN	.004 TYP	.014 MAX
A332a	.070 SQ	.012 .018	.150 MIN	.004 TYP	.014 MAX

A338

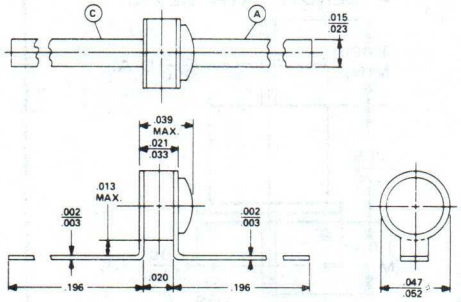

A339

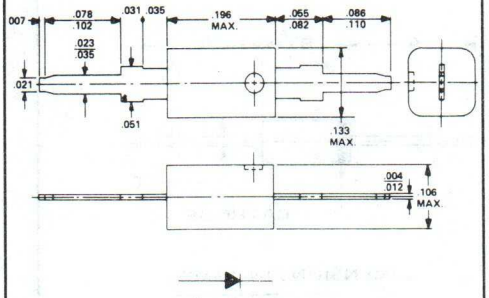

A342

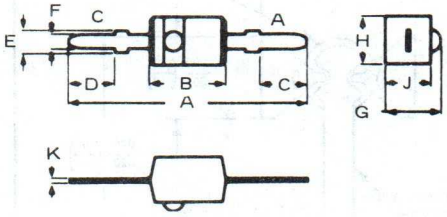

	A	B	C	D	E	F	G	H	J	K
A342	.511	.157	.102	.102	.043 MIN	.029 MAX	.114 MAX	.098	.094	.007
A342a	.492	.161	.094	.094	.047	.029	.106	.098	.094	.007

A344

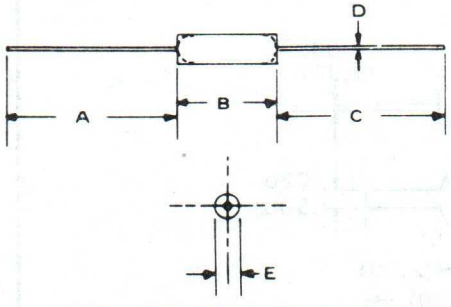

	A	B	C	D	E	REMARKS
A344n	.236 .314 TYP	.078 .110 TYP	.236 .314 TYP	.009 .013	.039 .047 TYP	Chamfered Edges

A345

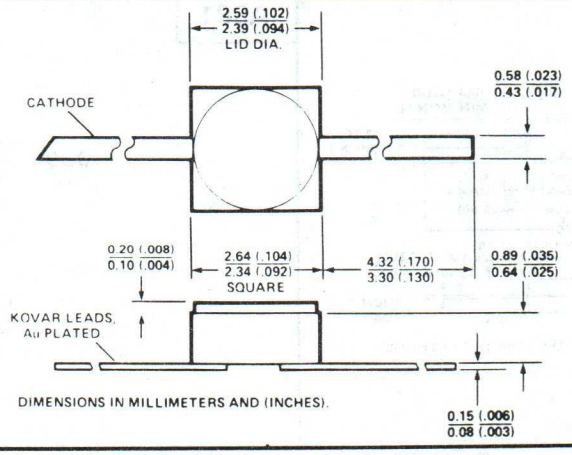

12. OUTLINE DRAWINGS

A351

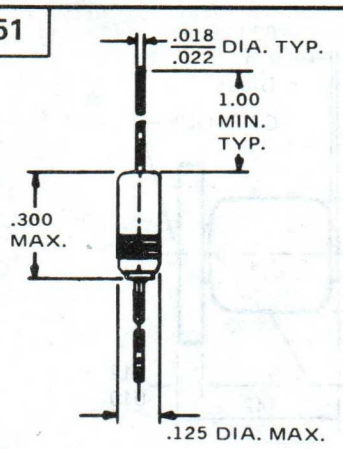

A352

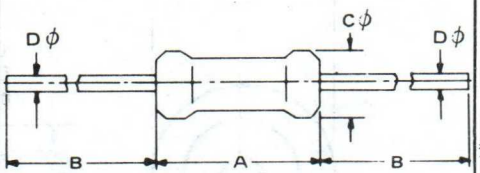

	A	B	C	D
A352	.291 .295typ	1.023 1.181	.094 .118typ	.017 .021
A352a	.196 MAX	.866 1.102	.098 MAX	.018 .023

A353

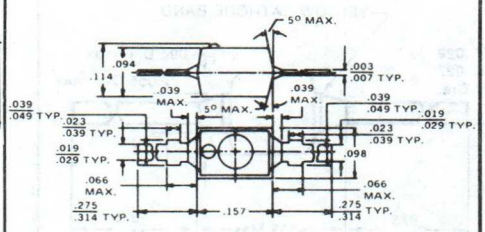

A354

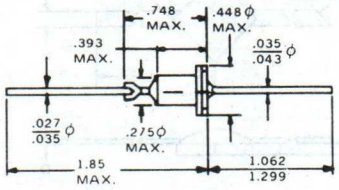

A366

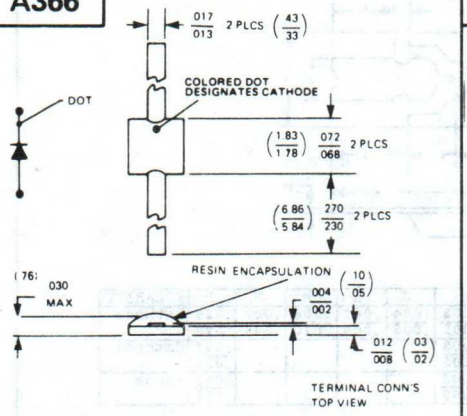

A367

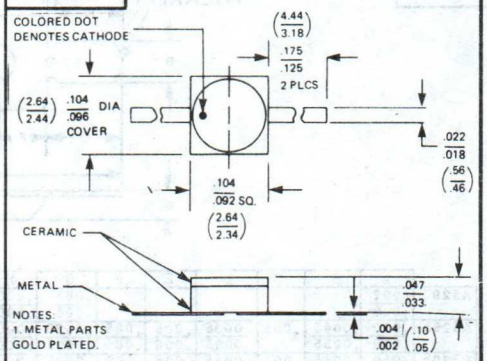

A370

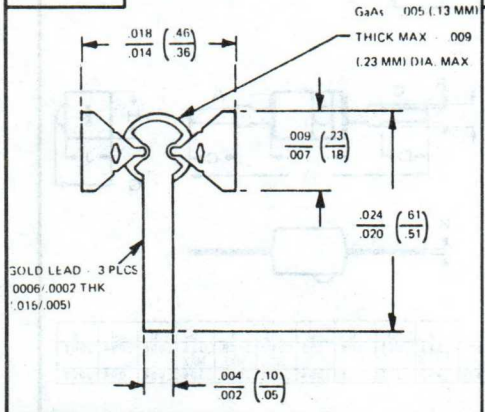

A395

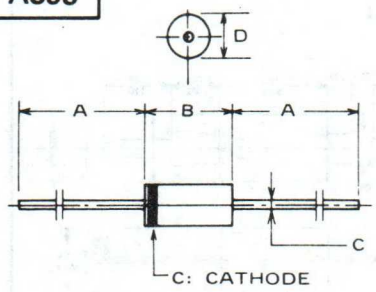

DIMENSIONS IN "MM"

	A	B	C	D
A395	28	7.0	.79	4.0
A395a	24	5.0	.60	2.7

A375

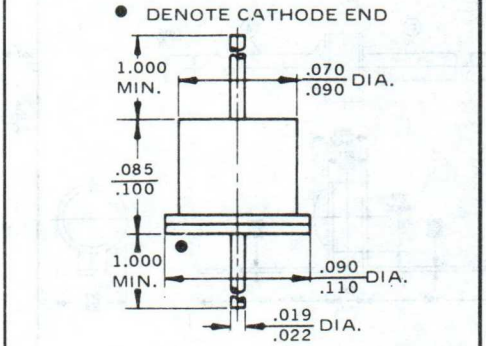

A376

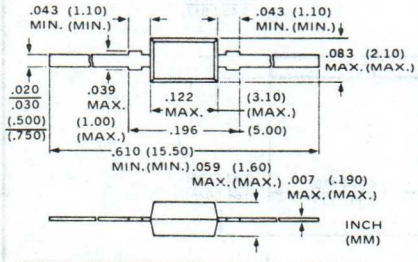

THE COLORED END INDICATES THE CATHODE

A381

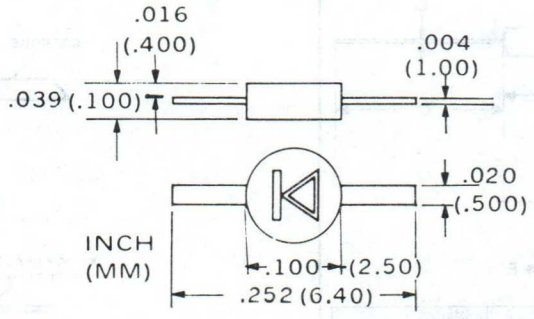

12. OUTLINE DRAWINGS

A402

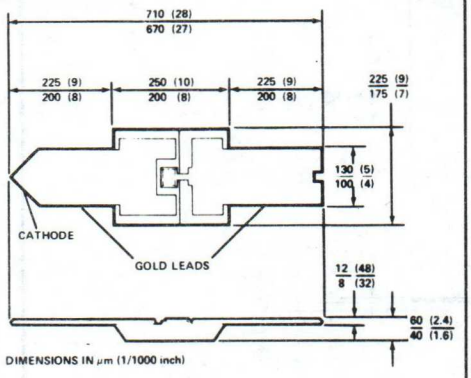

DIMENSIONS IN μm (1/1000 inch)

A412

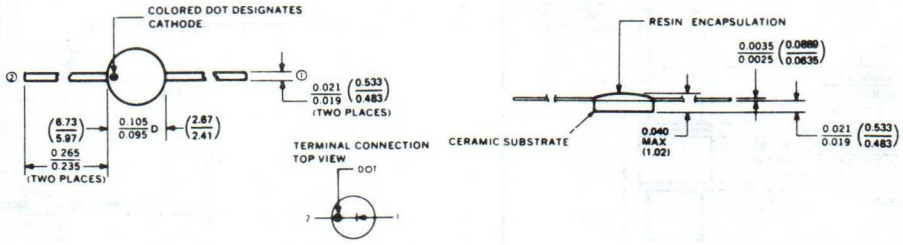

A414

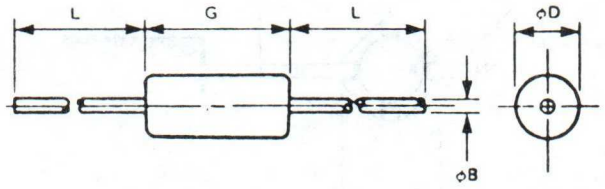

Ltr	Dimensions in inches with metric equivalents (mm) in parentheses	
	Minimum	Maximum
G	0.150 (3.81)	0.170 (4.32)
ϕD	0.068 (1.73)	0.076 (1.93)
L	1.000 (25.40)	1.500 (38.10)
ϕB	0.014 (0.36)	0.02 (0.51)

A415

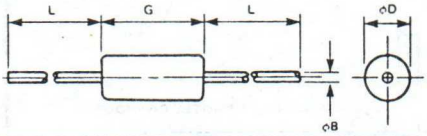

Ltr	Dimensions in inches with metric equivalents (mm) in parentheses	
	Minimum	Maximum
G	0.100 (2.54)	0.170 (4.32)
ϕD	0.045 (1.14)	0.076 (1.93)
L	0.975 (24.77)	1.500 (38.10)
ϕB	0.014 (0.36)	0.016 (0.41)

A416

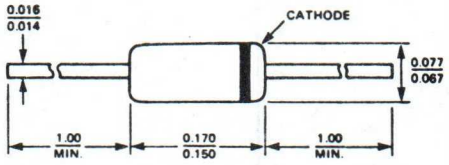

$C_p \approx 0.1$ pF
$L_p \approx 3$ nHy

(Glass axial lead—similar to D034)

A417

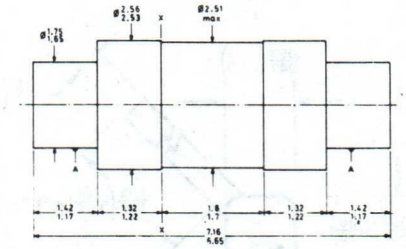

XX = reference plane
AA = concentricity tolerance = ± 0.15
All dimensions in mm

A418

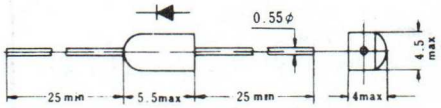

A419

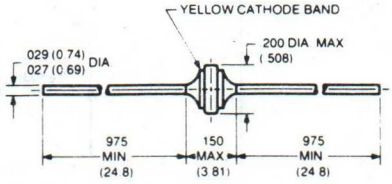

A420

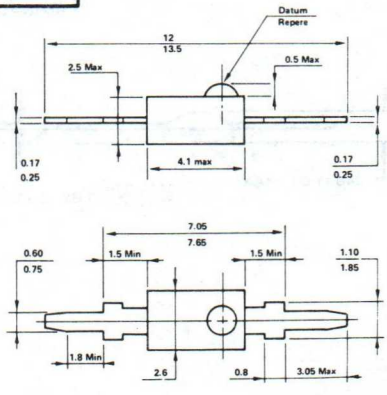

12. OUTLINE DRAWINGS

A421

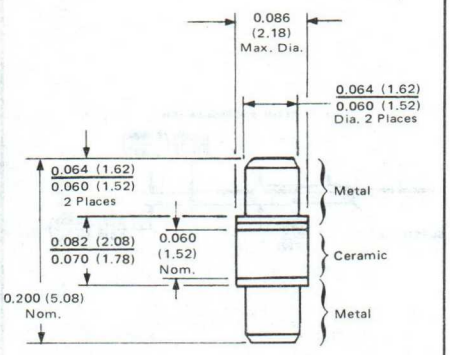

END SURFACE OF CATHODE TERMINAL COLORED

A422

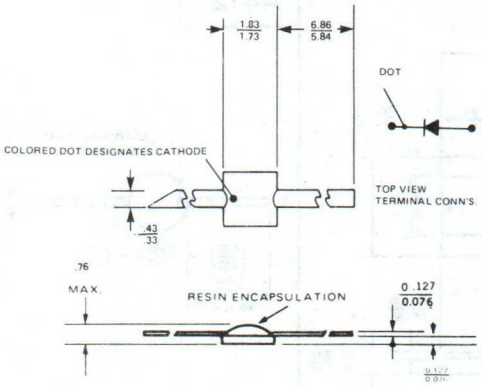

A423

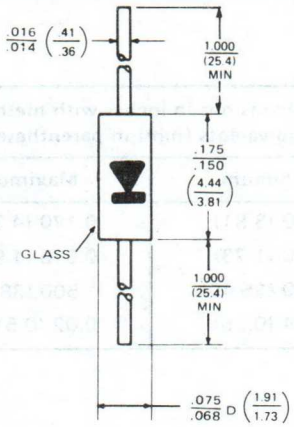

A424

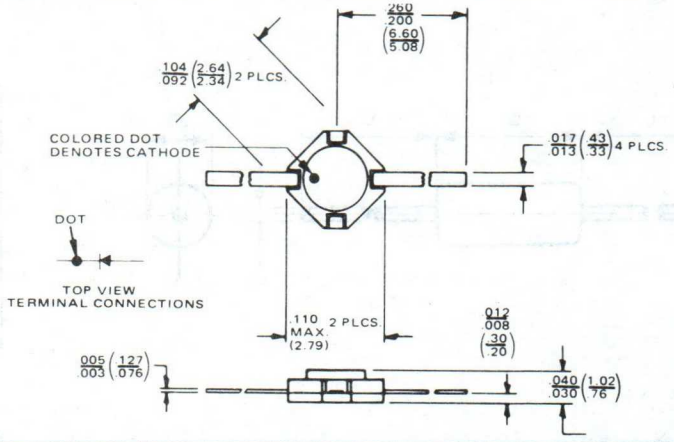

A425

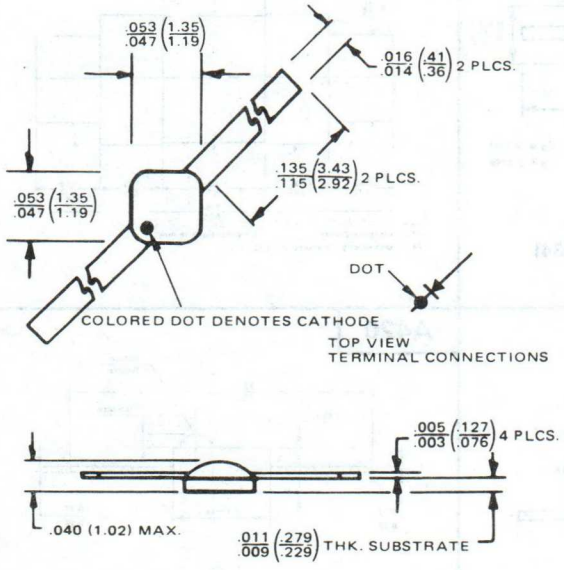

A426

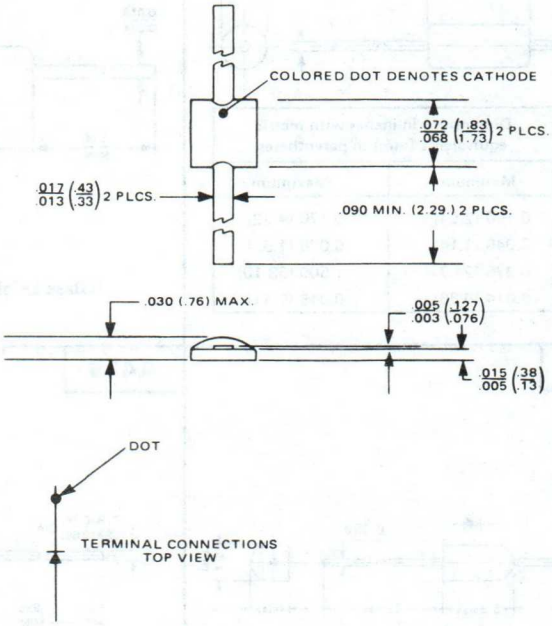

12. OUTLINE DRAWINGS

A431

EPOXY

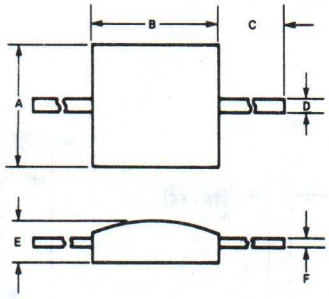

DIM.	INCHES		MILLIMETERS	
	MIN.	MAX.	MIN.	MAX.
A	—	.30	—	7,620
B	—	.30	—	7,620
C	.625	—	15,875	—
D	—	.035	—	0,889
E	—	.170	—	4,318
F	—	.02	—	0,508

A432

HERMETIC

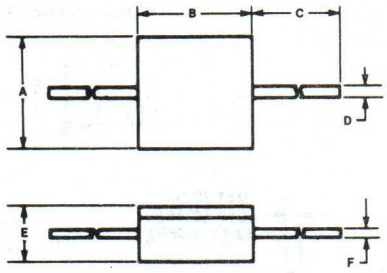

DIM.	INCHES		MILLIMETERS	
	MIN.	MAX.	MIN.	MAX.
A	—	.30	—	7,620
B	—	.30	—	7,620
C	.625	—	15,875	—
D	—	.035	—	0,889
E	—	.170	—	4,318
F	—	.02	—	0,508

A433

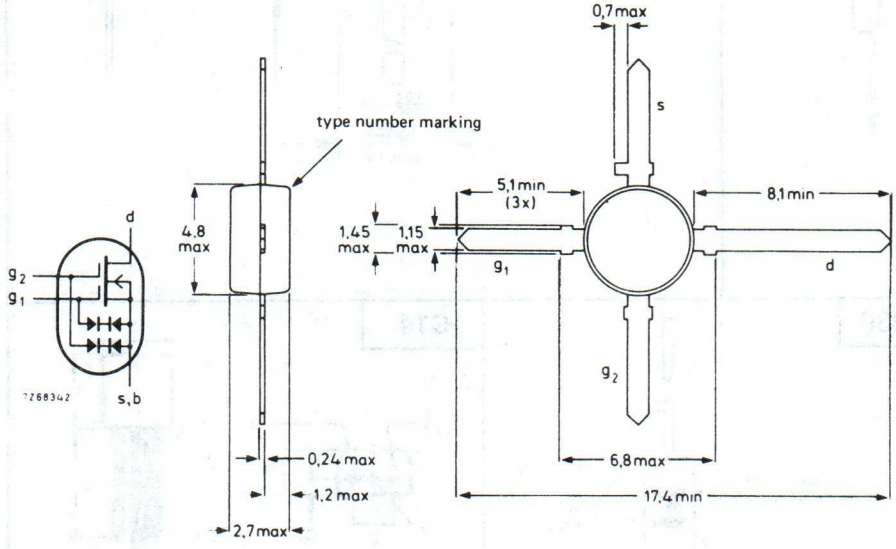

Dimensions in mm

A434

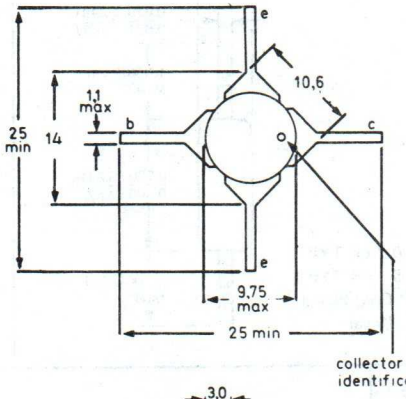

A435

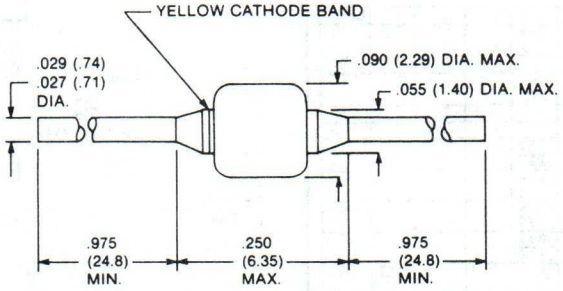

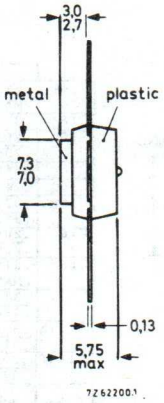

Dimensions in mm

12. OUTLINE DRAWINGS

A427

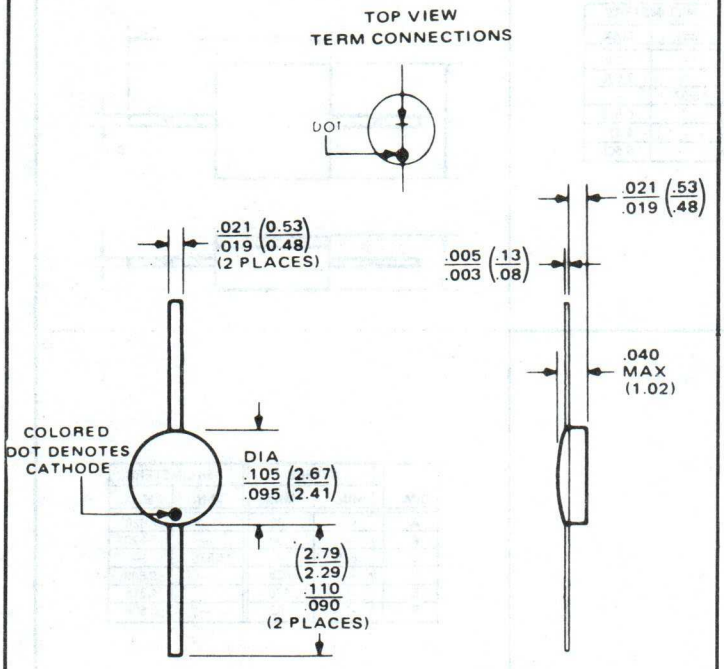

A428

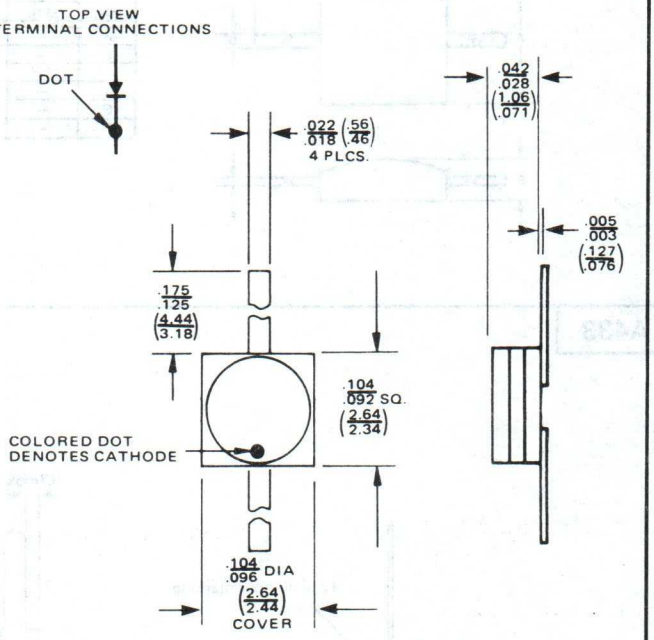

A429

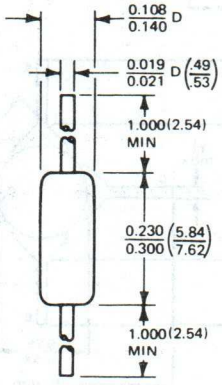

Cpkg = 0.2 pF TYP.
Lpkg = 5 nH TYP.
LEADS: Gold Plated Kovar

A430

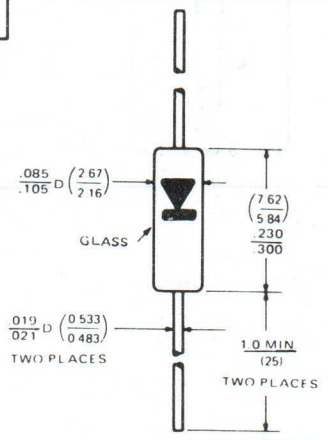

C14

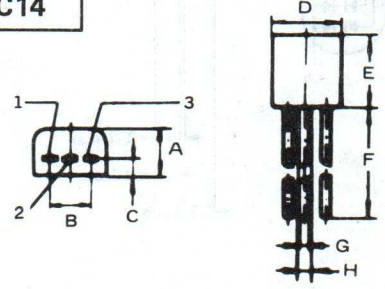

	A	B	C	D	E	F	G	H
C14	.098	.098	.039	.173	.173	.499	.006 MAX	.023 MAX
C14a	.080 / .090	.102		.171 / .190	.139 / .159	.405 / .594	.018	.018
C14b	.085 / .095	.100		.172 / .187	.142 / .157	.474 / .525	.015 / .019	.015 / .019

C16

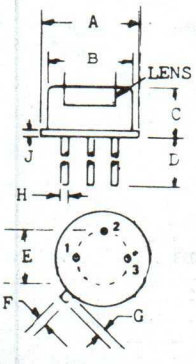

	A	B	C	D	E	F	G	H	J	1	2	3	LENS
C16a	.230 MAX	.195 MAX	.210 MAX	1.50 MIN	.100	.041	.048 MAX	.016 / .019	.030 MAX	A		C	NO
C16j	.370	.311	.259	.150	.200			.017		A		C	.197
C16n	.208 / .230	.178 / .195	.195 / .205	.500 MIN	.100	.036 / .046	.028 / .048	.012 / .019	.020 MAX	C	G	A	YES
C16p	.360	.330	.165	1.50	.100			.018		A	G	C	YES
C16q	.245	.182	.200	1.50	.050			.018		A	G	C	YES
C16r	.335 / .370	.305 / .335	.240 / .260	1.50 MIN	.200	.028 / .034	.029 / .045	.016 / .019	.009 / .125				YES
C16s	.208 / .230	.178 / .196	.170 / .210	.500 MIN	.100	.036 / .046	.028 / .048	.016 / .019	.030 MAX				YES
C16t	.370 MAX	.305 / .335	.360 / .390	1.500 MIN	.190 / .210	.028 / .034	.029 MIN	.016 / .019	.009 / .125				YES
C16u	.335 / .370	.305 / .335	.240 / .260	1.50 MIN	.200	.028 / .034	.029 / .045	.016 / .019	.009 / .125	A		C	NO
C16ad	.335 / .370	.305 / .335	.200 / .220	1.50 MIN	.200	.028 / .034	.029 / .045	.016 / .019		C	A	CASE	YES
C16af	.335 / .370	.305 / .335	.150 / .170	1.50 MIN	.200	.028 / .034	.029 / .045	.016 / .019	.020 / .030	C	G	A	YES
C16ag	.50	.45	.17	.22 MIN.	.300			.017					NO

C132

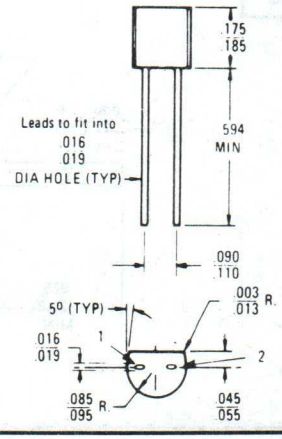

12. OUTLINE DRAWINGS

C153

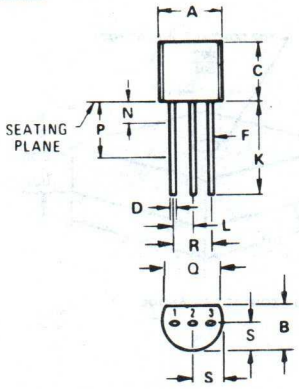

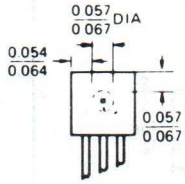

Die Placement Will Be Within the Boundaries of the Dotted Circle

	A	B	C	D	F	K	L	N	P	Q	R	S
C153	.175 / .205	.125 / .165	.170 / .210	.016 / .021	.016 / .019	.500 MIN	.045 / .055	.050 MAX	.250 MIN	.135 MIN	.095 / .105	.080 / .105
C153a	.196 / .204	.157 / .165	.196 / .204	.015	.015	.547 / .559						

C176

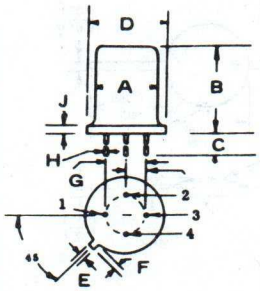

	A	B	C	D	E	F	G	H	J
C176	.195	.210	.500 MIN	.230	.036 / .046	.036 / .048	.100	.016 / .019	.030

C187

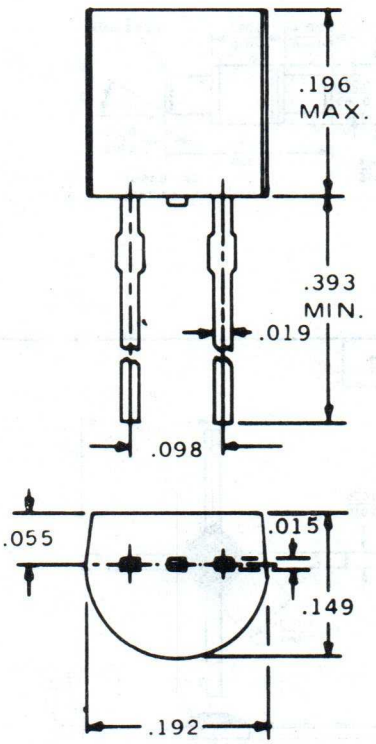

C200

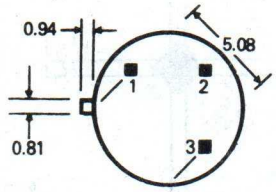

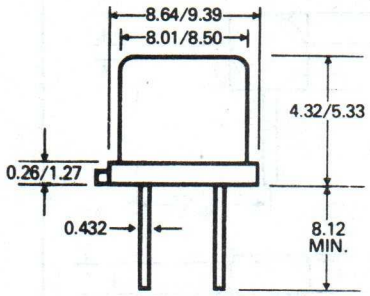

C201

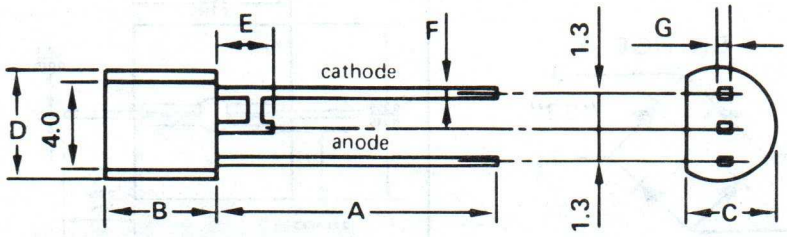

DIMENSIONS IN MM

	A	B	C	D	E	F	G
C201	13.2	5.0	4.0	5.0	2.5	.45	.45
C201A	12.7	5.2	4.2	4.8	2.5	.48	.35

12. OUTLINE DRAWINGS

C203

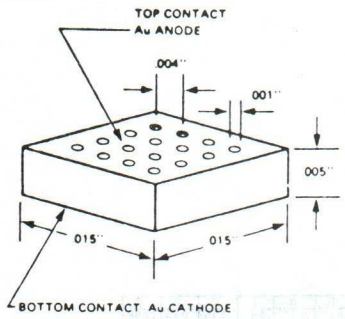

C204

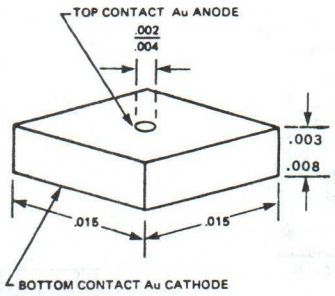

C205

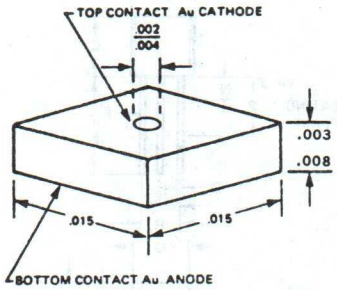

C208

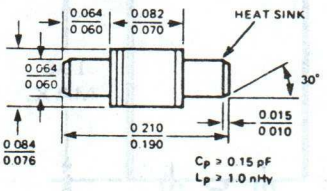

C209

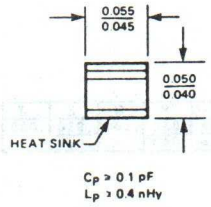

C210

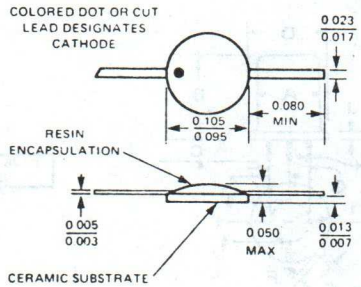

C211

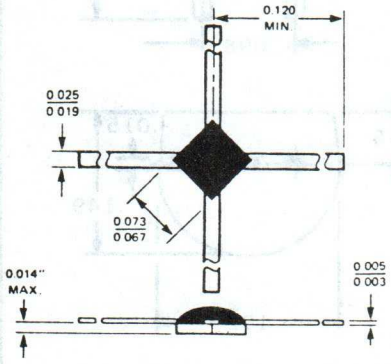

C212

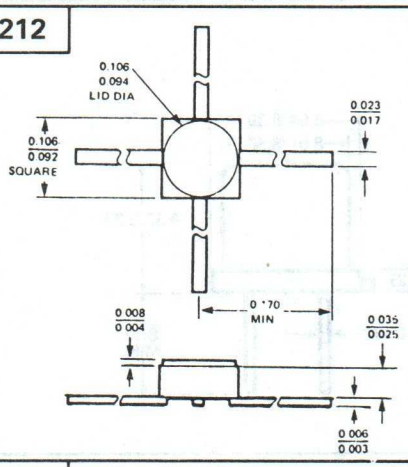

C213

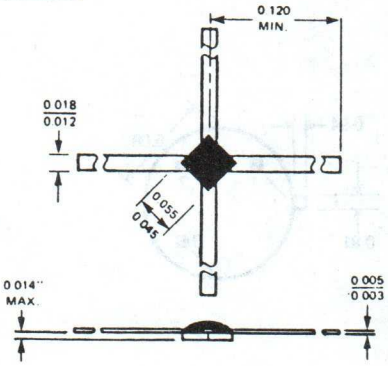

C214

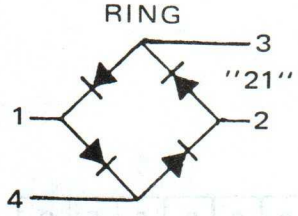

C215

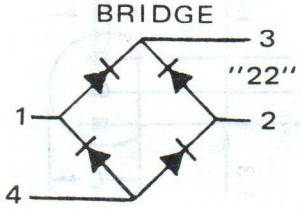

C216

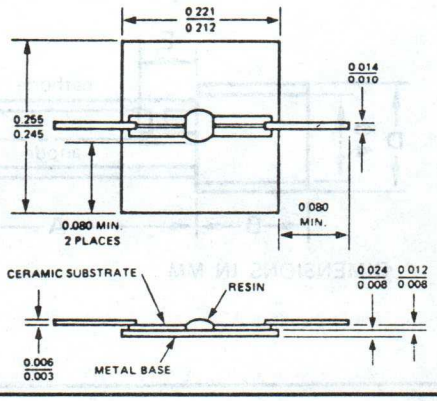

12. OUTLINE DRAWINGS

C217

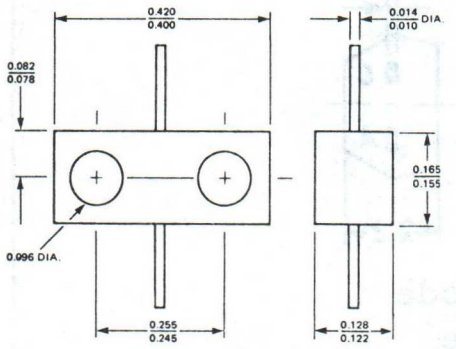

C218

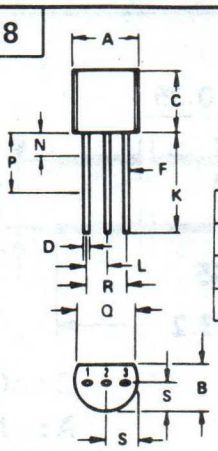

	A	B	C	D	F	K	L	N	P	Q	R	S
C218	.175 .205	.125 .165	.175 .185		.018 .019	.593	.045 .055				.095 .105	.080 .105
C218 a	.175 .205	.125 .165	.170 .210	.016 .021	.016 .019	.500 MIN	.045 .055	.050 MAX	.250 MIN	.135 MIN	.095 .105	.080 .105
C218 b	.175 .205	.125 .165	.175 .185	.016 .021	.016 .019	.500 MIN	.045 .055				.088 .105	.080 .110
C218 c	.177 MAX	.149 MAX	.228 MAX	.023 MAX		.393 MIN	.053			.177 MAX	.106	.106

C219

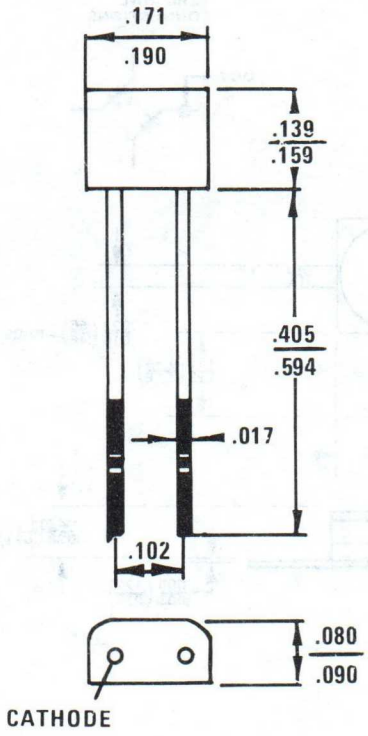

C220

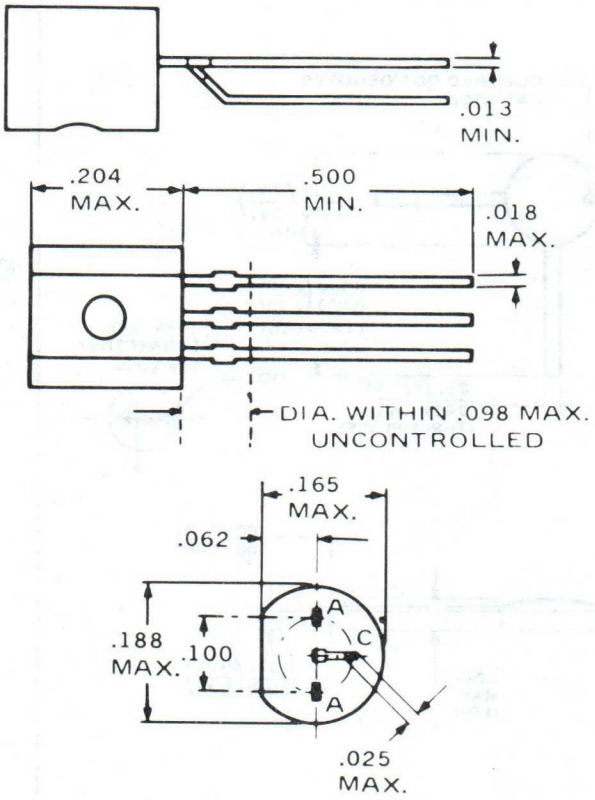

C221

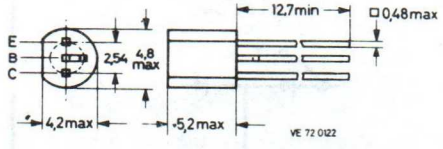

C224

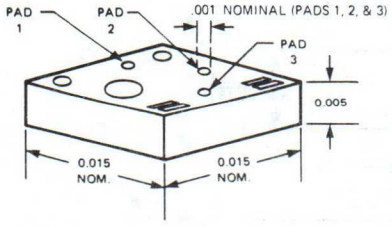

C225

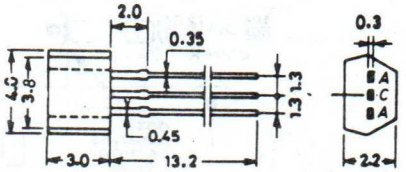

SANYO: SP

A: Anode
C: Cathode
A: Anode

12. OUTLINE DRAWINGS

C226

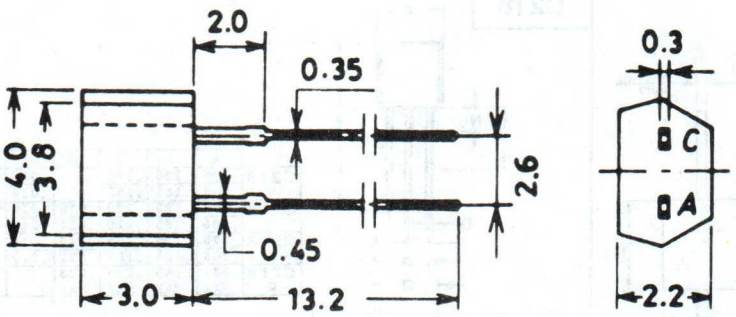

SANYO: SP'

C: Cathode
A: Anode

C228

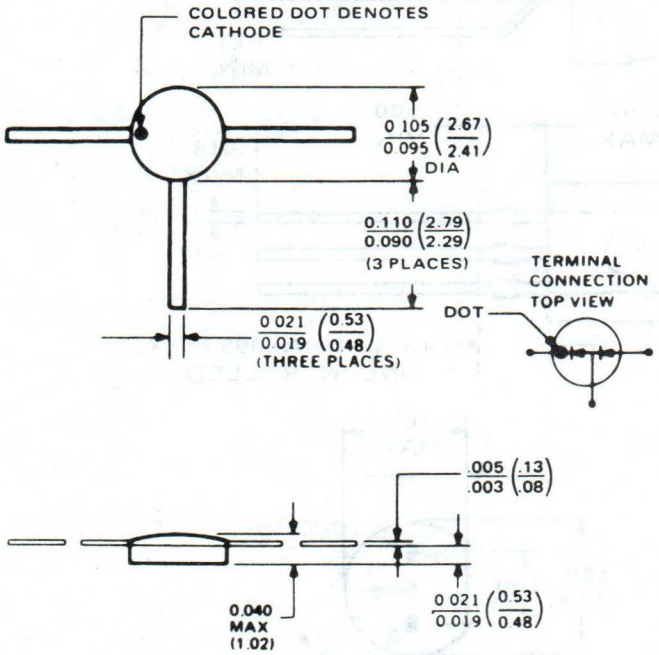

C229

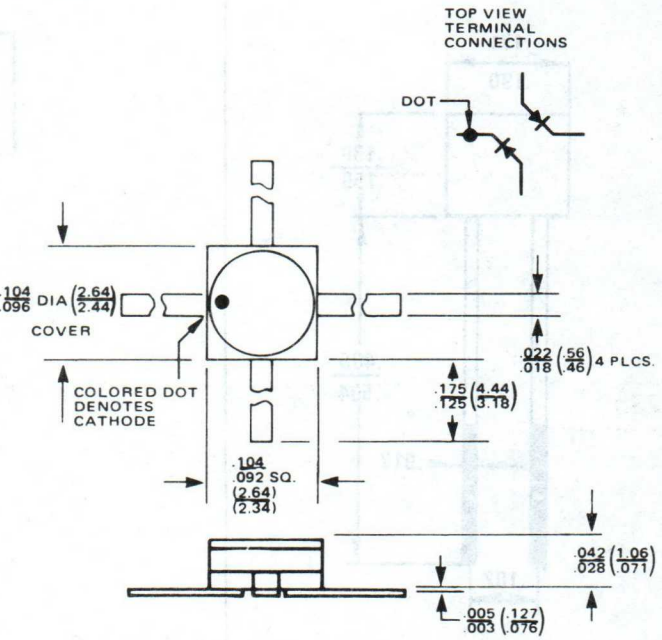

C230

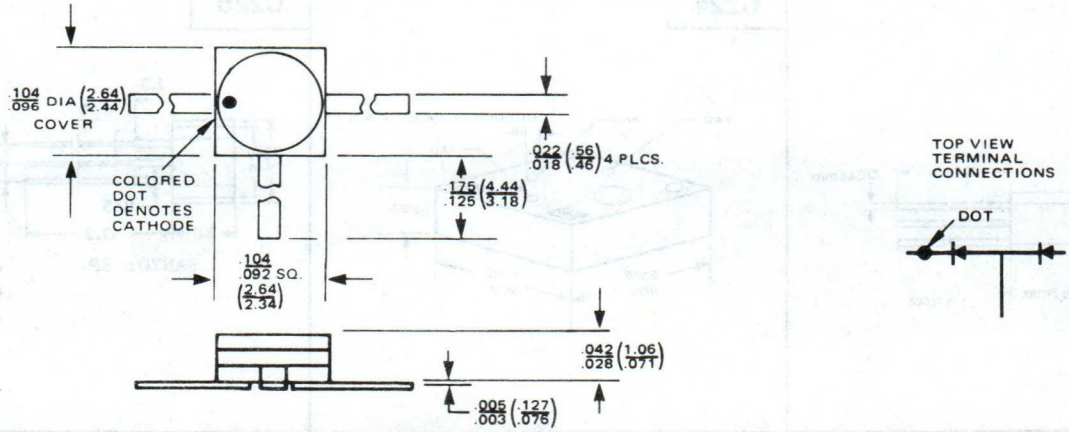

12. OUTLINE DRAWINGS

C231

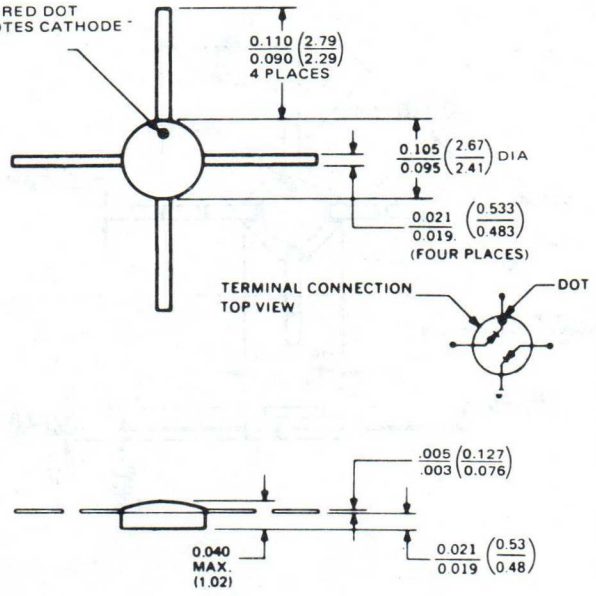

C232

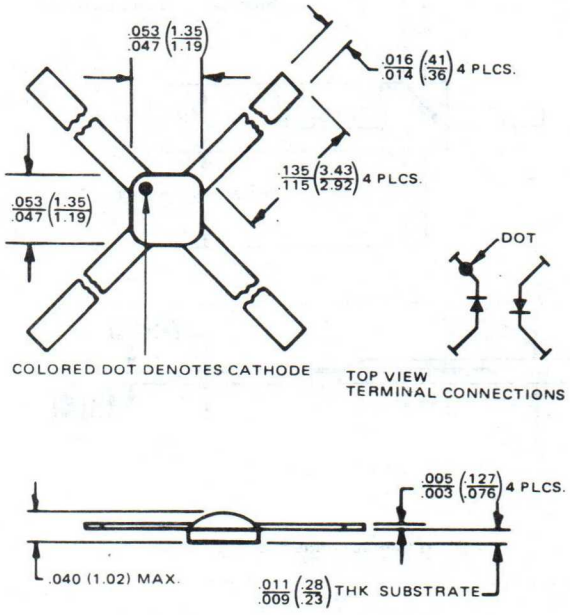

C233

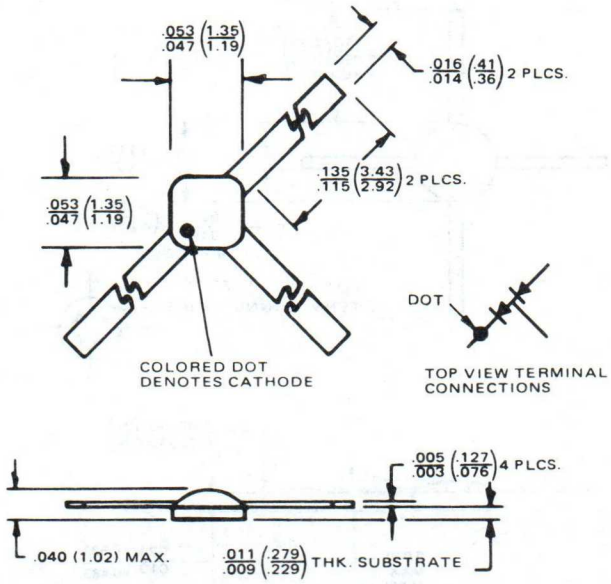

C234

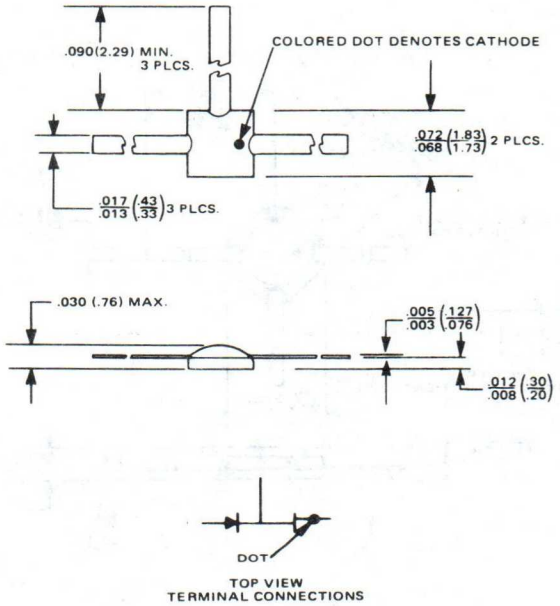

12. OUTLINE DRAWINGS

C235

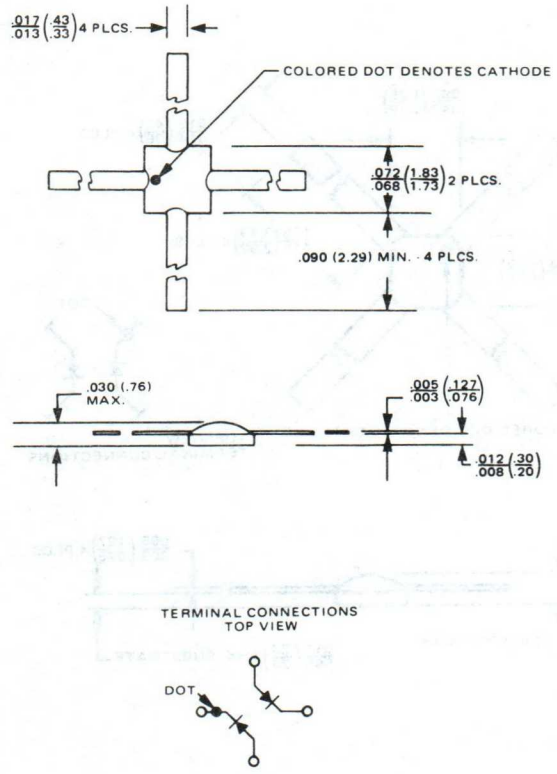

C236

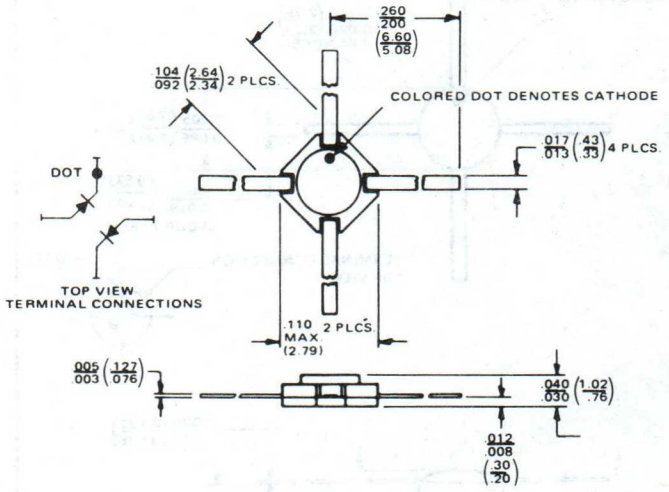

C237

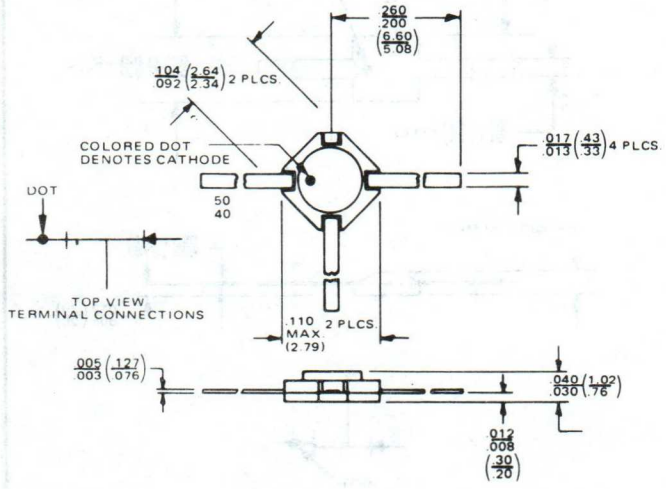

C238

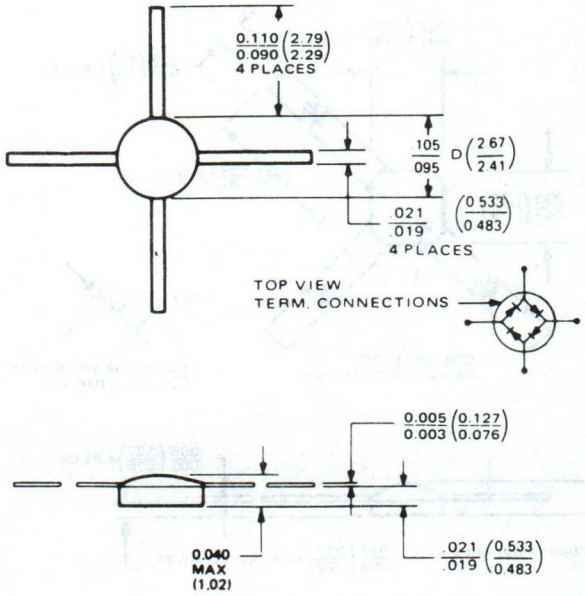

12. OUTLINE DRAWINGS

C239

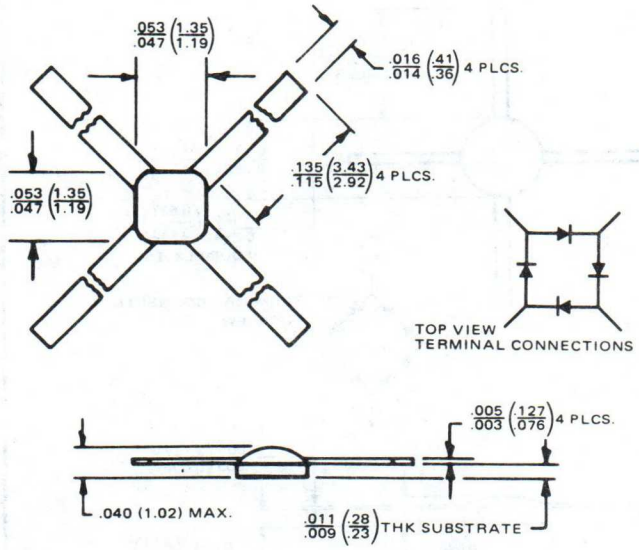

C240

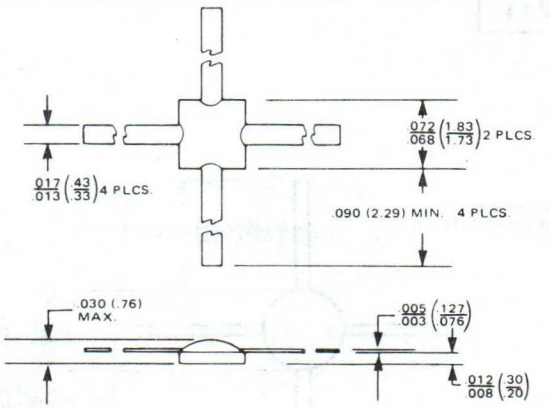

C241

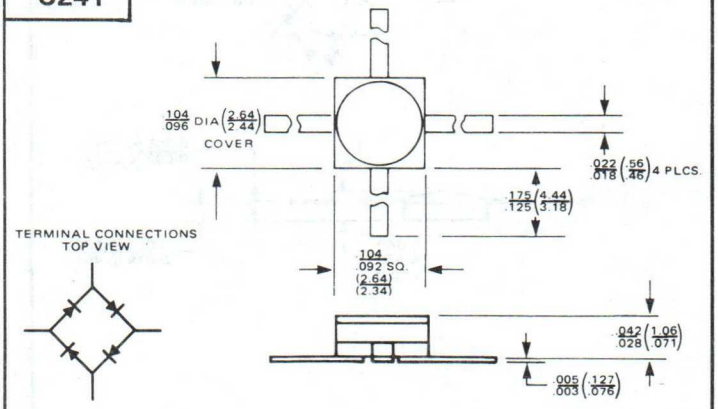

C242

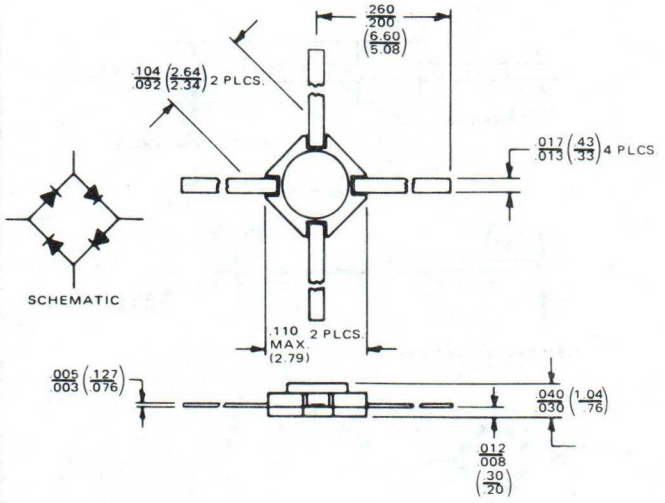

C243

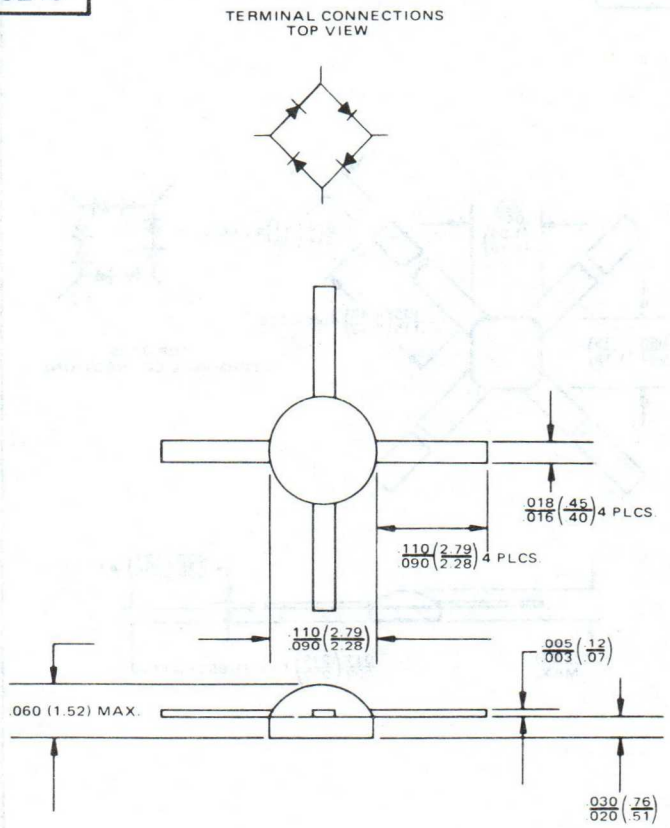

12. OUTLINE DRAWINGS

C244

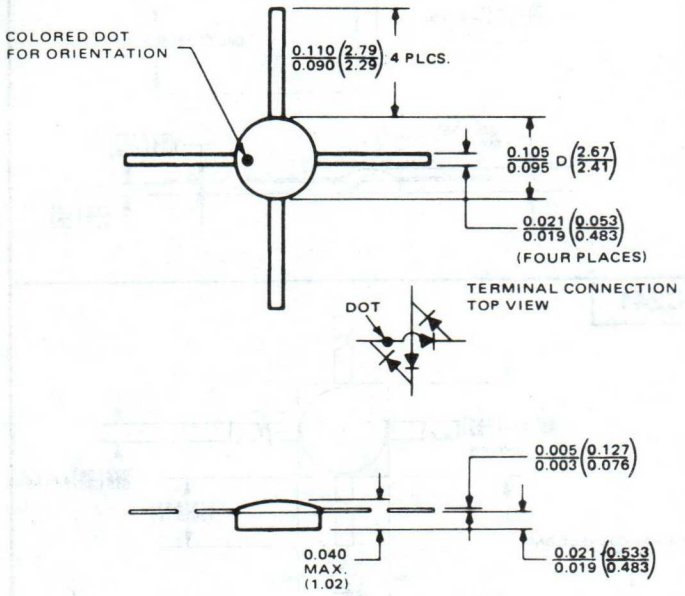

C245

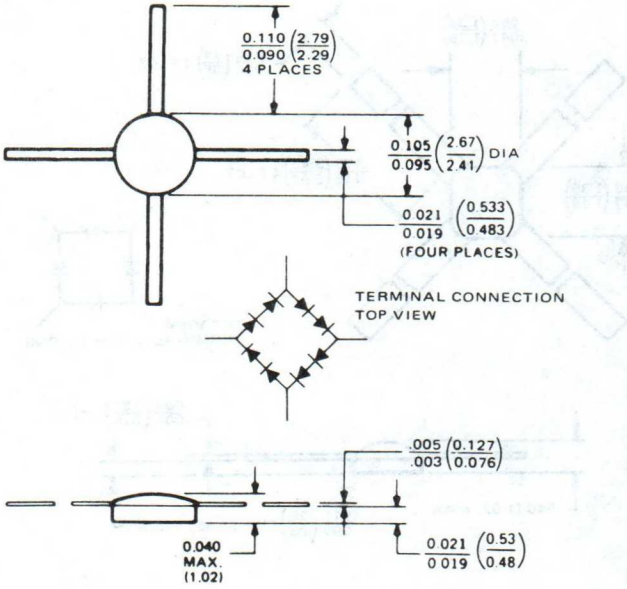

C246

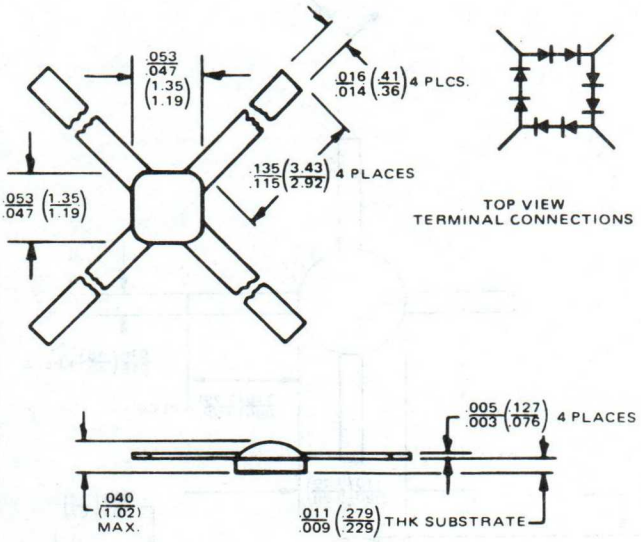

C247

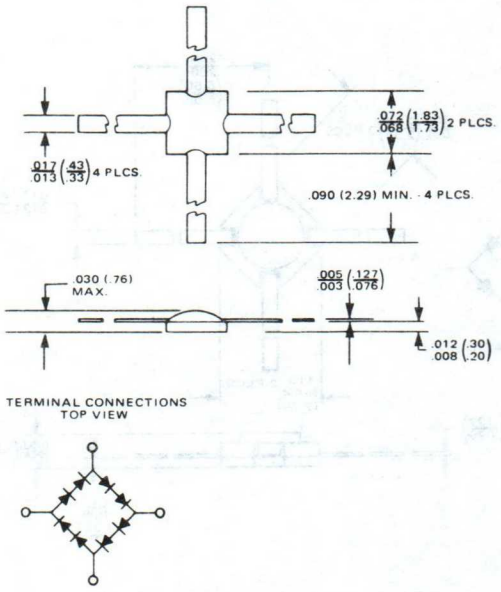

12. OUTLINE DRAWINGS

C248

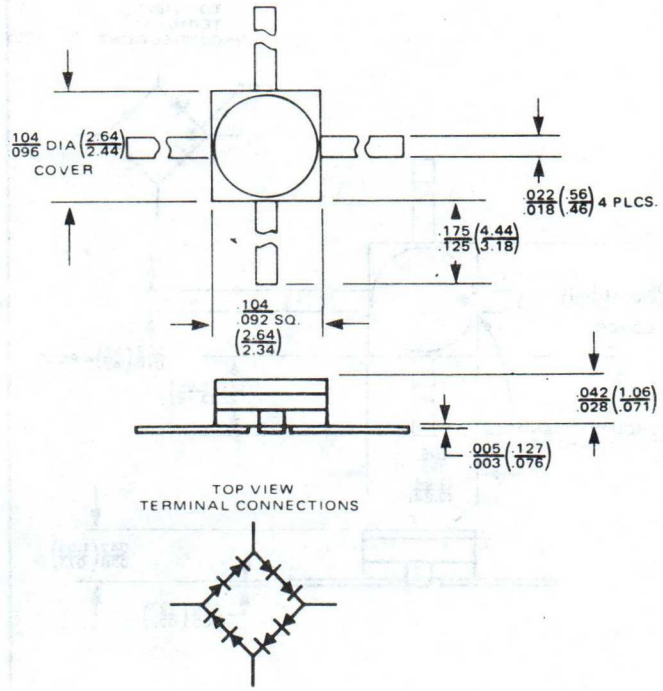

C249

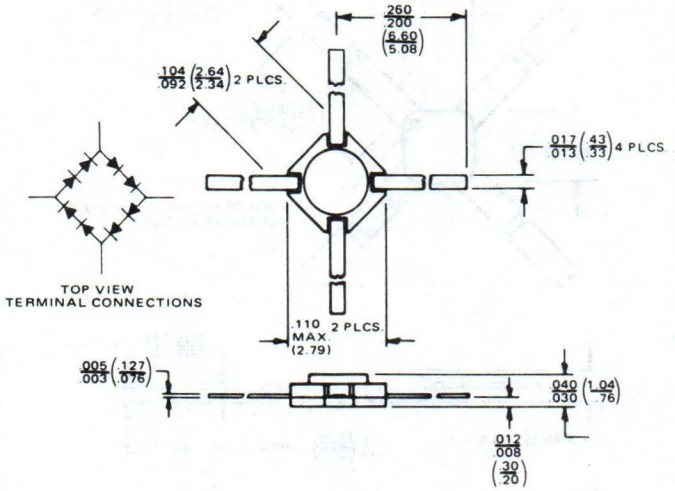

C250

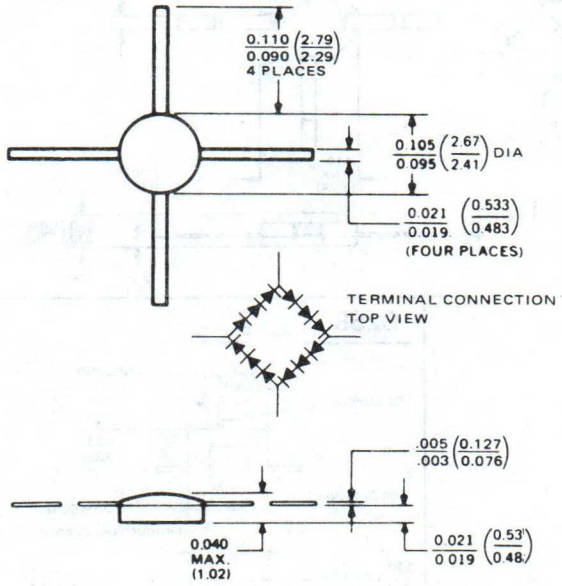

C251

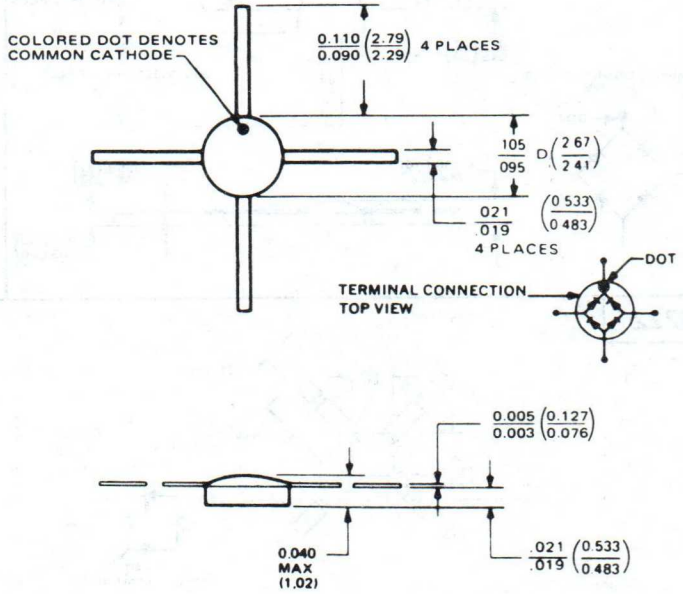

12. OUTLINE DRAWINGS

C252

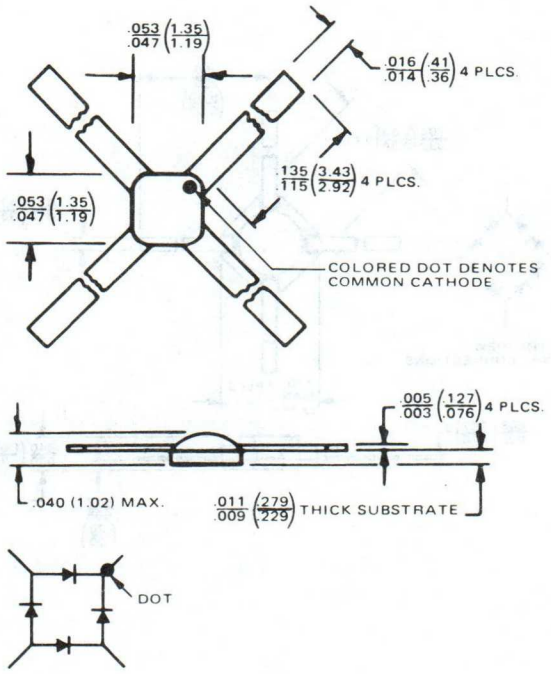

C253

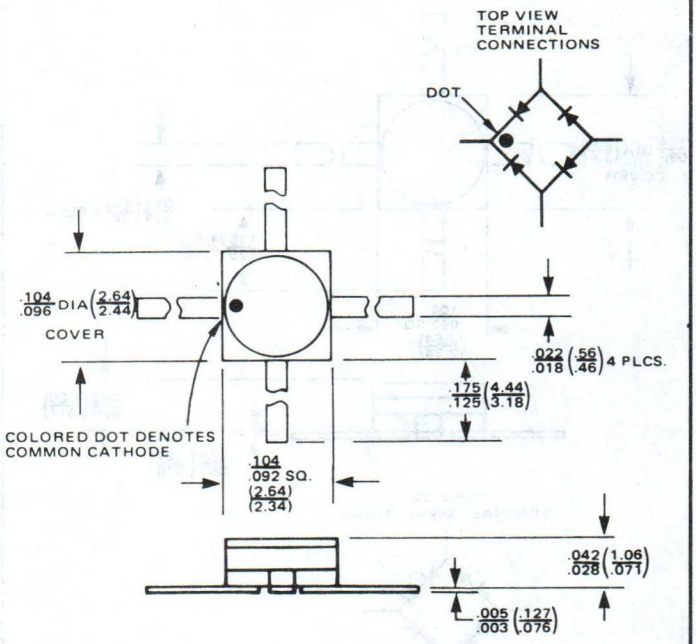

C254

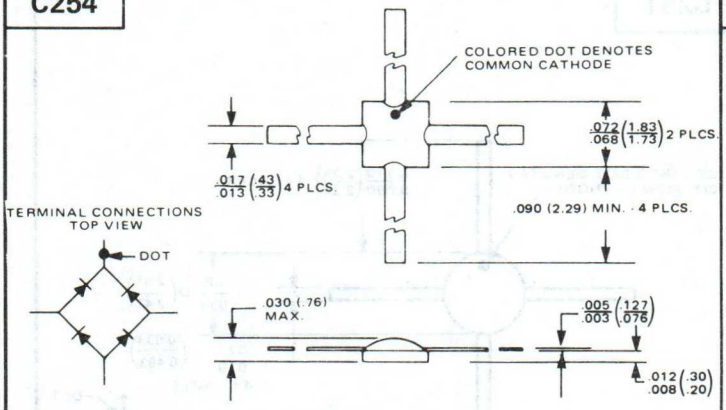

C255

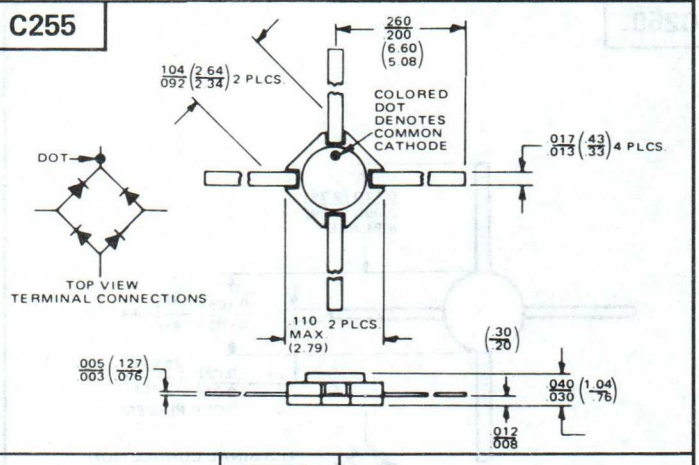

C222

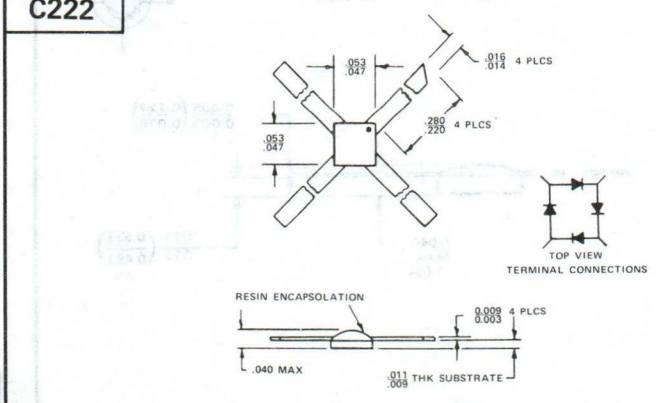

C258

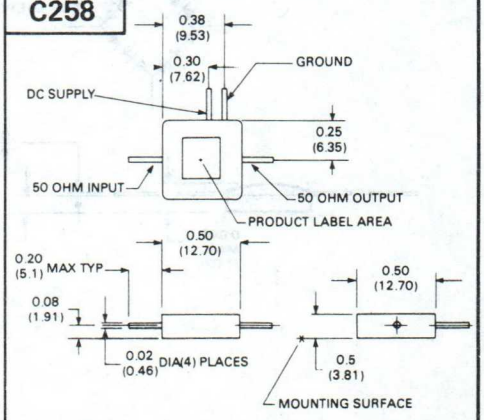

12. OUTLINE DRAWINGS

C259

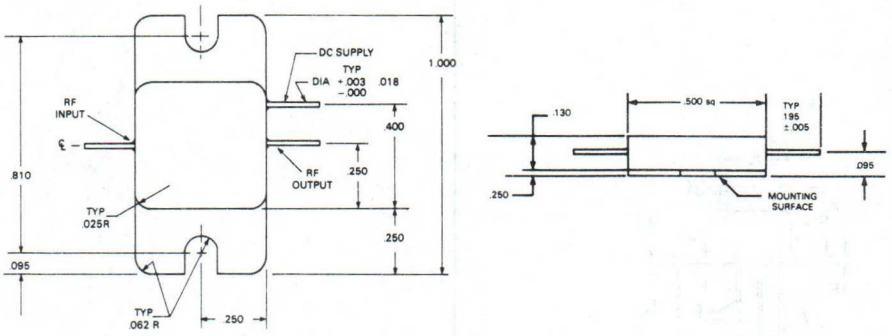

Unit in mm

C260

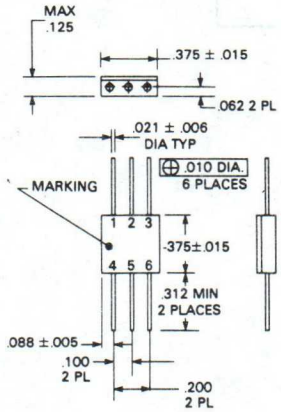

PIN OUTS
1, 3, 4 Ground
2 RF Input
5 RF Output
6 DC Supply

C261

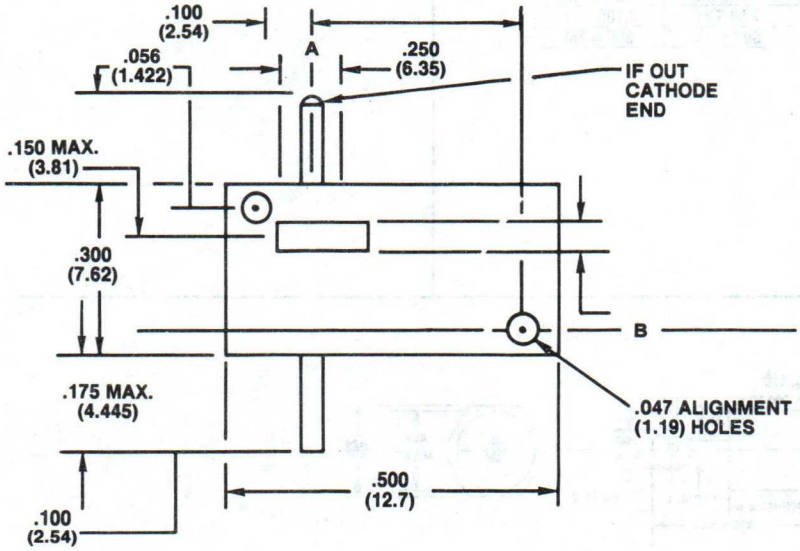

C262

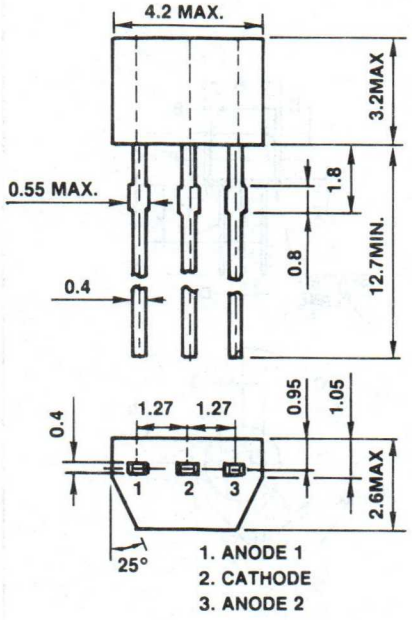

Unit in mm

C263

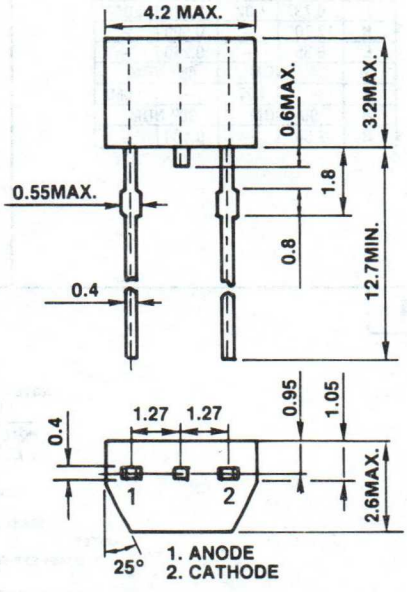

Dimensions in mm

12. OUTLINE DRAWINGS

C256

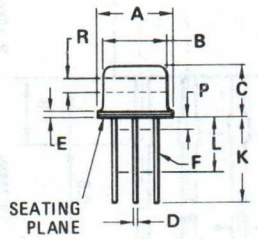

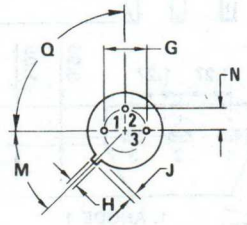

DIM	MILLIMETERS		INCHES	
	MIN	MAX	MIN	MAX
A	8.89	9.40	0.350	0.370
B	8.00	8.51	0.315	0.335
C	6.10	6.60	0.240	0.260
D	0.406	0.533	0.016	0.021
E	0.229	3.18	0.009	0.125
F	0.406	0.483	0.016	0.019
G	4.83	5.33	0.190	0.210
H	0.711	0.864	0.028	0.034
J	0.737	1.02	0.029	0.040
K	12.70	–	0.500	–
L	6.35	–	0.250	–
M	45° NOM		45° NOM	
P	–	1.27	–	0.050
Q	90° NOM		90° NOM	
R	2.54	–	0.100	–

C257

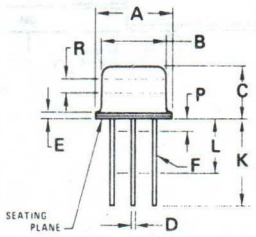

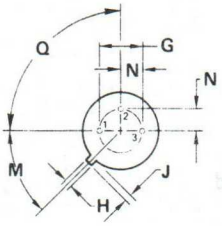

DIM	MILLIMETERS		INCHES	
	MIN	MAX	MIN	MAX
A	9.02	9.30	0.355	0.366
B	8.00	8.51	0.315	0.335
C	4.19	4.57	0.165	0.180
D	0.43	0.53	0.017	0.021
E	0.43	0.89	0.017	0.035
F	0.41	0.48	0.016	0.019
G	4.83	5.33	0.190	0.210
H	0.71	0.86	0.028	0.034
J	0.74	1.02	0.029	0.040
K	12.70	–	0.500	–
M	45° NOM		45° NOM	
N	2.54 TYP		0.100 TYP	
Q	90° NOM		90° NOM	

DO4

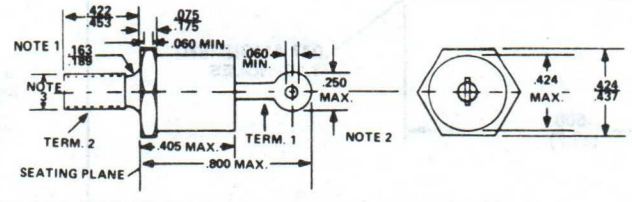

NOTES:

1. COMPLETE THREADS TO EXTEND TO WITHIN 2·1/2 THREADS OF SEATING PLANE.
2. ANGULAR ORIENTATION OF THIS TERMINAL IS UNDEFINED.
3. 10-32 UNF-2A MAXIMUM PITCH DIAMETER OF PLATED THREADS SHALL BE BASIC PITCH DIAMETER (.1697", 4.29 MM) REF. (SCREW THREAD STANDARDS FOR FEDERAL SERVICES 1957) HANDBOOK H28 P1.

12. OUTLINE DRAWINGS

DO7

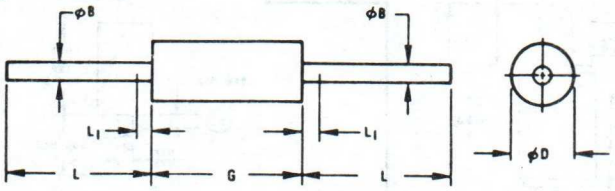

MILLIMETER DIMENSIONS ARE DERIVED FROM ORIGINAL INCH DIMENSIONS

SYMBOL	INCHES MIN.	INCHES MAX.	MILLIMETERS MIN.	MILLIMETERS MAX.	NOTES
ØB	.018	.022	0.458	0.558	-
ØD	.085	.107	2.16	2.71	1
G	.230	.300	5.85	7.62	1
L	1.000	-	25.40	-	-
L_1	-	.050	-	1.27	2

NOTES:

1. PACKAGE CONTOUR OPTIONAL WITHIN CYLINDER OF DIAMETER ØD AND LENGTH G. SLUGS, IF ANY, SHALL BE INCLUDED WITHIN THIS CYLINDER BUT SHALL NOT BE SUBJECT TO THE MINIMUM LIMIT OF ØD.
2. LEAD DIAMETER NOT CONTROLLED IN THIS ZONE TO ALLOW FOR FLASH, LEAD FINISH BUILD-UP, AND MINOR IRREGULARITIES OTHER THAN SLUGS.

DO14

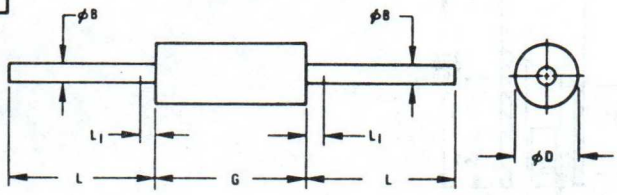

MILLIMETER DIMENSIONS ARE DERIVED FROM ORIGINAL INCH DIMENSIONS

SYMBOL	INCHES MIN.	INCHES MAX.	MILLIMETERS MIN.	MILLIMETERS MAX.	NOTES
ØB	.018	.022	.458	.558	-
ØD	.108	.140	2.75	3.55	1
G	.230	.300	5.85	7.62	1
L	1.000	-	25.40	-	-
L_1	-	.050	-	1.27	2

NOTES:

1. PACKAGE CONTOUR OPTIONAL WITHIN CYLINDER OF DIAMETER ØD AND LENGTH G. SLUGS, IF ANY, SHALL BE INCLUDED WITHIN THIS CYLINDER BUT SHALL NOT BE SUBJECT TO THE MINIMUM LIMIT OF ØD.
2. LEAD DIAMETER NOT CONTROLLED IN THIS ZONE TO ALLOW FOR FLASH, LEAD FINISH BUILD-UP, AND MINOR IRREGULARITIES OTHER THAN SLUGS.

DO16

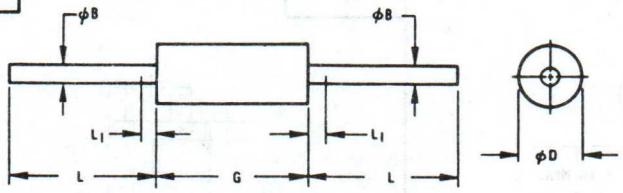

MILLIMETER DIMENSIONS ARE DERIVED FROM ORIGINAL INCH DIMENSIONS.

SYMBOL	INCHES MIN.	INCHES MAX.	MILLIMETERS MIN.	MILLIMETERS MAX.	NOTES
ØB	.009	.013	.228	.330	-
ØD	-	.050	-	1.27	1
G	.050	.100	1.27	2.54	1
L	.450	-	11.43	-	-
L_1	-	.050	-	1.27	2

NOTES:

1. PACKAGE CONTOUR OPTIONAL WITHIN CYLINDER OF DIAMETER ØD AND LENGTH G. SLUGS, IF ANY, SHALL BE INCLUDED WITHIN THIS CYLINDER.
2. LEAD DIAMETER NOT CONTROLLED IN THIS ZONE TO ALLOW FOR FLASH, LEAD FINISH BUILD-UP, AND MINOR IRREGULARITIES OTHER THAN SLUGS.

DO17

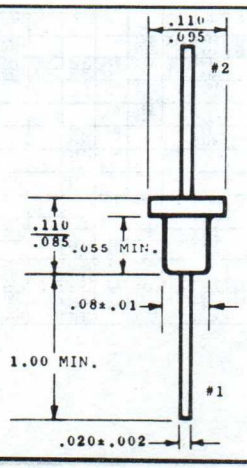

DO19

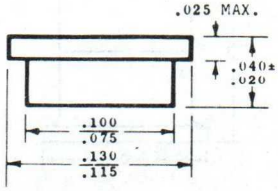

DO20

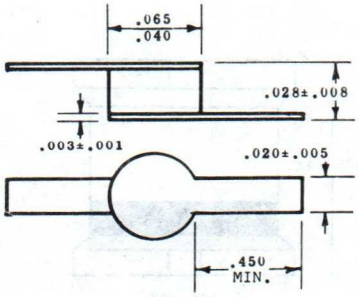

12. OUTLINE DRAWINGS

DO22

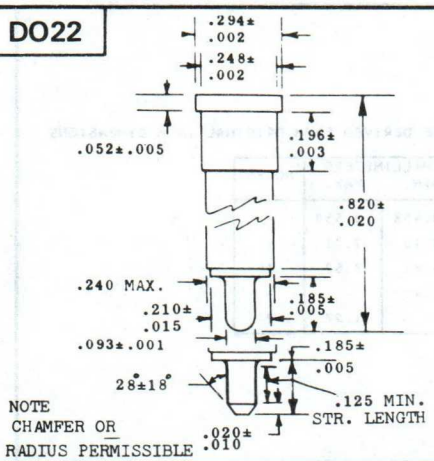

NOTE
CHAMFER OR
RADIUS PERMISSIBLE

DO23

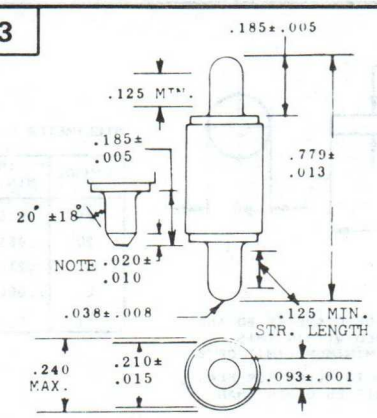

NOTE
CHAMFER OR RADIUS PERMISSABLE

DO34

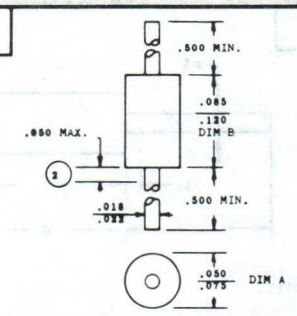

1. Package contour optional within dimensions A & B. Slugs, if any, shall be included within this cylinder but shall not be subject to the minimum limit of Dim. A.
2. Lead diameter not controlled in this zone to allow for flash, lead finish build-up, and minor irregularities other than slugs.

DO35

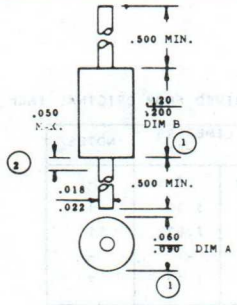

1. Package contour optional within dimensions A & B. Slugs, if any, shall be included within this cylinder but shall not be subject to the minimum limit of Dim. A.
2. Lead diameter not controlled in this zone to allow for flash, lead finish build-up, and minor irregularities other than slugs.

DO37

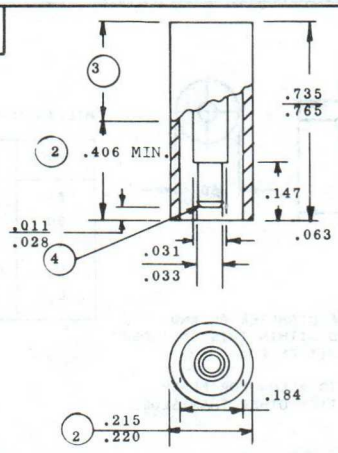

NOTES FOR DO37:

1. Axis of inner conductor shall not deviate more than .004 (0.101 MM) from axis of outer shell referred to its diameter.
2. Diameter .215/.220 applies to length .406. Diameter may vary beyond .406 to allow for finishes and marking.
3. Marking to be confined to this area.
4. End of terminal to have either radius or chamfer.

DO41

NOTES:

1. Package contour optional within cylinder of diameter .080 and length .160. Slugs .107 .205 if any, shall be included within this cylinder but shall not be subject to the minimum limit of .080 .107
2. Lead diameter not controlled in this zone to allow for flash, lead finish build-up, and minor irregularities other than slugs.

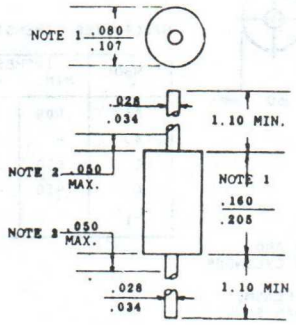

F3

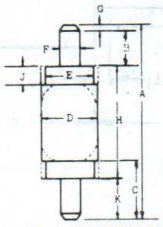

NOTE: DIM. E MAY EXTEND AS FAR AS DIM. D ON SOME DEVICES.

	A	B	C	D	E	F	G	H	J	K	CHAMFERED EDGES
F3a	.766 .792	.180 .190	.285 .325	.240 MAX	.210	.092 .096				.180 .190	YES
F3b	.866 MAX	.181 .189		.240 MAX	.215 .223	.093	.028 MAX	.466 .490	.086 .092	.181 .189	NO
F3d	.220 .230	.035 MIN		.105 MAX		.045 .047	NA				YES
F3e	.275 .285	.062 MIN		.105 MAX		.045 .047	NA				YES
F3f	.703 MAX	.185 MAX		.219 MAX			NA	.323 MAX			NO
F3h	.687 MAX	.185 MAX			.205		NA	.412 MAX			NO
F3j	.790 MAX	.188 MAX		.240 MAX	.216		NA	.411 MAX			NO
F3m	.687	.180 MIN		.240		.094	.150			.080	NO
F3n	.208	.064		.083		.064	.022			.064	NO
F3p	.807	.188		.216		.093				.093	NO
F3q		.185 MAX		.219 MAX			NA	.412 MAX			NO
F3r	.735 .765	.180 .190			.195 .215	.092 .094	NA	.469 .495		.075 .080	NO
F3s	.766 .792	.180 .190	.193 .199	.246 .250	.195 .225	.092 .094	NA	.406 .412	.030	.180 .190	YES
F3t	.754 .792			.219 MAX		.092 .094	NA	.392 .412		.180 .190	NO

F9

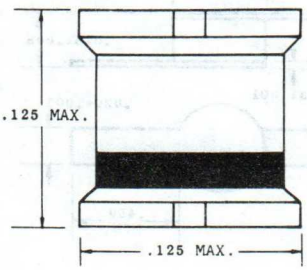

F9a

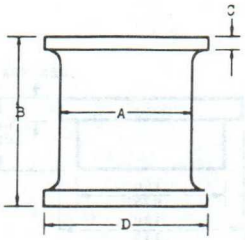

	A	B	C	D
F9a	.105 MAX	.120 .130	.030	.120 .130
F9b		.250 MAX		.400 MAX

12. OUTLINE DRAWINGS

F10

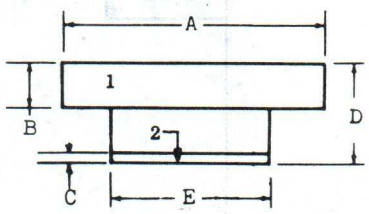

	A	B	C	D	E	1	2
F10a	.115 .131	.025 MAX	.005 .015	.035 .055	.080 .100	C	A
F10b	.117 .123	.020 MAX		.044 .056	.077 .083	A	C
F10c	.117 .123	.020 MAX		.044 .056	.077 .083	C	A
F10e	.118 .122	.025 MAX		.055	.075 .095	C	A
F10f	.048 .052	.017 .023	.029 .031	.045 .055	.024 .026	C	A
F10g	.066 .072	.012 MAX		.025 .031	.047 .053	C	A
F10h	.119 .125	.020 MAX		.055 .061	.079 .085	C	A
F10j	.119 .125	.020 MAX		.055 .061	.079 .085	A	C
F10k	.119 .125	.020 MAX		.055 .061	.077 .083	A	C
F10m	.117 .123	.025 MAX		.063 .068	.082 .088	C	A
F10n	.081 .085	.0075	.0365		.065 MAX		
F10p	.080	.012		.034	.050		
F10q	.123	.020		.058	.080		
F10r	.120	.013		.050	.080		
F10s	.050			.023	.030		
F10t	.162	.020		.055	.132		
F10u	.125	.009		.050	.090		
F10v	.125	.025		.060	.080		
F10w	.086	.012		.044	.054	C	A
F10x	.230	.025		.145	.162		
F10z	.081	.013		.030	.050	A	C

	A	B	C	D	E	1	2
F10aa	.080			.030	.050	C	A
F10ab	.120			.058	.080	C	A
F10ac	.078 .082	.010 .016		.034 .044	.051 .055	C	A
F10ad	.117 .123	.025 MAX		.082 .102	.075 .085	A	C
F10ae	.117 .123			.060	.080	A	C
F10af	.077 .083			.034	.047 .053	A	C
F10ag	.225 .235	.025 MAX		.135 .155	.157 .163	A	C
F10ah	.118 .123	.020 .024		.086 .094	.077 .083	A	C
F10aj	.117 .123	.025 MAX		.087 .097	.075 .085	A	C
F10ak	.119 .125	.116 .124		.087 .097	.077 .083		
F10al	.117 .123	.025 MAX		.087 .097	.075 .085	C	A
F10am	.129 .145typ	.013 .023typ		.051 .062typ	.086 .094typ		
F10an	.078 .082	.010 .016		.034 .048	.048 .053	C	A
F10ap	.117 .123	.025 MAX		.057 .067	.075 .085	C	A
F10aq	.118 .124	.019 .023		.054 .066	.080 .084		

F11

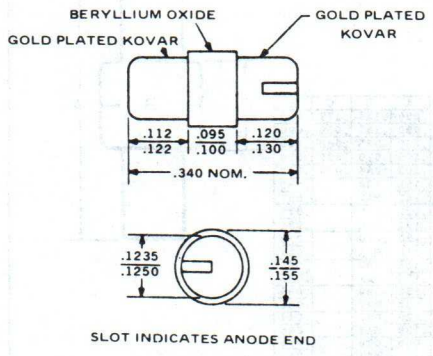

F21

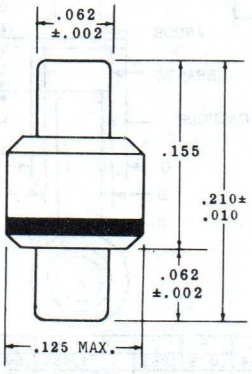

F27

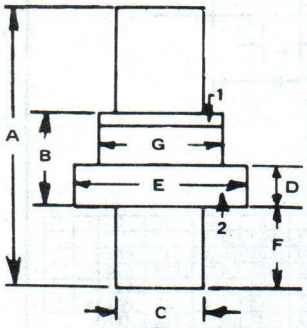

	A	B	C	D	E	F	G	1	2
F27	.175	.050	.062	.025	.123	.060 .064	.077 .083	C	A
F27a	.184	.058	.062	.020	.123	.060 .064	.077 .083	C	A
F27d	.212	.088	.062	.020	.123	.060 .064	.077 .083	C	A
F27e	.215		.064		.123	.060 .064	.077 .083	C	A
F27f	.215	.091	.062	.025	.123	.060 .064	.077 .083	C	A
F27g	.215	.091	.062	.025	.123	.060 .064	.077 .083	A	C
F27h	.215	.091	.062	.025	.123	.060 .064	.077 .083		
F27j	.180	.056	.062	.020	.123	.060 .064	.077 .083		
F27k	.171	.050	.064	.025	.123	.060 .064	.077 .083		
F27m	.062	.091	.062		.123	.060 .064	.077 .083		
F27n	.225		.066		.123	.060 .064	.077 .083	C	A
F27p	.197	.088	.062	.020	.123	.060 .064	.077 .083	C	A
F27q	.220	.094	.066	.015	.123	.060 .064	.077 .083		
F27r	.225	.097	.064	.025		.060 .064	.077 .083		
F27t	.186	.062	.062	.025	.120	.060 .064	.077 .083	C	A
F27u	.061	.088	.061 .063	.025	.118 .120	.060 .064	.077 .083		
F27v	.062	.084	.062	.017		.060 .064	.077 .083	C	A
F27w	.062	.081	.062	.025		.060 .064	.077 .083	C	A
F27x	.205 .225	.070 .076	.060 .066		.117 .120	.060 .064	.077 .083	C	A

	A	B	C	D	E	F	G	1	2
F27ac	.028		.062	.084	.120	.062	.080	C	A
F27ad	.215		.062	.067	.121	.062	.080	C	A
F27ae	.215		.063		.125	.063	.090	C	A
F27af	.189		.063	.063	.130	.063		C	A
F27ag	.202 .224	.082 .094	.060 .064	.025 MAX	.118 .123	.060 .064	.082 .094		
F27ah	.206 .218	.082 .086	.060 .064	.019	.116 .124	.062	.078 .082	C	A
F27aj	.202 .224	.082 .094	.060 .064	.025 MAX	.118 .123	.062 .064	.078 .082	C	A
F27ak	.208	.083 .093	.060 .064	.025 MAX	.122	.060 .083	.077		
F27al	.150	.086	.060 .062	.020	.118	.062	.080	A	C
F27am	.205 .225		.060 .064	.025 MAX	.117 .123	.060 .064	.075 .085	A	C
F27an	.205 .225		.060 .064	.025 MAX	.117 .123	.060 .064	.075 .085	C	A
F27ap	.205 .210	.145 .161	.060 .064	.025 MAX	.117 .125	.060 .064	.077 .083	C	A
F27aq	.205 .225	.087 .095	.060 .066		.117 .130	.059 .065	.077 .087		
F27ar	.080 .090	.080 .090	.060 .061	.016 .024	.118 .129		.078 .080	A	A
F27as	.204 .220		.060 .063		.118 .122	.060 .064	.078 .082	C	A
F27at	.205 .225	.085 .097	.060 .064	.025 MAX		.060 .064	.077 .083	C	A
F27au	.174 .194	.055 .065	.060 .064	.025 MAX	.117 .127	.060 .064	.077 .083		
F27av		.108 .110typ	.062		.129 .145typ	.074 .078typ	.090		
F27aw	.205 .217	.085 .091	.059 .063	.018 .024	.118 .157	.061 .062	.078 .080		
F27ax	.205 .225	.083 .097	.060 .064	.025	.119 .124	.060 .064	.077 .083	C	A
F27ay	.084 .100	.027 .037	.023 .027	.015	.079 .083	.028 .032	.047 .053	A	C
F27az	.205 .225	.083 .097	.060 .064	.025 MAX	.119 .124	.060 .064	.077 .083	A	C
	.205 .225		.060 .064	.025 MAX	.117 .125	.060 .064	.077 .083		

12. OUTLINE DRAWINGS

F32

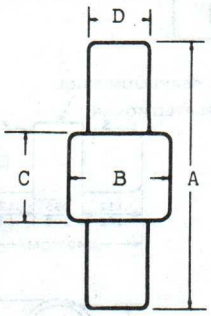

	A	B	C	D
F32b	.500	.126	.177	.094
F32c	.090	.145	.050	.090
F32d	.130	.085	.085	.045
F32e	.130	.070	.080	.030
F32f	.202	.084	.076	.062
F32g	.155 .165	.130 MAX		.089 .091
F32h	.122 .132	.070 MAX		.029 .031
F32j	.120 .130	.070 MAX		.029 .031
F32k	.125 .135	.090 MAX		.044 .046
F32m	.122 .132	.090 MAX		.044 .046
F32n	.120 .130	.090 MAX		.044 .046
F32p	.095	.070 MAX		.029 .031

F36

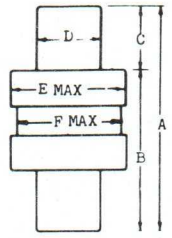

	A	B	C	D	E	F
F36b	.282	.231	.056	.069	.101	.099

F43

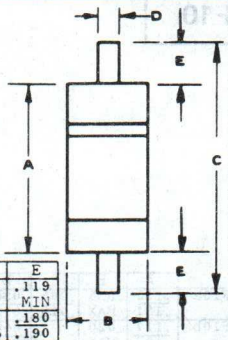

	A	B	C	D	E
F43	.493 MAX	.217	.729 MIN	.071	.119 MIN
F43a	.410	.155 .165	.760 .800	.091 .095	.180 .190
F43b	.260	.128 .134	.368 .408	.060 .064	.060 .064
F43c	.185	.085 .095	.290 .330	.060 .064	.060 .064
F43d	.410	.155 .165	.755 .805	.037 .041	.180 .190

F47

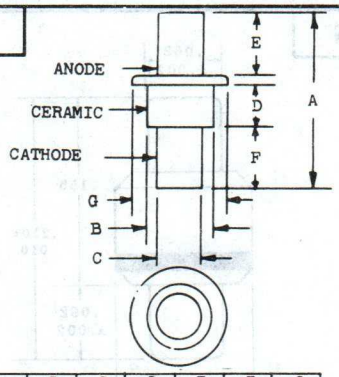

	A	B	C	D	E	F	G
F47	.184	.088	.062		.062	.062	.118
F47b	.202 .224	.078 .083	.060 .064	.057 .069	.060 .064	.060 .066	.118 .123
F47c	.209		.063	.067	.063	.059	.122

F48

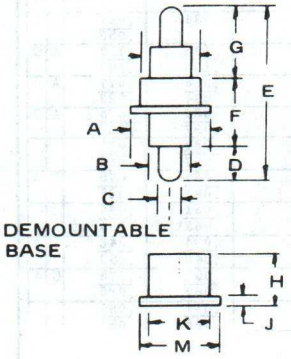

	A	B	C	D	E	F	G	H	J	K	M
F48a	.230	.160	.100	.185	.784		.335	NA	NA	NA	NA
F48b	.235	.160	.100	.185	.775		.310	NA	NA	NA	NA
F48c	.240	.170	.046	.190	.792	.412	.370	.250	.057	.250	.296
F48d	.235	.166	.094	.187	.816	.429	.185	.199	.057	.250	.296
F48e	.240	.150 .170	.092 .094	.180 .190	.800 .840		.370 MAX	.250	.047 .057	.246 .250	.292 .296
F48f	.240	.150 .170	.092 .094	.185	.776 .792		.365 MAX	NA	NA	NA	NA
F48g	.240 MAX	.150 .170	.092 .094	.180 .190	.766 .792		.300 .370	NA	NA	NA	NA
F48h	.235 MAX	.157 .162	.091 .095	.141 .228	.760 .808	.237 .285	.333 .343	NA	NA	NA	NA

F49

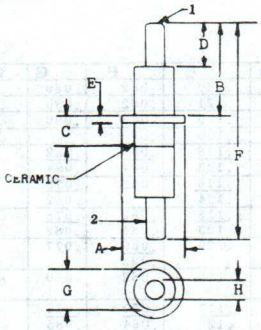

	A	B	C	D	E	F	G	H	1	2
F49	.230	.335	.105	.185	.025	.779	.160	.092 .094	A	C
F49a	.240	.335		.185	.025	.779	.160	.092 .094	A	C
F49b	.234			.165		.750 .790	.166	.088 .096		C
F49c	.234			.185		.750 .790	.166	.088 .096		A
F49d	.234			.185		.750 .790	.181	.088 .096		C
F49e	.240			.185		.750 .790	.210	.088 .096		
F49f	.240 MAX		.120 .180	.160 .190	.030 MAX	.766 .792	.150 .170	.092 .094	C	A
F49g	.225 .235	.333 .337		.180 .190	.015 .025	.766 .792				

F51

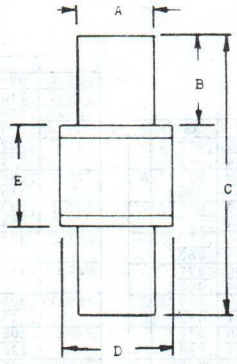

	A	B	C	D	E
F51	.060 .064	.060 .064	.190 .210	.080	.072 .080
F51a	.060 .064	.060 .064	.190 .210	.103	.072 .080
F51b	.250	.250	1.06	.380 MAX	.510 MAX
F51c	.059 .063	.059 .063	.169 .208	.077 .085	.070 .081

F54

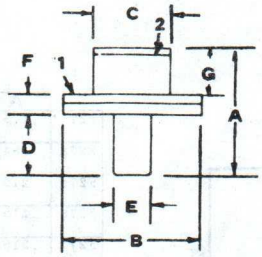

	A	B	C	D	E	F	G	1	2
F54	.065	.081	.051	.031	.026				
F54a	.138	.120	.080	.062	.062	.018	.058		
F54b	.063	.094	.051	.035	.025	.016	.020		
F54c	.054 .066	.079 .083	.048 .052	.028 .032	.024 .026	.013 MAX	.021 MAX		
F54d	.054	.080	.050	.025	.050	.012	.017		
F54e	.056	.080	.050		.040			C	
F54f	.055 .065	.075 .085	.047 .053	.027 .033	.022 .028	.015 MAX		A	C
F54g	.070 .080	.075 .085	.047 .053	.027 .033	.022 .028	.015 MAX		A	C
F54h	.060	.078 .082	.049 .051		.025			C	A
F54j	.049 .068	.078 .082	.049 .051	.028 .033	.038 .042			C	A
F54k	.146 .158	.117 .123	.077 .083	.060 .064	.054 .070	.022 MAX	.072 MAX		
F54m	.060	.080	.050	.035	.030	.007	.018	C	A
F54n	.053 .072	.078 .082	.049 .051	.025	.025 DIA			C	A
F54p	.048 .059	.078 .082	.045 .055		.025 .029		.015 .019	C	A
F54q	.055 .065	.075 .085	.047 .053	.027 .033	.022 .028	.015 MAX		C	A
F54r	.070 .080	.075 .085	.047 .053	.027 .033	.022 .028	.015 MAX		C	A

12. OUTLINE DRAWINGS

F56

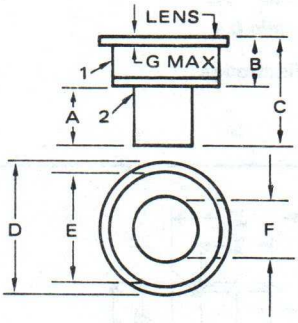

	A	B	C	D	E	F	G	1	2	WINDOW
F56	.030	.025	.055	.060	.050	.025				NA
F56a	.030	.045	.075	.060	.050	.025				NA
F56b	.062	.085	.122	.122	.080	.062	.025 MAX			NA
F56c	.030	.045	.075	.084	.050	.025	.015 MAX			NA
F56d	.022 / .029	.021 / .034	.045 / .062	.068 / .070	.046 / .053	.023 / .026	.011 MAX			NA
F56e		.117	.157	.122	.077 / .083	.059 / .065	.024	A	C	YES
F56f		.056	.118	.121	.077 / .083	.059 / .065	.020			
F56g		.084 / .114	.145 / .155	.119 / .125	.077 / .083	.059 / .065	.022 MAX		C	
F56h		.058	.113 / .127	.119 / .125	.077 / .083	.059 / .065	.018		C	
F56j		.014 / .071	.114 / .135	.118 / .123	.077 / .083	.059 / .065	.014 / .023		C	
F56k	.180 / .190	.165 MIN	.345 / .375	.240 MAX	.205 / .215	.092 / .096	.015 / .025			NA
F56m	.531	1.000 / 1.031	1.531 / 1.562	1.235 / 1.265	1.00	.343 / .348	.219			NA
F56n	.059 / .065	.070 / .076	.149 / .161	.117 / .130	.077 / .087	.060 / .066	.020	C		NA
F56p	.060 / .064	.054 / .071	.114 / .135	.117 / .123	.078 / .082	.060 / .064		A	C	NA
F56q	.060	.083 / .093	.148	.122	.077 / .083	.060 / .064	.025 MAX			NA
F56r	.060 / .064	.059 / .065	.119 / .129	.117 / .123	.075 / .085	.060 / .064	.025 MAX	A	C	NA
F56s	.060 / .064	.088 / .094	.148 / .158	.117 / .123	.075 / .085	.060 / .064	.025 MAX	A	C	NA
F56t	.059 / .065	.091 / .095	.150 / .160	.117 / .130	.077 / .087	.060 / .066	.019 / .021	A	C	NA
F56u	.060 / .064	.030 / .043	.090 / .107	.118 / .123	.076 / .083	.060 / .064	.014 / .023	C	A	NA
F56v	.060 / .064	.055 / .065	.115 / .129	.117 / .127	.077 / .083	.060 / .064	.025 MAX			NA
F56w	.060 / .064	.080 / .088	.146 / .158	.117 / .123	.077 / .083	.060 / .064	.020 / .024	A	C	NA
F56x	.060 / .064	.064 / .065	.114 / .128	.119 / .124	.077 / .083	.060 / .064	.020 MAX	A	C	NA
F56y	.060 / .064	.087 / .097	.147 / .161	.119 / .125	.077 / .083	.060 / .064	.016 / .024			NA
F56z	.030 TYP	.040 / .050	.070 / .080	.059 / .069	.047 / .053	.024 / .026	.015 MAX			
F56aa	.030	.025	.055	.060	.050	.025		C	A	NO
F56ab	.030	.030	.060	.080	.050	.030	.012	C	A	NO
F56ac	.029 / .031	.023 / .032		.078 / .082	.048 / .052	.024 / .026	.019	C	A	NA
F56ad	.600 / .640	.103 MAX	.143 / .163	.119 / .124	.077 / .083	.060 / .064	.025 MAX			NA

F58

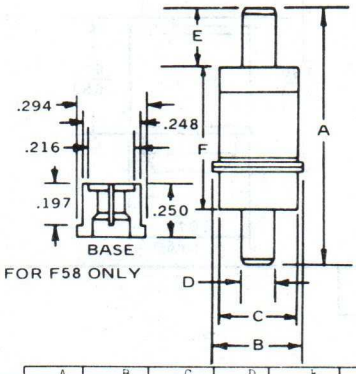

	A	B	C	D	E	F
F58	.792 MAX	.240 MAX	.210	.094	.185	
F58a		.287 / .303typ	.092 / .094typ		.182 / .188typ	.385 / .433typ

F59

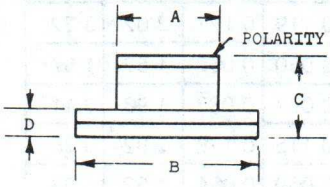

	A	B	C	D	POLARITY
F59	.050	.080	.034	.012	
F59a	.080	.123	.058	.020	
F59b	.080	.120	.050	.013	
F59c	.030	.050	.023		
F59d	.132	.162	.055	.020	
F59e	.090	.125	.050	.009	
F59f	.080	.125	.060	.025	
F59g	.054	.086	.044	.012	ANODE
F59h	.162	.230	.145	.025	
F59j	.085	.120	.090	.025	
F59k	.050	.081	.030	.013	CATHODE
F59m	.077 / .083	.118 / .124	.085 / .095	.027 MAX	CATHODE
F59n	.051 / .055	.078 / .082	.034 / .044	.010 / .016	CATHODE
F59p	.077 / .083	.119 / .127	.085 / .097	.016 / .024	
F59q	.077 / .083	.118 / .124	.050 / .070	.027 MAX	
F59r	.049 / .051	.078 / .082	.027 / .033		ANODE
F59s	.077 / .083	.119 / .124	.085 / .095	.025 MAX	CATHODE
F59t	.077 / .083	.117 / .123	.050 / .070	.013 / .025	ANODE
F59u	.077 / .083	.119 / .124	.085 / .095	.025 MAX	

F63

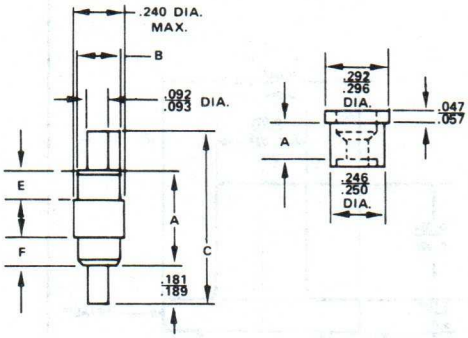

	A	B	C	D	E	F	REMARKS
F63	.157 / .166	.208 / .212	.776 / .790	.406 / .420	.118 / .122	.118 / .122	DETACHABLE BASE
F63a	.157 / .166	.208 / .212	.775 / .790	.406 / .420	.118 / .122	.118 / .122	NONE
F63b		.195 / .225	.766 / .792		.030	.030	DETACHABLE BASE
F63c		.195 / .225	.800 / .840		.030	.030	DETACHABLE BASE
F63d		.195 / .225	.800 / .840		.030	.030	WITH BASE ONLY

F79

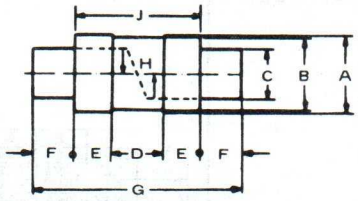

	A	B	C	D	E	F	G	H	J
F79	.099 / .101	.098 MAX	.062 / .069	.066 / .070	.048 / .051	.045 / .056	.261 / .282		
F79a	.173 / .181typ		.101 / .105			.114 / .122		.005	.230 / .248

12. OUTLINE DRAWINGS

F82

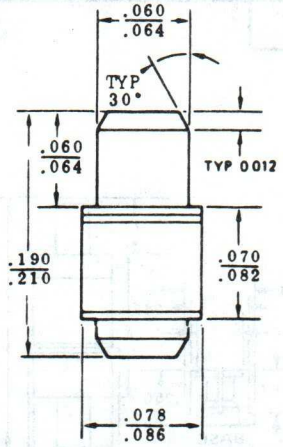

F85

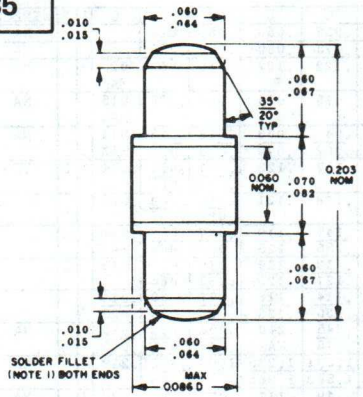

F166

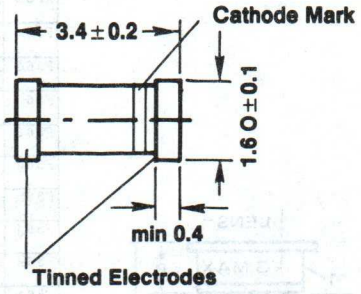

F88

	A	B	C	D	E	F	G	H	J	K	M	BASE
F88	.766 .792	.160 .190	.030	.180 .190	.030 .046	.292 .296	.047 .057	.193 .199	.246 .250	.753 .783	.800 .840	YES
F88a	.735 .765	.160 .190		.075 .080		NA	NA	NA	NA	NA	NA	NO
F88b	.776 .792	.160 .190	.031 .036	.180 .190	.030 .046	.292 .296	.031	.195 .199	.246 .250			YES
F88c	.752 .792	.160 .190	.031 .036	.180 .190	NA	.292 .296	.031 .041	.195 .199	.246 .250			YES

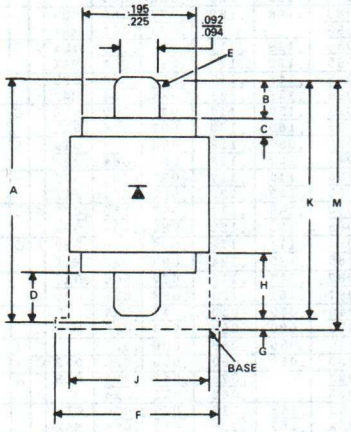

F91

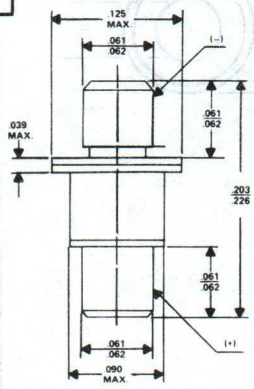

F94

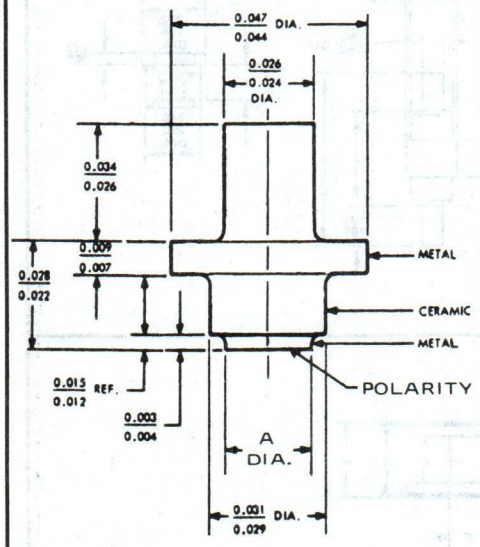

	A	POLARITY
F94	.022 .024	ANODE
F94a	.029 .031	CATHODE
F94b	.029 .031	ANODE

F96

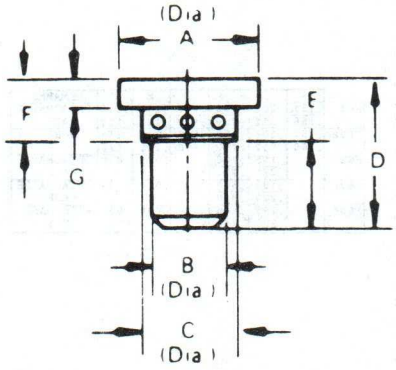

DIM	INCHES		MM	
	MIN	MAX	MIN	MAX
A	0 119	0 127	3 02	3 22
B	0 060	0 062	1 52	1 57
C	0 077	0 083	1 96	2 11
D	0 115	0 129	2 92	3 28
E	0 060	0 064	1 52	1 63
F	0 055	0 065	1 40	1 65
G	0 016	0 024	0 41	0 61

F98

	A	B	C	D	E	F	G	H	J
F98	.240 MAX	.092 .094	.030 .046	.766 .792	.120 .180	.180 .190	.150 .170	.025 .035	.120 .180
F98a	.240 MAX	.092 .094	.030 .046	.766 .792	.145 .155	.180 .190	.155 .165	.030 MAX	.160 MAX

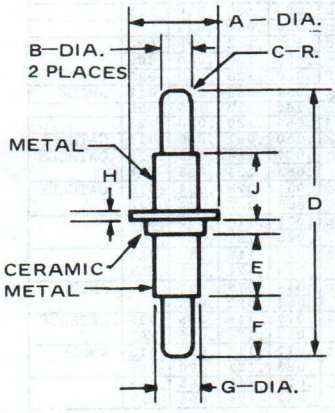

12. OUTLINE DRAWINGS

F99

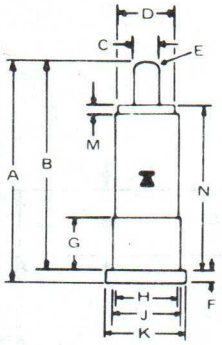

	A	B	C	D	E	F	G	H	J	K	M	N	REMARKS
F99	.800 .840	.753 .783	.092 .094	.195 .225	.030R .046R	.047 .057	.193 .199	.240	.246 .250	.292 .296	.030		
F99a	.799 .818typ		.092 .094typ			.051			.244 .284typ	.287 .295typ		.578 MAX	
F99b	.800 .840		.092 .094	.195 .215		.047 .057	.193 .199	.222 .240	.246 .250	.292 .296	.020 .030		Removable Base

F100

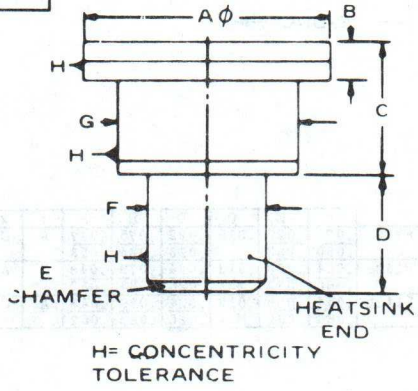

	A	B	C	D	E	F	G	H
F100	1.17 1.23	.013 .026	.059 .070	.060 .063	.010 MAX	.060 .063	.082 MAX	⋆.130
F100a	.129 .145typ	.021	.094 .114typ	.074 .078typ		.062	090	

F102

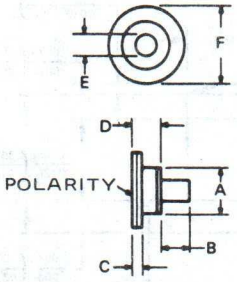

	A	B	C	D	E	F	POLARITY
F102	.049 .051	.028 .030	.008 .012	.027 .033	.024 .026	.079 .081	CATHODE
F102a	.078 .083	.060 .064	.014 .023	.054 .071	.058 .064	.118 .123	CATHODE
F102b	.078 .083	.060 .064	.014 .023	.037 .058	.058 .064	.118 .123	CATHODE
F102c	.075 .085	.060 .064	.025 .380	.088 .094	.060 .064	.117 .123	CATHODE
F102d	.078 .082	.060 .064		.054 .071	.060 .064	.117 .123	ANODE
F102e	.077 .083	.060 .064	.020 .024	.086 .094	.060 .064	.117 .123	
F102f	.047 .053	.028 .032	.015 MAX	.036 .044	.023 .027	.079 .083	ANODE

F105

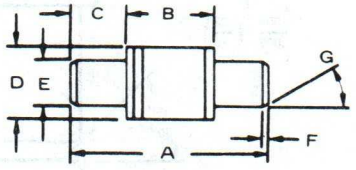

	A	B	C	D	E	F	G
F105	.190 .210	.070 .082	.060 .064	.078 .084	.060 .064	.010 .015	30°
F105a	.200 NOM	.070 .082	.060 .064	.086 MAX	.060 .064		
F105b	.195 .215		.059 .065	.077 .083	.059 .065		

F106

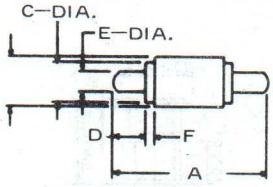

	A	B	C	D	E	F
F106	.776 .792	.222 .240	.195 .215	.180 .190	.092 .094	.020 .030
F106a	.743 .802	.240 MAX	.195 .215	.175 .195	.092 .094	
F106b	.663 .703		.219 MAX	.180 .190	.092 .094	
F106c	.663 .703		.150 MAX	.180 .190	.092 .094	

F107

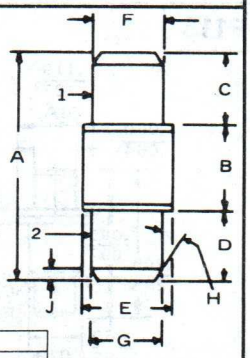

	A	B	C	D	E	F	G	H	J	1	2	REMARKS
F107	.190 .210	.070 .082	.060 .064	.060 .064	.077 .083	.060 .064	.060 .064	25° 30°	.010 .015			
F107a	.200 NOM	.070 .082	.060 .064	.060 .064	.086 MAX	.060 .064	.060 .064					Colored End Denotes Cathode
F107b	.190 .205	.070 .079	.059 .063	.059 .063	.086 MAX	.062 .064	.062 .064	25° 30°	.009 .014			Colored End Denotes Cathode

12. OUTLINE DRAWINGS

F111

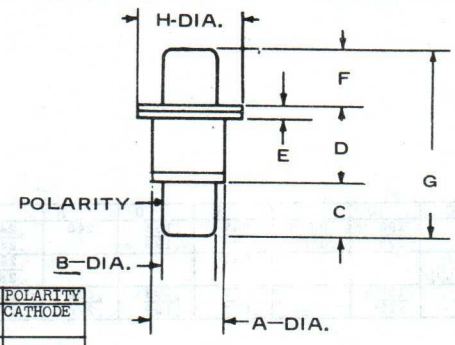

	A	B	C	D	E	F	G	H	POLARITY
F111	.077 .088	.060 .064	.060 .064	.083 .097	.025 MAX	.060 .064	.205 .225	.119 .124	CATHODE
F111a	.078 .084	.060 .064	.060 .064	.080 .095		.060 .064		.118 .125	
F111b	.077 .083	.060 .064	.060 .064	.050 .083	.027 MAX	.060 .064	.205 .225	.118 .124	CATHODE
F111c	.077 .083	.060 .064	.060 .064	.050 .083	.027 MAX	.060 .064	.205 .225	.118 .124	ANODE

F112

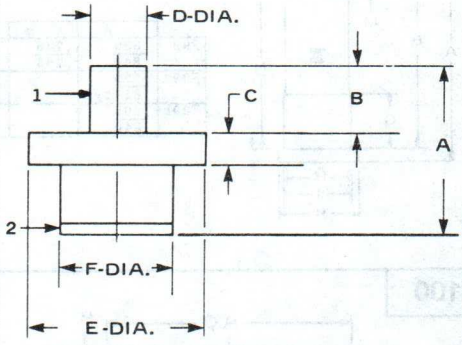

	A	B	C	D	E	F	1	2
F112	.070 .080	.027 .033	.015	.022 .028	.075 .085	.047 .053	A	C
F112a	.054 .066	.028 .032	.013 MAX	.024 .026	.079 .083	.048 .052	C	A
F112b	.054 .066	.028 .032	.013 MAX	.024 .026	.079 .083	.048 .052	A	C

F113

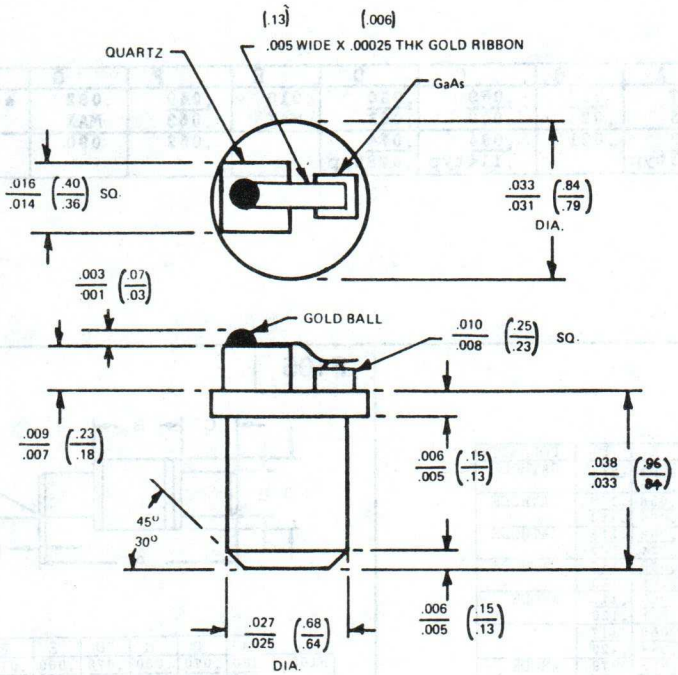

F114

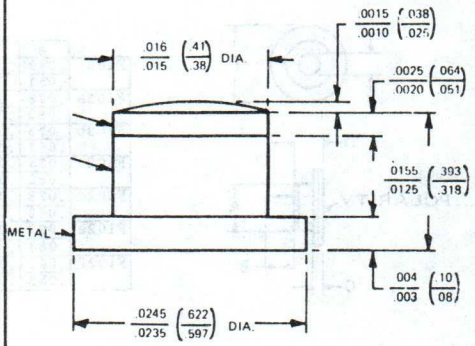

F115

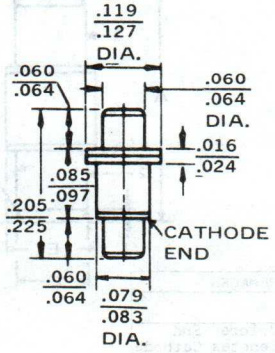

F118

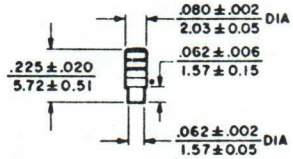

F120

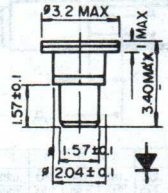

DIMENSIONS IN "MM"

12. OUTLINE DRAWINGS

F121

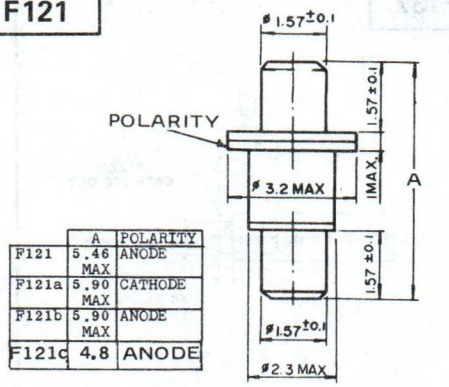

	A	POLARITY
F121	5.46 MAX	ANODE
F121a	5.90 MAX	CATHODE
F121b	5.90 MAX	ANODE
F121c	4.8	ANODE

DIMENSIONS IN "MM"

F126

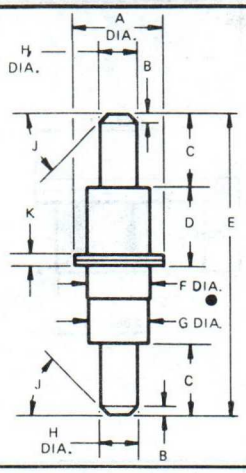

DIM.	INCHES MIN.	INCHES MAX.	MM MIN.	MM MAX.
A	0.228	0.232	5,79	5,89
B	0.010	0.030	0,25	0,76
C	0.183	0.187	4,65	4,75
D	0.165	0.180	4,19	4,57
E	0.766	0.792	19,46	20,12
F	--	0.165	--	4,19
G	0.157	0.163	3,99	4,14
H	0.092	0.094	2,34	2,39
J	10	45	10	45
K	--	0.030	--	0,76

C_D = 0.4 pF, L_D = 0.4 nH

F127

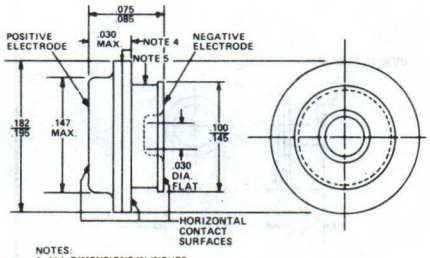

NOTES:
1. ALL DIMENSIONS IN INCHES.
2. DIMENSIONS ARE REFERENCES UNLESS TOLERANCED.
3. CONTACT SURFACES TINNED .0003.
4. WELD FLASH ALLOWED (THIS IS NOT A CONTACT SURFACE).
5. INSULATION – DO NOT APPLY CLAMPS.

F128

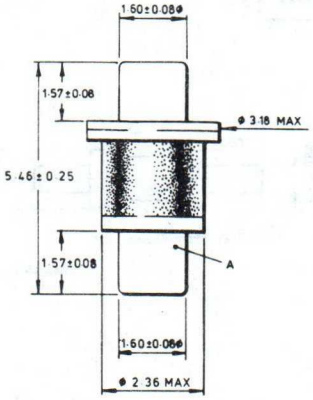

F129

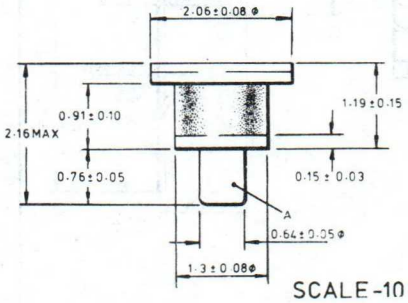

SCALE-10·1

F130

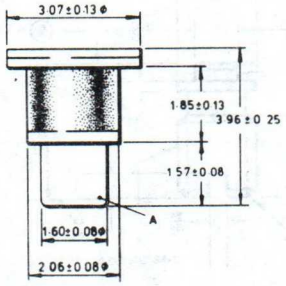

F131

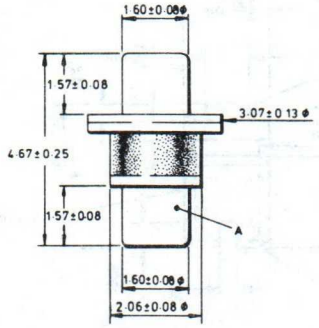

F132

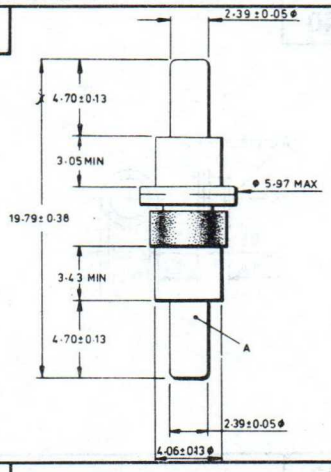

F133

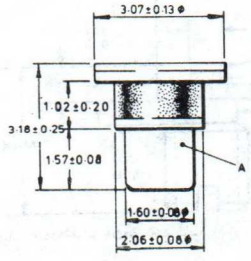

F134

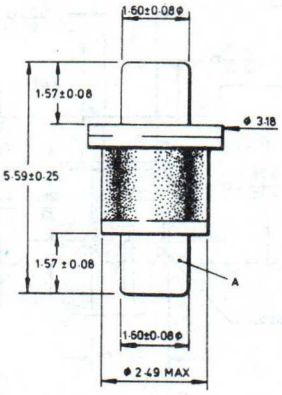

F165

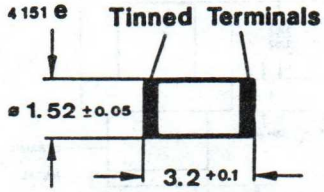

12. OUTLINE DRAWINGS

F135

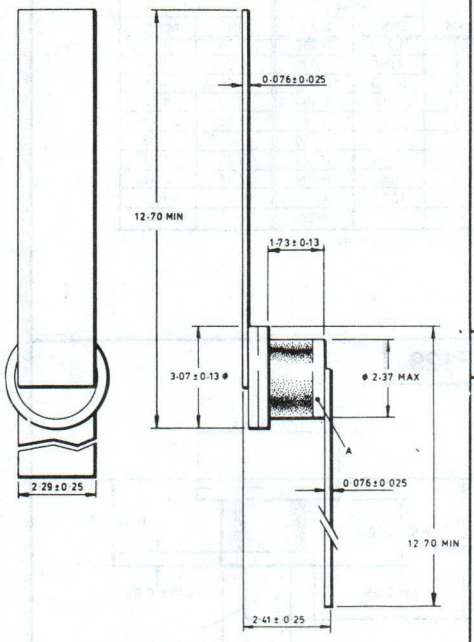

F136

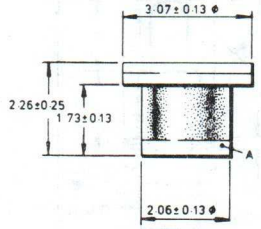

F137

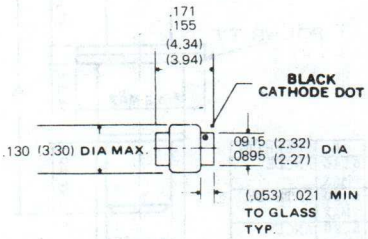

F138

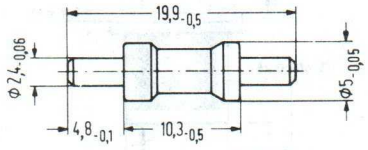

Maße in mm

F139

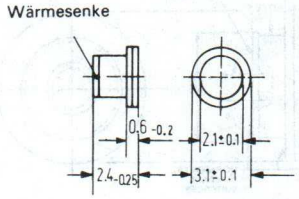

F140

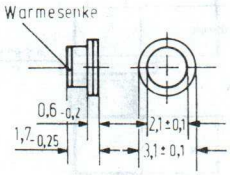

F141

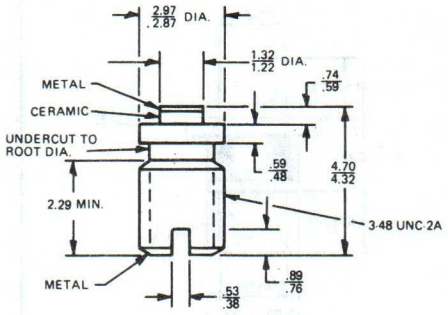

F142

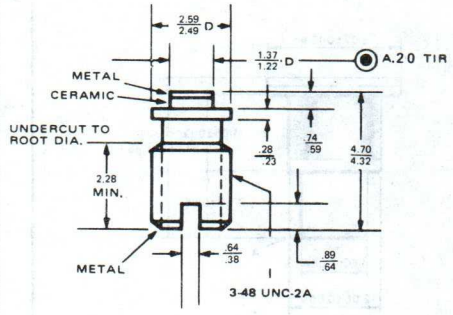

F143

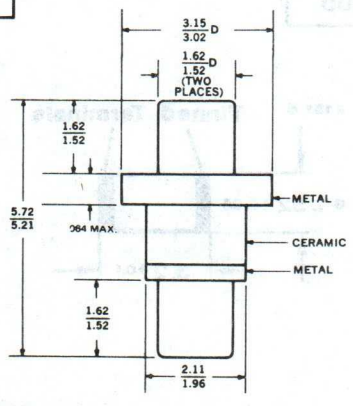

F144

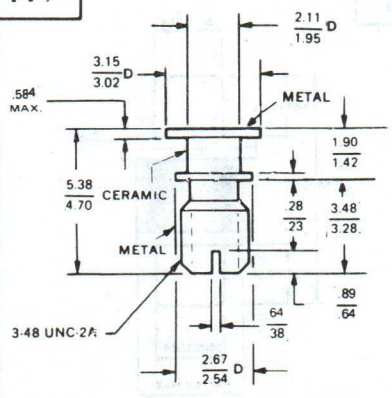

F145

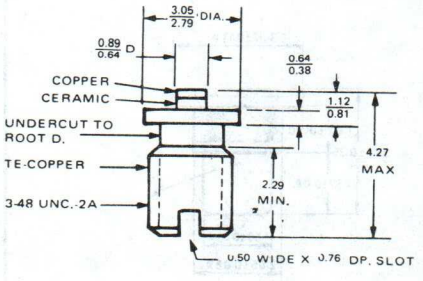

12. OUTLINE DRAWINGS

F146

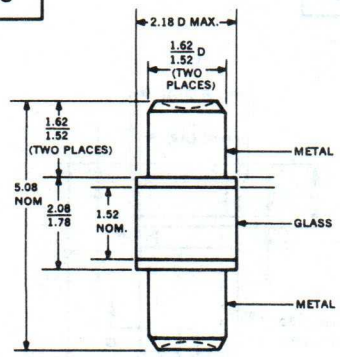

F147

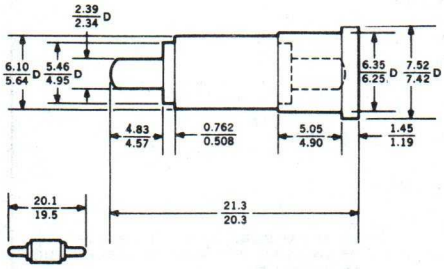

F148

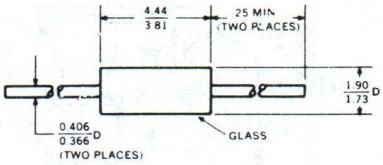

F149

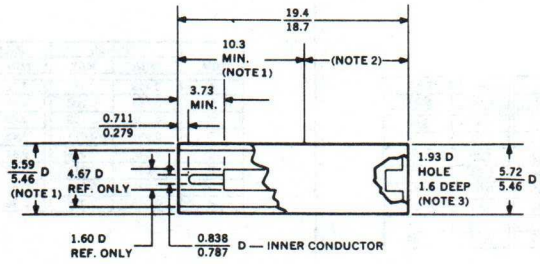

NOTES:
1. OUTSIDE D. 5.59/5.46 APPLIES ONLY TO 10.3 LENGTH AS SHOWN.
2. MARKING TO BE CONFINED TO THIS REGION.
3. OUTPUT CONNECTION AT THIS END.

F150

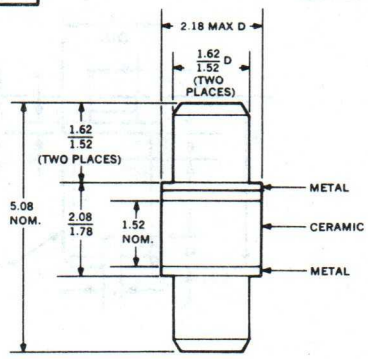

F151

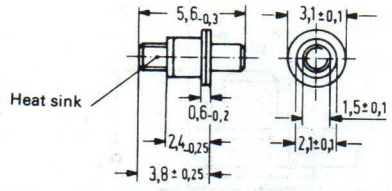

F152

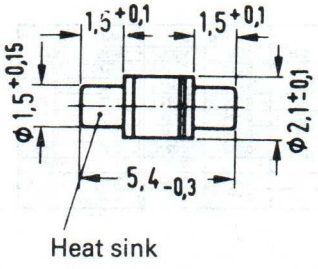

F153

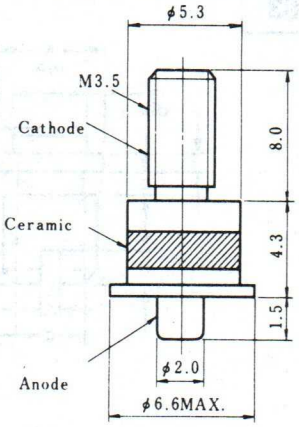

F154

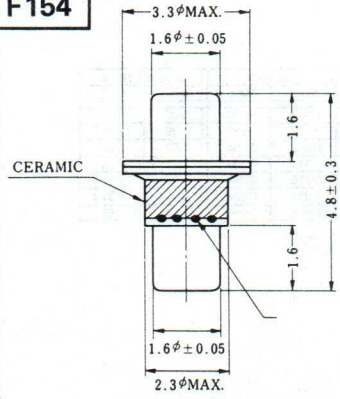

F155

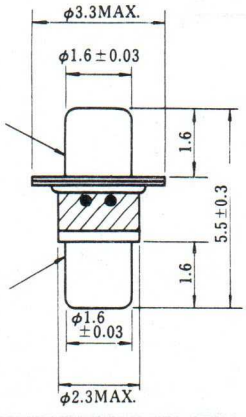

F156

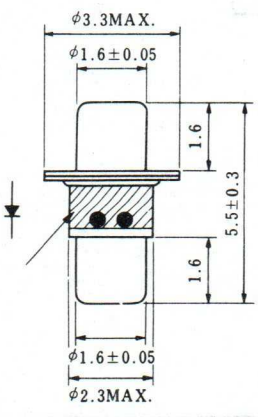

12. OUTLINE DRAWINGS

F160

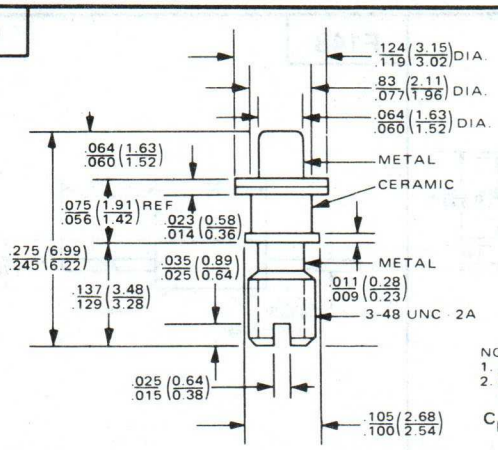

NOTES:
1. ALL METAL SURFACES GOLD PLATED
2. 3-48 TND AND .064/.060 DIA CONCENTRIC WITHIN .008 TIR

C_p=0.27$_p$F L_j=0.30nH

F161

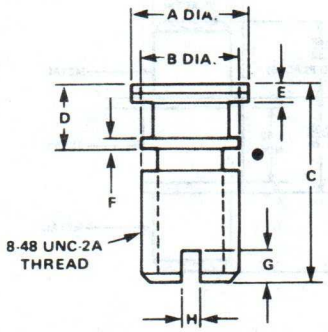

DIM.	INCHES		MILLIMETERS	
	MIN.	MAX.	MIN.	MAX.
A	0.119	0.127	3,02	3,23
B	0.188	0.208	4,78	5,28
C	0.098	0.102	2,49	2,59
D	0.057	0.071	1,45	1,80
E	0.016	0.024	0,41	0,61
F	0.009	0.011	0,23	0,28
G	0.025	0.045	0,64	1,14
H	0.015	0.025	0,38	0,64

F162

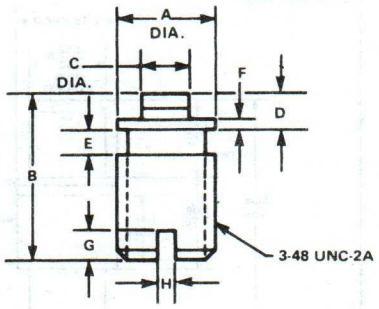

DIM.	INCHES		MILLIMETERS	
	MIN.	MAX.	MIN.	MAX.
A	0.113	0.118	2,87	3,00
B	0.159	0.179	4,04	4,55
C	0.048	0.052	1,22	1,32
D	0.033	0.044	0,84	1,12
E	0.025	0.035	0,64	0,89
F	0.018	0.022	0,46	0,56
G	0.035	0.045	0,89	1,14
H	0.015	0.025	0,38	0,64

F163

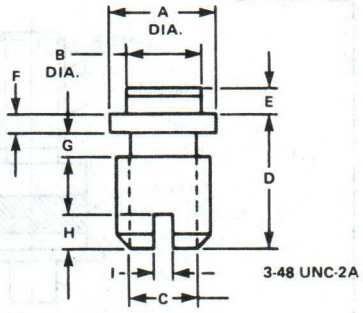

DIM.	INCHES		MILLIMETERS	
	MIN.	MAX.	MIN.	MAX.
A	0.113	0.118	2,87	3,00
B	0.076	0.084	1,93	2,13
C	0.068	0.072	1,73	1,83
D	0.138	0.146	3,51	3,71
E	0.026	0.034	0,66	0,86
F	0.018	0.022	0,46	0,56
G	— —	0.020	— —	0,51
H	0.035	0.045	0,89	0,114
I	0.015	0.025	0,38	0,64

F164

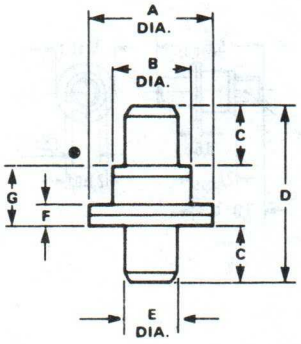

DIM.	INCHES		MILLIMETERS	
	MIN.	MAX.	MIN.	MAX.
A	0.119	0.127	3,02	3,23
B	0.077	0.083	1,96	2,11
C	0.060	0.064	1,52	1,63
D	0.174	0.194	4,42	4,93
E	0.060	0.062	1,52	1,57
F	0.016	0.024	0,41	0,61
G	0.055	0.065	1,40	1,65

C_p 0.30 pF Typical
L_S 0.40 nH Typical

12. OUTLINE DRAWINGS

F157

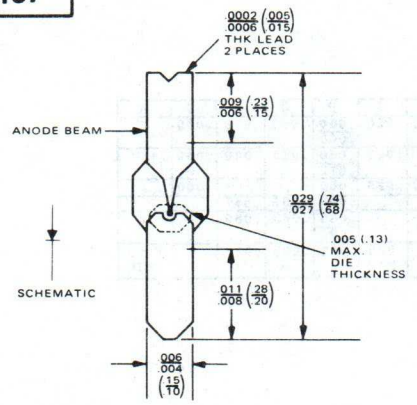

F158

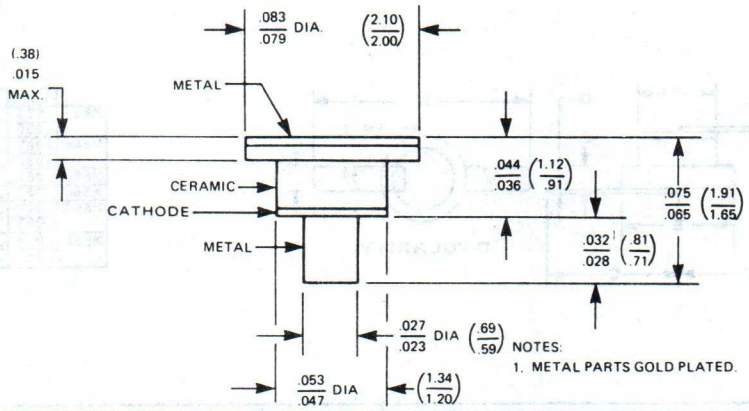

F159

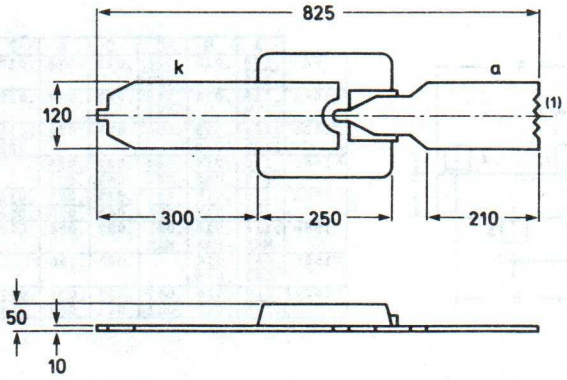

M12

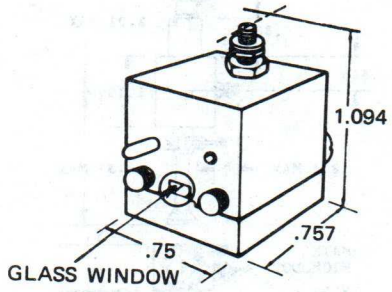

M15

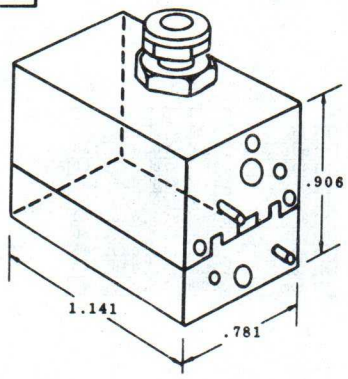

M17

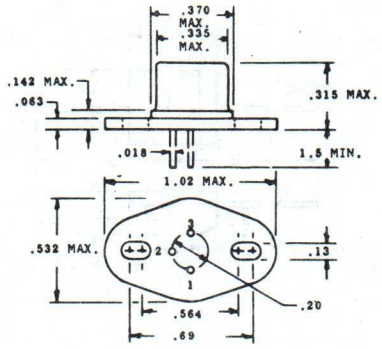

M27

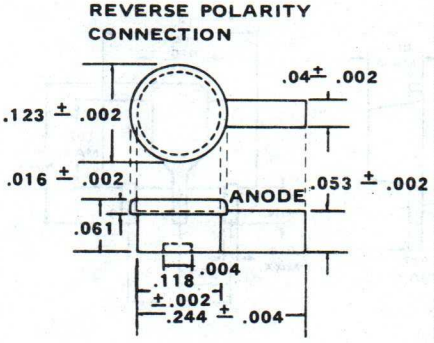

M83

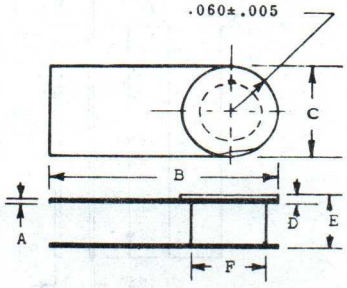

	A	B	C	D	E	F
M83	.003 / .007	.230 / .270	.115 / .130	.010 / .020	.055 / .075	.085 / .095
M83a	.003 / .007	.230 / .270	.115 / .130	.010 / .020	.035 / .055	.085 / .095

12. OUTLINE DRAWINGS

M86

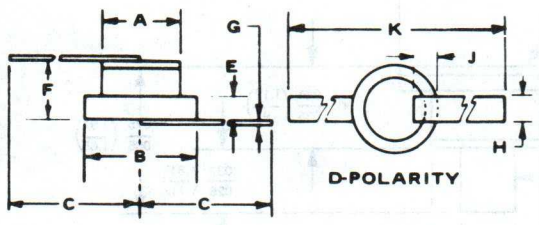

	A	B	C	D	E	F	G	H	J	K
M86	.075 .095	.119 .125	.500	ANODE	.020	.040 .060	.003	.050	.030	
M86a	.082 .088	.118 .122	.125	CATH.	.025	.060 .070	.003	.080	.060	
M86b	.081	.118	.125	ANODE	.025	.060			.060	
M86c	.750	.120				.094	.005	.047		
M86d	.077 .083	.117 .130	1.00	CATH.		.085 .095	.003	.080		
M86e	.077 .083	.117 .123	1.25 MIN	CATH.	.025 MAX	.089	.003	.080		2.50 MIN

M139

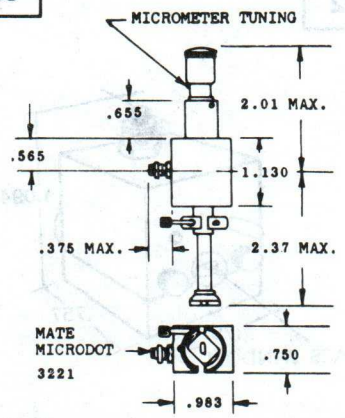

M156

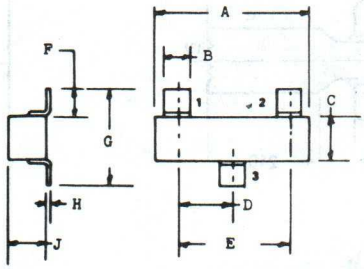

	A	B	C	D	E	F	G	H	J
M156	.106 .114	.015	.042 .051	.037	.074	.019	.082 .090	.002 .007	.031
M156a	.113 .118	.015	.048 .051	.037	.074	.019	.098 MAX	.003	.043
X156b	.106 .125	.013 .019	.059	.037	.074	.018 .029	.086 .118	.003 .011	.039 .051
M156c	.112 .118	.014 .016	.047 .051	.037 .041	.074 .082			.003 .004	.033 .047
M156d	.110 .120	.015 .017	.047 .055	.035 .045	.070 .090	.018 .024	.082 .100	.003 .005	.034 .047
M156e	.114 MAX	.016 MAX	.051 MAX	.037	.074	.019	.098 MAX	.003	.033 MAX
M156f	.085 .092	.014 .016		.025	.050		.106 .126	.005	.045 .058
M156g	.110 .118	.014 .017	.047 .051	.037 .041	.076 .080	.017 .023	.082 .098	.003 .004	.025 .033

M166

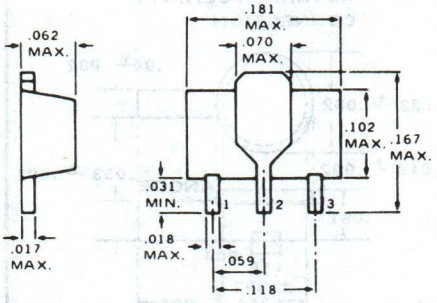

M190

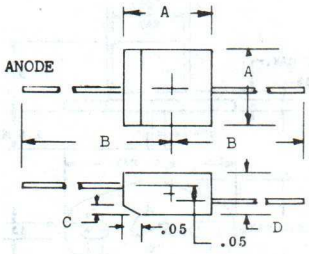

	A	B	C	D
M190a	.210	.870	.025	.160
M190b & c	.320	.870	.025	.160
M190d	.360	.870	.025	.160
M190e	.410	.870	.025	.160
M190f	.200	.870	.025	.160
M190g	.300	.870	.025	.160
M190h	.350	.870	.025	.160
M190j	.300	1.45	.030	.145
M190k	.350	1.45	.030	.145
M190m	.400	1.45	.030	.145

M214

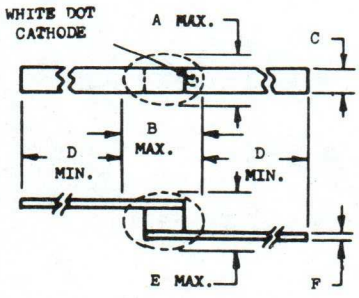

	A	B	C	D	E	F
M214	.060	.100	.020	.500	.060	.003
M214a	.100	.100	.040	.500	.025	.004
M214b	.063 MAX	.063 MAX	.025		.050 MAX	.003

M264

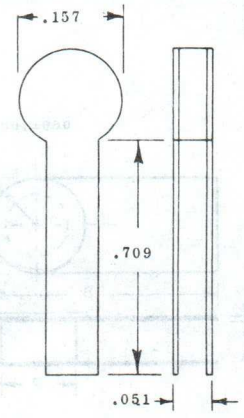

12. OUTLINE DRAWINGS

M277

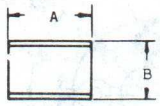

	A	B	WIDTH
M277	.030	.023	
M277a	.050	.020	
M277b	.053	.047	
M277c	.040	.025	
M277d	.035	.020	
M277e	.051 .055	.040 .050	
M277f	.022 .027	.019 .023	.022 .027
M277g	.083 MAX	.040	

M396

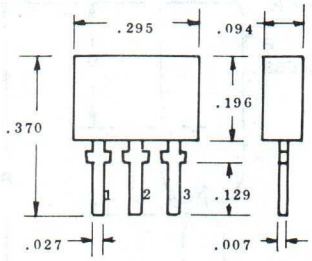

1	2	3
A1	C	A2

M491

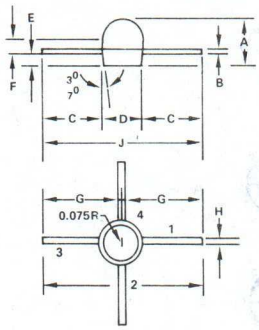

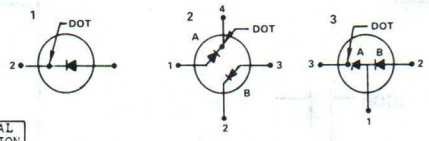

	A	B	C	D	E	F	G	H	J	REMARKS	TERMINAL CONNECTION
M491	.180 .210	.009 .011	.250 MIN	.250 MIN	.040 .050	.070 .080	.320 MIN	.013 .019	.640 MIN	OMIT LEAD 2,4	
M491a	.083 .100	.004 .006		.078 .092		.030 .040	.160	.010 .016	.320	OMIT LEAD 2,4	
M491b	.030 MAX	.003	.250	.100	.019 .021	.009 MAX	.300	.019 .021	.600	OMIT LEAD 2,4	1
M491c	.030 MAX	.003	.250	.100	.019 .021	.009 MAX	.300	.019 .021	.600	OMIT LEAD 4	2
M491d	.030 MAX	.003	.250	.100	.019 .021	.009 MAX	.300	.019 .021	.600		3
M491e	.030 MAX	.003	.250	.100	.019 .021	.009	.300	.019 .021	.600		4
M491f	.030 MAX	.003	.250	.100	.019 .021	.009	.300	.019 .021	.600		5
M491g	.050 MAX	.003 .005	.090 .110	.090 .110				.018 .022	.270 .330		

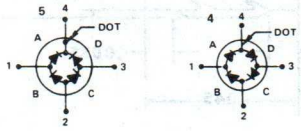

M500

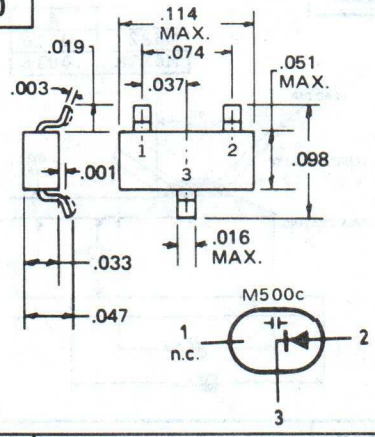

M501

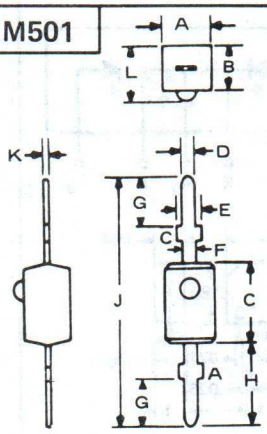

	A	B	C	D	E	F	G	H	J	K	L
M501	.098	.095	.157	.030 MAX	.043 MIN		.098		.492	.008	.114 MAX
M501a	.118 MAX	.106 MAX	.177 MAX	.026	.037	.030	.090	.157 MIN	.491	.010	

M524

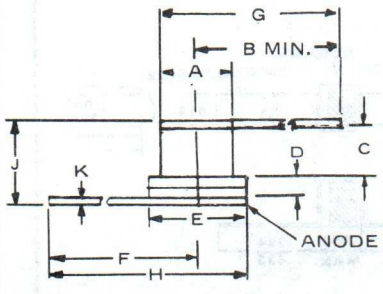

	A	B	C	D	E	F	G	H	J	K
M524	.081 .091	.340 MIN	.600 .700	.025 MAX	.118 .122	.340 MIN				
M524a	.075 .085		.072 MAX	.025 MAX	.117 .123		1.25 MAX	1.25 MAX		
M524b	.077 .083	.500 MIN	.060 .070	.027 MAX	.118 .122	.500 MIN				
M524c	.079 .085	.340 MIN			.120 .125				.125 .135	.004 .006

M526

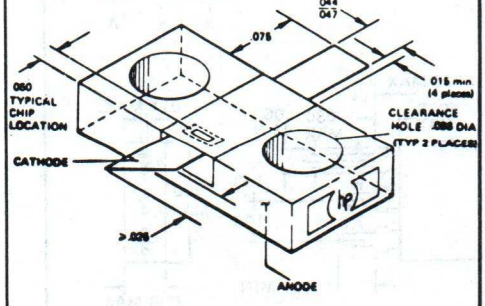

12. OUTLINE DRAWINGS

M577

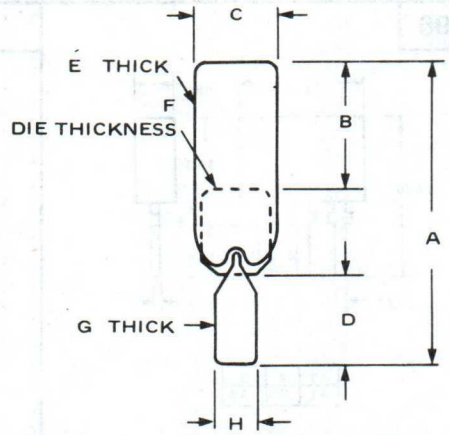

	A	B	C	D	E	F	G	H	POLARITY
M577	.036	.015	.010	.008 MIN	.005	.005 MAX	.005	.005	REVERSED
M577a	.035 .037	.015 MIN	.009 .011	.009 MIN	.0002 .0006	.005 MAX	.0002 .0006	.004 .006	AS SHOWN
M577b	.035 .037	.015 MIN	.009 .011	.009 MIN	.0002 .0006	.005 MAX	.0002 .0006	.004 .006	REVERSED

M578

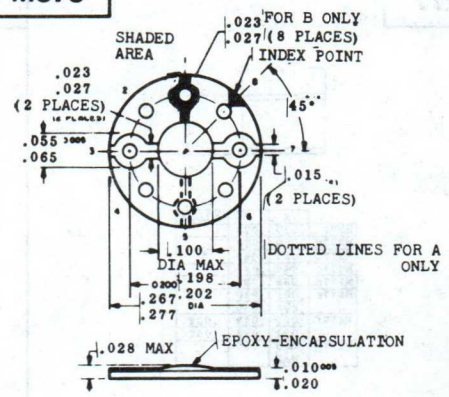

M579

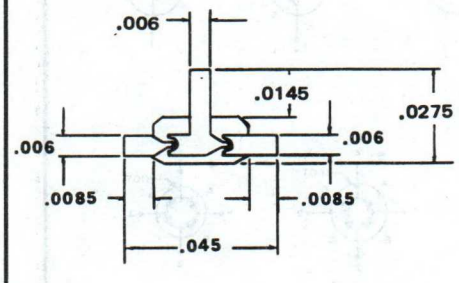

M657

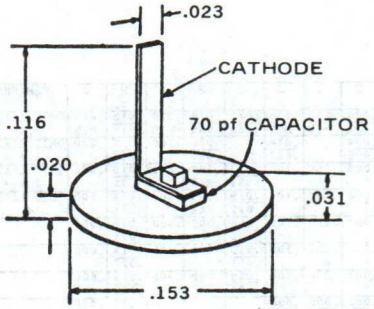

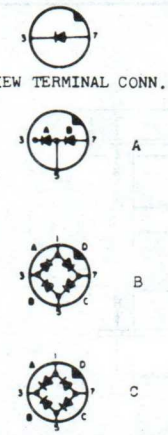

M658

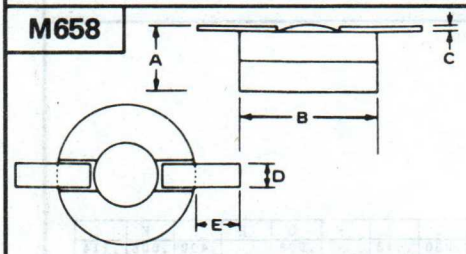

	A	B	C	D	E	BASE POLARITY
M658	.056 MAX	.097 .100	.003 .004	.017 .023	.040	
M658a	.047 MAX	.098 .102	.002 .004	.016 .024	.080 MIN	CATHODE
M658b	.047 MAX	.098 .102	.002 .004	.016 .024	.080 MIN	ANODE
M658c	.047 MAX	.098 .102	.002 .004	.016 .024	.080 MIN	

M675

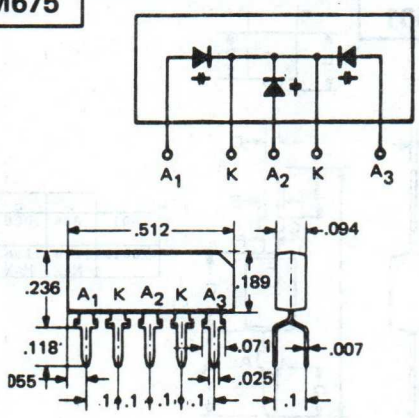

M682

	A
M682	.0010
M682a	.0015

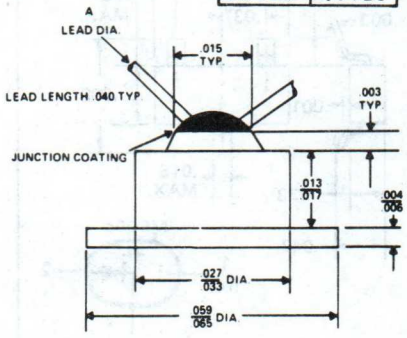

M689

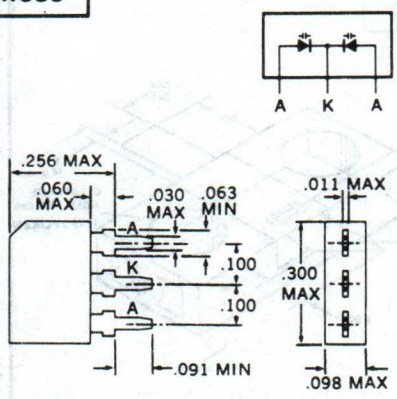

M696

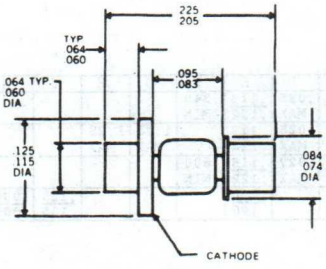

M709

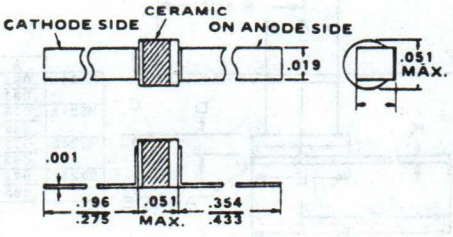

12. OUTLINE DRAWINGS

M723

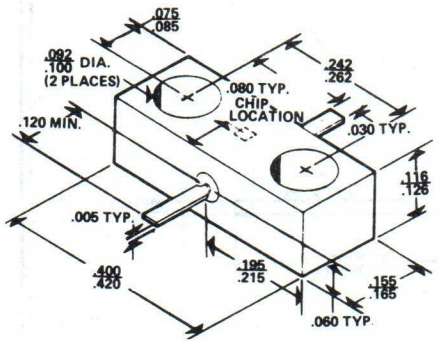

M750

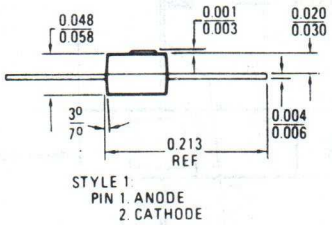

STYLE 1
PIN 1. ANODE
2. CATHODE

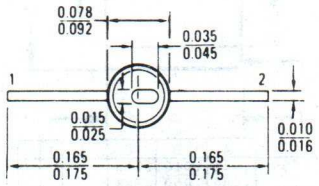

M764

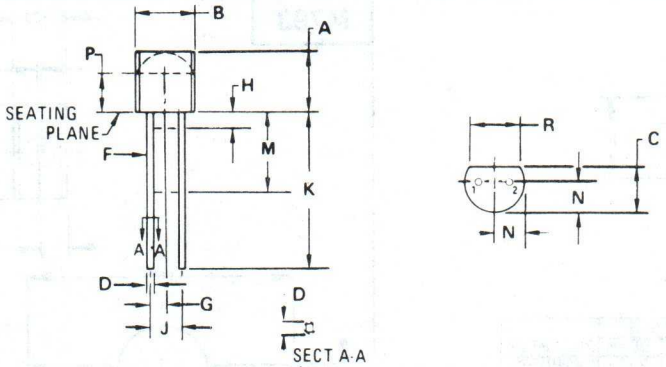

	A	B	C	D	F	G	H	J	K	M	N	P	R
M764	.170 .210	.178 .205	.125 .165	.014 .021	.016 .019	.050 BSC	.050 MAX	.100 BSC	.500 MIN	.250 MIN	.080 .105	.115	.135
M764a	.175 .185			.016 .019				.090 .110	.500 MIN				

M787

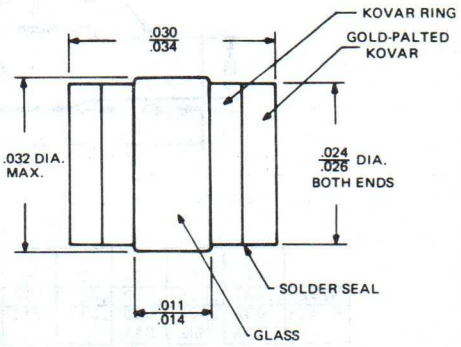

M785

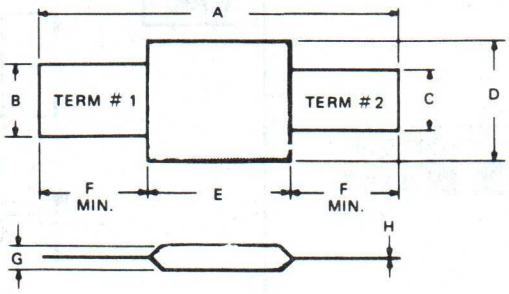

	A	B	C	D	E	F	G	H	TERM #1	TERM #2
M785	.030	.005 .008	.003 .005	.008 .012	.010 .014	.005 MIN	.001 .003	.0001 .0003	CATHODE	ANODE
M785a	.024 .030	.003 .005	.0045 .0065	.008 .013	.008 .012	.005 MIN	.001 .003	.0001 .0003	ANODE	CATHODE
M785b	.028	.001 .003	.006 .008	.008 .012	.013 .017	.005 MIN	.001 .003	.0001 .0003	ANODE	CATHODE

M787a

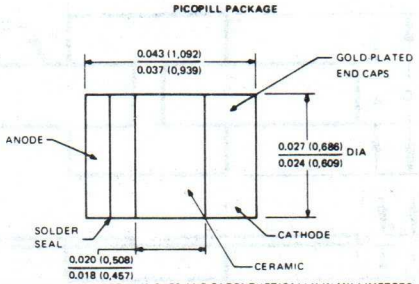

ALL DIMENSIONS ARE IN INCHES AND PARENTHETICALLY IN MILLIMETERS

M788

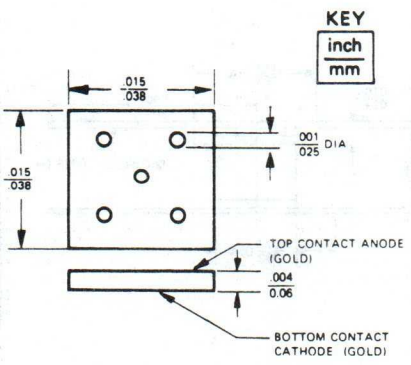

M789

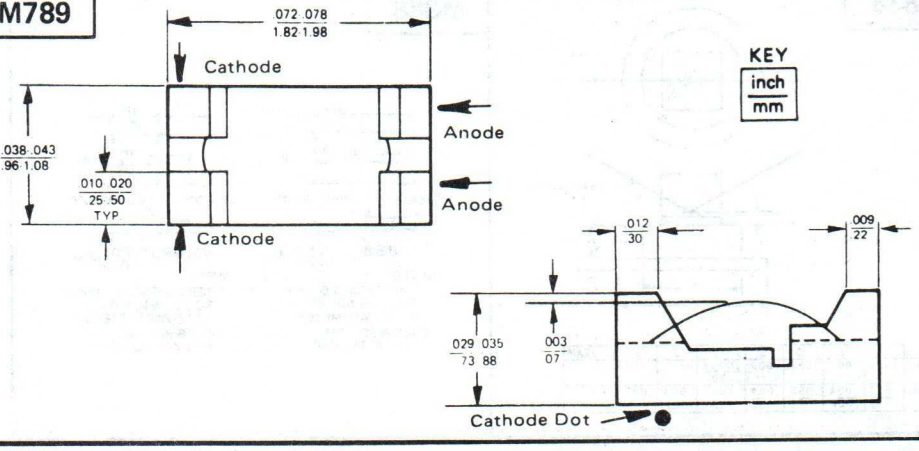

12. OUTLINE DRAWINGS

M790

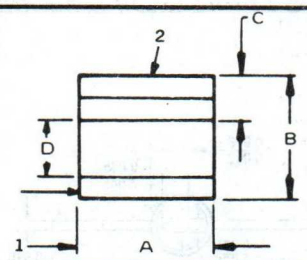

	A	B	C	L	1	2
M790	.051 / .055	.040 / .050	.015 MAX			
M790a	.024 / .027	.037 / .040		.018 / .020		
M790b	.051 / .055	.040 / .050				
M790c	.048 / .055	.040 / .050			C	A
M790d	.048 / .055	.040 / .050			A	C

M791

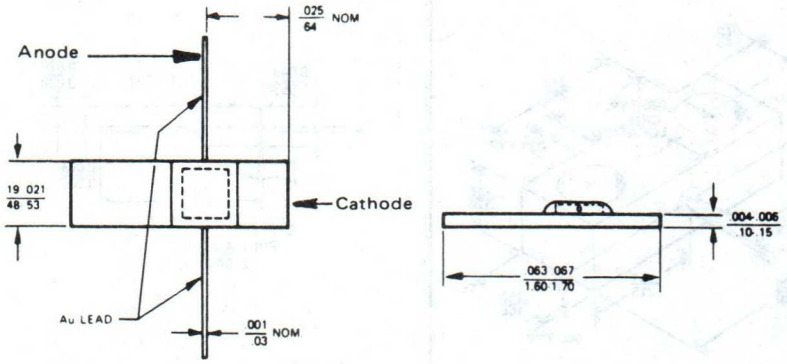

M792

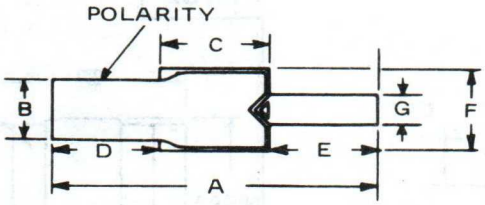

	A	B	C	D	E	F	G	THICKNESS CHIP	THICKNESS BEAM	POLARITY
M792	.030	.006	.010	.010	.010	.008	.003	.004	.0002	CATHODE
M792a	.035 MAX	.007 MAX	.013 MAX	.011	.011		.005 MAX		.0002 / .0003	CATHODE

M793

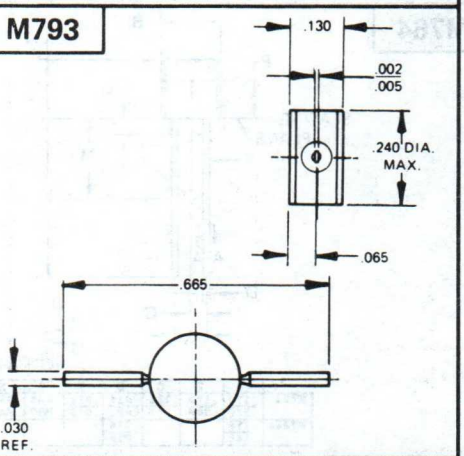

M794

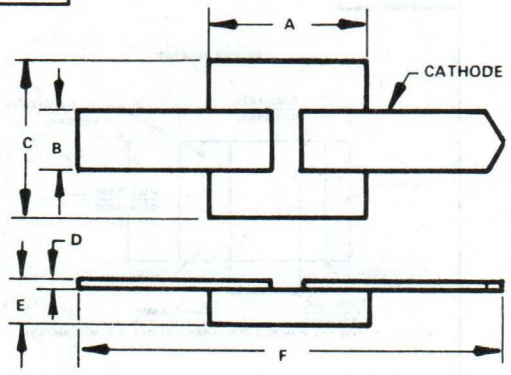

	A	B	C	D	E	P
M794	.007 / .011	.004 / .005	.007 / .011	.0004 / .0006	.002 / .004	.030 / .034
M794a	.007 / .009	.003 / .004	.006 / .008	.0004 / .0006	.001 / .002	.026 / .029

M796

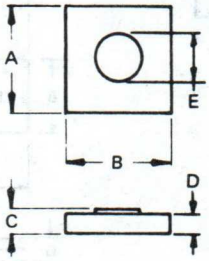

	A	B	C	D	E
M796	.020 / .024	.020 / .024	.003 / .006		
M796a	.020 / .030	.020 / .030		.005	.002 / .007
M796b	.020 / .030	.020 / .030		.005	.012 / .015

M838

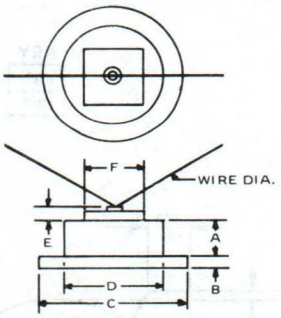

	A	B	C	D	E	F	WIRE DIAM
M838	.015	.005	.064	.030	.0007 / .020		.0025
M838a	.013 / .017	.004 / .006	.055 / .065	.027 / .033	.004 TYP	.020 TYP	.001

M888

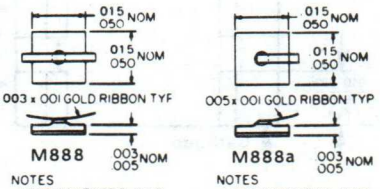

NOTES
1 TOP CONTACT & CHIP SIZE DEPENDS ON DIODE PARAMETERS
2 TOP & BOTTOM CONTACTS GOLD

NOTES
1 TOP CONTACT & CHIP SIZE DEPENDS ON DIODE PARAMETERS
2 TOP & BOTTOM CONTACTS GOLD

M892

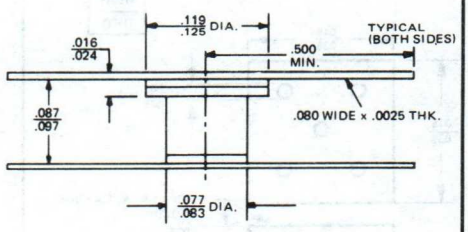

12. OUTLINE DRAWINGS

M893

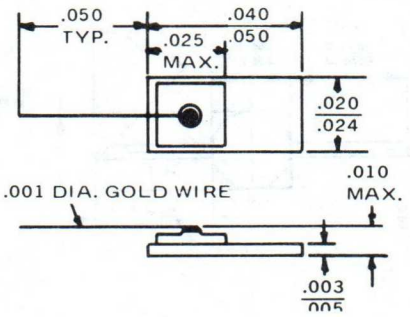

M896

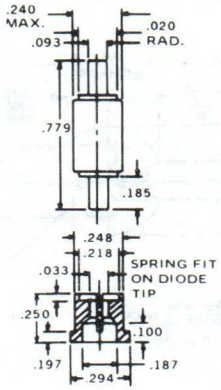

M897

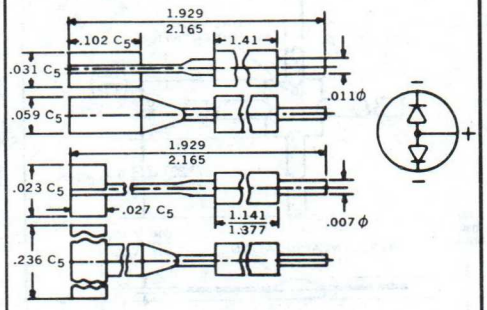

M898

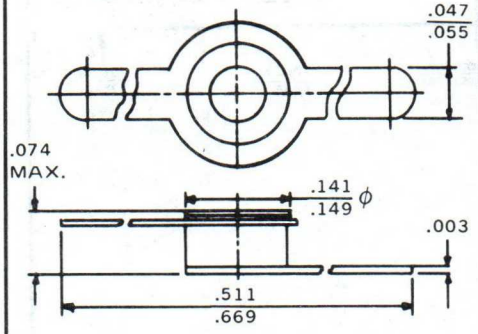

M899

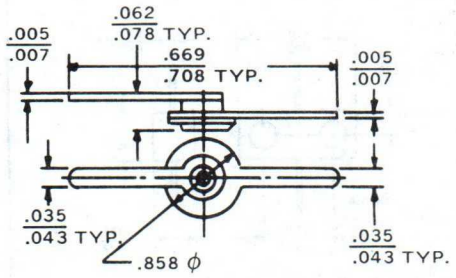

M905

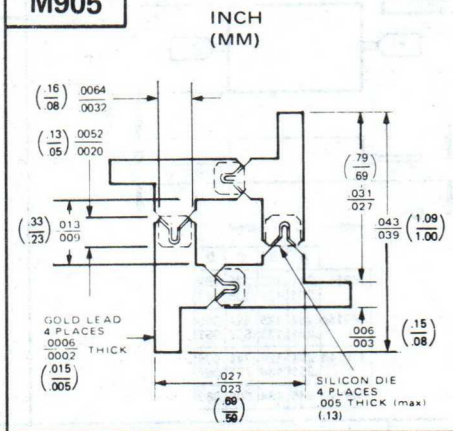

M906

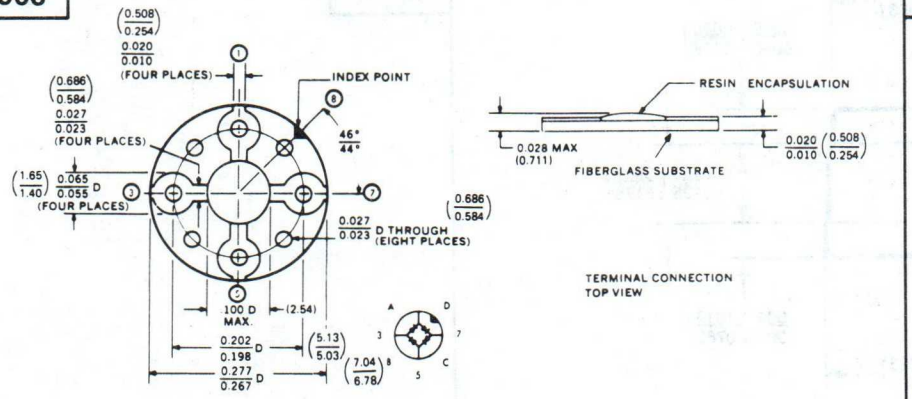

M907

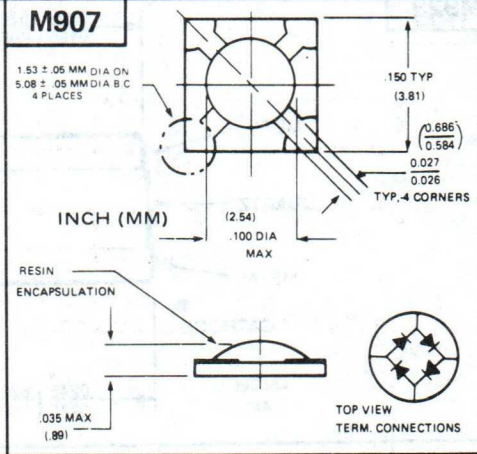

M908

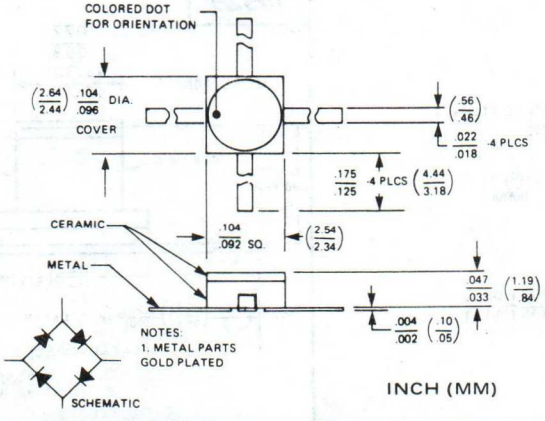

M909

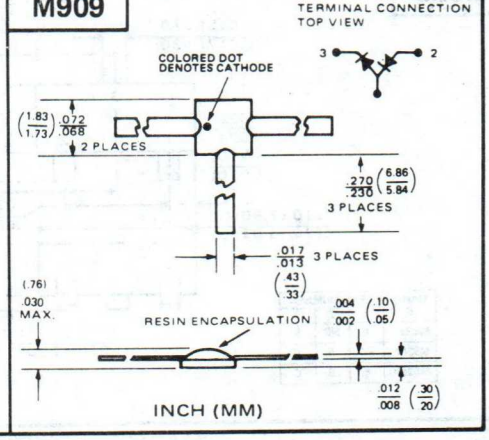

12. OUTLINE DRAWINGS

M910

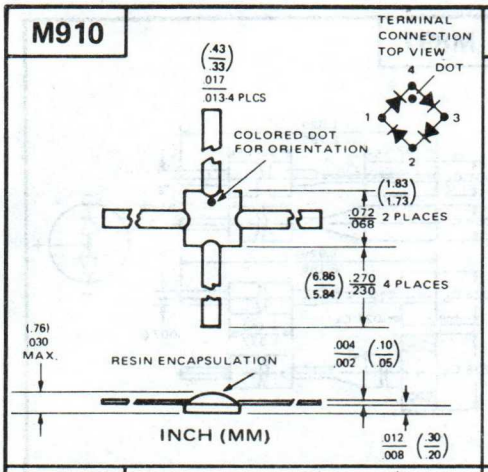

M912

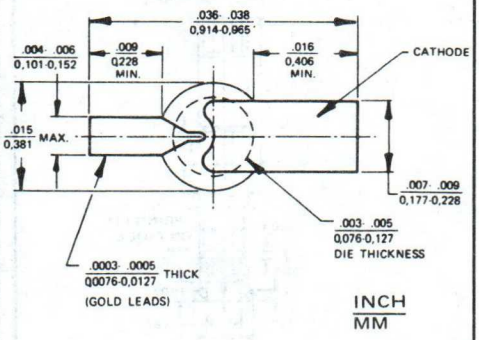

M913

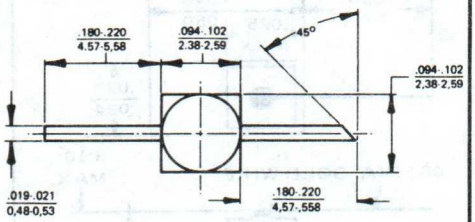

M914

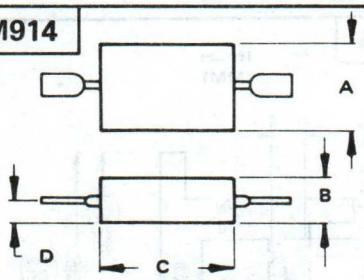

	A	B	C	D
M914	.241 .251	.125 .135	.325 .335	.059 .067
M914a	.241 .251	.125 .135	.527 .537	.059 .067
M914b	.241 .251	.126 .134	.745 .755	.059 .067
M914c	.245	.134	.600	.063

M918

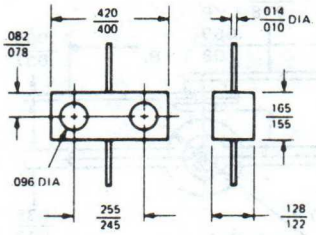

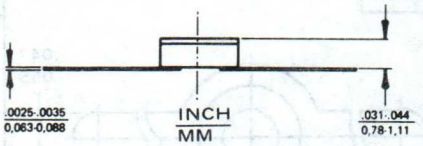

M923

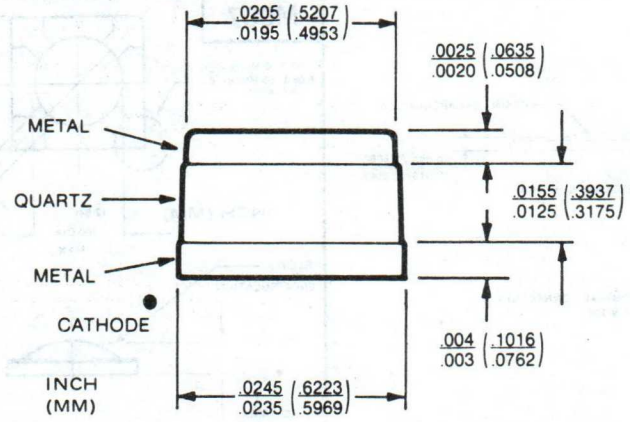

M928

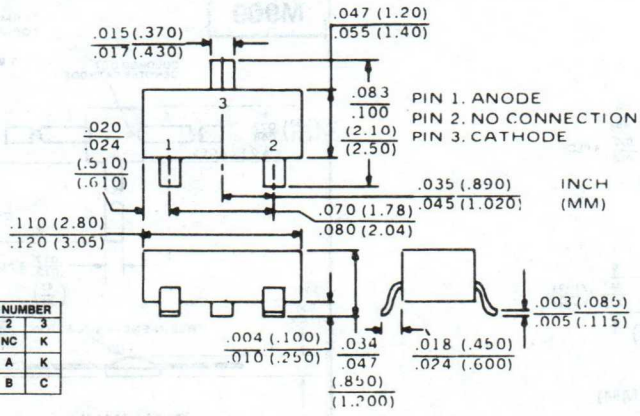

Drwng #	LEAD NUMBER 1	2	3
M928	A	NC	K
M928a	NC	A	K
M928b	E	B	C

M929

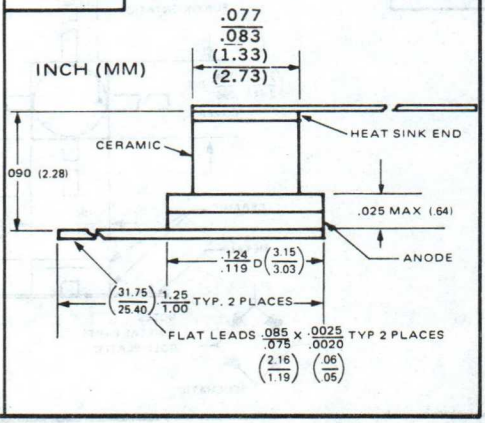

12. OUTLINE DRAWINGS

M934

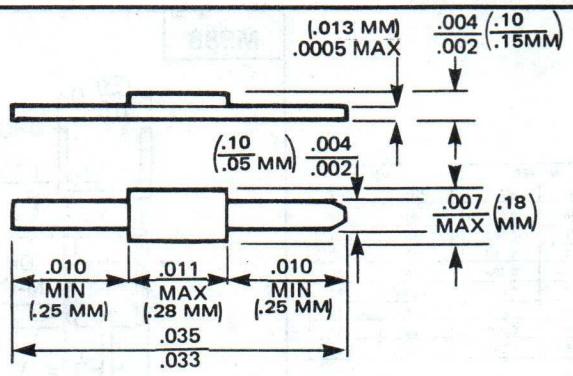

Note: Millimeters in parentheses.

Cp = .035 pF Lp = .08 nH

M951

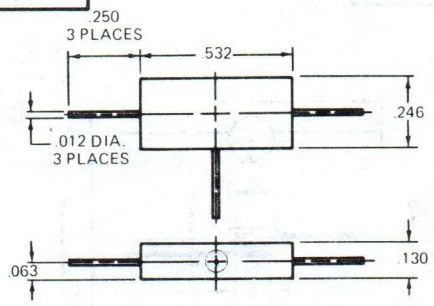

	A	B	C	D	E	F
M951	.532	.246	.250	.012	.130	.063
M951a	.330	.246	.100		.131	.063

M955

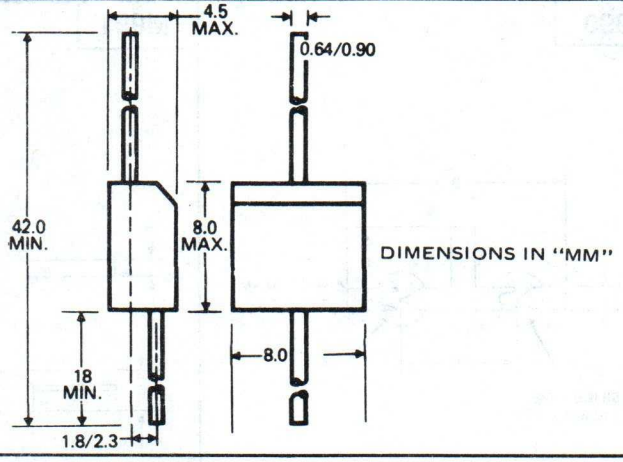

M956

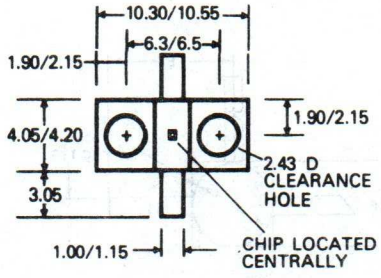

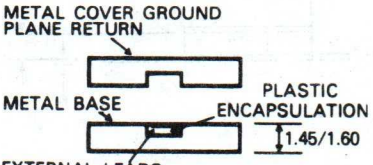

	HEAT SINK POLARITY
M956	Cathode
M956a	Anode

M981

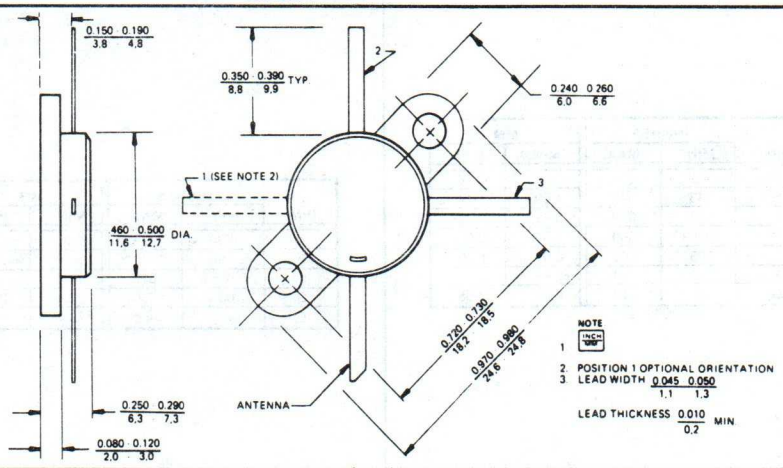

M982

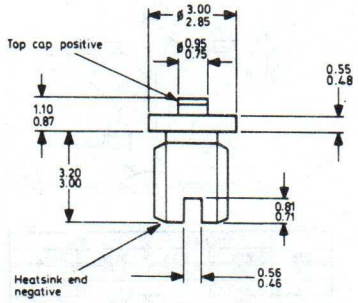

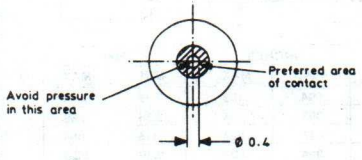

M984

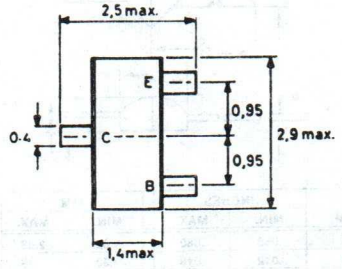

12. OUTLINE DRAWINGS

M987

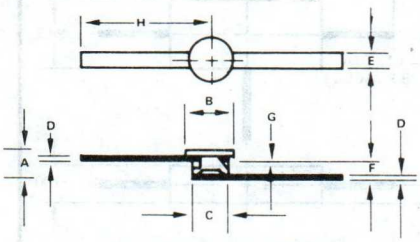

TYPICAL
Cp = 15 pF
Ls = 17 pH

DIM.	INCHES MIN.	INCHES MAX.	MM MIN.	MM MAX.
A	0.036	0.022	.91	1.12
B	0.077	0.083	.96	2.11
C	0.052	0.058	.32	1.47
D	0.004	0.006	.10	.15
E	0.027	0.033	.69	.84
F	0.026	0.030	.66	.76
G	0.010	0.020	.25	.51
H	0.225	0.240	5.72	6.10

M988

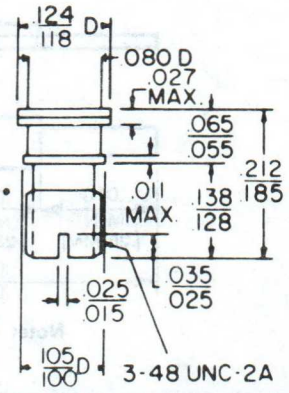

M989

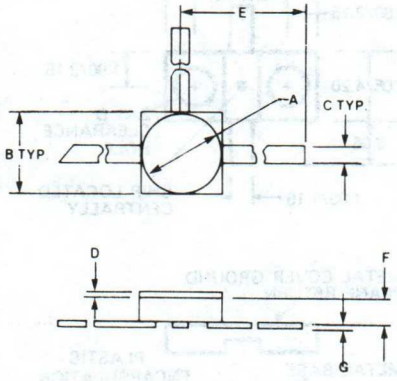

DIM.	INCHES MIN.	INCHES MAX.	MM MIN.	MM MAX.
A	094	102	2.39	2.59
B	092	106	2.34	2.69
C	017	023	0.43	0.58
D	004	008	0.10	0.20
E	200	–	5.08	–
F	025	035	0.64	0.89
G	003	006	0.08	0.15

M990

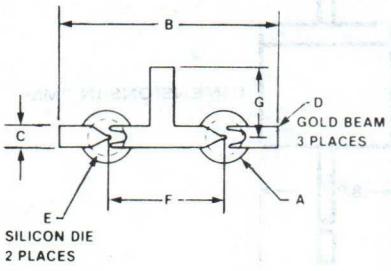

DIM.	INCHES MIN.	INCHES MAX.	MM MIN.	MM MAX.
A	– –	015	– –	0.38
B	043	045	1.09	1.14
C	007	009	0.18	0.23
D	0003	0005	0.008	0.013
E	003	005	0.08	0.13
F	019	021	0.48	0.53
G	021	023	0.53	0.58

M991

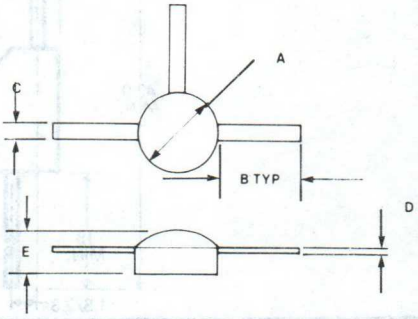

DIM.	INCHES MIN.	INCHES MAX.	MM MIN.	MM MAX.
A	090	110	2.29	2.79
B	090	110	2.29	2.79
C	018	022	0.46	0.56
D	003	006	0.08	0.15
E	– –	050		1.27

M992

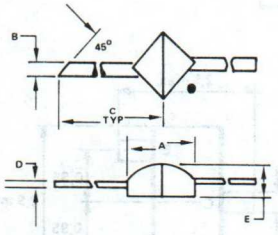

DIM.	INCHES MIN.	INCHES MAX.	MM MIN.	MM MAX.
A	.060	.080	1.52	2.03
B	.012	.018	.30	.46
C	.150	.180	3.81	4.57
D	.003	.005	.08	.13
E	–	.030	–	.76

M993

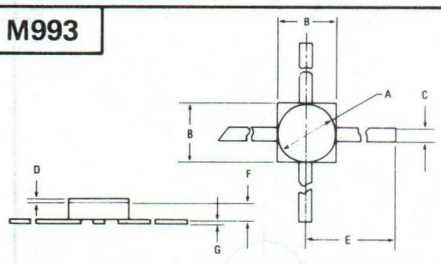

DIM.	INCHES MIN.	INCHES MAX.	MM MIN.	MM MAX.
A	.094	.102	2.39	2.59
B	.092	.106	2.34	2.69
C	.017	.023	.043	.058
D	.004	.008	0.10	0.20
E	.200	–	5.08	–
F	.025	.035	0.64	0.89
G	.003	.006	0.08	0.15

M994

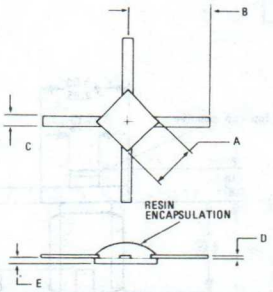

DIM.	INCHES MIN.	INCHES MAX.	MM MIN.	MM MAX.
A	045	055	1.14	1.40
B	150		3.81	
C	012	018	0.30	0.46
D	003	005	0.07	0.13
E		014		0.36

12. OUTLINE DRAWINGS

M995

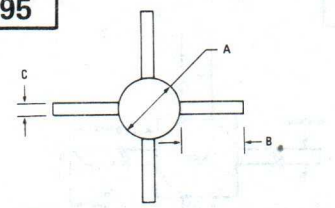

DIM.	INCHES MIN.	INCHES MAX.	MM MIN.	MM MAX.
A	.090	.110	2.29	2.79
B	.090	.110	2.29	2.79
C	.018	.022	0.46	0.56
D	.003	.006	0.08	0.15
E		.050		1.27

M996

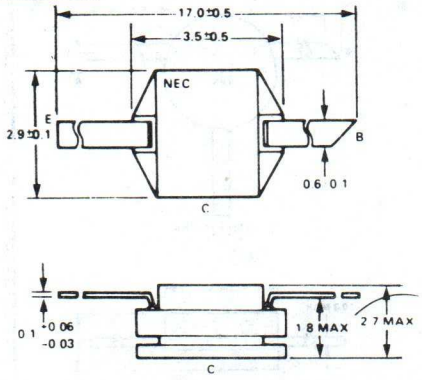

M997

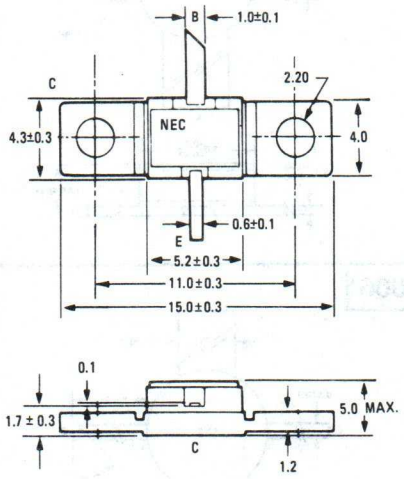

M998

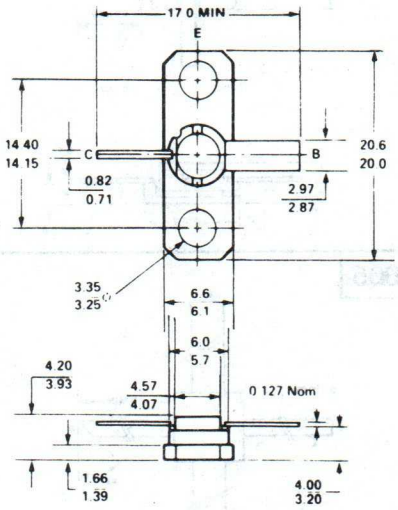

M999

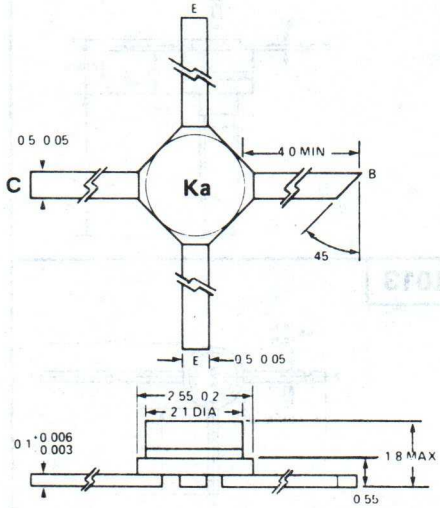

M1000

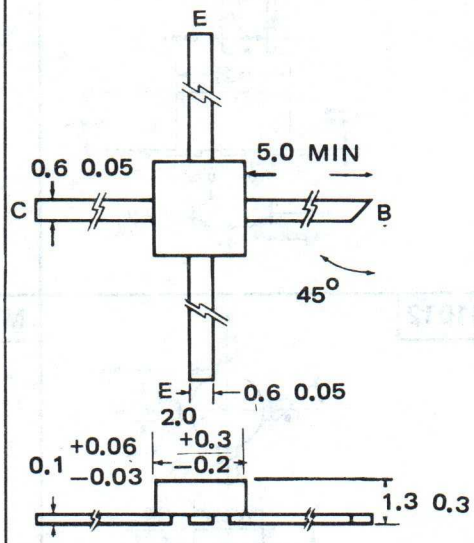

M1001

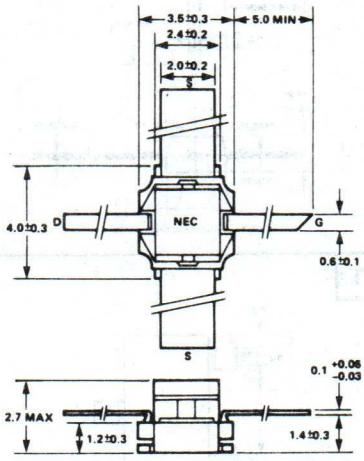

12. OUTLINE DRAWINGS

M1002

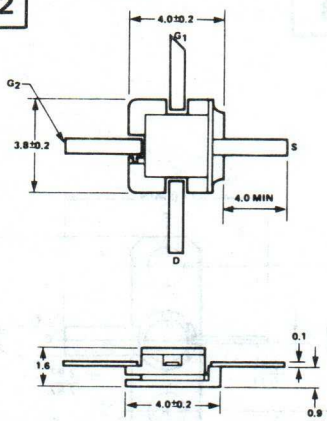

M1003

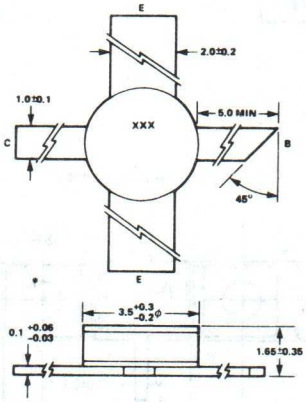

M1004

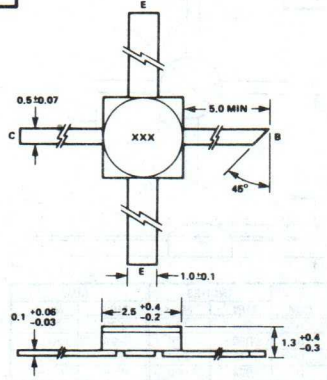

M1005

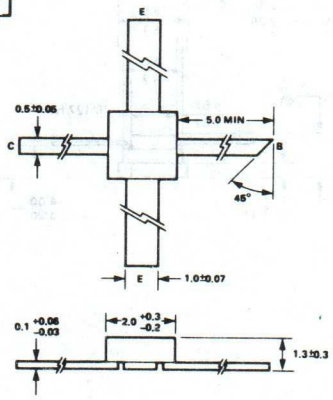

M1006

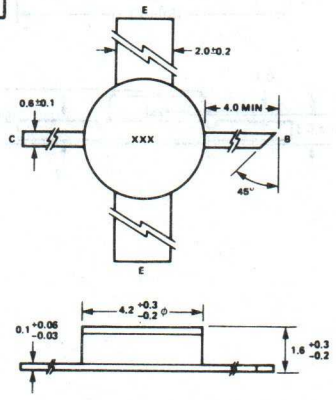

M1007

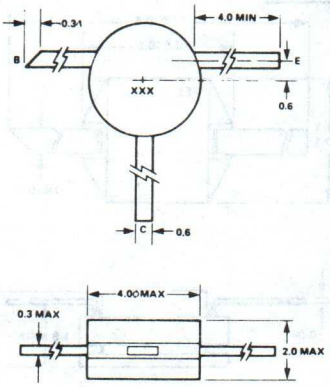

M1008

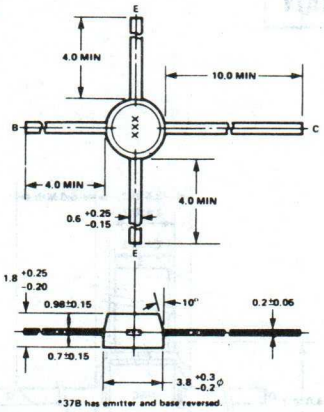

M1009

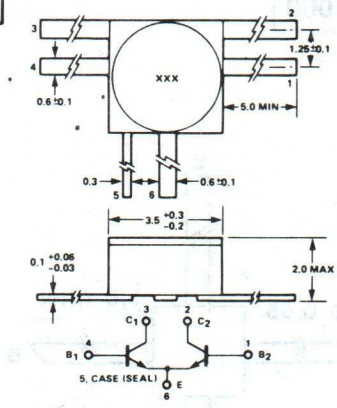

M1010

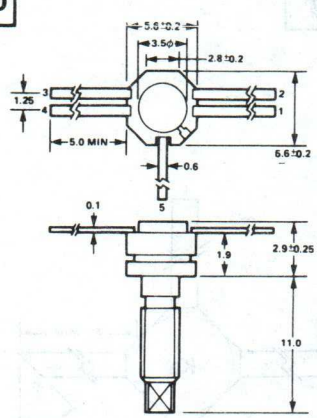

M1011

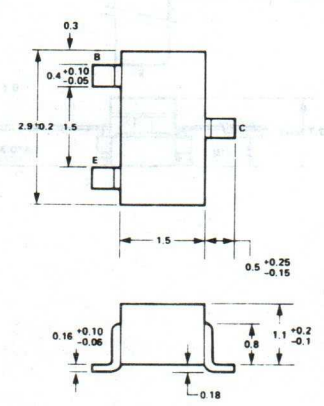

M1012

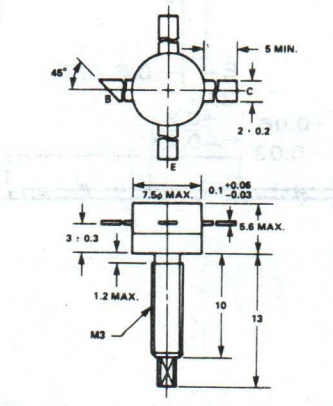

M1013

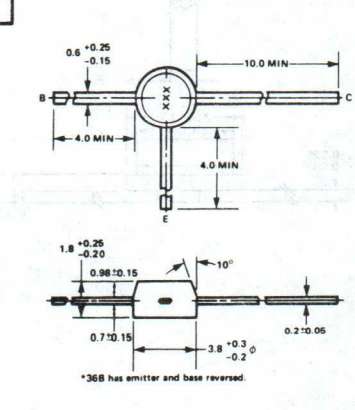

12. OUTLINE DRAWINGS

M1014

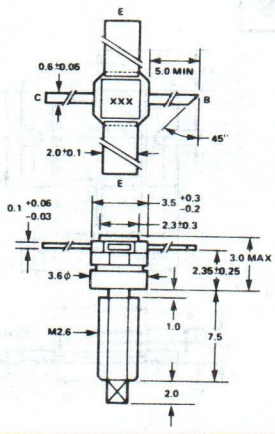

M1015

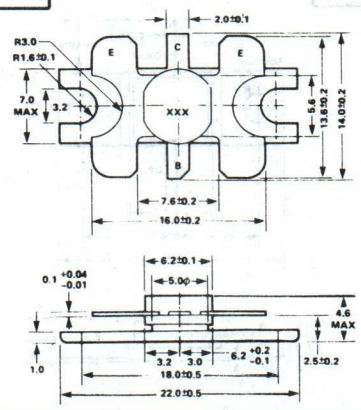

M1016

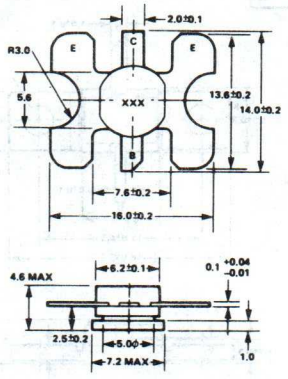

M1017

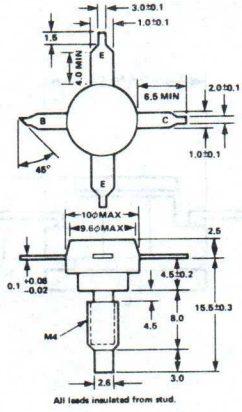

M1018

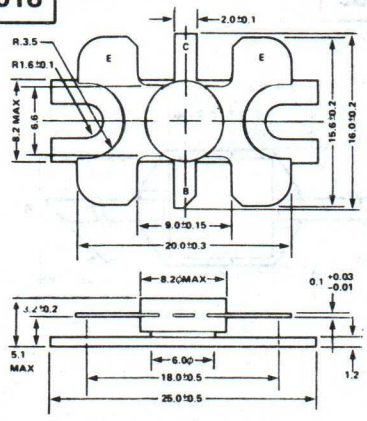

M1019

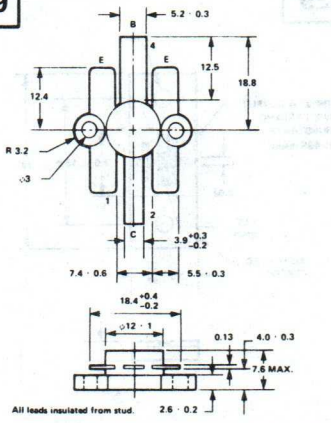

M1020

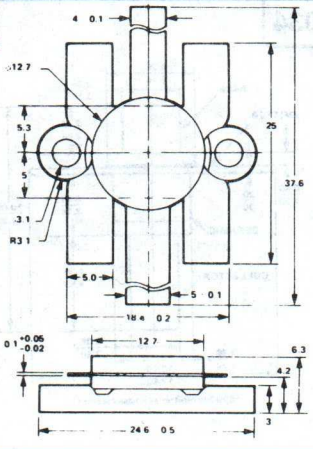

M1021

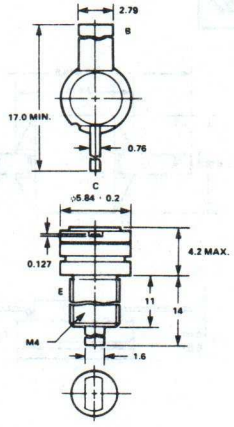

M1022

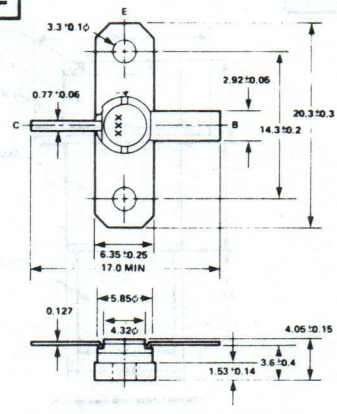

M1023

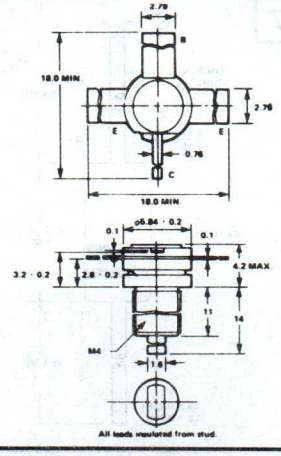

M1024

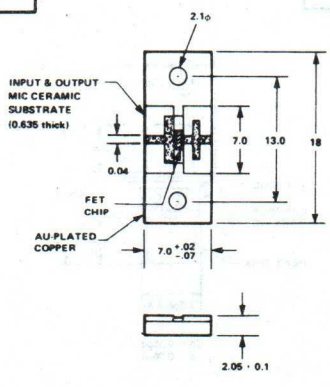

M1025

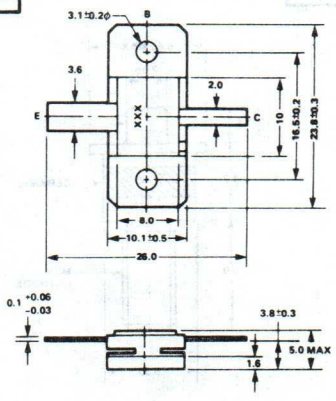

12. OUTLINE DRAWINGS

M1026

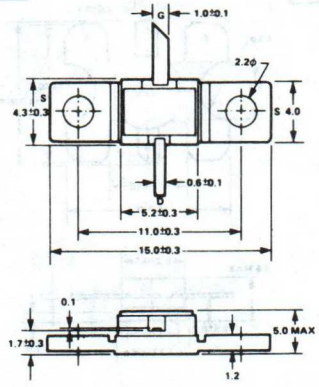

M1027

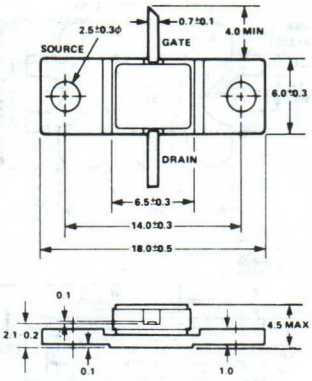

M1028

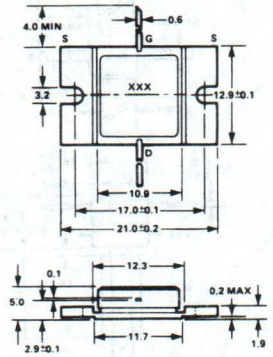

M1029

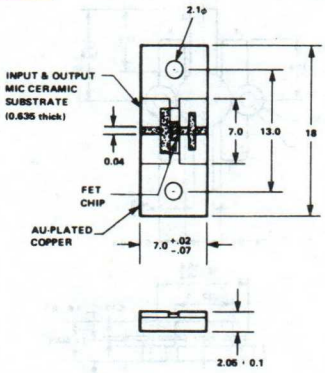

M1030

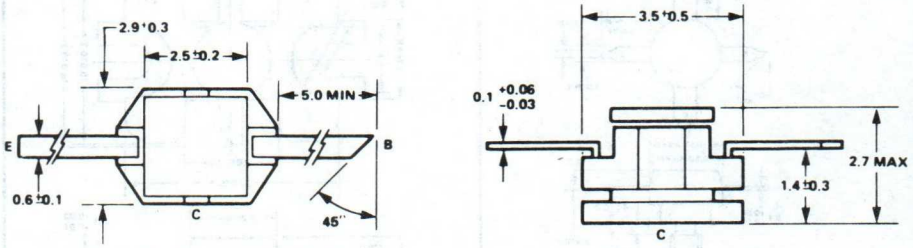

M1031

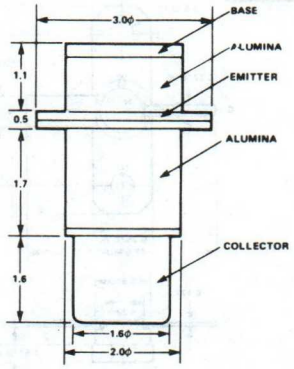

*608 has emitter and base reversed.

M1032

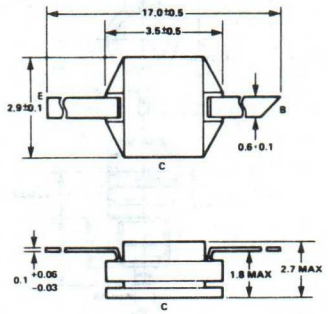

M1034

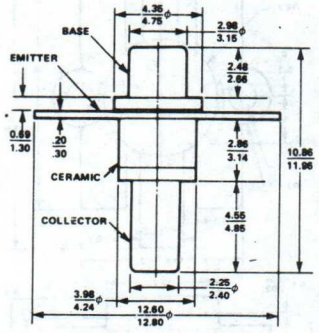

*628 has emitter and base reversed.

M1035

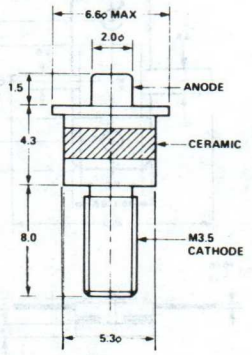

M1036

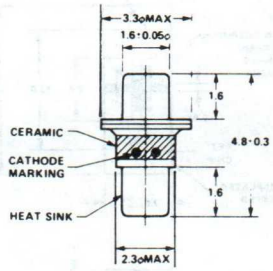

Cp = 0.35pF
Lp = 0.06pF

M1037

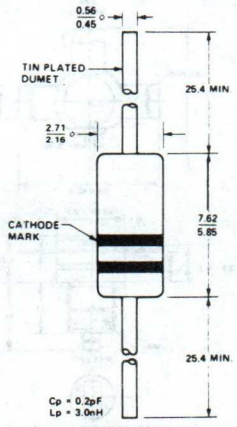

Cp = 0.2pF
Lp = 3.0nH

12. OUTLINE DRAWINGS

M1038

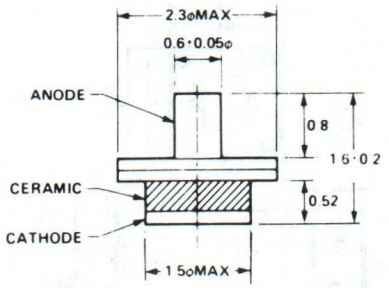

Cp = 0.25pF

M1039

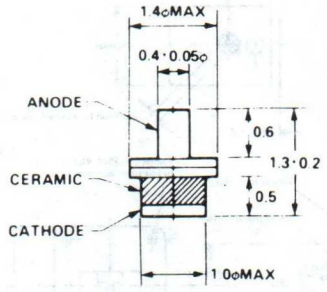

Cp = 0.1pF

M1040

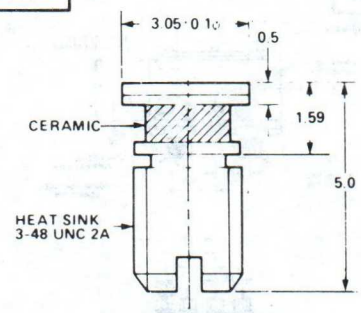

Cp = 0.35pF
Lp = 0.06nH

M1041

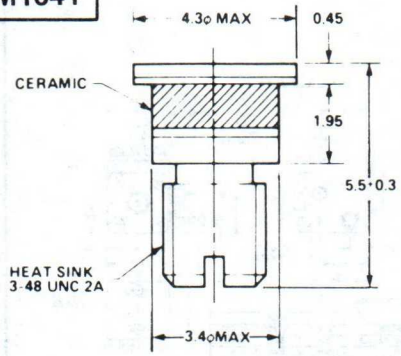

Cp = 0.6pF
Lp = 0.06nH

M1042

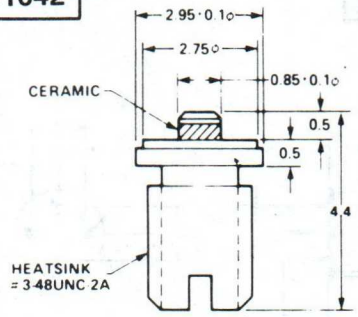

Cp = 0.15pF
Lp = 0.10nH

M1043

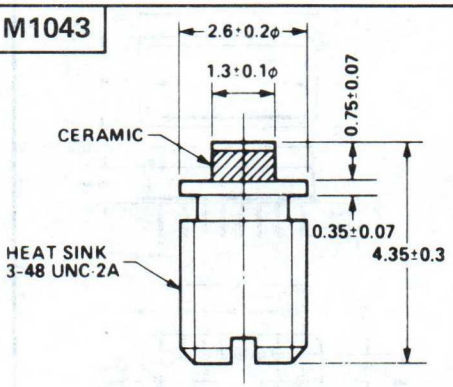

Cp = 0.25pF
Lp = 0.06nH

M1044

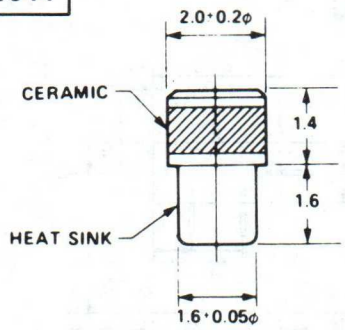

Cp = 0.40pF
Lp = 0.06nH

M1045

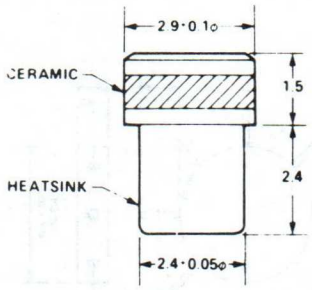

Cp = 0.45pF
Lp = 0.06nH

M1048

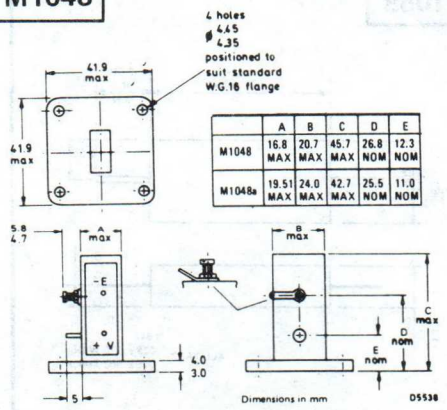

	A	B	C	D	E
M1048	16.8 MAX	20.7 MAX	45.7 MAX	26.8 NOM	12.3 NOM
M1048a	19.51 MAX	24.0 MAX	42.7 MAX	25.5 NOM	11.0 NOM

M1049

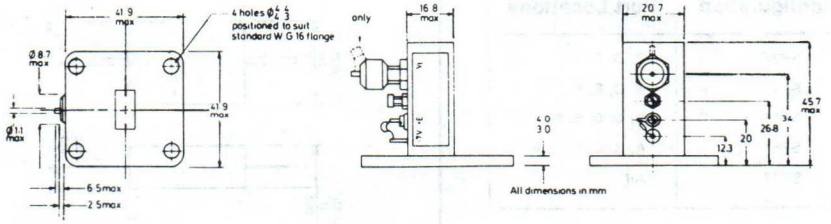

12. OUTLINE DRAWINGS

M1050

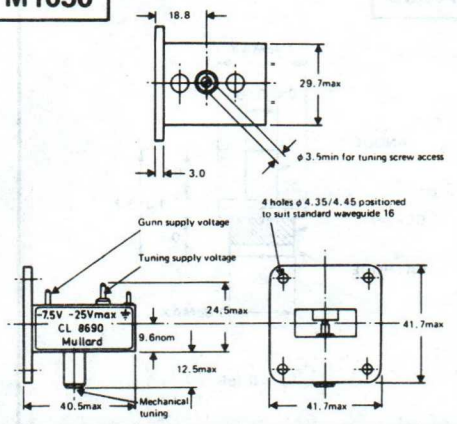

M1051

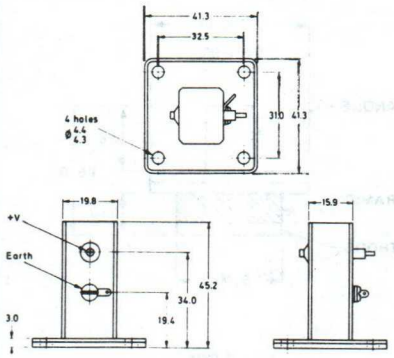

M1052

NOTES:

1) Mesa dia. dependant upon electrical parameters.

SCALE = 20X

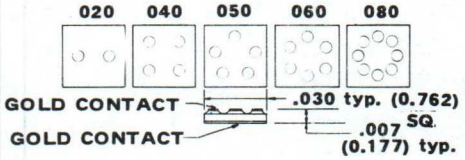

M1053

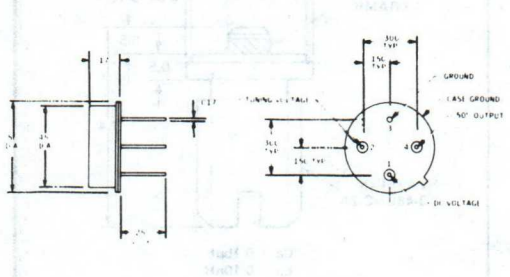

CONNECTOR OPTION

	MODEL		
CONNECTOR	TF-800	TF-801	TF-802
TUNING VOLTAGE	SMB	SMA	SMA
RF OUT	SMA	SMA	N

M1054

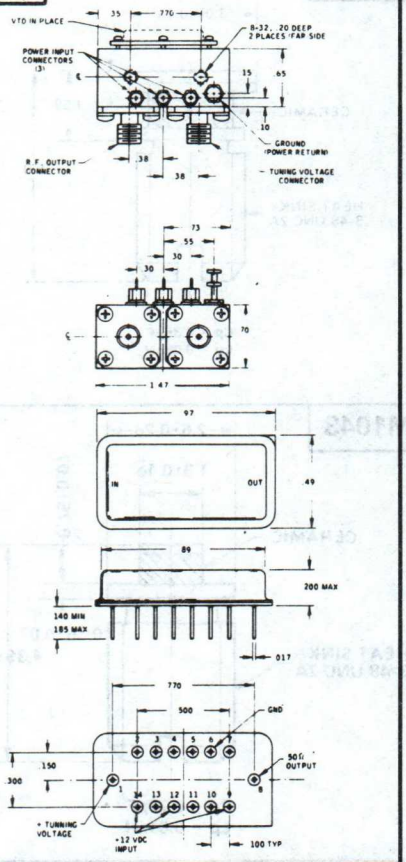

M1055

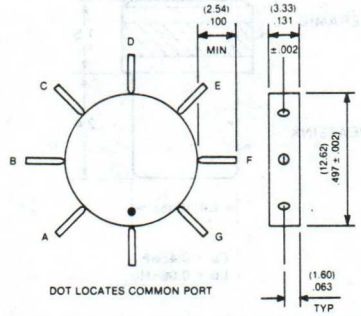

ALL TABS (.64) .025 ± .010 WIDE .006 ± .002 THICK (.15)

DIMENSIONS IN PARENTHESES ARE IN MM

S6A0059

Configuration	Port Locations
SP3T	B, D, F
SP4T	B, C, E, F
SP5T	B, C, D, E, F
SP6T	A, B, C, D, E, F
SP7T	All

M1056

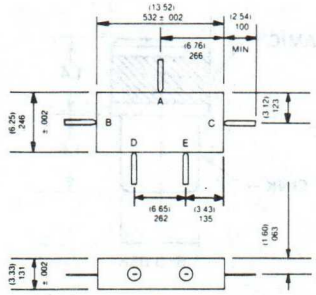

ALL TABS (.64) .025 ± .010 WIDE .006 ± .002 THICK (.15)

M1057

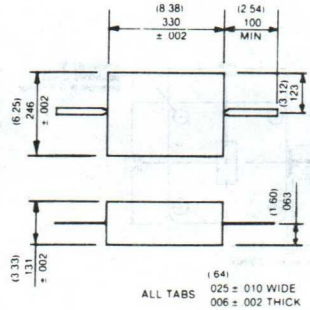

ALL TABS (.64) .025 ± .010 WIDE .006 ± .002 THICK (.15)

M1058

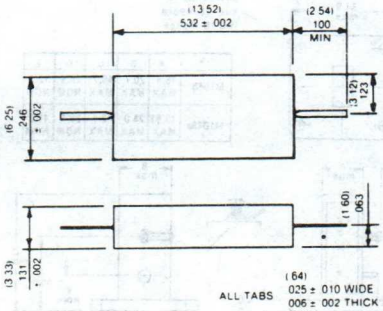

ALL TABS (.64) .025 ± .010 WIDE .006 ± .002 THICK (.15)

12. OUTLINE DRAWINGS

M1060

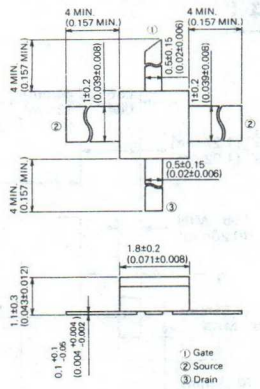

M1061

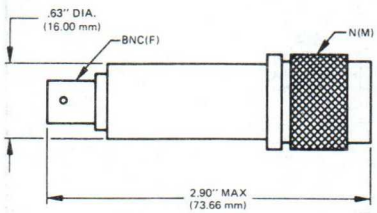

M1061a TNC(H)
M1061b BNC(M)

M1062

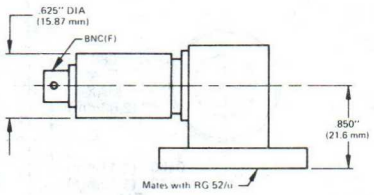

X-Band

M1063

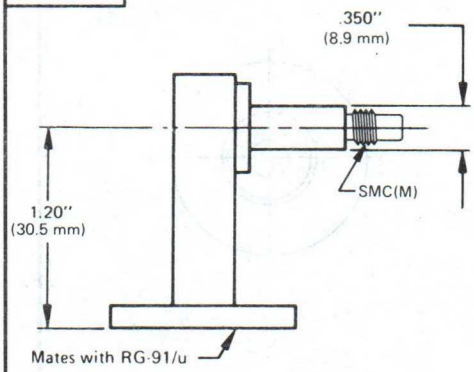

M1064

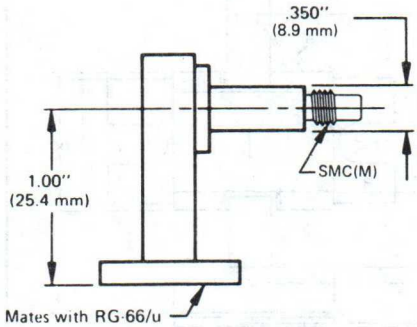

M1065

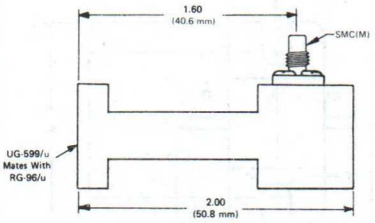

R-Band

M1068

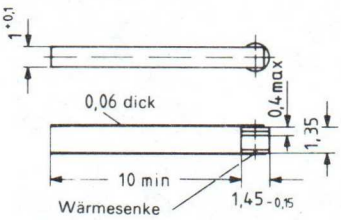

M1069

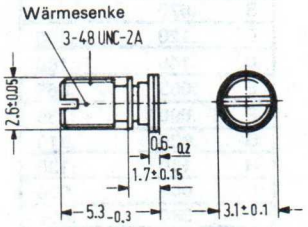

M1070

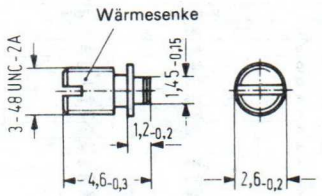

M1071

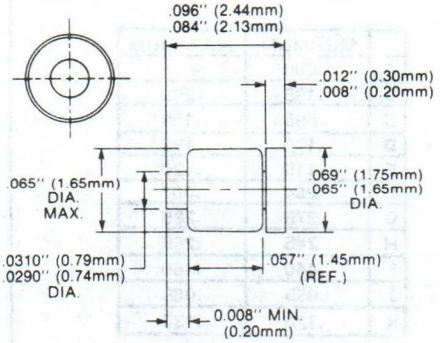

M1072

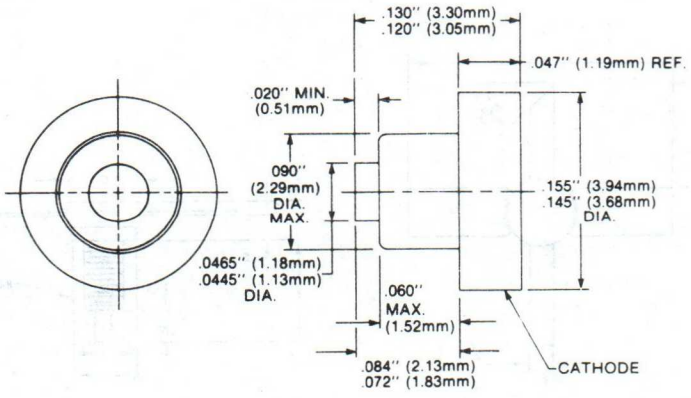

12. OUTLINE DRAWINGS

M1073

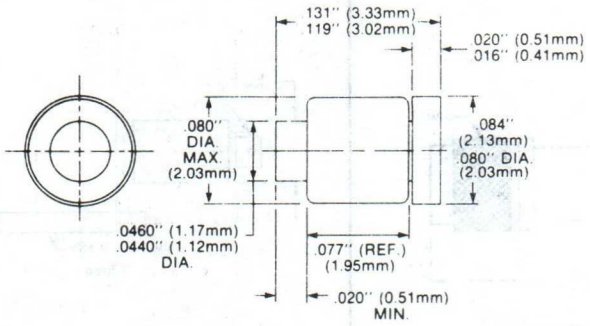

M1074

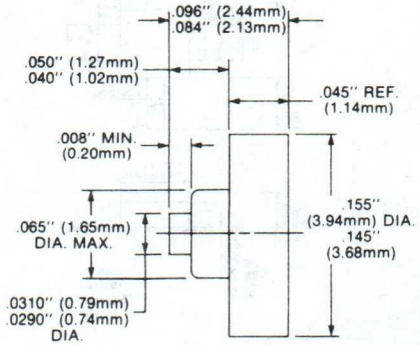

M1075

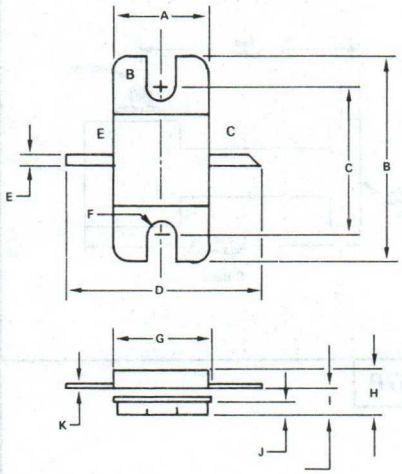

	MINIMUM	MAXIMUM
A	.380	.405
B	.890	.910
C	.650	.670
D	.715	—
E	.045	.055
F	.060	.065
G	.390	.615
H	—	.230
I	.115	.130
J	.055	.060
K	.004	.007

.400" SQ 2LF

M1076

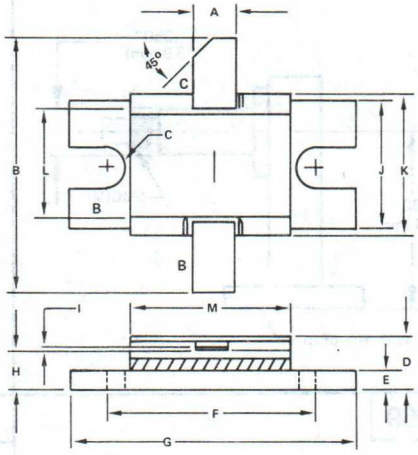

	Min	Max
A	.135	.155
B	.670	
C	.120	.130
D	.140	.180
E	.055	.065
F	.690	.730
G	.890	.910
H	.110	.130
I	.003	.006
J	.380	.405
K	.395	.405
L	.340	.405
M	.390	.510

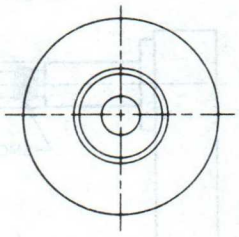

M1077

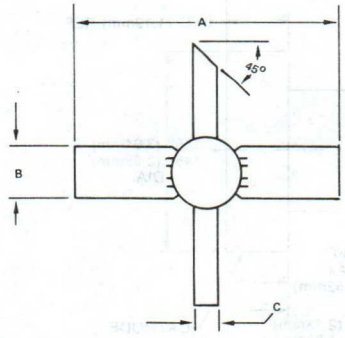

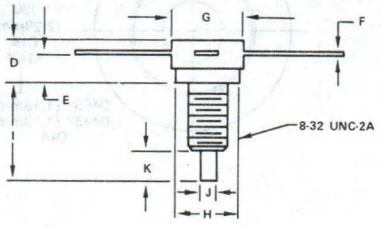

	MINIMUM	MAXIMUM
A	1.000	----
B	.195	.205
C	.095	.105
D	.170	.185
E	.110	.120
F	.004	.007
G	.275	.285
H	.245	.255
I	.440	.460
J	.055	.065
K	.120	.130

12. OUTLINE DRAWINGS

M1078

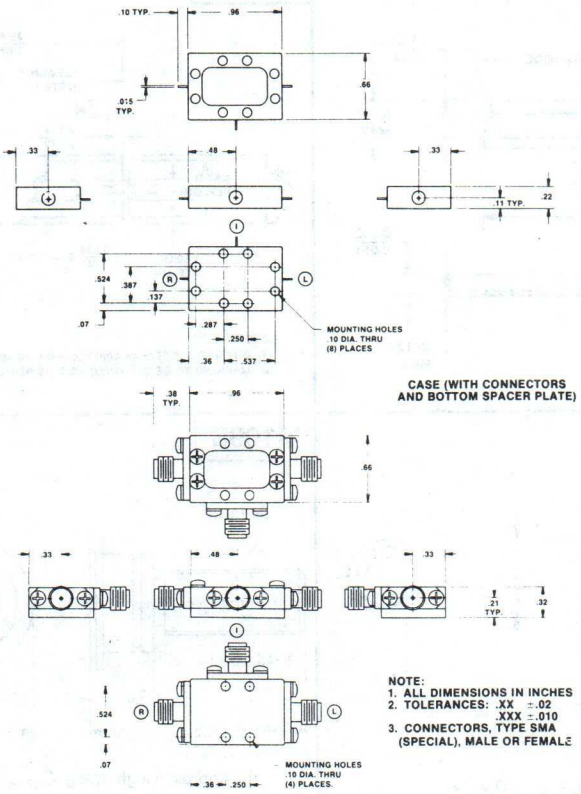

NOTE:
1. ALL DIMENSIONS IN INCHES
2. TOLERANCES: .XX ±.02
   .XXX ±.010
3. CONNECTORS, TYPE SMA
   (SPECIAL), MALE OR FEMALE

M1088

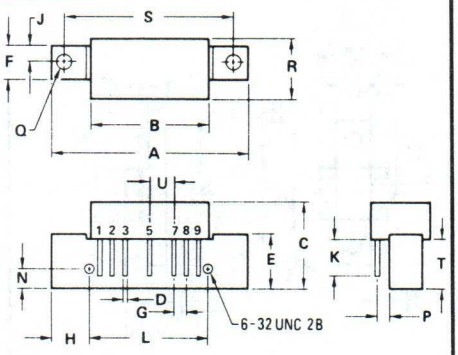

NOTE:
1. MOUNTING HOLES WITHIN 0.25 mm (0.010) DIA OF TRUE POSITION AT MAXIMUM MATERIAL CONDITION.

	MILLIMETERS		INCHES	
DIM	MIN	MAX	MIN	MAX
A	–	45.08	–	1.775
B	26.42	26.92	1.040	1.060
C	20.57	21.34	0.810	0.840
D	0.46	0.56	0.018	0.022
E	11.81	12.95	0.465	0.510
F	7.87	8.13	0.310	0.320
G	2.41	2.67	0.095	0.105
H	9.65	9.78	0.380	0.385
J	3.96 BSC		0.156 BSC	
K	6.86	7.37	0.270	0.290
L	25.40 BSC		1.000 BSC	
N	4.06	4.32	0.160	0.170
P	2.16	2.92	0.085	0.115
Q	3.81	4.19	0.150	0.165
R	–	15.11	–	0.595
S	38.10 BSC		1.500 BSC	
T	11.05	11.43	0.435	0.450
U	4.95	5.21	0.195	0.205

M1089

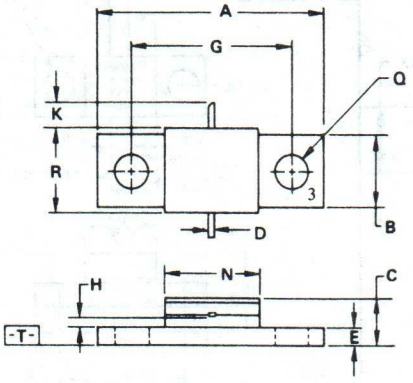

	MILLIMETERS		INCHES	
DIM	MIN	MAX	MIN	MAX
A	22.61	23.11	0.890	0.910
B	9.65	9.91	0.380	0.390
C	3.68	6.35	0.145	0.250
D	0.51	0.76	0.020	0.030
E	1.40	1.65	0.055	0.065
G	16.51 BSC		0.650 BSC	
H	1.14	1.77	0.045	0.070
K	2.54	–	0.100	–
N	9.91	10.41	0.390	0.410
Q	3.05	3.30	0.120	0.130
R	9.91	10.41	0.390	0.410

NOTES:
1. DIMENSIONS -A- AND -B- ARE DATUMS.
2. POSITIONAL TOLERANCE FOR MOUNTING HOLES:
   ⌖ Ø.13(0.005) Ⓜ | T | A Ⓜ | B Ⓜ
3. -T- IS SEATING PLANE.
4. DIMENSIONING AND TOLERANCING PER ANSI Y14.5, 1973.

STYLE 1.
PIN 1. EMITTER
2. COLLECTOR
3. BASE

M1090

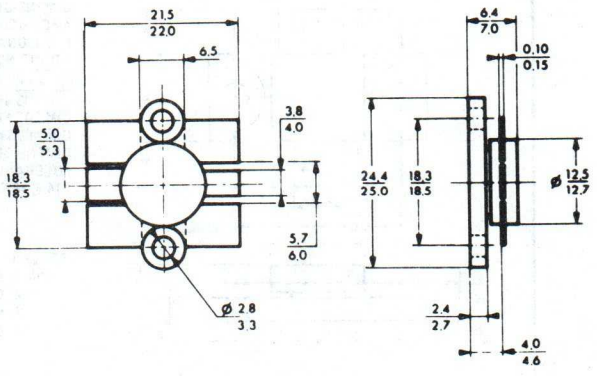

12. OUTLINE DRAWINGS

M1091

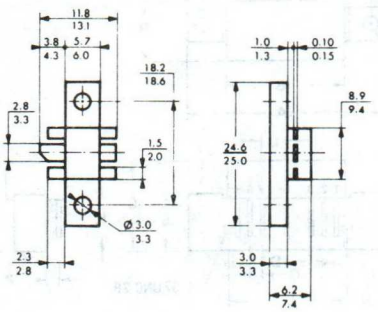

M1092

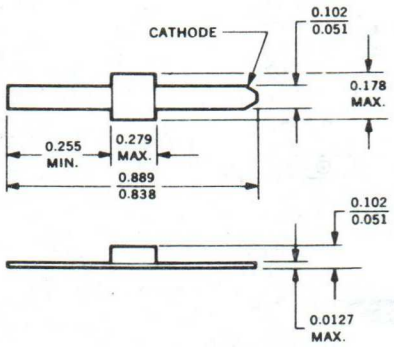

M1093

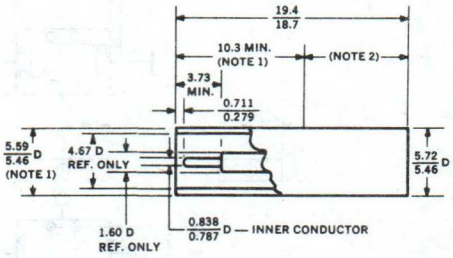

NOTES:
1. OUTSIDE D. 5.59/5.46 APPLIES ONLY TO 10.3 LENGTH AS SHOWN.
2. MARKING TO BE CONFINED TO THIS REGION.

M1094

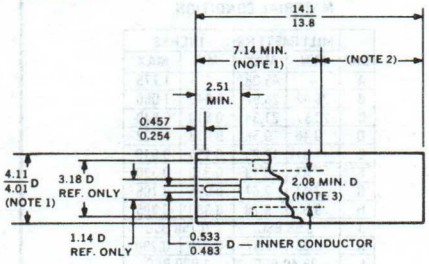

NOTES:
1. OUTSIDE D. 4.11 / 4.01 APPLIES ONLY TO 7.14 LENGTH AS SHOWN.
2. MARKING TO BE CONFINED TO THIS REGION.
3. SPACE FOR MATCHING TRANSFORMER (WHEN USED).

M1095

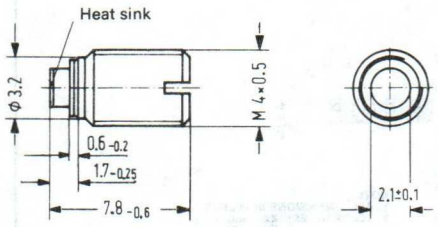

C_p = 0.3 pF; L_s = 0.4 nH
Approx. weight 0.5 g

M1096

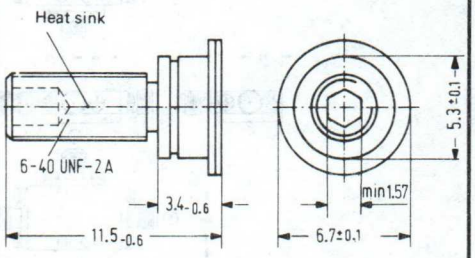

Approx. weight 0.8 g C_{case} = 1 pF; L_s = 0.6

M1098

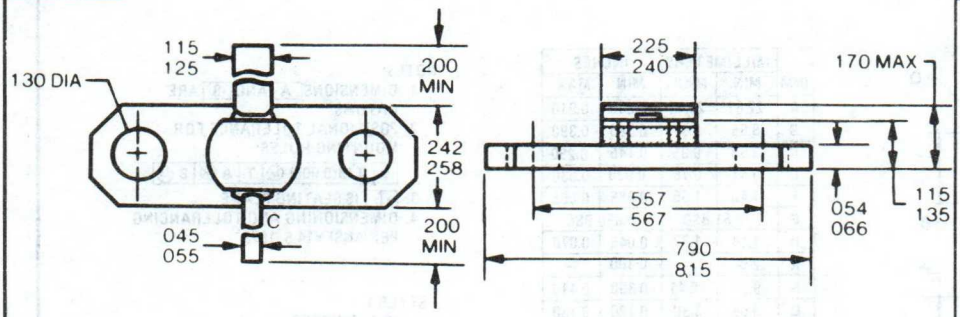

M1099

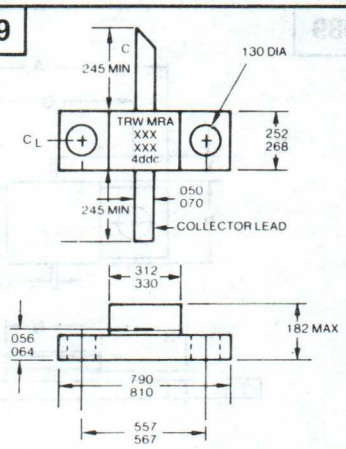

M1100

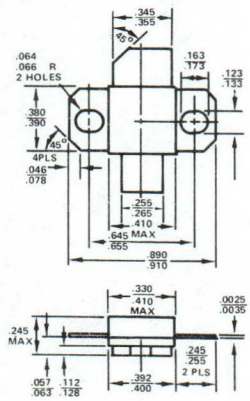

M1101

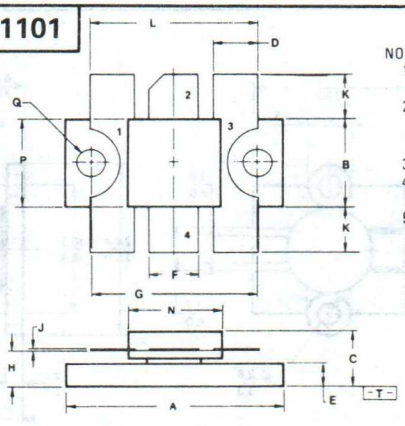

NOTES:
1. DIMENSIONS -A- AND -B- ARE DATUMS.
2. POSITIONAL TOLERANCE FOR MOUNTING HOLES:
   ⌖ Ø 0.13(0.005) Ⓜ T A Ⓜ B Ⓜ
3. -T- IS SEATING PLANE.
4. DIM "D" FOUR PLACES; DIM "F" TWO PLACES.
5. DIMENSIONING AND TOLERANCING PER ANSI Y14.5, 1973.

STYLE 1:
PIN 1. EMITTER
2. COLLECTOR
3. EMITTER
4. BASE

DIM	MILLIMETERS		INCHES	
	MIN	MAX	MIN	MAX
A	24.51	25.02	0.965	0.985
B	9.91	10.41	0.390	0.410
C	6.73	7.24	0.265	0.285
D	4.83	5.33	0.190	0.210
E	2.42	2.92	0.095	0.115
F	5.47	5.96	0.215	0.235
G	18.42 BSC		0.725 BSC	
H	3.94	4.44	0.155	0.175
J	0.10	0.15	0.004	0.006
K	4.95	5.21	0.195	0.205
L	18.80	19.55	0.740	0.770
N	10.54	10.80	0.415	0.425
P	9.91	10.16	0.390	0.400
Q	3.18	3.42	0.125	0.135

12. OUTLINE DRAWINGS

M1102

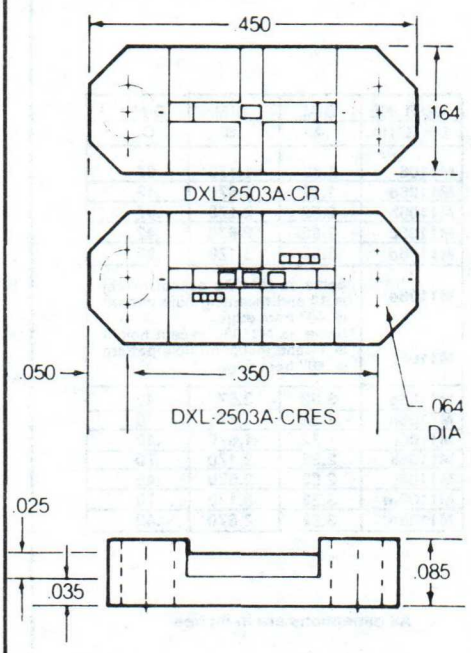

ALL DIMENSIONS ARE IN INCHES

M1103

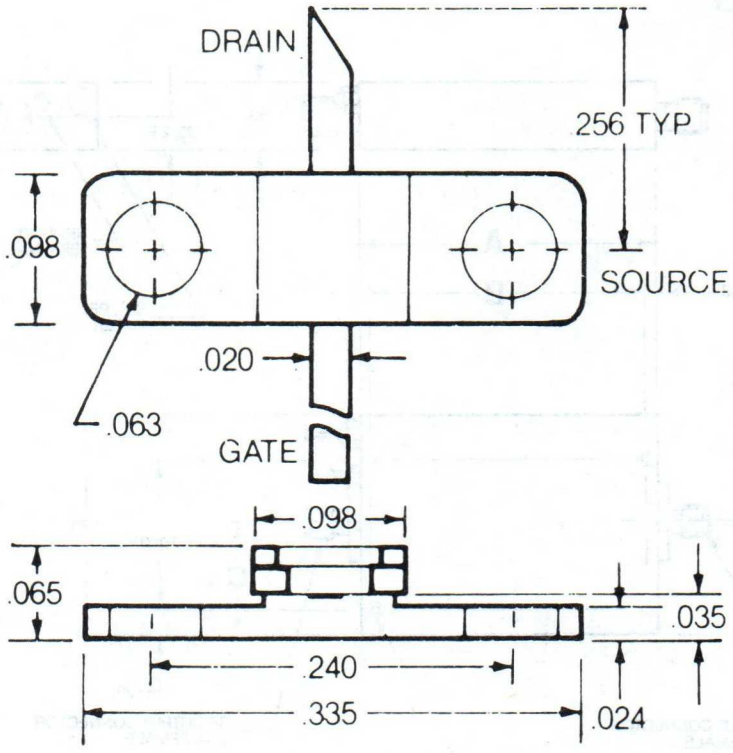

ALL DIMENSIONS ARE IN INCHES

M1104

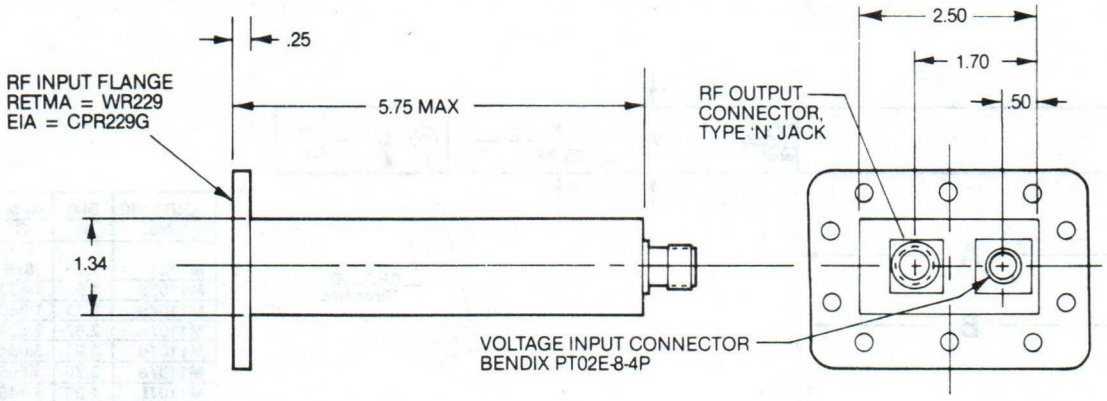

M1105

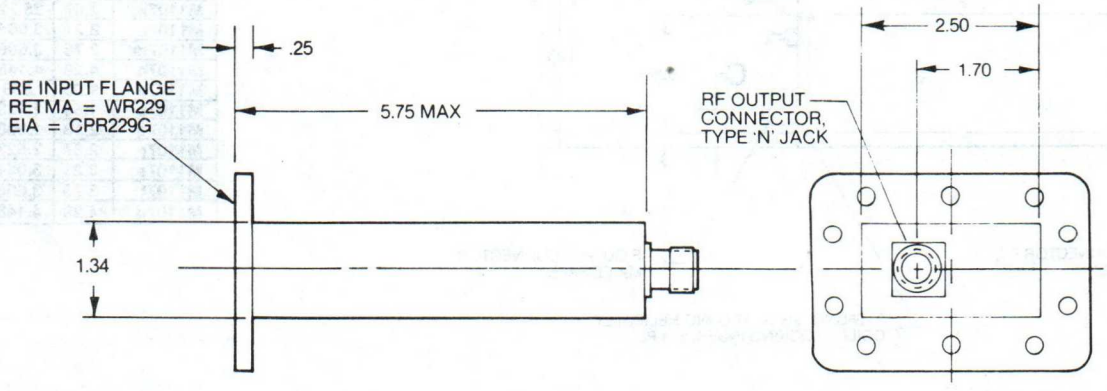

12. OUTLINE DRAWINGS

M1106

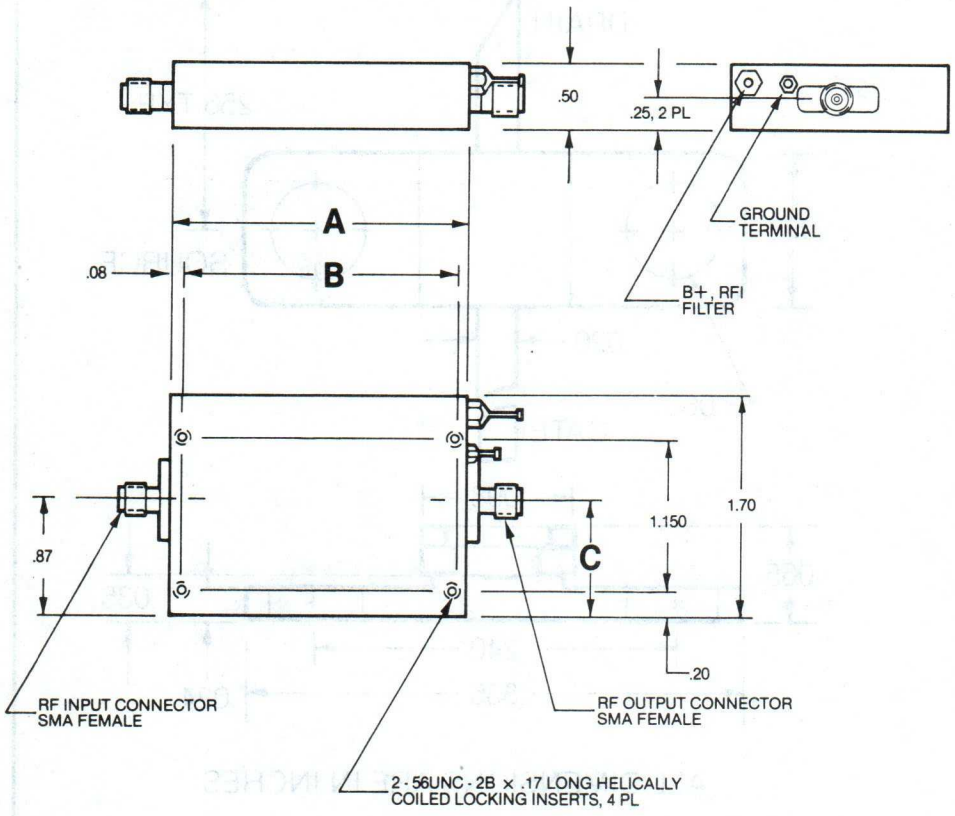

OUTLINE DWG. No.	DIM A	DIM B	DIM C
M1106	1.32	1.170	.87
M1106a	1.82	1.670	.42
M1106b	2.32	2.170	.87
M1106c	2.82	2.670	.42
M1106d	3.32	3.170	.87
M1106e	Same as M1106b except height is 1" and mounting hole pattern is .40" from edge.		
M1106f	Same as M1106c except height is 1" and mounting hole pattern is .40" from edge.		
M1106g	3.82	3.670	.42
M1106h	1.32	1.170	.70
M1106j	1.82	1.670	.40
M1106k	2.32	2.170	.70
M1106l	2.82	2.670	.40
M1106m	3.32	3.170	.70
M1106n	3.82	3.670	.40

All dimentions are in inches

M1107

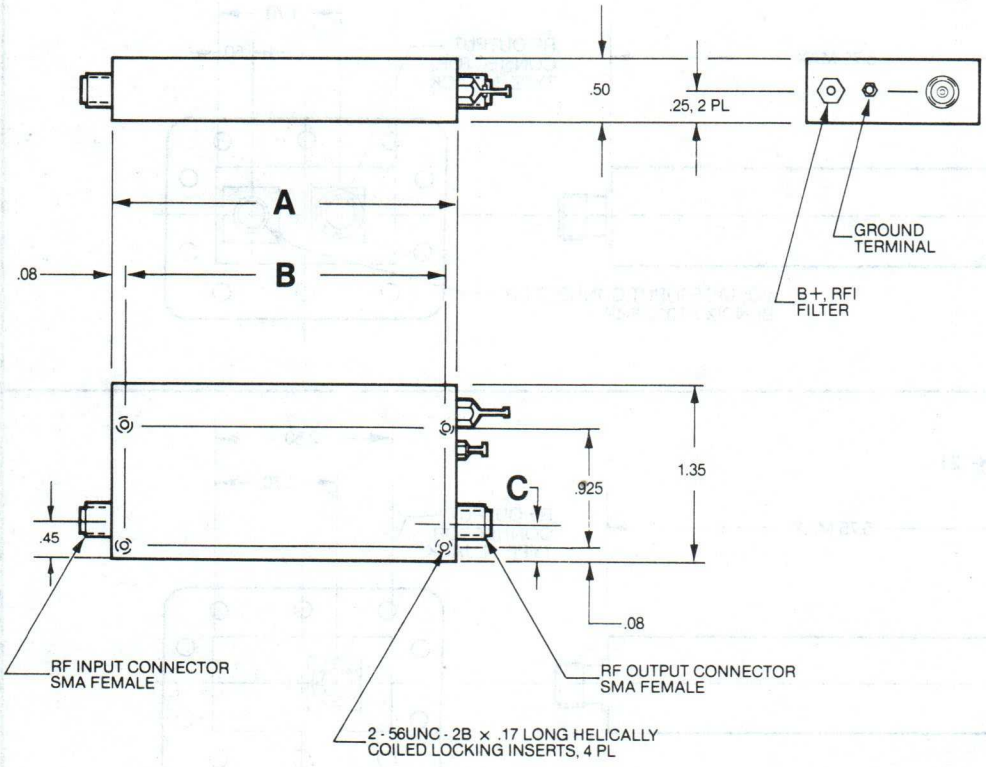

OUTLINE No.	DIM A	DIM B	DIM C
M1107	1.05	.896	.25
M1107a	1.59	1.438	.45
M1107b	2.13	1.980	.25
M1107c	2.67	2.522	.45
M1107d	3.21	3.064	.25
M1107e	3.75	3.606	.45
M1107f	4.29	4.148	.25
M1107g	1.05	.896	.30
M1107h	1.59	1.438	.30
M1107j	2.13	1.980	.30
M1107k	2.67	25.22	.30
M1107l	3.21	3.064	.30
M1107m	3.75	3.606	.30
M1107n	4.29	4.148	.30
M1107o	1.05	.896	.28
M1107p	1.59	1.438	.28
M1107q	2.13	1.980	.28
M1107r	2.67	2.522	.28
M1107s	3.21	3.064	.28
M1107t	3.75	3.606	.28
M1107u	4.29	4.148	.28

12. OUTLINE DRAWINGS

M1108

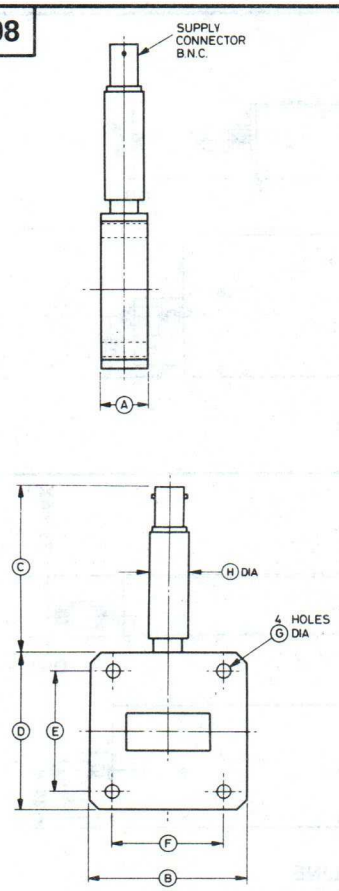

M1109

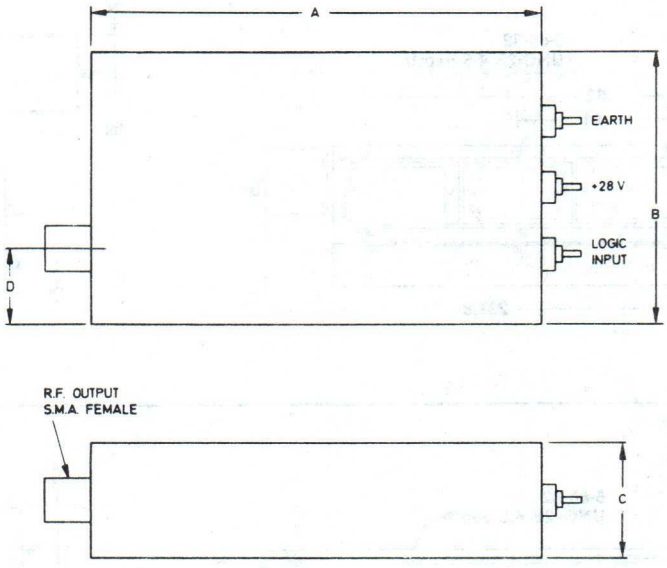

Ref	Millimetres	Inches
A	70	2.756
B	42	1.653
C	18	0.709
D	11.5	0.453

Inch dimensions have been derived from millimetres.

M1110

(Unit : mm)

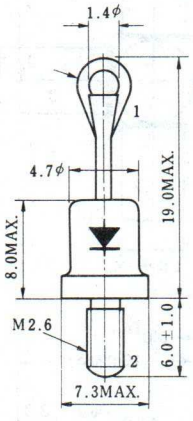

1. Anode
2. Cathode

M1111

(Unit : mm)

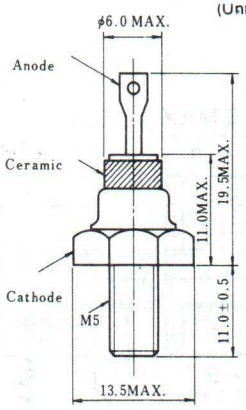

M1112

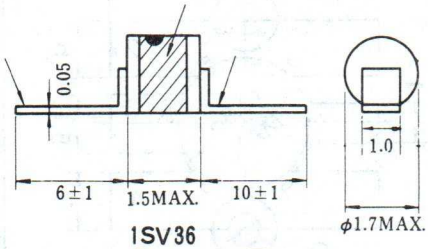

1SV36
$C_C = 0.22pF$

M1113

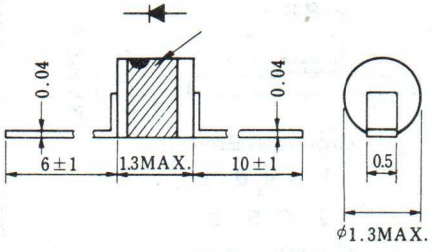

M1114

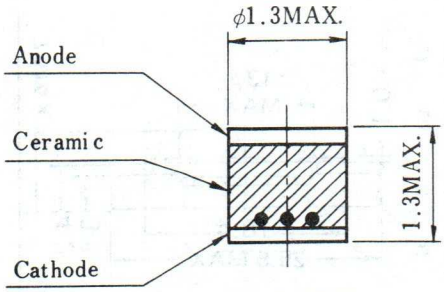

($C_C = 0.15pF$)

12. OUTLINE DRAWINGS

M1115

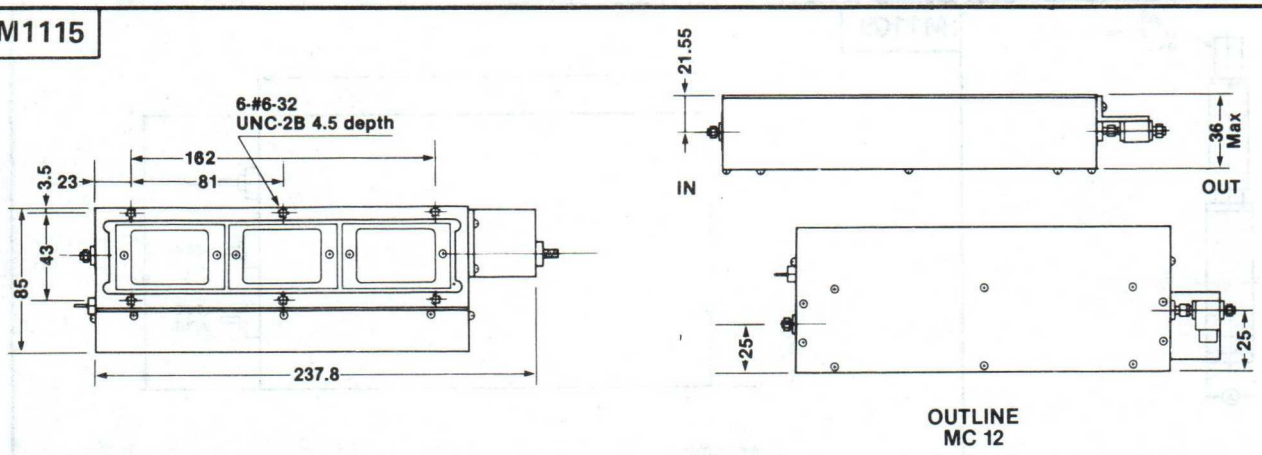

OUTLINE
MC 12

M1116

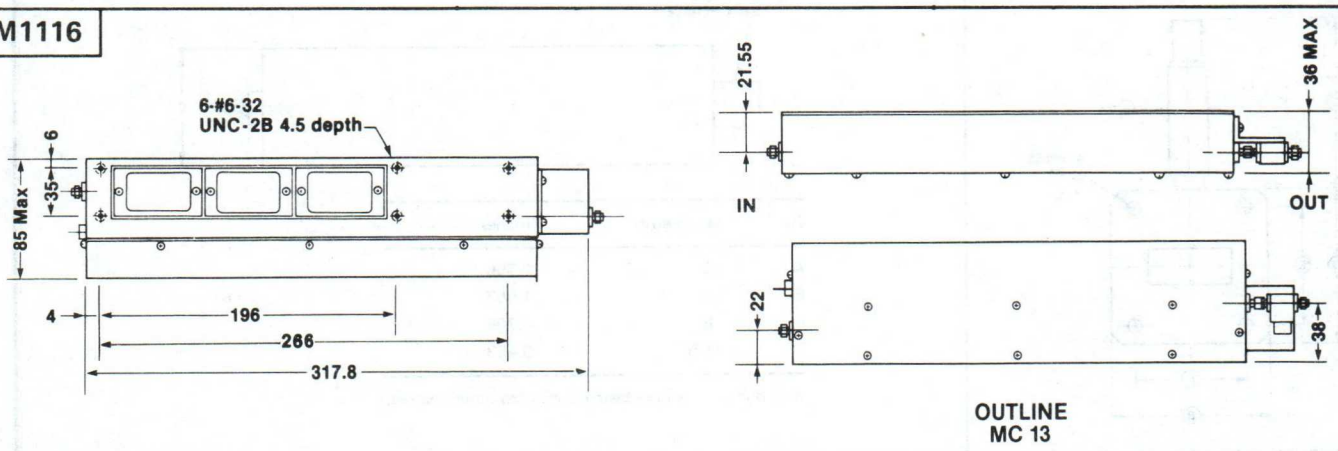

OUTLINE
MC 13

M1121

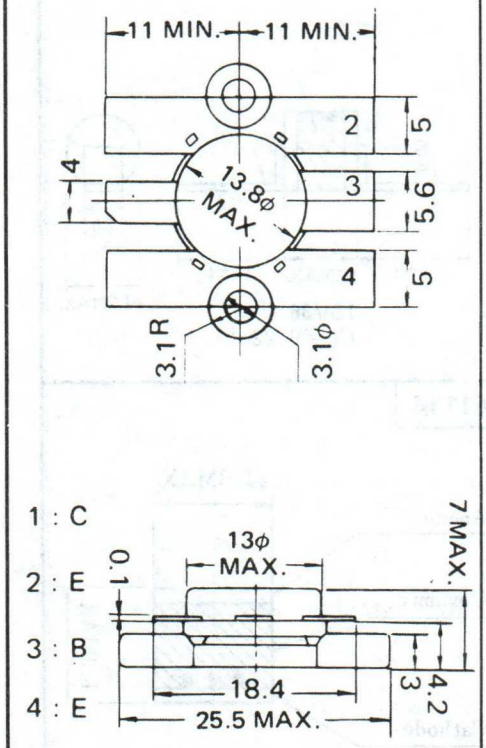

M1122

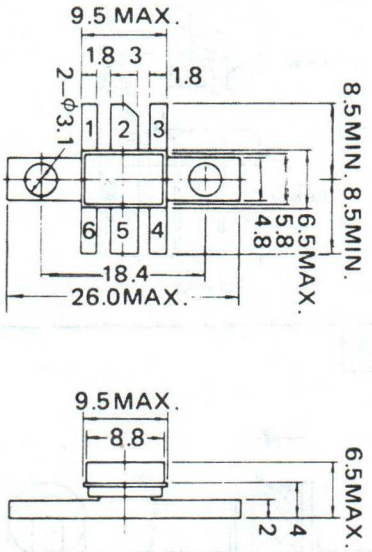

Grounded Emitter

1, 3, 4, 6 : E

2 : C 5 : B

Grounded Base

1, 3, 4, 6 : B

2 : C 5 : E

M1123

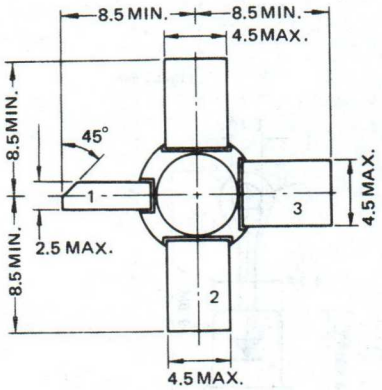

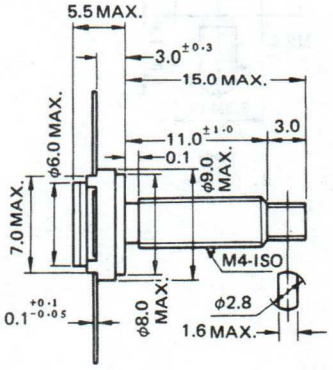

12. OUTLINE DRAWINGS

M1124

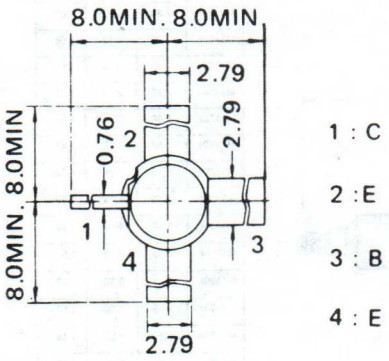

1 : C
2 : E
3 : B
4 : E

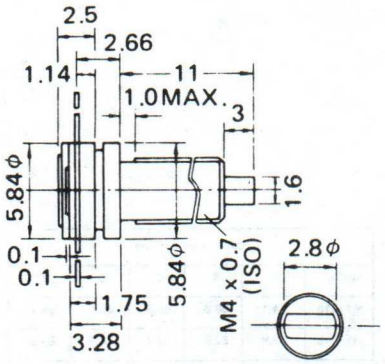

M1125

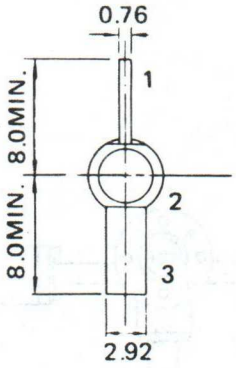

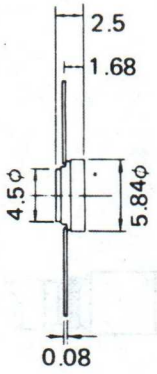

1 : C
2 : E
3 : B

M1127

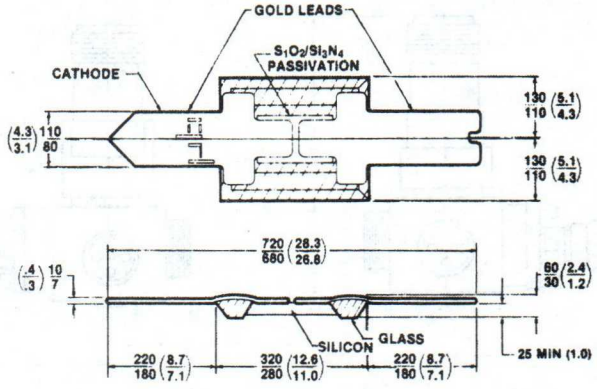

DIMENSIONS IN μm (1/1000 inch)

M1128

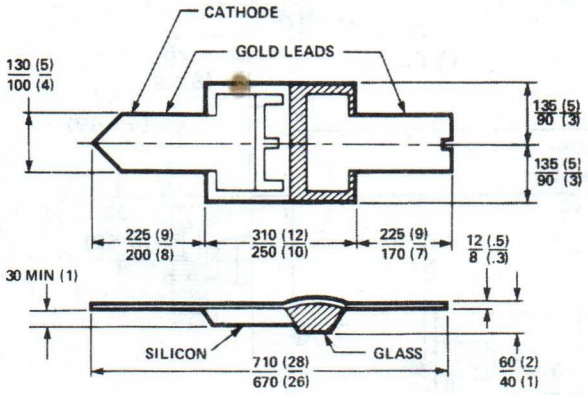

DIMENSIONS IN μm (1/1000 inch)

M1129

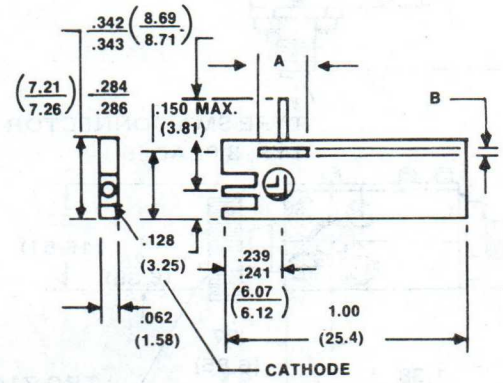

Dimensions in mm		
Suffix	**A**	**B**
M1129a	7.112	.762
M1129b	5.690	.610
M1129c	3.759	.406
M1129d	3.098	.330
M1129e	2.540	.254

12. OUTLINE DRAWINGS

M1130

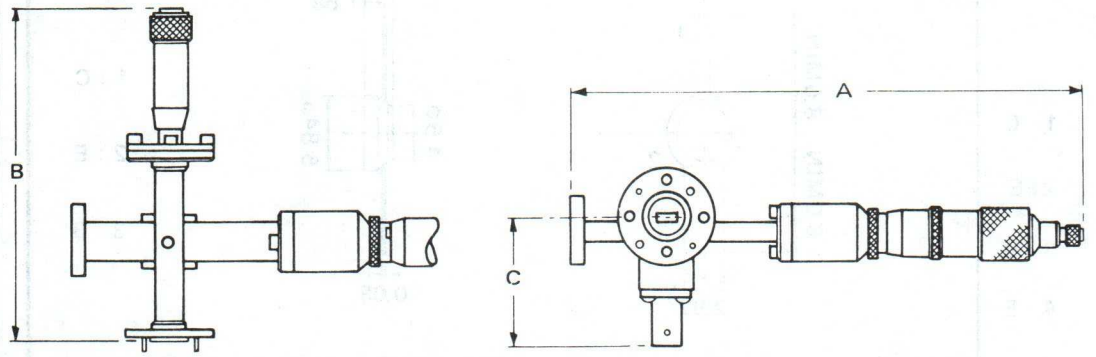

Dimensions in inches			
Suffix	A	B	C
M1130a	7.88	4.13	1.60
M1130b	7.88	4.13	1.56
M1130c	7.88	4.13	1.55
M1130d	7.88	3.50	1.53
M1130e	7.88	3.50	1.51
M1130f	7.88	3.50	1.49
M1130g	7.88	3.06	1.48
M1130h	6.56	4.13	1.60
M1130i	6.56	4.13	1.56
M1130j	6.56	4.13	1.55
M1130k	6.56	3.50	1.53
M1130m	6.56	3.50	1.51
M1130n	6.56	3.50	1.49
M1130o	6.56	3.05	1.48

M1131

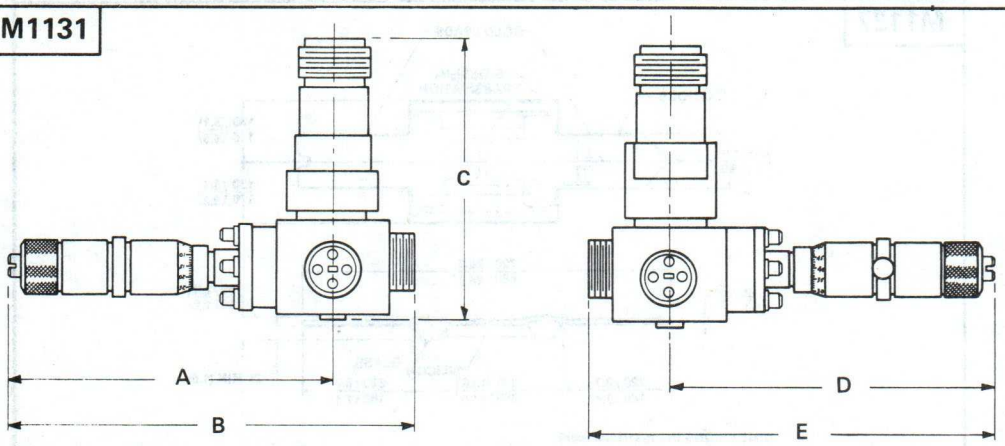

Dimensions in mm					
Suffix	A	B	C	D	E
M1131a	84.1	98.6	66.6	66.6	84.1
M1131b	69.9	82.6	59.7	70.9	83.6
M1131c	71.4	89.2	59.7	64.8	82.6

M1132

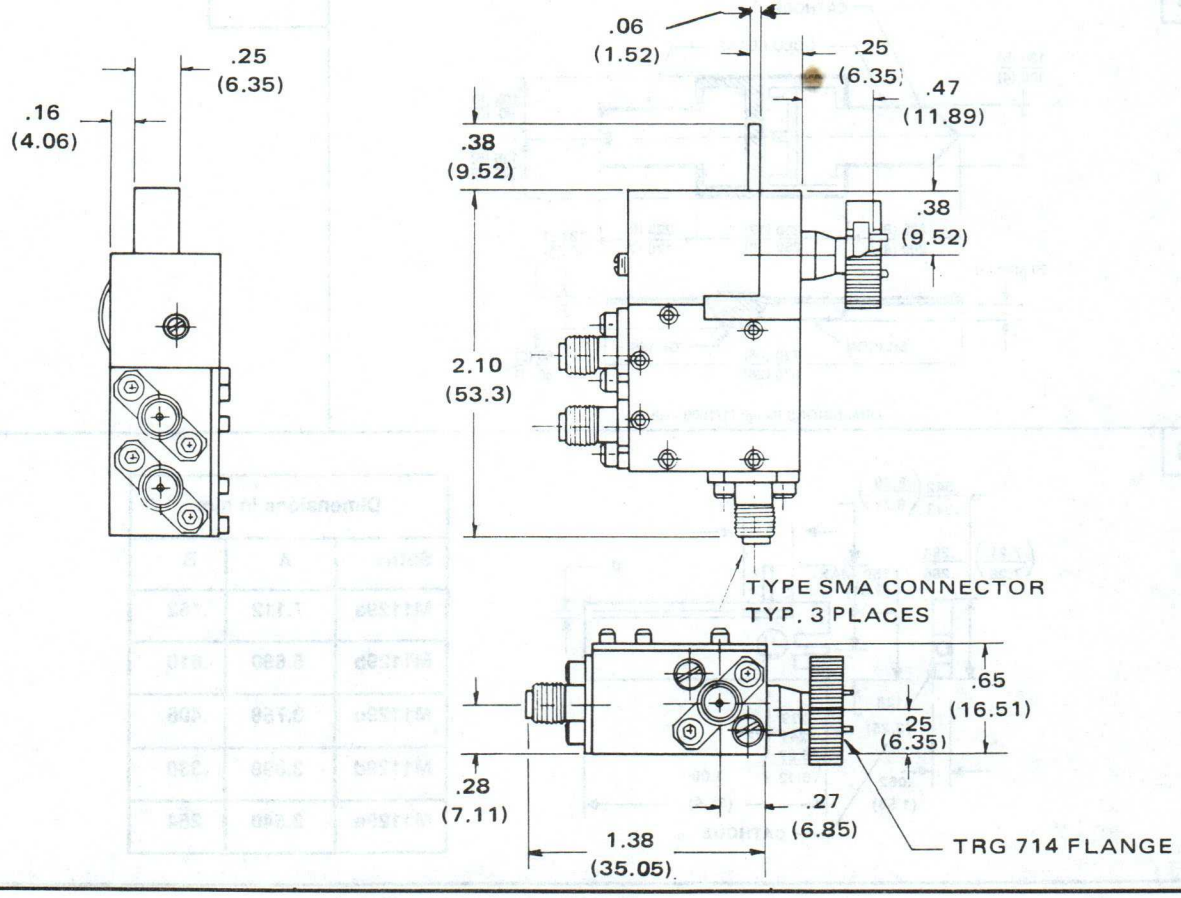

12. OUTLINE DRAWINGS

M1133

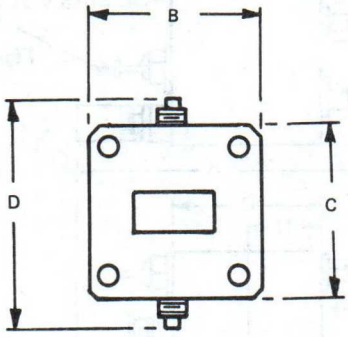

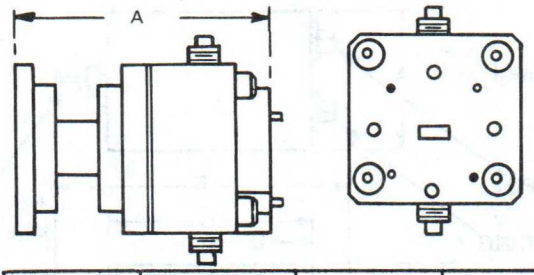

	A		B		C		D	
	Inches	MM	Inches	MM	Inches	MM	Inches	MM
M1133a	1.94	49.3	1.312	33.3	1.312	33.3	2.312	58.7
M1133b	1.94	49.3	1.312	33.3	1.312	33.3	2.312	58.7
M1133c	1.94	49,3	1.312	33.3	1.312	33.3	2.312	58.7

M1134

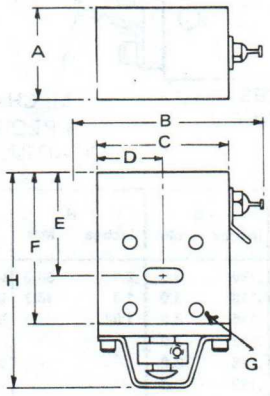

Figure 1

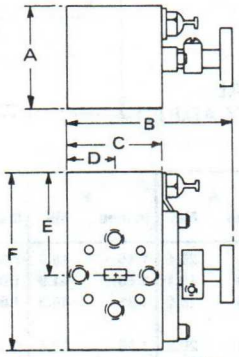

Figure 2

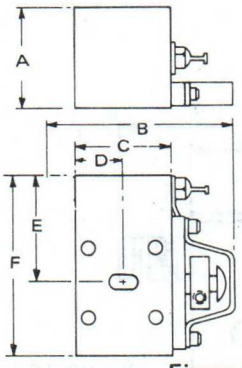

Figure 3

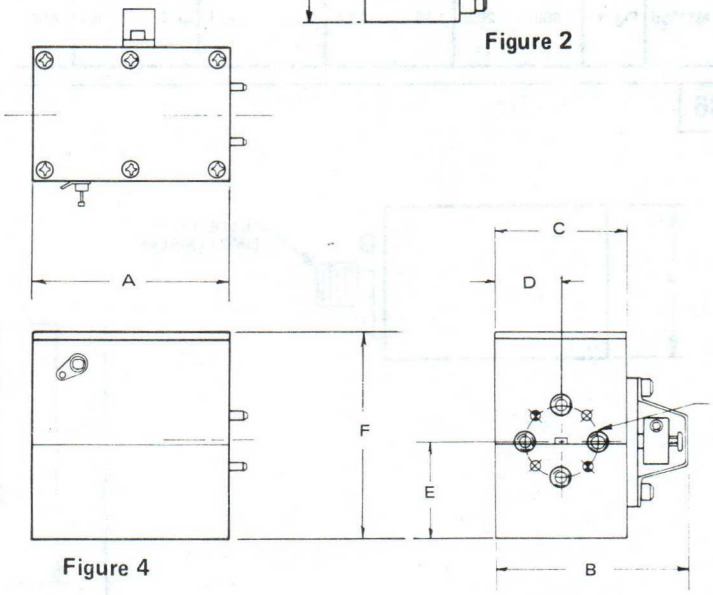

Figure 4

Model No.	Style	A Inches	A MM	B Inches	B MM	C Inches	C MM	D Inches	D MM	E Inches	E MM	F Inches	F MM	G Inches	G MM	H Inches	H MM	J
M1134a	Fig. 1	1.00	254.	1.65	41.9	1.31	33.3	.65	16.5	.65	16.5	1.31	33.3	.118	3.0	2.1	53.3	UG-419/U
M1134b	Fig. 1	.750	19.1	1.35	34.3	1.00	25.4	.500	12.7	.85	21.6	1.35	34.3	.118	3.0	1.9	48.3	UG-595/U
M1134c	Fig. 1	.625	15.9	1.31	33.3	1.00	25.4	.500	12.7	.81	20.6	1.12	28.4	.116 .119	3.0 3.0	1.67	42.4	UG-599/U
M1134d M1134e	Fig. 2	.800	20.3	1.25	31.8	.75	19.1	.375	9.5	.812	20.6	1.375	34.9	.116 .119	3.0 3.0	-	-	UG-599/U
M1134f	Fig. 3	.800	20.3	1.75	44.5	.75	19.1	.375	9.5	.812	20.6	1.375	34.9	-	-	-	-	UG-385/U
M1134g	Fig. 3	.800	20.3	1.75	44.5	.75	19.1	.375	9.5	.812	20.6	1.375	34.9	-	-	-	-	UG-387/U
M1134h	Fig. 4	.800	20.3	1.75	44.5	.75	19.1	.375	9.5	.812	20.6	1.375	34.9	-	-	-	-	UG-387/U

12. OUTLINE DRAWINGS

M1135

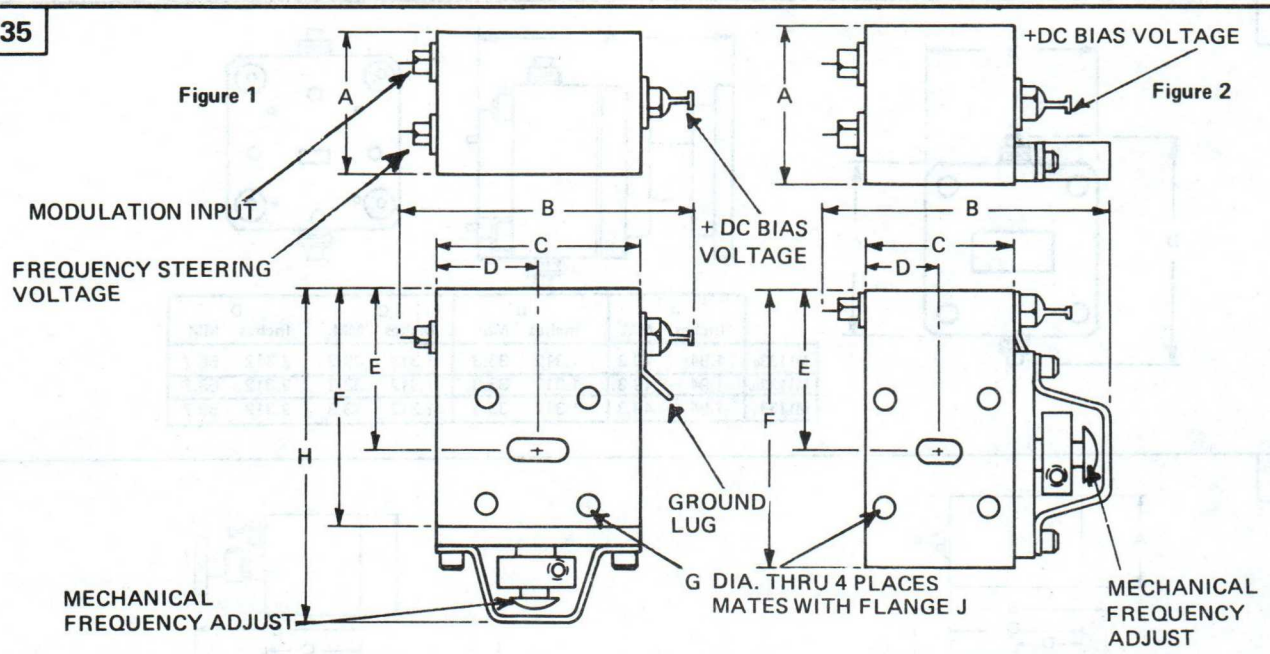

Model No.	Style	A Inches	A MM	B Inches	B MM	C Inches	C MM	D Inches	D MM	E Inches	E MM	F Inches	F MM	G Inches	G MM	H Inches	H MM	J
M1135a	Fig. 1	1.00	25.4	1.95	49.5	1.31	33.3	.65	16.5	.65	16.5	1.31	33.3	.118	3.0	2.1	53.3	UG 419/U
M1135b	Fig. 1	.750	19.1	1.65	41.9	1.00	25.4	.50	12.7	.85	21.6	1.35	34.3	.118	3.0	1.9	48.3	UG 595/U
M1135c	Fig. 1	.625	15.9	1.61	40.9	1.00	25.4	.500	12.7	.81	20.6	1.12	28.4	.116 .119	3.0 3.0	1.67	42.4	UG 599/U
M1135d	Fig. 2	.800	20.3	1.55	39.4	.75	19.1	.375	9.5	.812	20.6	1.375	34.9	.116 .119	3.0 3.0	-	-	UG 599/U

M1136

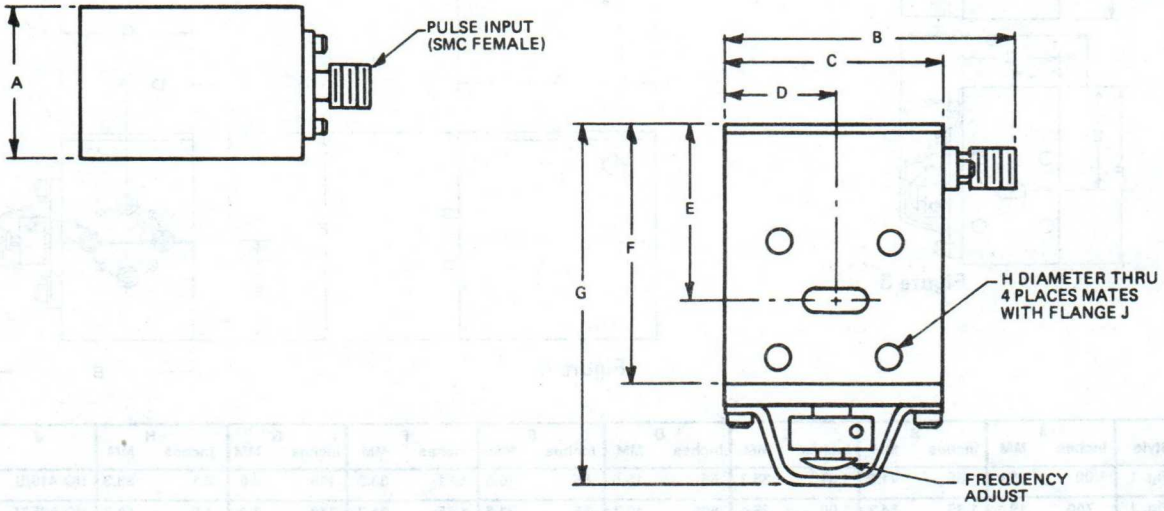

Model Number	A Inches	A MM	B Inches	B MM	C Inches	C MM	D Inches	D MM	E Inches	E MM	F Inches	F MM	G Inches	G MM	H Inches	H MM	J
M1136a	1.00	25.4	1.69	42.9	1.31	33.3	.65	16.5	.65	16.5	1.31	33.3	2.1	53.3	.145	3.7	UG-419/U
M1136b	.750	19.1	1.38	35.1	1.00	25.4	.500	12.7	.85	21.6	1.35	34.3	1.9	48.2	.118	3.0	UG-595/U
M1136c	.625	15.9	1.34	34.0	1.00	25.4	.500	12.7	.81	20.6	1.12	28.4	1.7	43.1	.118	3.0	UG-599/U

12. OUTLINE DRAWINGS

M1137

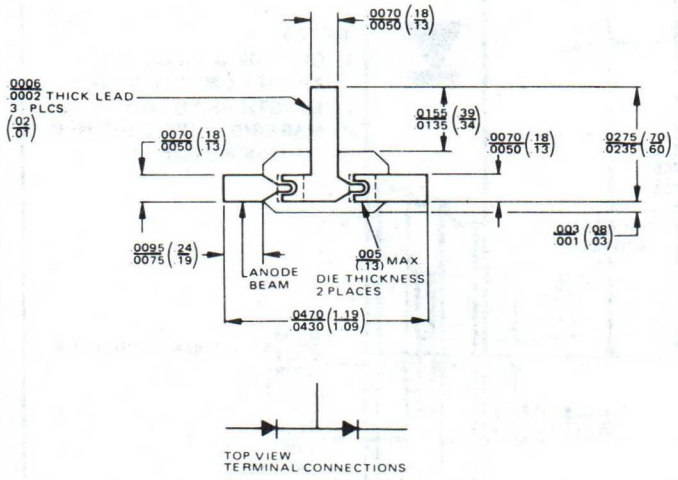

M1138

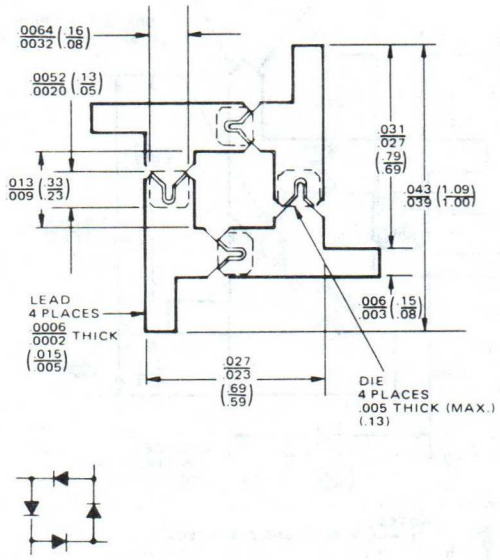

NOTES: 1. ALL DIMENSIONS TYP' 4 PLCS.

M1139

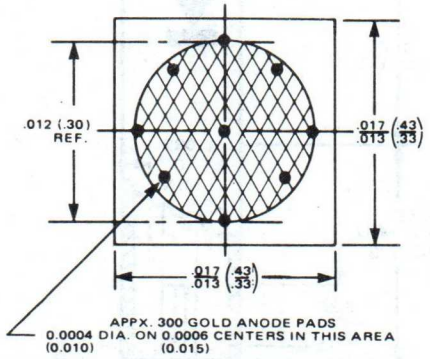

M1140

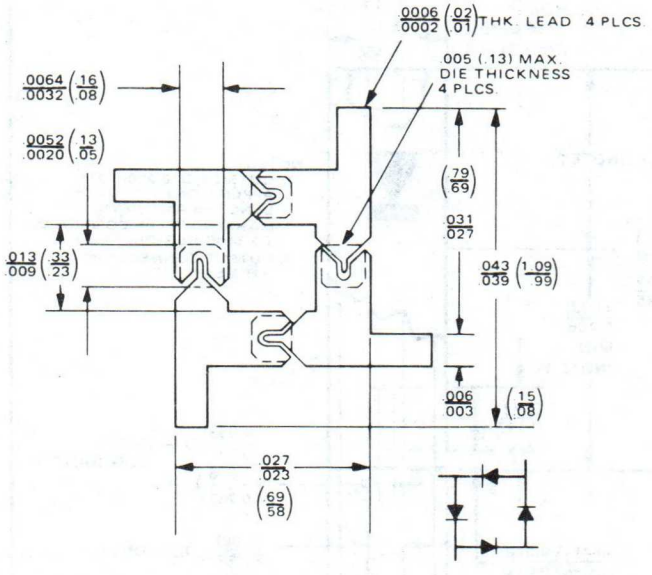

12. OUTLINE DRAWINGS

M1141

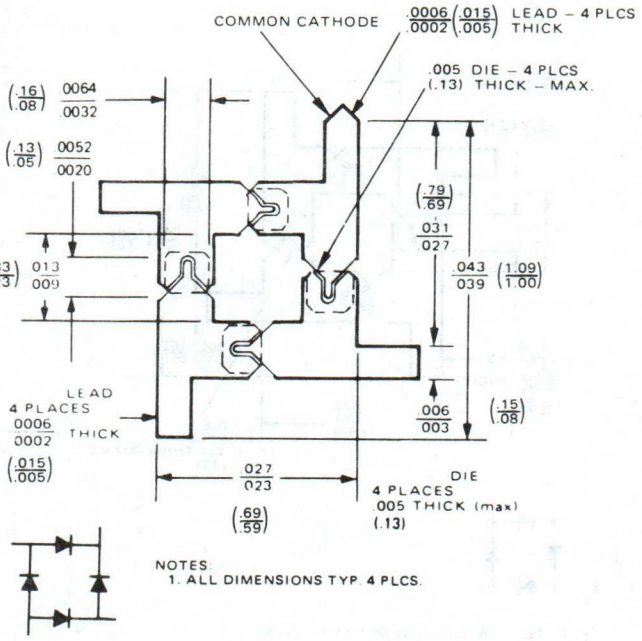

NOTES:
1. ALL DIMENSIONS TYP. 4 PLCS.

M1142

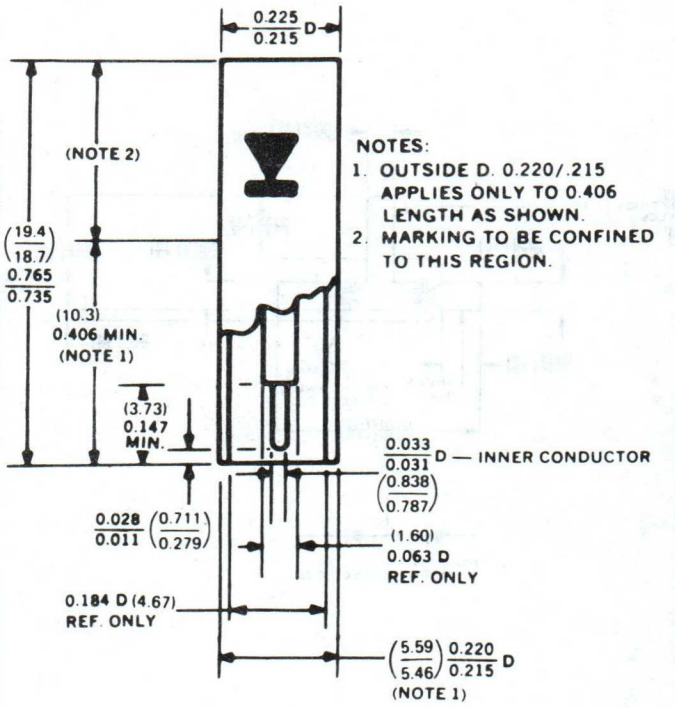

NOTES:
1. OUTSIDE D. 0.220/.215 APPLIES ONLY TO 0.406 LENGTH AS SHOWN.
2. MARKING TO BE CONFINED TO THIS REGION.

M1143

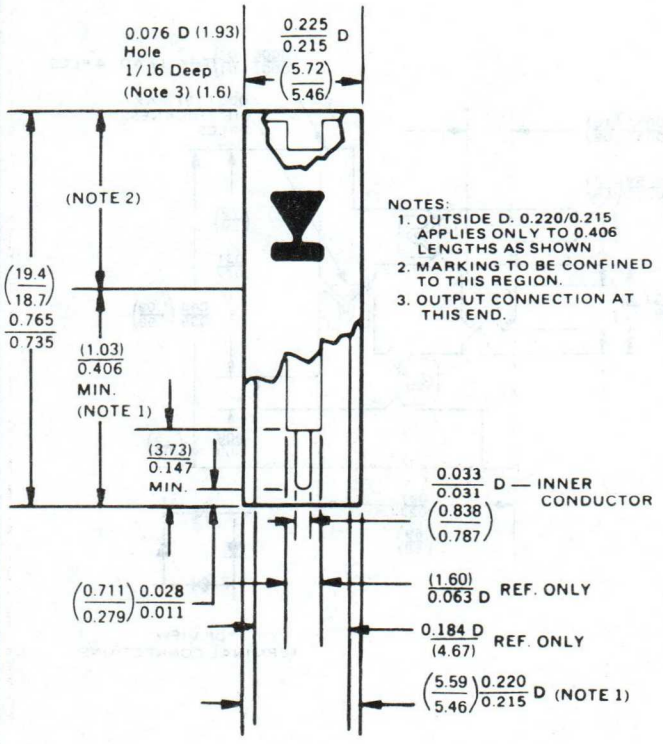

NOTES:
1. OUTSIDE D. 0.220/0.215 APPLIES ONLY TO 0.406 LENGTHS AS SHOWN
2. MARKING TO BE CONFINED TO THIS REGION.
3. OUTPUT CONNECTION AT THIS END.

M1144

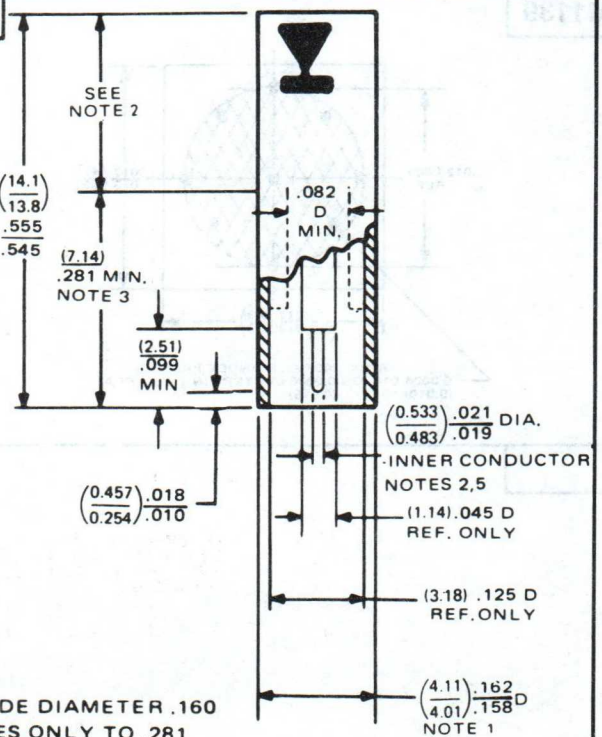

NOTES:
1. OUTSIDE DIAMETER .160 APPLIES ONLY TO .281 LENGTH AS SHOWN.
2. MARKING TO BE CONFINED TO THIS REGION.
3. SPACE FOR MATCHING TRANSFORMER (WHEN USED).

12. OUTLINE DRAWINGS

M1145

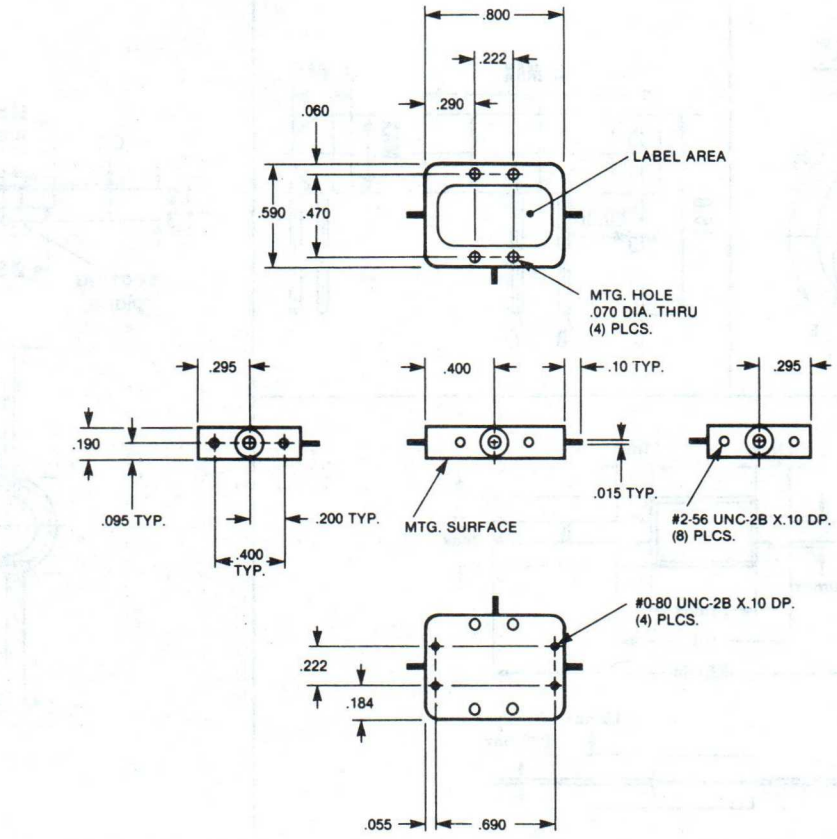

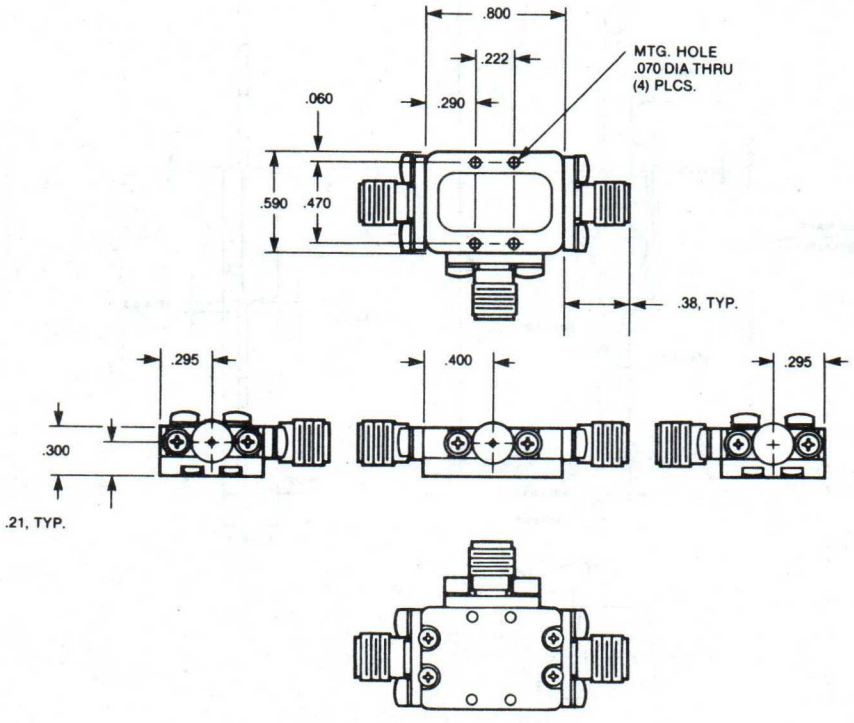

12. OUTLINE DRAWINGS

M1146

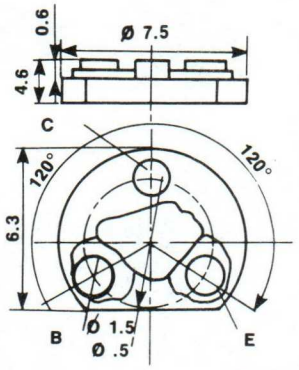

M1147

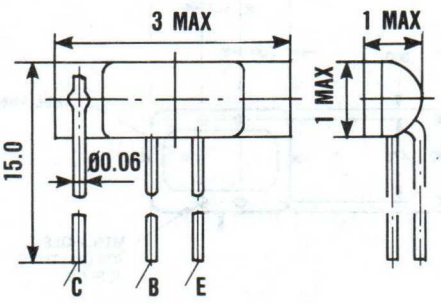

M1148

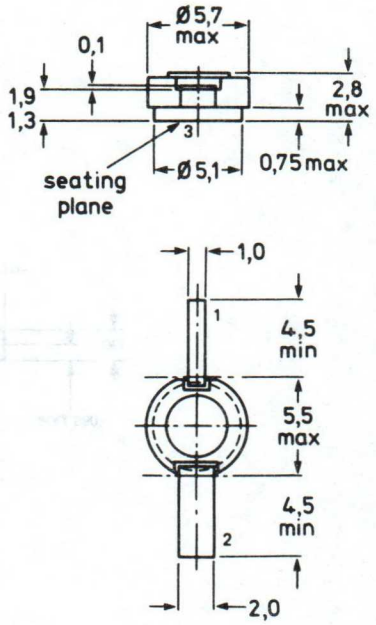

M1149

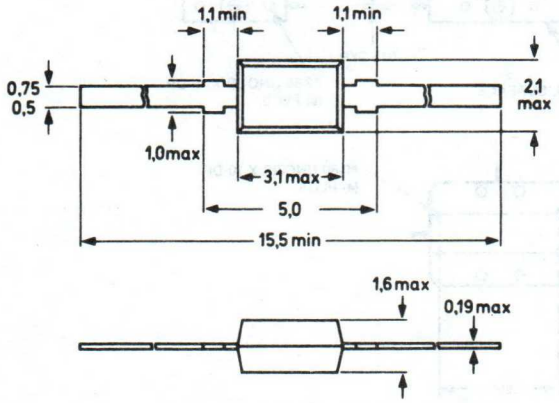

M1150

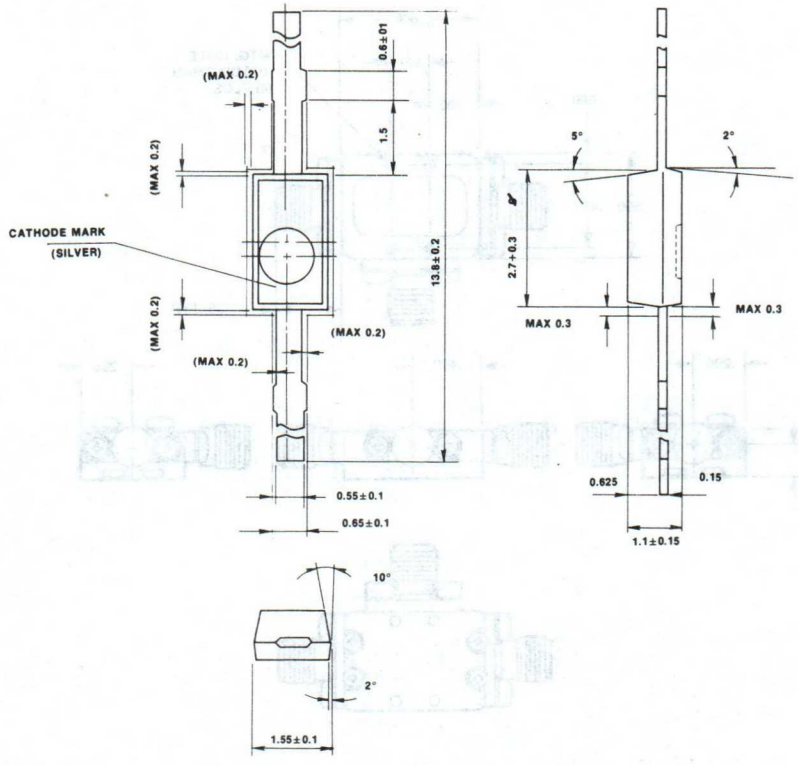

12. OUTLINE DRAWINGS

M1157

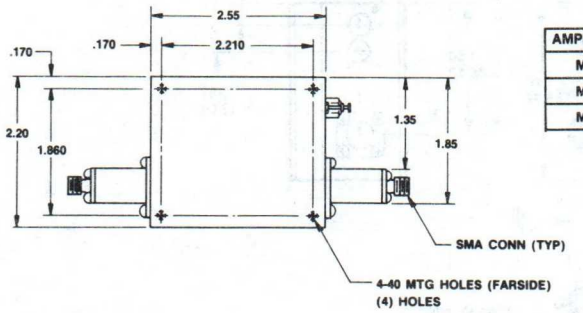

AMPLIFIER SERIES	A DIM	B DIM
M1157	1.20	4.97
M1157a	1.20	4.97
M1157b	1.29	5.13

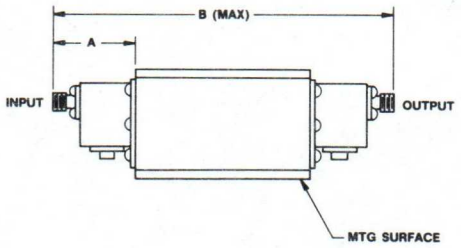

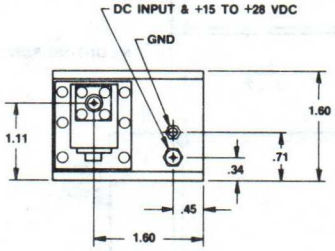

M1158

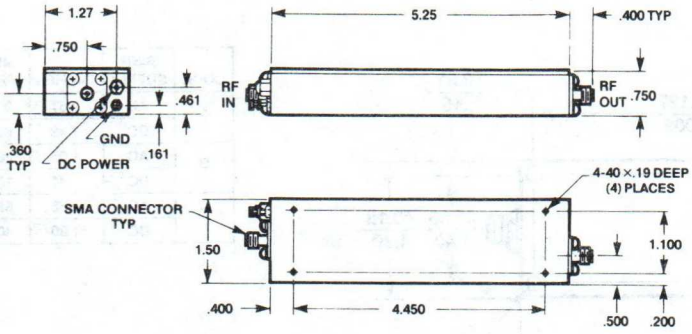

M1159

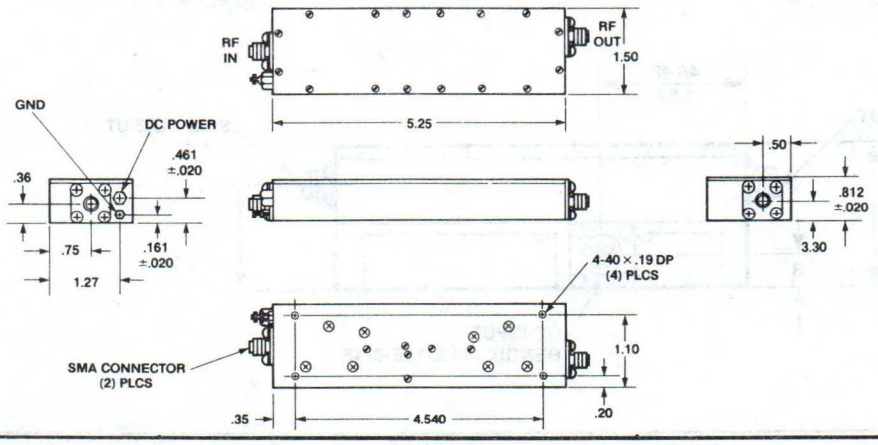

12. OUTLINE DRAWINGS

M1160

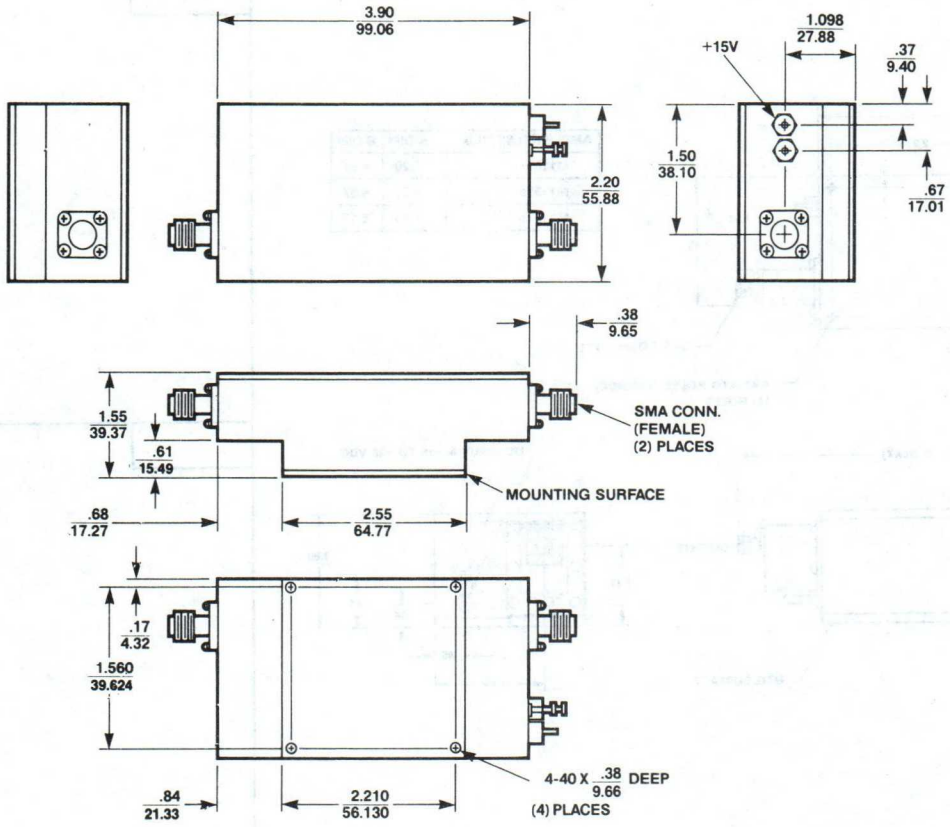

M1161

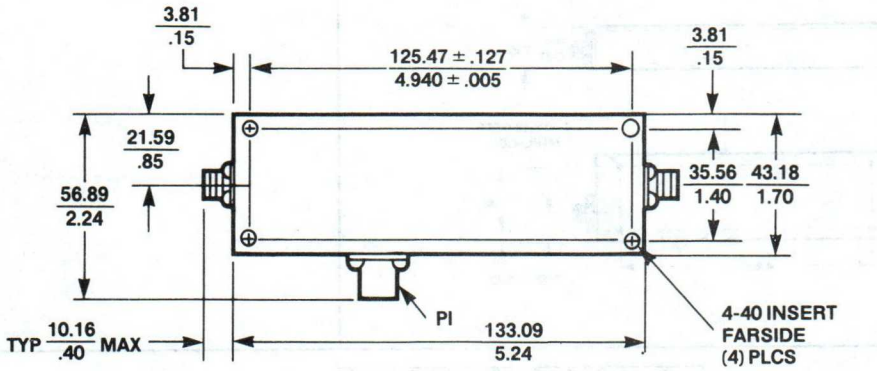

CODE	PWR SUPPLY	INCHES	MILLI-METER
A	AC	3.57	90.67
	DC	2.49	63.24
B	AC	1.05	26.67
	DC	.41	10.41
C	AC	2.68	68.07
	DC	1.60	40.64

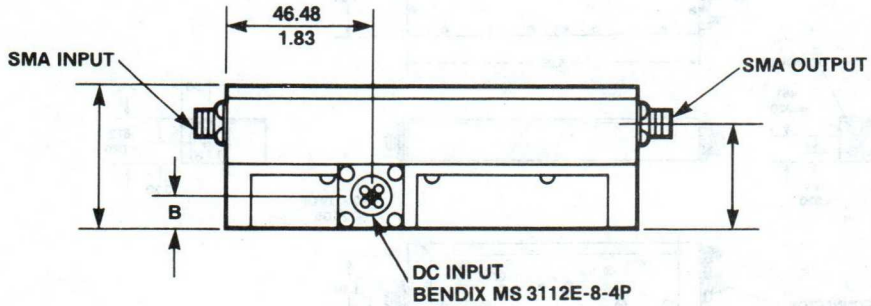

12. OUTLINE DRAWINGS

M1162

CODE	PWR SUPPLY	INCHES	MILLI-METER
A	AC	2.08	73.15
	DC	1.81	45.97
B	AC	1.05	26.67
	DC	.41	10.41
C	AC	2.48	62.99
	DC	1.41	35.81

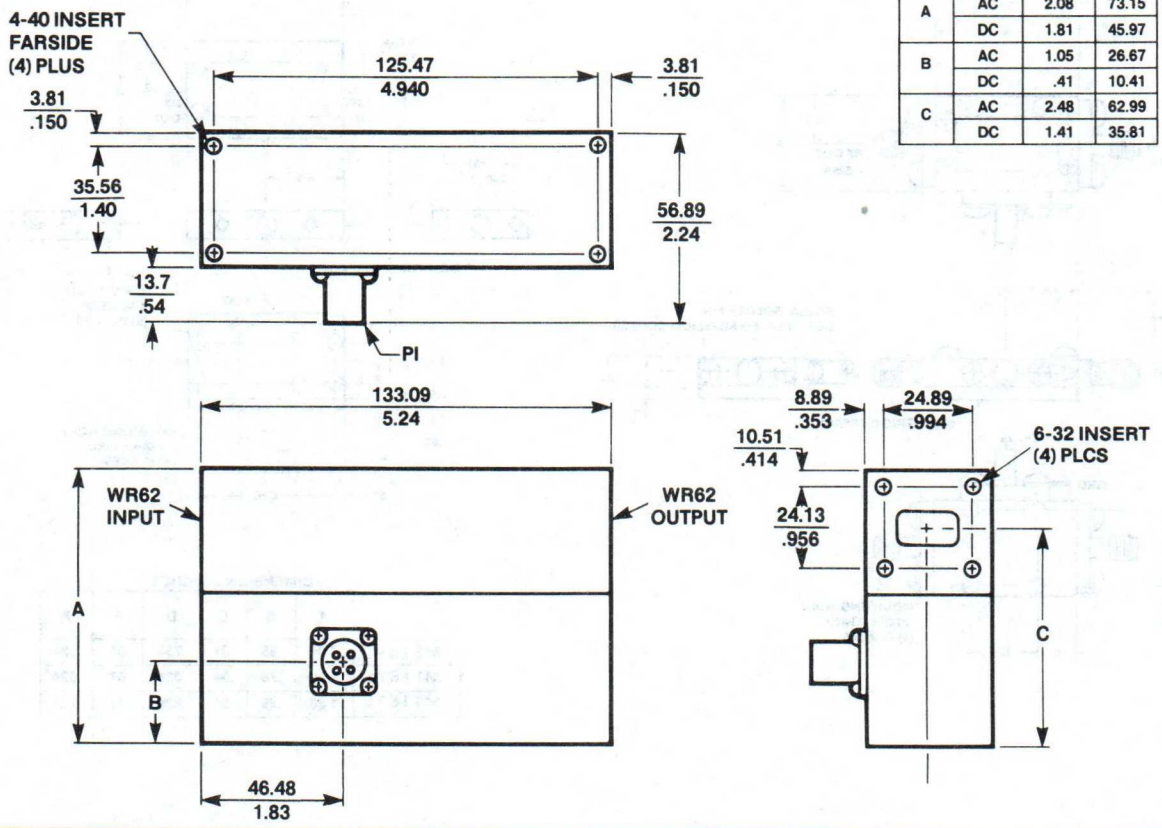

M1166

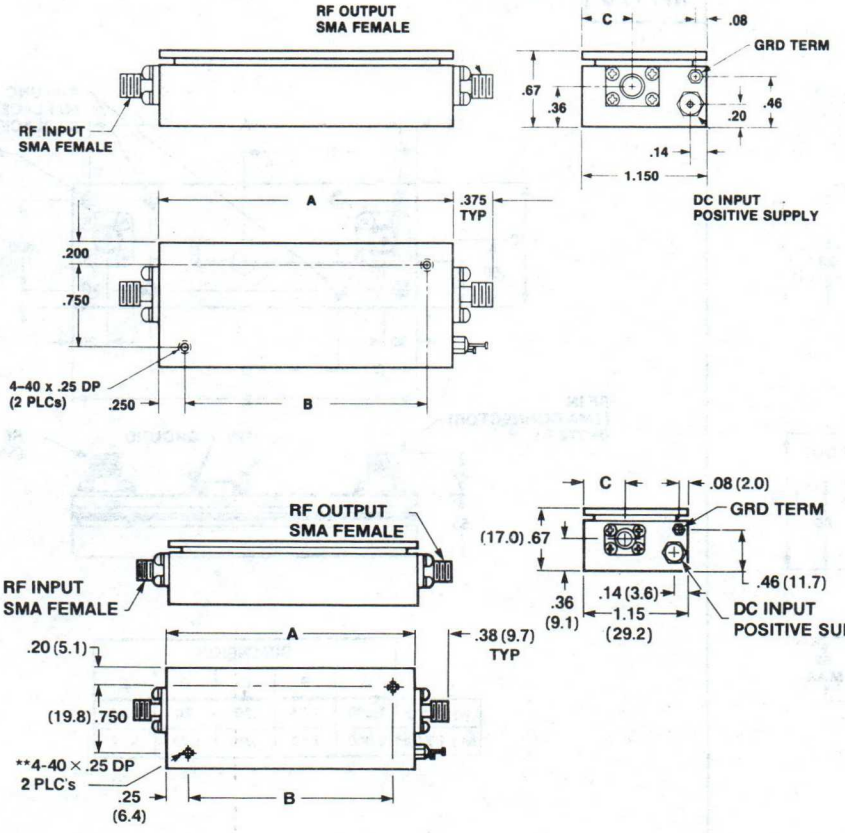

	A	B	C
M1166	1.75	1.25	.510
M1166a	2.25	1.75	.510
M1166b	2.75	2.25	.510
M1166c	3.25	2.75	.510
M1166d	1.417	.917	.375
M1166e	2.083	1.583	.375
M1166f	2.75	2.25	.375
M1166g	1.417	.917	.465
M1166h	2.083	1.583	.465
M1166j	2.75	2.25	.465
M1166k	3.75	3.25	.510

12. OUTLINE DRAWINGS

M1167

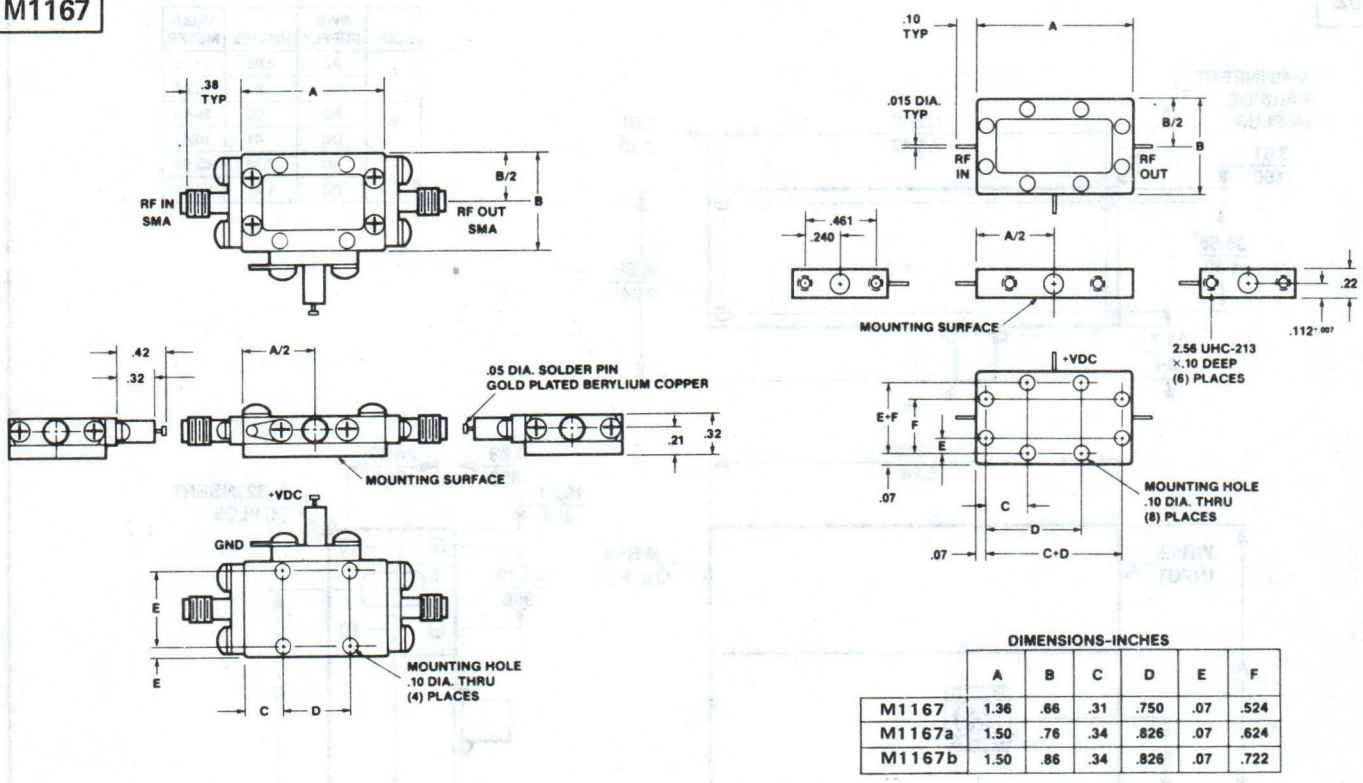

DIMENSIONS-INCHES

	A	B	C	D	E	F
M1167	1.36	.66	.31	.750	.07	.524
M1167a	1.50	.76	.34	.826	.07	.624
M1167b	1.50	.86	.34	.826	.07	.722

M1168

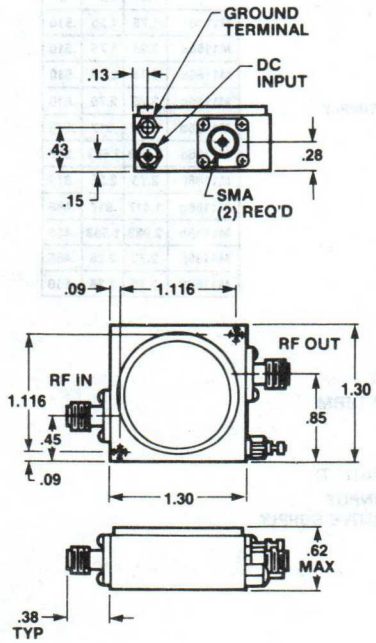

M1170

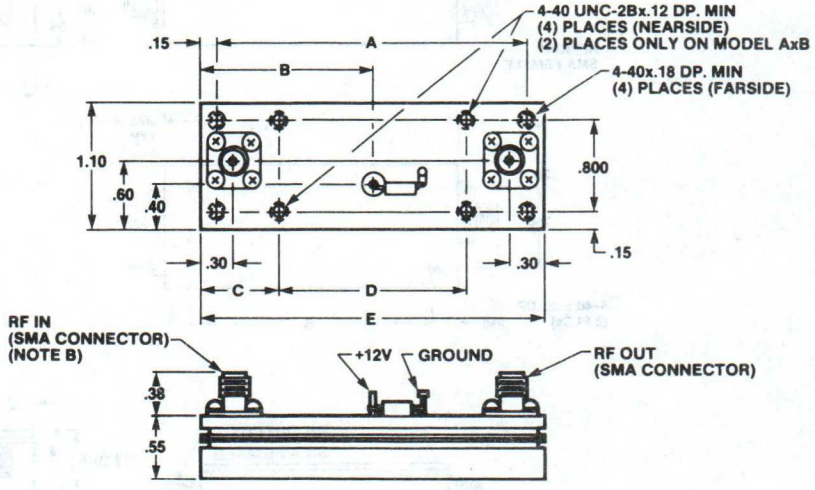

	DIMENSION				
	A	B	C	D	E
M1170	1.800	1.05	.70	.70	2.10
M1170a	2.800	1.55	.70	1.70	3.10

12. OUTLINE DRAWINGS

M1171

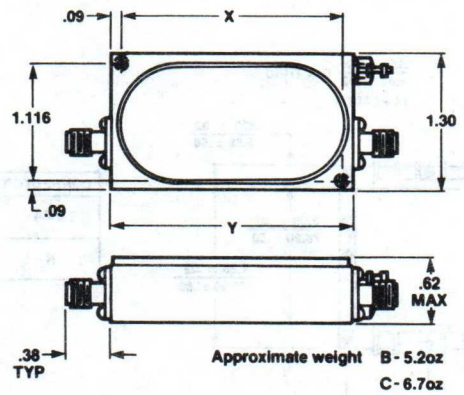

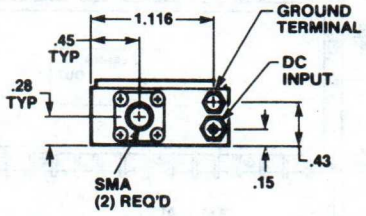

	DIMENSION	
	X	Y
M1171	2.116	2.30
M1171a	2.786	2.97

M1175

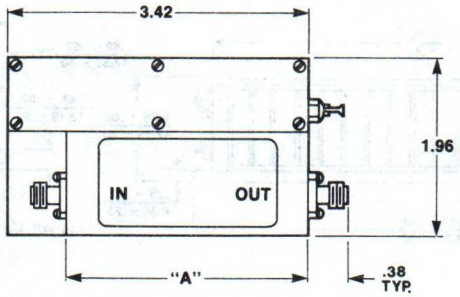

	A	B	C
M1175	2.75	2.250	.375
M1175a	3.42	2.917	.375
M1175b	2.75	2.250	.465
M1175c	3.42	2.917	.465

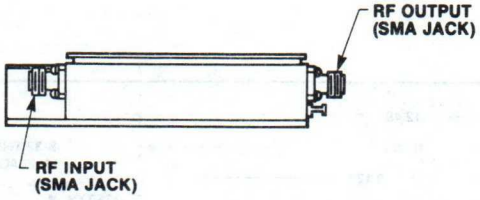

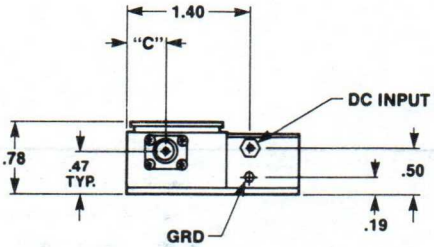

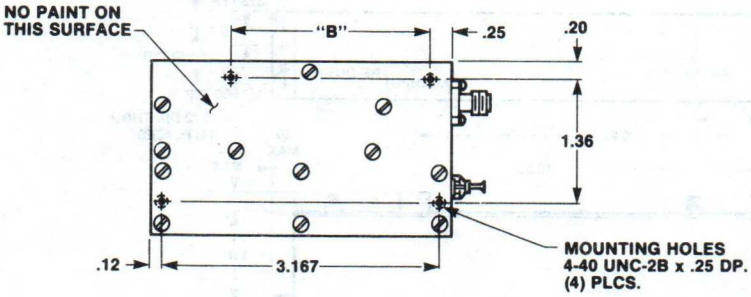

M983

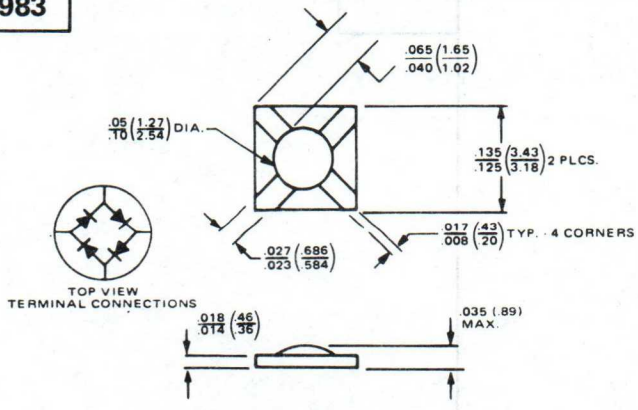

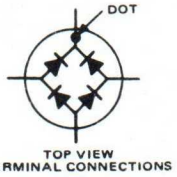

M983a

M1250

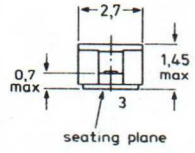

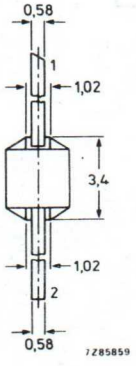

7Z85859

12. OUTLINE DRAWINGS

M1176

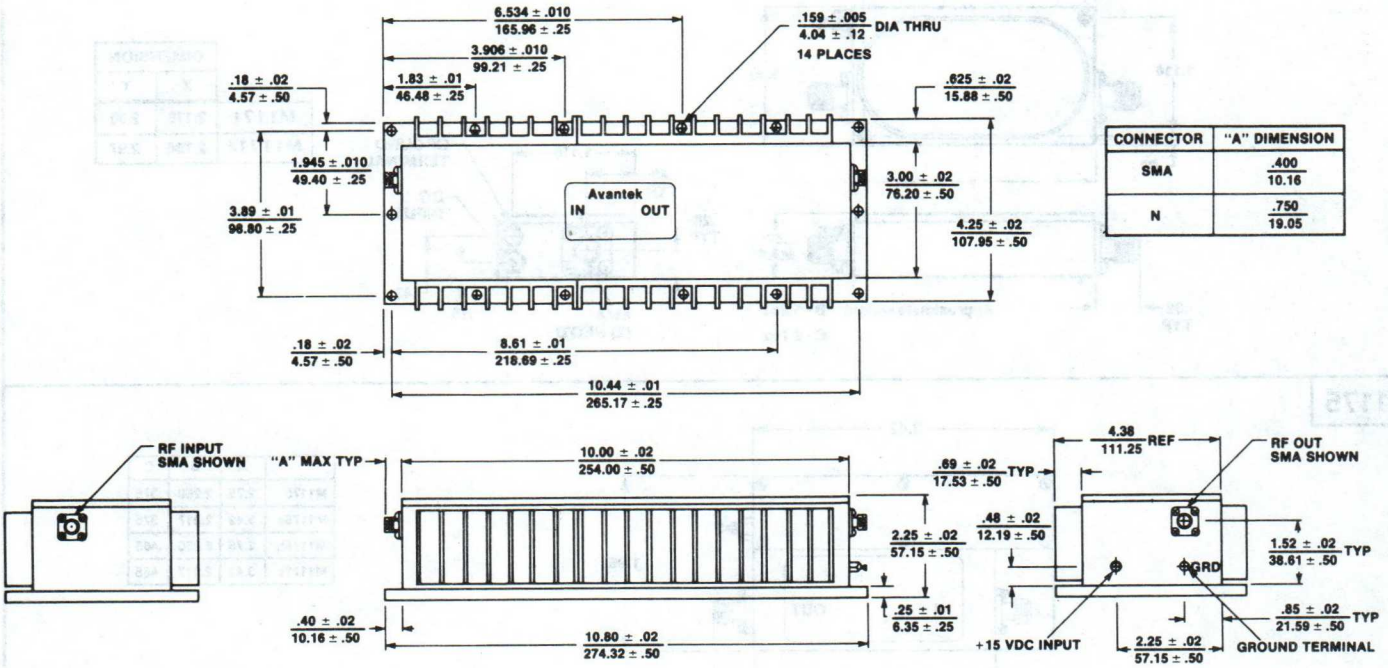

CONNECTOR	"A" DIMENSION
SMA	.400 / 10.16
N	.750 / 19.05

M1177

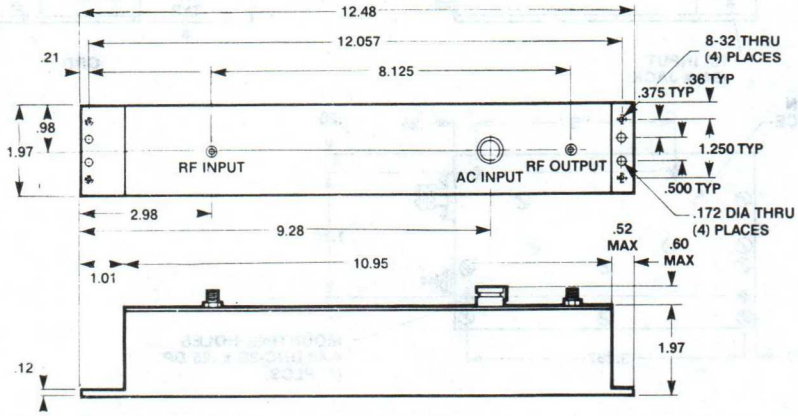

12. OUTLINE DRAWINGS

M1178

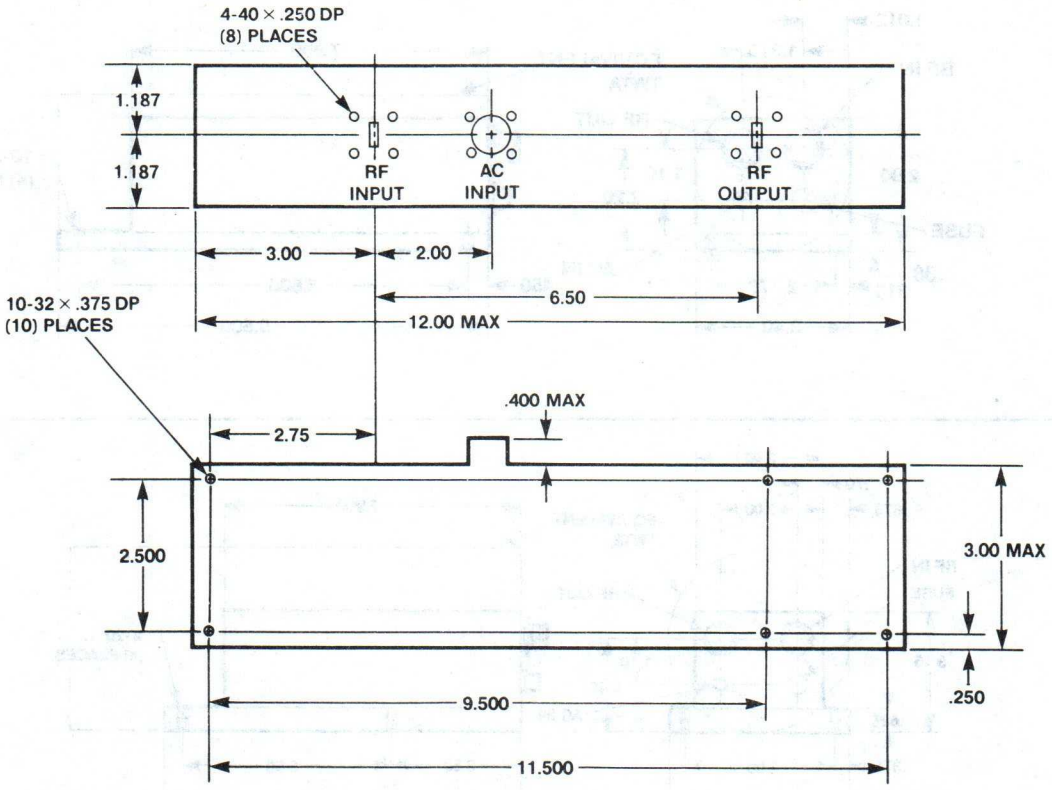

M1179

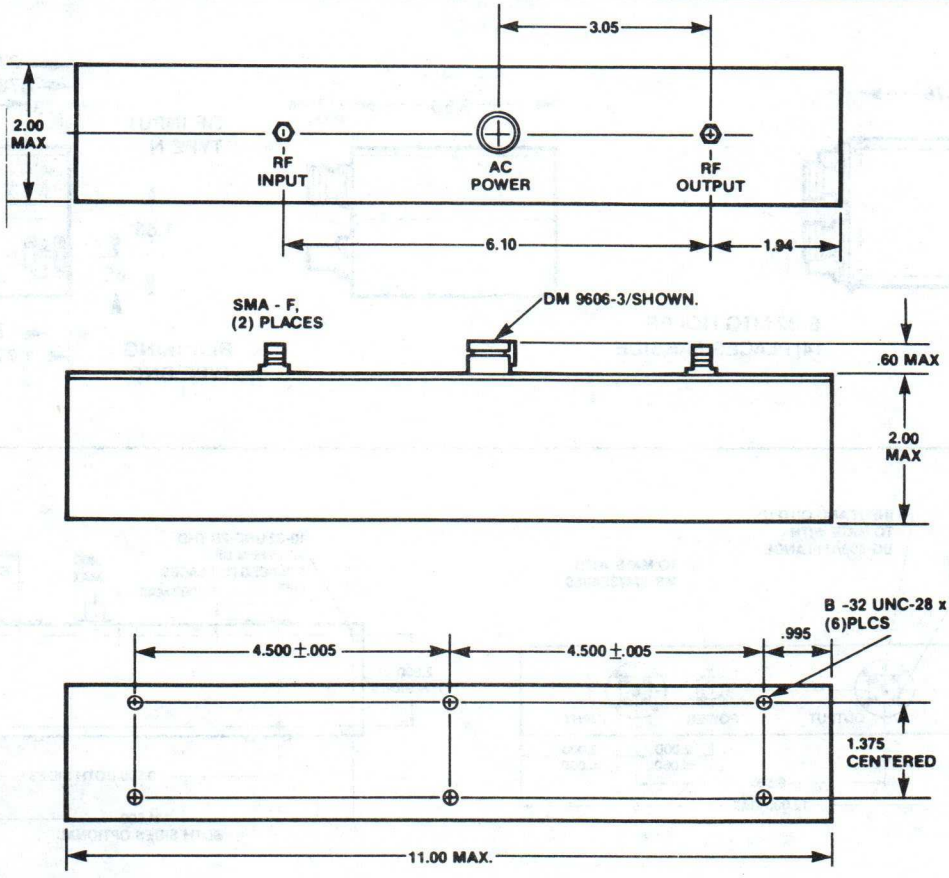

12. OUTLINE DRAWINGS

M1180

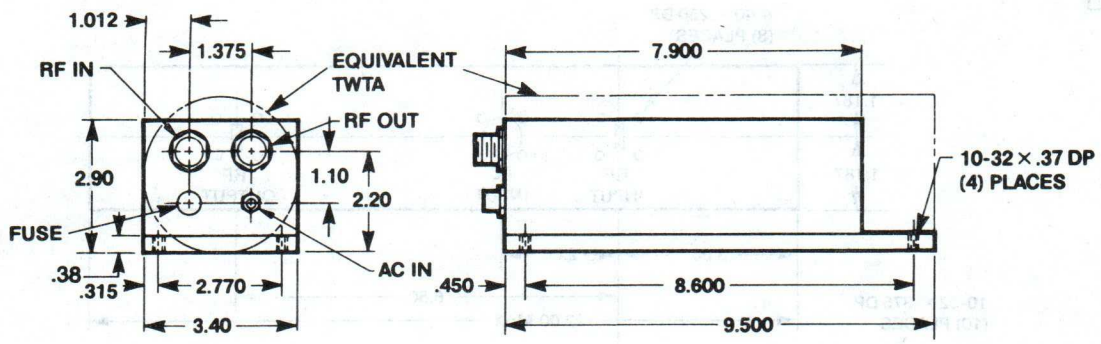

M1181

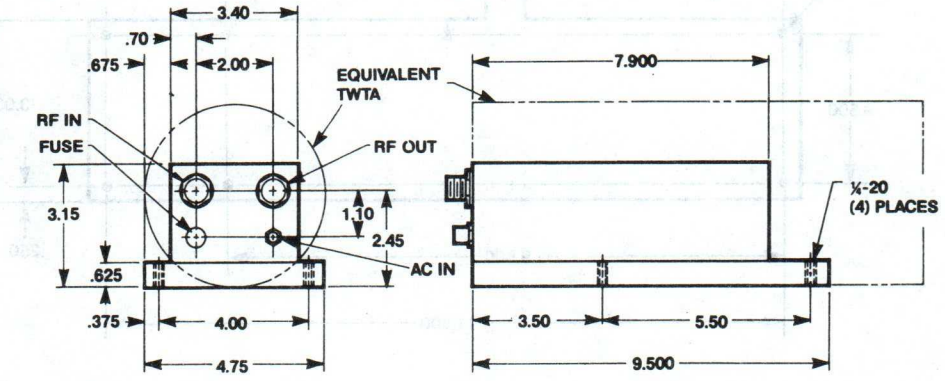

M1183

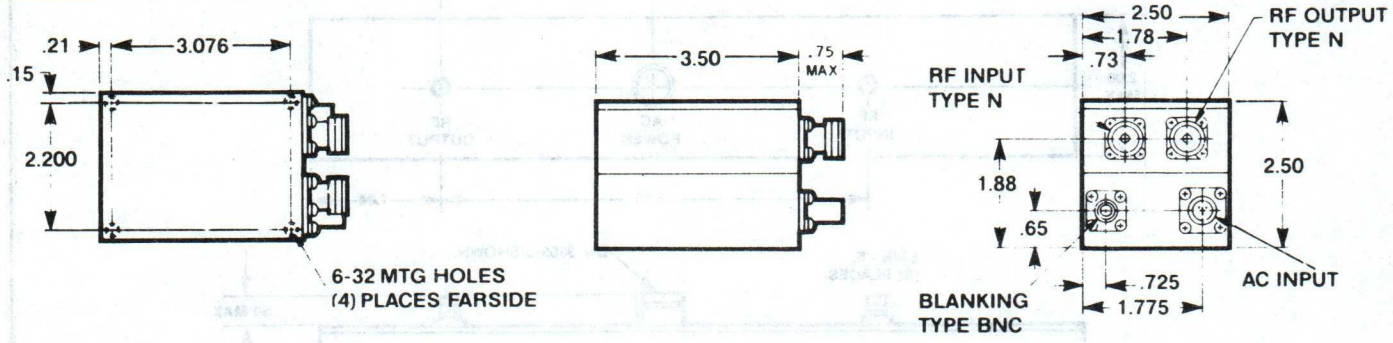

M1184

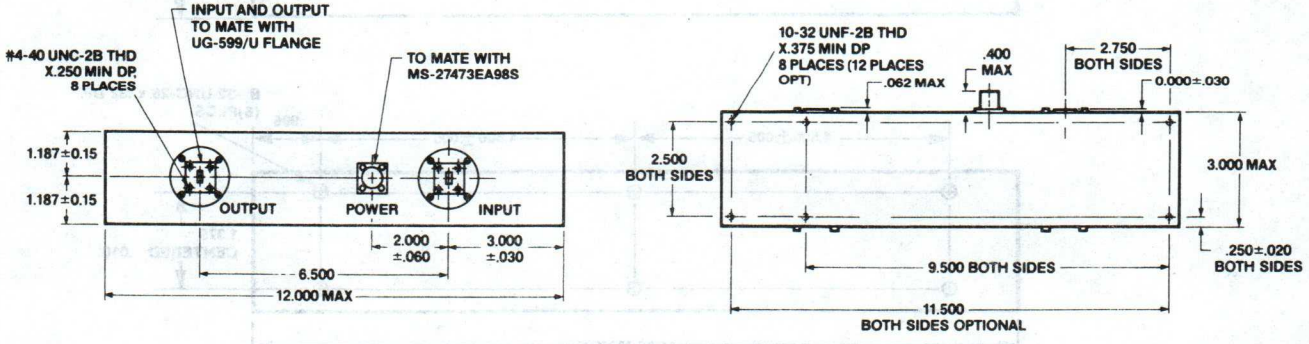

12. OUTLINE DRAWINGS

M1185

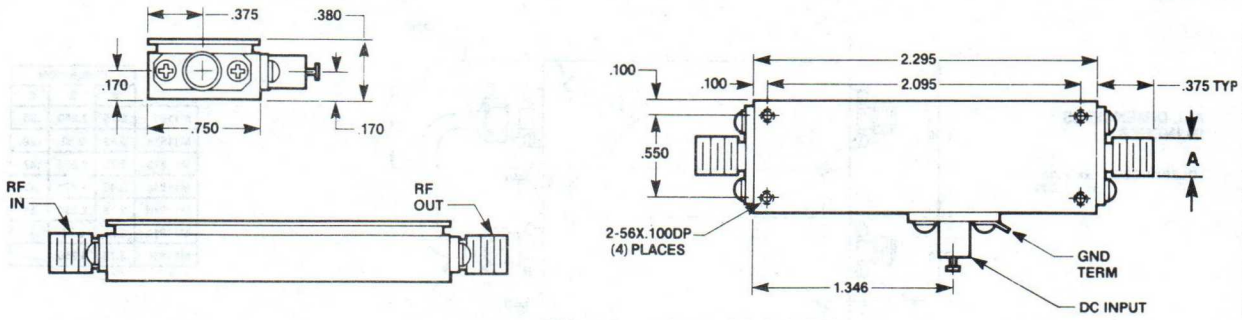

M1186

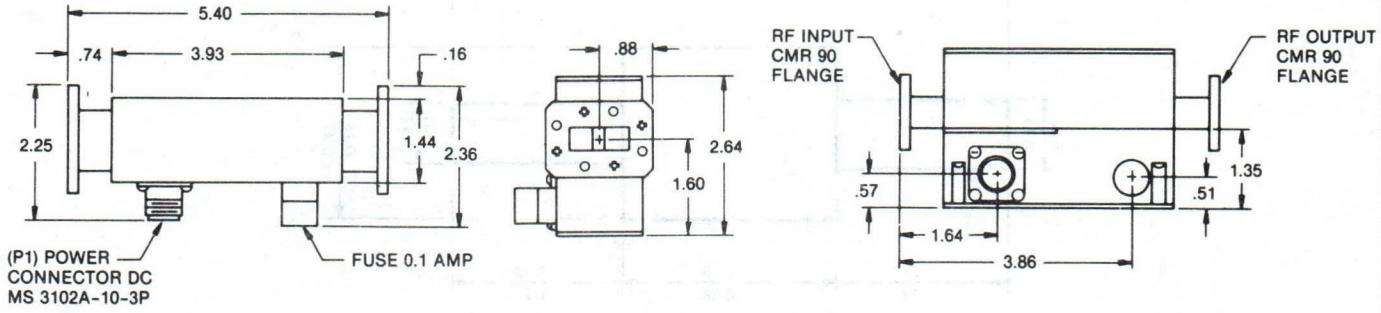

M1191

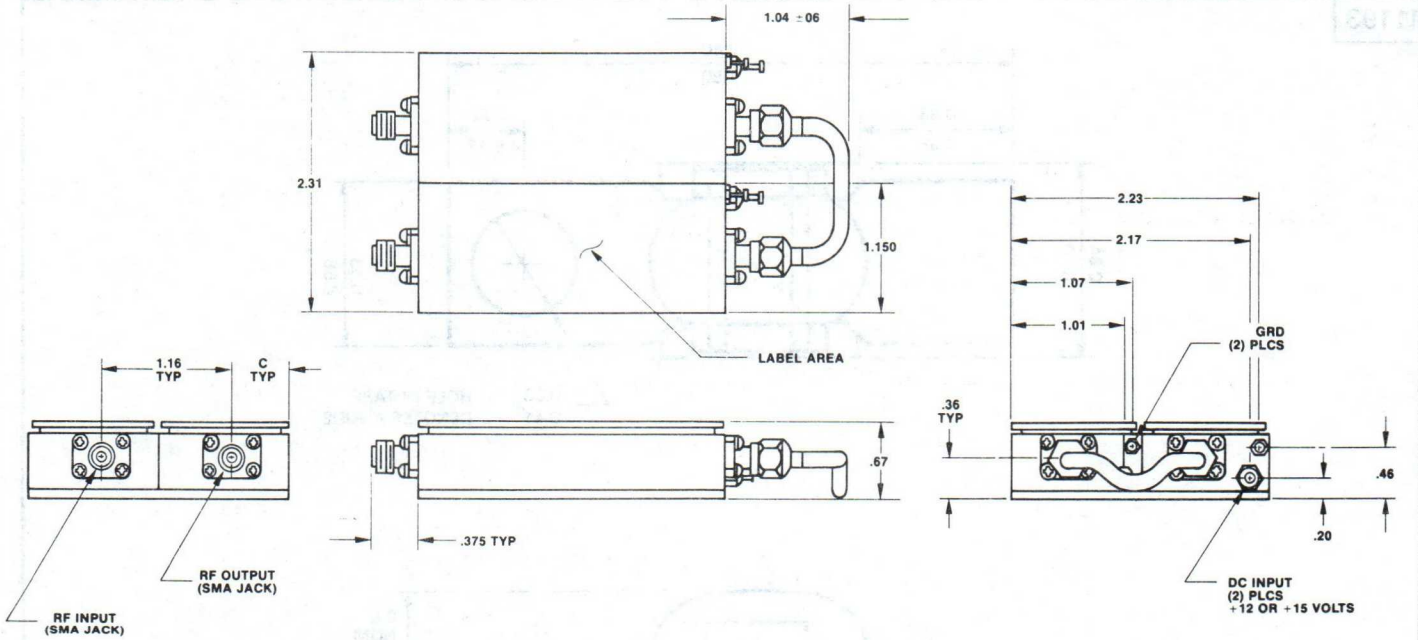

continued on next page

12. OUTLINE DRAWINGS

M1191

continued from previous page

ALL DIMENSIONS IN INCHES

TOLERANCES: .xx ± .02
.xxx ± .005

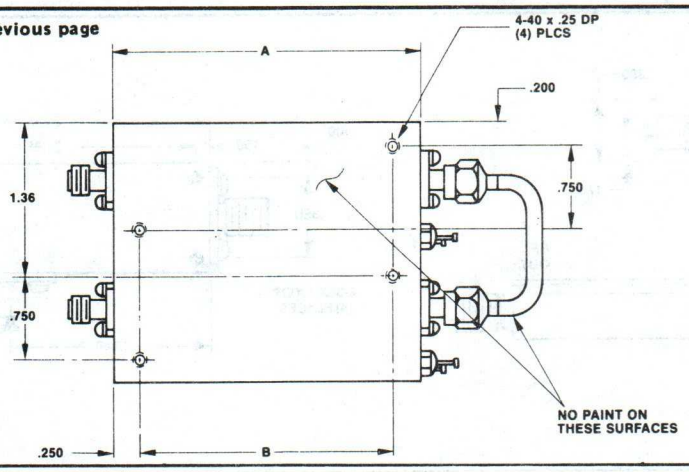

	DIMENSION		
	A	B	C
M1191	2.75	2.250	.38
M1191a	3.42	2.92	.38
M1191b	2.75	2.250	.47
M1191c	3.42	2.920	.47
M1191d	2.75	2.250	.51
M1191e	3.25	2.75	.51
M1191f	3.75	3.250	.51

M1192

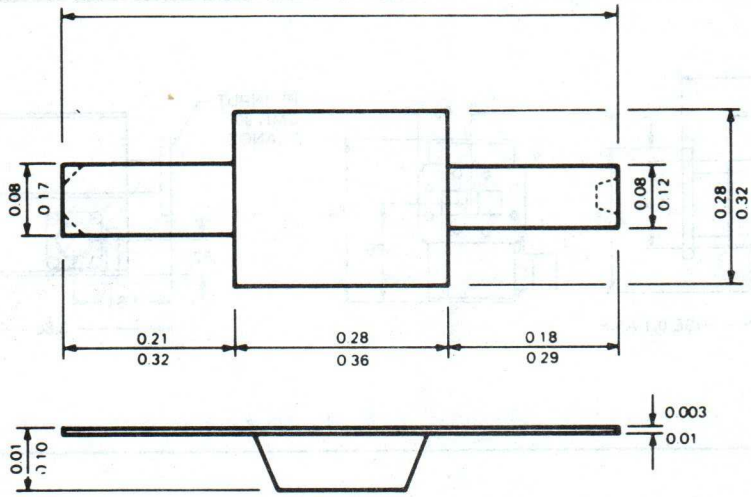

M1193

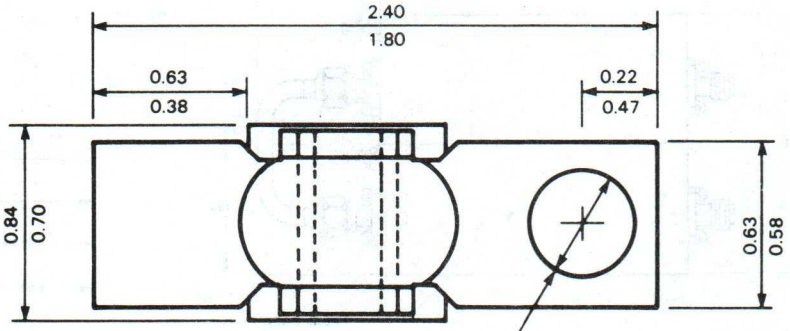

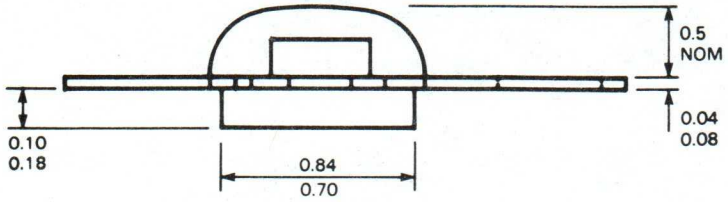

12. OUTLINE DRAWINGS

M1194

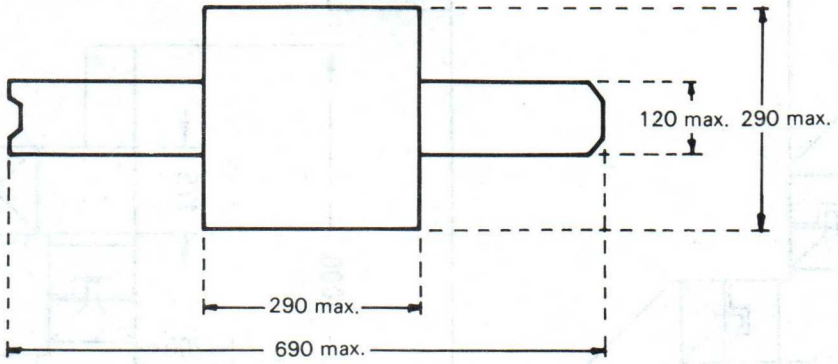

M1195

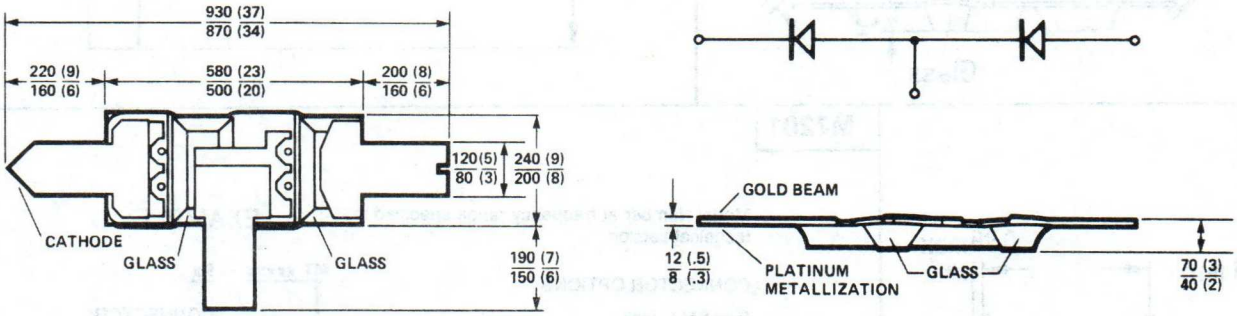

M1196

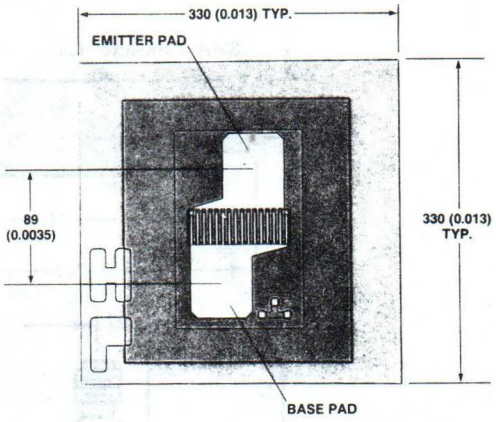

M1197

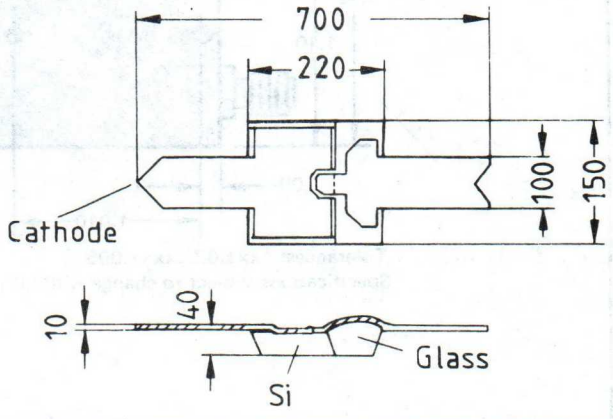

12. OUTLINE DRAWINGS

M1198

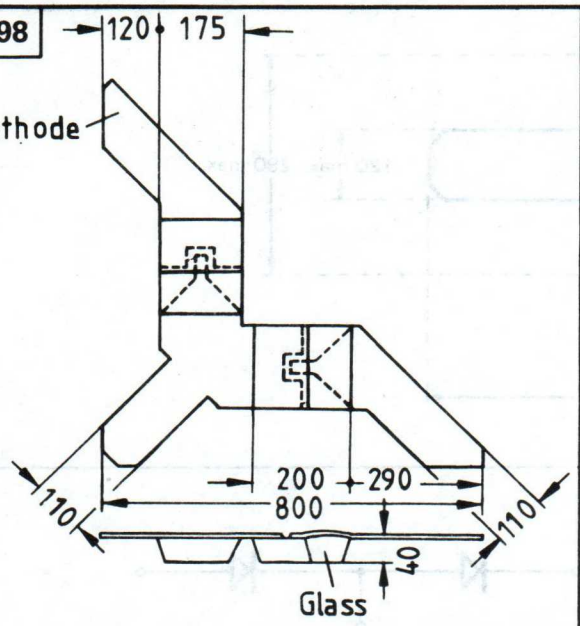

M1199

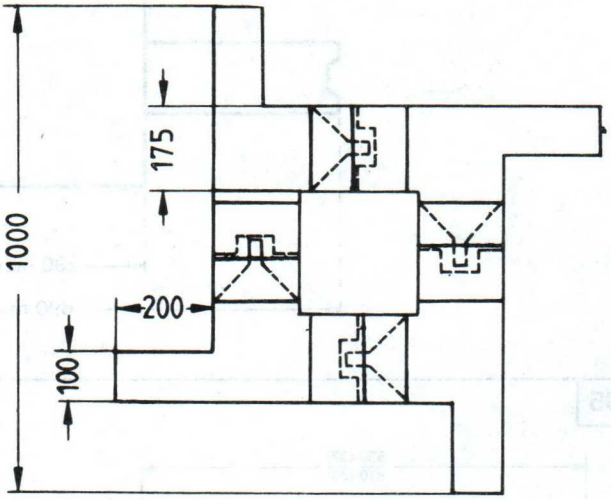

M1200

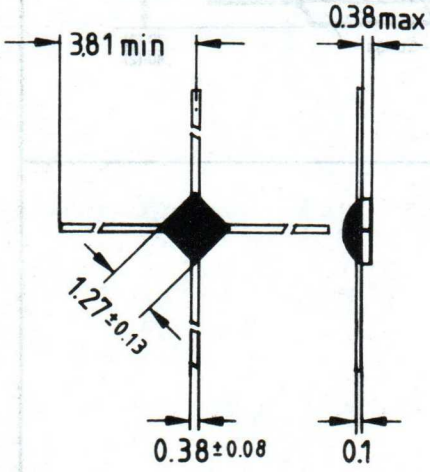

M1201

Model Number at frequency range specified in technical section

CONNECTOR OPTIONS

P_1 = SMA Jack
P_2 = SMC Jack
P_3 = Solder Pin

EXAMPLE:

MT xxxxx - Px

Px: CONNECTOR OPTIONS

MT xxxxx: MODEL NUMBER

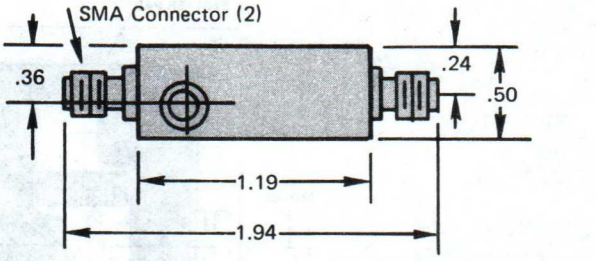

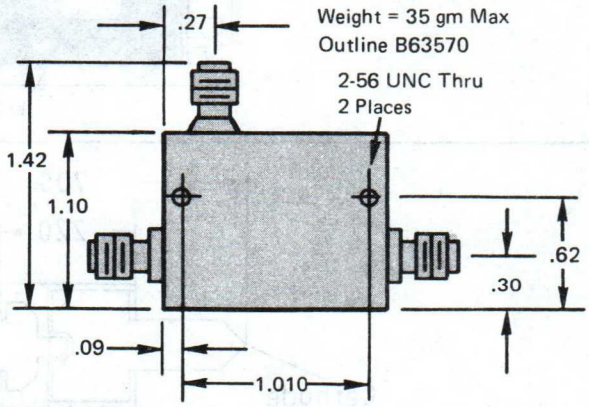

Tolerances: .xx±.02; .xxx±.005
Specifications subject to change without notice.

12. OUTLINE DRAWINGS

M1202

Model Number at frequency range specified in technical section

CONNECTOR OPTIONS

P_1 = SMA Jack
P_2 = SMC Jack
P_3 = Solder Pin

LOGIC

N = Non-Inverting
I = Inverting

POWER SUPPLY OPTIONS

S_1 = +5V, -12V
S_2 = +12V, -12V
S_3 = +15V, -15V
S_9 = +5V, -15V

EXAMPLE:

MT xxxxx - Px - N - Sx

- MT xxxxx: MODEL NUMBER
- Px: CONNECTOR OPTIONS
- N: LOGIC
- Sx: POWER SUPPLY OPTIONS

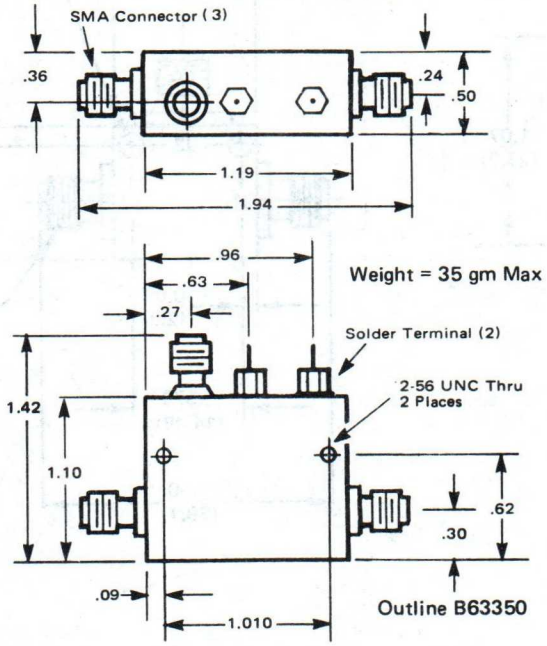

Weight = 35 gm Max

Outline B63350

M1203

Model Number at frequency range specified in technical section

CONNECTOR OPTIONS

P_1 = SMA Jack
P_2 = SMC Jack
P_3 = Solder Pin

LOGIC

N = Non-Inverting
I = Inverting

EXAMPLE:

MT xxxx-x - Px - N

- MT xxxx-x: MODEL NUMBER
- Px: CONNECTOR OPTIONS
- N: LOGIC

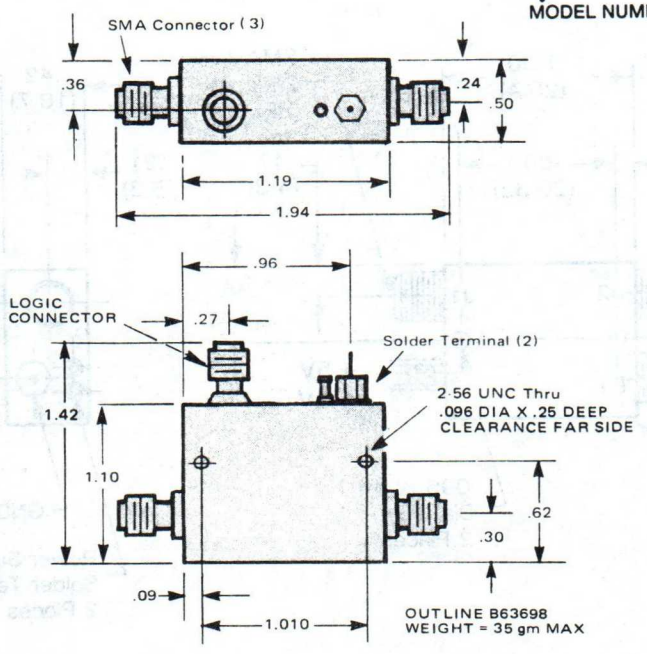

OUTLINE B63698
WEIGHT = 35 gm MAX

12. OUTLINE DRAWINGS

M1204

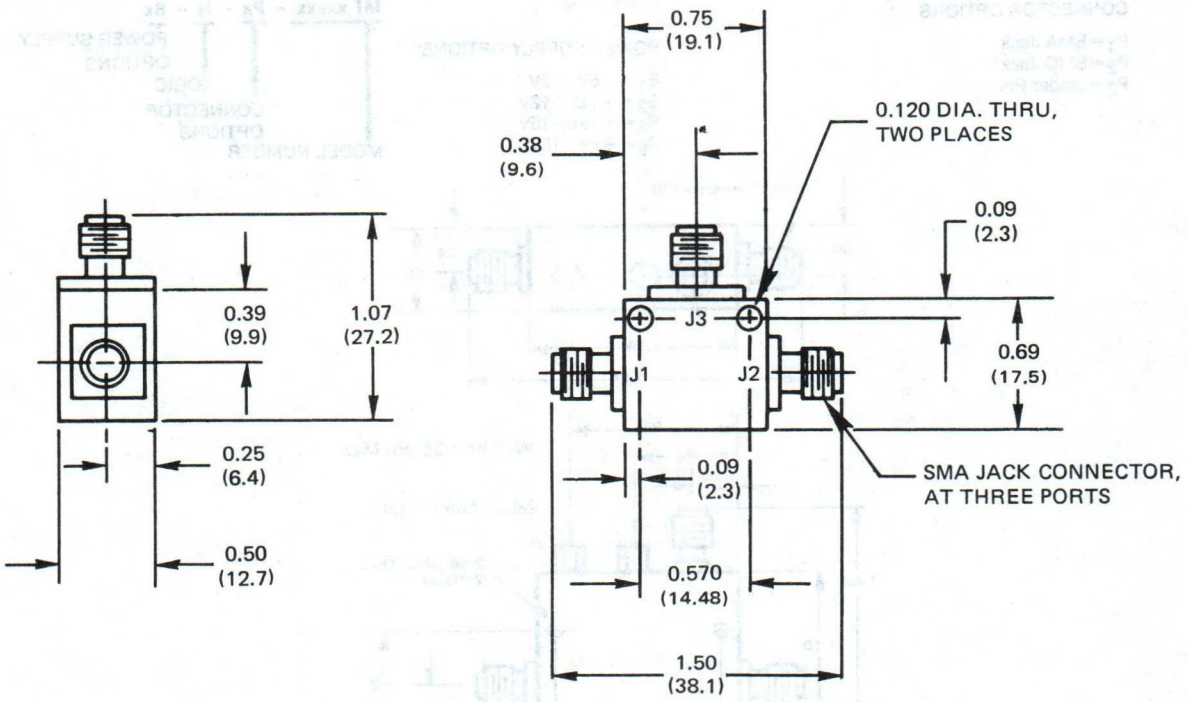

M1205

Model Number at frequency range specified in technical section

CONNECTOR OPTIONS

P_1 = SMA Jack
P_2 = SMC Jack
P_3 = Solder Pin

EXAMPLE:

MT xxxxx - Px
CONNECTOR OPTIONS
MODEL NUMBER

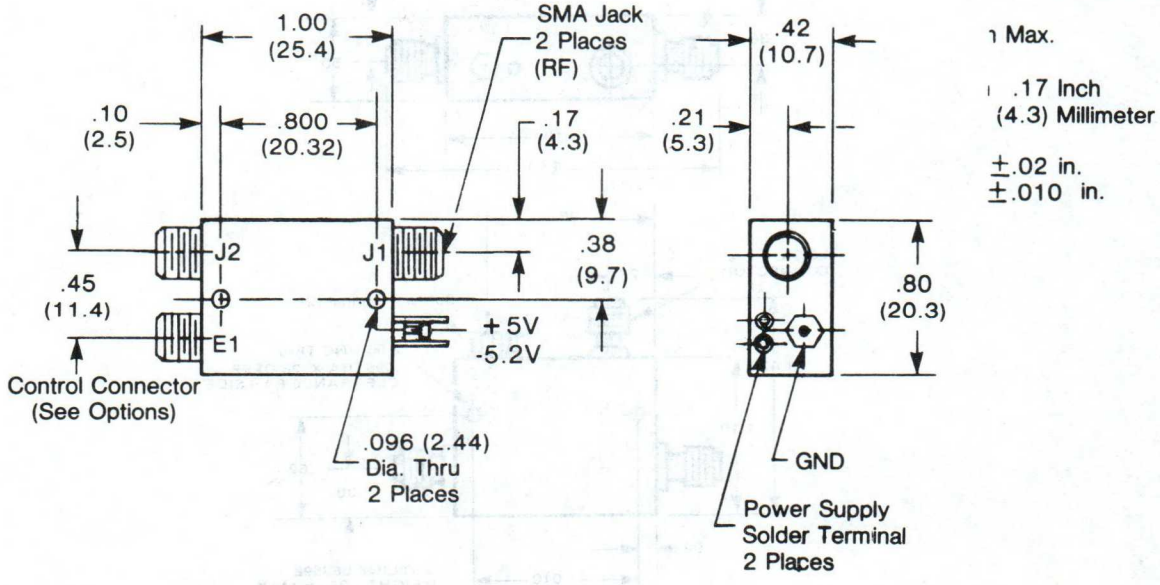

ı Max.

ı .17 Inch
(4.3) Millimeter

±.02 in.
±.010 in.

12. OUTLINE DRAWINGS

M1205a

Model Number at frequency range specified in technical section

CONNECTOR OPTION

P_1 = SMA Jack
P_2 = SMC Jack
P_3 = Solder Pin

LOGIC

N = Non-Inverting
I = Inverting

POWER SUPPLY OPTION

S_1 = +5V/–12V
S_2 = +12V/–12V
S_3 = +15V/–15V
S_4 = +5V/–5V
S_9 = +5V/–15V

EXAMPLE:

MT xxxxx – Px – N – Sx
MODEL NUMBER
CONNECTOR OPTION
LOGIC
POWER SUPPLY OPTION

ı Max.

ı .17 Inch
(4.3) Millimeter

±.02 in.
±.010 in.

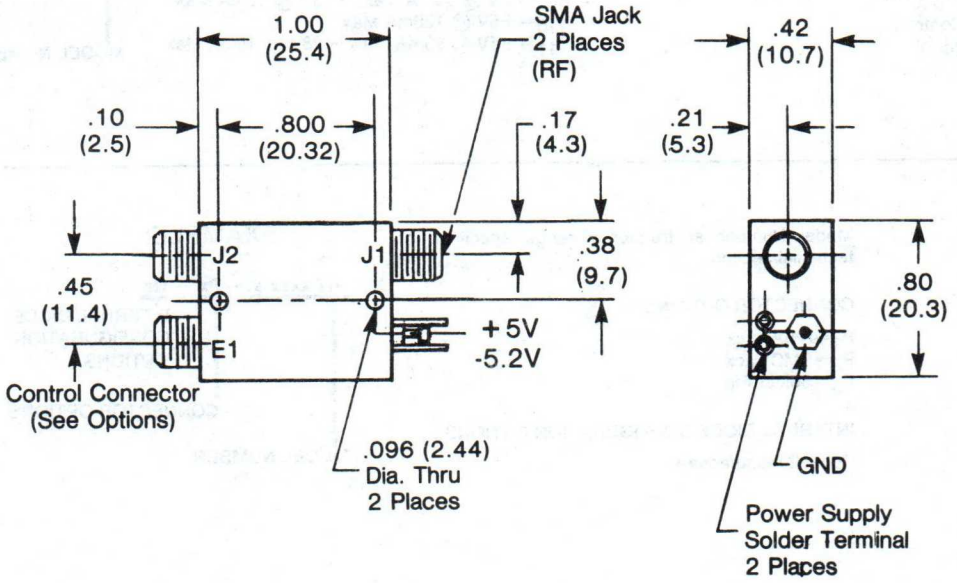

M1206

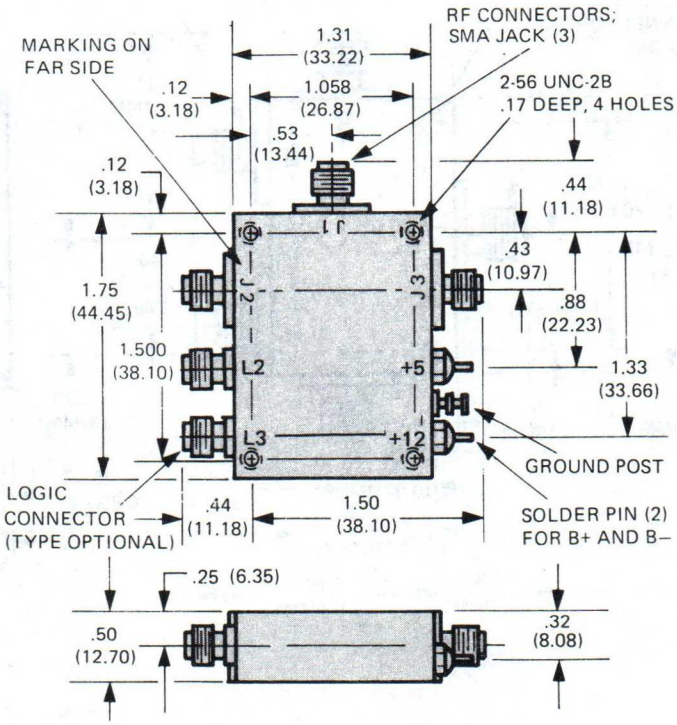

continued on next page

M1206

continued from previous page

Model Number at frequency range specified in technical section

CONNECTOR OPTIONS

P_1 = SMA Jack
P_2 = SMC Jack
P_3 = Solder Pin

CONTROL OPTIONS

C_1 = Single Control
C_2 = Dual Control

LOGIC

N = Non-Inverting
I = Inverting

POWER SUPPLY OPTIONS

S_5 = +5V @ 90mA Max; +12V @ 15mA Max
S_6 = +12V @ 110mA Max
S_7 = +15V @ 110mA Max
S_8 = +5V @ 90mA Max; +15V @ 15mA Max
S_{10} = +5V @ 120mA Max
S_{11} = +5V @ 90mA Max; +28V @ 15mA Max

EXAMPLE:

MT xxxx-x - Px - Cx - N - Sx

- MT xxxx-x: MODEL NUMBER
- Px: CONNECTOR OPTIONS
- Cx: (blank)
- N: LOGIC
- Sx: POWER SUPPLY OPTIONS

M1207

Model Number at frequency range specified in technical section

CONNECTOR OPTIONS

P_1 = SMA Jack
P_2 = SMC Jack
P_3 = Solder Pin

INTERNAL DIODE CONFIGURATION OPTIONS

Consult Manufacturer

EXAMPLE:

MT xxxx-x - Px - Qx

- MT xxxx-x: MODEL NUMBER
- Px: CONNECTOR OPTIONS
- Qx: INTERNAL DIODE CONFIGURATION OPTIONS

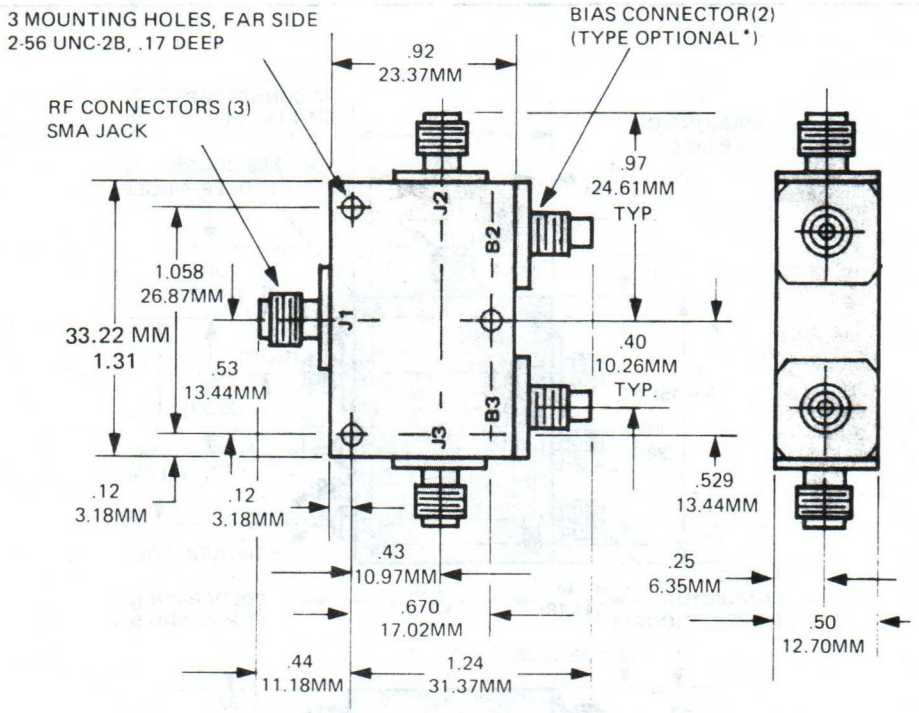

12. OUTLINE DRAWINGS

M1208

Model Number at frequency range specified in technical section

CONNECTOR OPTIONS

P_1 = SMA Jack
P_2 = SMC Jack
P_3 = Solder Pin

BIAS SUPPLY OPTIONS

OPTION	B+	B–
S_1 =	+5	–12
S_2 =	+12	–12
S_3 =	+15	–15

EXAMPLE:

MT xxxxx – Px – Sx
MODEL NUMBER
CONNECTOR OPTIONS
BIAS SUPPLY OPTIONS

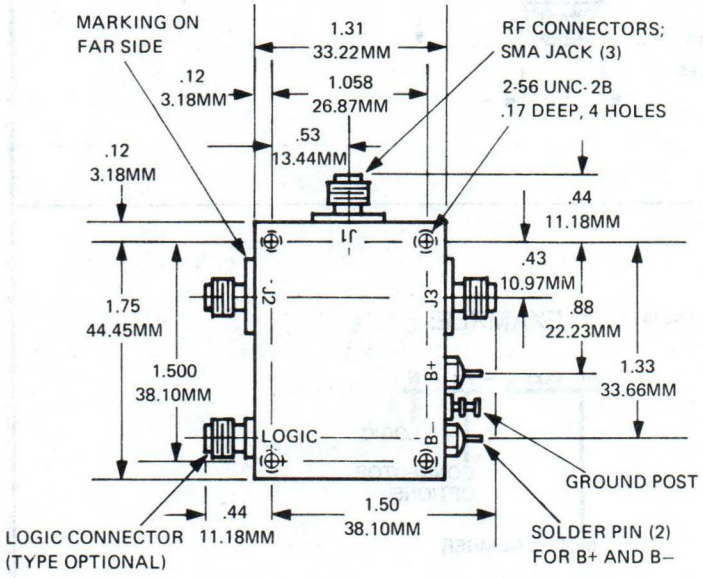

Tolerance on inch dimensions .XX ± .02
.XXX ± .010

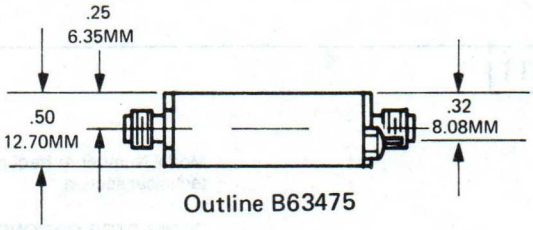

Outline B63475

Weight = 60 gm Max

M1209

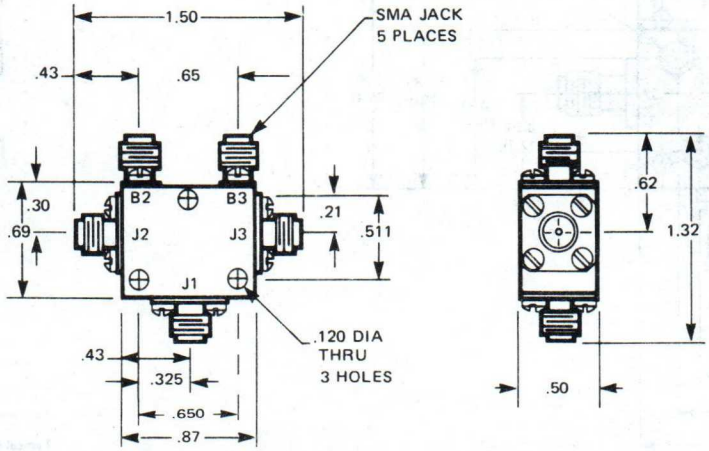

12. OUTLINE DRAWINGS

M1210

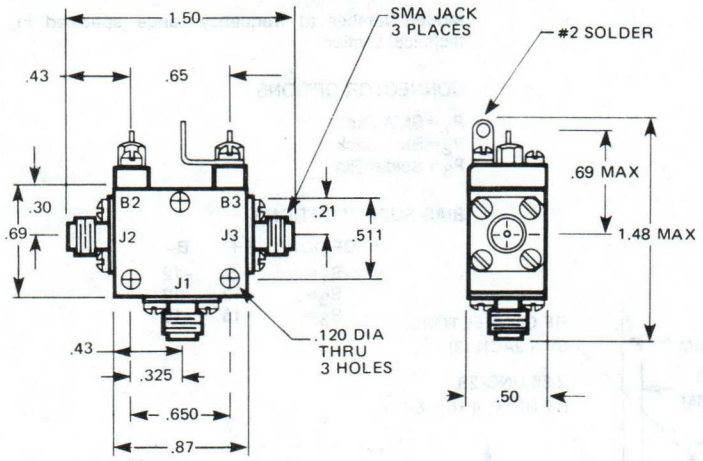

M1211

Model Number at frequency range specified in technical section

CONNECTOR OPTIONS

P_1 = SMA Jack
P_2 = SMC Jack
P_3 = Solder Pin

LOGIC

N = Non-Inverting
I = Inverting

EXAMPLE:

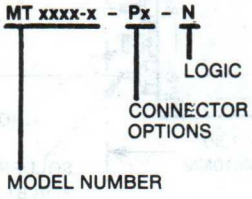

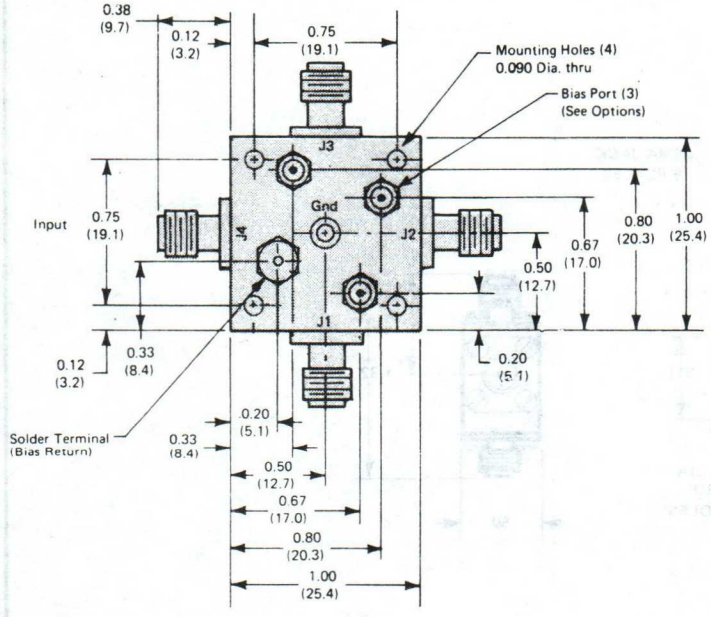

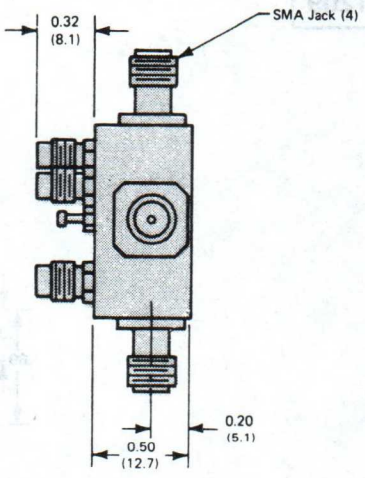

Tolerance on Inch Dimensions: .xx±0.02; .xxx±0.010

Typical Notation: 0.20 (5.1) — inch / millimeter

12. OUTLINE DRAWINGS

M1212

Model Number at frequency range specified in technical section

CONNECTOR OPTIONS

P_1 = SMA Jack
P_2 = SMC Jack
P_3 = Solder Pin

LOGIC

N = Non-Inverting
I = Inverting

EXAMPLE:

MT xxxx-x - Px - N

MODEL NUMBER

CONNECTOR OPTIONS

LOGIC

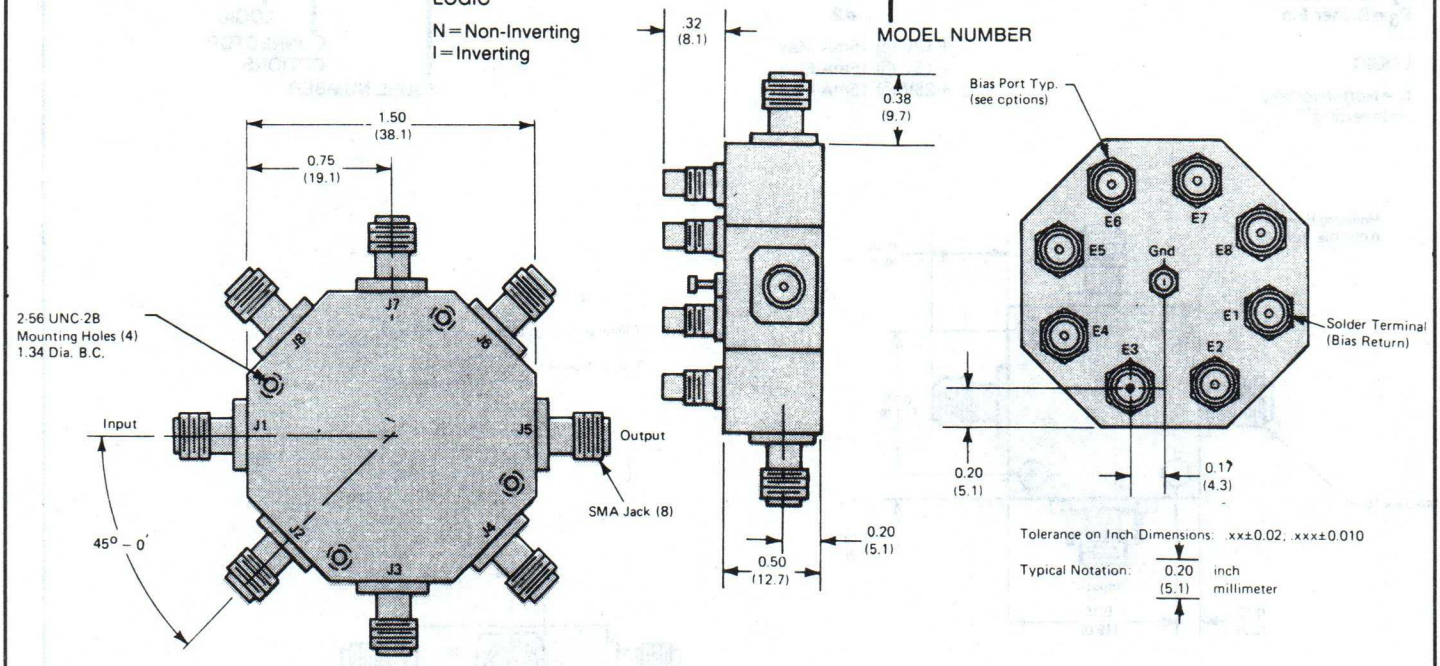

Tolerance on Inch Dimensions: .xx±0.02; .xxx±0.010

Typical Notation: 0.20 inch / (5.1) millimeter

M1213

Model Number at frequency range specified in technical section

CONNECTOR OPTION

P_1 = SMA Jack
P_2 = SMC Jack
P_3 = Solder Pin

BIAS CONDITION

N = Normal Polarity
I = Inverse Polarity

EXAMPLE:

MT xxxx-A - Px - N

MODEL NUMBER

CONNECTOR OPTION

BIAS CONDITIONS

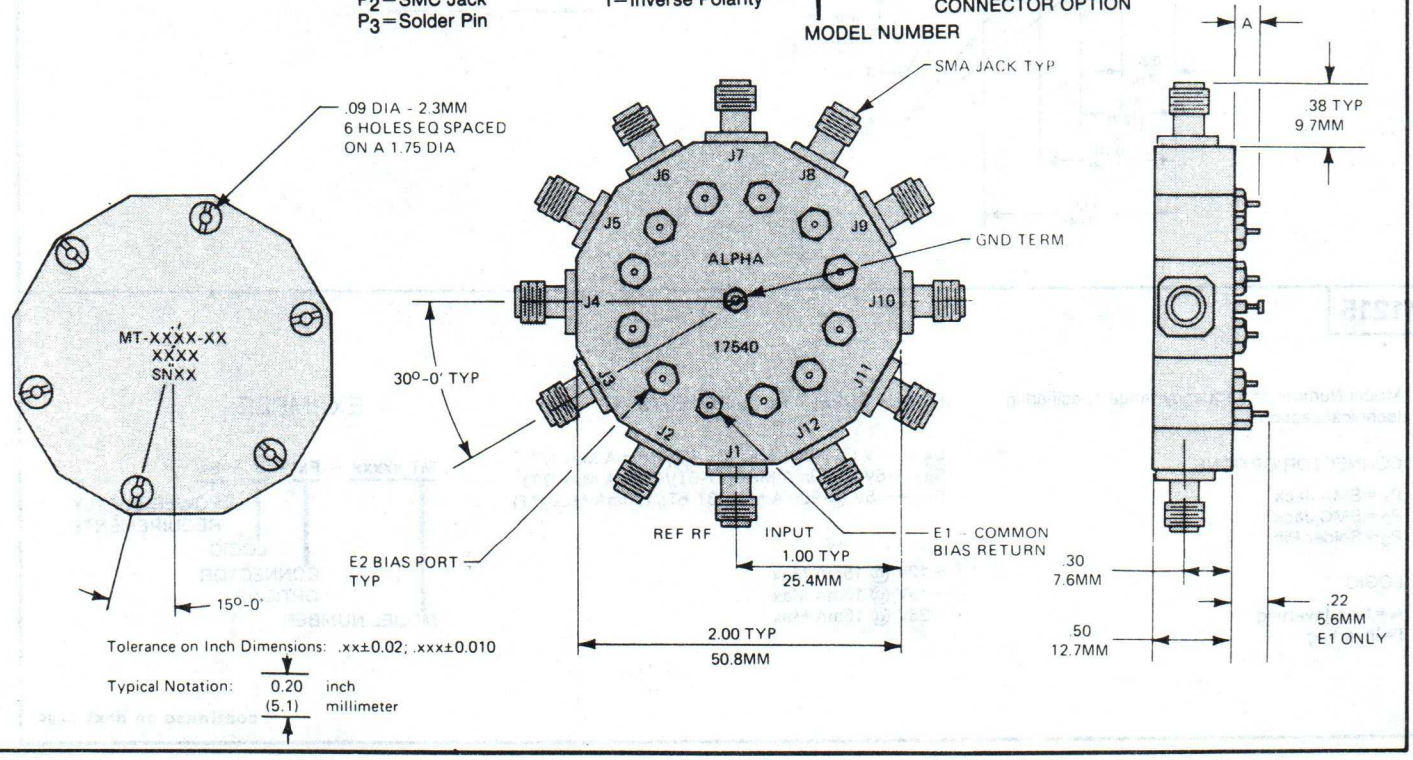

Tolerance on Inch Dimensions: .xx±0.02; .xxx±0.010

Typical Notation: 0.20 inch / (5.1) millimeter

12. OUTLINE DRAWINGS

M1214

Model Number at frequency range specified in technical section

CONNECTOR OPTIONS

P_1 = SMA Jack
P_2 = SMC Jack
P_3 = Solder Pin

LOGIC

N = Non-Inverting
I = Inverting

POWER SUPPLY REQUIREMENTS

#1

S_5 = +5V @ 90mA Max (3T-6T)/120mA Max (7T)
S_8 = +5V @ 90mA Max (3T-6T)/120mA Max (7T)
S_{11} = +5V @ 90mA Max (3T-6T)/120mA Max (7T)

#2

+12V @ 15mA Max
+15V @ 15mA Max
+28V @ 15mA Max

EXAMPLE:

MT xxxxx - Px - N - Sx

- MT xxxxx: MODEL NUMBER
- Px: CONNECTOR OPTIONS
- N: LOGIC
- Sx: POWER SUPPLY REQUIREMENTS

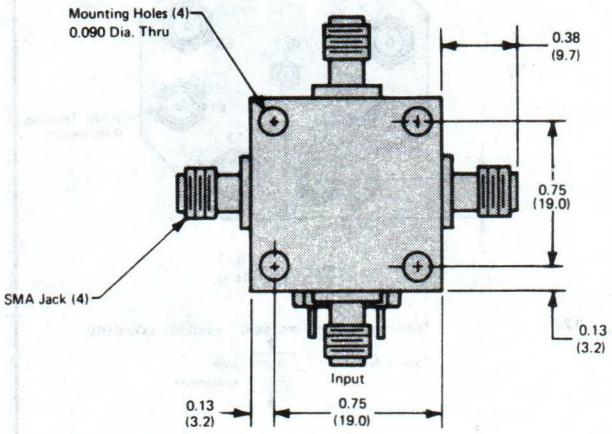

Tolerance on Inch Dimensions: .xx±0.02, .xxx±0.010

Typical Notation: 0.20 inch / (5.1) millimeter

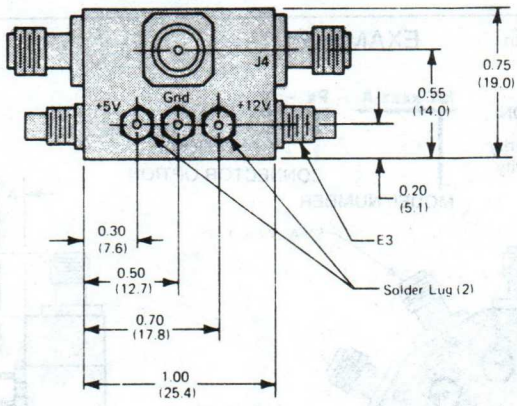

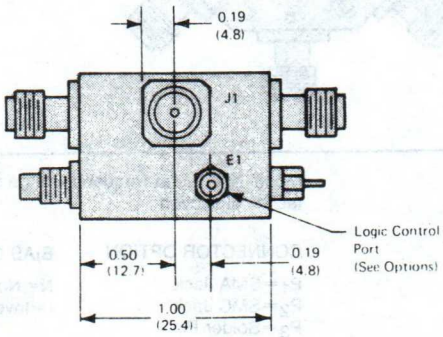

M1215

Model Number at frequency range specified in technical section

CONNECTOR OPTIONS

P_1 = SMA Jack
P_2 = SMC Jack
P_3 = Solder Pin

LOGIC

N = Non-Inverting
I = Inverting

POWER SUPPLY REQUIREMENTS

#1

S_5 = +5V @ 90mA Max (3T-6T)/120mA Max (7T)
S_8 = +5V @ 90mA Max (3T-6T)/120mA Max (7T)
S_{11} = +5V @ 90mA Max (3T-6T)/120mA Max (7T)

#2

+12V @ 15mA Max
+15V @ 15mA Max
+28V @ 15mA Max

EXAMPLE:

MT xxxxx - Px - N - Sx

- MT xxxxx: MODEL NUMBER
- Px: CONNECTOR OPTIONS
- N: LOGIC
- Sx: POWER SUPPLY REQUIREMENTS

continued on next page

12. OUTLINE DRAWINGS

M1215

continued from previous page

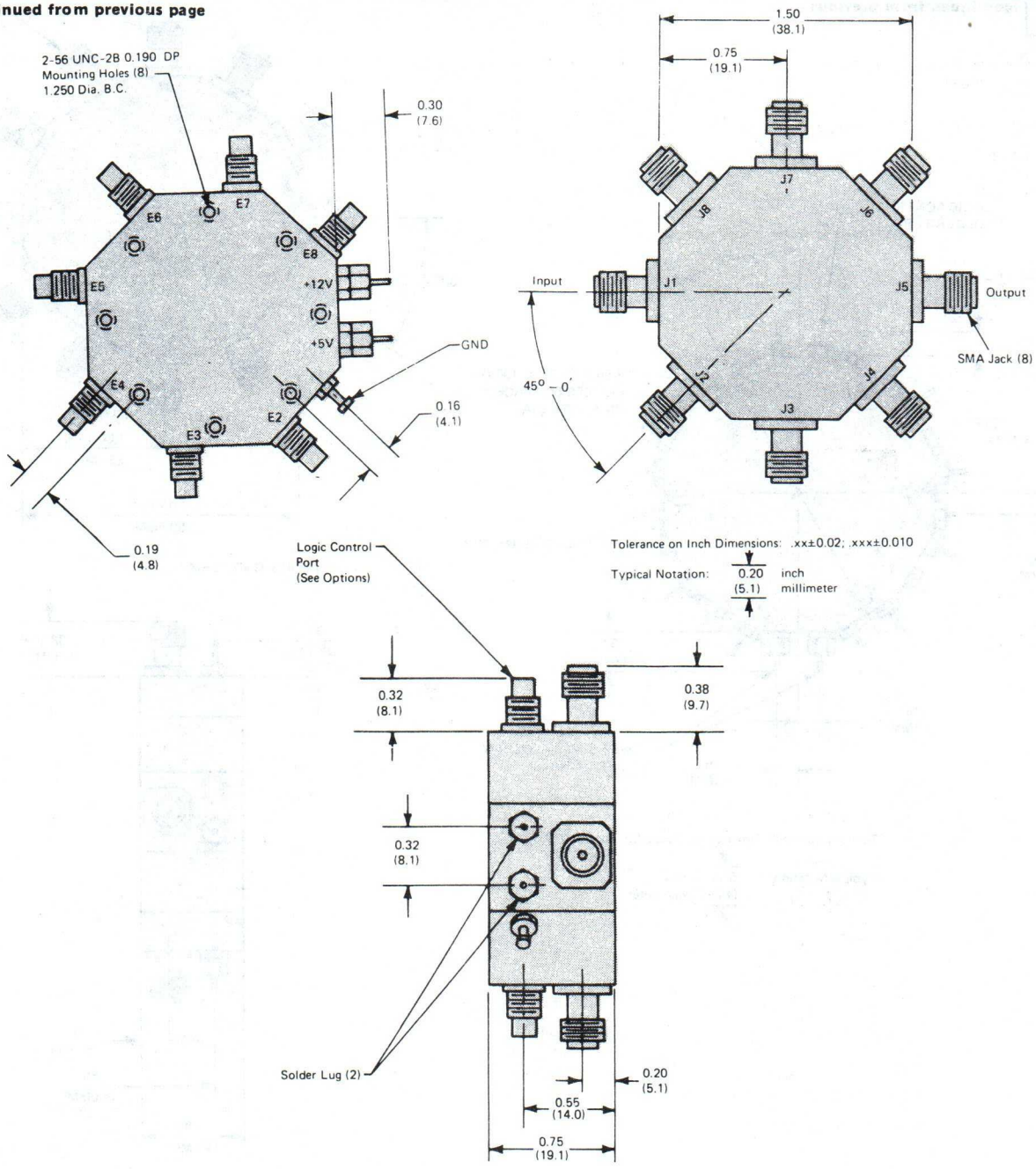

M1216

Model Number at frequency range specified in technical section

CONNECTOR OPTIONS

P_1 = SMA Jack
P_2 = SMC Jack
P_3 = Solder Pin

LOGIC

N = Non-Inverting
I = Inverting

POWER SUPPLY REQUIREMENTS

#1

S_5 = +5V @ 90mA Max (3T-6T)/120mA Max (7T)
S_8 = +5V @ 90mA Max (3T-6T)/120mA Max (7T)
S_{11} +5V @ 90mA Max (3T-6T)/120mA Max (7T)

#2

+12V @ 15mA Max
+15V @ 15mA Max
+28V @ 15mA Max

EXAMPLE:

MT xxxxx - Px - N - Sx

- Sx: POWER SUPPLY REQUIREMENTS
- N: LOGIC
- Px: CONNECTOR OPTIONS
- MT xxxxx: MODEL NUMBER

continued on next page

12. OUTLINE DRAWINGS

M1216

continued from previous page

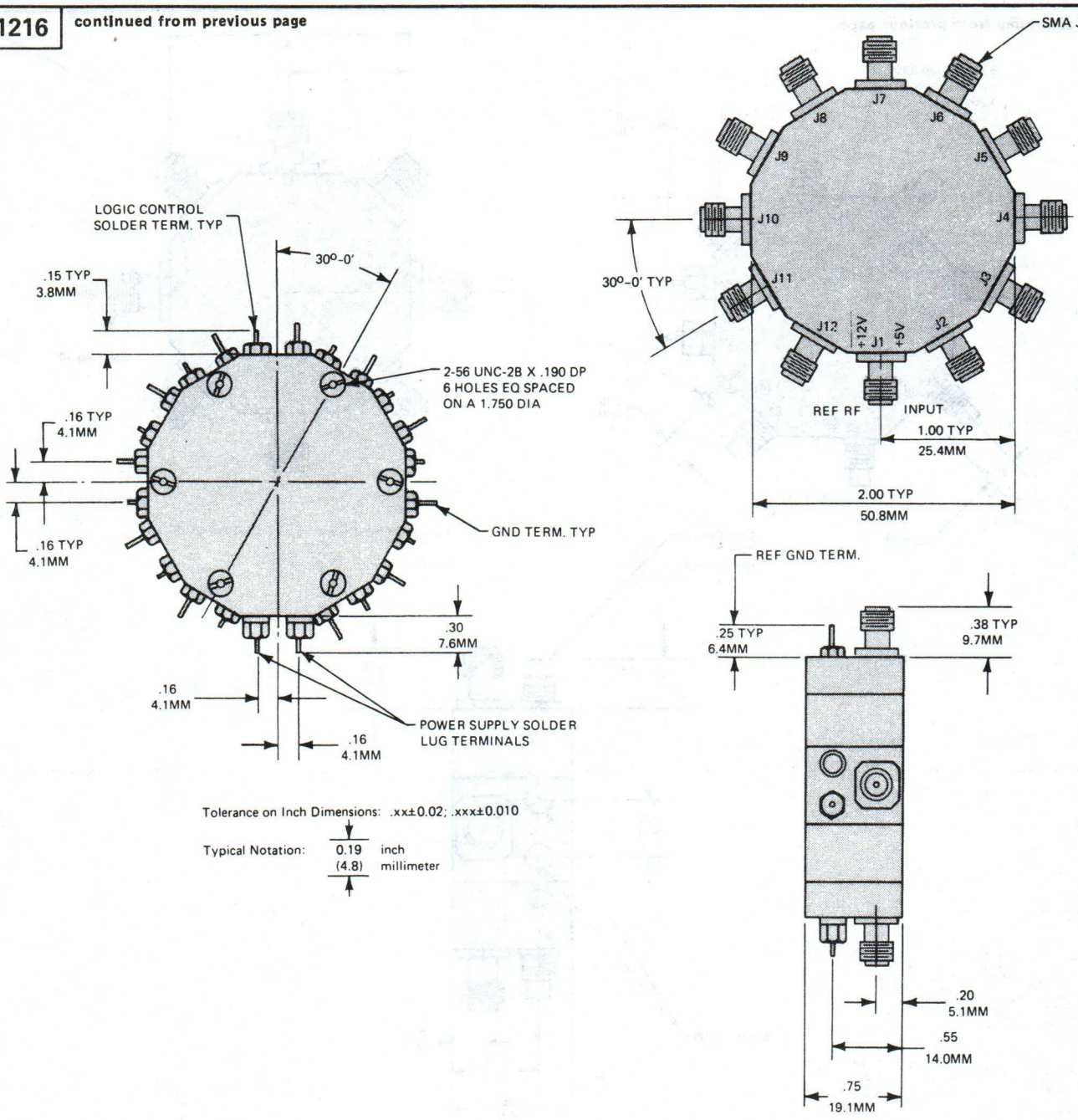

Tolerance on Inch Dimensions: .xx±0.02; .xxx±0.010

Typical Notation: 0.19 (4.8) inch millimeter

M1217

Model Number at frequency range specified in technical section

CONNECTOR OPTION

P_1 = SMA Jack
P_2 = SMC Jack
P_3 = Solder Pin

LOGIC

N = Non-Inverting
I = Inverting

POWER SUPPLY OPTIONS

S_1 = +5V/–12V
S_2 = +12V/–12V
S_3 = +15V/–15V
S_9 = +5V/–15V

EXAMPLE:

MT xxxxx - Px - N - Sx

- MT xxxxx: MODEL NUMBER
- Px: CONNECTOR OPTION
- N: LOGIC
- Sx: POWER SUPPLY OPTIONS

continued on next page

12. OUTLINE DRAWINGS

M1217

continued from previous page

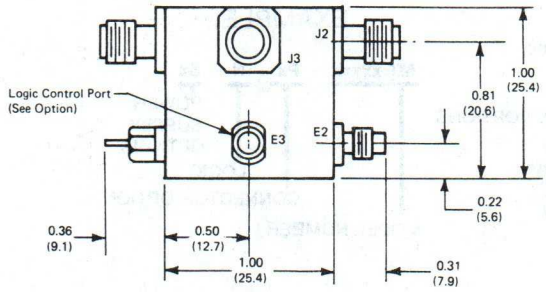

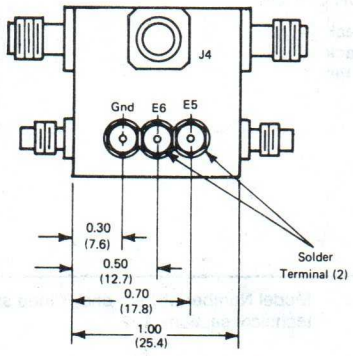

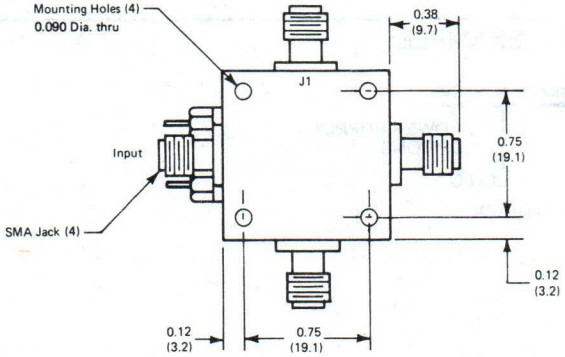

Package B63477

Weight = 60 gm max

Tolerance on Inch Dimensions: .xx±0.02; .xxx±0.010

Typical Notation: 0.30 inch / (7.6) millimeter

M1218

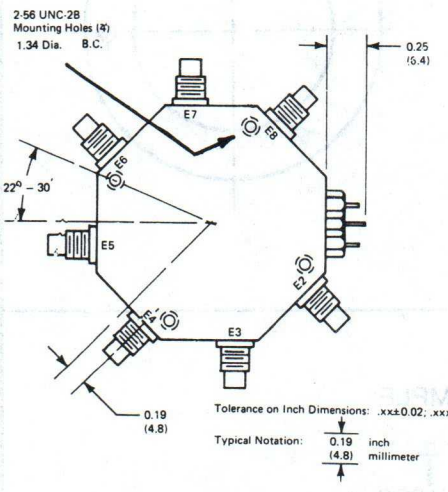

Tolerance on Inch Dimensions: .xx±0.02; .xxx±0.010

Typical Notation: 0.19 inch / (4.8) millimeter

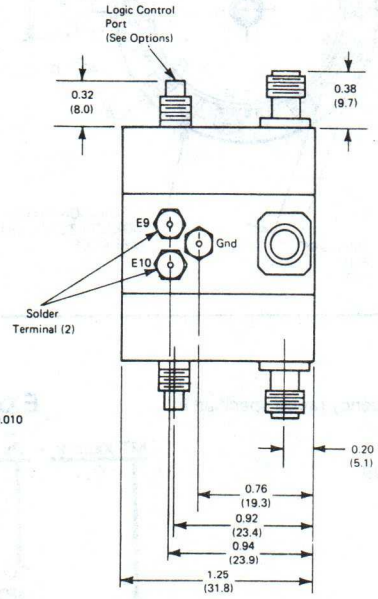

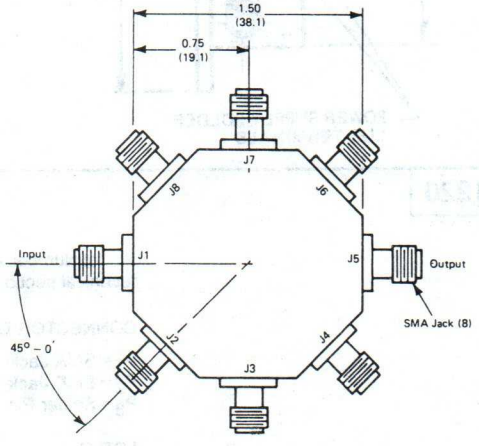

continued on next page

12. OUTLINE DRAWINGS

M1218

continued from previous page

Model Number at frequency range specified in technical section

CONNECTOR OPTION

P_1 = SMA Jack
P_2 = SMC Jack
P_3 = Solder Pin

LOGIC

N = Non-Inverting
I = Inverting

POWER SUPPLY OPTIONS

S_1 = +5V/–12V
S_2 = +12V/–12V
S_3 = +15V/–15V
S_9 = +5V/–15V

EXAMPLE:

MT xxxxx – Px – N – Sx
- MT xxxxx: MODEL NUMBER
- Px: CONNECTOR OPTION
- N: LOGIC
- Sx: POWER SUPPLY OPTIONS

M1219

Model Number at frequency range specified in technical section

LOGIC

N = Non-Inverting
I = Inverting

POWER SUPPLY OPTIONS

S_5 = 5V @ 125mA Max; 12V @ 15mA Max
S_8 = 5V @ 125mA Max; 15V @ 15mA Max
S_{11} = 5V @ 125mA Max; 28V @ 15mA Max

EXAMPLE:

MT xxxxx – N – Sx
- MT xxxxx: MODEL NUMBER
- N: LOGIC
- Sx: POWER SUPPLY OPTIONS

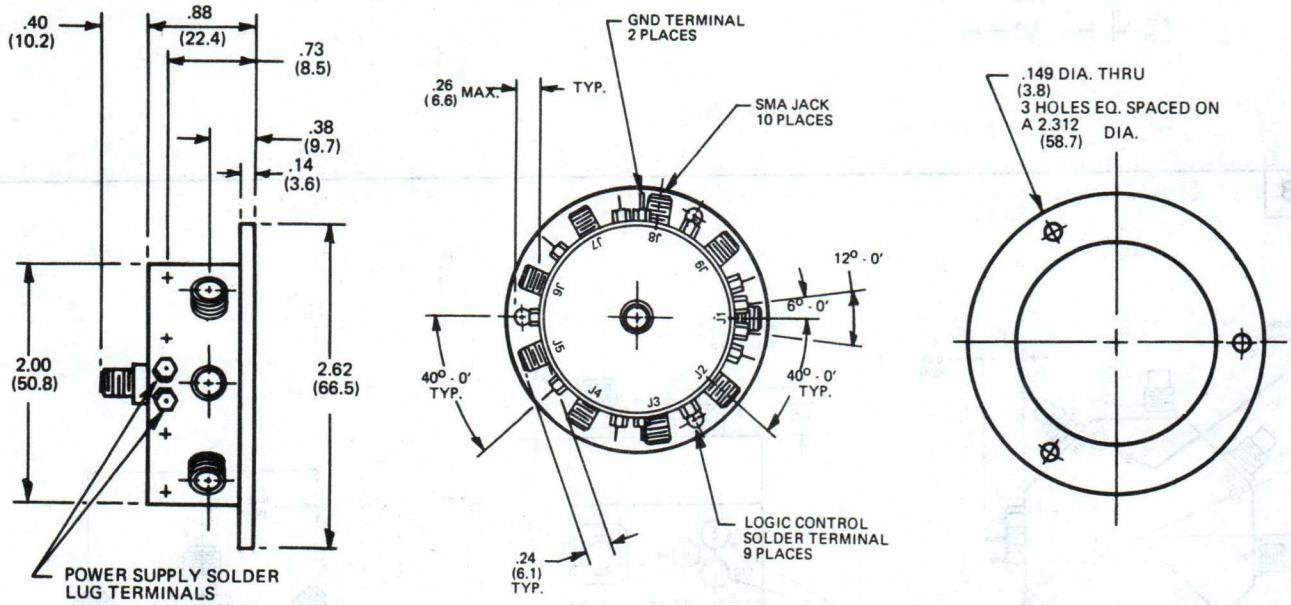

M1220

Model Number at frequency range specified in technical section

CONNECTOR OPTIONS

P_1 = SMA Jack
P_2 = SMC Jack
P_3 = Solder Pin

LOGIC

N = Non-Inverting
I = Inverting

EXAMPLE:

MT xxxx-x – Px – N
- MT xxxx-x: MODEL NUMBER
- Px: CONNECTOR OPTIONS
- N: LOGIC

continued on next page

12. OUTLINE DRAWINGS

M1220

continued from previous page

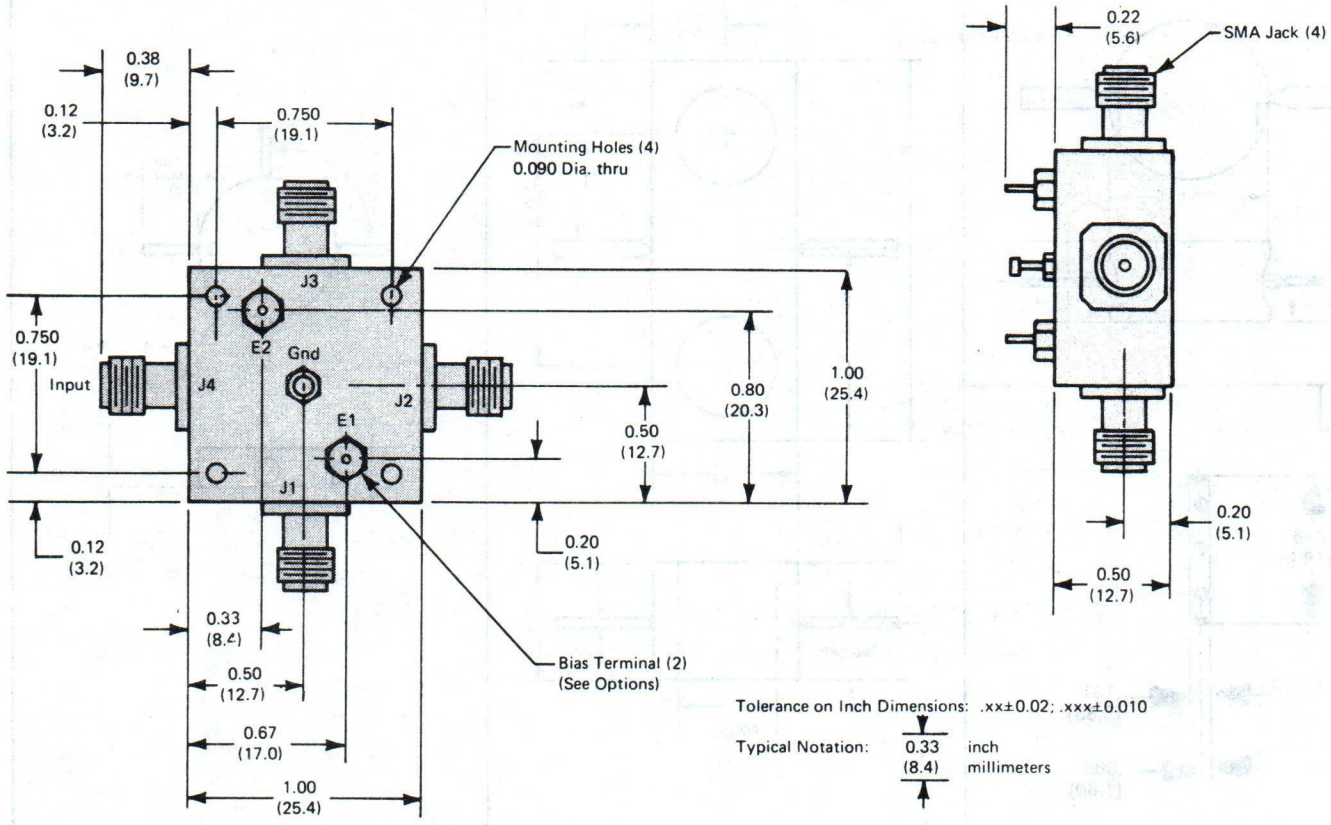

M1221

Model Number at frequency range specified in technical section

CONNECTOR OPTIONS

P_1 = SMA Jack
P_2 = SMC Jack
P_3 = Solder Pin

LOGIC

N = Non-Inverting
I = Inverting

EXAMPLE:

MT xxxx-x - Px - N
MODEL NUMBER — CONNECTOR OPTIONS — LOGIC

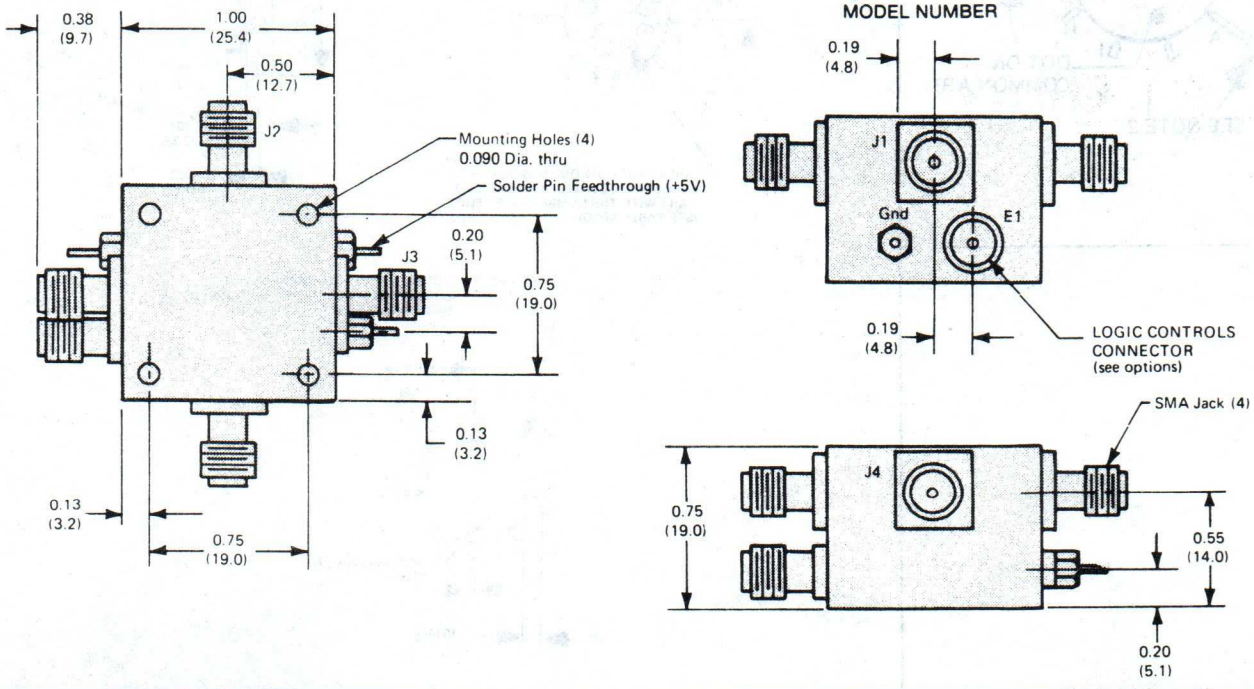

12. OUTLINE DRAWINGS

M1222

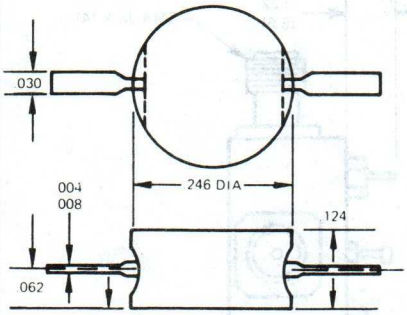

M1223

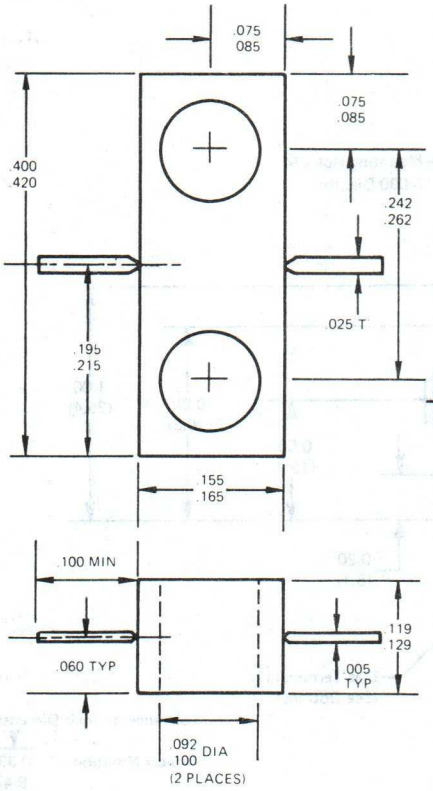

M1224

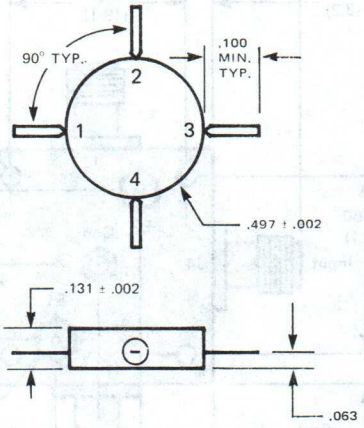

M1225

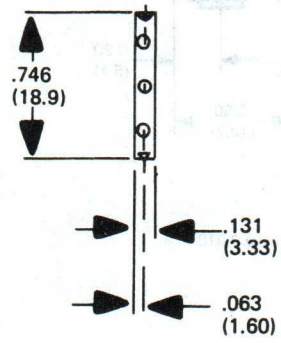

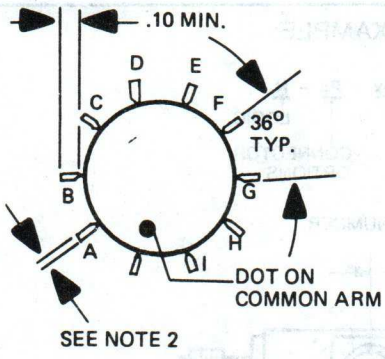

M1226

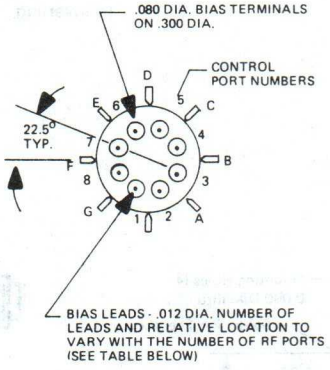

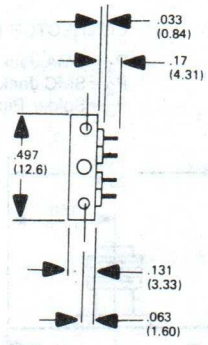

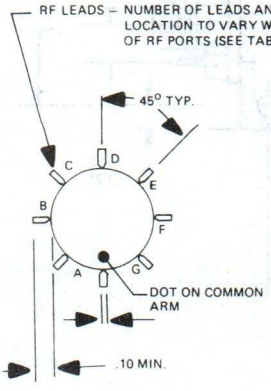

12. OUTLINE DRAWINGS

M1227

M1227 — Model Number at frequency range specified in technical section

M1228 — POWER SUPPLY OPTION
S_1 = 5V/–12V
S_2 = 5V/–15V

EXAMPLE:

MO xxxx – H – Sx
- Sx: POWER SUPPLY OPTION
- MODEL NUMBER

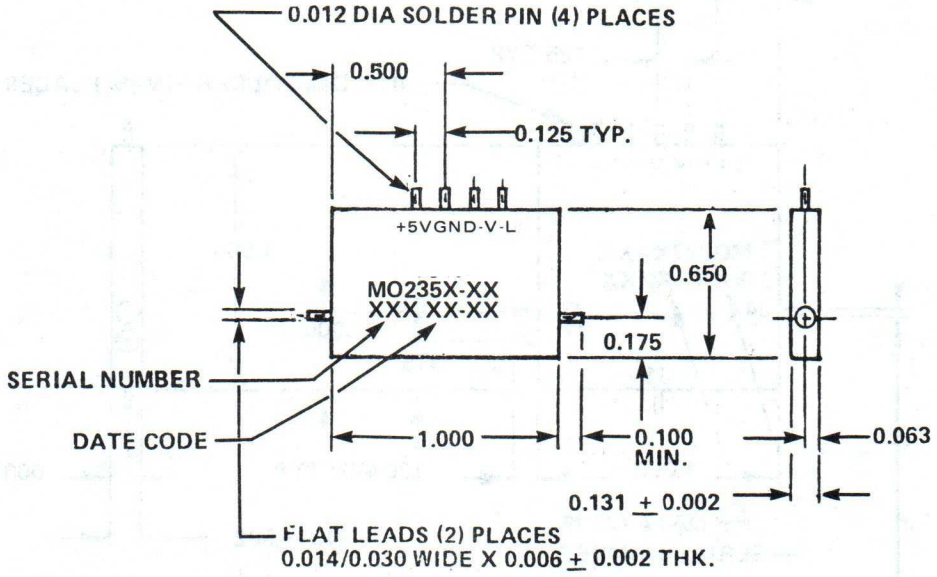

M1228

Model Number at frequency range specified in technical section

POWER SUPPLY OPTION
S_1 = 5V/–12V
S_2 = 5V/–15V

EXAMPLE:

MO xxxx – H – Sx
- Sx: POWER SUPPLY OPTION
- MODEL NUMBER

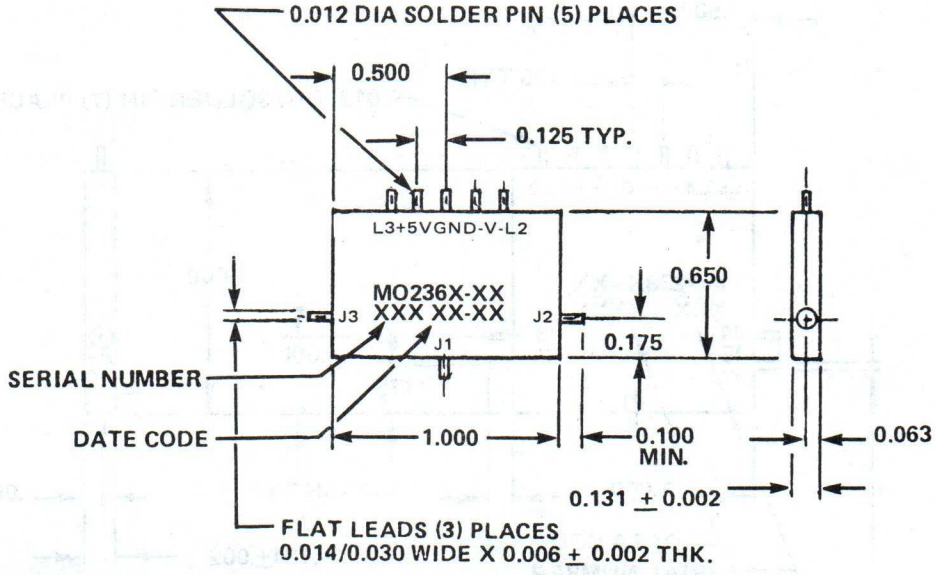

12. OUTLINE DRAWINGS

M1229

Model Number at frequency range specified in technical section

POWER SUPPLY OPTION
S_1 = 5V/–12V
S_2 = 5V/–15V

EXAMPLE:

MO xxxx – H – Sx
- MO xxxx: MODEL NUMBER
- Sx: POWER SUPPLY OPTION

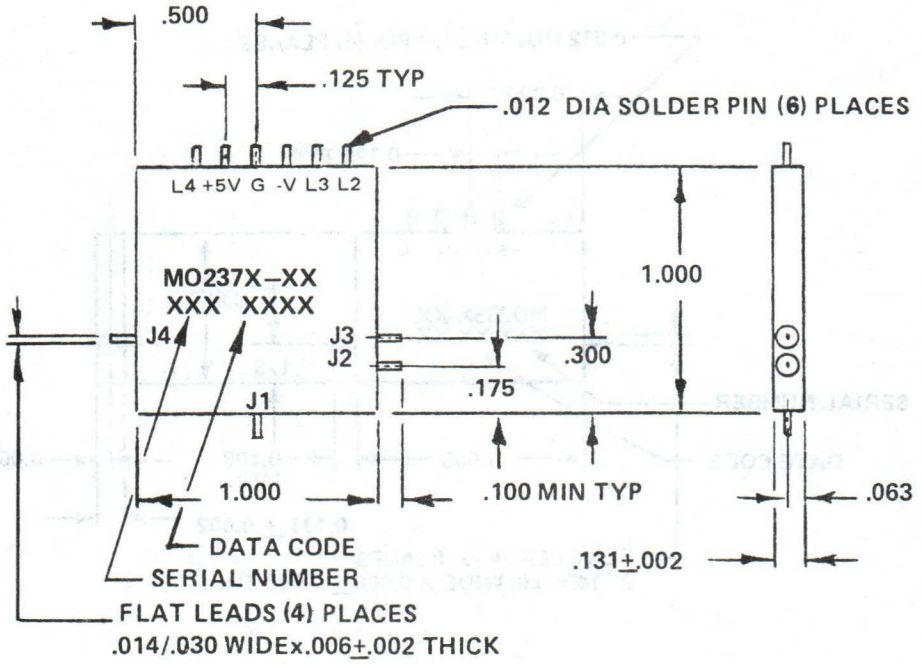

M1230

Model Number at frequency range specified in technical section

POWER SUPPLY OPTION
S_1 = 5V/–12V
S_2 = 5V/–15V

EXAMPLE:

MO xxxx – H – Sx
- MO xxxx: MODEL NUMBER
- Sx: POWER SUPPLY OPTION

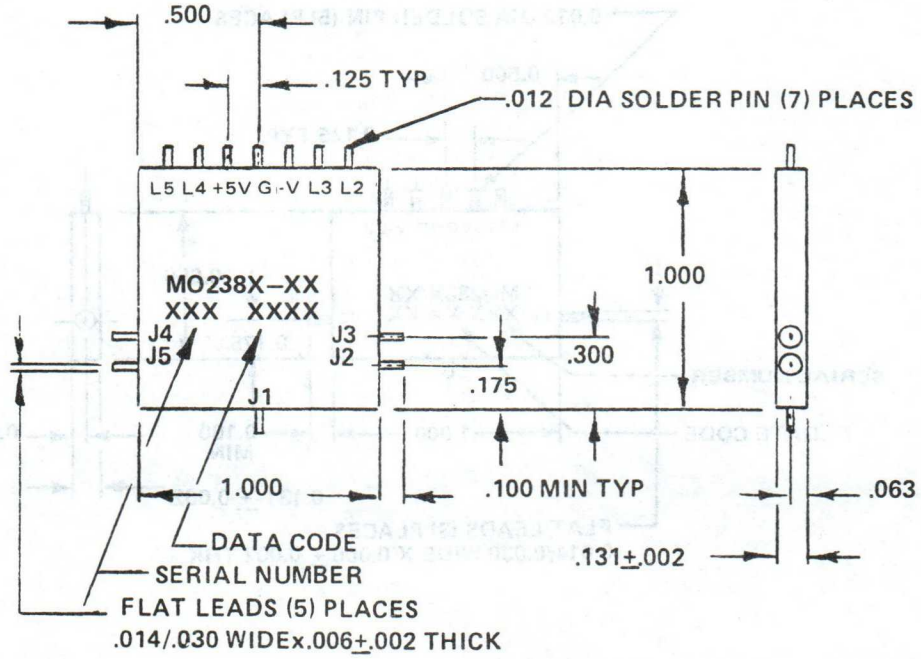

12. OUTLINE DRAWINGS

M1231

Model Number at frequency range specified in technical section

CONNECTOR OPTION

P_1 = SMA Jack
P_2 = SMC Jack
P_3 = Solder Pin

LOGIC
N = Non-Inverting
I = Inverting

POWER SUPPLY OPTIONS
S_1 = +5V/–12V
S_4 = +5V/–5V
S_5 = +5V/+12V
S_6 = 12V
S_7 = 15V
S_8 = +5V/+15V
S_9 = +5V/–15V

NOTE:
All power supply options not available for all devices. Consult Manufacturer.

EXAMPLE:

MT xxxxx - Px - N - Sx
- MODEL NUMBER
- CONNECTOR OPTION
- LOGIC
- POWER SUPPLY OPTION

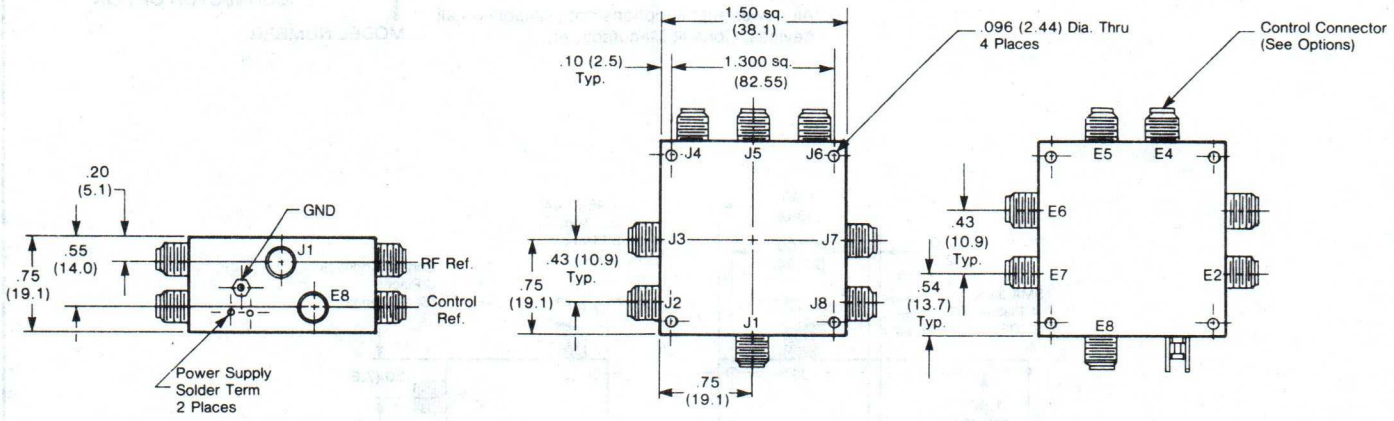

M1232

NOTE: All power supply options not available for all devices. Consult Manufacturer.

Model Number at frequency range specified in technical section

CONNECTOR OPTIONS

P_1 = SMA Jack
P_2 = SMC Jack
P_3 = Solder Pin

CONTROL OPTION

C_1 = Single Control
C_2 = Dual Control

LOGIC

N = Non-Inverting
I = Inverting

POWER SUPPLY OPTION
S_1 = +5V/–12V
S_2 = +12V/–12V
S_3 = +15V/–15V
S_4 = +5V/–5V
S_5 = +5V/+12V
S_6 = +12V/+12V
S_7 = +15V/+15V
S_8 = +5V/+15V
S_9 = +5V/–15V

EXAMPLE:

MT xxxxx - Px - Cx - N - Sx
- MODEL NUMBER
- CONNECTOR OPTION
- CONTROL OPTION
- LOGIC
- POWER SUPPLY OPTION

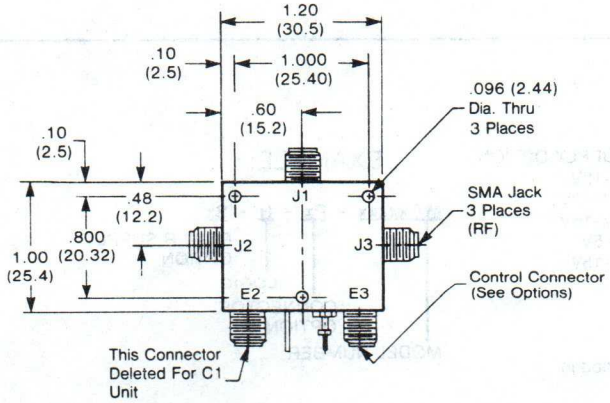

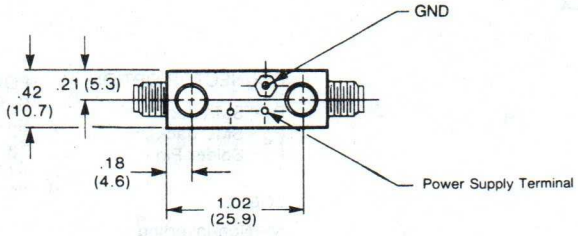

12. OUTLINE DRAWINGS

M1233

Model Number at frequency range specified in technical section

CONNECTOR OPTION

P_1 = SMA Jack
P_2 = SMC Jack
P_3 = Solder Pin

LOGIC
N = Non-Inverting
I = Inverting

POWER SUPPLY OPTION
S_1 = +5V/-12V
S_2 = +12V/-12V
S_3 = +15V/-15V
S_4 = +5V/-5V
S_5 = +5V/+12V
S_6 = +12V/+12V
S_7 = +15V/+15V
S_8 = +5V/+15V
S_9 = +5V/-15

NOTE:
All power supply options not available on all devices. Consult Manufacturer.

EXAMPLE:

MT xxxxx - Px - N - Sx

- MT xxxxx: MODEL NUMBER
- Px: CONNECTOR OPTION
- N: LOGIC
- Sx: POWER SUPPLY OPTION

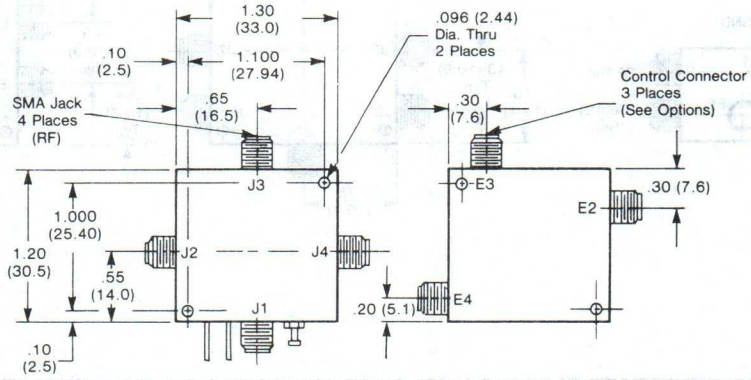

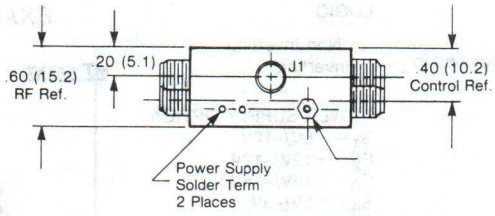

M1234

CONNECTOR OPTION

P_1 = SMA Jack
P_2 = SMC Jack
P_3 = Solder Pin

LOGIC

N = Non-Inverting
I = Inverting

Model Number at frequency range specified in technical section

POWER SUPPLY OPTION
S_1 = +5V/-12V
S_2 = +12V/-12V
S_3 = +15V/-15V
S_4 = +5V/-5V
S_9 = +5V/-15V

EXAMPLE:

MT xxxxx - Px - N - Sx

- MT xxxxx: MODEL NUMBER
- Px: CONNECTOR OPTION
- N: LOGIC
- Sx: POWER SUPPLY OPTION

continued on next page

12. OUTLINE DRAWINGS

M1234

continued from previous page

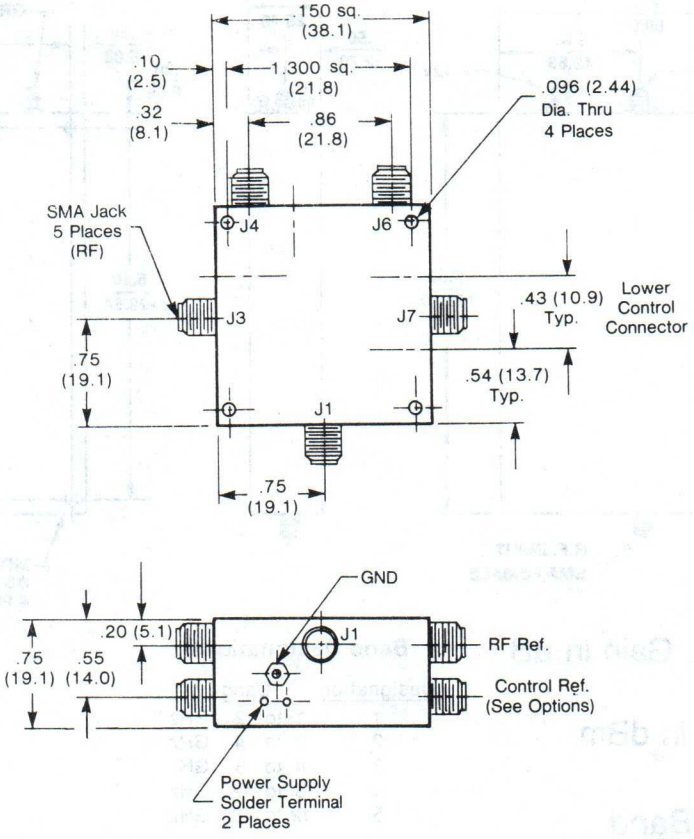

M1235

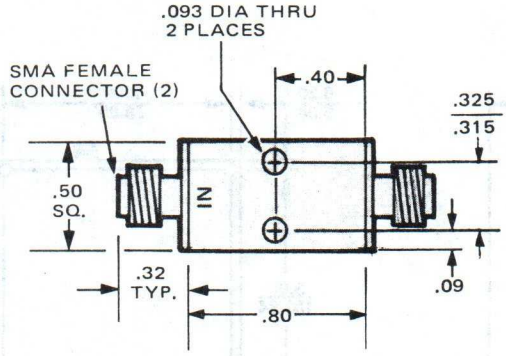

M1254

Notes: 1 All dimensions in inches
2 Case is RF ground connection

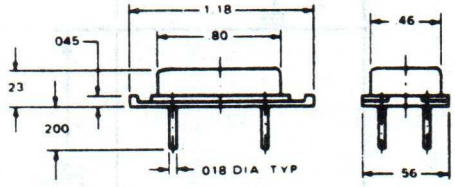

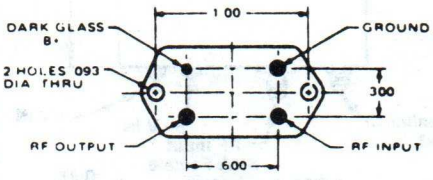

M1252

Dimensions in mm

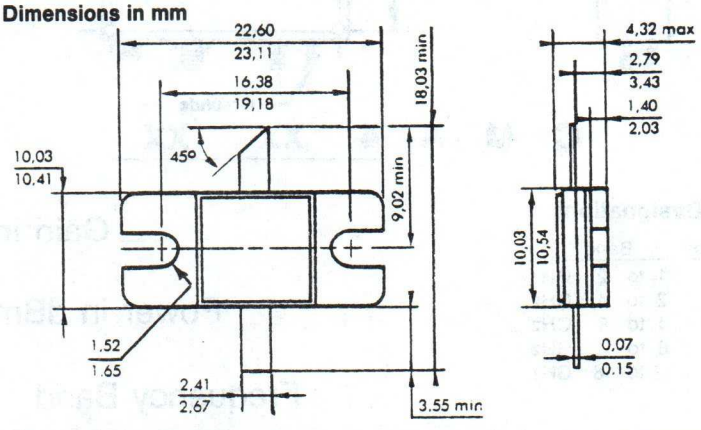

12. OUTLINE DRAWINGS

M1236

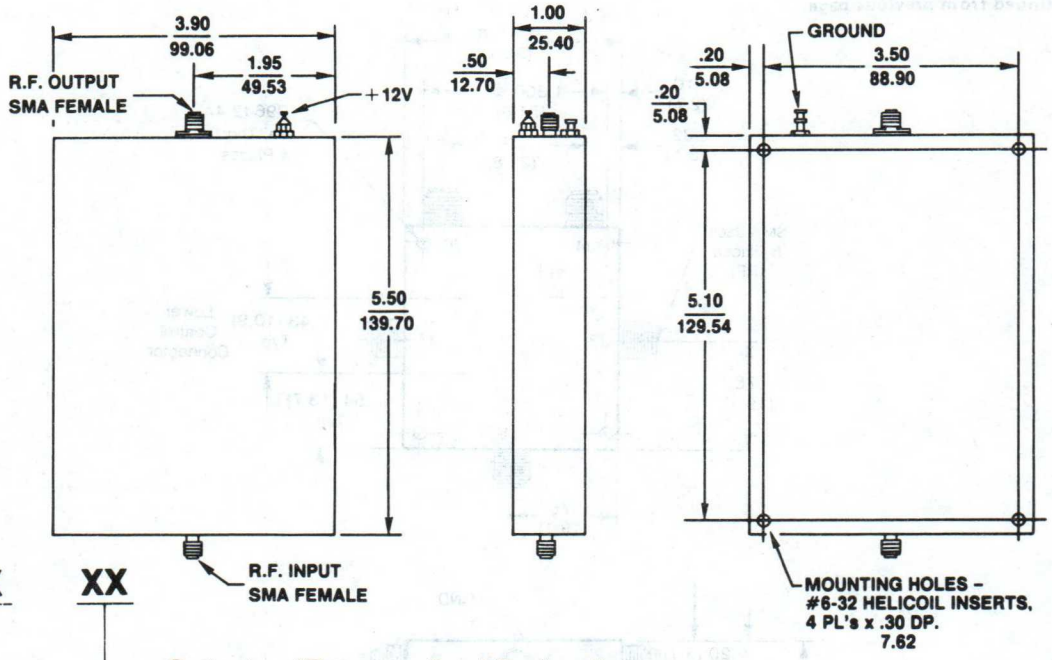

CMA 3 XX XX

- XX — Gain in dB
- XX — Power in dBm
- 3 — Frequency Band

Band Designations

Designation	Band
1	1 to 2 GHz
2	2 to 4 GHz
3	4 to 8 GHz
4	8 to 12 GHz
5	12 to 18 GHz

M1237

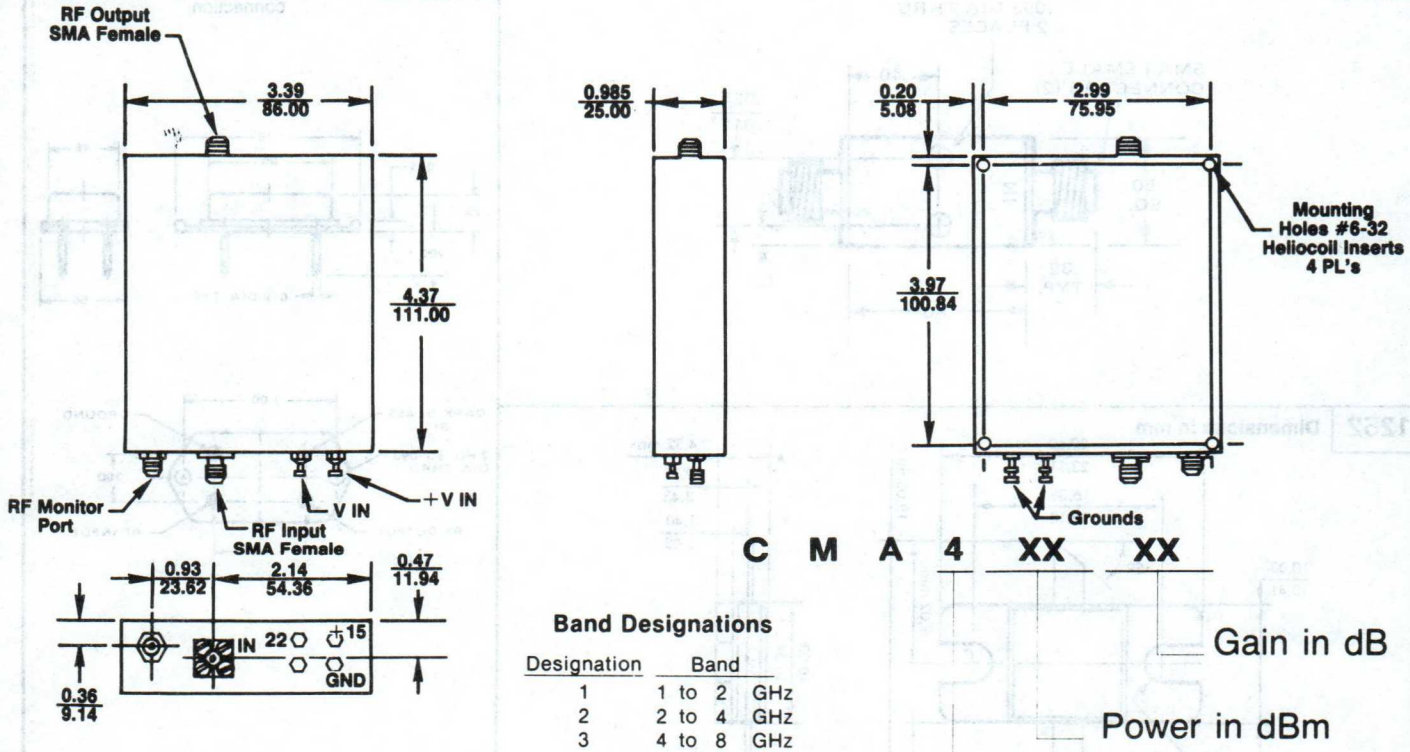

C M A 4 XX XX

- XX — Gain in dB
- XX — Power in dBm
- 4 — Frequency Band

Band Designations

Designation	Band
1	1 to 2 GHz
2	2 to 4 GHz
3	4 to 8 GHz
4	8 to 12 GHz
5	12 to 18 GHz

12. OUTLINE DRAWINGS

M1238

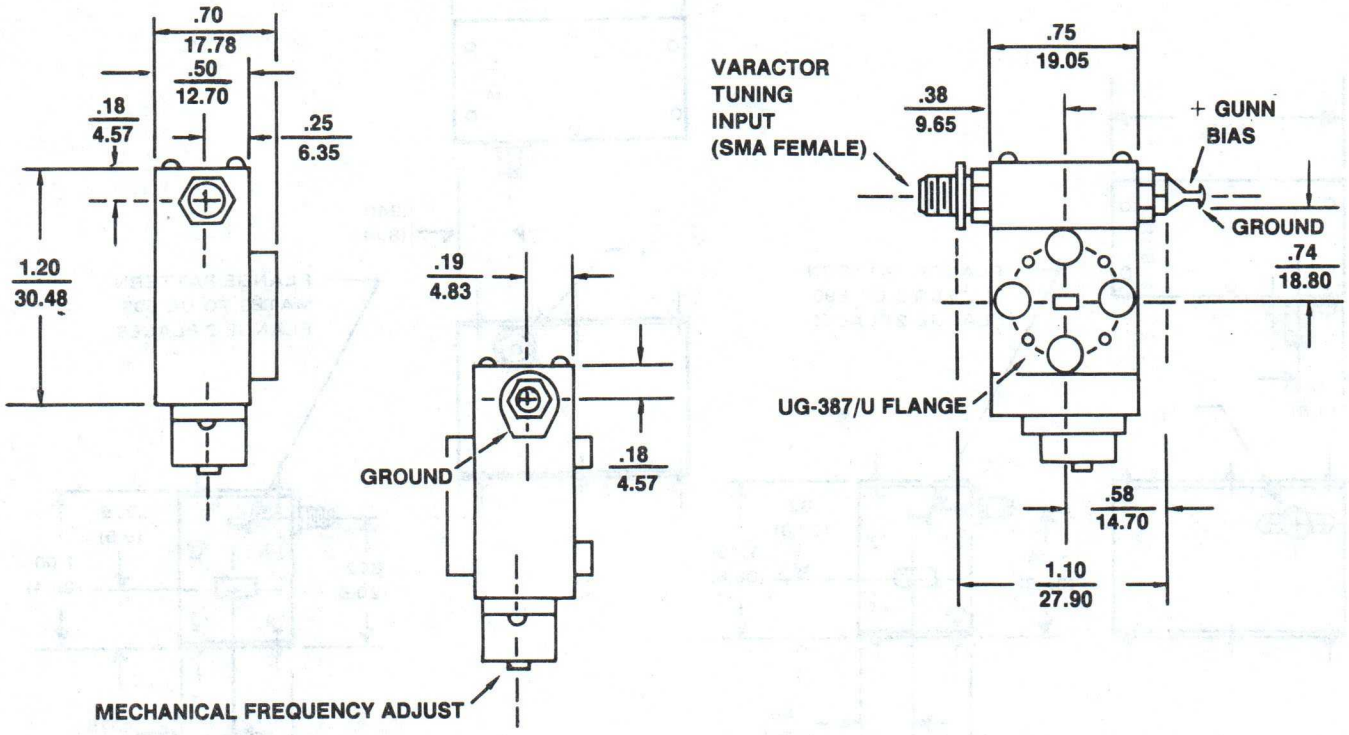

M1239

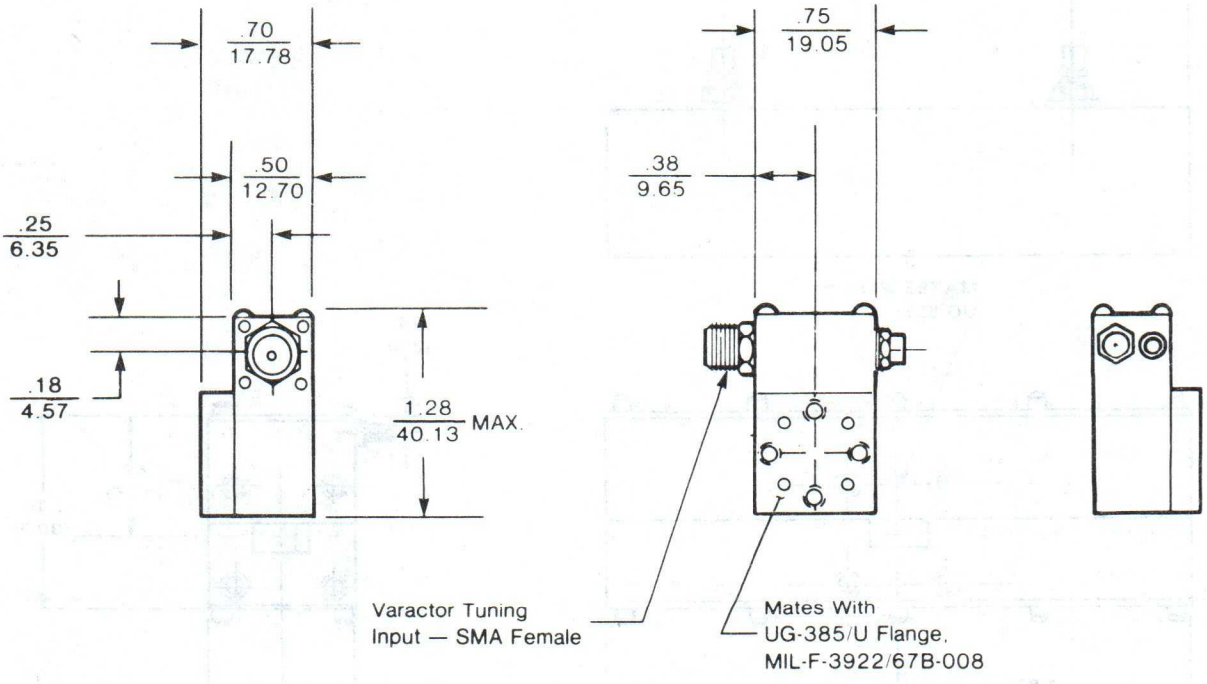

12. OUTLINE DRAWINGS

M1240

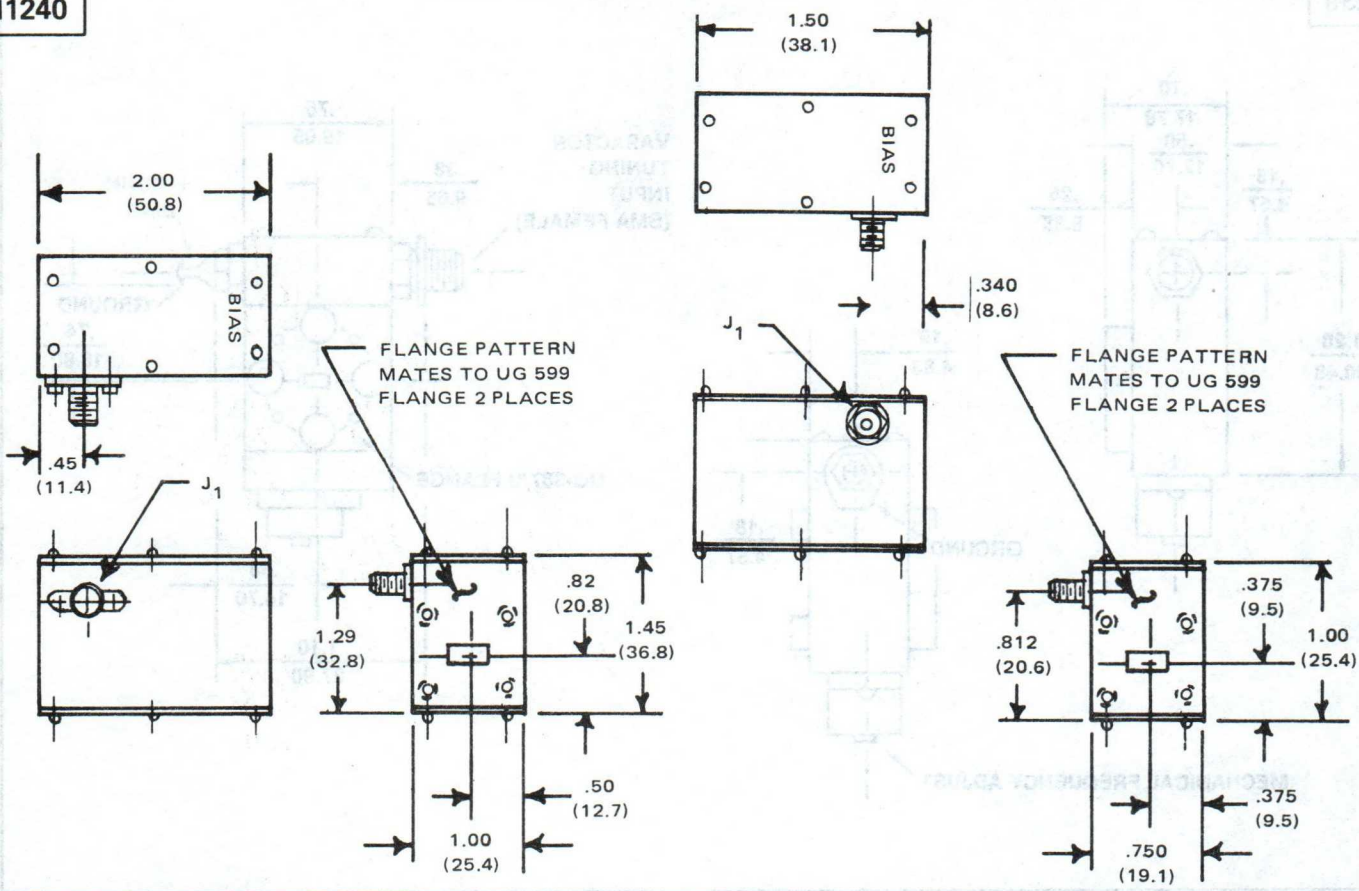

M1241

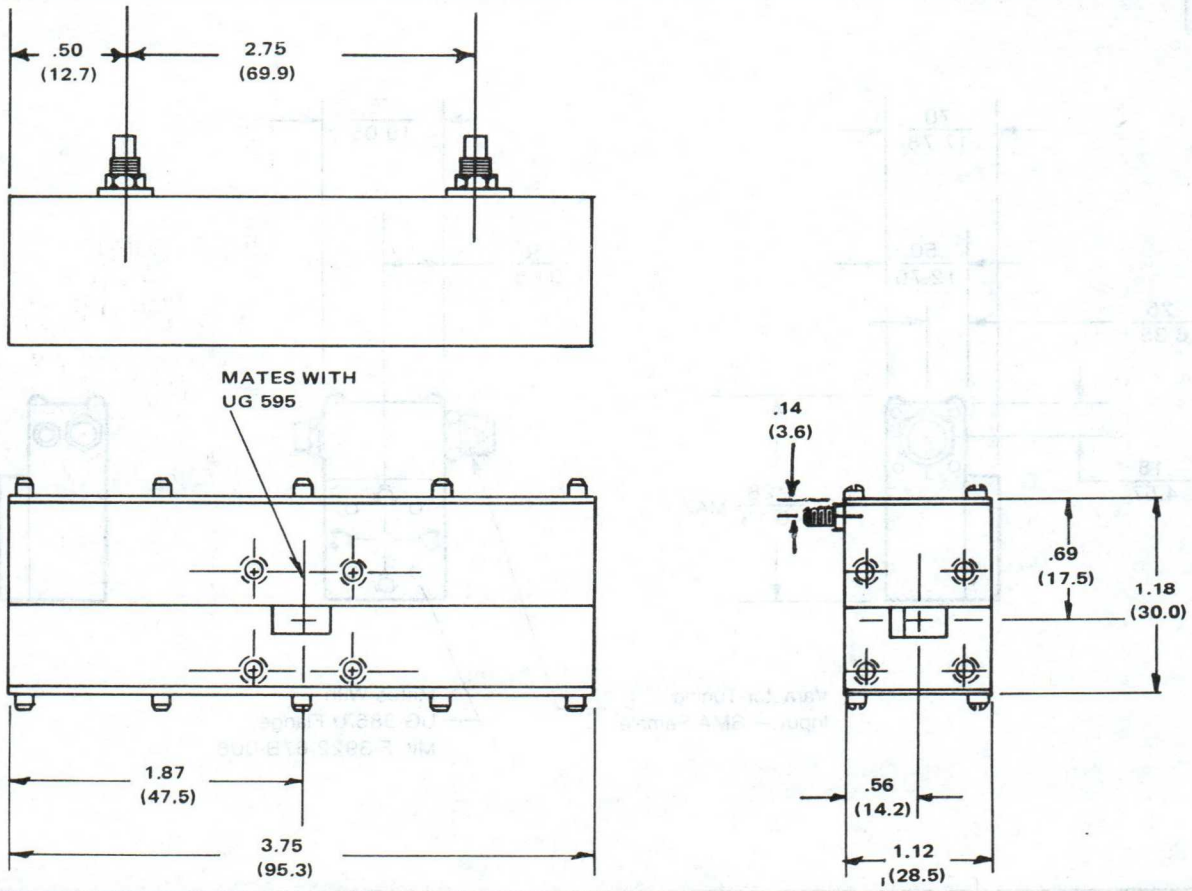

12. OUTLINE DRAWINGS

M1242 Dimensions A & B to be determined at electrical test.

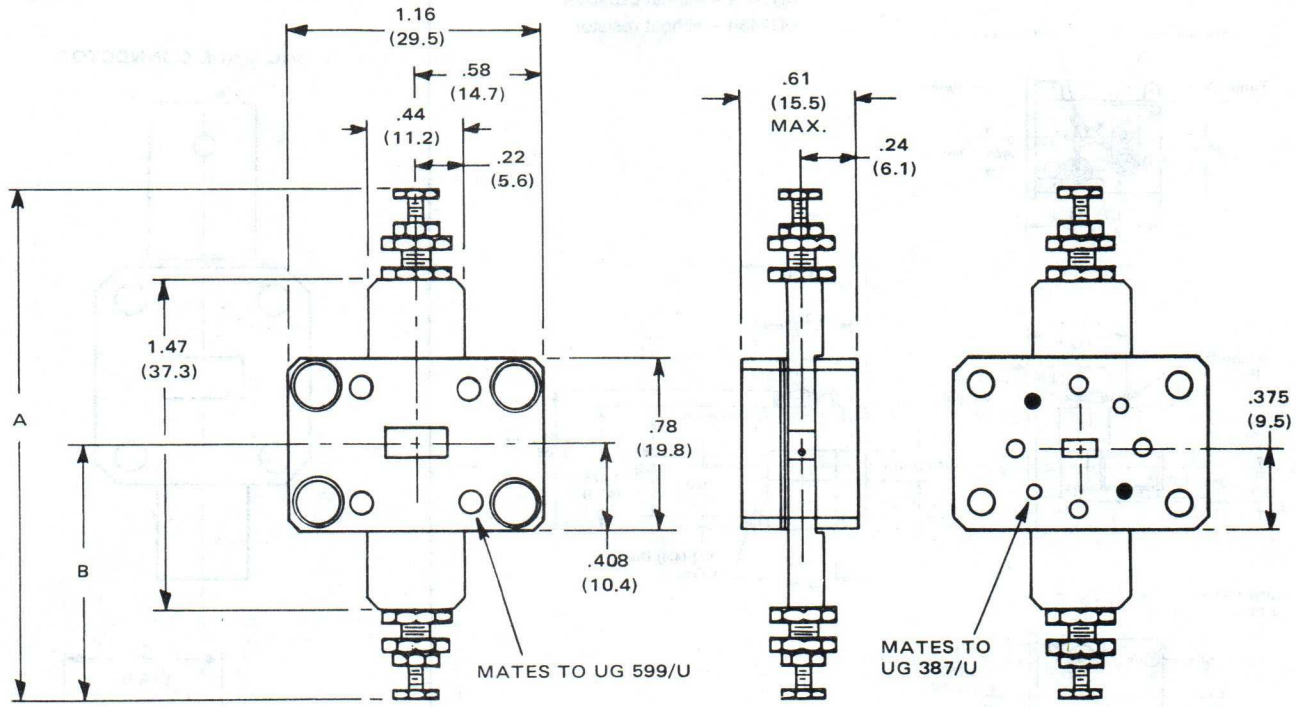

M1243 Millimeter dimensions in parentheses.

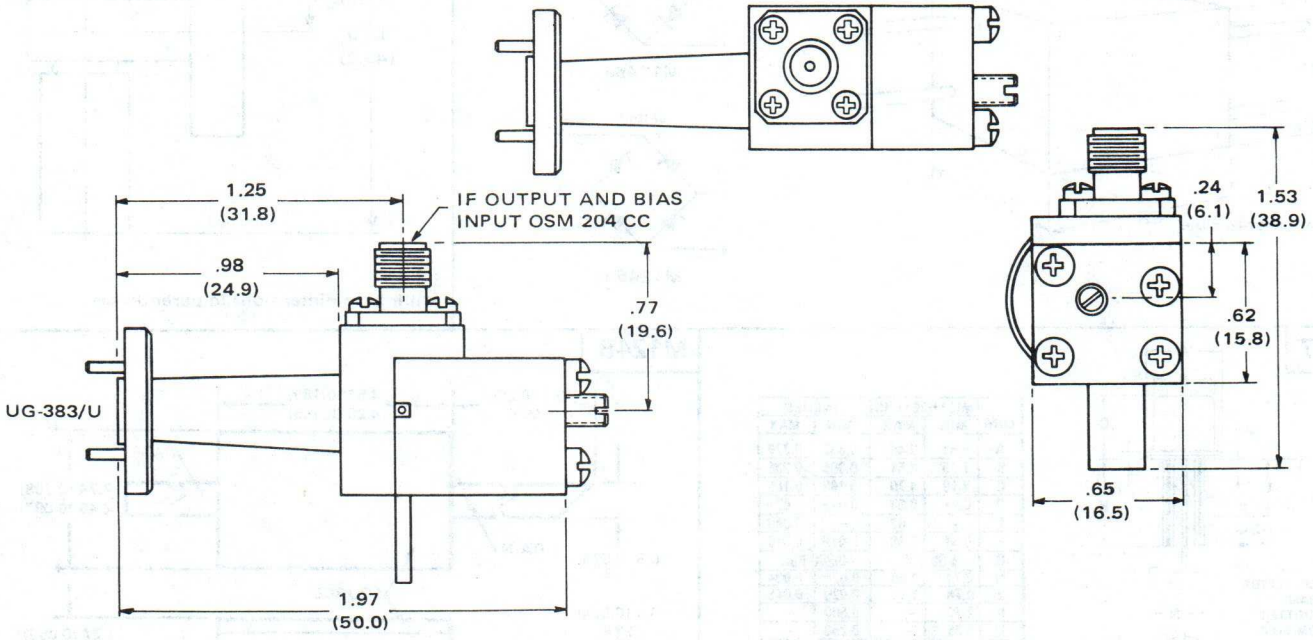

12. OUTLINE DRAWINGS

M1245

M1245 – with both capacitor and resistor
M1245a – without capacitor
M1245b – without resistor

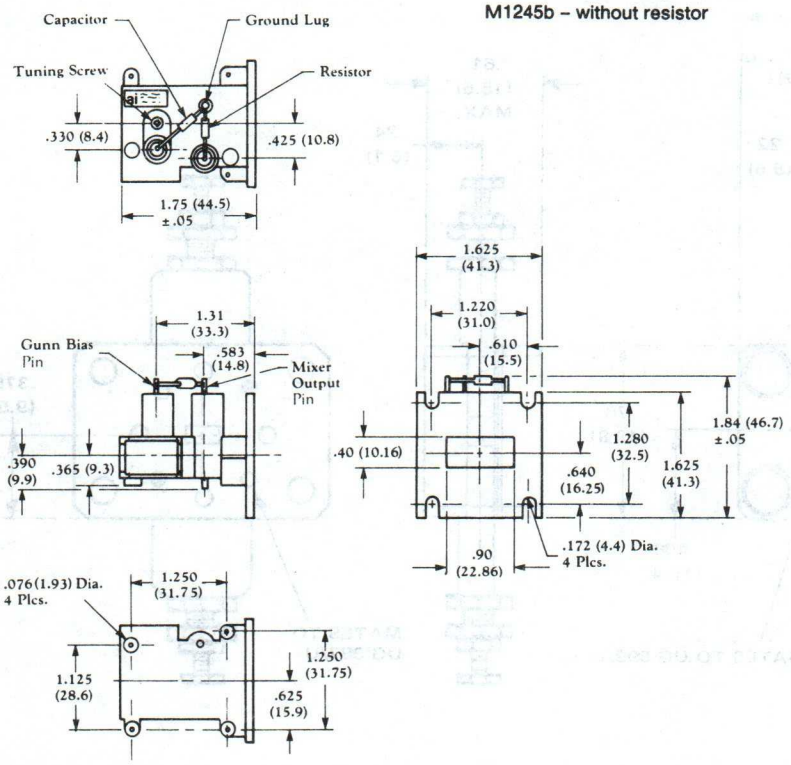

Millimeters in parentheses

M1244

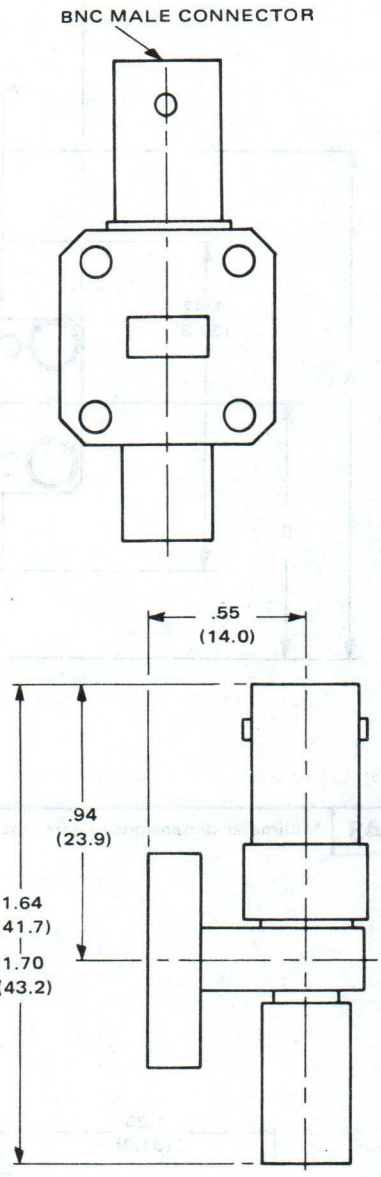

Millimeter dimensions in parentheses.

M1246

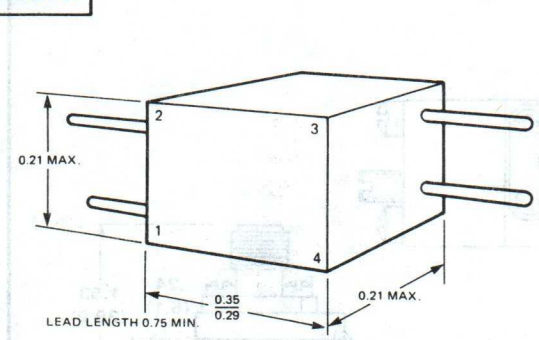

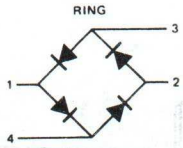

M1246a

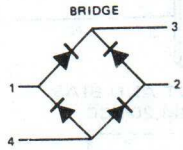

M1246b

M1247

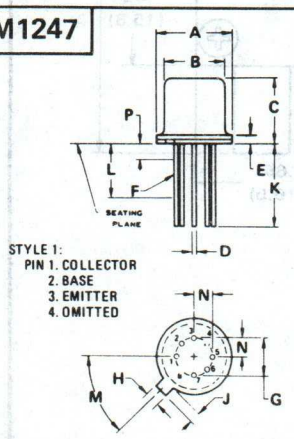

DIM	MILLIMETERS		INCHES	
	MIN	MAX	MIN	MAX
A	8.51	9.40	0.335	0.370
B	7.75	8.51	0.305	0.335
C	4.19	4.70	0.165	0.185
D	0.41	0.53	0.016	0.021
E	–	1.02	–	0.040
F	0.41	0.48	0.016	0.019
G	5.08 BSC		0.200 BSC	
H	0.71	0.86	0.028	0.034
J	0.74	1.14	0.029	0.045
K	2.70	–	0.500	–
L	6.35	–	0.250	–
M	45° BSC		45° BSC	
N	2.54		0.100 BSC	
P	–	1.27	–	0.050

M1248

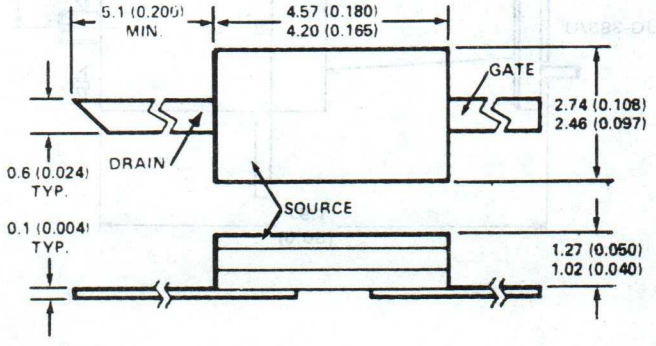

DIMENSIONS IN MILLIMETERS (INCHES)

12. OUTLINE DRAWINGS

M1249

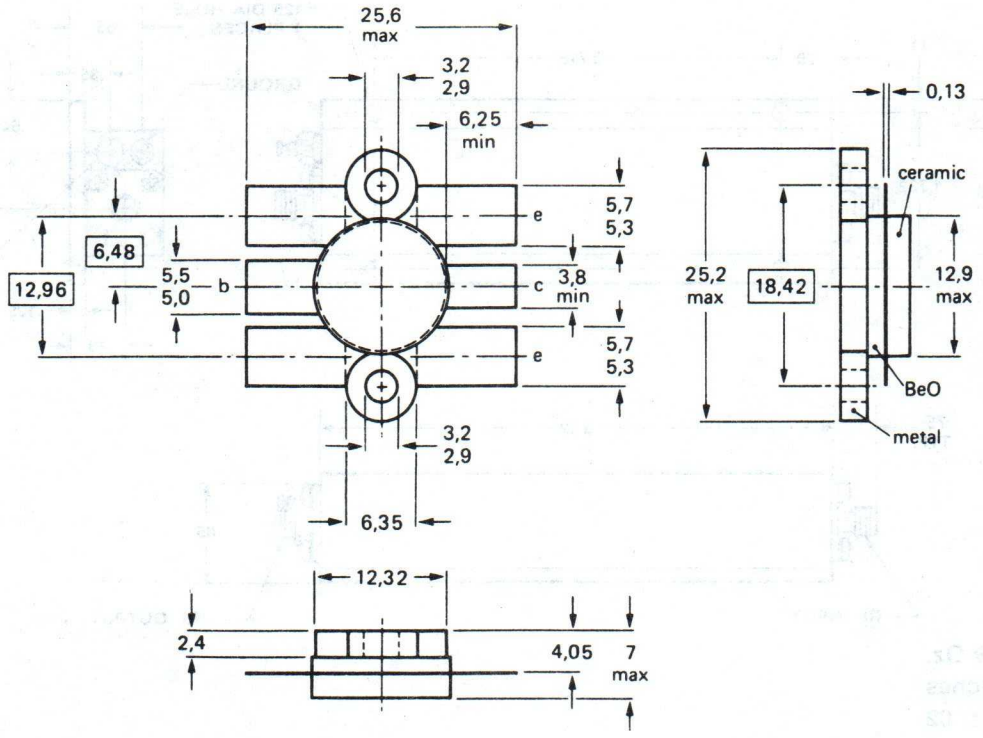

Dimensions in mm

M1251

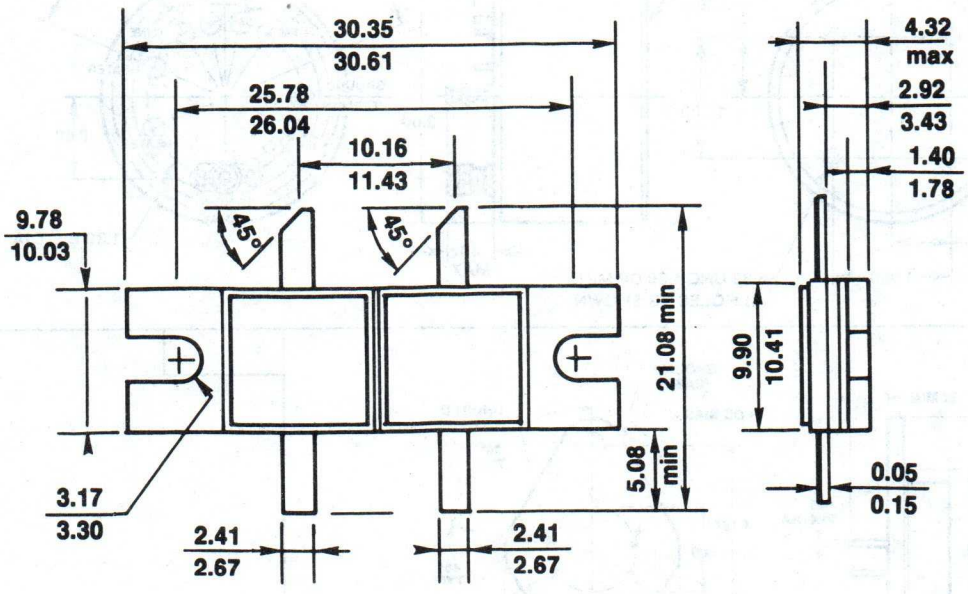

Dimensions in mm

12. OUTLINE DRAWINGS

M1253

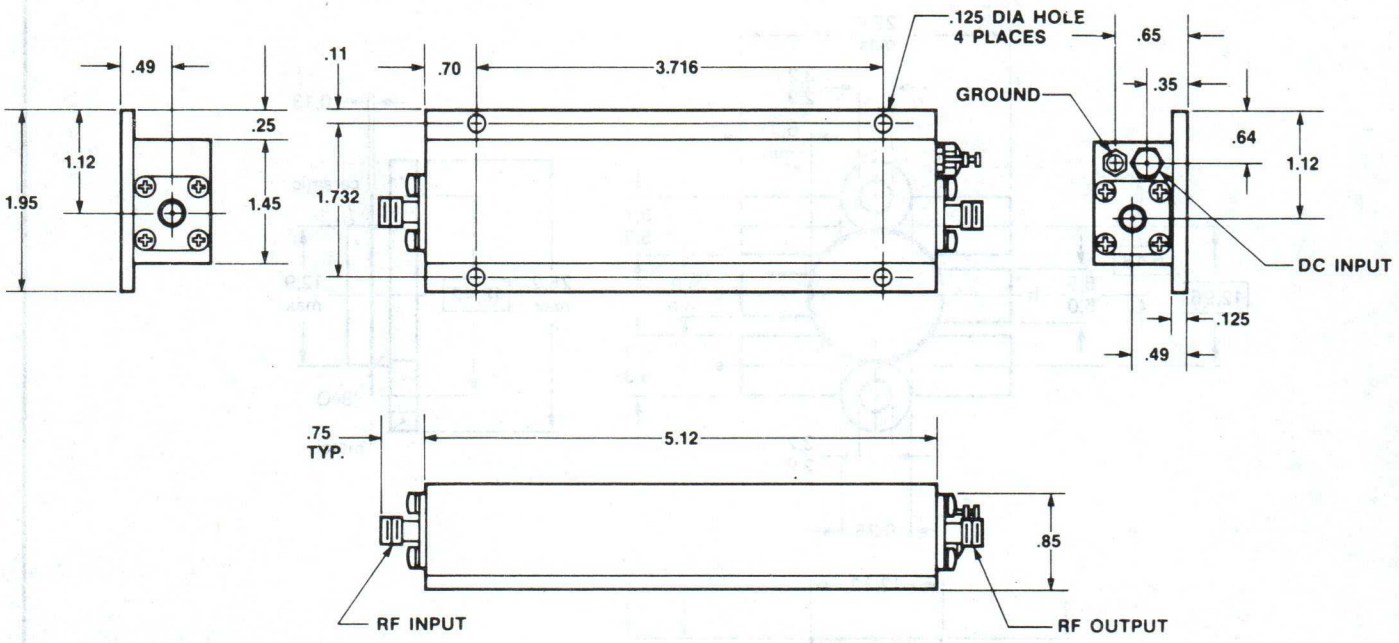

Approximate Weight 9 Oz.
All Dimensions in Inches
Tolerances .xx ± .02
.xxx ± .010

M1260

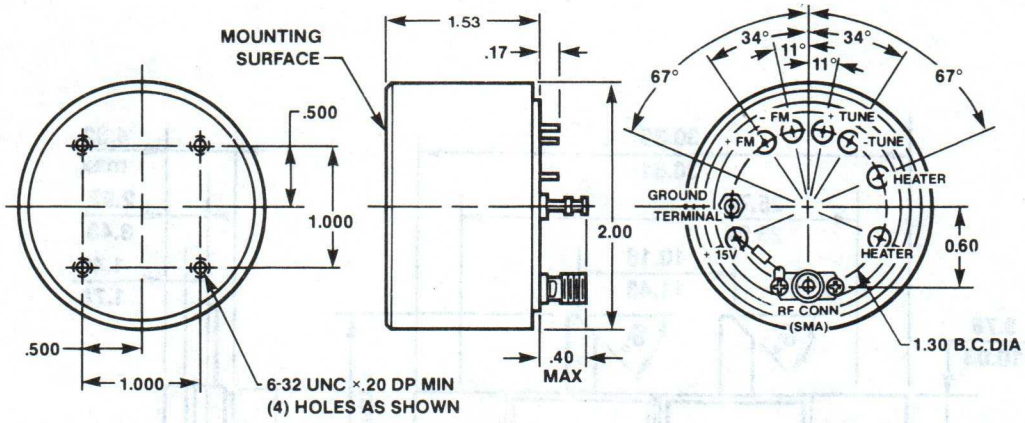

M1255

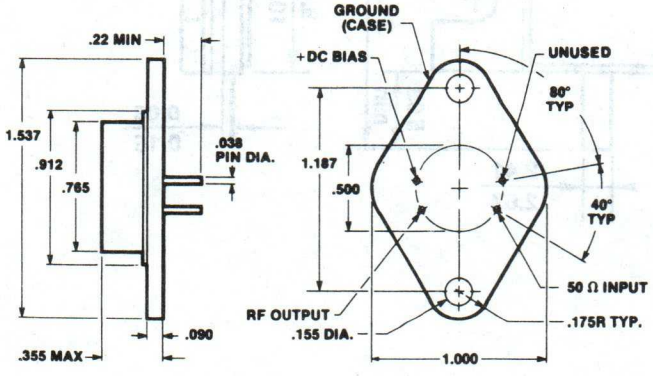

12. OUTLINE DRAWINGS

M1256

DRIVER OPTION TABLE		
DASH NO.	C	
	INSERTION LOSS	ISOLATION
-00X	−10V	+30 mA
-01X	TTL LO	TTL HI
-02X	TTL HI	TTL LO

CONNECTOR OPTION TABLE		
DASH NO.	J1	J2
-OX1	FEM	FEM
-OX2	NONE	NONE
-OX3	MALE	MALE
-OX4	MALE	FEM

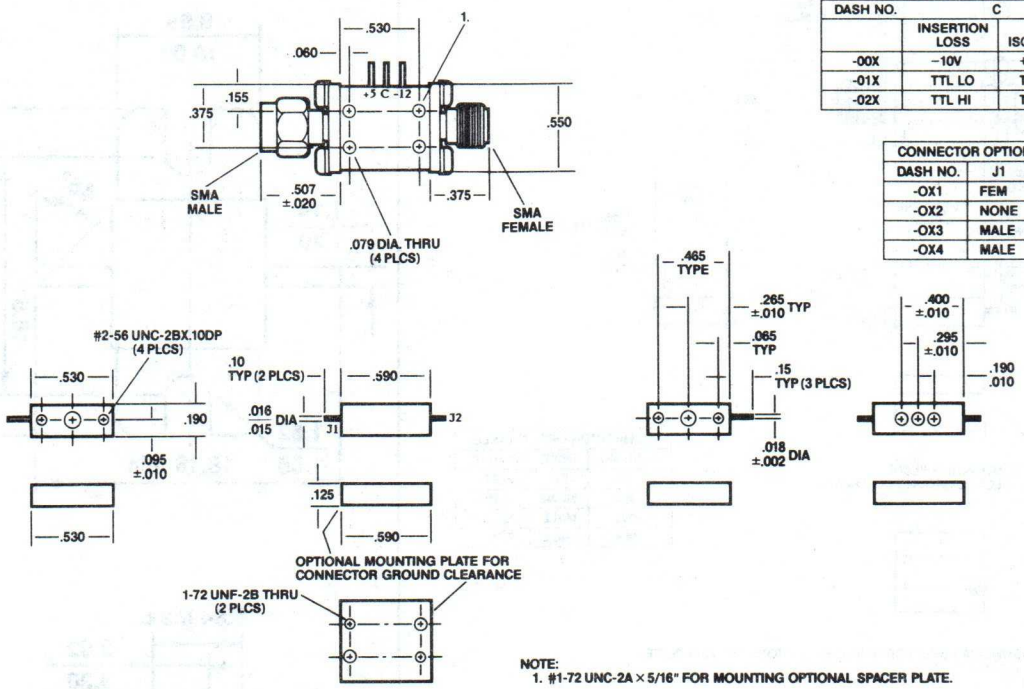

NOTE:
1. #1-72 UNC-2A × 5/16" FOR MOUNTING OPTIONAL SPACER PLATE.

M1257

DRIVER OPTION TABLE				
DASH NO.	C1		C2	
	INSERTION LOSS	ISOLATION	INSERTION LOSS	ISOLATION
-00X	−30 mA	+30 mA	−30 mA	+30 mA
-01X	TTL LO	TTL HI	TTL LO	TTL HI
-02X	TTL HI	TTL LO	TTL HI	TTL LO
-03X	TTL LO	TTL HI	TTL HI	TTL LO
-04X	TTL HI	TTL LO	TTL LO	TTL HI

CONNECTOR OPTION TABLE			
DASH	J0	J1	J2
-0X1	FEM	FEM	FEM
-OX2	NONE	NONE	NONE
-OX3	MALE	MALE	MALE
-OX4	MALE	MALE	FEM
-OX5	FEM	MALE	MALE

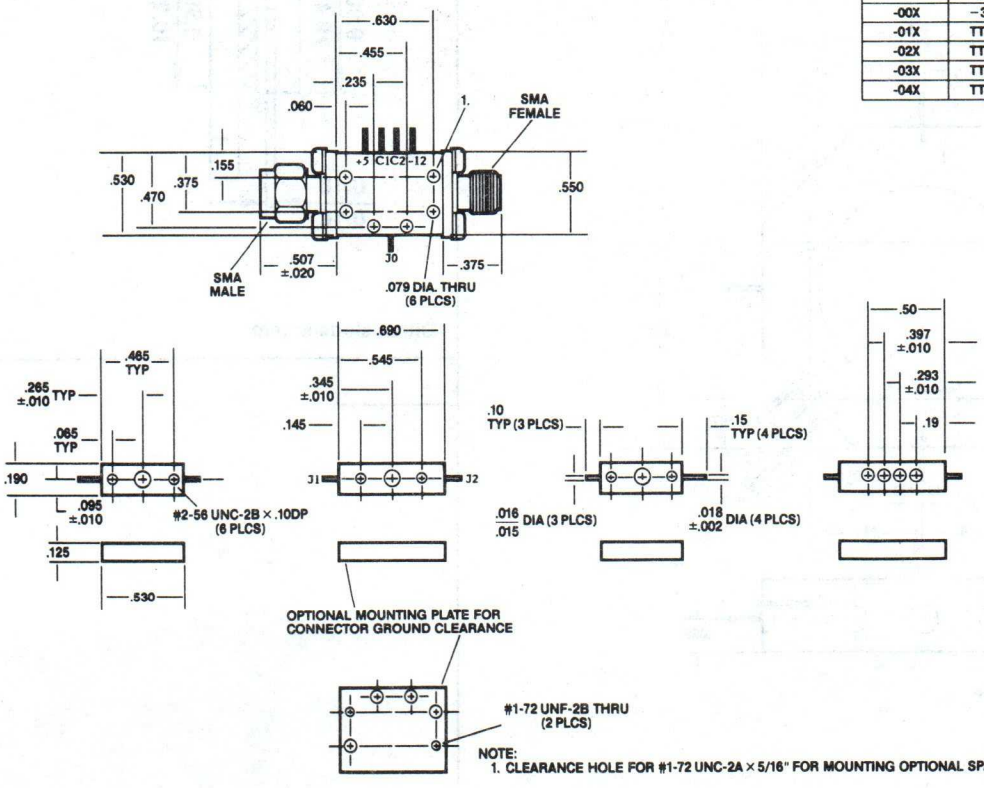

NOTE:
1. CLEARANCE HOLE FOR #1-72 UNC-2A × 5/16" FOR MOUNTING OPTIONAL SPACER PLATE.

12. OUTLINE DRAWINGS

M1258

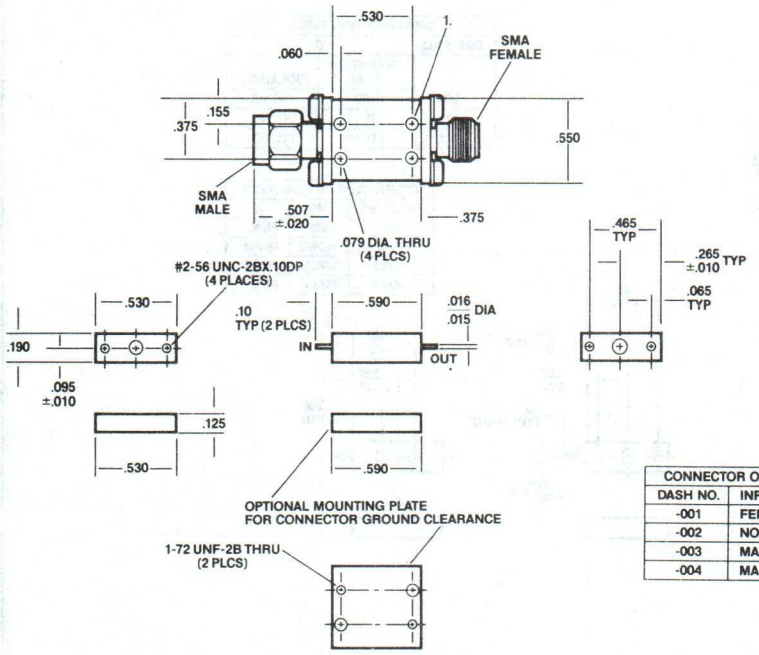

CONNECTOR OPTION TABLE		
DASH NO.	INPUT	OUTPUT
-001	FEM	FEM
-002	NONE	NONE
-003	MALE	MALE
-004	MALE	FEM

NOTE:
1. CLEARANCE HOLE FOR #1-72 UNC-2A × 5/16" FOR MOUNTING OPTIONAL SPACER PLATE.

M1263

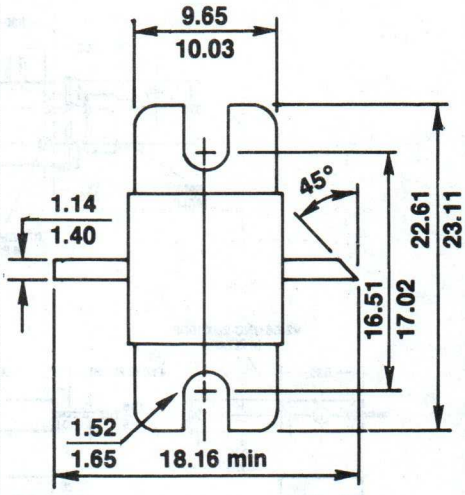

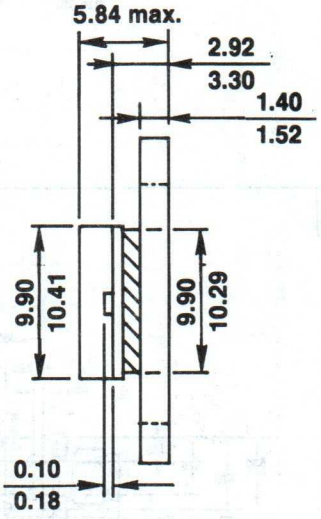

Dimensions in mm

M1259

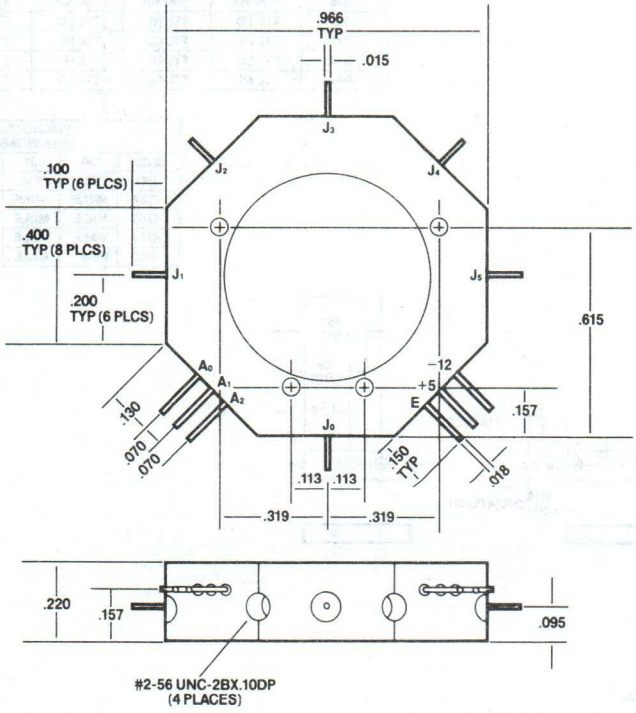

12. OUTLINE DRAWINGS

M1261

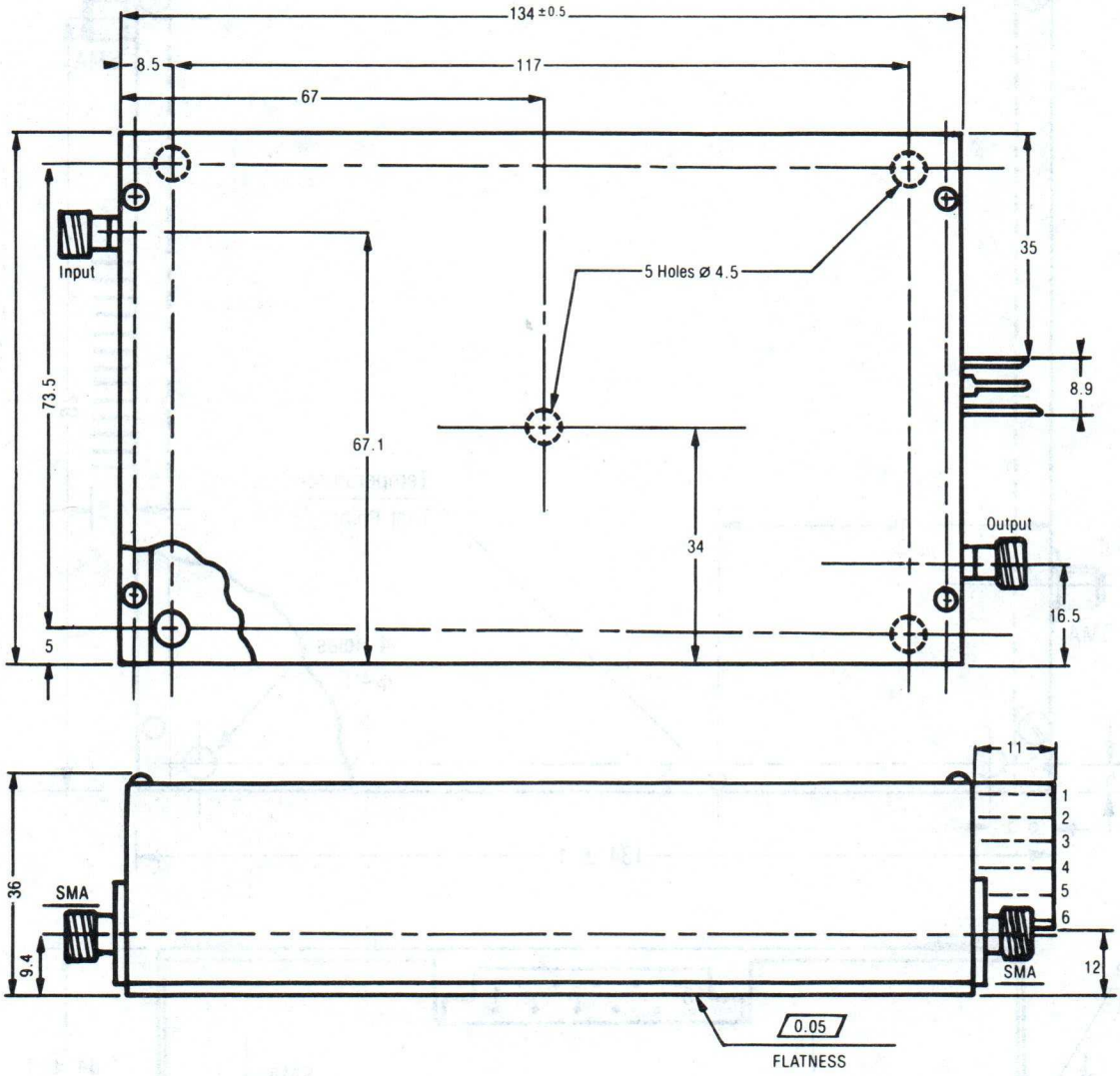

Plug-in Layout

Pin 1	+V supply 26.5 Volts
Pin 2	Do not use
Pin 3	Ground
Pin 4-5	Collector current test point
Pin 6	Optional

Voltage Measurement

V supply (between Pin 1 and 3)

Collector Current Measurement

Voltmeter must have an input impedance greater than 10 K Ω

- Transistor No. 1

$$I_{1\ AMP} = \frac{1}{0.47} \times V_{(Volts)} \text{ between Pin 1-5}$$

- Transistor No. 2

$$I_{2\ AMP} = \frac{1}{0.47} \times V_{(Volts)} \text{ between Pin 1-4}$$

12. OUTLINE DRAWINGS

M1262

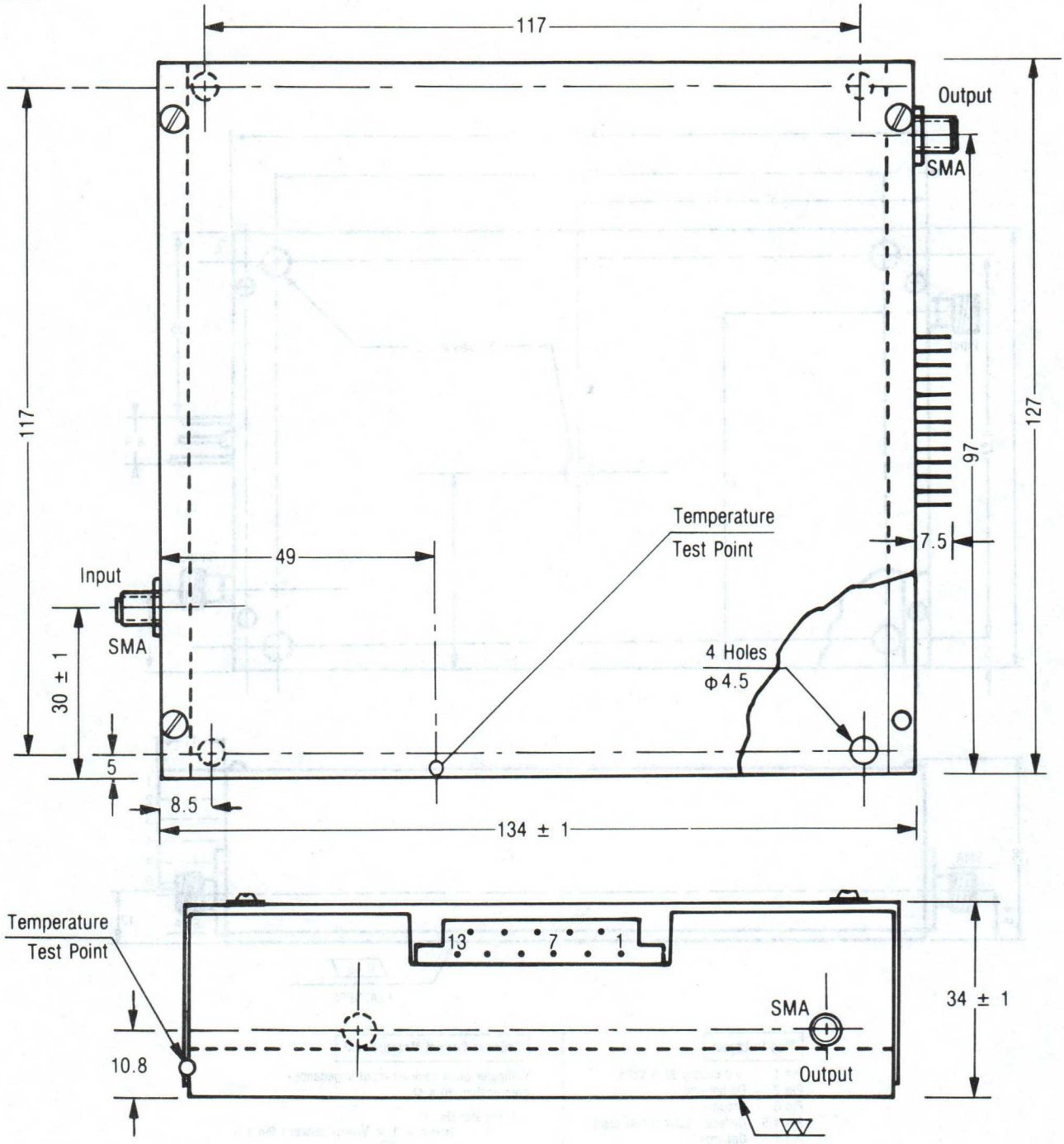

5.6.7.8.9 V_{CC} +
3 Test Point Transistor No. 1
11 Test Point Transistor No. 2
1.2.12.13 Ground

Plug-In Layout

Current and Voltage Measurements on Test Points

1 — Collector Current / Referenced to V_{CC} $\quad I_A = 13.3 \times V_{VOLT}$

2 — Collector Voltage / Referenced to Ground

Note: All dimensions are in millimeters.

12. OUTLINE DRAWINGS

P1

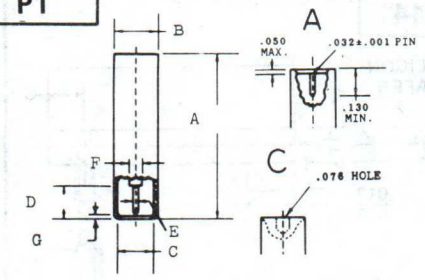

	A	B	C	D	E	F	G
P1	.555	.162	.125	.099	.021	.045	.018
P1a,b,c	.765	.221	.184	.147	.033	.063	.029
P1d	.734 / .766	.215 / .220	.179 / .189	.147 MIN	.031 / .033		.011 / .028
P1e	.735 / .765	.215 / .220	.184	.147 MIN	.031 / .033	.063	.020

P2

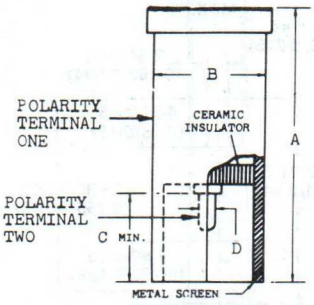

	A	B	C	D	POLARITY TERMINAL ONE	POLARITY TERMINAL TWO
P2	.750	.343	.241	.051		
P2a	.687	.343	.145	.063		
P2b	.750	.343	.247	.051	CATHODE	ANODE
P2c	.750	.343	.247	.051	ANODE	CATHODE
P2d	.740 / .760	.365 / .375	.235	.050 / .052		
P2e	.656 / .719	.344 / .406	.145	.060 / .063		
P2f	.740 / .760	.365 / .375	.248	.050 / .056		

P3

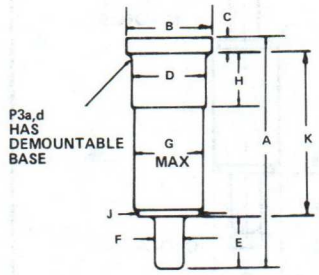

	A	B	C	D	E	F	G	H	J	K
P3	.800 / .840	.292 / .296	.052	.246 / .250	.180 / .190	.092 / .094	.240	.193 / .199	.195 / .225	.566 / .593
P3a	.800 / .840				.175 / .195	.092 / .094	.240 MAX		.195 / .215	
P3b	.810			.250	.200	.095				
P3c	.799 / .835	.291 / .295	.051 / .055	.248 / .250	.197 / .205	.091 / .094				.551 / .575
P3d	.800 / .840	.292 / .296	.047 / .057	.246 / .250	.180 / .190	.092 / .094	.222 / .240	.193 / .199	.195 / .215	

P6

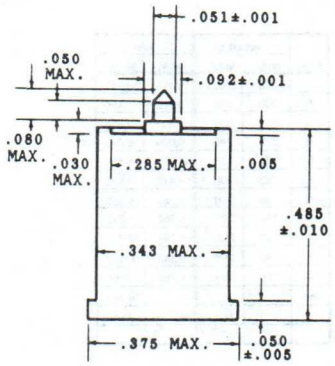

P8

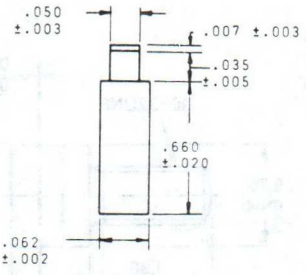

P9

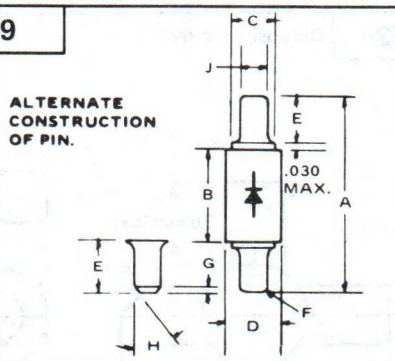

	A	B	C	D	E	F	G	H	J
P9	.743 / .802		.195 / .215	.240 MAX	.175 / .195	.030 / .046	.010 / .030	10° 45°	.092 / .094
P9a	.197 / .207	.070 / .082		.084 MAX	.062 REF	.012	NA	NA	.060 / .064

P13

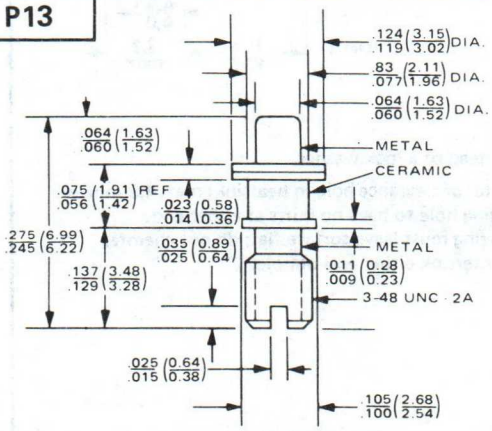

NOTES:
1. ALL METAL SURFACES GOLD PLATED
2. 3-48 TND AND .064/.060 DIA CONCENTRIC WITHIN .008 TIR

C_p=0.27pF L_j=0.30nH

P22

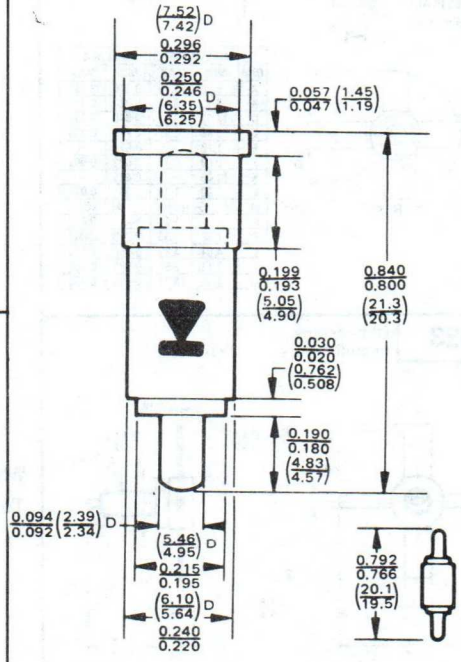

NOTES:
1. BASE REMOVABLE, ENCLOSING PRONG WITH DIMENSIONS SAME AS OTHER PRONG.

12. OUTLINE DRAWINGS

P12

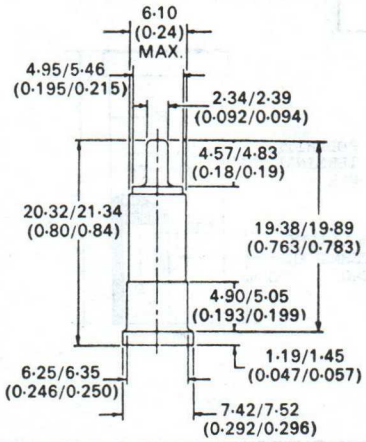

POLARITY IS SUCH THAT THE BASE IS POSITIVE WHEN CURRENT FLOWS IN THE FORWARD (PASS) DIRECTION. R TYPES HAVE OPPOSITE POLARITY.

P12a — HAS DETACHABLE BASE.

MILLIMETERS
(INCHES)

P14

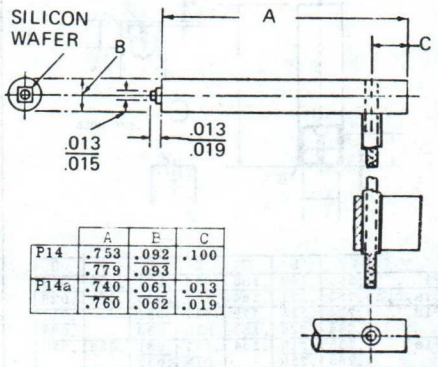

	A	B	C
P14	.753 .779	.092 .093	.100
P14a	.740 .760	.061 .062	.013 .019

P21

DIM.	INCHES MIN.	INCHES MAX.	MM MIN.	MM MAX.
A	.776	.792	19,456	20,117
B	.030	.046	0,762	1,168
C	.092	.094	2,337	2,388
D	.222	.240	5,639	6,096
E	.180	.190	4,572	4,826
F	.292	.296	7,417	7,518
G	.246	.250	6,248	6,350
H	.216	.221	5,468	5,613
J	.031	.036	0,787	0,914
K	.246	.250	6,248	6,350
L	.195	.199	4,953	5,054
M		.187		4,750
N		.100		2,540

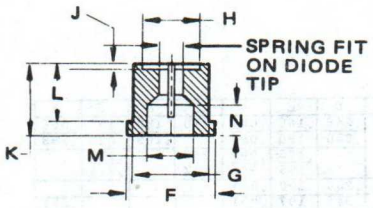

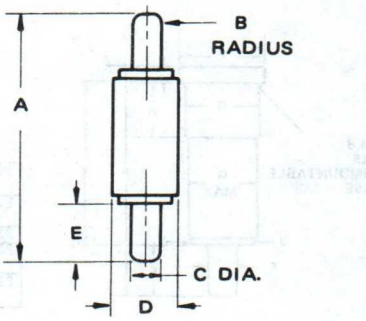

S525

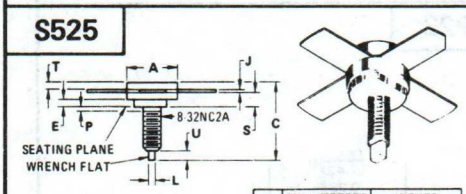

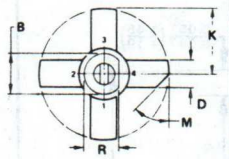

DIM	MILLIMETERS MIN	MILLIMETERS MAX	INCHES MIN	INCHES MAX
A	9.40	9.78	0.370	0.385
B	8.13	8.38	0.320	0.330
C	17.02	20.07	0.670	0.790
D	5.46	5.97	0.215	0.235
E	1.78	–	0.070	–
J	0.08	0.18	0.003	0.007
K	11.05	–	0.435	–
L	1.40	1.78	0.055	0.070
M	45° NOM		45° NOM	
P	–	1.27	–	0.050
R	7.59	7.80	0.299	0.307
S	4.01	4.52	0.158	0.178
T	2.11	2.54	0.083	0.100
U	2.49	3.35	0.098	0.132

S526

Dimensions in mm

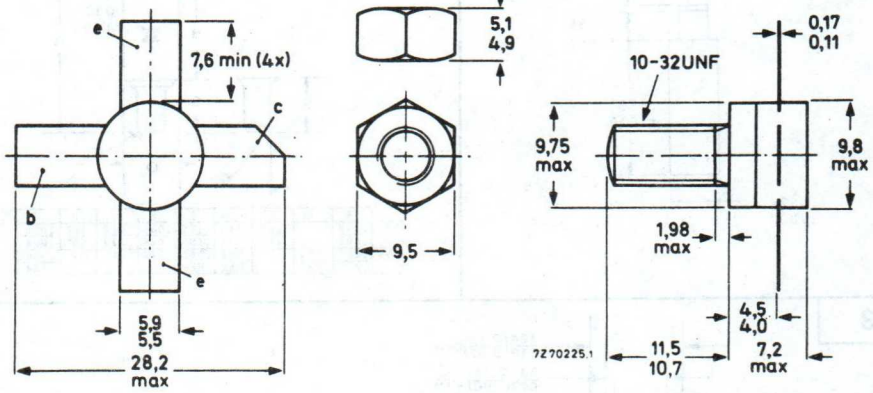

When locking is required an adhesive is preferred instead of a lock washer.

Torque on nut: min. 1,5 Nm (15 kg cm)
max. 1,7 Nm (17 kg cm)

Diameter of clearance hole in heatsink: max. 4,9 mm.
Mounting hole to have no burrs at either end.
De-burring must leave surface flat; do not chamfer or countersink either end of hole.

S533

Dimensions in millimeters

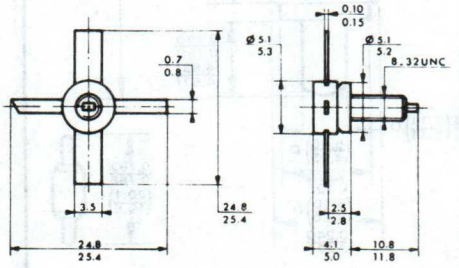

12. OUTLINE DRAWINGS

S4

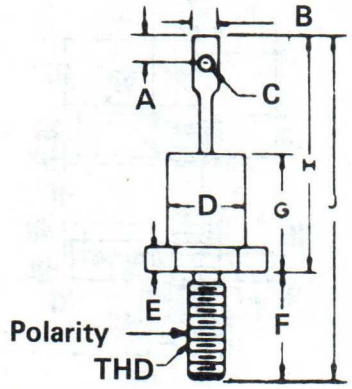

	A	B	C	D	E	F	G	H	J	THD	POLARITY
S4a		.125	.062	.250	.100	.435	.375	.800		10-32	
S4b		.123	.070	.435	.095	.450	.375	.800	1.25	20-32	
S4c		.140	.070	.290	.060	.450	.450	.800	1.25	10-32	
S4d	.093		.078	.375		.437	.420	.650	1.50	10-32	
S4e		.236	.126	.461		.394	.354		.339	5M	
S4f				.276	.157	.433	.394	.787		10-32	
S4g		.140	.060	.290		.437	.450	.800	1.24	10-32	

S19

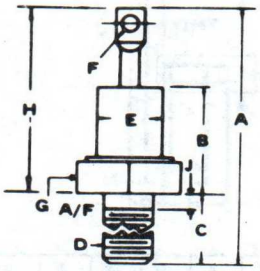

	A	B	C	D	E	F	G	H	J
S19	1.20	.394	.437	10-32NF-2A	.270	.070	.437		
S19a		.375	.437	10-32NF-2A	.280	.065	.434	.800	
S19b	1.32	.886	.433	M5 PO. 9		.071		.886	
S19c	1.26	.453	.433	M5	.362	.091	.550	.827	
S19d	1.61	.563	.473	M6	.571	.150	.750	1.14	
S19e	1.44	.500	.435	1/4-28	.425	.140	.563	1.00	
S19f	1.56		.437	10-32 THD.		.125	.437	1.13	
S19g	1.30	.401	.431	M5	.421	.062		.828	
S19h	1.16	.397	.450	10-32 THD.	.255	.072	.434	.710	
S19j	1.16	.405	.450	10-32 THD.	.270	.080	.434	.710	
S19k	1.22	.393	.434	M5		.094	.473	.787	
S19m	1.14	.394	.437		.276	.071	.433	.708	
S19n	1.45	.472	.457	M6	.520	.156	.669	1.00	
S19p	1.25	.452	.433	M6	.393	.165		1.00	
S19q	1.25 MAX		.453 MAX	10-32 UNF-2A	.290 MAX	.160 MAX	.437 MAX	.800 MAX	
S19r	1.18		.433	M5			.433	.629	
S19s	1.249	.401	.423 .450	M5	.421	.062 .078	.433	.799	
S19t	1.18	.393	.433	M5	.275	.070	.433	.748	
S19u		.460	.444	.25-28UNF-2A	.511	.137	.669		
S19v		.570	.472	M6x.039	.551	.149	.771	1.00	.070
S19w	1.23 MAX	.405 MAX	.438	10-32NF-2A	.281 MAX	.060		.800 MAX	NA

S59

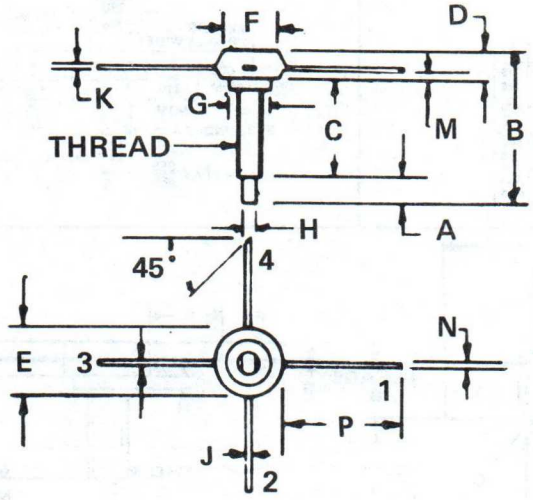

	A	B	C	D	E	F	G	H	J	K	M	N	P	THREAD
S59m	.118	.827 MAX	.394		.394 MAX	.378	.291 MAX	.102	.070 .086	.004		.110 .126	.315 MIN	M4

S72

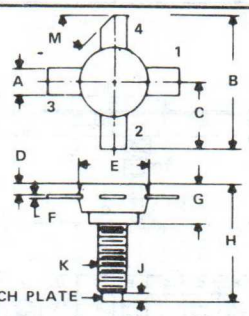

	A	B	C	D	E	F	G	H	J	K	M
S72	.220 .230	1.055 1.065	.520 .540	.065 .085	.465 .485	.003 .008	.240 .260	.710 .730	.120 .130	8-32N.C.2A	45°
S72a	.225	1.00 MIN			.390 MAX	.005 .010	.195	.640	.115	8-32UNC24THD	45°
S72b	.120 .125		.358 .378		.220 .240	.008	.200	.305 MAX	.145	6-32	30°
S72c	.146	.984 1.142	.571	.102	.375 MAX	.005 MAX	.226	.687	.134	8-32UNC	
S72d	.223 MAX			.045 TYP	.355 .375	.008 TYP	.155 .165	.595 .635	.130	8-32UNC-2A	45°
S72e	.225 MAX			.104 TYP	.490 .510	.006 TYP	.260 .280	.700 .750	.120	8-32UNC-2A	45°
S72f	.078	.866			.275	.003	.242	.774	.118	JSOM3	45°
S72g	.220 .230	1.095 MIN			.365 .385	.004 .008	.205 .225	.630 .750		8-32UNC2ATHD	45°
S72h	.220 .230	1.055 1.065	.520 .540	.080 .100	.365 .385	.004 .007	.245 .275	.710 .750	.100 .130	8-32NC3A	45°
S72j	.031			.082	.393	.157		.484		8-32UNC-2A	
S72k	.138 .154	1.00 1.04		.113	.370 .378	.005	.207 .227	.624 .684		10-32UNF	
S72m	.146	.984 MIN		.108	.382 MAX	.005	.226 MAX	.667 MAX	.141	8-32UNC	
S72n	.221 .229	4.04 1.05		.085 .095	.370 .390	.004 .006	.250 .275		.100 .130	8-32UNC-2A	45°
S72p	.220 .230				.565 .585	.005 NOM			.100 .130		45°
S72q	.220 .230	1.055 1.065	.520 .530	.073 .077	.365 .385	.005	.245 .275	.710 .750	.100 .130	8-32UNC-2A	45°
S72r	.220 .230	1.055 1.065	.520 .530	.080 .100	.490 .510	.005	.245 .275	.835 .845	.110 .120	10-32NC-3A	45°
S72s	.228	1.06		.104	.377	.005	.267	.748	.129	M4	
S72t		1.055 1.065	.520 .530		.500		.250	.840		8-32NC-3A	
S72u	.217 .233	1.11		.106 .126	.387	.004 .006	.284 MAX	.707 .738		10-32 UNF	
S72v	.229	1.055	.530		.390		.275	.750	.130	8-32	
S72w	.157	.708	.354	.074	.350	.003	.177	.728	.118	M4	

12. OUTLINE DRAWINGS

S75

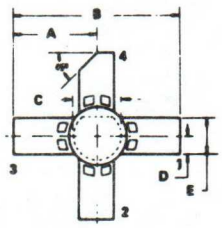

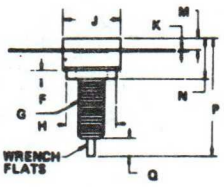

	A	B	C	D	E	F	G	H	J	K	M	N	P	Q
S75	.520 / .540	1.05 / 1.06	.325	.110 / .115	.220 / .230	.075	10-32NC3A	.305	.365 / .385	.005	.080 / .100	.245 / .275	.710 / .750	.100 / .130
S75h				.110 / .115	.220 / .230	.062	8-32NC2A	.244 / .275	.322 MAX	.005	.097 / .136	.232 MAX	.724 MAX	.114 MIN

S78

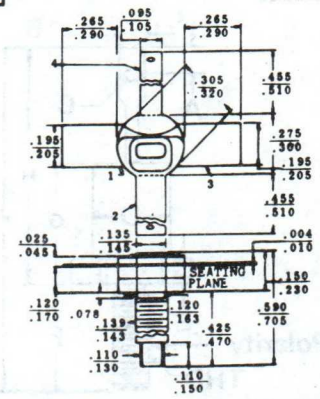

S84

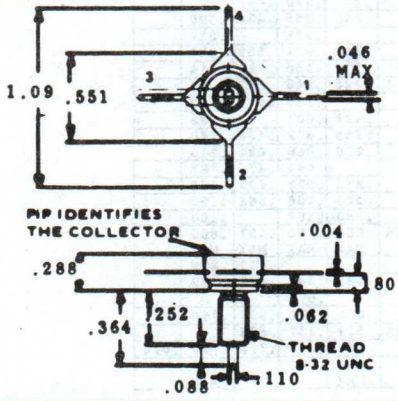

S89

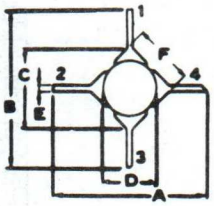

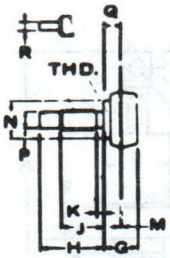

	A	B	C	D	E	F	G	H	J	K	M	N	P	Q	R	THD
S89	.984 MIN	.984 MIN	.551	.381 MAX	.043	.417	.225 MAX	.440	.314	.062	.003	.281	.110	.118	.059	8-32UNC
S89a	1.08		.391 / .406	.378	.023 / .040		.185 / .205	.492 / .532	.358 MAX	.048 MAX	.003 / .008	.378	.096 / .109	.127 / .148	.072 / .088	8-32UNC

S90

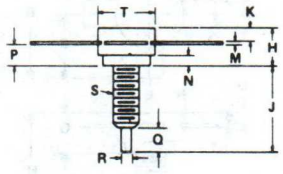

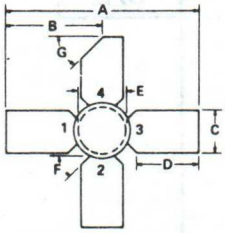

	A	B	C	D	E	F	G	H	J	K	M	N	P	Q	R	S	T
S90	1.055 / 1.065	.525 / .535	.220 / .230		.246 / .254		45	.178 / 1.98	.437 / .457	.055	.055	.060	.118 / .128	.115 / .145		8-32NC2A	.278 / .286
S90a	1.04 / 1.06	.520 / .530	.220 / .230	.380 / .390	.245 / .255	45	45	.185 / .215	.445 / .455	.070 / .090	.002 / .008	.058 / .062	.114 / .122	.125 / .135	.056 / .064	8-32UNF-2A	.270 / .290
S90b	.980 / 1.11		.220 / .230					.155 / .191	.400 / .500		.002 / .008		.101 / .125			8-32UNC-2A	.275 / .285
S90c			.220 / .230	.354 MIN				.232 MAX			.005		.110 / .130	.114 MIN		8-32UNC	.283 MAX

S91

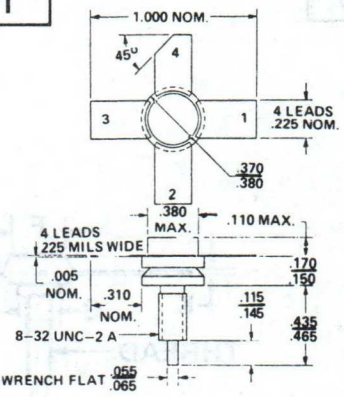

S107

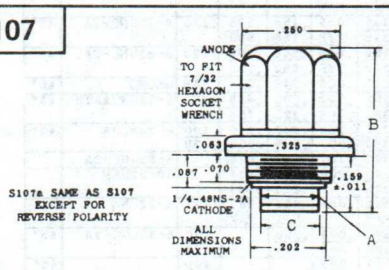

	A	B	C
S107	.166	.435	.166
S107a	.166	SAME AS S107 EXCEPT FOR REVERSE POLARITY	
S107b	.125	SAME AS S107; ALSO AVAILABLE WITHOUT ADAPTOR	
S107c	.080	.385	.125 ALSO AVAILABLE WITHOUT ADAPTOR

S111

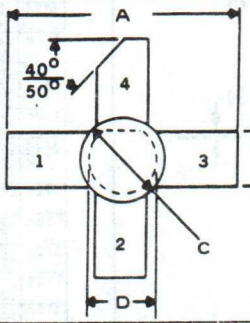

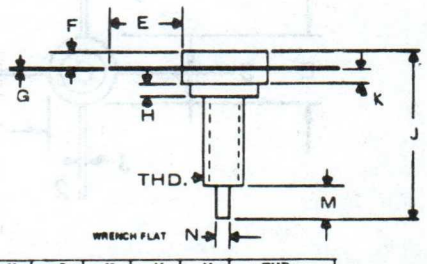

	A	B	C	D	E	F	G	H	J	K	M	N	THD
S111	1.055 / 1.065	.221 / .229	.370 / .380	.300 / .380	.300 / .350	.085 / .095	.004 / .006	.070 / .080	.710 / .750	.086 / .094	.100 / .130	.055 / .065	8-32UNC-3A
S111a	1.000	.225		.225 NOM		.095	.005 NOM		.545 / .635		.115 / .145		8-32UNC-2A
S111b	1.000	.225	.300			.100	.005 NOM		.545 / .635		.115 / .145		8-32UNC-2A

12. OUTLINE DRAWINGS

S114

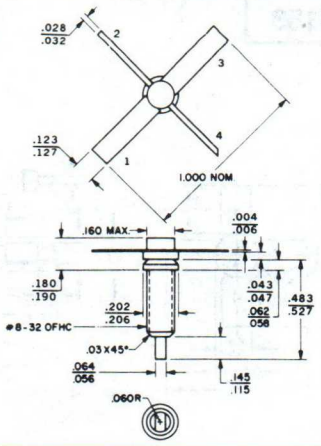

S123

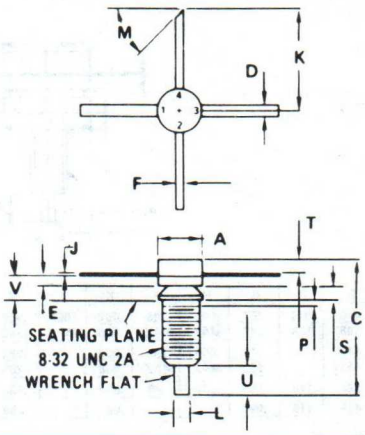

DIM	MILLIMETERS MIN	MILLIMETERS MAX	INCHES MIN	INCHES MAX
A	5.08	5.59	0.200	0.220
C	13.97	16.26	0.550	0.640
D	1.40	1.65	0.055	0.065
E	1.02	1.27	0.040	0.050
F	0.64	0.89	0.025	0.035
J	0.08	0.18	0.003	0.007
K	11.05		0.435	
L	1.40	1.65	0.055	0.065
M	45° NOM		45° NOM	
P		1.27		0.050
S	1.40	1.65	0.055	0.065
T	1.40	1.78	0.055	0.070
U	2.79	3.81	0.110	0.150
V	2.41	2.92	0.095	0.115

S136

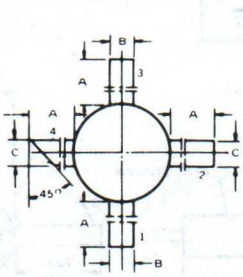

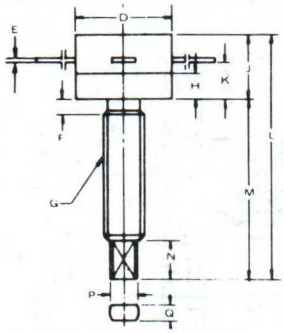

	A	B	C	D	E	F	G	H	J	K	L	M	N	P	Q
S136	.196 MIN	.070 .086	.070 .086	.295 MAX	.004	.039 MAX	M3	.078	.220 MAX	.106 .129	.744 MAX	.511	.118	.0780	.055
S136a	.196 MIN	.098 MAX	.098 MAX	.295 MAX	.004	.039 MAX	M3	.078	.193 .216			.508 .528	.118	.0780	.055

S141

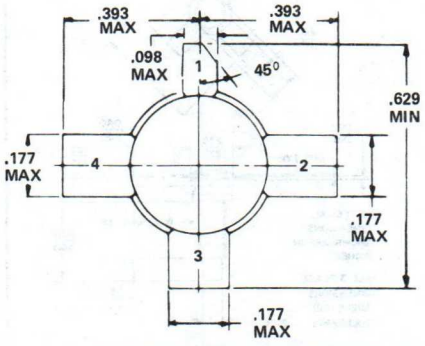

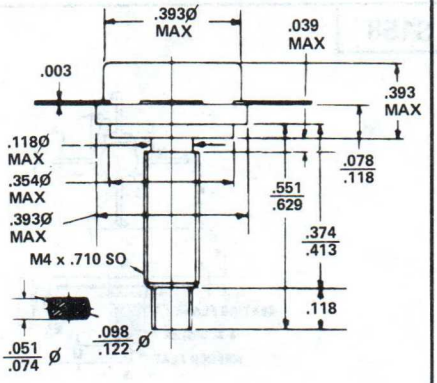

S142

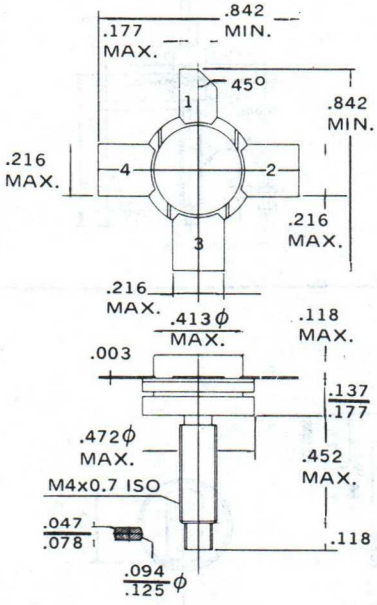

S150

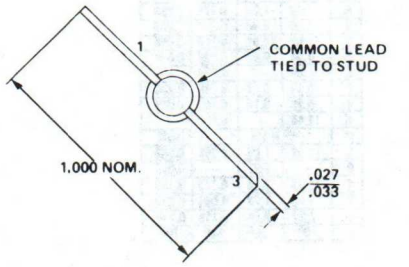

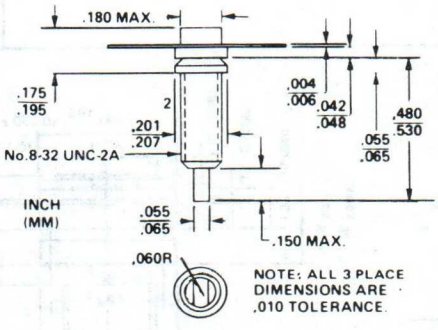

S534 Dimensions in mm

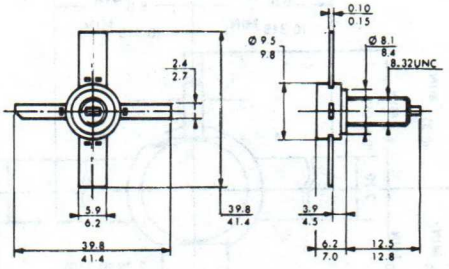

12. OUTLINE DRAWINGS

S151

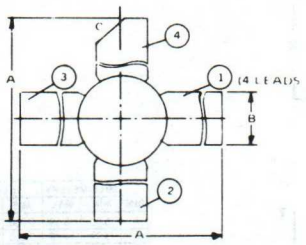

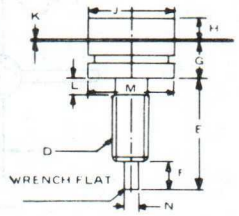

	A	B	C	D	E	F	G	H	J	K	L	M	N	P
S151	1.03 1.09	.216 .232	45°	M4 x 0.7	.440 .488	.098 .138	.157 .177	.094 MAX	.386 MAX	.002 .006	.051 MAX	.366 .386	.047 .070	.106 NORM
S151a	1.03 1.09	.216 .232	45°	M4 x 0.7	.443 .453		.112 .132	.094 MAX	.295 MAX	.003 .008		.264 .280	.047 .070	.106 NORM
S151b	.897	.196		M4	.523	.118	.153	.090	.346	.004		.433	.063	.110
S151c	.708	.157		M4	.433	.118	.098			.003		.059		

S153

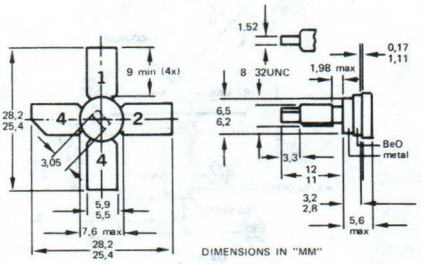

S154

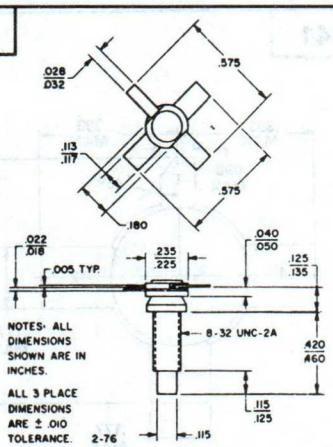

S155

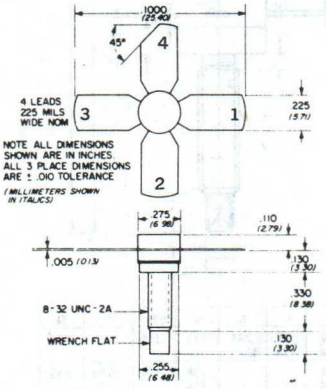

S157

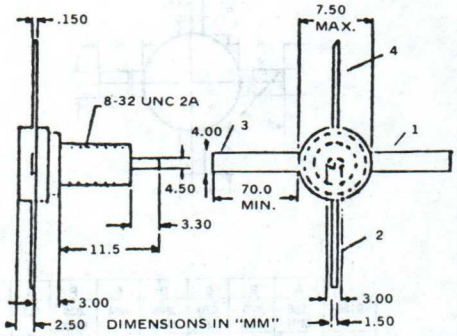

S158

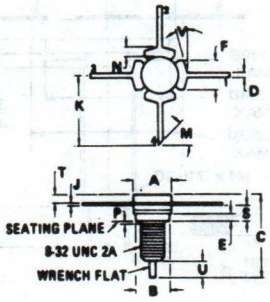

DIM	MILLIMETERS MIN	MILLIMETERS MAX	INCHES MIN	INCHES MAX
A	7.06	7.20	0.278	0.286
B	6.20	6.60	0.244	0.256
C	14.99	16.39	0.590	0.645
D	0.84	0.89	0.025	0.035
E	1.90	–	0.060	–
F	5.46	5.97	0.215	0.235
J	0.08	0.18	0.003	0.007
K	12.45	–	0.490	–
M	45° NOM		45° NOM	
N	1.40	1.65	0.055	0.065
P	–	1.27	–	0.050
S	3.00	3.25	0.118	0.128
T	1.40	1.78	0.055	0.070
U	2.92	3.68	0.115	0.145
V	10°	20°	10°	20°

S160

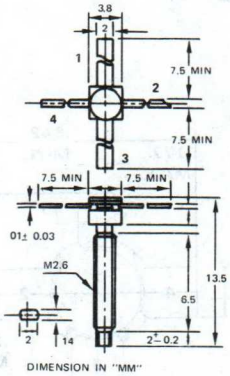

S161

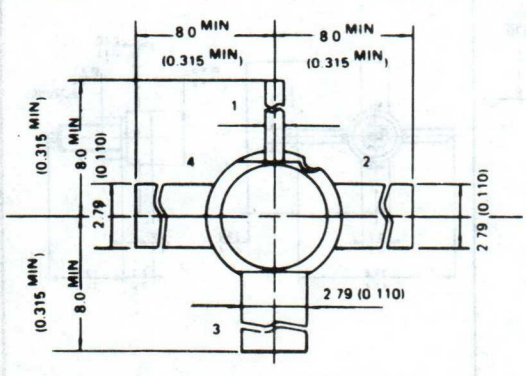

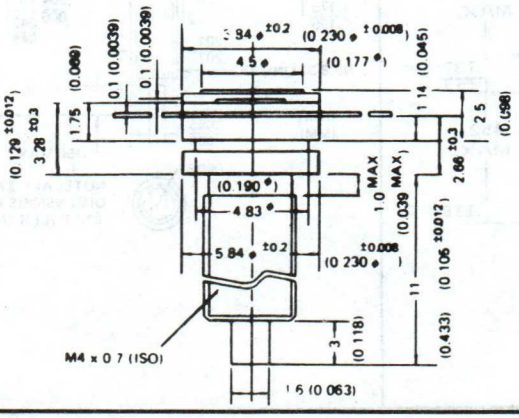

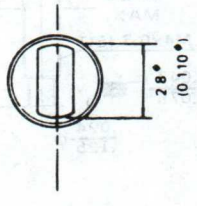

MM
(INCH)

12. OUTLINE DRAWINGS

S163

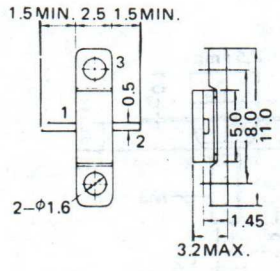

1 : G 2 : D 3 : S

S165



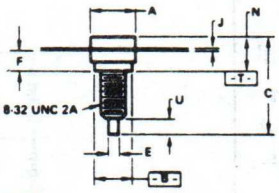

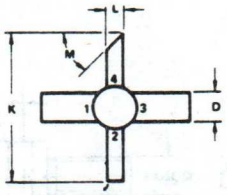

NOTES:
1. DIM [B] IS DATUM
2. POSITIONAL TOLERANCE FOR LEADS: [Φ] 0.76(0.030)Ⓜ T B Ⓜ
3. [-T-] IS SEATING PLANE.
4. DIMENSION K APPLIES TWO PLACES.
5. DIMENSIONING AND TOLERANCING PER ANSI Y14.5, 1973.

DIM	MILLIMETERS MIN	MILLIMETERS MAX	INCHES MIN	INCHES MAX
A	7.01	7.62	0.276	0.300
B	6.20	6.50	0.244	0.256
C	16.26	16.76	0.640	0.660
D	4.95	5.21	0.195	0.205
E	1.40	1.65	0.055	0.065
F	2.92	3.43	0.115	0.135
J	0.08	0.18	0.003	0.007
K	15.24		0.600	
L	2.41	2.67	0.095	0.105
M	45° Nom.		45° Nom.	
N	5.00	5.46	0.200	0.215
U	2.92	3.68	0.115	0.145

S167

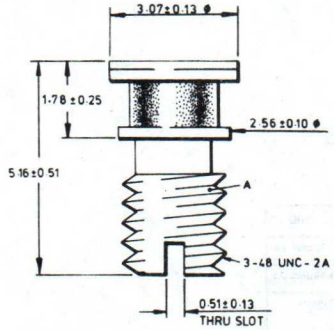

S168

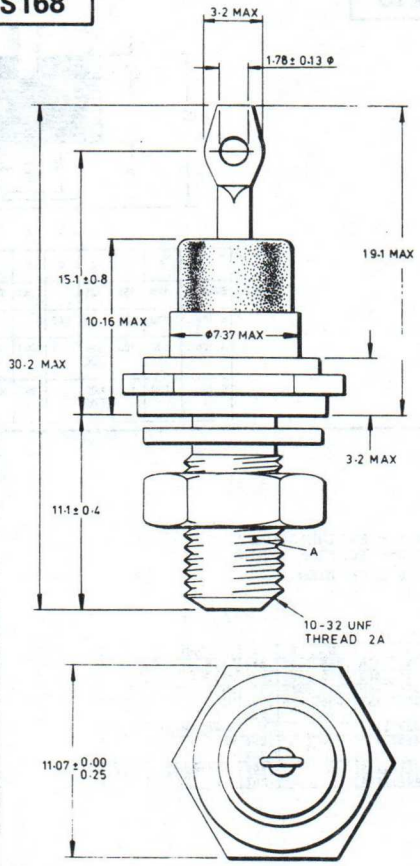

S169

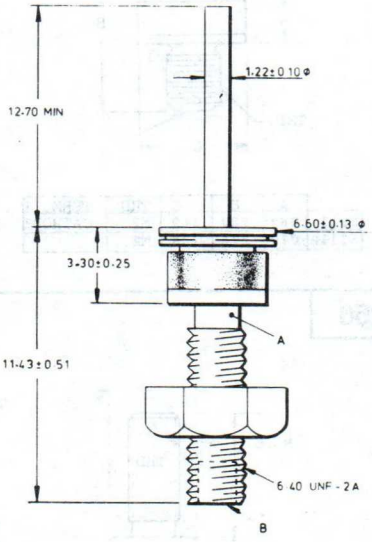

S170

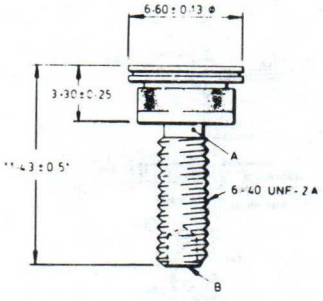

S171

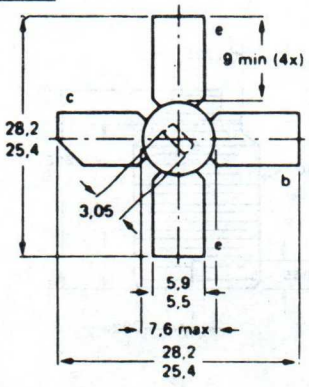

Dimensions in mm

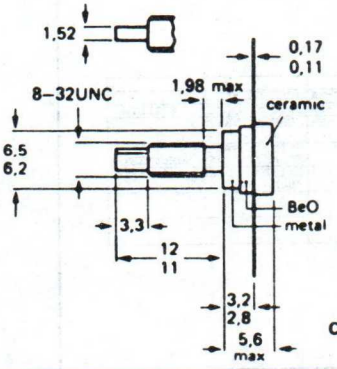

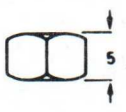



Diameter of clearance hole in heatsink: max. 4,2 mm.
Mounting hole to have no burrs at either end.
De-burring must leave surface flat; do not chamfer or countersink either end of hole.
Torque on nut: min. 0,75 Nm (7,5 kg cm)
max. 0,85 Nm (8,5 kg cm)

When locking is required an adhesive is preferred instead of a lock washer.

CAUTION This device incorporates beryllium oxide, the dust of which is toxic.
The device is entirely safe provided that the BeO disc is not damaged.

12. OUTLINE DRAWINGS

S173

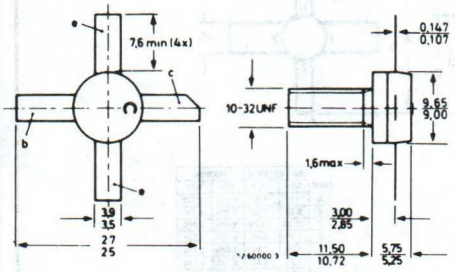

S174

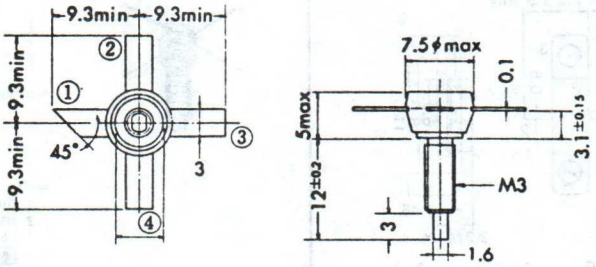

S211

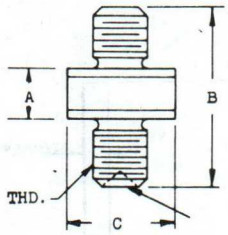

	A	B	C	THD	TERM. 1
S211	.082	.280	.149	M2	CATHODE
S211a	.079	.276	.138	M2	

S215

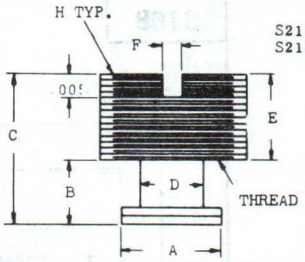

S215 - has screw driver slot (F & G)
S215a - has spline socket - 6 teeth (H)

	A	B	C	D	E	F	G	H	THD.
S215	.125	.055	.185		.130	.025	.035		2-80UNF-2A
S215a	.130	.055	.150	.083				.050	3-48UNC-2A
S215b	.130	.100	.690 / .700		.590	.031	.039		6 ISO
S215c	.230	.134	1.00 / 1.02		.866	.039	.059		8x100 ISO

S250

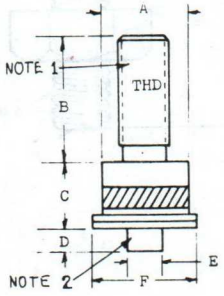

S250d NOTE 1 - SPLINE SOCKET
NOTE 2-- PORTION DEFINE
BY D & E OMITTED

	A	B	C	D	E	F	THD	NOTE
S250	.225	.321	.170	.065	.082	.246	M3.5	
S250a	.080	.145	.062	.023	.035	.102	M3.5	
S250b	.173	.276	.099	.059	.079	.239	M3.0	
S250c	.209	.374	.169	.059	.079	.260 MAX	M3.5	
S250d		.320	.131			.265	6-40UNF-2A	1,2
S250e		.315	.170			.260 MAX	M3.5	2
S250f	.207 / .213	.317 / .323	.118 / .134			.259 / .267	.164-32NC 2A	1,2

S535

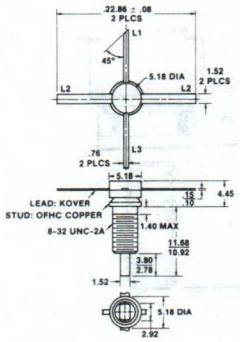

S268

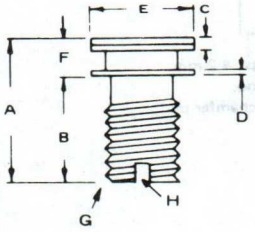

	A	B	C	D	E	F	G	H
S268	.212	.137	.023	.011	.123		3-48UNC-2A	SCREWDRIVER SLOT
S268a	.225	.107	.025	.030	.149		3-48UNC-2A	SPLINE SOCKET - 6 TEETH
S268b	.183	.128 / .136			.119 / .125		3-48UNC-2A	SCREWDRIVER SLOT
S268c	.151	.085	.022	.010	.120		3-48UNC-2A	BRISTOL SPLINE SOCKET - .050 NOM(6TEETH)
S268d	.212	.137	.023	.011	.123		3-48UNC-2A	BRISTOL SOCKET - 6 TEETH .048
S268e		.110 / .125	.021 MAX	.015	.118	.061 / .080	M2x.4	
S268f		.127 / .135	.022 / .025	.007 / .009	.118 / .122	.055 / .074	3-48UNC	

S286

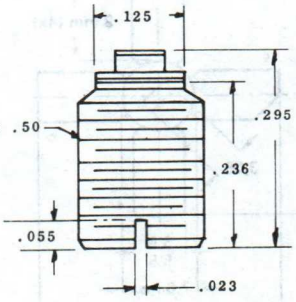

12. OUTLINE DRAWINGS

S288

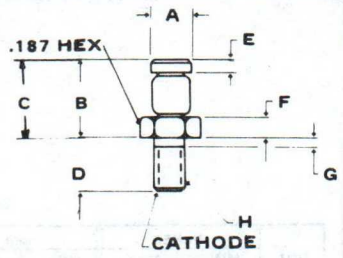

	A	E	C	D	E	F	G	H
S288	.150	.160 MAX	.335					
S288a	.100	.230 MAX	.460					
S288b	.154 .159	.245 .275		.177 .187	.049 .053	.069 .078	.035 MAX	4-40NC-2
S288c	.096 .100	.215 .240		.235 .250	.039 .043	.090 .096	.035 MAX	4-40NC-2

S328

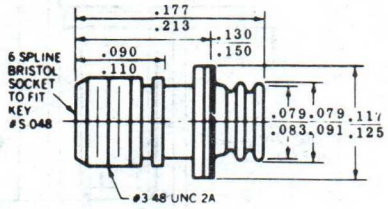

S347

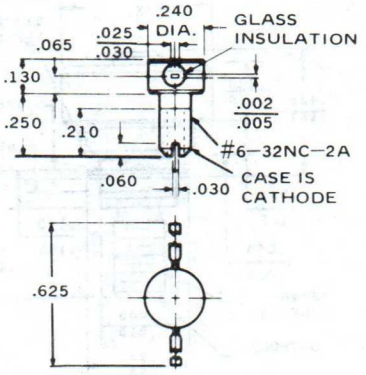

S356

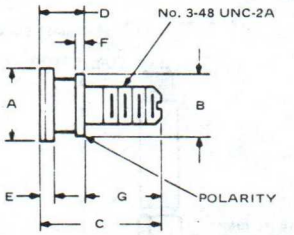

	A	B	C	D	E	F	G	POLARITY
S356	.118 .123	.100 .105	.185 .212	.056 .075	.014 .023	.009 .011	.129 .137	CATHODE
S356a	.119 .127	.098 .102	.188 .208	.057 .071	.016 .024	.009 .011		CATHODE
S356b	.118 .124		.188 .208	.058 .071	.019 .024	.009 .011	.117 .150	CATHODE
S356c	.118 .124		.188 .208	.058 .071	.019 .024	.009 .011	.117 .150	ANODE

S359

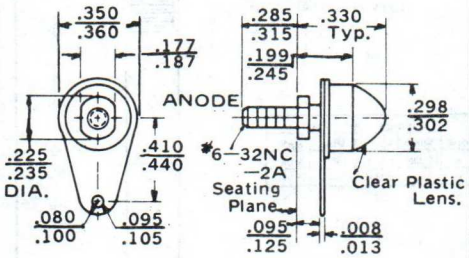

S396

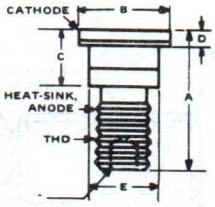

	A	B	C	D	E	F	THD
S396	.200 .224	.158 .163	.071 .105	.014 .028	.122 .126	BRISTOL SOCKET – 6 TEETH .048	3-48UNC-2A
S396a	.435 .451	.255 .265	.119 .131	.025		PLAIN	6-40UNF-2A
S396b	.488 .498	.225 .235	.160 .180		.165	.031 x .062 SLOT	6-40UNF-2A
S396c	.446 MAX	.259 .267	.118 .134	.027 .033		PLAIN	.164-32 UNC 2A

S401

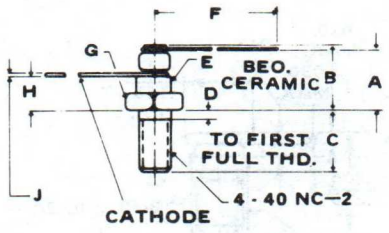

	A	B	C	D	E	F	G	H	J
S401	.264 .274	.292 MAX	.180 .190	.035 MAX	.125DIA x .062	.600 MIN	.187	.111 .119	NI-.121 x .006 .128 x .005
S401a	.231 .241	.260 MAX	.180 .190	.035 MAX	.125DIA x .062	.600 MIN	.187	.111 .119	CU-.090 x .005 .097 x .006

S419

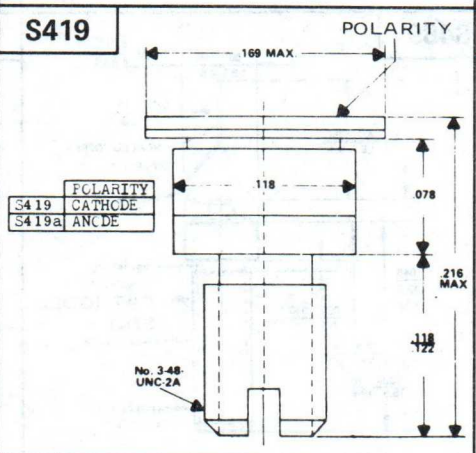

	POLARITY
S419	CATHODE
S419a	ANODE

S420

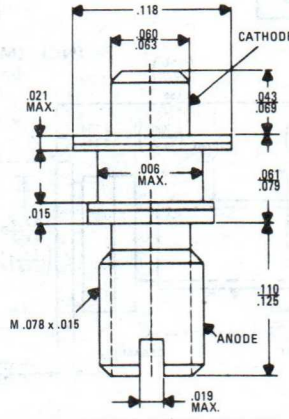

S428

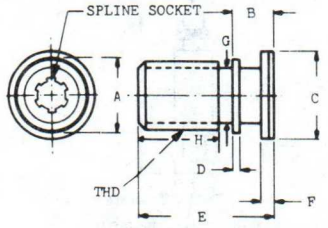

	A	B	C	D	E	F	G	H	THD
S428	.100	.054 .066	.118 .126	.009 .011	.183 .203	.014 .022			3-48UNC-2A
S428a	.193 .199	.118 .134	.259 .267	.091 .101	.446	.027 .033	.207 .213	.317 .323	8-32UNF-2A
S428b	.100 .105	.056 .075	.118 .123	.009 .011	.185 .212	.014 .023		.129 .137	3-48-UNC-2A
S428c	.098 .102	.058 .071	.119 .127	.009 .011	.188 .208	.016 .024			3-48-UNC-2A

S429

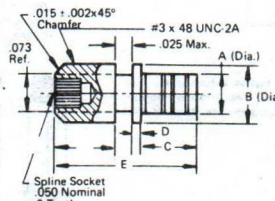

DIM.	INCHES MIN.	INCHES MAX.	MM MIN.	MM MAX.
A	0.075	0.085	1.90	2.16
B	0.095	0.105	2.41	2.68
C	0.096	0.128	2.44	3.25
D	0.008	0.012	0.202	0.304
E	0.241	0.281	6.12	7.14

S430

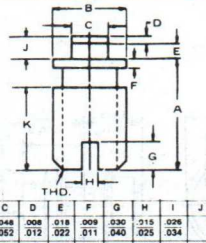

	A	B	C	D	E	F	G	H	I	J	K THD
S430	.153 .173	.098 .102	.048 .052	.008 .012	.018 .022	.009 .011	.030 .040	.015 .025	.026 .034		3-48UNC2A
S430a	.168 MAX	.110 .120	.025 .035			.015 .025	.030	.020	.014 .021	.090 MIN	3-48UNC2A
S430b	.170 .185	.098 .120	.048 .054			.009 .011	.025 .035	.015 .025	.023 .029	.090 MIN	3-48UND2A
S430c	.143 .155	.098 .102	.048 .052			.009 .011			.022 .030		3-48UNC2A
S430d	.140 .145	.113 .118	.027 .034			.018 .022			.016 .019		3x48-UNC2A
S430e	3.43 3.80	2.50 2.60	1.22 1.32	.200 .310	460 560	.230 .280	.760 1.02	.380 .640	460 590		3-48UNC2A
S430f	.161 MAX	.110 .120	.025 .035			.015 .025	.030	.020	.029 MAX	.090 MIN	3-48UNC2A
S430g	.145 .157	.113 .118	.048 .052			.018 .022	.035 .045			.022 .030	3.48UNC2A

12. OUTLINE DRAWINGS

S448

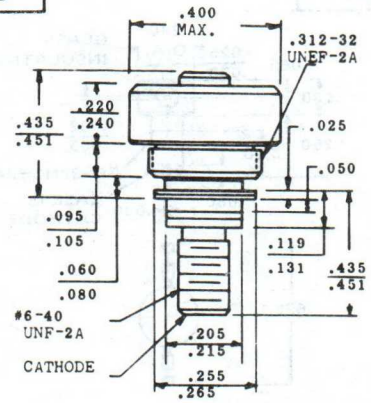

S454

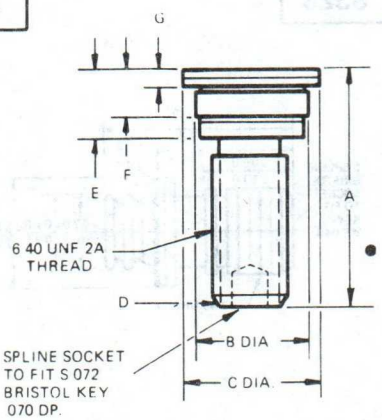

DIM.	INCHES MIN.	INCHES MAX.	MM MIN.	MM MAX.
A	0.440	0.460	11,18	11,68
B	0.208	0.212	5,28	5,38
C	0.255	0.265	6,48	6,73
D	.020 x 45	REF.	0,51 x 45°	REF.
E	0.119	0.131	3,02	3,33
F	0.050	REF.	1,27	REF.
G	0.025	0.035	0,64	0,89

Cp .75 pF, L_S 0.6 nH

S462

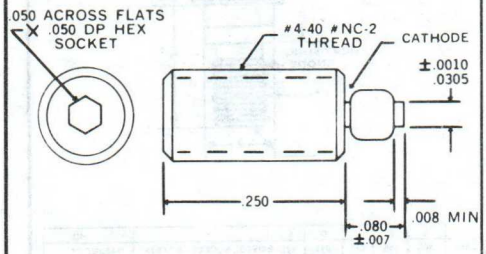

S484

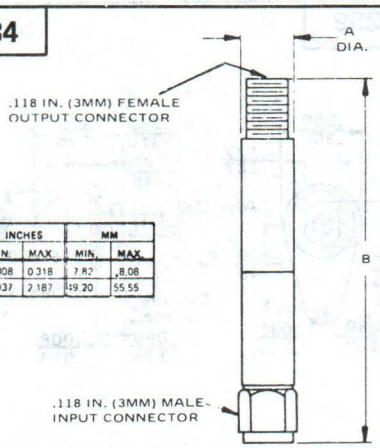

DIM.	INCHES MIN.	INCHES MAX.	MM MIN.	MM MAX.
A	0.308	0.318	7.82	8.08
B	1.937	2.187	49.20	55.55

S485

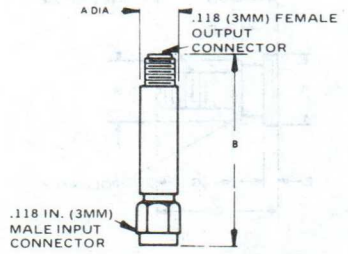

DIM.	INCHES MIN.	INCHES MAX.	MM MIN.	MM MAX.
A	0.312	0.375	7.92	9.53
B	1.28	1.46	32.51	37.08

S486

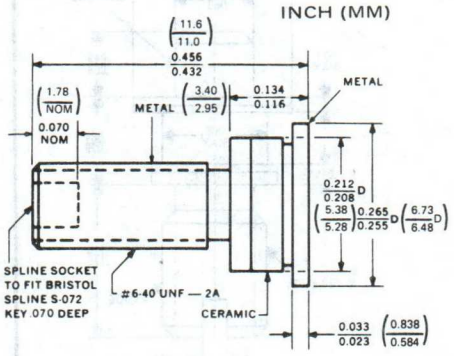

S489

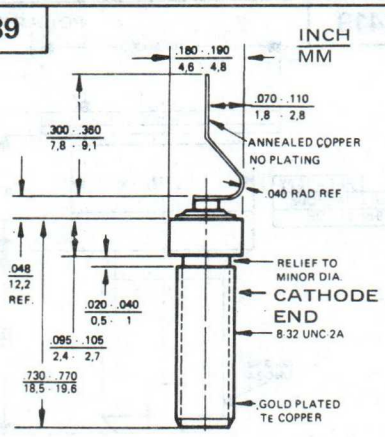

S490

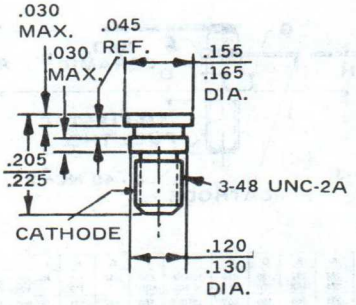

S495

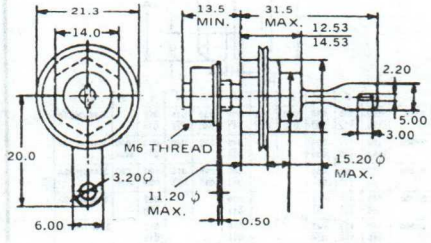

DIMENSIONS IN MM

S500

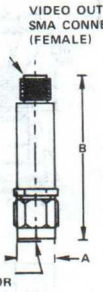

NOTES
1 This dim applies before label
2 Finish body, manufacturers option
Connectors, passivate stainless steel

DIM.	INCHES MIN.	INCHES MAX.	MM MIN.	MM MAX.
A	295	330	7.495	8.385
B	1.28	1.46	32.51	37.08

S501

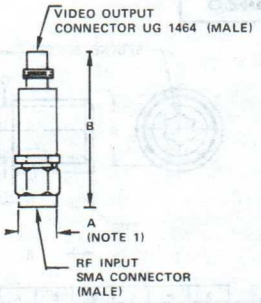

NOTE
1 This dim applies before label

DIM.	INCHES MIN.	INCHES MAX.	MM MIN.	MM MAX.
A	295	330	7,495	8,385
B	1.308	1.348	33.22	34.24

12. OUTLINE DRAWINGS

S502

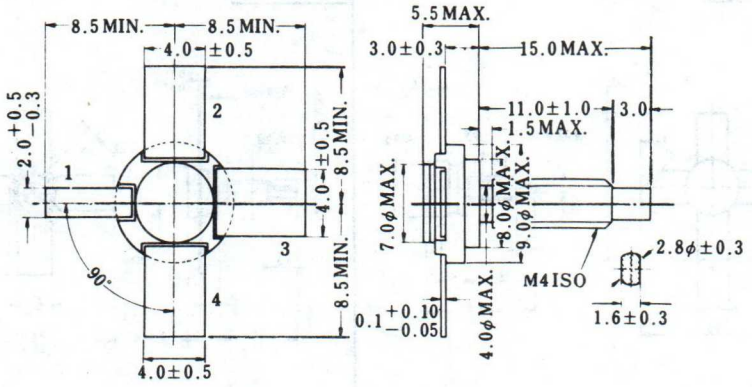

S503

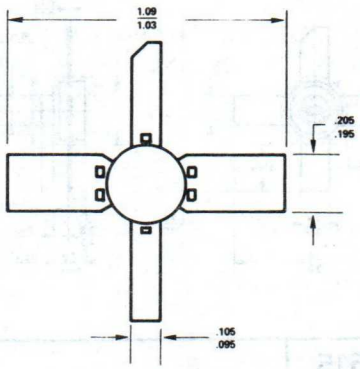

S504

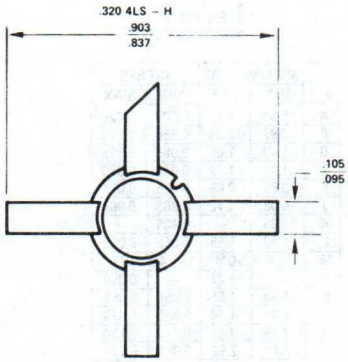

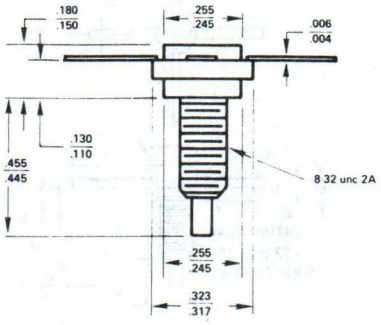

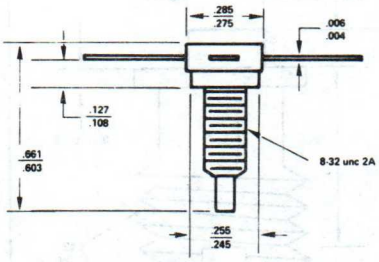

.280 STUD

S506

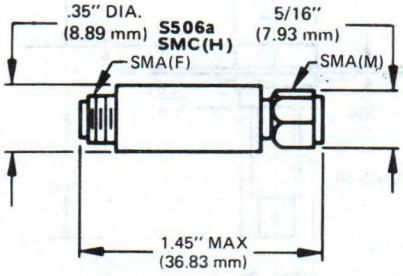

S507

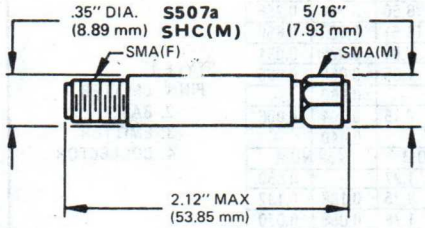

S508

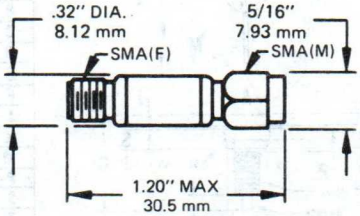

S509

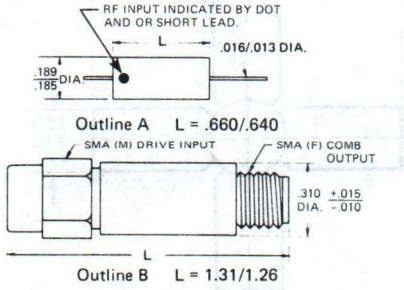

S510

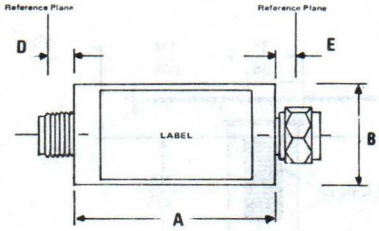



REF.	MILLIMETRES			INCHES		
	Min.	Nom.	Max.	Min.	Nom.	Max.
	-	31	-	-	1.220	-
	-	26	-	-	1.024	-
	9.0	-	10.0	0.354	-	0.393
	9.0	-	10.0	0.354	-	0.393
	3.3	-	4.3	0.130	-	0.169
	5.6	-	6.6	0.220	-	0.260

Note 1: The millimetre dimensions are the prime dimensions.
The inch dimensions are given only for information.

12. OUTLINE DRAWINGS

S512

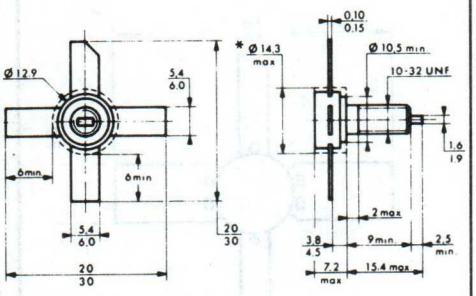

S513

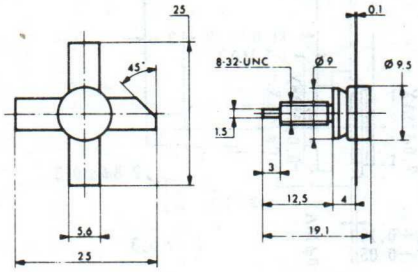

S514

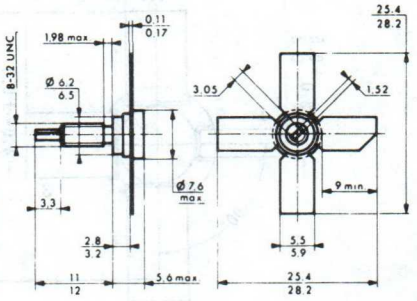

S515

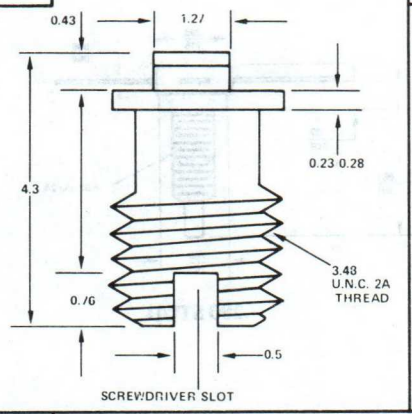

S516

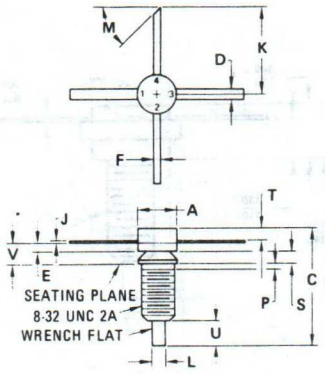

STYLE 1:
PIN 1. EMITTER
2. BASE
3. EMITTER
4. COLLECTOR

DIM	MILLIMETERS		INCHES	
	MIN	MAX	MIN	MAX
A	5.08	5.59	0.200	0.220
C	13.97	16.26	0.550	0.640
D	1.40	1.65	0.055	0.065
E	1.02	1.27	0.040	0.050
F	0.64	0.89	0.025	0.035
J	0.08	0.18	0.003	0.007
K	11.05	–	0.435	–
L	1.40	1.65	0.055	0.065
M	45° NOM		45° NOM	
P	–	1.27	–	0.050
S	1.40	1.65	0.055	0.065
T	1.40	1.78	0.055	0.070
U	2.79	3.81	0.110	0.150
V	2.41	2.92	0.095	0.115

S517

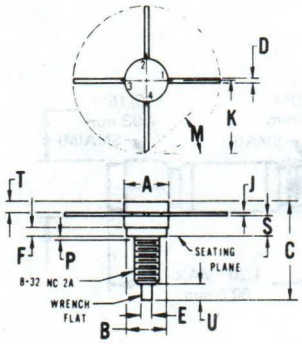

DIM	MILLIMETERS		INCHES	
	MIN	MAX	MIN	MAX
A	7.06	7.26	0.278	0.286
B	6.20	6.50	0.244	0.256
C	15.24	16.51	0.600	0.650
D	0.66	0.86	0.026	0.034
E	1.40	1.65	0.055	0.065
F	1.52	–	0.060	–
J	0.10	0.15	0.004	0.006
K	11.17	–	0.440	–
M	45° NOM		45° NOM	
P	–	1.27	–	0.050
S	2.74	3.35	0.108	0.132
T	1.40	1.78	0.055	0.070
U	2.92	3.68	0.115	0.145

STYLE 1:
PIN 1. EMITTER
2. BASE
3. EMITTER
4. COLLECTOR

S518

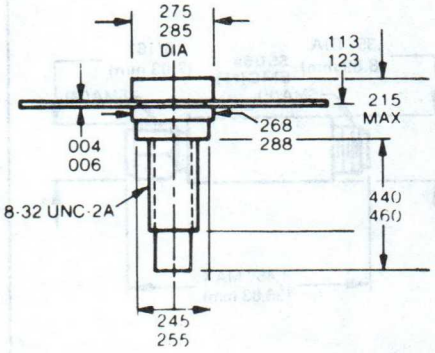

S519

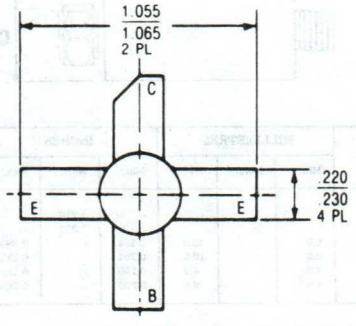

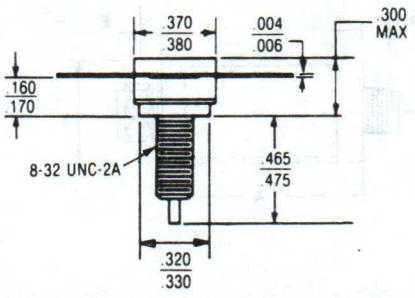

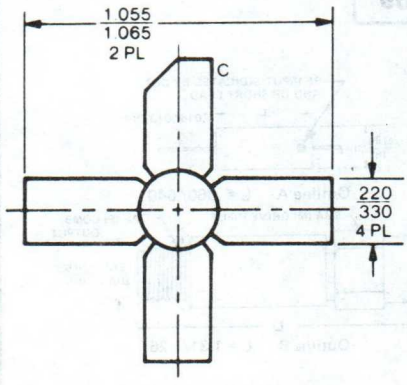

12. OUTLINE DRAWINGS

S520

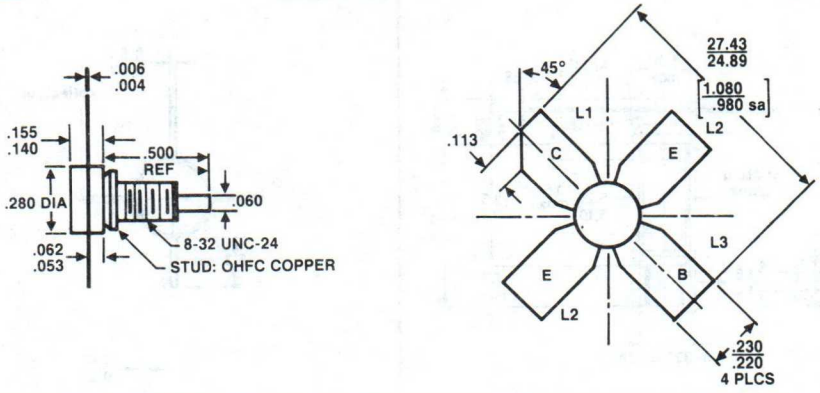

S521

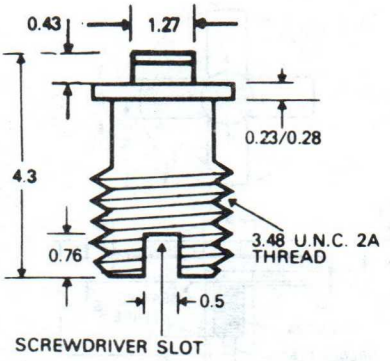

S522

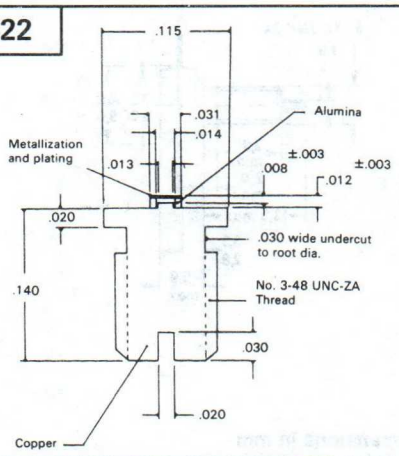

S523

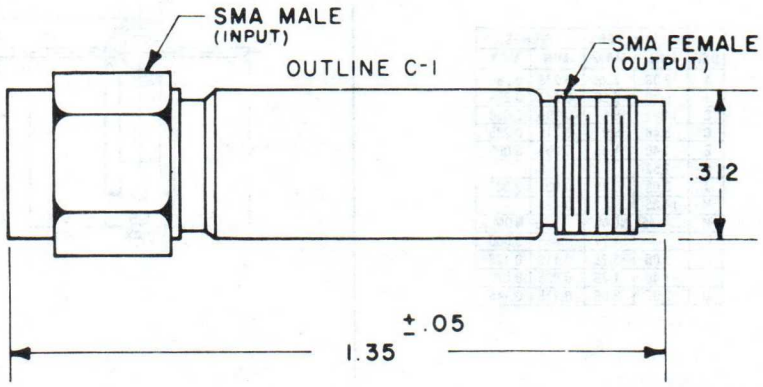

S524

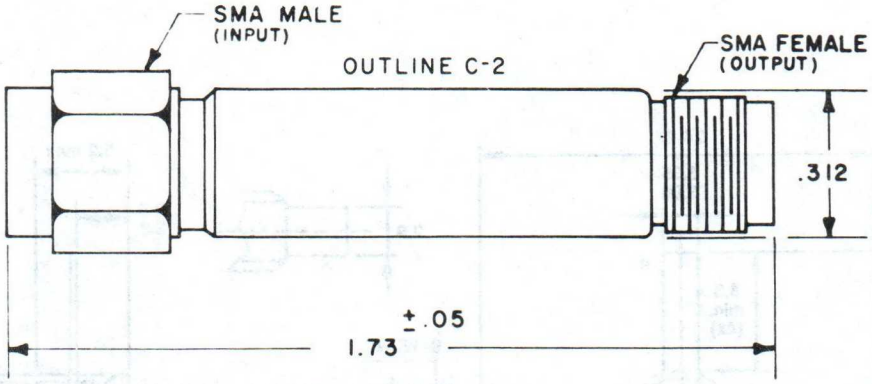

S536

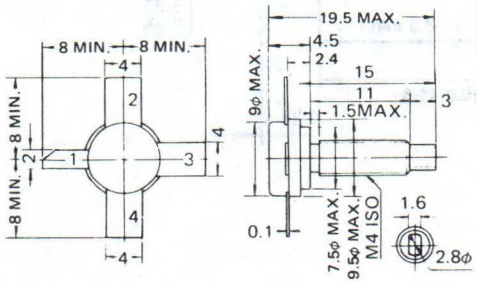

S537

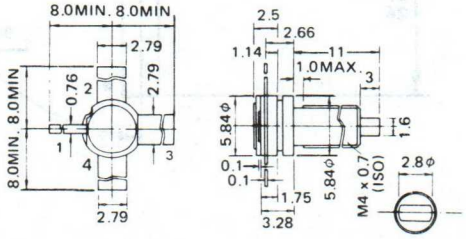

12. OUTLINE DRAWINGS

S527

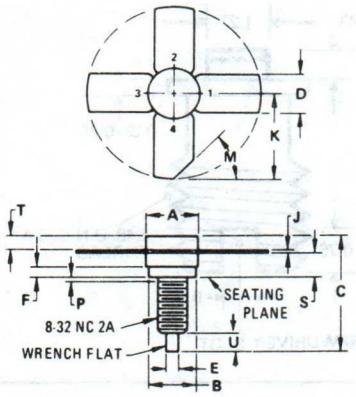

DIM	MILLIMETERS		INCHES	
	MIN	MAX	MIN	MAX
A	7.06	7.26	0.278	0.286
B	6.20	6.50	0.244	0.256
C	14.99	16.51	0.590	0.650
D	5.46	5.97	0.215	0.235
E	1.40	1.65	0.055	0.065
F	1.52	–	0.060	–
J	0.08	0.18	0.003	0.007
K	11.05	–	0.435	–
M	45° NOM		45° NOM	
P	–	1.27	–	0.050
S	3.00	3.25	0.118	0.128
T	1.40	1.78	0.055	0.070
U	2.92	3.68	0.115	0.145

S530

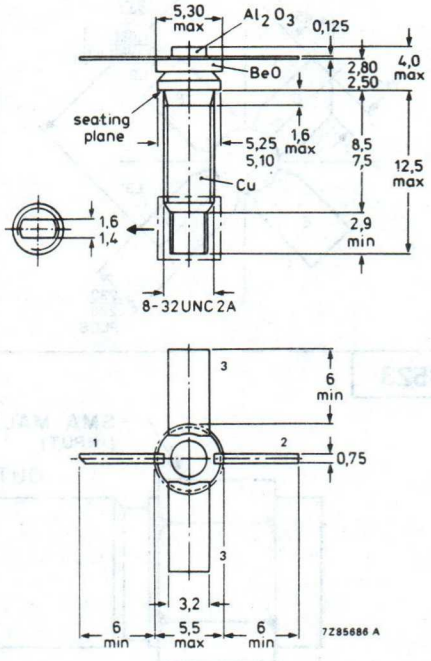

S531

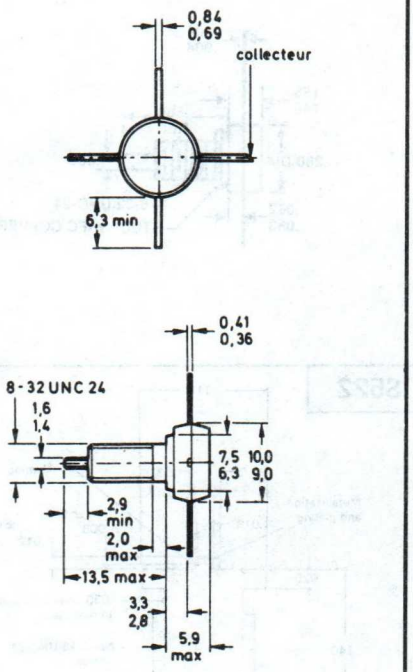

Dimensions in mm

S528

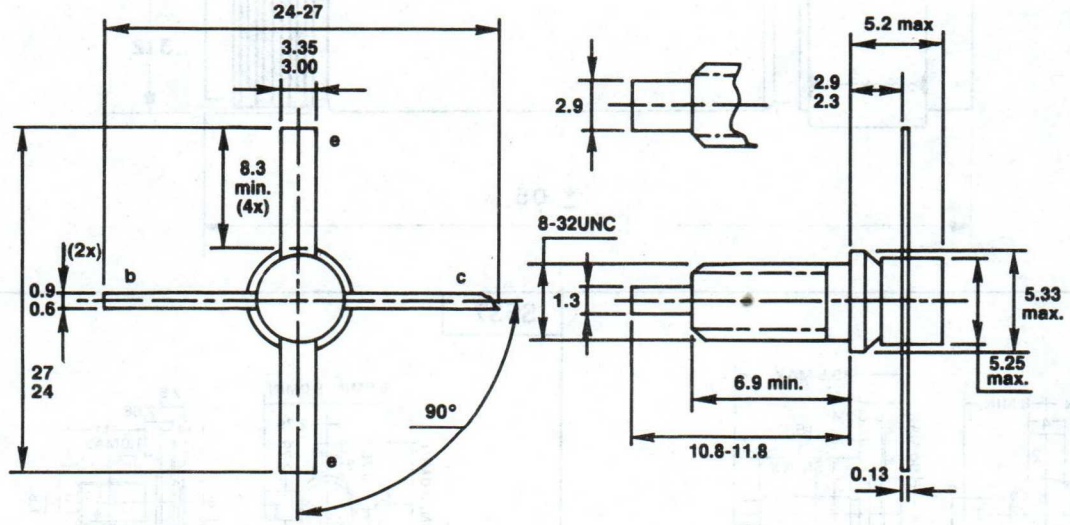

12. OUTLINE DRAWINGS

S529

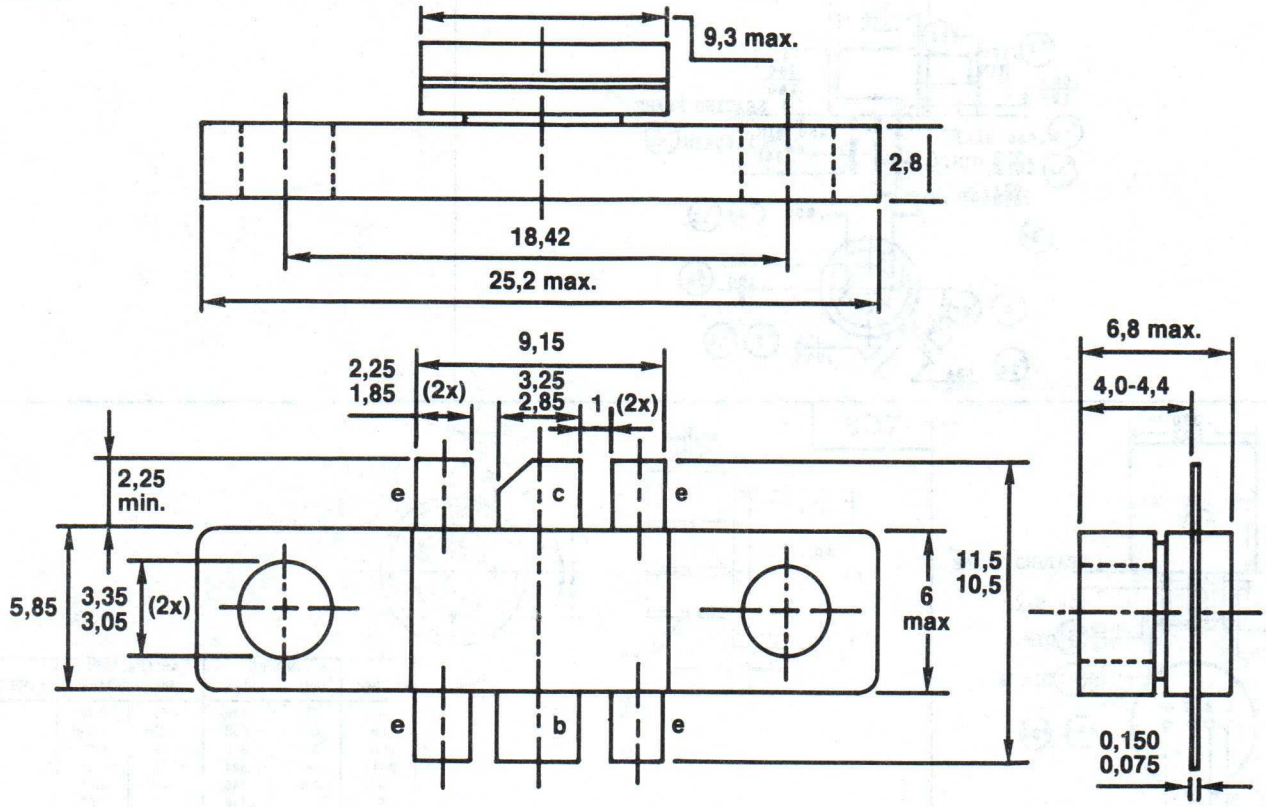

Dimensions in mm

S532

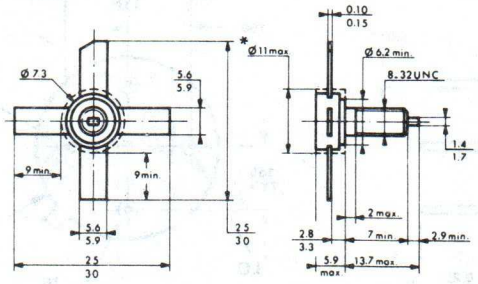

* Outputs must not be bent, cut or used in this area

S538

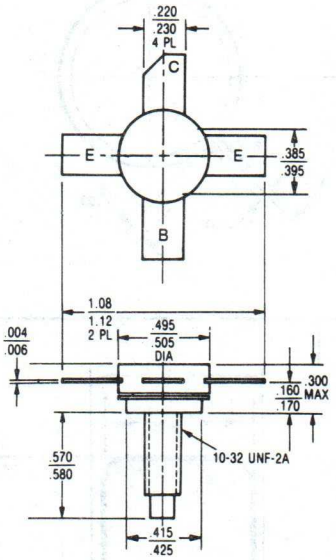

12. OUTLINE DRAWINGS

TO5

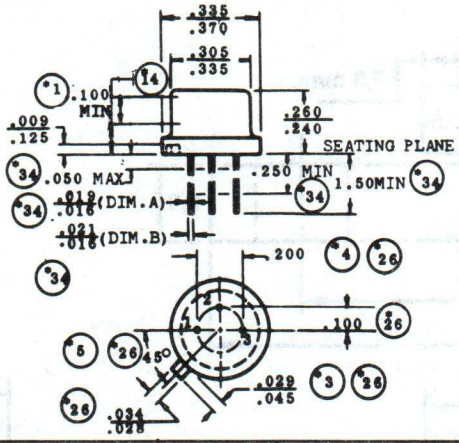

TO7

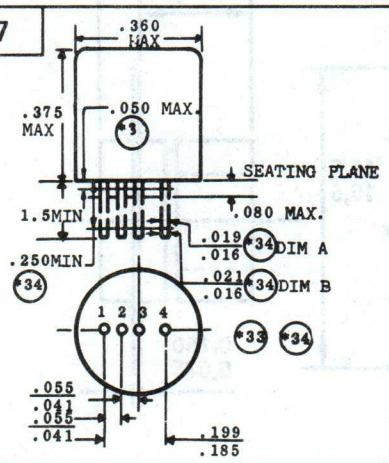

TO8

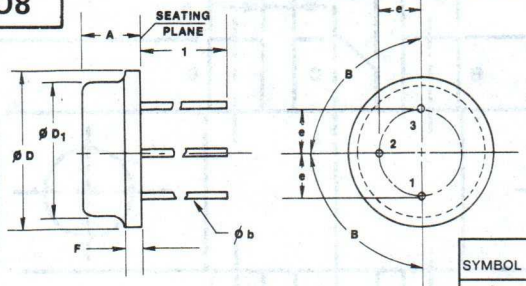

SYMBOL	INCHES MIN.	INCHES MAX.	MILLIMETERS MIN.	MILLIMETERS MAX.	NOTES
A	.270	.330	6.86	8.38	
Ø b	.027	.033	.686	.838	1
Ø D	.550	.650	13.97	16.51	
Ø D_1	.444	.524	11.28	13.31	
e	.136	.146	3.45	3.71	
F		.115		2.92	
1	.360	.440	9.14	11.18	1
B	90° NOMINAL				

TO8M

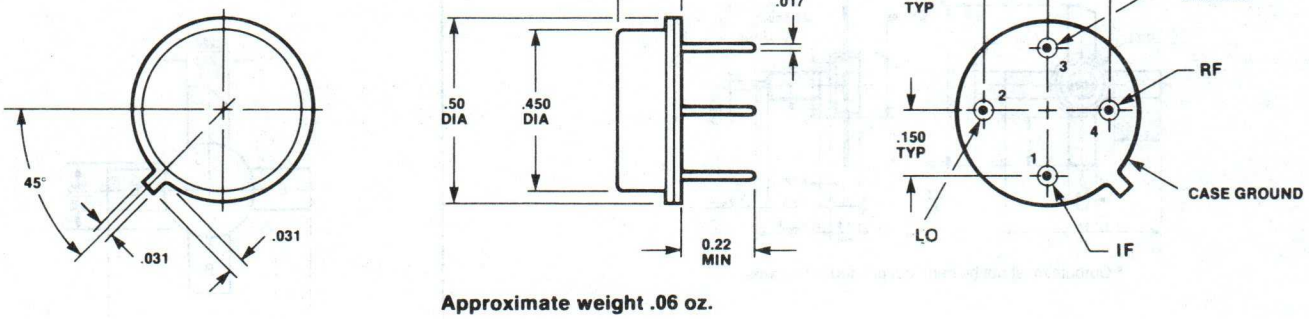

Approximate weight .06 oz.

TO18

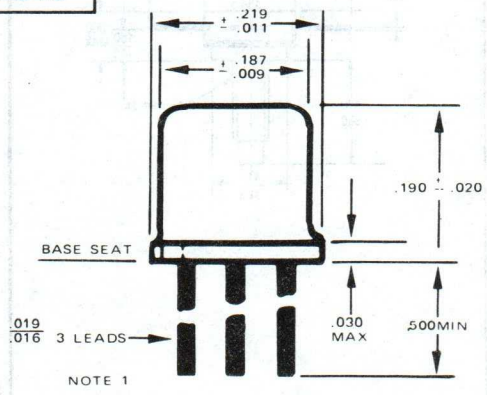

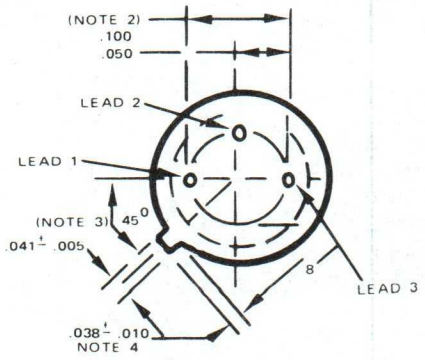

NOTES FOR TO18:

1. The specified lead dia. applies to the zone between .050 and .250 from the base seat. Between .250 and end of lead a max. of .021 is held. Outside of these zones the lead dia. is not controlled.
2. Leads having max. dia. of .019 measured in gaging plane .054 −.001, −.000 below the seating plane of the device shall be within .007 of their true positions relative to the max. tab width.
3. Index tab for vital orientation only.
4. Measured from max. dia. of the actual device.

12. OUTLINE DRAWINGS

TO12

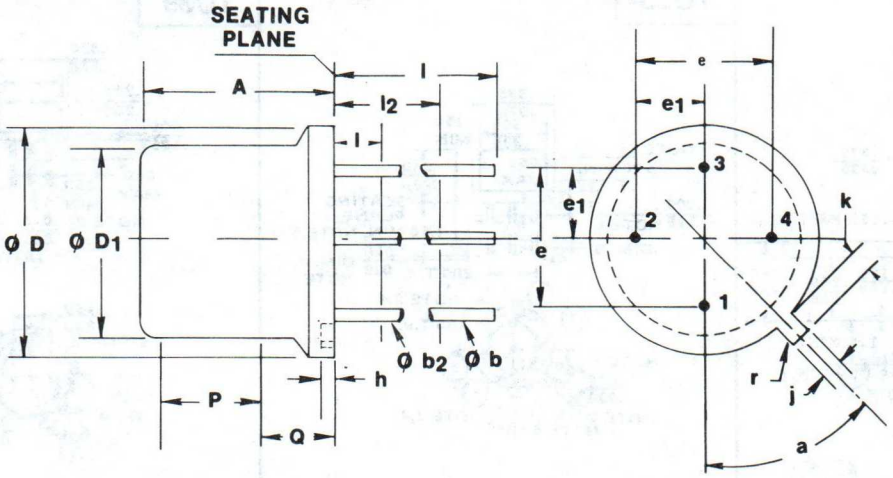

NOTES:
1. THIS ZONE IS UNCONTROLLED FOR AUTOMATIC HANDLING. THE VARIATION IN ACTUAL DIAMETER WITHIN THIS ZONE SHALL NOT EXCEED .010" (.254 MM).
2. (FOUR LEADS) O b_2 APPLIES BETWEEN 1, AND 1_2. O b APPLIES BETWEEN 1_1 AND .5" (12.70MM) FROM SEATING PLANE. DIAMETER IS UNCONTROLLED IN 1, AND BEYOND .5" (12.70MM) FROM SEATING PLANE.
3. MEASURED FROM MAXIMUM DIAMETER OF THE ACTUAL DEVICE.
4. LEADS HAVING MAXIMUM DIAMETER .019" (.483 MM) MEASURED IN A GAGING PLANE .054" (1.37MM) + .001" (.025 MM) – .000" (.000 MM) BELOW THE SEATING PLANE OF THE DEVICE SHALL BE WITHIN .007" (.178 MM) OF THEIR TRUE POSITIONS RELATIVE TO THE MAXIMUM-WIDTH TAB.
5. THE DEVICE MAY BE MEASURED BY DIRECT METHODS OR BY THE GAGE AND GAGING PROCEDURE DESCRIBED ON GAGE DRAWING GS-1.
6. DETAILS OF OUTLINE IN THIS ZONE OPTIONAL.
7. TAB CENTERLINE.

SYMBOL	INCHES MIN.	INCHES MAX.	MILLIMETERS MIN.	MILLIMETERS MAX.	NOTES
A	.240	.260	6.10	6.60	
O b	.016	.021	.406	.533	2
O b_2	.016	.019	.406	.483	2
O D	.335	.370	8.51	9.40	
O D_1	.305	.335	7.75	8.51	
e	.200 T.P.		5.08 T.P.		4,5
e_1	.100 T.P.		2.54 T.P.		5
h	.009	.125	.229	3.18	
j	.028	.034	.711	.864	5
k	.029	.045	.737	1.14	3,5
l	.500		12.70		2
l_1		.050		1.27	2
l_2	.250		6.35		2
P	.100		2.54		1
Q					6
r		.007		.178	
α	45° T.P.				5,7

TO50

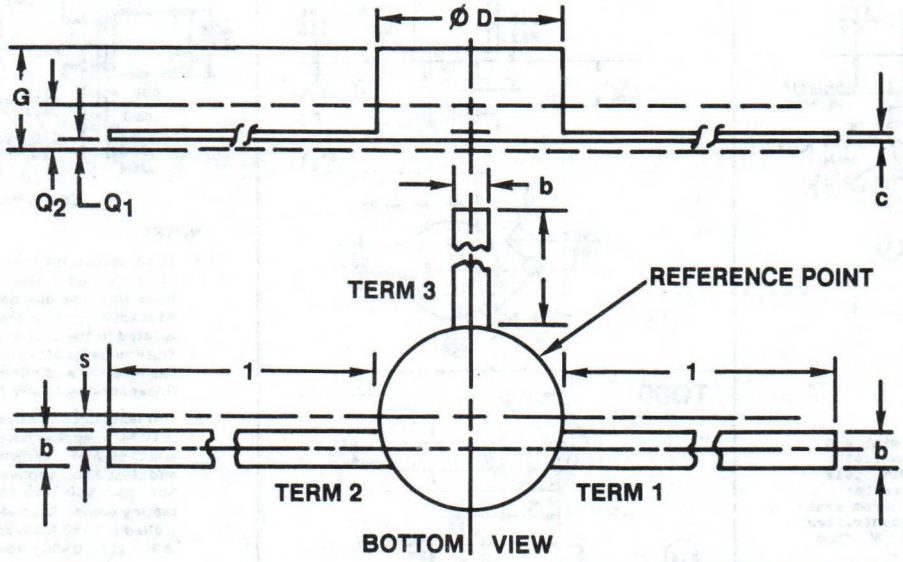

NOTES:
1. LEADS SHALL EMERGE FROM THE O D DIMENSION WITHIN THE LIMITS INDICATED BY THE s, Q_1 AND Q_2 DIMENSIONS.
2. MINIMUM AND MAXIMUM DIMENSIONS BOTH APPLY TO THE MAJOR (LARGEST) DIAMETER ONLY.

SYMBOL	INCHES MIN.	INCHES MAX.	MILLIMETERS MIN.	MILLIMETERS MAX.	NOTES
b	.015	.028	.381	.711	
c	.003	.005	.076	.127	
O D	.180	.215	4.57	5.46	2
G	.040	.060	1.02	1.52	
l	.250		6.35		
Q_1		.010		.254	1
Q_2		.025		.635	1
s	.015	.035	.381	.889	1

12. OUTLINE DRAWINGS

TO29

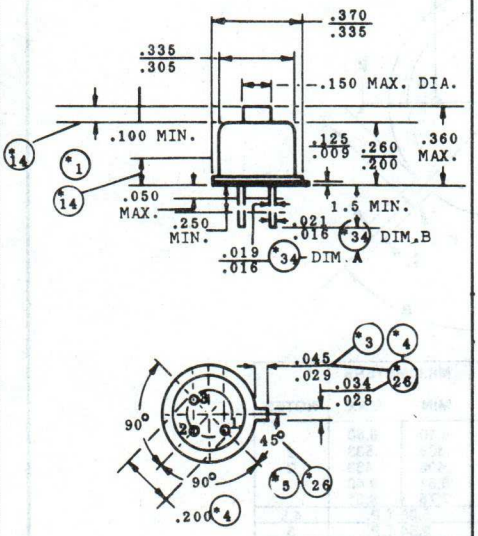

TO33

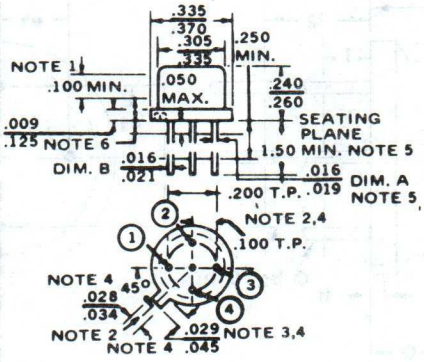

NOTES FOR TO33:

1. This zone is controlled for automatic handling. The variation in actual diameter within the zone shall not exceed 0.010.
2. Leads having max. dia. .019 measured in plane .054 −.001 below the seating plane of the device shall be within .007 of their true locations.
3. Measured from max. dia. of the actual device.
4. The device may be measured by direct methods or by the gauge and gauging procedure described on gauge drawing GS-1.
5. All leads — Dia. is uncontrolled to .050 from seating plane and beyond min. tolerance of lead length (1.5 or .5) from seating plane. Dim. A applies between .050 and .250 from seating plane. Dim. B applies between .250 and min. tolerance of lead length from seating plane.

TO39

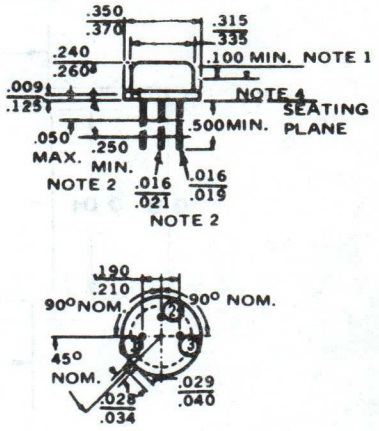

1. This zone is controlled for automatic handling. The variation in actual diameter within this zone shall not exceed .010".
2. (Three Leads) (Dim. .016 min. and .019 max.) applies between (.050 max.) and (.250 min.) (Dim. .016 min. and .021 max.) applies betwee (.250 min.) and .5" from seating plane. Diameter is uncontrolled in .050 max. and beyond .5" from seating plane.
3. Measured from max. diameter of the actual device.
4. Details of outline in this zone optional.

TO46

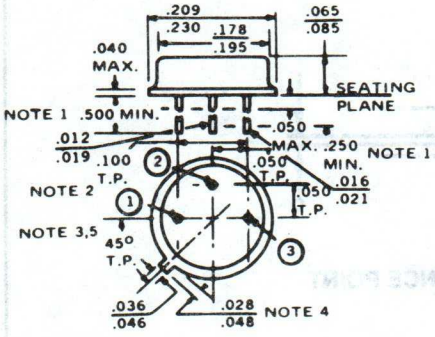

NOTES:

1. (Three Leads) (Dim. .012 min. and .019 max.) applies between (.050 max.) and (.250 min.). (Dim. .016 min. and .021 max.) applies between (.250 min.) and .5" from seating plane. Diameter is uncontrolled in (.050 max.) and beyond .5" from seating plane.
2. Maximum diameter leads at a gauging plane .054" and .001"-.000" below seating plane to be within .007" of their true position relative to maximum-width tab and to the maximum .230" diameter measured with a suitable gauge. When is not used, measurement will be made at seating plane.
3. Index tab for visual orientation only.
4. Measured from maximum diameter of the actual device.
5. Tab centerline.

TO52

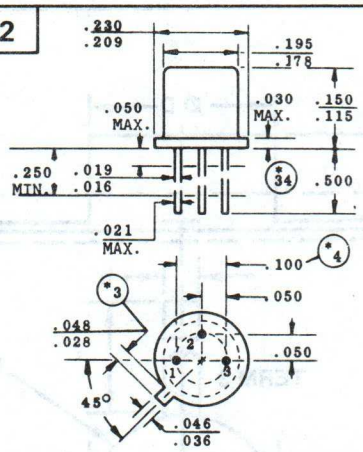

TO60

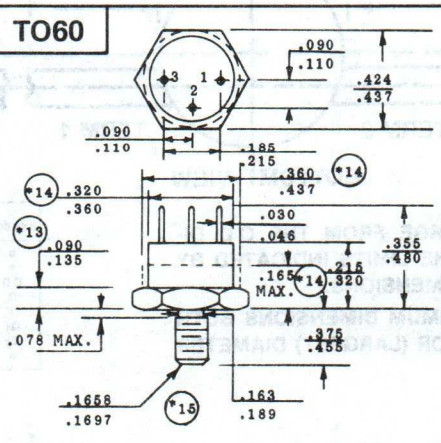

TO72

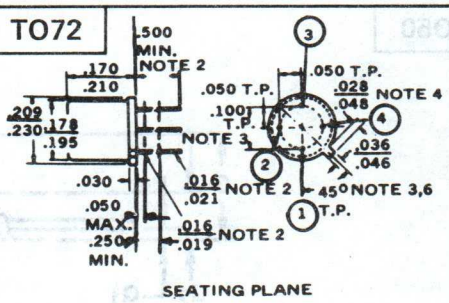

NOTES:

1. (Four leads), maximum number of leads omitted in this outline— none (0). The number and position of leads actually presented are indicated in the product registration. Outline designation determined by the location and minimum angular or linear spacing of any two adjacent leads.
2. (All leads). Dimension .016 Min. and .019 Max. applies between .050 Min. and .250 Max. Dimension .016 Min. and .021 Max. applies between .250 Min. and .500" (12.70MM) from seating plane. Diameter is uncontrolled in .050 Max. and beyond .500" (12.70MM) from seating plane.
3. Leads have maximum diameter .019 measured in gauging plane .054 (1.34MM) − .001 (.025MM) − .000 (.000MM) below seating plane of the product shall be within .007 (.175MM) of their true position relative to a maximum width tab.
4. Measured from maximum diameter of product.
5. The product may be measured by direct methods or by gauge.
6. Tab centerline.

12. OUTLINE DRAWINGS

TO92

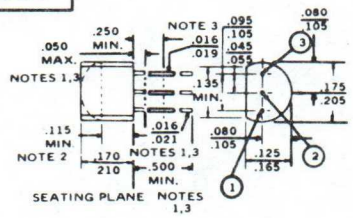

NOTES:
1. Three leads.
2. Contour of the package beyond this zone is uncontrolled.
3. (Three Leads). Dimension .016 Min. and .019 Max. applies between .050 Max. and .250 Min. Dimension .016 Min. and .021 Max. applies between .250 Min. and .5" (12.70 MM) from seating plane. Diameter is uncontrolled in .050 Min. and beyond .5" (12.70 MM) from seating plane.

TO106

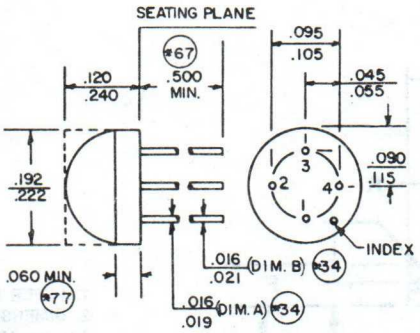

TO117

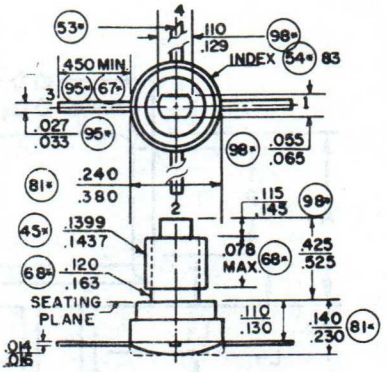

TO119

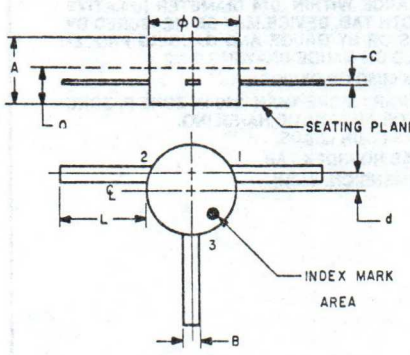

NOTES:
1. CONTOUR OF BODY OPTIONAL WITHIN ϕD AND A. ϕ0 MIN. AND ϕD INC. APPLY ONLY TO GREATEST BODY DIAMETER.
2. TYPICAL ALL LEADS.
3. LEADS SHALL EMERGE FROM THE BODY WITHIN THE LIMITS INDICATED BY THE d AND g DIMENSIONS.
4. MEASURED FROM GREATEST BODY DIAMETER OF ACTUAL DEVICE.

MILLIMETER DIMENSIONS DERIVED FROM BASIC INCH DIMENSIONS

SYMBOL	INCHES		MILLIMETERS		NOTES
	MIN.	MAX.	MIN.	MAX.	
A	.040	.065	1.02	1.65	1
B	.020	.028	.508	.711	2
C	.003	.005	.077	.127	3
ϕD	.184	.225	4.58	5.71	1
J	–	.035	–	.88	3
L	.240	–	6.10	–	2, 4
V	–	.030	–	.76	3

TO120

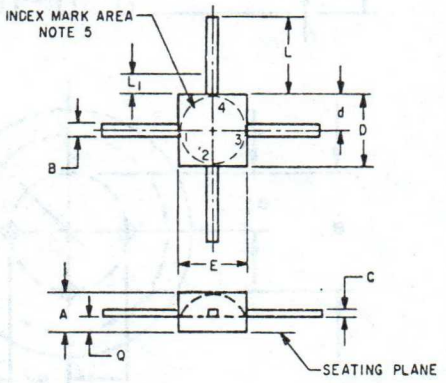

MILLIMETER DIMENSIONS ARE DERIVED FROM ORIGINAL INCH DIMENSIONS

SYMBOL	INCHES		MILLIMETERS		NOTES
	MIN.	MAX.	MIN.	MAX.	
A	.030	.062	.77	1.57	1
B	.008	.019	.21	.48	2
C	.003	.007	.077	.177	2
d	.015	.046	.39	1.16	3
D	.067	.092	1.71	2.33	1
E	.067	.088	1.71	2.23	1
L	.100	–	2.54	–	2
L1	–	.035	–	.88	2,4
Q	.007	.034	.18	.86	–

NOTES:
1. CONFIGURATION OF PACKAGE OPTIONAL WITHIN ZONE DEFINED BY A, D, AND E.
2. TYPICAL ALL LEADS.
3. THIS DIMENSION APPLIES TO LEADS 1 AND 3 ONLY.
4. LEAD DIMENSIONS NOT CONTROLLED IN THIS ZONE TO ALLOW FOR BODY AND LEAD FINISH IRREGULARITIES.
5. INDEX TO BE VISIBLE FROM TOP.
6. OMISSION OF ONE LEAD OPTIONAL. LEADS MISSING FROM THEIR DESIGNATED POSITIONS SHALL BE COUNTED WHEN NUMBERING LEADS FOR SPECIFIC APPLICATIONS. THE NUMBER AND POSITION OF LEADS ACTUALLY PRESENT ARE INDICATED IN THE PRODUCT REGISTRATION.

TO122

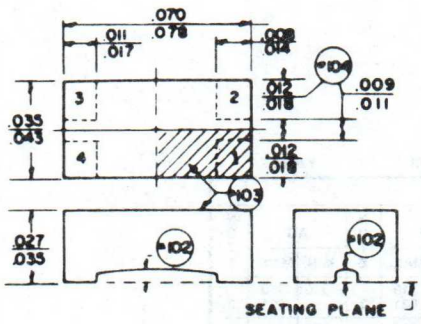

TO129

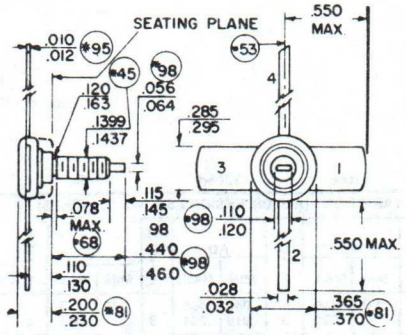

TO131

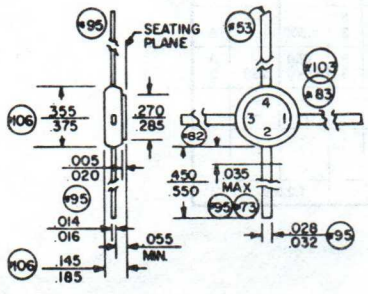

Y215/TO215

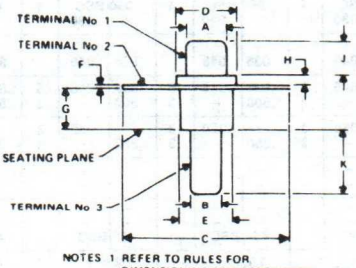

NOTES 1 REFER TO RULES FOR DIMENSIONING SEMICONDUCTOR PRODUCT OUTLINES INCLUDED IN PUBLICATION No 76

	A	B	C	D	E	F	G	H	J	K
Y215a/	.117	.090	.496	.175	.157	.009	.114	.027	.098	.179
TO215AA	.123	.094	.504	.185	.167	.012	.127	.040	.105	.191

12. OUTLINE DRAWINGS

Y206/TO206

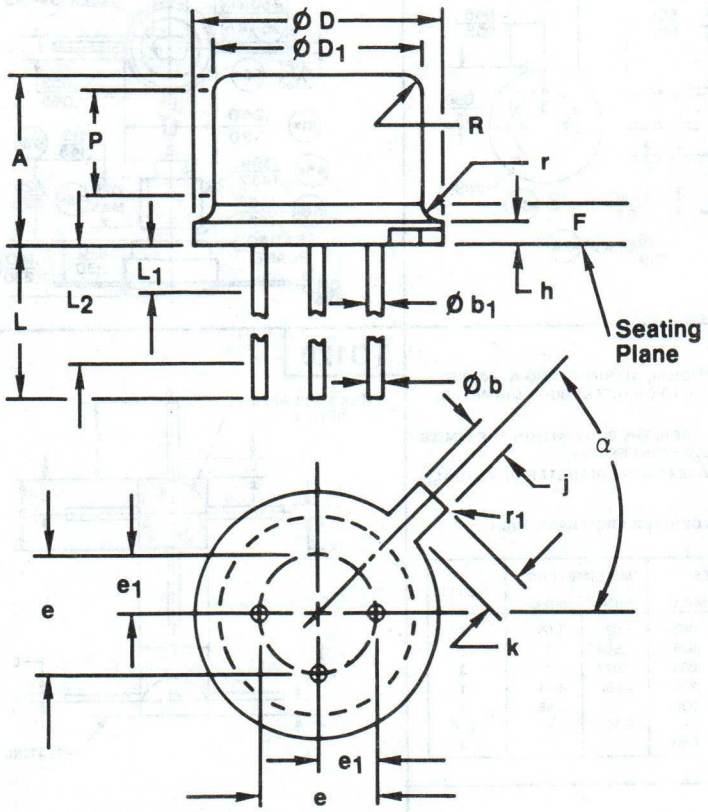

NOTES:

1. REFER TO APPLICABLE SYMBOL LIST.
2. DIMENSIONING AND TOLERANCING PER ANSI Y14.5, 1973.
3. O b_1 APPLIES BETWEEN L_1 AND L_2. O b APPLIES BETWEEN L_2 AND L. DIAMETER IS UNCONTROLLED IN L_1 AND BEYOND L MINIMUM.
4. LEADS HAVING A MAXIMUM DIAMETER OF .019 MEASURED IN GAUGING PLANE .054-.055 BELOW THE REFERENCE PLANE OF THE DEVICE SHALL BE LOCATED AT POSITION TOLERANCE WITHIN .014 DIAMETER RELATIVE TO MAXIMUM WIDTH TAB. DEVICE MAY BE MEASURED BY DIRECT METHODS OR BY GAUGE AND GAUGING PROCEDURES DESCRIBED ON GAUGE DRAWING GS-2.
5. MEASURED FROM MMC OF DEVICE.
6. O D_1 SHALL NOT VARY MORE THAN .010 IN ZONE P. ZONE P CONTROLLED FOR AUTOMATIC HANDLING.
7. VARIATION AF HAS FOUR LEADS.
8. VARIATION AG HAS NO INDEX TAB.
9. CONTROLLING DIMENSION: INCH.

SYMBOL	Y206a			Y206b			Y206c			Y206d			Y206e			Y206f			Y206g		
	VARIATIONS (ALL DIMENSIONS SHOWN IN INCHES)																				
	AA		NOTE	AB		NOTE	AC		NOTE	AD		NOTE	AE		NOTE	AF		NOTE	AG		NOTE
	MIN.	MAX.		MIN.	MAX.		MIN.	MAX.		MIN.	MAX.		MIN.	MAX.		MIN.	MAX.		MIN.	MAX.	
A O b	.170 .016	.210 .021	3	.065 .016	.085 .021	3	.115 –	.150 .021	3	.050 .016	.060 .021	3	.170 –	.210 .021	3	.170 .016	.210 .021	3	.320 –	.350 .021	3
O b_1 O D	.016 .209	.019 .230	3	.016 .209	.019 .230	3	.016 .209	.019 .230	3	.016 .209	.019 .230	3	.016 .209	.019 .230	3	.016 .209	.019 .230	3	.016 .255	.019 .275	3
O D_1 e	.178 .100	.195 BSC	4	.178 .100	.195 BSC	4	.178 .100	.195 BSC	4	.178 .100	.185 BSC	4	.182 .100	.192 BSC	4	.178 .100	.195 BSC	4	.225 .100	.240 BSC	4
e_1 F	.050 –	BSC .030	4	.050 –	BSC .040	4	.050 –	BSC .030	4	.050 –	BSC .040	4	.050 –	BSC .023	4	.050 –	BSC .030	4	.050 .010	BSC .030	4
h j	– .036	– .046		– .036	– .046		– .036	– .046		– .036	– .046		.005 .036	.015 .046		– .036	– .046		– –	– –	
k L	.028 .500	.048 –	5 3	.028 .500	.048 –	5 3	.028 .500	.048 –	5 3	.028 .500	.048 –	5 3	.030 .500	.046 .625	5 3	.028 .500	.048 –	5 3	– 1.500	– –	3
L_1 L_2	– .250	.050 –	3 3	– .250	.050 –	3 3	– .250	.050 –	3 3	– .250	.050 –	3 3	– .250	.020 –	3 3	– .250	.050 –	3 3	.050 –	– .250	3 3
P R	– –	– –		– –	– –		– –	– –		– –	– –		.125 .010	– –	6	– –	– –		– –	– –	
r r_1	– – 45°	– – BSC		– – 45°	– – BSC		– – 45°	– – BSC		– – 45°	– – BSC		– – 45°	.010 .007 BSC		– – 45°	– – BSC		– –	– –	
NOTE	1,2,9			1,2,9			1,2,9			1,2,9			1,2,9			1,2,7,9			1,2,8,9		

12. OUTLINE DRAWINGS

Y220/TO220

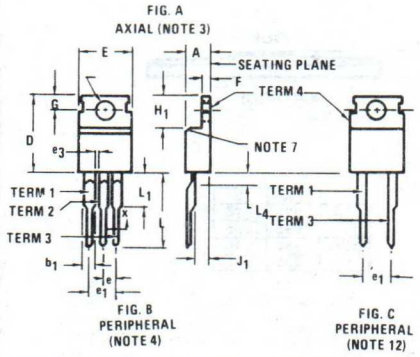

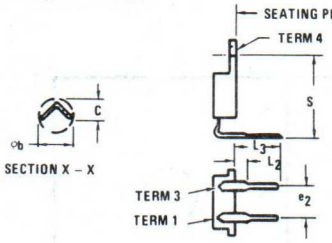

SYMBOL	Y220a AA MIN.	Y220a AA MAX.	NOTE	Y220b AB MIN.	Y220b AB MAX.	NOTE	Y220c AC MIN.	Y220c AC MAX.	NOTE
A	3.56	4.82		3.56	4.82		3.56	4.82	
b_1	1.15	1.77		1.15	1.77		.99	1.40	
0b	.51	1.14	5	.51	1.14	5	.51	1.14	5
c	.31	1.14	5	.31	1.14	5	.31	1.14	5
D	14.23	15.87		14.23	16.51		14.23	16.51	
E	9.66	10.66	6	9.66	10.66	6	9.66	10.66	6
e	—	—		2.29	2.79	9	—	—	
e_1	—	—		4.83	5.33	9	5.08	BSC	
e_2	4.83	5.33	8	—	—		—	—	
e_3	—	—		1.15	—		—	—	
F	.51	1.39		.51	1.39		.51	1.39	
H_1	5.85	6.85	6	5.85	6.85	6	5.85	6.85	6
J_1	2.04	2.92		2.04	2.92		2.04	2.92	
L	—	—		12.70	14.73		12.70	14.73	
L_1	—	—		—	6.35		4.60	6.35	
L_2	—	1.27		—	—		—	—	
L_3	8.64	10.71		—	—		—	—	
L_4	—	—		—	—		—	.51	
OP	3.531	3.733		3.54	4.08		3.531	3.733	
Q	2.54	3.04		3.54	3.42		2.54	3.04	
s	14.74	15.49		—	—		—	—	

Y236/TO236

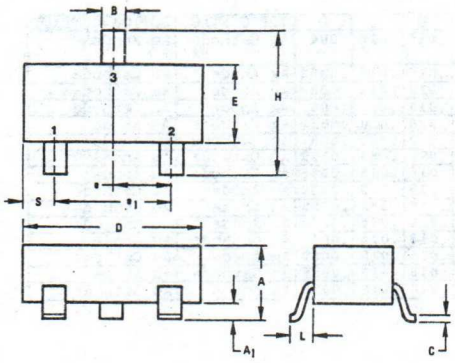

NOTES:
1. REFER TO APPLICABLE SYMBOL LIST.
2. DIMENSIONS AND TOLERANCING PER ANSI Y14.5-1973.
3. CONTROLLING DIMENSION: MILLIMETERS
4. DIMENSION S APPLIES AT BOTH ENDS.

SYMBOL	AA MIN.	AA MAX.	NOTES
A	.0315	.0472	
A_1	.0039	.0098	
B	.0146	.0169	
C	.0034	.0045	
D	.1102	.1197	
E	.0472	.0051	
e	.0374	.0413	
e_1	.0701	.0807	
H	.0827	.0984	
L	.0177	.0236	
S	.0177	.0236	4

u1

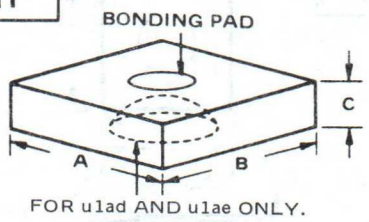

FOR u1ad AND u1ae ONLY.

u1ad	.015	.015	.0035	.004 BOND PAD CATHODE
u1ae	.015	.015	.0035	.004 BOND PAD ANODE
u1af	.015	.015	.005	.003 BOND PAD ANODE

u2

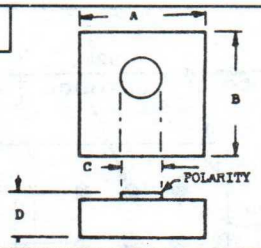

	A	B	C	D	POLARITY
u2	.022 .028	.022 .028	.009 .013	.008 .010	CATHODE
u2a	.017 .023	.017 .023	.002 .011	.003 .010	ANODE
u2b	.037 .043	.037 .043	.016 .025	.003 .010	ANODE
u2c	.020	.020		.011	CATHODE
u2d	.020	.020		.011	ANODE
u2e	.020	.020	.004	.003	ANODE
u2f	.025	.025	.013	.003	ANODE
u2g	.020	.020	.004	.005	ANODE

u3

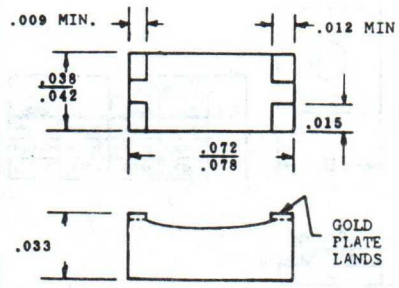

u7

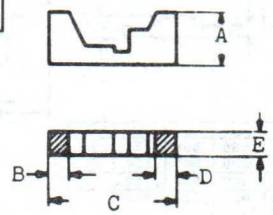

	A	B	C	D	E
u7	.031	.011 MIN	.074	.011 MIN	.014
u7a	.032 .036	.012 MIN	.092 .098	.009 MIN	.065 .069
u7b	.028 .035	.012	.307 .311	.009	.038 .042
u7c	.029 .034	.012 MIN	.072 .078	.009 MIN	.014
u7d	.029 .038	.012 .018	.072 .081	.009 .015	.013 .020

u12

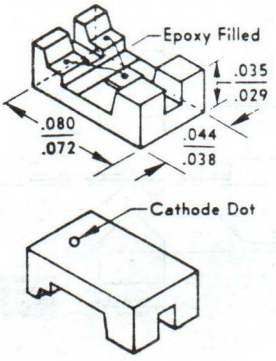

u13

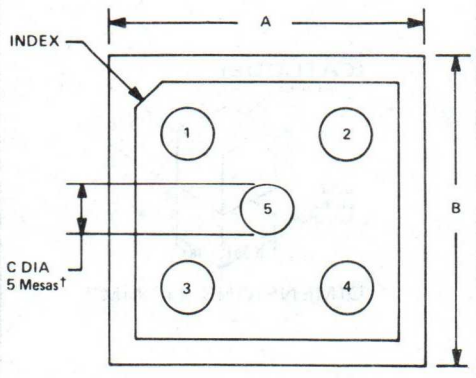

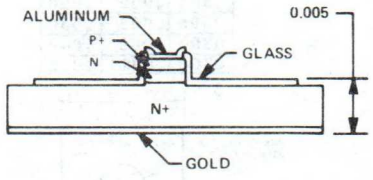

	A	B	C
u13	0.030	0.030	0.006
u13a	0.025	0.025	0.005
u13b	0.025	0.025	0.004
u13c	0.025	0.025	0.003
u13d	0.025	0.025	0.002

12. OUTLINE DRAWINGS

u14

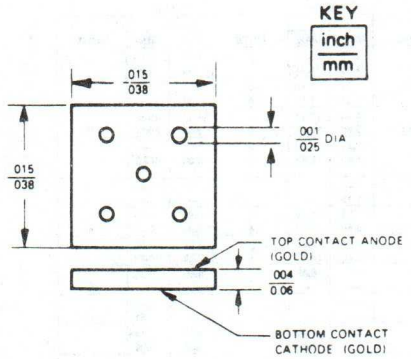

u16

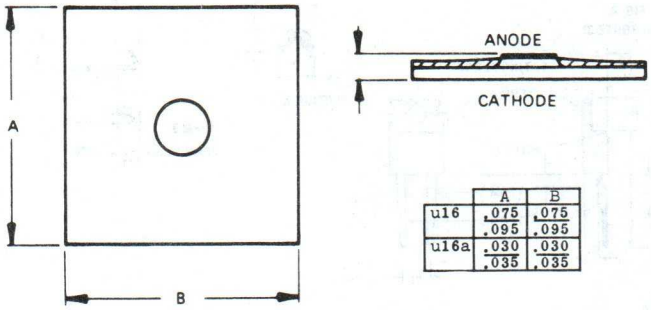

	A	B
u16	.075 .095	.075 .095
u16a	.030 .035	.030 .035

u17

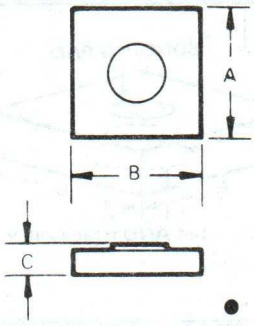

DIM.	INCHES		MM	
	MIN.	MAX.	MIN.	MAX.
A	0.110	0.130	2,79	3,30
B	0.130	0.130	2,79	3,30
C	0.003	0.006	0,08	0,15

u19

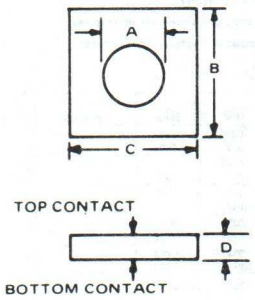

	A	B	C	D	TOP CONTACT	BOTTOM CONTACT
u19	.0008 TYP	.015	.015	.004	Ag Cathode	Au Anode
u19a	.004	.015	.015	.0052	Ag Anode	Au Cathode
u19b	.003	.015	.015	.005	Au Anode	Au Cathode
u19c	.0026	.015	.015	.005	Ag Anode	Au Cathode
u19d	.009	.020	.020	.0032	Ag Cathode	Au Anode
u19e	.009	.020	.020	.006	Ag Cathode	Au Anode
u19f	.009	.020	.020	.0092	Ag Cathode	Au Anode
u19g	.004	.015	.015	.0035	Au Cathode	Au Anode
u19h	.0008	.015	.015	.0052	Au Anode	Au Cathode
u19j	.0028	.015	.015	.0052	Au Anode	Au Cathode
u19k	.0036	.015	.015	.0052	Au Anode	Au Cathode
u19l	.0008	.015	.015	.004	Au Cathode	Au Anode
u19m	.002	.015	.015	.0052	Ag Anode	Au Cathode
u19n	.004	.015	.015	.0036	Au Cathode	Au Anode
u19p	.004	.015	.015	.0036	Au Anode	Au Cathode

u20

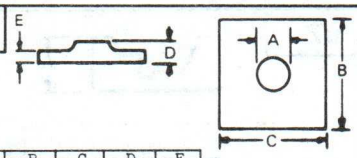

	A	B	C	D	E
u20	.078	.590	.590	.157	
u20a	.157	.590	.590	.157	
u20b	.098	.590	.590	.157	
u20c	.002 MIN	.020	.020	.005 MIN	
u20d	.002 MIN	.012	.012	.005 MIN	
u20e	.001 .007	.020 .030	.020 .030		.005
u20f	.012 .029	.020 .030	.020 .030		.005
u20g		.015 .050	.015 .050		.003 .005
u20h	.002 MIN	.017 .023	.017 .023	.003 .005	
u20j	.017 .024	.037 .041	.037 .041	.0120 .0130	

u21

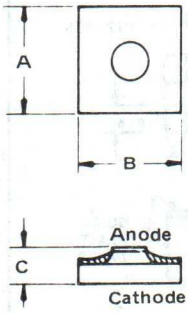

DIM.	INCHES		MM	
	MIN.	MAX.	MIN.	MAX.
A	0135	0165	0.3429	0.4191
B	0135	0165	0.3429	0.4191
C	0035	0065	0.0889	0.1651

u28

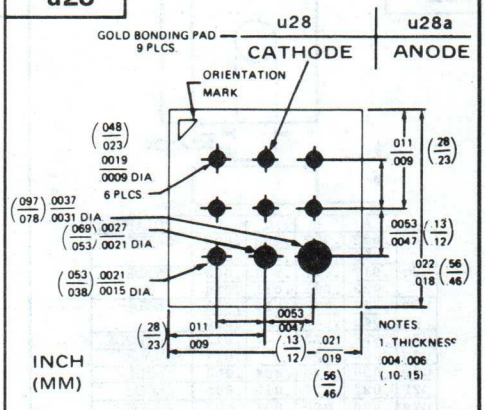

u30

	A	L
u30	.002	.012
u30a	.002	.020
u30b	.002	.030
u30c	.002	.040
u30d	.0011	.012

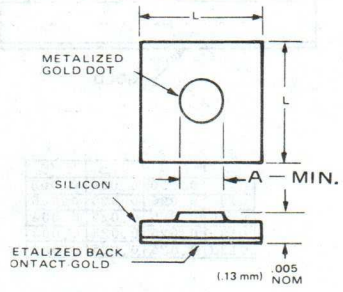

u34

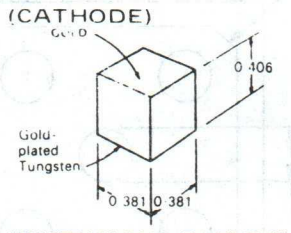

u38

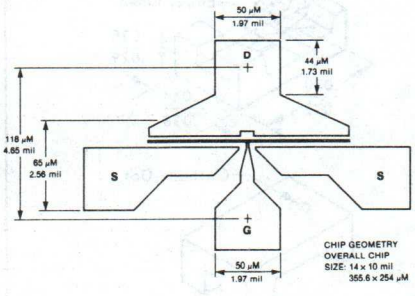

12. OUTLINE DRAWINGS

u39

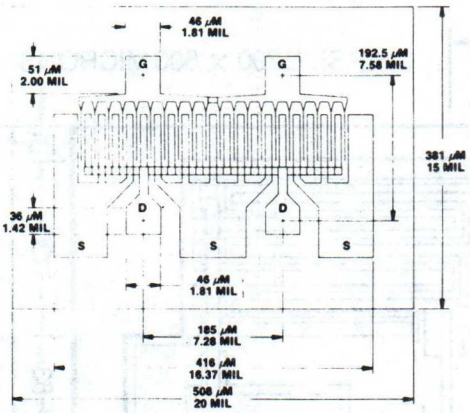

THICKNESS = 4.5 ± .5 MILS
114 ± 13 µM

u41

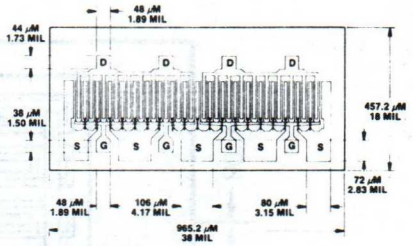

THICKNESS = 4.5 ± .5 MILS
114 ± 12 µM

u42

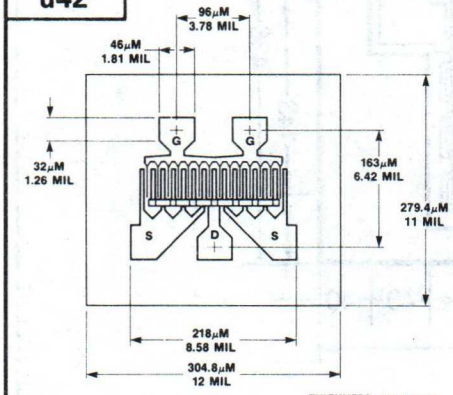

THICKNESS: 114 ± 13µM
4.5 ± .5 MILS

u43

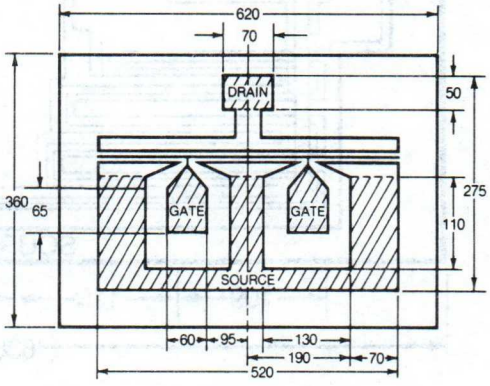

ALL DIMENSIONS ARE IN MICRONS

u44

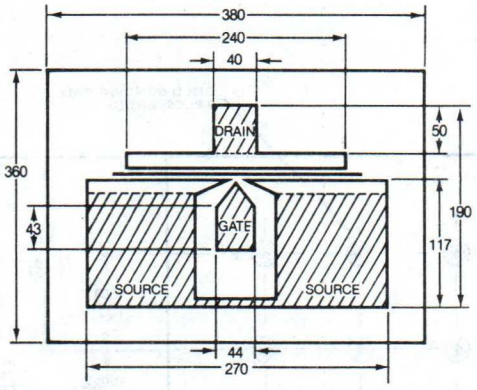

CHIP SIZE: 380 × 360 MICRONS

u45

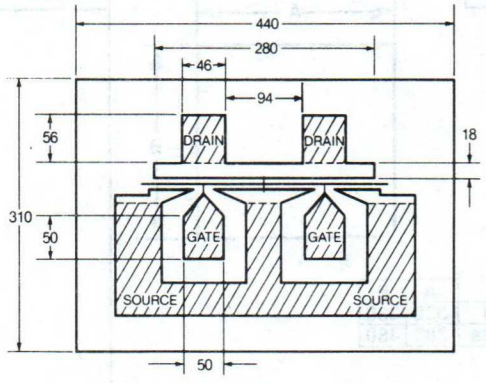

ALL DIMENSIONS ARE IN MICRONS

u46

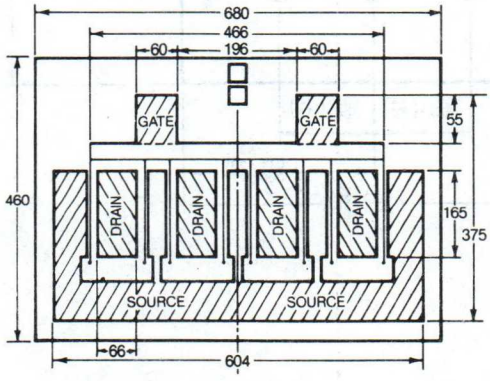

CHIP SIZE 680 × 460 MICRONS

u47

CHIP SIZE 680 × 410 MICRONS

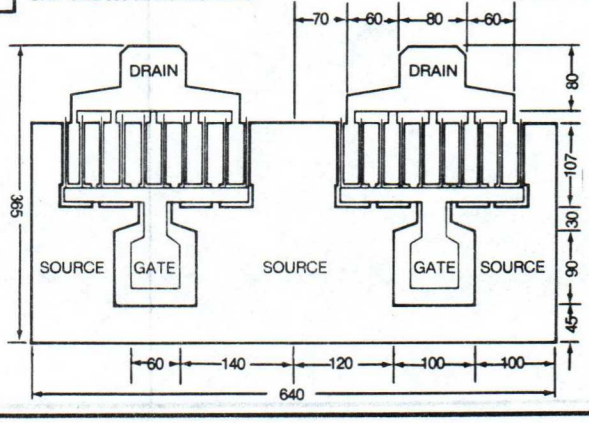

12. OUTLINE DRAWINGS

u48

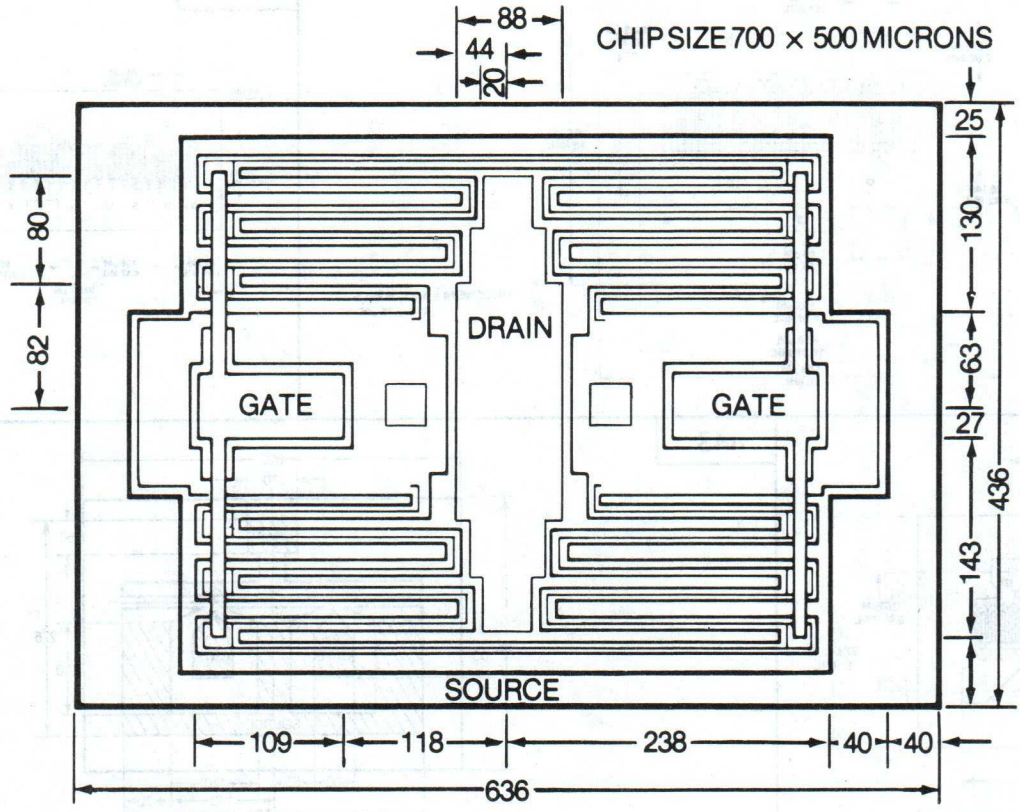

u53

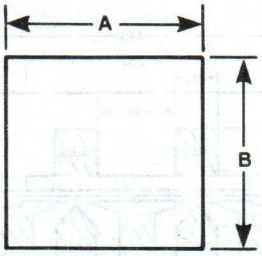

	A	B
u53	330	330
u53a	380	480

Dimensions in Micrometers

u54

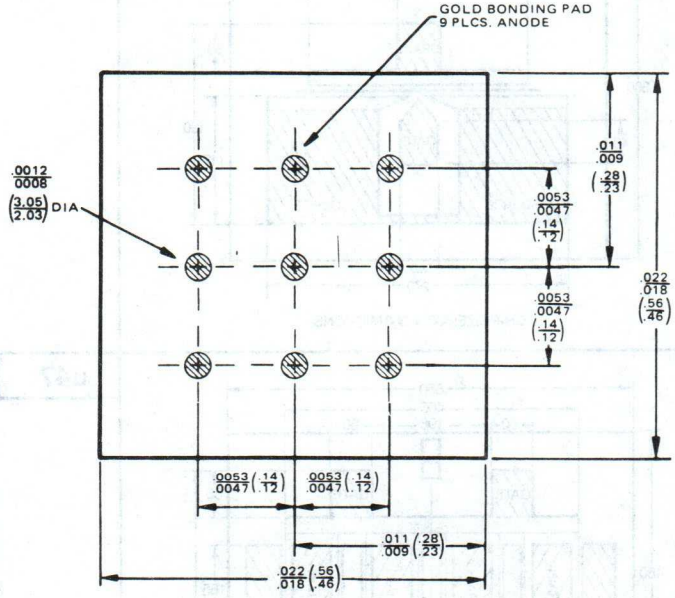

12. OUTLINE DRAWINGS

u55 | u56 | u57 | u58

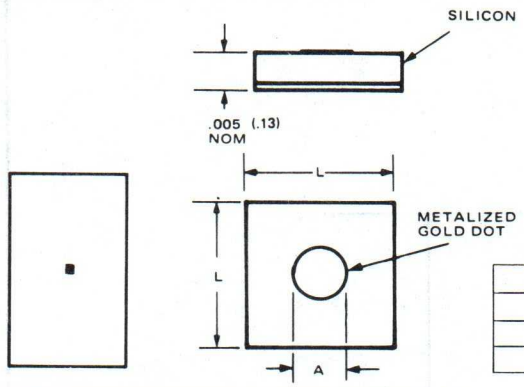

	INCHES		MM	
	DIM A	DIM L	DIM A	DIM L
u55	.002	.030	.05	.76
u56	.002	.035	.05	.89
u57	.002	.020	.05	.50
u58	.0012	.010	.03	.25

u59

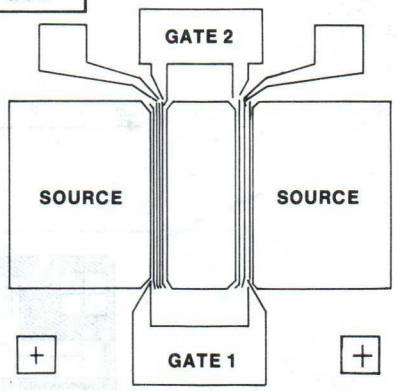

CHIP SIZE: 500x500 MICRONS

u60

CHIP SIZE: 240x350 MICRONS

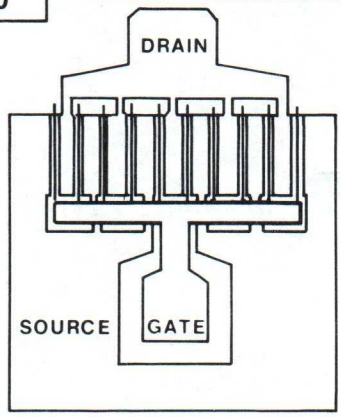

u61

CHIP SIZE: 360x430 MICRONS

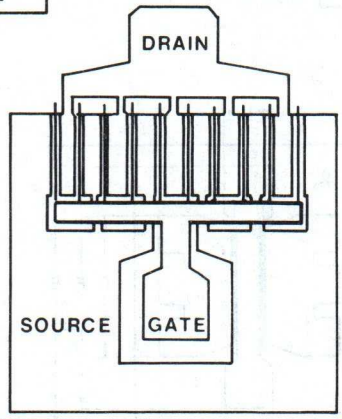

u62

CHIP SIZE: 480x350 MICRONS

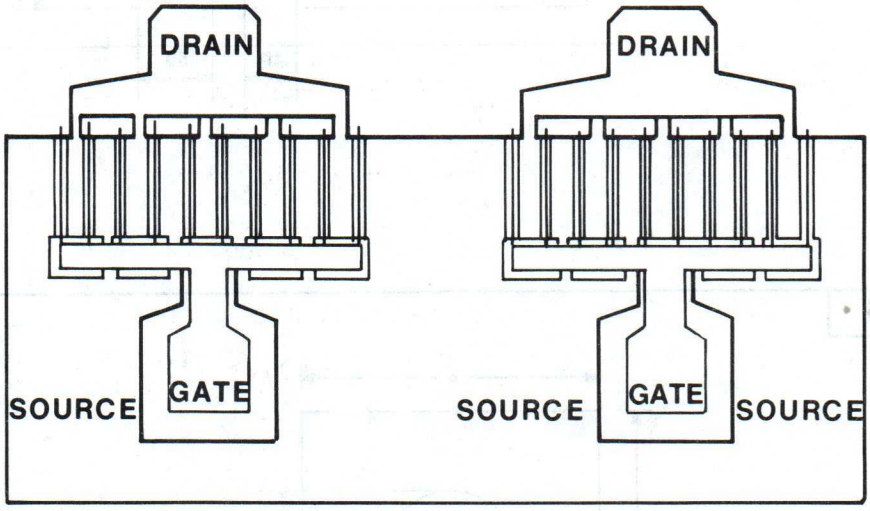

u63

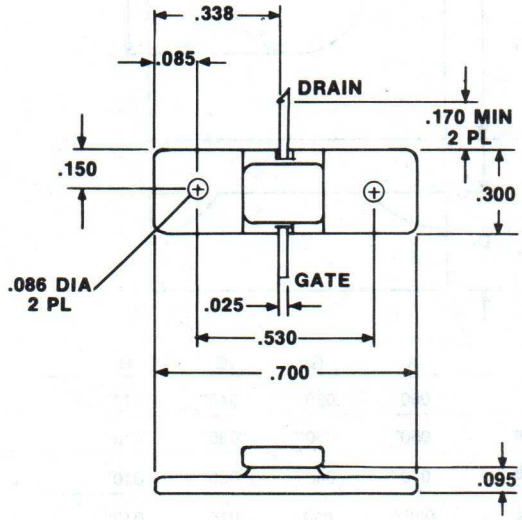

u78

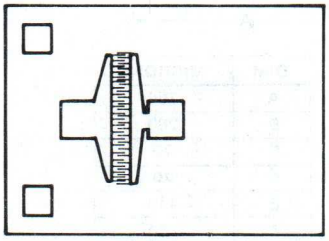

Nominal Chip Size: 0.015" x 0.020" x 0.005"
Front Metalization: Gold
Back Metalization: Gold
Emitter/Base Bond Pad: 2.8 mil Dia.
#Emitter Fingers: 22
#Base Fingers: 23
Emitter Diffusion: Ion-Implanted Aresenic

12. OUTLINE DRAWINGS

u64

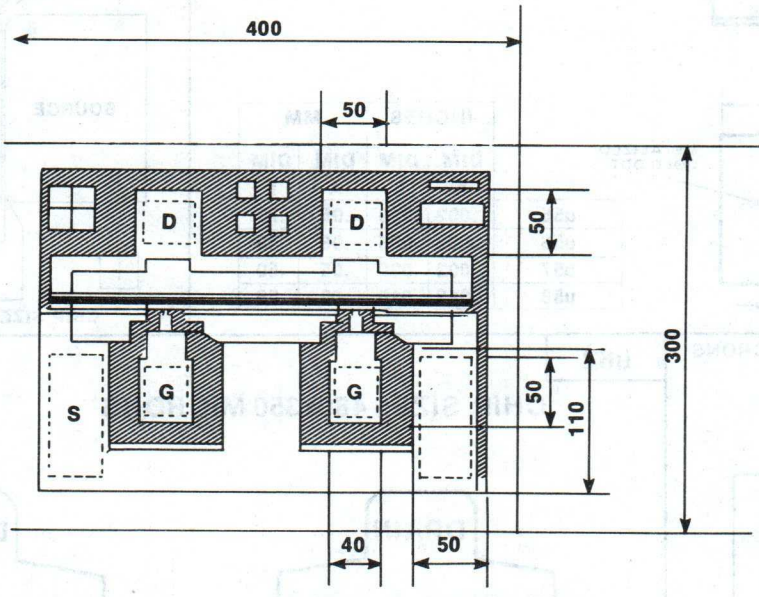

u65

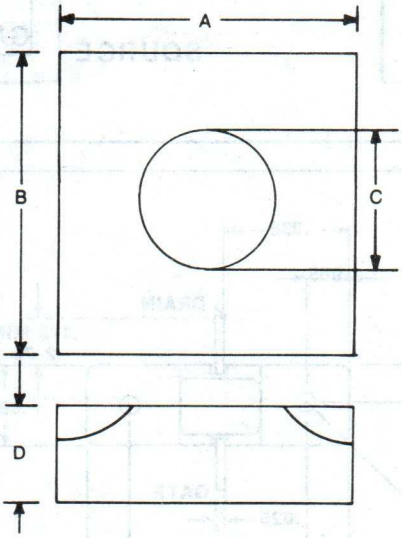

	A	B	C	D
U65	.060''	.060''	.048''	.010''
U65a	.050''	.050''	.035''	.010''
U65b	.040''	.040''	.025''	.010''
U65c	.030''	.030''	.015''	.010''
	± .002	± .002	± .005	.009 ± .001

u66

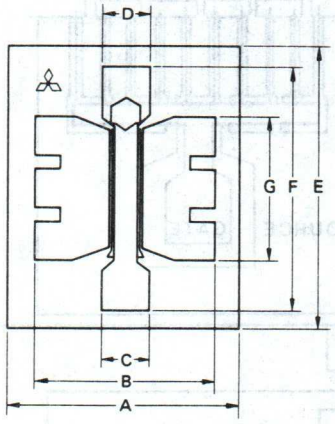

DIM	MICRONS
A	360
B	280
C	70
D	70
E	440
F	380
G	220

12. OUTLINE DRAWINGS

u67

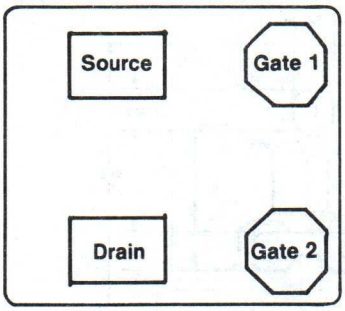

Nominal Chip Size: 0.017" X 0.020" X 0.005"
Drain/Source Bond Pad: 0.003" X 0.004"
Gate 1/Gate 2 Bond Pad: 0.0035" X 0.0035"

u68

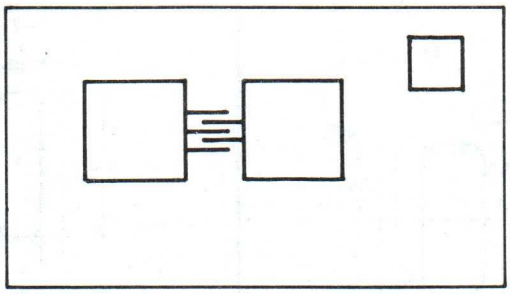

Nominal Chip Size: 12 x 22 mils
Front Metalization: Aluminum
Back Metalization: Aluminum
Emitter/Base Bond Pad: 4.0 x 4.0 mils
#Emitter Fingers: 2
#Base Fingers: 3

u69

Dimensions in mm

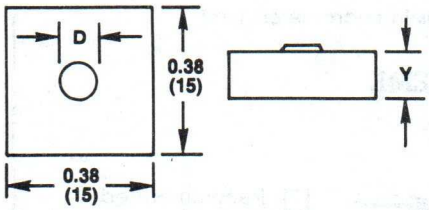

Drawing #	D	Y	Top Contact	Bottom Contact
U69	0.10	.13	Anode	Cathode
U69a	0.08	.13	Anode	Cathode
U69b	0.06	.13	Anode	Cathode
U69C	0.02	.10	Anode	Cathode
U69d	0.02	.10	Cathode	Anode

u70

Chip Dimensions in mm (in.)
0.69 (0.027) x 0.31 (0.012) x 0.13 (0.005)

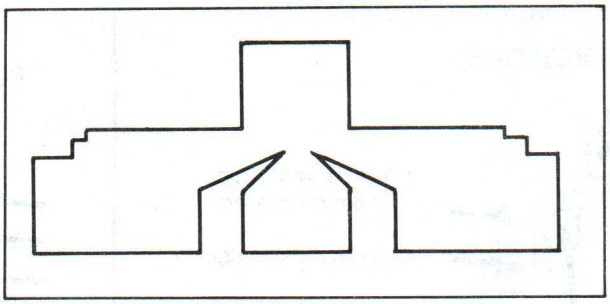

u72

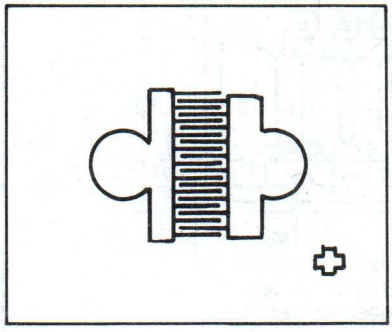

Nominal Chip Size: 0.014" X 0.016" X 0.005"
Front Metalization: Gold
Back Metalization: Gold
Emitter/Base Bond Pad: 2.8 mil Dia.
#Emitter Fingers: 10
#Base Fingers: 11
Emitter Diffusion: Ion-Implanted Arsenic

u71

Chip Domensions in mm (in.)
0.55 (0.022) x 0.39 (0.015) x 0.13 (0.005)

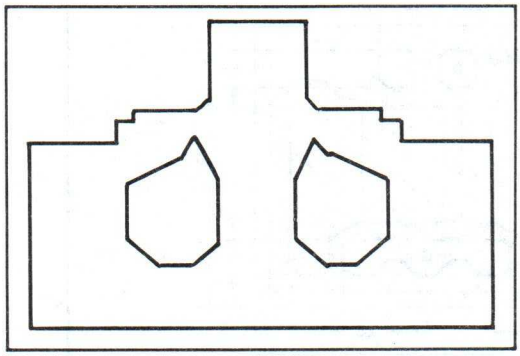

u77

Nominal Chip Size: 0.017" X 0.027" X 0.005"
Front Metallization: Gold
Back Metallization: Gold
Emitter/Base Bond Pad: 0.003" X 0.004"
#Emitter Fingers: 56
#Base Fingers: 57
Emitter Diffusion: Ion-Implanted Arsenic
Fabrication: Fully Ion Implanted
Ballasting: NiCr Resistor
Passivation: Silicon Nitride

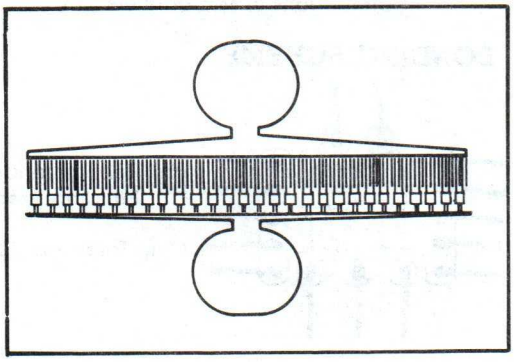

12. OUTLINE DRAWINGS

u73

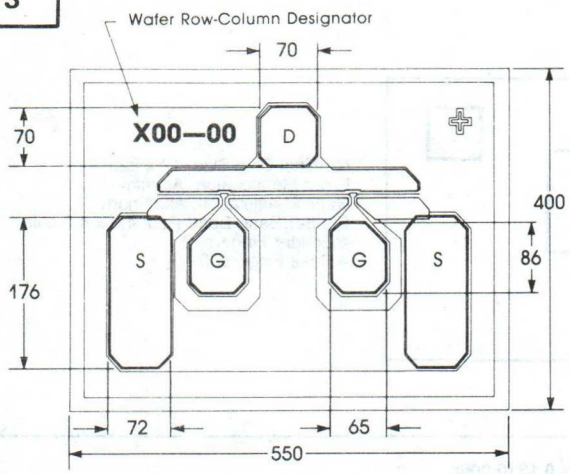

D = DRAIN G = GATE S = SOURCE
Dimensions in Micrometers (μm)

BONDING SCHEME

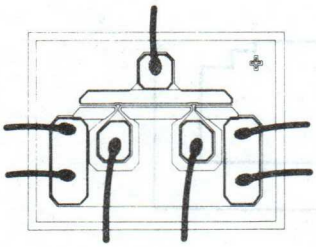

□ Recommended Bonding Area

Chip Thickness 125 μm

u74

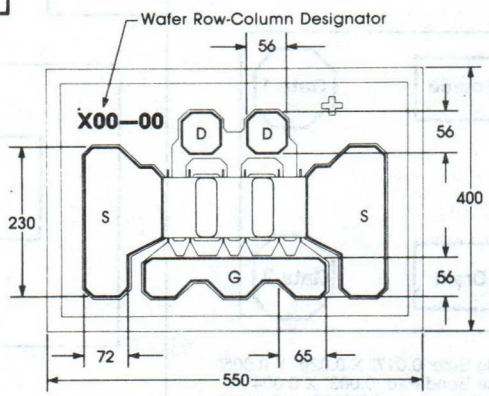

D = DRAIN G = GATE S = SOURCE
Dimensions in Micrometers (μm)

BONDING SCHEME

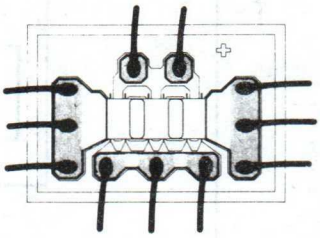

□ Recommended Bonding Area

Chip Thickness 125 μm

u75

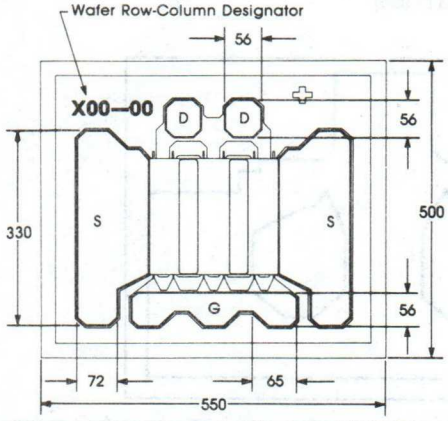

D = DRAIN G = GATE S = SOURCE
Dimensions in Micrometers (μm)

BONDING SCHEME

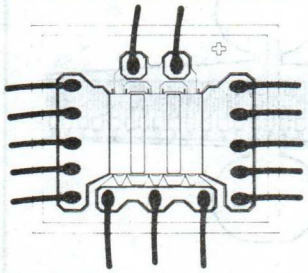

□ Recommended Bonding Area

Chip Thickness 125 μm

u76

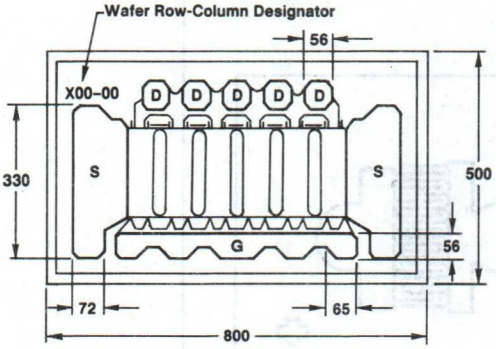

D = DRAIN G = GATE S = SOURCE
DIMENSIONS IN MICROMETERS (μm)

BONDING SCHEME

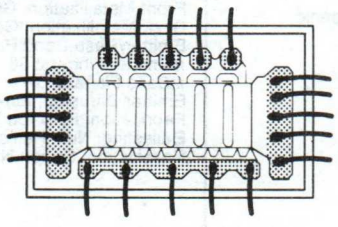

▨ Recommended Bonding Area

Chip Thickness 125 μm

12. OUTLINE DRAWINGS

V1

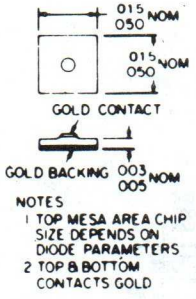

Style 000

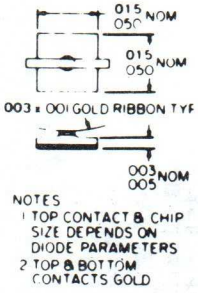

Style 001

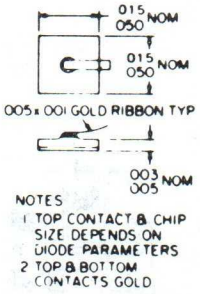

Style 002

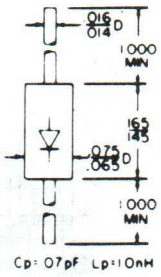

Style 011

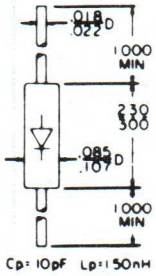

Style 015

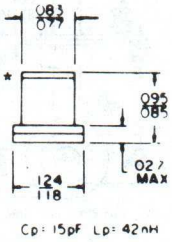

Style 100

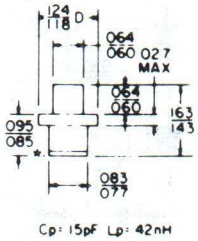

Style 101

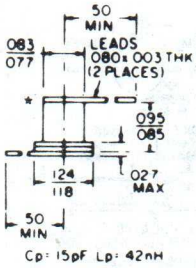

Style 111

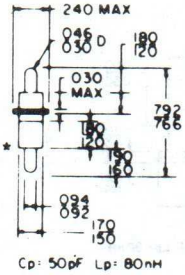

Style 200

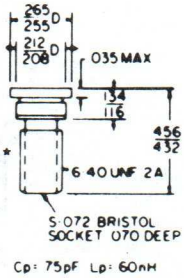

Style 250

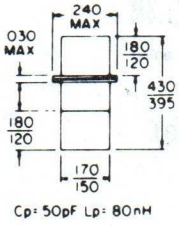

Style 290

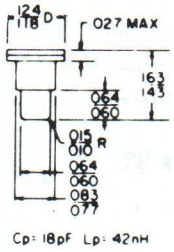

Style 300

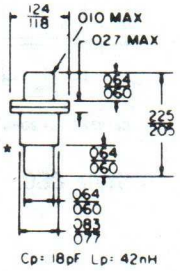

Style 301

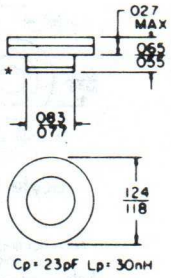

Style 400

Style 450

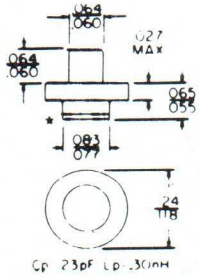

Style 401

*—HEAT SINK END

NOTE: USE STYLE NUMBERS AS TYPE NUMBER SUFFIX FOR PACKAGE VARIATION DESIRED.

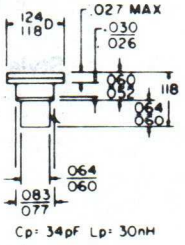

Cont'd on next page

12. OUTLINE DRAWINGS

V1 Cont'd

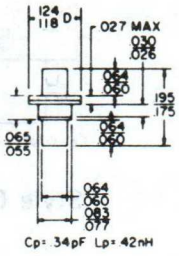

Cp= 34pF Lp= 42nH

Style 451

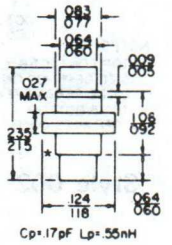

Cp=17pF Lp=.55nH

Style 452

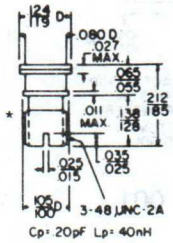

Cp= 20pF Lp= 40nH

Style 500

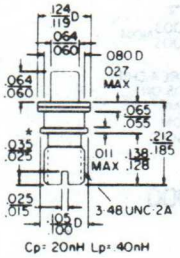

Cp= 20nH Lp= 40nH

Style 501

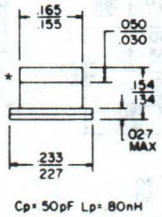

Cp= 50pF Lp= 80nH

Style 550

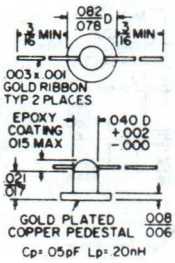

Cp= 05pF Lp= 20nH

Style 700

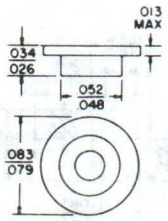

Cp= 25pF Lp= 15nH

Style 800

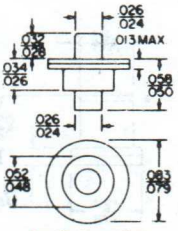

Cp= 25pF Lp= 15nH

Style 801

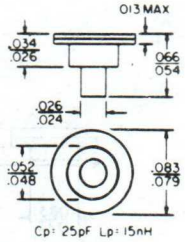

Cp= 25pF Lp= 15nH

Style 802

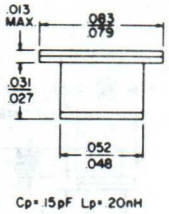

Cp= 15pF Lp= 20nH

Style 880

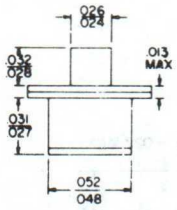

Cp= 15pF Lp= 20nH

Style 881

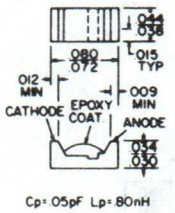

Cp= 05pF Lp= 80nH

Style 901

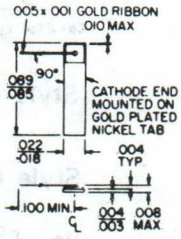

Style 920

* — HEAT SINK END

NOTE: USE STYLE NUMBERS AS TYPE NUMBER SUFFIX FOR PACKAGE VARIATION DESIRED.

12. OUTLINE DRAWINGS

V2

STYLE 4556

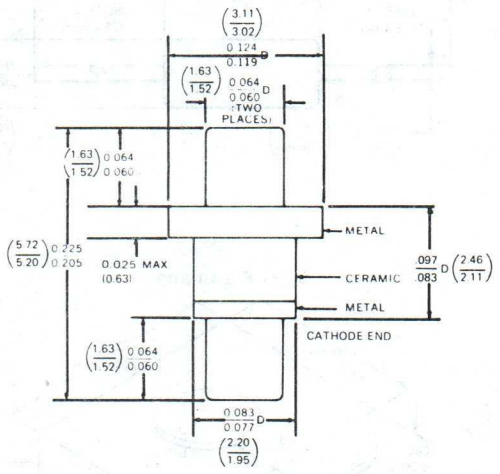

INCH
(MM)

STYLE 4557

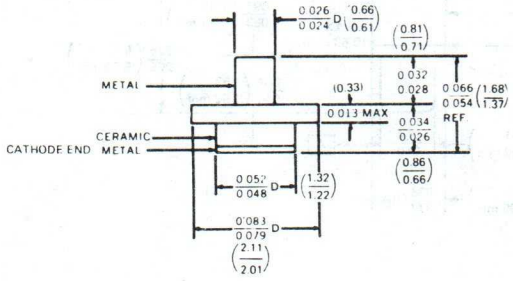

STYLE 4558

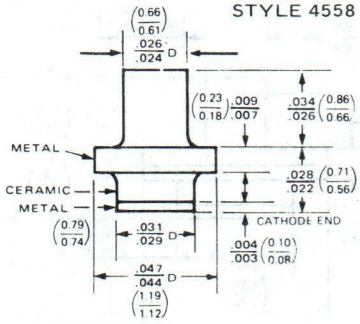

V3

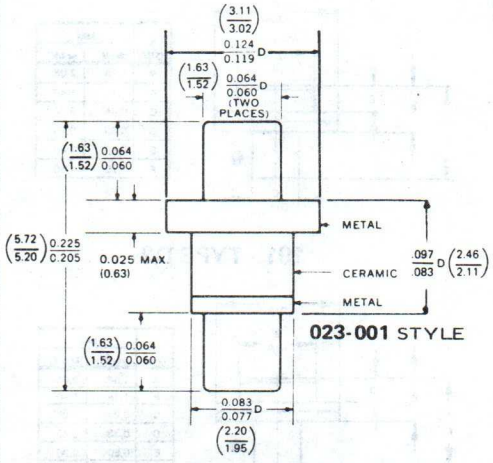

023-001 STYLE

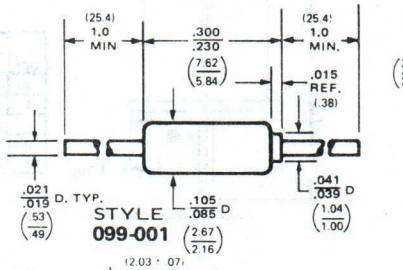

STYLE
099-001

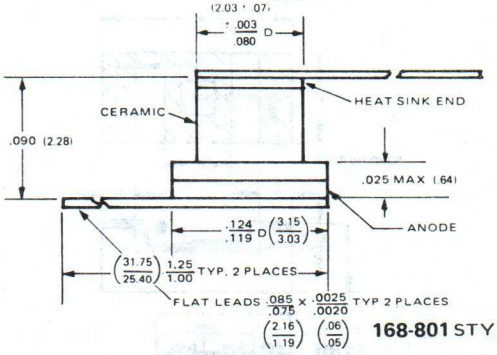

168-801 STYLE

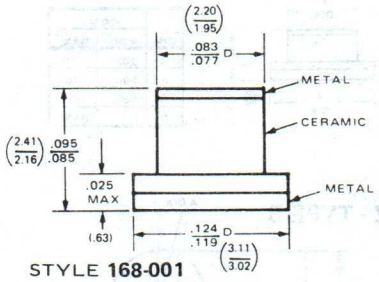

STYLE **168-001**

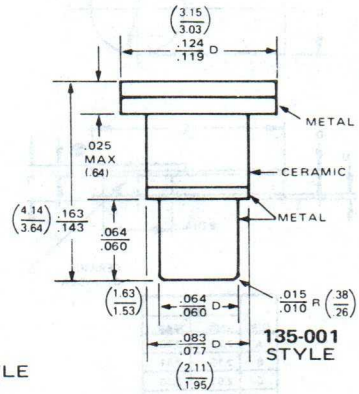

135-001 STYLE

INCH
(MM)

12. OUTLINE DRAWINGS

V4

STYLE 023-001

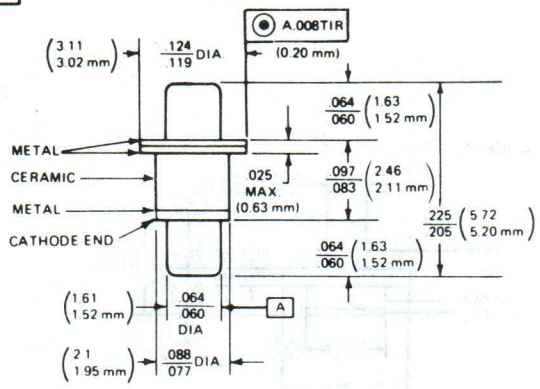

STYLE 075-001

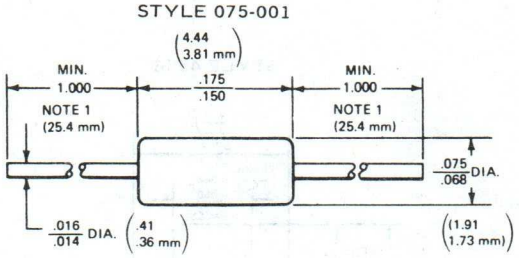

STYLE 082-001

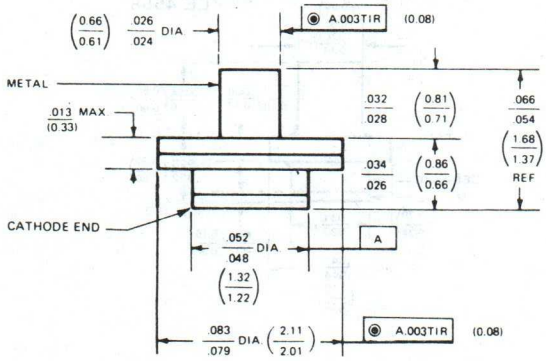

STYLE 149-802

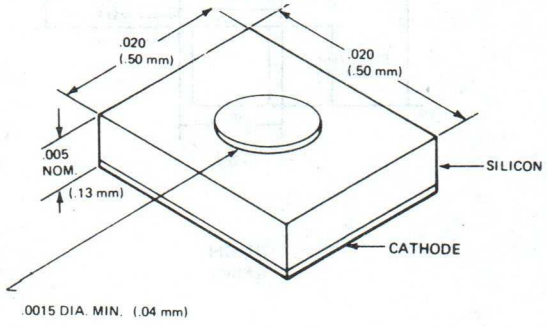

INCH (MM)

V5

32 - TYPE A

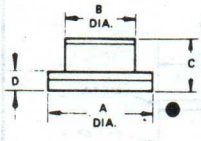

DIM.	MM MIN.	MM MAX.
A	3,02	3,175
B	1,95	2,10
C	1,39	1,65
D		0,63

182 - TYPE B

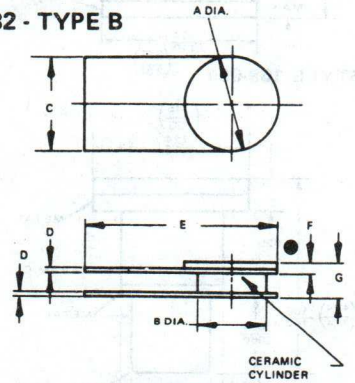

DIM.	MM MIN.	MM MAX.
A	2,75	3,30
B	2,16	2,41
C	2,92	3,30
D	0,08	0,18
E	5,84	6,86
F	0,25	0,51
G	0,89	1,40

183 - TYPE C

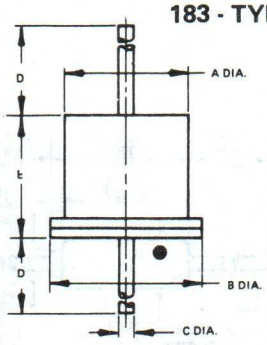

DIM.	MM MIN.	MM MAX.
A	1,78	2,29
B	2,29	2,75
C	0,48	0,56
D	2,54	–
E	2,16	2,54

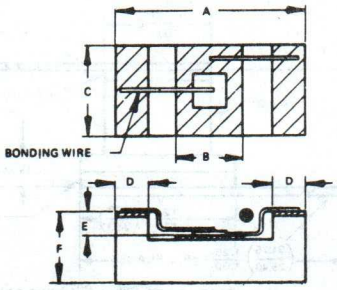

188

DIM.	MM MIN.	MM MAX.
A	1,40	1,52
B	0,51	–
C	0,61	0,76
D	0,18	0,36
E	0,18	–
F	0,43	0,69

189 - TYPE D1

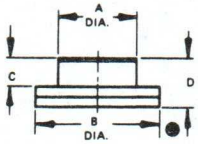

DIM.	MM MIN.	MM MAX.
A	1,14	1,40
B	1,98	2,08
C	0,38	0,48
D	0,69	0,86

190 - TYPE D

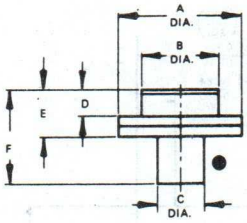

DIM.	MM MIN.	MM MAX.
A	1,98	2,08
B	1,14	1,40
C	0,64	0,74
D	0,38	0,48
E	0,69	0,86
F	1,22	1,50

191 - TYPE D2

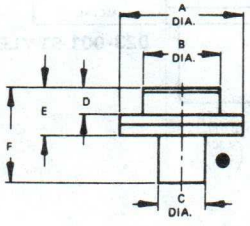

DIM.	MM MIN.	MM MAX.
A	1,98	2,08
B	1,14	1,40
C	0,97	1,07
D	0,38	0,48
E	0,69	0,86
F	1,22	1,50

● Denotes Cathode End

12. OUTLINE DRAWINGS

V6

30

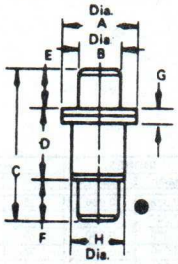

DIM.	INCHES MIN.	INCHES MAX.	MM MIN.	MM MAX.
A	.119	.127	3,02	3,23
B	.060	.064	1,52	1,63
C	.205	.225	5,21	5,72
D	.085	.097	2,16	2,46
E	.060	.064	1,52	1,63
F	.060	.064	1,52	1,63
G	.016	.024	0,41	0,61
H	.079	.083	2,01	2,11

31

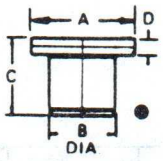

DIM.	INCHES MIN.	INCHES MAX.	MM MIN.	MM MAX.
A	.119	.127	3,02	3,23
B	.077	.083	1,95	2,11
C	.085	.097	2,16	2,46
D	.016	.024	0,41	0,61

32

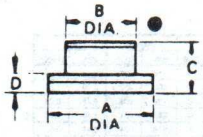

DIM.	INCHES MIN.	INCHES MAX.	MM MIN.	MM MAX.
A	.119	.125	3,02	3,18
B	.077	.083	1,96	2,11
C	.055	.065	1,40	1,65
D	–	.025	–	0,64

36

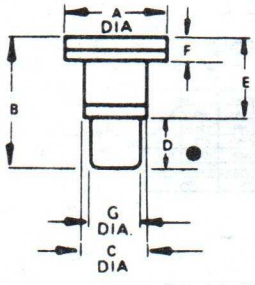

DIM.	INCHES MIN.	INCHES REF.	INCHES MAX.	MM MIN.	MM REF.	MM MAX.
A	.119	—	.125	3,02	—	3,18
B	.143	—	.163	3,63	—	4,14
C	.077	—	.083	1,96	—	2,11
D	.060	—	.064	1,52	—	1,63
E	—	.091	—	—	2,31	—
F	—	—	.025	—	—	0,64
G	.060	—	.064	1,52	—	1,63

54

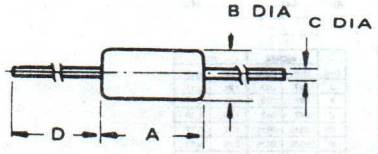

DIM.	INCHES MIN.	INCHES MAX.	MM MIN.	MM MAX.
A	.145	.165	3,68	4,19
B	.068	.075	1,72	1,91
C	.014	.016	0,35	0,41
D	1.000	1.500	25,4	38,1

91

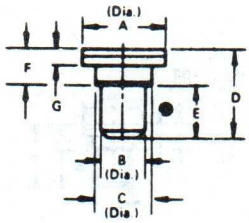

DIM.	INCHES MIN.	INCHES MAX.	MM MIN.	MM MAX.
A	.119	.127	3,02	3,23
B	.060	.062	1,52	1,57
C	.077	.083	1,96	2,11
D	.115	.129	2,92	3,28
E	.060	.064	1,52	1,63
F	.055	.065	1,40	1,65
G	.016	.024	0,41	0,61

92

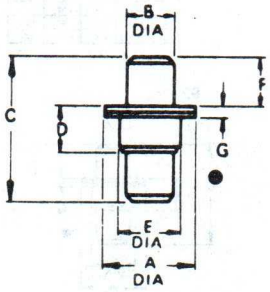

DIM.	INCHES MIN.	INCHES MAX.	MM MIN.	MM MAX.
A	.119	.127	3,02	3,23
B	.061	.065	1,55	1,65
C	.174	.194	4,42	4,93
D	.055	.065	1,40	1,65
E	.077	.083	1,96	2,11
F	.060	.064	1,52	1,63
G	.016	.024	0,41	0,61

94

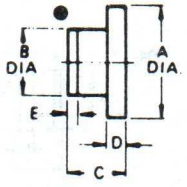

DIM.	INCHES MIN.	INCHES MAX.	MM MIN.	MM MAX.
A	.078	.086	1,98	2,18
B	.047	.053	1,19	1,35
C	.040	.050	1,02	1,27
D	—	.015	—	0,381
E	.004	.010	0,102	0,254

95

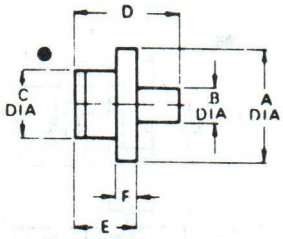

DIM.	INCHES MIN.	INCHES MAX.	MM MIN.	MM MAX.
A	.078	.086	1,98	2,18
B	.024	.026	0,61	0,66
C	.047	.053	1,19	1,35
D	.070	.080	1,78	2,03
E	.040	.050	1,02	1,27
F	—	.015	—	0,38

111

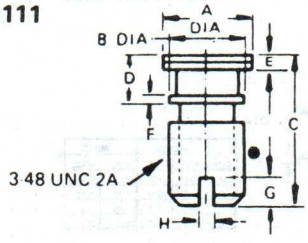

DIM.	INCHES MIN.	INCHES MAX.	MM MIN.	MM MAX.
A	.119	.127	3,02	3,22
B	.098	.102	2,49	2,59
C	.188	.208	4,78	5,28
D	.057	.071	1,45	1,80
E	.016	.024	0,41	0,61
F	.009	.011	0,23	0,28
G	.030	.040	0,76	1,02
H	.015	.025	0,38	0,64

12. OUTLINE DRAWINGS

V7

30

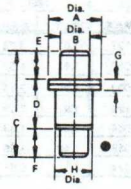

DIM.	INCHES MIN.	INCHES MAX.	MM MIN.	MM MAX.
A	.119	.127	3,02	3,23
B	.060	.064	1,52	1,63
C	.205	.225	5,21	5,72
D	.085	.097	2,16	2,46
E	.060	.064	1,52	1,63
F	.060	.064	1,52	1,63
G	.016	.024	0,41	0,61
H	.079	.083	2,01	2,11

31

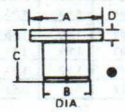

DIM.	INCHES MIN.	INCHES MAX.	MM MIN.	MM MAX.
A	.119	.127	3,02	3,23
B	.077	.083	1,95	2,11
C	.085	.097	2,16	2,46
D	.016	.024	0,41	0,61

● Denotes Cathode End.

32

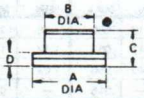

DIM.	INCHES MIN.	INCHES MAX.	MM MIN.	MM MAX.
A	.119	.125	3,02	3,18
B	.077	.083	1,96	2,11
C	.055	.065	1,40	1,65
D	–	.025	–	0,64

36

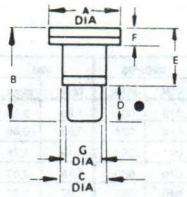

DIM.	INCHES MIN.	INCHES REF.	INCHES MAX.	MM MIN.	MM REF.	MM MAX.
A	.119	—	.125	3,02	—	3,18
B	.143	—	.163	3,63	—	4,14
C	.077	—	.083	1,96	—	2,11
D	.060	—	.064	1,52	—	1,63
E	—	.091	—	—	2,31	—
F	—	—	.025	—	—	0,64
G	.060	—	.064	1,52	—	1,63

54

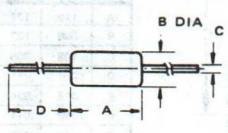

DIM.	INCHES MIN.	INCHES MAX.	MM MIN.	MM MAX.
A	.145	.165	3,68	4,19
B	.068	.075	1,72	1,91
C	.014	.016	0,35	0,41
D	1.000	1.500	25,4	38,1

91

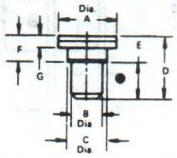

DIM.	INCHES MIN.	INCHES MAX.	MM MIN.	MM MAX.
A	.119	.127	3,02	3,23
B	.060	.062	1,52	1,57
C	.077	.083	1,96	2,11
D	.115	.129	2,92	3,28
E	.060	.064	1,52	1,63
F	.055	.065	1,40	1,65
G	.016	.024	0,41	0,61

92

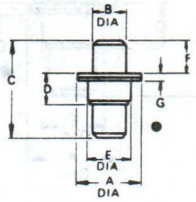

DIM.	INCHES MIN.	INCHES MAX.	MM MIN.	MM MAX.
A	.119	.127	3,02	3,23
B	.061	.065	1,55	1,65
C	.174	.194	4,42	4,93
D	.055	.065	1,40	1,65
E	.077	.083	1,96	2,11
F	.060	.064	1,52	1,63
G	.016	.024	0,41	0,61

94

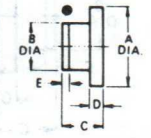

DIM.	INCHES MIN.	INCHES MAX.	MM MIN.	MM MAX.
A	.078	.086	1,98	2,18
B	.047	.053	1,19	1,35
C	.040	.050	1,02	1,27
D	—	.015	—	0,381
E	.004	.010	0,102	0,254

95

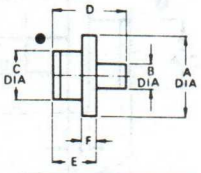

DIM.	INCHES MIN.	INCHES MAX.	MM MIN.	MM MAX.
A	.078	.086	1,98	2,18
B	.024	.026	0,61	0,66
C	.047	.053	1,19	1,35
D	.070	.080	1,78	2,03
E	.040	.050	1,02	1,27
F	—	.015	—	0,38

96

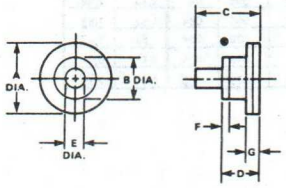

DIM.	INCHES MIN.	INCHES MAX.	MM MIN.	MM MAX.
A	0.078	0.086	1,98	2,18
B	0.047	0.053	1,19	1,35
C	0.070	0.080	1,78	2,03
D	0.040	0.050	1,02	1,27
E	0.024	0.026	0,61	0,66
F	0.004	0.010	0,10	0,25
G	— —	0.015	— —	0,38

C_p = 0.15 pF Typical
L_S = 0.17 nH Typical

97

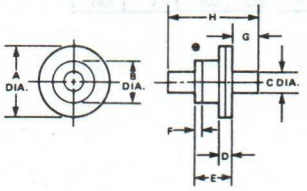

DIM.	INCHES MIN.	INCHES MAX.	MM MIN.	MM MAX.
A	0.078	0.086	1,98	2,18
B	0.047	0.053	1,19	1,35
C	0.024	0.026	0,61	0,66
D	— —	0.015	— —	0,38
E	0.040	0.050	1,02	1,27
F	0.004	0.010	0,10	0,25
G	0.029	0.031	0,74	0,79
H	0.100	0.110	2,54	2,79

C_p = 0.15 pF Typical
L_S = 0.17 nH Typical

111

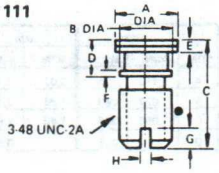

DIM.	INCHES MIN.	INCHES MAX.	MM MIN.	MM MAX.
A	.119	.127	3,02	3,22
B	.098	.102	2,49	2,59
C	.188	.208	4,78	5,28
D	.057	.071	1,45	1,80
E	.016	.024	0,41	0,61
F	.009	.011	0,23	0,28
G	.030	.040	0,76	1,02
H	.015	.025	0,38	0,64

126

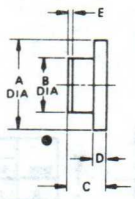

TYPICAL
L_p = .2 nH
C_p = .23 pF

DIM.	INCHES MIN.	INCHES MAX.	MM MIN.	MM MAX.
A	.079	.087	2,01	2,21
B	.047	.053	1,19	1,35
C	.030	.038	0,76	0,97
D	.009	.015	0,23	0,38
E	.003 REF.		0,076 REF.	

128

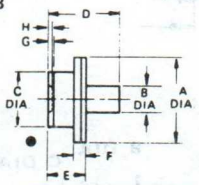

DIM.	INCHES MIN.	INCHES MAX.	MM MIN.	MM MAX.
A	.077	.083	1,96	2,11
B	.022	.028	0,56	0,71
C	.047	.053	1,19	1,35
D	.0645	.0675	1,38	1,71
E	.0296	.0325	0,75	0,83
F	.010	.015	0,25	0,38
G	.002	.007	0,06	0,17
H	.0015	.0030	0,04	0,08

● Denotes Cathode End.

Cont'd on next page

12. OUTLINE DRAWINGS

V7 | **Cont'd**

155

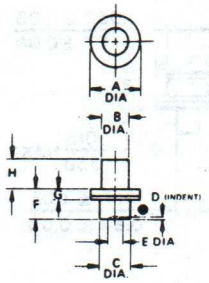

DIM.	INCHES MIN.	INCHES MAX.	MM MIN.	MM MAX.
A	.043	.047	1,09	1,19
B	.024	.026	0,61	0,66
C	.029	.031	0,74	0,79
D	.001	.002	0,03	0,05
E	.016	.010	0,41	0,25
F	.022	.028	0,56	0,71
G	.007	.009	0,18	0,23
H	.026	.034	0,66	0,86

156

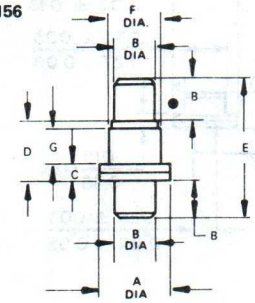

DIM.	INCHES MIN.	INCHES MAX.	MM MIN.	MM MAX.
A	.117	.123	2,97	3,12
B	.060	.064	1,52	1,63
C	.016	.024	0,40	0,61
D	.055	.065	1,40	1,65
E	.174	.194	4,42	4,93
F	.077	.083	1,96	2,11
G	.033 REF.		0,84 REF.	

166

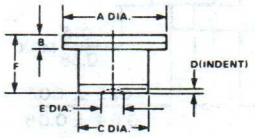

DIM.	INCHES MIN.	INCHES MAX.	MM MIN.	MM MAX.
A	0.043	0.047	1.09	1.19
B	0.006	0.008	0.15	0.20
C	0.029	0.031	0.74	0.79
D	0.001	0.002	0.03	0.05
E	0.010	0.016	0.25	0.41
F	0.026	0.033	0.66	0.84

157

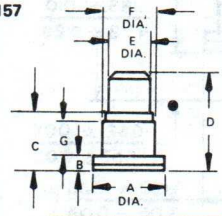

DIM.	INCHES MIN.	INCHES MAX.	MM MIN.	MM MAX.
A	.117	.123	2,97	3,12
B	.016	.024	0,41	0,61
C	.055	.065	1,40	1,65
D	.117	.127	2,97	3,23
E	.060	.064	1,52	1,63
F	.077	.083	1,96	2,11
G	.033 REF.		0,83 REF.	

158

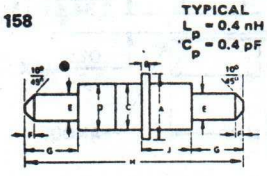

DIM.	INCHES MIN.	INCHES MAX.	MM MIN.	MM MAX.
A	.228	.232	5,791	5,892
B	–	.030	–	0,762
C	–	.165	–	4,191
D	.157	.163	3,987	4,140
E	.092	.094	2,336	2,387
F	.010	.030	0,254	0,762
G	.183	.187	4,648	4,749
H	.766	.792	19,456	20,116
J	.165	.180	4,191	4,572

168

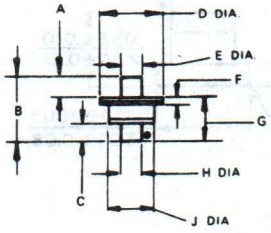

DIM.	INCHES MIN.	INCHES MAX.	MM MIN.	MM MAX.
A	.028	.032	0,71	0,81
B	.084	.096	2,13	2,44
C	.028	.032	0,71	0,81
D	.079	.081	2,01	2,06
E	.024	.026	0,61	0,66
F	.008	.010	0,20	0,25
G	.048	.054	1,22	1,37
H	.024	.026	0,61	0,66

159

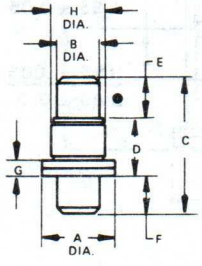

DIM.	INCHES MIN.	INCHES MAX.	MM MIN.	MM MAX.
A	.119	.127	3,02	3,23
B	.060	.064	1,52	1,63
C	.205	.225	5,21	5,72
D	.085	.097	2,16	2,46
E	.060	.064	1,52	1,63
F	.060	.064	1,52	1,63
G	.016	.024	0,41	0,61
H	.079	.083	2,01	2,11

186

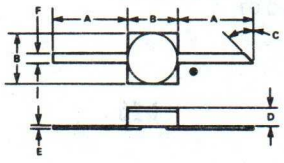

DIM.	INCHES MIN.	INCHES MAX.	MM MIN.	MM MAX.
A	0.130	0.170	3.30	4.32
B	0.094	0.102	2.39	2.59
C	35°	55°	35°	55°
D	0.031	0.044	0.79	1.12
E	0.0025	0.0035	0.064	0.089
F	0.019	0.021	0.48	0.53

277

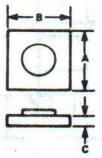

DIM.	INCHES MIN.	INCHES MAX.	MM MIN.	MM MAX.
A	0.010	0.012	0,25	0,30
B	0.010	0.012	0,25	0,30
C	0.004	0.005	0,10	0,13

12. OUTLINE DRAWINGS

V8

N9

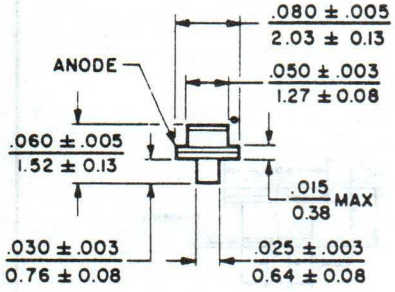

N10

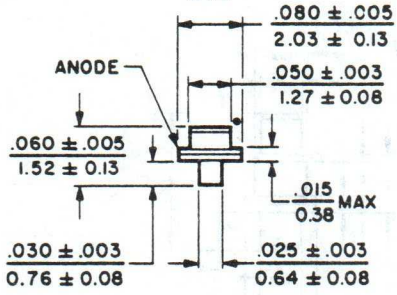

N11

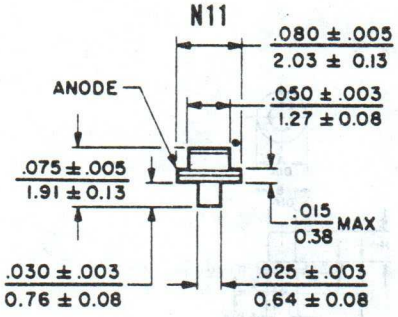

N16

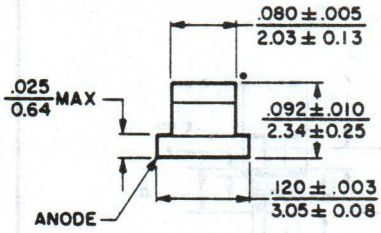

N18

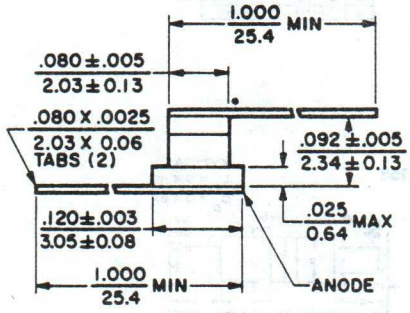

N19

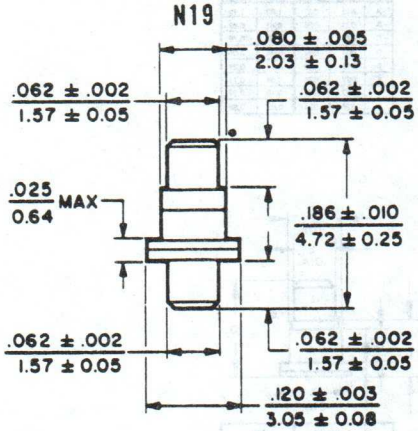

N20

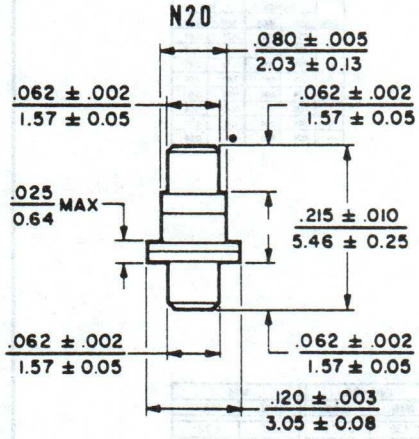

N21

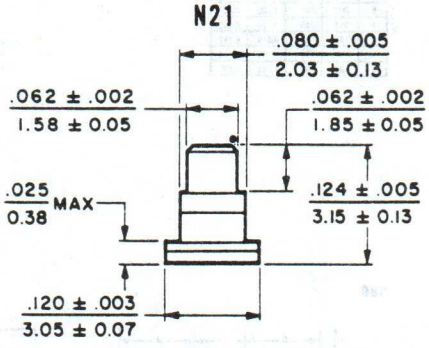

N22

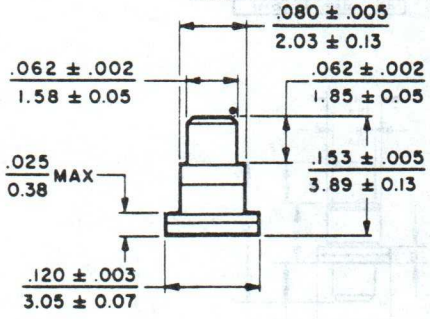

N23

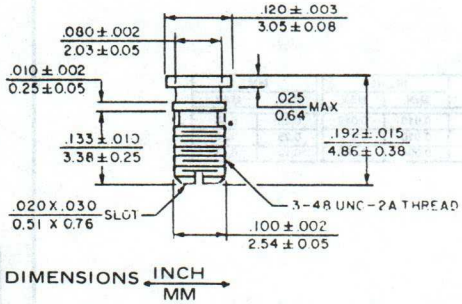

DIMENSIONS INCH / MM

N25

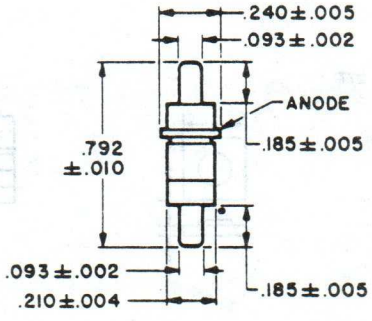

N26

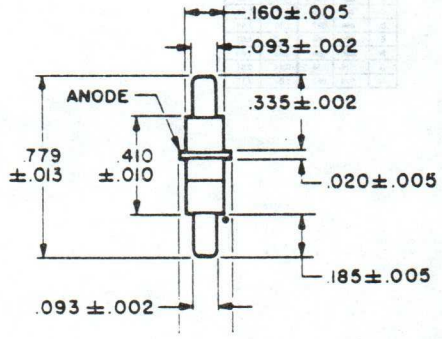

Cont'd on next page

12. OUTLINE DRAWINGS

V8 Cont'd

N27

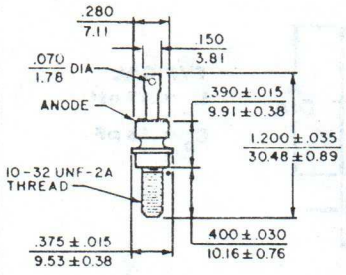

Case N28

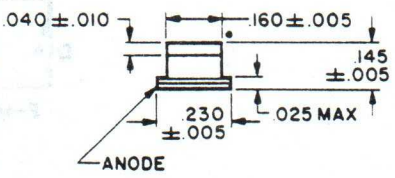

CASE N60

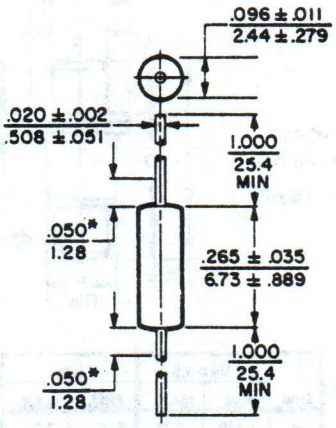

CASE N74

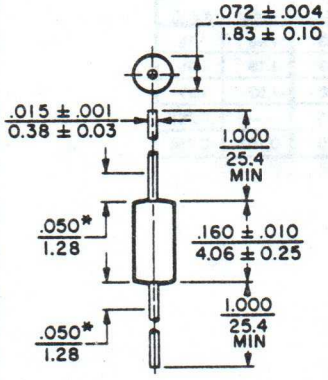

N76 Case

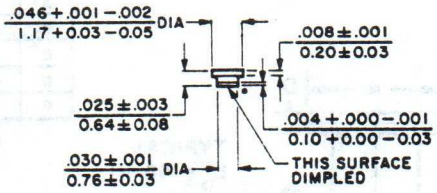

N77 Case

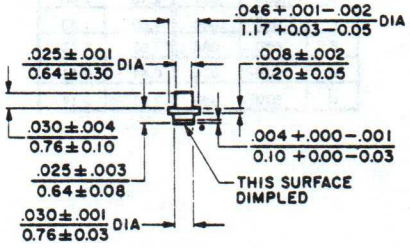

*WITHIN THIS ZONE, DIAMETER MAY VARY TO ALLOW FOR LEAD FINISHES AND IRREGULARITIES

•HEAT SINK END

DIMENSIONS ← inch / mm →

V9

VARIATION A

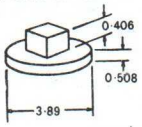

VARIATION B

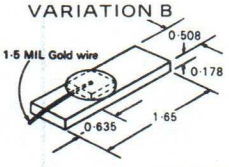

VARIATION C

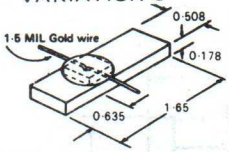

VARIATION D

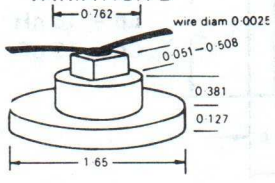

VARIATION G

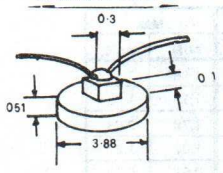

NOTE:
USE VARIATION LETTER AS TYPE NUMBER SUFFIX FOR DESIRED CHIP CARRIER STYLE.

ALL DIMENSIONS IN "MM"

V10

VARIATION A

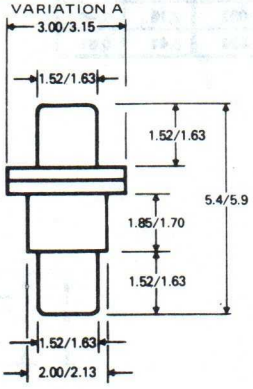

VARIATION B

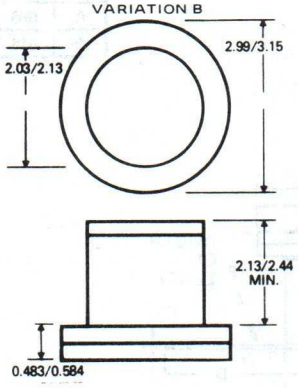

VARIATION C

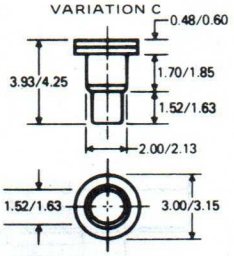

VARIATION F

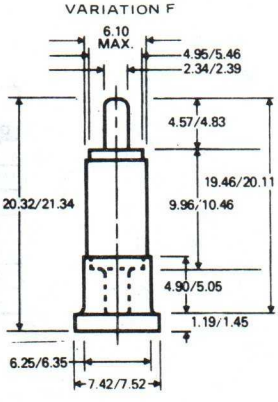

NOTE:
USE VARIATION LETTER AS TYPE NUMBER SUFFIX FOR DESIRED PACKAGE STYLE.

DIMENSIONS IN "MM"

VARIATION G

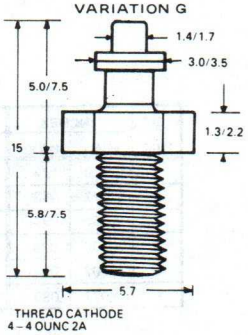

12. OUTLINE DRAWINGS

V11

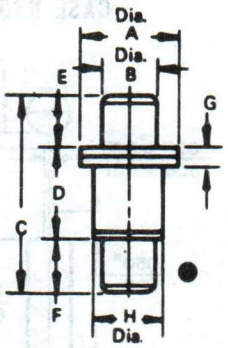

TYPICAL
L_p = .60 nH
C_p = .18 pF

DIM.	INCHES MIN.	INCHES MAX.	MM MIN.	MM MAX.
A	.119	.127	3,02	3,23
B	.060	.064	1,52	1,63
C	.205	.225	5,21	5,72
D	.085	.097	2,16	2,46
E	.060	.064	1,52	1,63
F	.060	.064	1,52	1,63
G	.016	.024	0,41	0,61
H	.079	.083	2,01	2,11

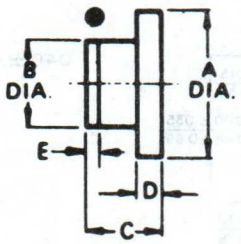

TYPICAL
L_p = .17 nH
C_p = .15 pF

DIM.	INCHES MIN.	INCHES MAX.	MM MIN.	MM MAX.
A	.078	.086	1,98	2,18
B	.047	.053	1,19	1,35
C	.040	.050	1,02	1,27
D	—	.015	—	0,381
E	.004	.010	0,102	0,254

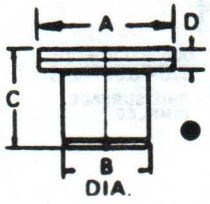

TYPICAL
L_p = .60 nH
C_p = .18 pF

DIM.	INCHES MIN.	INCHES MAX.	MM MIN.	MM MAX.
A	.119	.127	3,02	3,23
B	.077	.083	1,95	2,11
C	.085	.097	2,16	2,46
D	.016	.024	0,41	0,61

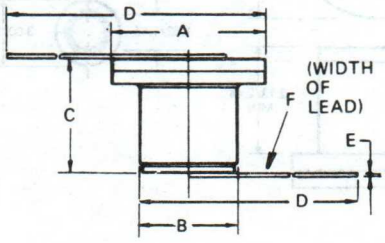

Lp = .4 nH
Cp = .15 pF

DIM.	INCHES MIN.	INCHES MAX.	MM MIN.	MM MAX.
A	.119	.127	3,02	3,22
B	.077	.083	1,96	2,11
C	.085	.097	2,16	2,46
D	.975	1.025	2,48	26,0
E	.002	.004	0,051	0,102
F	.077	.083	1,956	2,108

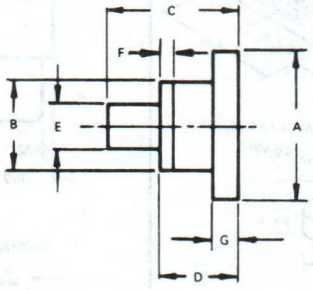

Lp = .10 nH
Cp = .15 pF

DIM.	INCHES MIN.	INCHES MAX.	MM MIN.	MM MAX.
A	.078	.086	1,98	2,18
B	.047	.053	1,19	1,35
C	.070	.080	1,78	2,03
D	.040	.050	1,02	1,27
E	.024	.026	0,61	0,66
F	.004	.010	0,10	0,25
G	-	015		0,38

● Denotes Cathode End.

12. OUTLINE DRAWINGS

V13

100

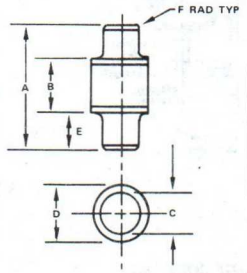

DIM.	INCHES MIN.	INCHES MAX.	MM MIN.	MM MAX.
A	0.97	0.207	5.00	5.26
B	0.070	0.082	1.78	2.08
C	0.060	0.064	1.52	1.63
D	—	0.084	—	2.13
E	0.058	0.068	1.47	1.73
F	—	0.012	—	0.30

Typ. Cp = .13 pF
Typ. L_S = 0.5 nH

155

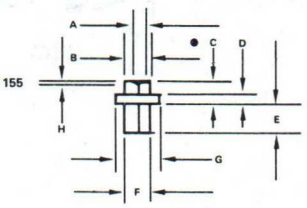

DIM.	INCHES MIN.	INCHES MAX.	MM MIN.	MM MAX.
A	0.010	0.016	0.25	0.41
B	0.029	0.031	0.74	0.79
C	0.022	0.028	0.56	0.71
D	0.007	0.010	0.18	0.25
E	0.026	0.034	0.66	0.86
F	0.024	0.026	0.61	0.66
G	0.043	0.047	1.09	1.19
H	0.001	0.012	0.03	0.05

Typ. Cp = .13 pF
Typ. L_S = .16 nH

119

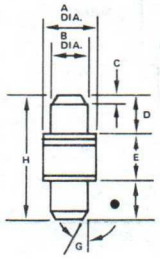

DIM.	INCHES MIN.	INCHES MAX.	MM MIN.	MM MAX.
A	0.078	0.086	1.98	2.18
B	0.060	0.064	1.52	1.63
C	0.009	0.015	0.23	0.38
D	0.060	0.064	1.52	1.63
E	0.070	0.082	1.78	2.08
F	0.060	0.064	1.52	1.63
G	30° NOM		30° NOM	
H	0.190	0.210	4.83	5.33

Typ. Cp = .15 pF
Typ. L_S = .5 nH

185

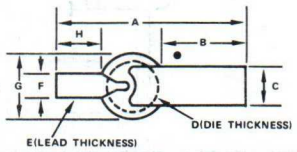

DIM.	INCHES MIN.	INCHES MAX.	MM MIN.	MM MAX.
A	0.036	0.038	0.91	0.97
B	0.016	—	0.41	—
C	0.007	0.009	0.18	0.23
D	0.003	0.005	0.08	0.13
E	0.0003	0.0005	0.008	0.013
F	0.004	0.006	0.10	0.15
G	—	0.015	—	0.38
H	0.009	—	0.23	—

120

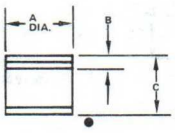

DIM.	INCHES MIN.	INCHES MAX.	MM MIN.	MM MAX.
A	0.051	0.055	1.30	1.40
B	—	0.015	—	0.38
C	0.040	0.050	1.02	1.27

Typ. Cp = .13 pF
Typ. L_S = 0.4 nH

195

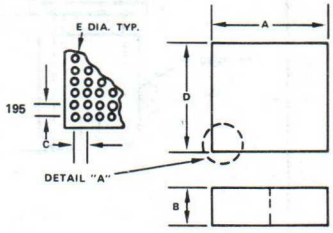

DIM.	INCHES MIN.	INCHES MAX.	MM MIN.	MM MAX.
A	0.012	0.018	0.30	0.46
B	0.004	0.006	0.10	0.15
C	0.00016 TYP.		0.004 TYP.	
D	0.012	0.018	0.30	0.46
E	0.000008 TYP.		0.002 TYP.	

135

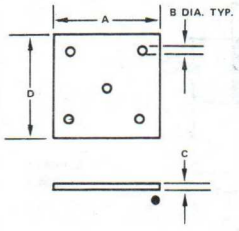

DIM.	INCHES MIN.	INCHES MAX.	MM MIN.	MM MAX.
A	0.013	0.017	0.33	0.43
B	0.001	—	0.03	—
C	0.004	0.006	0.10	0.15
D	0.013	0.017	0.33	0.43

276

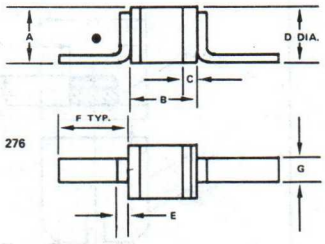

DIM.	INCHES MIN.	INCHES MAX.	MM MIN.	MM MAX.
A	0.060	0.040	1.52	1.02
B	0.050	0.040	1.27	1.02
C	0.015	—	0.38	—
D	0.055	0.051	1.39	1.29
E	0.005	—	0.13	—
F	0.260	0.240	6.60	6.10
G	0.025	0.015	0.64	0.38

Typ. Cp = 0.13 pF
Typ. L_S = 0.2 nH

12. OUTLINE DRAWINGS

V15

PACKAGE CODE - 00

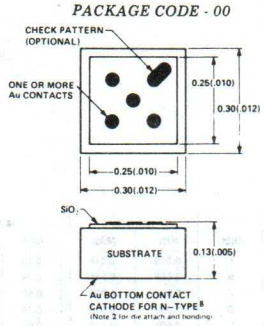

PACKAGE CODE - 3G

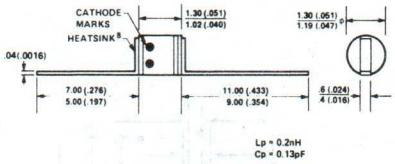

Lp = 0.2nH
Cp = 0.13pF

PACKAGE CODE - 3M

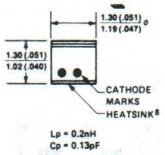

Lp = 0.2nH
Cp = 0.13pF

PACKAGE CODE - 5T

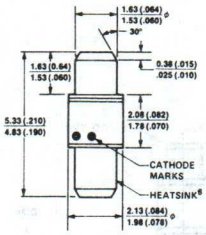

Lp = 1.0nH
Cp = 0.15pF

PACKAGE CODE - 7E

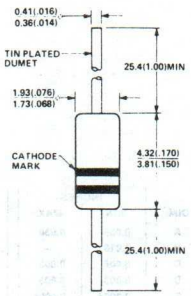

PACKAGE CODE - 7F

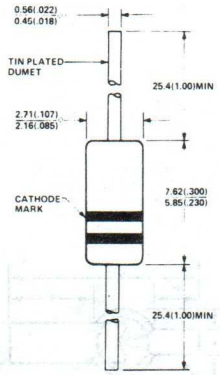

PACKAGE CODE - 8F

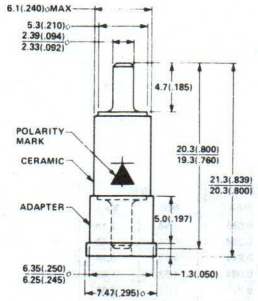

PACKAGE CODE - 8G

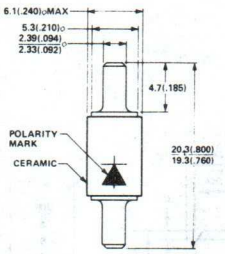

V16

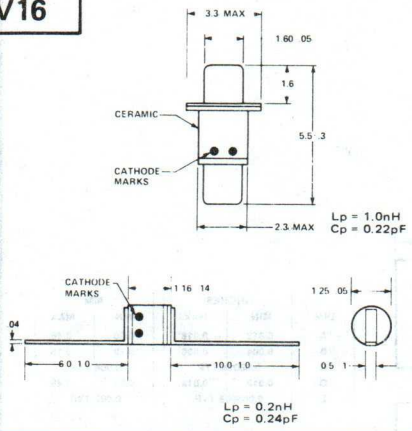

V17

1T PACKAGE

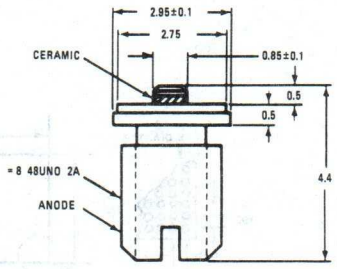

Cp = 0.15pF
Lp = 0.10nH

6K PACKAGE (DHS)

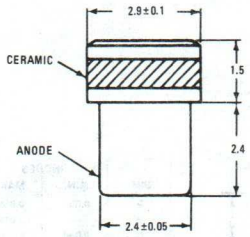

Cp = 0.25pF
Lp = 0.06nH

1N PACKAGE (DHS)
1P PACKAGE (CHS)

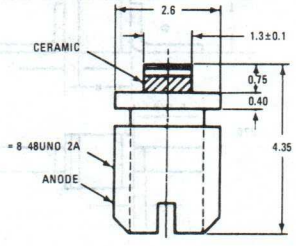

Cp = 0.45pF
Lp = 0.06nH

5H PACKAGE (DHS)
5G PACKAGE (CHS)

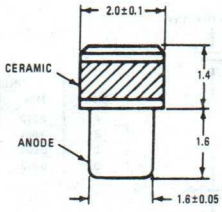

Cp = 0.40pF
Lp = 0.06nH

12. OUTLINE DRAWINGS

V18

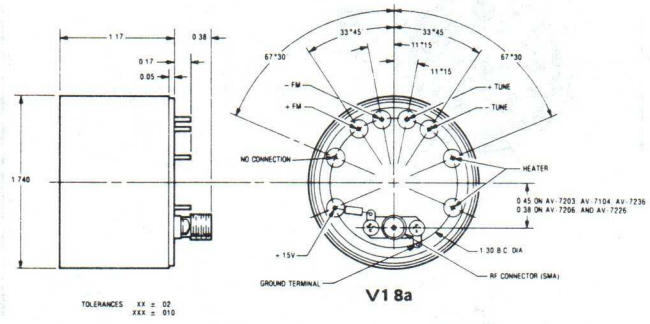

V18a

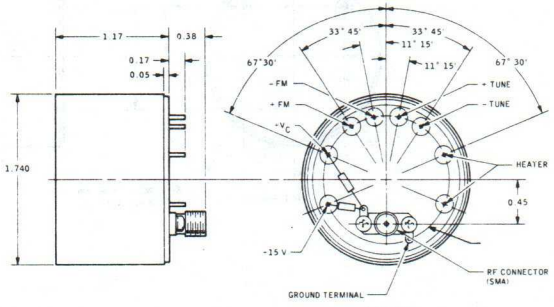

V18b

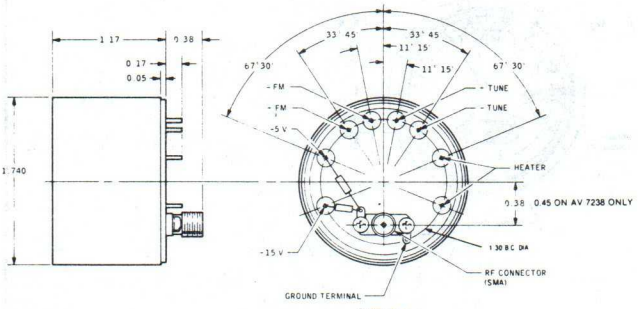

V18c

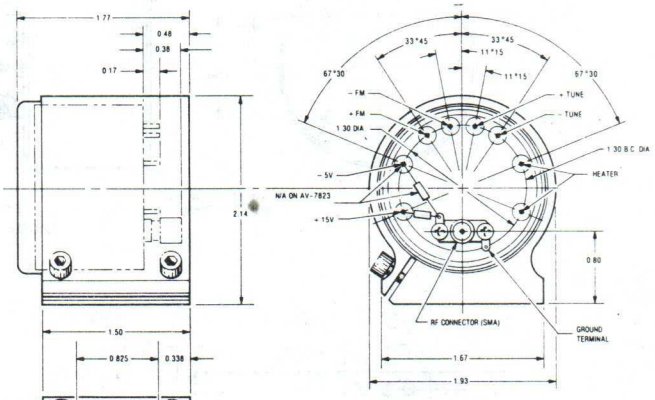

V18d

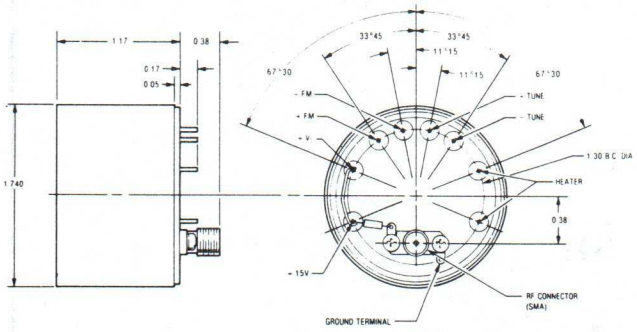

V18e

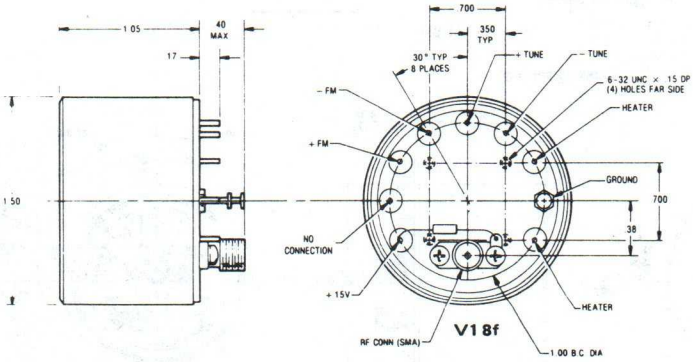

V18f

Cont'd on next page

12. OUTLINE DRAWINGS

V18 Cont'd

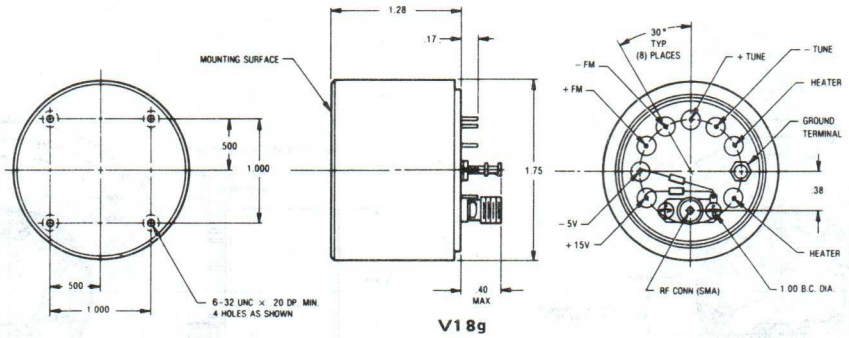

V18g

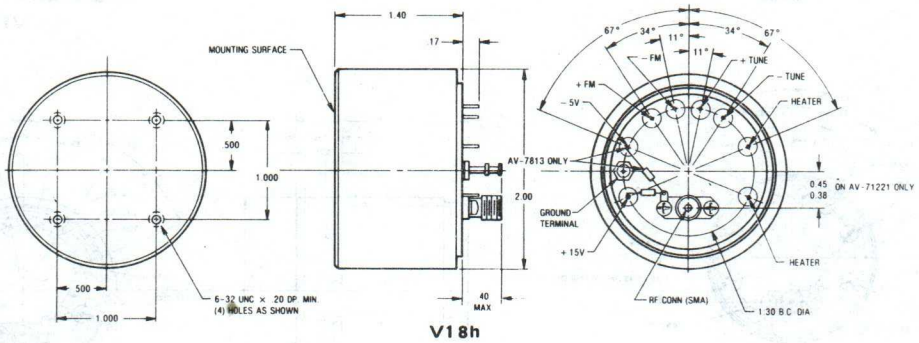

V18h

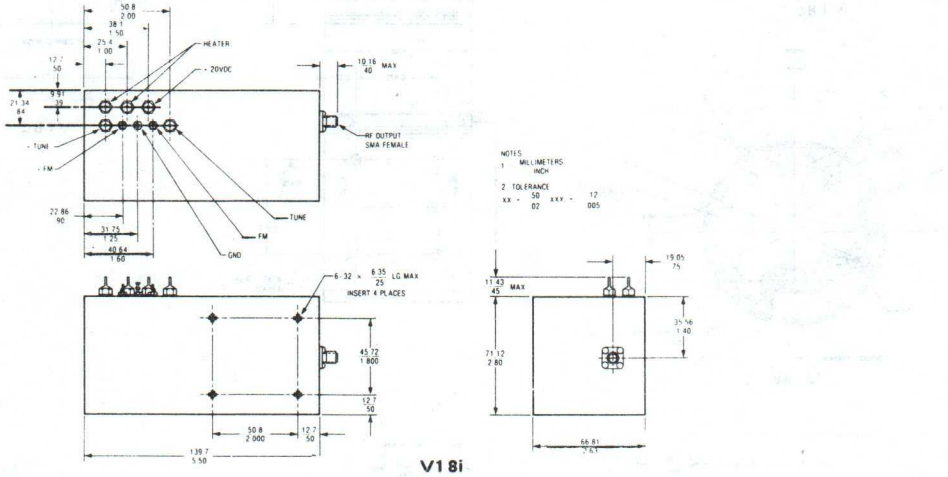

V18i

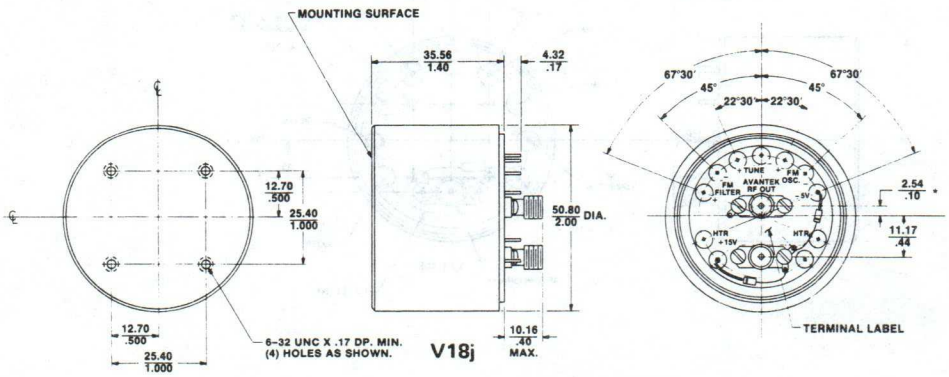

V18j

STANDARD VERSION
–001

12. OUTLINE DRAWINGS

V19

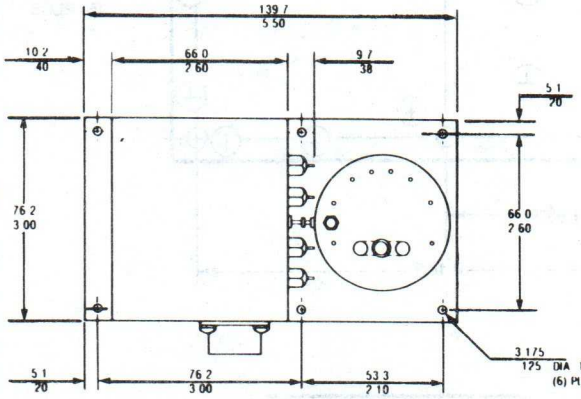

V19a

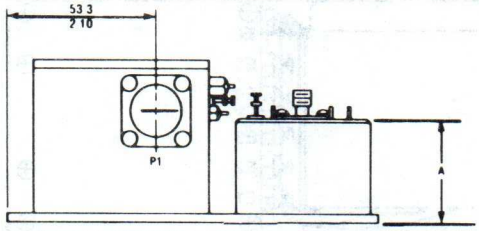

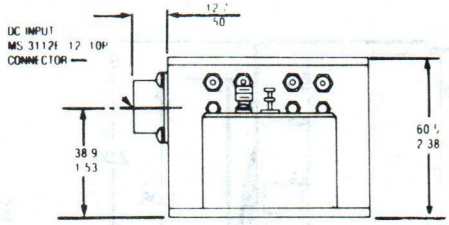

MODEL	DIMENSION A
AYA 7104	11 4/45
AYA 7203	11 4/45
AYA 7204	11 4/45
AYA 7206	9 7/38
AYA 7226	9 7/38
AYA 7236	11 4/45
AYA 7403	9 7/38
AYA 7433	9 7/38
AYA 7228	9 7/38
AYA 7238	11 4/45
AYA 7803	9 7/38
AYA 7823	9 7/38

PIN INDEX P1	
PIN NO.	INPUT
A	+15V
B	15V
C	HEATER
D	HEATER
E	+ TUNE
F	TUNE
G	GROUND
H	NC
J	+ PM
K	+ PM

NOTES: (UNLESS OTHERWISE SPECIFIED)

1 MILLIMETER
INCH

2 TOLERANCE ±5
± .02

V19b

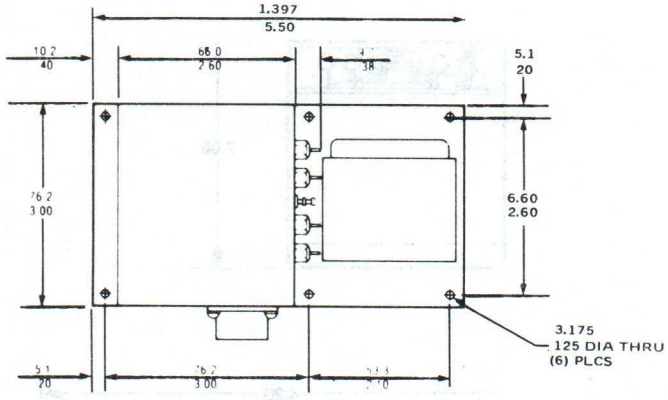

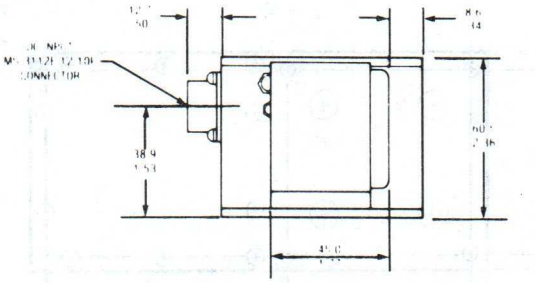

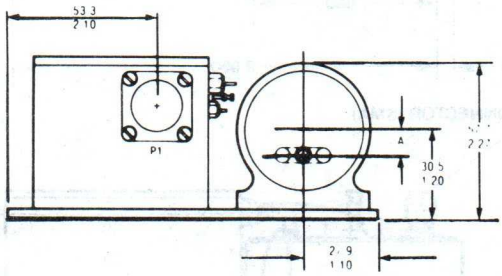

MODEL	DIMENSION A
AYA 7216	30 0/1 18
AYA 7218	35 6/1 41
AYA 7413	35 6/1 41
AYA 7813	38 9/1 53
AYA 71202	38 9/1 53
AYA 71221	38 9/1 53
AYA 71211	38 9/1 53
AYA 78018	38 9/1 53
AYA 78118	38 9/1 53

PIN INDEX P1	
PIN NO.	INPUT
A	+15V
B	-15V
C	HEATER
D	HEATER
E	+ TUNE
F	- TUNE
G	GROUND
H	NC
J	+ PM
K	- PM

NOTES: (UNLESS OTHERWISE SPECIFIED)

1 MILLIMETER
INCH

2 TOLERANCE ±5
± .02

12. OUTLINE DRAWINGS

V20

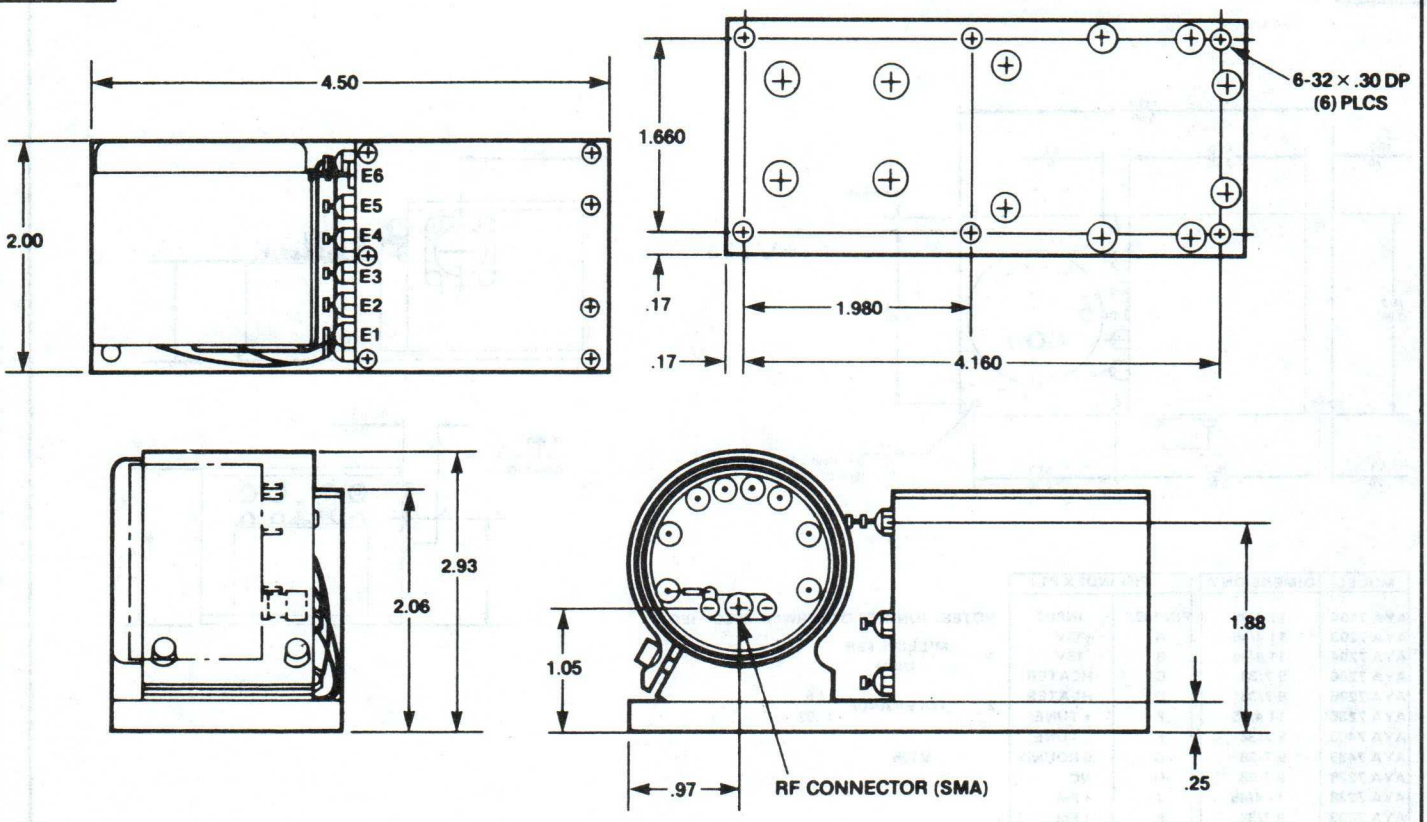

V21

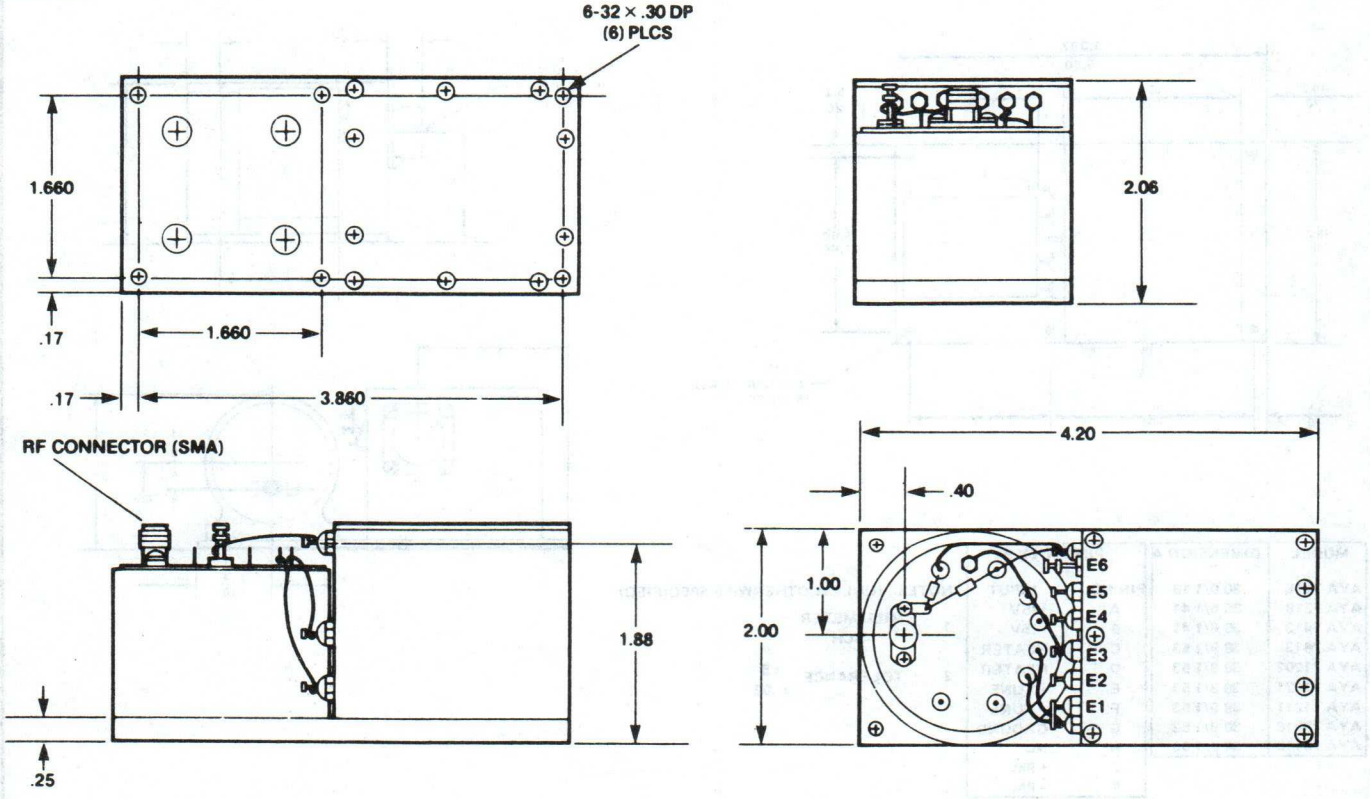

12. OUTLINE DRAWINGS

V22

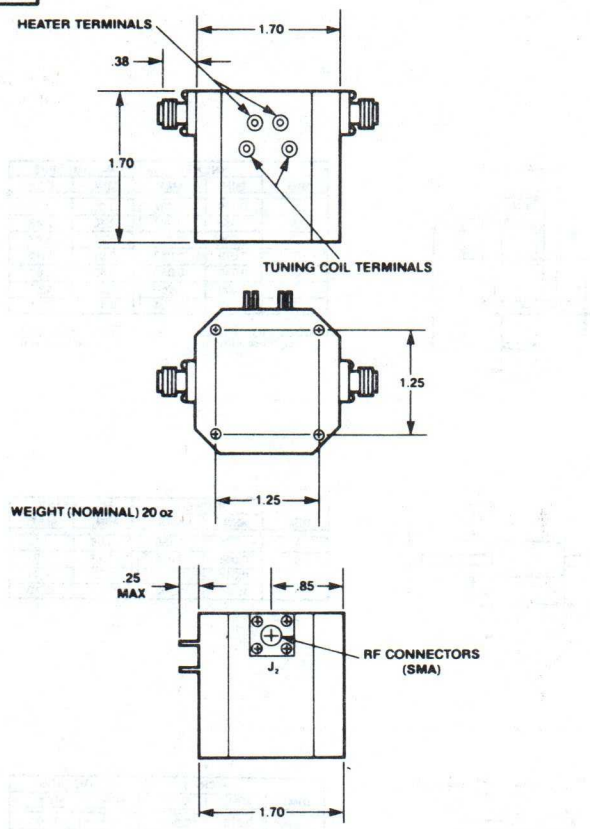

1.7 INCH CUBE

V23

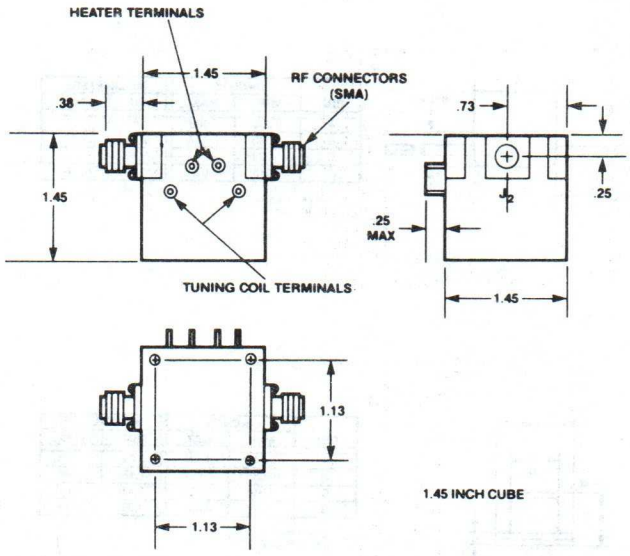

1.45 INCH CUBE

W248

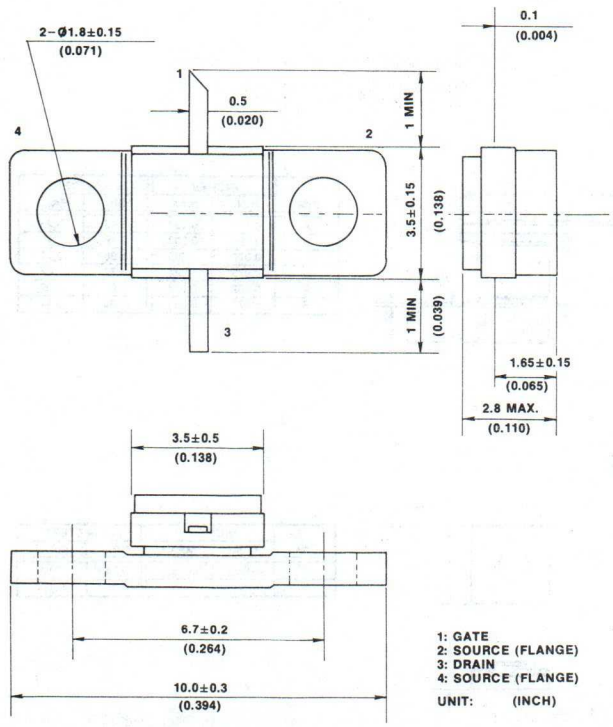

1: GATE
2: SOURCE (FLANGE)
3: DRAIN
4: SOURCE (FLANGE)

UNIT: (INCH)

W249

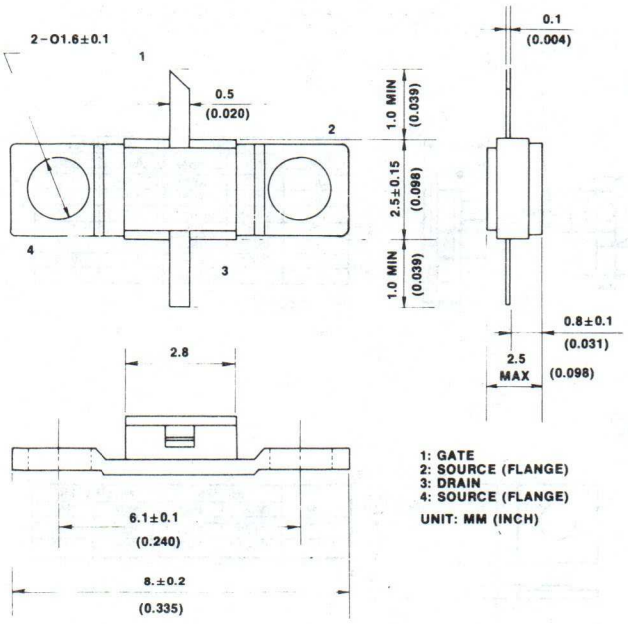

1: GATE
2: SOURCE (FLANGE)
3: DRAIN
4: SOURCE (FLANGE)

UNIT: MM (INCH)

12. OUTLINE DRAWINGS

V25 To order, add the desired case style number as a suffix to the basic model number.

4

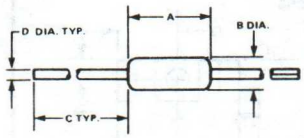

DIM.	INCHES		MILLIMETERS	
	MIN.	MAX.	MIN.	MAX.
A	0.230	0.300	5,84	7,62
B	0.085	0.107	2,16	2,72
C	1.000	— —	25,40	— —
D	0.018	0.022	0,46	0,56

C_P = 0.07 pF Typical
L_S = 2.50 nH Typical

30

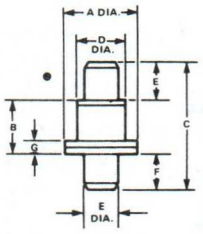

DIM.	INCHES		MILLIMETERS	
	MIN.	MAX.	MIN.	MAX.
A	0.119	0.127	3,02	3,23
B	0.085	0.097	2,16	2,46
C	0.205	0.225	5,21	5,72
D	0.079	0.083	2,01	2,11
E	0.060	0.064	1,52	1,63
F	0.060	0.064	1,52	1,63
G	0.016	0.024	0,41	0,61

GaAs: C_P = 0.18 pF Typical, L_S = 0.60 nH Typical
Silicon: C_P = 0.18 pF Typical, L_S = 0.40 nH Typical

31

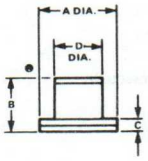

DIM.	INCHES		MILLIMETERS	
	MIN.	MAX.	MIN.	MAX.
A	0.119	0.127	3,02	3,23
B	0.085	0.097	2,16	2,46
C	0.016	0.024	0,41	0,61
D	0.077	0.083	1,96	2,11

C_P = 0.18 pF Typical
L_S = 0.60 nH Typical

54

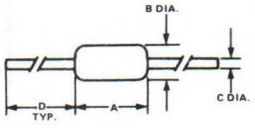

DIM.	INCHES		MILLIMETERS	
	MIN.	MAX.	MIN.	MAX.
A	0.145	0.165	3,68	4,19
B	0.068	0.075	1,72	1,91
C	0.014	0.016	0,35	0,41
D	1.000	1.500	25,40	38,10

C_P = 0.05 pF Typical
L_S = 1.00 nH Typical

91

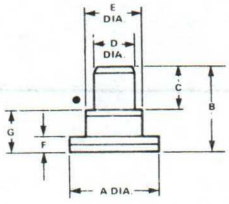

DIM.	INCHES		MILLIMETERS	
	MIN.	MAX.	MIN.	MAX.
A	0.119	0.127	3,02	3,23
B	0.115	0.129	2,92	3,28
C	0.060	0.064	1,52	1,63
D	0.060	0.062	1,52	1,57
E	0.077	0.083	1,96	2,11
F	0.016	0.024	0,41	0,61
G	0.055	0.065	1,40	1,65

C_P = 0.30 pF Typical
L_S = 0.30 nH Typical

94

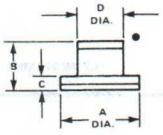

DIM.	INCHES		MILLIMETERS	
	MIN.	MAX.	MIN.	MAX.
A	0.078	0.086	1,98	2,18
B	0.040	0.050	1,02	1,27
C	— —	0.015	— —	0,38
D	0.047	0.053	1,19	1,35

96

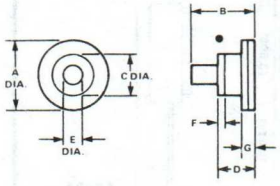

DIM.	INCHES		MILLIMETERS	
	MIN.	MAX.	MIN.	MAX.
A	0.078	0.086	1,98	2,18
B	0.070	0.080	1,78	2,03
C	0.047	0.053	1,19	1,35
D	0.040	0.050	1,02	1,27
E	0.024	0.026	0,61	0,66
F	0.004	0.010	0,10	0,25
G	— —	0.015	— —	0,38

C_P = 0.15 pF Typical
L_S = 0.17 nH Typical

108

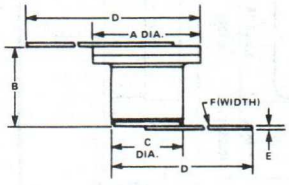

DIM.	INCHES		MILLIMETERS	
	MIN.	MAX.	MIN.	MAX.
A	0.119	0.127	3,02	3,23
B	0.085	0.097	2,16	2,46
C	0.077	0.083	1,96	2,11
D	0.975	1.025	24,77	26,04
E	0.002	0.004	0,05	0,09
F	0.077	0.083	1,96	2,11

132

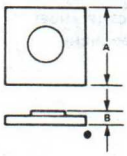

DIM.	INCHES		MILLIMETERS	
	MIN.	MAX.	MIN.	MAX.
A	0.020	0.024	0,51	0,61
B	0.003	0.006	0,08	0,15

134

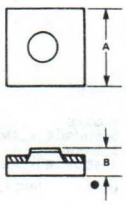

DIM.	INCHES		MILLIMETERS	
	MIN.	MAX.	MIN.	MAX.
A	0.0135	0.0165	0.34	0.42
B	0.0035	0.0065	0.09	0.17

12. OUTLINE DRAWINGS

V24

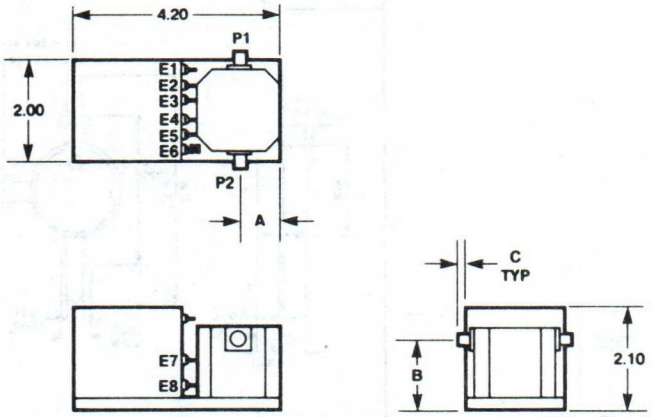

PIN INDEX	
E1	+15V INPUT
E2	−15V INPUT
E3	±15V RETURN
E4	+TUNE INPUT
E5	−TUNE INPUT
E6	GND
E7	HEATER
E8	HEATER
P1	RF INPUT
P2	RF OUTPUT

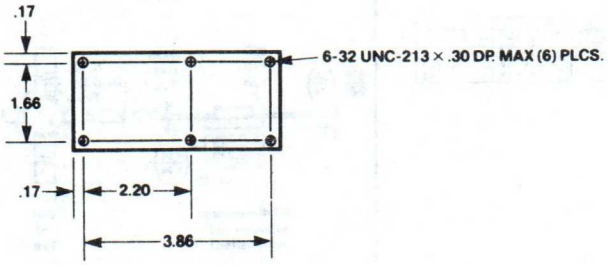

FILTER CASE	DIMENSION A	B	C
FIL 1	1.00	1.45	.10
FIL 2	1.00	1.40	.23

DIMENSIONS IN INCHES
TOLERANCES: XX ± .02
XXX ± .010.

W5

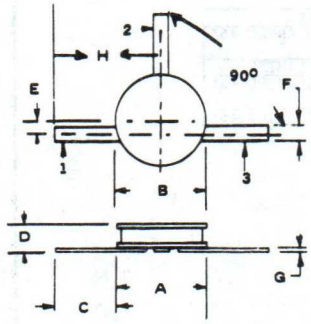

	A	B	C	D	E	F	G	H	REMARKS
W5	.192 MAX	.220 MAX	.100 MIN	.072 MAX	.012 .032	.022 .028	.010 .014		
W5a	.190 MAX	.218 MAX	.250 MIN	.060 MAX	.012 .032	.022 .028	.010 .014		
W5b	.184 .192	.208 .260	.060 MIN	.080 MAX	.012 .032	.022 .028	.010 .014		
W5c	.185 MAX	.255 MAX		.102 MAX		.023	.003	.275 MIN	LEAD 1 SLANTED 45°

W278

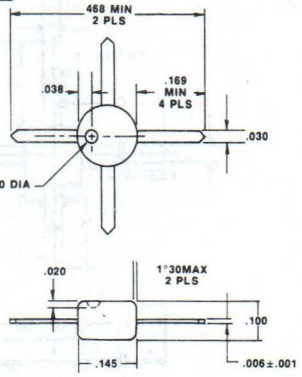

W277

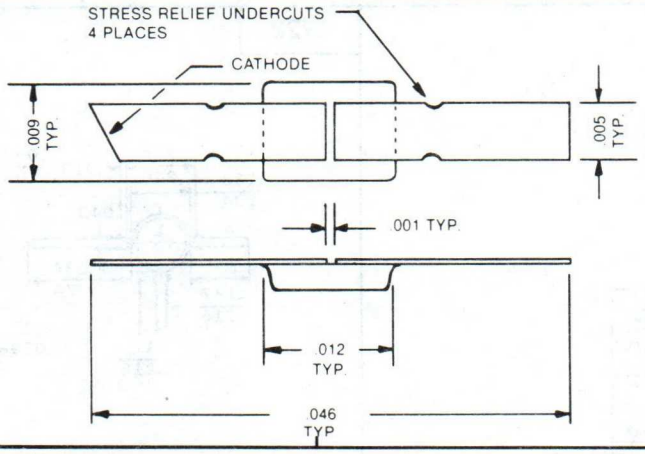

W280

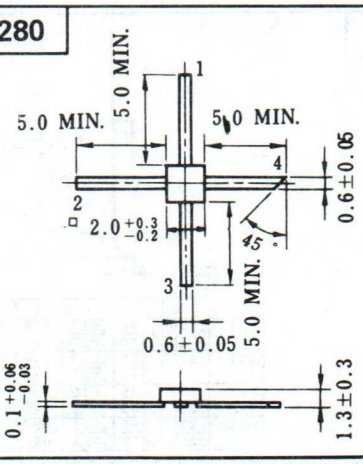

12. OUTLINE DRAWINGS

W14

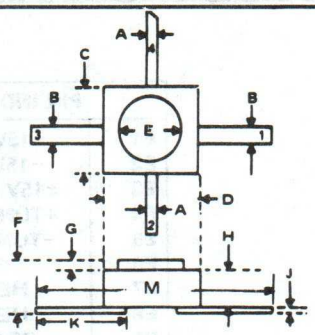

	A	B	C	D	E	F	G	H	J	K	M	REMARKS
W14	.020	.040	.070 TYP	.070 TYP	.070 DIA	NA	NA	.030 TYP	.004	.250 TYP		
W14a	.039	.020	.098	.098	.098	NA	NA	.040	.004		.500	LEAD 1 SLANTED
W14b	.024	.050	.126 .138			.050			.004			
W14c	.015 .023	.035 .043	.092 .104	.092 .104				.039 .051	.002 .004		.432 .510	

W15

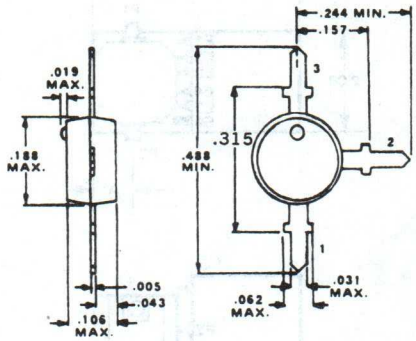

W16

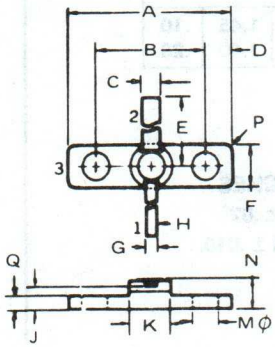

	A	B	C	D	E	F	G	H	J	K	M	N	P	Q
W16	.800 TYP	.560 TYP	.080 TYP	.120 TYP	.300 TYP	.200 TYP	.040 TYP	.004 TYP	.125 TYP	.220 .230	.120 TYP	.150 TYP	.310 TYP	
W16a	.825 MAX	.531 .570	.078 .098	.295 MAX		.275 MAX	.059 MAX					.196 MAX		.078 MAX

W17

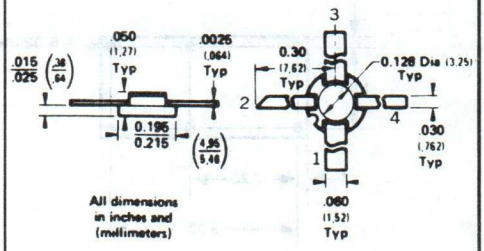

W18

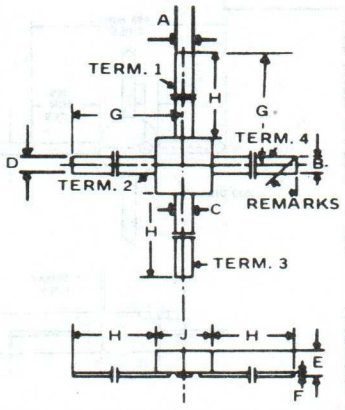

	A	B	C	D	E	F	G	H	J	REMARKS
W18	.021 .026	.021 .026	.021 .026	.021 .026	.035 .060	.002 .007		.196	.066 .093	LEAD 4 SLANTED 45°
W18a	.019	.019	.019	.019	.055	.003	.157		.068	LEAD 2 SLANTED
W18b	.062	.019	.062	.019	.055 MAX	.003	.157 MIN	.216 MIN	.098	LEAD 2 SLANTED 45°
W18c	.021 .025	.021 .025	.021 .025	.021 .025	.039 .063	.002 .006		.196	.070 .090	LEAD 4 SLANTED 45°

W21

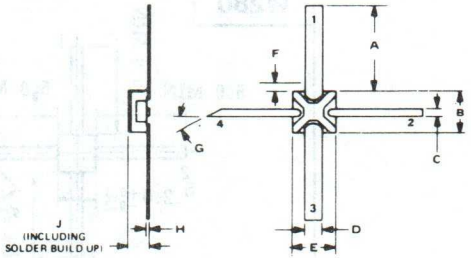

	A	B	C	D	E	F	G	H	J
W21	.200 MIN	.090 .110	.017 .023	.036 .042	.090 .110	.020	30°	.003 .006	.050 MAX
W21a	.275	.131 .143	.023 .031	.074 .082	.131 .143		45°	.003	.059
W21b	.230 .280	.095 .105	.016 .074	.036 .044	.095 .105			.002 .006	.050 MAX
W21c	.230 .280	.065 .075	.016 .024	.036 .044	.065 .075			.002 .006	.050 MAX

W22

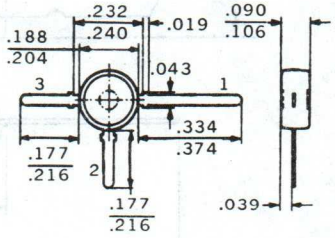

12. OUTLINE DRAWINGS

W23

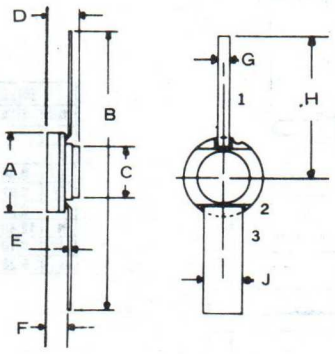

	A	B	C	D	E	F	G	H	J
W23	.225 .235	.740 .760	.160 .180	.085 .115	.005	.064	.028 .032	.370 .380	.113 .117
W23a	.225 .235	.935 MAX	.175 .185	.090 .100	.003 .006	.060 .070	.045 .055		.115 .125

W24

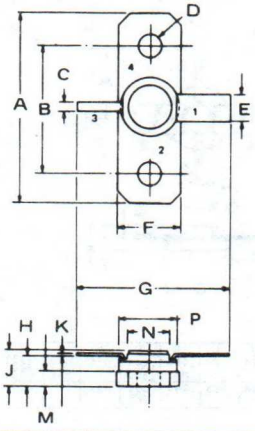

	A	B	C	D	E	F	G	H	J	K	M	N	P
W24	.790 .810	.557 .567	.028 .032	.120 .132	.113 .117	.240 .260	.740 .760	.120 .140	.155 .165	.005	.055 .065	.160 .180	.225 .240
W24a	.795 .810	.560	.045 .055	.128 .132	.115 .125	.245 .255	.935 MAX	.115 .135	.145 .165	.003 .006	.055 .065	.175 .185	.225 .235

W26

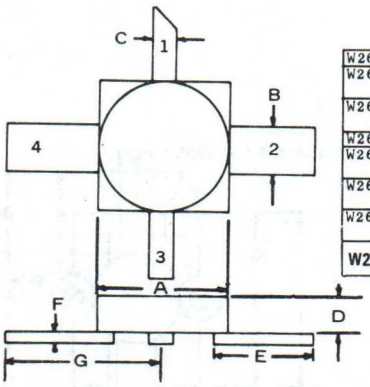

	A	B	C	D	E	F	G	REMARKS
W26	.070	.040	.020	.030	.250	.004		LEAD 1 ANGLES
W26a	.099 .101	.040	.020	.046	.130 MIN	.004		LEAD 4 ANGLES
W26b	.062 .078	.020 TYP	.030 TYP	.030 .033		.004 TYP		LEAD 2 ANGLES
W26c	.098	.039	.019	.039		.003		LEAD 1 ANGLES
W26d	.090 .114	.390 .396	.016 .022	.039 .066	.196 MIN	.002 .004		LEAD 1 ANGLES
W26e	.092 .104	.037 .041	.018 .022	.046 MAX		.003 .006	.180 .220	LEAD 1 ANGLES
W26f	.100 TYP	.040	.020	.025 TYP		.004	.232 TYP	LEAD 1 ANGLES
W26g	**.044 .056**	**.026 .030**	**.008 .012**	**.016 .024**	**.25 TYP.**	**.0005 .0045**		

W29

	A	B	B1	C	D	ØD	E	L	M
W29	.053 MAX	.043 MAX	.023 MAX	.002 .006	.104 MAX	.102 MAX	.104 MAX	.129 .169	.005 MIN
W29a	.035 .055	.035 .043	.016 .024	.003 .006	.090 .105		.090 .105	.175 .178	
W29c	.039 .067	.035 .043	.017 .022	.004	.090 .114	.085 .108	.090 .114	.196 MIN	
W29d	.050 TYP	.040 TYP	.020 TYP	.004 TYP	.090 .110		.090 .110	.130 MIN	
W29e	.050 MAX	.036 .043	.016 .024	.002 .006	.095 .105		.095 .105	.230 .280	
W29f	.050 MAX	.036 .043	.016 .024	.002 .006	.065 .075		.065 .075	.230 .280	
W29g	.041 .043	.040 TYP	.020 TYP	.004 TYP	.090 .110		.090 .110	.125 MIN	
W29h	.040 MAX	.038 .042	.018 .022	.004 TYP	.064 .076	.067	.064 .076	.173 TYP	
W29j	.049 MAX	.037 .041	.018 .022	.004 TYP	.092 .104	.098	.092 .104	.150 TYP	

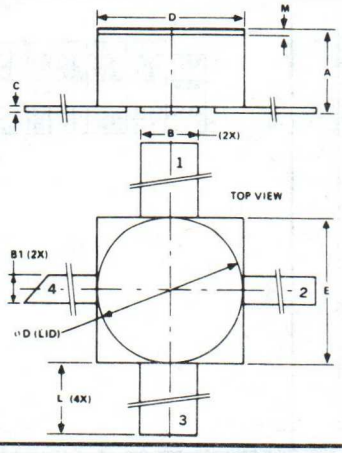

W30

DIM	MILLIMETERS		INCHES	
	MIN	MAX	MIN	MAX
A	24.51	25.15	0.965	0.990
B	9.47	9.73	0.373	0.383
C	5.97	7.62	0.235	0.300
D	17.78	19.30	0.700	0.760
E	2.16	2.67	0.085	0.105
F	4.32	4.57	0.170	0.180
H	18.29	18.54	0.720	0.730
J	0.10	0.15	0.004	0.006
K	12.19	12.70	0.480	0.500
L	3.05	3.30	0.120	0.130
N	6.86	7.11	0.270	0.280
Q	2.79	3.18	0.110	0.125
R	6.10	6.60	0.240	0.260
S	2.67	3.05	0.105	0.120
U	1.65	1.91	0.065	0.075

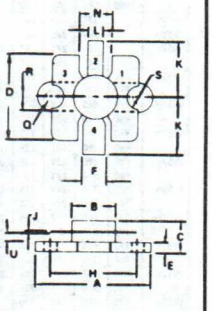

NOTE
1 DIM "Q" IS DIA
DIM "S" IS RAD

12. OUTLINE DRAWINGS

W32

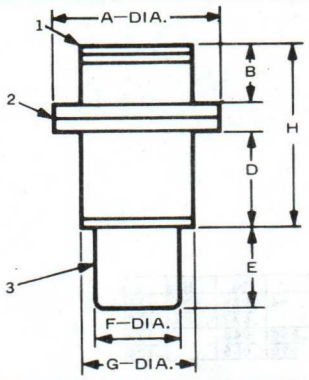

	A	B	C	D	E	F	G	H
W32	.120	.045	.135	.067	.062	.062	.080	
W32a		.047	.136	.067	.062	.060	.080	.198

W33

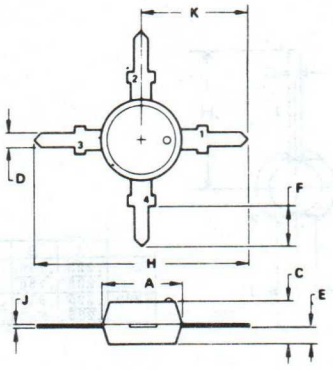

DIM	MILLIMETERS MIN	MILLIMETERS MAX	INCHES MIN	INCHES MAX
A	–	4.78	–	0.188
C	–	3.05	–	0.120
D	0.64	0.89	0.025	0.035
E	0.97	1.22	0.038	0.048
F	2.21	2.46	0.087	0.097
H	12.40	12.90	0.488	0.508
J	0.10	0.15	0.004	0.006
K	6.20	6.45	0.244	0.254

W36

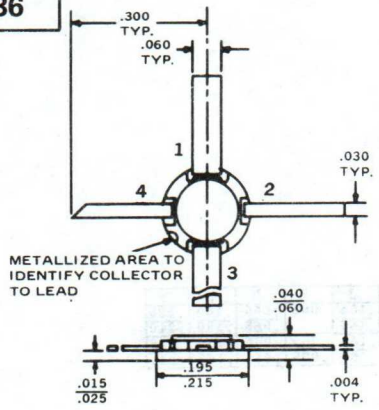

W45

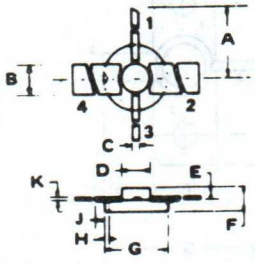

	A	B	C	D	E	F	G	H	J	K
W45	.438	.125	.030	.110	.030	.060 MAX	.204 .206	.015	.050 MAX	.004 .006
W45a	.300 MIN	.060	.030	.128	.025	.045	.204 .206	.015		.004

W52

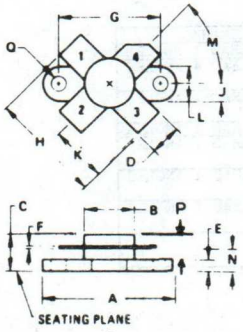

	A	B	C	D	E	F	G	H	J	K	L	M	N	P	Q
W52	.970	.375	.239	.220	.085	.004	.720	.790	.122	.390	.245	40°			.117
	.980	.383	.281	.230	.105	.006	.730	.810	.127	.410	.255	50°			.123
W52a	.970	.465	.229	.085	.084	.004	.720	1.40	.122	.700	.245	40°			.117
	.980	.475	.265	.155	.100	.006	.730	1.50	.127	.750	.255	50°			.123
W52b	.970	.373	.239	.220	.085	.004	.720	.850	.123	.425	.245	40°	.150		.117
	.980	.383	.281	.230	.105	.006	.730	.870	.127	.435	.255	50°	.180		.123
W52c		.375	.260	.225	.100	.005	.725				.250	45°	.160	.160	.125
W52d		.500	.285	.225	.125	.005	.725				.250	45°	.165	.160	.125
W52e		.450	.244	.221	.085	.004	.720	1.05			.245	40°	.145	.159	.122
		.510	.286	.229	.105	.006	.730	1.06			.255	50°	.175	.181	.127
W52f	.970	.464	.229	.085	.083	.003	.720	1.39	.122	.699	.244	40°	.144		.116
	.979	.509	.264	.155	.100	.005	.729	1.49	.127	.749	.255	50°	.170		.122
W52g	.970	.465	.229	.085	.084	.004	.720	1.400	.122	.700	.245	40°	.144	.145	.115
	.980	.510	.275	.155	.100	.006	.730	1.500	.127	.750	.255	50°	.178	.175	.125
W52h	.970	.370	.229	.215	.085	.004	.720	.850	.122	.425	.245	40°	.150	.144	.113
	.980	.390	.281	.235	.105	.006	.730	.870	.127	.435	.255	50°	.180	.176	.130
W52i	.970	.490	.229	.240	.085	.004	.720	.970	.122	.485	.245	40°	.150	.144	.113
	.980	.510	.281	.260	.105	.006	.730	1.030	.127	.515	.255	50°	.180	.176	.130
W52k	.970	.370	.229	.215	.085	.004	.720	.790	.122	.395	.245	40°	.150		.113
	.980	.390	.281	.235	.105	.006	.730	.810	.127	.405	.255	50°	.180		.130
W52m	.970	.465	.229	.085	.084	.003	.720			.700	.245	45°	.144		.115
	.980	.510	.275	.155	.110	.007	.730			MIN	.255	NOM	.178		.130
W52n	.970	.495	.229	.216	.084	.003	.720	.870	.123	.435	.246	45°	.144	.145	.115
	.980	.510	.275	.235	.110	.007	.730	MIN	.127	MIN	.255	NOM	.178	.175	.130
W52p	.970	.464	.229	.216	.084	.003	.720			.435	.246	45°	.144		.115
	.980	.510	.275	.235	.110	.007	.730			MIN	.255	NOM	.178		.130
W52q	.975	.490	.250	.120			.725	1.450			.250	45°	.190		.120
W52r		.480	.248	.218	.106	.004	.718	1.00			.240		.150		.122
		.520	.287	.222	.130	.008	.730				.256		.181		.130
W52s	.963	.386	.256	.216	.086	.004	.719	1.03				45°	.162		.122
	.986	MAX	.276	.232	.110		.730	1.09					.182		.130
W52t	.970	.495		.220	.095	.004	.720	1.085		.390	.245		.160		.115
	.980	.505	.300	.230	.105	.006	.730	1.115		.410	.255		.170		.130

W55

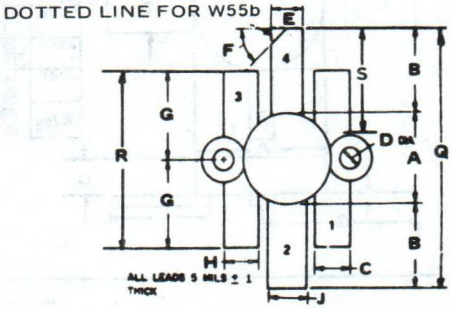

	A	B	C	D	E	F	G	H	J	K	M	N	P	Q	R	S
W55	.475 .525	.465 .485	.195 .205	.120 .130	.170 .190	40° 50°	.480 .500	.195 .205	.220 .230	.260 .280	.120 .130	.720 .730	.160 .175			
W55a				.117	.205		.490	.215	.155	.300 MAX	.100	.735	.160 .175		.980	.602
W55b	.456 .496	.720 .760	.204 .226	.078 .118	.148 .168	NA	.476 .511	.204 .226	.192 .216		.094 .110	.716 .740	.145 .169			

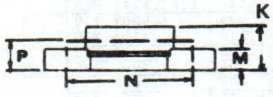

12. OUTLINE DRAWINGS

W56

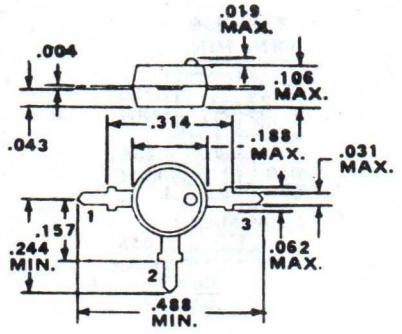

W65

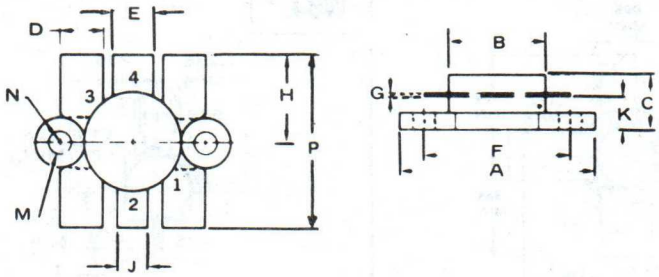

	A	B	C	D	E	F	G	H	J	K	M	N	P
W65	.960	.490	.235	.210	.220	.718	.004	.420	.175	.160	.115	.120	.840
	.990	.510	.300	.220	.230	.732	.006	.430	.185	.175	.125	.130	.860
W65a	.960	.490	.235	.215	.200	.720	.004	.420	.150	.150	.115	.120	.840
	.990	.510	.300	TYP	.210	.730	.006	.430	.160	.170	.130	.130	.866
W65b		.500	.270	.200	.225	.725		.375	.180		.125		75C
		NOM		NOM	NOM			NOM	NOM		NOM		NOM
W65C	.960	.490	.235	.210	.200	.720	.004	.405	.150	.150	.115	.120	
	.990	.510	.300	.220	.210	.730	.006	MIN	.160	.170	.130	.130	
W65d	.970	.495	.300		.200	.720	.004	.405	.150	.160	.115		.810
	.980	.505			.210	.730	.006		.160	.180	.113		

W66

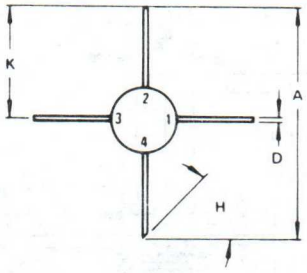

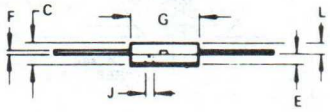

	A	C	D	E	F	G	H	J	K	L
W66	1.328	.110	.025	.055	.013	.275	40°	.027	.664	.055
	1.428	.130	.035	.065	.017	.290	50°	.033	.714	.065
W66a		.095	.055	.040	.003	.200	45°		.435	.040
		.130	.065	.050	.007	.220	NOM		MIN	.050
W66b	.669	.590	.027	.545	.009	.153			.216	.354
	MIN		MAX		MAX	.161			MIN	MAX

W69

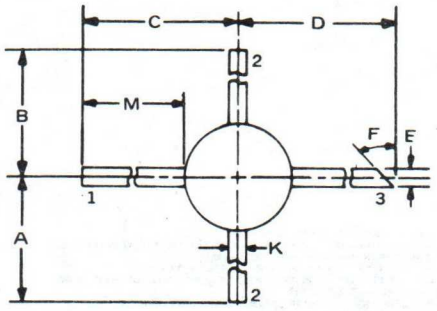

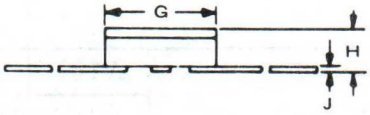

	A	B	C	D	E	F	G	H	J	K	M
W69c	.200	.200	.200	.200	.020	45°	.062	.031	.004	.030	
	TYP	TYP	TYP	TYP	TYP		.078	TYP	TYP	TYP	
W69e	.157	.157	.157	.157	.020	45°	.070	.039	.004	.030	
	MIN	MIN	MIN	MIN				MAX			

W77

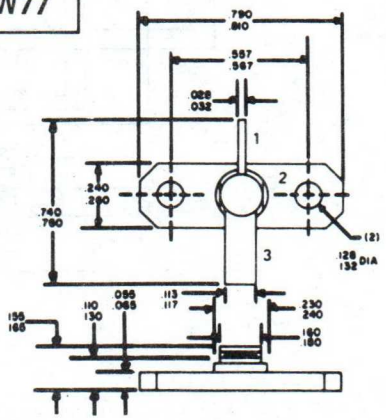

W78

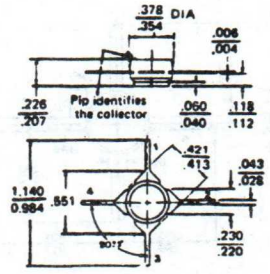

12. OUTLINE DRAWINGS

W80

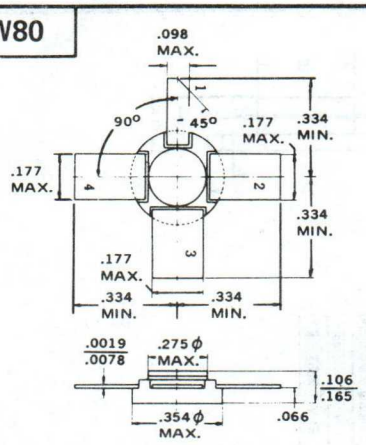

W84

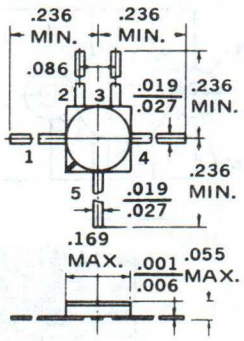

W85

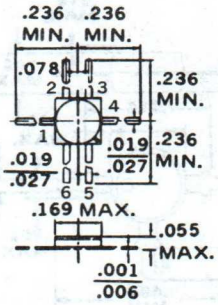

W86

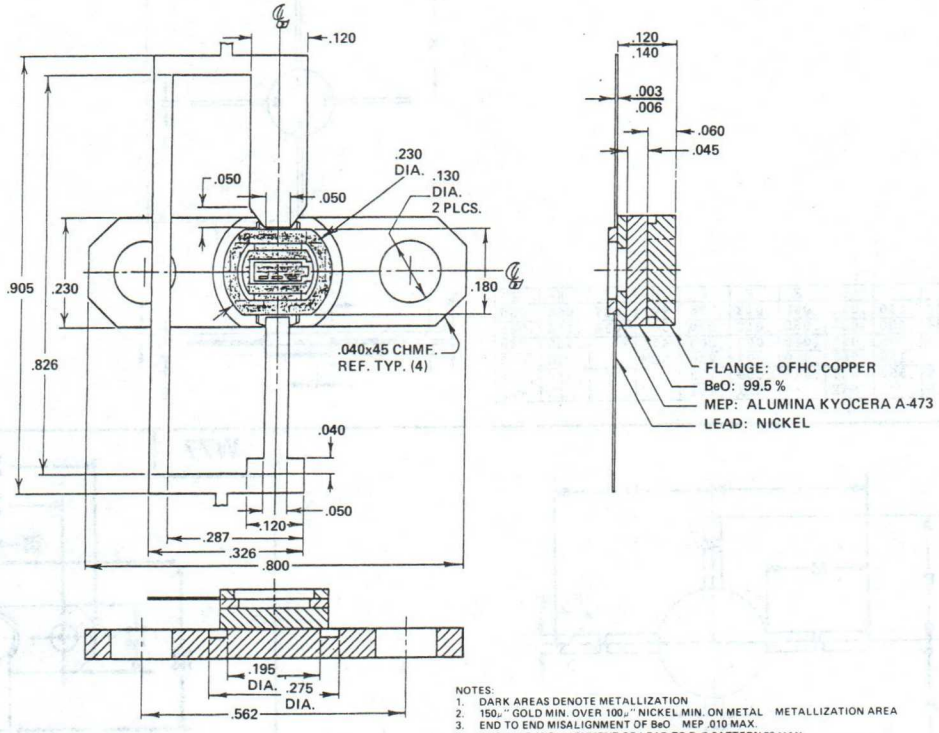

NOTES:
1. DARK AREAS DENOTE METALLIZATION
2. 150μ" GOLD MIN. OVER 100μ" NICKEL MIN. ON METAL METALLIZATION AREA
3. END TO END MISALIGNMENT OF BeO MEP .010 MAX.
4. ANGULAR MISALIGNMENT OF LEAD TO BeO PATTERN 5° MAX.
5. INSIDE BRAZE FILLETS BETWEEN BeO MEP .010 R. MAX. WITH UNIFORM FLOW OF BRAZE MATERIAL BEYOND .010
6. LEAD FRAME POSITION IS VENDOR OPTION, EITHER LEFT OR RIGHT
7. LEAD PULL STRENGTH AT 90o 2 LBS. MIN.
8. PLATING MUST STAND 420°C IN NITROGEN FOR 4 MINUTES WITHOUT BLISTERING, FLAKING OR DISCOLORATION

W97

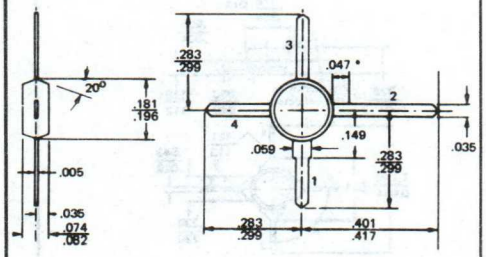

* SOLDERABILITY NOT GUARANTEED IN THIS AREA

W100

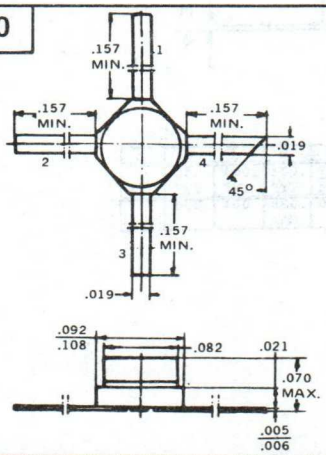

W101

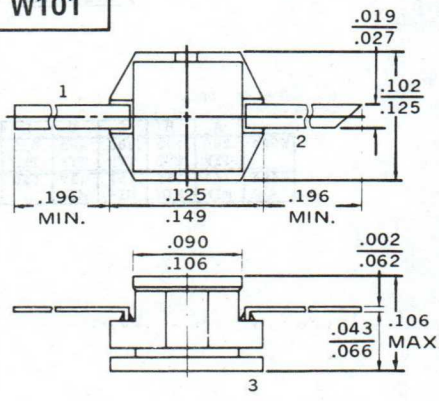

12. OUTLINE DRAWINGS

W102

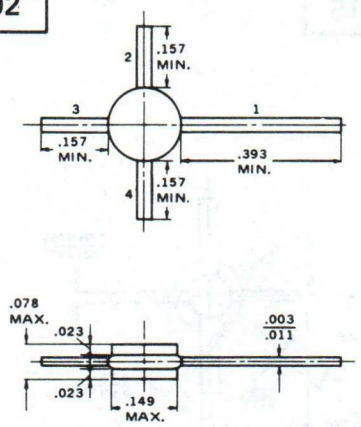

W103

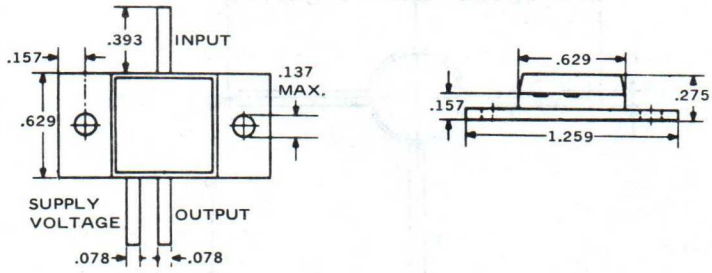

W104

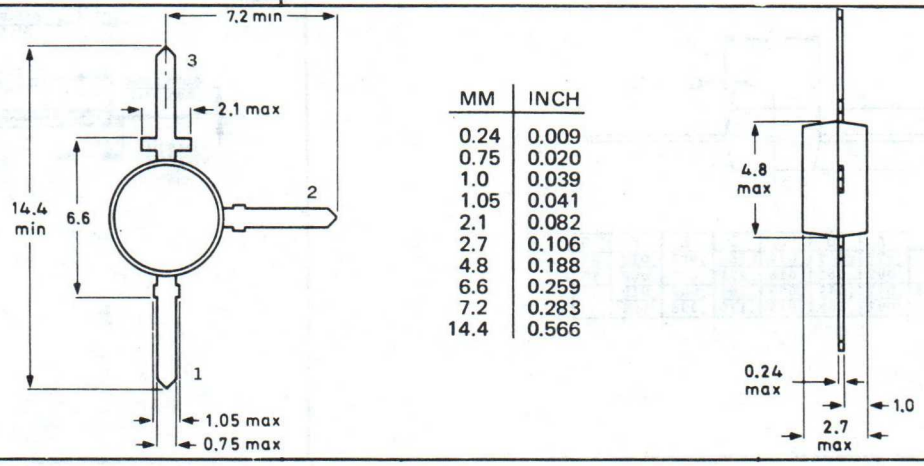

MM	INCH
0.24	0.009
0.75	0.020
1.0	0.039
1.05	0.041
2.1	0.082
2.7	0.106
4.8	0.188
6.6	0.259
7.2	0.283
14.4	0.566

W106

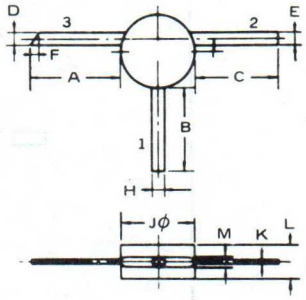

	A	B	C	D	E	F	G	H	J	K	L	M
W106	.157 MIN	.157 MIN	.157 MIN	.023	.023	.013	.023	.023	.149 MAX	.003	.078 MAX	.023

W108

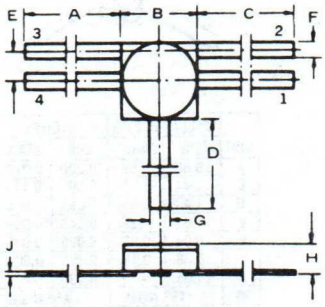

	A	B	C	D	E	F	G	H	J
W108	.196 MIN	.129 .149	.196 MIN	.196 MIN	.045 .053	.019 .027	.019 .027	.078 MAX	.002 .004

W109

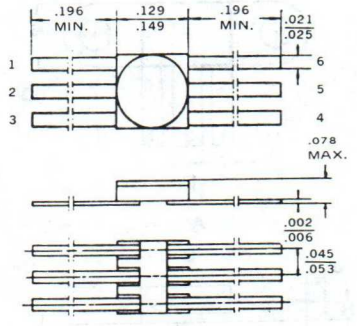

12. OUTLINE DRAWINGS

W110

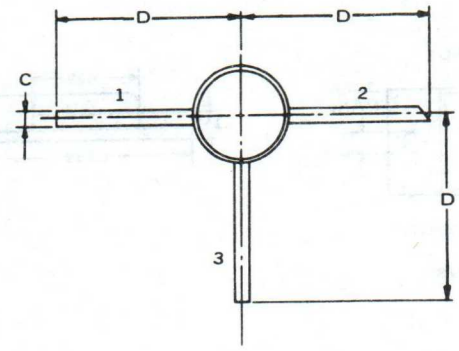

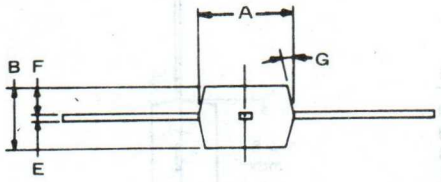

	A	B	C	D	E	F	G
W110	.077 .092	.047 .062	.012 .013	.160 .171	.003 .007	.018 .030	3° 7°
W110a	.077 .092	.047 .059	.009 .016	.164 .175	.003 .006	.019 .024	

W115

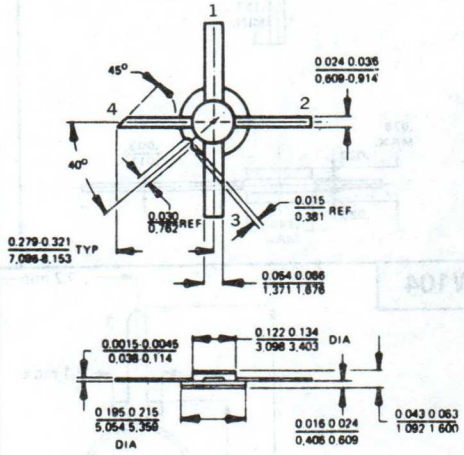

W116

	A	B	C	D	E	F	G
W116	.196 MIN	.130 .150	.070 .090	.004	.047 .070	.035 .043	
W116a	.158 MIN	.157 .177	.070 .090	.004	.055 .075	.020 .028	
W116b	.196 MIN	.150 MAX	.070 .090	.004	.079 MAX	.035 .043	
W116c		.098	.039	.002	.047	.019	.551 MIN

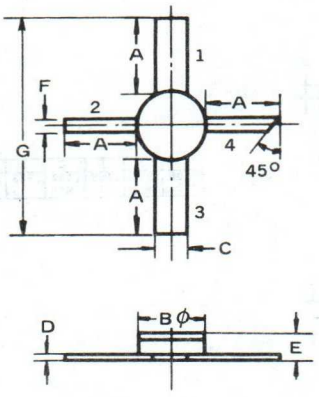

W124

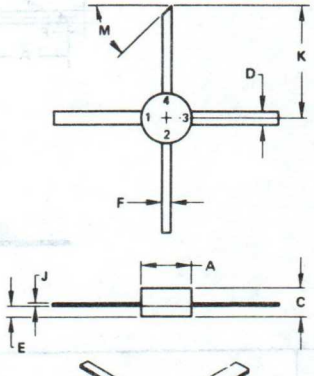

DIM	MILLIMETERS		INCHES	
	MIN	MAX	MIN	MAX
A	5.08	5.59	0.200	0.220
C	2.41	3.30	0.095	0.130
D	1.40	1.65	0.055	0.065
E	1.02	1.27	0.040	0.050
F	0.64	0.89	0.025	0.035
J	0.08	0.18	0.003	0.007
K	11.05	–	0.435	–
M	45° NOM		45° NOM	

W125

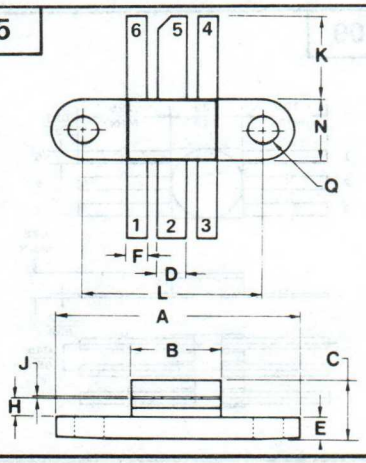

DIM	MILLIMETERS		INCHES	
	MIN	MAX	MIN	MAX
A	25.15	25.65	0.990	1.010
B	8.76	9.02	0.345	0.355
C	5.72	6.48	0.225	0.255
D	2.92	3.18	0.115	0.125
E	2.29	2.54	0.090	0.100
F	1.78	2.03	0.070	0.080
H	1.65	1.90	0.065	0.075
J	0.10	0.15	0.004	0.006
K	7.87	8.64	0.310	0.340
L	18.42	BSC	0.725	BSC
N	6.22	6.48	0.245	0.255
Q	3.05	3.30	0.120	0.130

12. OUTLINE DRAWINGS

W127

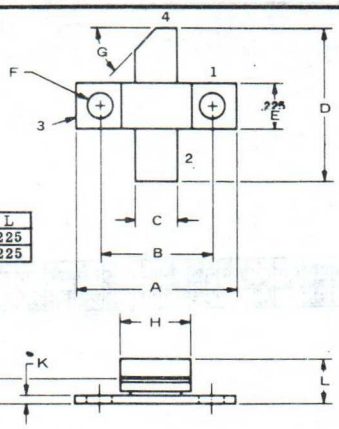

	A	B	C	D	E	F	G	H	J	K	L
W127	.800	.560	.215	.700	.225	.125	45°	.350	.135	.040	.225
W127a	.800	.560	.215	.750	.225	.125	45°	.355	.120	.060	.225

W128

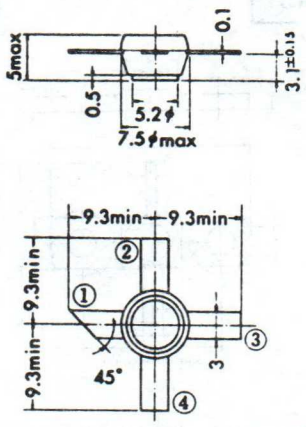

W131

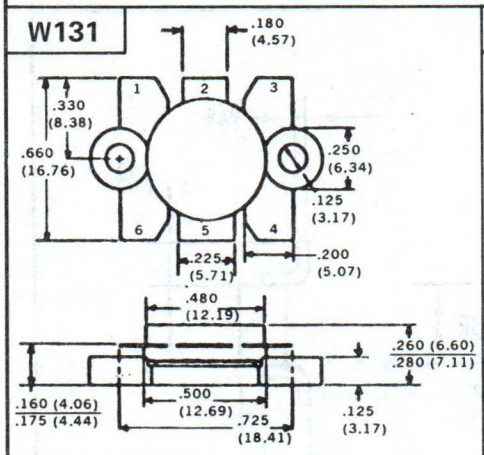

W132

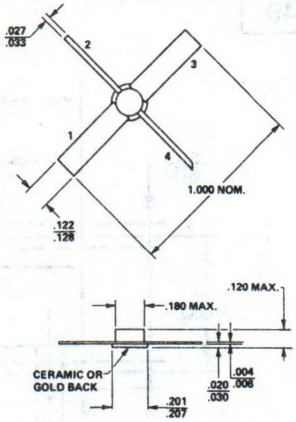

W133

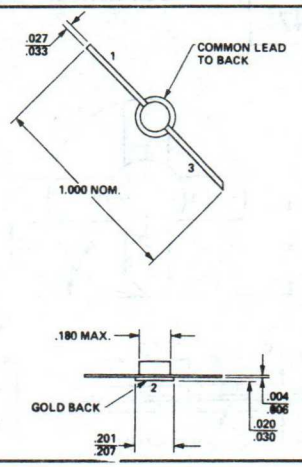

W134

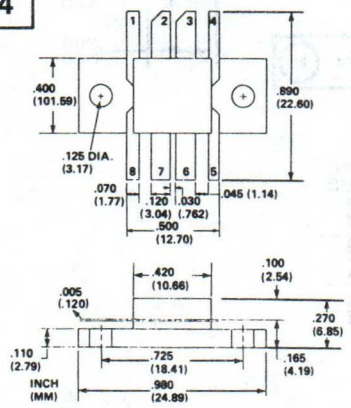

W135

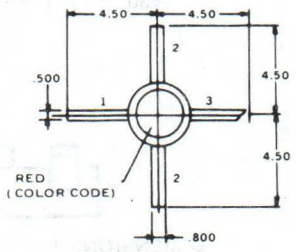

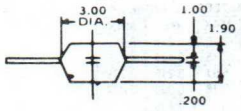

W138

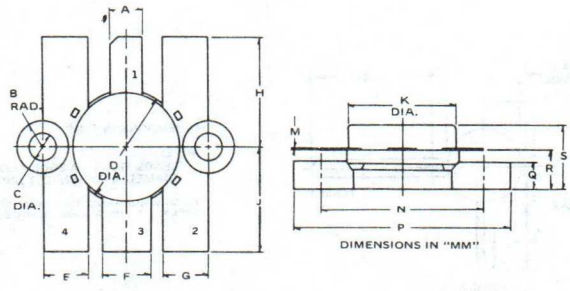

	A	B	C	D	E	F	G	H	J	K	M	N	P	Q	R	S
W138	4.00	3.10	3.10	18.7	5.00	5.60	5.00	12.0	13.0	13.0	.100	18.4	24.6	3.00	4.80	6.60
W138a	4.50	3.10 3.30	2.80 3.30	13.6	5.50	6.00	5.50	11.0	11.0	13.0	.100	17.8 18.9	25.5	3.50	4.70	7.00

W144

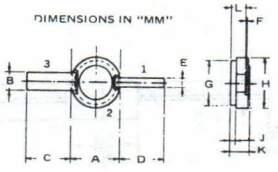

	A	B	C	D	E	F	G	H	J	K	L
W144	5.80 MAX	3.00	4.80 MIN	4.80 MAX	1.00	0.10	5.10	5.70 MAX	0.75 MAX	2.80 MAX	1.30 1.90
W144a	7.00	3.00	4.80 MIN	4.80 MIN	0.75	0.10	5.35	7.00 MAX	0.75 MAX	2.80 MAX	1.30 1.90
W144C	5.44 5.94	3.93	5.08	5.08	0.76	0.08		5.84		2.50	1.68

12. OUTLINE DRAWINGS

W145

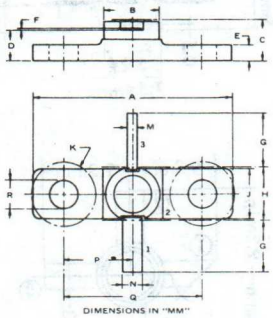

	A	B	C	D	E	F	G	H	J	K	M	N	P	Q	R
W145	20.5 MAX	5.00	4.50 MAX	3.20	1.70 MAX	0.10	4.50 MIN	5.50 MAX	5.10	3.40 MIN	1.00	2.00	7.10	14.2	2.90 / 3.20
W145a	20.5 MAX		4.50 MAX		1.70 MAX		4.50 MIN	7.00	6.35	3.40 MIN	0.65 / 0.85	1.95 / 2.10	7.10 TYP	14.2 TYP	3.10 / 3.40

W146

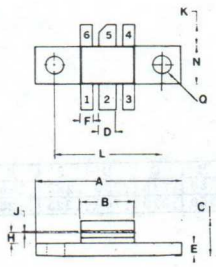

	A	B	C	D	E	F	H	J	K	L	N	Q
W146	.965 / 1.01	.345 / .355	.225 / .255	.115 / .125	.090 / .100	.070 / .080	.065 / .075	.004 / .008	.230 / .270	.725 BSC	.225 / .235	.120 / .130
W146a	.970 / .985	.350 / .370	.245 / .290	.110 / .130	.970 / .985	.060 / .080	.040 / .050	.004 / .008	.150 / .170	.720 / .730	.225 / .235	.120 / .130

W147

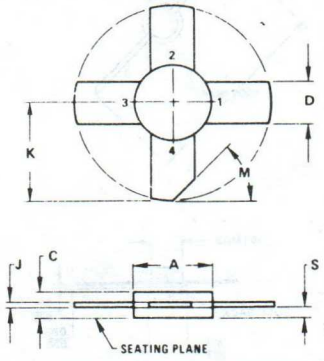

	MILLIMETERS		INCHES	
DIM	MIN	MAX	MIN	MAX
A	7.06	7.26	0.278	0.286
C	2.84	3.45	0.112	0.136
D	5.46	5.97	0.215	0.235
J	0.08	0.18	0.003	0.007
K	11.05		0.435	
M	45° NOM		45° NOM	
S	1.40	1.65	0.055	0.065

W149

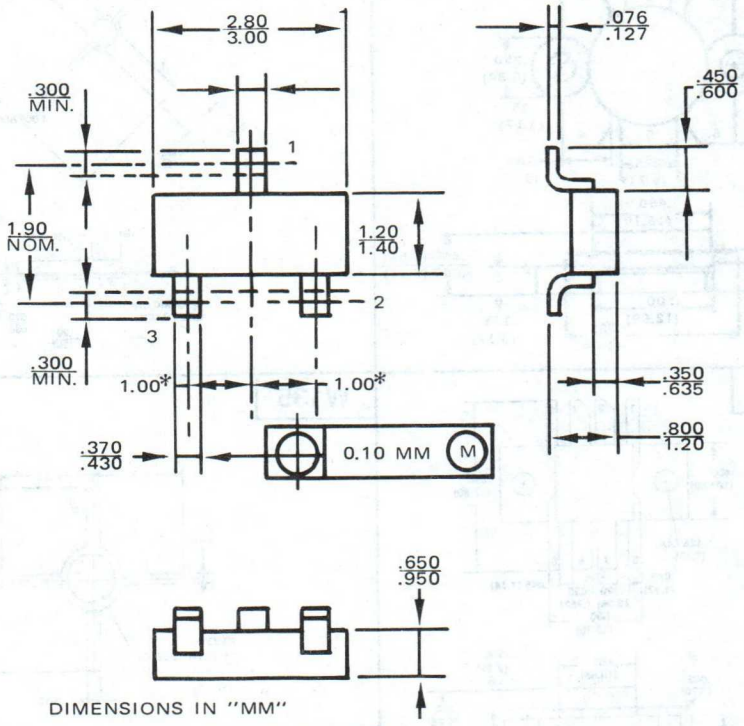

DIMENSIONS IN "MM"

(*) MEANS TRUE GEOMETRICAL POSITION

W150

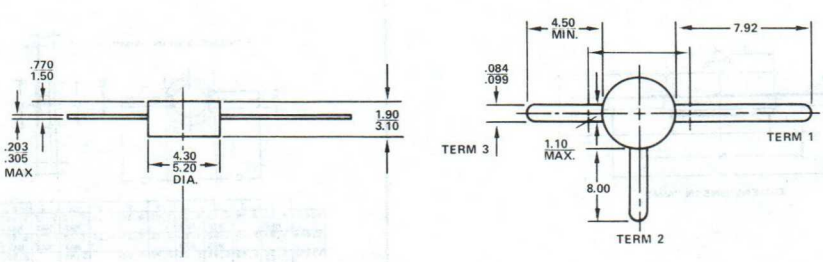

DIMENSIONS IN "MM"

NOTES:

1. LEADS SHALL EMERGE FROM THE BODY DIAMETER WITHIN .800 AND 1.50 MM.
2. MINIMUM AND MAXIMUM DIMENSIONS BOTH APPLY TO THE MAJOR (LARGEST) DIAMETER ONLY.

12. OUTLINE DRAWINGS

W151

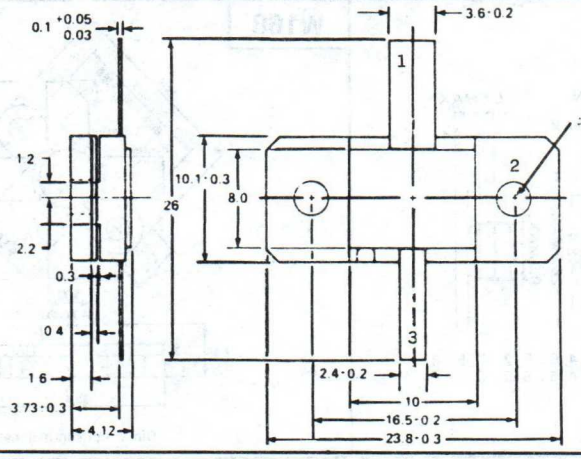

DIMESIONS IN "MM"

W153

DIM	MILLIMETERS MIN	MILLIMETERS MAX	INCHES MIN	INCHES MAX
A	25.15	25.65	0.990	1.010
B	9.52	9.78	0.375	0.385
C	6.73	7.24	0.265	0.285
D	2.41	2.67	0.095	0.105
E	3.05	3.30	0.120	0.130
G	6.35 BSC		0.250 BSC	
H	0.76	1.02	0.030	0.040
J	0.23	0.28	0.009	0.011
K	15.24	16.51	0.600	0.650
L	18.42 BSC		0.725 BSC	
N	8.76	9.02	0.345	0.355
Q	3.05	3.30	0.120	0.130

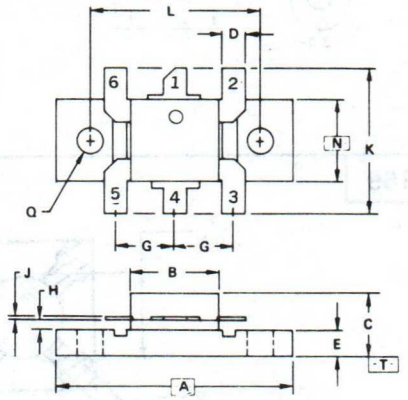

NOTES:
1. DIMENSIONS A AND N ARE DATUMS.
2. T IS SEATING PLANE.
3. POSITIONAL TOLERANCE FOR LEADS:
   ⌖ 0.25 (0.010) M T A M
4. POSITIONAL TOLERANCE FOR MOUNTING HOLES
   ⌖ Ø 0.13 (0.005) M T A M N M
5. DIMENSIONING AND TOLERANCING PER ANSI Y14.5, 1973.

W156

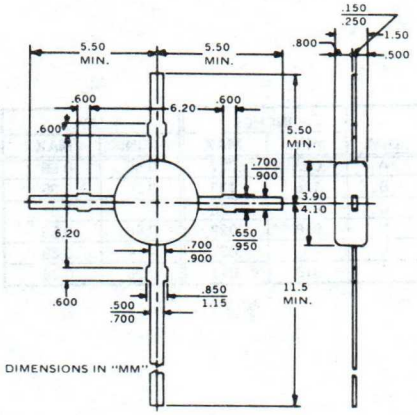

DIMENSIONS IN "MM"

W157

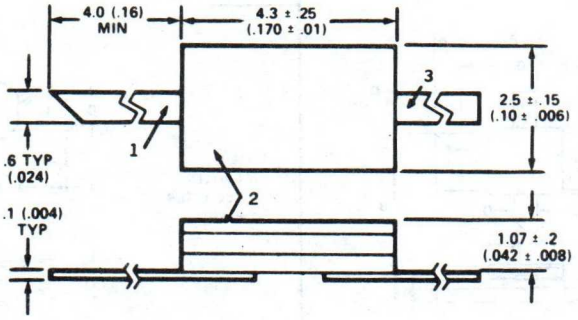

DIMENSIONS IN MILLIMETERS (INCHES)

W160

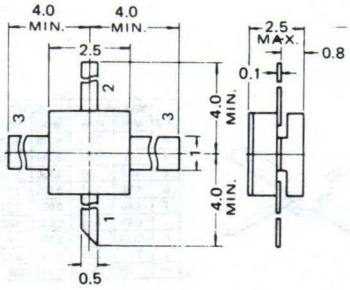

1 : G 2 : D 3 : S

W161

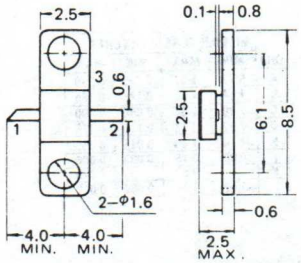

1 : G 2 : D 3 : S

W163

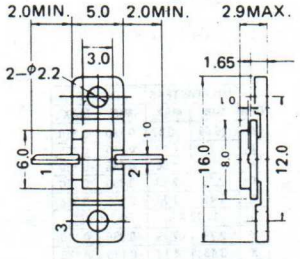

1 : G 2 : D 3 : S

W164

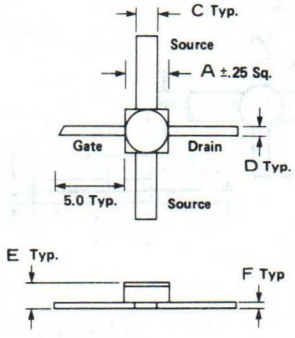

Dimensions in Millimeters

12. OUTLINE DRAWINGS

W166

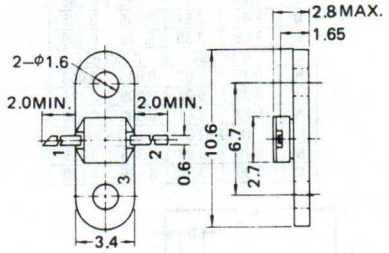

W167

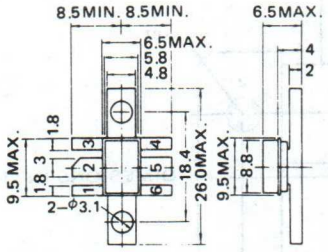

Grounded Emitter 1, 3, 4, 6 : E 2 : C 5 : B
Grounded Base 1, 3, 4, 6 : B 2 : C 5 : E

W168

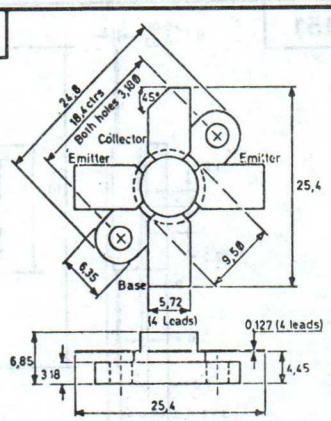

Dimensions in millimetres

W169

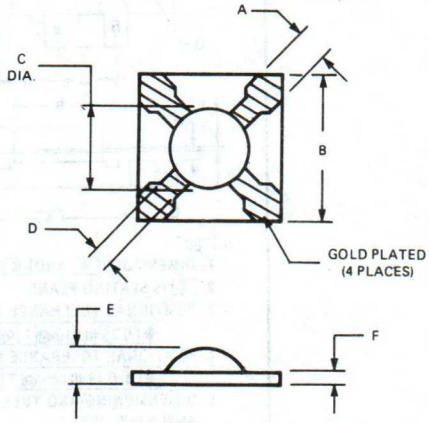

DIM.	INCHES		MM	
	MIN.	MAX.	MIN.	MAX.
A	.023	.027	0,58	0,69
B	.128	.132	3,25	3,35
C	– –	.075	– –	1,91
D	.018	.022	0,46	0,56
E	– –	.035	– –	0,89
F	.010	.011	0,25	0,28

W170

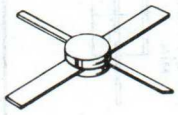

DIM	MILLIMETERS		INCHES	
	MIN	MAX	MIN	MAX
A	7.01	7.62	0.276	0.300
B	6.20	6.50	0.244	0.256
C	3.30	3.81	0.130	0.150
D	4.95	5.21	0.195	0.205
F	1.40	1.78	0.055	0.070
J	0.08	0.18	0.003	0.007
K	15.24	–	0.600	–
L	2.41	2.67	0.095	0.105
M	45° NOM		45° NOM	

NOTES:
1. DIM [A] IS DATUM.
2. POSITIONAL TOLERANCE FOR LEADS:
   Φ | 0.76 (0.030) Ⓜ | T | A Ⓜ
3. [T] IS SEATING PLANE.
4. DIM K APPLIES 2 PLACES.
5. DIMENSIONING AND TOLERANCING PER ANSI Y14.5, 1973.

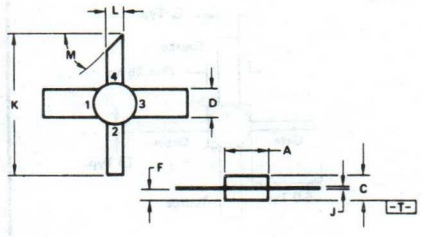

W171

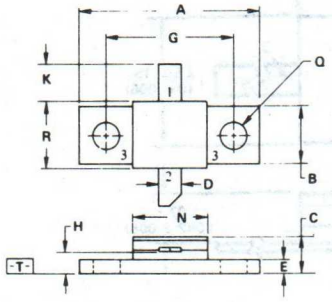

NOTES:
1. DIMENSIONS [A] AND [B] ARE DATUMS.
2. POSITIONAL TOLERANCE FOR MOUNTING HOLES:
   Φ | Ø.13(0.005) Ⓜ | T | A Ⓜ | B Ⓜ
3. [T] IS SEATING PLANE.
4. DIMENSIONING AND TOLERANCING PER ANSI Y14.5, 1973.

DIM	MILLIMETERS		INCHES	
	MIN	MAX	MIN	MAX
A	20.07	20.57	0.790	0.810
B	6.22	6.48	0.245	0.255
C	3.68	4.06	0.145	0.160
D	2.29	2.79	0.090	0.110
E	1.42	1.73	0.056	0.068
G	14.27 BSC		0.560 BSC	
H	2.29	2.79	0.090	0.110
K	3.43	4.19	0.135	0.165
N	7.87	8.38	0.310	0.330
Q	3.05	3.30	0.120	0.130
R	7.24	7.49	0.285	0.295

W172

STYLE 1
1 EMITTER
2 COLLECTOR
3 BASE

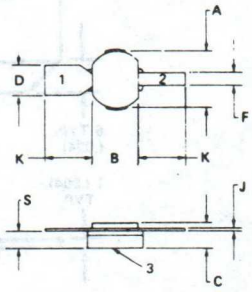

DIM	MILLIMETERS		INCHES	
	MIN	MAX	MIN	MAX
A	5.72	5.97	0.225	0.235
B	4.44	4.70	0.175	0.185
C	2.29	2.54	0.090	0.100
D	2.92	3.18	0.115	0.125
F	1.14	1.40	0.045	0.055
J	0.08	0.15	0.003	0.006
K	–	9.52	–	0.375
S	1.52	1.78	0.060	0.070

12. OUTLINE DRAWINGS

W173

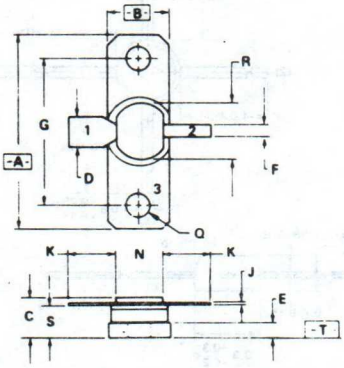

NOTES

1. A AND B ARE DATUMS.
2. T IS SEATING PLANE.
3. POSITIONAL TOLERANCE FOR MOUNTING HOLES: "Q"
   ⌖ 0.15 (0.006) M T A M B M
4. DIMENSIONING AND TOLERANCING PER ANSI Y14.5, 1973.

DIM	MILLIMETERS MIN	MILLIMETERS MAX	INCHES MIN	INCHES MAX
A	20.19	20.57	0.795	0.810
B	6.22	6.48	0.245	0.255
C	3.68	4.19	0.145	0.165
D	2.92	3.18	0.115	0.125
E	1.40	1.65	0.055	0.065
F	1.14	1.40	0.045	0.055
G	14.22 BSC		0.560 BSC	
J	0.08	0.15	0.003	0.006
K	–	9.52	–	0.375
N	4.44	4.70	0.175	0.185
Q	3.25	3.35	0.128	0.132
R	5.72	5.97	0.225	0.235
S	2.92	3.43	0.115	0.135

W174

Dimensions in mm

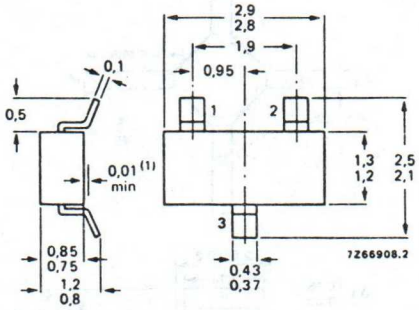

(1) between case and substrate after soldering

W175

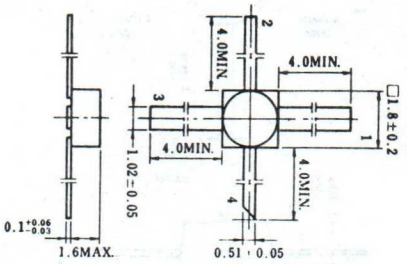

W177

(Unit : mm)

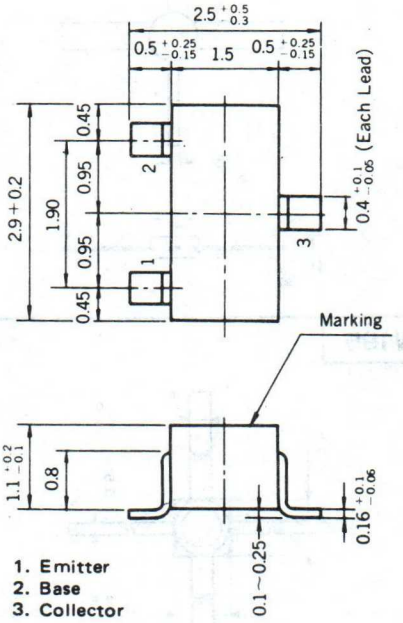

1. Emitter
2. Base
3. Collector

W178

in millimeters (inches)

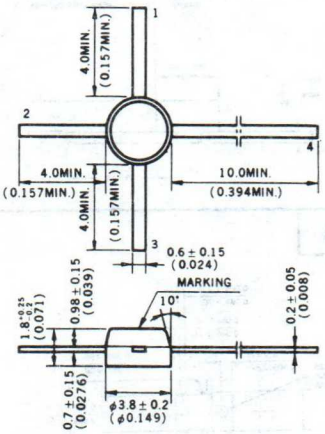

W179

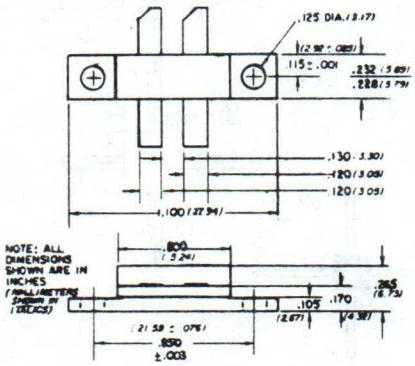

W180

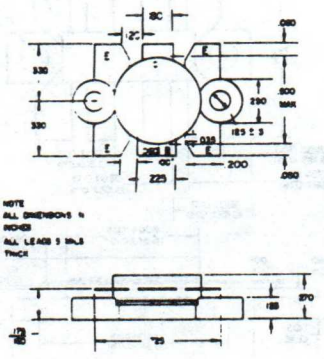

W181

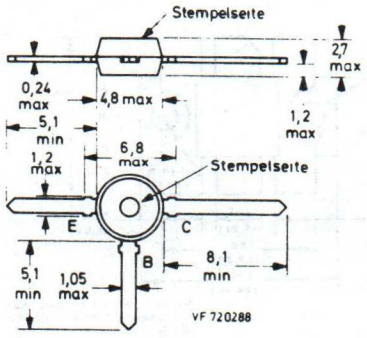

W183

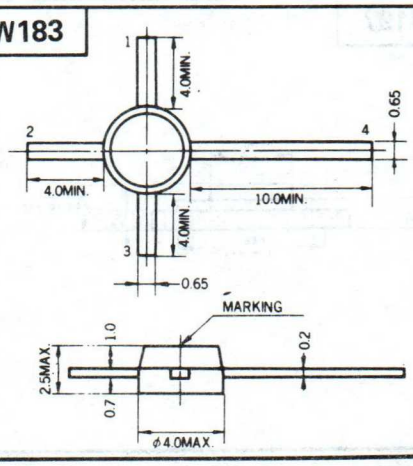

12. OUTLINE DRAWINGS

W184

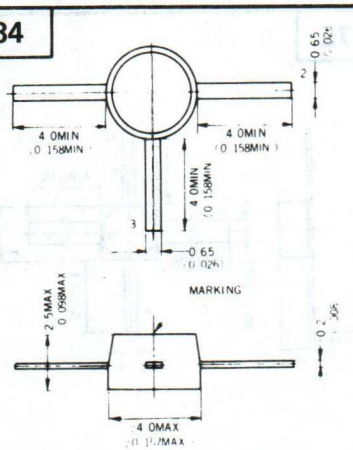

W185

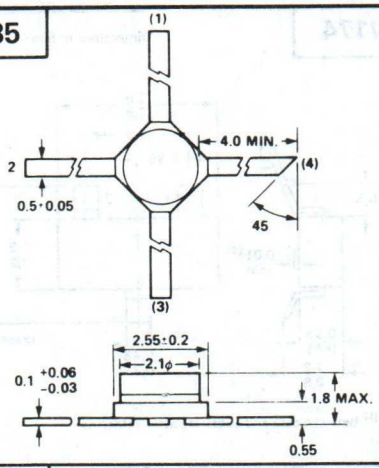

W186

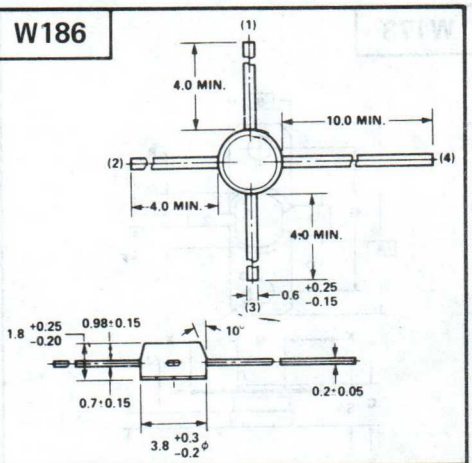

W191

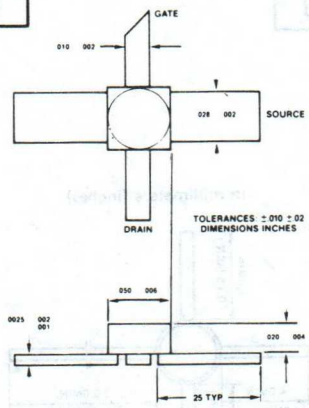

W192

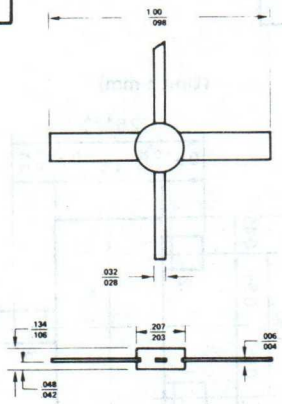

W193

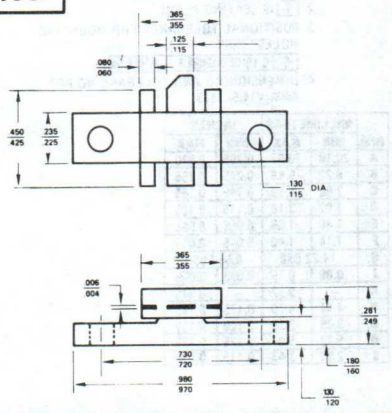

W194

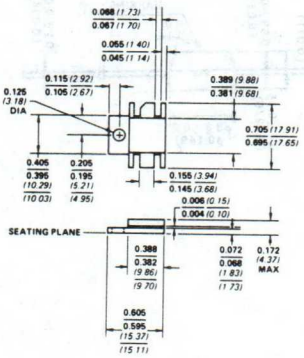

W195

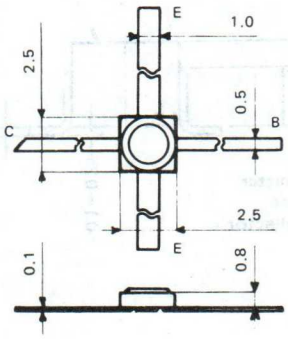

W196

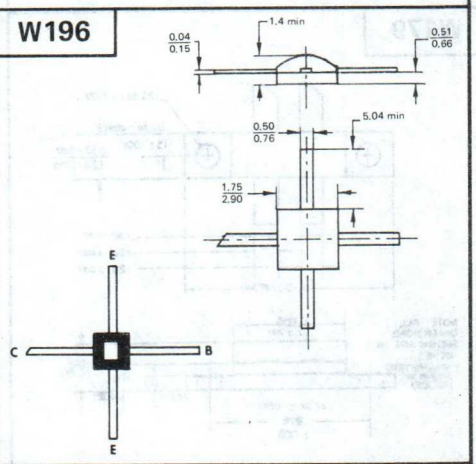

W197

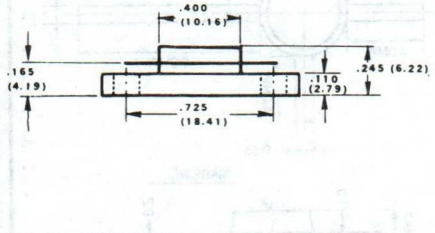

NOTES: All dimensions shown are in inches + 10 mils. Millimeters shown in ( ).
Leads are 5 mils + 2 mils thick.

W198

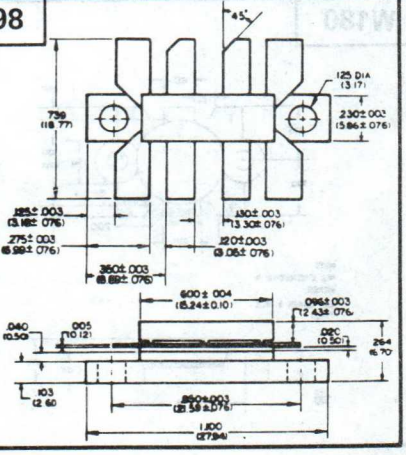

12. OUTLINE DRAWINGS

W19

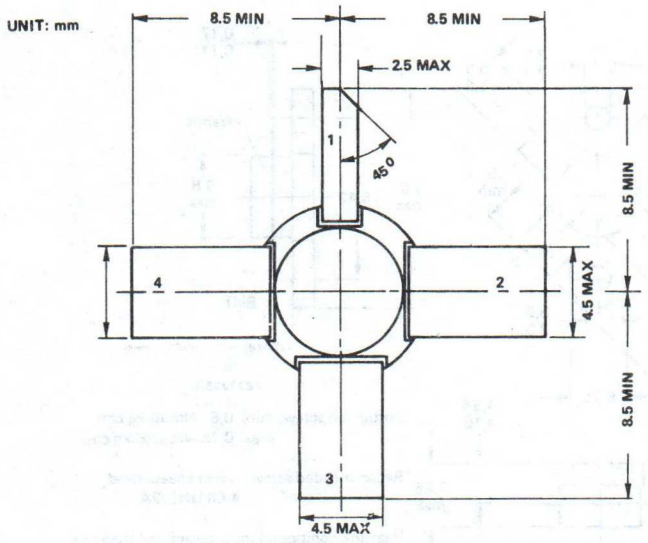

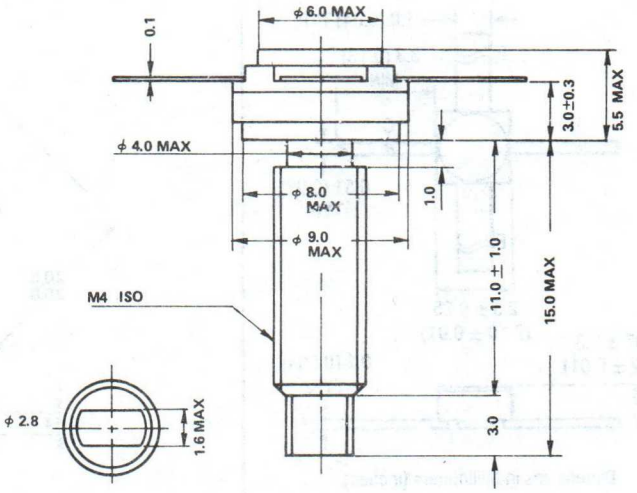

W201

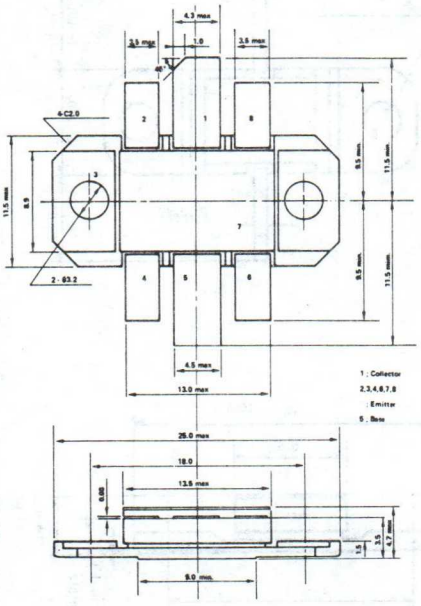

W202

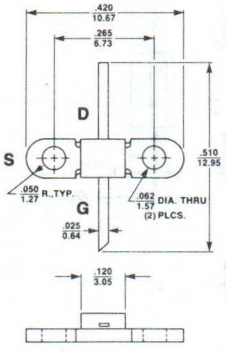

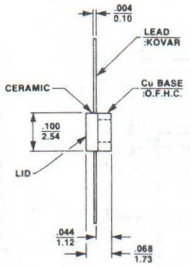

W203

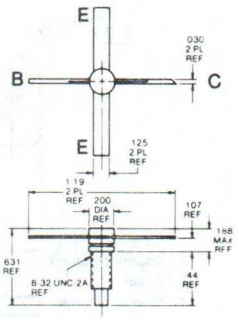

W204

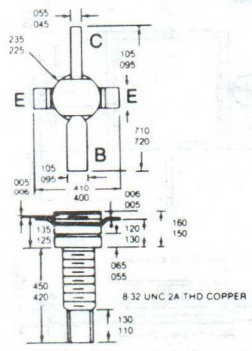

12. OUTLINE DRAWINGS

W205

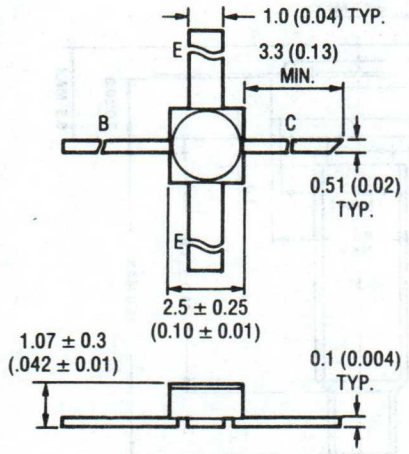

Dimensions in Millimeters (Inches).

W206

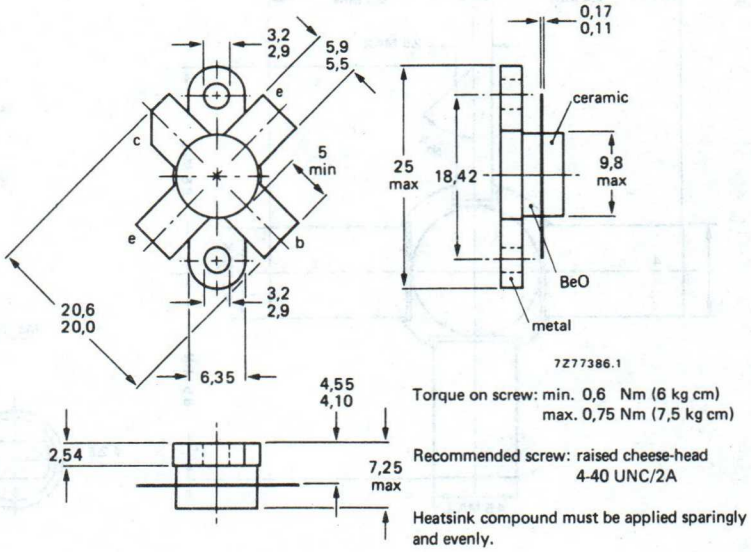

Torque on screw: min. 0,6 Nm (6 kg cm)
max. 0,75 Nm (7,5 kg cm)

Recommended screw: raised cheese-head
4-40 UNC/2A

Heatsink compound must be applied sparingly and evenly.

W207

CASE STYLE "ME"
Metal-Ceramic Hermetic Package

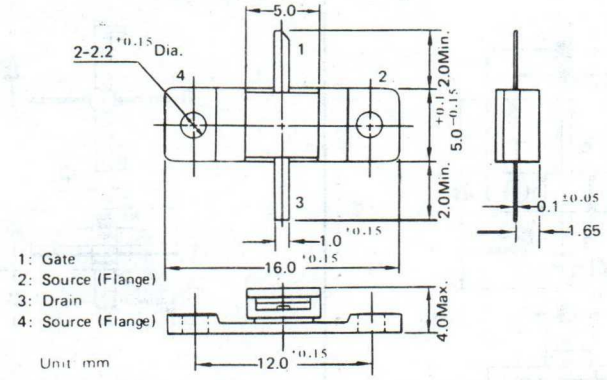

W208

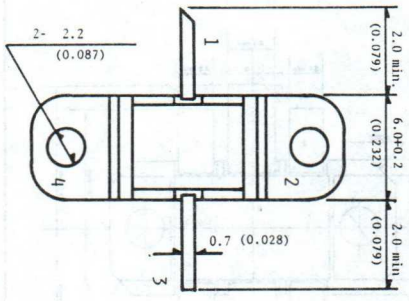

W209

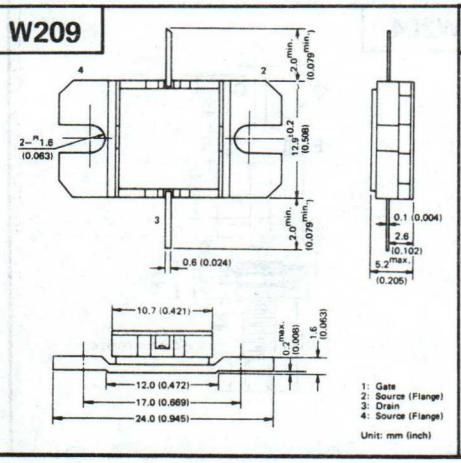

W210

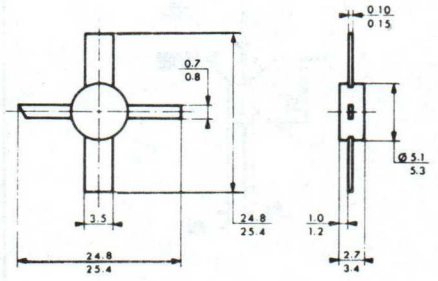

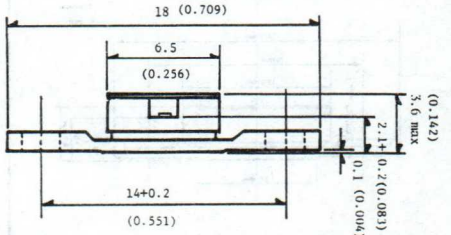

12. OUTLINE DRAWINGS

W211

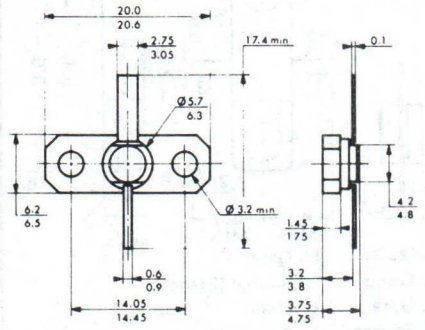

W212

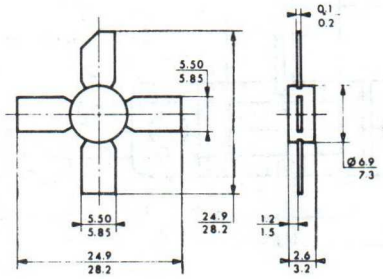

W213

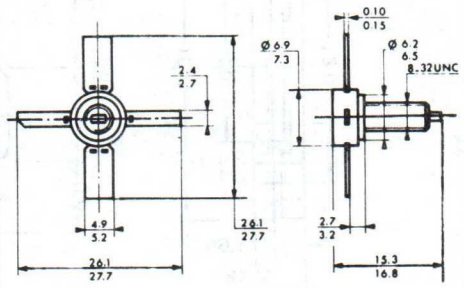

W214

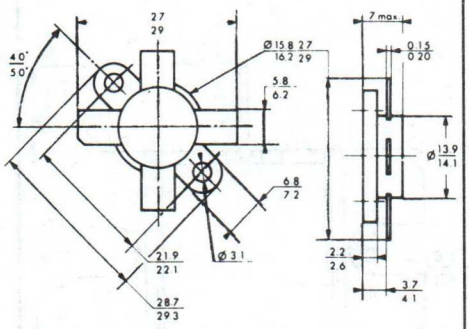

W215

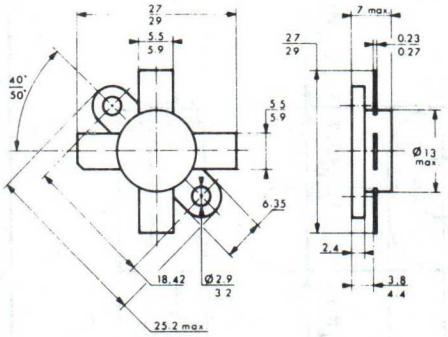

W216

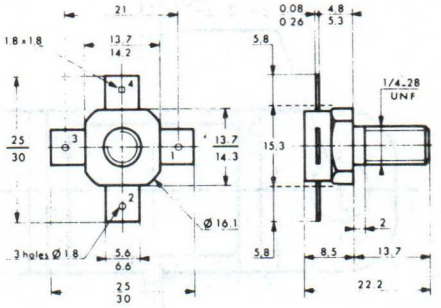

W217

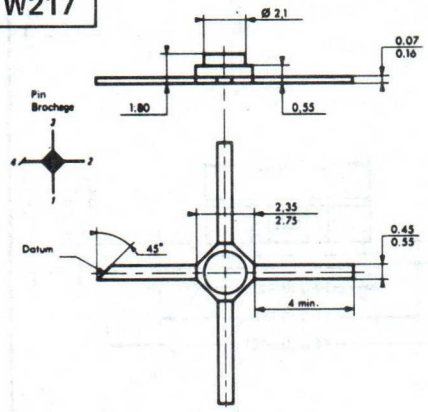

W219

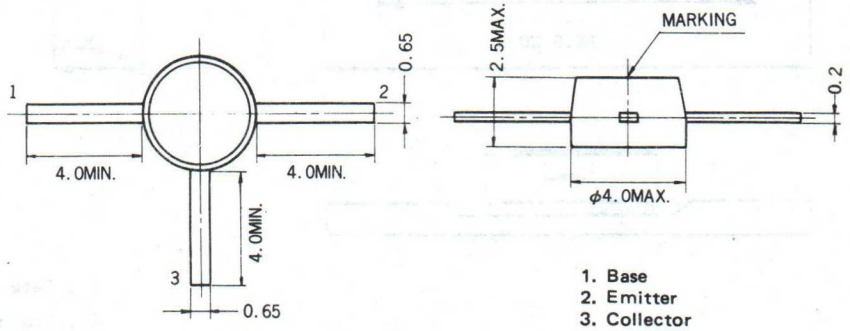

W220

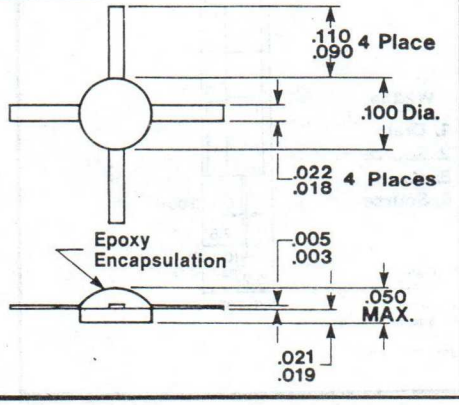

W221

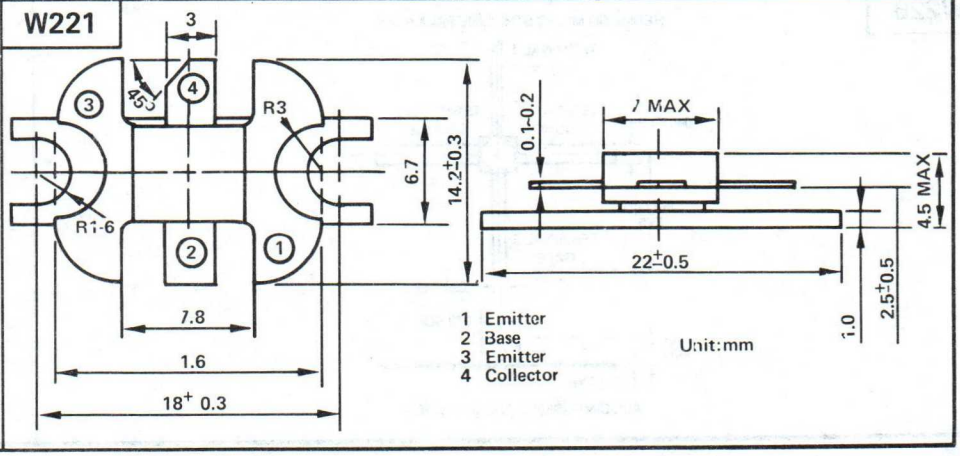

12. OUTLINE DRAWINGS

W222

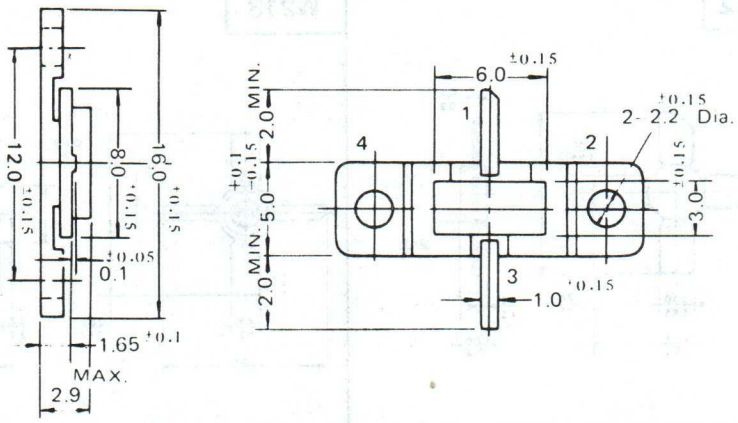

W223

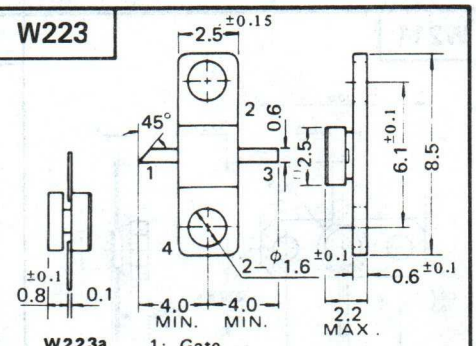

W223a
1. Drain
2. Gate
3. Source

1: Gate
2: Source (Flange)
3: Drain
4: Source (Flange)

Unit: mm (inch)

W224

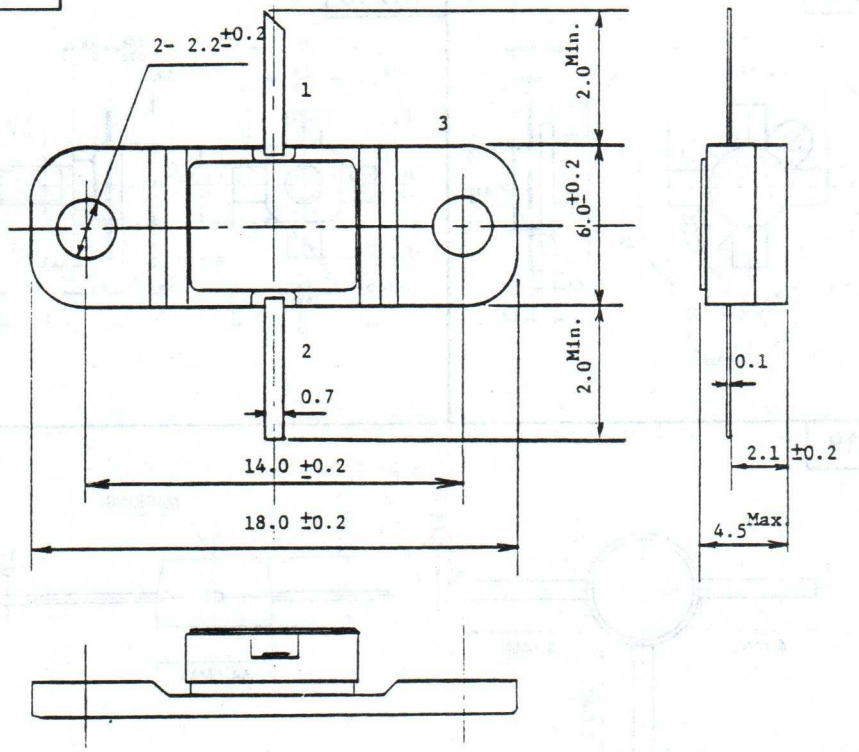

1 ; Gate
2 ; Drain
3 ; source

Dimensions in millimeters

W225

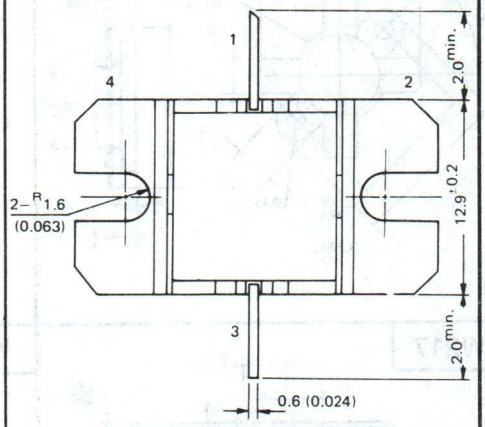

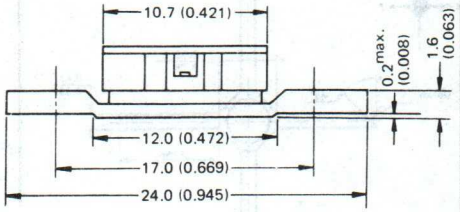

W226

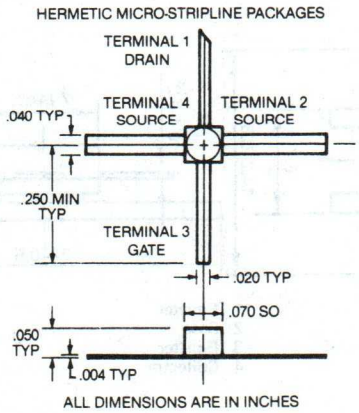

W225a
1. Drain
2. Source
3. Gate
4. Source

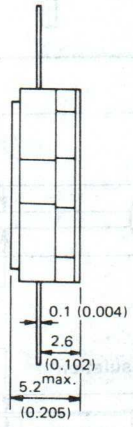

1 Gate
2 Source (Flange)
3 Drain
4 Source (Flange)

Unit: mm (inch)

12. OUTLINE DRAWINGS

W228

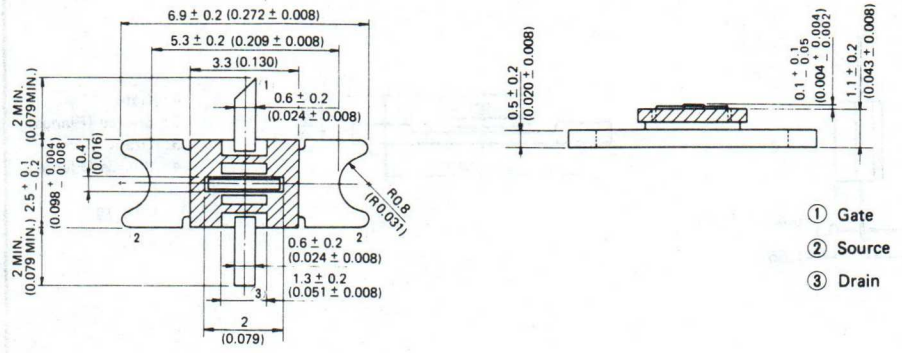

W229

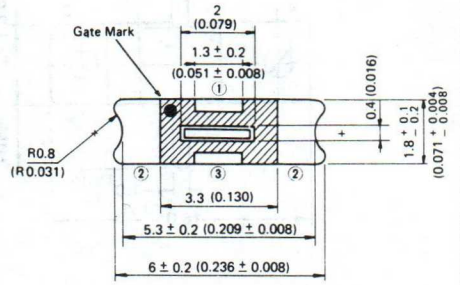

W230

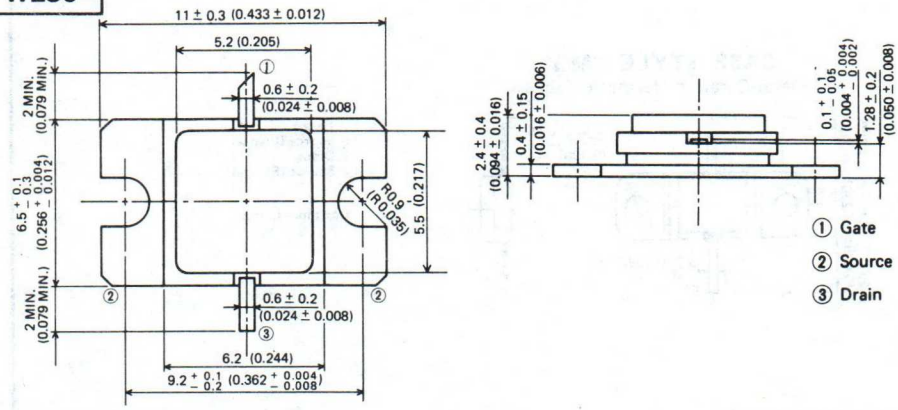

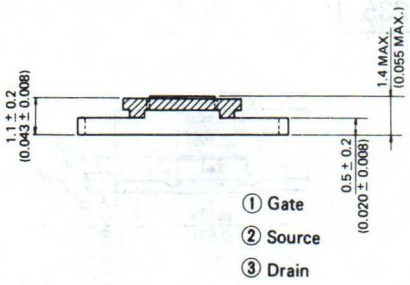

W231

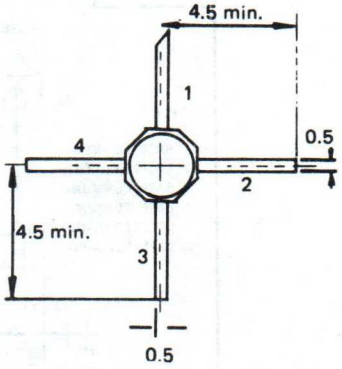

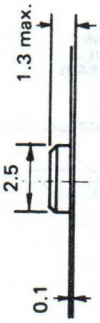

Terminal Connection
1. Collector
2. Emitter
3. Base
4. Emitter

W232

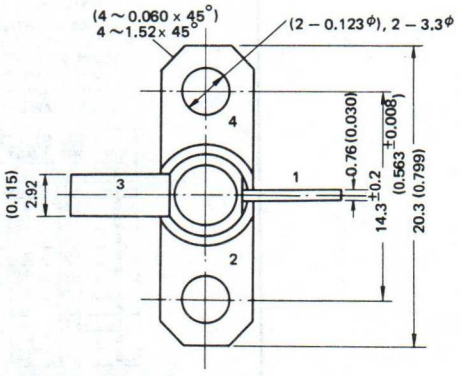

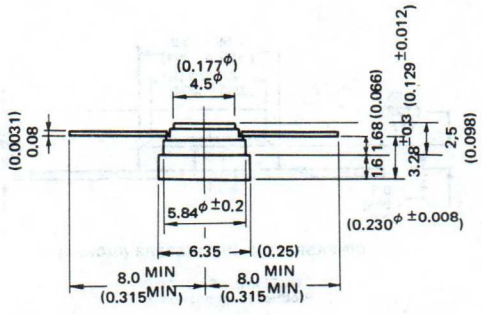

1: Collector 2: Base 3: Emitter 4: Base

12. OUTLINE DRAWINGS

W233

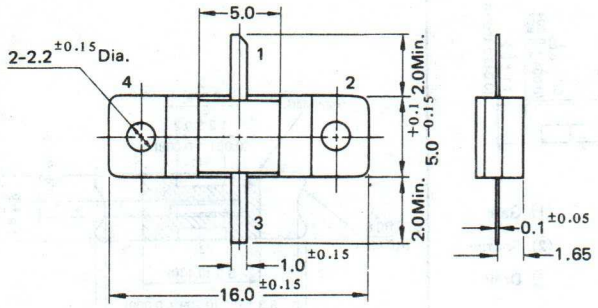

1: Gate
2: Source (Flange)
3: Drain
4: Source (Flange)

Unit: mm

W235

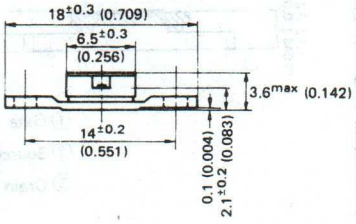

CASE STYLE "MG"
Metal-Ceramic Hermetic Package

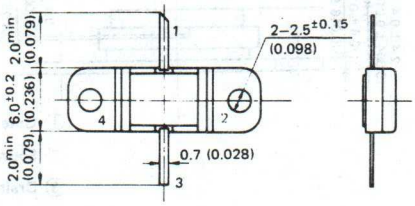

1 : Gate
2 : Source (Flange)
3 : Drain
4 : Source (Flange)

Unit: mm (inch)

W236

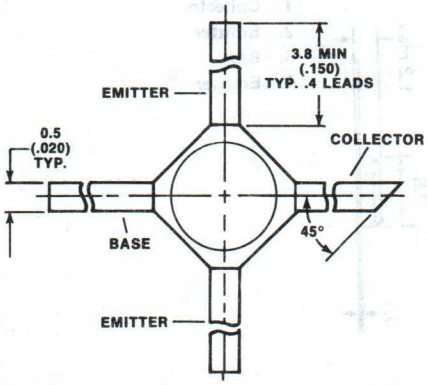

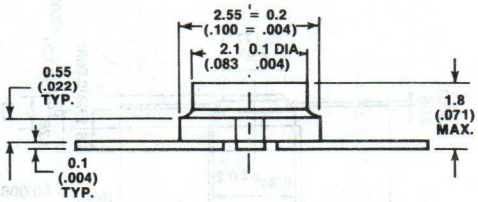

DIMENSIONS IN MILLIMETERS (INCHES)

OUTLINE HPAC -100X
Product Identification = T

W237

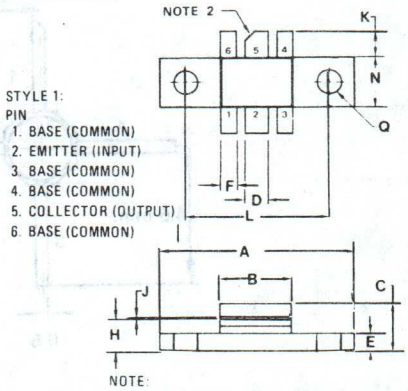

STYLE 1:
PIN
1. BASE (COMMON)
2. EMITTER (INPUT)
3. BASE (COMMON)
4. BASE (COMMON)
5. COLLECTOR (OUTPUT)
6. BASE (COMMON)

NOTE:
1. HOLES WITHIN .15 mm (.006) TRUE POSITION TO EACH OTHER AT MAXIMUM MATERIAL CONDITION.
2. IDENTIFICATION NOTCH 1.0mm (0.04) MIN. X 45°
3. DIM D APPLIES 2 PLACES, DIM K APPLIES 2 PLACES, DIM Q APPLIES 2 PLACES, DIM F APPLIES 4 PLACES.

DIM	MILLIMETERS		INCHES	
	MIN	MAX	MIN	MAX
A	24.51	25.02	0.965	0.985
B	8.76	9.02	0.345	0.355
C	5.84	6.60	0.230	0.260
D	2.92	3.18	0.115	0.125
E	2.69	2.95	0.106	0.116
F	1.91	2.16	0.075	0.085
H	4.06	4.31	0.160	0.170
J	0.10	0.15	0.004	0.006
K	2.29	2.79	0.090	0.110
L	18.42	BSC	0.725	BSC
N	5.72	5.97	0.225	0.235
Q	3.18	3.43	0.125	0.135

CASE 319-04

12. OUTLINE DRAWINGS

W238

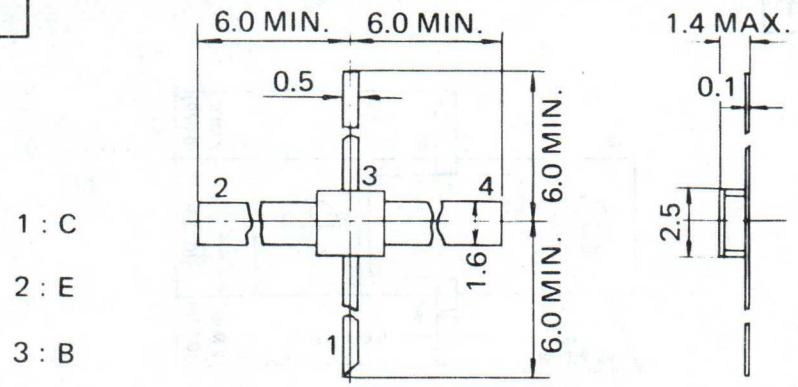

W243

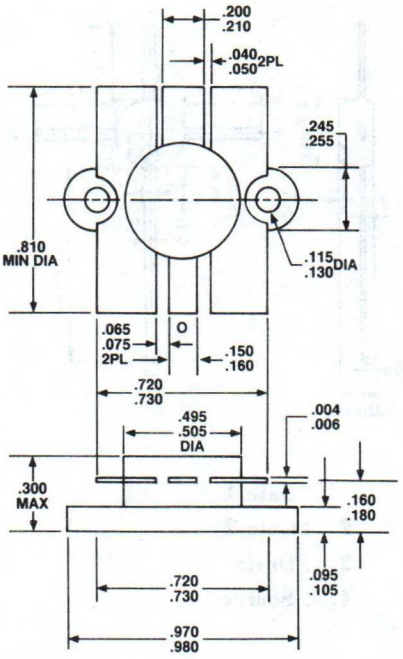

W245

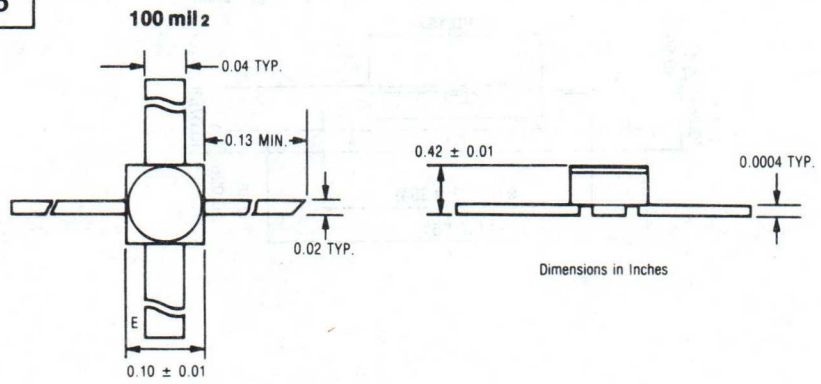

W246

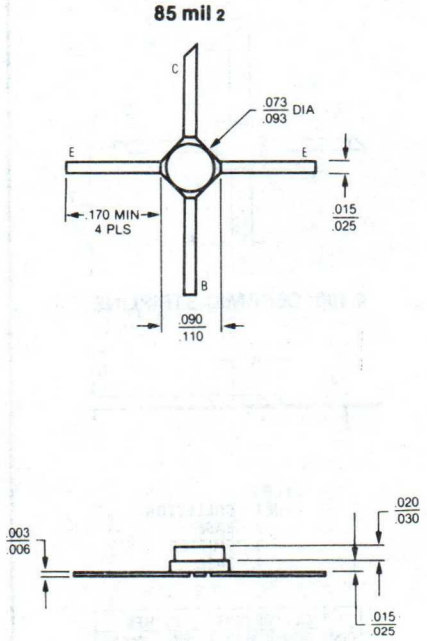

W247

12. OUTLINE DRAWINGS

W250

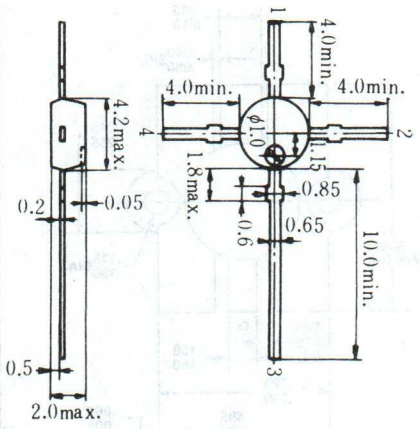

1. : Gate 1
2. : Gate 2
3. : Drain
4. : Source

W251

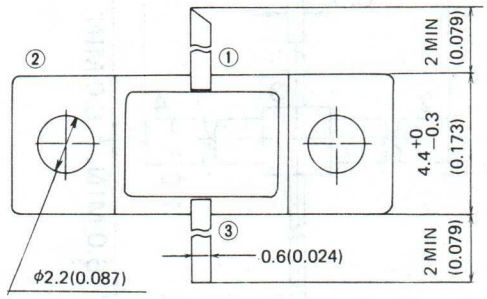

① Gate
② Source
③ Drain

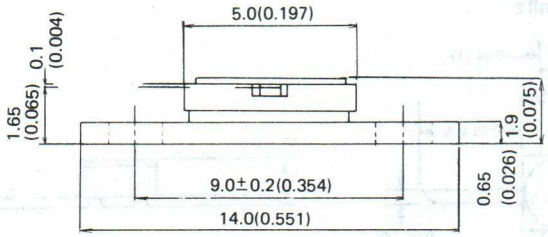

W252

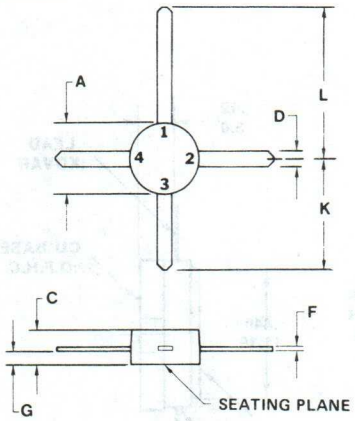

STYLE 2:
PIN 1. COLLECTOR
2. EMITTER
3. BASE
4. EMITTER

DIM	MILLIMETERS MIN	MILLIMETERS MAX	INCHES MIN	INCHES MAX
A	4.44	5.21	0.175	0.205
C	1.90	2.54	0.075	0.100
D	0.84	0.99	0.033	0.039
F	0.20	0.30	0.008	0.012
G	0.76	1.14	0.030	0.045
K	7.24	8.13	0.285	0.320
L	10.54	11.43	0.415	0.450

CASE 317-01

W253

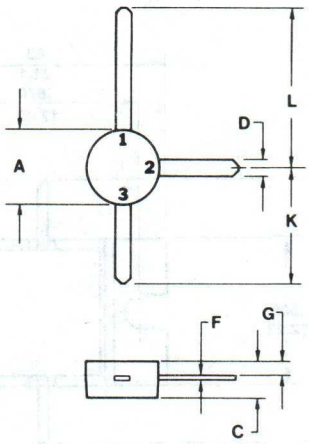

STYLE 2.
PIN 1. COLLECTOR
2. EMITTER
3. BASE

DIM	MILLIMETERS MIN	MILLIMETERS MAX	INCHES MIN	INCHES MAX
A	4.44	5.21	0.175	0.205
C	1.90	2.54	0.075	0.100
D	0.94	0.99	0.033	0.039
F	0.20	0.30	0.008	0.012
G	0.76	1.14	0.030	0.045
K	7.24	8.13	0.285	0.320
L	10.54	11.43	0.415	0.450

CASE 317A-01

W254

NOTE:
1. DIMENSION K APPLIES TO ALL LEADS.

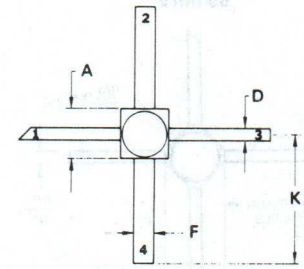

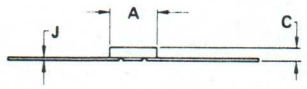

STYLE 2:
PIN 1. COLLECTOR
2. BASE
3. EMITTER
4. BASE

DIM	MILLIMETERS MIN	MILLIMETERS MAX	INCHES MIN	INCHES MAX
A	2.29	2.67	0.090	0.105
C	0.89	1.40	0.035	0.055
D	0.41	0.61	0.016	0.024
F	0.89	1.09	0.035	0.043
J	0.08	0.15	0.003	0.006
K	4.45	5.84	0.175	0.230

CASE 303-1

12. OUTLINE DRAWINGS

W255

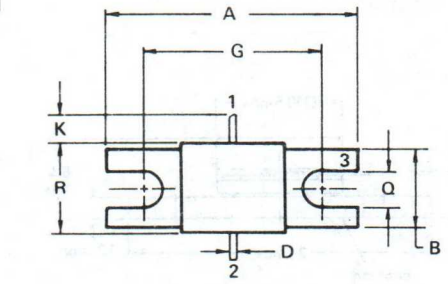

STYLE 2.
PIN 1. COLLECTOR
2. EMITTER
3. BASE

DIM	MILLIMETERS		INCHES	
	MIN	MAX	MIN	MAX
A	22.61	23.11	0.890	0.910
B	9.65	9.91	0.380	0.390
C	4.06	5.84	0.160	0.230
D	0.51	0.76	0.020	0.030
E	1.40	1.65	0.055	0.065
G	16.51 BSC		0.650 BSC	
H	1.14	1.77	0.045	0.070
K	2.54	–	0.100	–
N	9.91	10.41	0.390	0.410
Q	3.00	3.61	0.118	0.142
R	9.91	10.41	0.390	0.410

W256

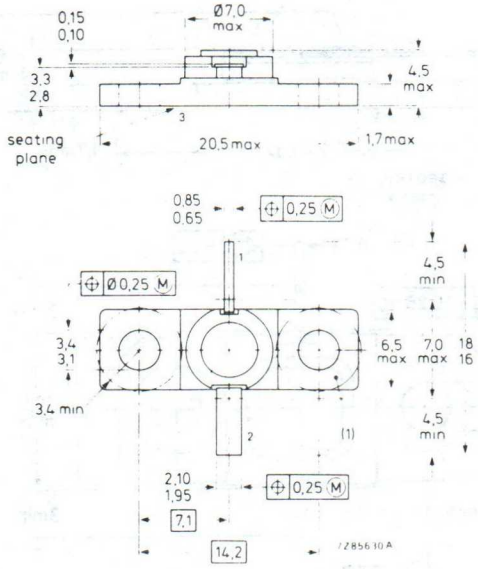

W257

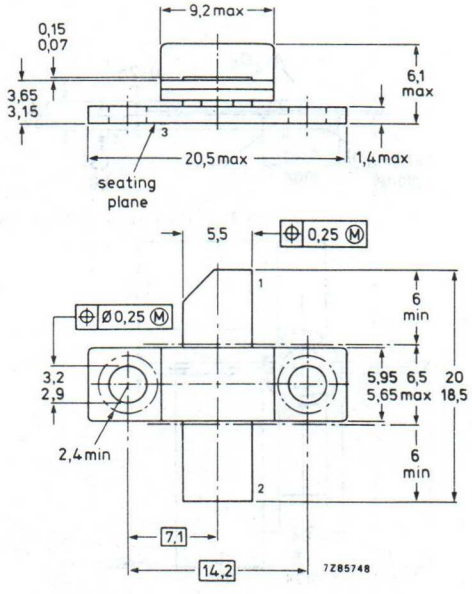

W258

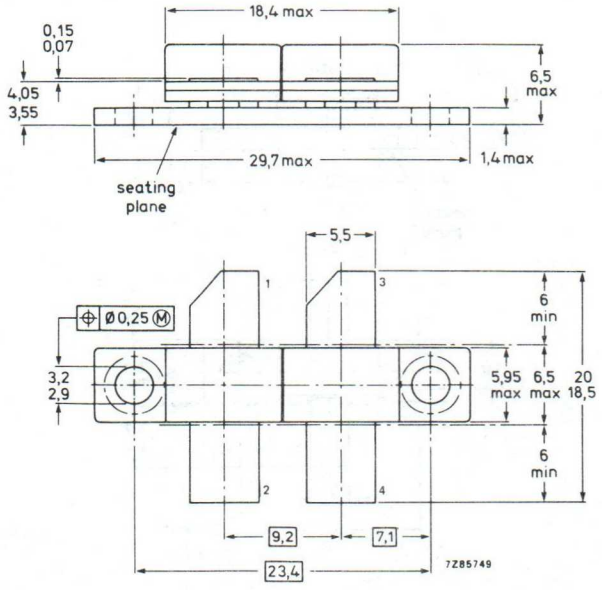

12. OUTLINE DRAWINGS

W259

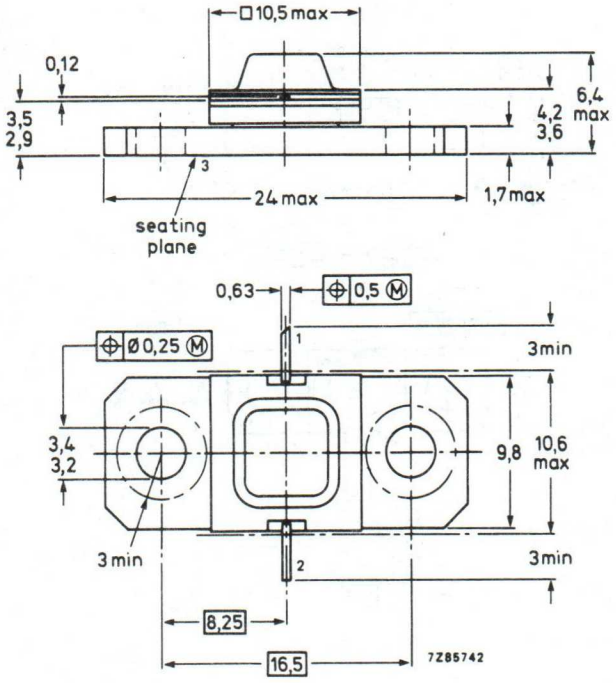

W260

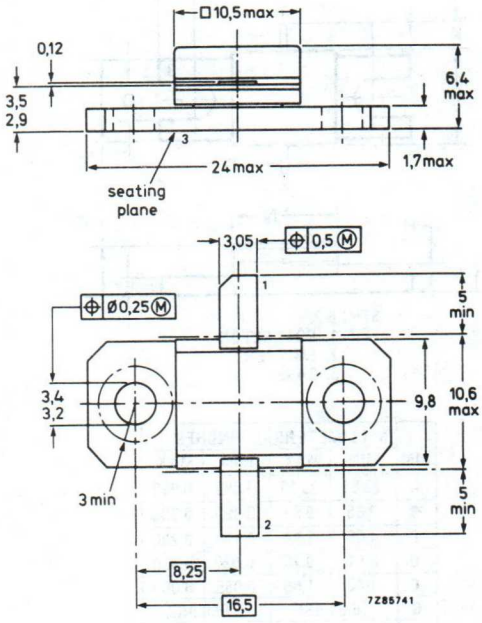

W261

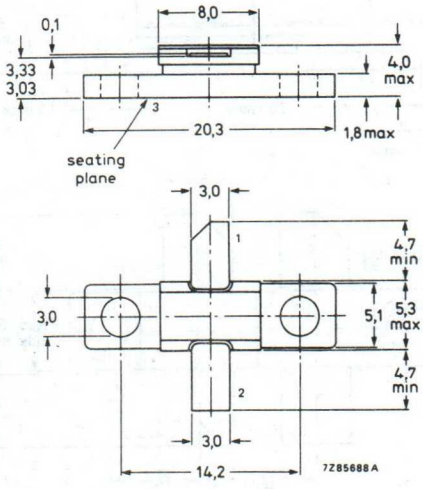

W263

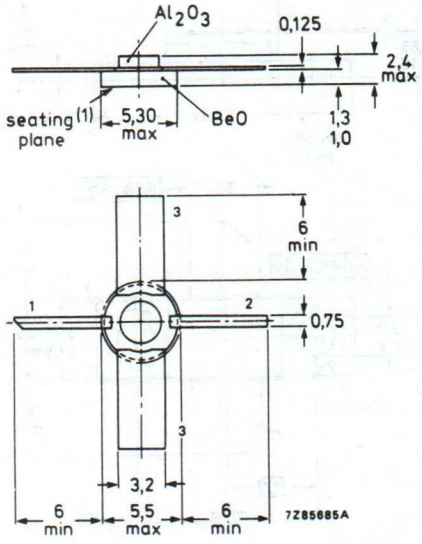

12. OUTLINE DRAWINGS

W264

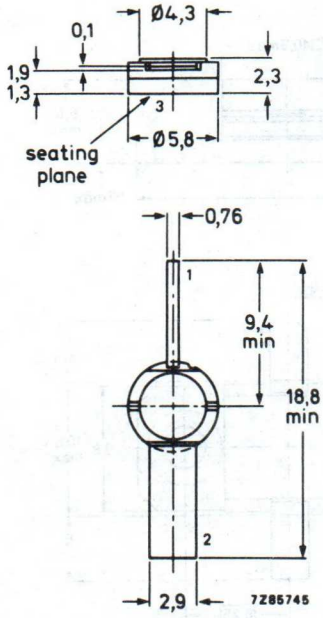

W265

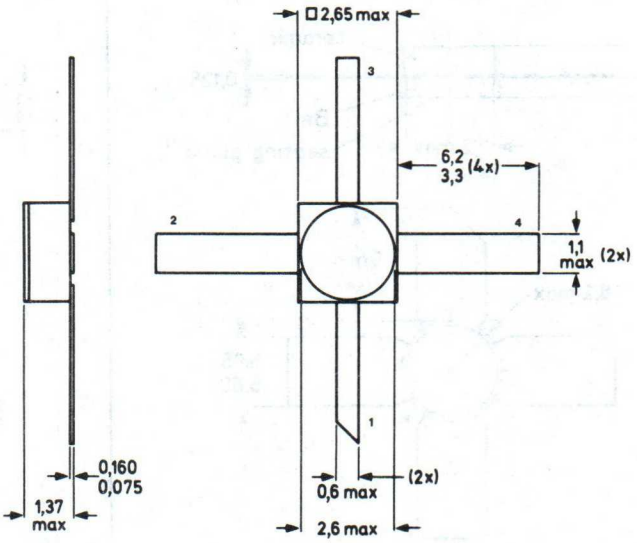

W266

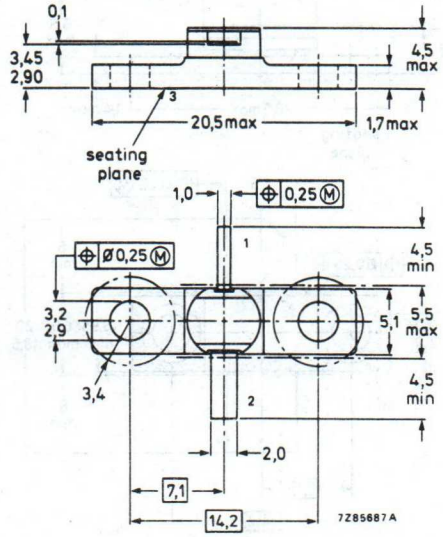

W267

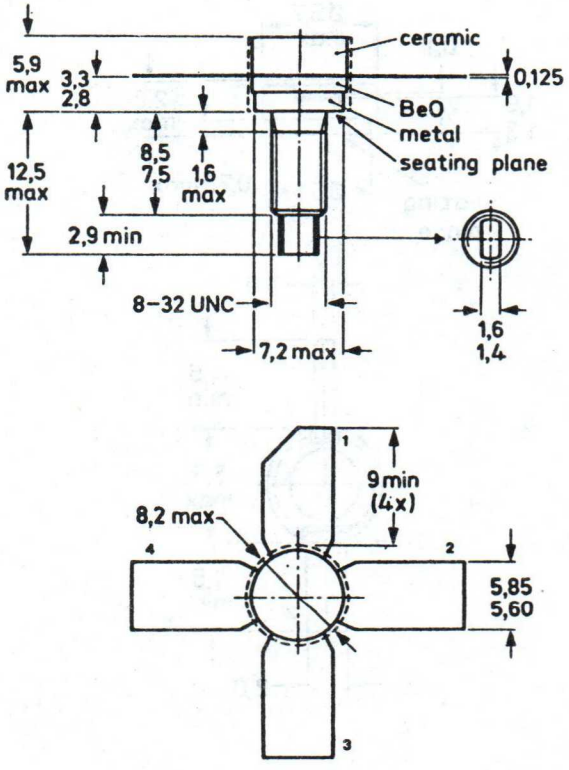

12. OUTLINE DRAWINGS

W268

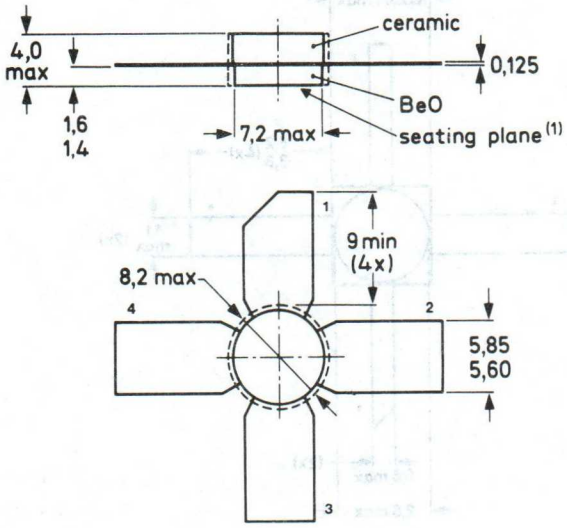

W269

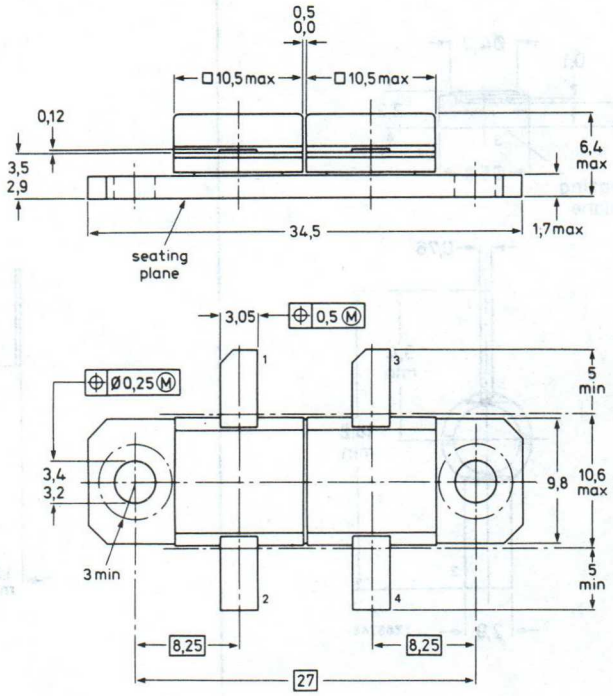

W270

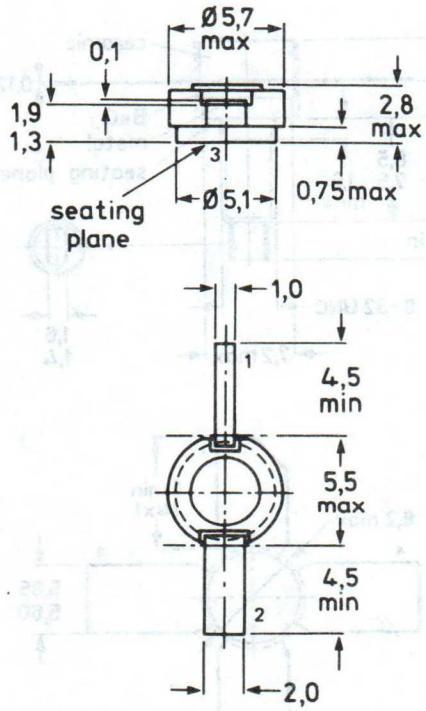

W271

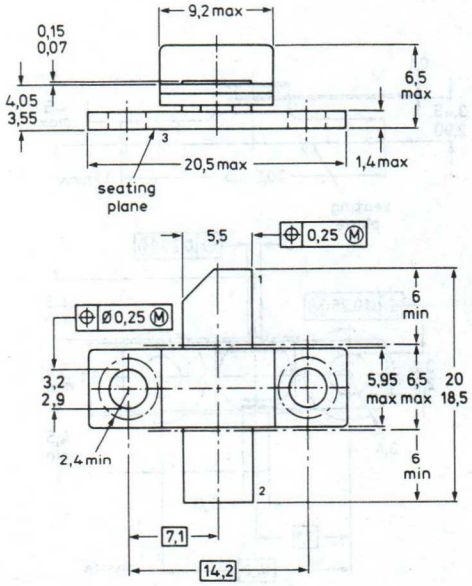

12. OUTLINE DRAWINGS

W272

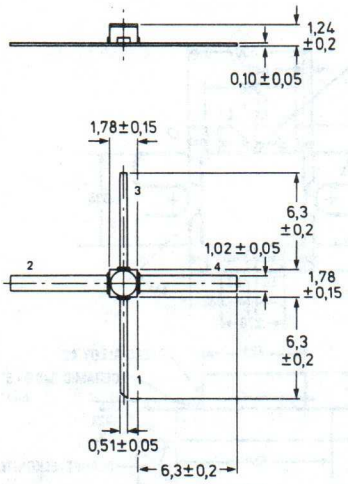

W273

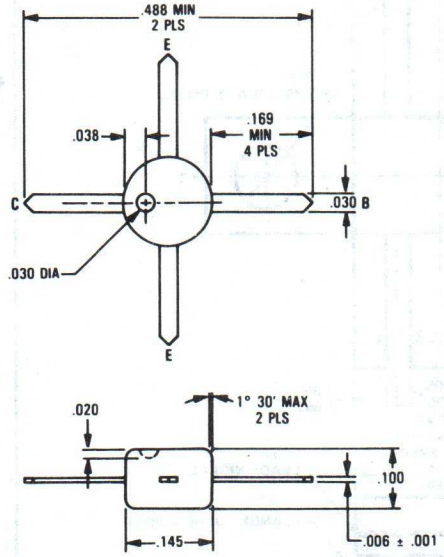

W274

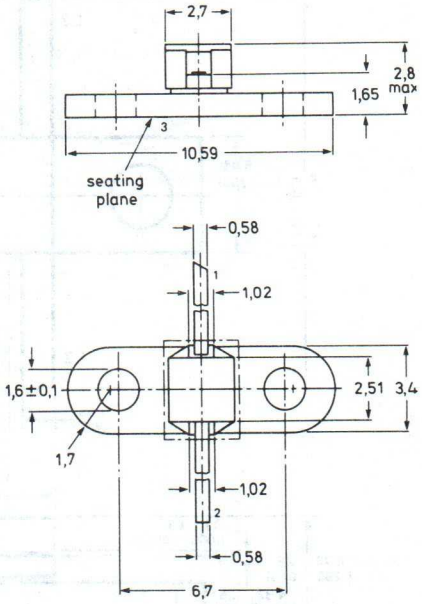

W275

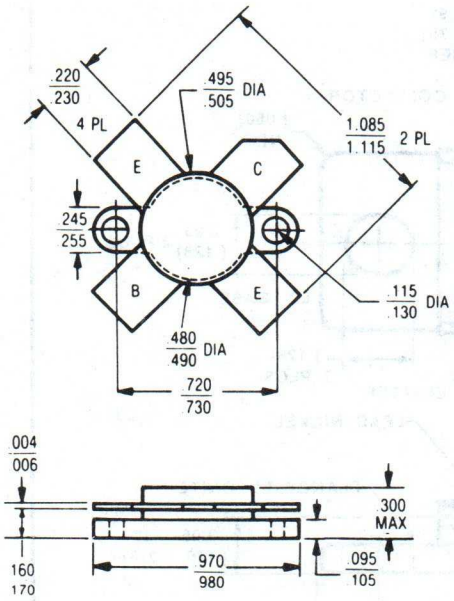

W276

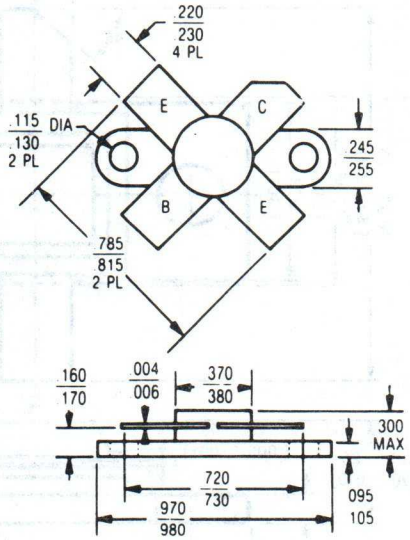

W279

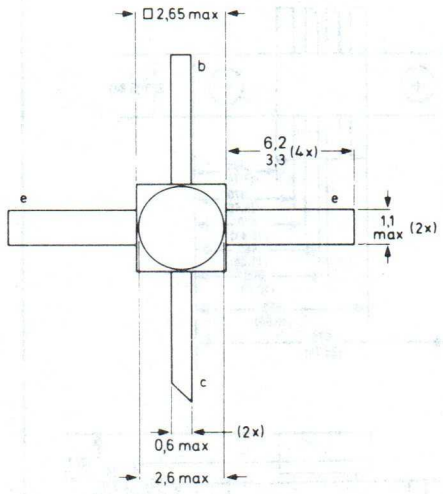

12. OUTLINE DRAWINGS

W282

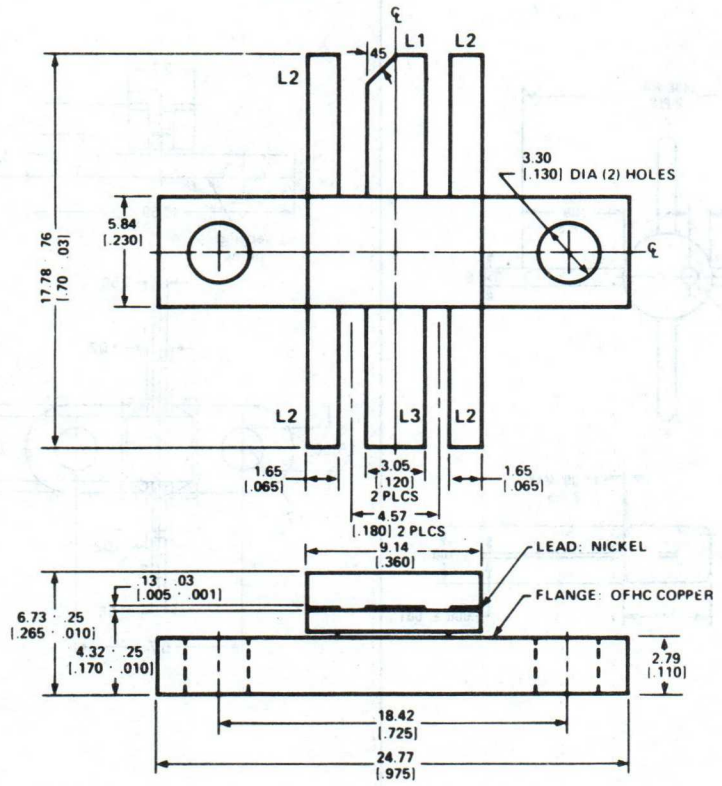

W283

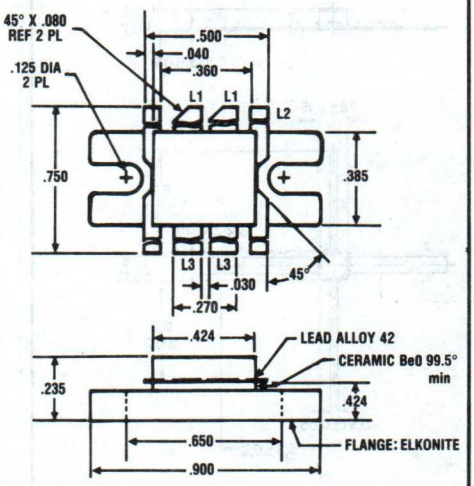

W284

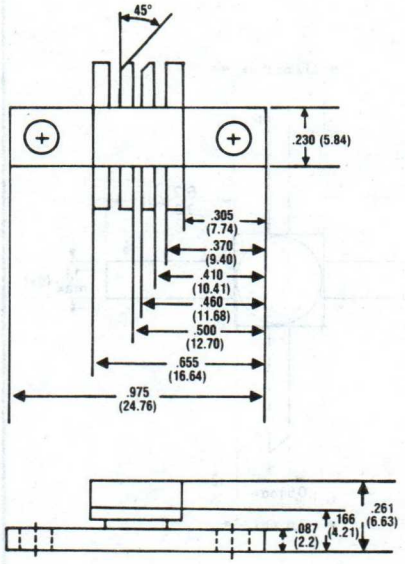

W285

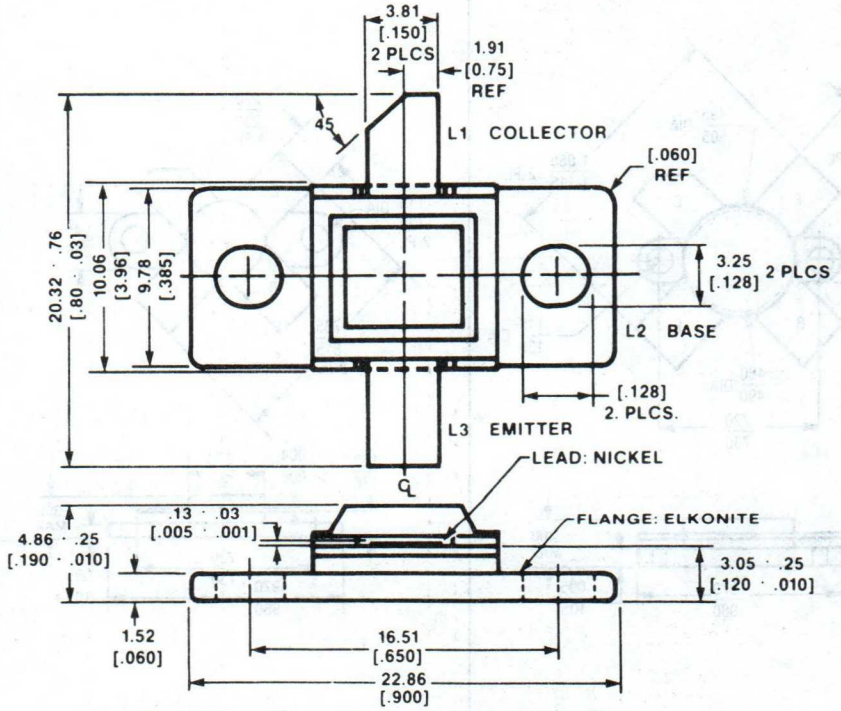

TOLERANCE: .127mm [.005"] UNLESS OTHERWISE SHOWN
.5 ON ANGULAR

12. OUTLINE DRAWINGS

W281

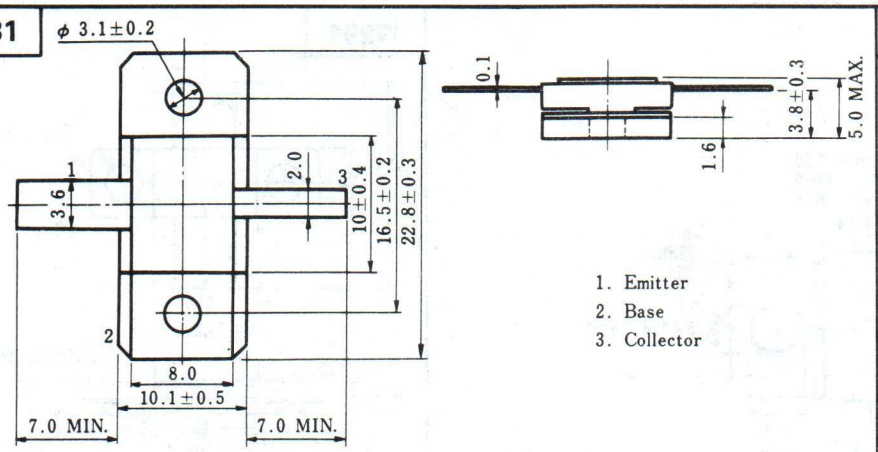

1. Emitter
2. Base
3. Collector

W286

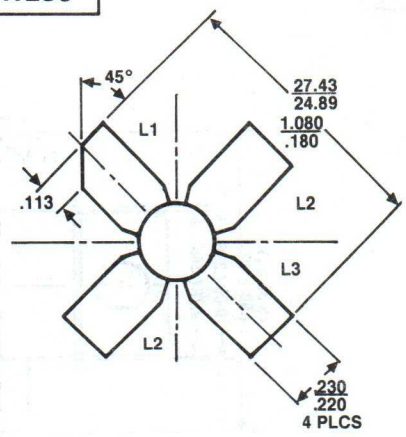

W287

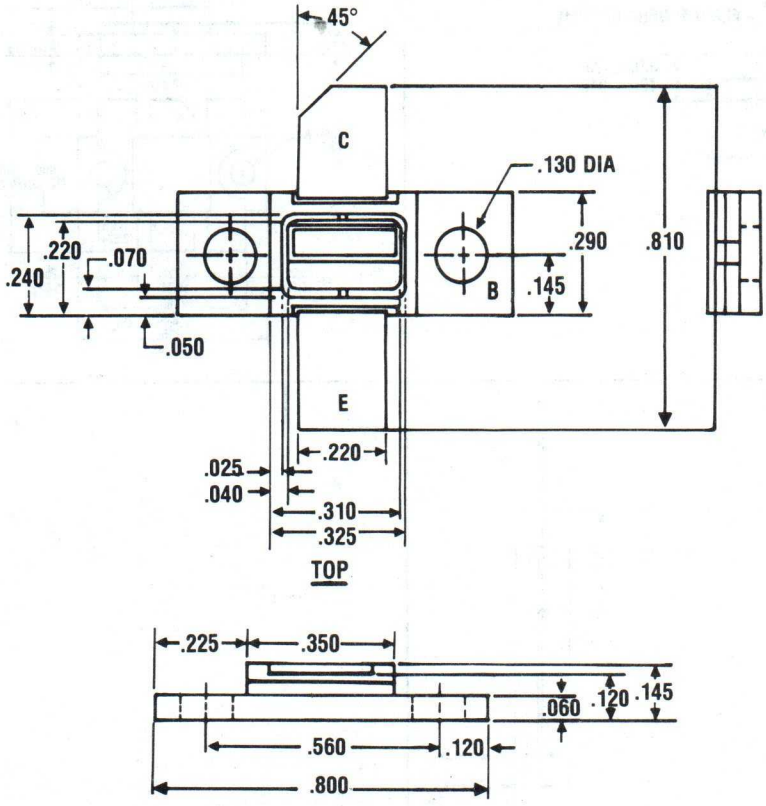

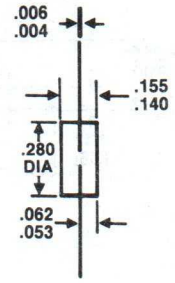

W288

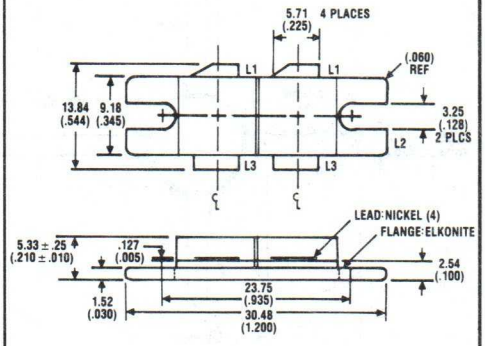

W289

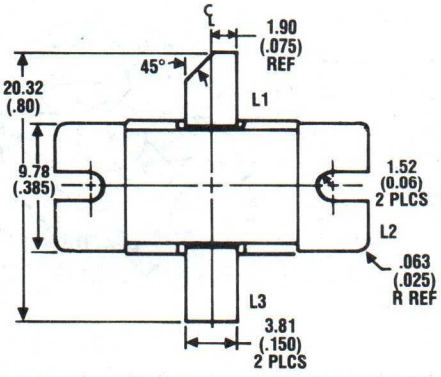

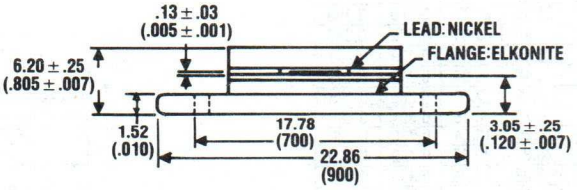

12. OUTLINE DRAWINGS

W290

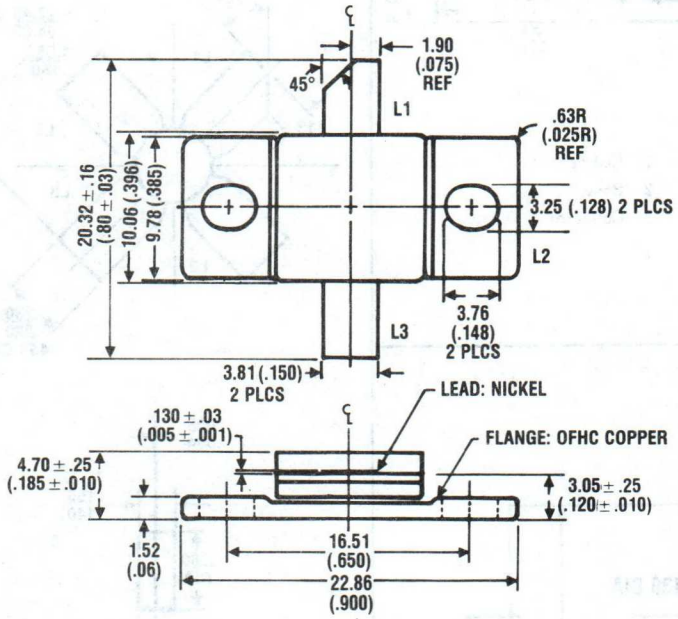

W291

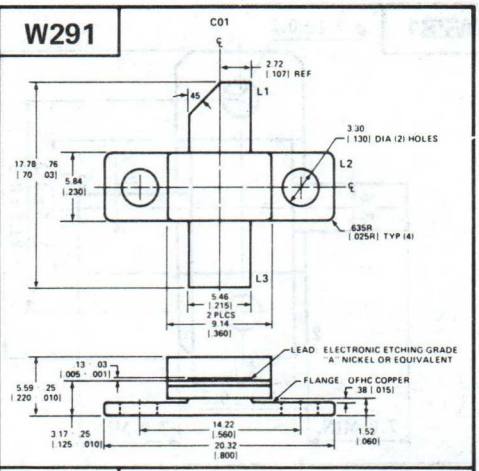

W292

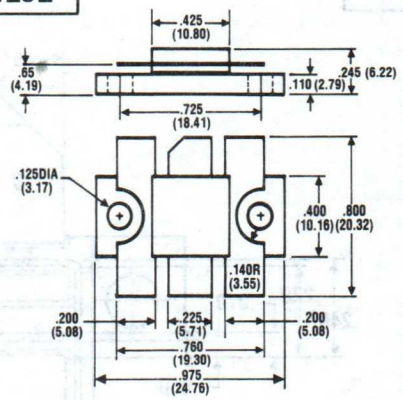

W293

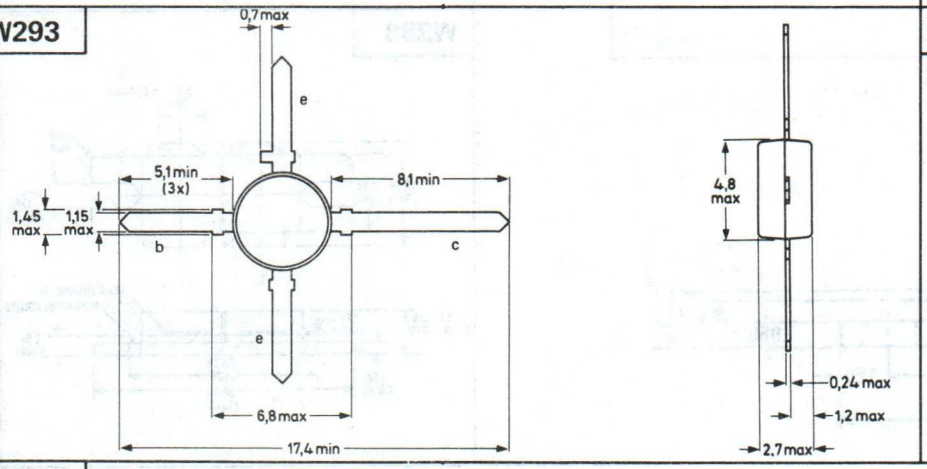

W294

DIM	MILLIMETERS		INCHES	
	MIN	MAX	MIN	MAX
A	24.38	25.15	0.960	0.990
B	9.40	9.91	0.370	0.390
C	5.82	7.14	0.229	0.281
D	5.46	5.97	0.215	0.235
E	2.16	2.67	0.085	0.105
F	0.10	0.15	0.004	0.006
G	18.29	18.54	0.720	0.730
H	20.07	20.57	0.790	0.810
K	10.03	10.29	0.395	0.405
L	6.22	6.48	0.245	0.255
M	40°	50°	40°	50°
N	3.81	4.57	0.150	0.180
Q	2.87	3.30	0.113	0.130

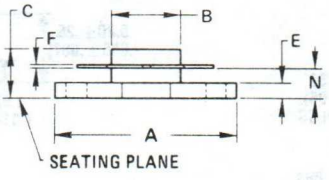

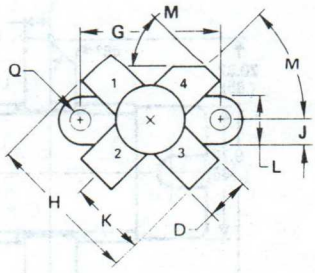

12. OUTLINE DRAWINGS

W302

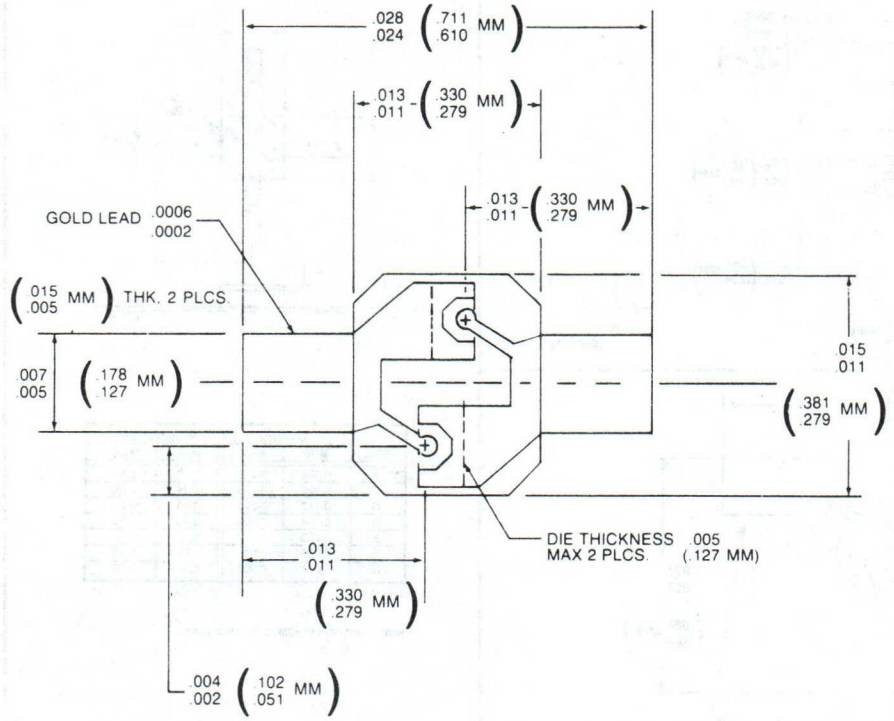

W306

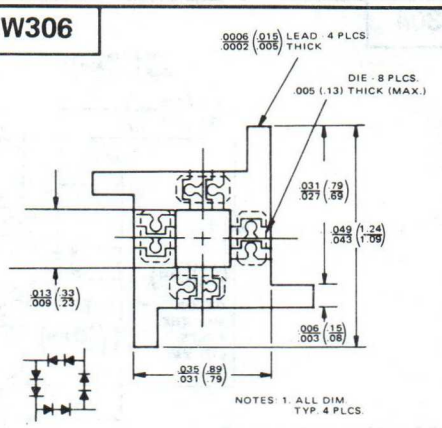

W307

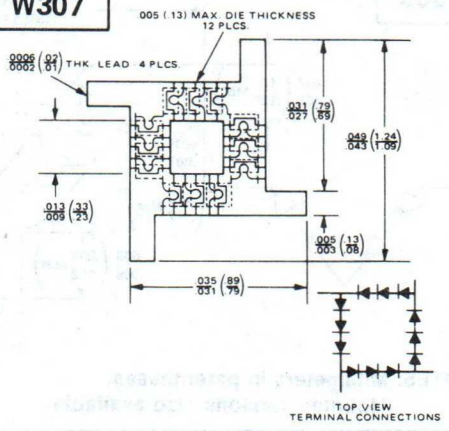

W303

NOTES: Millimeters in parenthese. Mounted versions also available.

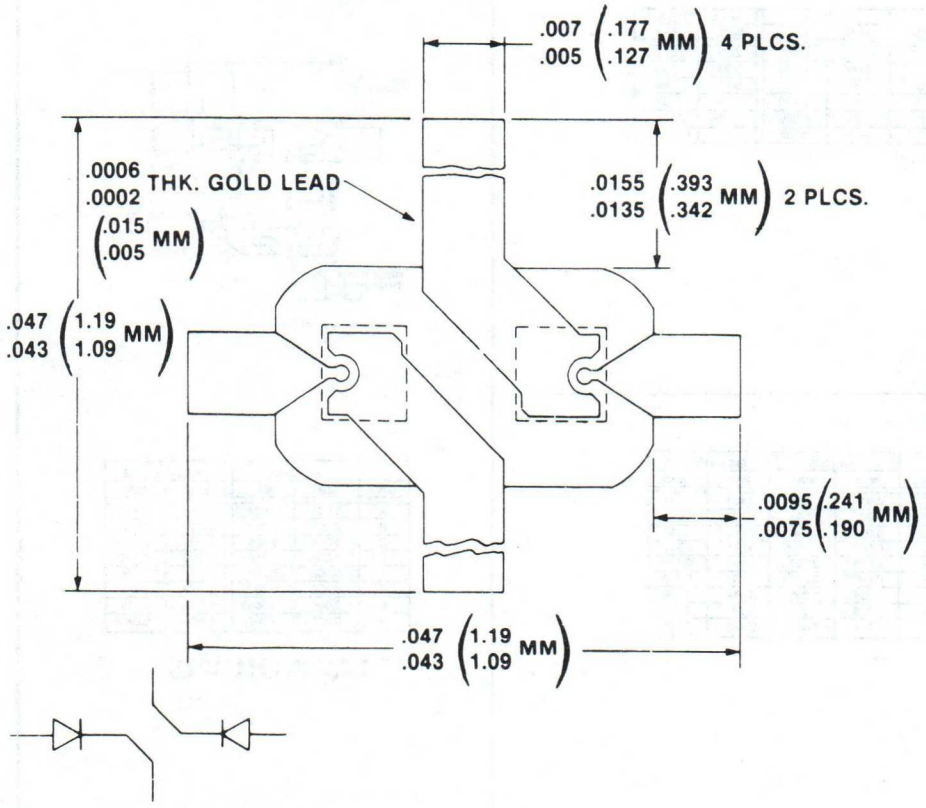

W311

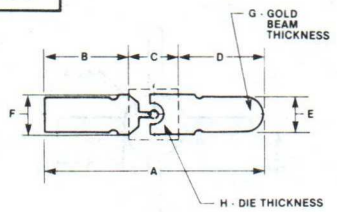

DIM.	INCHES MIN.	INCHES MAX.	MILLIMETERS MIN.	MILLIMETERS MAX.
A	0.026	0.028	0,660	0,711
B	0.0080	0.009	0,203	0,229
C	0.009	0.011	0,229	0,279
D	0.008	0.009	0,203	0,229
E	0.0040	0.0048	0,102	0,122
F	0.0045	0.0055	0,114	0,139
G	0.0002	0.0005	0,0050	0,0127
H	0.002	0.002	0,0050	0,0050

W312

GOLD BEAM THICKNESS

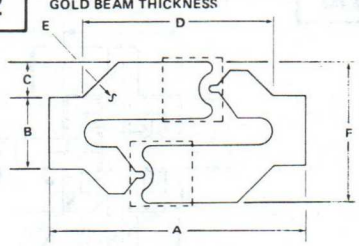

DIM.	INCHES MIN.	INCHES MAX.	MILLIMETERS MIN.	MILLIMETERS MAX.
A	0.035	0.037	0,889	0,940
B	0.009	0.011	0,229	0,279
C	0.004	0.006	0,102	0,152
D	0.025	0.027	0,635	0,686
E	0.0002	0.0005	0,0051	0,0127
F	0.019	0.021	0,483	0,533

12. OUTLINE DRAWINGS

W304

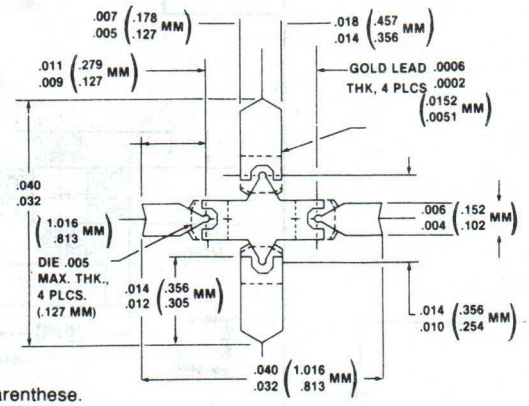

397-001

NOTES: Millimeters in parenthese.

W305

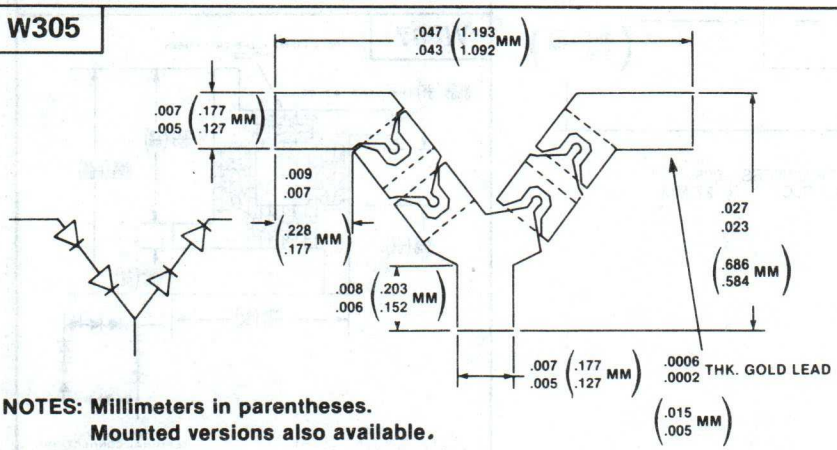

NOTES: Millimeters in parentheses.
Mounted versions also available.

W308

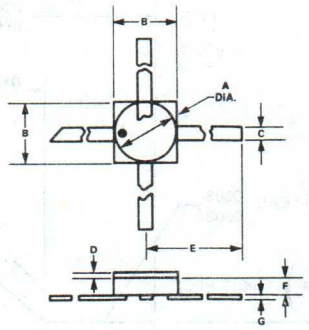

DIM.	INCHES MIN.	INCHES MAX.	MILLIMETERS MIN.	MILLIMETERS MAX.
A	0.094	0.102	2,39	2,59
B	0.092	0.016	2,34	2,69
C	0.017	0.023	0,43	0,58
D	0.004	0.008	0,10	0,20
E	0.200	— —	5,08	— —
F	0.025	0.035	0,64	0,89
G	0.003	0.006	0,08	0,15

C_p = 0.12 pF

NOTE: COMMON CATHODE IS SLASHED LEAD.

W309

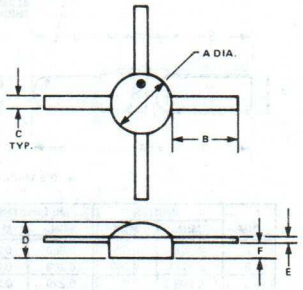

DIM.	INCHES MIN.	INCHES MAX.	MILLIMETERS MIN.	MILLIMETERS MAX.
A	0.090	0.110	2,29	2,79
B	0.090	0.110	2,29	2,79
C	0.018	0.022	0,46	0,56
D	— —	0.050	— —	1,27
E	0.003	0.006	0,08	0,15
F	— —	0.025	— —	0,64

C_p = 0.10 pF

W313

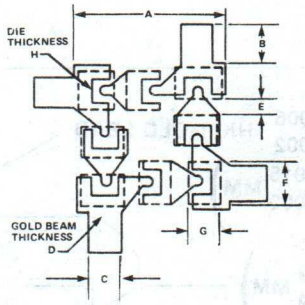

DIM.	INCHES MIN.	INCHES MAX.	MILLIMETERS MIN.	MILLIMETERS MAX.
A	0.022	0.024	0,559	0,610
B	0.005	0.007	0,127	0,178
C	0.004	0.006	0,101	0,152
D	0.0002	0.0005	0,005	0,0127
E	0.002	0.003	0,051	0,076
F	0.006	0.007	0,152	0,177
G	0.0045	0.0055	0,114	0,139
H	0.0015	0.0025	0,0381	0,0635

NOTE: MEASUREMENT A, B, C & D 4 PLACES
MEASUREMENT E, F, G & H 8 PLACES

W310

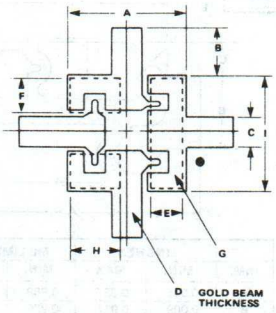

DIM.	INCHES MIN.	INCHES MAX.	MILLIMETERS MIN.	MILLIMETERS MAX.
A	0.019	0.021	0,483	0,533
B	0.007	0.009	0,127	0,229
C	0.004	0.006	0,102	0,152
D	0.0002	0.0005	0,0051	0,0127
E	0.006	0.007	0,152	0,178
F	0.006	0.007	0,152	0,178
G	0.0045	0.0055	0,114	0,140
H	0.009	0.010	0,229	0,254
I	0.019	0.021	0,483	0,533

NOTES: MEASUREMENTS A, B, C, D - FOUR PLACES
MEASUREMENT G - THREE PLACES
MEASUREMENTS F & H - TWO PLACES
MEASUREMENTS E & I - ONE PLACE

12. OUTLINE DRAWINGS

W314

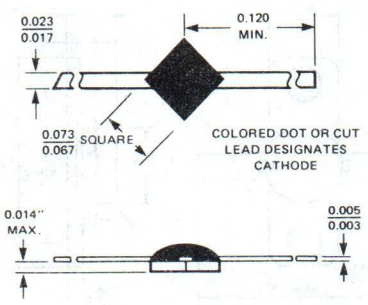

W315

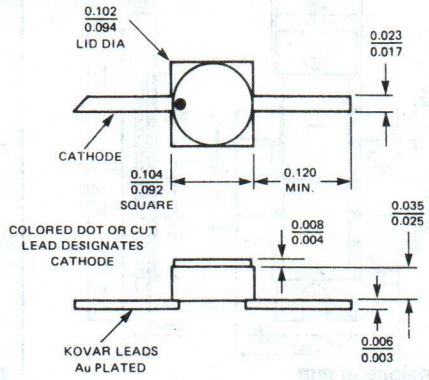

W316

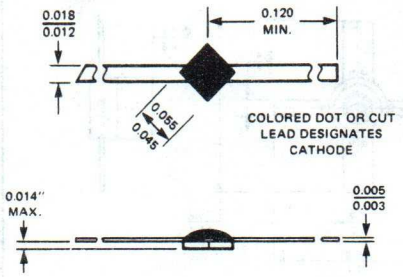

W317

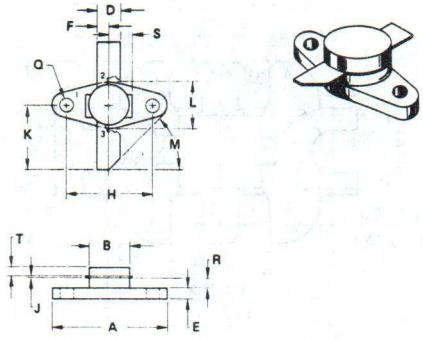

DIM	MILLIMETERS		INCHES	
	MIN	MAX	MIN	MAX
A	21.08	21.59	0.830	0.850
B	9.27	9.78	0.365	0.385
D	5.59	5.84	0.220	0.230
E	2.03	2.41	0.080	0.095
F	2.79	2.92	0.110	0.115
H	15.11	15.37	0.595	0.605
J	0.10	0.15	0.004	0.006
K	13.08	13.59	0.515	0.535
L	9.91	10.41	0.390	0.410
M	45°	NOM	45°	NOM
Q	2.92	3.18	0.115	0.125
R	1.52	2.03	0.060	0.080
S	-	5.38	-	0.212
T	2.03	2.54	0.080	0.100

W319

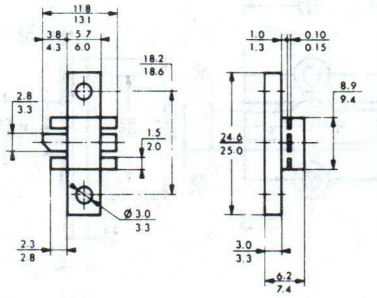

Dimensions in mm

W318

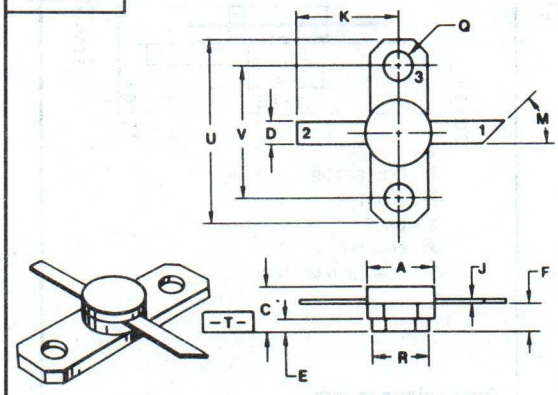

NOTES:
1. DIMENSIONS R AND U ARE DATUMS AND T IS A DATUM SURFACE AND SEATING PLANE.
2. POSITIONAL TOLERANCE FOR MOUNTING HOLES: ⌖ Ø 0.38 (0.015) Ⓜ T U Ⓜ R Ⓜ
3. DIMENSIONING AND TOLERANCING PER ANSI Y14.5, 1973.

DIM	MILLIMETERS		INCHES	
	MIN	MAX	MIN	MAX
A	7.06	7.26	0.278	0.286
C	4.44	5.20	0.175	0.205
D	2.36	2.71	0.093	0.107
E	1.39	1.77	0.055	0.070
F	2.66	3.42	0.105	0.135
J	0.10	0.15	0.004	0.006
K	11.04	–	0.435	–
M	45° NOM		45° NOM	
Q	3.04	34.2	0.120	0.135
R	6.09	6.86	0.240	0.280
U	20.06	20.57	0.790	0.810
V	14.27 BSC		0.562 BSC	

W320

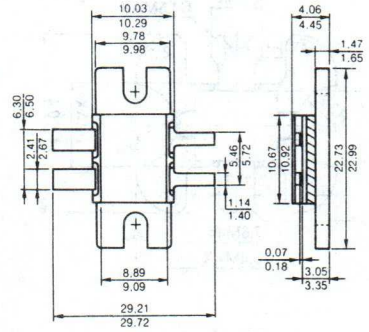

Dimensions in mm

W321

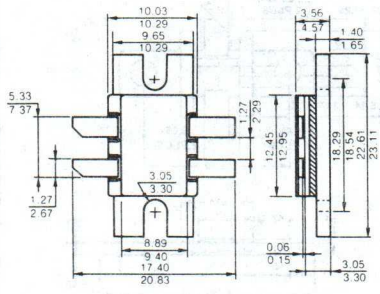

Dimensions in mm

W322

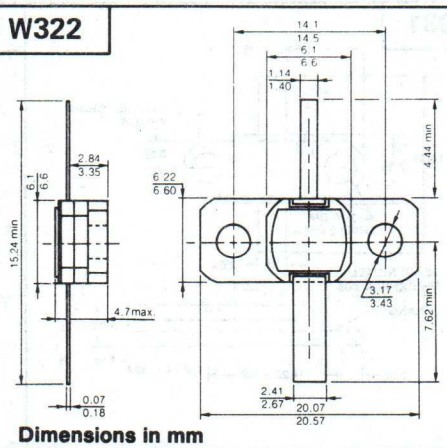

Dimensions in mm

W323

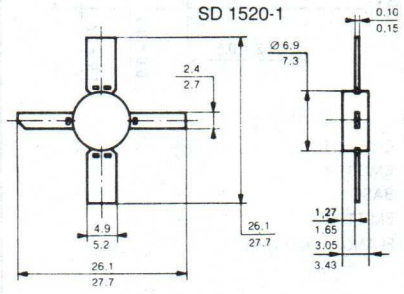

Dimensions in mm

12. OUTLINE DRAWINGS

W324

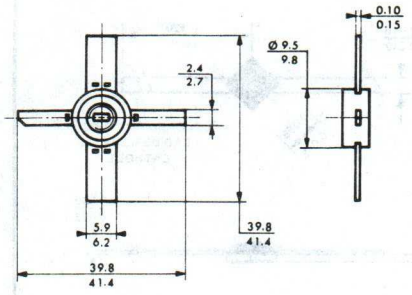

Dimensions in mm

W325

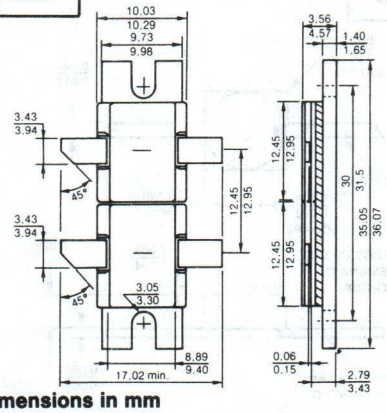

Dimensions in mm

W326

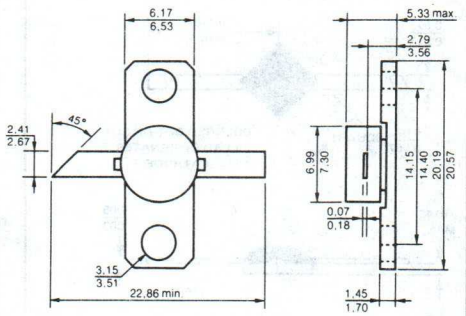

Dimensions in mm

W327

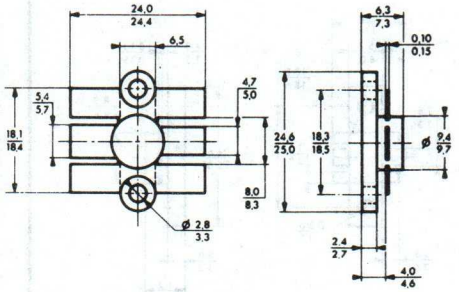

Dimensions in mm

W328

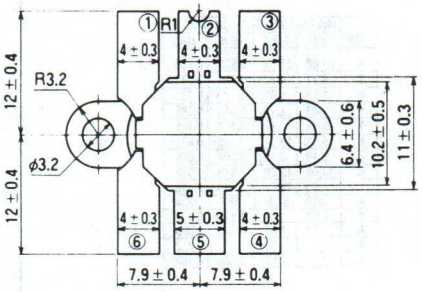

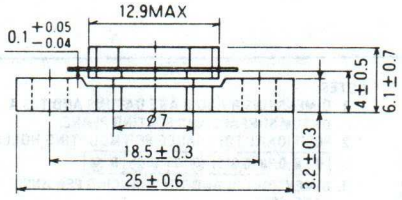

Pin:
① EMITTER (FLANGE)
② COLLECTOR
③ EMITTER (FLANGE)
④ EMITTER (FLANGE)
⑤ BASE
⑥ EMITTER (FLANGE)

Dimensions in mm

W329

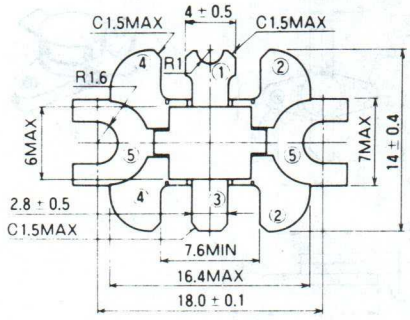

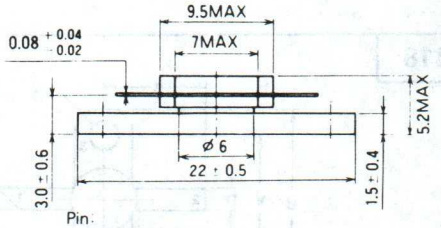

Pin:
① COLLECTOR
② EMITTER
③ BASE
④ EMITTER
⑤ FLANGE (EMITTER)

Dimensions in mm

W330

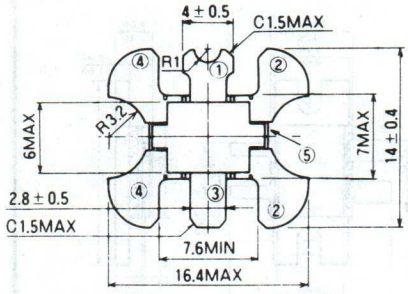

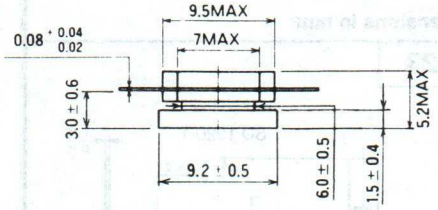

Pin:
① COLLECTOR
② EMITTER
③ BASE
④ EMITTER
⑤ FLANGE (EMITTER)

Dimensions in mm

W331

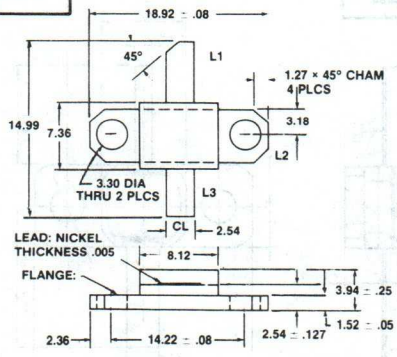

W332

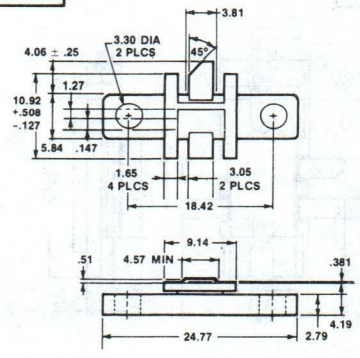

12. OUTLINE DRAWINGS

W333

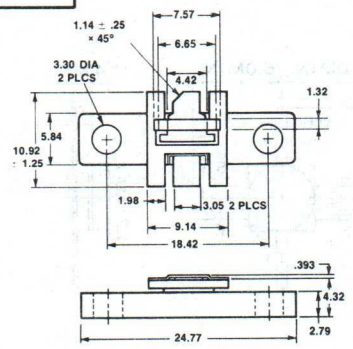

W334

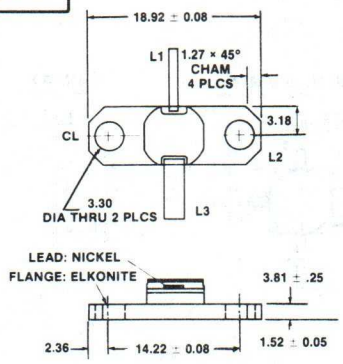

W335

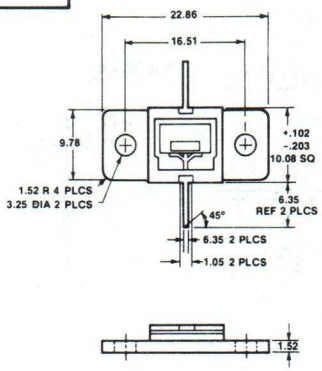

W336

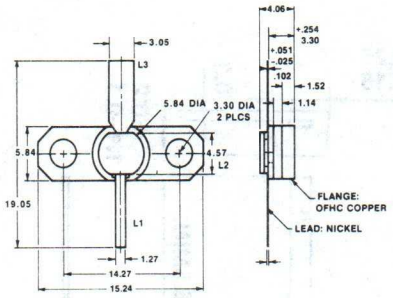

W337

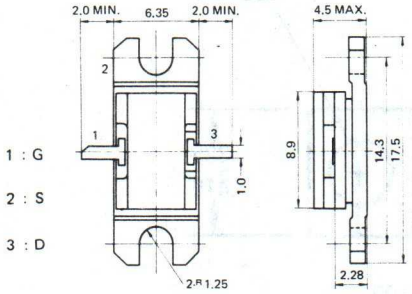

W338

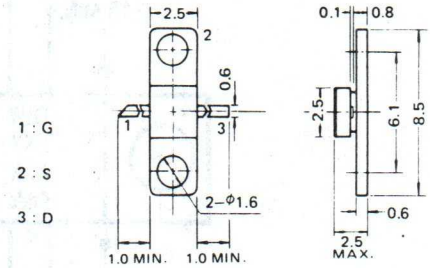

W339

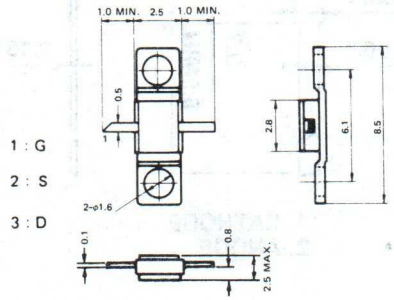

W340

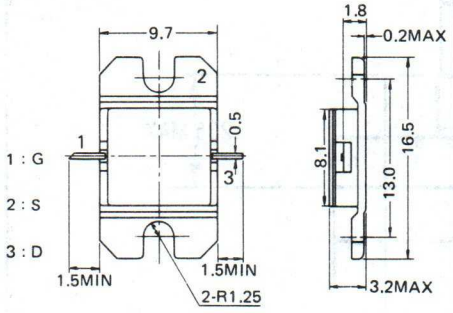

W341

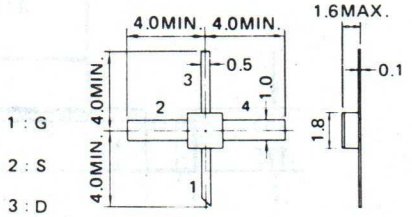

W342

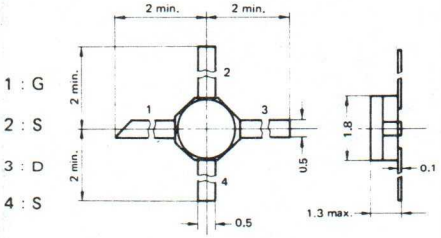

W343

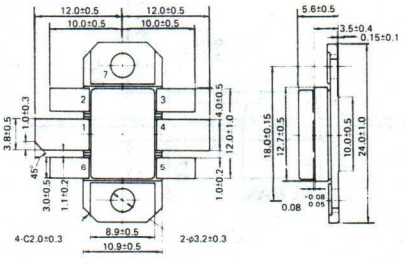

W344

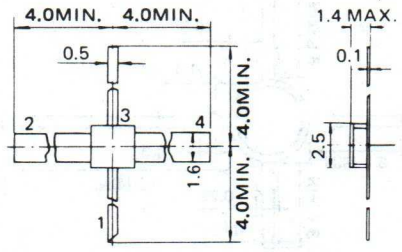

12. OUTLINE DRAWINGS

W345

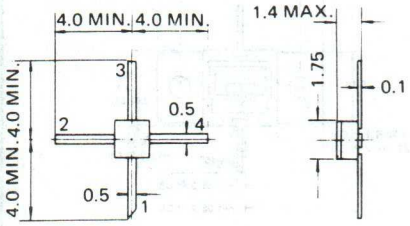

W346

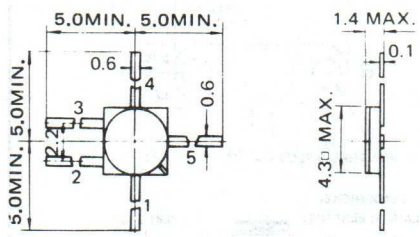

W347

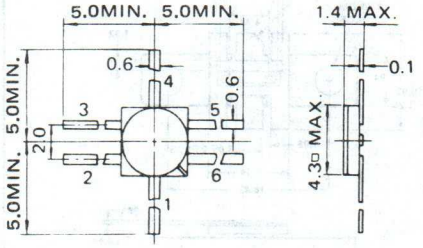

W348

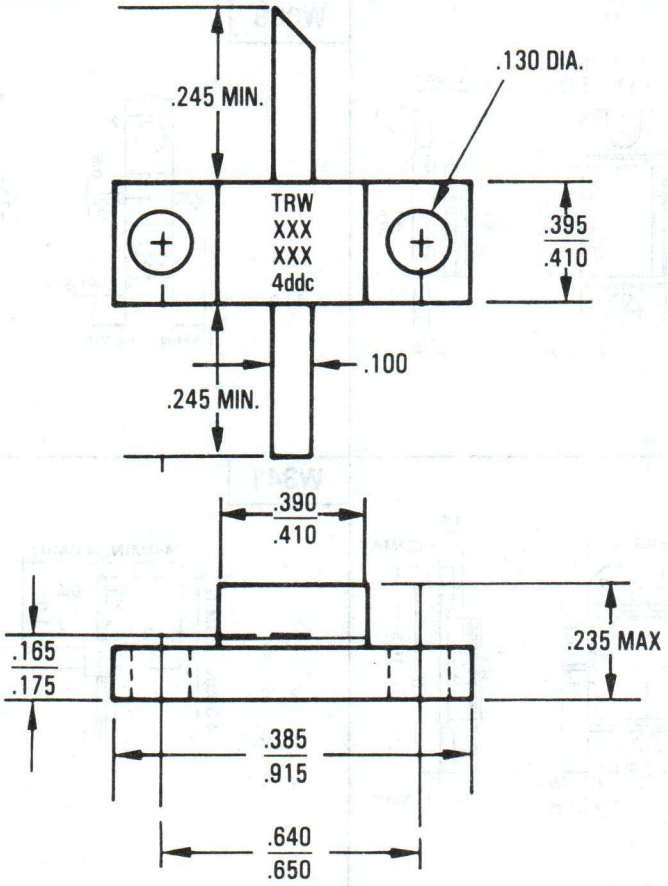

W349

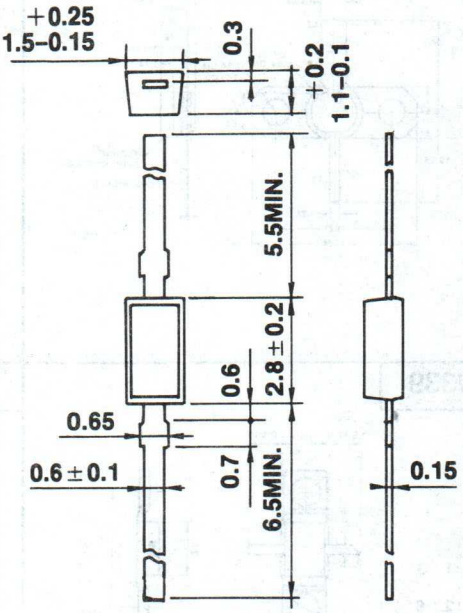

1. CATHODE
2. ANODE

Unit in mm

W350

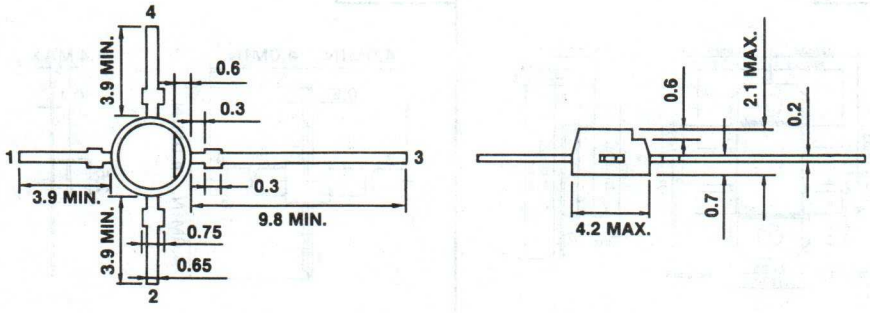

12. OUTLINE DRAWINGS

W295

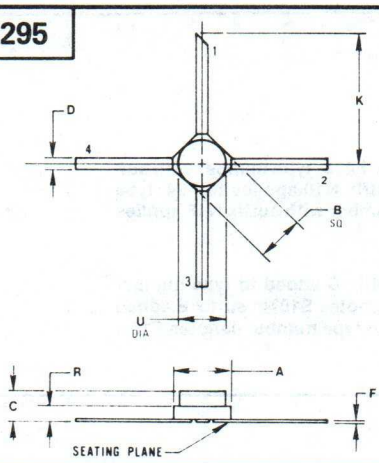

STYLE 1:
PIN 1. BASE
2. EMITTER
3. COLLECTOR
4. EMITTER

DIM	MILLIMETERS		INCHES	
	MIN	MAX	MIN	MAX
A	2.41	2.92	0.095	0.115
B	1.95	2.36	0.077	0.093
C	1.09	1.60	0.043	0.063
D	0.43	0.58	0.017	0.023
F	0.07	0.15	0.003	0.006
K	4.82	6.60	0.190	0.260
R	0.53	0.96	0.021	0.038
U	1.98	2.18	0.078	0.086

W296

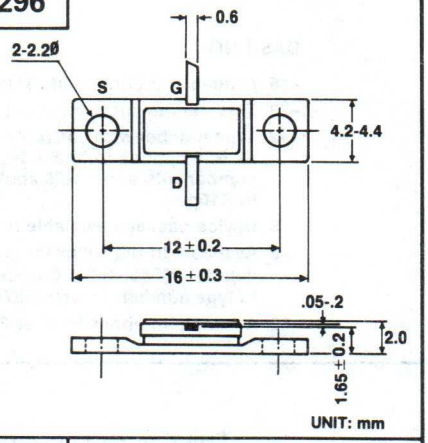

UNIT: mm

W297

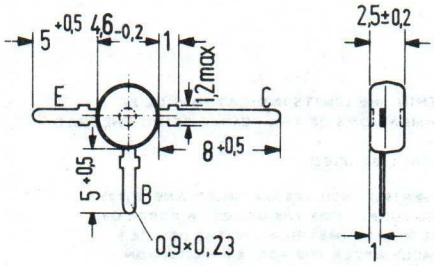

W298

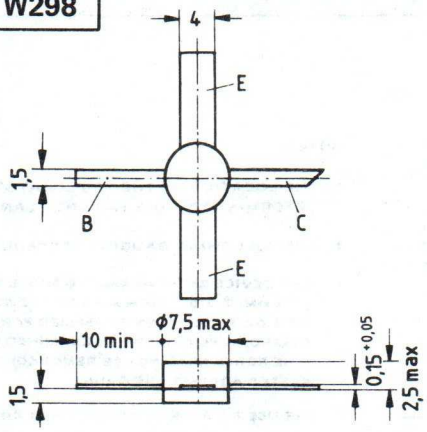

W299

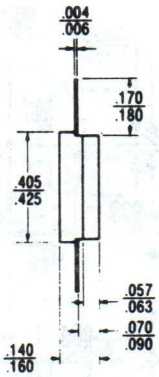

W300

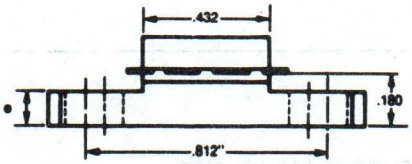

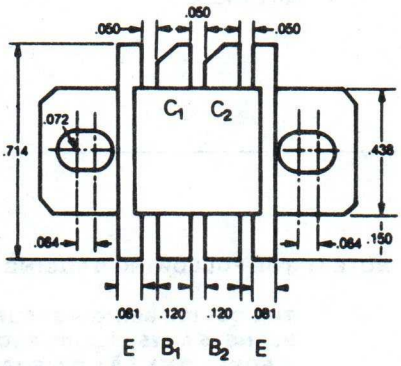

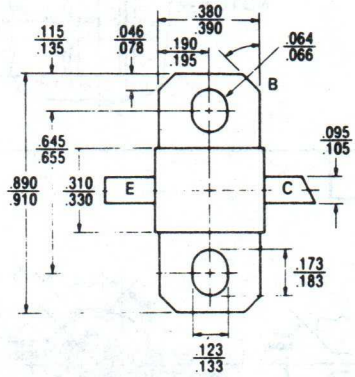

W301

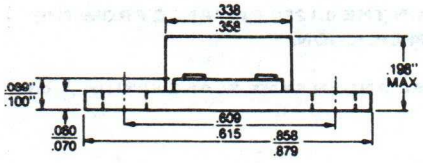

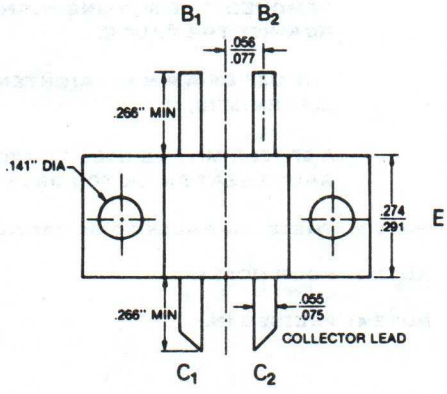

Y200 SERIES

THE Y200 SERIES (Y200 & HIGHER) REPRESENTS THE TO200 SERIES, WITH THE PREFIX "TO" REPLACED BY "Y" FOR SPACE-SAVING PURPOSES. THESE DRAWINGS ARE LOCATED IN ORDER IN THE "TO" SERIES.

12. OUTLINE DRAWINGS

Z NOTES
(DRAWING REFERENCE INFORMATION)

DASH NO.

-16 Available in either TO5, TO18, F3a or F49.

-23 This item is shown without adapter at F56 and with adapter at S216.

-42 Type number with suffix N28 applies to drawing F10x; type number with suffix N26 applies to F49b; type number with suffix N18 applies to M86b; type number with suffix N20 applies to F27f; type number with suffix N10 applies to F54; type number with suffix N25 applies to F58; type number with suffix N27 applies to S252; type number with suffix N16 applies to F10p.

-45 Device package available in either A97 or F56a.

-48 Available in the following package styles: suffix A added to type number denotes S4g; suffix B added to type number denotes M380; suffix C added to type number denotes F58; suffix D added to type number denotes S107b; suffix E added to type number denotes F27f; suffix F added to type number denotes S107c; suffix G added to type number denotes F10v.

-60 Available in either F27v or F10q.

JEDEC GAUGE DESIGNATIONS

The Gauge Designations below are referenced in the JEDEC TO Outline Drawings

GS1

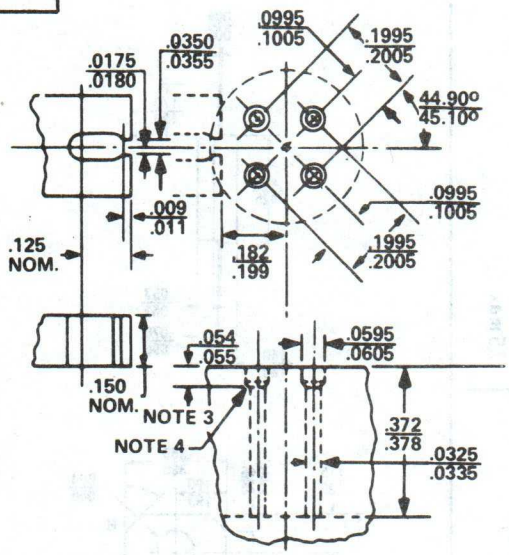

NOTES:

1. THE LOCATION OF THE TAB LOCATOR WITHIN THE LIMITS INDICATED WILL BE DETERMINED BY THE TAB AND FLANGE DIMENSIONS OF THE DEVICE BEING CHECKED.
2. THE FOLLOWING GAUGING PROCEDURE SHALL BE USED:

   THE DEVICE BEING MEASURED SHALL BE INSERTED UNTIL ITS SEATING PLANE IS .125" (3.18 MM) ± .010" (.254MM) FROM THE SEATING SURFACE OF THE GAUGE. A FORCE OF 8 ± .5 OZ. SHALL THEN BE APPLIED PARALLEL AND SYMMETRICAL TO THE DEVICE'S CYLINDRICAL AXIS. WHEN EXAMINED VISUALLY AFTER THE FORCE APPLICATION (THE FORCE NEED NOT BE REMOVED) THE SEATING PLANE OF THE DEVICE SHALL BE SEATED AGAINST THE GAUGE.

   THE USE OF A PIN STRAIGHTENER PRIOR TO INSERTION IN THE GAUGE IS PERMISSIBLE.
3. GAUGING PLANE.
4. DRILL ANGLE.

GS2

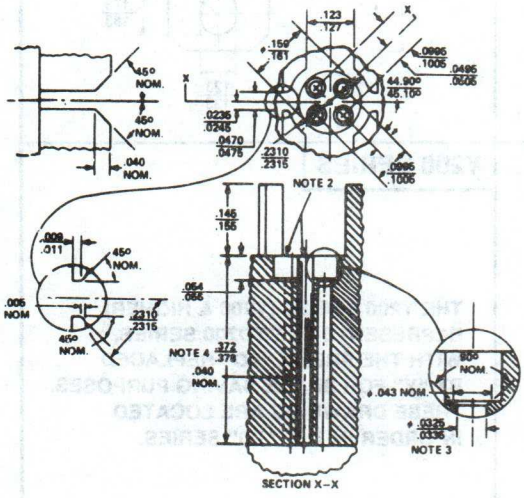

NOTE 1: THE FOLLOWING GAUGING PROCEDURE SHALL BE USED:

THE DEVICE BEING MEASURED SHALL BE INSERTED UNTIL ITS SEATING PLANE IS 0.125" ± .010" FROM THE SEATING SURFACE OF THE GAUGE. A FORCE OF 8 ± 0.5 OZ. SHALL THEN BE APPLIED PARALLEL AND SYMMETRICAL TO THE DEVICE'S CYLINDRICAL AXIS. WHEN EXAMINED VISUALLY AFTER THE FORCE APPLICATION (THE FORCE NEED NOT BE REMOVED) THE SEATING PLANE OF THE DEVICE SHALL BE SEATED AGAINST THE GAUGE.

THE USE OF A PIN STRAIGHTENER PRIOR TO INSERTION IN THE GAUGE IS PERMISSIBLE.

A SPACER MAY BE USED TO OBTAIN THE 0.125" DISTANCE FROM THE GAUGE SEAT PRIOR TO FORCE APPLICATION.

NOTE 2: THESE SURFACES TO BE PARALLEL AND IN SAME PLANE WITHIN ± .001"

NOTE 3: FOUR HOLES.

NOTE 4: PRESSED IN.

LEAD CODE IDENTIFICATION GUIDE

LEAD CODE EXPANDER	
— Emitter (E,E2) or Source (S) tied to Case	— Collector (C,C1/C2) or Gate (G) tied to Case
— Base (B,B1) or Drain (D) tied to Case	— Anode (A) tied to Case —
— Case tied to Substrate	— Base (B2) tied to Case
— Lead Configuration Shown on outline drawing	

ABBREV.	TERM
A	Anode
B	Base
B1	Base 1
C	Collector
C1/C2	Collector (1/2)
D	Drain
E	Emitter
E1/B2	Emitter 1/Base 2
E2	Emitter 2
G	Gate
K	Cathode
S	Source
Case	Case/Shield
Sub	Substrate

LEAD CODE GROUPING	
A-BZ	Bipolar
CA-CZ	UJT
DA-FZ	FET
GA-HZ	MultiElement (2 to 4 Lead)
KA-KZ	Darlington
PA-RZ	MultiElement (5 to 9 Lead)

LEAD CODE	LEAD CONFIGURATION								
	1	2	3	4	5	6	7	8	9
A	E	B	C						
B	E	C	B						
C	B	E	C						
D	B	C	E						
E	C	E	B						
F	C	B	E						
G	E	B	C	CASE					
H	C	E	C	E					
J	B	E	C	CASE					
N	C	B	E	E					
R	E	B	E	C					
S	E	C	E	B					
T	B		E						
U	C	B	E	B					
V	C	E	B	E					
X	B	C	E	CASE					
Y	B	E	C	E					
Z	B	E	B	C					
AC	E	B	C	B					
DA	S	G	D						
DB	G	S	D	S					
DD	D	S	G						
DE	G	S	D						
DF	G	D	S						
DX	D	G2	G1	S SUB					
DZ	G	D	SUB CASE	S					
EF	S1	G	S2	D					
ET	S SUB	D	G2	G1					
EW	CASE	D	G	S					
EX	S	D	S	G					
EY	S	G	S	D					
FB	S	D	G	SUB CASE					
FC	G	D	S SUB CASE						
FD	G1	G2	D	S					
FE	D	S	G	S					
GJ	B	E1	C	E2					
QG	E1	C1	C2	E2	B2	B1			
QH	E1/E2	C1	C2	E1/E2	B2	B1			
QJ	E1	C1	B2	E2	C2	B1			
QM	B2	C2	C1	B1	E1/E2				
RA	B2	E1/E2	C2	C1	E1/E2	B1			
RE	E2	B2	C2	C1	B1	E1			
RK	B	E	B	B	C	B			
RL	E1/E2	C1	C2	E1/E2	E1/E2	B2	B1	E1/E2	
RM	E	C	E	E	B	E			
RP	C	E	E	B	E	E			
RQ	E	B	E	E	C	E			
RT	E	B	E	E	C	E			
RU	B1	C1	C2	B2	E1/E2				
RV	C1	C2	E	B1	B2	E			

SECTION 13
MANUFACTURERS' DEVICE NUMBERING KEYS

ALPHA INDUSTRIES, INC.

MICROWAVE COMPONENTS

CONNECTOR
- P1-SMA Jack
- P2-SMC Jack
- P3-Solder Pin

POWER SUPPLY
- S1- +5 V, -12 V
- S2- +12 V, -12 V
- S3- +15 V, -15 V

CONTROL
- C1-Single TTL Control
- C2-Dual TTL Control

EXAMPLE

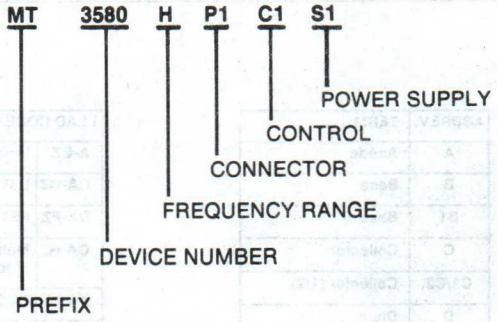

MULLARD LIMITED

DISCRETE DEVICES

MATERIAL USED

The first letter indicates the semiconductor material used:
- A - germanium
- B - silicon
- C - compound materials such as gallium arsenide
- R - compound materials such as cadmium sulphide

FUNCTION

The second letter indicates the general function of the device:
- A - detection diode, high speed diode, mixer diode
- B - variable capacitance diode
- C - transistor for a.f. applications (not power types)
- D - power transistor for a.f. applications
- E - tunnel diode
- F - transistor for r.f. applications (not power types)
- G - multiple of dissimilar devices; miscellaneous devices
- L - power transistor for r.f. applications
- N - photo-coupler
- P - radiation sensitive device such as photodiode, phototransistor, photoconductive cell, or radiation detector diode
- Q - radiation generating device such as light-emitting diode
- R - controlling and switching device (e.g. thyristor) having a specified breakdown characteristic (not power types)
- S - transistor for switching applications (not power types)
- T - controlling and switching power device (e.g. thyristor) having a specified breakdown characteristic
- U - power transistor for switching applications
- X - multiplier diode such as varactor or step recovery diode
- Y - rectifier diode, booster diode, efficiency diode
- Z - voltage reference or voltage regulator diode, transient suppressor diode

SERIAL NUMBER

The remainder of the type number is a serial number indicating a particular design or development and is in one of the following two groups:

(a) Devices intended primarily for use in consumer applications (radio and television receivers, audio amplifiers, tape recorders, domestic appliances, etc.) The serial number consists of three figures.

(b) Devices intended mainly for applications other than (a), e.g. industrial, professional and transmitting equipments. The serial number consists of one letter (Z, Y, X, W, etc.) followed by two figures.

RANGE NUMBERS

Where there is a range of variants of a basic type of rectifier diode, thyristor or voltage regulator diode the type number as defined above is often used to identify the range; further letters and figures are added after a hyphen to identify associated types within the range. These additions are as follows:

Rectifier Diodes and Thyristors

The group of figures indicates the rated repetitive peak reverse voltage, V_{RRM}, or the rated repetitive peak off-state voltage, V_{DRM}, whichever value is lower, in volts for each type.

The final letter R is used to denote a reverse polarity version (stud-anode) where applicable. The normal polarity version (stud cathode) has no special final letter.

Voltage Regulator Diodes, Transient Suppression Diodes

The first letter indicates the nominal percentage tolerance in the operating voltage Vz.
- A - ±1%
- B - ±2%
- C - ±5%
- D - ±10%
- E - ±20%

EXAMPLE

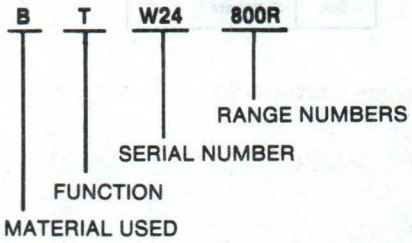

Tne letter is omitted on transient suppressor diodes.

The group of figures indicates the typical operating voltage Vz for each type at the nominal operating current Iz rating of the range. For transient suppressor diodes the figure indicates the maximum recommended standoff voltage V_R.

The letter V is used to denote a decimal sign.

The final letter R is used to denote a reverse polarity version (stud anode) where applicable. The normal polarity version (stud cathode) has no special final letter.

Continued on next page

SECTION 13
MANUFACTURERS' DEVICE NUMBERING KEYS

MULLARD LIMITED (Cont'd)

TRANSMITTING AND INDUSTRIAL VALVES AND TUBES

NOTE:
The type number for valves or tubes used primarily in 'professional' applications (e.g. transmitters, navigation or communication equipment, industrial applications) consists of two letters followed by four figures. This system does not apply to receiving-type valves.

CHARACTERISTIC
The first letter indicates a fundamental characteristic of the device:
- X – photosensitive tube
- Y – vacuum valve or tube (except photodevices)
- Z – gasfilled valve or tube (except photodevices)

FUNCTION
The second letter indicates the construction or application of the device:
- A – diode
- C – trigger tube
- D – triode or double triode
- G – miscellaneous
- H – travelling wave tube
- J – magnetron
- K – klystron
- L – tetrode, pentode, double tetrode or double pentode
- M – cold cathode indicator or counter tube
- P – photomultiplier tube or radiation counter tube
- Q – camera tube
- T – thyratron
- X – ignitron, image intensifier or image converter
- Y – rectifier
- Z – voltage stabilizer or reference tube

SERIAL NUMBER
The group of four figures is a serial number. The last figure is 0 for basic types; variants of the basic type are indicated by the figures 1 to 9.

EXAMPLE

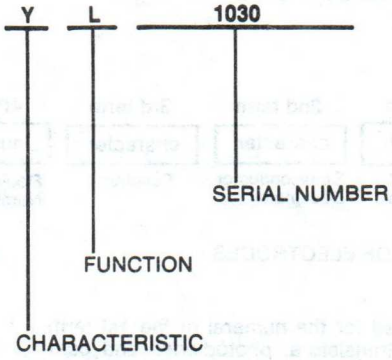

NEC ELECTRONIC USA, INC. NEC

DISCRETE DEVICES

NEC'S ORIGINAL NOMENCLATURE.

Some diodes and optical semiconductor elements employ a nomenclature original to NEC. This nomenclature consists of a prefix of 2 or 3 alphabet characters followed by a numeral and character. As shown in the table, the prefix indicates the use and structure of the element.

NEC Nomenclature

Prefix	Use & Structure	Product example
AD	Impatt diode	AD611
GD	Gunn diode	GD408A
GH	Germanium mixer diode	GH1D
PH	Phototransistor	PH201A
PS	Photocoupler, photointerrupter	PS2001
RD	Zener diode	RD2.OE
SD	Small signal diode	SD13
SE	Infrared light emitting diode	SE301A
SG	Green light emitting diode	SG203D
SH	Point contact type silicon diode	SH5A
SM	Schotty barrier type GaAs mixer diode	SM153
SR	Red light emitting diode	SR103D
SY	Amber color light emitting diode	SY403D
SV	Silicon varactor diode	SV87D

EXAMPLE

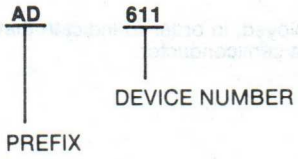

Continued on next page

NEC ELECTRONIC USA, INC. (Cont'd) NEC

DISCRETE DEVICES

1st term	2nd term	3rd term	4th term	5th term
numeral	character	character	numeral	character
Number of Electrodes	Semiconductor Designator	Function	Registration Number	Improvements

NUMBER OF ELECTRODES

1st TERM

0 is used for the numeral of the 1st term, for phototransistors, photodiodes and composite elements including such diodes and transistors. In other elements, when the number of effective electrodes is n, the number n-1 is used for the numeral of the 1st term. That is to say, for a 2 electrode elements such as a diode 1, for a 3 electrode transistor 2, and for a 4 electrode transistor 3 is used. In the case of composite elements, the element with the most numerous electrodes is taken and, similarly to the above, when the number of electrodes of this element is n the numeral of the 1st term shall be n-1.

In the above case, since shield lead wires and 2 or more lead wires coming from the same electrode are not counted as effective electrodes, the number of effective electrodes and the number of lead wires may not necessarily be the same.

SEMICONDUCTOR DESIGNATOR

2nd TERM

S is employed, in order to indicate that the product is a semiconductor.

FUNCTION

3rd TERM

This character is deleted, when the 1st term numeral is 0 or 1.

When the numeral of the 1st term is one or more, in order to make the polarity and outline characteristics of the element known, one of the following characters is used for the 3rd term.

- A – High frequency PNP transistors.
- B – Low frequency PNP transistors.
- C – High frequency NPN transistors.
- D – Low frequency NPN transistors.
- E – Esaki diodes.
- F – Thyristors.
- G – Gunn diodes.
- H – Single junction transistors.
- J – P channel field effect transistors.
- K – N channel field effect transistors.
- M – Bidirectional thyristors.
- Q – Light emitting diodes.
- R – Rectifying diodes.
- S – Small signal diodes.
- T – Avalanche conduction diodes.
- V – Variable capacity diodes, PIN diodes, Snap-off diodes.
- Z – Zener diodes.

However, in the case of diodes some products still remain that have been registered under the old system, in which the 3rd term character is deleted and the type name is in the form of 1SOO.

REGISTRATION NUMBER

4th TERM

A number which is attached in accordance with the order of registration, that starts at 11.

EXAMPLE

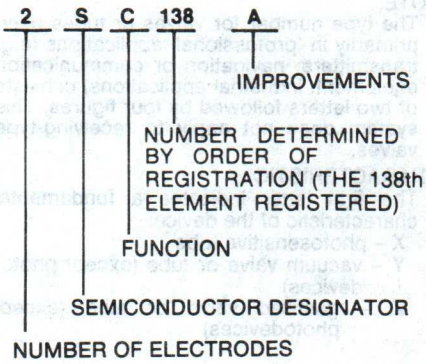

IMPROVEMENT

5th TERM

This character indicates improvements from the original form. This character is not attached to the original form, but is attached to improved models employing the capital letters, A, B, C, D, E, F, G, H, J, K of the alphabet in the order of the improvements. In the case improvements are made, the improved model shall be compatible with the preceding model, though compatibility in the opposite direction is not necessarily required.

In the case of diodes, when the letter M is used for the 5th term it indicates that the element is a matching couple, and when R is used that the polarity is reversed while the exterior and electrical characteristics are the same.

In addition to the above, with no bearing on the JIS nomenclature, a character or number in ( ) is sometimes used as a 6th term to indicate that the specification is that of a specific customer.

- N – NHK standard type (example: 2SC594 N)
- M – Defense Agency Maritime General Staff approved (example: 2SC68-M)
- S – One of the several S series types established for industrial measurement (example 2SD188 S)

(numerals)...Established for specific customers or applications. Attached sequentially from (1) in order of establishment.
(example: 2SC653(1), 1S306(3))

SECTION 13
MANUFACTURERS' DEVICE NUMBERING KEYS

RAYTHEON CO.

BEAM LEAD CHIPS

PREFIX

BD	–	Diode; 2 anode beams, 2 cathode beams
B2D	–	Diode; 1 anode beam, 1 cathode beam, 2 beams mechanical support only
BZ	–	Zener diode
BT	–	Transistor

SUFFIX

No Designator	–	B-level (military) visual
C	–	C-level (commercial) visual
T	–	B-level visual chip in TO-18 can TO-18 can

EXAMPLE

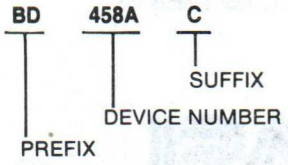

14. MANUFACTURERS' LOGOS

AEIL – AEI Semiconductors Inc.

ALGG – Telefunken Electronic GmbH

ALP – Alpha Industries Inc.

APX – Amperex Electronic Co.

ASI – Advanced Semiconductors, Inc.

AVA – Avantek, Inc.

BELI – Bharat Electronics

CCI – Custom Components Inc.

CEI – Calvert Electronics Intl, Inc.

CEN – Central States Industries

CODI – CODI Corp.

CSR – CSR Industries

CTR – Acrian, Inc.

DEX – Dexcel Inc., Relmag Div.

DIT – Diode Transistor Co., Inc.

EAS – Eastron Corp.

EEVB – English Electric Valve Co., Ltd.

EMBI – Thorn EMI-Varian Ltd.

ESE – Elm State Electronics, Inc.

ETC – Electronic Transistors Corp.

FCAJ – Fujitsu Ltd.

FERB – Ferranti Ltd.
FERS – Ferranti Ltd.

FMI – Fujitsu Microelectronics Microwave Opto Group

FSC – Fairchild Camera & Instrument Corp.

14. MANUFACTURERS' LOGOS

GESY – General Electric Co.

GHZ – Frequency Sources Inc.

GTC – General Transistor Corp.

HAC – Hughes Aircraft Co.

HITJ – Hitachi Ltd.

HPA – Hewlett Packard

HSE – Hybrid Semiconductors & Electronics Inc.

HTN – Hi-Tron Semiconductor Corp.

HVS – High Voltage Semiconductor Specialists Inc.

IDC – International Diode Corp.

IDI – International Devices Inc.

ITT – ITT Electron Tube Div.
ITTG – ITT Semiconductors Intermettal

KSI – Knox Semiconductor Inc.

LIT – Litton Industries

LMTF – Le Material Telephonique

MATJ – Matsushita Electronics Corp.

MDC – Microwave Diode Corp.

MDO – Raytheon Company

MIC – Microwave Associates
MICB – Microwave Associates, Ltd.

MIT – Mictron Inc.

MITJ – Mitsubishi Electric Corp.

MOTA – Motorola Semiconductor Products

MOVB – M-O Valve Co., Ltd.

14. MANUFACTURERS' LOGOS



MSC – Microsemi Corp.



MSI – MSI Electronics Inc.



MULB – Mullard Ltd.



NASG – North American Semiconductor Co. Ltd.



NECE – NEC Electron
NECJ – Nippon Electric Co., Ltd.



NJRC – New Japan Radio Co., Ltd.



NJS – New Jersey Semiconductor Products Co., Inc.



NSC – National Semiconductor



OKIJ – OKI Electric Industry Co., Ltd.



OWE – Omni-Wave Electronics Corp.



PHIN – Philips Elect. Comp. Material Div.



PII – Parametric Industries Inc.



PPC – PPC Products Corp.



RHM – ROHM Corporation



RTCF – R.T.C. La Radio Technique-Compelec



RTN – Raytheon Co.



SCA – Semicoa



SDI – SDI Inc.

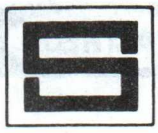

SEI – Semiconductors, Inc.



SES – Semitronics Corp.



SGSI – SGS-ATES Componenti Elettronici S.p.A.



SIEG – Siemens Corp.



SIX – Siliconix Inc.



SODI – Solitron Devices Inc.

SONY – Sony Corp.

SPE – Space Power Electronics Inc.

SST – Solid State Inc.

STCE – Stantel Components

STI – Semiconductor Technology Inc.

STR – Syntar Industries Inc.

SWT – Swampscott Electronics Co.

TCY – Teledyne Crystalonics Inc.

THC – Thomson-CSF Electron Tubes Inc.

THEF – Thomson-CSF/EFCIS

TIC – TIC Semiconductor

TII – Texas Instruments Inc.
TIID – Texas Instruments, Deutschland
TIIF – Texas Instruments, France

TOSJ – Toshiba Corp.

TRWM – TRW Microwave
TRWS – TRW Semiconductors Inc.

TSAJ – Tokyo Sanyo Electric Co., Ltd.

UNI – Unitrode Corp.

UPI – UPI Semiconductor

UTS – Unitran Semiconductor Corp.

VALG – VALVO GmbH

VAR – Varian Associates Inc.
VARC – Varian Canada, Inc.
VET – Varian Associates Inc.

WAB – Walbern Devices Inc.

★ SYMBOLS & CODES COMMON TO MORE THAN ONE SECTION

SYMBOLS FOLLOWING TYPE NO. & IN TYPE NO. CROSS INDEX

\# ☑ % — Indicators of separate manufacturers producing same type number (non-JEDEC) whose characteristics are not the same. This manufacturer-identifying symbol (assigned by D.A.T.A.) is an integral part of the type number (in Type No. Cross-Index and Technical Data Section) to avoid the possibility of confusing the device of one manufacturer with the devices of the others.

Example	Type No.	Manufacturer	Tube Type
	W9/2E #	STCB	TWT
	W9/2E ☑	HITJ	KL
		WJC	MG

#1, #2, #3. . . . Tube Listed More than Once for Different Modes of Operation

– RT..... Indicates replacement type; consult manufacturer

ALL VALUES TYPICAL UNLESS OTHERWISE INDICATED

ENGLISH-RUSSIAN ALPHABET TRANSLITERATION FOR USSR TYPES

ENGLISH	RUSSIAN	ENGLISH	RUSSIAN
A	А	L	Л
B	Б	M	М
V	В	N	Н
G	Г	O	О
D	Д	P	П
E	Е	R	Р
SZ	Ж	S	С
I	И	T	Т
K	К	U	У

UNDER DESCRIPTION

UNDER MATERIAL (and Process)

GA	– Gallium Arsenide	∅	– Gold Bonded
Ge	– Germanium	†	– Indium Bonded
GP	– Gallium Phosphide	☑	– Point Contact
GS	– Gallium Antimonide	#	– Planar
Se	– Selenium	§	– Mesa
SG	– Germanium Silicon	$	– Epitaxial
Si	– Silicon	%	– Metal-Silicon
*	– Alloyed	♦	– Schottky Barrier
△	– Diffused	▼	– Ion Implanted
X	– Contains Poisonous Material		

FOLLOWING LINE NO.

- ▼ – New Type
- ♦ – Revised Specifications
- # – Non-JEDEC type manufactured outside U.S.A.

REVERSE POLARITY TYPES

Note: Availability of reverse polarity types is indicated by a § symbol in the Dwg. No. column.

MW-1

INTERPRETER — MICROWAVE
SYMBOLS & CODES EXPLAINED

TYPE NO.	The manufacturers designated type number for the device.
CENTER FREQUENCY	The center value of the useable frequency range i.e. the average value of the two useable frequency extremes.
POWER OUTPUT	The maximum available output power delivered to the load.
FREQUENCY RANGE	The maximum and minimum frequency extremes at which the device conforms to certain given specifications.
MAX. DUTY CYCLE	The ratio of the "ON" period to the total period during which the device is operating.
MAX BEAM VOLTAGE	The applied beam accelerating voltage. See note 1.
MAX CATHODE CUR.	The maximum total cathode current that the device can safely carry.
GAIN	The ratio of the output to the input power.
NF	The ratio of the total noise power to the input noise power, when the input termination is at the standard temperature of 290° Kelvin.
TUBE TYPE	(See list of abbreviations (tab 11) for tube types.)
FUNCTION	The main use or function of the device. (See list of abbreviations.)
TUNING	The electro/mechanical means employed for tuning the device.
OUTPUT	Indicates the output coupling mode (e.g. waveguide, cavity coupled, etc.)
WEIGHT	The typical weight in pounds of the device.

2. SOURCE,AMPLIFIER,OUTPUT TUBES

IN ORDER OF (1)TUBE TYPE (2)CENTER FREQUENCY (3)POWER OUTPUT (4)TYPE No.

LINE No.	4 TYPE No.	2 CENTER FREQ. (Hz)	3 POWER OUTPUT (W)	FREQUENCY RANGE (Hz)	MAX. DUTY CYCLE	MAX. BEAM VOLTAGE (Note 1) (V)	MAX. CATHODE CUR. (A)	GAIN (dB)	NF (dB)	DESCRIPTION: 1 TUBE TYPE	FUNCTION	TUNING	OUTPUT	WEIGHT (lb)
✪			(4)	(5)	(6)	(7)	(8)	(9)	(10)	(11)	(12)	(13)	(14)	(15)

(4)
- ∗ : Maximum
- † : Minimum
- △ : Peak R-F carrier wave beam
- ◫ : Incident R.F. power peak maximum rating (noise source only)

SEE FOOTNOTE

(5)
- † : Range covered by two or more tubes
- ∗ : Tube can be set to one Freq. within this freq. range
- ∅ : Tube can be set for a specified tuning range within these limits
- △ : Frequency coverage – available in selected frequency ranges
- ◫ : Fine tuning range at set frequency
- § : Frequency tolerance at fixed frequency

(6)
CW: Continuous Wave

(7)
\# : Anode Voltage
§ : Integral Power supply with source voltage indicated. The following symbols coupled with the above indicate the frequency of the source voltage:
- △ : 60 H_z
- ◫ : 400 H_z
- ∅ : DC
- ∗ : 50 H_z

† : Power Supply Input Voltage and Frequencies Selectable (Max. Values Specified)

Note 1: The Max. Beam Voltage represents:
Anode to Cathode for Magnetron;
Resonator to Cathode for Klystron;
Periodic Structure to Cathode for other devices;
Anode to Cathode on-state or operating voltage for Noise Source.

∅ : Nominal (when symbol used alone)
SEE FOOTNOTE

FOOTNOTE: For pulse tubes (indicated by duty cycle other than C.W.) the given data of Power Output, Max. Beam Voltage and Max. Cathode Current are pulsed values. For C.W. tubes, the indicated values are dc.

(8)
- ◫ : Helix Current
- ∅ : Nominal
- △ : Max. Anode Current See footnote
- § : Max. Collector Current

SEE FOOTNOTE

(9)
- ∗ : Maximum
- † : Minimum
- § : Min. Conv. Gain
- ∅ : Matched Gain

(10)
- ∗ : Maximum
- † : Minimum
- § : Effective Noise Ratio

✪ SYMBOLS & CODES AT TOP OF FIRST INTERPRETER PAGE, MW-1.

(Continued on Next Page)

(11) Note: All Magnetrons have permanent magnets unless otherwise indicated.

- BWM : Backward Wave Tube-M type
- BWT : Backward Wave Tube
- CFA : Crossed-Field Amplifier
- CFG : Crossed-Field Noise Generator
- GYT : Gyrotron
- KL : Klystron
- KL2, KL3 } Indicates number of cavities
- KLF : Floating Drift Tube Klystron
- KLR : Reflex Klystron
- KL4 : Indicates # of cavities
- KLT : Klystron Input, Travelling Wave Output
- MG : Magnetron
- MGC : Coaxial Magnetron
- MGI : Inverted Coaxial Magnetron
- NS : Noise Source
- TWT : Travelling Wave Tube
- ∅ : Electromagnetic Field
- △ : Electrostatic Field
- * : Gridded
- † : Permanent Magnetic Field
- § : Periodic Permanent Magnetic Focusing
- # : Liquid Cooled
- ◰ : Solid State
- $: Modulating Anode
- ♦ : Vapor-cooled

(12) Note: For frequency multiplier tubes, the center frequency column indicates the center frequency of the input signal and under frequency range column, the output frequency range is given.

- AM : Amplifier
- AMD : Dispersive Amplifier
- AML : Low Noise Amplifier (10db max.)
- CON : Converter
- FQ : Frequency Multiplier; numeric suffix indicates multiplication factor. (x = 10)
- LIM : Limiter
- OS : Oscillator
- SEA : Serrodyne (amplifier, low noise
- SER : Serrodyne modulator
- MWO : Microwave Oven

(13) Note: For travelling wave tubes and any broad band tubes, this column is left blank, indicating that no adjustments are necessary to obtain the entire listed frequency range.

- BB: Broad Band
- DT: Dither Tuned
- EM: Electro-Mechanical FM
- FF: Fixed Frequency
- FM: Frequency Modulated
- HT: Hydraulically Tuned
- MT: Mechanically Tuned
- MTM: Mechanically Tuned motor drive
- SE: Separate Resonator Electro-Mechanical FM
- SR: Separate Resonator
- ST: Spin Tuned
- TT: Thermally Tuned
- VT: Voltage Tuned

(14)

- CC: Cavity Coupled
- CO: Coaxial
- CS: Output connector made to customer's specifications
- WA: Waveguide Output
- WC: Waveguide or Coaxial Output
- AT: Antenna

(15)

- *: Wt. includes external/integral magnet, solenoid and/or cavity
- §: Wt. of device only. More than one (1) magnet, solenoid and/or cavity size indicated by manufacturer
- ◰: Instrumentation type
- △: Max. wt. indicated by manufacturer

✪ SYMBOLS & CODES AT TOP OF FIRST INTERPRETER PAGE, MW-1.

INTERPRETER — MICROWAVE
SYMBOLS & CODES EXPLAINED

TYPE NO.	The manufacturers designated type number for the device.
CENTER FREQUENCY	The center value of the useable frequency range i.e. the average value of the two useable frequency extremes.
INCIDENT POWER	The product of the outgoing current and voltage traveling from a transmitter along a transmission line.
FREQUENCY RANGE	The maximum and minimum frequency extremes at which the device conforms to certain given specifications.
MAX DUTY CYCLE	The ratio of the "ON" period to the total period during which the device is operating.
MAX PULSE WIDTH	The maximum operating pulse width (i.e. on time) for which the given parameters are guaranteed.
RECOVERY TIME	The time required after a transmitted pulse for recovery to a specified relation between receiving sensitivity or received signal and the normal value.
VSWR	(Voltage standing wave ratio.) The ratio of the magnitude of the transverse electric field in a plane of maximum strength to the magnitude at the equivalent point in an adjacent plane of minimum field strength.
LEAKAGE SPIKE	The radio frequency energy per pulse transmitted through the tube before and during the establishment of the steady-state radio frequency discharge.
LEAKAGE FLAT	The peak radio frequency power transmitted through the tube after the establishment of the steady-state radio frequency discharge.
INSERTION LOSS	The ratio of (A) the power delivered to that part of a system following the transducer before insertion of the transducer to (B) the power delivered to that same part of the system after insertion of the transducer.
TUBE TYPE	A code indicating the type or main function of the tube (e.g. Pre TR, TR Limiter, etc.)
FEATURES	One or more abbreviations or symbols indicating special features of the device.
OUTPUT	Indicates the output coupling mode (e.g. waveguide, cavity coupled, etc.)
LIFE	The MTBF or expected life of the tube.

3. DUPLEXER TUBES

IN ORDER OF (1)TUBE TYPE (2)CENTER FREQUENCY (3)INCIDENT POWER (4)TYPE No.

LINE No.	4 TYPE No.	2 CENTER FREQ. (Hz)	3 INCIDENT POWER (W)	FREQUENCY RANGE (Hz)	MAX. DUTY CYCLE	MAX. PULSE WIDTH (s)	RECOVERY TIME (s)	MAX. VSWR	LEAKAGE SPIKE (ergs)	LEAKAGE FLAT (W)	MAX. INSERTION LOSS (dB)	DESCRIPTION 1 TUBE TYPE	FEATURES	OUTPUT	LIFE (hr)
		(4)		(5)		(7)	(8)	(9)	(10)	(11)	(12)	(13)	(14)	(15)	(16)

(4) ∗: Maximum
†: Minimum
△: Peak R-F carrier wave beam

NOTE: For pulse tubes (indicated by duty cycle other than C.W.) the given data of Incident Power are pulsed values. For C.W. tubes, the indicated values are dc.

(5) ⍁: Fine tuning range at set frequency

(7) §: Test condition for max. power output

(8) ∗: Maximum

(9) ∅: Typical

(10) ∗: Maximum
§: Isolation in DB
⍁: Joules Per Pulse

(11) ∗: Maximum
⍁: Low power leakage
†: Energy in ergs.

(12) ∅: Typical
$: Max. arc loss
†: Minimum

(13) ATR : Anti Trans-Rec.
DPBA : Balanced Duplexer
DPBR : Branched Duplexer
PTR : Pre TR
PTRD : Pre TR Dual
PTRLD: Pre Dual TR Limiter
TR : Trans-Rec.
TRDL : TR Dual
TRL : TR Limiter
TRLD : Dual TR Limiter
#: Liquid cooled

(14) BP : Band Pass or Broad Band
CM : Cavity Mounted
CP : Crystal Protected
DP : Diode Protected or Limited
FP : Ferrite Protected or Limited
MT : Mechanically Tuned
PL : Plug In
PS : Passive (Igniterless)
SS : Solid State Protected

(15) CC: Cavity Coupled
CO: Coaxial
CS: Output connector made to customer's specifications
WA: Waveguide output
WC: Waveguide or Coaxial Output

(16) ∗: Maximum
†: Minimum
⍁: Cycles

SYMBOLS & CODES AT TOP OF FIRST INTERPRETER PAGE, MW-1.

TYPE NO. The manufacturers designated type number for the device.

BAND The operating frequency band (e.g. Ku, X, etc.) of the device.

TEST FREQUENCY The frequency at which the device parameters are specified.

FREQUENCY RANGE The maximum and minimum frequency extremes at which the device conforms to certain given specifications.

NOISE RATIO NR The noise temperature ratio. The temperature of a passive system having an available noise power per unit bandwidth equal to that of the actual terminal.

NOISE REC NF The device noise figure. The ratio of the total noise power to the input noise power, when the input termination is at the standard temperature of 290° K.

TEST COND. P_{in} The power input condition for which the following 'conversion loss' and 'max vswr' are valid.

TEST COND. R_L The load resistance for which the following 'conversion loss' and 'max vswr' are valid.

TEST COND Z_m The AC load impedance for which the following 'conversion loss' and 'max vswr' are valid.

CONVERSION LOSS The ratio of the magnitude of the input frequency voltage across the input termination of a transducer to the magnitude of the output frequency voltage across the external termination of the output with the transducer inserted between the generator and the output termination.

VSWR (Voltage standing wave ratio.) The ratio of the magnitude of the transverse electric field in a plane of maximum strength to the magnitude at the equivalent point in an adjacent plane of minimum field strength.

IF IMPEDANCE RANGE The minimum and maximum values of the devices impedance at local oscillator frequency.

BURN OUT A permanent degradation of device characteristics as a result of exposure to excessive electrical stress.

TEMP The maximum allowable temperature at which the device operation will fall within given specifications.

MAT The material (e.g. silicon, germanium, etc.) used in manufacturing the device.

DWG NO. The location at which the physical device specifications and drawing may be found.

4. MICROWAVE MIXER DIODES

IN ORDER OF (1) TEST FREQ (OR AVG FREQ WHEN TEST FREQ NOT AVAILABLE) and (2) TYPE No.

LINE No.	[2] TYPE No.	BAND	[1] TEST FREQ. (Hz)	FREQUENCY RANGE MIN - MAX (Hz)	NOISE MAX RATIO NR times	NOISE MAX REC. NF (dB)	TEST COND. FOR- Pin (W)	TEST COND. FOR- RL (Ω)	TEST COND. FOR- Zm (Ω)	MAX. CONV. LOSS (dB)	MAX. VSWR	IF IMPEDANCE RANGE MIN - MAX (Ω)	ABSOLUTE MAX RATING BURN-OUT (Erg)	ABSOLUTE MAX RATING MAX. TEMP (°C)	DESCRIPTION MAT.	DESCRIPTION DWG. No.
✪						⑦				⑪	⑫	⑬	⑭	⑮	✪	⑰

⑦ ∅ – I.F. amplifier
† – Typical

⑪⑫⑬ ∅ – Typical

⑭ § – mW
$ – Peak pulse power (watts)

⑮ A – Ambient
C – Case
J – Junction
S – Storage

⑰ ∅ – Available with reverse polarity (R);
Available in matched forward pair (M);
Available in matched forward and reverse pair (MR)
(Appropriate letter code can be added to type number; e.g., 1N3000B, 1N3000RB; 1N21WE, 1N21WEM, 1N21WEMR)
§ – Reverse polarity cartridge
△ – Tripolar construction
⍁ – Coaxial cartridge
$ – Two matched units in separate cases
* – Two or more units in a single case (see Outline Drawing for terminal arrangement)

✪ SYMBOLS & CODES AT TOP OF FIRST INTERPRETER PAGE, MW-1.

INTERPRETER — MICROWAVE
SYMBOLS & CODES EXPLAINED

SECTION 5 — MICROWAVE VIDEO DETECTOR DEVICES — SECTION 5

TYPE NO.	The manufacturers designated type number for the device.
BAND	The operating frequency band (e.g. Ku, X, etc.) of the device.
TEST FREQUENCY	The frequency at which the device parameters are specified.
FREQUENCY RANGE	The minimum and maximum frequencies at which the devices parameters fall within given specifications.
FIGURE OF MERIT	The quantitative excellence of the detector in terms of current sensitivity and video impedance; (i.e. that part of the signal-to-noise ratio equation that pertains to the crystal parameters and the equivalent noise resistance of the video amplifier).
@ PWR LVL	The power level at which the figure of merit is specified.
@ R	The resistance at which the figure of merit is specified.
MIN OUTPUT V_0	The minimum available intelligence output voltage.
@ PWR LVL	The power level at which the min output voltage is specified.
TANG SENS	(Tangential sensitivity) The signal power below a one-milliwatt reference level required to produce an output pulse whose amplitude is sufficient to raise the noise fluctuation by an amount equal to the average noise level.
VIDEO IMPEDANCE RANGE	The minimum and maximum value of the devices impedance at the video frequency.
@ MAX VOLT	The maximum voltage at which the video impedance is specified.
BURN OUT	A permanent degradation of device characteristics as a result of exposure to excessive electrical stress.
MAX TEMP	The maximum allowable temperature at which the device operation will fall within given specifications.
MAT	The material (e.g. silicon, germanium, etc.) used in manufacturing the device.
DWG NO.	The location at which the physical device specifications and drawing may be found.

5. MICROWAVE VIDEO DETECTOR DIODES

IN ORDER OF (1) TEST FREQ (OR AVG FREQ WHEN TEST FREQ NOT AVAILABLE) and (2) TYPE No.

LINE No.	[2] TYPE No.	BAND	[1] TEST FREQ. (Hz)	FREQUENCY RANGE MIN - MAX (Hz)	MIN FIG OF MERIT: FIGURE of MERIT	at PWR. LVL. (W)	at R (Ω)	MIN OUTPT: Vo (V)	at PWR. LVL. -dBm	MIN TANG. SENS. -dBm	VIDEO IMPEDANCE RANGE MIN - MAX (Ω)	at MAX. VOLT. (V)	ABSOLUTE MAX RATING: BURN-OUT (W)	MAX. TEMP (C)	MAT.	DESCRIPTION: DWG. No.
✪					⑥							⑬	⑭	⑮	✪	⑰

⑥ § – Capacitance in fF; test voltage shown in Power Level column
* – Output noise voltage in micro volts (bias current shown in Power Level column)

⑬ * – Bias current in amps

⑭ ∅ – Ergs
$ – Peak pulse power

⑮ A – Ambient
J – Junction
S – Storage

⑰ ∅ – Available with reverse polarity (R);
Available in matched forward pair (M);
Available in matched forward and reverse pair (MR)
(Appropriate letter code can be added to type number e.g., 1N3000B, 1N3000RB, 1N21WE, 1N21WEM, 1N21WEMR)
§ – Reversible polarity cartridge
△ – Tripolar construction
⊠ – Coaxial cartridge
† – Available in different package configuration - consult manufacturer
$ – Two matched units in separate cases

✪ SYMBOLS & CODES AT TOP OF FIRST INTERPRETER PAGE, MW-1.

SECTION 6 VOLTAGE VARIABLE CAPACITORS & VARACTOR DIODES SECTION 6

TYPE NO.	The manufacturers designated type number for the device.
MINIMUM CUTOFF FREQUENCY	The frequency at which the figure of merit (Q) is equal to 1.
CAP C_j	The junction capacitance at a specified voltage.
@ TEST VOLT	The voltage at which the junction capacitance is specified.
CAPACITANCE RANGE	The total capacitance change between V = 0 and PIV.
PIV	The recommended maximum instantaneous anode to cathode voltage that may be applied in the reverse direction.
Q FACTOR MIN Q	Two pi (2π) times the ratio of the energy stored per cycle to the energy dissipated per cycle. The magnitude of the ratio of its susceptance to its effective shunt conductance at a given frequency.
@ TEST FREQUENCY	The frequency at which the 'Q factor' is specified.
SER. RES R_s	A dropping resistance considered to be in series with an assumed pure capacitance.
MAX DISS @ 25°C	The maximum allowable device power dissipation at an ambient temperature of 25°C.
MAT	The material (e.g. silicon, germanium, etc.) used in manufacturing the device.
DWG NO.	The location at which the physical device specifications and drawing may be found.

6. VOLTAGE VARIABLE CAPACITORS & VARACTOR DIODES

IN ORDER OF (1) TYPICAL CAPACITANCE, (2) TEST VOLTAGE, and (3) TYPE No.

LINE No.	3 TYPE No.	MINIMUM CUTOFF FREQUENCY (Corresponding to Type Numbers in previous column) (Hz) (Hz) (Hz) (Hz) (Hz) (Hz)	TYP. CAP. 1 CAP. Cj (F)	2 at TEST VOLT (V)	CAPACITANCE RANGE (for V = 0 to PIV) Ø - at TEST VOLT. (pF)	PIV (V)	Q FACTOR MIN Q	Q FACTOR at TEST FREQ (Hz)	MAX. SER. RES. Rs (Ω)	MAX. DISS. (@ 25 C (W)	MAT.	DESCRIPTION DWG. No.
✪		(3)	(9)		(11)	(12)	(13)		(15)	(16)	✪	(18)

(3)
Ø – Typical

Applies to all values even though symbol appears only once

(9)
Ø – Minimum
☐ – Maximum
† – Total Capacitance
§ – C_T (Total Capacitance) = C_j (Junction) + C_c (Case)
△ – Available in closer tolerances; consult manufacturer
% – Type no. suffixes indicate capacitance tolerances:

"A" – 10% "D" – 1%
"B" – 5% No suffix – 20%
"C" – 2%

(11)
Ø – At test voltage
† – Center value may be specified within indicated range at test voltage
§ – Change in capacitance (end points not specified) over the voltage range 0 to PIV
% – Percent capacitance tolerance at test voltage in order of type no. plain and suffixes, respectively
$ – Capacitance Ratio at indicated voltage range

(12)
† – PIV equal to max. cont. working voltage, DC blocking voltage, or min. saturation voltage
☐ – Breakdown voltage at worst-case conditions. When specified at a given reverse current, minimum breakdown voltage is used.
$ – Max. cont. working voltage (PIV not specified)
% – Available at lower voltages

✪ SYMBOLS & CODES AT TOP OF FIRST INTERPRETER PAGE, MW-1.

(Continued on Next Page)

MW-7

INTERPRETER — MICROWAVE
SYMBOLS & CODES EXPLAINED

SECTION 6 VOLTAGE VARIABLE CAPACITORS & VARACTOR DIODES (CONT'D) SECTION 6

(12)

Following symbols indicate a max. cont. working voltage rating lower than the PIV value given in the column:

△ – WV 90-99% of given PIV
§ – WV 75-79% of given PIV
∅ – WV 70-74% of given PIV

(13)

∅ – Typical
⍁ – To determine Q: divide f_{co} by test frequency f_m where $f_{co} = \frac{1}{2\pi R_s C_j}$

(15)

⍁ – Typical

(16)

§ – Above 25°C
⍁ – With infinite heat sink

(18)

△ – Available in matched pairs; consult manufacturer
† – Available in different package configuration; consult manufacturer

✪ SYMBOLS & CODES AT TOP OF FIRST INTERPRETER PAGE, MW-1.

MW-8

SECTION 7 — TUNNEL DIODES — SECTION 7

TYPE NO. The manufacturers designated type number for the device.

PEAK CUR. I_p The maximum current at that point on the forward current-voltage characteristic at which the slope of the characteristic reaches its most negative value.

TOLERANCE ± The variation (plus or minus) of the specified 'peak current'.

TOTAL CAP The sum of the devices junction capacitance (C_j) and case capacitance (C_c).

MIN I_p/I_v The minimum value of the ratio of peak current to valley current.

V_p The voltage at that point on the forward current-voltage characteristic corresponding to the lowest positive (forward) voltage at which $dI/dV = 0$.

V_v The voltage at that point on the forward current-voltage characteristic corresponding to the second lowest positive (forward) voltage at which $dI/dV = 0$.

V_f at I_p The voltage drop across the devices operating in a normal forward conducting mode at a current level equal to the peak current (I_p).

RESISTIVE CUTOFF FREQUENCY The frequency at which the net negative resistance of the equivalent circuit is zero.

SER IND LS The effective inductance in series with the device, consisting primarily of lead inductance.

SER RES-R The effective resistance in series with the device, consisting primarily of the resistive portion of the device leads.

NEG RES-R The true value equal to the absolute quantity of the measured negative resistance plus the series resistance. The negative resistance is measured at the minimum resistance point of the negative resistance portion of the characteristic curve. Negative resistance is that characteristic of a device where an increase in current is accompanied by a decrease in voltage.

NOISE VOLT The voltage of an ideal voltage source (zero internal impedance) in series with the input terminals of the device that represents the part of the internally generated noise that can properly be represented by a voltage source.

ABSOLUTE MAX FWD CUR The maximum allowable current that may safely be passed through the device in a forward direction.

ABSOLUTE MAX DISS @25°C The maximum allowable power the device can safely dissipate at 25°C ambient temperature.

THERMAL RES °C/mW The ratio of the rise of junction temperature to power dissipated.

ABSOLUTE MAX TEMP The maximum ambient temperature in degrees centigrade that the device can safely operate at.

MAT The material (e.g. silicon, germanium, etc.) used in manufacturing the device.

DWG NO. The location at which the physical device specifications and drawing may be found.

7. TUNNEL DIODES

IN ORDER OF (1) PEAK CURRENT, (2) MAXIMUM CAPACITANCE, and (3) TYPE No.

LINE No.	3 TYPE No.	PEAK CUR. 1 Ip (A)	TOLERANCE ± (A)	2 MAX. TOTAL CAP. (F)	MIN Ip/Iv	Vp (V)	Vv (V)	RESISTIVE Vf at Ip (V)	RESISTIVE CUTOFF FREQ. (Hz)	SER. IND. Ls (H)	SER. RES. Rs (Ω)	NEG. RES. -R (Ω)	NOISE VOLT. (V)	ABSOLUTE MAX. RATINGS FWD. CUR. (A)	DISS. @ 25°C (W)	THER. RES. °C/mW	MAX. TEMP (°C)	DESCRIPTION MAT.	DWG. No.
✪				(5)	(6)	(7)	(8)	(9)	(10)		(12)	(13)	(14)				(18)	✪	(20)

(5) Δ – Typical
∅ – C_j

(6) † – Typical
Δ – Maximum

(7) Δ – Maximum
* – VR at 500 μA IR

(8) ∅ – Minimum
Δ – Maximum

(9) § – Measured at I_{MAX} (instead of Ip)
Δ – Maximum
* – Measured at 3mA IF

(10) ∅ – Minimum

(12)(13) Δ – Miminum
⍁ – Maximum

(14) ⍁ – Maximum
§ – Noise constant (instead of noise voltage)

(18) A – Ambient
J – Junction
S – Storage

(20) † – Available in different package configuration; consult manufacturer

✪ SYMBOLS & CODES AT TOP OF FIRST INTERPRETER PAGE, MW-1.

INTERPRETER — MICROWAVE
SYMBOLS & CODES EXPLAINED

TYPE NO.	The manufacturers designated type number for the device.
USE	The type of or main function of the device.
MAT	The material (e.g. silicon, germanium, etc.) used in manufacturing the device.
DWG NO.	The location at which the physical device specifications and drawing may be found.
TECHNICAL DATA	Any pertinent data or characteristic of the device.

8. MISCELLANEOUS DEVICES

IN ORDER OF (1) USE and (2) TYPE No.

LINE No.	2 TYPE No.	1 USE	DESCRIPTION MAT.	DESCRIPTION DWG. No.	TECHNICAL DATA

✪ (3) (4) (5)

(3)

5 – Backward Diode
7 – R-F & Microwave switch/limiter Pin Diodes
14 – Oscillator Diodes
15 – Step Recovery Diodes
18 – Random/White Noise Diode
19 – Multipliers and Harmonic Generators
20 – Detector
21 – Ring/Bridge Quad
22 – Power Transistors
23 – Special Applications
24 – Switching Transistors
25 – Amplifier Diode
26 – YIG Tuned
27 – Transistor Amps
28 – Transistor Oscillators
29 – AMP Device/Modules
30 – General Purpose
31 – Harmonic Mixer
32 – Mixer Assembly
33 – Varactor Tuned Oscillator
34 – Switches, Module

(4)

IN ADDITION TO THOSE COMMON TO ALL

CdSe – Cadmium Selenide
CE – Cadmium Selenide & Cadmium Sulfide
CS – Cadmium Sulfide
GAP – Gallium Arsenide Phosphide
InAs – Indium Arsenide
InSb – Indium Antimonide
PbS – Lead Sulfide
SC – Silicon Carbide
Se – Selenium
YIG – Yttrium Iron Garnet
ZnO – Zinc Oxide
ZnS – Zinc Sulfide

(5)

⍁ – Available with reverse polarity; consult manufacturer
† – Available in different package configuration; consult manufacturer

✪ SYMBOLS & CODES AT TOP OF FIRST INTERPRETER PAGE, MW-1.

TYPE NO.	The manufacturers designated type number for the device.
MAX OSC FREQUENCY	The maximum frequency of oscillation, the frequency at which G_{max} approximates unity. G_{max} is the maximum available power gain (MAG) at which the transistor is unconditionally stable and input and output ports are conjugately matched.
P_T	The maximum power the device can safely dissipate at 25°C ambient temperature.
BV_{CBO}	Break down voltage collector to base with the emitter lead open circuit.
IC	The maximum allowable device collector current.
TEMP CODE	A symbolic code indicating the max allowable operating temperature.
POL & MAT	Indicates whether the device is NPN or PNP and the material (i.e. silicon etc.) that is used in manufacturing the device.
TYPE & TECH	Indicates the type of device (BIPOLAR, FET, etc.) and the manufacturing technology used (Epitaxial, Annular, etc.).
NOISE FIGURE NF	The ratio of the input signal-to-noise ratio divided by the output signal-to-noise ratio.
@ FREQ	The frequency at which the 'Noise Figure' is specified.
@ VCE	The collector to emitter voltage at which the 'Noise Figure' is specified.
@ IC	The collector current at which the 'Noise Figure' is specified.
GAIN $(S_{21})^2$	$(S_{21})^2$ Insertion gain in a 50 ohm system. (Also forward transfer coefficient in dB (20 log S_{21})) Resulting from the insertion of a transducer in a transmission system, the ratio of (1) the power delivered to that part of the system following the transducer to (2) the power delivered to that same part before insertion.
Pout	The available power output in watts.
REFLECTION COEFFICIENT S11 (Mag)	(Input reflection coefficient) The magnitude of the ratio of the reflected voltage to the incident voltage /S11/dB = 20 log /S11/ = 10 log /S11/^{2}
REFLECTION COEFFICIENT S11 (deg)	The phase angle of the reflection coefficient, i.e. the angle by which the reflected voltage wave lags the incident wave.
REFLECTION COEFFICIENT S22 (Mag)	The ratio of the outgoing output power to the incoming output power. /S22/dB = 20 log /S22/
REFLECTION COEFFICIENT S22 (deg)	The phase angle of the reflection coefficient, i.e. the angle by which the reflected voltage wave lags the incident wave.
@ FREQ	The frequency at which the 'Reflection Coefficients' are specified.
@ VCE	The collector to emitter voltage at which the 'Reflection Coefficient' is specified.
@ IC	The value of collector current at which the 'Reflection Coefficient' is specified.
DWG NO.	The location at which the physical device specifications and drawing may be found.
LEAD CODE	A code by which the lead configuration may be looked up on the lead configuration chart. This chart may be found at the end of the outline drawing section.

10. UHF/MICROWAVE TRANSISTORS

IN ORDER OF:(1)MAX. OSCILLATOR FREQUENCY (2)MAX. TOTAL PWR(PT) & (3)TYPE No.

LINE No.	3 TYPE No.	1 MAX. OSC. FREQ Fmax (Hz)	MAXIMUM RATINGS 2 PT (W)	BVCBO (V)	IC (A)	TEMP CODE	POL & MAT	TYPE & TECH	NOISE FIGURE @ STATED CONDITIONS NF (dB)	@ FREQ (Hz)	@ VCE (V)	@ IC (A)	TYPICAL OPERATING GAIN (S21)2 (dB)	Pout (W)	TYPICAL REFLECTION COEFFICIENTS S11 (Mag)	S11 (deg)	S22 (Mag)	S22 (deg)	@ FREQ (Hz)	@ VCE (V)	@ IC (A)	DWG No.	LEAD CODE
		(3)	(4)	(5)	(6)	(7)	(8)	(9)	(10)		(12)	(13)	(14)	(15)	(16)	(17)	(18)	(19)		(21)	(22)		

(3) * – Max. specified frequency of S-parameters
– Max. operating frequency at which characteristics are specified
§ – Gain-bandwidth product
∅ – Unity gain frequency ($S_{21}{}^2$ =1)
▼ – Transition frequency
△ – f_T min.

(4) * – Collector dissipation (P_c)
– Pulsed
∅ – Free air rating
† – Derating starts above 25°C
▼ – Operating power dissipation (P_{out}/Efficiency)
△ – fT min

(5) △ – Minimum
* – BV_{CEO}
# – BV_{GDO}
% – BV_{DSO}
∅ – BV_{CES}

(6) # – I_D
% – I_{DSS}

(7) # – 85-100°C § – 170-200°C
♦ – 110-125°C ▼ – Over 200°C
† – 130-135°C A – Ambient
$ – 140-165°C C – Case
J – Junction
S – Storage

SYMBOLS & CODES AT TOP OF FIRST INTERPRETER PAGE, MW-1.

(Continued on Next Page)

MW-11

INTERPRETER — MICROWAVE
SYMBOLS & CODES EXPLAINED

(8)

POLARITY

N – NPN or N-Channel
P – PNP or P-Channel

MATERIAL

GA – Gallium Arsenide
Ge – Germanium
Si – Silicon

(9)

TYPE

B – Bipolar
F – MOS FET
J – Junction FET

TECHNOLOGY

AL – Alloy
AN – Annular
DF – Diffused or Drift
DM – Diffused Mesa
EP – Epitaxial
EA – Epitaxial Annular
EM – Epitaxial Mesa
FU – Fused
GR – Grown
HO – Hometaxial
MA – Micro Alloy
MD – Micro Alloy Diffused
ME – Mesa
MF – MES FET
OF – Overlay
PA – Precision Alloy
PC – Point Contact
PD – Precision Alloy Diffused
PE – Planar Epitaxial
PL – Planar
S – Switching, other uses
ST – Schottky Barrier
ST – Surface Barrier
VM – VMOS

(10)

⍁ – Maximum/guaranteed
† – Typical
% – Efficiency (%)

(12)

* – V_{CB}/V_{DG}
# – V_{DS}
§ – V_{CC}

(13)

* – I_E
# – I_D
% – I_{DS}/I_{DSS}
§ – P_{in} (Watts)
∅ – P_{out} (Watts)

(14)

♦ – Power Gain (db)
* – Max. available gain
∅ – Associated gain at specified noise figure
⍁ – Associated gain at specified power output
△ – Min. associated gain at specified power output
§ – Unilateral gain
$ – Tuned gain
% – |hfe| in dB
# – Minimum
▼ – Gtr (Transducer Gain)
† – Infel

(15)

♦ – Power Out (dBm)
* – Power output at 1dB compression point (Po 1dB)
∅ – Oscillator output power (Posc)
§ – Saturated power output
△ – Min. P_{out} associated with specified gain
– Peak pulse power
⍁ – max.
† – min.

(16)

* – Real part of S11 [$S11_{(real)}$]
∅ – Input resistance (r_{in})(ohms)
⍁ – Input conductance (g_{in}) (mmhos)
△ – dB

(17)

* – Imaginary part of S11 [$S11_{(imag)}$]
∅ – Input reactance (X_{in})(ohms)
⍁ – Input susceptance (b_{in})(mmhos)

(18)

* – Real part of S22 [$S22_{(real)}$ j
∅ – Output resistance (r_{out})(ohms)
⍁ – Output conductance (g_{out})(mmhos)
§ – Load resistance (r_L)(ohms)
△ – dB

(19)

* – Imaginary part of S22 [$S22_{(imag)}$ j
∅ – Output reactance (X_{out})(ohms)
⍁ – Output susceptance (b_{out}) (mmhos)

(21)

* – V_{CB}/V_{DG}
# – V_{DS}
§ – V_{CC}

(22)

§ – Load reactance (X_L) (ohms)
* – I_E
# – I_D
% – I_{DS}/I_{DSS}
∅ – P_{out} (Watts)

SYMBOLS & CODES AT TOP OF FIRST INTERPRETER PAGE, MW-1.

MICROWAVE – DRAWING INDEX

OUTLINE DRAWINGS

DRAWING NO.	PAGE	DRAWING NO.	PAGE	DRAWING NO.	PAGE	DRAWING NO.	PAGE	DRAWING NO.	PAGE	DRAWING NO.	PAGE	DRAWING NO.	PAGE
A1	326	A376	330	C230	338	F47	350	F136	356	M657	362	M987	368
A1a-zy	326	A381	330	C231	339	F47b-c	350	F137	356	M658	362	M988	368
A2	326	A395	330	C232	339	F48	350	F138	356	M658a-c	362	M989	368
A2d-x	326	A395a	330	C233	339	F48a-h	350	F139	356	M675	362	M990	368
A3aq	326	A402	331	C234	339	F49	350	F140	356	M682	362	M991	368
A24	326	A412	331	C235	340	F49a-g	350	F141	356	M682a	362	M992	368
A24a-d	326	A414	331	C236	340	F51	350	F142	356	M689	362	M993	368
A31	326	A415	331	C237	340	F51a-c	350	F143	356	M696	362	M994	368
A31e	326	A416	331	C238	340	F54	350	F144	356	M709	362	M995	369
A32	326	A417	331	C239	341	F54a-r	350	F145	356	M723	363	M996	369
A32a-d	326	A418	331	C240	341	F56	351	F146	357	M750	363	M997	369
A60	326	A419	331	C241	341	F56a-ad	351	F147	357	M764	363	M998	369
A60j-p	326	A420	331	C242	341	F58	351	F148	357	M764a	363	M999	369
A82	327	A421	332	C243	341	F58a	351	F149	357	M785	363	M1000	369
A82a-f	327	A422	332	C244	342	F59	351	F150	357	M785a-b	363	M1001	369
A83	327	A423	332	C245	342	F59a-u	351	F151	357	M787	363	M1002	370
A83cj-cm	327	A424	332	C246	342	F63	351	F152	357	M787a	363	M1003	370
A90	327	A425	332	C247	342	F63a-d	351	F153	357	M788	363	M1004	370
A90a	327	A426	332	C248	343	F79	351	F154	357	M789	363	M1005	370
A109	327	A427	334	C249	343	F79a	351	F155	357	M790	364	M1006	370
A109a-g	327	A428	334	C250	343	F82	352	F156	357	M790a-d	364	M1007	370
A146	327	A429	334	C251	343	F85	352	F157	359	M791	364	M1008	370
A146a-u	327	A430	334	C252	344	F88	352	F158	359	M792	364	M1009	370
A196	327	A431	333	C253	344	F88a-c	352	F159	359	M792a	364	M1010	370
A196a-p	327	A432	333	C254	344	F91	352	F160	358	M793	364	M1011	370
A246	327	A433	333	C255	344	F94	352	F161	358	M794	364	M1012	370
A246a	327	A434	333	C256	346	F94a-b	352	F162	358	M794a	364	M1013	370
A276	328	A435	333	C257	346	F96	352	F163	358	M796	364	M1014	371
A276a	328	C14	334	C258	344	F98	352	F164	358	M796a-b	364	M1015	371
A278	328	C14a-b	334	C259	345	F98a	352	F165	355	M838	364	M1016	371
A285	328	C16	334	C260	345	F99	353	F166	352	M838a	364	M1017	371
A285a-b	328	C16a-ag	334	C261	345	F99a-b	353	M12	359	M888	364	M1018	371
A286	328	C132	334	C262	345	F100	353	M15	359	M892	364	M1019	371
A287	328	C153	335	C263	345	F100a	353	M17	359	M893	365	M1020	371
A287a-c	328	C153a	335	D04	346	F102	353	M27	359	M896	365	M1021	371
A298	328	C176	335	D07	347	F102a-f	353	M83	359	M897	365	M1022	371
A298t	328	C187	335	D014	347	F105	353	M83a	359	M898	365	M1023	371
A302	328	C200	335	D016	347	F105a-b	353	M86	360	M899	365	M1024	371
A316	328	C201	335	D017	347	F106	353	M86a-e	360	M905	365	M1025	371
A317	328	C201a	335	D019	347	F106a-c	353	M139	360	M906	365	M1026	372
A317a-c	328	C203	336	D020	347	F107	353	M156	360	M907	365	M1027	372
A320	328	C204	336	D022	348	F107a-b	353	M156a-g	360	M908	365	M1028	372
A324	329	C205	336	D023	348	F111	354	M166	360	M909	365	M1029	372
A325	329	C208	336	D034	348	F111a-c	354	M190	360	M910	366	M1030	372
A329	329	C209	336	D035	348	F112	354	M190a-m	360	M912	366	M1031	372
A329a-b	329	C210	336	D037	348	F112a-b	354	M214	360	M913	366	M1032	372
A332	329	C211	336	D041	348	F113	354	M214a-b	360	M914	366	M1034	372
A338	329	C212	336	F3	348	F114	354	M264	360	M914a-c	366	M1035	372
A339	329	C213	336	F3a-t	348	F115	354	M277	361	M918	366	M1036	372
A342	329	C214	336	F9	348	F118	354	M277a-g	361	M923	366	M1037	372
A342a	329	C215	336	F9a	348	F120	354	M396	396	M928	366	M1038	373
A344	329	C216	336	F10	349	F121	355	M491	361	M928a-b	366	M1039	373
A344n	329	C217	337	F10a-aq	349	F121a-c	355	M491a-g	361	M929	366	M1040	373
A345	329	C218	337	F11	349	F126	355	M500	361	M934	367	M1041	373
A351	330	C219	337	F21	349	F127	355	M501	361	M951	367	M1042	373
A352	330	C220	337	F27	349	F128	355	M501a	361	M951a	367	M1043	373
A352a	330	C221	337	F27a-az	349	F129	355	M524	361	M955	367	M1044	373
A353	330	C222	344	F32	350	F130	355	M524a-c	361	M956	367	M1045	373
A354	330	C224	337	F32b-p	350	F131	355	M526	361	M956a	367	M1048	373
A366	330	C225	337	F36	350	F132	355	M577	362	M981	367	M1048a	373
A367	330	C226	338	F36b	350	F133	355	M577a-b	362	M982	367	M1049	373
A370	330	C228	338	F43	350	F134	355	M578	362	M983	395	M1050	374
A375	330	C229	338	F43a-d	350	F135	356	M579	362	M984	367	M1051	374

MW-13

OUTLINE DRAWINGS

DRAWING NO.	PAGE	DRAWING NO.	PAGE	DRAWING NO.	PAGE	DRAWING NO.	PAGE	DRAWING NO.	PAGE	DRAWING NO.	PAGE	DRAWING NO.	PAGE
M1052	374	M1129a-e	383	M1198	402	M1258	430	S168	439	S524	445	u30	454
M1053	374	M1130	384	M1199	402	M1259	430	S169	439	S525	434	u30a-d	454
M1054	374	M1130a-o	384	M1200	402	M1260	428	S170	439	S526	434	u34	454
M1055	374	M1131	384	M1201	402	M1261	431	S171	439	S527	446	u38	454
M1056	374	M1131a-c	384	M1202	403	M1262	432	S173	440	S528	446	u39	455
M1057	374	M1132	384	M1203	403	M1263	430	S174	440	S529	447	u41	455
M1058	374	M1133	385	M1204	404	P1	433	S211	440	S530	446	u42	455
M1060	375	M1133a-c	385	M1205	404	P1a-e	433	S215	440	S531	446	u43	455
M1061	375	M1134	385	M1205a	405	P2	433	S215a-c	440	S532	447	u44	455
M1061a-b	375	M1134a-h	385	M1206	405	P2a-f	433	S250	440	S533	434	u45	455
M1062	375	M1135	386	M1206	406	P3	433	S250a-f	440	S534	437	u46	455
M1063	375	M1135a-d	386	M1207	406	P3a-d	433	S268	440	S535	440	u47	455
M1064	375	M1136	386	M1208	407	P6	433	S268a-f	440	S536	445	u48	456
M1065	375	M1136a-c	386	M1209	407	P8	433	S286	440	S537	445	u53	456
M1068	375	M1137	387	M1210	408	P9	433	S288	441	S538	447	u54	456
M1069	375	M1138	387	M1211	408	P9a	433	S288a-c	441	TO5	448	u55	457
M1070	375	M1139	387	M1212	409	P12	434	S328	441	TO7	448	u56	457
M1071	375	M1140	387	M1213	409	P12a	434	S347	441	TO8	448	u57	457
M1072	375	M1141	388	M1214	410	P13	433	S356	441	TO8M	448	u58	457
M1073	376	M1142	388	M1215	410	P14	434	S356a-c	441	TO12	449	u59	457
M1074	376	M1143	388	M1215	411	P14a	434	S359	441	TO18	448	u60	457
M1075	376	M1144	388	M1216	411	P21	434	S396	441	TO29	450	u61	457
M1076	376	M1145	389	M1217	412	P22	433	S401	441	TO33	450	u62	457
M1077	376	M1146	390	M1218	413	S4	435	S401a	441	TO39	450	u63	457
M1078	377	M1147	390	M1219	414	S4a-g	435	S419	441	TO46	450	u64	458
M1088	377	M1148	390	M1220	414	S19	435	S419a	441	TO50	449	u65	458
M1089	377	M1149	390	M1221	415	S19a-w	435	S420	441	TO52	450	u65a-c	458
M1090	377	M1150	390	M1222	416	S59	435	S428	441	TO60	450	u66	458
M1091	378	M1157	391	M1223	416	S59m	435	S428a-c	441	TO72	450	u67	459
M1092	378	M1157a-b	391	M1224	416	S72	435	S429	441	TO92	451	u68	459
M1093	378	M1158	391	M1225	416	S72a-w	435	S430	441	TO106	451	u69	459
M1094	378	M1159	391	M1226	416	S75	436	S430a-g	441	TO117	451	u70	459
M1095	378	M1160	392	M1227	417	S75h	436	S448	442	TO119	451	u71	459
M1096	378	M1161	392	M1228	417	S78	436	S454	442	TO120	451	u72	459
M1098	378	M1162	393	M1229	418	S84	436	S462	442	TO122	451	u73	460
M1099	378	M1166	393	M1230	418	S89	436	S484	442	TO129	451	u74	460
M1100	378	M1166a-k	393	M1231	419	S89a	436	S485	442	TO131	451	u75	460
M1101	378	M1167	394	M1232	419	S90	436	S486	442	Y206/TO206	452	u76	460
M1102	379	M1167a-b	394	M1233	420	S90a-c	436	S489	442	Y215/TO215	451	u77	459
M1103	379	M1168	394	M1234	420	S91	436	S490	442	Y215a/TO12AA	451	u78	457
M1104	379	M1170	394	M1235	421	S107	436	S495	442	Y220/TO220	453	V1	461
M1105	379	M1170a	394	M1236	422	S107a-c	436	S500	442	Y236/TO236	453	V2	463
M1106	380	M1171	395	M1237	422	S111	436	S501	442	u1	453	V3	463
M1106a-n	380	M117a	395	M1238	423	S111a-b	436	S502	443	u1ad-af	453	V4	464
M1107	380	M1175	395	M1239	423	S114	437	S503	443	u2	453	V5	464
M1107a-u	380	M1175a-c	395	M1240	424	S123	437	S504	443	u2a-g	453	V6	465
M1108	381	M1176	396	M1241	424	S136	437	S506	443	u3	453	V7	466
M1109	381	M1177	396	M1242	425	S136a	437	S507	443	u7	453	V8	468
M1110	381	M1178	397	M1243	425	S141	437	S508	443	u7a-d	453	V9	469
M1111	381	M1179	397	M1244	426	S142	437	S509	443	u12	453	V10	469
M1112	381	M1180	398	M1245	426	S150	437	S510	443	u13	453	V11	470
M1113	381	M1181	398	M1246	426	S151	438	S512	444	u13a-d	453	V13	471
M1114	381	M1183	398	M1247	426	S151a-c	438	S513	444	u14	454	V15	472
M1115	382	M1184	398	M1248	426	S153	438	S514	444	u16	454	V16	472
M1116	382	M1185	399	M1249	427	S154	438	S515	444	u16a	454	V17	472
M1121	382	M1186	399	M1250	395	S155	438	S516	444	u17	454	V18	473
M1122	382	M1191	399	M1251	427	S157	438	S517	444	u19	454	V19	475
M1123	382	M1192	400	M1252	421	S158	438	S518	444	u19a-p	454	V19a	475
M1124	383	M1193	400	M1253	428	S160	438	S519	444	u20	454	V20	476
M1125	383	M1194	401	M1254	421	S161	438	S520	445	u20a-j	454	V21	476
M1127	383	M1195	401	M1255	428	S163	439	S521	445	u21	454	V22	477
M1128	383	M1196	401	M1256	429	S165	439	S522	445	u28	454	V23	477
M1129	383	M1197	401	M1257	429	S167	439	S523	445			V24	479

MW-14

MICROWAVE – DRAWING INDEX

OUTLINE DRAWINGS

DRAWING NO.	PAGE	DRAWING NO.	PAGE	DRAWING NO.	PAGE	DRAWING NO.	PAGE	DRAWING NO.	PAGE	DRAWING NO.	PAGE	DRAWING NO.	PAGE
V25	478	W69	483	W146	488	W197	492	W238	499	W282	508	W320	513
W5	479	W69c-e	483	W146a	488	W198	492	W243	499	W283	508	W321	513
W5a-c	479	W77	483	W147	488	W199	493	W245	499	W284	508	W322	513
W14	480	W78	483	W149	488	W201	493	W246	499	W285	508	W323	513
W14a-c	480	W80	484	W150	488	W202	493	W247	499	W286	509	W324	514
W15	480	W84	484	W151	489	W203	493	W248	477	W287	509	W325	514
W16	480	W85	484	W153	489	W204	493	W249	477	W288	509	W326	514
W16a	480	W86	484	W156	489	W205	494	W250	501	W289	509	W327	514
W17	480	W97	484	W157	489	W206	494	W251	501	W290	510	W328	514
W18	480	W100	484	W160	489	W207	494	W252	501	W291	510	W329	514
W18a-c	480	W101	484	W161	489	W208	494	W253	501	W292	510	W330	514
W21	480	W102	485	W163	489	W209	494	W254	501	W293	510	W331	514
W21a-c	480	W103	485	W164	489	W210	494	W255	502	W294	510	W332	514
W22	480	W104	485	W166	490	W211	495	W256	502	W295	517	W333	515
W23	481	W106	485	W167	490	W212	495	W257	502	W296	517	W334	515
W23a	481	W108	485	W168	490	W213	495	W258	502	W297	517	W335	515
W24	481	W109	485	W169	490	W214	495	W259	503	W298	517	W336	515
W24a	481	W110	486	W170	490	W215	495	W260	503	W299	517	W337	515
W26	481	W110a	486	W171	490	W216	495	W261	503	W300	517	W338	515
W26a-g	481	W115	486	W172	490	W217	495	W263	503	W301	517	W339	515
W29	481	W116	486	W173	491	W219	495	W264	504	W302	511	W340	515
W29a-j	481	W116a-c	486	W174	491	W220	495	W265	504	W303	511	W341	515
W30	481	W124	486	W175	491	W221	495	W266	504	W304	512	W342	515
W32	482	W125	486	W177	491	W222	496	W267	504	W305	512	W343	515
W32a	482	W127	487	W178	491	W223	496	W268	505	W306	511	W344	515
W33	482	W127a	487	W179	491	W224	496	W269	505	W307	511	W345	516
W36	482	W128	487	W180	491	W225	496	W270	505	W308	512	W346	516
W45	482	W131	487	W181	491	W225a	496	W271	505	W309	512	W347	516
W45a	482	W132	487	W183	491	W226	496	W272	506	W310	512	W348	516
W52	482	W133	487	W184	492	W228	497	W273	506	W311	511	W349	516
W52a-t	482	W134	487	W185	492	W229	497	W274	506	W312	511	W350	516
W55	482	W135	487	W186	492	W230	497	W275	506	W313	512	Y200	517
W55a-b	482	W138	487	W191	492	W231	497	W275	506	W314	513	GS1	518
W56	483	W138a	487	W192	492	W232	497	W277	479	W315	513	GS2	518
W65	483	W144	487	W193	492	W233	498	W278	479	W316	513		
W65a-d	483	W144a-b	487	W194	492	W235	498	W279	505	W317	513		
W66	483	W145	488	W195	492	W236	498	W280	479	W318	513		
W66a-b	483	W145a	488	W196	492	W237	498	W281	501	W319	513		

MW-15

MANUFACTURERS' SALES OFFICES AND REPRESENTATIVES

These manufacturers have listed their sales offices and representatives in this section for your convenience. Please contact the sales office nearest you for any information you may need.

ADVANCED CONTROL COMPONENTS, INC.

P.O. Box 4928
Clinton, New Jersey 08809

Telephone 201-534-6155
Telex 821399

D.A.T.A. Code ADN

CUSTOM COMPONENTS, INC.

P.O. Box 334
Lebanon, New Jersey 08833

Telephone 201-534-6151 Telex 821399

D.A.T.A. Code CCI

DIODE TRANSISTOR COMPANY, INC.

40 Pier Lane
W. Fairfield, New Jersey 07006

Telephone 201-686-0400 Telex 139-385
Outside of NY & NJ area call toll free
800-526-4581

D.A.T.A. Code DIT

ENGLISH ELECTRIC VALVE COMPANY LIMITED

ENGLAND
106 Waterhouse Lane
Chelmsford, Essex CM1 2QU

Telephone 011 44 245 261777
Telex 99103
Cable ENELECTICO CHEMSFORD

ENGLISH ELECTRIC VALVE COMPANY LIMITED (Cont'd)

CANADA
EEV Canada Ltd.
67 Westmore Drive
Rexdale, Ontario M9V 3Y6

Telephone 416-745-9494
Telex 06-989363
Cable ENELECAN TORONTO

FRANCE
GEC Composants SA
Dept. Tubes Electroniques
2 Rue Henri Bergson
92600 Asnieres

Telephone 790-62-15
Telex 610471 INELMEC

UNITED STATES
EEV, Inc.
7 Westchester Plaza
Elmsford, New York 10523

Telephone 914-592-6050
Telex 6818096

D.A.T.A. Code EEVB

SEE OUR ADS INSIDE FRONT AND INSIDE BACK COVERS.

FERRANTI INDUSTRIAL ELECTRONICS LIMITED

SCOTLAND

Microwave Components & Power Tubes Group
Dunsinane Avenue
Dundee DD2 3PN

Telephone 0382-89311 Telex 76166

SEE OUR AD ON BACK COVER.

D.A.T.A. Code FERS

Continued on Next Page

C2

FERRANTI
Microwave components

FERRANTI INDUSTRIAL ELECTRONICS LIMITED (Cont'd)

UNITED STATES

Ferranti Electric, Inc.
87 Modular Avenue
Commack, New York 11725

Telephone 516-543-0200
Telex 510-226-1490

D.A.T.A. Code FERS

HUGHES
HUGHES AIRCRAFT COMPANY

HUGHES AIRCRAFT COMPANY

UNITED STATES

Electron Dynamics Division
3100 West Lomita Blvd.
P.O. Box 2999
Torrance, California 90509-2999

Telephone 213-517-6000
Telex 910-347-7321

UNITED STATES

Hughes Electron Dynamics Division
Lexington Office Park
420 Bedford Street
Lexington, Massachusetts 02173

Telephone 617-861-0358

Hughes Electron Dynamics Division
1918 Miami Valley Tower
4th & Ludlow Streets
Dayton, Ohio 45402

Telephone 513-224-1061

Hughes Electron Dynamics Division
1721 West Plano Parkway
Suite 201 G
Plano, Texas 75075

Telephone 214-578-4768

Hughes Electron Dynamics Division
1000 Wilson Boulevard
Arlington, Virginia 22209

Telephone 703-525-1550

HUGHES
HUGHES AIRCRAFT COMPANY

HUGHES AIRCRAFT COMPANY (Cont'd)

INTERNATIONAL

Hughes International Marketing
Post Office Box 2999
Torrance, California 90509-2999

Telephone 213-517-6820
Cable 677064 HACTORR-TRNC
HUGHESAIR

FRANCE

Hughes Aircraft International
Service Co.
Batiment Florence
3 Place Gustave Eiffel
Silic 248
Rungis Cedex, France 94568

Telephone 687-3582
Cable HAISC c/o ISO-BUR
QPA (204681) (QQQ)

D.A.T.A. Code HAC

HSE Hybrid Semiconductors & Electronics Inc.

HYBRID SEMICONDUCTORS & ELECTRONICS INC.

50-14 39th Street
Long Island City, New York 11104

Telephone 718-392-0277
Telex 64-5067

Sales Office

Imperial Product Center, Inc.
50-14 39th Street
Long Island City, New York 11104

Telephone 718-784-7079
Telex 64-5067

D.A.T.A. Code HSE

Continued on Next Page

C3

HYBRID SEMICONDUCTORS & ELECTRONICS INC. (Cont'd)

50-14 39th Street
Long Island City, New York 11104

Telephone 718-392-0277
Telex 64-5067

EUROPE (Continental)

Remy Electronics Inc.
1424 Sheepshead Bay Rd.
Brooklyn, New York 11235

Telephone 718-934-7225
Telex 237733

International

ENGLAND

Diran Semicon Ltd.
P.O. Box 3, Glos.
Tetbury, England GL8 8EQ

Telephone Tetbury 52956 Telex 43241

D.A.T.A. Code HSE

HI-TRON SEMICONDUCTOR CORPORATION

85 Engineers Rd.
Hauppauge, New York 11787

Telephone 516-231-1500
Telex 510-227-9666

D.A.T.A. Code HTN

ITT ELECTRON TUBE DIVISION

P.O. Box 100
3505 Hartley Avenue
Easton, Pennsylvania 18042

Telephone 215-252-7331
Telex 847494

ITT ELECTRON TUBE DIVISION (Cont'd)

Frank J. Rich
San Jose, California

Telephone 215-252-7331 Telex 847494

CANADA

ITT Canada Ltd.
Components Division
300 N. Rivermede Road
Concord
Ontario, Canada

Telephone 416-736-1048

D.A.T.A. Code ITT

KNOX SEMICONDUCTORS, INC.

155 New Boston St.
Suite 140
Woburn, Massachusetts 01801

Telephone 617-938-8451

P.O. Box 609
Rockport, Maine 04856

Telephone 207-236-8278

D.A.T.A. Code KSI

C4

LITTON ELECTRON DEVICES DIVISION

960 Industrial Road
San Carlos, California 94070

Telephone 415-591-8411
Telex 910-376-4900

Williamsport Facility
1035 Westminster Drive
Williamsport, Pennsylvania 17701

Telephone 717-326-3561
Telex 84-1430

D.A.T.A. Code LIT

Genalex

THE M-O VALVE COMPANY LIMITED

ENGLAND

A Subsidiary of the General
Electric Co., Ltd. Of England
Brook Green Works, Hammersmith,
London W67PE

Telephone 01-603-3431 Telex 23435

CANADA

EEV Canada Ltd.
67 Westmore Drive
Rexdale, Ontario MV9 3Y6

Telephone 416-745-9494
Telex 06-989363
Cable ENELECAN TORONTO

UNITED STATES
EEV, INC.
7 Westchester Plaza
Elmsford, New York 10523

Telephone 914-592-6050
Telex 6818096

D.A.T.A. Code MOVB

PHILIPS ELECTRONIC COMPONENTS & MATERIALS DIVISION

MARKETING COMMUNICATIONS
Building BA
Eindhoven, Netherlands

Telephone (040) 723142 Telex 35000

ARGENTINA

Philips Argentina S.A.
Div. Elcoma
Vedia 3892
Buenos Aires 1430

Telephone 541-7141/7545 Telex 21243

AUSTRALIA

Philips Industries Holdings, Ltd.
Elcoma Division
11, Waltham Street
Artarmon, NSW 2064

Telephone (02) 439 3322
Telex 20165 PHILIND

AUSTRIA

Österreichische Philips
Bauelemente Industrie G.m.b.H.
Treister Strasse 64
Wien A-1101

Telephone 62 91 11 Telex 131802

BELGIUM

N.V. Philips & M.B.L.E. Associated
9 Rue du Pavillon
Bruxelles B-1030

Telephone (02) 242 7400 Telex 21420

BRAZIL

Ibrape
Av. Brigadeiro Faria Lima
Caixa Postal 7383
Sao Paulo SP-1735

Telephone (011) 211-2600 Telex 112-4354

D.A.T.A. Code PHIN

Continued on Next Page

C5

PHILIPS ELECTRONIC COMPONENTS & MATERIALS DIVISION (Cont'd)

MARKETING COMMUNICATIONS
Building BA
Eindhoven, Netherlands

Telephone (040) 723142 Telex 35000

CANADA

Philips Electronics Ltd.
Electron Devices Division
601 Milner Avenue
Scarborough, Ontario M1B 1M8

Telephone 292-5161 Telex 65-25103

DENMARK

Strandlodsvej 2
P.O. Box 1919
Copenhagen S, DK-2300

Telephone (01) 54 11 33 Telex 15310

FINLAND

Oy Philips Ab
Elcoma Division
Kaivokatu 8
Helsinki 10 SF-00100

Telephone 1 72 71 Telex 124811

FRANCE

R.T.C. (RTCF)*
La Radiotechnique-Compelec
130, Avenue Ledru Rollin
75540 Paris 11

Telephone 338-8000 Telex 680495

GERMANY

VALVO (VALG)*
UB Bauelemente der Philips GmbH
Valvo Haus
Burchardstrasse 19
Hamburg 1 D-2

Telephone (040) 3296-0 Telex 2161891

PHILIPS ELECTRONIC COMPONENTS & MATERIALS DIVISION (Cont'd)

HONG KONG

Philips Hong Kong Ltd.
Elcoma Div.
15/F Philips Industrial Bldg.
24-28 Kung Yip Street
Kwai Chung

Telephone (0)-24 5121 Telex 75820

ITALY

Philips S.p.A.
Sezione Elcoma
Piazza IV Novembre 3
Milano I-20124

Telephone 2-6752.1 Telex 3 30262

JAPAN

Nihon Philips Corporation
Shuwa Shinagawa Bldg.
26-33 Takanawa, 3-chome
Minato-ku
Tokyo 108

Telephone (448) 5611
Telex 26388 024 22205

KOREA

Philips Electronics (Korea) Ltd.
Philips House-Elcoma Division
260-199 Itaewon-dong
Yongsan-ku
C.P.O. Box 3680
Seoul

Telephone 794-4202 Telex 27291

MEXICO

Electronica S.A. de C.V.
Carr. Mexico
Toluca km. 62.5
Edo. de Mexico
Toluca 50140

Telephone 91(721)613-00 Telex 1771227

D.A.T.A. Code PHIN

Continued on Next Page

* Manufacturer Code inside ( ) can be found in Manufacturers' Codes, Names and Addresses.

C6

PHILIPS ELECTRONIC COMPONENTS & MATERIALS DIVISION (Cont'd)

MARKETING COMMUNICATIONS
Building BA
Eindhoven, Netherlands

Telephone (040) 723142 Telex 35000

NETHERLANDS

Philips Nederland
Marketgroep Elonco
Postbus 90050
Eindhoven 5600 PB

Telephone (040) 79 33 33 Telex 51238

NEW ZEALAND

Philips Electrical Industries Ltd.
Elcoma Division
110 Mt. Eden Road
C.P.O. Box 1041
Auckland

Telephone 605-914 Telex 2312

NORWAY

Norsk A/S Philips
Electronica Dept.
Sandstuveien 70
Oslo 6

Telephone 68-0200 Telex 11141

SOUTH AFRICA

EDAC (Pty.) Ltd.
3rd Fl. Rainer House
Upper Railway Rd. & Ove St.
New Doornfontein, Johannesburg 2001

Telephone 614-2362/9 Telex 8-3607

SPAIN

Miniwatt S.A.
Balmes 22
Barcelona 7

Telephone 301 63 12 Telex 54666

PHILIPS ELECTRONIC COMPONENTS & MATERIALS DIVISION (Cont'd)

SWEDEN

Philips Komponenter A.B.
Lidingövägen 50
Stockholm 27 S-11584

Telephone 08/7821000 Telex 10776

SWITZERLAND

Philips A.G.
Elcoma Dept.
Allmendstrasse 140-142
Zürich CH-8027

Telephone 01/488 22 11 Telex 52392

TAIWAN

Philips Taiwan Ltd.
San Min Bldg., 3rd Floor
57-1 Chung Shan N. Road
Section 2
P.O.B. 22978
Taipei

Telephone (02) 5631717 Telex 21570

UNITED KINGDOM

Mullard Ltd. (MULB)*
Mullard House
Torrington Place
London WC1E 7HD

Telephone 01-580-6633 Telex 264341

UNITED STATES

Amperex Corporation (APX)*
Sem. & Microcircuits Division
Providence Pike, Slatersville
Rhode Island 02876

Telephone 401-762-9000 Telex 92-7584

D.A.T.A. Code PHIN

* Manufacturer Code inside ( ) can be found in Manufacturers' Codes, Names and Addresses.

C7

R.T.C. LA RADIOTECHNIQUE-COMPELEC

130, Avenue Ledru-Rollin
75540 Paris Cedex 11
France

Telephone 338-8000
Telex PHILAMP PARIS 280 746

D.A.T.A. Code RTCF

SPACE POWER ELECTRONICS INC.

Jeffrey Lane, R.D. 1
Glen Gardner, New Jersey 08826
(CUSTOM DEVICES AVAILABLE)

Telephone 201-537-2184/5
Telex 64-2028/510-235-4290

D.A.T.A. Code SPE

STANTEL COMPONENTS

636 Remington Road
Schaumburg, Illinois 60195

Telephone 312-490-7150
TWX 910-291-1280

D.A.T.A. Code STCE

SEMICONDUCTOR COMPONENTS, INC.

1353 East Edinger Street
Santa Ana, California 92705

Telephone 714-547-6059 or 714-972-2226

D.A.T.A. Code SCE

THOMSON-CSF

THOMSON-CSF

RESEAU DE VENTE INTERNATIONAL
INTERNATIONAL SALES NETWORK

FRANCE

THOMSON-CSF Division Tubes Electroniques
38 rue Vauthier - B.P. 305
F-92102 BOULOGNE-BILLANCOURT CEDEX

Telephone (33.1) 604 81 75
Telex THOMTUB 200772 F

BRASIL

THOMSON-CSF COMPONENTES
DO BRASIL Ltda
Avenida Roque Petroni JR. NR 1464
CEP 04707 – BROOKLIN – SAO PAULO

Telephone (55.11) 542 4722
Telex (011) 24226 TCSF BR

DEUTSCHLAND

THOMSON-CSF BAUELEMENTE GmbH
Bereich Elektronenröhren
Perchtinger Str. 3 – Postfach 701909
D-8000 MUNCHEN 70

Telephone (49.89) 7879-0
Telex 522916 CSF D

ESPANA

THOMSON-CSF COMPONENTES Y TUBOS SA
Calle Albacete 5
E-28027 MADRID

Telephone (34.1) 405 16 15
Telex 46033 TCCE E

ITALIA

THOMSON-CSF COMPONENTI
Via Sergio 1°, 32
I-00165 ROMA

Telephone (39.6) 639 02 48
Telex 620683 THOMTE-I

D.A.T.A. Code THEF

Continued on Next Page

C8

THOMSON-CSF (Cont'd)

THOMSON-CSF Division Tubes Electroniques
38 rue Vauthier - B.P. 305
F-92102 BOULOGNE-BILLANCOURT CEDEX

Telephone (33.1) 604 81 75
Telex THOMTUB 200772 F

JAPAN

THOMSON JAPAN KK
TBR Building 701 – Kojimachi 5-7 – Chiyoda-Ku
TOKYO 102

Telephone (81.3) 264 63 46
Telex 2324241 THCSF J

SVERIGE

THOMSON-CSF KOMPONENTER &
ELEKTRONRÖR AB
Sandhamnsgatan 65 – Postadress: Box 27080
S-102 51 STOCKHOLM

Telephone (46.8) 63 50 60
Telex 12078 THCSF S

UNITED KINGDOM

THOMSON-CSF COMPONENTS
AND MATERIALS Ltd.
Ringway House - Bell Road
GB-BASINGSTOKE RG 24 OQG

Telephone (44.256) 29 155
Telex 858865 TESAFI G

USA

THOMSON-CSF COMPONENTS
CORPORATION
Electron Tube Division
301 Route Seventeen North
RUTHERFORD – NEW JERSEY 07070

Telephone (1.201) 438-2300
Telex 710 989 7286

D.A.T.A. Code THEF

Pour tous les autres pays veuillez contacter la FRANCE
For all other countries, please contact FRANCE

UPI SEMICONDUCTORS

Division United-Page, Inc.
481 Getty Avenue
Paterson, New Jersey 07503-9989

Telephone N.J. (201) 279-7500
N.Y. (212) 736-9351
Telex 710-642597 Cable UNIPAGE

Western Regional Office

UPI Semiconductors
558 St. Charles Drive Suite 215
Thousand Oaks, California 91360

Telephone 805-497-8991
Telex 910-494-2690

D.A.T.A. Code UPI

VARIAN ASSOCIATES INC.

Electron Device Group
611 Hansen Way
Palo Alto, California 94303

Telephone 415-493-4000
Telex 910-373-1731

D.A.T.A. Code VAR

C9

MANUFACTURERS' CODES, NAMES & ADDRESSES

(MANUFACTURERS IN ORDER OF D.A.T.A. CODE LETTERS)

QPL MFR. DESIGN.	FSCM/ NATO No.	D.A.T.A. MFRS.' CODE		
		ADN	*	Advanced Control Components, P.O. Box 4928, Clinton, NJ 08809
	K1612	**AEIL**		Marconi Electronic Devices, Ltd., 160 Smith Street, Farmingdale, NY 11735
		ALGG		Telefunken Electronic GmbH, Postfach 1109, 7100 Heilbronn, W. Germany
CDAP	17540	**ALP**		Alpha Industries, Inc., 20 Sylvan Rd, Woburn MA 01801
		AMR		American Microsemiconductor, 133 Kings Rd., Madison, NJ 07940
CEP	73445	**APX**		Amperex Electronic Co., Slatersville Div., George Washington Hwy., Smith Field, RI 02917
		ASI		Advanced Semiconductors, Inc., 7525 Ethel Ave., N. Hollywood, CA 91605
		AVA		Avantek, Inc., 3175 Bowers Ave., MS-3K, Santa Clara, CA 95051
		BELI		Bharat Electronics Ltd., Jalahalli, Bangalore 13, South India
	13866	**BTC**		Beam Tube Corp., 11 Beach St., Milford, MA 01757
		CCI	*	Custom Components Inc., Box 334, Lebanon, NJ 08833
	05586	**CEI**		Calvert Electronics, 3030 N. River Rd., River Grove, IL 60171
	55464	**CEN**		Central States Industries, 145 Adams Ave., Hauppauge, NY 11788
CCUR	16352	**CODI**		CODI Semiconductor, 350 Hurst St., Linden, N.J. 07036
		CRI		Crimson Semiconductor, Inc., 460 W. 34th St., 12th Floor, New York, NY 10001
		CSR		CSR Industries, Inc., 35 Central Ave., East Farmingdale, NY 11735
	50155	**CTR**		Acrian Inc., 490 Race St., San Jose, CA 95126
		DEX		Gould, Inc., Dexcel Div., 2580 Junction Ave., San Jose, CA 95134
	62141	**DIT**	*	Diode Transistor Co., Inc., 40 Pier Lane West, Fairfield, NJ 07006
	19373	**EAS**		Eastron Corp., 15 Hale Street, Haverhill, MA 01830
	K0442	**EEVB**	*	English Electric Valve Co., Ltd., Waterhouse Lane, Chelmsford, Essex, England
	01751	**EMIB**		Thorn EMI-Varian, Ltd., 248 Blyth Rd., Hales Middlesex, UB3 1HR, England
		ESE		Elm State Electronics, Inc., 60 United Dr., P.O. Box 158, Northhaven, CT 06473
		ETC		Electronic Transistors Corp., 112-15 Northern Boulevard, Flushing, NY 11368
	S0167	**FCAJ**		Fujitsu Ltd., 1015 Kamikodanaka, Nakahara-ku, Kawasaki 211, Japan
	K1196	**FERB**		Ferranti Electronics Ltd., Fields New Rd., Chadderton Oldham OL9 8NP, England
	K1889	**FERS**	*	Ferranti Industrial Electronics, Ltd., Dunsinane Ave., Dundee DD2 3PN, Scotland
		FMI		Fujitsu Microelectronics, Inc., 3320 Scott Blvd, Santa Clara, CA 95051
CFJ	07263	**FSC**		Fairchild Camera & Instr., 450 National Ave., Mountain View, CA 94042
CG	09214	**GESY**		General Electric Semiconductor Co., Electronics Park Bldg. 7, Syracuse, NY 13221
	50101	**GHZ**		Frequency Sources Inc., Semiconductor Div., 16 Maple Rd., Chelmsford, MA 01824
	IT853	**GTC**		General Transistor Corporation, 216 W. Florence, Inglewood, CA 90301
CAPN	73292	**HAC**	*	Hughes Aircraft/Solid State, 200 N. Sepulveda, P.O. Box 1042, El Segundo CA 90245
	S4361	**HITJ**		Hitachi, Ltd., 2210 O'Toole, San Jose, CA 95131
CAQI	54893	**HPA**		Hewlett Packard, 3000 Hanover St., Palo Alto, CA 94304
		HSE	*	Hybrid Semiconductor, 30-14 39th St., Long Island City, NY 11104
	6K951	**HTN**	*	Hi-Tron Semiconductor Corp., 85 Engineers Rd., Hauppauge, NY 11787
		HVS		High Voltage Semiconductor, 2 Yukon Dr., Woodbury, Long Island, NY 11797
	16068	**IDC**		International Diode Corp., 229 Cleveland Ave., Harrison, NJ 07029
		IDI		International Devices Inc., 5413 E. La Palma Ave., Anaheim, CA 92807

★ New Manufacturers

* See Sales Office Listings

C10

MANUFACTURERS' CODES, NAMES & ADDRESSES

(MANUFACTURERS IN ORDER OF D.A.T.A. CODE LETTERS)

QPL MFR. DESIGN.	FSCM/ NATO No.	D.A.T.A. MFRS.' CODE		
	15238	**ITT**	*	ITT Electron Tube Div., P.O. Box 100, Easton, PA 18042
		ITTG	★	ITT Semiconductors Intermettal, P.O. Box 840, D-7800 Freiburg 1 Br., West Germany
		KSI	*	Knox Semiconductor Inc., 155 New Boston St., Suite 140, Woburn, MA 01801
	80080	**LIT**	*	Litton Electron Devices, 960 Industrial Rd., San Carlos, CA 94070
		LMTF		LeMaterial Telephonique, 46-47, Quai A. LeGallo, 92 Boulogne-Billancourt, France
	01619	**MATJ**		Matsushita Electronics Corp., 1 Kotari-Yakemachi, Nagaokakyo, Kyoto 617, Japan
	55557	**MDC**		Microwave Diode Corp., Washington St., U.S. Rte. 3, P.O. Box 250, W. Stewartstown, NH 03597
	49959	**MDO**		Raytheon Company, 350 Ellis St., Mountain View, CA 94043
		MEC		Teledyne MEC, 3165 Porter, Palo Alto, CA 94304
CBYI	96341	**MIC**		Microwave Associates, South Avenue, Burlington, MA 01803
	K3577	**MICB**		Microwave Associates, Ltd., Dunstable LU54SX, Bedfordshire, England
		MISI		Mistral S.p.A., Via Le Pastine 32, 04010-Sermoneta-Latina-Italy
	20678	**MIT**		Mictron, Inc., P.O.B. 10126, Sarasota, FL 33578
	90144	**MITJ**		Mitsubishi Electric America Inc., 1050 East Arques Ave., Sunnyvale, CA 94086
CGG	04713	**MOTA**		Motorola Semiconductor Prods., 3501 Bluestein Blvd., Austin TX 78721
	10667	**MOVB**	*	M-O Valve Co., Ltd., Brook Green Works, Hammersmith, London W6 7PE, England
CCYL	14552	**MSC**		Microsemi Corp., P.O. Box 26890, Santa Ana, CA 92799-6890
	18518	**MSI**		MSI Electronics, Inc., 34-32 57th St., Woodside, NY 11377
	K8996	**MULB**		Mullard Limited, New Road, Mitcham, Surrey, England CR4 4XY
		NASG		North American Semiconductor Co., Ltd., Schluderstrasse 10, D-8000 Munich 19, West Germany
		NECE		NEC Electronics USA, Inc., Electron Div., 401 Ellis Street, P.O. Box 7241 Mountain View, CA 94039
	S42378	**NECJ**		Nippon Electric Co., Ltd., 484 Tsukagoshi, 3-chome, Saiwai-ku, Kawasaki City, Managawa 210 Japan
		NJRC		New Japan Radio Co., Ltd., 1-22-14 Toranomon, Minato-ku, Tokyo 105, Japan
		NJS		New Jersey Semiconductor, 20 Stern Ave., Springfield, NJ 07083
		NSC		National Semiconductor, Microcirc. Div., P.O. Box 58090, Santa Clara, CA 95052
	S4071	**OKIJ**		OKI Electric Industry Co., Ltd., 4-chome 10-3 Shibaura, Minato-Ku, Tokyo 108 Japan
	08040	**OWE**		Omni-Wave Electronics Corp., P.O. Box 660 Blackburn Industrial Park, Gloucester, MA 10930
CDGW	H0002	**PHIN**	*	Philips Electronic Components & Material Div., Elcoma Comm. Dept., Bldg. BA, Eindhoven, Netherlands
CDTP	21455	**PII**		Parametric Industries, Inc., 43 South Avenue Building 1, Burlington, MA 01803
	33178	**PPC**		PCC Products Corp., 7516 Central Industrial Dr., Riviera Beach, FL 33404
		RHM		ROHM Corporation, 8 Whatney, P.O. Box 19515, Irvine, CA 92713
	12556	**RTCF**	*	R.T.C. LaRadiotechnique-Compelec, 130, Ave. Ledru-Rollin, 75540 Paris Cedex 11, France
CRP	49956	**RTN**		Raytheon Company, 350 Ellis St., Mountain View, CA 94043
	34156	**SCA**		Semicoa, 333 McCormick Ave., Costa Mesa, CA 92626
		SCE		Semiconductor Components, Inc., 1353 E. Edinger Ave., Santa Ana, CA 92705
		SDI		SDI Inc. 11 Executive Park Drive, North Billerica, MA 01862
		SEI		Semiconductors, Inc., 3680 Investment Lane, Riviera Beach, FL 33404
		SES		Semitronics Corp., 64 Commercial St., Freeport, NY 11520
	A3500	**SGSI**		SGS-ATES Componenti Electtronici S.p.A., Via C Olivetti 2, -20041 Agrate Brianza, Milan, Italy

★ New Manufacturers

* See Sales Office Listings

C11

MANUFACTURERS' CODES, NAMES & ADDRESSES

(MANUFACTURERS IN ORDER OF D.A.T.A. CODE LETTERS)

QPL MFR. DESIGN.	FSCM/ NATO No.	D.A.T.A. MFRS.' CODE		
CCZL	25088	**SIEG**		Siemens Aktiengesellschaft, Frankfurter Ring 152, D-8000 Munchen 46, West Germany
CBDN	17856	**SIX**		Siliconix Inc., 2201 Laurelwood Rd., Santa Clara, CA 95054
CDCD	21845	**SODI**		Solitron Devices, Inc., 1177 Blue Heron Blvd., Riveria Beach, FL 33404
	S0482	**SONY**		Sony Corp., Information Center, Atsugi Plant, 4-14-1 Asahicho, Atsugi City, Kanaguawa 253, Japan
		SPE	*	Space Power Electronics Inc., Jeffrey Lane, RD 1, Glen Gardner, NJ 08826
		SST		Solid State, Inc., 46 Farrand St., Bloomfield, NJ 07003
		STCE	*	Stantel Components, Brixham Rd., Paignton, Devon TQ4 7BE, England
	50891	**STI**		Semiconductor Technology, Inc., 3131 Southeast Jay St., Stuart, FL 33494
		STR		Syntar Industries Inc., 3400 Brush Hollow Rd., Westbury, NY 11590
		SWT		Swampscott Electronics Co., Inc., 41 Spinale Rd., Swampscott, MA 01907
CCZK	12498	**TCY**		Teledyne Crystalonics, Inc., 147 Sherman St., Cambridge, MA 02140
	18778	**THC**		Thomson-CSF, Components Corp., 6660 Variel Ave., Canoga Park, CA 91303
		THEF	*	Thomson-CSF/EFCIS, 45 Avenue de l'Europe, 78140 Vilizy Villacoublay, France
		TIC		TIC Semiconductor, 18 W. 21st St., NY, NY 10010
CGO	01295	**TII**		Texas Instruments Inc., Literature Response Center, P.O. Box 401560, Dallas, TX 75240
	D2336	**TIID**		Texas Instruments, Deutschland GmbH, 8050 Freising, Haggertystrasse 1, West Germany
	F2210	**TIIF**		Texas Instruments France, S.A., 06270, Villeneuve-Lobet, BP5, France
	S0557	**TOSJ**		Toshiba Corp., c/o Microelectronics, Center 1 Komukai, Toshiba s/o Sai Kawasaki 210 Japan
		TRWM		TRW Microwave, 825 Stewart Drive, Sunnyvale, CA 94086
CCNL	01281	**TRWS**		TRW RF Device Div., 14520 Aviation Blvd., Lawndale, CA 90260
		TSAJ		Tokyo Sanyo Electric Co., Ltd., Oizumimachi, Oragun, Gumma, Japan
CDAS	12969	**UNI**		Unitrode Corporation, 5 Forbes Rd., Lexington, MA 02173
	34428	**UPI**	*	UPI Semiconductor, 401 Getty Ave., Paterson, NJ 07503
		USSR		V/O Electronzagranpostafka, 24/2 Usievisha, Moscow 125315, U.S.S.R.
		UTS		Uni-Tran Semiconductor Corp., R.D. 2, Lake Ariel, PA 18436
	D2540	**VALG**		VALVO GmbH, P.O. Box 106323, D2000 Hamburg 1, West Germany
CBXT	06980	**VAR**	*	Varian Associates, Inc., Electron Div. Group, 301 Industrial Way, San Carlos, CA 94070
	02845	**VARC**		Varian Canada Microwave Div., 45 River Dr., Georgetown, Ontario, Canada L7G 2J4
	88236	**VET**		Varian Associates, Inc., Salem Rd., Beverly, MA 01915
		WAB		Walbern Devices, Inc., 1818 E. Elizabeth Ave., Linden, NH 07036

★ New Manufacturers

* See Sales Office Listings

C12

D.A.T.A.BOOKS®

Represented Around the World

Corporate Headquarters

D.A.T.A. INC.

9889 Willow Creek Rd.
P.O. Box 26875
San Diego, California 92126 U.S.A.
Telephone: 619-578-7600
Toll-Free: 1-800-854-7030
In California: 1-800-421-0159
TLX: 910-530606

International Headquarters

D.A.T.A. INTERNATIONAL INC.

Orpin House
Hilders Lane
Edenbridge, Kent TN8 6JX
England
Telephone: 44-0732-866013
TLX: 851-95671

UNITED STATES

D.A.T.A. INC.
9889 Willow Creek Rd.
P.O. Box 26875
San Diego, California 92126
Toll-Free: 1-800-854-0730
In California: 1-800-421-0159

CANADA SALES REPRESENTATIVES

British Columbia
TECH-TREK LTD.
7960 Willowfield Drive
Richmond, B.C. V7C 4S7
Canada
604-271-3149

Ontario
TECH–TREK LTD.
272 Galaxy Boulevard
Rexdale, Ontario M9W 5R8
Canada
416-674-1717
Telex: 06-989630

TECH-TREK LTD.
Ottawa, Ontario – Contact Rexdale Office

Quebec
TECH-TREK LTD.
6600 Trans-Canada Hwy
Suite 300
Pointe-Claire, Quebec H9R 4S2
Canada
514-697-3385
Telex: 05-821581

INTERNATIONAL SALES REPRESENTATIVES

Australia, Papua New Guinea and New Zealand
J.H. BOOK SERVICES PTY. LTD.
75 Archer Street (P.O. Box 311)
Chatswood, N.S.W., 2067
Australia
Telephone: 61-2-419 7779 or 419 2386 Telex: 790-27621

Austria
DIPL/ING.
PAUL KUGLER GmbH
Cranachstrasse 5A
A/1133 Wien, Austria
Telephone: 43-0222-841346 or 84 17 062, Telex: 847-133075

Belgium, Netherlands and Luxemburg
KREISLER-IMPORT B.V.
P.O. Box 93053
Joan Maetsuyckerstraat 257
2509 AB-The Hague, Netherlands
Telephone: 31-70-856555
Telex: 844-33229

Brazil
PUBLICACOES TECNICAS INTERNACIONAIS LTDA
Rua Peixoto Gomide 209
Caixa Postal 1703
01409 Sao Paulo, SP Brazil
Telephone: 55-11-257 1640 or 258 8167 Telex: 391-1135844

People's Republic of China and Southeast Asia
CCI ASIA-PACIFIC
Dominion Centre
Suite 500
43-59 Queen's Road East
Wanchi, Hong Kong
Telephone: 852-5-270639
Telex: 780-75368

Denmark
HARCK & GJELLERUPS GEC Gad Noerreport
Fiolstraede 31-33
1171 Kobenhavn K
Denmark
Telephone: 45-1-137233
Telex: 855-19110

Finland
AKATEEMINEN KIRJAKAUPPA
Keskuskatu 1 Centralgatan
SF 00100, Helsinki 10
Finland
Telephone: 358-0-90 6511 22
Telex: 857-125080

France
RADIO TELEVISION FRANCAISE
9, Rue d'Arcueil
BP 78
94253 Gentilly
Cedex
France
Telephone: 33-1-664-11-01
Telex: 842-201069F

Greece
COMPTEL LTD.
20/22 George Street
GR/10682
Athens, Greece
Telephone: 30-01-3614300 or 3646200
Telex: 863-21-6246 COMP GR

India
ALLIED PUBLISHERS SUBSCRIPTION AGENCY
750 Mount Road
Madras 600 002, India
Telephone: 91-22-88011
Telex: 953-416014

Israel
TELDAN PUBLICATIONS DIV
P.O. Box 18094
Tel Aviv, 61180, Israel
Telephone: 972-3-250-073
Telex: 922-341390-361360

Italy
CENTRO EDIZIONI TECHNICHE INTERNAZIONALI
Via Pordenone, 17
20132 Milano, Italy
Telephone: 39-2-2152378 or 2152527 Telex: 843-310229

Japan and Korea
ADO ELECTRONIC INDUSTRIAL CO., LTD.
7th Floor Sasage Bldg.
4-6, Sotokanda 2-Chome
Chiyoda-Ku, Tokyo, Japan
Telephone: 81-3-257 1025
Telex: 781-222 4754

Norway
NARVESEN AS,
DIV. LITTERATURTJENSTE
Postboks 6125
Etterstad, Oslo 6, Norway
Telephone: 47-2-19-40-20
Telex: 856-76835

Portugal
DEFEX PORTUGAL
Rua Presidente Arriaga
82 R/C
1200 Lisboa, Portugal
Telephone: 351-1-679124
Telex: 832-15665 DEFEX P

South Africa
ALLIED ELECTRONIC COMP. (PTY.) LTD.
P.O. Box 6387
Dunswart 1508
Transvaal, South Africa
Telephone: 27-11-528661
Telex: 960-425559

Spain
MERCOR ELECTRONICA S.A.
Gran Via de Carles III, 80
Barcelona-28, Spain
Telephone: 34-3-3300954
Telex: 831-54132

Sweden
ELFA RADIO & TELEVISION AB
S-171 17 Solna, Sweden
Telephone: 46-8-730 07 00
Telex: 854-10479

Switzerland
MITRON LTD.
Baarerstr. 79
CH-6300 Zug 2
Switzerland
Telephone: 41-1-223671 or 223672 Telex: 845-864994

Turkey
BARKEY LTD.
P.K. 667
Sisli
Istanbul, Turkey
Telephone: 90-11-1479740 or 1489147 Telex: 821-23401 or 22644

United Kingdom and Ireland
H.T.I. LTD.
Portman House
16-20 Victoria Road
Romford
Essex RM1 2JH
England
Telephone: 44-0708-46 447
Telex: 851-946303

West Germany
I.W.T. VERLAG GmbH
Wendelsteinstrasse 3
8011 Vaterstetten bei Munchen
West Germany
Telephone: 49-89-810631017
Telex: 841-5213989

D.A.T.A.BOOK information is now available to EVERYONE in your entire organization...with D.A.T.A.TAPES!

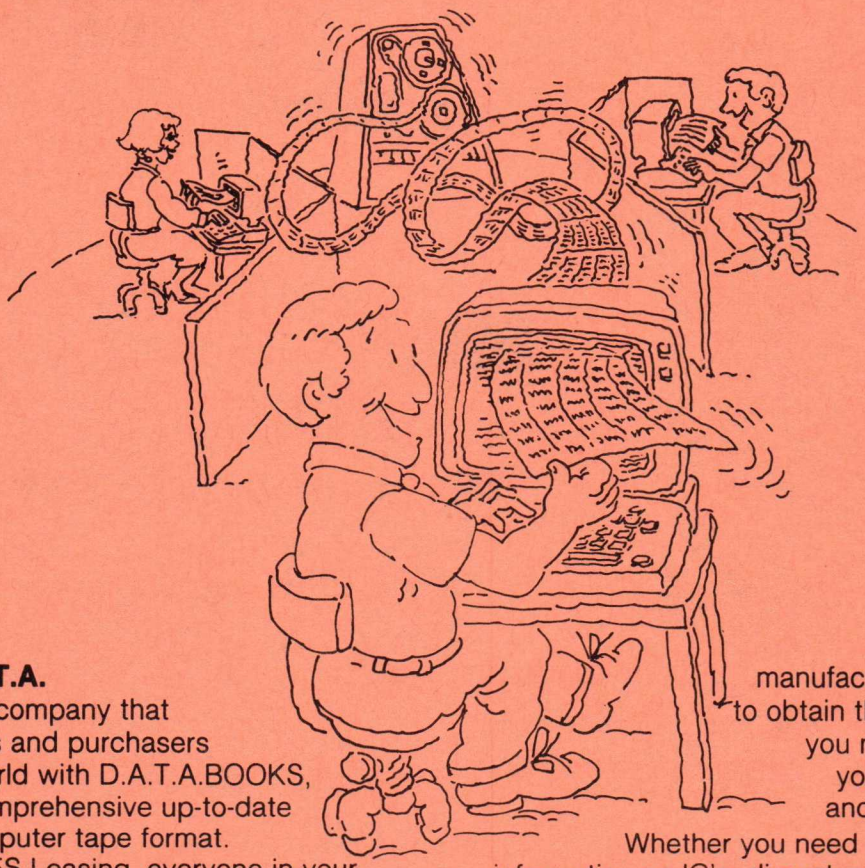

NEW FROM D.A.T.A.
D.A.T.A., Inc., the company that provides specifiers and purchasers throughout the world with D.A.T.A.BOOKS, now offers this comprehensive up-to-date database in a computer tape format. With D.A.T.A.TAPES Leasing, everyone in your organization is able to access electronic component information – whether they're across the hall or across the country!

Whatever your needs, D.A.T.A.TAPES and your data processing department can handle them.
D.A.T.A.TAPES are leased annually to your company and their use is not limited to any one location or department. Using your computer and telecommunications network, anyone with a terminal in your organization will be able to benefit from the investment in D.A.T.A.TAPES.

Whatever information you need for your projects, D.A.T.A.TAPES have it.
Electrical specs...equivalent devices...device replacement...manufacturing sources...and more. More than 650,000 device types are referenced in the database and the list grows larger every day. Our information is complete, accurate and up-to-date because we contact these manufacturers continually to obtain the technical data you need to complete your projects faster and more efficiently.

Whether you need electronic device information on IC's, discretes, optoelectronics, microwave, or MIL-Spec microcircuits and semiconductors, D.A.T.A.TAPES have it.

Add your data to our D.A.T.A.
With D.A.T.A.TAPES, you can customize our database to your unique requirements to include any additional information regarding the device, manufacturer or proprietary information. Distributors, for example, are able to integrate stocking, availability and quantity pricing. Manufacturers find it useful to highlight qualified vendors and provide purchasing departments with second sourcing information. Additional technical information, such as reliability data, can also be added to the database.

Find out about leasing D.A.T.A.TAPES from the nearest sales representative listed in this book or call **TOLL-FREE 1-800-854-7030 (In California, 1-800-421-0159)** and ask for our sales manager.

D.A.T.A. INC.
9889 Willow Creek Road, P.O. Box 26875
San Diego, CA 92126-0875 USA
Telephone: 619-578-7600 TELEX: 910-530606

D.A.T.A. INTERNATIONAL INC.
Orpin House, Hilders Lane
Edenbridge TN8 6JX, Kent, England
Telephone: 44-0732-866013 TELEX: 851-95671

NEW FROM D.A.T.A.BOOKS®...



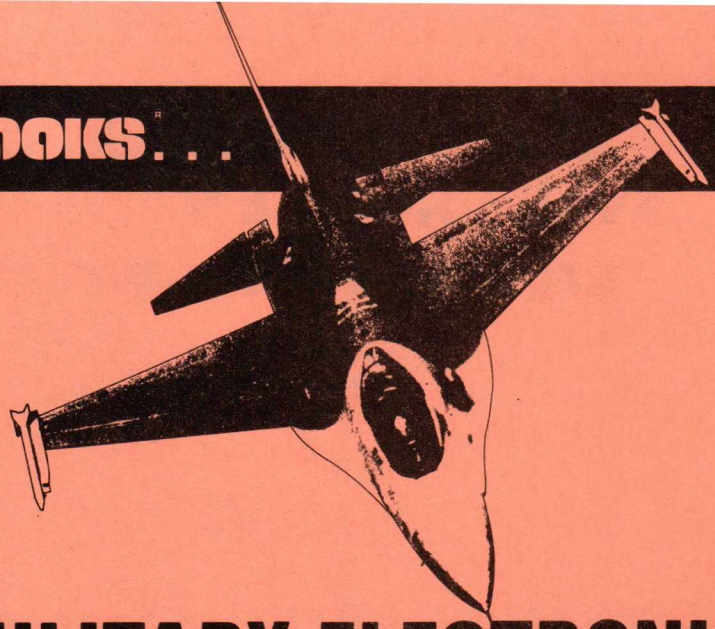

MILITARY ELECTRONIC DEVICES GUIDE

Microcircuits and Semiconductors

Easy-to-use cross-reference guide for military/aerospace MIL-SPEC Microcircuits and Semiconductors.

Now find both military qualified Microcircuits MIL-M-38510 and Semiconductors MIL-S-19500 in one concise guide.

For use by engineers, purchasing, receiving and other personnel — in U.S. Government agencies, military and military contractors or the aerospace industry — the **Military Electronic Devices Guide** helps you find Microcircuits and Semiconductors fast **by number or by function.**

Find Devices By Number

Use three cross indexes to find a specific military microcircuit by government designation, generic/industry or National Stock Number (NSN). For semiconductors, use either the government designation/industry number or NSN to locate the device number you need.

Find Devices By Function

All product information is arranged in the Product Selection section by major function headings and subheadings to find product by device function. If you require a flip-flop, check the Microcircuit Product Selection section under the main heading "Flip-flops" and then the subheadings, "D-Type", "JK-Type", etc., until you locate the device you need.

The Product Selection section also allows quick side-by-side comparisons for Microcircuits...

- device class
- package style
- 883 standard
- case outlines
- lead finish
- technology

. . . and more with slash sheet, manufacturers' codes, FSCM, DESC drawing numbers and QPL editions listed for both Microcircuits and Semiconductors.

A separate section lists manufacturers' locations — addresses, phone and telex numbers — with a handy numeric cross-reference by FSCM numbers.

Easy-To-Use — For Any Job

An **engineer** will use the Guide for determining the correct device number and for a quick "first cut" component selection. **Purchasing** or **repair** personnel will locate alternate sources by generic/industry number. Once ordered, **receiving** personnel can use the NSN cross-reference index to verify that the correct component was received.

Also included in the Guide's extensive Component Locator is a key to quickly find further electrical characteristics in your D.A.T.A.BOOK library.

30-DAY MONEY-BACK GUARANTEE

Try this new D.A.T.A.BOOK — FREE for 30 days. If you are not completely satisfied, return it in 30 days and owe nothing.

Order Now And Save $20.00

Order the new Military Electronic Devices Guide at the introductory subscription price of $175 (a savings of $20 off the regular price of $195) and receive 4 editions — each new and completely updated following new QPL's. First edition available August 1985. Introductory offer expires 12/31/85.

Prices good in U.S. only; others write for rates.

For more information or Toll Free ordering:

1-800-854-7030

In California 1-800-421-0159

D.A.T.A. INC.

A Cordura Company

Dept. SQ • P.O. Box 26875 • San Diego, CA 92126 U.S.A.

SYMBOLS & CODES COMMON TO D.A.T.A. MICROWAVE BOOK

SYMBOLS FOLLOWING TYPE NO. & IN TYPE NO. CROSS INDEX

Example	Type No.	Manufacturer	Tube Type
	W9/2E #	STCB	TWT
	W9/2E ⍁	HITJ	KL
		WJC	MG

⍁ %

Indicators of separate manufacturers producing same type number (non-JEDEC) whose characteristics are not the same. This manufacturer-identifying symbol (assigned by D.A.T.A.) is an integral part of the type number (in Type No. Cross-Index and Technical Data Section) to avoid the possibility of confusing the device of one manufacturer with the devices of the others.

#1,#2,#3....Tube Listed More than Once for Different Modes of Operation

– RT.....Indicates replacement type; consult manufacturer

ALL VALUES TYPICAL UNLESS OTHERWISE INDICATED

UNDER DESCRIPTION

UNDER MATERIAL (and Process)

- GA – Gallium Arsenide
- Ge – Germanium
- GP – Gallium Phosphide
- GS – Gallium Antimonide
- Se – Selenium
- SG – Germanium Silicon
- Si – Silicon
- * – Alloyed
- △ – Diffused
- X – Contains Poisonous Material
- ∅ – Gold Bonded
- † – Indium Bonded
- ⍁ – Point Contact
- # – Planar
- § – Mesa
- $ – Epitaxial
- % – Metal-Silicon
- ♦ – Schottky Barrier
- ▼ – Ion Implanted

MANUFACTURERS' CODES & NAMES

MFRS.' CODE		MANUFACTURER
ADN	*	Advanced Control Components
AEIL		Marconi Electronic Devices, Ltd.
ALGG		Telefunken Electronic GmbH
ALP		Alpha Industries, Inc.
AMR		American Microsemiconductor
APX		Amperex Electronic Co.
ASI		Advanced Semiconductors
AVA		Avantek, Inc.
BELI		Bharat Electronics Ltd.
BTC		Beam Tube Corp.
CCI	*	Custom Components Inc.
CEI		Calvert Electronics
CEN		Central States Industries
CODI		CODI Semiconductor
CRI		Crimson Semiconductor, Inc.
CSR		CSR Industries, Inc.
CTR		Acrian Inc.
DEX		Gould, Inc.
DIT	*	Diode Transistor Co.
EAS		Eastron Corp.
EEVB	*	English Electric Valve Co., Ltd.
EMIB		Thorn EMI-Varian, Ltd.
ESE		Elm State Electronics, Inc.
ETC		Electronic Transistors Corp.
FCAJ		Fujitsu Ltd.
FERB		Ferranti Electronics Ltd.
FERS	*	Ferranti Industrial Electronics, Ltd.
FMI		Fujitsu Microelectronics, Inc.

MFRS.' CODE		MANUFACTURER
FSC		Fairchild Camera & Instr.
GESY		General Electric Semiconductor Co.
GHZ		Frequency Sources Inc.
GTC		General Transistor Corporation
HAC	*	Hughes Aircraft/Solid State
HITJ		Hitachi, Ltd.
HPA		Hewlett Packard
HSE	*	Hybrid Semiconductor
HTN	*	Hi-Tron Semiconductor Corp.
HVS		High Voltage Semiconductor
IDC		International Diode Corp.
IDI		International Devices Inc.
ITT	*	ITT Electron Tube Div.
ITTG	★	ITT Semiconductors Intermettal
KSI	*	Knox Semiconductor Inc.
LIT	*	Litton Electron Devices
LMTF		LeMaterial Telephonique
MATJ		Matsushita Electronics Corp.
MDC		Microwave Diode Corp.
MDO		Raytheon Company
MEC		Teledyne MEC
MIC		Microwave Associates
MICB		Microwave Associates, Ltd.
MISI		Mistral S.p.A.
MIT		Mictron, Inc.
MITJ		Mitsubishi Electric America Inc.
MOTA		Motorola Semiconductor Prods.
MOVB	*	M-O Valve Co., Ltd.

★ New Manufacturers

* See Sales Office Listings

SYMBOLS & CODES COMMON TO D.A.T.A. MICROWAVE BOOK

FOLLOWING LINE NO. _____

▼ – New Type

♦ – Revised Specifications

\# – Non-JEDEC type manufactured outside U.S.A.

REVERSE POLARITY TYPES _____

Note: Availability of reverse polarity types is indicated by a § symbol in the Dwg. No. column.

ENGLISH-RUSSIAN ALPHABET TRANSLITERATION FOR USSR TYPES

ENGLISH	RUSSIAN	ENGLISH	RUSSIAN
A	А	L	Л
B	Б	M	М
V	В	N	Н
G	Г	O	О
D	Д	P	П
E	Е	R	Р
SZ	Ж	S	С
I	И	T	Т
K	К	U	У

MANUFACTURERS' CODES & NAMES

MFRS.' CODE		MANUFACTURER
MSC		Microsemi Corp.
MSI		MSI Electronics, Inc.
MULB		Mullard Limited
NASG		North American Semiconductor Co., Ltd.
NECE		NEC Electronics USA, Inc., Electron Div.
NECJ		Nippon Electric Co., Ltd.
NJRC		New Japan Radio Co., Ltd.
NJS		New Jersey Semiconductor
NSC		National Semiconductor, Microcirc. Div.
OKIJ		OKI Electric Industry Co., Ltd.
OWE		Omni-Wave Electronics Corp.
PHIN	*	Philips Electronic Components & Material Div.
PII		Parametric Industries, Inc.
PPC		PCC Products Corp.
RHM		ROHM Corporation
RTCF	*	R.T.C. LaRadiotechnique-Compelec
RTN		Raytheon Company
SCA		Semicoa
SCE		Semiconductor Components, Inc.
SDI		SDI Inc.
SEI		Semiconductors, Inc.
SES		Semitronics Corp.
SGSI		SGS-ATES Componenti Electtronici S.p.A.
SIEG		Siemens Aktiengesellschaft
SIX		Siliconix Inc.
SODI		Solitron Devices, Inc.
SONY		Sony Corp.

MFRS.' CODE		MANUFACTURER
SPE	*	Space Power Electronics Inc.
SST		Solid State, Inc.
STCE	*	Stantel Components
STI		Semiconductor Technology, Inc.
STR		Syntar Industries Inc.
SWT		Swampscott Electronics Co., Inc.
TCY		Teledyne Crystalonics, Inc.
THC		Thomson-CSF, Components Corp.
THEF	*	Thomson-CSF/EFCIS
TIC		TIC Semiconductor
TII		Texas Instruments Inc.
TIID		Texas Instruments
TIIF		Texas Instruments France
TOSJ		Toshiba Corp.
TRWM		TRW Microwave
TRWS		TRW RF Device Div.
TSAJ		Tokyo Sanyo Electric Co., Ltd.
UNI		Unitrode Corporation
UPI	*	UPI Semiconductor
USSR		V/O Electronzagranpostafka
UTS		Uni-Tran Semiconductor Corp.
VALG		VALVO GmbH
VAR	*	Varian Associates, Inc.
VARG		Varian Canada Microwave Div.
VET		Varian Associates, Inc.
WAB		Walbern Devices, Inc.

⋆ New Manufacturers

* See Sales Office Listings

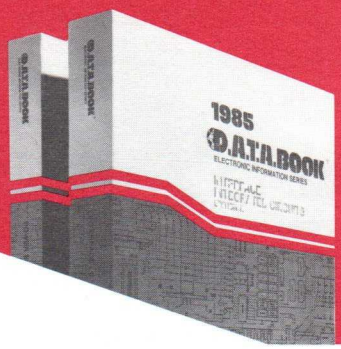

The world's fastest, easiest search system for device information...

D.A.T.A.BOOKS

D.A.T.A.BOOKS ...The leading source of electrical specs, logic and package design, alternate type, second source, circuit and block drawings, and manufacturers.

New

MILITARY ELECTRONIC DEVICES GUIDE

Microcircuits and Semiconductors

The most complete and up-to-date technical data cross-reference guide for military/aerospace MIL-SPEC microcircuits and semiconductors on the market. Comprises device information from DESC, QPL's, MCRL, JAN and other sources.

Cross-reference indexes list MIL-M-38510 microcircuits alternately by Generic/Industry Number, Government Designation and National Stock Number; 883 microcircuits by function and industry part number; and MIL-S-19500 semiconductors by National Stock Number and Government Designation. Product information arranged by major function headings and subheadings. Microcircuits Product Selection section provides side-by-side comparisons for device class, package style, 883 standard, case outlines, lead finish, technology and DESC drawing numbers.

Manufacturers' codes, slash sheets, FSCM, QPL notes and edition numbers are listed for both microcircuits and semiconductors. Includes manufacturers' locations, addresses, phone and telex numbers; alternate and second source suppliers; definitions of government terminology and type designation; and numeric cross-referenced FSCM numbers.

Updated with each new QPL. Published quarterly.

INTEGRATED CIRCUITS

DIGITAL ICs – IMPROVED FORMAT References more than 16,300 types from 59 worldwide manufacturers. Arranged by primary device parameters, includes gates, flip-flops, timing devices, computational devices, parity generators and special devices. Thousands of logic and outline drawings plus 1,565 military-qualified JAN-prefix types. Published semiannually.*

LINEAR ICs – IMPROVED FORMAT Provides characteristics for over 12,300 IC types from 142 manufacturers. Improved and expanded Table of Contents and Technical Section now list 15 major component categories such as "Amplifiers" and 62 specific types of devices within those categories (Differential, Power, Video, etc). Includes many new Technical Sections including Power Management Devices, Transistor Arrays and Telecommunication Devices. New Generic (Functional Equivalent) Index lists pin-for-pin compatible devices. Now search by schematic characteristics with circuit drawings labeled with device name and "functional equivalence" numbers. Published semiannually.

INTERFACE ICs – IMPROVED FORMAT Electrical, logical, physical and pin-out connection data on more than 14,900 state-of-the-art interface ICs from 87 producers worldwide. Sections arranged by major device parameters within functional groupings include: Logic/Peripheral Drivers; A/D, D/A and Level Converters; Switches/Multiplexers; Receivers/Sensors and more. New subheadings by device function speed device comparison.. Indexes direct you to thousands of detailed logic and outline drawings including over 670 military qualified JAN-prefix ICs.
Published semiannually.*

MEMORY ICs – IMPROVED FORMAT New megabit technology added to this title to include over 12,700 types from 69 manufacturers. Six major memory IC categories with device function subheadings assist device search. New Generic (Functional Equivalent) Index lists devices which are functionally compatible. 222 military qualified JAN-prefix devices included. Published semiannually.*

IC FUNCTIONAL EQUIVALENCE GUIDE – References over 28,200 memory, digital and interface devices from over 50 manufacturers. Lists pin-for-pin compatibility by function. Covers basic logic, timing devices, Parity Generators, ROMs, RAMs, Special Devices, Peripheral/Power Drivers and more. Faster and easier selection for alternate sourcing. Functional equivalence determined by an independent testing laboratory. Published semiannually.

MICROPROCESSOR ICs – Referencing chip level products that do processing, this title details 9,500 microprocessor, RAM, ROM and interface/support chips. Includes coverage of processor architecture and manufacturers' software support. Drawings and manufacturers' names and addresses are cross-referenced. Published semiannually.

MICROCOMPUTER SYSTEMS – Covering 4,200 devices, this systems book is organized on the common denominator at design level: CPU, Memory, Controller, and Data Transfer Boards, plus Support Enclosures and Bus Structures. Circuit/Outline Drawings also provided. Published semiannually.

MODULES/HYBRIDS – Details over 10,400 linear and interface modules and hybrid devices from over 78 worldwide manufacturers. References RF/IF, wideband and other amplifiers, voltage regulators and comparators, A/D, D/A converters, memory/clock, display devices and more. Published annually.

AUDIO/VIDEO ICs – Employs unique cross-reference for mass market items. Provides detailed electrical, functional and pictorial information on 2,900 TV Circuits, Audio Amplifiers, Clocks, Calculators, Rhythm Devices, Video Games, etc. from 53 manufacturers. Published annually.

DISCRETE DEVICES

TRANSISTOR – IMPROVED FORMAT 13 technical data sections list over 30,800 type numbers from 127 worldwide manufacturers in subheadings by device functions for faster device search. Circuit drawings now labeled with device name to allow search by schematic. Special MIL-Spec Index, Direct Replacement Guide, and dimensioned outline drawings are also included. Published annually.*

DIODE – IMPROVED FORMAT Information on 48,800 diodes from 156 manufacturers. Now categorized by 7 major Technical Sections with subheadings by device functions for easier device search. Includes dimensioned outline drawings plus 1,171 military-qualified JAN-prefix devices, suggested replacements and device numbering keys.
Published annually.*

THYRISTOR – IMPROVED FORMAT Covers SCRs, Triacs, Shockley Diodes, Gate Turn-off devices, SCSs, Triggers, etc. from 78 manufacturers. 42,600 types with lead designations and dimensioned outline drawings. Includes 89 military-qualified JAN-prefix devices. Published annually.*

MORE SPECIAL DEVICES, DIRECTORIES AND DISCONTINUED DEVICES NEXT PAGE

Send Order Card or Call, TOLL FREE: 1-800-854-7030
(In CA 1-800-421-0159) TELEX: 910-530606

* Improved format editions available after September 1985; other editions to be reformatted upon publication.

Ad Referral Number B75

D.A.T.A. INC. A Cordura Company • P.O. Box 26875 • 9889 Willow Creek Road • San Diego, CA 92126 USA

Introducing D.A.T.A.TAPES

A Powerful Electronic Components Database On Magnetic Tape.

D.A.T.A.BOOK information now instantly accessible to everyone in your company with D.A.T.A.TAPES. Selected titles now available for lease.

Send order card or call for further information.

DISCONTINUED DEVICES

DIGITAL & AUDIO/VIDEO DISCONTINUED DEVICES – Indexes over 20,100 devices obsolete since 1968. Includes Digital device drawings and easy cross-reference of obsolete to active devices listed in the DIGITAL and AUDIO/VIDEO ICs D.A.T.A.BOOKS. DIGITAL categories include: Binary/Flip-flops, Gates, Decoders, Timing, Computational, and Checking and Control. AUDIO/VIDEO categories include: Audio Amplifiers, Audio/RF Signal Processing, Video Circuits, Color TV Circuits, Digital Circuits and Special Circuits. Published annually.

INTERFACE & MEMORY DISCONTINUED DEVICES – Fingertip reference to 17,400 interface and memory devices obsolete since 1970...includes Interface device drawings. Easy cross-reference of obsolete to active devices listed in INTERFACE IC and MEMORY IC D.A.T.A.BOOKS. Interface categories included are: Logic Buffers/Drivers, Display Drivers, A/D and D/A Converters, Analog Gate Switches/Multiplexes, Receivers-/Sensors and Special Devices. Memory categories include: RAMs, ROMs, Character Generators, CAMs, Code Converters, Shift Registers and Special Memory Devices. Published annually.

LINEAR DISCONTINUED DEVICES – **IMPROVED FORMAT** Completely redesigned to help make comparable device selection easier and faster. Technical Sections are now sorted by device function listing 15 major component headings and 62 specific device types within those headings. More than 7,500 devices obsolete from 1969 to 1985 included. Published annually.

TRANSISTOR DISCONTINUED DEVICES – **IMPROVED FORMAT** More than 16,700 types-along with characteristics-which are now obsolete. Technical data presentation coincides with that of the TRANSISTOR D.A.T.A.BOOK to facilitate substitutions. Together they provide the fastest, most accurate method of selecting optimum replacement for discontinued types. Published annually.*

DIODE DISCONTINUED DEVICES – Facilitates substitution when used with the DIODE D.A.T.A.BOOK. Lists over 43,700 types no longer manufactured: Silicon Reference Diodes, general purpose, Standard/Fast Recovery Rectifiers, MW mixer and video detectors, varactors, tunnel diodes and more. A "must" for complete replacement data. Published annually.*

THYRISTOR DISCONTINUED DEVICES – Provides you with technical information on SCRs and PNPN devices which are no longer manufactured. 26,200 discontinued SCRs from all known manufacturers which appeared at any time in the THYRISTOR D.A.T.A.BOOK. Published annually.

OPTOELECTRONICS DISCONTINUED DEVICES – Features more than 11,500 worldwide optoelectronic devices that have become obsolete since 1974. 22 sections on obsolete Emitters, Junction Sensors, Photocell Sensors, Photocouplers, Displays (readouts), plus special devices. A must for replacement and substitution data when used with the OPTOELECTRONICS D.A.T.A.BOOK. Published annually.

MICROWAVE DISCONTINUED DEVICES – Provides technical data on over 18,800 obsolete devices including: Source Amplifier, Output and Duplexer Tubes. Conforms to MICROWAVE D.A.T.A.BOOK technical sections to simplify and speed substitution and replacement. Published annually.

DISCONTINUED TYPE LOCATOR – Now, easily discover if a product is no longer manufactured...who once manufactured it...and in what discontinued type D.A.T.A.BOOK you'll find detailed technical information. Covers over 159,300 obsolete ICs, Transistors, Diodes, Thyristors, Microwave and Optoelectronic devices to simplify substitution and replacement work. Details nearly 1,000 JEDEC and Mil-Spec devices...Published annually.

SPECIAL DEVICES and DIRECTORIES

OPTOELECTRONICS – 22 data sections list 17,000 devices and assemblies from 110 manufacturers arranged by primary device parameters and grouped as follows: Emitters, Junction Sensors, Photocells, Photocouplers, Displays and Specialty Devices such as Gap/Reflex Detectors, CCDs, Fiber Optics and Laser components. Schematic and outline drawings. Military JAN-prefix. Published annually.

POWER SEMICONDUCTOR – **IMPROVED FORMAT** Covers 60,000 power devices from 151 worldwide sources. Includes Standard and Fast Recovery Rectifiers (10 Amps and up). Power Zeners (10 Watts and up), Power Transistors (1 Amp and up), General Purpose and Inverter SCRs (10 Amps and up), plus package outline drawings and lead code identification. Includes 641 military-qualified JAN-prefix devices. Published annually.*

POWER SUPPLIES – Cross-references over 27,900 Linear and Switching Power Supplies and DC/DC Converters from 71 worldwide manufacturers. All types listed by: volts in, amps in, volts out, amps out, operating temperature range, general description and more. All the information you need to take the frustration out of locating a power supply or finding an equivalent substitute. Published annually.

MICROWAVE – Covers 27,200 semiconductors and tubes from 111 manufacturers. Includes Source, Amplifier, Output and Duplexer tubes; Mixer, Detector, Varactor, Tunnel, PIN and Oscillator diodes; plus UHF/Microwave transistors. Mil-Spec numbers, QPL manufacturers, dimensioned outline drawings for semiconductor devices. Published annually.

MASTER TYPE LOCATOR – 269,400 types from 14 separate D.A.T.A.BOOK titles. Identifies manufacturer and product class of each type and directs reader to D.A.T.A.BOOK volume where detailed technical data is given. 111 product classes identified. 519 worldwide manufacturers included. Published annually.

MICROPROCESSOR TECHNICAL SOFTWARE – Covers 2,300 packages from 161 vendors. Sections contain currently manufactured software including Operating Systems, Diagnostics and Utilities. Quickly access information through five indexes: Application/Function, Processor, Package Name, Vendor, and Operating System Family. Published annually.

APPLICATION NOTES REFERENCE – Order notes from a single source with User Request Cards enclosed in this book. Covers over 4,500 circuits and devices from 110 manufacturers. Published semiannually.

PLASTICS

THERMOPLASTICS AND THERMOSETS
extruding and molding grades

The most complete and up-to-date technical data publication of extrudable and moldable thermoplastics and thermosets sold in the U.S. and Canada. Displays and ranks available properties on over 8,200 individual materials from nearly 200 different manufacturers, comprising 60 generic types of plastics.

Also includes: property range of generic materials; flammability tables; chemical and environmental resistance; machinability characteristics; filled and reinforced plastics index; and description of ASTM Tests.

Hardbound edition published annually by International Plastics Selector, Inc. (I.P.S.)

* Improved format editions available after September 1985; other editions to be reformatted upon publication.

30-DAY GUARANTEE

Try one or more D.A.T.A.BOOKS for 30 days. See for yourself how useful and time-saving your D.A.T.A.BOOKS can be! At the end of 30 days, make up your own mind. We guarantee you'll agree that D.A.T.A.BOOKS are worth the investment or you may return them for full credit or refund.

FOR BEST SERVICE: Use These Cards when Ordering D.A.T.A.BOOKS.

FILL IN AD REFERRAL NUMBERS FOR THOSE PRODUCTS OF INTEREST TO YOU

ADVERTISERS INFORMATION CARD

To receive further information and specifications about any product(s) advertised in this D.A.T.A.BOOK please enter the referral number(s) printed at the bottom of each ad in the boxes below.

Your Name _____

Tele. No. ( ) _____ Ext _____

Company _____

Address _____

City _____ State _____ Zip _____

Signature _____

Title _____

We need your signature to process your request

1 Number of employees at business location:
- 1 □ 1 to 49
- 2 □ 50 to 99
- 3 □ 100 to 499
- 4 □ 500 to 999
- 5 □ 1000 or more

2 The number of electronic engineers at this address:
- 1 □ 1
- 2 □ 2-5
- 3 □ 6-19
- 4 □ 20-49
- 5 □ 50-99
- 6 □ 100-249
- 7 □ 250-499
- 8 □ 500-999
- 9 □ Over 1000

3 Your principal job function: (please circle)
- 1 General & Corporate Management
- 2 Design & Development engineering
- 3 Basic Research
- 4 Engineering assistants (draftsman, lab assistant, technician)
- 5 Purchasing & procurement
- 6 Component repair/replacement
- 7 Engineering library
- 8 Other (please describe) _____

4 Your principal responsibility: (please circle)
- 1 Management other than engineering
- 2 Engineering Management
- 3 Engineering
- 4 Other (Please describe) _____

40 B75

YES: Send me 30-day trial copies of the D.A.T.A.BOOKS I've indicated.



Phone Order Desk
1-800-854-7030
Telex 910530606
In California **1-800-421-0159**
In Ontario Call **(416) 674-1717**
In British Columbia Call **(604) 271-3149**
In Quebec Call **(514) 697-3385**

(Please Print)

Name _____

Title _____

Company _____

Address _____

City _____ State _____ Zip _____

Signature _____

P.O. No. _____

Telephone ( ) _____ Date _____

□ Payment enclosed. □ Bill my company. Full refund privilege.

□ **Send Information on D.A.T.A.TAPES Lease**

TITLE	QTY.	U.S. $	CANADIAN $	TOTAL
APPLICATION NOTES REFERENCE (2 eds.)		59.	83.	
AUDIO/VIDEO ICs (1 ed.)		89.	125.	
DIGITAL ICs (2 eds.)		99.	139.	
DIODE (1 ed.)		89.	125.	
I.C. FUNCTIONAL EQUIVALENCE GUIDE (2 eds.)		109.	153.	
INTERFACE ICs (2 eds.)		99.	139.	
LINEAR ICs (2 eds.)		99.	139.	
MASTER TYPE LOCATOR (1 ed.)		69.	97.	
MEMORY ICs (2 eds.)		99.	139.	
MICROCOMPUTER SYSTEMS (2 eds.)		89.	125.	
MICROPROCESSOR ICs (2 eds.)		89.	125.	
MICROPROCESSOR TECHNICAL SOFTWARE (1 ed.)		149.	209.	
MICROWAVE (1 ed.)		89.	125.	
MILITARY ELECTRONIC DEVICES GUIDE (4 eds.)		175.	245.	
MODULES/HYBRIDS (1 ed.)		84.	118.	
OPTOELECTRONICS (1 ed.)		89.	125.	
PLASTICS (1 ed.)		125.	175.	
POWER SEMICONDUCTORS (1 ed.)		99.	139.	
POWER SUPPLIES (1 ed.)		79.	111.	
THYRISTOR (1 ed.)		89.	125.	
TRANSISTOR (1 ed.)		89.	125.	
DISCONTINUED DIGITAL & AUDIO/VIDEO (1 ed.)		64.	90.	
DISCONTINUED DIODE (1 ed.)		64.	90.	
DISCONTINUED INTERFACE & MEMORY (1 ed.)		64.	90.	
DISCONTINUED LINEAR (1 ed.)		64.	90.	
DISCONTINUED MICROWAVE (1 ed.)		64.	90.	
DISCONTINUED OPTOELECTRONIC (1 ed.)		64.	90.	
DISCONTINUED THYRISTOR (1 ed.)		64.	90.	
DISCONTINUED TRANSISTOR (1 ed.)		64.	90.	
DISCONTINUED TYPE LOCATOR (1 ed.)		69.	97.	
			Subtotal	$
			California Customers: Add State and Local Sales Tax	$
			Grand Total	$

Prices subject to change without notice and are good in the U.S. and Canada only. Others write for rates.

40 B75

YES: Send me 30-day trial copies of the D.A.T.A.BOOKS I've indicated.



Phone Order Desk
1-800-854-7030
Telex 910530606
In California **1-800-421-0159**
In Ontario Call **(416) 674-1717**
In British Columbia Call **(604) 271-3149**
In Quebec Call **(514) 697-3385**

(Please Print)

Name _____

Title _____

Company _____

Address _____

City _____ State _____ Zip _____

Signature _____

P.O. No. _____

Telephone ( ) _____ Date _____

□ Payment enclosed. □ Bill my company. Full refund privilege.

□ **Send Information on D.A.T.A.TAPES Lease**

TITLE	QTY.	U.S. $	CANADIAN $	TOTAL
APPLICATION NOTES REFERENCE (2 eds.)		59.	83.	
AUDIO/VIDEO ICs (1 ed.)		89.	125.	
DIGITAL ICs (2 eds.)		99.	139.	
DIODE (1 ed.)		89.	125.	
I.C. FUNCTIONAL EQUIVALENCE GUIDE (2 eds.)		109.	153.	
INTERFACE ICs (2 eds.)		99.	139.	
LINEAR ICs (2 eds.)		99.	139.	
MASTER TYPE LOCATOR (1 ed.)		69.	97.	
MEMORY ICs (2 eds.)		99.	139.	
MICROCOMPUTER SYSTEMS (2 eds.)		89.	125.	
MICROPROCESSOR ICs (2 eds.)		89.	125.	
MICROPROCESSOR TECHNICAL SOFTWARE (1 ed.)		149.	209.	
MICROWAVE (1 ed.)		89.	125.	
MILITARY ELECTRONIC DEVICES GUIDE (4 eds.)		175.	245.	
MODULES/HYBRIDS (1 ed.)		84.	118.	
OPTOELECTRONICS (1 ed.)		89.	125.	
PLASTICS (1 ed.)		125.	175.	
POWER SEMICONDUCTORS (1 ed.)		99.	139.	
POWER SUPPLIES (1 ed.)		79.	111.	
THYRISTOR (1 ed.)		89.	125.	
TRANSISTOR (1 ed.)		89.	125.	
DISCONTINUED DIGITAL & AUDIO/VIDEO (1 ed.)		64.	90.	
DISCONTINUED DIODE (1 ed.)		64.	90.	
DISCONTINUED INTERFACE & MEMORY (1 ed.)		64.	90.	
DISCONTINUED LINEAR (1 ed.)		64.	90.	
DISCONTINUED MICROWAVE (1 ed.)		64.	90.	
DISCONTINUED OPTOELECTRONIC (1 ed.)		64.	90.	
DISCONTINUED THYRISTOR (1 ed.)		64.	90.	
DISCONTINUED TRANSISTOR (1 ed.)		64.	90.	
DISCONTINUED TYPE LOCATOR (1 ed.)		69.	97.	
			Subtotal	$
			California Customers: Add State and Local Sales Tax	$
			Grand Total	$

Prices subject to change without notice and are good in the U.S. and Canada only. Others write for rates.

NO POSTAGE
NECESSARY
IF MAILED
IN THE
UNITED STATES

BUSINESS REPLY MAIL
FIRST CLASS PERMIT NO. 11108 SAN DIEGO, CA

POSTAGE WILL BE PAID BY

D.A.T.A. INC.
A Cordura Company

M/S B75
9889 Willow Creek Road
P.O. Box 26875
San Diego, CA 92126-0875

NO POSTAGE
NECESSARY
IF MAILED
IN THE
UNITED STATES

BUSINESS REPLY MAIL
FIRST CLASS PERMIT NO. 11108 SAN DIEGO, CA

POSTAGE WILL BE PAID BY

D.A.T.A. INC.
A Cordura Company

M/S B75
9889 Willow Creek Road
P.O. Box 26875
San Diego, CA 92126-0875

NO POSTAGE
NECESSARY
IF MAILED
IN THE
UNITED STATES

BUSINESS REPLY MAIL
FIRST CLASS PERMIT NO. 11108 SAN DIEGO, CA

POSTAGE WILL BE PAID BY

D.A.T.A. INC.
A Cordura Company

ATTN: Advertising Coordinator
9889 Willow Creek Road
P.O. Box 26875
San Diego, CA 92126-0875

This invention will change your tune about magnetrons.

EEV announces the Tuning Fork frequency agile magnetron.

For the first time full tuning range (400 MHz) and fast tuning rate (1,000 Hz) have been combined without compromising reliability or life expectancy. For this system has no bearings. No driveshaft. No bellows. In short, no mechanical parts to go wrong.

Now tuning is achieved by the movement of a tuning fork, driven electro-magnetically through the vacuum envelope from an integral power pack.

The position of the fork is continuously monitored by an electromagnetic sensor; from this a low-voltage readout signal proportional to frequency is generated by means of an integrated signal processing unit. This readout is extremely accurate, even under severe thermal and vibrational conditions.

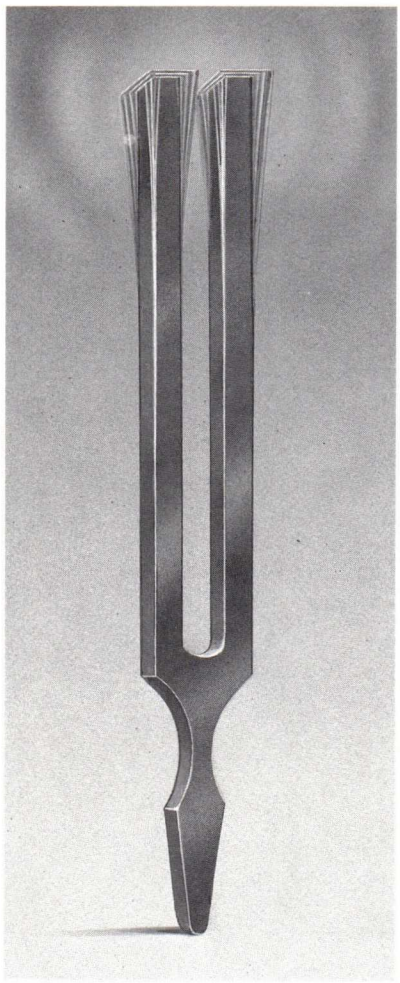

EEV's unique tuning fork technology, based on established co-axial magnetron design, offers you considerable benefits over a wide range of frequencies and power levels.

To find out how far we've changed the magnetron's tune, just contact us today.

The MG 5272 J (Ku) band magnetron; dimensions 145mm x 160mm x 84mm. 45kW peak power; weight 3.5 kg;



The unique agile magnetron

EEV Magnetrons

EEV Inc, 7 Westchester Plaza, Elmsford, NY 10523, USA. Tel: 914 592 6050. Telex: 6818096.
EEV, Waterhouse Lane, Chelmsford, Essex CM1 2QU, England. Tel: 0245 261777. Telex: 99103.
EEV Canada Ltd, 67 Westmore Drive, Rexdale, Ontario M9V 3Y6. Tel: 416 745 9494. Telex: 06 989 363.

Ad Referral Number MW3

Across the bandwidth Ferranti delivers high performance, proven product reliability.

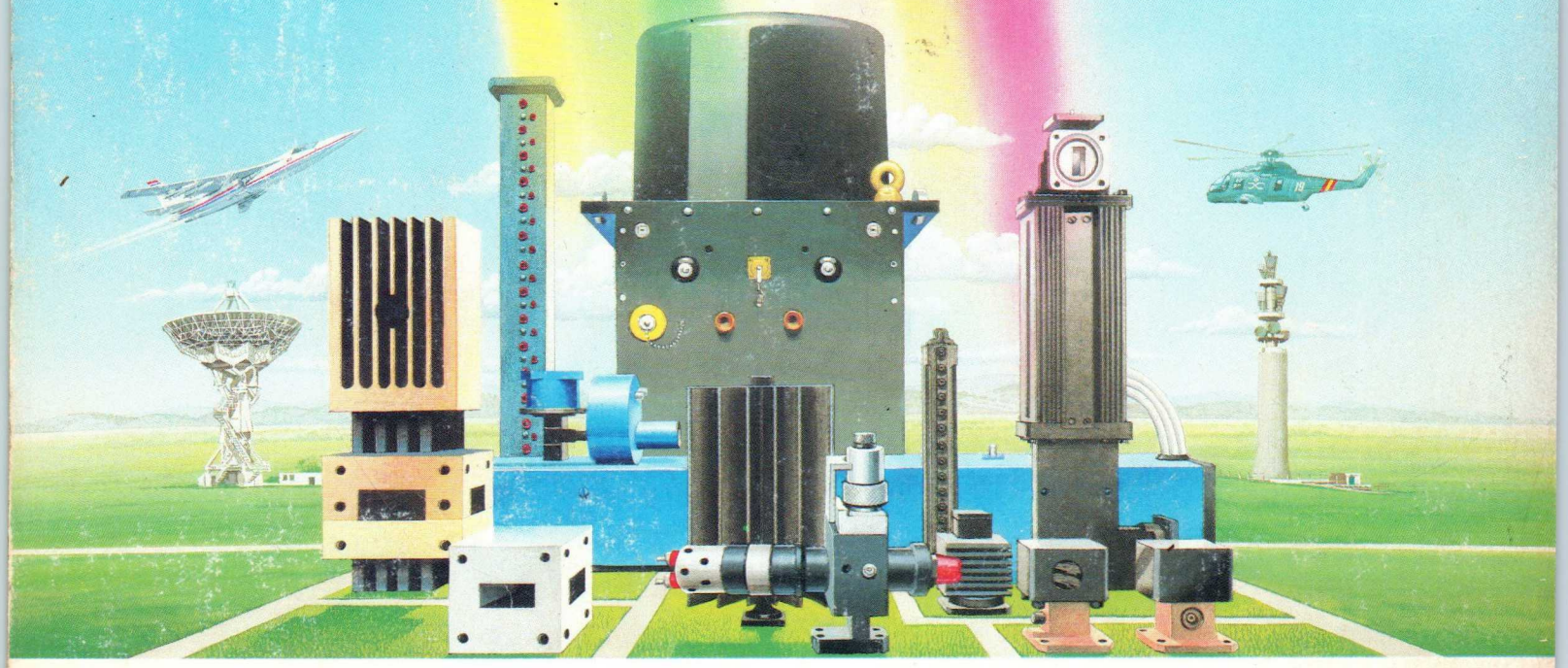

Microwave components were the first products Ferranti made at Dundee.
Over the years the development has kept pace with this technology.
Well, you wouldn't expect us to let our lead slip, would you?
And it hasn't. Today if you want high performance and proven integrity in microwave components, you specify Ferranti almost automatically.
And as the wavebands have spread, Ferranti components have extended to cover them.
We now lead the bands right across from L to Ka, in a range of power tubes, power supplies, ferrites, filters, TR cells and Microstrip, to meet the wide world of microwave requirements.
Whatever your waveband, tune in to Ferranti microwave capability by posting the coupon to:

Ferranti plc, Microwave Component Sales, Professional Components Department, Dunsinane Avenue, Dundee DD2 3PN, Scotland. Telephone: 0382-89311 Telex: 76166.

Ad Referral Number MW4

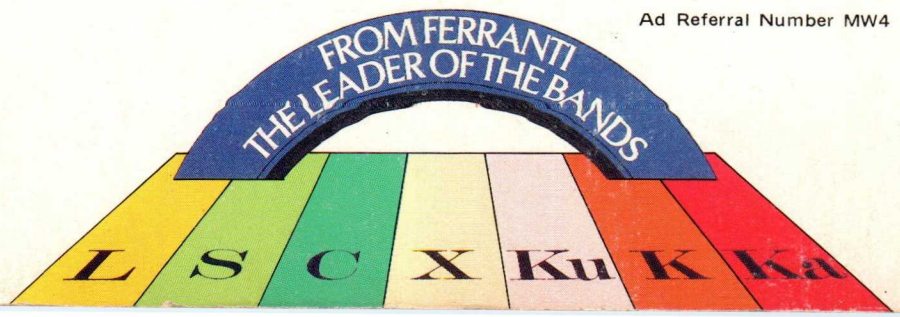

FERRANTI
Microwave capability

Please send me data on power tubes/power supplies/ferrites/filters/TR cells/Microstrip. (Delete where not required).

Ferranti plc, Microwave Component Sales, Professional Components Department, Dunsinane Avenue, Dundee DD2 3PN, Scotland.

Name _____
Position _____
Company _____
Address _____