MICROWAVE AND POWER TUBES

TECHNICAL DATA

RAYTHEON

Excellence in Electronics

RAYTHEON

RAYTHEON TECHNICAL DATA SERVICE

The Raytheon Technical Data Service consists of four loose leaf binders which together contain data for tubes and semiconductor products manufactured by Raytheon.

The binder titles are:

RECEIVING TUBES
MICROWAVE AND POWER TUBES
SEMICONDUCTOR DEVICES – Transistors, Diodes, Rectifiers, Circuit-Paks
ELECTRON TUBES – Industrial and Military

The above binders, with data, may be ordered individually or in any combination. The charge is $6.25 for each and includes a one-year data subscription service which maintains each binder in an up-to-date condition. For future years, this data subscription service is available at the rate of $1.25 per year for each binder.

To maintain prices for binders and data service at a nominal level, we have eliminated invoices and other bookkeeping procedures, and therefore ask that a check or money order be sent with your order. Make them payable to RAYTHEON COMPANY.

- -

ORDER FORM

Technical Information Service
RAYTHEON COMPANY
55 Chapel Street
Newton 58, Massachusetts

Please send the indicated Raytheon Data Binder (s) with one-year subscription service for each, to address below:

☐	**RECEIVING TUBES**	$6.25
☐	**MICROWAVE AND POWER TUBES**	6.25
☐	**SEMICONDUCTOR DEVICES – Transistors, Diodes, Rectifiers, Circuit-Paks**	6.25
☐	**ELECTRON TUBES – Industrial and Military**	6.25

Enclosed is total remittance for . . $_____

Please print clearly. If a specific individual cannot be named, please show correct department name or other identifying data in addition to company name.

NAME _____ POSITION _____

COMPANY _____

STREET _____

CITY _____ ZONE _____ STATE _____

RAYTHEON

DATA SERVICE

ELECTRON TUBES
MICROWAVE

INDEX

TYPE	SECTION
RK2J42	Magnetron
RK2J49	Magnetron
RK2J50	Magnetron
RK2J51	Magnetron
RK2J55	Magnetron
RK2J56	Magnetron
RK2J70	Magnetron
RK2K22	Klystron
RK2K25	Klystron
RK2K26	Klystron
RK2K28	Klystron
RK2K29	Klystron
RK2K33	Klystron
RK2K45	Klystron
RK2K48	Klystron
RK2K56	Klystron
RK4J31	Magnetron
RK4J32	Magnetron
RK4J33	Magnetron
RK4J34	Magnetron
RK4J35	Magnetron
RK4J36	Magnetron
RK4J37	Magnetron
RK4J38	Magnetron
RK4J39	Magnetron
RK4J40	Magnetron
RK4J41	Magnetron
RK4J54	Magnetron
RK4J55	Magnetron
RK4J56	Magnetron
RK4J57	Magnetron
RK4J58	Magnetron
RK4J59	Magnetron
RK5J26	Magnetron
QK172	Magnetron
QK235	Magnetron
QK254	Magnetron
QK289	Klystron
QK290	Klystron

TYPE	SECTION
QK291	Klystron
QK292	Klystron
QK293	Klystron
QK294	Klystron
QK295	Klystron
QK297	Klystron
QK306	Klystron
QK329	Special Purpose
QK338	Magnetron
QK358	Magnetron
QK386	Klystron
QK417	Klystron
QK420	Klystron
QK422	Klystron
QK428	Magnetron
QK436	Klystron
QK456	Magnetron
QK483	Klystron
QK518	Backward Wave Oscillator
QK528	Backward Wave Oscillator
QK542	Traveling Wave
QKS576	Amplitron-Stabilotron
QK610	Backward Wave Oscillator
QK625	Backward Wave Oscillator
QK630	Amplitron-Stabilotron
QK634	Backward Wave Oscillator
QK653	Amplitron-Stabilotron
QK665	Magnetron
QK666	Magnetron
QKW669	Traveling Wave
QK673	Klystron
QKB691	Backward Wave Oscillator
QK702	Magnetron
RK725A	Magnetron
RK726C	Klystron
QK735	Magnetron
QKW746	Traveling Wave
QK748	Special Purpose
QKN748	Special Purpose
QKK752/QKK753	Klystron

TYPE	SECTION
RK6312/QK420	Klystron
RK6316/QK436	Klystron
RK6344/QK235	Magnetron
RK6390	Klystron
RK6406/QK428	Magnetron
RK6410/QK338	Magnetron
RK6517/QK358	Magnetron
RK6518/QK254	Magnetron
RK6573/QK483	Klystron
RK6841	Magnetron
RK6845/QK386	Klystron
RK6959/QK172	Magnetron
RK7156	Magnetron
RK7449	Magnetron
RK7452	Magnetron
RK7461	Magnetron
RK7484	Magnetron
RK7521	Magnetron
RK7528	Magnetron
RK7529	Magnetron
RK7547	Magnetron
RK7577/QK653	Amplitron-Stabilotron
RK7578	Magnetron
RK7630/QK702	Magnetron
RK7718	Magnetron
8128	Traveling Wave
8129	Amplitron-Stabilotron

TYPE	SECTION
Coaxial Calorimetric Waterload	Special Products
Waveguide Calorimetric Waterload	Special Products
5 KW, Dummy Load	Special Products
Missing Pulse Detector & Simulator	Special Products
Stable RF Source	Special Products

RAYTHEON®

Excellence in Electronics

THE DATA IN THIS SECTION FORMS A PART OF THE RAYTHEON TECHNICAL DATA BOOK FOR

MICROWAVE and POWER TUBES

For replacement data sheets or for additional copies of this book, contact

TECHNICAL INFORMATION SERVICE
RAYTHEON COMPANY
55 Chapel Street,
Newton 58, Massachusetts

RAYTHEON

DATA SERVICE

ELECTRON TUBES
MICROWAVE

CONTENTS

AMPLITRONS – STABILOTRONS

TYPE	PAGE	DATE
QKS576	1-2	8-62
QK630	1-7	7-59
QKS807	1	2-62
QKS997	1	2-62
QKS1012	1	11-61
RK7577/QK653	1-2	Prelim
8129	1-6	10-61

The technical information on this data sheet is of a proprietory nature and is furnished as a customer service for private use only.

QKS576 OBJECTIVE DATA SHEET

RAYTHEON

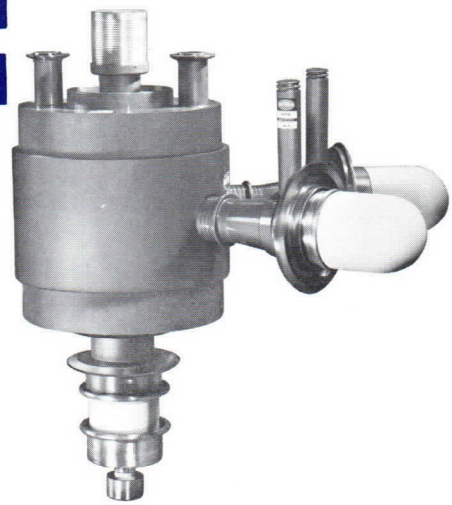

The QKS576 is a pulsed type Amplitron capable of operation over the range from 1.8 Mw to 10 Mw peak power output. At these levels peak drive power of 120 kw and 1.5 Mw, respectively, are required. RF drive levels can be determined on request for intermediate operating points. When used with a modulator having suitable load line characteristics, the QKS576 will cover the frequency band 570 to 630 Mc without electrical or mechanical adjustment. It has coaxial rf input and output probes which mate to a specially designed WR 1500 waveguide transition. Forced liquid cooling is required. The tube can be supplied with integral magnet on special request.

Reliable operation and optimum Amplitron life can be achieved only if the radar transmitter is designed with the Amplitron characteristics clearly in mind. This Objective Data Sheet is intended only to acquaint the reader with the basic characteristics of this Amplitron and should not be used solely in the system design. Detailed information may be obtained by contacting the Product Programs Department, Microwave and Power Tube Division, Raytheon Company, Spencer Laboratory, Burlington, Massachusetts.

MECHANICAL DATA

Detailed Dimensions	See Outline Drawing
Mounting Position	Cathode Axis Vertical
Weight	165 lbs. approx.
Cooling	Liquid
Input Bushing	Oil Immersed
RF Output Pressurization	None
RF Output Flanges	Special
Solenoid	Special

TYPICAL ELECTRICAL DATA

Operation	I	II
Peak Power Output	10	1.8 Megawatt (min.)
Average Power Output	72	14 Kilowatts
Pulse Duration	6.0	6.6 usec
Duty Cycle	.0072	.0079
Peak Anode Current	200	65 Amperes
Peak Anode Voltage	75	60 Kilovolts
Magnetic Field	440	390 Gauss
Driver Peak Power	1500	120 Kilowatts
Heater Current, Preheat	95	95 Amperes
Heater Current, Operate	0	95 Amperes

8/62

The specifications for this tube have not been finalized. The tube is in the development stage and is available for engineering analysis purposes only. This engineering information and/or delivery of sample tubes do not imply availability of tubes with the same electrical and/or mechanical characteristics. Changes in ratings and/or dimensions may be made at our discretion as deemed advisable by manufacturing experience or other considerations. For current information concerning this tube contact the nearest Microwave and Power Tube Regional Sales Representative.

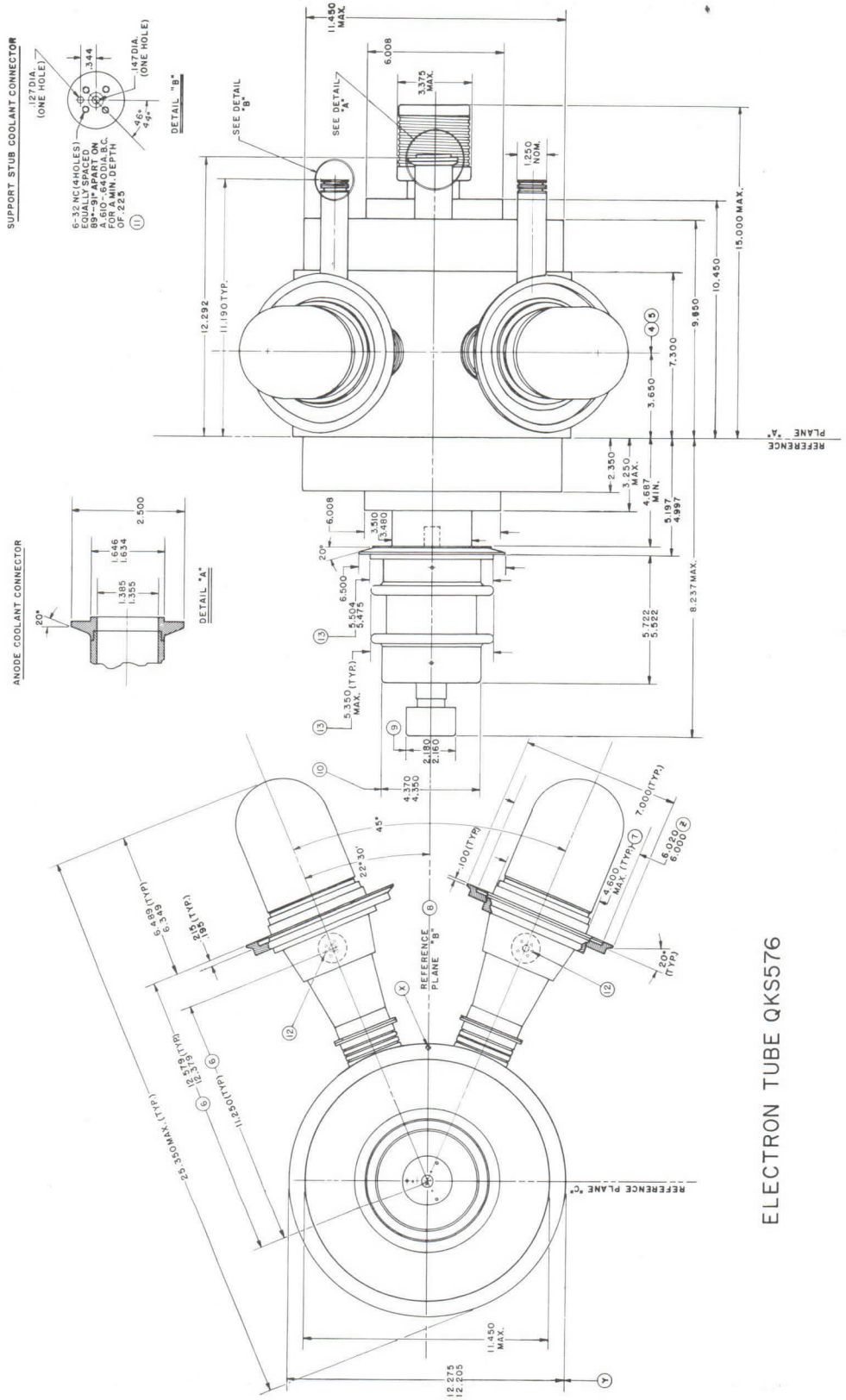

ELECTRON TUBE QKS576

NOTES

1. REFERENCE PLANE "A" IS DEFINED AS A PLANE THAT LIES ON THE FACE OF THE ANODE.
2. REFERENCE PLANE "B" IS DEFINED AS A PLANE PERPENDICULAR TO REFERENCE PLANE "A" & PASSING THRU THE CENTER OF TAPPED HOLE "X" & DIAMETER "Y".
3. REFERENCE PLANE "C" IS DEFINED AS A PLANE PERPENDICULAR TO BOTH REFERENCE PLANES "A" & "B" PASSING THRU THE CENTER OF DIAMETER "Y".
4. INCLUDES ANGULAR AS WELL AS LATERIAL DEVIATION.
5. THIS DIMENSION PASSES THRU THE CENTER OF DIAMETER "Z".
6. THESE DIMENSIONS APPLY TO AXIS OF DIAMETER "Y".
7. CONCENTRIC TO "Z" WITHIN .015.
8. PARTS OF THIS CENTERLINE MAY VARY FROM TRUE LOCATION BY .125.
9. HEATER CONNECTION.
10. COMMON HEATER-CATHODE CONNECTION.
11. MINOR DIAMETER MUST NOT BE GREATER THAN .116.
12. SEE DETAIL "B" FOR LOCATION OF .127 DIAMETER HOLE.
13. THESE DIAMETERS MUST SIMULATENOUSLY ACCEPT A 5,505 I.D. x 5,000 LONG GAUGE.

RAYTHEON

TECHNICAL INFORMATION

TENTATIVE DATA

Excellence in Electronics

TYPE QK630

GENERAL DESCRIPTION

The QK630 is a self-excited oscillator capable of producing a minimum of 550 kilowatts peak power output. Used with a tunable, external cavity the combination is an oscillator frequency stabilized to a high degree and tunable from 1270 to 1350 Mc.

The information contained herein is representative of a small number of prototypes and is not necessarily representative of the final tube. Detailed information on specific applications may be obtained by contacting the Applications Engineering Department, Microwave and Power Tube Division, Raytheon Company, Waltham 54, Massachusetts.

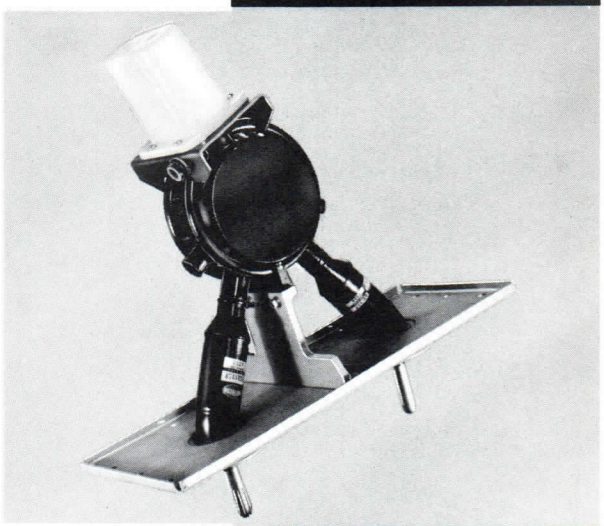

PULSED-TYPE STABILOTRON OSCILLATOR

GENERAL CHARACTERISTICS

ELECTRICAL

Heater Characteristics

Heater current preheat	2.4 A
Heater current operate	2.4 A
Heater voltage @ 2.4 A	27-33 V
Minimum preheat time	3 Minutes
Cold heater resistance	2.0 ohms (Approx.)

Typical Operation

Pulse duration	3.0 usec
Duty cycle	.0024
Peak anode voltage	35 kv
Peak anode current	37 A
Average anode current	89 mAdc
Peak power output	550 kw
Average power output	1320 W
VSWR	1.1/1
Frequency region	1270-1350 Mc
RF bandwidth	0.67 Mc

MECHANICAL

Overall dimensions	19.625" x 18.3" x 8.125"
Net weight: tube	16 lbs.
magnet, typically	40 lbs.
Mounting	Any
Output coupling	Round flange, 3 5/8" diameter
Input coupling	Round flange, 3 5/8" diameter

Printed in U.S.A.

MICROWAVE AND POWER TUBE DIVISION
RAYTHEON COMPANY
FOUNDRY AVE., WALTHAM 54, MASS.

TENTATIVE DATA

Output Pressure	35 psia
Input Pressure	35 psia
Cooling	Forced Water
Cathode bushing	Glass @ atmos. Press.
Vibration	50 cps @ 2.5G
Shock	15G
Magnet Protection	12"

DETAILED ELECTRICAL INFORMATION

HEATER-CATHODE

The cathode must be preheated at 2.4 amperes for at least three minutes prior to the application of the high voltage pulse. Heater current surges in excess of five amperes may cause damage to the tube. When the average anode current is greater than 50 milliamperes, the heater current should be reduced to zero. The application of heater power without forced liquid cooling may cause permanent damage to the tube.

TYPICAL OPERATION

As illustrated in Figure 1 the Stabilotron circuit consists of a Stabilotron tube, a high Q tunable stabilizing system and a feedback mismatch in the output circuit of the tube. The circuit will oscillate when the following conditions are satisfied.

1. $|\Gamma_1|\ |\Gamma_2|$ Gain $\geq$ 1
2. Total loop phase shift from plane $l\ l^1$ to plane $r\ r^1$ is an integral multiple of 360 degrees.

A portion of the output power is reflected from the reference plane $l\ l^1$. This reflected power travels back through the Stabilotron network with little or no attenuation or reflection and out to the reference plane $r\ r^1$. The energy at the resonant frequency of the cavity is again reflected, amplified by the backward wave principle and arrives at the reference plane $l\ l^1$ at full power level. The energy not at the resonant frequency of the cavity is absorbed by the damping resistor. A line stretcher provides phase adjustment for optimum system performance.

Figure 2 shows a QK630 Stabilotron tube used with a QK629 Stabilizing System. The input of the QK630 is connected to a 1⅝" coax line stretcher which in turn is connected to a cylindrical, tunable cavity. A damping resistor for the purpose of absorbing off resonant energy is connected through a fixed length of 1⅝" coax line to the other side of the cavity. As the cavity is tuned it moves physically toward or away from the tube, changing the line length between the cavity and tube and thus maintaining proper loop phase shift.

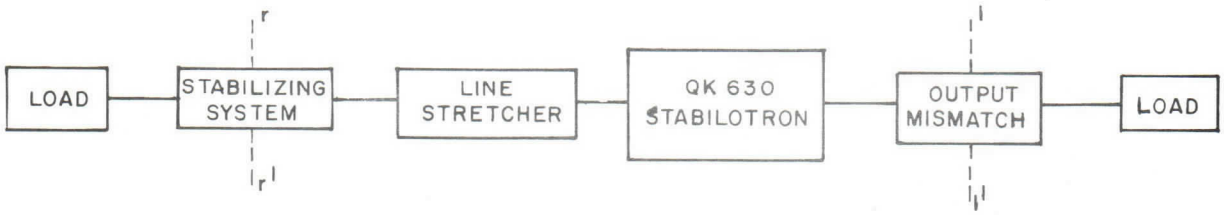

Figure 1

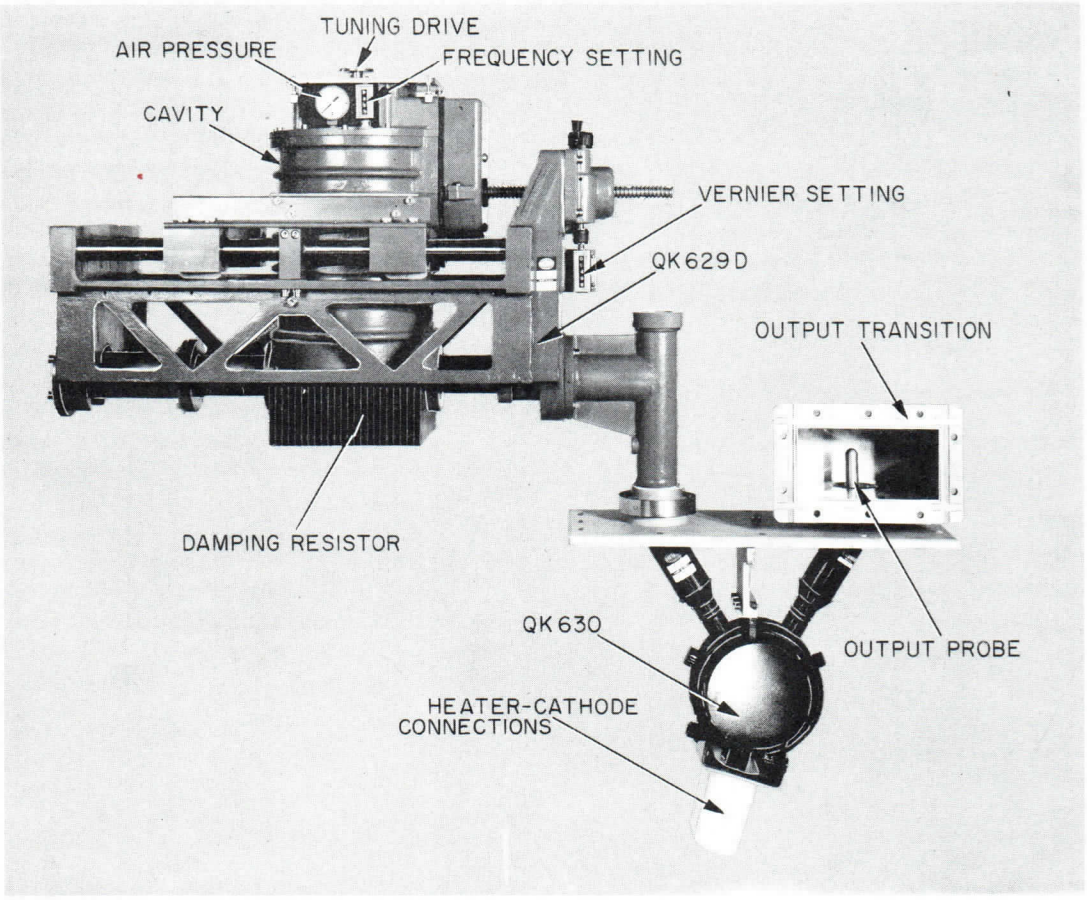

Figure 2

FREQUENCY STABILITY

The phase shift vs frequency characteristics of the stabilizing cavity in the region of cavity resonance has a slope many times greater than that of any other element in the circuit. A slight change in frequency will result when the cavity is subjected to a substantial shift in phase which might be introduced by the antenna load, frequency pushing, etc. Figure 3 demonstrates the frequency shift which occurs for the same phase shift increment in a stabilized and unstabilized system. It is seen that in the stabilized case the resulting frequency change, Δfs, caused by the Δθ increment of phase is much less than the frequency change, Δ fu, in the unstabilized case.

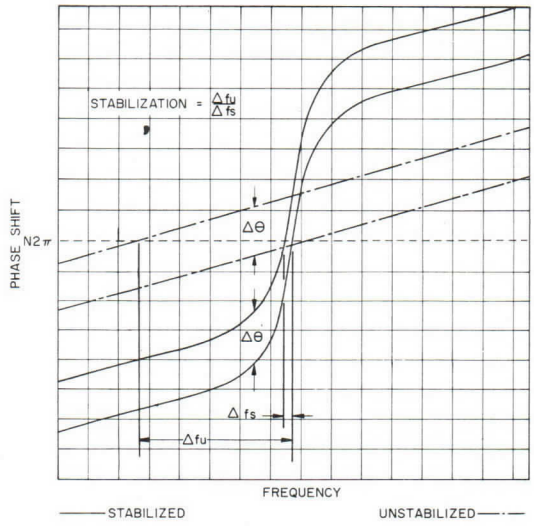

Figure 3

Printed in U.S.A.

TENTATIVE DATA

OPERATING CHARACTERISTICS

Figure 4 is a plot of peak power output, peak anode voltage, efficiency, and bandwidth variation with respect to frequency.

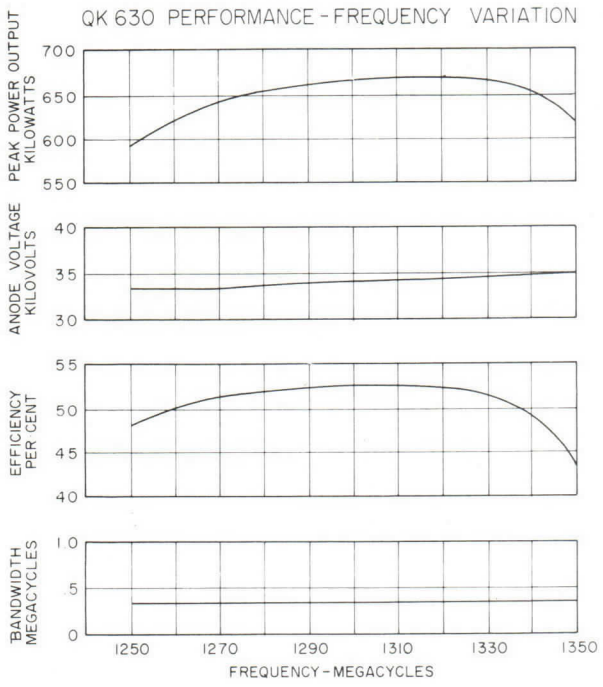

Figure 4

COOLING

The QK630 Stabilotron is a forced liquid cooled tube. The input temperature of the coolant will dictate the flow rate necessary to maintain the anode temperature below the specified maximum of 125°C. Figure 5 shows cooling water flow versus the total input power plotted for different values of anode temperature rise, Δt, above the inlet temperature of the coolant. The relationship of back pressure and water flow is also shown.

PULSE LENGTH AND DUTY CYCLE

The QK630 Stabilotron has been designed and tested at the following pulse conditions. See Figure 6.

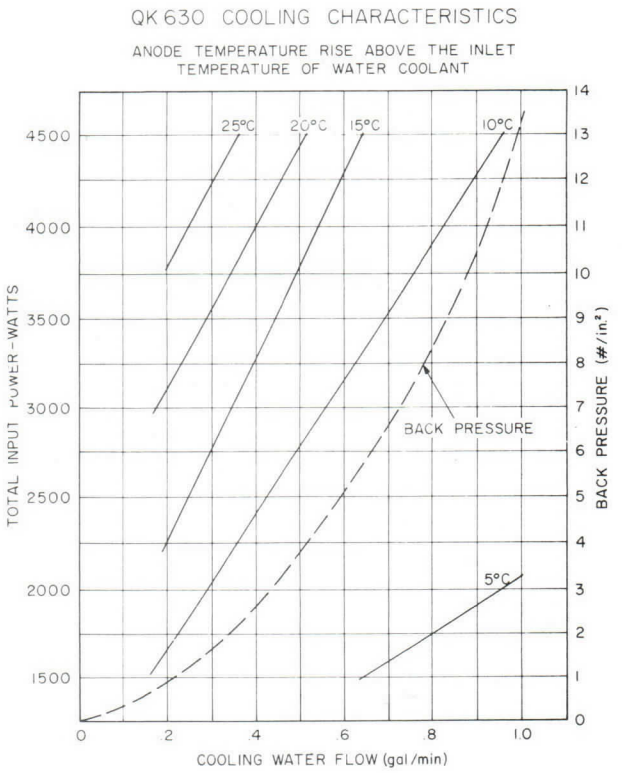

Figure 5

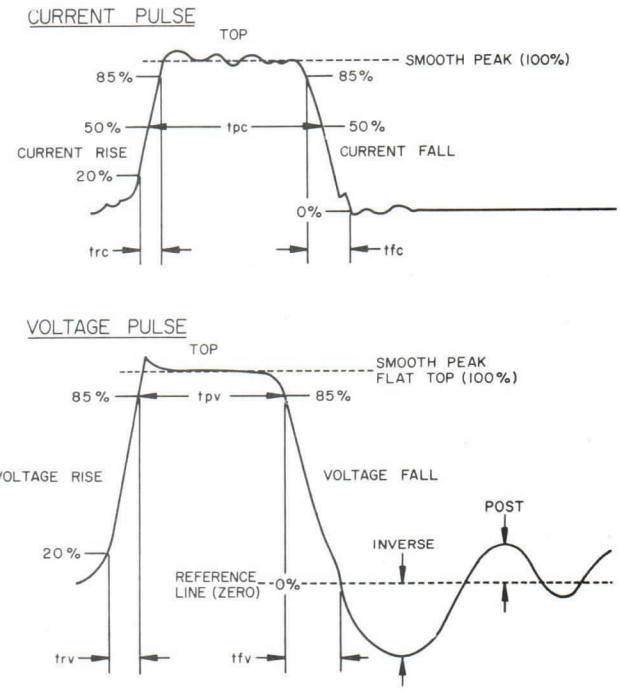

Figure 6

t_{pc} = 3.0 usec (measured at 50%)
t_{rc} = 0.20 usec (measured 20 to 85%)
t_{fc} = 1.30 usec (measured 0 to 85%)
t_{rv} = 0.45 usec (measured 20 to 85%)
t_{fv} = 2.0 usec (measured 0 to 85%)

No spike or ripple should exceed ±2.5% of the average peak value of current or voltage. Inverse voltage should not exceed 25% of the forward voltage. Post voltages should be held to a minimum to avoid post pulse noise or oscillations. If operation at pulse conditions different from those given above is anticipated, the manufacturer should be consulted for further information.

LOAD DIAGRAMS

Figures 7, 8, and 9 are load diagrams of the QK630 Stabilotron at 1270 Mc, 1300 Mc, and 1350 Mc. The output spectrum, peak power output and frequency deviation are shown at a matched load position and several phase positions with a load VSWR of 1.5/1.

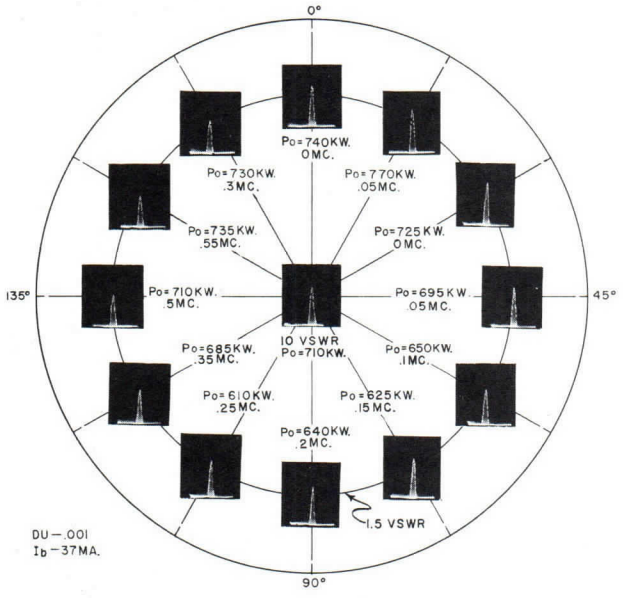

QK630-LOAD DIAGRAM
FREQUENCY-1270MC/S

Figure 7

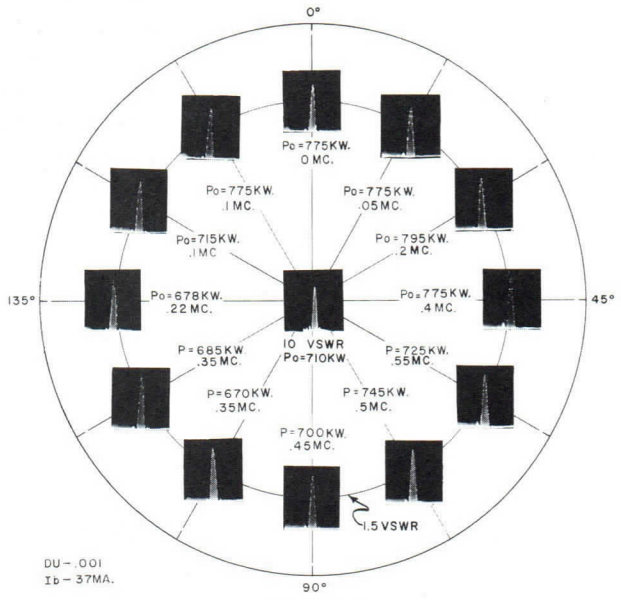

QK 630-LOAD DIAGRAM
FREQUENCY-1300MC/S.

Figure 8

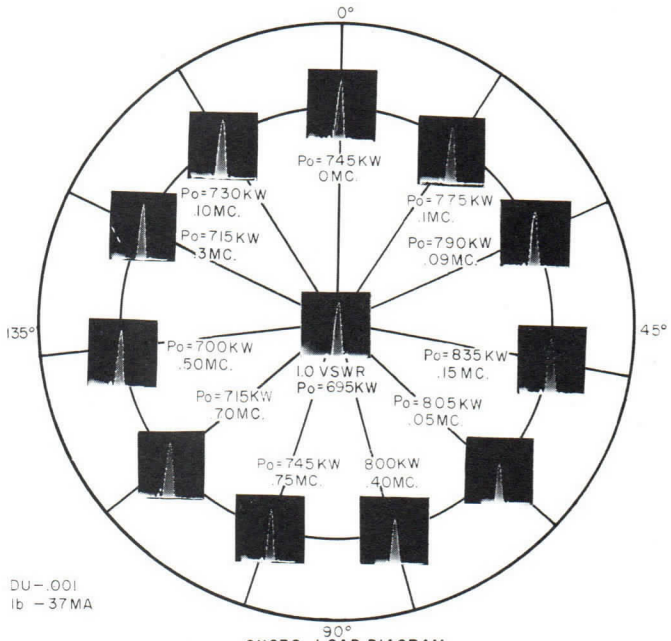

QK630-LOAD DIAGRAM
FREQUENCY-1350 MC/S

Figure 9

ELECTRICAL CONNECTIONS

Electrical connections are made to the frame of the tube and to the two terminals located on the

high voltage cathode bushing. The positive high voltage should be grounded on the mounting surface. Heater connections should be designed to minimize contact resistance and lateral forces on the heater terminals. The common heater-cathode terminal is marked with the letter "C". Drawings of suitable heater-cathode connecting devices are available on request.

MOUNTING

The tube is mounted within the equipment by twelve bolts passed through clearance holes in the rectangular mounting plate. The relative position of the tube is unimportant. Details of the mounting plate are shown in the outline drawing.

COUPLING AND PRESSURIZATION

The input pipe of the tube has been designed to mate with the connection of the QK629 Stabilizing System. The output pipe, identical to the input pipe, is intended to couple into a standard 3" x 6" waveguide (RG-69/U) through the mounting flange shown in the outline drawing. Pressurization of the input and output RF transmission system to 35 psia is required to prevent arcing in the system.

REFERENCES

Final Engineering Report, Volume I on the Design and Development of the Platinotron, Amplitron and Stabilotron: W. C. Brown, Signal Corps Contract No. DA-36-039-sc-56644, December, 1955.

Description and Operating Characteristics of the Platinotron — A New Microwave Tube Device: W. C. Brown, Proceedings of the IRE, September 1957.

Raytheon Technical Information Bulletin — Eng. I: June 1958.

QK630 ELECTRON TUBE INSTALLATION DETAILS

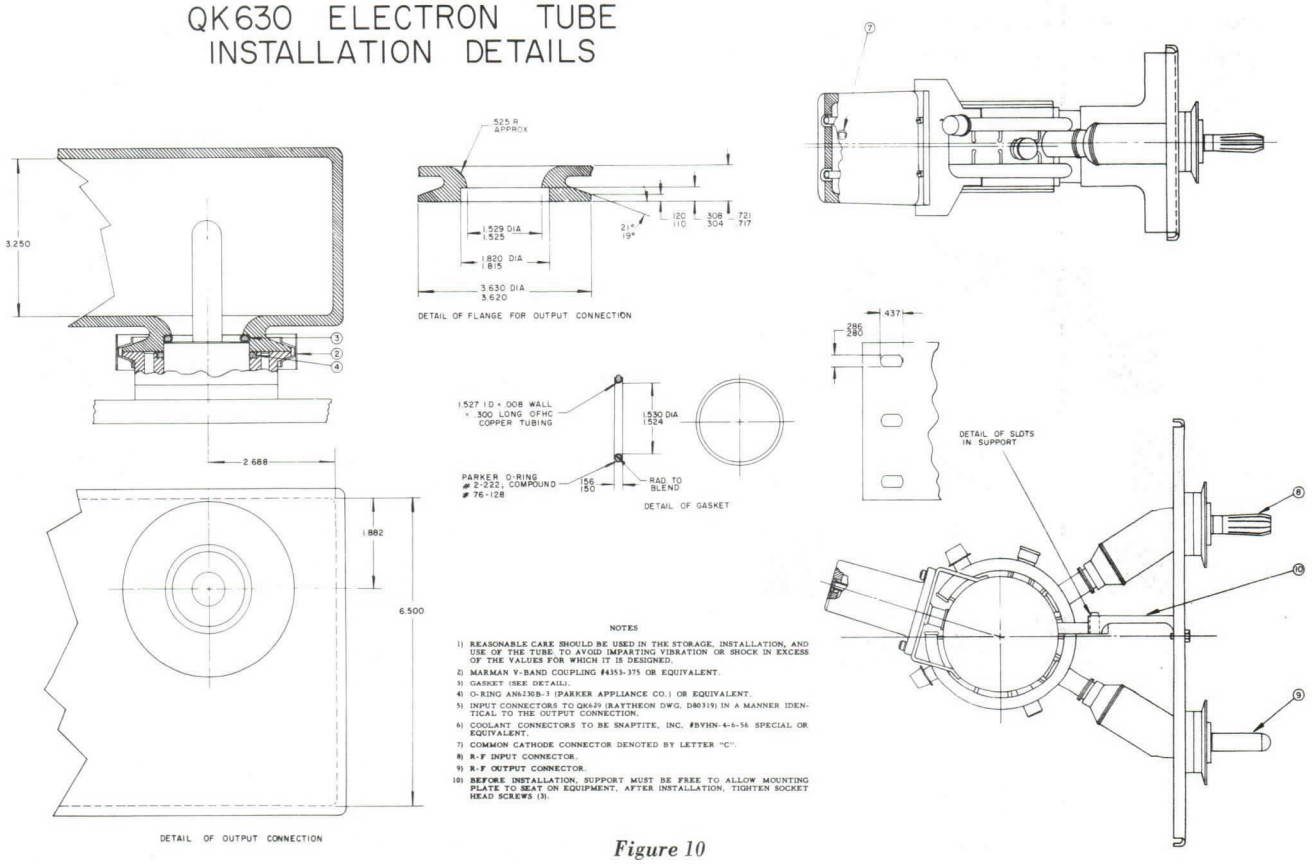

Figure 10

QK630 ELECTRON TUBE OUTLINE DRAWING

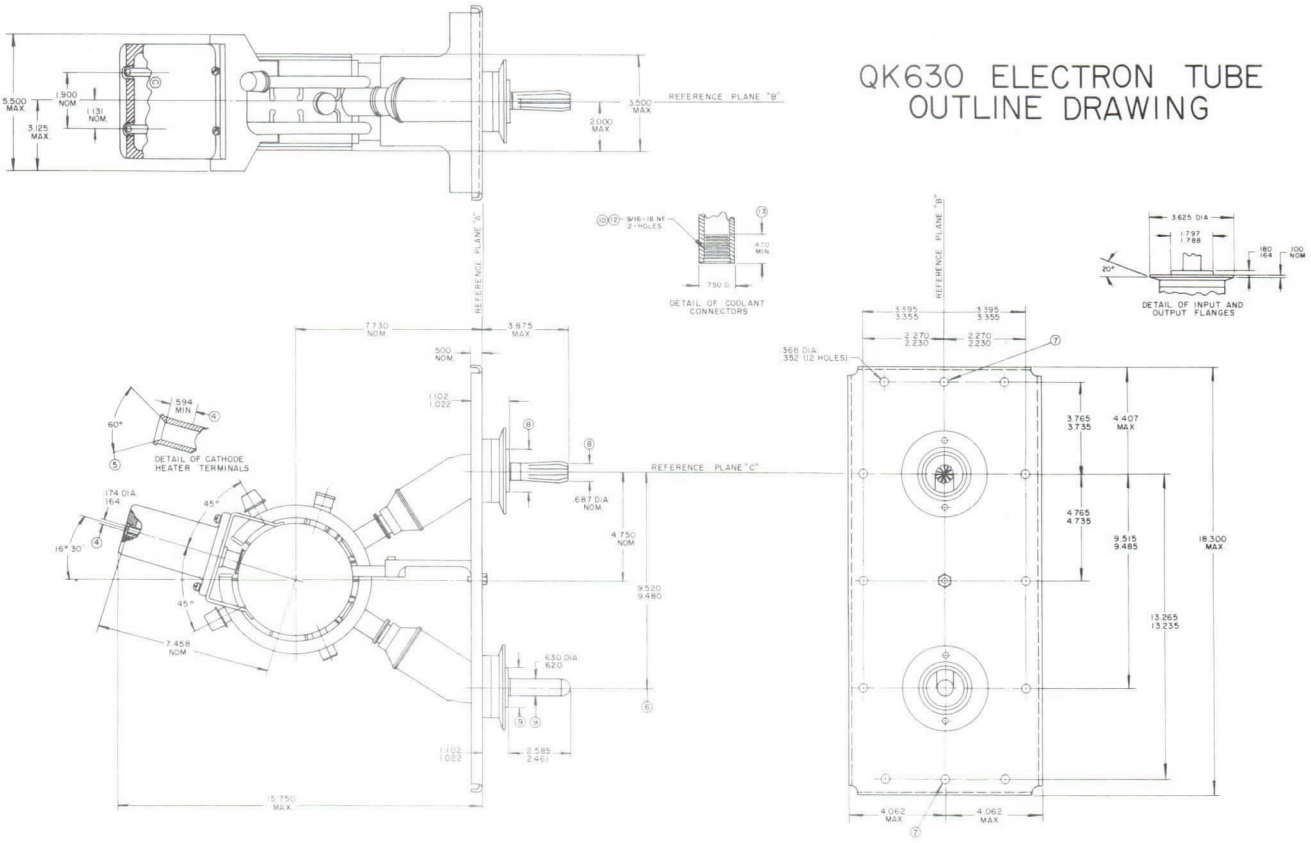

NOTES

1) REFERENCE PLANE "A" IS DEFINED AS A PLANE PASSING ALONG THE FACE OF THE MOUNTING PLATE AS SHOWN
2) REFERENCE PLANE "B" IS DEFINED AS A PLANE PERPENDICULAR TO REFERENCE PLANE "A" AND PASSING THROUGH THE CENTERS OF DIAMETERS "XX" AND "YY" AS SHOWN
3) REFERENCE PLANE "C" IS DEFINED AS A PLANE PERPENDICULAR TO REFERENCE PLANES "A" AND "B" AND PASSING THROUGH THE CENTER OF DIAMETER "XX" AS SHOWN
4) JACK HOLE DIAMETERS APPLY FOR DEPTH SHOWN
5) THIS COUNTERSINK SHALL BE CAPABLE OF ACCEPTING A CONE HAVING A 60° INCLUDED ANGLE AND A BASE DIAMETER OF 0.234 AND SHALL REJECT A SIMILAR CONE HAVING A BASE DIAMETER OF 0.254
6) THIS DIMENSION REFERS TO THE CENTERLINE OF DIAMETER "Y"
7) THESE HOLES TO BE LOCATED ON REFERENCE PLANE "B" WITHIN .015
8) WITH A GAGE HAVING AN 1.820 I.D. AND CONCENTRIC 0.640 I.D. PLACED OVER THESE DIAMETERS, ALL FINGERS OF THE INPUT CONNECTOR MUST CONTACT THE 0.640 DIAMETER
9) A GAGE HAVING A 1.797 I.D. AND CONCENTRIC 0.655 I.D. MUST PASS OVER THESE DIAMETERS
10) PITCH DIAMETER MUST ACCEPT CLASS 2 "GO" GAGE ONLY
11) MINOR DIAMETER MUST NOT BE GREATER THAN 0.513
12) APPLIES TO DEPTH OF FULL THREAD

Figure 11

TYPE QKS622

GENERAL DESCRIPTION

The QKS622 is a pulsed-type Amplitron capable of producing a minimum peak power output of 3 megawatts when an rf drive power no less than 550 kilowatts is applied to its input. When used with a modulator having proper load line characteristics, such as a "line type" modulator, it will cover the frequency band 2900 Mc to 3100 Mc without mechanical or electrical adjustment. It is an integral magnet type tube with waveguide input and output and requires forced liquid cooling.

Detailed information necessary for specific applications may be obtained by contacting the Applications Engineering Department, Microwave and Power Tube Division, Raytheon Company, Spencer Laboratory, Burlington, Massachusetts.

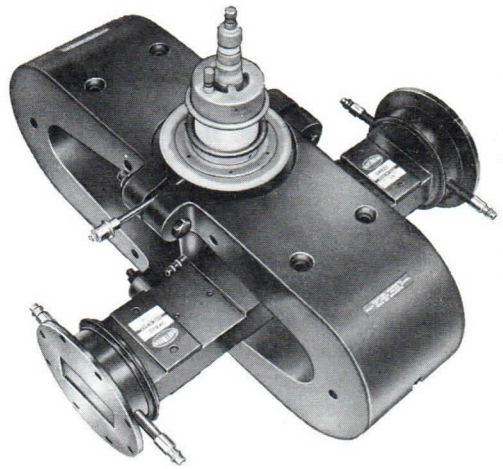

PULSED-TYPE AMPLITRON

GENERAL CHARACTERISTICS

ELECTRICAL

Heater Characteristics

No Heater Power Required For Most Applications

Typical Operation

Pulse Duration	11	10 usec
Duty Cycle	.0055	.0050
Peak Anode Voltage @ 2900 Mc	48	50 kv
Peak Anode Voltage @ 3100 Mc	52	54 kv
Peak Anode Current	20	66 a
Average Anode Current	110	330 mAdc
Peak Power Output	600 kw	3.0 Mw
Average Power Output	3300	15,000 W
Frequency Band	2900-3100	2900-3100 Mc
RF Driver Characteristics		
Peak Drive Power	48 kw	550 kw min.
Frequency Band	2900-3100	2900-3100 Mc

The driver rf pulse must coincide with or overlap the Amplitron current pulse.

Cold Insertion Loss	0.5 db

Printed in U.S.A.

MICROWAVE AND POWER TUBE DIVISION

RAYTHEON COMPANY

FOUNDRY AVE., WALTHAM 54, MASS.

MECHANICAL

Over-all Dimensions	20" x 16.8" x 16"
Net Weight	110 lbs.
Mounting	Cathode Axis Vertical
Output Coupling	Mates with UG54A/U type flange
Input Coupling	Mates with UG54A/U type flange
Input Pressurization	35 psia
Output Pressurization	45 psia
Cooling	Forced Liquid
Magnet Protection	12"

DETAILED ELECTRICAL INFORMATION

HEATER-CATHODE

This tube does not require heater power for most applications. Satisfactory starting and operation will occur whenever the pulse voltage is applied in the presence of normal rf drive power.

TYPICAL OPERATION

Figure 1 illustrates a typical Amplitron circuit. The driver tube may be a magnetron, Amplitron, traveling wave tube, or other device capable of supplying at least the minimum required rf input power. An isolator will normally be required between the Amplitron and its driver because reverse directed power reflected from the load mismatch is practically unattenuated by the Amplitron. The amount of isolation necessary will depend upon the gain of the Amplitron, the VSWR of the load and the amount of mismatch the driver can withstand.

The relationship $|\Gamma_i|\,|\Gamma_o|\,G < 1$ must be maintained to eliminate oscillation, where G is the power gain of the Amplitron and Γ_i and Γ_o are the input and output reflection coefficients measured at the input and output terminals looking away from the tube.

TYPICAL OPERATION

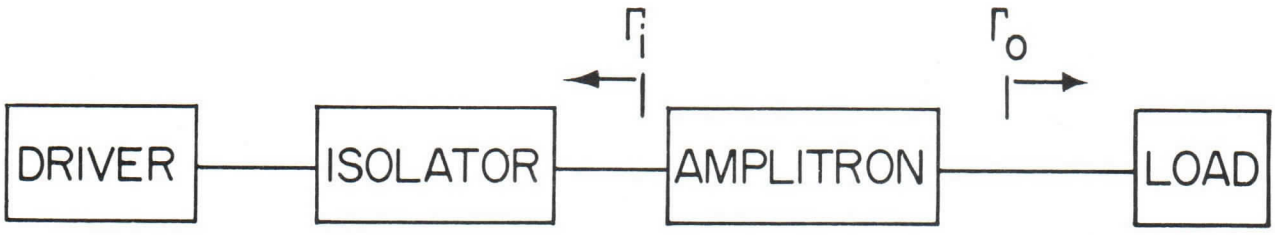

OPERATING CHARACTERISTICS

The operating characteristics of the QK S 622 for high power operation is shown in Figure 2 below. With peak current and driver power held constant the output power, gain, efficiency and peak voltage are plotted versus frequency. Gain and efficiency are defined as follows:

$$\text{Gain} = \frac{\text{rf power output}}{\text{rf power input}}$$

$$\text{Efficiency} = \frac{\text{rf power output} - \text{rf power input}}{\text{Modulator power input to Amplitron}}$$

QKS622 TYPICAL OPERATING CHARACTERISTICS

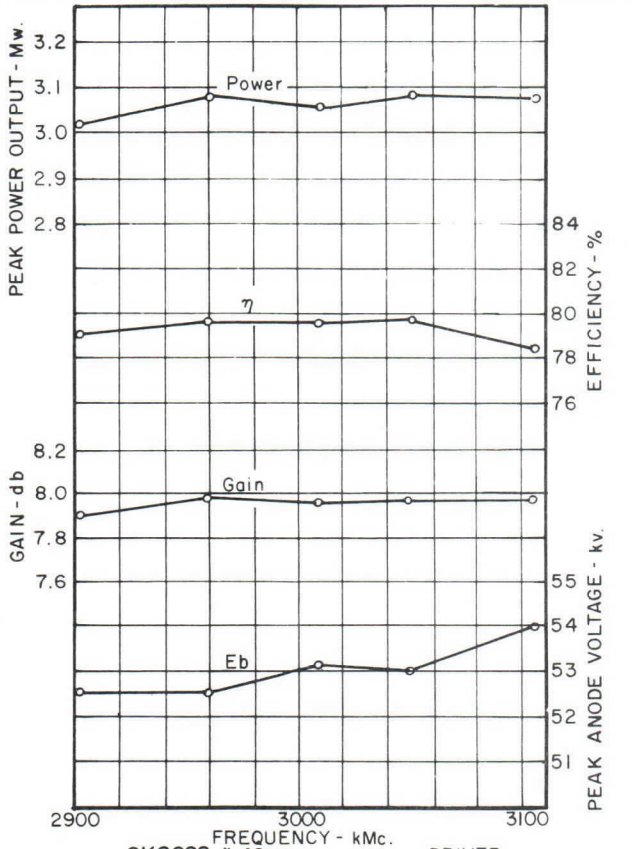

QKS622 # 42

490 kw. PEAK rf INPUT
du = .005
tpc = 10 μ sec.
pps = 500
ib = 62 a

DRIVER
tpc = 11 μ sec.
pps = 500
du = .0055

LOAD MISMATCH

The nature of the QKS622 is such that output power is less sensitive to load mismatch than is common in magnetrons. Power is a maximum with a matched load and decreases as the load mismatch becomes greater causing more power to be reflected back through the Amplitron into the input circuit.

PHASE SHIFT CHARACTERISTICS

In many applications, MTI operation in particular, it is desirable that the phase delay in a given tube be as independent as possible of variations of voltage or current pulse amplitude. Phase pushing in the QKS622 is on the order of 0.5 degrees per 1% change in peak current. The total phase change occurring in the QKS622 during the pulse rise and fall is only a few degrees and takes place during the last small part of the voltage rise as well as during the first small part of the voltage fall.

DRIVER REQUIREMENTS

Amplitrons must have a driving signal applied to them for proper operation. The driving signal may be applied either before or at the same instant the Amplitron is turned on and may be removed either after or at the same time the Amplitron is turned off. The magnitude of the rf output is insensitive to rf input but dependent on the pulsed d/c input. If the rf drive for a given level of pulsed d/c input is reduced to too low a value, the tube ceases to operate properly. Moreover, the consequent instability can damage the tube.

VOLTAGE-CURRENT CHARACTERISTICS

The voltage-current characteristic of an Amplitron is non-linear, resembling that of a magnetron oscillator. A representative value for the dynamic impedance of a QKS622 would be 200 ohms. The rate of voltage rise is not critical.

Printed in U.S.A.

MICROWAVE AND POWER TUBE DIVISION

RAYTHEON COMPANY

FOUNDRY AVE., WALTHAM 54, MASS.

COOLING

The QKS622 is a forced liquid cooled tube. The coolant to be used will depend on the average power level and ambient temperature requirements which will determine the coolant flow rate. Figure 3 is a plot of water coolant flow rate as a function of pressure drop.

CATHODE BUSHING PROTECTION

It is recommended that the ceramic cathode bushing be immersed in a fluid insulating medium of "Univolt 35" transformer oil or equivalent. A minimum distance of 1½" must be maintained through the oil from high voltage to ground. No sharp-edged objects should be in the vicinity of the cathode bushing.

If the QKS622 is mounted with the cathode bushing vertically downward, the oil vent pipe provided on the tube must be used to remove all air trapped in the Amplitron oil flange area. A puncture and loss of the vacuum seal may result from arcing near the ceramic cathode bushing.

PRESSURIZATION

Output waveguide pressurization to 45 psia is required. An input waveguide pressure of 35 psia is satisfactory. Pressures lower than those recommended may result in waveguide breakdown If sustained arcing in the waveguide occurs, failure of the output window may result. To minimize the possibility of arcing in the guide, and to achieve optimum performance, the load VSWR should be kept as low as possible.

QKS622 WATER COOLANT FLOW VS. BACKPRESSURE

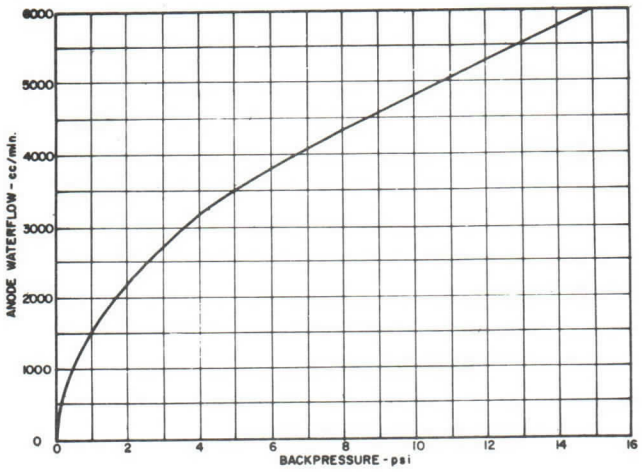

GENERAL PRECAUTIONS

Damage to the Amplitron will be avoided if the following installation and handling precautions are carefully observed:

1. Avoid setting up mechanical strains on input and output windows and cathode bushing when handling or mounting.
2. If the Amplitron has been operated with water as a coolant, be sure to drain the water from the coolant jacket before storing in a freezing environment.
3. If an Amplitron has been stored in a freezing environment, examine it closely for traces of frost or moisture on the rf windows and wipe dry before application of high voltage.
4. Avoid unnecessary jarring or rough handling.
5. Do not place tube in closer proximity to magnetic materials than is specified.

QKS622 ELECTRON TUBE OUTLINE DRAWING

REFERENCE PLANE "A" IS DEFINED AS A PLANE PASSING ALONG THE MOUNTING SURFACE OF THE MAGNET AS SHOWN.

REFERENCE PLANE "B" IS DEFINED AS A PLANE PERPENDICULAR TO REFERENCE PLANE "A" PASSING THRU THE ℄ OF HOLES AT REFERENCE PLANE "A" AS SHOWN.

REFERENCE PLANE "C" IS DEFINED AS A PLANE MUTUALLY PERPENDICULAR TO REFERENCE PLANES "A" & "B" PASSING THRU THE ℄ OF "Y" HOLE AT REFERENCE PLANE "A" AS SHOWN.

1. THIS FLANGE TO MATE WITH UG-54 A/U WITH CLEARANCE HOLES.
2. MATES WITH HANSEN SERIES #3000 SOCKET OR EQUIVALENT.
3. ANODE TEMPERATURE POINT.
4. MATES WITH WIGGINS #P1700 SERIES OR EQUIVALENT.
5. THIS DIMENSION APPLIES TO THE ℄ OF 5.300 - 5.325 DIAMETER.
6. COMMON CATHODE CONNECTION.
7. THESE SURFACES TO BE COPLANER WITHIN .032.
8. RF OUTPUT.
9. RF INPUT.
10. THESE HOLES WILL ACCEPT A GAGE CONSISTING OF FOUR .385 DIAMETER PINS, 7.125 LONG, 3.000 APART x 10.500 APART.
11. THIS DIMENSION APPLIES TO THE AXIS OF DIAMETER "X".

REFERENCES

Answers on the Amplitron: Raytheon Co.

The Amplitron: Raytheon Technical Information Bulletin, June, 1958.

Final Engineering Report, Volume I on the Design and Development of the Platinotron, Amplitron, and Stabilotron: W. C. Brown, Signal Corps Contract No. DA-36-039-sc-56644, December, 1955.

Platinotron Increases Search Radar Range: W. C. Brown, Electronics, August, 1957.

Description and Operating Characteristics of the Platinotron — A New Microwave Tube Device: W. C. Brown, Proceedings of the IRE, September, 1957.

QKS622 Final Engineering Report, BuShips Contract No. NObsr-72589.

A 3-Megawatt, 15 Kilowatt S-Band Amplitron — Smith and Zawada, Microwave Journal, October 1959.

RAYTHEON

PULSED-TYPE AMPLITRON

QKS622 ELECTRON TUBE OUTLINE DRAWING

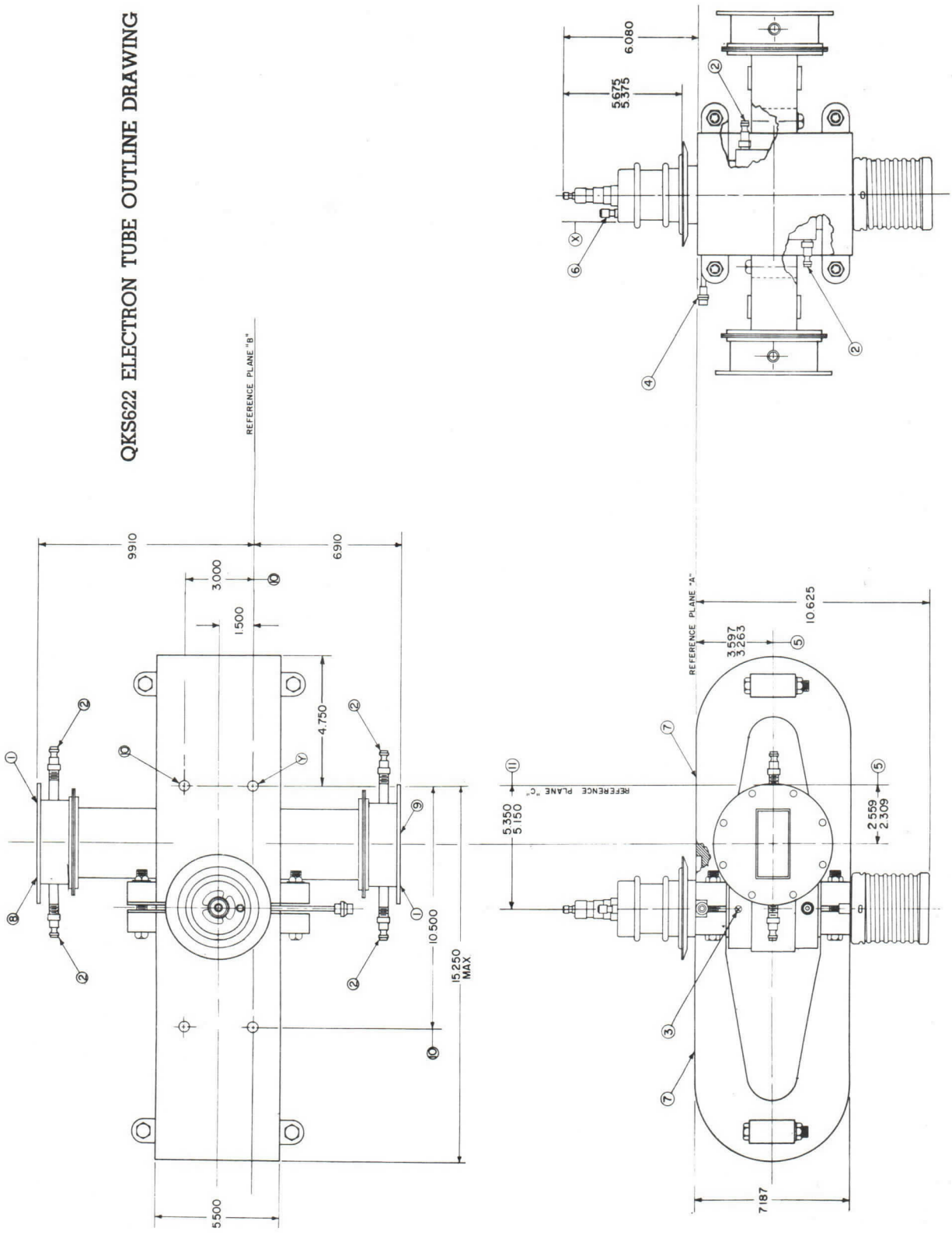

MICROWAVE AND POWER TUBE DIVISION

RAYTHEON COMPANY

FOUNDRY AVE., WALTHAM 54, MASS.

The technical information on this data sheet is of a proprietory nature and is furnished as a customer service for private use only.

RK7577/QK653

PRELIMINARY DATA SHEET

RAYTHEON *Excellence in Electronics*

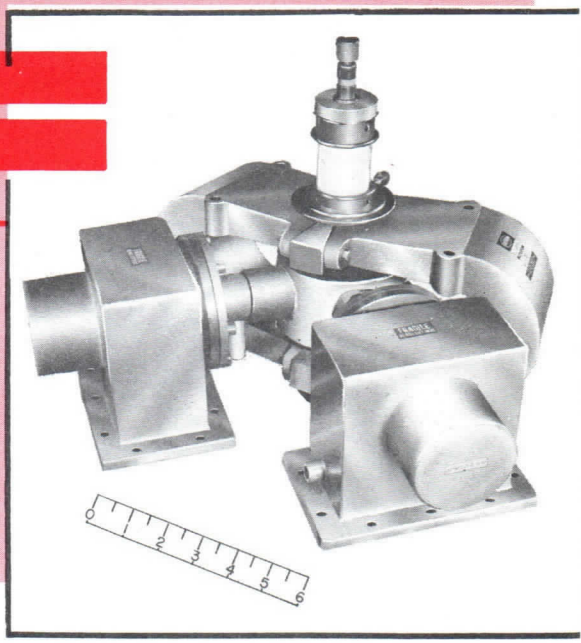

RK7577/QK653

GENERAL DESCRIPTION

The RK7577/QK653 is a pulsed-type Amplitron capable of producing a minimum peak power of 5.3 megawatts when an rf drive power of no less than 400 kilowatts is applied to its input. When used with a modulator having proper load line characteristics, such as a "line type" modulator, it will cover the frequency band 1280 to 1350 Mc without electrical or mechanical adjustment. It is an integral magnet type tube with waveguide input and output. It requires forced liquid cooling.

Reliable operation and optimum Amplitron life can be achieved only if the radar transmitter is designed with the Amplitron characteristics and peculiarities clearly in mind. This preliminary data sheet is intended only to acquaint the reader with the basic characteristics of this Amplitron and should not be used solely in the system design. The data herein presented a representative of only a small number of prototype models and should not be interpreted as necessarily defining the characteristics of the final tube.

Mechanical Data

Mounting Position	Cathode Vertical
Net Weight	120 Lbs.
Cooling	Liquid
Input Bushing	Oil Immersed
Pressurization	30 psia Min.
RF Couplings	Waveguide

Typical Electrical Data

Heater Current, Preheat	60 Amperes *
Heater Current, Operate	0 Amperes
Heater Voltage @ 60 A	3.8 Volts *
Pulse Duration	1.8 usec
Duty Cycle	.00068
Peak Anode Voltage	97 kilovolts
Peak Anode Current	98 Amperes
Average Power Output	3600 Watts
Life	1000 Hours Min.
Driver Peak Power	400 kilowatts, Min.
Driver Pulse Duration	1.9 usec, Min.

* Not final values

The specifications for this tube have not been finalized. The tube is being manufactured in limited quantities and is available for engineering analysis purposes only. This engineering information and/or delivery of sample tubes do not imply availability of tubes with the same electrical and/or mechanical characteristics. Changes in ratings and/ or dimensions may be made at our discretion as deemed advisable by manufacturing experience or other considerations. For current information concerning this tube contact the nearest Microwave and Power Tube Regional Sales Representative.

RAYTHEON

Excellence in Electronics

preliminary data sheet

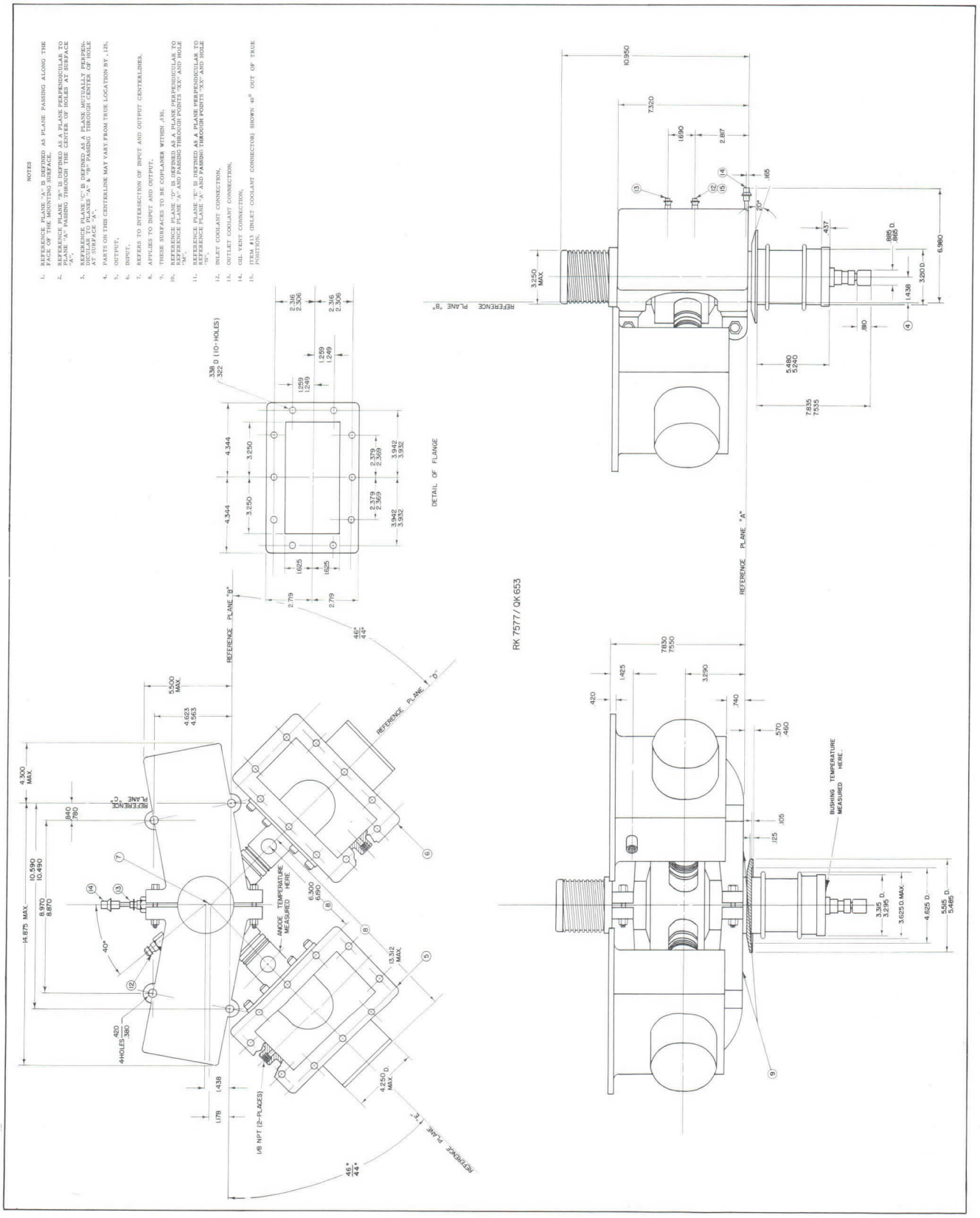

The technical information on this data sheet is of a proprietory nature and is furnished as a customer service for private use only.

QKS807

OBJECTIVE DATA SHEET

RAYTHEON

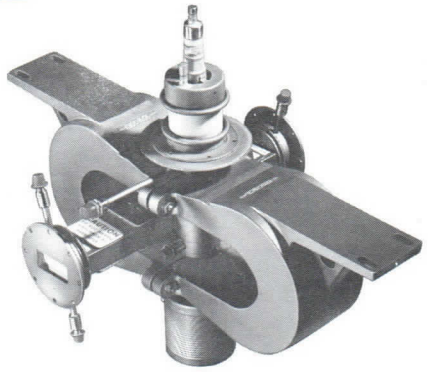

GENERAL DESCRIPTION

The QKS807 is a pulsed-type Amplitron capable of operation over the range from 1 Mw to 3 Mw peak power output. At these limits peak power input of 100 kw and 550 kw, respectively, are required. R F drive levels can be determined on request for intermediate operating points. When used with a modulator having suitable load line characteristics, the QKS807 will cover the frequency band 5450 to 5825 Mc without electrical or mechanical adjustment. It has waveguide input and output terminals and an integral permanent magnet. Forced liquid cooling is required.

Reliable operation and optimum Amplitron life can be achieved only if the radar transmitter is designed with the Amplitron characteristics clearly in mind. This objective data sheet is intended only to acquaint the reader with the basic characteristics of this Amplitron and should not be used solely in the system design. Detailed information may be obtained by contacting the Product Programs Department, Microwave and Power Tube Division, Raytheon Company, Burlington, Massachusetts.

Mechanical Data

Mounting Position	Cathode Axis Vertical
Weight	55 lbs.
Cooling	Liquid
Input Bushing	Oil Immersed
Waveguide Pressurization	45 psia Min.
Waveguide Flanges	UG 407 / U

Typical Electrical Data

Operation	I	II
Peak Power Output	3	1 Megawatt, Min.
Average Power Output	5000	2000 Watts
Pulse Duration	2.5	10 usec.
Duty Cycle	.00166	.002
Peak Anode Current	75	40 amperes
Peak Anode Voltage	50	40 kilovolts
Heater		None Required *
Driver Peak Power	550	100 kilowatts, Max.

* Not final

2/62

The specifications for this tube have not been finalized. The tube is in the development stage and is available for engineering analysis purposes only. This engineering information and/or delivery of sample tubes do not imply availability of tubes with the same electrical and/or mechanical characteristics. Changes in ratings and/or dimensions may be made at our discretion as deemed advisable by manufacturing experience or other considerations. For current information concerning this tube contact the nearest Microwave and Power Tube Regional Sales Representative.

The technical information on this data sheet is of a proprietory nature and is furnished as a customer service for private use only.

QKS997

OBJECTIVE DATA SHEET

RAYTHEON *Excellence in Electronics*

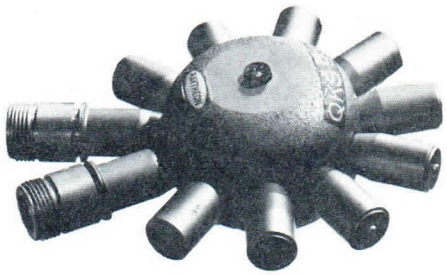

The QKS997 is a high gain, high efficiency, rugged construction, C.W. type Amplitron capable of producing a minimum power output of 25-watts when an rf drive no less than 250 milliwatts is applied to its input. The QKS997 is designed to cover a frequency band of 2200 Mc ±5% minimum without mechanical or electrical adjustments. Additional desirable tube characteristics are negligible insertion loss and high phase stability. It utilizes a permanent magnet and the input and output connectors are TNC. Tube is available at two gauss levels.

Detailed information necessary for specific applications may be obtained by contacting the Applications Engineering Department, Microwave and Power Tube Division, Raytheon Company, Burlington, Massachusetts.

GENERAL CHARACTERISTICS

ELECTRICAL

(Typical Ratings)

	At 1600 Gauss	At 2000 Gauss
Anode Voltage	1.3 - 1.5	1.7 - 1.9 kv
Anode Current	13	23 mA
Heater Voltage	6.3	6.3 V
Heater Power	5	5 W
Bandwidth	10	10%
Efficiency	55	60%
Power Output	10	25 W
Gain	20	20 db
Frequency	2.2	2.2 kMc

MECHANICAL

Weight	1 lb. approx.
Dimensions	1 1/4" x 3" Dia.
Cooling	Conduction
Magnet	Permanent
Connectors	TNC

2/62

The specifications for this tube have not been finalized. The tube is in the development stage and is available for engineering analysis purposes only. This engineering information and/or delivery of sample tubes do not imply availability of tubes with the same electrical and/or mechanical characteristics. Changes in ratings and/or dimensions may be made at our discretion as deemed advisable by manufacturing experience or other considerations. For current information concerning this tube contact the nearest Microwave and Power Tube Regional Sales Representative.

The technical information on this data sheet is of a proprietory nature and is furnished as a customer service for private use only.

QKS1012

OBJECTIVE DATA SHEET

RAYTHEON



The QKS1012 is a pulse type Amplitron capable of producing a minimum peak power output of 100 kilowatts when an rf drive no less than 5 kilowatts is applied to its input. The QKS1012 is designed to cover the frequency band of 1215 to 1400 Mc's without mechanical or electrical adjustments. It has a coaxial input and output connector and requires liquid cooling.

Detailed information necessary for specific applications may be obtained by contacting the Applications Engineering Department, Microwave and Power Tube Division, Raytheon Company, Burlington, Massachusetts.

GENERAL CHARACTERISTICS

ELECTRICAL (Typical Operation)

Anode Voltage	19 - 21 kv
Anode Current	9.0 Amperes
Duty Cycle	.025
Bandwidth	1215 - 1400 Mcs.
Pulse Width	1 - 300 usec.
Efficiency	60 - 70%
Peak Power (Output)	100 kw (min.)
Gain	13 db
Drive Power	5 kW (min.)

MECHANICAL

Weight	15 lbs. (max.)
Coolant	Liquid
Magnetic Field	External
Dimensions	3 1/2" x 12" long

11/61

The specifications for this tube have not been finalized. The tube is in the development stage and is available for engineering analysis purposes only. This engineering information and/or delivery of sample tubes do not imply availability of tubes with the same electrical and/or mechanical characteristics. Changes in ratings and/or dimensions may be made at our discretion as deemed advisable by manufacturing experience or other considerations. For current information concerning this tube contact the nearest Microwave and Power Tube Regional Sales Representative.

Preliminary Data*

ISSUED 12/66

RAYTHEON

QKS1343 AMPLITRON

The QKS1343 is a pulsed-type Amplitron capable of power output levels from 0.5 to 3.0 megawatts over a frequency range of 5.4 to 5.9 GHz. When used with a modulator having proper load line characteristics, such as a "line type" modulator, it will cover the frequency band without electrical or mechanical adjustment. It is an integral magnet tube with waveguide input and output. It requires forced liquid cooling.

Reliable operation and optimum Amplitron life can be achieved only if the radar transmitter is designed with the Amplitron characteristics clearly in mind. This preliminary data sheet is intended only to acquaint the reader with the basic characteristics of this Amplitron. Detailed information may be obtained by contacting the Sales Department, Microwave and Power Tube Division, Raytheon Company, Waltham, Mass.

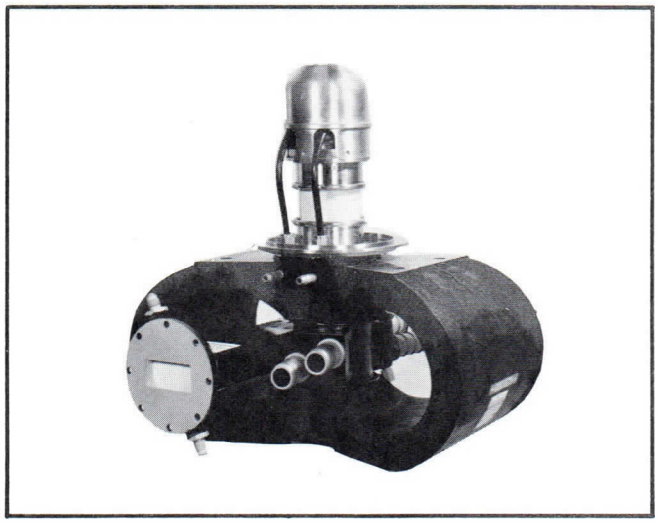

TYPICAL OPERATION

Electrical	Operation I	Operation II	
Peak Power Output	0.5	1.5	Mw
Average Power Output	15.0 max.	15.0 max.	kW
Duty Cycle	.03 max.	.01 max.	
Pulse Duration	200 max.	100 max.	usec.
Peak Anode Voltage	48-53	49-55	kv
Peak Anode Current	16	44	a
Driver Peak Power	40	150	kw
Efficiency	65 min.	65 min.	%
Heater Power	None required	None required	
Anode-Cathode Capacity	33	33	pf

Mechanical	
Mounting Position	Cathode vertical
Weight	75 lbs.
Anode Cooling	4 gpm of water at 22 psi
Cathode Cooling	1 gpm of water at 11 psi
Window Cooling	0.5 gpm of water at 1 psi
Input Bushing	Oil immersed
Waveguide Pressurization	40 psia min.
RF Couplings	UG-149A/U

*The specifications for this device have not been finalized. For current information contact the nearest Microwave and Power Tube Regional Sales Representative.

Printed in U. S. A.

TUBE OUTLINE DRAWING

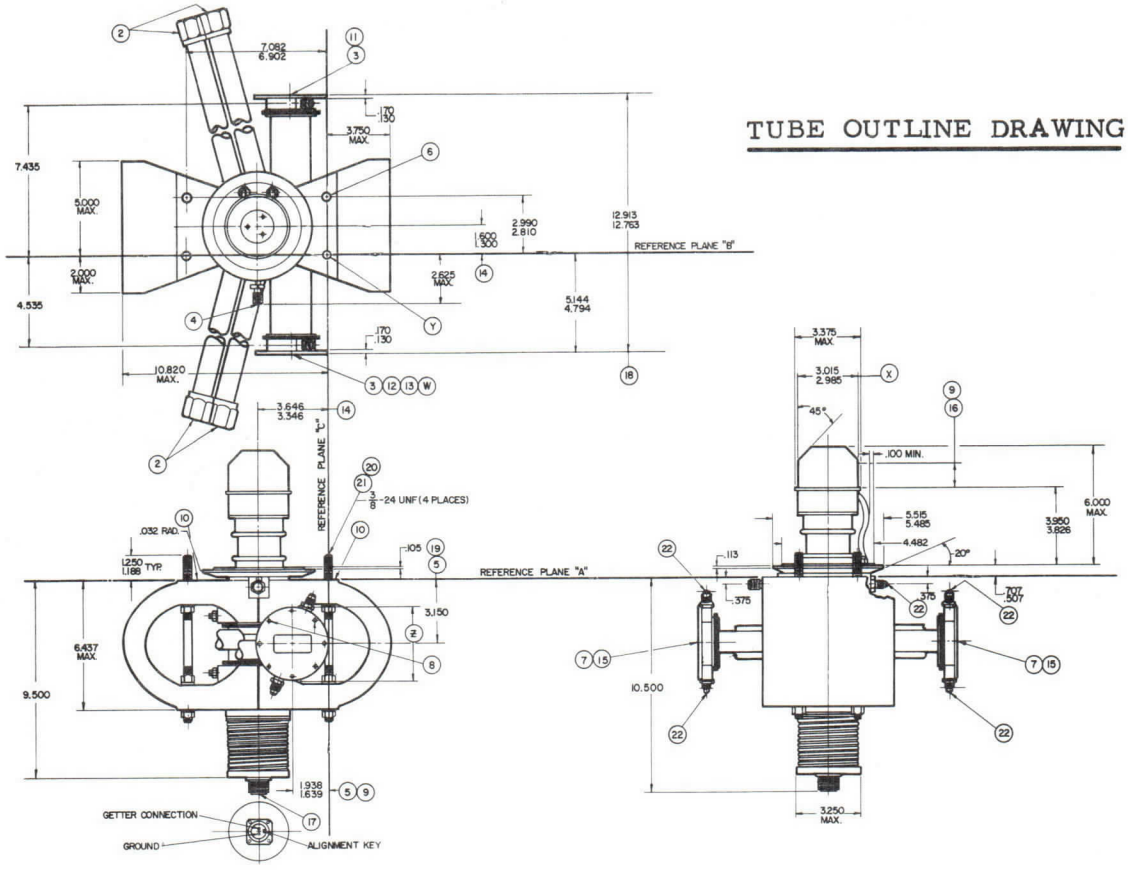

REF. PLANE "A" IS DEFINED AS A PLANE PASSING ALONG THE MOUNTING SURFACE OF THE MAGNETS AS SHOWN.

REF. PLANE "B" IS DEFINED AS A PLANE PERPENDICULAR TO REF. PLANE "A" PASSING THROUGH THE AXIS OF THE PITCH DIA. OF STUDS AT REF. PLANE "A" AS SHOWN.

REF. PLANE "C" IS DEFINED AS A PLANE MUTUALLY PERPENDICULAR TO PLANES "A" & "B" PASSING THROUGH THE AXIS OF THE PITCH DIA. OF STUD "Y" AT REF. PLANE "A".

1. DIMENSIONS WITHOUT TOLERANCES ARE NOMINAL AND ARE GIVEN FOR INFORMATION PURPOSES ONLY.
2. THESE COUPLINGS SHALL BE PARKER PUSH-LOK #3/4-12-30682-4 OR EQUIVALENT.
3. THIS FLANGE TO MATE WITH UG 406A/U.
4. THIS COUPLING SHALL BE AN815-5C SERIES OR EQUIVALENT.
5. THESE DIMENSIONS APPLY TO AXIS OF "Z" DIA.
6. THIS STUD TO BE CENTERED ON REF. PLANE "C" WITHIN .090.
7. THESE SURFACES TO BE FLAT WITHIN .015.
8. A LINE PASSING THROUGH THE AXES OF THESE HOLES TO BE PARALLEL WITH REF. PLANE "A" WITHIN .093. (APPLIES TO BOTH FLANGES)
9. CATHODE CONNECTION.
10. THESE SURFACES TO BE COPLANAR WITHIN .032.
11. RF OUTPUT.
12. RF INPUT.
13. THIS SURFACE TO BE PERPENDICULAR TO REF. PLANE "C" WITHIN 2°.
14. THIS DIMENSION APPLIES TO AXIS OF "X" DIA.
15. THESE SURFACES TO BE PERPENDICULAR TO REF. PLANE "A" WITHIN 2°.
16. MINIMUM CONTACT LENGTH 1.000.
17. THIS COUPLING SHALL BE MS 3102-16-13P OR EQUIVALENT. (GETTER CONNECTION)
18. THIS DIMENSION TO BE MEASURED PERPENDICULAR TO SURFACE "W".
19. THESE DIMENSIONS APPLY TO BOTH FLANGES.
20. PITCH DIAMETER MUST ACCEPT CLASS 2 "GO" GAGE ONLY.
21. MAJOR DIAMETER MUST NOT BE LESS THAN .3645.
22. THESE COUPLINGS SHALL BE AN 815-4 OR EQUIVALENT.

TYPE 8129

GENERAL DESCRIPTION

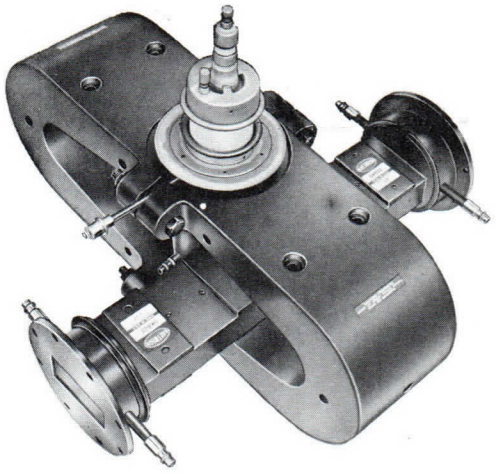

The 8129 is a pulsed-type Amplitron capable of producing a minimum peak power output of 3 megawatts when an rf drive power no less than 550 kilowatts is applied to its input. When used with a modulator having proper load line characteristics, such as a "line type" modulator, it will cover the frequency band 2900 Mc to 3100 Mc without mechanical or electrical adjustment. It is an integral magnet type tube with waveguide input and output and requires forced liquid cooling.

Detailed information necessary for specific applications may be obtained by contacting the Product Programs Department, Microwave and Power Tube Division, Raytheon Company, Spencer Laboratory, Burlington, Massachusetts.

PULSED-TYPE AMPLITRON

GENERAL CHARACTERISTICS

ELECTRICAL

Heater Characteristics

No Heater Power Required For Most Applications

Typical Operation

Pulse Duration	11	10 usec
Duty Cycle	.0055	.0050
Peak Anode Voltage @ 2900 Mc	48	50 kv
Peak Anode Voltage @ 3100 Mc	52	54 kv
Peak Anode Current	20	66 a
Average Anode Current	110	330 mAdc
Peak Power Output	600 kw	3.0 Mw
Average Power Output	3300	15,000 W
Frequency Band	2900-3100	2900-3100 Mc
RF Driver Characteristics		
Peak Drive Power	48 kw	550 kw min.
Frequency Band	2900-3100	2900-3100 Mc

The driver rf pulse must coincide with or overlap the Amplitron current pulse.

Cold Insertion Loss	0.5 db

Printed in U.S.A.

MECHANICAL

Over-all Dimensions	20" x 16.8" x 16.7"
Net Weight	110 lbs.
Mounting	Cathode Axis Vertical
Output Coupling	Mates with UG54A/U type flange
Input Coupling	Mates with UG54A/U type flange
Input Pressurization	35 psia
Output Pressurization	45 psia
Cooling	Forced Liquid
Magnet Protection	12"

DETAILED ELECTRICAL INFORMATION

HEATER-CATHODE

This tube does not require heater power for most applications. Satisfactory starting and operation will occur whenever the pulse voltage is applied in the presence of normal rf drive power.

TYPICAL OPERATION

Figure 1 illustrates a typical Amplitron circuit. The driver tube may be a magnetron, Amplitron, traveling wave tube, or other device capable of supplying at least the minimum required rf input power. An isolator will normally be required between the Amplitron and its driver because reverse directed power reflected from the load mismatch is practically unattenuated by the Amplitron. The amount of isolation necessary will depend upon the gain of the Amplitron, the VSWR of the load and the amount of mismatch the driver can withstand.

The relationship $|\Gamma_i|\,|\Gamma_o|\,G < 1$ must be maintained to eliminate oscillation, where G is the power gain of the Amplitron and Γ_i and Γ_o are the input and output reflection coefficients measured at the input and output terminals looking away from the tube.

TYPICAL OPERATION

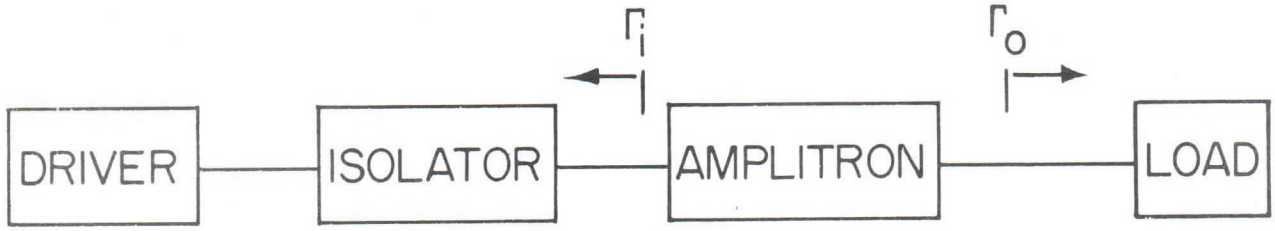

Figure 1

OPERATING CHARACTERISTICS

The operating characteristics of the 8129 for high power operation is shown in Figure 2 below. With peak current and driver power held constant the output power, gain, efficiency and peak voltage are plotted versus frequency. Gain and efficiency are defined as follows:

$$\text{Gain} = \frac{\text{rf power output}}{\text{rf power input}}$$

$$\text{Efficiency} = \frac{\text{rf power output} - \text{rf power input}}{\text{Modulator power input to Amplitron}}$$

8129 TYPICAL OPERATING CHARACTERISTICS

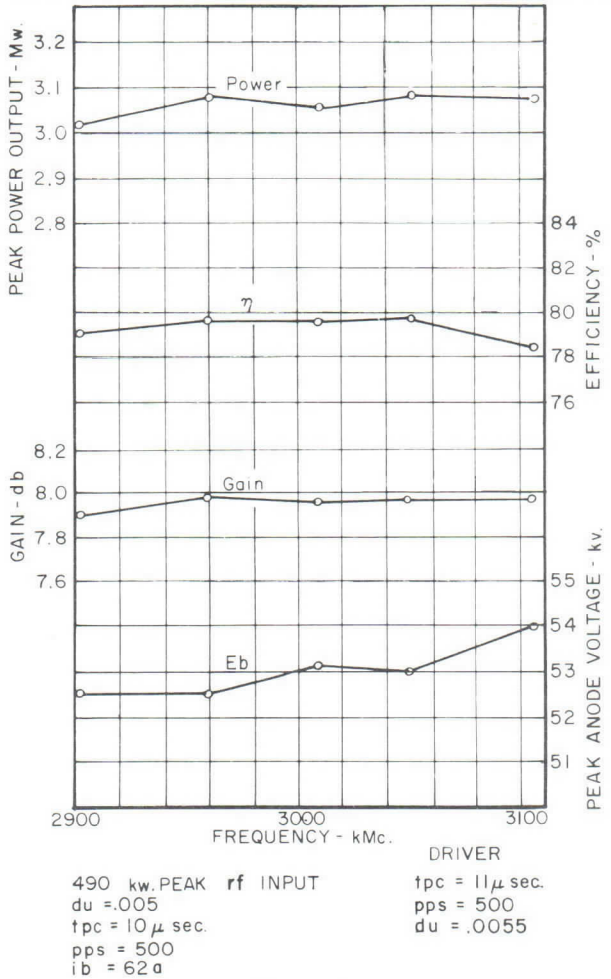

Figure 2

LOAD MISMATCH

The nature of the 8129 is such that output power is less sensitive to load mismatch than is common in magnetrons. Power is a maximum with a matched load and decreases as the load mismatch becomes greater causing more power to be reflected back through the Amplitron into the input circuit.

PHASE SHIFT CHARACTERISTICS

In many applications, MTI operation in particular, it is desirable that the phase delay in a given tube be as independent as possible of variations of voltage or current pulse amplitude. Phase pushing in the 8129 is on the order of 0.5 degrees per 1% change in peak current. The total phase change occurring in the 8129 during the pulse rise and fall is only a few degrees and takes place during the last small part of the voltage rise as well as during the first small part of the voltage fall.

DRIVER REQUIREMENTS

Amplitrons must have a driving signal applied to them for proper operation. The driving signal may be applied either before or at the same instant the Amplitron is turned on and may be removed either after or at the same time the Amplitron is turned off. The magnitude of the rf output is insensitive to rf input but dependent on the pulsed dc input. If the rf drive for a given level of pulsed dc input is reduced to too low a value, the tube ceases to operate properly. Moreover, the consequent instability can damage the tube.

VOLTAGE-CURRENT CHARACTERISTICS

The voltage-current characteristic of an Amplitron is non-linear, resembling that of a magnetron oscillator. A representative value for the dynamic impedance of an 8129 would be 160 ohms.

COOLING

The 8129 is a forced liquid cooled tube. The coolant to be used will depend on the average power level and ambient temperature requirements which will determine the coolant flow rate. Figure 3 is a plot of water coolant flow rate as a function of pressure drop.

CATHODE BUSHING PROTECTION

It is recommended that the ceramic cathode bushing be immersed in a fluid insulating medium of "Univolt 35" transformer oil or equivalent. A minimum distance of 1½" must be maintained through the oil from high voltage to ground. No sharp-edged objects should be in the vicinity of the cathode bushing.

If the 8129 is mounted with the cathode bushing vertically downward, the oil vent pipe provided on the tube must be used to remove all air trapped in the Amplitron oil flange area. A puncture and loss of the vacuum seal may result from arcing near the ceramic cathode bushing.

PRESSURIZATION

Output waveguide pressurization to 45 psia is required. An input waveguide pressure of 35 psia is satisfactory. Pressures lower than those recommended may result in waveguide breakdown If sustained arcing in the waveguide occurs, failure of the output window may result. To minimize the possibility of arcing in the guide, and to achieve optimum performance, the load VSWR should be kept as low as possible.

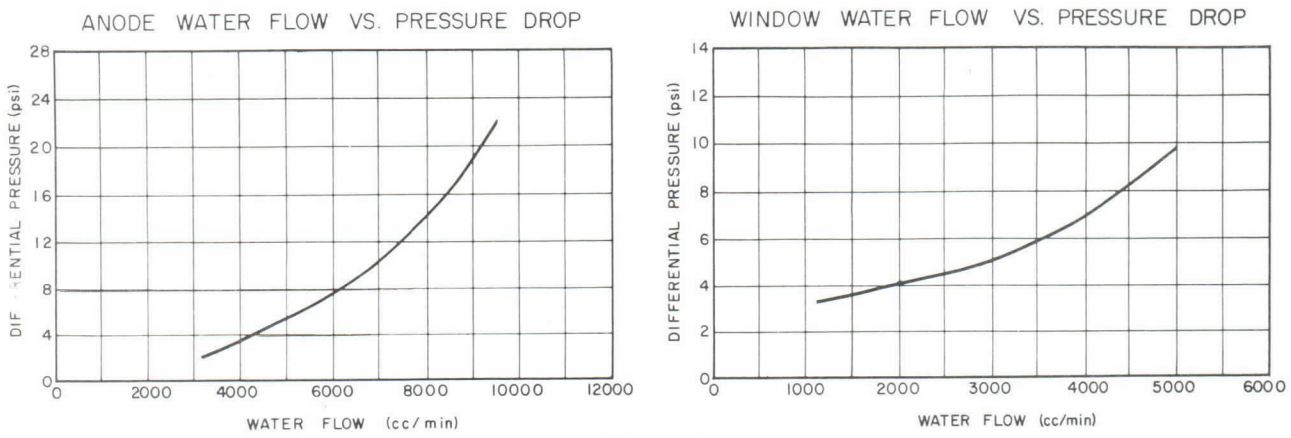

Figure 3

GENERAL PRECAUTIONS

Damage to the Amplitron will be avoided if the following installation and handling precautions are carefully observed:

1. Avoid setting up mechanical strains on input and output windows and cathode bushing when handling or mounting.
2. If the Amplitron has been operated with water as a coolant, be sure to drain the water from the coolant jacket before storing in a freezing environment.
3. If an Amplitron has been stored in a freezing environment, examine it closely for traces of frost or moisture on the rf windows and wipe dry before application of high voltage.
4. Avoid unnecessary jarring or rough handling.
5. Do not place tube in closer proximity to magnetic materials than is specified.

8129 ELECTRON TUBE OUTLINE DRAWING

REFERENCE PLANE "A" IS DEFINED AS A PLANE PASSING ALONG THE MOUNTING SURFACE OF THE MAGNET AS SHOWN.

REFERENCE PLANE "B" IS DEFINED AS A PLANE PERPENDICULAR TO REFERENCE PLANE "A" PASSING THRU THE ℄ OF HOLES AT REFERENCE PLANE "A" AS SHOWN.

REFERENCE PLANE "C" IS DEFINED AS A PLANE MUTUALLY PERPENDICULAR TO REFERENCE PLANES "A" & "B" PASSING THRU THE ℄ OF "Y" HOLE AT REFERENCE PLANE "A" AS SHOWN.

1. THIS FLANGE TO MATE WITH UG-54 A/U WITH CLEARANCE HOLES.
2. MATES WITH HANSEN SERIES #3000 SOCKET OR EQUIVALENT.
3. ANODE TEMPERATURE POINT.
4. MATES WITH WIGGINS #P1700 SERIES OR EQUIVALENT.
5. THIS DIMENSION APPLIES TO THE ℄ OF 5.300 - 5.325 DIAMETER.
6. COMMON CATHODE CONNECTION.
7. THESE SURFACES TO BE COPLANER WITHIN .032.
8. RF OUTPUT.
9. RF INPUT.
10. THESE HOLES WILL ACCEPT A GAGE CONSISTING OF FOUR .385 DIAMETER PINS, 7.125 LONG, 3.000 APART x 10.500 APART.
11. THIS DIMENSION APPLIES TO THE AXIS OF DIAMETER "X".

REFERENCES

Answers on the Amplitron: Raytheon Co.

The Amplitron: Raytheon Technical Information Bulletin, June, 1958.

Final Engineering Report, Volume I on the Design and Development of the Platinotron, Amplitron, and Stabilotron: W. C. Brown, Signal Corps Contract No. DA-36-039-sc-56644, December, 1955.

Platinotron Increases Search Radar Range: W. C. Brown, Electronics, August, 1957.

Description and Operating Characteristics of the Platinotron — A New Microwave Tube Device: W. C. Brown, Proceedings of the IRE, September, 1957.

QKS622 Final Engineering Report, BuShips Contract No. NObsr-72589.

A 3-Megawatt, 15 Kilowatt S-Band Amplitron — Smith and Zawada, Microwave Journal, October 1959.

RAYTHEON

PULSED-TYPE AMPLITRON

8129 ELECTRON TUBE OUTLINE DRAWING

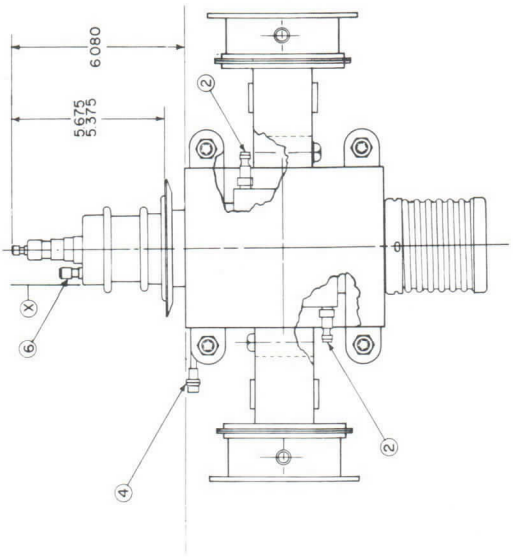

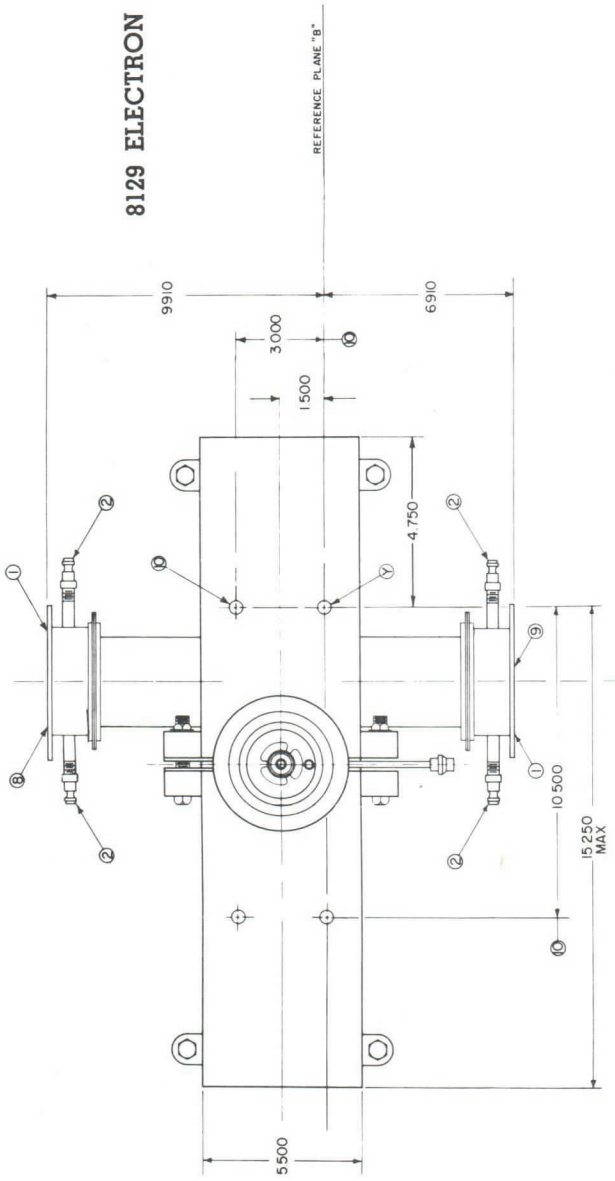

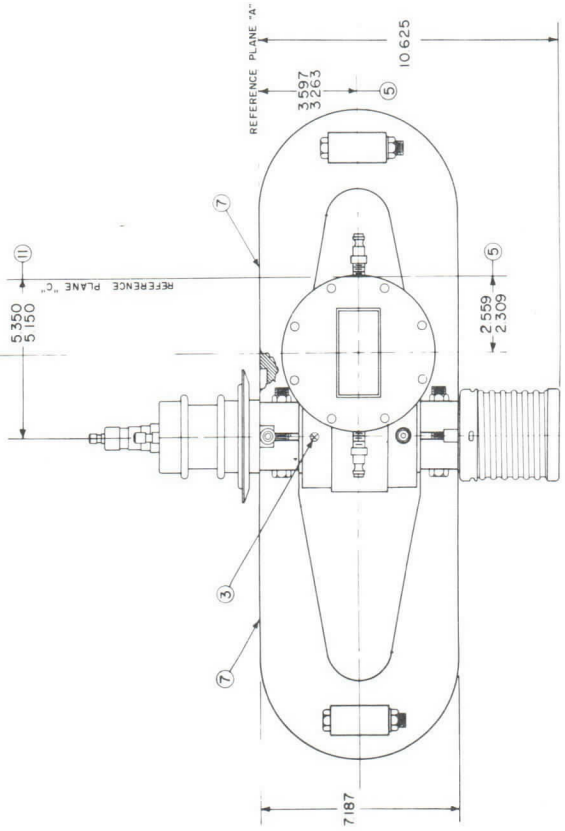

MICROWAVE AND POWER TUBE DIVISION

RAYTHEON COMPANY

FOUNDRY AVE., WALTHAM 54, MASS.

10-61

RAYTHEON®

Excellence in Electronics

THE DATA IN THIS SECTION FORMS A PART OF THE RAYTHEON TECHNICAL DATA BOOK FOR

MICROWAVE and POWER TUBES

For replacement data sheets or for additional copies of this book, contact

TECHNICAL INFORMATION SERVICE
RAYTHEON COMPANY
55 Chapel Street,
Newton 58, Massachusetts

RAYTHEON

DATA SERVICE

ELECTRON TUBES
MICROWAVE

CONTENTS

BACKWARD WAVE OSCILLATORS

TYPE	CLASS	PAGE	DATE
QK518	O	1-4	2-59
QK528	O	1-4	11-58
QK610	O	1-4	9-58
QK625	M	1-5	9-59
QK634	M	1-5	5-59
QKB691		1-4	6-60
QKB760A	O	1-2	Obj
QKB776	O	1-2	Obj
QKB786	O	1-2	Obj
QKB808	O	1-3	Prelim
QKB816A	O	1-2	Obj
QKB830	O	1-2	Obj
QKB870	O	1-3	Prelim
QKB890		1-2	8-61
QKB891		1-2	7-61
QKB913		1-3	2-61
QKB914		1-3	3-61
QKB915		1-3	2-61
QKB916		1-3	2-61
QKB924		1-6	1-61

RAYTHEON

TECHNICAL INFORMATION

BACKWARD WAVE OSCILLATOR

TENTATIVE DATA

Excellence in Electronics

TYPE QK518

GENERAL DESCRIPTION

The QK518 is a voltage-tunable backward wave oscillator designed for CW or pulsed operation over the 2000- to 4000-Mc range with an average power output of 500 milliwatts. It is an integral magnet, coaxial output type tube requiring forced-air cooling and is designed for coupling to standard type "N" connector. A special control electrode, normally at cathode potential, facilitates low-voltage, pulsed or amplitude modulation.

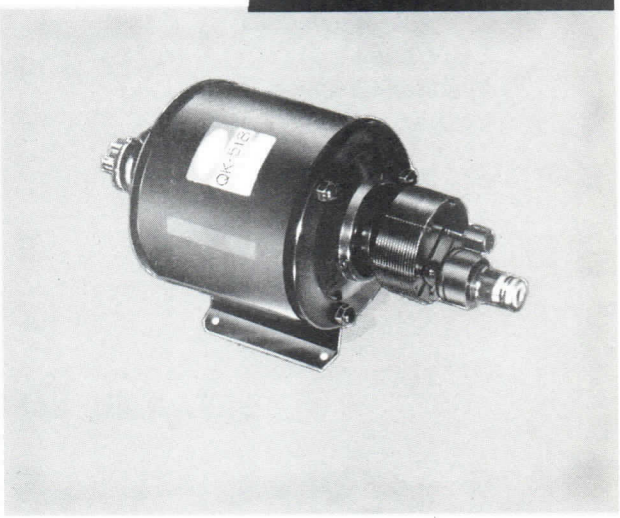

GENERAL CHARACTERISTICS

ELECTRICAL

Heater Characteristics

Heater Voltage	6.3 V
Heater Current	1.3 A
Cathode Heating Time	1.0 minute min.

Maximum Ratings

Anode Voltage	250 Vdc
Anode Current	20 mAdc
Delay-Line Voltage	1500 Vdc Max. 100 Vdc Min.*
Delay-Line Current	45 mAdc
Delay-Line Dissipation	68 W
Control Electrode Voltage	
Positive Value	0 Vdc
Negative Value	100 Vdc

The values specified above must not be exceeded under any service condition. The ratings are limiting values above which the serviceability of any individual tube may be impaired. It does not necessarily follow that combinations of maximum ratings can be attained simultaneously.

* Minimum value may be exceeded provided care is taken that the attendant increased anode current will not result in excessive anode dissipation.

Typical Operation CW

Frequency Range	2000—4000 Mc ±5%
Delay-Line Voltage	150—1400 Vdc
Delay-Line Current	40 mAdc
Anode Voltage	170 Vdc
Anode Current	1-10 mAdc
Grid Voltage	0 Vdc
Power Output	0.1-1.0 W

Printed in U.S.A.

MICROWAVE AND POWER TUBE DIVISION
RAYTHEON COMPANY
FOUNDRY AVE., WALTHAM 54, MASS.

TENTATIVE DATA

MECHANICAL

Over-all Dimensions	See outline drawing
Net Weight	8.5 lbs. approx.
Mounting Position	Any
Cooling	Forced air, 10 cu. ft/min.
Output Coupling	Coaxial
Base	Standard Intermediate Octal

DETAILED ELECTRICAL INFORMATION

CONTROL ELECTRODE

For CW operation at maximum power output, the control grid is tied to the cathode. In applications where pulsed or amplitude modulation is required, the circuit given in Figure 1 is recommended. The control grid must never be operated positive with respect to the cathode.

SIMPLIFIED MODULATION CIRCUIT

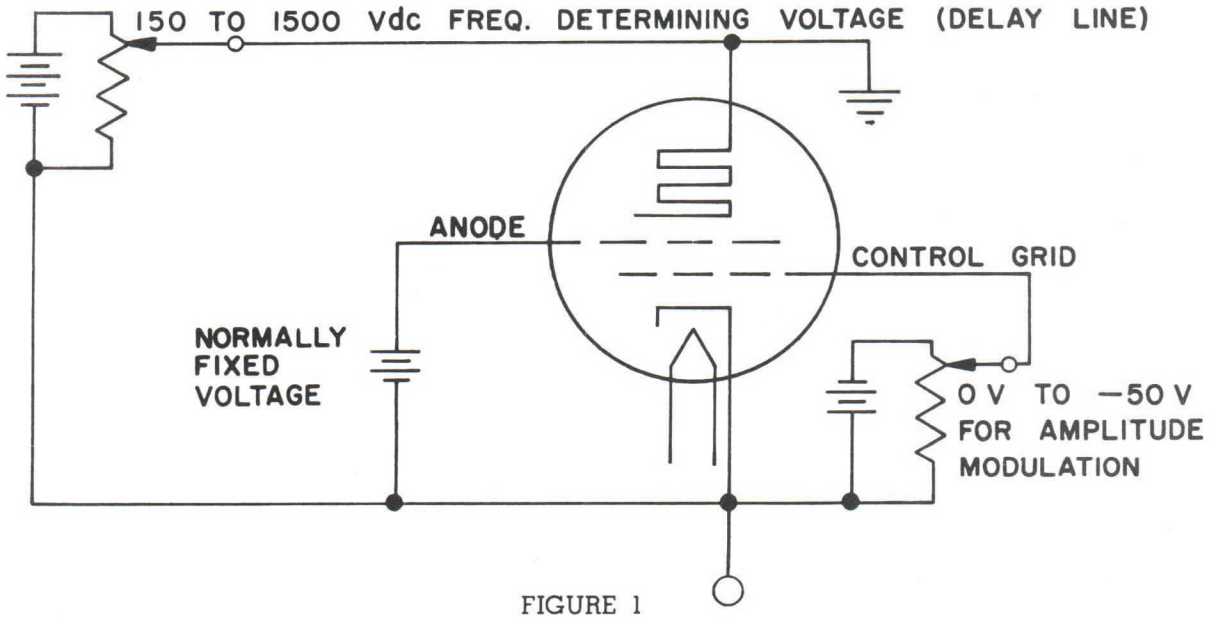

FIGURE 1

FREQUENCY STABILITY

The regulation of the voltage supplied to the delay line and anode will be reflected directly in the stability of the output frequency.

The regulation of the control electrode bias supply will be reflected directly in the power output of the tube. Therefore, the regulation of these supplies must be commensurate with the power and frequency stability requirements of the application.

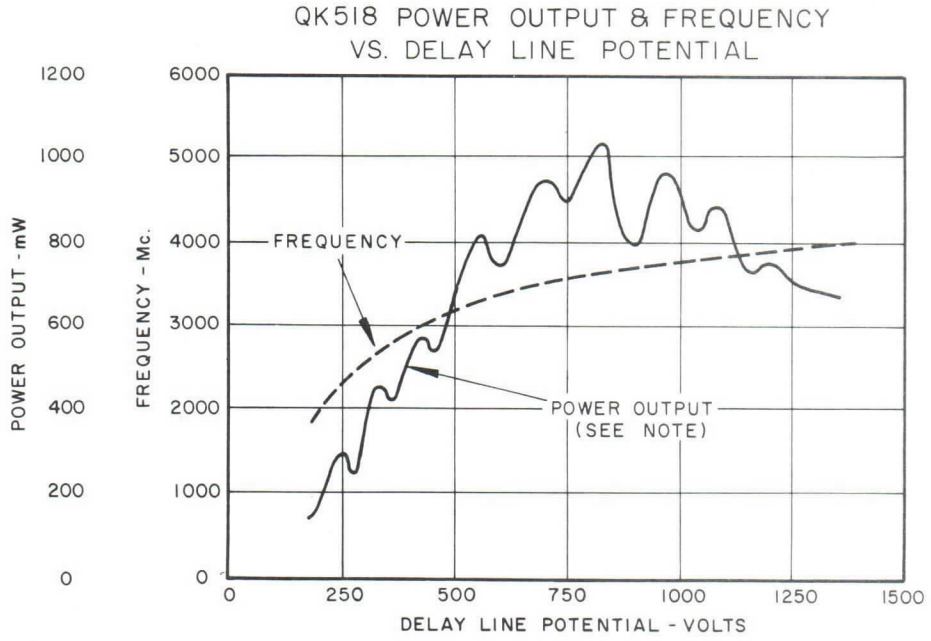

Note: The power output curve shows multiple minima and maxima points as the frequency is varied. In no case will the points of minimum power output be below the specified minimum power level.

OPERATING PRECAUTIONS

In order to prevent damage to the tube, the anode voltage must not be applied without the minimum delay line voltage being applied before the anode voltage. Failure to observe this precaution will result in excessive anode current and possible burn out. Simultaneous application of all voltages after the preheat time is permissible. The grid must always be either zero or negative — never positive and can be applied or removed at any time with or without anode or delay line voltage except in the special case where the anode voltage is set high enough so that with operation without negative grid bias, the maximum cathode-delay line current would be exceeded. In this case, the negative grid voltage must be applied before or simultaneously with but never after the anode. The grid and anode should not be allowed to float with respect to the cathode since these tubes contain a tetrode gun.

The cooling system capacity must be sufficient to maintain the delay-line temperature below 100° C and must be in operation before the application of the above voltages.

Adequate clearance must be maintained between the tube magnet and ferromagnetic materials or other magnets to avoid deterioration of the tube's gauss level.

TENTATIVE DATA

NOTE:

A. THESE TOLERANCES OCCASIONED BY THE NECESSITY FOR MANUFACTURERS ADJUSTMENT OF TUBE BODY WITHIN MAGNET ASSEMBLY. ADJUSTING SCREWS ARE PRE-SET BY MANUFACTURER.

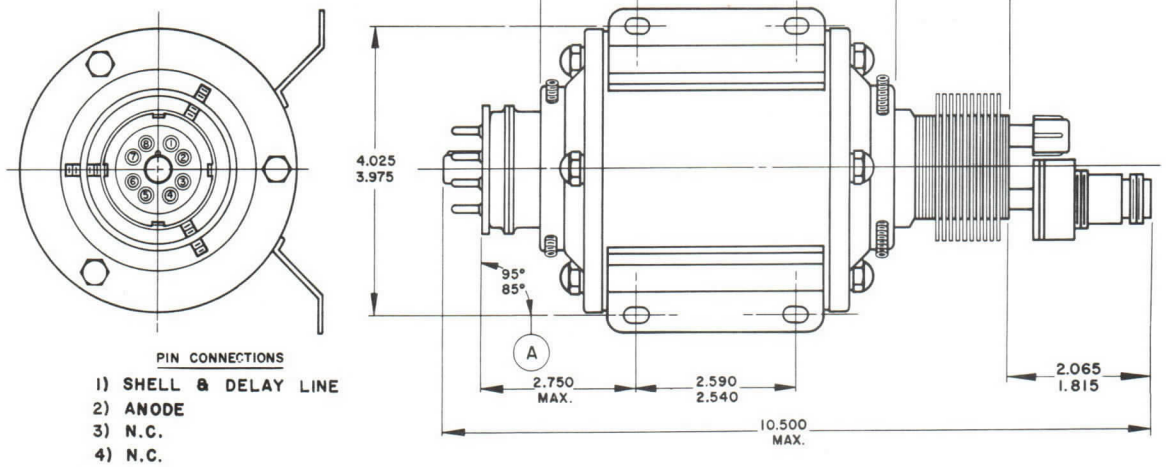

PIN CONNECTIONS

1) SHELL & DELAY LINE
2) ANODE
3) N.C.
4) N.C.
5) GRID
6) N.C.
7) HEATER
8) H-CATHODE

QK518 ELECTRON TUBE OUTLINE DRAWING

The tabluated data and accompanying graphs are representative of only a small sample and are presented as general information for the circuit designer. They should not be interpreted as completely defining the expected spread of the tube's characteristics. Detailed information necessary for specific applications may be obtained by contacting the Applications Engineering Department, Microwave and Power Tube Operations.

REFERENCES

"New Oscillator Tubes With Wide-Band Electronic Tuning At Microwave Frequencies," P. Guénard, O. Doehler, B. Epsztein and R. Warnecke, C. R. Acad. Sci. (Paris) vol. 235, pp. 236-8 (July 21, 1952). In French.

"Fundamental Phenomena In Traveling-Wave Tubes," R. Warnecke, P. Guénard and O. Doehler, Onde Élect. vol. 34, No. 325, pp. 323-38 (April 1954). In French.

RAYTHEON

TECHNICAL INFORMATION

BACKWARD WAVE OSCILLATOR

TENTATIVE DATA

Excellence in Electronics

TYPE QK528

GENERAL DESCRIPTION

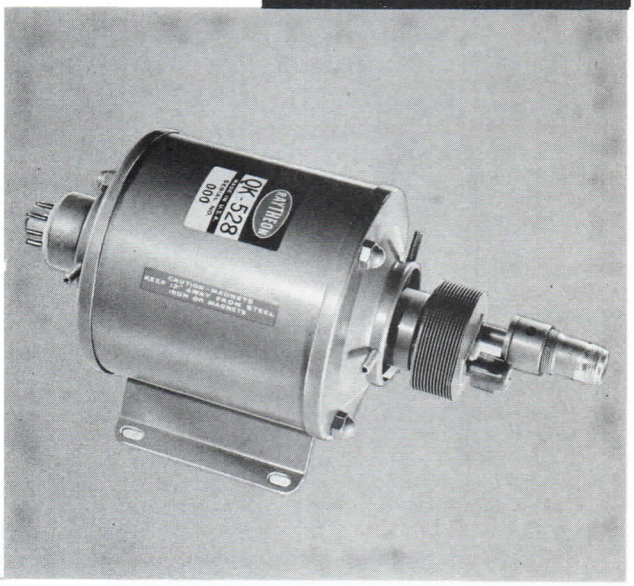

The QK528 is a voltage-tunable backward wave oscillator designed for CW or pulsed operation over the 3600 to 7200 Mc range with an average power output of 400 milliwatts. It is an integral magnet, coaxial output type tube requiring forced-air cooling and is designed for coupling to standard type "N" connector. A special control electrode, normally at cathode potential, facilitates low-voltage, pulsed or amplitude modulation.

GENERAL CHARACTERISTICS

ELECTRICAL

Heater Characteristics

Heater Voltage	6.3 V
Heater Current	1.0 A
Cathode Heating Time (Minimum)	1.0 minute

Maximum Ratings

Anode Voltage	150 Vdc
Anode Current	5 mAdc
Delay-Line Voltage	1500 Vdc
Delay-Line Current	40 mAdc
Delay-Line Dissipation	60 W
Control Electrode Voltage	
Positive Value	0 Vdc
Negative Value	100 Vdc

The values specified above must not be exceeded under any service condition. The ratings are limiting values above which the serviceability of any individual tube may be impaired. It does not necessarily follow that combinations of maximum ratings can be attained simultaneously.

Typical Operation CW

Frequency Range	3600—7200 Mc
Delay-Line Voltage	180—1400 Vdc
Delay-Line Current	15-35 mAdc
Anode Voltage	100 Vdc
Anode Current	1 mAdc
Grid Voltage	0 Vdc
Power Output	20—750 mw

Printed in U.S.A.

MICROWAVE AND POWER TUBE DIVISION

RAYTHEON MANUFACTURING COMPANY

FOUNDRY AVE., WALTHAM 54, MASS.

TENTATIVE DATA

MECHANICAL

Over-all Dimensions	See outline drawing
Net Weight	8.5 lb. approx.
Mounting Position	Any
Cooling	Forced air, 10 cfm
Output Coupling	Coaxial
Base	Standard Intermediate Octal

DETAILED ELECTRICAL INFORMATION

CONTROL ELECTRODE

For CW operation at maximum power output, the control grid is tied to the cathode. In applications where pulsed or amplitude modulation is required, a circuit such as given in Fig. 1 is recommended. The control grid must never be operated positive with respect to the cathode.

SIMPLIFIED MODULATION CIRCUIT

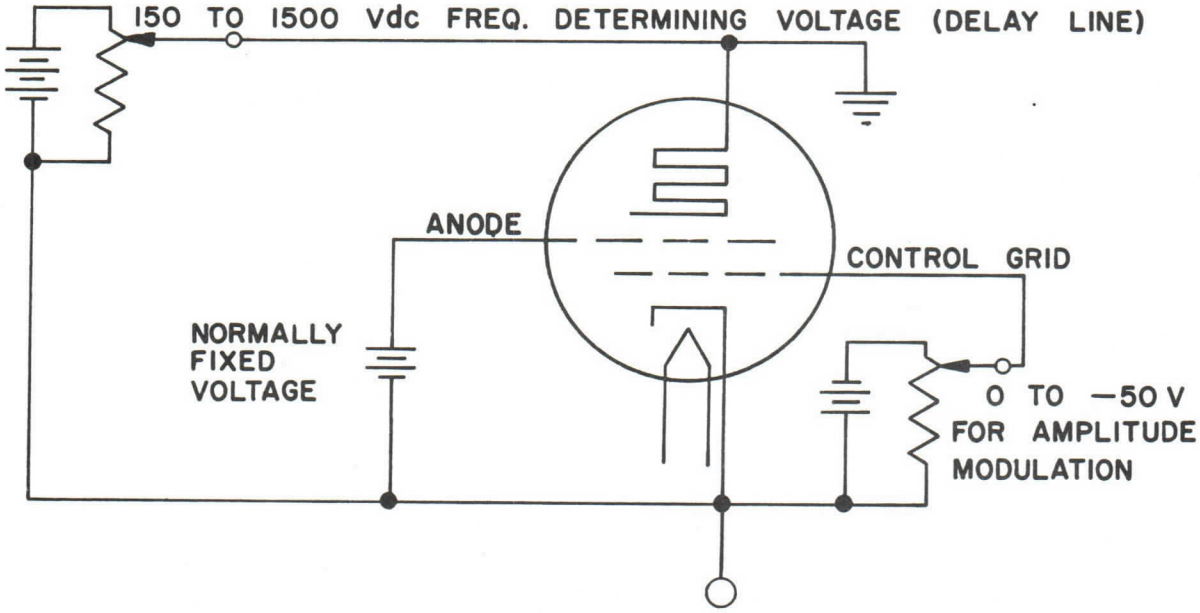

FIGURE 1

FREQUENCY STABILITY

The regulation of the voltages supplied to the delay line and anode will be reflected directly in the stability of the output frequency.

The regulation of the control electrode bias supply will be reflected directly in the power output of the tube. Therefore, the regulation of these supplies must be commensurate with the power and frequency stability requirements of the application.

POWER OUTPUT & FREQUENCY VS. DELAY LINE POTENTIAL

QK528 BACKWARD WAVE OSCILLATOR

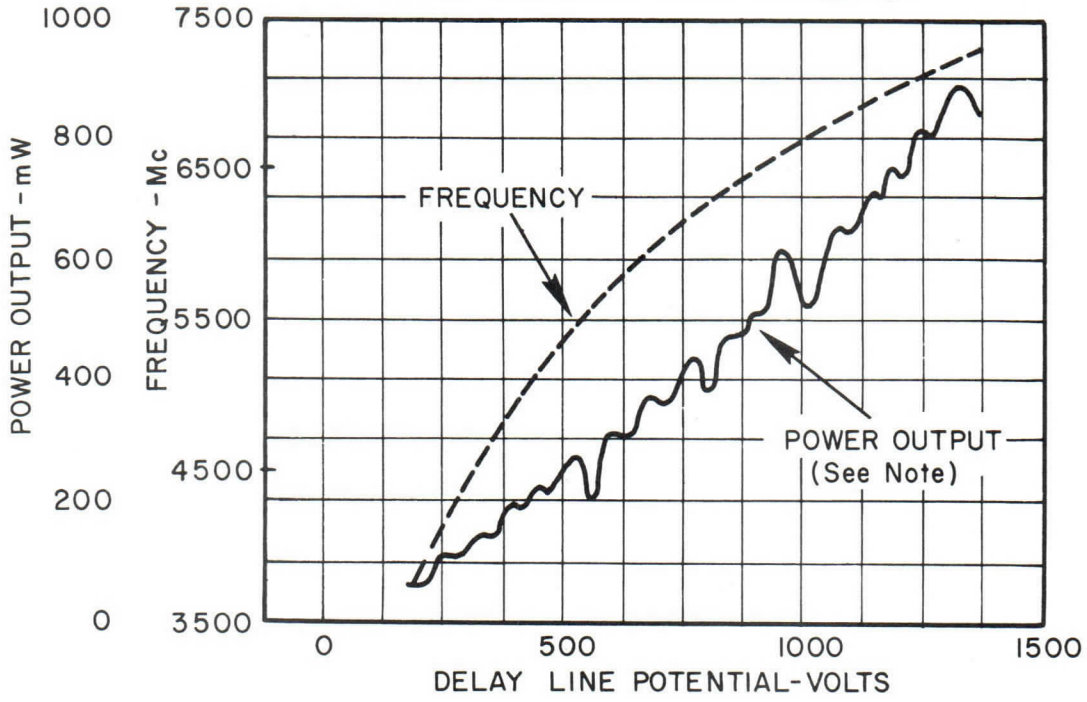

Note: The power output curve shows multiple minima and maxima points as the frequency is varied. In no case will the points of minimum power output be below the specified minimum power level.

OPERATING PRECAUTIONS

In order to prevent damage to the tube, the anode voltage must not be applied without the minimum delay line voltage being applied before the anode voltage. Failure to observe this precaution will result in excessive anode current and possible burn out. Simultaneous application of all voltages after the preheat time is permissible. The grid must always be either zero or negative — never positive and can be applied or removed at any time with or without anode or delay line voltage except in the special case where the anode voltage is set high enough so that with operation without negative grid bias, the maximum cathode-delay line current would be exceeded. In this case, the negative grid voltage must be applied before or simultaneously with but never after the anode. The grid and anode should not be allowed to float with respect to the cathode since these tubes contain a tetrode gun.

The cooling-system capacity must be sufficient to maintain the delay-line temperature below 100° C and must be in operation before the application of the above voltages.

Adequate clearance must be maintained between the tube magnet and ferromagnetic materials or other magnets to avoid deterioration of the tube's gauss level.

TENTATIVE DATA

NOTE:

A. THESE TOLERANCES OCCASIONED BY THE NECESSITY FOR MANUFACTURERS ADJUSTMENT OF TUBE BODY WITHIN MAGNET ASSEMBLY. ADJUSTING SCREWS ARE PRE-SET BY MANUFACTURER.

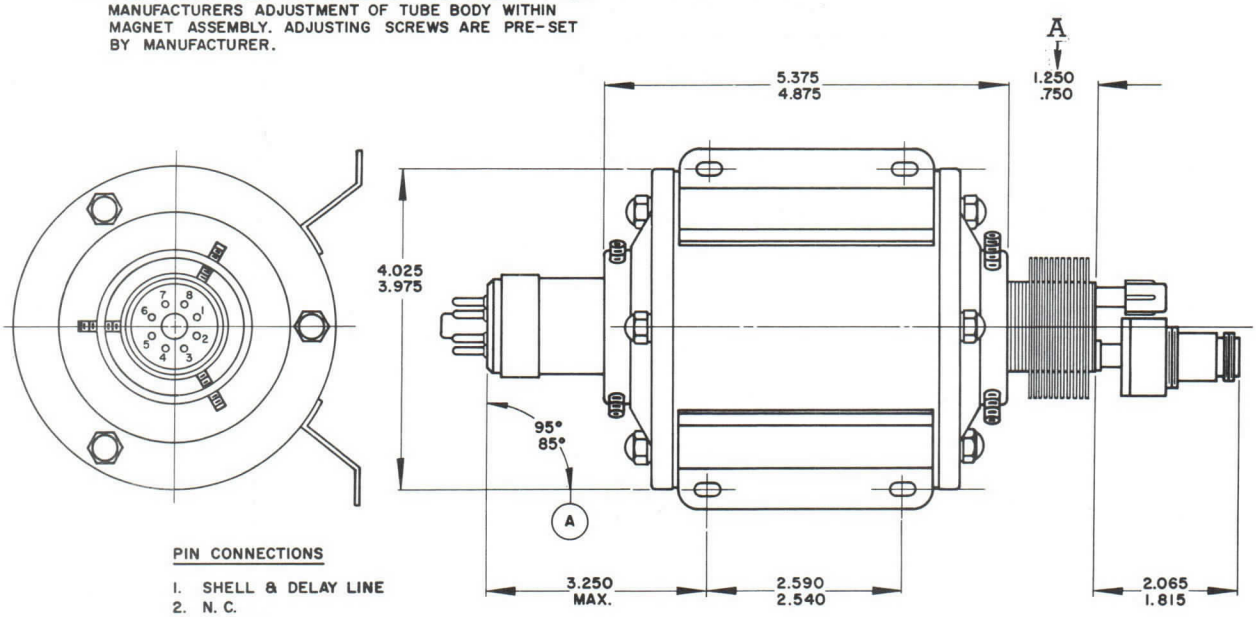

PIN CONNECTIONS

1. SHELL & DELAY LINE
2. N. C.
3. HEATER
4. CONTROL GRID
5. CATHODE
6. HEATER
7. ANODE
8. N.C.

QK528 ELECTRON TUBE OUTLINE DRAWING

The tabulated data and accompanying graphs are representative of only a small sample and are presented as general information for the circuit designer. They should not be interpreted as completely defining the expected spread of the tube's characteristics. Detailed information necessary for specific applications may be obtained by contacting the Applications Engineering Department, Microwave and Power Tube Operations, Raytheon Manufacturing Co., Waltham, Mass.

REFERENCES

"New Oscillator Tubes With Wide-Band Electronic Tuning At Microwave Frequencies," P. Guénard, O. Doehler, B. Epsztein and R. Warnecke, C. R. Acad. Sci. (Paris) vol. 235, pp. 236-8 (July 21, 1952). In French.

"Fundamental Phenomena In Traveling-Wave Tubes," R. Warnecke, P. Guénard and O. Doehler, Onde Élect. vol. 34, No. 325, pp. 323-38 (April 1954). In French.

RAYTHEON

TECHNICAL INFORMATION

TENTATIVE DATA

Excellence in Electronics

TYPE QK610

GENERAL DESCRIPTION

The QK610 is a voltage-tunable backward wave oscillator designed for CW or pulsed operation over the 6700 to 11,400-Mc range with a minimum power output of 20 milliwatts. It is an integral magnet coaxial output type tube requiring forced-air cooling and is designed for coupling to standard type "N" connector. A special control electrode facilitates low-voltage, pulsed or amplitude modulation.

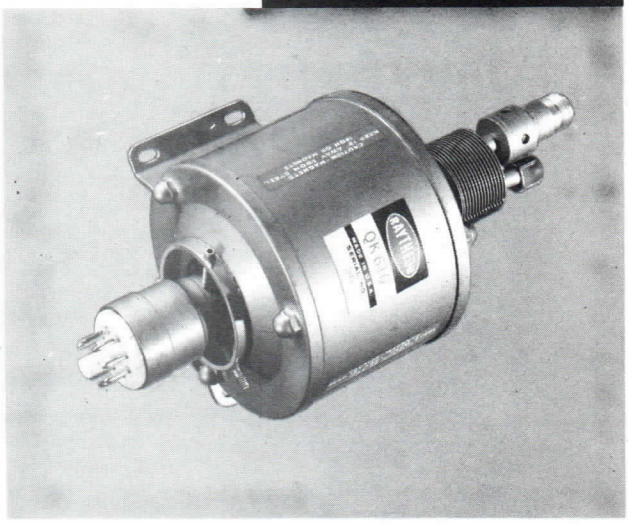

VOLTAGE-TUNABLE BACKWARD WAVE OSCILLATOR

GENERAL CHARACTERISTICS

ELECTRICAL

Heater Characteristics

Heater Voltage	6.3 V ± 10%
Heater Current	1.5 A
Cathode Heating Time	2.0 minute min.

Maximum Ratings

Anode Voltage	250 Vdc
Anode Dissipation	0.75 W
Delay-Line Voltage	1500 Vdc
Delay-Line Current	35 mAdc
Delay-Line Dissipation	52.5 W
Control Electrode Voltage	
Positive Value	0 Vdc
Negative Value	150 Vdc

The values specified above must not be exceeded under any service condition. The ratings are limiting values above which the serviceability of any individual tube may be impaired. It does not necessarily follow that combinations of maximum ratings can be attained simultaneously.

Typical Operation CW

Frequency Range	6700 — 11,400 Mc
Delay-Line Voltage	250 — 1320 Vdc
Delay-Line Current	18 — 30 mAdc
Anode Voltage	100 Vdc
Anode Current	1 mAdc
Grid Voltage	0 Vdc
Power Output	20 — 300 mW

Power output can generally be increased, at the expense of low frequency coverage, by increasing anode voltage. Care must be taken not to exceed the maximum ratings.

Printed in U.S.A.

MICROWAVE AND POWER TUBE DIVISION
RAYTHEON COMPANY
FOUNDRY AVE., WALTHAM 54, MASS.

VOLTAGE-TUNABLE BACKWARD WAVE OSCILLATOR

TENTATIVE DATA

MECHANICAL

Over-all Dimensions	See outline drawing
Net Weight	6.5 lb. approx.
Mounting Position	Any
Cooling	Forced air, 10 cu. ft./min.
Output Coupling	Coaxial Type "N"
Base	Standard Intermediate Octal

DETAILED ELECTRICAL INFORMATION

CONTROL ELECTRODE

For CW operation at maximum power output, the control grid is tied to the cathode In applications where pulsed or amplitude modulation is required, the circuit given in Fig. 1 is recommended. The control grid must never be operated positive with respect to the cathode.

SIMPLIFIED MODULATION CIRCUIT

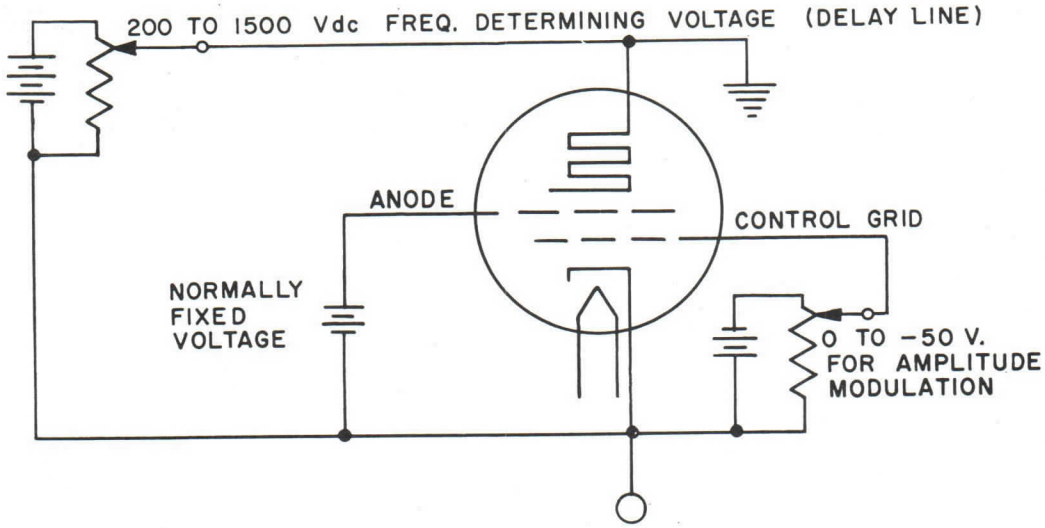

FIGURE 1

FREQUENCY STABILITY

The regulation of the voltages supplied to the delay line and anode will be reflected directly in the stability of the output frequency.

The regulation of the control electrode bias supply will be reflected directly in the power output of the tube. Therefore, the regulation of these supplies must be commensurate with the power and frequency stability requirements of the application.

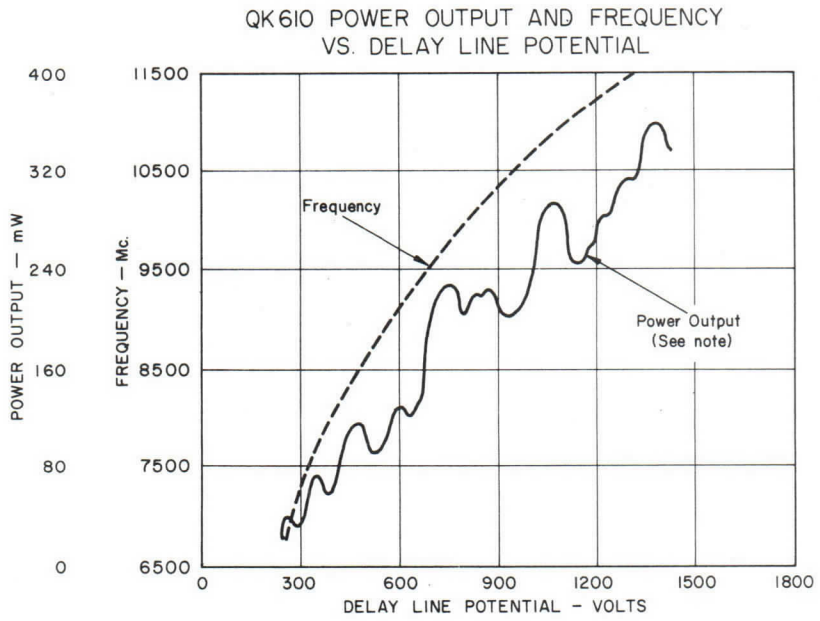

Note: The power output curve shows multiple minima and maxima points as the frequency is varied. In no case will the points of minimum power output be below the specified minimum power level.

FIGURE 2

OPERATING PRECAUTIONS

All voltages may be applied simultaneously after the required heater warmup time. In no case should the anode voltage be applied prior to the delay line voltage. Failure to observe this precaution will result in excessive anode current and possible burn out. The grid must always be either zero or negative — never positive and can be applied or removed at any time with or without anode or delay line voltage except in the special case where the anode voltage is set high enough so that with operation without negative grid bias, the maximum cathode-delay line current would be exceeded. In this case, the negative grid voltage must be applied before or simultaneously with but never after the anode. The grid and anode should not be allowed to float with respect to the cathode since these tubes contain a tetrode gun.

The cooling system capacity must be sufficient to maintain the delay line temperature (measured at the base of the cooling fins) below 125°C and must be in operation before the application of the above voltages.

Adequate clearance must be maintained between the tube magnets and other magnetic material to avoid deterioration or distortion of the magnetic field. In general, a 4" clearance is sufficient. The tube should not be subjected to external fields in excess of 100 gauss.

RAYTHEON

VOLTAGE-TUNABLE BACKWARD WAVE OSCILLATOR

TENTATIVE DATA

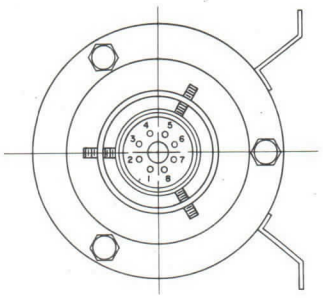

PIN CONNECTIONS

1. SHELL & DELAY LINE
2. N. C.
3. HEATER
4. CONTROL GRID
5. CATHODE
6. HEATER
7. ANODE
8. N.C.

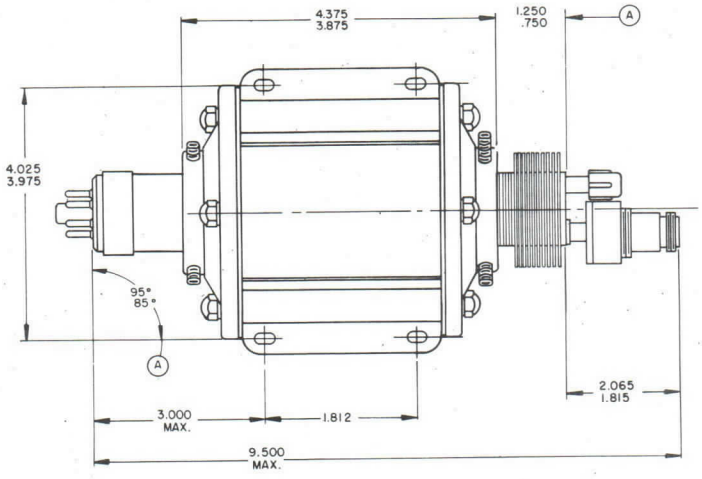

NOTE:

A. THESE TOLERANCES OCCASIONED BY THE NECESSITY FOR MANUFACTURERS ADJUSTMENT OF TUBE BODY WITHIN MAGNET ASSEMBLY. ADJUSTING SCREWS ARE PRE-SET BY MANUFACTURER.

QK610 ELECTRON TUBE OUTLINE DRAWING

The tabulated data and accompanying graphs are representative of only a small sample and are presented as general information for the circuit designer. They should not be interpreted as completely defining the expected spread of the tube's characteristics. Detailed information necessary for specific applications may be obtained by contacting the Applications Engineering Department, Microwave and Power Tube Operations, R.M.C. Waltham, Mass.

REFERENCES

"New Oscillator Tubes With Wide-Band Electronic Tuning At Microwave Frequencies," P. Guénard, O. Doehler, B. Epsztein and R. Warnecke, C. R. Acad. Sci. (Paris) vol. 235, pp. 236-8 (July 21, 1952). In French.

"Fundamental Phenomena In Traveling-Wave Tubes," R. Warnecke, P. Guénard and O. Doehler, Onde Élect. vol. 34, No. 325, pp. 323-38 (April 1954). In French.

TYPE QK625

GENERAL DESCRIPTION

The QK625 "M" Type Backward Wave Oscillator is voltage tunable over the frequency band 2500 to 3300 megacycles with a minimum C.W. power output of 180 watts. It has an integral magnet, requires liquid-cooling, and is designed for coupling to RG44U rigid coaxial transmission line. The tube is capable of being amplitude modulated and/or frequency modulated at rates exceeding 10 megacycles.

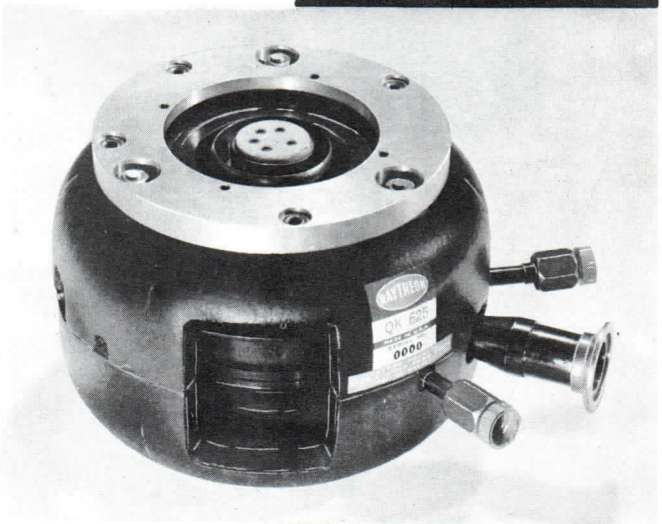

"M" TYPE VOLTAGE TUNABLE BACKWARD WAVE OSCILLATOR

GENERAL CHARACTERISTICS

ELECTRICAL

Heater Voltage Preheat	10.0 volts
Heater Voltage Operate	10.0 volts
Heater Current	1.5-2.0 amps.
Minimum Preheating Time	30 sec.
Frequency	2500-3300 mcs.
Delay Line Voltage	2300-4950 volts
Delay Line Current	300 ma
Accelerator Voltage	650-1300 volts
Sole Voltage	—850 volts
Grid Voltage	0 volts
Power Output Minimum	180 watts.
Power Output Normal	250-300 watts

MECHANICAL

Mounting Position	Any
Detailed Dimensions	See outline drwg. (Fig. #8)
Weight	24 lbs approximate
Cooling	Liquid

ELEMENT IDENTIFICATION

GENERAL

All potentials are referenced to the cathode. Figure 1 illustrates the QK625 schematically as a pentode and shows the polarity of the potentials that must be applied.

Figure 2 illustrates the position of the elements within the tubes and will help to clarify their functions.

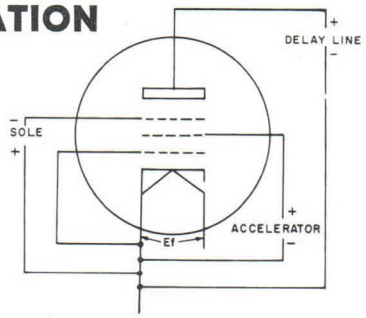

Figure 1

Printed in U.S.A.

ELEMENTS OF HIGH POWER BACKWARD-WAVE OSCILLATOR

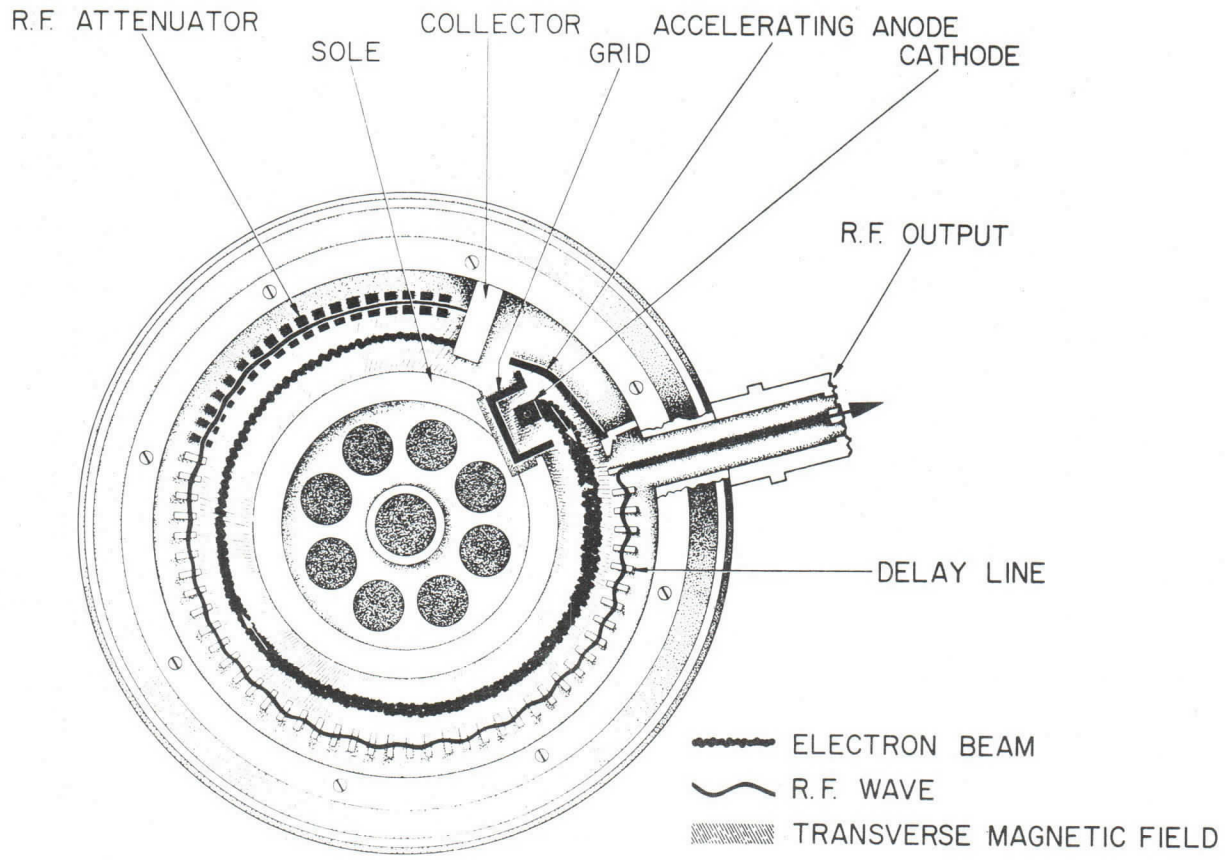

Figure 2

HEATER

The QK625 should be preheated at 10.0 volts for a minimum of 30 seconds. Heater surge current should not exceed 2.7 amps.

DELAY LINE

The delay line or anode is the same potential as the body of the tube. For most applications this potential is grounded. The entire frequency band, 2500-3300 mcs, can be tuned by varying the delay line voltage. Tuning sensitivity is approximately 0.4 mc per volt. The delay line voltage may be swept with any desired waveform and at rates up to and exceeding 10 mcs to achieve any desired bandwidth of frequency modulation.

See Figure 3 for typical delay line voltage-frequency characteristics.

SOLE

The sole electrode is biased negatively with respect to the cathode and in its parallel position to the delay line serves to bound the electron interaction space. The quiescent sole bias is fixed for all QK625's at —850 volts.

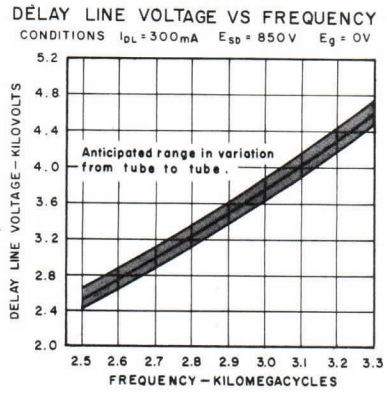

Figure 3

Frequency is determined fundamentally by the delay line to sole potential. Therefore, frequency modulation may also be achieved by varying the sole potential with the same tuning sensitivity (0.4 mc. per volt) as the delay line.

Sole frequency modulation is limited to a smaller percentage of the band and modulation in excess of ±50 mcs is not recommended.

GRID

The grid is not a control electrode. Its function is to optimize electron gun optics to maximize tube efficiency. The grid should never be biased positive with respect to the cathode.

Normally the QK625 is operated with the grid at zero bias. However, in some particular applications it may be desirable to operate the QK625 with some negative bias applied to the grid. The tube manufacturer should be consulted regarding grid bias requirements.

ACCELERATOR

The accelerator which controls delay line current is biased positive with respect to the cathode. Amplitude modulation can be achieved by varying the accelerator voltage. Due to frequency pushing, inherent frequency modulation accompanies amplitude modulation. Pushing is defined as an R.F. frequency change resulting from a change in delay line current. Pushing is neither linear over the frequency band nor over the current range. The tube manufacturer should be consulted regarding A.M. requirments.

ELECTRODE CURRENTS (With respect to Cathode)

Current is defined as flowing from a positive to a negative potential in the circuit of the power supply.

The accelerator current is always positive.

The sole current is always negative. Sole current varies with frequency and the performance of the typical QK625 is illustrated by Figure 4.

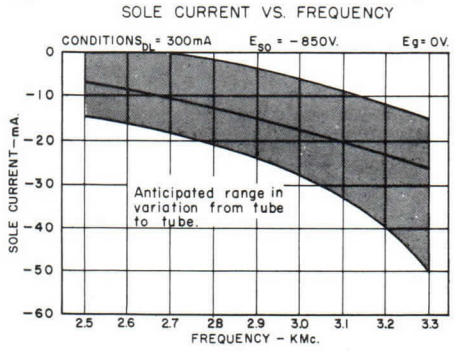

Figure 4

All electrode currents may change with the life of the tube. Chart #1 gives the maximum new tube limits as well as the minimum end of life limits which may be expected.

ELECTRODE CURRENTS

PARAMETER	MAXIMUM NEW TUBE LIMIT	MAXIMUM END OF LIFE LIMITS
Accelerator Current	+ 1 mA	+ 5 mA
Sole Current	+ 0mA – 55mA	+ 0mA – 55mA

Chart #1

INTERELECTRODE CAPACITANCE

Frequency and amplitude modulation rates normally encountered are limited mainly by modulation power and inter-electrode capacity. The maximum capacities that should be considered for system design are given in chart #2. Capacity is measured from the indicated electrode to all other electrodes tied together.

R.F. POWER OUTPUT

The minimum C.W. power output of the QK625 is 180 watts. The actual power output is greater

INTERELECTRODE CAPACITY	
Sole Capacity	85 uuf Max.
Accelerator Capacity	25 uuf Max.
Grid Capacity	28 uuf Max.
Cathode Capacity	25 uuf Max
Delay Line Capacity	50 uuf Max.

Chart #2

and averages from 250 to 300 watts over the band. Figure 5 illustrates the power output of the typical QK625.

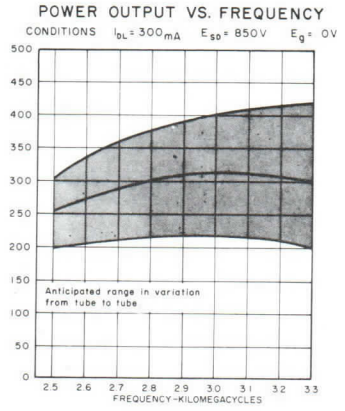

Figure 5

ELECTRICAL INPUT

The electrode connections to the input bushing are shown in Figure 6. Connections are made with miniature banana plugs. An acceptable connector can be furnished by Ucinite Company, Newtonville, Mass., Part No. 154689.

For high altitude operation, the input bushing must be pressurized or immersed in an insulating liquid. Sealing can be accomplished with a piston type O ring similar to the gauge shown on the tube outline drawing Figure 8.

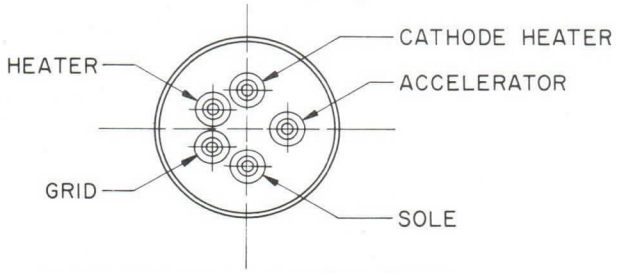

ELECTRICAL INPUT CONNECTIONS

Figure 6

R.F. OUTPUT

The R.F. output is designed to mate with RG44U rigid coaxial transmission line. See Figure 8 for detail of R.F. output and mating flange. The R.F. output is designed to operate unpressurized to 60,000 feet altitude.

COOLING

The QK625 is designed for liquid cooling of the delay line. Figure 7 gives the pressure drop-vs-flow characteristics with water of the QK625 cooling jacket. Since many different cooling fluids can be used, the tube manufacturer should be consulted regarding limitations pertaining to the different fluids. In any event, the temperature of the delay line as measured at the point indicated on the tube outline drawing Figure 8 should never exceed 150°C.

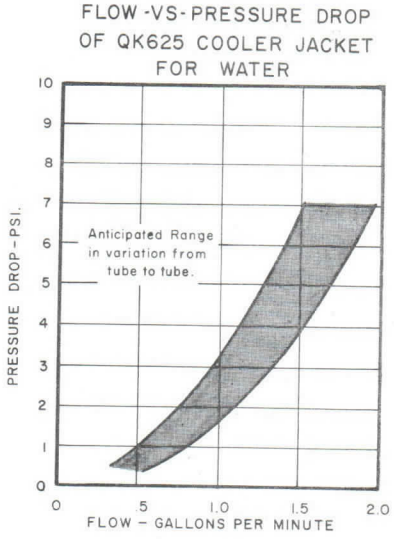

Figure 7

PRECAUTIONS

Overload protection at least in the form of fast acting relays should be employed on all power supplies. Accelerator voltage should be removed immediately in cases where the delay line voltage falls below 2000 volts or sustained arcs occur between any tube elements. Accelerator voltage should only be applied when the delay line and sole voltages are within limits.

The accelerator regulator should be designed so as to sense and regulate cathode current.

"M" TYPE BACKWARD WAVE OSCILLATOR

TENTATIVE DATA

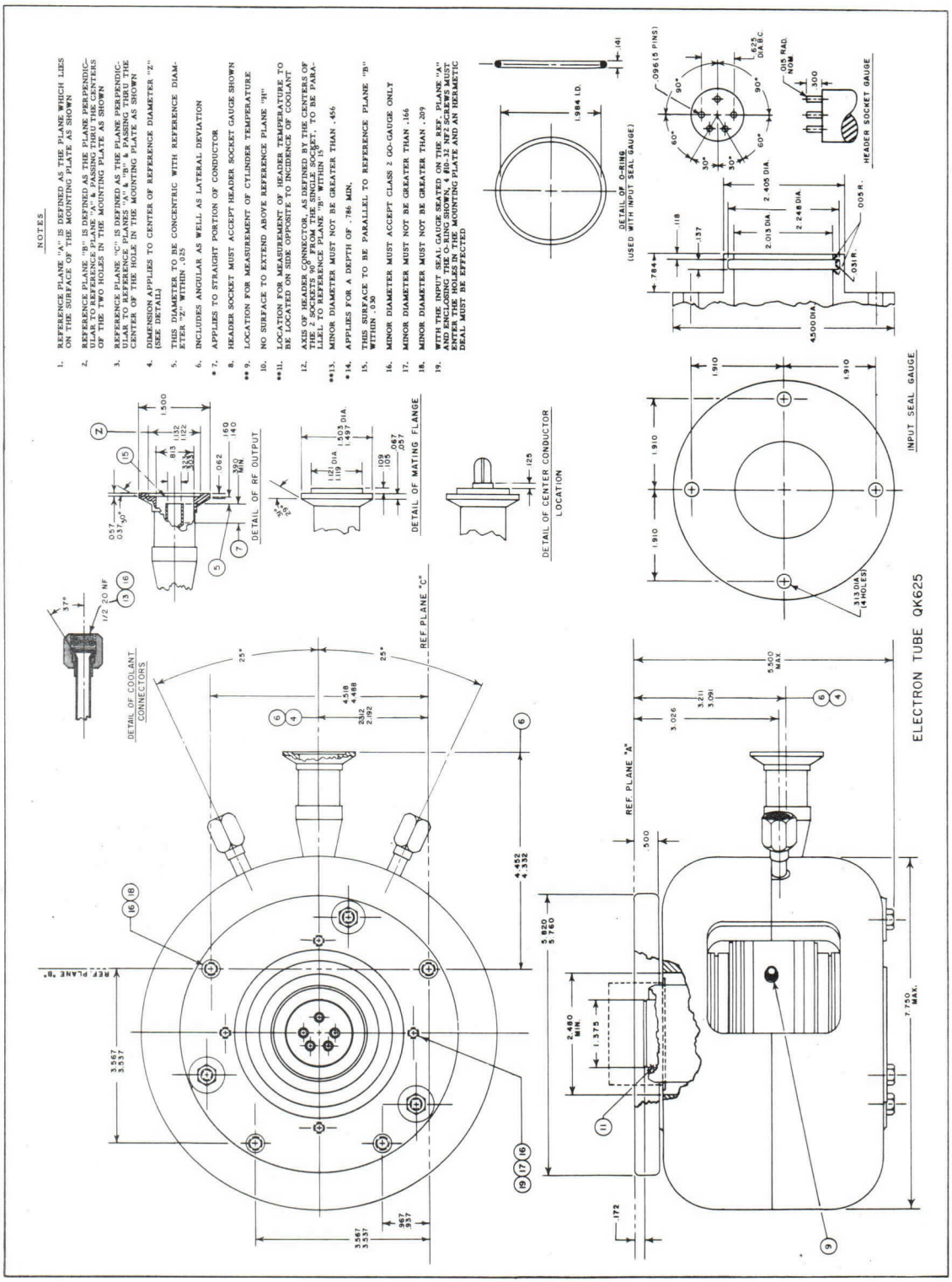

MICROWAVE AND POWER TUBE DIVISION

RAYTHEON COMPANY

FOUNDRY AVE., WALTHAM 54, MASS.

TYPE QK630

GENERAL DESCRIPTION

The QK630 is a self-excited oscillator capable of producing a minimum of 550 kilowatts peak power output. Used with a tunable, external cavity the combination is an oscillator frequency stabilized to a high degree and tunable from 1270 to 1350 Mc.

The information contained herein is representative of a small number of prototypes and is not necessarily representative of the final tube. Detailed information on specific applications may be obtained by contacting the Applications Engineering Department, Microwave and Power Tube Division, Raytheon Company, Waltham 54, Massachusetts.

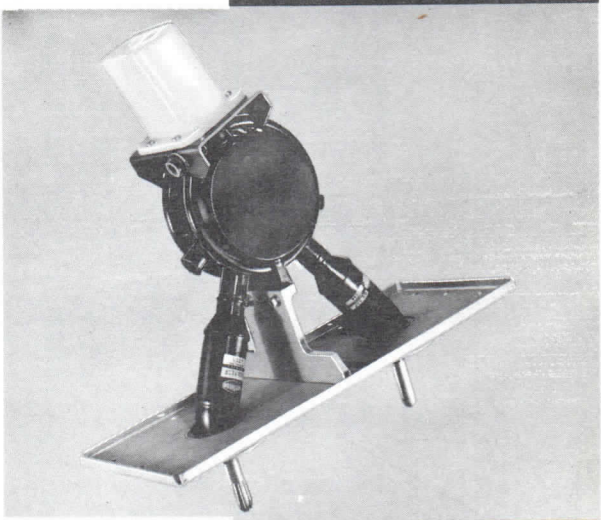

PULSED-TYPE STABILOTRON OSCILLATOR

GENERAL CHARACTERISTICS

ELECTRICAL

Heater Characteristics

Heater current preheat	2.4 A
Heater current operate	2.4 A
Heater voltage @ 2.4 A	27-33 V
Minimum preheat time	3 Minutes
Cold heater resistance	2.0 ohms (Approx.)

Typical Operation

Pulse duration	3.0 usec
Duty cycle	.0024
Peak anode voltage	35 kv
Peak anode current	37 A
Average anode current	89 mAdc
Peak power output	550 kw
Average power output	1320 W
VSWR	1.1/1
Frequency region	1270-1350 Mc
RF bandwidth	0.67 Mc

MECHANICAL

Overall dimensions	19.625" x 18.3" x 8.125"
Net weight: tube	16 lbs.
magnet, typically	40 lbs.
Mounting	Any
Output coupling	Round flange, 3 5/8" diameter
Input coupling	Round flange, 3 5/8" diameter

Printed in USA

MICROWAVE AND POWER TUBE DIVISION

RAYTHEON COMPANY

FOUNDRY AVE., WALTHAM 54, MASS.

Output Pressure	35 psia
Input Pressure	35 psia
Cooling	Forced Water
Cathode bushing	Glass @ atmos. Press.
Vibration	50 cps @ 2.5G
Shock	15G
Magnet Protection	12"

DETAILED ELECTRICAL INFORMATION

HEATER-CATHODE

The cathode must be preheated at 2.4 amperes for at least three minutes prior to the application of the high voltage pulse. Heater current surges in excess of five amperes may cause damage to the tube. When the average anode current is greater than 50 milliamperes, the heater current should be reduced to zero. The application of heater power without forced liquid cooling may cause permanent damage to the tube.

TYPICAL OPERATION

As illustrated in Figure 1 the Stabilotron circuit consists of a Stabilotron tube, a high Q tunable stabilizing system and a feedback mismatch in the output circuit of the tube. The circuit will oscillate when the following conditions are satisfied.

1. $|\Gamma_1|\ |\Gamma_2|$ Gain $\geq$ 1
2. Total loop phase shift from plane l l^1 to plane r r^1 is an integral multiple of 360 degrees.

A portion of the output power is reflected from the reference plane l l^1. This reflected power travels back through the Stabilotron network with little or no attenuation or reflection and out to the reference plane r r^1. The energy at the resonant frequency of the cavity is again reflected, amplified by the backward wave principle and arrives at the reference plane l l^1 at full power level. The energy not at the resonant frequency of the cavity is absorbed by the damping resistor. A line stretcher provides phase adjustment for optimum system performance.

Figure 2 shows a QK630 Stabilotron tube used with a QK629 Stabilizing System. The input of the QK630 is connected to a 1⅝" coax line stretcher which in turn is connected to a cylindrical, tunable cavity. A damping resistor for the purpose of absorbing off resonant energy is connected through a fixed length of 1⅝" coax line to the other side of the cavity. As the cavity is tuned it moves physically toward or away from the tube, changing the line length between the cavity and tube and thus maintaining proper loop phase shift.

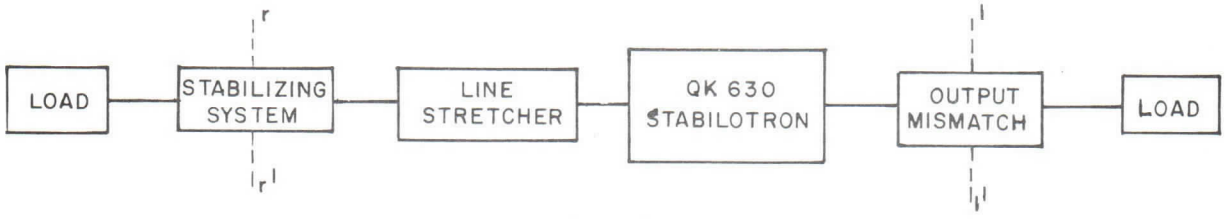

Figure 1

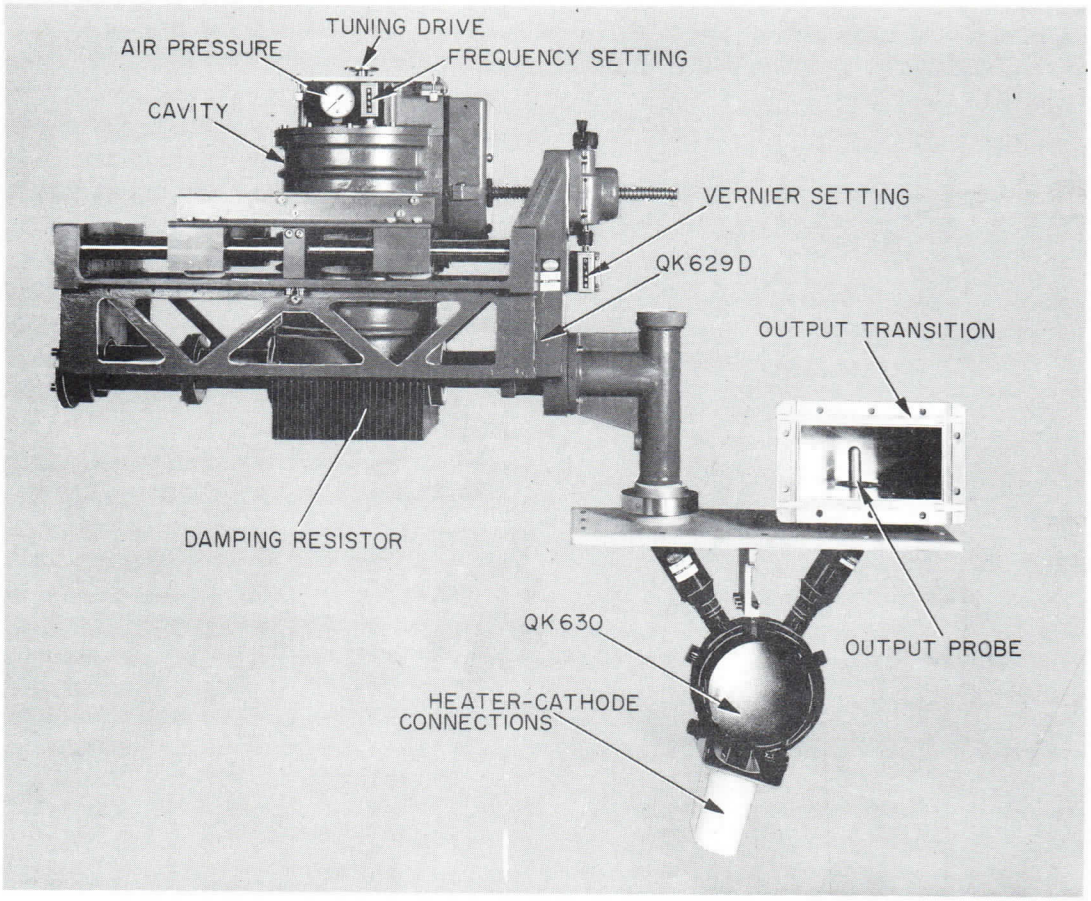

Figure 2

FREQUENCY STABILITY

The phase shift vs frequency characteristics of the stabilizing cavity in the region of cavity resonance has a slope many times greater than that of any other element in the circuit. A slight change in frequency will result when the cavity is subjected to a substantial shift in phase which might be introduced by the antenna load, frequency pushing, etc. Figure 3 demonstrates the frequency shift which occurs for the same phase shift increment in a stabilized and unstabilized system. It is seen that in the stabilized case the resulting frequency change, Δfs, caused by the $\Delta\theta$ increment of phase is much less than the frequency change, Δ fu, in the unstabilized case.

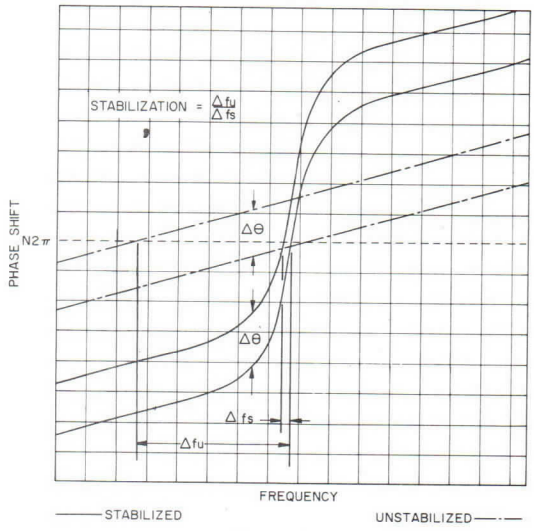

Figure 3

Printed in U.S.A.

OPERATING CHARACTERISTICS

Figure 4 is a plot of peak power output, peak anode voltage, efficiency, and bandwidth variation with respect to frequency.

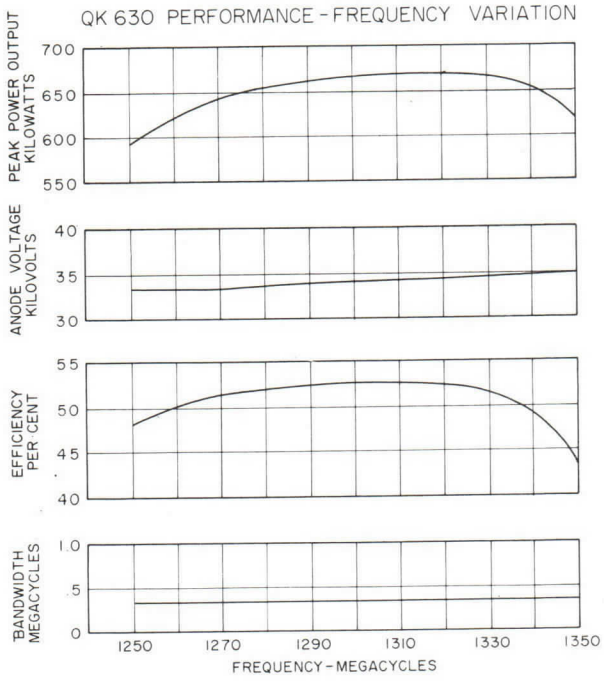

Figure 4

COOLING

The QK630 Stabilotron is a forced liquid cooled tube. The input temperature of the coolant will dictate the flow rate necessary to maintain the anode temperature below the specified maximum of 125°C. Figure 5 shows cooling water flow versus the total input power plotted for different values of anode temperature rise, Δt above the inlet temperature of the coolant. The relationship of back pressure and water flow is also shown.

PULSE LENGTH AND DUTY CYCLE

The QK630 Stabilotron has been designed and tested at the following pulse conditions. See Figure 6.

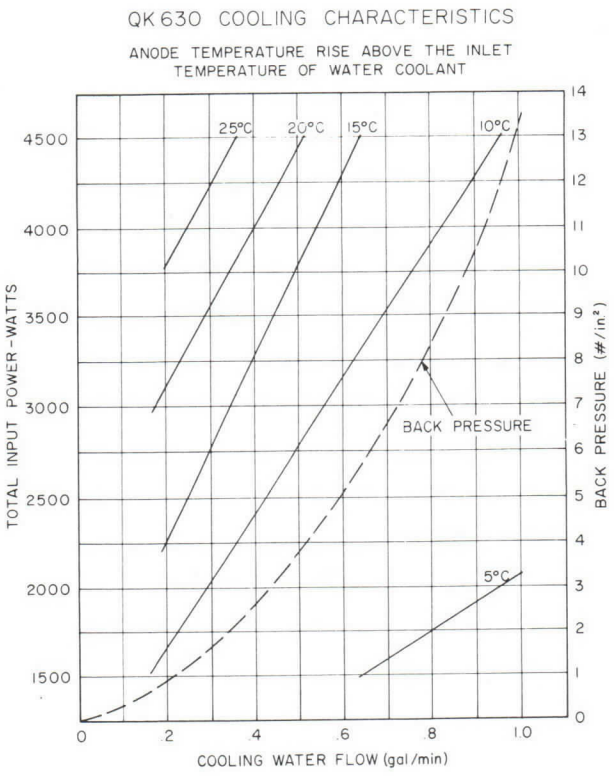

Figure 5

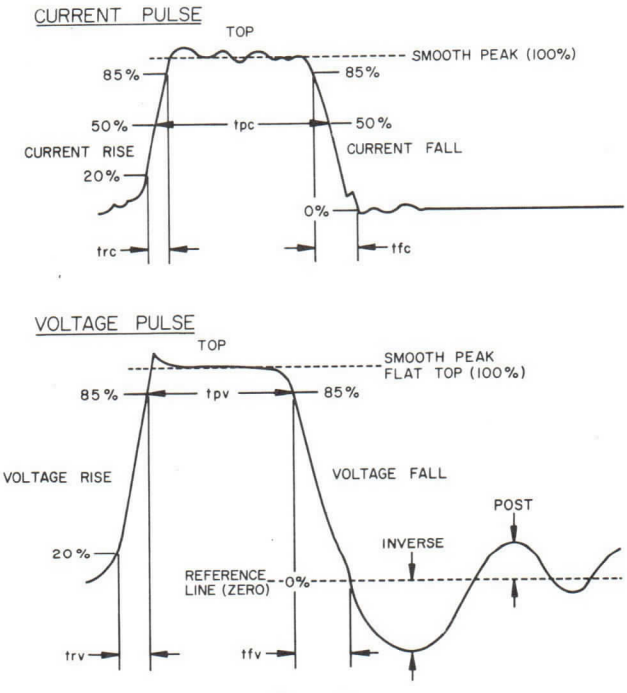

Figure 6

t_{pc} = 3.0 usec (measured at 50%)
t_{rc} = 0.20 usec (measured 20 to 85%)
t_{fc} = 1.30 usec (measured 0 to 85%)
t_{rv} = 0.45 usec (measured 20 to 85%)
t_{fv} = 2.0 usec (measured 0 to 85%)

No spike or ripple should exceed ±2.5% of the average peak value of current or voltage. Inverse voltage should not exceed 25% of the forward voltage. Post voltages should be held to a minimum to avoid post pulse noise or oscillations. If operation at pulse conditions different from those given above is anticipated, the manufacturer should be consulted for further information.

LOAD DIAGRAMS

Figures 7, 8, and 9 are load diagrams of the QK630 Stabilotron at 1270 Mc, 1300 Mc, and 1350 Mc. The output spectrum, peak power output and frequency deviation are shown at a matched load position and several phase positions with a load VSWR of 1.5/1.

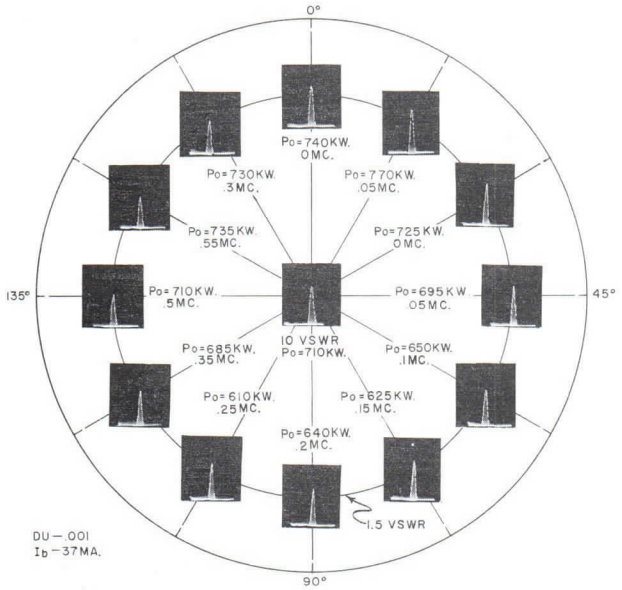

QK630-LOAD DIAGRAM
FREQUENCY-1270MC/S

Figure 7

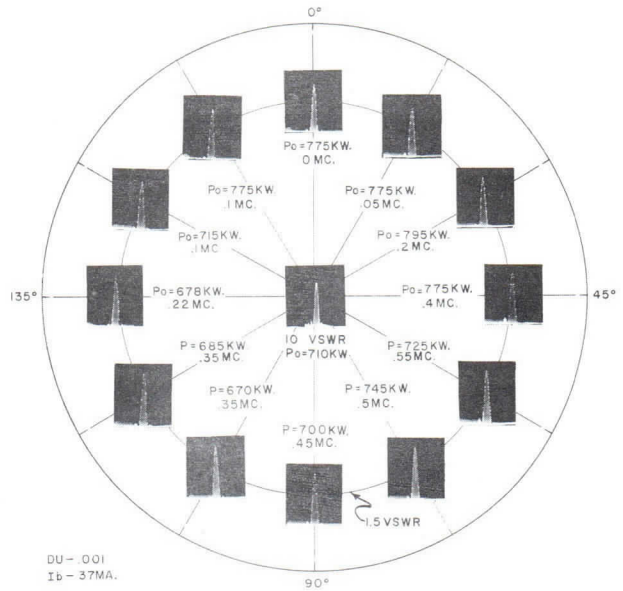

QK 630-LOAD DIAGRAM
FREQUENCY-1300MC/S

Figure 8

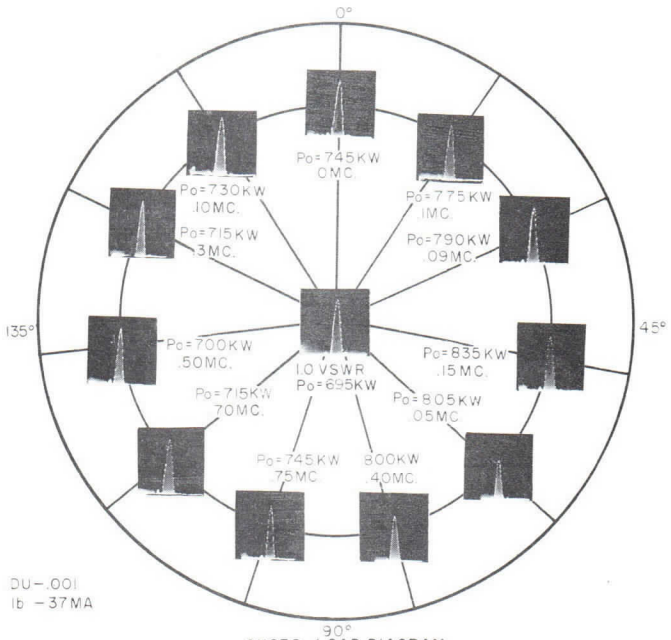

QK630-LOAD DIAGRAM
FREQUENCY-1350MC/S

Figure 9

ELECTRICAL CONNECTIONS

Electrical connections are made to the frame of the tube and to the two terminals located on the

high voltage cathode bushing. The positive high voltage should be grounded on the mounting surface. Heater connections should be designed to minimize contact resistance and lateral forces on the heater terminals. The common heater-cathode terminal is marked with the letter "C". Drawings of suitable heater-cathode connecting devices are available on request.

MOUNTING

The tube is mounted within the equipment by twelve bolts passed through clearance holes in the rectangular mounting plate. The relative position of the tube is unimportant. Details of the mounting plate are shown in the outline drawing.

COUPLING AND PRESSURIZATION

The input pipe of the tube has been designed to mate with the connection of the QK629 Stabilizing System. The output pipe, identical to the input pipe, is intended to couple into a standard 3" x 6" waveguide (RG-69/U) through the mounting flange shown in the outline drawing. Pressurization of the input and output RF transmission system to 35 psia is required to prevent arcing in the system.

REFERENCES

Final Engineering Report, Volume I on the Design and Development of the Platinotron, Amplitron and Stabilotron: W. C. Brown, Signal Corps Contract No. DA-36-039-sc-56644, December, 1955.

Description and Operating Characteristics of the Platinotron — A New Microwave Tube Device: W. C. Brown, Proceedings of the IRE, September 1957.

Raytheon Technical Information Bulletin — Eng. I: June 1958.

QK630 ELECTRON TUBE
INSTALLATION DETAILS

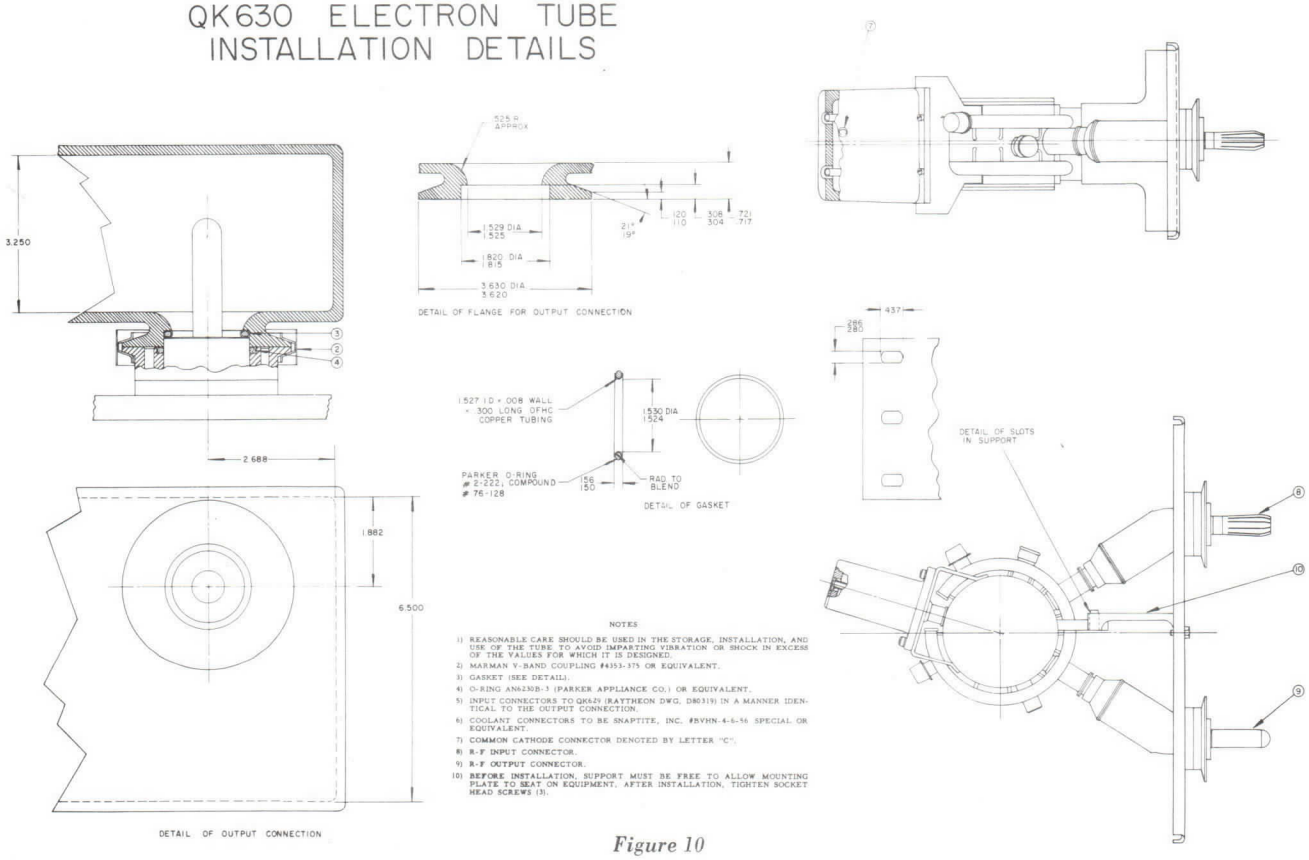

Figure 10

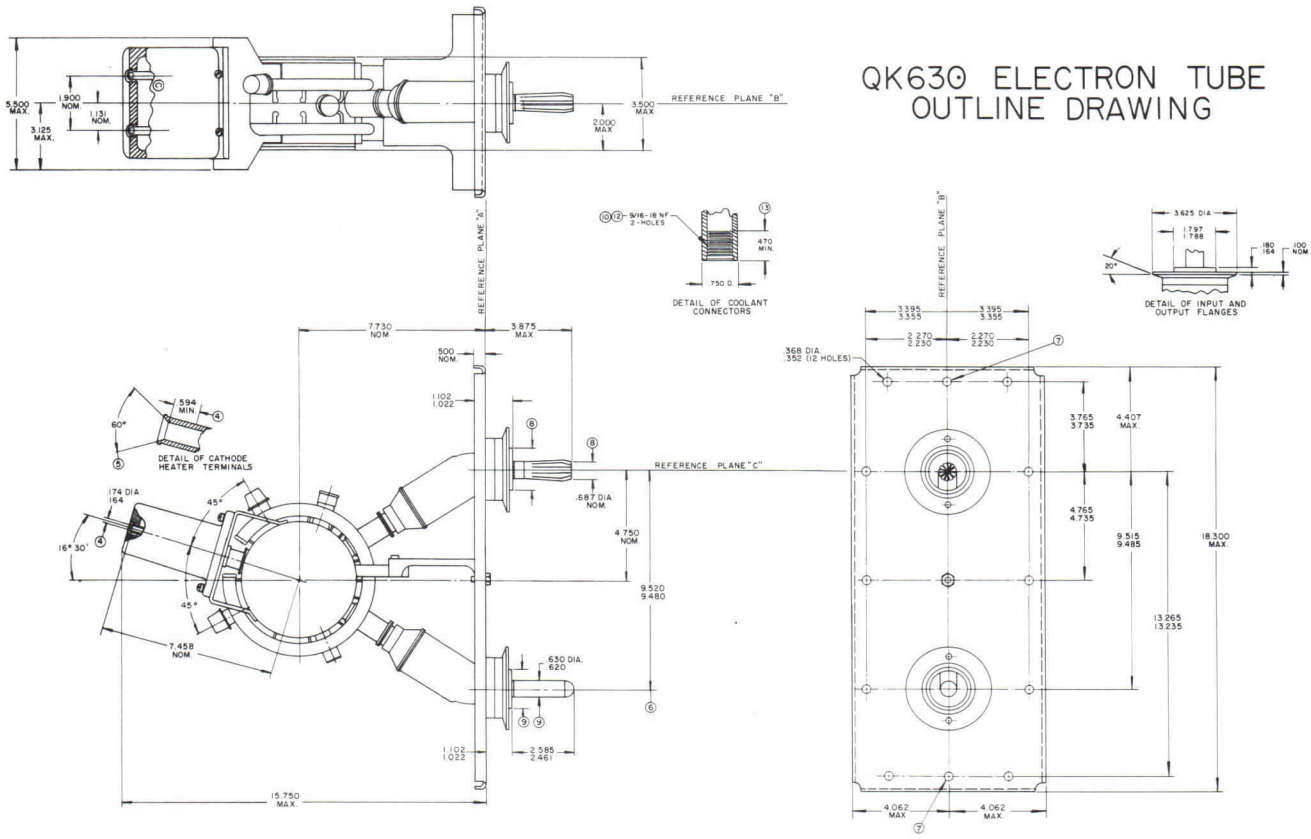

NOTES

1) REFERENCE PLANE "A" IS DEFINED AS A PLANE PASSING ALONG THE FACE OF THE MOUNTING PLATE AS SHOWN
2) REFERENCE PLANE "B" IS DEFINED AS A PLANE PERPENDICULAR TO REFERENCE PLANE "A" AND PASSING THROUGH THE CENTERS OF DIAMETERS "XX" AND "YY" AS SHOWN
3) REFERENCE PLANE "C" IS DEFINED AS A PLANE PERPENDICULAR TO REFERENCE PLANES "A" AND "B" AND PASSING THROUGH THE CENTER OF DIAMETER "XX" AS SHOWN
4) JACK HOLE DIAMETERS APPLY FOR DEPTH SHOWN
5) THIS COUNTERSINK SHALL BE CAPABLE OF ACCEPTING A CONE HAVING A 60° INCLUDED ANGLE AND A BASE DIAMETER OF 0.234 AND SHALL REJECT A SIMILAR CONE HAVING A BASE DIAMETER OF 0.254
6) THIS DIMENSION REFERS TO THE CENTERLINE OF DIAMETER "Y"
7) THESE HOLES TO BE LOCATED ON REFERENCE PLANE "B" WITHIN .015
8) WITH A GAGE HAVING AN 1.820 I.D. AND CONCENTRIC 0.640 I.D. PLACED OVER THESE DIAMETERS, ALL FINGERS OF THE INPUT CONNECTOR MUST CONTACT THE 0.640 DIAMETER
9) A GAGE HAVING A 1.797 I.D. AND CONCENTRIC 0.655 I.D. MUST PASS OVER THESE DIAMETERS
10) PITCH DIAMETER MUST ACCEPT CLASS 2 "GO" GAGE ONLY
11) MINOR DIAMETER MUST NOT BE GREATER THAN 0.513
12) APPLIES TO DEPTH OF FULL THREAD

Figure 11

Printed in U.S.A.

MICROWAVE AND POWER TUBE DIVISION

RAYTHEON COMPANY

FOUNDRY AVE., WALTHAM 54, MASS.

RAYTHEON

TECHNICAL INFORMATION

TENTATIVE DATA

Excellence in Electronics

TYPE QK634

GENERAL DESCRIPTION

The QK634 "M" Type Backward Wave Oscillator is voltage tunable over the frequency band 8150 to 11,000 megacycles with a minimum C.W. power output of 156 watts. It has an integral magnet, requires liquid-cooling, and is designed for coupling to standard ½" x 1" waveguide. The tube is capable of being amplitude modulated and/or frequency modulated at rates exceeding 10 megacycles.

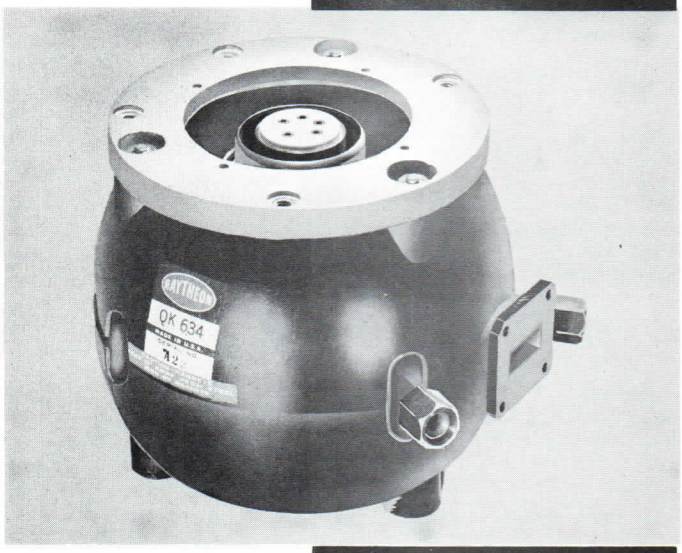

"M" TYPE BACKWARD WAVE OSCILLATOR

GENERAL CHARACTERISTICS

ELECTRICAL

Heater Voltage Preheat	10.0 volts
Heater Voltage Operate	10.0 volts
Heater Current	1.1-1.7 amps.
Minimum Preheating Time	30 sec.
Frequency	8150-11,000 mcs.
Delay Line Voltage	2100-5200 volts
Delay Line Current	275 ma
Accelerator Voltage	1000-2000 volts
Sole Voltage	—1600 volts
Grid Voltage	—600 volts
Power Output Minimum	156 watts
Power Output Nominal	200-250 watts

MECHANICAL

Mounting Position	Any
Detailed Dimensions	See outline drwg. (Fig. #8)
Weight	20 lbs. approximate
Cooling	Liquid

ELEMENT IDENTIFICATION

GENERAL

All potentials are referenced to the cathode. Figure #1 illustrates the QK634 schematically as a pentode and shows the polarity of the potentials that must be applied.

Figure #2 illustrates the position of the elements within the tubes and will help to clarify their functions.

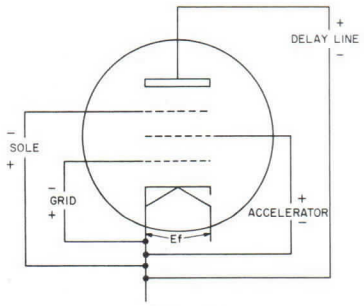

Figure 1

Printed in U.S.A.

ELEMENTS OF HIGH POWER BACKWARD-WAVE OSCILLATOR

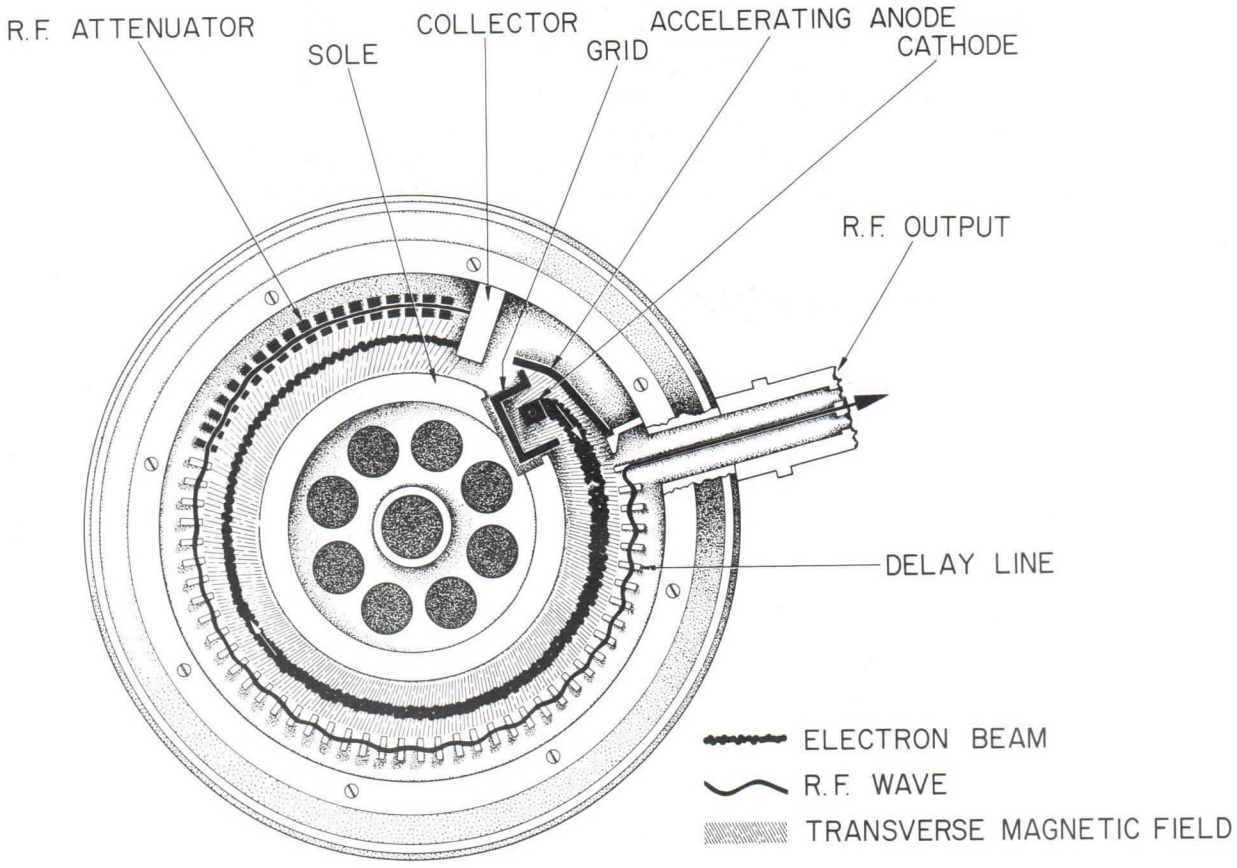

Figure 2

HEATER

The QK634 should be preheated at 10.0 volts for a minimum of 30 seconds. Heater surge current should not exceed 150% of rated current.

DELAY LINE

The delay line or anode is the same potential as the body of the tube. For most applications this potential is grounded. The entire frequency band, 8150-11,000 mcs, can be tuned by varying the delay line voltage. Tuning sensitivity is approximately 1 mc per volt. The delay line voltage may be swept with any desired waveform and at rates up to and exceeding 10 mcs to achieve any desired bandwidth of frequency modulation.

See Figure #3 for typical delay line voltage-frequency characteristics.

SOLE

The sole electrode is biased negatively with respect to the cathode and in its parallel position to the delay line serves to bound the electron interaction space. The quiescent sole bias is fixed for all QK634's at —1600 volts.

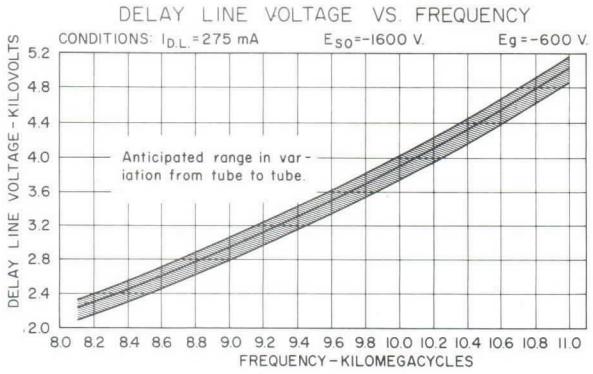

Figure 3

Frequency is determined fundamentally by the delay line to sole potential. Therefore, frequency modulation may also be achieved by varying the sole potential with the same tuning sensitivity (1.0 mc. per volt) as the delay line.

Sole frequency modulation is limited to a smaller percentage of the band and modulation in excess of ±200 mcs is not recommended.

GRID

The grid is not a control electrode. Its function is to optimize electron gun optics to maximize tube efficiency. The grid should never be biased positive with respect to the cathode. All QK634's should be operated with a grid bias of —600 volts.

ACCELERATOR

The accelerator which controls delay line current is biased positive with respect to the cathode. Amplitude modulation can be achieved by varying the accelerator voltage. Due to frequency pushing, inherent frequency modulation accompanies amplitude modulation. Pushing is defined as an R.F. frequency change resulting from a change in delay line current. Pushing which may be as high as 0.75 mcs per milliampere is neither linear over the frequency band nor over the current range. The tube manufacturer should be consulted regarding A.M. requirements.

ELECTRODE CURRENTS (With respect to cathode)

Current is defined as flowing from a positive to a negative potential in the circuit of the power supply.

The grid current may be either positive or negative.

The accelerator current is always positive.

The sole current may be either positive or negative. Sole current varies with frequency and the performance of the typical QK634 is illustrated by Figure 4.

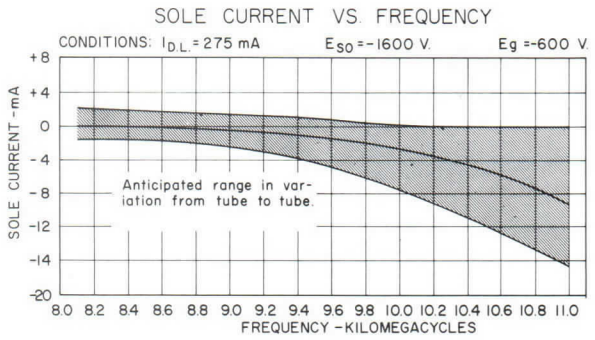

Figure 4

All electrode currents may change with the life of the tube. Chart #1 gives the maximum new tube limits as well as the maximum end of life limits which may be expected.

ELECTRODE CURRENTS

PARAMETER	MAXIMUM NEW TUBE LIMIT	MAX. END OF LIFE LIMITS
Grid Current	± 1 mA	± 3 mA
Accelerator Current	+ 1 mA	+ 3 mA
Sole Current	+ 2 mA - 18 mA	+ 5 mA - 20 mA

Chart # 1

INTERELECTRODE CAPACITANCE

Frequency and amplitude modulation rates normally encountered are limited mainly by modulation power and inter-electrode capacity. The maximum capacities that should be considered for system design are given in chart #2. Capacity is measured from the indicated electrode to all other electrodes tied together.

R.F. POWER OUTPUT

The minimum C.W. power output of the QK634 is 156 watts. The actual power output is greater

INTERELECTRODE CAPACITY	
Sole Capacity	60 uuf Max.
Accelerator Capacity	15 uuf Max.
Grid Capacity	23 uuf Max.
Cathode Capacity	20 uuf Max.
Delay Line Capacity	40 uuf Max.

Chart # 2

and averages from 200 to 250 watts over the band. Figure #5 illustrates the power output of the typical QK634.

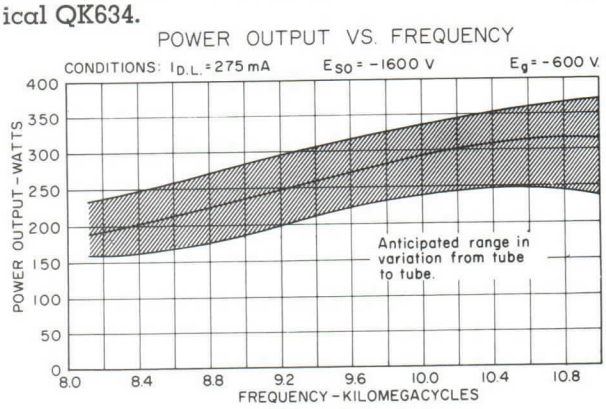

Figure 5

ELECTRICAL INPUT

The electrode connections to the input bushing are shown in Figure #6. Connections are made with miniature banana plugs. An acceptable connector can be furnished by Ucinite Company, Newtonville, Mass., Part No. 154689.

For high altitude operation, the input bushing must be pressurized or immersed in an insulating liquid. Sealing can be accomplished with a piston type O ring similar to the gauge shown on the tube outline drawing figure #8.

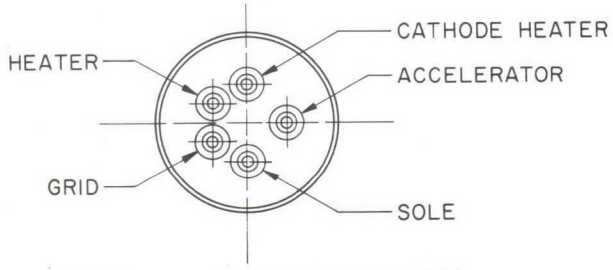

ELECTRICAL INPUT CONNECTIONS

Figure 6

R.F. OUTPUT

The QK634 output flange is designed to couple to a standard ½" x 1" waveguide. A standard X band UG 40 A/U with holes modified to provide clearance for #8-32 bolts, mates with the output flange. The R.F. output is designed to operate unpressurized to 60,000 feet altitude.

COOLING

The QK634 is designed for liquid cooling of the delay line. Figure #7 gives the pressure drop-vs-flow characteristics with water of the QK634 cooling jacket. Since many different cooling fluids can be used, the tube manufacturer should be consulted regarding limitations pertaining to the different fluids. In any event, the temperature of the delay line as measured at the point indicated on the tube outline drawing Figure #8 should never exceed 150°C.

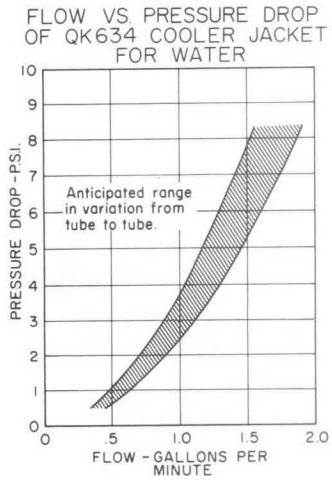

Figure 7

PRECAUTIONS:

Overload protection at least in the form of fast acting relays should be employed on all power supplies. Accelerator voltage should be removed immediately in cases where the delay line voltage falls below 2000 volts or sustained arcs occur between any tube elements. Accelerator voltage should only be applied when the delay line, grid, and sole voltages are within limits.

The accelerator regulator should be designed so as to sense and regulate cathode current.

QK 634 ELECTRON TUBE OUTLINE DRAWING

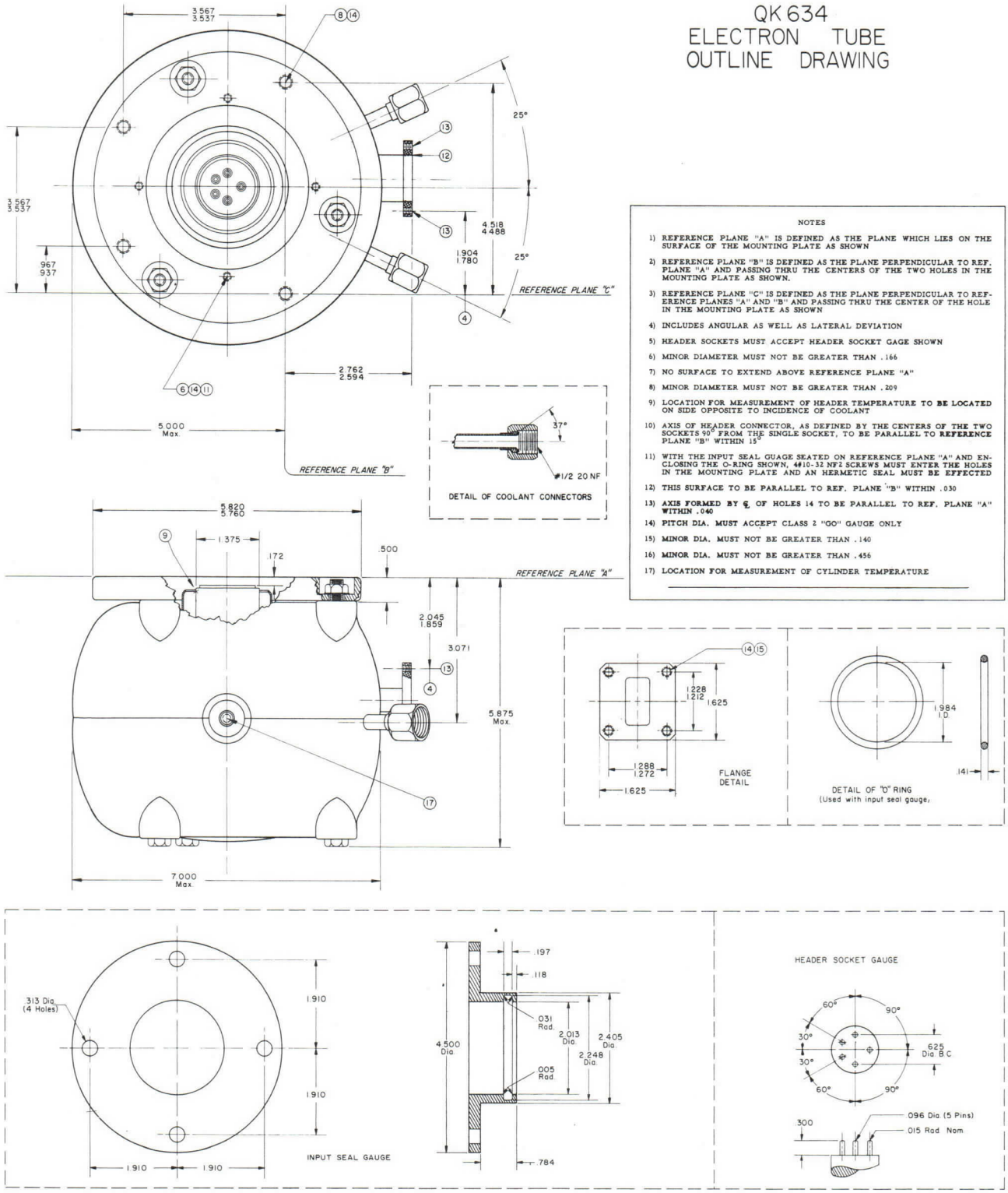

NOTES

1) REFERENCE PLANE "A" IS DEFINED AS THE PLANE WHICH LIES ON THE SURFACE OF THE MOUNTING PLATE AS SHOWN
2) REFERENCE PLANE "B" IS DEFINED AS THE PLANE PERPENDICULAR TO REF. PLANE "A" AND PASSING THRU THE CENTERS OF THE TWO HOLES IN THE MOUNTING PLATE AS SHOWN.
3) REFERENCE PLANE "C" IS DEFINED AS THE PLANE PERPENDICULAR TO REFERENCE PLANES "A" AND "B" AND PASSING THRU THE CENTER OF THE HOLE IN THE MOUNTING PLATE AS SHOWN
4) INCLUDES ANGULAR AS WELL AS LATERAL DEVIATION
5) HEADER SOCKETS MUST ACCEPT HEADER SOCKET GAGE SHOWN
6) MINOR DIAMETER MUST NOT BE GREATER THAN .166
7) NO SURFACE TO EXTEND ABOVE REFERENCE PLANE "A"
8) MINOR DIAMETER MUST NOT BE GREATER THAN .209
9) LOCATION FOR MEASUREMENT OF HEADER TEMPERATURE TO BE LOCATED ON SIDE OPPOSITE TO INCIDENCE OF COOLANT
10) AXIS OF HEADER CONNECTOR, AS DEFINED BY THE CENTERS OF THE TWO SOCKETS 90° FROM THE SINGLE SOCKET, TO BE PARALLEL TO REFERENCE PLANE "B" WITHIN 15°
11) WITH THE INPUT SEAL GUAGE SEATED ON REFERENCE PLANE "A" AND ENCLOSING THE O-RING SHOWN, 4#10-32 NF2 SCREWS MUST ENTER THE HOLES IN THE MOUNTING PLATE AND AN HERMETIC SEAL MUST BE EFFECTED
12) THIS SURFACE TO BE PARALLEL TO REF. PLANE "B" WITHIN .030
13) AXIS FORMED BY ℄ OF HOLES 14 TO BE PARALLEL TO REF. PLANE "A" WITHIN .040
14) PITCH DIA. MUST ACCEPT CLASS 2 "GO" GAUGE ONLY
15) MINOR DIA. MUST NOT BE GREATER THAN .140
16) MINOR DIA. MUST NOT BE GREATER THAN .456
17) LOCATION FOR MEASUREMENT OF CYLINDER TEMPERATURE

Figure 8

Printed in U.S.A.

MICROWAVE AND POWER TUBE DIVISION

RAYTHEON COMPANY

FOUNDRY AVE., WALTHAM 54, MASS.

TYPE QKB691

GENERAL DESCRIPTION

The QKB691 is a voltage-tunable backward wave oscillator designed for CW or pulsed operation over the 2000- to 4000-Mc range with a typical power output of 500 milliwatts at mid band. It is an integral magnet, coaxial output type tube requiring forced-air cooling and is designed for coupling to standard type "N" connector. A special control electrode, normally at cathode potential, facilitates low-voltage, pulsed or amplitude modulation.



BACKWARD WAVE OSCILLATOR

GENERAL CHARACTERISTICS

ELECTRICAL

Heater Characteristics

Heater Voltage	6.3 V
Heater Current	1.3 A
Cathode Heating Time	1.0 minute min.

Maximum Ratings

Anode Voltage	250 Vdc
Anode Current	20 mAdc
Delay-Line Voltage	1600 Vdc Max. 100 Vdc Min.*
Delay-Line Current	45 mAdc
Delay-Line Dissipation	68 W
Control Electrode Voltage	
Positive Value	0 Vdc
Negative Value	100 Vdc

The values specified above must not be exceeded under any service condition. The ratings are limiting values above which the serviceability of any individual tube may be impaired. It does not necessarily follow that combinations of maximum ratings can be attained simultaneously.

* Minimum value may be exceeded provided care is taken that the attendant increased anode current will not result in excessive anode dissipation.

Typical Operation CW

Frequency Range	2000—4000 Mc
Delay-Line Voltage	150—1400 Vdc
Delay-Line Current	40 mAdc
Anode Voltage	130 Vdc
Anode Current	1-10 mAdc
Grid Voltage	0 Vdc
Power Output	0.1-1.0 W

Printed in U.S.A.

MECHANICAL

Over-all Dimensions	See outline drawing
Net Weight	8.5 lbs. approx.
Mounting Position	Any
Cooling	Forced air, 10 cu. ft/ min.
Output Coupling	Coaxial Type "N" Female
Base	Standard Intermediate Octal

DETAILED ELECTRICAL INFORMATION

CONTROL ELECTRODE

For CW operation at maximum power output, the control grid is tied to the cathode. In applications where pulsed or amplitude modulation is required, the circuit given in Figure 1 is recommended. The control grid must never be operated positive with respect to the cathode.

SIMPLIFIED MODULATION CIRCUIT

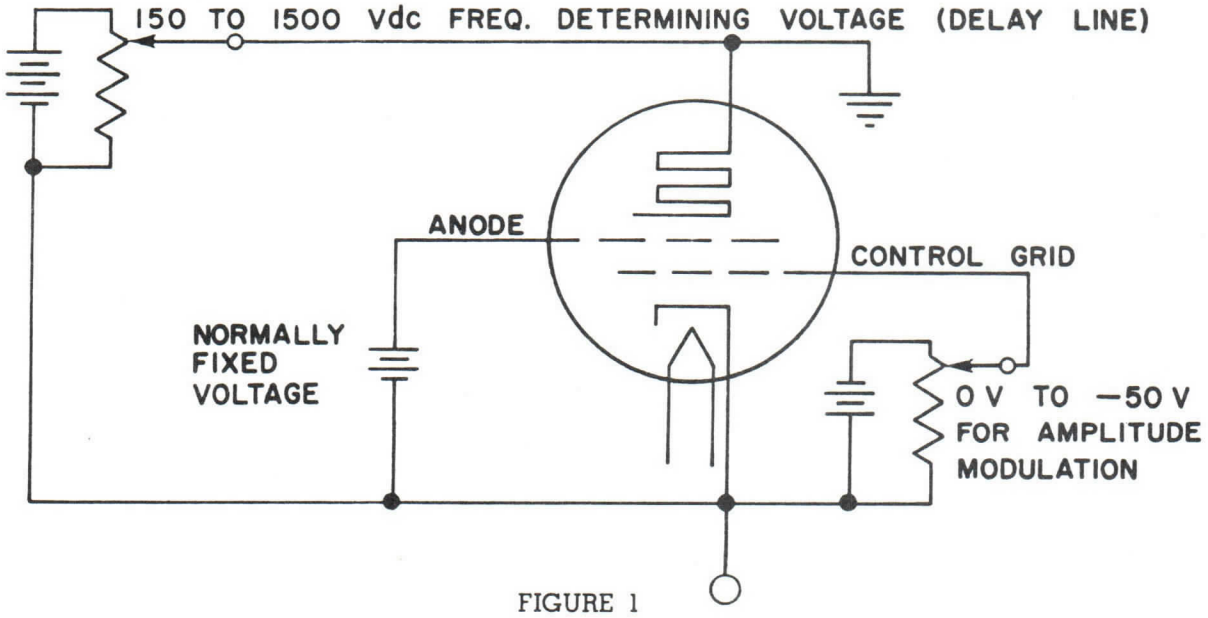

FIGURE 1

FREQUENCY STABILITY

The regulation of the voltage supplied to the delay line and anode will be reflected directly in the stability of the output frequency.

The regulation of the control electrode bias supply will be reflected directly in the power output of the tube. Therefore, the regulation of these supplies must be commensurate with the power and frequency stability requirements of the application.

QKB691 POWER OUTPUT & FREQUENCY VS. DELAY LINE VOLTAGE

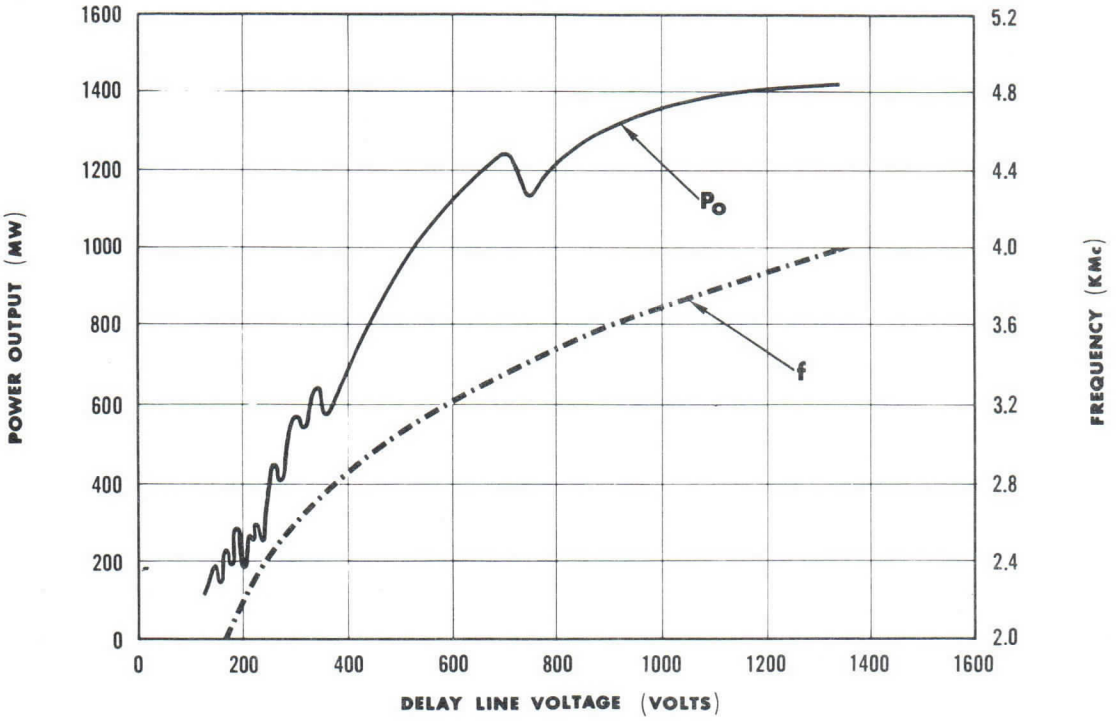

OPERATING PRECAUTIONS

In order to prevent damage to the tube, the anode voltage must not be applied without the minimum delay line voltage being applied before the anode voltage. Failure to observe this precaution will result in excessive anode current and possible burn out. Simultaneous application of all voltages after the preheat time is permissible. The grid must always be either zero or negative — never positive and can be applied or removed at any time with or without anode or delay line voltage except in the special case where the anode voltage is set high enough so that with operation without negative grid bias, the maximum cathode-delay line current would be exceeded. In this case, the negative grid voltage must be applied before or simultaneously with but never after the anode. The grid and anode should not be allowed to float with respect to the cathode since these tubes contain a tetrode gun.

The cooling system capacity must be sufficient to maintain the delay-line temperature below 125° C and must be in operation before the application of the above voltages.

Adequate clearance must be maintained between the tube magnet and ferromagnetic materials or other magnets to avoid deterioration of the tube's gauss level. Generally a 4 inch clearance is sufficient.

Printed in U.S.A.

MICROWAVE AND POWER TUBE DIVISION

RAYTHEON COMPANY

FOUNDRY AVE., WALTHAM 54, MASS.

VOLTAGE-TUNABLE BACKWARD WAVE OSCILLATOR

NOTE:

A. THESE TOLERANCES OCCASIONED BY THE NECESSITY FOR MANUFACTURERS ADJUSTMENT OF TUBE BODY WITHIN MAGNET ASSEMBLY. ADJUSTING SCREWS ARE PRE-SET BY MANUFACTURER.

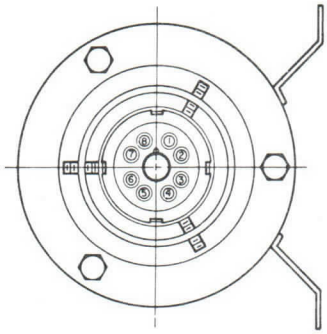

PIN CONNECTIONS

1) SHELL & DELAY LINE
2) ANODE
3) N.C.
4) N.C.
5) GRID
6) N.C.
7) HEATER
8) H-CATHODE

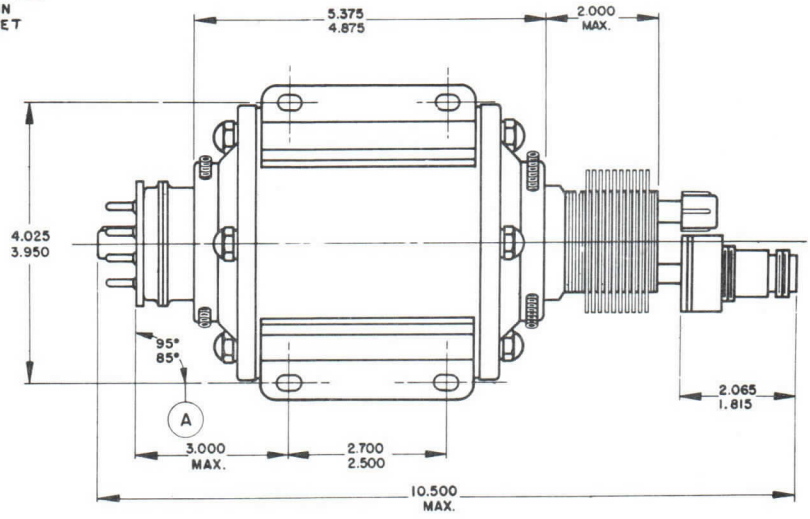

QKB691 ELECTRON TUBE OUTLINE DRAWING

The tabluated data and accompanying graphs are representative of only a small sample and are presented as general information for the circuit designer. They should not be interpreted as completely defining the expected spread of the tube's characteristics. Detailed information necessary for specific applications may be obtained by contacting the Applications Engineering Department, Microwave and Power Tube Operations.

REFERENCES

"New Oscillator Tubes With Wide-Band Electronic Tuning At Microwave Frequencies," P. Guénard, O. Doehler, B. Epsztein and R. Warnecke, C. R. Acad. Sci. (Paris) vol. 235, pp. 236-8 (July 21, 1952). In French.

"Understanding the Backward Wave Oscillator", D. A. Dunn, *Electronic Industries*, January, 1958.

"Fundamental Phenomena In Traveling-Wave Tubes," R. Warnecke, P. Guénard and O. Doehler, Onde Élect. vol. 34, No. 325, pp. 323-38 (April 1954). In French.

"The OType Carcinotron Tube", Palluel and Goldberger, *Proceedings of the I.R.E.*, March 1956, pp. 333-345.

The technical information on this data sheet is of a proprietory nature and is furnished as a customer service for private use only.

QKB760A **OBJECTIVE DATA SHEET**

RAYTHEON *Excellence in Electronics*

The QKB760A is a rugged C band "O" type backward wave oscillator designed for use as a local oscillator, driver tube for an amplifier chain, and for other applications requiring a voltage tunable RF signal source such as signal generators. This tube type employs a compact integral permanent magnet and has a control electrode which facilitates low voltage pulsed or amplitude modulation.

GENERAL CHARACTERISTICS

ELECTRICAL

Heater Characteristics

Heater Voltage	6.3 Volts
Heater Current	1.0 A
Cathode Heating Time	60 Sec. Min.
Heater Cathode Leakage (E_{hk} = ± 90 V)	5 mA Max.

Maximum Ratings

Anode Voltage	150 Vdc
Anode Current	10 mAdc
Delay Line Voltage	1500 Vdc
Cathode Current	45 mAdc
Control Electrode Voltage	
Positive Value	0 Vdc
Negative Value	-100 Vdc
Delay Line Temperature	125°C
Altitude	No Limit

Typical Operation CW

VSWR	1.25:1 Max.
Frequency Range	4000 - 8000 Mc
Delay Line Voltage (Tuning Voltage)	150 - 1400 Vdc
Cathode Current	20 - 40 mAdc
Anode Voltage (Note 1)	75 - 125 Vdc
Anode Current	0 mA
Control Grid Voltage	0 Vdc
Power Output	20 mW Min.
Fine Grain Power Output Variation (Note 2)	± 0.5 db Max.
Vibration = 10 to 55 cps @ .08" displacement 55 to 500 cps @ 20 G's	△ F = 1.0 Mc. Max.

The specifications for this tube have not been finalized. The tube is in the development stage and is available for engineering analysis purposes only. This engineering information and/or delivery of sample tubes do not imply availability of tubes with the same electrical and/or mechanical characteristics. Changes in ratings and/or dimensions may be made at our discretion as deemed advisable by manufacturing experience or other considerations. For current information concerning this tube contact the nearest Microwave and Power Tube Regional Sales Representative.

Shock	30 G's, 11 msec
Heater F.M. (E_f = 6.3 V @ 60 cps)	0.5 Mc Max.
Tuning Curve Linearity (Note 3)	± 1.0 Mc. Max.
Tuning Curve Repeatability (Note 4)	△ F = 5% Max.
Frequency Pushing (E_g = 0 to -25 Vdc)	△ F = 50 Mc. Max.
Temperature Coefficient	± 50 Kc/°C Max.
Noise Figure (Note 5)	30 db Max.
Spurious Oscillations (Note 6)	50 db Min.
Life (Warranteed)	1000 Hours

MECHANICAL

Input Base	Potted, With Flying Leads
Cooling	Freely Circulating Air
Output Coupling	Coaxial Type "N"
Mounting Position	Any
Weight	6 1/2 Lbs. Max.
Interelectrode Capacity (Between any two electrodes except H-K)	20 uuf Max.
Focusing	Integral Permanent Magnet
Proximity (Note 7)	2 Inches

COLOR CODE

Red	Green	Yellow	Brown	Blue
Delay Line	Grid	Cathode	Heater	Anode

Note 1: The anode voltage should be set at the value specified for each tube.

Note 2: For any 100 Mc band in the frequency range, the power output shall not deviate from a smooth curve by more than the amount specified.

Note 3: The tuning curve will not deviate from a monotonic function by more than the value specified when operating a load VSWR of up to 1.5 to 1.0.

Note 4: From tube to tube, the frequency will be within 5% for any given value of delay line voltage.

Note 5: At 30, 45 and 60 Mc I.F.'s.

Note 6: Within ±5 Mc of the center frequency, the spurious oscillations shall be at least 50 db down from the main signal.

Note 7: A 2 inch separation must be maintained between the tube magnet and ferromagnetic materials or other magnets for proper operation.

The technical information on this data sheet is of a proprietory nature and is furnished as a customer service for private use only.

QKB 776 **OBJECTIVE DATA SHEET**

RAYTHEON *Excellence in Electronics*

The QKB776 is a rugged X band "O" type backward wave oscillator designed for use as a local oscillator, driver tube for an amplifier chain, and for other applications requiring a voltage tunable R-F signal source such as signal generators. This tube type employs a compact integral permanent magnet and has a control electrode which facilitates low voltage pulsed or amplitude modulation.

GENERAL CHARACTERISTICS

ELECTRICAL

Heater Characteristics

Heater Voltage	6.3 Volts
Heater Current	1.8 A
Cathode Heating Time	60 Sec. Min.
Heater Cathode Leakage ($E_{hk} = \pm 90$ V)	5 mA Max.

Maximum Ratings

Anode Voltage	150 Vdc
Anode Current	5 mA
Delay Line Voltage	1500 Vdc
Cathode Current	45 mAdc
Control Electrode Voltage	
Positive Value	0 Vdc
Negative Value	-150 Vdc
Delay Line Temperature	125°C
Altitude	No Limit

Typical Operation CW

VSWR	1.25:1 Max.
Frequency Range	8000 - 12,400 Mc
Delay Line Voltage (Tuning Voltage)	180 - 1400 Vdc
Cathode Current	20-40 mAdc
Anode Voltage (Note 1)	75 - 100 Vdc
Anode Current	0 mA
Control Grid Voltage	0 Vdc
Power Output	20 mW Min.
Fine Grain Power Output Variation (Note 2)	$\pm$ 0.5 db Max.
Vibration = 10 to 55 cps at .08" displacement 55 to 2000 cps @ 20 G's	Δ F = 1.0 Mc Max.

The specifications for this tube have not been finalized. The tube is in the development stage and is available for engineering analysis purposes only. This engineering information and/or delivery of sample tubes do not imply availability of tubes with the same electrical and/or mechanical characteristics. Changes in ratings and/or dimensions may be made at our discretion as deemed advisable by manufacturing experience or other considerations. For current information concerning this tube contact the nearest Microwave and Power Tube Regional Sales Representative.

Shock	30 G's, 11 msec
Heater F.M. (E_f = 6.3 V at 60 cps)	0.5 Mc. Max.
Tuning Curve Linearity (Note 3)	± 1.0 Mc Max.
Tuning Curve Repeatability (Note 4)	△ F = 5% Max.
Frequency Pushing (E_g = 0 to -25 Vdc)	△ F = 50 Mc Max.
Temperature Coefficient	± 50 Kc/°C Max.
Noise Figure (Note 5)	30 db Max.
Spurious Oscillations (Note 6)	50 db Min.
Life (Warranteed)	1000 Hours

MECHANICAL

Input Base	Potted, With Flying Leads
Cooling	Freely Circulating Air
Output Coupling	Waveguide, RG52/U
Mounting Position	Any
Weight	5 1/2 Lbs. Max.
Interelectrode Capacity (Between any two electrodes except H-K)	20 uuf Max.
Focusing	Integral Permanent Magnet
Proximity (Note 7)	2 Inches

COLOR CODE

Red	Green	Yellow	Brown	Blue
Delay Line	Grid	Cathode	Heater	Anode

Note 1: The anode voltage should be set at the value specified for each tube.

Note 2: For any 200 Mc band in the frequency range, the power output shall not deviate from a smooth curve by more than the amount specified.

Note 3: The tuning curve will not deviate from a monotonic function by more than the value specified when operating into a load VSWR of up to 1.5 to 1.0.

Note 4: From tube to tube, the frequency will be within 5% for any given value of delay line voltage.

Note 5: At 30, 45 and 60 Mc I.F.'s

Note 6: Within ±5 Mc of the center frequency, the spurious oscillations shall be at least 50 db down from the main signal.

Note 7: A 2 inch separation must be maintained between the tube magnet and ferromagnetic materials or other magnets for proper operation.

The technical information on this data sheet is of a proprietory nature and is furnished as a customer service for private use only.

QKB786 **OBJECTIVE DATA SHEET**

RAYTHEON *Excellence in Electronics*

The QKB786 is a rugged L band "O" type backward wave oscillator designed for use as a local oscillator, as a driver tube for an amplifier chain, as an oscillator for a signal generator and for other applications requiring a voltage tunable RF signal source. This tube type employs a compact integral permanent magnet and has a control electrode which facilitates low voltage pulsed or amplitude modulation.

GENERAL CHARACTERISTICS

ELECTRICAL

Heater Characteristics

Heater Voltage	6.3 Volts
Heater Current	1.5 A
Cathode Heating Time	60 Sec. Min.
Heater Cathode Leakage (E_{hk} = ± 90 V)	5 mA Max.

Maximum Ratings

Anode Voltage	250 Vdc
Anode Current	10 mAdc
Delay Line Voltage	1500 Vdc
Cathode Current	45 mAdc
Control Electrode Voltage	
Positive Value	0 Vdc
Negative Value	-200 Vdc
Delay Line Temperature	125°C
Altitude	No Limit

Typical Operation CW

VSWR	1.25:1 Max.
Frequency Range	1000-2000 Mc.
Delay Line Voltage (Tuning Voltage)	150-1250 Vdc
Cathode Current	20-40 mAdc
Anode Voltage (Note 1)	100-200 Vdc
Anode Current	0 mA
Control Grid Voltage	0 Vdc
Power Output	100 mW Min.
Fine Grain Power Output Variation (Note 2)	± 0.5 db Max.

The specifications for this tube have not been finalized. The tube is in the development stage and is available for engineering analysis purposes only. This engineering information and/or delivery of sample tubes do not imply availability of tubes with the same electrical and/or mechanical characteristics. Changes in ratings and/or dimensions may be made at our discretion as deemed advisable by manufacturing experience or other considerations. For current information concerning this tube contact the nearest Microwave and Power Tube Regional Sales Representative.

Vibration = 10 to 55 cps @ .08" displacement 55 to 500 cps @ 20 G's	$\triangle$F=1.0 Mc Max.
Shock	30 G's, 11 msec.
Heater FM (E_f = 6.3 Vac at 60 cps)	0.5 Mc Max.
Tuning Curve Linearity (Note 3)	$\pm$ 700 Kc Max.
Tuning Curve Repeatability (Note 4)	$\triangle$ F = 5% Max.
Frequency Pushing (E_g = 0 to -25 Vdc)	$\triangle$ F = 15 Mc Max.
Temperature Coefficient	$\pm$ 50 Kc/°C Max.
Noise Figure (Note 5)	30 db Max.
Spurious Oscillations (Note 6)	50 db Min.
Life (Warranteed)	1000 Hrs.

MECHANICAL

Input Base	Potted, with flying leads
Cooling	Freely Circulating Air
Output Coupling	Coaxial Type "N"
Mounting Position	Any
Weight	10 Lbs. Max.
Interelectrode Capacity (Between any two electrodes except H-K)	20 uuf Max.
Focusing	Integral Permanent Magnet
Proximity (Note 7)	2 Inches

COLOR CODE

Red	Green	Yellow	Brown	Blue
Delay Line	Grid	Cathode	Heater	Anode

Note 1: The anode voltage should be set at the value specified for each tube.

Note 2: For any 100 Mc band in the frequency range the power output shall not deviate from a smooth curve by more than the amount specified.

Note 3: The tuning curve will not deviate from a monotonic function by more than the value specified when operating into a load VSWR of up to 1.5 to 1.0.

Note 4: From tube to tube, the frequency will be within 5% for any given value of delay line voltage.

Note 5: At 30, 45 and 60 Mc I.F.'s

Note 6: Within $\pm$ 5 Mc of the center frequency, the spurious oscillations shall be at least 50 db down from the main signal.

Note 7: A 2 inch separation must be maintained between the tube magnet and ferromagnetic materials or other magnets for proper operation.

The technical information on this data sheet is of a proprietory nature and is furnished as a customer service for private use only.

QKB808

PRELIMINARY

DATA SHEET

RAYTHEON *Excellence in Electronics*



QKB808

The QKB808 is a rugged X band "O" type backward wave oscillator designed for use as a local oscillator, driver tube for an amplifier chain, and for other applications requiring a voltage tunable RF signal source such as signal generators. This tube type employs a compact integral permanent magnet and has a control electrode which facilitates low voltage pulsed or amplitude modulation.

GENERAL CHARACTERISTICS

ELECTRICAL

Heater Characteristics

Heater Voltage	6.3 Volts
Heater Current	1.6 A
Cathode Heating Time	60 sec. min.
Heater Cathode Leakage (EHK ± 90 V)	5 mA Max.

Maximum Ratings

Anode Voltage	150 Vdc
Anode Current	5 mA
Delay Line Voltage	1700 Vdc
Cathode Current	45 mA
Delay Line Dissipation	65 W
Control Electrode Voltage	
Positive Valve	0 Vdc
Negative Valve	150 Vdc
Delay Line Temperature (Adjacent to Cooling Fins)	150°C
Altitude (With magnet shorted to tube body)	75,000 ft.

Typical Operation CW

VSWR	1.25: 1 Max.
Frequency Range	6700-12,000 Mc
Delay Line Voltage (Tuning Voltage)	230-1550 Vdc
Delay Line Current	18-35 mA
Anode Voltage (Note 1)	75-100 Vdc
Anode Current	0 mA
Grid Voltage	0 Vdc
Power Output (20 mw Min Guarantee)	30 mW Min.
Power Output (8500-12,000 Mc) (Note 8)	100 mW Min.
Fine Grain Power Output Variation (Note 2)	± 0.5 db
Vibration: 10 to 55 cps at .08" displacement	$\overline{\Delta}F$ = 2.0 Mc
55 to 500 cps at 10 G's	

The specifications for this tube have not been finalized. The tube is being manufactured in limited quantities and is available for engineering analysis purposes only. This engineering information and/or delivery of sample tubes do not imply availability of tubes with the same electrical and/or mechanical characteristics. Changes in ratings and/ or dimensions may be made at our discretion as deemed advisable by manufacturing experience or other considerations. For current information concerning this tube contact the nearest Microwave and Power Tube Regional Sales Representative.

Shock	30 G's
Heater FM (Ef = 6.3 Vac at 60 cps)	0.5 Mc
Tuning Curve Linearity (Note 3)	±2.0 Mc
Tuning Curve Repeatability (Note 4)	± 2.5%
Frequency Pushing (E_G = 0 to -25 Vdc)	ΔF = 50 Mc
Temperature Coefficient	-200 Kc/°C
Noise Figure (Note 5)	35 db
Spurious Oscillation (Note 6)	50 db
Life (Warranteed)	1000 hrs.

MECHANICAL

Input Base	Potted, with flying leads
Cooling	Forced Air
Output Coupling	Type "N" Connector
Mounting Position	Any
Weight	4 1/2 lbs. approx.
Interelectrode Capacity (except heater to cathode) (Between any two elements)	20 uuf
Focusing (Note 7)	Integral Permanent Magnet
Proximity (Note 9)	2 Inches

COLOR CODE

Shell	Red & Delay Line	Green Grid	Yellow Cathode	Brown Heater	Blue Anode

Note 1: The anode voltage should be set at the value specified for each tube.

Note 2: The power output will not vary from a smooth curve drawn through the power output vs. frequency curve by more than ± 0.5 db.

Note 3: The tuning curve will not deviate from a monotonic function by more than ± 2.0 Mc when fed into a load VSWR up to 1.5 to 1.

Note 4: From tube to tube, the frequency will be within 2.5% for any given value of delay line voltage.

Note 5: At 30, 45, and 60 Mc IF's.

Note 6: Within ± 2 Mc of the center frequency, the spurious(ion) oscillations shall not be closer to the peak center frequency than 50 db.

Note 7: There will be no DC continuity between the magnet casing and the tube body.

Note 8: It is possible to obtain a minimum power output of 100 mw from 8500-12,000 Mc with a different anode voltage value than that supplied with the tube for optimum performance over the 6700-12,000 Mc range and still remain within the maximum ratings for this tube type.

Note 9: A 2 inch separation must be maintained between the tube magnet and ferromagnetic materials or other magnets for proper operation.

RAYTHEON

Excellence in Electronics

preliminary data sheet

POWER OUTPUT VS. FREQUENCY

(SEE NOTE 2 ON FINE GRAIN POWER OUTPUT VARIATIONS)

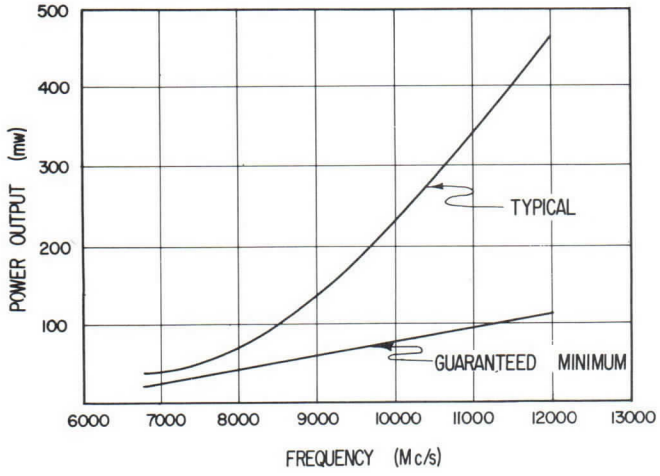

QKB808

DELAY LINE CURRENT AND FREQUENCY VS. DELAY LINE VOLTAGE

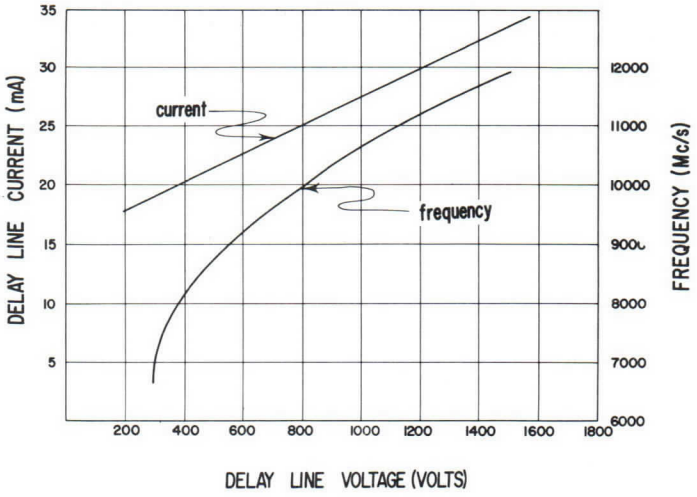

NOTES

1. REFERENCE PLANE "A" IS DEFINED AS A PLANE PASSING ALONG THE FACE OF MOUNTING BRACKETS.
2. REFERENCE PLANE "B" IS DEFINED AS A PLANE PERPENDICULAR TO PLANE "A" AND PASSING THROUGH THE CENTER OF THE SLOTS AT PLANE "A" AS SHOWN.
3. REFERENCE PLANE "C" IS DEFINED AS A PLANE MUTUALLY PERPENDICULAR TO PLANES "A" & "B" PASSING THROUGH THE CENTER OF THE SLOT AT PLANE "A" AS SHOWN.
4. THE CENTER OF THE CONNECTOR SHALL BE WITHIN A RADIUS OF .375 OF THE SPECIFIED LOCATION.
5. THESE TOLERANCES OCCASIONED BY THE NECESSITY FOR MANUFACTURERS ADJUSTMENT OF TUBE BODY WITHIN MAGNET.
6. TYPE "N" OUTPUT CONNECTOR.
7. CAUTION: LOOSENING SCREWS DAMAGES TUBE.
8. THE LINE OF CENTERS OF THE R-F OUTPUT AND THE PINCH-OFF SHALL NOT BE OUT OF ALIGNMENT WITH THIS LINE BY MORE THAN 5°.
9. CATHODE LEAD (YELLOW) MUST NOT DEVIATE FROM A PLANE PASSING THROUGH THE CENTERS OF THE R-F OUTPUT AND PINCH-OFF BY MORE THAN ± 20°.
10. REFERS TO CENTER OF THE O.D. OF TUBE BODY.

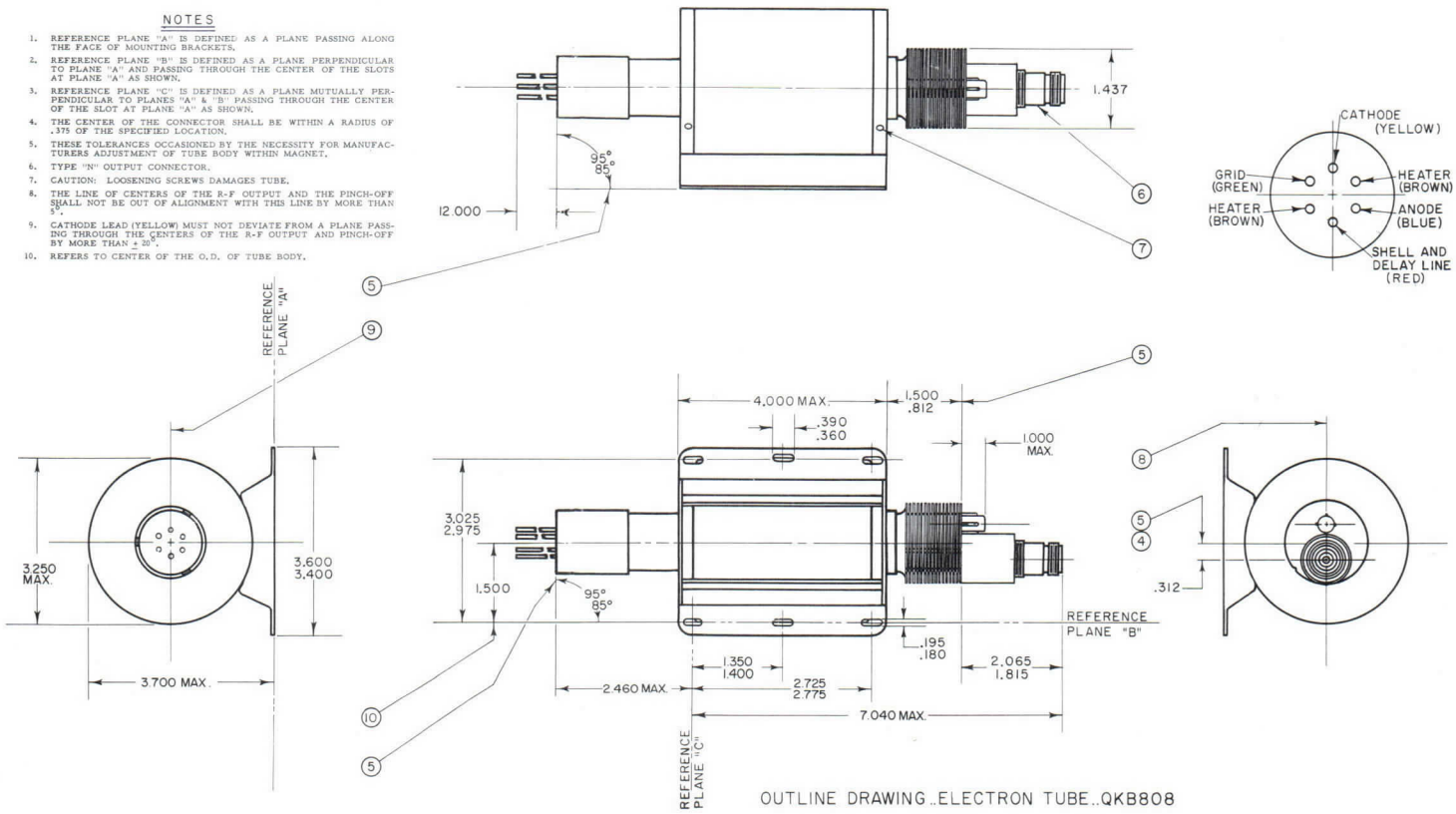

OUTLINE DRAWING..ELECTRON TUBE..QKB808

The technical information on this data sheet is of a proprietory nature and is furnished as a customer service for private use only.

QKB816A **OBJECTIVE DATA SHEET**

RAYTHEON *Excellence in Electronics*

The QKB816A is a rugged S band "O" type backward wave oscillator designed for use as a local oscillator, as a driver tune for an amplifier chain, as an oscillator for a signal generator and for other applications requiring a voltage tunable R-F signal source. This tube type employs a compact integral permanent magnet and has a control electrode which facilitates low voltage pulsed or amplitude modulation.

GENERAL CHARACTERISTICS

ELECTRICAL

Heater Characteristics

Heater Voltage	6.3 Volts
Heater Current	1.3 Amps
Cathode Heating Time	60 Sec. Min.
Heater Cathode Leakage (E_{hk} = ± 90 V)	5 mA Max.

Maximum Ratings

Anode Voltage	250 Vdc
Anode Current	5 mAdc
Delay Line Voltage	1500 Vdc
Cathode Current	45 mAdc
Control Electrode Voltage	
Positive Value	0 Vdc
Negative Value	-100 Vdc
Delay Line Temperature	125°C
Altitude	No Limit

Typical Operation CW

VSWR	1.25:1 Max.
Frequency Range	2000 to 4000 Mc
Delay Line Voltage (Tuning Voltage)	175 - 1350 Vdc
Cathode Current	20 - 40 mAdc
Anode Voltage (Note 1)	100 - 200 Vdc
Anode Current	0 mA
Control Grid Voltage	0 Vdc
Power Output	70 mW Min.
Fine Grain Power Output Variation (Note 2)	± 0.5 db Max.
Vibration: 10 to 55 cps @ .08" displacement	△ F = 1.0 Mc Max.
55 to 500 cps @ 20 G's	

The specifications for this tube have not been finalized. The tube is in the development stage and is available for engineering analysis purposes only. This engineering information and/or delivery of sample tubes do not imply availability of tubes with the same electrical and/or mechanical characteristics. Changes in ratings and/or dimensions may be made at our discretion as deemed advisable by manufacturing experience or other considerations. For current information concerning this tube contact the nearest Microwave and Power Tube Regional Sales Representative.

Shock	30 G's, 11 msec.
Heater FM (E_f = 6.3 Vac @ 60 cps)	0.5 Mc Max.
Tuning Curve Linearity (Note 3)	± 1 Mc Max.
Tuning Curve Repeatability (Note 4)	△ F = 5% Max.
Frequency Pushing (E_g = 0 to -25 Vdc)	△ F = 30 Mc Max.
Temperature Coefficient	± 50 Kc/°C Max.
Noise Figure (Note 5)	30 db Max.
Spurious Oscillations (Note 6)	50 db Min.
Life (Warranteed)	1000 Hours

MECHANICAL

Input Base	Potted, with Flying Leads
Cooling	Freely Circulating Air
Output Coupling	Coaxial Type "N"
Mounting Position	Any
Weight	6 1/2 Lbs. Max.
Interelectrode Capacity (Between any two electrodes except H-K)	20 uuf Max.
Focusing	Integral Permanent Magnet
Proximity (Note 7)	2 Inches

COLOR CODE

Red	Green	Yellow	Brown	Blue
Delay Line	Grid	Cathode	Heater	Anode

Note 1: The anode voltage should be set at the value specified for each tube.

Note 2: For any 100 Mc band in the frequency range, the power output shall not deviate from a smooth curve by more than the amount specified.

Note 3: The tuning curve will not deviate from a monotonic function by more than the value specified when operating into a load VSWR of up to 1.5 to 1.0.

Note 4: From tube to tube the frequency will be within 5% for any given value of delay line voltage.

Note 5: At 30, 45 and 60 Mc I.F's

Note 6: Within ± 5 Mc of the center frequency the spurious oscillation shall be at least 50 db down from the main signal.

Note 7: A 2 inch separation must be maintained between the tube magnet and ferromagnetic materials or other magnets for proper operation.

The technical information on this data sheet is of a proprietory nature and is furnished as a customer service for private use only.

QKB830 **OBJECTIVE DATA SHEET**

RAYTHEON *Excellence in Electronics*

GENERAL DESCRIPTION

The QKB830 is a rugged X-band electrostatically focussed "O" type backward wave oscillator designed for use as a local oscillator, driver tube for an amplifier chain and for other applications requiring a voltage tunable RF signal source such as signal generators. Since this tube type employs the voltage focussing principle it eliminates the necessity of any magnet thus reducing the tube's overall weight. The QKB830 also has a control electrode which facilitates low voltage pulsed or amplitude modulation.

GENERAL CHARACTERISTICS

ELECTRICAL

HEATER CHARACTERISTICS

Heater Voltage	6.3 V
Heater Current	0.70 A
Cathode Heating Time	60 Sec. min.
Heater-Cathode Leakage (E_{hk} = ±90 V)	5 mA max.

MAXIMUM RATINGS

Delay Line #1 Voltage	400 Vdc
Delay Line #2 Voltage	500 Vdc
Cathode Current	45 mA
Control Electrode Voltage	
Minimum Value	0 Vdc
Maximum Value	-100 Vdc
Delay Line Temperature (Adjacent to Cooling Fins)	150°C
Altitude	No Limit

TYPICAL OPERATION (CW)

VSWR	1.25 to 1 Max.
Frequency Range	8500 to 9600 Mc
Delay Line #1 Voltage	70 to 300 Vdc
Delay Line #1 Current	5 to 10 mAdc
Delay Line #2 Voltage (Note #1)	300 to 500 Vdc
Delay Line #2 Current	10 to 20 mAdc
Grid Voltage	0 Vdc
Power Output (20 mW min.)	40 to 250 mW
Fine Grain Power Output Variation (Note #2)	±0.25 db
Vibration: 10 to 55 CPS @ .08" displacement	
55 to 2000 CPS @ 20 G's	$\triangle F$ = 1.0 Mc Max.

The specifications for this tube have not been finalized. The tube is in the development stage and is available for engineering analysis purposes only. This engineering information and/or delivery of sample tubes do not imply availability of tubes with the same electrical and/or mechanical characteristics. Changes in ratings and/or dimensions may be made at our discretion as deemed advisable by manufacturing experience or other considerations. For current information concerning this tube contact the nearest Microwave and Power Tube Regional Sales Representative.

TYPICAL OPERATION (CW) (con't)

Shock	50 G's
Heater FM (E_f = 6.3 Vac. @ 60 cps)	$\triangle$ F = 0.1 Mc max.
Tuning Curve Linearity (Note #3)	$\pm$3.0 Mc
Tuning Curve Repeatability (Note #4)	5.0%
Frequency Pushing (E_g = 0 to - 25 Vdc)	$\triangle$ F = 40 Mc max.
Temperature Coefficient	$\pm$50 Kc / ^{o}C max.
Noise Figure (Note #5)	25 db
Spurious Oscillation (Note #6)	50 db
Electrode Capacity (Note #7)	15 uuf
Life (Warranted)	1000 hours

MECHANICAL

Input Base	Potted, with flying leads
Cooling	Forced Air
Output Coupling	Waveguide RG-52/U
Mounting Position	Any
Weight	1 lb. approx.

COLOR CODE

ORANGE	GREEN	YELLOW	BROWN	RED
Delay Line #1	Grid	Cathode	Heater	Shell and Delay Line #2

Note #1: There shall be one discrete value of focus voltage required to cover the specified frequency change.

Note #2: For any 200 Mc band in the frequency range the power output shall not deviate from a smooth curve by more than the amount specified.

Note #3: The frequency versus delay line voltage curve shall not deviate from a smooth function by more than the amount specified when the tube is operated into a 1.5 to 1 VSWR of any phase.

Note #4: The frequency versus delay line voltage curve shall remain within the specified limit from tube to tube.

Note #5: The ratio of tube noise power to thermal noise power (KTB = -114 dbm) shall be no greater than the value specified when measured at the frequencies 30 Mc above and below the main signal.

Note #6: The ratio of the power level of the tube center frequency and spurious oscillations occuring within 5 Mc of the center frequency shall be no smaller than the limit specified.

Note #7: The capacity between any two electrodes except the delay line shall be less than the value specified.

The technical information on this data sheet is of a proprietory nature and is furnished as a customer service for private use only.

QKB870

PRELIMINARY DATA SHEET

RAYTHEON *Excellence in Electronics*

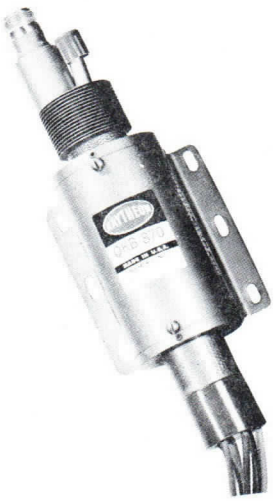

The QKB870 is a rugged X band "O" type backward wave oscillator designed for use as a local oscillator, driver tube for an amplifier chain, and for other applications requiring a voltage tunable RF signal source such as signal generators. This tube type employs a compact integral permanent magnet and has a control electrode which facilitates low voltage pulsed or amplitude modulation. The QKB870 normally operates from 7200 to 12,400 Mc., but frequencies as high as 13,500 Mc. are possible with an increase in delay line voltage.

GENERAL CHARACTERISTICS

ELECTRICAL

Heater Characteristics:

Heater Voltage	6.3 Volts
Heater Current	1.7 A
Cathode Heating Time	60 Sec. Min.
Heater Cathode Leakage (EHK ± 90 V)	5 mA Max.

Maximum Ratings:

Anode Voltage (Note 8)	150 Vdc
Anode Current	5 mA
Delay Line Voltage	1800 Vdc
Cathode Current	45 mA
Delay Line Dissipation	80 W
Control Electrode Voltage	
Positive Value	0 Vdc
Negative Value	150 Vdc
Delay Line Temperature (Adjacent to Cooling Fins)	150°C
Altitude (With magnet shell shorted to tube body)	75,000 ft.

Typical Operation CW:

VSWR	1.25:1 Max.
Frequency Range	7200 - 12,400 Mc
Delay Line Voltage (Tuning Voltage)	250 - 1300 Vdc
Delay Line Current	15 - 35 mA
Anode Voltage (Note 1)	75 - 100 Vdc
Anode Current	0 mA
Grid Voltage	0 Vdc
Power Output (20 mW Min. Guarantee)	30 - 70 mW
Power Output (9000 - 12,400 Mc.) (Note 8)	100 mW Min.

The specifications for this tube have not been finalized. The tube is being manufactured in limited quantities and is available for engineering analysis purposes only. This engineering information and/or delivery of sample tubes do not imply availability of tubes with the same electrical and/or mechanical characteristics. Changes in ratings and/ or dimensions may be made at our discretion as deemed advisable by manufacturing experience or other considerations. For current information concerning this tube contact the nearest Microwave and Power Tube Regional Sales Representative.

Fine Grain Power Output Variation (Note 2)	±0.5 db
Vibration: 10 to 55 cps @ .08" displacement	△F = 2.0 Mc.
55 to 500 cps at 10 G's	
Shock	30 G's
Heater FM (Ef = 6.3 Vac @ 60 cps)	0.5 Mc.
Tuning Curve Linearity (Note 3)	±2.0 Mc.
Tuning Curve Repeatability (Note 4)	±2.5%
Frequency Pushing (E_G = 0 to -25 Vdc)	△F = 100 Mc.
Temperature Coefficient	-200 Kc/°C
Noise Above KTB (Note 5)	35 db
Spurious Oscillation (Note 6)	30 db
Life (Warranted)	1000 Hours

MECHANICAL:

Input Base	Potted, with flying leads
Cooling	Forced air
Output Coupling	Type "N" connector
Mounting Position	Any
Weight	3 lbs. approx.
Interelectrode Capacity (Between any two elements except heater to cathode)	20 uuf
Focusing (Note 7)	Integral Permanent Magnet
Proximity (Note 9)	2 Inches

COLOR CODE:

Red	Green	Yellow	Brown	Blue
Shell & Delay Line	Grid	Cathode	Heater	Anode

Note 1: The anode voltage (E_{b1}) should be set at the value specified for each tube.

Note 2: The power output will not vary from a smooth curve drawn through the power output vs. frequency curve by more than ±.5 db over any 200 Mc band within the specified tuning range.

Note 3: The tuning curve will not deviate from a monotonic function by more than ±2.0 Mc when operated into a load VSWR up to 1.5/1

Note 4: From tube to tube, the frequency will be within 2.5% for any given value of delay line voltage.

Note 5: At 30, 45, and 60 Mc from the carrier frequency.

Note 6: Within ±5 Mc of the center frequency, the spurious(ion) oscillations shall not be closer to the peak power of the center frequency than 30 db.

Note 7: There will be no DC continuity between the magnet casing and the tube body.

Note 8: It is possible to obtain a minimum power output of 100 mW from 9000 - 12,400 Mc with a different anode voltage value than that supplied with the tube and still remain within the maximum ratings for this tube type. The anode voltage must not exceed 250 Vdc and the anode dissipated power must be limited to .75 watts.

Note 9: A 2 inch separation should be maintained between the tube magnet and ferromagnetic materials or other magnets for proper operation.

preliminary data sheet

RAYTHEON

Excellence in Electronics

POWER OUTPUT VS. FREQUENCY
(SEE NOTE 2 ON FINE GRAIN POWER OUTPUT VARIATIONS)

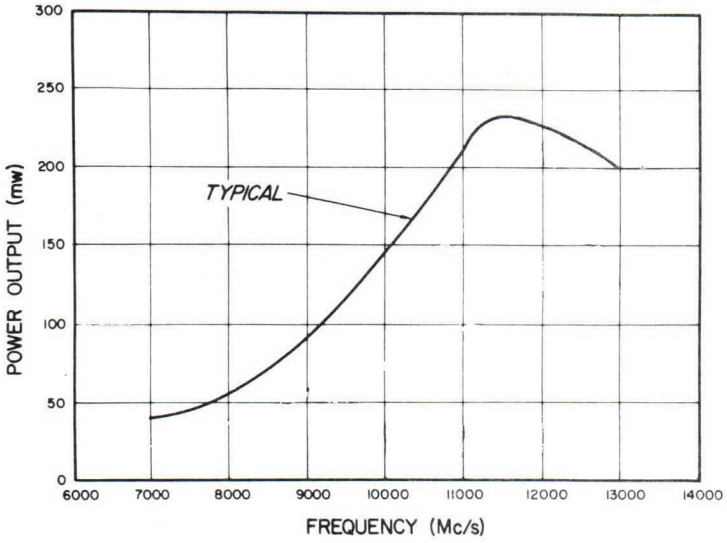

QKB870
DELAY LINE CURRENT AND FREQUENCY VS. DELAY LINE VOLTAGE

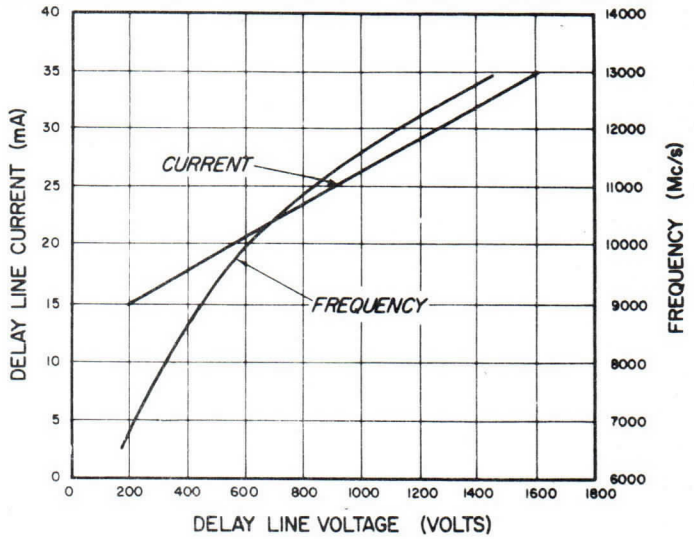

NOTES

1. REFERENCE PLANE "A" IS DEFINED AS A PLANE PASSING ALONG THE FACE OF MOUNTING BRACKETS.
2. REFERENCE PLANE "B" IS DEFINED AS A PLANE PERPENDICULAR TO PLANE "A" AND PASSING THROUGH THE CENTER OF THE SLOTS AT PLANE "A" AS SHOWN.
3. REFERENCE PLANE "C" IS DEFINED AS A PLANE MUTUALLY PERPENDICULAR TO PLANES "A" & "B" PASSING THROUGH THE CENTER OF THE SLOT AT PLANE "A" AS SHOWN.
4. THE CENTER OF THE CONNECTOR SHALL BE WITHIN A RADIUS OF .375 OF THE SPECIFIED LOCATION.
5. THESE TOLERANCES OCCASIONED BY THE NECESSITY FOR MANUFACTURERS ADJUSTMENT OF TUBE BODY WITHIN MAGNET.
6. TYPE "N" OUTPUT CONNECTOR.
7. CAUTION: LOOSENING SCREWS DAMAGES TUBE.
8. THE LINE OF CENTERS OF THE R-F OUTPUT AND THE PINCH-OFF SHALL NOT BE OUT OF ALIGNMENT WITH THIS LINE BY MORE THAN 5°.
9. CATHODE LEAD (YELLOW) MUST NOT DEVIATE FROM A PLANE PASSING THROUGH THE CENTERS OF THE R-F OUTPUT AND PINCH-OFF BY MORE THAN ± 20°.
10. REFERS TO CENTER OF THE O.D. OF TUBE BODY.

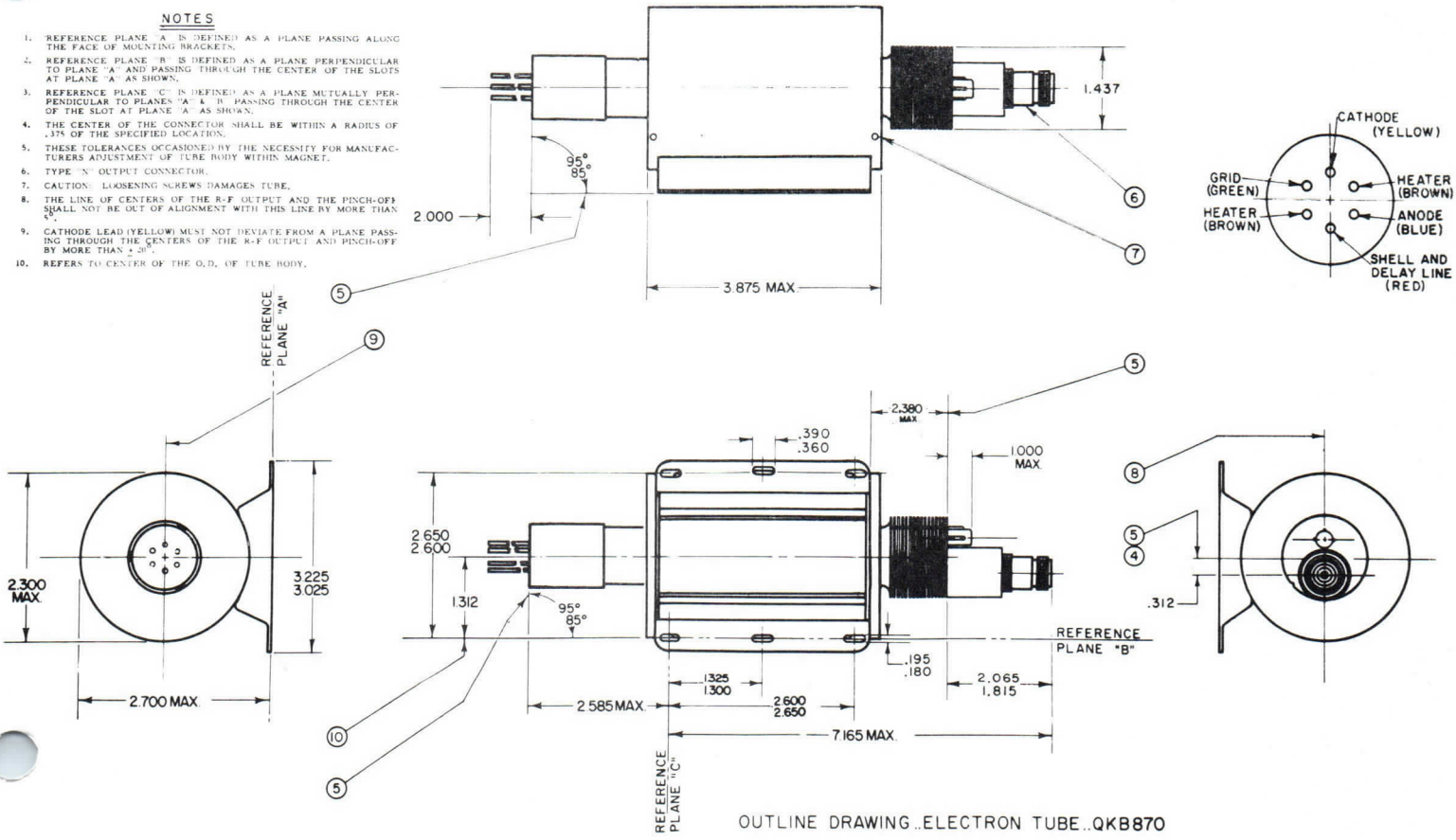

OUTLINE DRAWING..ELECTRON TUBE..QKB870

The technical information on this data sheet is of a proprietory nature and is furnished as a customer service for private use only.

QKB890

OBJECTIVE

DATA SHEET

RAYTHEON

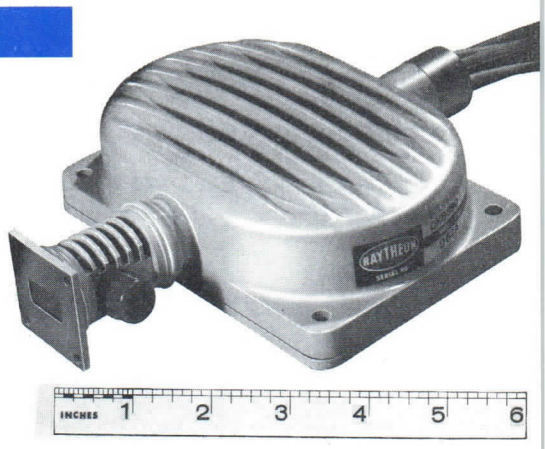

The QKB890 is a rugged Ku band "O" type backward wave oscillator designed for use as a local oscillator, driver tube for an amplifier chain, and for other applications requiring a voltage tunable R-F signal source such as signal generators. This type employs a compact integral permanent magnet and has a control electrode which facilitates low voltage pulsed or amplitude modulation.

GENERAL CHARACTERISTICS

ELECTRICAL

Heater Characteristics

Heater Voltage	6.3 Volts
Heater Current	1.8 A
Cathode Heating Time	60 Sec. Min.
Heater Cathode Leakage ($E_{hk} = \pm 90$ V)	5 mA Max.

Maximum Ratings

Anode Voltage	200 Vdc
Anode Current	5 mA
Delay Line Voltage	1500 Vdc
Cathode Current	30 mAdc
Control Electrode Voltage	
Positive Value	0 Vdc
Negative Value	-150 Vdc
Delay Line Temperature	125° C
Altitude	No Limit

Typical Operation CW

VSWR	1.25:1 Max.
Frequency Range	12400 - 18000 Mc
Delay Line Voltage (Tuning Voltage)	398 - 1268 Vdc
Cathode Current	17 - 25 mAdc
Anode Voltage (Note 1)	100 - 175 Vdc
Anode Current	0 mA
Control Grid Voltage	0 Vdc
Power Output (40 mW Min)	80 - 180 mW

8/61

The specifications for this tube have not been finalized. The tube is in the development stage and is available for engineering analysis purposes only. This engineering information and/or delivery of sample tubes do not imply availability of tubes with the same electrical and/or mechanical characteristics. Changes in ratings and/or dimensions may be made at our discretion as deemed advisable by manufacturing experience or other considerations. For current information concerning this tube contact the nearest Microwave and Power Tube Regional Sales Representative.

Typical Operation CW (con't.)

Fine Grain Power Output Variation (Note 2)	2.5 db Max.
Vibration = 10 to 55 cps at .08" displacement 55 to 500 cps @ 20 G's	ΔF = 3.0 Mc Max.
Shock	30 G's, 11 msec.
Heater F.M. (E_f = 6.3 V at 60 cps)	500 Kc
Tuning Curve Repeatability (Note 3)	ΔF = 5% Max.
Temperature Coefficient	-200 Kc/°C Max.
Noise / KTB (Note 4)	35 db Max.
Spurious Oscillations (Note 5)	30 db Min.
Life (Warranteed)	1000 Hours

MECHANICAL

Input Base	Potted, With flying leads
Cooling	Forced Air
Output Coupling	Waveguide, RG91/U mates with UG419/U Flange
Mounting Position	Any
Weight	4 Lbs. Max.
Interelectrode Capacity (Between any two electrodes except H-K)	20 pf Max.
Focusing	Integral Permanent Magnet
Proximity (Note 6)	2 Inches

COLOR CODE

Red	Green	Yellow	Brown	Blue
Delay Line & Shell	Grid	Cathode	Heater	Anode

Note 1: The anode voltage should be set at the value specified for each tube.

Note 2: For any 200 Mc band in the frequency range, the ratio of maximum power output to minimum power output shall not be more than the amount specified.

Note 3: From tube to tube, the frequency will be within 5% for any given value of the delay line voltage.

Note 4: At 30 Mc. I. F.

Note 5: Within $\pm$5 Mc of the center frequency, the spurious oscillations shall be at least 40 db down from the main signal.

Note 6: A 2 inch separation must be maintained between the tube magnet and ferromagnetic materials or other magnets for proper operation.

The technical information on this data sheet is of a proprietory nature and is furnished as a customer service for private use only.

QKB891

OBJECTIVE

DATA SHEET

RAYTHEON



The QKB891 is a rugged K band "O" type backward wave oscillator designed for use as a local oscillator, driver tube for an amplifier chain, and for other applications requiring a voltage tunable R-F signal source such as signal generators. This type employs a compact integral permanent magnet and has a control electrode which facilitates low voltage pulsed or amplitude modulation.

GENERAL CHARACTERISTICS

ELECTRICAL

Heater Characteristics

Heater Voltage	6.3 Volts
Heater Current	1.8 A
Cathode Heating Time	60 Sec. Min.
Heater Cathode Leakage (E_{hk} = ±90 V)	5 mA Max.

Maximum Ratings

Anode Voltage	300 Vdc
Anode Current	5 mA
Delay Line Voltage	2500 Vdc
Cathode Current	35 mAdc
Control Electrode Voltage	
Positive Value	0 Vdc
Negative Value	-150 Vdc
Delay Line Temperature	125° C
Altitude	No Limit

Typical Operation CW

VSWR	1.25:1 Max.
Frequency Range	18000 - 26500 Mc
Delay Line Voltage (Tuning Voltage)	600 - 2110 Vdc
Cathode Current	21 - 32 mAdc
Anode Voltage (Note 1)	100 - 250 Vdc
Anode Current	0 mA
Control Grid Voltage	0 Vdc
Power Output (40 mW min.)	60 - 180 mW

RAYTHEON COMPANY | MICROWAVE AND POWER TUBE DIVISION | WALTHAM 54, MASS.

The specifications for this tube have not been finalized. The tube is in the development stage and is available for engineering analysis purposes only. This engineering information and/or delivery of sample tubes do not imply availability of tubes with the same electrical and/or mechanical characteristics. Changes in ratings and/or dimensions may be made at our discretion as deemed advisable by manufacturing experience or other considerations. For current information concerning this tube contact the nearest Microwave and Power Tube Regional Sales Representative.

Typical Operation CW (con't.)

Fine Grain Power Output Variation (Note 2)	± 2.5 db Max.
Vibration = 10 to 55 cps at .08" displacement 55 to 500 cps @ 20 G's	ΔF = 4.0 Mc Max.
Shock	30 G's, 11 msec
Heater F.M. (E_f = 6.3 V at 60 cps)	500 Kc
Tuning Curve Repeatability (Note 3)	ΔF = 5% Max.
Noise / KTB (Note 4)	35 db Max.
Temperature Coefficient	-200 Kc/° C Max.
Spurious Oscillations (Note 5)	30 db Min.
Life (Warranteed)	1000 Hours

MECHANICAL

Input Base	Potted, With Flying Leads
Cooling	Forced Air
Output Coupling	Waveguide, RG53/U ,ates with UG595/U Flange
Mounting Position	Any
Weight	4 Lbs. Max.
Interelectrode Capacity (Between any two electrodes except (H-K)	20 pf Max.
Focusing	Integral Permanent Magnet
Proximity (Note 6)	2 Inches

COLOR CODE

Red	Green	Yellow	Brown	Blue
Delay Line & Shell	Grid	Cathode	Heater	Anode

Note 1: The anode voltage should be set at the value specified for each tube.

Note 2: For any 200 Mc band in the frequency range, the ratio of maximum power output to minimum power output shall not be more than the amount specified.

Note 3: From tube to tube, the frequency will be within 5% for any given value of delay line voltage.

Note 4: At 30 Mc. I. F.

Note 5: Within ± 5 Mc of the center frequency, the spurious oscillations shall be at least 40 db down from the main signal

Note 6: A 2 inch separation must be maintained between the tube magnet and ferromagnetic materials or other magnets for proper operation.

The technical information on this data sheet is of a proprietory nature and is furnished as a customer service for private use only.

QKB913

PRELIMINARY DATA SHEET

RAYTHEON



The QKB913 is an L band "O" type backward wave oscillator designed for use as an oscillator for a sweep generator, wide range spectrum analyzer, harmonic generator, and for other applications requiring a voltage tunable RF signal source. This tube type employs a compact integral permanent magnet, a control electrode which facilitates low voltage pulsed or amplitude modulation, and a focusing electrode (anode) which optimizes beam optics.

GENERAL CHARACTERISTICS

ELECTRICAL

Heater Characteristics

Heater Voltage	6.3 Volts
Heater Current	1.1 A
Cathode Heating Time	60 Sec. Min.
Heater Cathode Leakage (E_{hk} = ± 90 V)	5 mA Max.

Maximum and Minimum Ratings

Anode Voltage	175 Vdc Max.
Anode Current	5.0 mAdc Max.
Delay Line Voltage	175 Vdc Min.
	1500 Vdc Max.
Cathode Current	35 mAdc Max.
Control Electrode Voltage	
Positive Value	0 Vdc Max.
Negative Value	-150 Vdc Max.
Body Temperature	100°C Max.

Typical Operation CW

VSWR	1.25:1
Frequency Range	1000 - 2000 Mc.
Delay Line Voltage (Tuning Voltage)	180 - 1100 Vdc
Delay Line Current	20-35 mAdc
Anode Voltage (Note 1)	70 - 100 Vdc
Anode Current	1 mAdc
Control Grid Voltage	0 Vdc

RAYTHEON COMPANY | MICROWAVE AND POWER TUBE DIVISION | WALTHAM 54, MASS.

The specifications for this tube have not been finalized. The tube is being manufactured in limited quantities and is available for engineering analysis purposes only. This engineering information and/or delivery of sample tubes do not imply availability of tubes with the same electrical and/or mechanical characteristics. Changes in ratings and/ or dimensions may be made at our discretion as deemed advisable by manufacturing experience or other considerations. For current information concerning this tube contact the nearest Microwave and Power Tube Regional Sales Representative.

Power Output (100 mW Min.)	200 - 1400 mW
Fine Grain Power Output Variation (Note 2)	3.0 db
Noise/KTB (Note 3)	35 db
Spurious Oscillations (Note 4)	30 db Min.
Life (Warranteed)	1000 Hours

MECHANICAL

Vibration	10 to 55 cps @ .08" displacement
Shock	15 G's, 11 msec
Input Base	Octal
Cooling	Forced Air
Output Coupling	Coaxial Type "N"
Mounting Position	Any
Weight	15 Pounds
Interelectrode Capacity (between any electrode and all others tied together)	30 uuf Max.
Focusing	Integral Permanent Magnet
Proximity (Note 5)	4 Inches

PIN CONNECTIONS:

	1	2	3	4	5	6	7	8
ELEMENTS:	Delay Line and Shell	NC	Heater	Control Grid	Cathode	Heater	Anode	NC

NOTES:

Note 1: The anode voltage should be set at the value specified for each tube.

Note 2: For any 100 Mc band in the frequency range the ratio of maximum P_p power to minimum power shall not exceed the limit specified.

Note 3: At 30 Mc I.F.

Note 4: Within $\pm$ 2 Mc of the center frequency, the ratio of the tube center frequency and the spurious oscillations shall be no less than the limit specified.

Note 5: A 4 inch separation must be maintained between the tube magnet and ferromagnetic materials or other magnets for proper operation. The magnet must not be subjected to external fields in excess of 100 gauss.

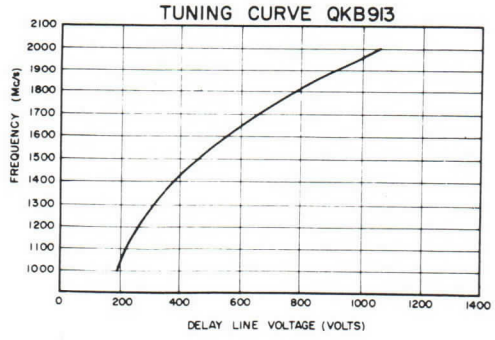

preliminary data sheet

RAYTHEON

Excellence in Electronics

NOTES

1. REFERENCE PLANE "A" IS DEFINED AS A PLANE PASSING ALONG THE FACE OF THE MOUNTING SURFACE.
2. REFERENCE PLANE "B" IS DEFINED AS A PLANE PERPENDICULAR TO PLANE "A" PASSING THRU THE CENTER OF THE SLOTS AT PLANE "A" AS SHOWN.
3. REFERENCE PLANE "C" IS DEFINED AS A PLANE MUTUALLY PERPENDICULAR TO PLANES "A" AND "B" PASSING THRU THE CENTER OF THE SLOT AT PLANE "A" AS SHOWN.
4. CAUTION: LOOSENING SCREWS DAMAGES TUBE.
5. TYPE "N" OUTPUT CONNECTOR.
6. 8 PIN OCTAL BASE WITH PIN AND INDEX GUIDE PER GROUP NO. 1 IN EIA STANDARD RS-209.
7. CENTER OF CONNECTOR MAY FALL ANYWHERE WITHIN THE AREA DEFINED BY THIS DIAMETER.
8. LEADS 3.000 LONG ATTACHED TO OCTAL BASE.

OUTLINE DRAWING
ELECTRON TUBE
QKB913

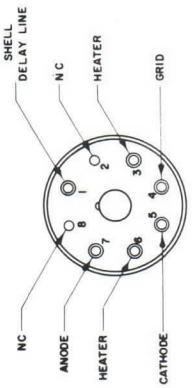

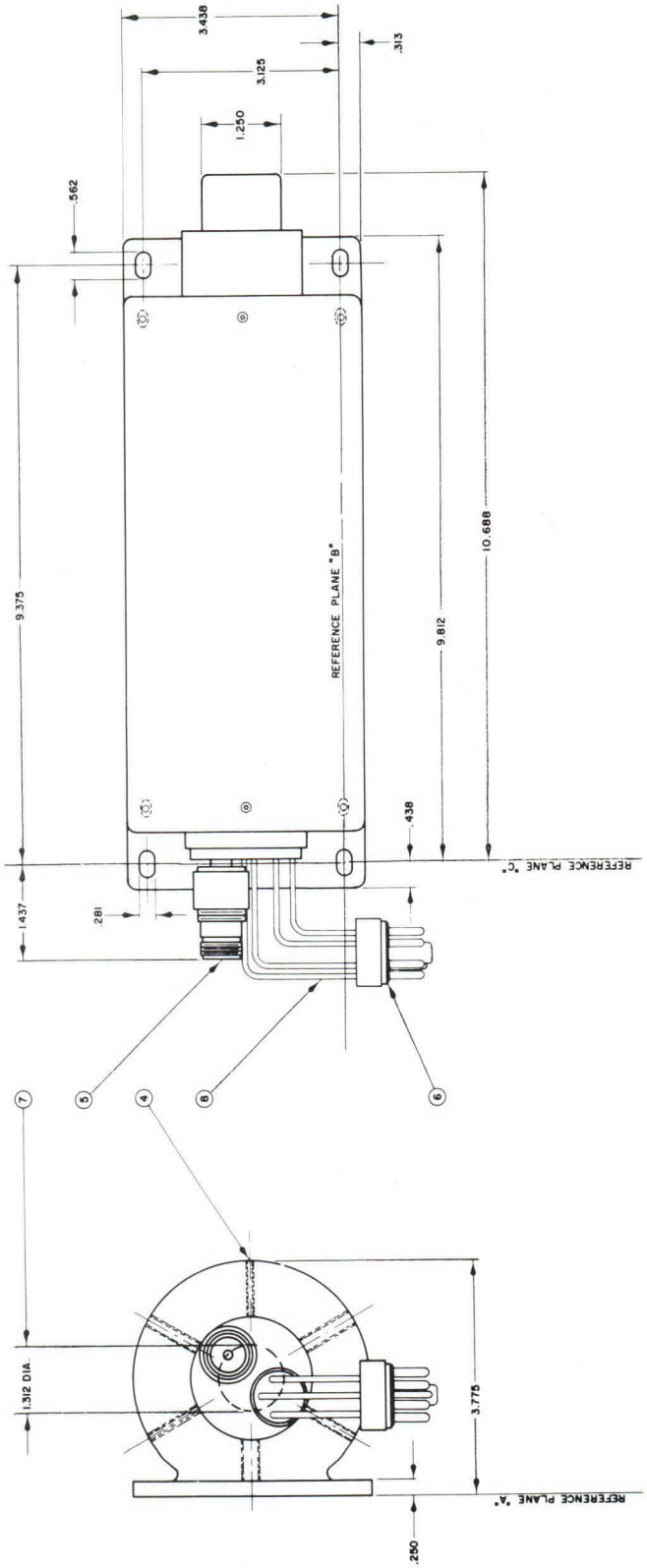

The technical information on this data sheet is of a proprietory nature and is furnished as a customer service for private use only.

QKB914

PRELIMINARY

DATA SHEET

RAYTHEON



The QKB914 is an S band "O" type backward wave oscillator designed for use as an oscillator for a sweep generator, wide range spectrum analyzer, harmonic generator, and for other applications requiring a voltage tunable RF signal source. This tube type employs a compact integral permanent magnet, a control electrode which facilitates low voltage pulsed or amplitude modulation, and a focusing electrode (anode) which optimizes beam optics.

GENERAL CHARACTERISTICS

ELECTRICAL

Heater Characteristics

Heater Voltage	6.3 Volts
Heater Current	1.3 A
Cathode Heating Time	60 Sec. Min.
Heater Cathode Leakage (E_{hk} = ± 90 V)	5 mA Max.

Maximum and Minimum Ratings

Anode Voltage	200 Vdc Max.
Anode Current	15 mAdc Max.
Delay Line Voltage	150 Vdc Min. 1500 Vdc Max.
Delay Line Current	50 mAdc Max.
Control Electrode Voltage	
Positive Value	0 Vdc Max.
Negative Value	-150 Vdc Max.
Body Temperature	100°C Max.

Typical Operation CW

VSWR	1.25:1
Frequency Range	2000 - 4000 Mc.
Delay Line Voltage (Tuning Voltage)	185 - 1450 Vdc
Delay Line Current	25 - 40 mAdc
Anode Voltage (Note 1)	100 - 200 Vdc
Anode Current	1.0 mAdc
Control Grid Voltage	0 V

The specifications for this tube have not been finalized. The tube is being manufactured in limited quantities and is available for engineering analysis purposes only. This engineering information and/or delivery of sample tubes do not imply availability of tubes with the same electrical and/or mechanical characteristics. Changes in ratings and/ or dimensions may be made at our discretion as deemed advisable by manufacturing experience or other considerations. For current information concerning this tube contact the nearest Microwave and Power Tube Regional Sales Representative.

RAYTHEON

Excellence in Electronics

preliminary data sheet

Power Output (60 mW Min.)	120 - 1000 mW
Fine Grain Power Output Variation (Note 2)	3.5 db
Noise/KTB (Note 3)	35 db
Spurious Oscillations (Note 4)	30 db
Life (Warranteed)	1000 Hours

MECHANICAL

Vibration	10 to 55 cps @ .08" displacement
Shock	15 G's, 11 msec.
Input Base	Octal
Cooling	Forced Air
Output Coupling	Coaxial Type "N"
Mounting Position	Any
Weight	7 Pounds (max.)
Interelectrode Capacity (Between any electrode and all others tied together)	20 uuf Max.
Focusing	Integral Permanent Magnet
Proximity (Note 5)	4 Inches

PIN CONNECTIONS:

	1	2	3	4	5	6	7	8
ELEMENTS:	Delay Line and Shell	NC	Heater	Control Grid	Cathode	Heater	Anode	NC

NOTES:

Note 1: The anode voltage should be set at the value specified for each tube.

Note 2: For any 100 Mc band in the frequency range the ratio of maximum power to minimum power shall not exceed the limit specified.

Note 3: At 30, 45, and 60 Mc I.F.'s.

Note 4: Within ± 2 Mc of the center frequency, the ratio of the tube center frequency and the spurious oscillations shall be no less than the limit specified.

Note 5: A 4 inch separation must be maintained between the tube magnet and ferromagnetic materials or other magnets for proper operation.

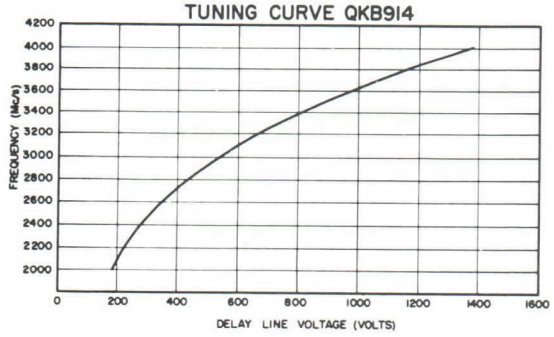

preliminary data sheet

RAYTHEON

Excellence in Electronics

OUTLINE DRAWING ELECTRON TUBE QKB914

NOTES

1. REFERENCE PLANE "A" IS DEFINED AS A PLANE PASSING ALONG THE FACE OF THE MOUNTING SURFACE.
2. REFERENCE PLANE "B" IS DEFINED AS A PLANE PERPENDICULAR TO PLANE "A" PASSING THRU THE CENTER OF THE SLOTS AT PLANE "A" AS SHOWN.
3. REFERENCE PLANE "C" IS DEFINED AS A PLANE MUTUALLY PERPENDICULAR TO PLANES "A" AND "B" PASSING THRU THE CENTER OF THE SLOT AT PLANE "A" AS SHOWN.
4. CAUTION: LOOSENING SCREWS DAMAGES TUBE.
5. TYPE "N" OUTPUT CONNECTOR.
6. TEMPERATURE TO BE MEASURED AT THIS POINT.
7. CENTER OF CONNECTOR MAY FALL ANYWHERE WITHIN THE AREA DEFINED BY THIS DIAMETER.
8. 8 PIN OCTAL BASE WITH PIN AND INDEX GUIDE PER GROUP NO. 1 IN EIA STANDARD RS-209.

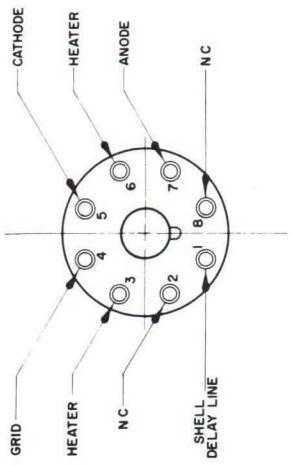

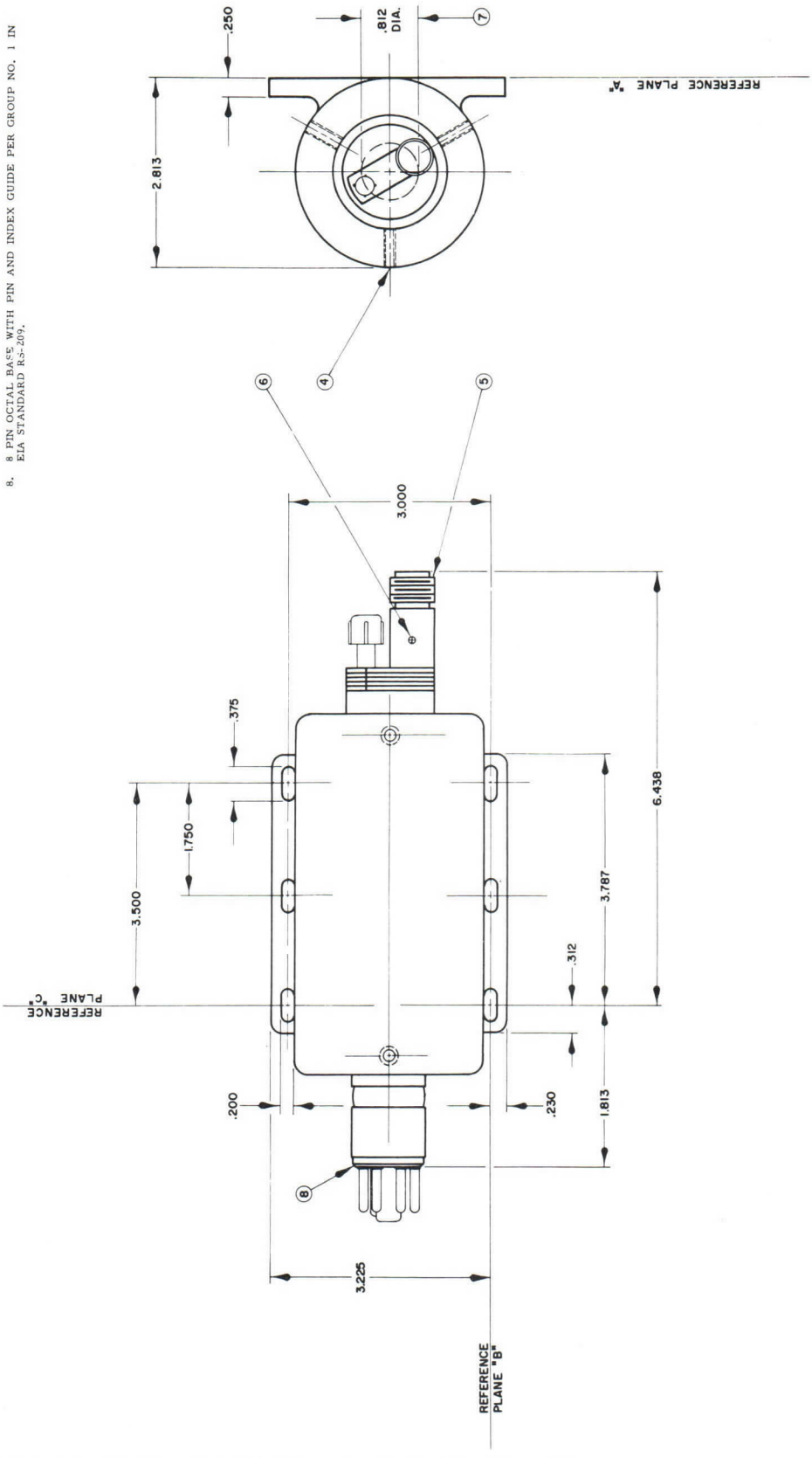

The technical information on this data sheet is of a proprietory nature and is furnished as a customer service for private use only.

QKB915

PRELIMINARY DATA SHEET

RAYTHEON *Excellence in Electronics*



The QKB915 is a C band "O" type backward wave oscillator designed for use as an oscillator for a sweep generator, wide range spectrum analyzer, harmonic generator, and for other applications requiring a voltage tunable RF signal source. This tube type employs a compact integral permanent magnet, a control electrode which facilitates low voltage pulsed or amplitude modulation, and a focusing electrode (anode) which optimizes beam optics.

GENERAL CHARACTERISTICS

ELECTRICAL

Heater Characteristics

Heater Voltage	6.3 Volts
Heater Current	1.0 A
Cathode Heating Time	60 Sec. Min.
Heater Cathode Leakage (E_{hk} = ± 90 V)	5 mA Max.

Maximum and Minimum Ratings

Anode Voltage	150 Vdc Max.
Anode Current	5 mAdc Max.
Delay Line Voltage	150 Vdc Min. 1500 Vdc Max.
Delay Line Current	35 mAdc Max.
Control Electrode Voltage	
Positive Value	0 Vdc Max.
Negative Value	-150 Vdc Max.
Body Temperature	100°C Max.

Typical Operation CW

VSWR	1.25:1
Frequency Range	4000 - 8000 Mc.
Delay Line Voltage (Tuning Voltage)	170 - 1350 Vdc
Delay Line Current	20 - 30 mAdc
Anode Voltage (Note 1)	60 - 130 Vdc
Anode Current	3 mAdc (Max.)
Control Grid Voltage	0 V

The specifications for this tube have not been finalized. The tube is being manufactured in limited quantities and is available for engineering analysis purposes only. This engineering information and/or delivery of sample tubes do not imply availability of tubes with the same electrical and/or mechanical characteristics. Changes in ratings and/ or dimensions may be made at our discretion as deemed advisable by manufacturing experience or other considerations. For current information concerning this tube contact the nearest Microwave and Power Tube Regional Sales Representative.

RAYTHEON

Excellence in Electronics

preliminary data sheet

Power Output (20 mW Min.)	35 - 250 mW
Fine Grain Power Output Variation (Note 2)	3.0 db
Noise/KTB (Note 3)	35 db
Spurious Oscillations (Note 4)	30 db
Life (Warranteed)	1000 Hours

MECHANICAL

Vibration	10 to 55 cps @ .08" displacement
Shock	15 G's, 11 msec.
Input Base	Octal
Cooling	Forced Air
Output Coupling	Coaxial Type "N"
Mounting Position	Any
Weight	7 Pounds
Interelectrode Capacity (Between any electrode and all others tied together)	30 uuf Max.
Focusing	Integral Permanent Magnet
Proximity (Note 5)	2 Inches

PIN CONNECTIONS:

	1	2	3	4	5	6	7	8
ELEMENTS:	Delay Line and Shell	NC	Heater	Control Grid	Cathode	Heater	Anode	NC

NOTES:

Note 1: The anode voltage should be set at the value specified for each tube.

Note 2: For any 100 Mc band in the frequency range the ratio of maximum power to minimum power shall not exceed the limit specified.

Note 3: At 30 Mc I.F.

Note 4: Within ± 2 Mc of the center frequency, the ratio of the tube center frequency and the spurious oscillations shall be no less than the limit specified.

Note 5: A 3 inch separation must be maintained between the tube magnet and ferromagnetic materials or other magnets for proper operation. Do not subject to magnetic fields in excess of 100 gauss.

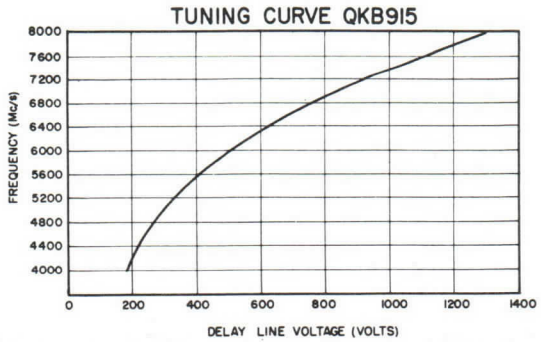

preliminary data sheet

Excellence in Electronics

RAYTHEON

OUTLINE DRAWING
ELECTRON TUBE
QKB915

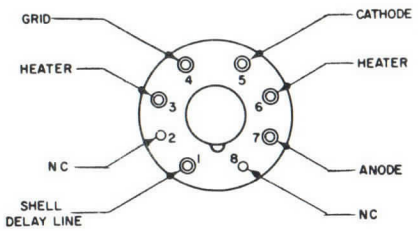

NOTES

1. REFERENCE PLANE "A" IS DEFINED AS A PLANE PASSING ALONG THE FACE OF THE MOUNTING SURFACE.
2. REFERENCE PLANE "B" IS DEFINED AS A PLANE PERPENDICULAR TO PLANE "A" PASSING THRU THE CENTER OF THE SLOTS AT PLANE "A" AS SHOWN.
3. REFERENCE PLANE "C" IS DEFINED AS A PLANE MUTUALLY PERPENDICULAR TO PLANES "A" AND "B" PASSING THRU THE CENTER OF THE SLOT AT PLANE "A" AS SHOWN.
4. CAUTION: LOOSENING SCREWS DAMAGES TUBE.
5. TYPE "N" OUTPUT CONNECTOR.
6. 8 PIN OCTAL BASE WITH PIN AND INDEX GUIDE PER GROUP NO. 1 IN EIA STANDARD RS-209.
7. CENTER OF CONNECTOR MAY FALL ANYWHERE WITHIN THE AREA DEFINED BY THIS DIAMETER.

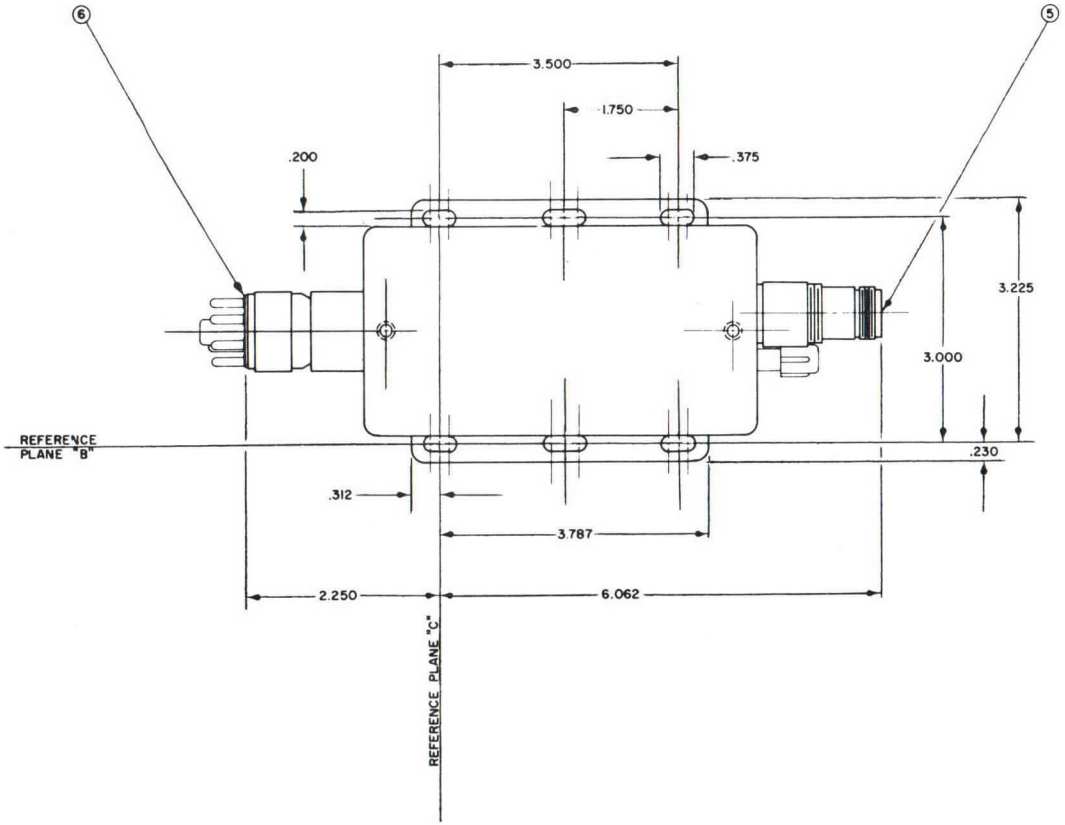

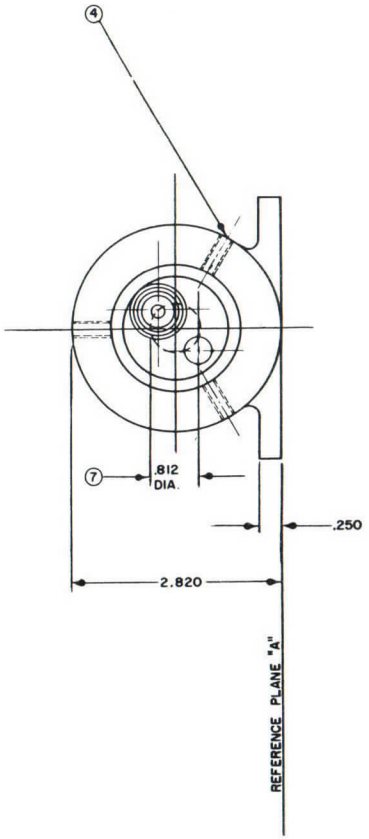

RAYTHEON COMPANY | MICROWAVE AND POWER TUBE DIVISION | WALTHAM 54, MASS.

The technical information on this data sheet is of a proprietory nature and is furnished as a customer service for private use only.

QKB916

PRELIMINARY

DATA SHEET

RAYTHEON



The QKB916 is an X band "O" type backward wave oscillator designed for use as an oscillator for a sweep generator, wide range spectrum analyzer, harmonic generator, and for other applications requiring a voltage tunable RF signal source. This tube type employs a compact integral permanent magnet, a control electrode which facilitates low voltage pulsed or amplitude modulation, and a focusing electrode (anode) which optimizes beam optics.

GENERAL CHARACTERISTICS

ELECTRICAL

Heater Characteristics

Heater Voltage	6.3 Volts
Heater Current	1.8 A
Cathode Heating Time	60 Sec. Min.
Heater Cathode Leakage (E_{hk} = ± 90 V)	5 mA Max.

Maximum and Minimum Ratings

Anode Voltage	150 Vdc Max.
Anode Current	5 mAdc Max.
Delay Line Voltage	150 Vdc Min. 1500 Vdc Max.
Delay Line Current	35 mAdc Max.
Control Electrode Voltage	
Positive Value	0 Vdc Max.
Negative Value	-150 Vdc Max.
Body Temperature	100°C Max.

Typical Operation CW

VSWR	1.25:1
Frequency Range	8000 - 12,400 Mc.
Delay Line Voltage (Tuning Voltage)	320 - 1250 Vdc
Delay Line Current	20 - 30 mAdc
Anode Voltage (Note 1)	60 - 130 Vdc
Anode Current	1 mAdc
Control Grid Voltage	0 V

The specifications for this tube have not been finalized. The tube is being manufactured in limited quantities and is available for engineering analysis purposes only. This engineering information and/or delivery of sample tubes do not imply availability of tubes with the same electrical and/or mechanical characteristics. Changes in ratings and/ or dimensions may be made at our discretion as deemed advisable by manufacturing experience or other considerations. For current information concerning this tube contact the nearest Microwave and Power Tube Regional Sales Representative.

RAYTHEON

Excellence in Electronics

preliminary data sheet

Power Output (20 mW Min.)	50 - 250 mW
Fine Grain Power Output Variation (Note 2)	2.5 db
Noise/KTB (Note 3)	35 db
Spurious Oscillation (Note 4)	30 db
Life (Warranteed)	1000 Hours

MECHANICAL

Vibration	10 to 55 cps @ .08" displacement
Shock	15 G's, 11 msec.
Input Base	Octal
Cooling	Forced Air
Output Coupling	Coaxial Type "N"
Mounting Position	Any
Weight	2 3/4 Pounds
Interelectrode Capacity (Between any electrode and all others tied together)	30 uuf Max.
Focusing	Integral Permanent Magnet
Proximity (Note 5)	2 Inches

PIN CONNECTIONS:

	1	2	3	4	5	6	7	8
ELEMENTS:	Delay Line and Shell	NC	Heater	Control Grid	Cathode	Heater	Anode	NC

NOTES:

Note 1: The anode voltage should be set at the value specified for each tube.

Note 2: For any 200 Mc band in the frequency range the ratio of maximum power to minimum power shall not exceed the limit specified.

Note 3: At 30 Mc I.F.

Note 4: Within $\pm$ 2 Mc of the center frequency, the ratio of the tube center frequency and the spurious oscillations shall be no less than the limit specified.

Note 5: A 2 inch separation must be maintained between the tube magnet and ferromagnetic materials or other magnets for proper operation. The magnet must not be subjected to external fields in excess of 100 gauss.

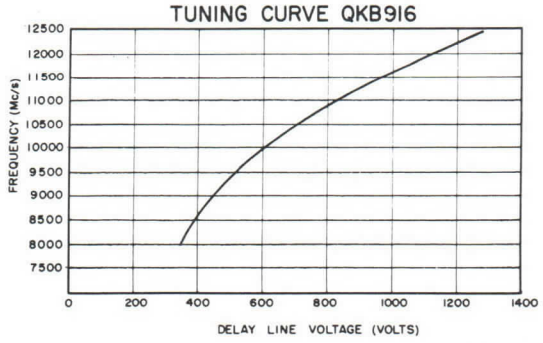

RAYTHEON

Excellence in Electronics

preliminary data sheet

OUTLINE DRAWING ELECTRON TUBE QKB9916

NOTES

1. REFERENCE PLANE "A" IS DEFINED AS A PLANE PASSING ALONG THE FACE OF MOUNTING BRACKETS.
2. REFERENCE PLANE "B" IS DEFINED AS A PLANE PERPENDICULAR TO PLANE "A" AND PASSING THROUGH THE CENTER OF THE SLOTS AT PLANE "A" AS SHOWN.
3. REFERENCE PLANE "C" IS DEFINED AS A PLANE MUTUALLY PERPENDICULAR TO PLANES "A" & "B" PASSING THROUGH THE CENTER OF THE SLOT AT PLANE "A" AS SHOWN.
4. THE CENTER OF THE CONNECTOR SHALL BE WITHIN A RADIUS OF .375 OF THE SPECIFIED LOCATION.
5. TEMPERATURE TO BE MEASURED AT THIS POINT.
6. TYPE "N" OUTPUT CONNECTOR.
7. CAUTION: LOOSENING SCREWS DAMAGES TUBE.
8. 8 PIN OCTAL BASE WITH PIN AND INDEX GUIDE PER GROUP NO. 1 BK EIA STANDARD RS-301.

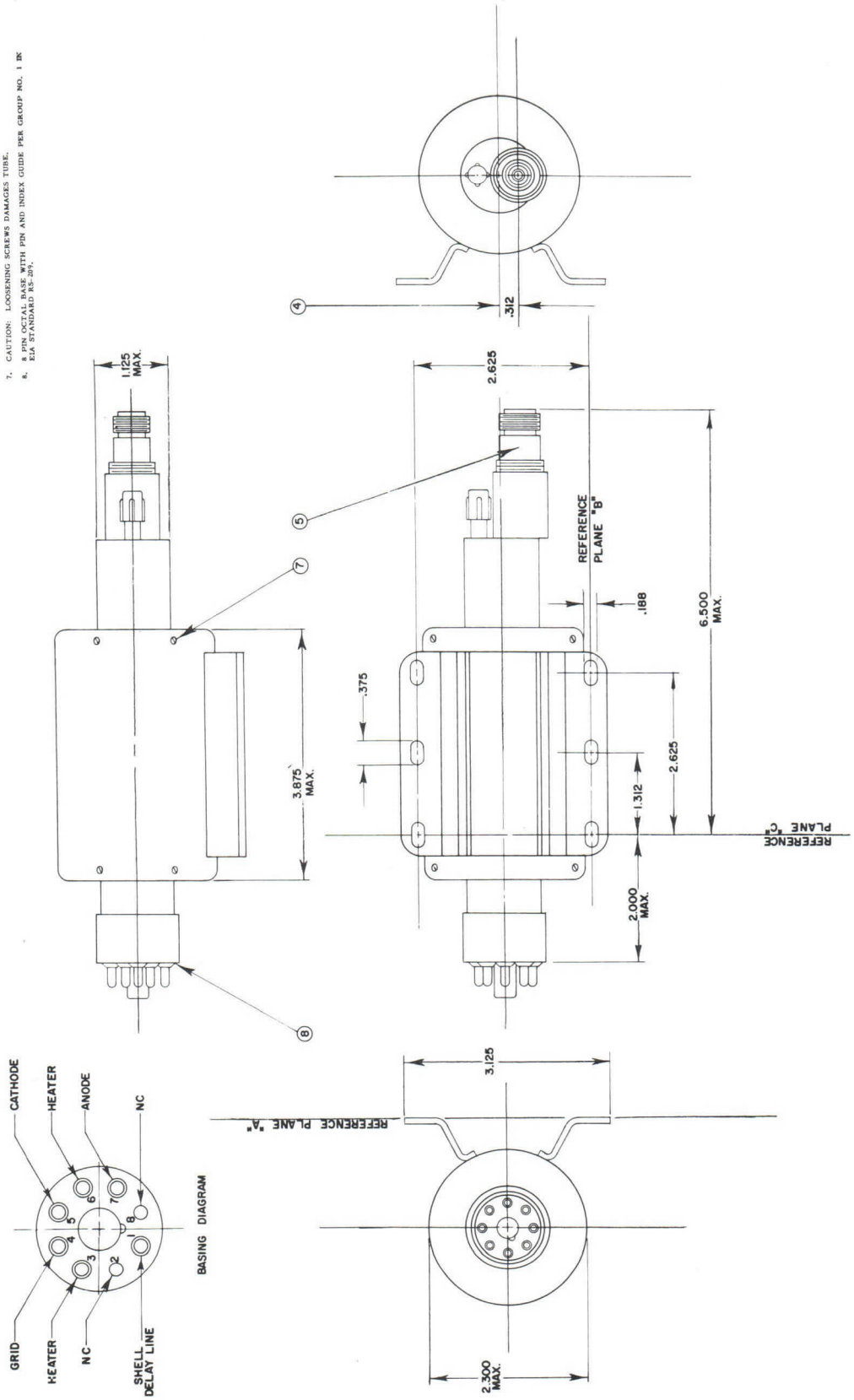

TYPE QKB924

GENERAL DESCRIPTION

The QKB924 is an extremely stable "S" band backward wave oscillator designed as a driver tube for amplifier chains and other applications where stable frequency operation is essential. This voltage tunable device has provisions for external feedback which result in essentially flat frequency versus voltage characteristics at discrete steps. The QKB924 employs a compact integral permanent magnet for beam focusing and has a control electrode which facilitates low voltage pulsed or amplitude modulation.

With the input connection terminated into a matched load, this tube has the characteristics of a normal backward wave oscillator with typical power in the 2700 to 3200 Mc region of 500 mW. When a time delay circuit (400 ft. of coaxial cable) is used as a feedback loop, the frequency stability is increased by a factor of 10.



VOLTAGE-TUNABLE BACKWARD WAVE OSCILLATOR

GENERAL CHARACTERISTICS

ELECTRICAL

Heater Characteristics

Heater Voltage	6.3 V
Heater Current	1.3 A
Cathode Heating Time	1.0 minute min.

Maximum Ratings

Anode Voltage	250 Vdc
Anode Current	10 mAdc
Delay-Line Voltage	800 Vdc Max. 100 Vdc Min.*
Delay-Line Current	45 mAdc
Control Electrode Voltage	
Positive Value	O Vdc
Negative Value	100 Vdc
Delay-Line Temperature	125° C

*Minimum value may be exceeded provided care is taken that the attendant increased anode current will not result in excessive anode dissipation.

Printed in U.S.A.

MICROWAVE AND POWER TUBE DIVISION

RAYTHEON COMPANY

FOUNDRY AVE., WALTHAM 54, MASS.

The values specified above must not be exceeded under any service condition. The ratings are limiting values above which the serviceability of any individual tube may be impaired. It does not necessarily follow that combinations of maximum ratings can be attained simultaneously.

Typical Stabilized Operation (Feedback Time Delay Consisting of 400 Ft. of Low Loss Coaxial Cable)

Frequency Range	2700—3200 Mc.
Delay-Line Voltage (Tuning Voltage)	390—640 V
Delay-Line Current	20—30 mA
Delay-Line Sensitivity	0.2 kc/mV
Anode Voltage	130 Vdc
Anode Current	2 mA
Anode Sensitivity	0.35 kc/mV
Grid Voltage	0 Vdc
Power Output	30 mW
Hysteresis	0.15 V
Frequency Steps	2.0 Mc.
Spurious Signals	50 db below carrier
Life (Warranted)	1000 Hours

Typical Nonstabilized Operation (Input Connection Terminated by Matched Load)

Frequency Range	2700—3200 Mc.
Delay-Line Voltage	390—640 V
Delay-Line Current	20—30 mA
Anode Voltage	130 V
Anode Current	2.0 mA
Grid Voltage	0 V
Power Output	400—900 mW
Spurious Signals	40 db below carrier

MECHANICAL

Over-all Dimensions	See outline drawing
New Weight	6½ lbs. approx.
Mounting Position	Any
Cooling	Convection Cooling. No Forced Air Required.
Output Coupling	Coaxial Type "N" Female
Input Coupling	Coaxial Type "N" Female
Base	Standard Intermediate Octal
Focusing	Permanent Magnet

DETAILED ELECTRICAL INFORMATION

TYPICAL STABILIZED OPERATION

For stabilized operation a portion of the BWO's RF power output is fed back through a time delay circuit (coaxial cable) to the RF input end of the BWO's slow wave structure. The perturbations caused by the feedback power result in the BWO oscillating only in discrete frequency steps. The frequency on these steps is much less sensitive to voltage change than the normal BWO.

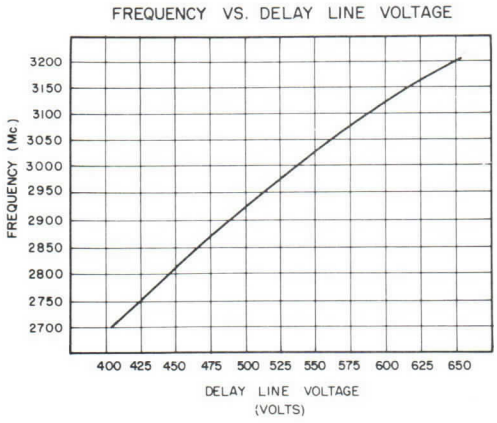

Figure 1

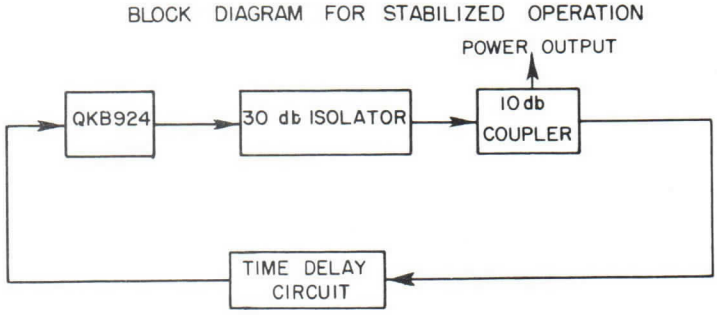

Figure 2

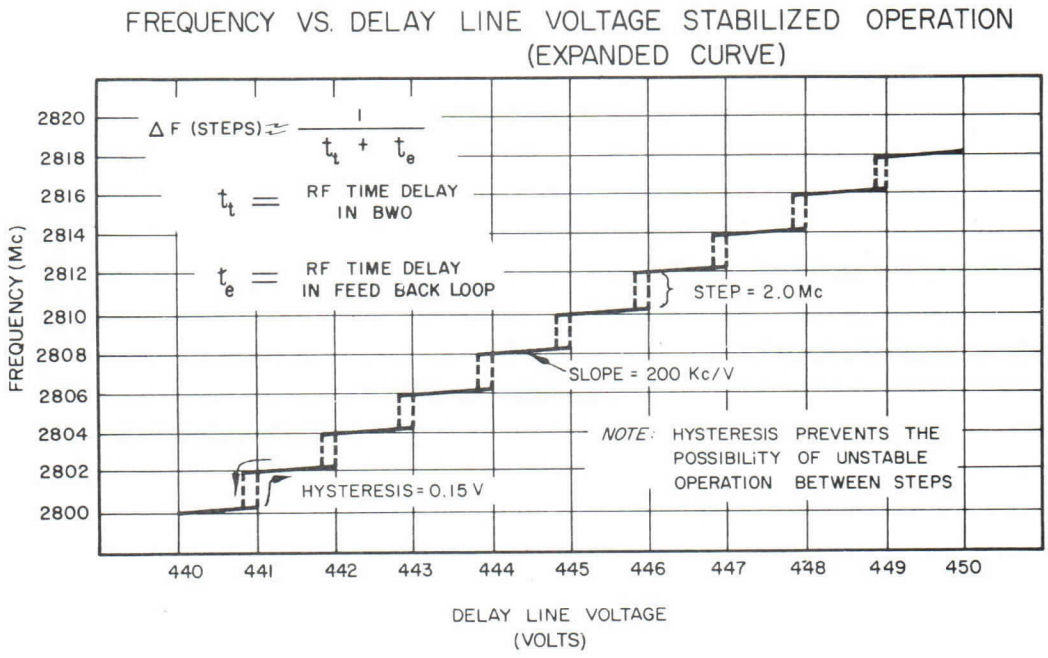

Figure 3

Printed in
U.S.A.

OPERATING PRECAUTIONS

In order to prevent damage to the tube, the anode voltage must not be applied without the minimum delay line voltage being applied before the anode voltage. Failure to observe this precaution will resulting excessive anode current and possible burn out. Simultaneous application of all voltages after the preheat time is permissible. The grid must always be either zero or negative — never positive and can be applied or removed at any time with or without anode or delay voltage except in the special case where the anode voltage is set high enough so that with operation without negative grid bias, the maximum cathode-delay line current would be exceeded. In this case, the negative grid voltage must be applied before or simultaneously with but never after the anode. The grid and anode should not be allowed to float with respect to the cathode since these tubes contain a tetrode gun.

Adequate clearance must be maintained between the tube magnet and ferromagnetic materials or other magnts to avoid deterioration of the tube's gauss level. Generally a 4 inch clearance is sufficient.

CHARACTERISTICS OF A BACKWARD WAVE OSCILLATOR EMPLOYING AN EXTERNAL FEEDBACK CIRCUIT

The conventional backward wave oscillator (BWO) is normally employed as an electronically tunable, self-excited oscillator. Its frequency of oscillation varies continuously as the applied beam voltage is changed. When the usual form of the BWO is modified so that part of the output is "fed back" into the tube, then this device has new characteristics. The main effect of this modification is to produce a self-excited oscillator that will operate only at discrete frequencies as the beam voltage is varied. Oscillations occur continuously as the beam voltage is varied, however, the frequency of oscillation changes mainly in discontinuous steps. The frequency of oscillation on any on of these steps is extremly stable. Thus, the BWO with external feedback has the characteristic that it oscillates at discrete frequencies making is useful as the low power drive for frequency diversity radar systems.

The usual form of the conventional BWO is shown

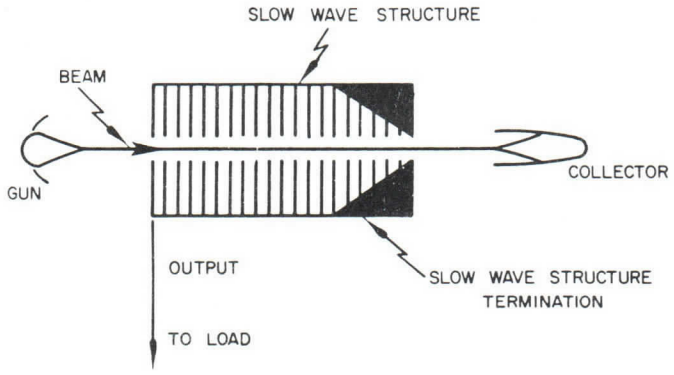

SCHEMATIC OF A CONVENTIONAL BWO.

Figure 1

in Figure 4. An electron beam is caused to move through a slow wave structure. Oscillation will occur at a frequency where the phase velocity of the circuit wave moving in the direction opposite to the beam coincides with the beam velocity. R.F. power resulting from this oscillation propagates along the slow wave structure in the direction opposite to the beam and out to the useful load which is connected at the gun end of the structure. The feedback mechanism that produces oscillation results from the fact that the beam and the circuit wave move in opposite directions. If the load is not terminated, R.F. power will be reflected back into the device. This reflected energy is prevented from disrupting operation by the termination at the collector end of the slow wave structure where this reflected power is dissipated. When feedback is introduced into the BWO, its structure is modified as shown schematically in Figure 5. In this device the slow wave termination

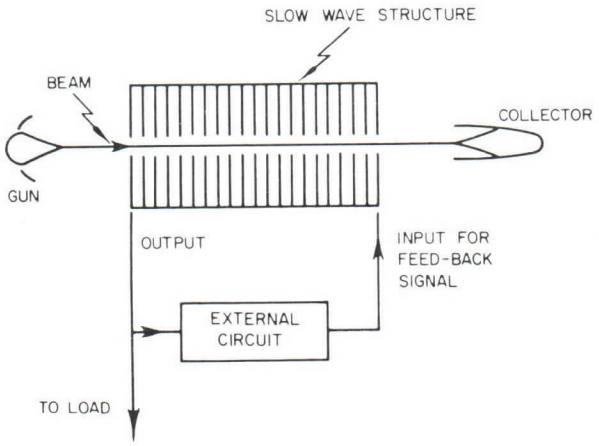

SCHEMATIC OF THE QKB924

Figure 5

is removed and a connection is made to the collector end of the structure. A portion of the output power is fed through an external delay line to the input terminal. This causes the "stepped" tuning curve shown in Figure 6.

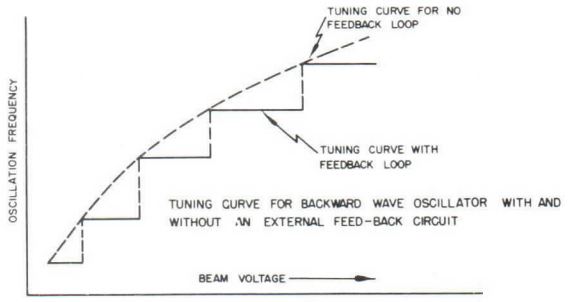

Figure 6

There are two main features of interest in the "stepped" tuning characteristic of the BWO with external feedback. One is the frequency increment between steps and the other is the rate of tuning on a given step. There is some slight tuning across a given step as the beam voltage is changed. The frequency increments for a given type of BWO are directly proportional to the phase velocity of delay line and inversely proportional to its electrical length. The tuning rate on a given "step" is described by a stabilization factor which is the ratio of the tuning rates of the BWO without and with stabilization. The larger the stabilization the less the change in frequency with changing beam voltage. For a given BWO the degree of stabilization is directly proportional to the amount of output power that is fed back as well as to the physical length of the external circuit. The stabilization is inversely proportional to the losses and phase velocity of the external feedback circuit. Since frequency increment and stability are mainly determined by the characteristics of the external transmission line, these tube properties can be controlled by the use of various lengths of external transmission line. The frequency increment can be increased by decreasing the length of the external transmission line, but only at the expense of reducing the stabilization. Conversely, the frequency increments can be decreased, while the stability is increased, by the use of longer external transmission lines. Here the limiting factor is the losses introduced by the length of the transmission line.

The following results were obtained with a particular length of delay line.

Delay Line	*Frequency Increments*	*Stability Factor*
400 ft.	2.0 Mc.	10.0

A higher degree of stabilization can be obtained at a single frequency by the addition of a high "Q" resonant cavity in the circuit either in the reflected or direct feedback method.

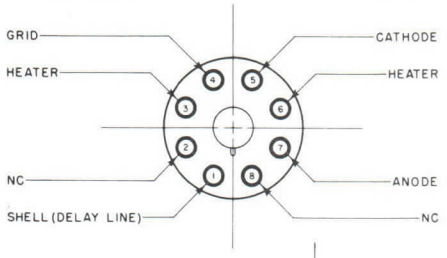

NOTES

1. REFERENCE PLANE "A" IS DEFINED AS A PLANE PASSING ALONG THE FACE OF THE MOUNTING SURFACE.
2. REFERENCE PLANE "B" IS DEFINED AS A PLANE PERPENDICULAR TO PLANE "A" PASSING THRU THE CENTER OF THE SLOTS AT PLANE "A" AS SHOWN.
3. REFERENCE PLANE "C" IS DEFINED AS A PLANE MUTUALLY PERPENDICULAR TO PLANES "A" AND "B" PASSING THRU THE CENTER OF THE SLOT AT PLANE "A" AS SHOWN.
4. CAUTION: LOOSENING SCREWS DAMAGES TUBE.
5. TYPE "N" OUTPUT CONNECTORS.
6. TEMPERATURE TO BE MEASURED AT THIS POINT.
7. CENTER OF CONNECTORS MAY FALL ANYWHERE WITHIN THE AREA DEFINED BY THIS DIAMETER.
8. 8 PIN OCTAL BASE WITH PIN AND INDEX GUIDE PER GROUP NO. 1 IN EIA STANDARD RS-209.

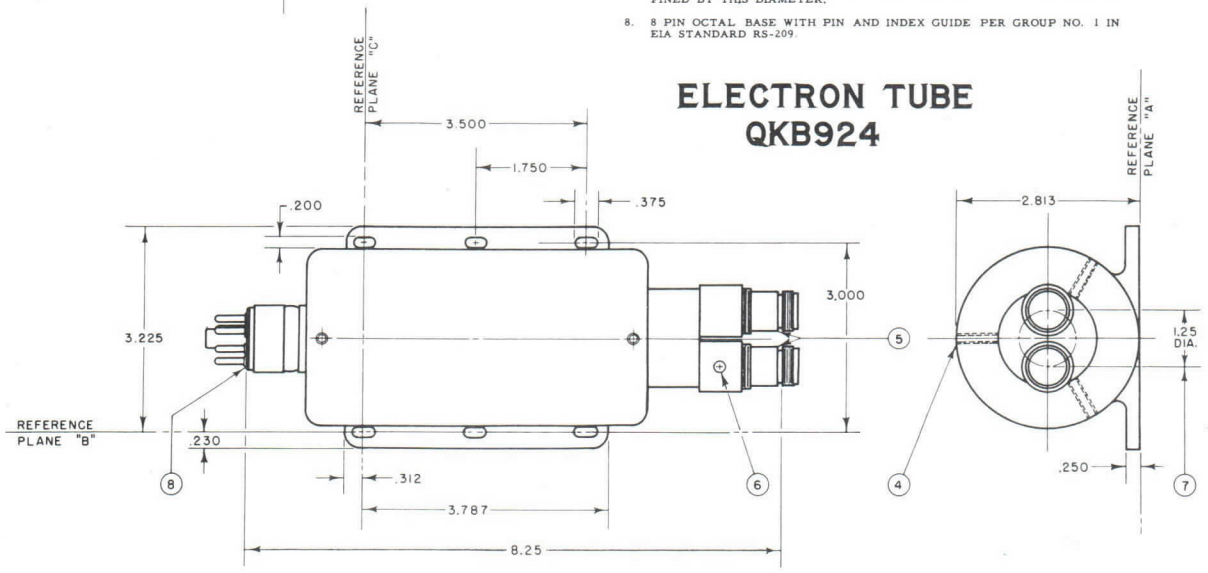

The tabluated data and accompanying graphs are representative of only a small sample and are presented as general information for the circuit designer. They should not be interpreted as completely defining the expected spread of the tube's characteristics. Detailed information necessary for specific applications may be obtained by contacting the Applications Engineering Department, Microwave and Power Tube Division.

REFERENCES

"New Oscillator Tubes With Wide-Band Electronic Tuning At Microwave Frequencies," P. Guénard, O. Doehler, B. Epsztein and R. Warnecke, C. R. Acad. Sci. (Paris) vol. 235, pp. 236-8 (July 21, 1952). In French.

"Fundamental Phenomena In Traveling-Wave Tubes," R. Warnecke, P. Guénard and O. Doehler, Onde Élect. vol. 34, No. 325, pp. 323-38 (April 1954). In French.

"Understanding the Backward Wave Oscillator", D. A. Dunn, *Electronic Industries*, January, 1958.

"The OType Carcinotron Tube", Palluel and Goldberger, *Proceedings of the I.R.E.*, March 1956, pp. 333-345.

"The Behavior of a BWO with External Feedback", F. L. Vernon, IRE National Convention Record 1957, pp 91-102.

RAYTHEON®

Excellence in Electronics

THE DATA IN THIS SECTION FORMS A PART OF THE RAYTHEON TECHNICAL DATA BOOK FOR

MICROWAVE and POWER TUBES

KLYSTRONS

For replacement data sheets or for additional copies of this book, contact

TECHNICAL INFORMATION SERVICE
RAYTHEON COMPANY
55 Chapel Street,
Newton 58, Massachusetts

RAYTHEON

DATA SERVICE

ELECTRON TUBES
MICROWAVE

CONTENTS

KLYSTRONS

TYPE	PAGE	DATE
RK2K22	1-4	7-57
RK2K25	1-7	9-56
RK2K26	1-4	12-56
RK2K28	1-4	12-55
RK2K29	1-5	7-57
RK2K33 (see QK306)		
RK2K45	1-5	12-56
RK2K48	1-5	2-59
RK2K56	1-5	6-57
QK289	1-4	7-57
QK290 (see QK289)		
QK291 (see QK289)		
QK292	1-5	7-57
QK293 (see QK292)		
QK294 (see QK292)		
QK295 (see QK292)		
QK297 (see 6178/QK297)		
QK306	1-4	7-57
QK386 (see 6845/QK386)		
QK417 (see 6310/QK417)		
QK420 (see 6312/QK420)		
QK422	1-5	12-56
QK436 (see 6316/QK436)		
QK483 (see 6573/QK483)		
QK673	1-4	6-62
RK726C	1-5	
QKK752/QKK75	1-2	8-61
QKK754	1-5	
QKK755	1-4	12-60
QKK758/759	1-3	10-60
QKK815	1	Obj
QKK822	1-4	10-61
QKK826	1-4	5-61
QKK833	1-2	Obj
QKK834	1-2	9-61
QKK837	1-2	Prelim
QKK838 (see QKK837)		
QKK839	1-2	10-60
QKK863	1-5	2-62
QKK864 (see QKK863)		
QKK865 (see QKK863)		
QKK866	1-4	6-62
QKK867 (see QKK863)		
QKK869	1-4	5-61
QKK874	1-4	7-61
QKK877	1-5	7-61
QKK910	1-4	6-61
QKK923	1-2	7-61
QKK965	1-4	2-61
QKK971	1-5	6-61
QKK977	1-2	8-61
QKK991	1-2	6-62
QKK1017	1-2	9-1-61
QKK1022	1-2	6-62
QKK1041	1-2	6-62
QKK1043	1-2	6-62
QKK1045	1-2	6-62
QKK1048	1-2	6-62
QKK1074	1-4	6-62
QKK1075 (see QKK1074)		
QKK1076 (see QKK1074)		
QKK1078	1-2	6-62
QKK1079	1-2	6-62
QKK1080	1-4	4-62
RK5721	1-7	5-55
RK5836	1-9	10-55
RK5976	1-5	3-1-54
RK5981	1-5	5-55
RK6043	1-3	4-61
RK6115	1-5	
RK6116	1-10	2-55

CONTENTS
(Cont'd.)

DATA SERVICE

ELECTRON TUBES
MICROWAVE

RAYTHEON

KLYSTRONS

TYPE	PAGE	DATE
RK6178/QK297	1-4	11-57
RK6236	1-6	5-55
RK6253 (see QK306)		
RK6254 (see QK306)		
RK6310/QK417	1-6	6-55
RK6312/QK420	1-6	6-55
RK6316/QK436	1-6	2-55
RK6390	1-6	7-55
RK6573/QK483	1-5	7-57
RK6845/QK386	1-2	6-55

TYPE 2K22

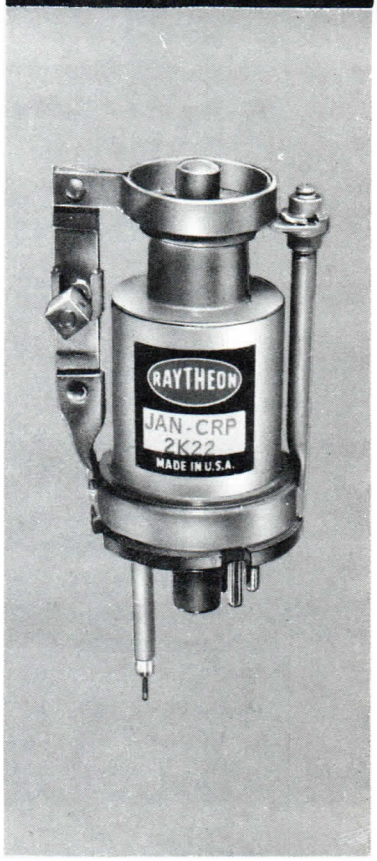

The type 2K22 is a velocity variation oscillator of the single cavity (integral) reflex type, designed for operation in the frequency range of 4240 to 4910 megacycles with an average power output of 100 milliwatts. The mechanical tuning mechanism provides a simple method of making wide frequency adjustments. In addition, the 2K22 can be electronically tuned to give a vernier adjustment. The 2K22 is designed for operation at any frequency within the specified range, and it is particularly suited for local oscillator service in microwave receivers. It is useful, also, as a local oscillator in microwave spectrum analyzers, and as a microwave source for test purposes.

GENERAL CHARACTERISTICS

ELECTRICAL

Heater

Heater, for exide coated unipotential cathode:

Voltage (A.C. or D.C.)	6.3±0.5 V
Current	0.44 A

Maximum Ratings, Absolute Values

Resonator Voltage	330 Vdc
Resonator Current	37 mAdc
Reflector Voltage	
Positive Value	0 Vdc
Negative Value	—350 Vdc
Heater-Cathode Voltage	±100 V
Ambient Temperature of Air Around Shell	110 °C
Temperature of coaxial output line	75 °C

Typical Operating Conditions

Frequency Range	4240 to 4910 Mc
Resonator Voltage	300 Vdc
Resonator Current	25 mAdc
Reflector Voltage Range*	—120 to —180 Vdc
Reflector Current	Less than 7μa
Electronic Tuning (Half Power)**	
Frequency Change @ 4575 Mc	34.5 Mc
Power Output @ 4575 Mc	115 mW
Thermal Compensation	—0.10 ±0.05 Mc/°C

*Adjusted for maximum power output at 4575 Mc.

**Change in frequency between the two ½ power points when the reflector voltage is varied above and below the point of max. power output corresponding to the given frequency.

MECHANICAL

Mounting . . .	Any Position
Overall Dimensions	See Outline Drawing
Resonator Cavity .	Integral part of tube
Envelope . . .	Metal
Cap	Miniature
Base . . .	To fit standard octal with No. 4 pin enlarged and tapped to admit transducer
Net Weight . .	1.5 Ounces

INSTALLATION

The 2K22 requires a standard octal socket modified with No. 4 pin enlarged and tapped to admit the coaxial transducer. The tube may be mounted in any position but should be rigidly clamped to insure proper contact of the tube with the transducer, and to guard against excessive strains on the coaxial output line. The tube must be clamped on or below the shoulder of the header skirt.

The coaxial output line is coupled into type N connector through a wide band transducer coupling unit (see outline drawing for transducer). All the tabulated data contained in this data sheet was taken using this transducer operating into a matched load.

It is important that this transducer, or its electrical equivalent, be used to insure tube interchangeability, and satisfactory tuning range characteristics. The standing wave ratio at the transducer should not exceed a VSWR of 1.1.

SHIELDING

Where the 2K22 is to be operated in the presence of strong magnetic fields, shielding of the resonator and reflector voltage leads is usually required in order to avoid undesirable modulation of the tube output. In extremely troublesome conditions, it may be advisable to place the 2K22 in a metal chamber with polyiron chokes on the leads bringing the voltages into the chamber.

CATHODE

In most applications, the metal envelope (resonator) of the 2K22 is operated at ground potential. The cathode is therefore negative with respect to ground by the amount of the resonator potential, and must not be grounded. The cathode may be connected to one side of the heater or the center tap of the heater transformer secondary. When cathode and heater are connected together, connections to the cathode should be made directly to the cathode contacts on the tube socket and never to a heater lead. When cathode and heater are not connected together, the heater-cathode voltage should not exceed ± 100 volts. In all cases where the resonator is operated at ground potential, the heater transformer must be insulated to withstand the maximum resonator voltage.

In applications where the metal envelope is operated above ground potential, the tube should be surrounded by a grounded enclosure or insulating device for the protection of the operator. Adequate ventilation must be provided through this enclosure or insulating device to keep the ambient below the maximum specified values.

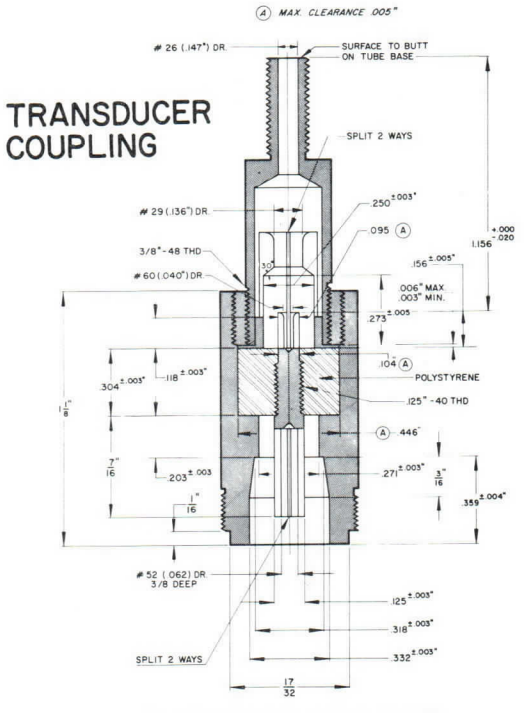

ALL METAL PARTS BRASS SILVER PLATED 25 M.S.I. (.0005" THICK)

REFLECTOR

The reflector electrode is connected to the small cap on the top of the tube. The power supply furnishing the reflector potential must be insulated to withstand the total resonator and reflector voltage. The reflector must never be allowed to become positive with respect to the cathode. If this precaution is not observed, damage to the tube may result. In cases where modulating potentials bring the reflector voltage close to zero volts, or where extremely high reflector circuit impedances are required, a diode should be connected between cathode and reflector to prevent the reflector from going positive.

MECHANICAL TUNING MECHANISM

The mechanical tuning mechanism of the 2K22 is designed to permit occasional frequency adjustments. Rotating the tuning screw in a clockwise direction reduces the frequency. Approximately 3 revolutions of the tuning nut are required to cover the recommended frequency range of the tube.

When the tube is first put into service, it should be mechanically tuned to the desired frequency. The tuning bows should then be flexed several times to relax the strains in the tuning mechanism. In this process the tuning screws should be adjusted to overshoot the desired frequency several times, each time decreasing the amount of tuning screw movement.

ELECTRONIC TUNING

With the mechanical tuning mechanism set near the desired frequency, vernier adjustment of the frequency may be accomplished by varying the reflector voltage. Maximum power output for a fixed mechanical tuner position, however, will be obtained at only one reflector value. If the mechanical tuning mechanism and the reflector voltage are mutually adjusted for a maximum power output, at a given frequency, and if the reflector voltage is then varied above and below the value for maximum power output, such that the power output is reduced to one-half, the frequency change between the half-power values is defined as electronic tuning range.

The amount of the electronic tuning and the linearity of its variation with reflector voltage is dependent upon the type of load used, and the coupling to the load.

2K22 OUTLINE DRAWING

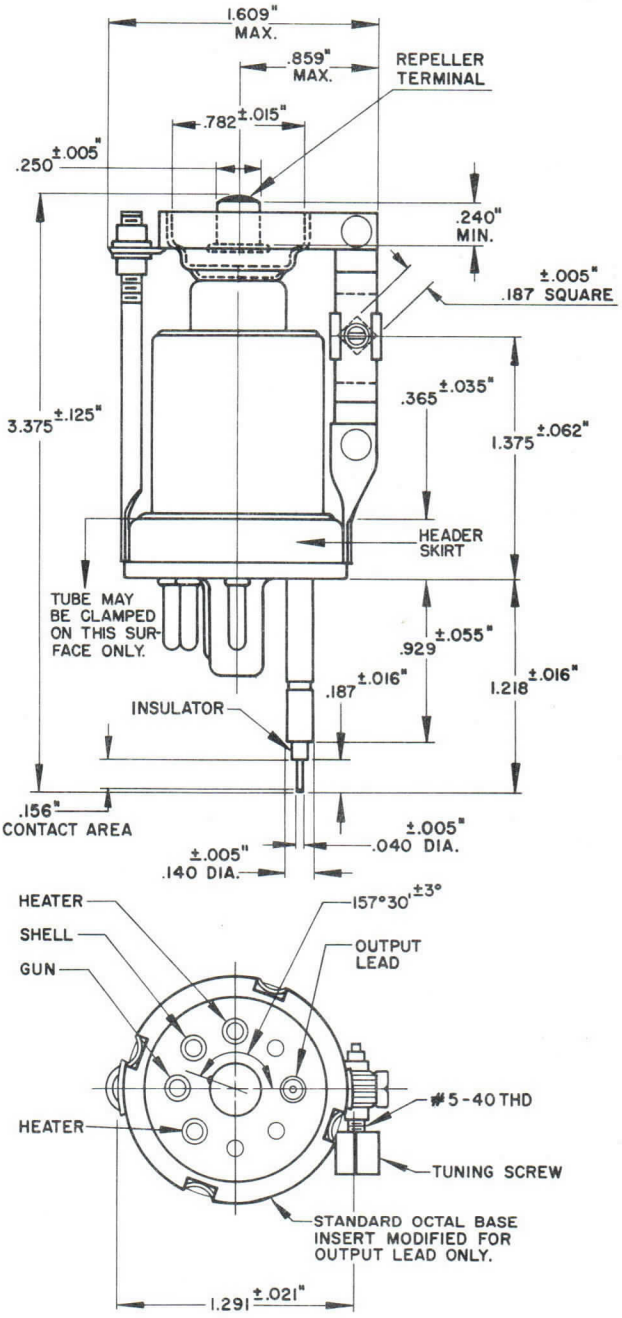

FREQUENCY STABILITY

To obtain the most stable operation from the 2K22, the reflector and resonator voltage supplies should be very well regulated. It is also essential that the 2K22 be operated at a near constant ambient temperature. Under no circumstances should the temperature exceed the maximum specified values.

The materials used in the mechanical tuning mechanism of the 2K22 have been selected in such a way that their thermal expansion coefficient will produce a desirable ambient temperature vs. frequency coefficient. In order that this desirable temperature coefficient will not be interfered with, a tube should not be clamped above the header skirt.

MODES OF OPERATION

Oscillation may be obtained in a given tube with several combinations of resonator and reflector voltages at a particular frequency. The regions where oscillation occurs within the reflector voltage range are referred to as voltage modes. The curves show characteristics of the average 2K22 in the recommended mode. This mode has been chosen because it represents the best compromise between optimum power output and wide electronic tuning range.

AVERAGE PERFORMANCE CHARACTERISTICS

TUBES DESIGNED FOR USE IN MODE 3 3/4

RESONATOR POTENTIAL=300 VOLTS

REFLECTOR VOLTAGE AT MAXIMUM POWER OUTPUT VS. FREQUENCY



ELECTRONIC TUNING BETWEEN P.O./2 VS. FREQUENCY

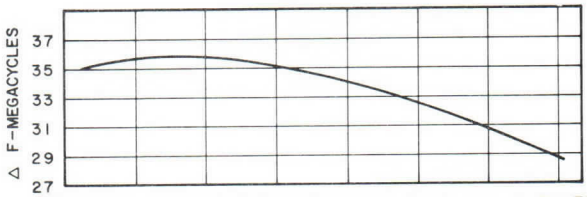

POWER OUTPUT (MAX.) VS. FREQUENCY

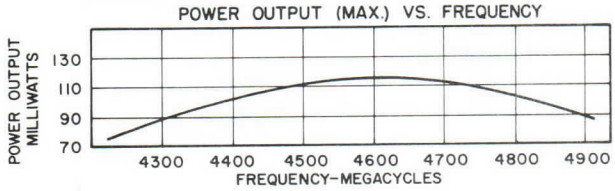

REFLECTOR VOLTAGE SWEEP BETWEEN P.O./2 VS. FREQUENCY

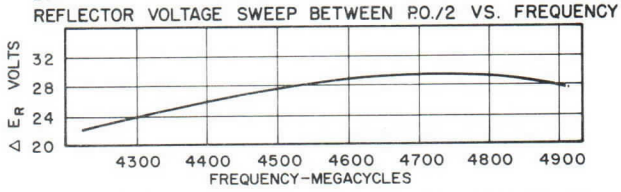

The exact value of reflector voltage producing maximum output at a certain frequency, varies from tube to tube. The voltage for all tubes at each mode, will fall within the shaded area indicated below.

POWER & FREQUENCY VS. REFLECTOR VOLTAGE

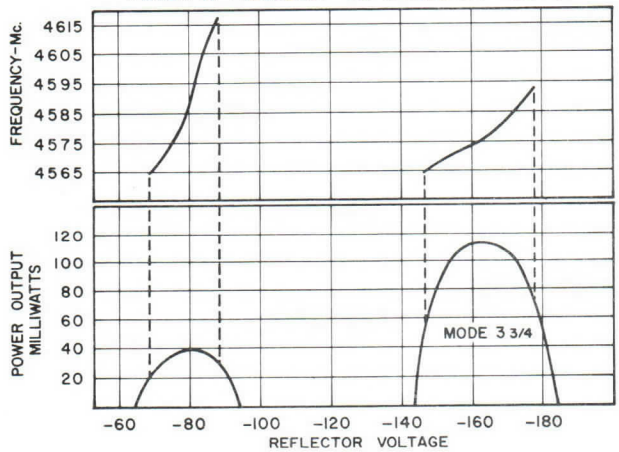

REFLECTOR VOLTAGE VS. FREQUENCY

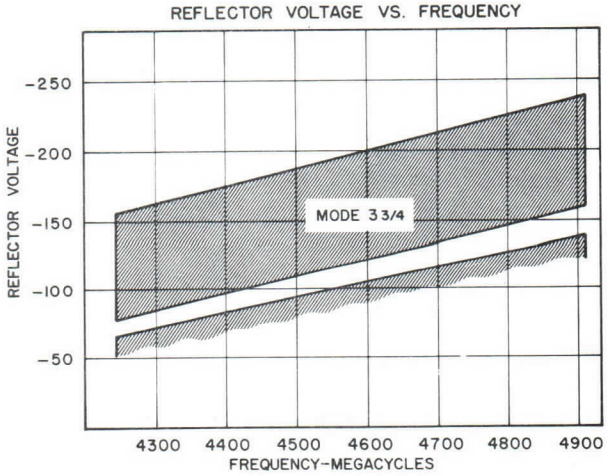

TYPE 2K25

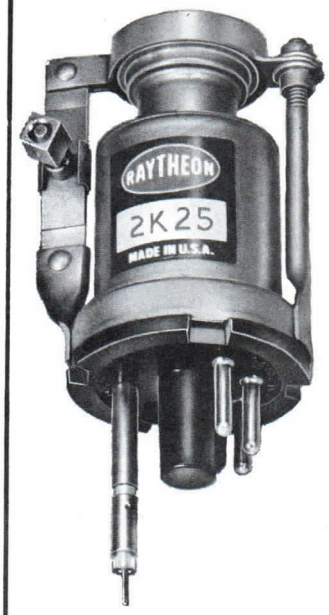

VELOCITY VARIATION OSCILLATOR

The 2K25 is a mechanically tuned velocity variation oscillator of the single-cavity reflex type designed for CW operation in the 8500 to 9660 Mc range with an average power output of 30 mW. Sufficient cooling for this tube is usually provided by freely circulating air. It is a coaxial output type tube intended to couple into a standard 1"x½" waveguide through a suitable transducer. The tube is particularly well suited for local oscillator service in microwave receivers and is useful also as a local oscillator in spectrum analyzers and as a microwave source for test purposes.

GENERAL CHARACTERISTICS

ELECTRICAL

Heater Characteristics

Voltage	6.3±0.5 V
Current	0.44 A

Maximum Ratings

Resonator Voltage	330 Vdc
Resonator Current	37 mAdc
Reflector Voltage	0 to —400 Vdc
Reflector Current	7 mAdc
Electronic Tuning Range (min.)	28 Mc
Heater-Cathode Voltage	±100 V
Shell Ambient Temperature	110°C
Coaxial Output Line Ambient Temperature	90°C
Thermal Compensation	—0.20 Mc/C°

Typical Operation

Resonator Voltage	250 Vdc	300 Vdc
Resonator Current	20 mAdc	25 mAdc
Reflector Voltage	—108 to —168 Vdc	—100 to —160 Vdc
Electronic Tuning Range @ 9660 Mc	32 Mc	44 Mc
Electronic Tuning Range @ 8500 Mc	45 Mc	60 Mc
Power Output @ 9660 Mc	23 mW	26 mW
Power Output @ 8500 Mc	21.5 mW	32 mW

MECHANICAL

Mounting Position	Any
Outline Dimensions	See Outline Drawing
Envelope	Metal
Base	Fits standard octal socket with #4 pin enlarged to 3/16"
Vibration (max)	10 g
Altitude (max)	50,000'
Humidity	100%
Guaranteed Minimum Life	500 Hours

Printed in U.S.A.

DETAILED ELECTRICAL INFORMATION

CATHODE

In applications where the metal envelope (resonator) of the tube is operated at ground potential, the cathodes will be negative with respect to ground by the amount of resonator and tuner diode potentials respectively. The klystron cathode may be connected to one side of the heater or the center tap of the heater transformer secondary. When the klystron cathode and heater are connected together, connections to the cathode should be made directly to the cathode contacts on the tube socket and never to a heater lead. When the cathode and heater are not tied together, the heater-cathode voltage should not exceed ± 100 volts. In all cases where the resonator is operated at ground potential, the heater transformers must be insulated to withstand the maximum resonator and diode voltages respectively.

In applications where the metal envelope is operated above ground potential, the tube should be surrounded by a grounded enclosure or insulating device for the protection of the operator. Adequate ventilation must be provided through this enclosure or insulating device to keep the ambient below the maximum specified values.

REFLECTOR

The reflector electrode is connected to the small cap on the top of the tube. The power supply furnishing the reflector potential must be insulated to withstand the total resonator and reflector voltage. The reflector must never be allowed to become positive with respect to the cathode. If this precaution is not observed, damage to the reflector may result. In cases where modulating potentials bring the reflector voltage close to zero volts, or where extremely high reflector circuit impedance are required, a diode should be connected between cathode and reflector to prevent the reflector from going positive.

MECHANICAL TUNING

Occasional coarse tuning is accomplished by rotating the Tuning Screw in a clockwise direction to reduce the frequency. The Tuning Bows will move from a closed to an open position in approximately 4.0 revolutions. Care should be taken not to exceed the minimum frequency specified, since further clockwise rotation may damage the internal structure of the tube. In the process of tuning, the screw should be adjusted to overshoot the desired frequency several times, each time decreasing the amount of tuning screw movement.

ELECTRONIC TUNING

With the mechanical tuner adjusted so that the tube is operating near the desired frequency, vernier frequency adjustment may be made by varying the reflector voltage. Maximum power output for a given mechanical tuner setting, however, will be obtained at only one value of reflector voltage. If the mechanical tuner and reflector voltage are mutually adjusted for maximum power output at a given frequency, and if then the reflector voltage is varied above and below the value for maximum power output such that the power output is reduced by one half, the frequency change between the half power values is defined as the electronic tuning range. The electronic tuning range and linearity depend on the type of load and coupling used. A highly reactive load may shorten the electronic tuning range and cause non-linear variation of frequency with reflector voltage.

MODE OF OPERATION

Oscillation may be obtained in a given tube with several combinations of resonator and reflector voltage at a given frequency. The region where oscillations occur within the reflector voltage range are referred to as voltage modes. The curves show the characteristics of the 2K25 in the recommended mode. This mode has been chosen because it represents the best compromise between optimum power and wide electronic tuning range.

AVERAGE CHARACTERISTICS

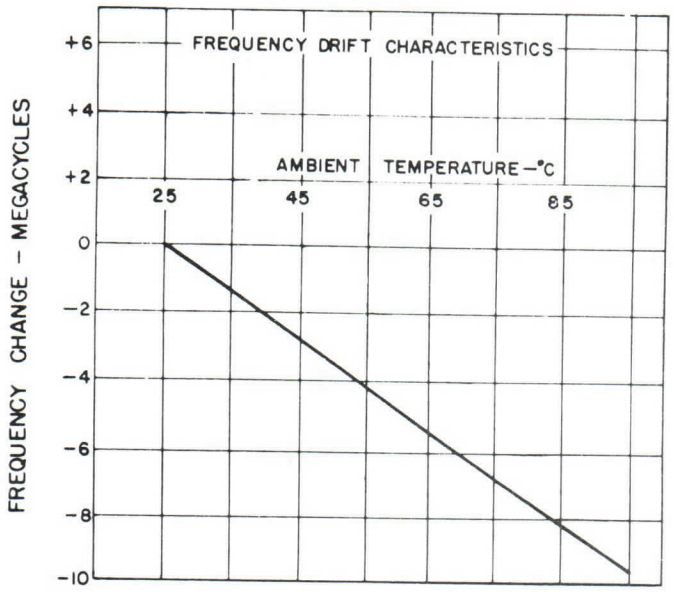

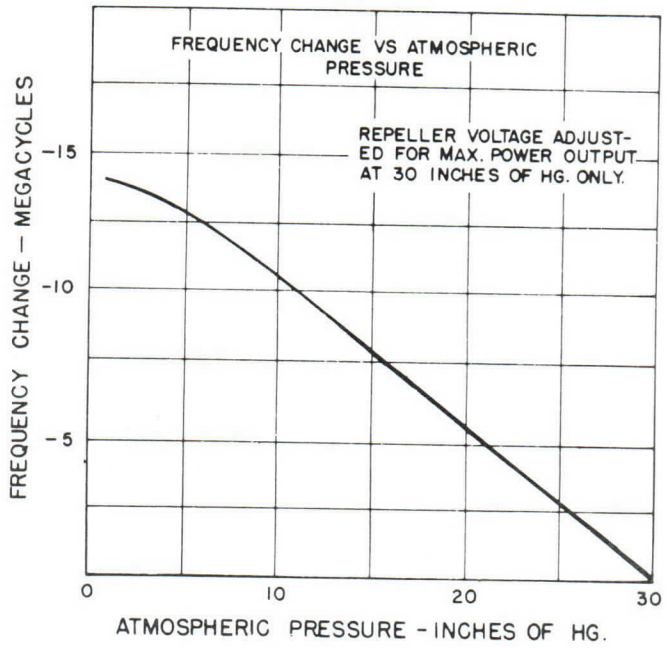

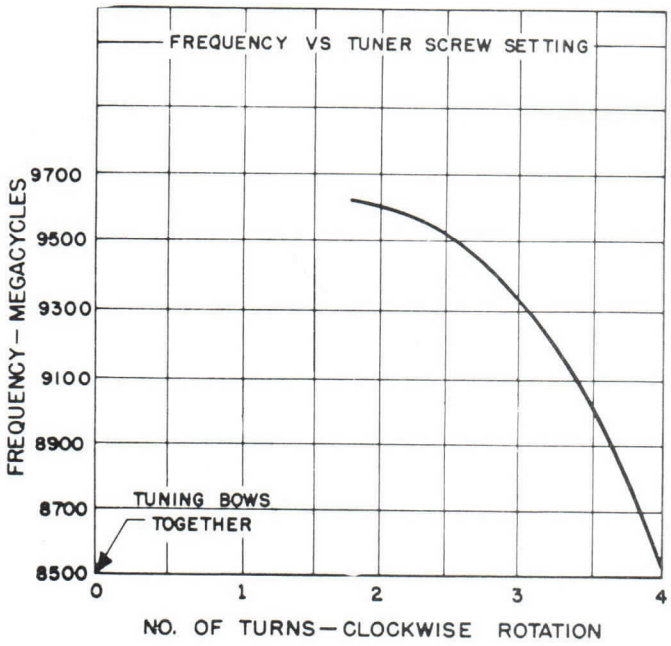

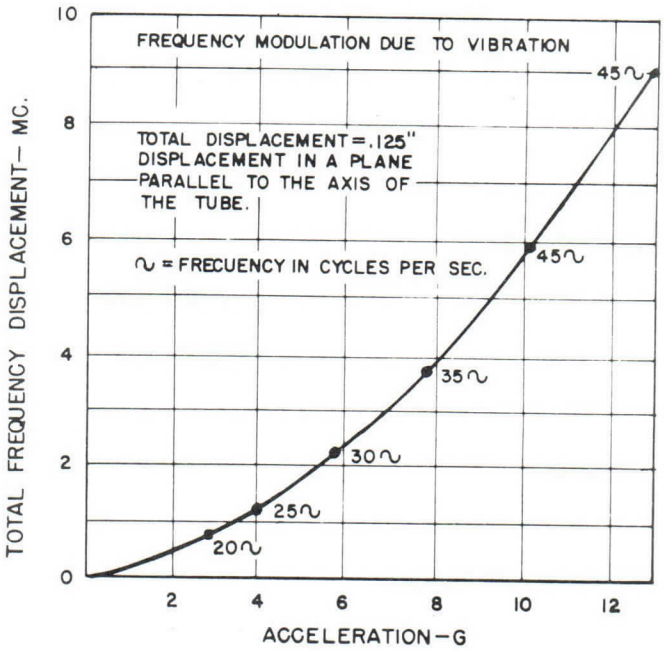

AVERAGE CHARACTERISTICS

TUBES DESIGNED FOR USE IN MODES A OR B

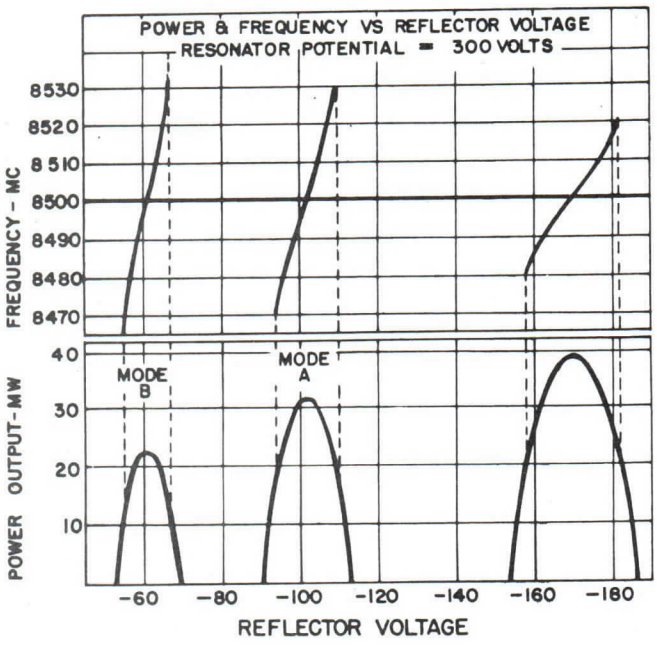

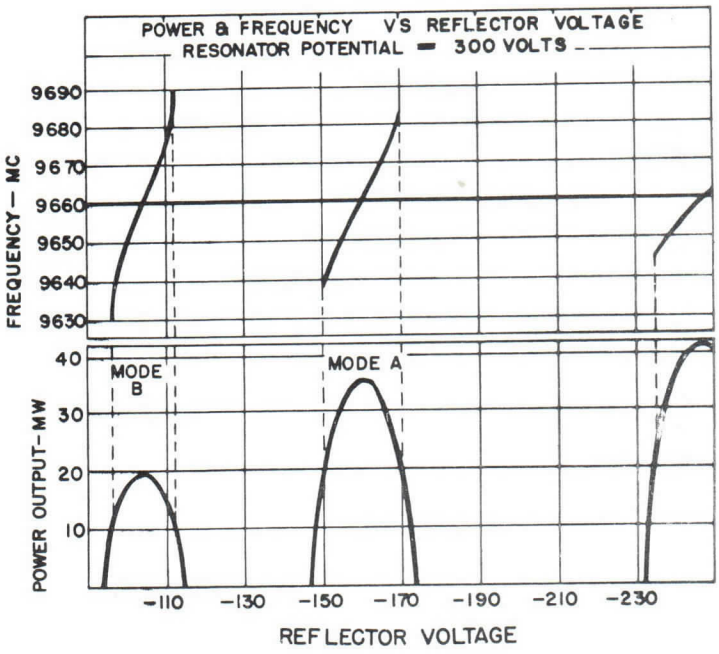

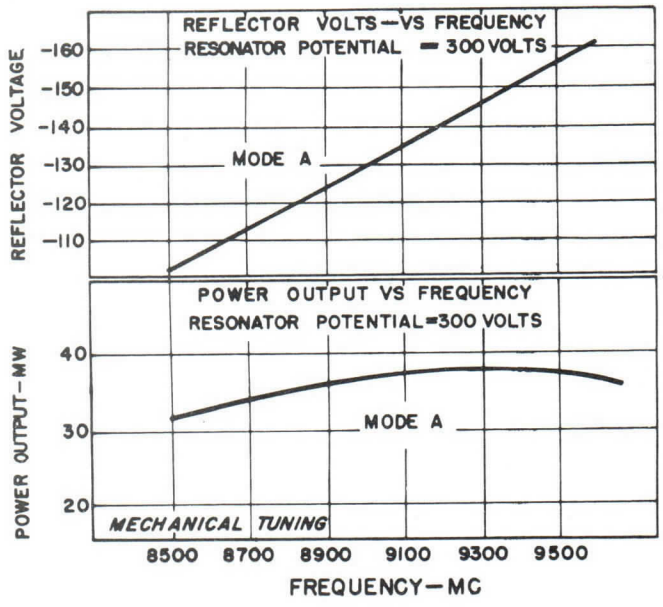

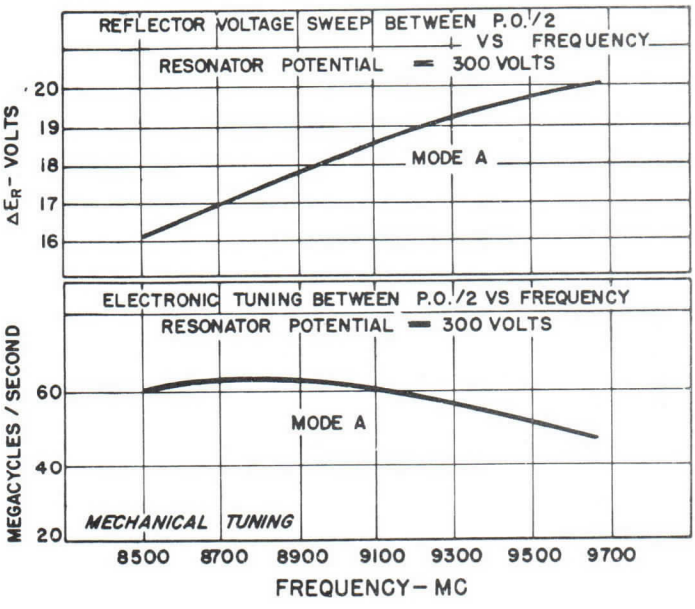

AVERAGE CHARACTERISTICS

TUBES DESIGNED FOR USE IN MODES A OR B

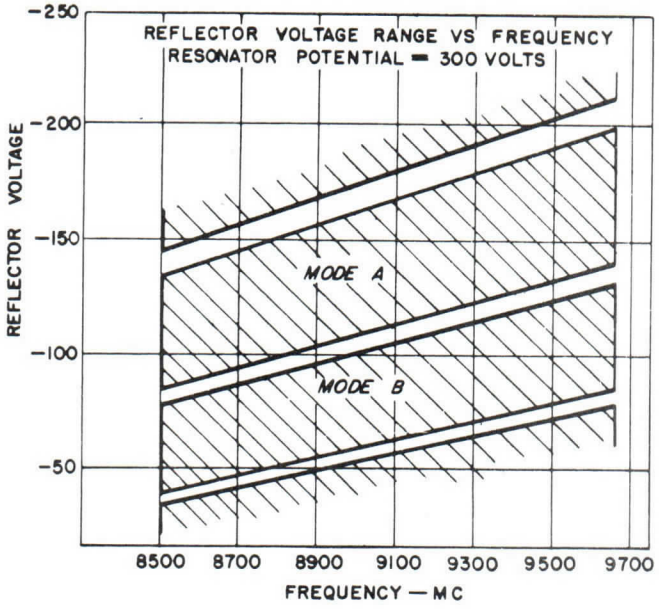

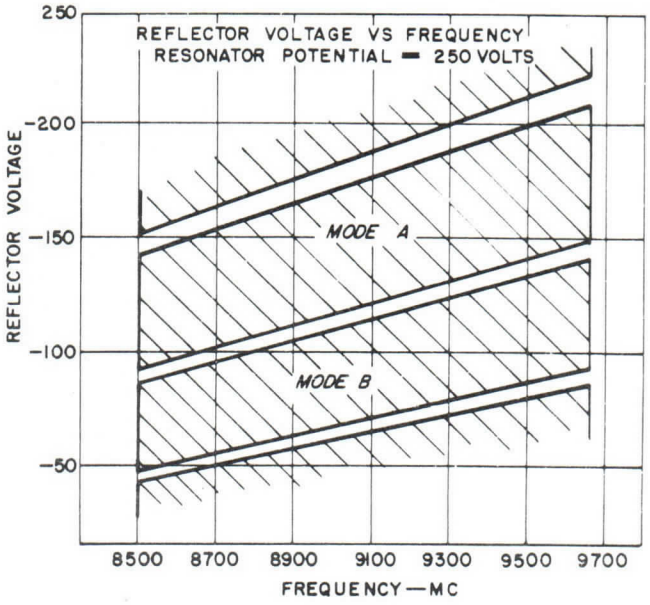

THE EXACT VALUE OF REFLECTOR VOLTAGE, PRODUCING MAXIMUM OUTPUT AT A CERTAIN FREQUENCY, VARIES FROM TUBE TO TUBE. THE VOLTAGE FOR ALL TUBES, AT EACH MODE, WILL FALL WITHIN THE SHADED AREA INDICATED ABOVE.

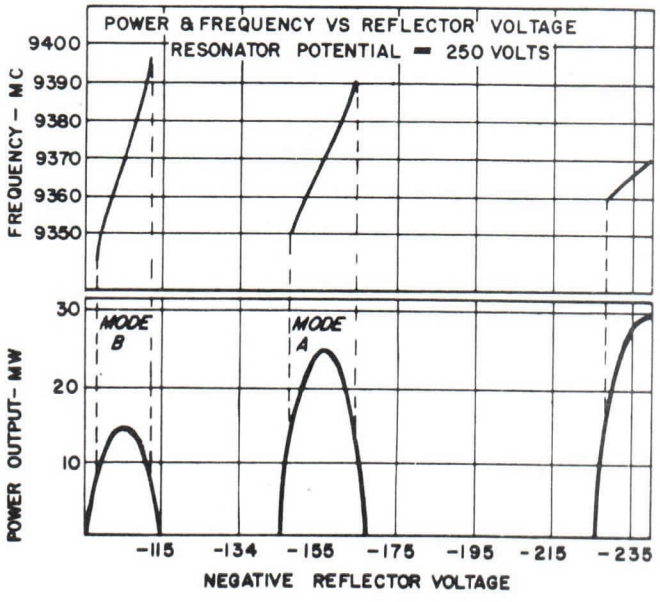

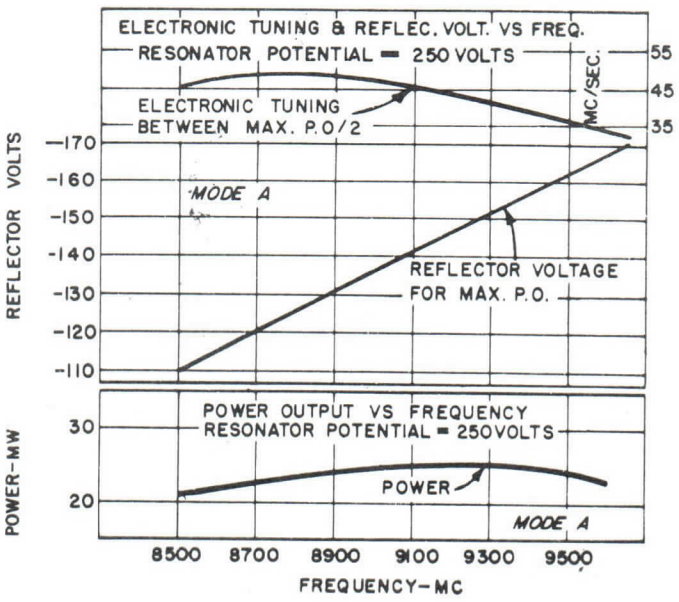

DETAILED MECHANICAL INFORMATION

INSTALLATION

The 2K25 requires a modified standard octal socket with pin #4 enlarged. The tube may be mounted in any position, but should be rigidly clamped to ensure the proper depth of the coaxial output line in the waveguide and to guard against excessive strain in the coaxial output line. The tube should be clamped to the waveguide and socket assembly by the header skirt, but not so that excessive stress will be applied between the header skirt and the base. Under conditions of severe vibration, lack of rigidity in the clamping which will allow the tube to move with respect to the waveguide will contribute seriously to frequency variations.

The coaxial output line is coupled into the waveguide (1" x ½") through a transducer (see Fig. for socket details.) All tabulated data in this sheet were obtained using this type of coupling and a load presenting a VSWR less than 1.1:1. It is important that this tube coupling assembly, or its electrical equivalent, be used. To realize satisfactory tube performance, the voltage standing-wave ratio at the coupling assembly should not exceed 1.5:1.

SHIELDING

Operation of the 2K25 in the presence of a strong magnetic field usually requires shielding of the resonator and reflector leads to avoid undesirable modulation of the tube output. In extremely troublesome environments, it may be necessary to place the 2K25 in a metal chamber with polyiron chokes provided on the leads bringing voltages into the chamber.

OUTLINE DRAWING

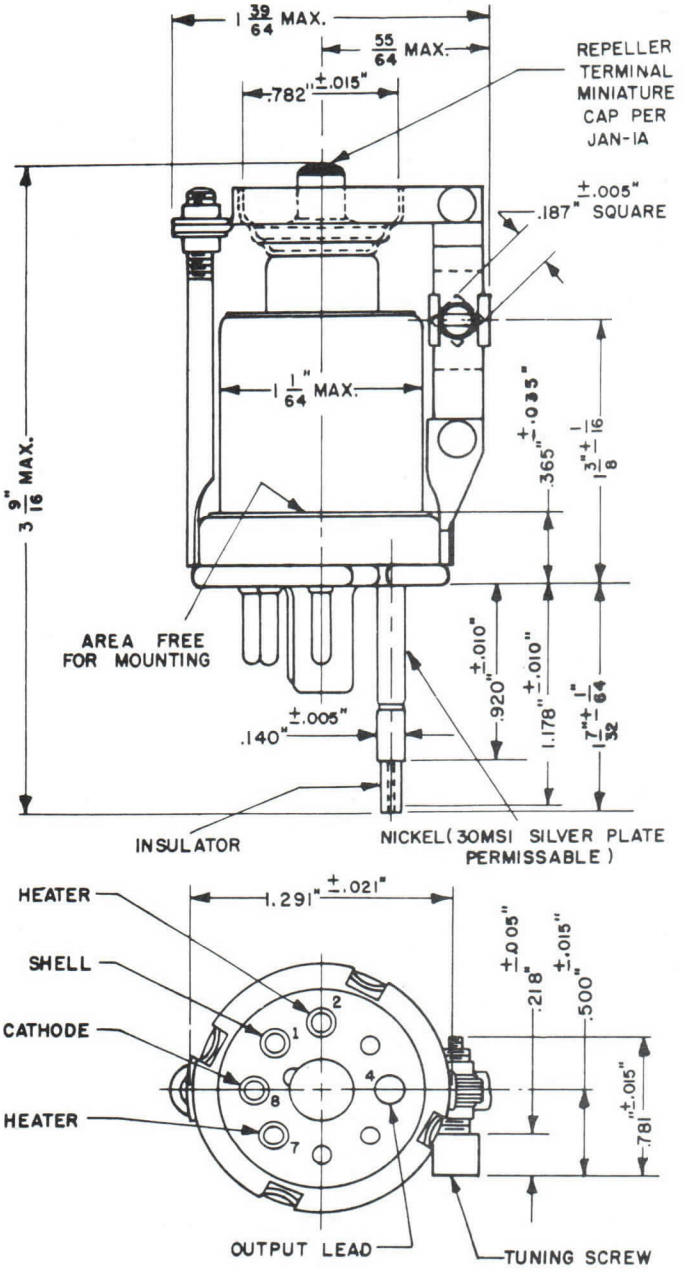

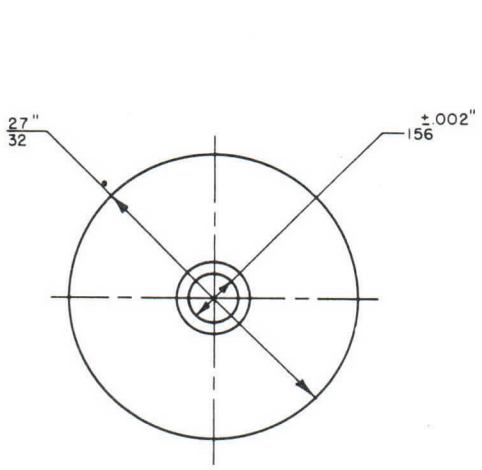

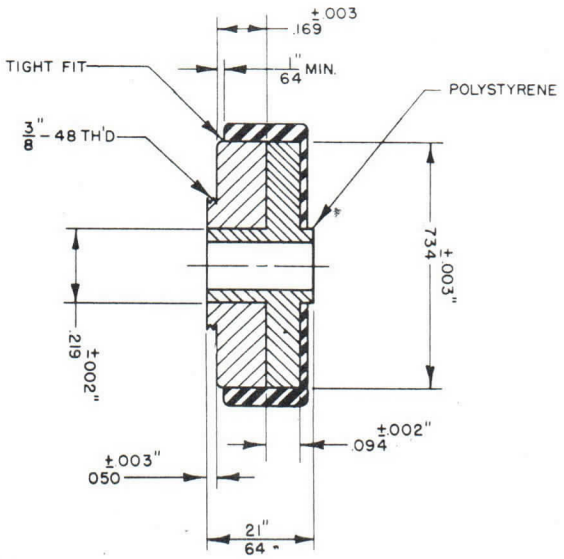

ENLARGED VIEW
OF RF CHOKE

A BROAD BAND COUPLING
DESIGNED TO CONNECT THE
2K25 TO 1" x 1/2" WAVEGUIDE

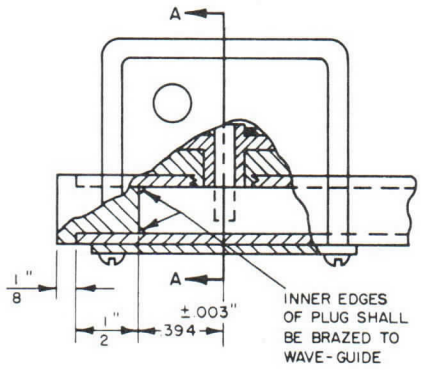

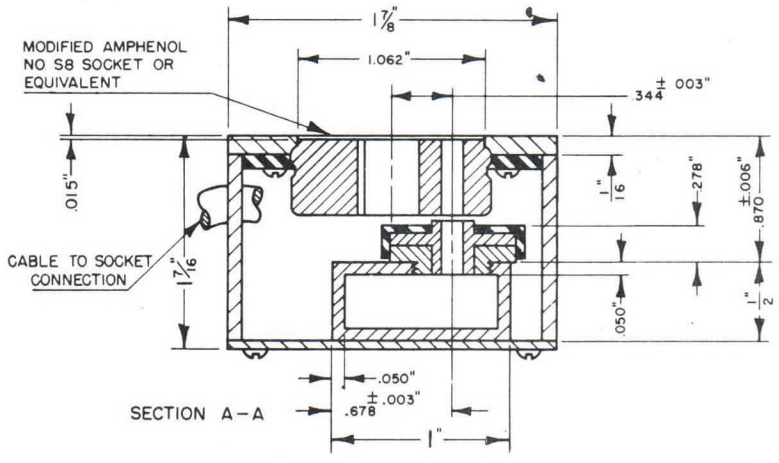

TYPE 2K26

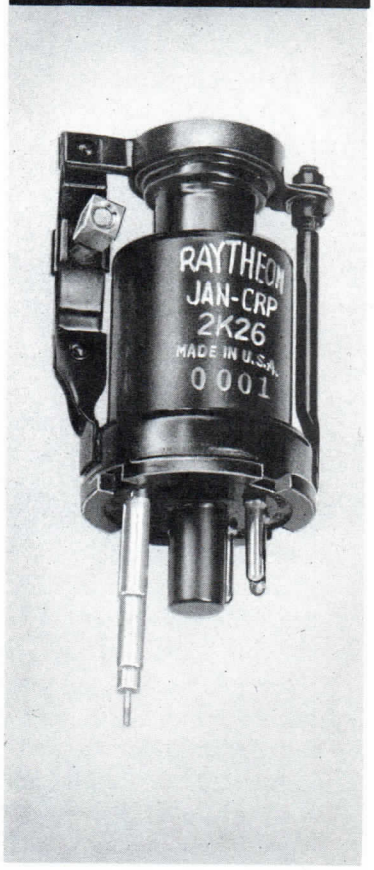

VELOCITY VARIATION OSCILLATOR

The type 2K26 is a velocity variation oscillator of the single cavity (integral) reflex type, designed for operation in the frequency range of 6250 to 7060 megacycles with an average power output of 80 milliwatts. The mechanical tuning mechanism provides a simple method of making wide frequency adjustments. In addition, the 2K26 can be electronically tuned to give a 45 megacycle vernier adjustment. The 2K26 is designed for operation at any frequency within the specified range, and it is particularly suited for local oscillator service in microwave receivers. It is useful, also, as a local oscillator in microwave spectrum analyzers, as a pulse generator for testing circuit response, and as a frequency-modulated source in microwave relay links.

GENERAL CHARACTERISTICS

ELECTRICAL

Heater

Heater, for oxide coated unipotential cathode	
Voltage (A.C. or D.C.)	6.3±0.5 V
Current	0.44 A

Maximum Ratings, Absolute Values

Resonator Voltage	330 Vdc
Resonator Current	35 mAdc
Reflector Voltage	
Positive Value	0 Vdc
Negative Value	—350 Vdc
Heater-Cathode Voltage	±100 Vdc
Ambient Temperature of Air Around Shell	110 °C
Temperature of Coaxial Output Line	75 °C

Typical Operating Conditions

Frequency Range	6250 to 7060 Mc
Resonator Voltage	300 Vdc
Resonator Current	24.0 mAdc
Reflector Voltage Range*	—70 to —115 Vdc
Reflector Current	Less than 7μAdc
Electronic Tuning (Half Power)**	
Frequency Change @ 6660 Mc	45 Mc
Power Output @ 6660 Mc	100 mW
Thermal Compensation	—0.20 Mc/°C

*Adjusted for maximum power output at 6660 Mc.

**Change in frequency between the two ½ power points when the reflector voltage is varied above and below the point of max. power output corresponding to the given frequency.

Printed in U.S.A.

VELOCITY VARIATION OSCILLATOR

MECHANICAL

Mounting	Any Position
Overall Dimensions	See Outline Drawing
Resonator Cavity	Integral part of tube
Envelope	Metal
Cap	Miniature
Base	To fit standard octal with No. 4 pin enlarged to admit transducer
Net Weight	1.5 Ounces

INSTALLATION

The 2K26 requires a standard octal socket modified with No. 4 pin enlarged to admit the coaxial transducer. The tube may be mounted in any position but should be rigidly clamped to insure proper contact of the tube with transducer and to guard against excessive strains on the coaxial output line. The tube must be clamped on or below the shoulder of the header skirt.

The tube is coupled into the waveguide through a wide band transducer coupling unit. (See outline drawing for transducer.) All the tabulated data contained in this data sheet was taken using this transducer operating into a matched load.

It is important that this transducer, or its electrical equivalent, be used to insure tube interchangeability, and satisfactory tuning range characteristics. The standing wave ratio at the transducer should not exceed a VSWR of 1.1.

SHIELDING

Where the 2K26 is to be operated in the presence of strong magnetic fields, shielding of the resonator and reflector voltage leads is usually required in order to avoid undesirable modulation of the tube output. In extremely troublesome conditions, it may be advisable to place the 2K26 in a metal chamber with polyiron chokes provided to bring the voltages into the chamber. Adequate ventilation must be provided.

CATHODE

In applications where the metal envelope (resonator) of the tube is operated at ground potential, the cathodes will be negative with respect to

TRANSDUCER COUPLING

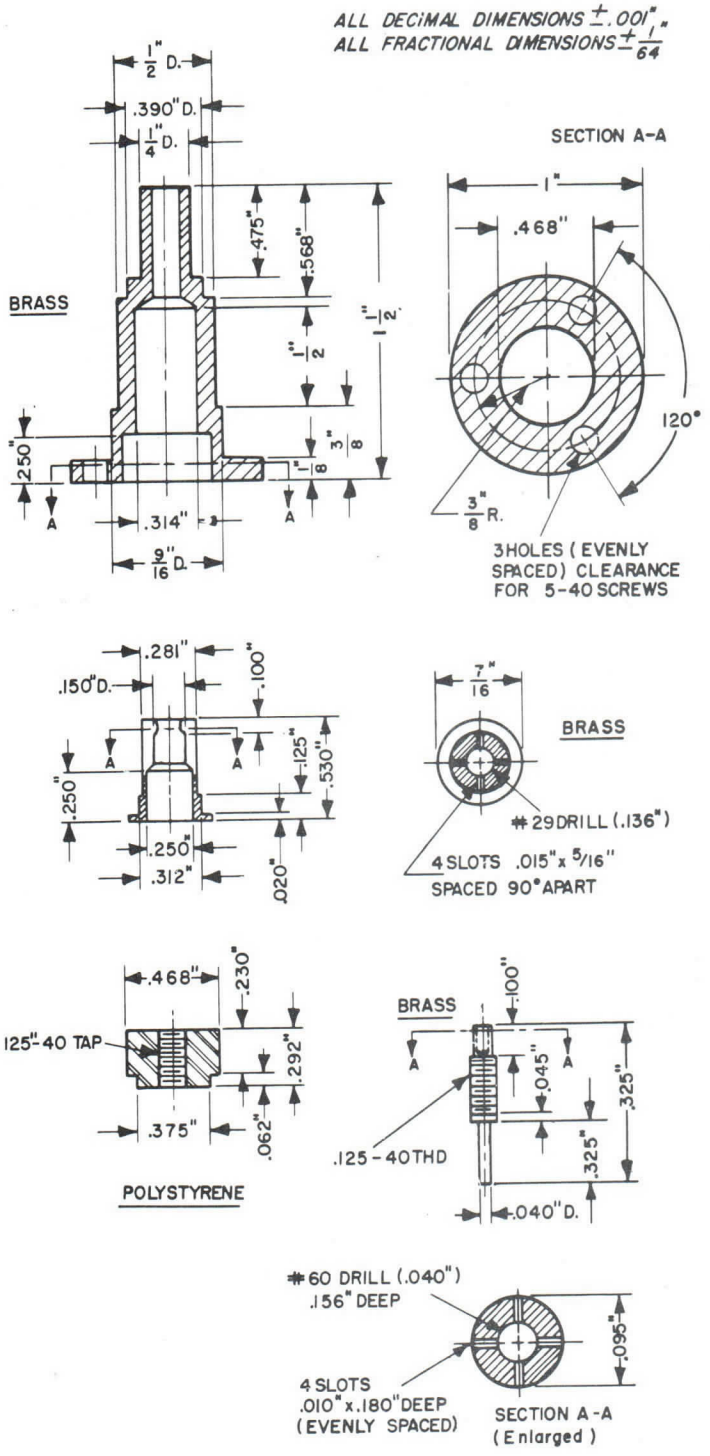

ground by the amount of resonator and tuner diode potentials respectively. The klystron cathode may be connected to one side of the heater or the center tap of the heater transformer secondary. When the klystron cathode and heater are connected together, connections to the cathode should be made directly to the cathode contacts on the tube socket and never to a heater lead. When the cathode and heater are not tied together, the heater-cathode voltage should not exceed ±100 volts. In all cases where the resonator is operated at ground potential, the heater transformers must be insulated to withstand the maximum resonator and diode voltages respectively.

In applications where the metal envelope is operated above ground potential, the tube should be surrounded by a grounded enclosure or insulating device for the protection of the operator. Adequate ventilation must be provided through this enclosure or insulating device to keep the ambient below the maximum specified values.

REFLECTOR

The reflector electrode is connected to the small cap on the top of the tube. The power supply furnishing the reflector potential must be insulated to withstand the total resonator and reflector voltage. The reflector must never be allowed to become positive with respect to the cathode. If this precaution is not observed, damage to the reflector may result. In cases where modulation potentials bring the reflector voltage close to zero volts, or where extremely high reflector circuit impedance are required, a diode should be connected between cathode and reflector to prevent the reflector from going positive.

MECHANICAL TUNING MECHANISM

The mechanical tuning mechanism of the 2K26 is designed to permit occasional frequency adjustments. Rotating the tuning screw in a clockwise direction reduces the frequency. Approximately 3 revolutions of the tuning nut are required to cover the recommended frequency range of the tube.

When the tube is first put into service, it should be mechanically tuned to the desired frequency. The tuning bows should then be flexed several

OUTLINE DRAWING

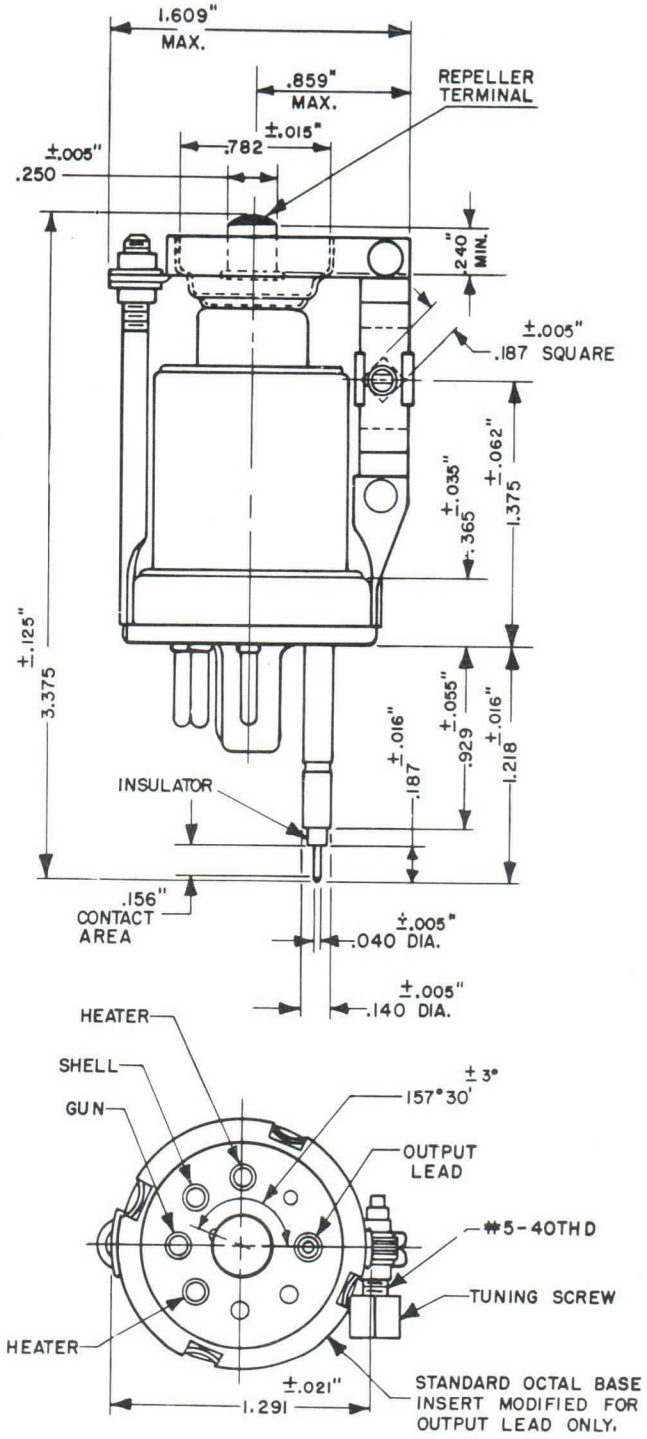

times to relax the strains in the tuning mechanism. In this process the tuning screws should be adjusted to overshoot the desired frequency several times, each time decreasing the amount of tuning screw movement.

ELECTRONIC TUNING

With the mechanical tuning mechanism set near the desired frequency, vernier adjustment of the frequency may be accomplished by varying the reflector voltage. Maximum power output for a fixed mechanical tuner position, however, will be obtained at only one reflector value. If the mechanical tuning mechanism and the reflector voltage are mutually adjusted for a maximum power output, at a given frequency, and if the reflector voltage is then varied above and below the value for maximum power output, such that the power output is reduced to one-half, the frequency change between the half-power values is defined as electronic tuning range.

The amount of the electronic tuning and the linearity of its variation with reflector voltage is dependent upon the type of load used, and the coupling to the load. When maximum electronic tuning range is required, it is recommended that the transducer be operated into a resistive load. A highly reactive load will shorten the electronic tuning range and cause non-linear variation of frequency with reflector voltage.

FREQUENCY STABILITY

To obtain the most stable operation from the 2K26, the reflector and resonator voltage supplies should be very well regulated. It is also essential that the 2K26 be operated at a near constant ambient temperature. Under no circumstances should the temperature exceed the maximum specified values.

The materials used in the mechanical tuning mechanism of the 2K26 have been selected in such a way that their thermal expansion coefficient will produce a desirable ambient temperature vs. frequency coefficient. In order that this desirable temperature coefficient will not be interfered with, a tube should not be clamped above the header skirt.

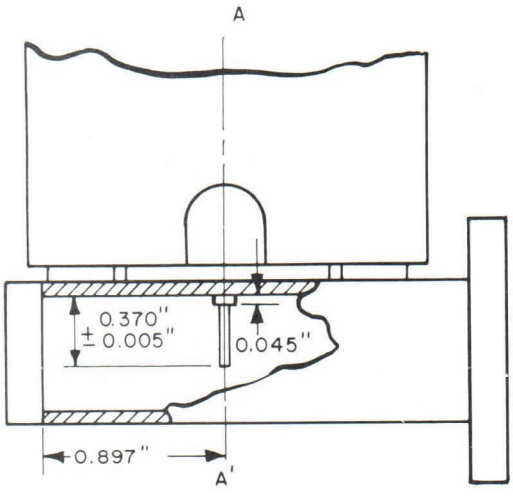

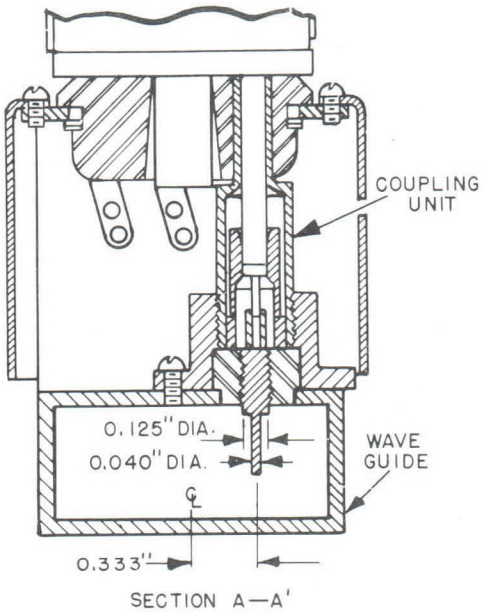

POSITION OF TRANSDUCER COUPLING UNIT WITH RESPECT TO 1½" x ¾" WAVEGUIDE

RAYTHEON

TECHNICAL INFORMATION

Excellence in Electronics

TYPE 2K28

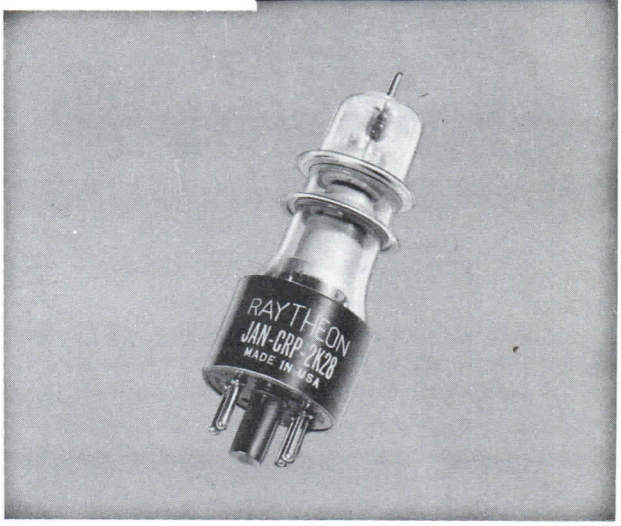

VELOCITY VARIATION OSCILLATOR

The type 2K28 is a reflex velocity variation oscillator designed for use with an external cavity in CW operation over the 2650 to 3700 Mc range with a minimum power output of 80 milliwatts. Freely circulating or in some cases forced air is required for cooling of the grid ring cavity contacts. The wide frequency range of this tube makes it ideally suited for signal generator and special local oscillator applications. Special cavities and certain reflector modes can be used with the 2K28 to obtain an extended frequency coverage of 1800 to 4000 Mc.

GENERAL CHARACTERISTICS

ELECTRICAL

Heater Characteristics

Heater Voltage	6.3V ±5%
Heater Current	0.66 A

Ratings — Absolute Maximum Values

Grid #1 Voltage	330 Vdc
Grid #2 and #3 Voltage	330 Vdc
Cathode Current	45 mAdc
Reflector Voltage	
Positive Value	−25 Vdc
Negative Value	500 Vdc
Reflector Current	5 uAdc
Heater-Cathode Voltage	±50V
VSWR	1.20/1
Cavity Temperature	150°C
Thermal Frequency Drift (with brass cavity)	.15 Mc/°C

The values specified above are based on the absolute system and must not be exceeded under any service condition. Operation above these limiting values may affect tube life and serviceability adversely. It does not necessarily follow that combinations of absolute maximum ratings can be attained simultaneously.

Typical Operating Conditions

Frequency Range	3315-3680 Mc
Reflector Voltage Transit Mode	2¾
Grid #1 Voltage	300 Vdc
Grid #2 and #3 Voltage	300 Vdc
Cathode Current	30 mAdc
Reflector Voltage Range	−150 to −250 Vdc
Electronic Tuning Range Po/2	20 Mc
Average Power Output	125 mW

Printed in U.S.A.

MICROWAVE AND POWER TUBE DIVISION
RAYTHEON COMPANY
FOUNDRY AVE., WALTHAM 54, MASS.

3633 — 12-55

MECHANICAL

Mounting Position	Any
Overall Dimensions	See Outline Dwg.
Envelope	Glass
Vibration	10G (max.)
Altitude	10000′ (max.)
Base	Intermediate Octal, 4 Pin
Pin Connections	See Outline Dwg.

DETAILED ELECTRICAL INFORMATION

REFLECTOR

The power supply furnishing the reflector potential must be insulated to withstand the total resonator and reflector voltage. The reflector must never be allowed to become more positive than —25 volts with respect to the cathode. If this precaution is not observed, damage to the tube may result. Where high reflector circuit impedances are used, it is advisable to shunt the high impedance of the power supply with a small diode.

CATHODE

In most applications, the metal cavity used with the 2K28 is operated at ground potential and the cathode will be negative with respect to ground by the amount of the resonator potential. The cathode may be connected to one side of the heater or the center tap of the heater transformer secondary. When the cathode and heater are connected together, connections to the cathode should be made directly to the cathode contact on the tube socket and never to a heater lead. When the cathode and heater are not tied together the heater cathode voltage should not exceed ±50V. In all cases where the resonator is operated at ground potential, the heater transformer must be insulated to withstand the maximum resonator voltage. To obtain maximum tube life, it is recommended that the heater be allowed to warm up for 30 seconds before other voltages are applied. Application of the beam potential must not precede the application of any of the other voltages.

ELECTRONIC TUNING

Vernier adjustment of the frequency of the 2K28 is accomplished by varying the reflector voltage. If the mechanical tuning mechanism employed in the external cavity and the reflector voltage are mutually adjusted to yield a maximum power output at a given frequency, and if then the reflector voltage is varied above and below the value for maximum power such that the power output is reduced to one half, the frequency change between the half power values is defined as the electronic tuning range. The range of electronic tuning and the linearity of its variation with reflector voltage is a function of the type of load and coupling used. Maximum electronic tuning range will be achieved with operation into a resistive load. Operation into a highly reactive load may be attended by excessive hysteresis, and nonlinear variation of frequency with reflector voltage.

FREQUENCY STABILITY

The regulation of the voltages applied to the reflector and resonator will be reflected directly in the stability of the output frequency, hence the regulation of these supplies must be commensurate with the stability requirements of the application.

The thermal frequency drift experienced with the 2K28 will be mainly a function of the change in physical size of the resonant chamber with temperature. Careful consideration should therefore be given to the material from which the external cavity is constructed.

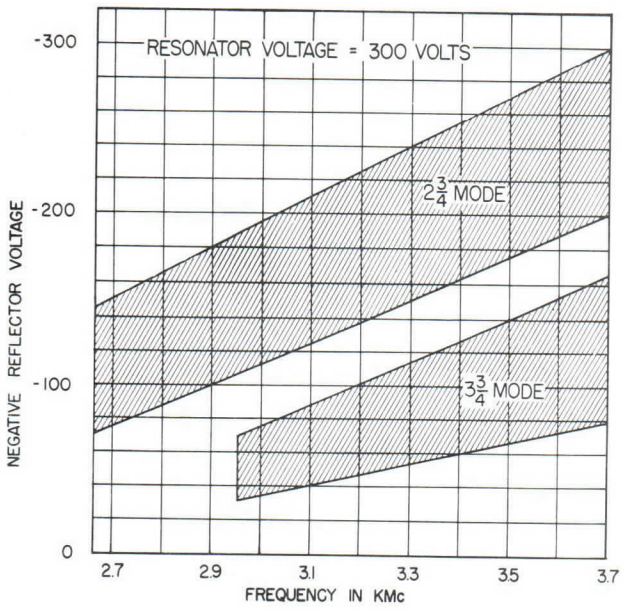

MODES OF OPERATION

Oscillation can be obtained in a given tube with several combinations of resonator and reflector voltage at a particular frequency. The regions where oscillations occur, within the reflector voltage, are referred to as voltage modes. (See mode curves.) The 2¾ reflector voltage transit mode is the recommended mode of operation because it represents the best compromise between optimum power output and wide electronic tuning range.

INSTALLATION

The tube mounts in any position and requires a standard octal socket. Positive contact of the resonator discs with the cavity is essential for satisfactory tube operation. Cavity design should be such that no undue strain be set up in the copper to glass seals at the junction of the disc and tube as a result of thermal expansion or contraction.

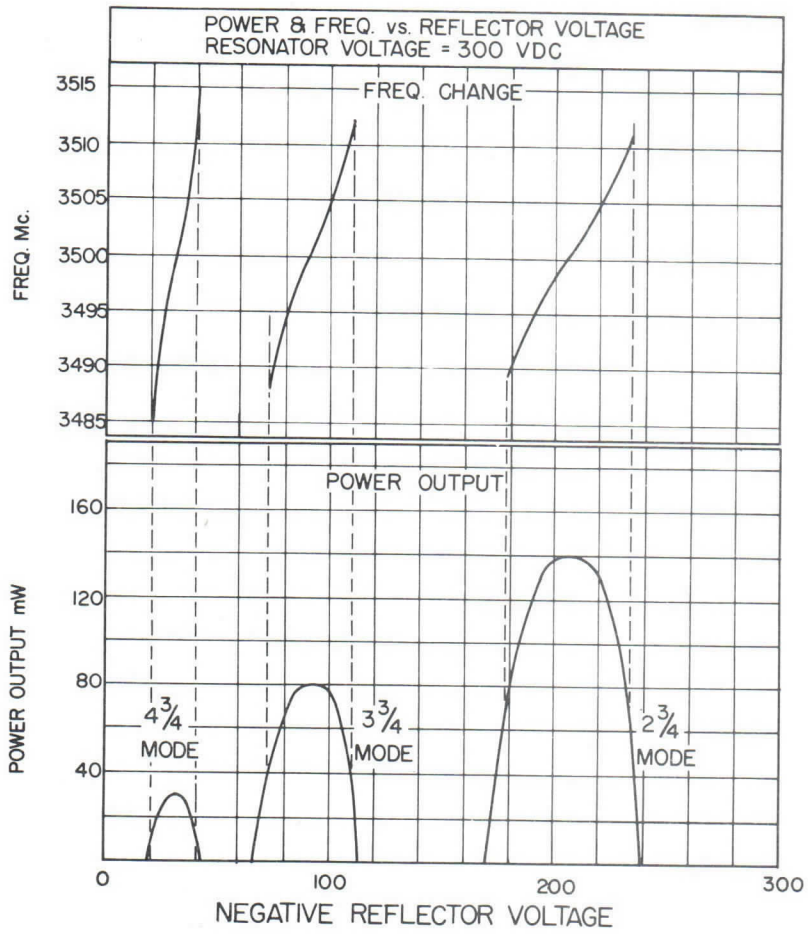

Printed in U.S.A.

RAYTHEON

VELOCITY VARIATION OSCILLATOR

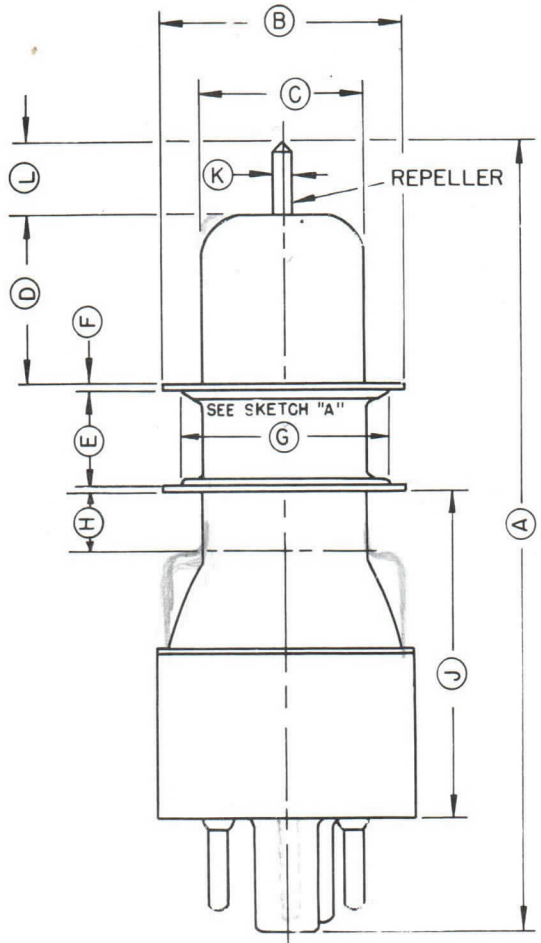

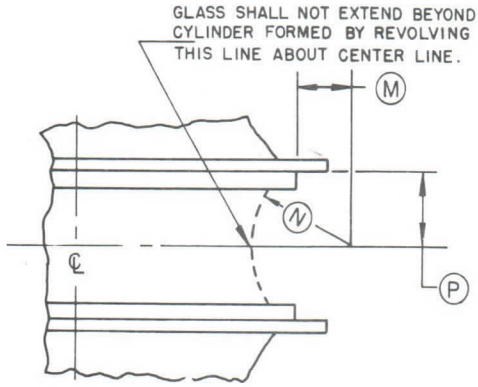

SKETCH "A"

REF.	DIMENSIONS
A	4.15 MAX.
B	1.115 MIN. 1.135 MAX.
C	.812 ± .031
D	.797 MIN. .891 MAX.
E	.405 ± .003
F	.010 APPROX.
G	1.005 MAX. NOTE 1.
H	.250 MIN.
J	1.531 MIN. 1.781 MAX.
K	.055 MIN. .062 MAX.
L	.313 MIN.
M	.188 MAX.
N	.250 MIN.
P	.201 MIN. .204 MAX.

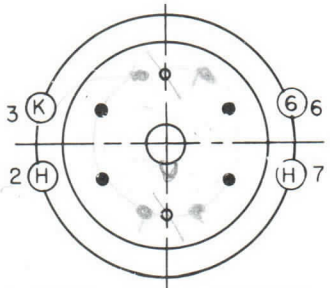

BOTTOM VIEW OF STANDARD INTERMEDIATE OCTAL BASE.

NOTE 1:
DIMENSION APPLIES TO EACH DISC SEPARATELY.

NOTE 2:
DISCS SHALL BE CONCENTRIC WITH EACH OTHER WITHIN 0.015". THE DISCS SHALL BE CONCENTRIC WITHIN .094".

NOTE 3:
DISCS SHALL BE SMOOTH, FREE FROM TEARS & SHALL BE GOLD PLATED 20 MSI OR 10 MSI NICKEL PLUS 10 MSI SILVER.

NOTE 4:
THE CAVITY DIMENSIONS WHICH CORRESPOND TO THE 0.405 ± 0.003 DIMENSIONS ON THE TUBES SHALL BE 0.401" MAX. 0.396" MIN.

ALL DIMENSIONS IN INCHES

RAYTHEON
2K28
TUBE OUTLINE DRAWING

TYPE 2K29

GENERAL DESCRIPTION

The type 2K29 is a velocity variation oscillator of the single cavity (integral) reflex type, designed for operation in the frequency range 3400 to 3960 megacycles with an average power output of 90 milliwatts. The mechanical tuning mechanism provides a simple method of making wide frequency adjustments. Vernier frequency adjustments may be made electronically. The 2K29 is particularly well suited to serve as a local oscillator in microwave receivers.

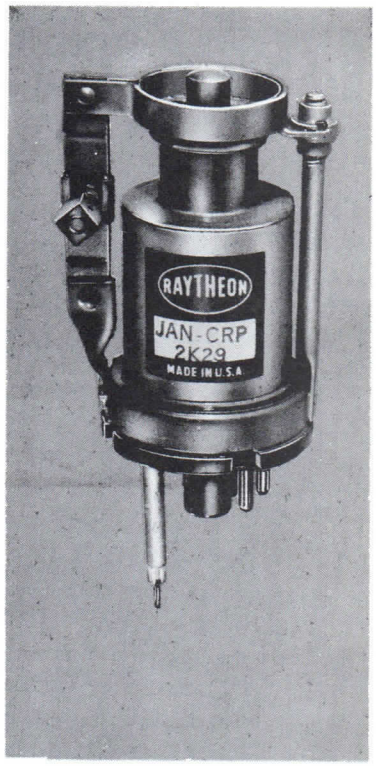

GENERAL CHARACTERISTICS

ELECTRICAL

Heater

Heater, for oxide coated unipotential cathode	
Voltage (A.C. or D.C.)	6.3±0.5 V
Current	0.44 A

Maximum Ratings, Absolute Values

Resonator Voltage	330 Vdc
Resonator Current	37 mAdc
Reflector Voltage	
Positive Value	0 Vdc
Negative Value	—350 Vdc
Heater-Cathode Voltage	±100 V
Ambient Temperature of Air Around Shell	110° C
Temperature of Coaxial Output Line	75° C

Typical Operating Conditions

Frequency Range	3400 to 3960 Mc
Resonator Voltage	300 Vdc
Resonator Current	24.4 mAdc
Reflector Voltage Range*	—90 to —150 Vdc
Reflector Current	Less than 7μ Adc
Electronic Tuning (Half Power)**	
Frequency Change @ 3650 Mc	40 Mc
Power Output @ 3650 Mc	106 mW
Thermal Compensation	—0.10 ±0.05 Mc/°C

*Adjusted for maximum power output at 3650 Mc.

**Change in frequency between the two ½ power points when the reflector voltage is varied above and below the point of maximum power output corresponding to the given frequency.

Printed in U.S.A.

MICROWAVE AND POWER TUBE DIVISION
RAYTHEON COMPANY
FOUNDRY AVE., WALTHAM 54, MASS.

MECHANICAL

Mounting	Any Position
Overall Dimensions	See Outline Drawing
Resonator Cavity	Integral part of tube
Envelope	Metal
Cap	Miniature
Base	To fit standard octal with No. 4 pin enlarged to admit transducer
Net Weight	1.5 Ounces

INSTALLATION

The 2K29 requires a standard octal socket modified with No. 4 pin enlarged and tapped to admit the coaxial transducer. The tube may be mounted in any position but should be rigidly clamped to insure proper contact of the tube with the transducer, and to guard against excessive strains on the coaxial output line. The tube must be clamped on or below the shoulder of the header skirt.

The coaxial output line is coupled into a type "N" connector through a wide band transducer coupling unit. (See outline drawing for transducer.) All the tabulated data contained in this data sheet has been taken using this transducer operating into a matched load.

It is important that this transducer or its electrical equivalent be used to insure tube interchangeability and satisfactory tuning range characteristics.

SHIELDING

Operation of the 2K29 in the presence of a strong magnetic field usually requires shielding

2K29

TRANSDUCER COUPLING

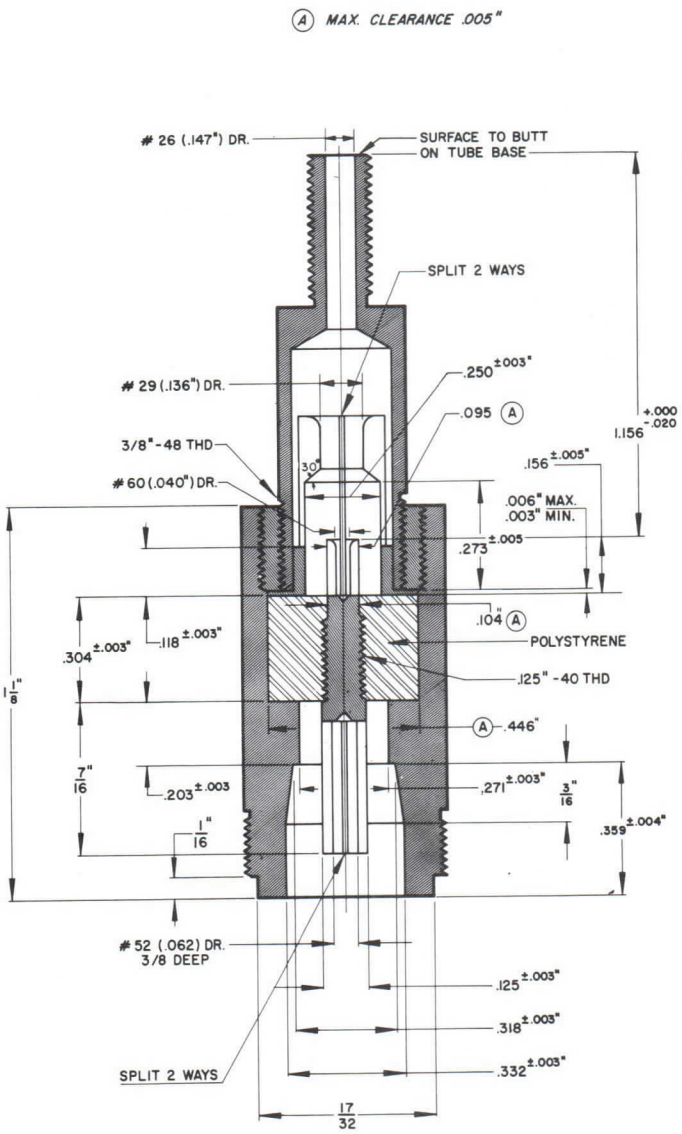

ALL METAL PARTS BRASS SILVER PLATED 25 M.S.I. (.00015" THICK)

of the resonator and reflector leads to avoid undesirable modulation of the tube output. In extremely troublesome magnetic environments, it may be necessary to place the 2K29 in a metal chamber with polyiron chokes provided to bring the voltages into the chamber.

CATHODE

In most applications, the metal envelope (resonator) of the 2K29 is operated at ground potential. The cathode is therefore negative with respect to ground by the amount of the resonator potential and must not be grounded. The cathode may be connected to one side of the heater or to one side of the heater transformer secondary. When cathode and heater are connected together, connection to the cathode should be made directly to the cathode contacts on the tube socket and never to a heater lead. When cathode and heater are not connected together, the heater-cathode voltage should not exceed ± 100 volts. In all cases where the resonator is operated at ground potential, the heater transformer must be insulated to withstand the maximum resonator voltage.

In applications where the metal envelope is operated above ground potential, the tube should be surrounded by a grounded enclosure or insulating device for the protection of the operator. Adequate ventilation must be provided through this enclosure or insulating device to keep the ambient below the maximum specified values.

REFLECTOR

The reflector electrode is connected to the small cap on the top of the tube. The power supply furnishing the reflector potential must be insulated to withstand the total resonator and reflector voltage. The reflector must never be allowed to become positive with respect to the cathode. If this

2K29 ELECTRON TUBE OUTLINE DRAWING

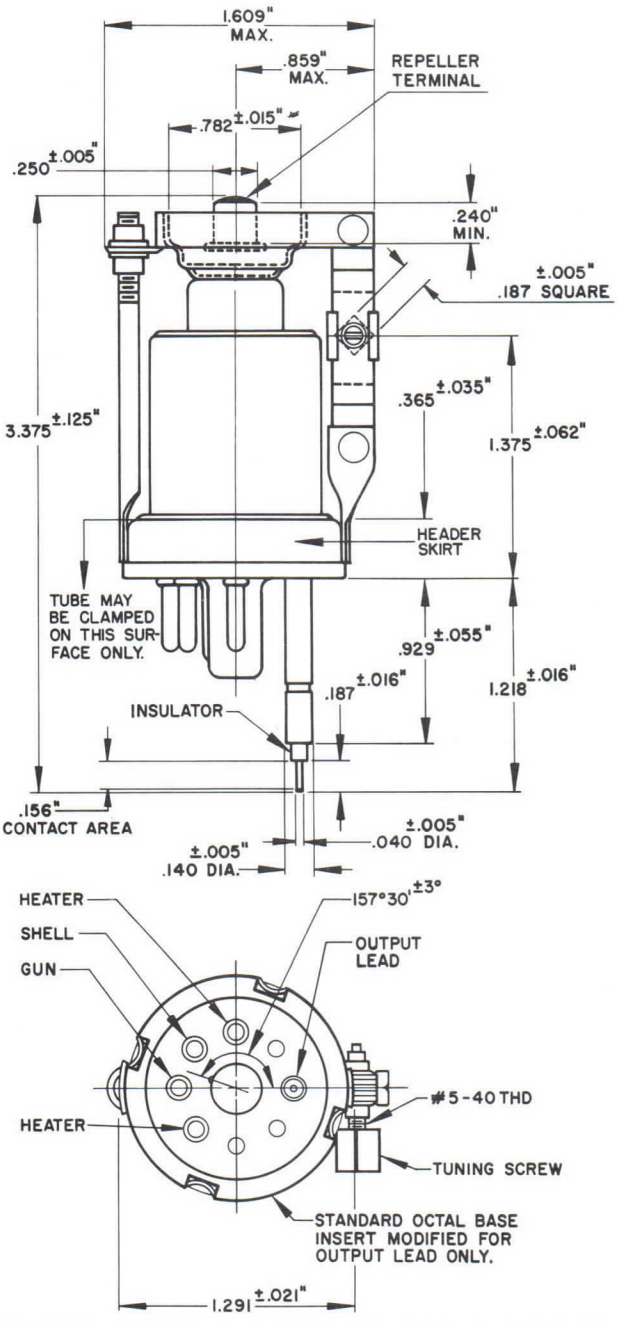

Printed in U.S.A.

MICROWAVE AND POWER TUBE DIVISION

RAYTHEON COMPANY

FOUNDRY AVE., WALTHAM 54, MASS.

precaution is not observed, damage to the tube may result. In cases where modulating potentials bring the reflector voltage close to zero volts, or where extremely high reflector circuit impedances are required, a diode should be connected between cathode and reflector to prevent the reflector from going positive.

MECHANICAL TUNING MECHANISM

The mechanical tuning mechanism of the 2K29 is designed to permit occasional frequency adjustments. Rotating the tuning screw in a clockwise direction reduces the frequency. Approximately 3 revolutions of the tuning nut are required to cover the recommended frequency range of the tube.

When the tube is first put into service, it should be mechanically tuned to the desired frequency. The tuning bows should then be flexed several times to relax the strains in the tuning mechanism. In this process the tuning screws should be adjusted to overshoot the desired frequency several times, each time decreasing the amount of tuning screw movement.

ELECTRONIC TUNING

With the mechanical tuning mechanism set near the desired frequency, vernier adjustment of the frequency may be accomplished by varying the reflector voltage. Maximum power output for a fixed mechanical tuner position, however, will be obtained at only one reflector value. If the mechanical tuning mechanism and the reflector voltage are mutually adjusted for a maximum power output, at a given frequency, and if the reflector voltage is then varied above and below the value for maximum power output, such that the power output is reduced to one-half, the frequency change between the half-power values is defined as electronic tuning range.

The amount of the electronic tuning and the linearity of its variation with reflector voltage is dependent upon the type of load used, and the coupling to the load.

FREQUENCY STABILITY

To obtain the most stable operation from the 2K29, the reflector and resonator voltage supplies should be very well regulated. It is also essential that the 2K29 be operated at a near constant ambient temperature. Under no circumstances should the temperature exceed the maximum specified values.

The materials used in the mechanical tuning mechanism of the 2K29 have been selected in such a way that their thermal expansion coefficient will produce a desirable ambient temperature vs. frequency coefficient. In order that this desirable temperature coefficient will not be interfered with, a tube should not be clamped above the header skirt.

MODES OF OPERATION

Oscillation may be obtained in a given tube with several combinations of resonator and reflector voltage at a particular frequency. The regions where oscillation occurs within the reflector voltage range are referred to as voltage modes. The curves show characteristics of the average 2K29 in the recommended mode. This mode has been chosen because it represents the best compromise between optimum power output and wide electronic tuning range.

Printed in U.S.A.

MICROWAVE AND POWER TUBE DIVISION

RAYTHEON COMPANY

FOUNDRY AVE., WALTHAM 54, MASS.

2K29 AVERAGE CHARACTERISTICS

TUBES DESIGNED FOR USE IN 3 3/4 MODE

RESONATOR POTENTIAL=300 VOLTS FOR ALL GRAPHS

REFLECTOR VOLTAGE (AT MAX. POWER OUTPUT) VS. FREQUENCY

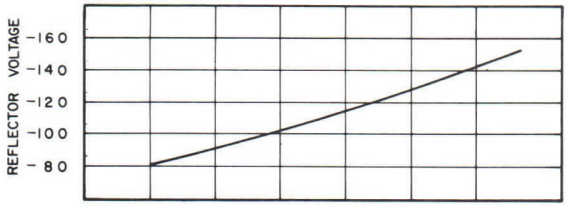

REFLECTOR VOLTAGE SWEEP BETWEEN P.O./2 VS. FREQUENCY

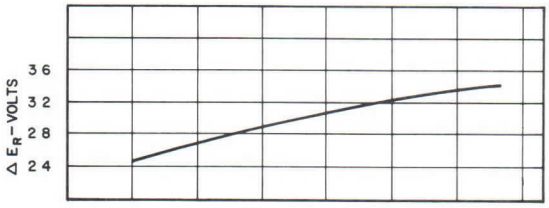

POWER OUTPUT (MAX.) VS. FREQUENCY

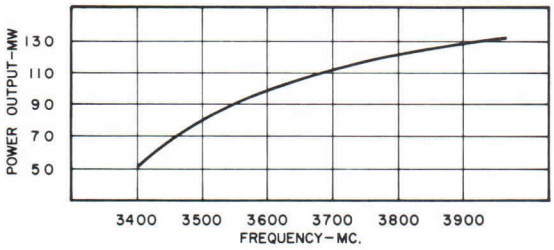

ELECTRONIC TUNING BETWEEN P.O./2 VS. FREQUENCY

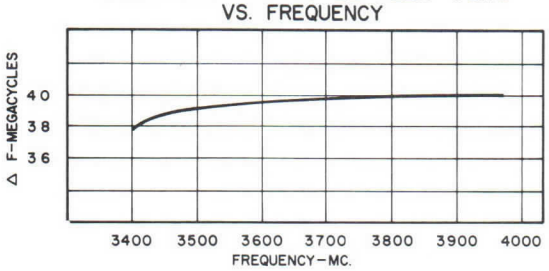

THE EXACT VALUE OF REFLECTOR VOLTAGE PRODUCING MAXIMUM OUTPUT AT A CERTAIN FREQUENCY, VARIES FROM TUBE TO TUBE. THE VOLTAGE FOR ALL TUBES AT EACH MODE, WILL FALL WITHIN THE SHADED AREA INDICATED BELOW.

POWER OUTPUT & FREQUENCY VS. REFLECTOR VOLTAGE

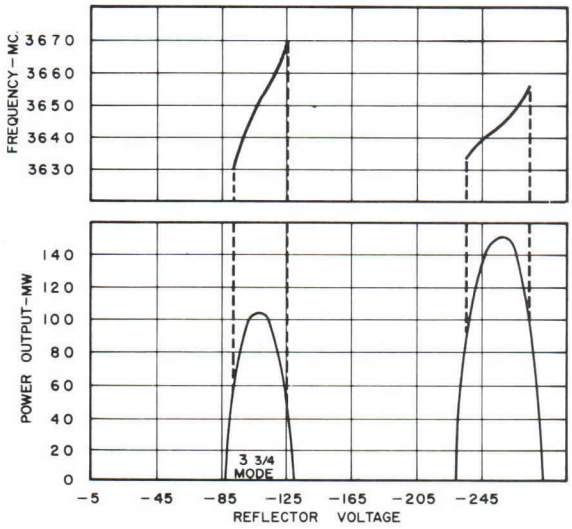

REFLECTOR VOLTAGE RANGE VS. FREQUENCY

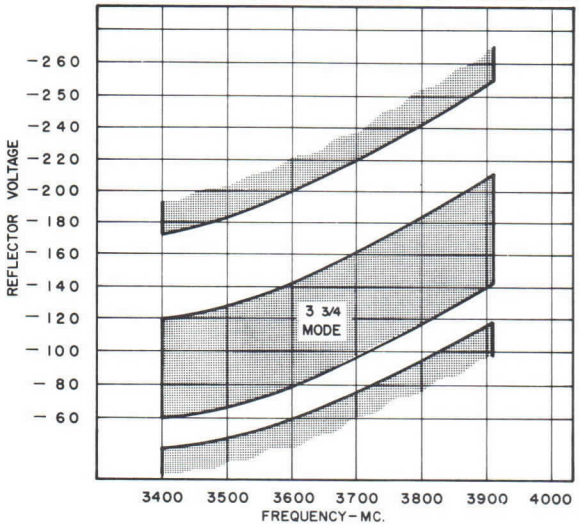

Printed in U.S.A.

MICROWAVE AND POWER TUBE DIVISION

RAYTHEON COMPANY

FOUNDRY AVE., WALTHAM 54, MASS.

RAYTHEON

TECHNICAL INFORMATION

VELOCITY VARIATION OSCILLATOR

Excellence in Electronics

TYPE 2K45

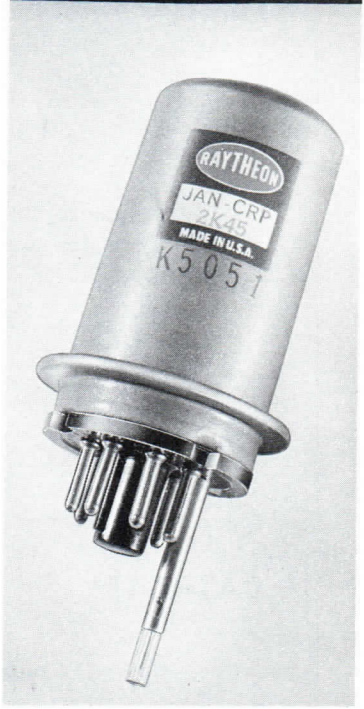

The type 2K45 is a thermally tuned velocity variation oscillator of the single cavity (integral) reflex type designed for CW operation in the 8500 to 9660 Mc range with an average power output of 30 milliwatts. Sufficient cooling for this type is usually provided by freely circulating air. Output coupling is made by inserting the output probe directly into a standard 1" x ½" O. D. waveguide. The 2K45 is intended for local oscillator service in microwave receivers where remote frequency adjustment is desired.

GENERAL CHARACTERISTICS

Heater Characteristics:

Heater Voltage (ac or dc)	6.3 ± .5 volts
Heater Current at 6.3 volts (approx.)	.76 amperes

Maximum Ratings:

DC Resonator Voltage	350 volts
DC Resonator Current	30 ma. DC
Tuner Plate Power Dissipation	7.5 watts
DC Reflector Voltage-Positive	0 volts
DC Reflector Voltage-Negative	.350 volts
Heater Cathode Voltage	± 50 volts DC
DC Tuner Grid Voltage	.75 volts
Thermal Tuning Speed 8500-9660	9 seconds
Thermal Tuning Speed 9660-8500	9 seconds
Ambient Temperature of air around shell	110°C
Temperature of coaxial output line	70°C
VSWR Mismatch	1.5/1

Typical Operation: 8500-9660

DC Resonator Voltage	300 volts
DC Tuner Plate Voltage	300 volts
DC Resonator Current	25 ma. (average)
DC Reflector Voltage (max. Po) at 9660 Mc.	—95 to —145 volts
DC Reflector Voltage (max. Po) at 8500 Mc.	—66 to 110 volts
Power Output	26 to 34 mw.
Tuner Cathode Current	0 to 25 ma.
Tuner Grid Voltage	—35 to +15 v DC
Tuner Cathode bias resistor	750 ohms
Electronic Tuning (to halt power points)	85 to 70 mc.
Thermal Tuning Speed 8500 to 9660	6 seconds
Thermal Tuning Speed 9660 to 8500	6 seconds

Printed in U.S.A.

MICROWAVE AND POWER TUBE DIVISION
RAYTHEON COMPANY
FOUNDRY AVE., WALTHAM 54, MASS.

MECHANICAL:

Mounting Position	Any
Overall Dimensions	See outline drawing
Envelope	Metal
Base	Fits std. octal with #4, pin enlarged to 11/64"
Shock (maximum)	50 G
Vibration (maximum)	10 G
Altitude	50,000 feet
Humidity	100%
Tube Life	500 hours

DETAILED ELECTRICAL INFORMATION

CATHODE

In applications where the metal envelope (resonator) of the tube is operated at ground potential, the cathodes will be negative with respect to ground by the amount of resonator and tuner diode potentials respectively. The klystron cathode may be connected to one side of the heater or the center tap of the heater transformer secondary. When the klystron cathode and heater are connected together, connections to the cathode should be made directly to the cathode contacts on the tube socket and never to a heater lead. When the cathode and heater are not tied together, the heater-cathode voltage should not exceed ±100 volts. In all cases where the resonator is operated at ground potential, the heater transformers must be insulated to withstand the maximum resonator and diode voltages respectively.

In applications where the metal envelope is operated above ground potential, the tube should be surrounded by a grounded enclosure or insulating device for the protection of the operator. Adequate ventilation must be provided through this enclosure or insulating device to keep the ambient below the maximum specified values.

REFLECTOR

The reflector is connected to the #8 pin on the base of the tube. The power supply furnishing the reflector potential must be insulated to withstand the total resonator and reflecor voltage. The reflector must never be allowed to become positive with respect to the cathode. If this precaution is not observed, damage to the reflector may result. In cases where modulating potentials bring the reflector close to zero volts, or where extremely high reflector circuit impedance is required, a diode should be connected between cathode and reflector to prevent the reflector from going positive.

THERMAL TUNING

Thermal tuning has been accomplished in the 2K45 by coupling the thermal expansion characteristics of the plate of the integral triode to the top grid of the klystron cavity. Plate current changes in the triode (klystron tuning) are accomplished very smoothly by varying the control grid

voltage. Use of the tuner circuit in Figure 1 will avoid the possibility of drawing excessive tuner current and consequent damage to the tube.

ELECTRONIC TUNING

With the thermal tuner adjusted so that the tube is operating near the desired frequency, vernier frequency adjustment may be made by varying the reflector voltage. Maximum power output for a given thermal tuner setting, however, will be obtained at only one value of reflector voltage. If the thermal tuner and reflector voltage are mutually adjusted for maximum power output at a given frequency, and if then the reflector voltage is varied above and below the value for maximum power output, such that the power output is reduced by one half, the frequency change between the half power values is defined as the electronic tuning range. The electronic tuning range and linearity depend on the type of load and coupling used. A highly reactive load may shorten the electronic tuning range, and cause non-linear variation of frequency with reflector voltage.

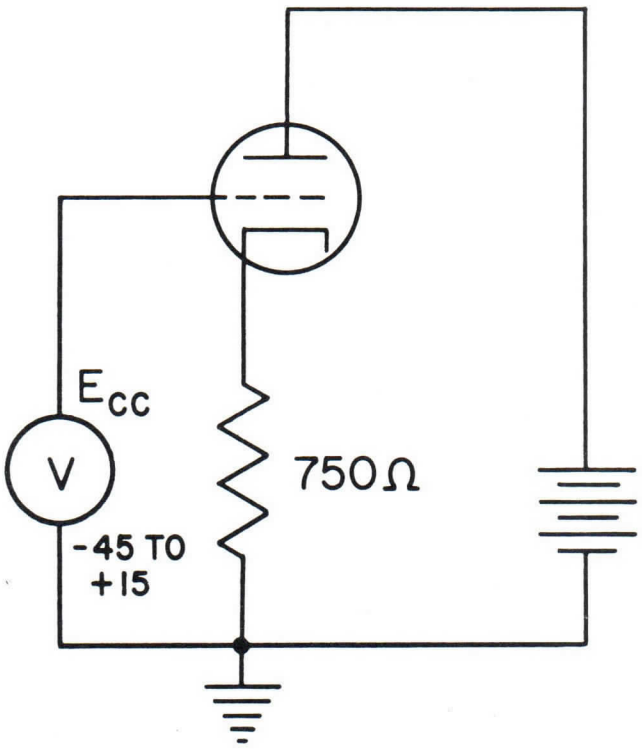

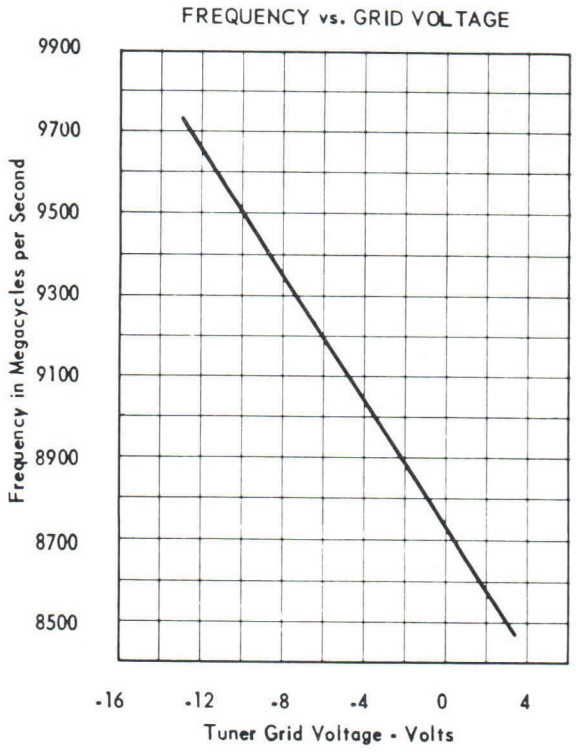

Figure 1

THE FOLLOWING DATA IS REPRESENTATIVE OF AVERAGE TUBES

TUBES DESIGNED FOR USE IN MODE A

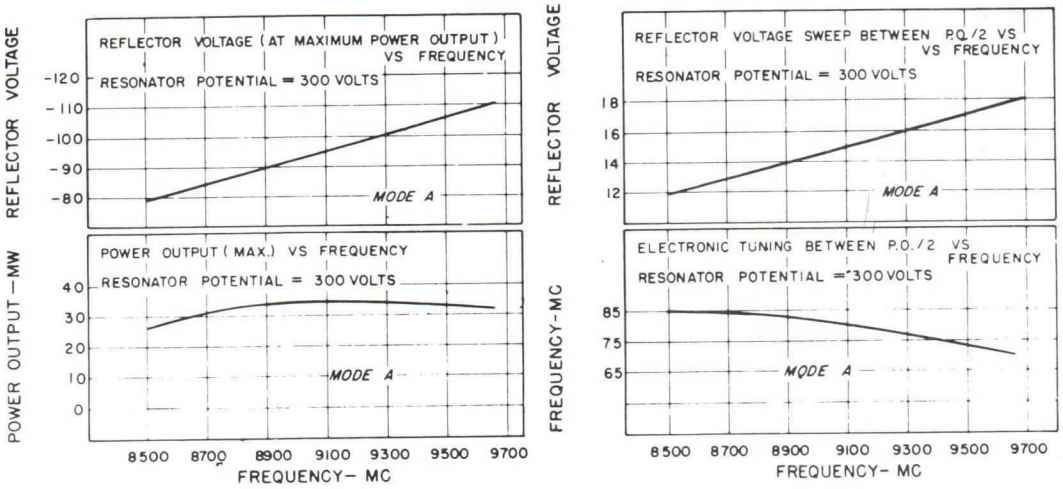

Figure 2a

MODES OF OPERATION

Oscillation may be obtained in a given tube with several combinations of resonator and reflector voltage at a particular frequency. The regions where oscillations occur, within the reflector voltage range, are referred to as voltage modes. The curves of Figure 2 show the characteristics of the 2K45 in the recommended mode. This mode has been chosen because it represents the best compromise between optimum power and wide electronic tuning range.

THE EXACT VALUE OF REFLECTOR VOLTAGE PRODUCING MAXIMUM OUTPUT AT A CERTAIN FREQUENCY, VARIES FROM TUBE TO TUBE. THE VOLTAGE FOR ALL TUBES, AT EACH MODE, WILL FALL WITHIN SHADED AREA INDICATED BELOW.

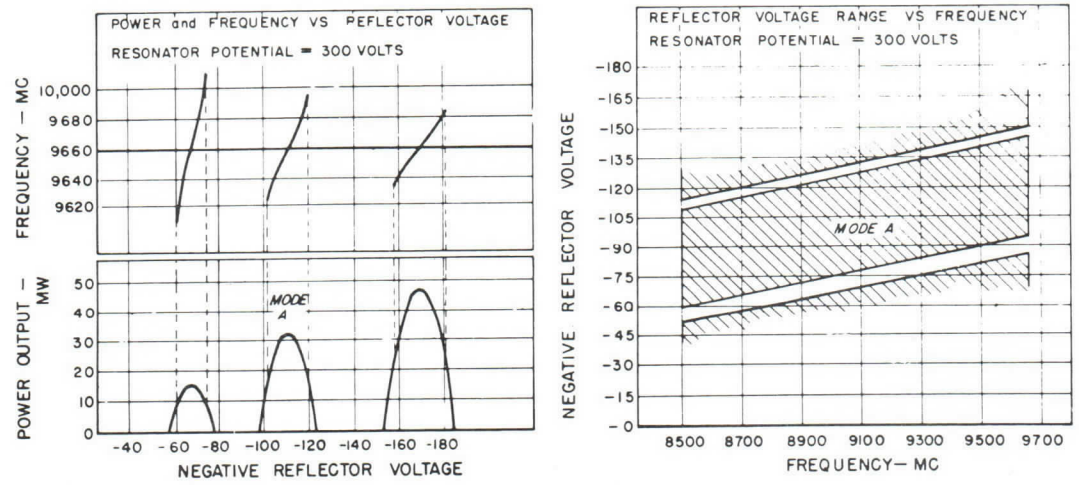

Figure 2b

DETAILED MECHANICAL INFORMATION

INSTALLATION

The 2K45 requires a modified standard octal socket with pin #4 enlarged. The tube may be mounted in any position, but should be rigidly clamped to insure the proper depth of the coaxial output line in the waveguide, and to guard against excessive strain in the coaxial output line. The tube must be clamped on or below the header skirt.

The coaxial output line is coupled into the waveguide (1" x ½") through a trap (see Figure 3 for socket details). All tabulated data in this sheet was obtained using this type of coupling. It is important that this tube coupling assembly, or its electrical equivalent, be used to insure its interchangeability. The voltage standing wave ratio at the coupling assembly should not exceed 1.1/1.

SHIELDING

Operation of the 2K45 in the presence of a strong magnetic field usually requires shielding of the resonator and reflector leads to avoid undesirable modulation of the tube output. In extremely troublesome magnetic environments, it may be necessary to place the 2K45 in a metal chamber with polyiron chokes provided to bring the voltages into the chamber.

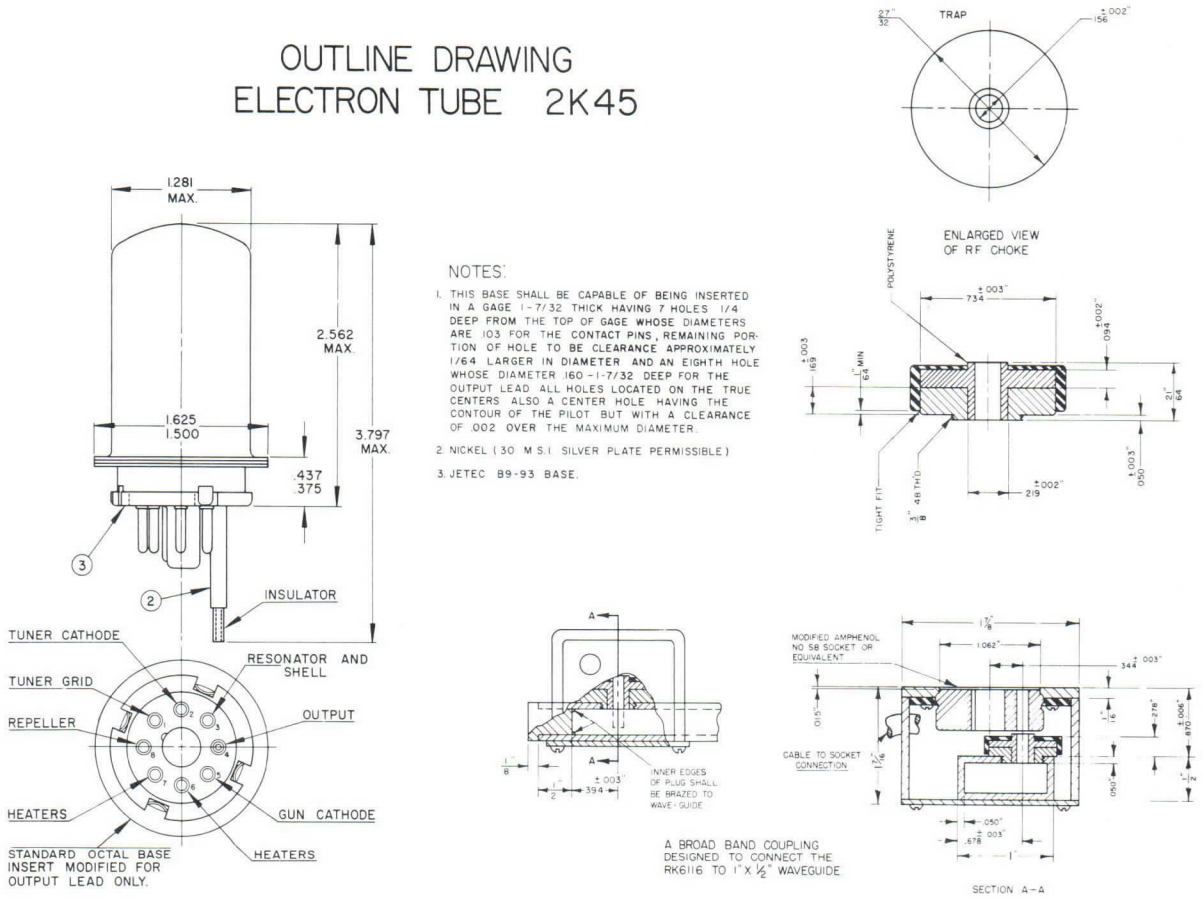

Figure 3

TYPE 2K48

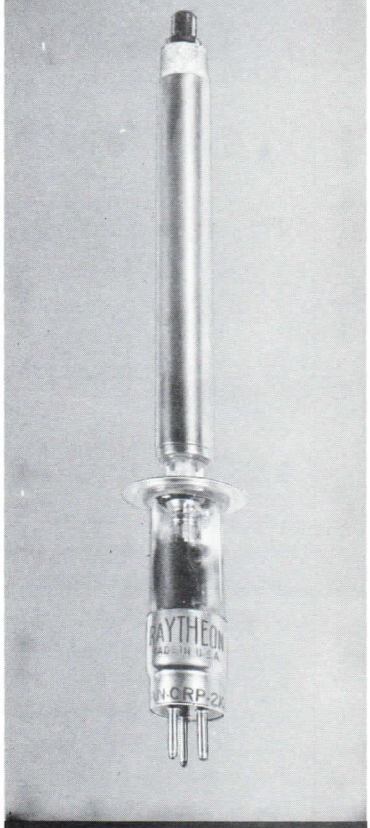

VELOCITY VARIATION OSCILLATOR

The type 2K48 is a reflex velocity variation oscillator designed for use with an external coaxial cavity in CW operation over the 4200 to 10750 Mc range with an average power output of 20 milliwatts. Freely circulating and in some cases forced air is required for cooling of the grid ring cavity contacts. The extremely wide frequency ranges which can be achieved with a single reflector mode make this tube ideally suited for signal generator and special local oscillator applications.

GENERAL ELECTRICAL CHARACTERISTICS

Heater:

Heater Voltage	6.3 ±0.3 V
Heater Current	450 to 700 mA

Maximum Ratings:

Resonator Voltage	1500 Vdc
Resonator Current	15 mAdc
Reflector Voltage	
Minimum Negative	18 Vdc
Maximum Negative	400 Vdc
Dissipation (exclusive of heater power)	22.5 W
Temperature at Grid Seals	120°C

Typical Ratings:

A. Operation @ 2¾ cycles Reflector Transit Mode

Frequency Range	4300 to 7200 Mc
Resonator Voltage	1250 Vdc
Resonator Current	12 mAdc
Power Output	
Minimum @ 4320 Mc	5 mW
Minimum @ 7050 Mc	20 mW
Reflector Voltage @ 4325 Mc	
Maximum Negative Value	50 Vdc
Minimum Negative Value	20 Vdc
Reflector Voltage @ 7200 Mc	
Maximum Negative Value	235 Vdc
Minimum Negative Value	175 Vdc

B. Operation @ 3¾ cycles Reflector Transit Mode

Frequency Range	7000 to 10750 Mc
Resonator Voltage	1250 Vdc
Resonator Current	12 mAdc
Power Output	
Minimum @ 7200 Mc	5 mW
Minimum @ 10700 Mc	20 mW
Reflector Voltage @ 7200 Mc	
Maximum Negative Value	110 Vdc
Minimum Negative Value	65 Vdc
Reflector Voltage @ 10700 Mc	
Maximum Negative Value	
Minimum Negative Value	

Printed in U.S.A.

GENERAL MECHANICAL CHARACTERISTICS

Mounting	Any Position
Over-all Dimensions	See Outline Dwg.
Envelope	Glass
Cap	Miniature
Base	Pee-Wee 3 Pin, RMA A3-1
Net Weight	1.8 ounces

DETAILED ELECTRICAL INFORMATION

REFLECTOR

The reflector electrode is connected to the miniature cap on top of the tube. The power supply furnishing the reflector potential must be insulated to withstand the total resonator and reflector voltage. The reflector must never be allowed to become positive with respect to the cathode. If this precaution is not observed, damage to the tube may result. Where high reflector circuit impedances are used, it is advisable to shunt the high impedance of the power supply with a small diode.

CATHODE

In most applications, the metal cavity to be used with the 2K48 is operated at ground potential. The cathode is therefore negative with respect to ground by the amount of the resonator potential. Connection to the cathode should be made directly to the cathode contacts on the tube socket and never to a heater lead. In all cases where the resonator is operated at ground potential, the heater transformer must be insulated to withstand the maximum resonator voltage. To obtain maximum tube life, it is recommended that the heater be allowed to warm up for 30 seconds before other voltages are applied. Application of the beam potential must not precede the application of any of the other voltages.

ELECTRONIC TUNING

Vernier adjustment of the frequency of the 2K48 is accomplished by varying the reflector voltage. If the mechanical tuning mechanism employed in the external cavity and the reflector voltage are mutually adjusted to yield a maximum power output at a given frequency, and if then the reflector voltage is varied above and below the value for maximum power such that the power output is reduced to one half, the frequency change between the half power values is defined as the electronic tuning range. The range of electronic tuning and the linearity of its variation with reflector voltage is a function of the type of load and coupling used.

FREQUENCY STABILITY

The regulation of the voltages applied to the reflector and resonator will be reflected directly in the stability of the output frequency, hence the regulation of these voltage supplies must be commensurate with the stability requirements of the application.

The thermal frequency drift experienced with the 2K48 will be mainly a function of the change in the physical size of the resonant chamber with temperature. Careful consideration should therefore be given to the material from which the external cavity is constructed.

MODES OF OPERATION

The 2K48 is designed to cover the 4200 to 7300 Mc range in the 2¾ cycle reflector transit mode, and the 7000 to 10750 Mc range in the 3¾ cycle reflector transit mode. The tube is designed for use with non-contacting plunger coaxial cavities. Design and construction of such cavities can be quite troublesome and certain precautions must be observed to avoid interference from circumferential resonances, one quarter wavelength modes, and multi-frequency bunching. An extensive treatment of the design of wide range coaxial cavities is beyond the scope of this publication; however, the following references contain adequate information pertinent to their design:

1. W. H. Huggins "Multifrequency Bunching in Reflex Klystrons", Proc. IRE Vol. 36, pp. 624-630
2. W. H. Huggins "Broad Band Non-Contacting Short Circuits for Coaxial Lines", Proc. IRE Vol. 35, pp. 1324-1328
3. Radio Research Laboratory Staff "Very High Frequency Techniques", McGraw-Hill, 1947, Vol. II, pp. 916-919, 900-911

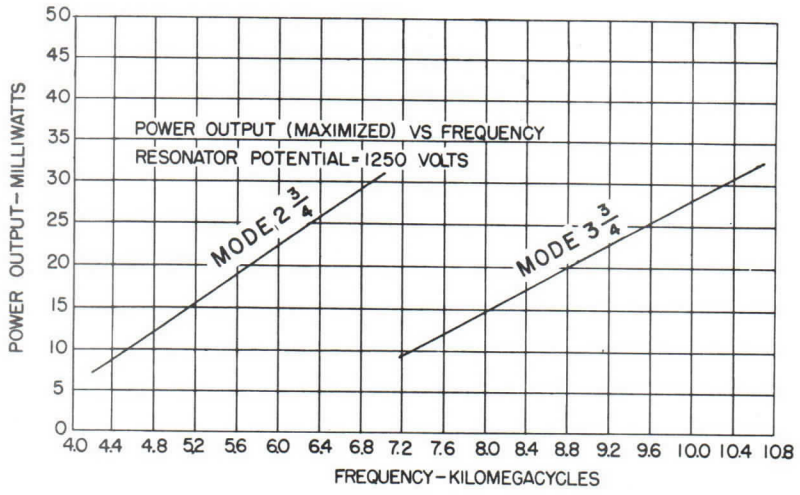

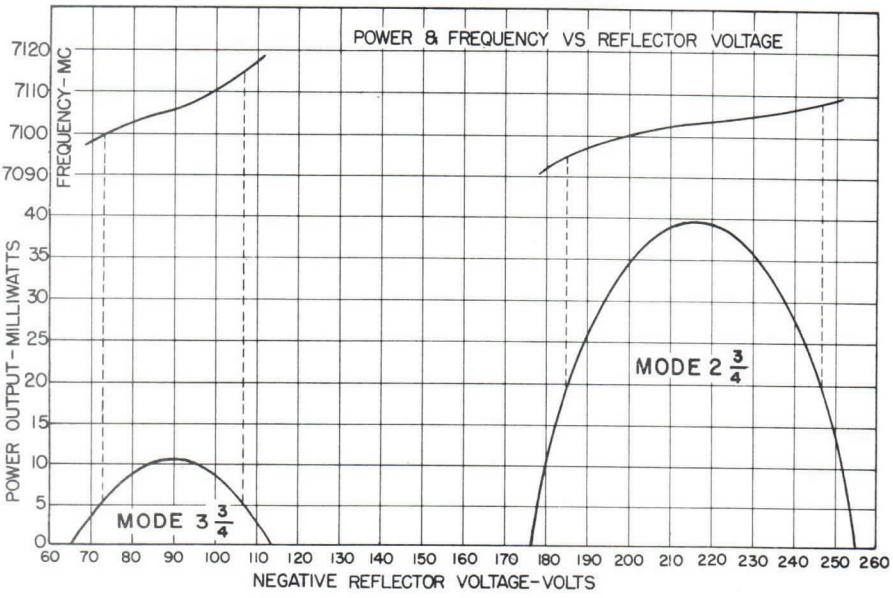

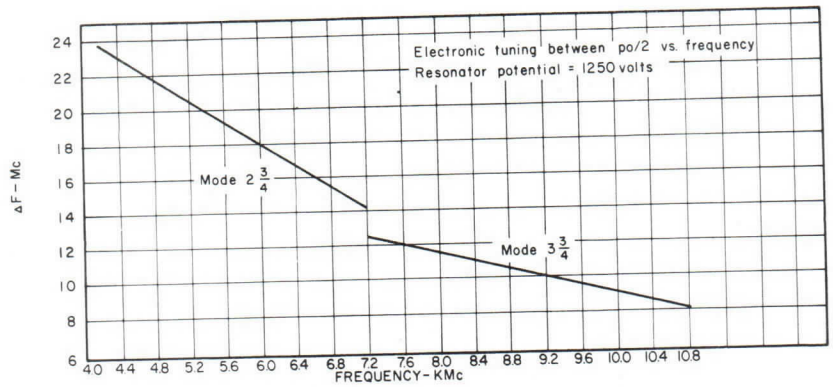
Electronic tuning between po/2 vs. frequency
Resonator potential = 1250 volts
Mode 2 3/4
Mode 3 3/4
ΔF - Mc
FREQUENCY - KMc

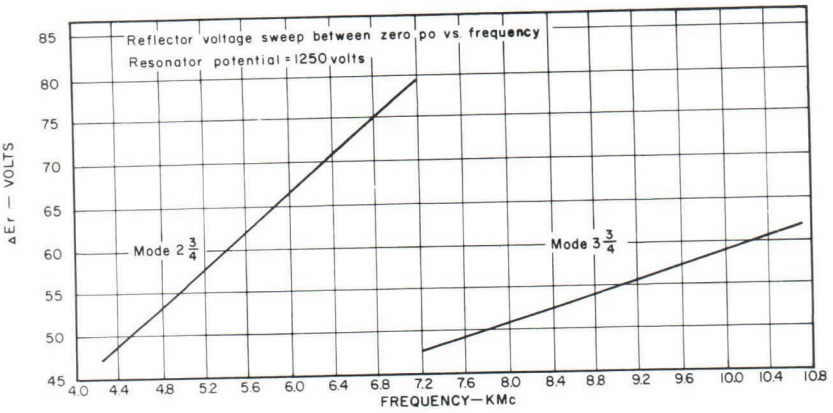
Reflector voltage sweep between zero po vs. frequency
Resonator potential = 1250 volts
Mode 2 3/4
Mode 3 3/4
ΔEr — VOLTS
FREQUENCY — KMc

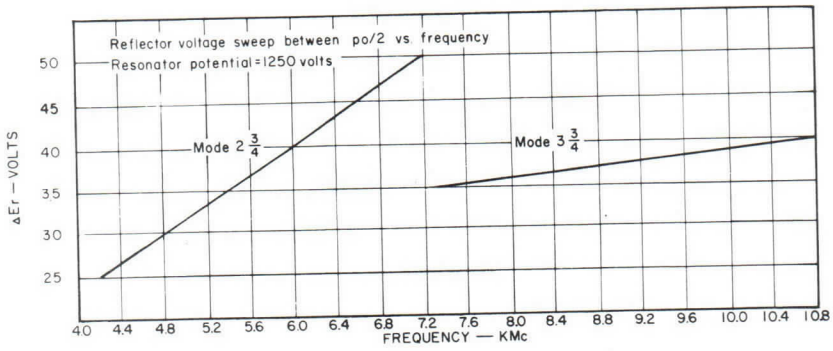
Reflector voltage sweep between po/2 vs. frequency
Resonator potential = 1250 volts
Mode 2 3/4
Mode 3 3/4
ΔEr — VOLTS
FREQUENCY — KMc

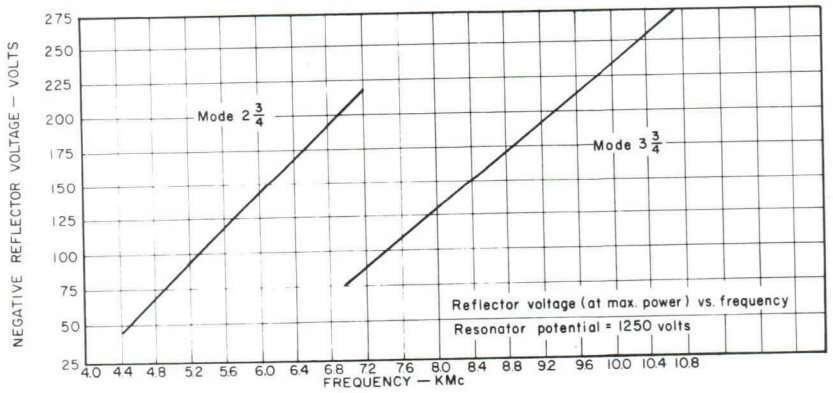
Mode 2 3/4
Mode 3 3/4
Reflector voltage (at max. power) vs. frequency
Resonator potential = 1250 volts
NEGATIVE REFLECTOR VOLTAGE — VOLTS
FREQUENCY — KMc

DETAILED MECHANICAL INFORMATION

INSTALLATION

The tube mounts in any position and requires a Pee-Wee 3 prong socket.

Extreme care must be exercised in handling the tube to avoid damage to the metal to glass seals, and to keep the tube in good alignment. Since the cylindrical extension on the second interaction gap grid is the heaviest and most rugged portion of the tube, the tube should be handled by this member as much as possible rather than by the base. Caution must be observed at all times to prevent damage to the delicate flange which forms the electrical connection and mechanical support for the first interaction gap grid. With the tube mounted rigidly in a cavity, a protecting cover should be placed over the protruding base portion of the tube because the slightest blow in this region may misalign the electron gun by bending or cracking the tube at the first copper to glass seal.

SHIELDING

Where the 2K48 is to be operated in the presence of strong magnetic fields, shielding of the resonator and reflector voltage leads is usually required in order to avoid undesirable modulation of the tube output. In extremely troublesome magnetic environments, it may be advisable to place the portions of the 2K48 not covered by the cavity in a metal chamber with polyiron chokes on the leads bringing the voltages into the chamber.Care must always be taken not to exceed the maximum operating temperature of 120°C on the G1 fin.

2K48 ELECTRON TUBE OUTLINE DRAWING

A) CONTACT PORTION OF DISC MEASURED RADIALLY WHICH MUST BE FREE FROM SPLITS OR TEARS, MUST BE SMOOTH AND FLAT
B) THE TUBE SHALL BE CAPABLE OF BEING INSERTED IN CONCENTRIC CYLINDER WITHOUT BINDING (EQUIV GAGING METHOD MAY BE USED)
C) THESE AREAS ARE GOLD PLATED

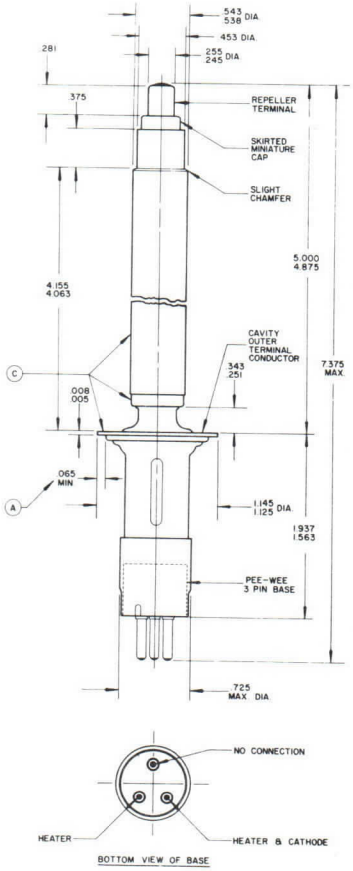

BOTTOM VIEW OF BASE

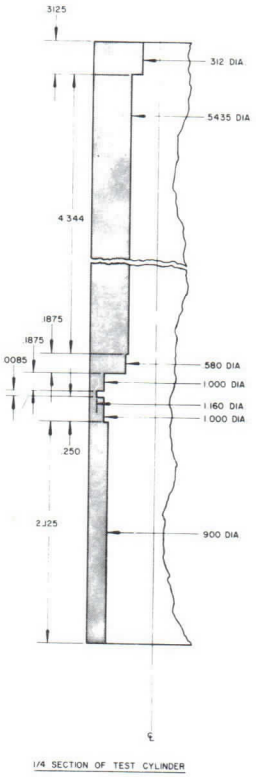

1/4 SECTION OF TEST CYLINDER

RAYTHEON

TECHNICAL INFORMATION

VELOCITY VARIATION OSCILLATOR

Excellence in Electronics

TYPE 2K56

The type 2K56 is a velocity variation oscillator of the single cavity (integral) reflex type, designed for operation in the frequency range of 3840 to 4460 megacycles with an average power output of 90 milliwatts. The mechanical tuning mechanism provides a simple method of making wide frequency adjustments. In addition, the 2K56 can be electronically tuned to give a vernier adjustment. The 2K56 is designed for operation at any frequency within the specified range, and it is particularly suited for local oscillator service in microwave receivers. It is useful, also, as a local oscillator in microwave spectrum analyzers, and as a microwave source for test purposes.

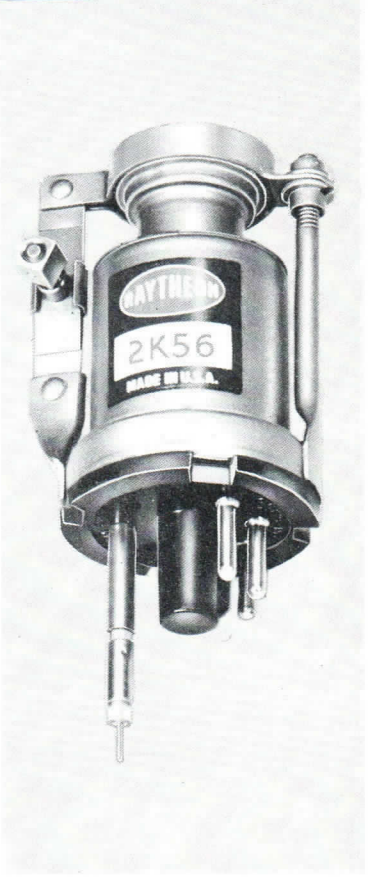

GENERAL CHARACTERISTICS

ELECTRICAL

Heater

Heater, for oxide coated unipotential cathode:

Voltage (A.C. or D.C.)	6.3±0.5 V
Current	0.44 A

Maximum Ratings, Absolute Values

Heater Voltage	6.3±0.5 V
Resonator Voltage	330 Vdc
Resonator Current	37 mAdc
Reflector Voltage	
Positive Value	0 Vdc
Negative Value	—400 Vdc
Heater-Cathode Voltage	±100 V
Ambient Temperature of Air Around Shell	110° C
Temperature of Coaxial Output Line	75° C

Typical Operating Conditions

Frequency Range	3840 to 4460 Mc
Resonator Voltage	300 Vdc
Resonator Current	32 mAdc
Reflector Voltage Range*	—85 to —150 Vdc
Reflector Current	Less than 7 μa
Electronic Tuning (Half-Power)**	
Frequency Change @ 4150 Mc	35 Mc
Power Output @ 4150 Mc	90 mW
Thermal Compensation	—.10 ±.05 Mc./°C

*Adjusted for maximum power output at 4150 Mc.

**Change in frequency between the two ½ power points when the reflector voltage is varied above and below the point of max. power output corresponding to the given frequency.

VELOCITY VARIATION OSCILLATOR

MECHANICAL

Mounting	Any Position
Overall Dimensions	See Outline Drawing
Resonator Cavity	Integral part of tube
Envelope	Metal
Cap	Miniature
Base	To fit standard octal with No. 4 hole enlarged and tapped to admit transducer
Net Weight	1.5 Ounces

INSTALLATION

The 2K56 requires a standard octal socket modified with No. 4 hole enlarged and tapped to admit the coaxial transducer. The tube may be mounted in any position but should be rigidly clamped to insure proper contact of the tube with the transducer, and to guard against excessive strains on the coaxial output line. The tube must be clamped on or below the shoulder of the header skirt.

The coaxial output line is coupled into type N connector through a wide band transducer coupling unit (see outline drawing for transducer). All the tabulated data contained in this data sheet was taken using this tranducer operating into a matched load.

It is important that this transducer, or its electrical equivalent, be used to insure tube interchangeability, and satisfactory tuning range characteristics. The standing wave ratio at the transducer should be kept as low as possible.

TRANSDUCER COUPLING

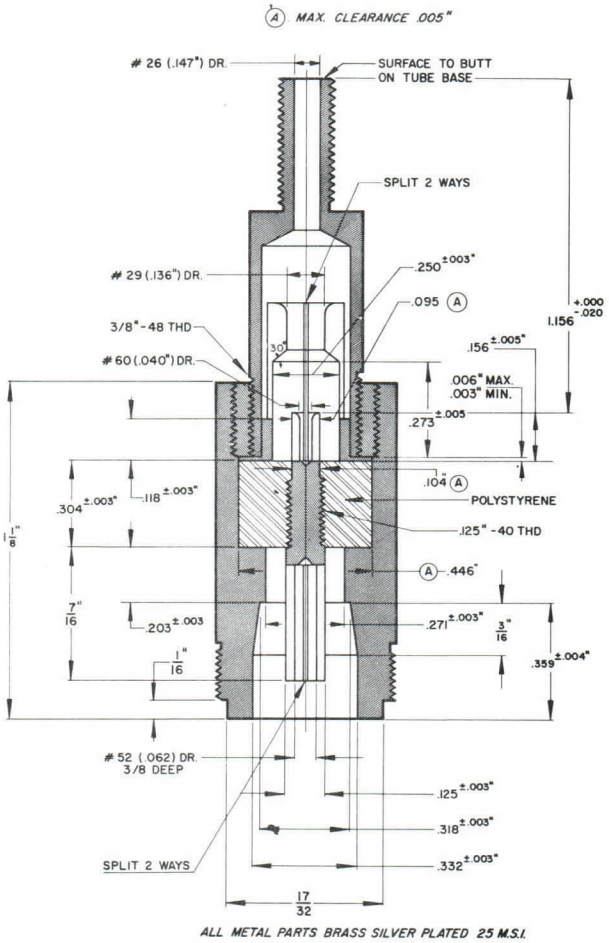

ALL METAL PARTS BRASS SILVER PLATED 25 M.S.I.

SHIELDING

Where the 2K56 is to be operated in the presence of strong magnetic fields, shielding of the resonator and reflector voltage leads is usually required in order to avoid undesirable modulation of the tube output. In extremely troublesome conditions, it may be advisable to place the 2K56 in a metal chamber with polyiron chokes provided on the leads bringing the voltages into the chamber.

CATHODE

In most applications, the metal envelope (resonator) of the 2K56 is operated at ground potential. The cathode is therefore negative with respect to ground by the amount of the resonator potential. The cathode may be connected to one side of the heater or the center tap of the heater transformer secondary. When cathode and heater are connected together, connections to the cathode should be made directly to the cathode contacts on the tube socket and never to a heater lead. When cathode and heater are not connected together, th heater-cathode voltage should not exceed ± 100 volts. In all cases where the resonator is operated at ground potential, the heater transformer must be insulated to withstand the maximum resonator voltage.

In applications where the metal envelope is operated above ground potential, the tube should be surrounded by a grounded enclosure or insulating device for the protection of the operator. Adequate ventilation must be provided through this enclosure or insulating device to keep the ambient below the maximum specified values.

REFLECTOR

The reflector electrode is connected to the small cap on the top of the tube. The power supply furnishing the reflector potential must be insulated to withstand the total resonator and reflector voltage. The reflector must never be allowed to become positive with respect to the cathode. If this precaution is not observed, damage to the tube may result. In cases where modulating potentials bring the reflector voltage close to zero volts, or where extremely high reflector circuit impedances are required, a diode should be connected between cathode and reflector to prevent the reflector from going positive.

AVERAGE CHARACTERISTICS

The exact value of reflector voltage, producing maximum power output at a certain frequency varies from tube to tube. The voltage for all tubes, at each mode, will fall within the shaded area indicated below.

The amount of the electronic tuning and the linearity of its variation with reflector voltage is dependent upon the type of load used, and the coupling to the load.

MECHANICAL TUNING MECHANISM

The mechanical tuning mechanism of the 2K56 is designed to permit occasional frequency adjustments. Rotating the tuning screw in a clockwise direction reduces the frequency. Approximately 3 revolutions of the tuning nut are required to cover the recommended frequency range of the tube.

When the tube is first put into service, it should be mechanically tuned to the desired frequency. The tuning bows should then be flexed several times to relax the strains in the tuning mechanism. In this process the tuning screws should be adjusted to overshoot the desired frequency several times, each time decreasing the amount of tuning screw movement.

ELECTRONIC TUNING

With the mechanical tuning mechanism set near the desired frequency, vernier adjustment of the frequency may be accomplished by varying

the reflector voltage. Maximum power output for a fixed mechanical tuner position, however, will be obtained at only one reflector value. If the mechanical tuning mechanism and the reflector voltage are mutually adjusted for a maximum power output, at a given frequency, and if the reflector voltage is then varied above and below the value for maximum power output, such that the power output is reduced to one-half, the frequency change between the half-power values is defined as electronic tuning range.

FREQUENCY STABILITY

To obtain the most stable operation from the 2K56, the reflector and resonator voltage supplies should be very well regulated. It is also essential that the 2K56 be operated at a near constant ambient temperature. Under no circumstances should the temperature exceed the maximum specified values.

The materials used in the mechanical tuning mechanism of the 2K56 have been selected in such a way that their thermal expansion coefficient will produce a desirable ambient temperature vs. frequency coefficient. In order that this desirable temperature coefficient will not be interfered with, a tube should not be clamped above the header skirt.

MODES OF OPERATION

Oscillation may be obtained in a given tube with several combinations of resonator and reflector voltages at a particular frequency. The regions where oscillation occurs within the reflector voltage range are referred to as voltage modes. The curves show characteristics of the average 2K56 in the recommended mode. This mode has been chosen because it represents the best compromise between optimum power output and wide electronic tuning range.

OUTLINE DRAWING

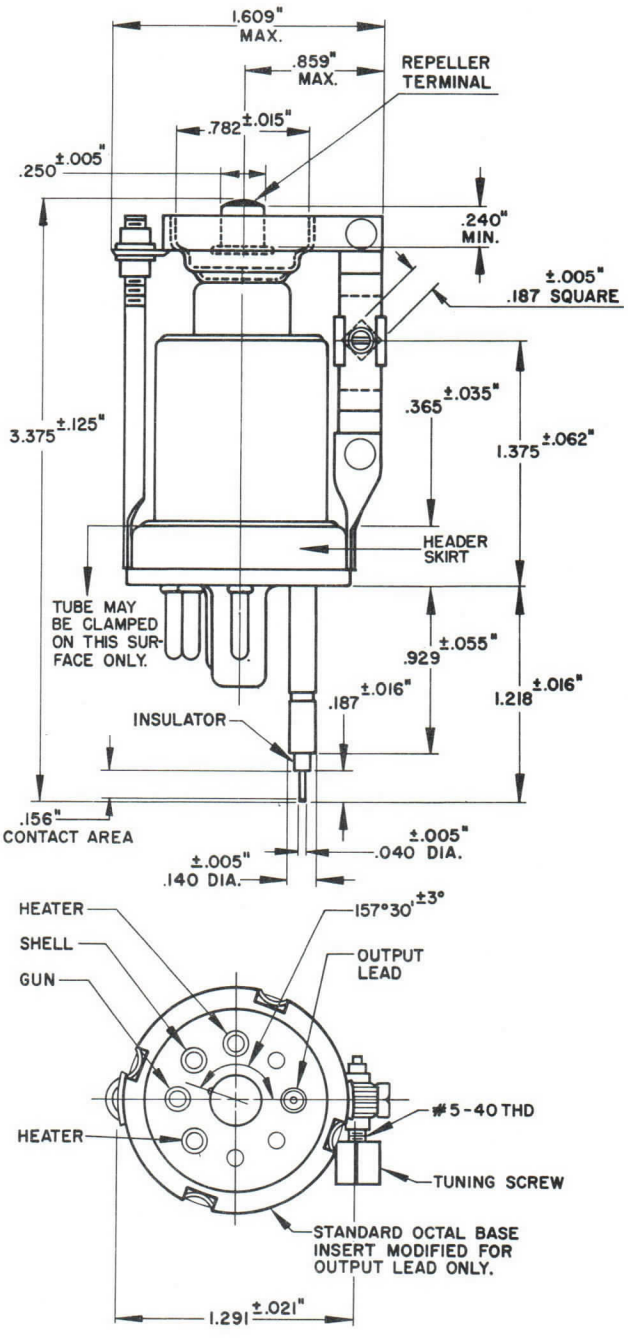

RAYTHEON

VELOCITY VARIATION OSCILLATOR

2K56 OPERATING CHARACTERISTICS

REFL. VOLT. SWEEP BETWEEN PO/2 VS. FREQ.
RESONATOR POTENTIAL = 300 V.

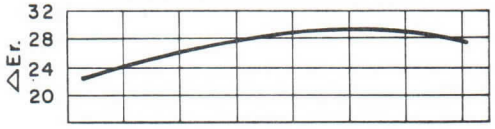

REFL. VOLT. AT MAX. POWER OUTPUT VS. FREQ.
RESONATOR POTENTIAL = 300 V.

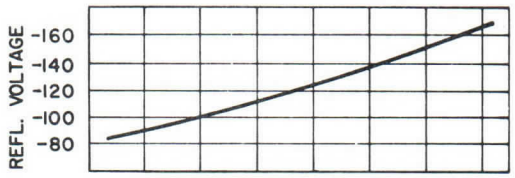

ELECTRONIC TUNING BETWEEN PO/2 VS. FREQ.

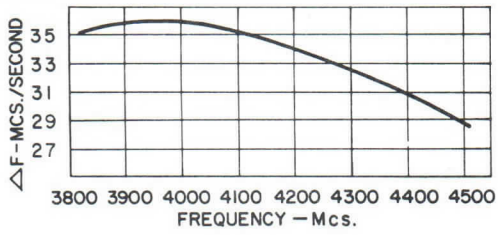

POWER OUTPUT (MAX.) VS. FREQ.

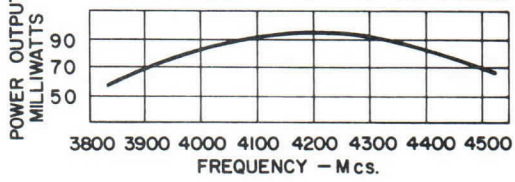

THE EXACT VALUE OF REFLECTOR VOLTAGE PRODUCING MAXIMUM OUTPUT AT A CERTAIN FREQUENCY VARIES FROM TUBE TO TUBE. THE VOLTAGE FOR ALL TUBES AT EACH MODE, WILL FALL WITHIN THE SHADED AREA INDICATED BELOW.

POWER & FREQUENCY VS. REFL. VOLTAGE
RESONATOR POTENTIAL = 300 V.

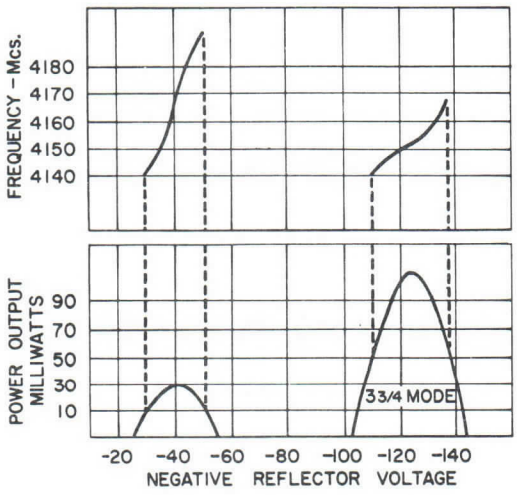

REFLECTOR VOLTAGE VS. FREQUENCY
RESONATOR POTENTIAL = 300 V.

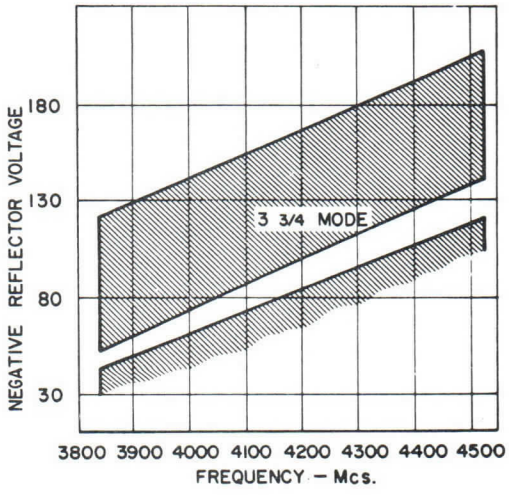

Printed in U.S.A.

Excellence in Electronics

TYPE QK289 thru QK291

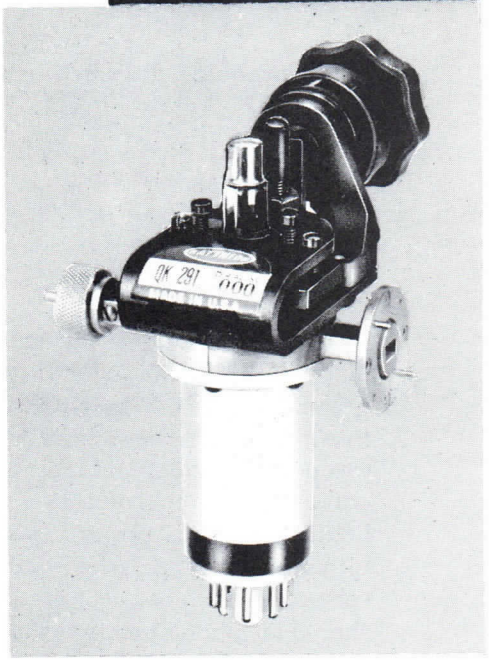

The types QK289 thru QK291 are mechanically tuned velocity variation oscillators having an oxide coated unipotential cathode and designed for operation in the 27,270 to 36,260 Mc. range.

GENERAL CHARACTERISTICS

ELECTRICAL

Heater

Heater Voltage	6.3 Volts A.C.-D.C.
Heater Current	.58 Amperes

Maximum Ratings

Heater Voltage	6.3±10% Volts A.C.-D.C.
Resonator Potential	2500 Volts D.C.
Cathode Current	15 Ma. D.C.
Reflector Potential	—50 to —450 Volts D.C.
Envelope Temperature	125°C.

The values specified above are based on the absolute system and must not be exceeded under any service condition. Operation above these limiting values may affect tube life and serviceability adversely. It does not necessarily follow that combinations of absolute maximum ratings can be attained simultaneously.

Typical Operation

Resonator Potential	2250 Volts D.C.
Focus Grid Potential	—20 to —250 Volts D.C.
Cathode Current	10 to 15 mA
Reflector Potential	—50 to —200 Volts D.C.
Power Output of QK-290 or QK-289	Average 20 Milliwatts
Power Output of QK-291	Average 18 Milliwatts
Frequency Range QK-289	27,270-30,000 Mc.
Frequency Range QK-290	29,700-33,520 Mc.
Frequency Range QK-291	33,520-36,250 Mc.

MECHANICAL

Base	Intermediate Octal.				
Pin No.	1	2	7	8	Small Top Cap.
Element	Focus	H	H	K	Reflector.
Bulb	Glass — Copper Disc Seal Construction.				
Mounting	Any position.				
Cooling	Freely Circulating or Forced Air (latter is preferable).				

Printed in U.S.A.

Maximum Overall Dimensions	Height:	Max. 4.625" Base to Top of Cap Excluding Pins.
	Diameter:	Max. 4.375" Including Tuning Screw and Waveguide.
Waveguide: RG 96/U . .		To be used with .280" x .140" Waveguide with .040" Walls.

DETAILED ELECTRICAL INFORMATION

CATHODE

In most applications, the metal shell (resonator) of the QK289 thru QK291 types is operated at ground potential. The cathode is therefore negative with respect to ground by the amount of the resonator potential and must not be grounded. The cathode may be connected to one side of the heater or to the center tap of the heater transformer secondary. When cathode and heater are connected together, connections to the cathode should be made directly to the cathode on the tube socket and never to the heater lead. When cathode or heater are not connected together, the heater cathode voltage should not exceed ±50 volts. In all cases where the resonator is operated at ground potential the heater transformer must be insulated to withstand the maximum resonator voltage.

In applications where the metal envelope (resonator) of the QK289 thru QK291 is not at ground potential, it is essential that the tube be surrounded by a grounding shield to avoid injury to the operator. Adequate ventilation must be provided through this shield to keep the ambient temperature of the chamber below a maximum value.

The cathode current in these types must be adjusted to the proper value (between 10.0 and 15.0 mA) by adjusting the focus grid voltage. For optimum results, it is imperative that the cathode current be maintained at the value specified for each tube.

REFLECTOR

The reflector electrode is connected to the small cap on the top of the tube. The glass stem supporting the reflector electrode must be carefully protected against rough handling. If the glass stem comes in contact with other objects, damage may result which will cause the tube's characteristics to change.

The power supply furnishing the reflector potential must be insulated to withstand the total resonator and reflector voltage. The reflector must never be allowed to become more positive than —50 Vdc with respect to the cathode. If this precaution is not observed, damage to the reflector may result. In cases where modulating potentials bring the reflector voltage close to zero volts, or where extremely high reflector circuit impedances are required, a diode should be connected between cathode and reflector to prevent the reflector from going positive. Also, it is required that the application of reflector voltage precede the application of resonator voltage.

FREQUENCY STABILITY

To obtain the most stable operation from these tubes, the reflector and resonator voltage supplies should be very well regulated. It is also essential that these types be operated at a near constant ambient temperature.

The materials used in the tuning mechanism have been selected in such a way that their thermal expansion coefficient will produce a desirable ambient temperature vs. frequency coefficient.

After the back tuning stub has been adjusted for maximum power output, the lock nut on the plunger screw and Allen set screw should be tightened. Failure to observe this precaution may result in noisy and unstable operation.

Printed in U.S.A.

MICROWAVE AND POWER TUBE DIVISION

RAYTHEON COMPANY

FOUNDRY AVE., WALTHAM 54, MASS.

MECHANICAL TUNING MECHANISM

The mechanical tuning mechanism of these types is designed to permit occasional frequency adjustments. Clockwise rotation of the tuning knob increases the frequency. Care should be taken not to exceed the maximum clockwise limit of the tuning knob, since further rotation may damage the tuning mechanism.

ELECTRONIC TUNING

With the mechanical tuner adjusted so that the tube is operating near the desired frequency, vernier frequency adjustment may be made by varying the reflector voltage. Maximum power output for a given mechanical tuner setting, however, will be obtained at only one value of reflector voltage. If the mechanical tuner and reflector voltage are mutually adjusted for maximum power output at a given frequency, and if then the reflector voltage is varied above and below the value for maximum power output such that the power output is reduced by one half, the frequency change between the half power values is defined as the electronic tuning range. The electronic tuning range and linearity depend on the type of load and coupling used. A highly reactive load may shorten the electronic tuning range and cause non-linear variation of frequency with reflector voltage.

MODES OF OPERATION

Oscillation may be obtained in a given tube with several combinations of resonator and reflector voltages at a given frequency. The regions where oscillation occurs within the reflector voltage range are referred to as voltage modes. Data cards are furnished with each tube showing various modes of operation. Operation in the higher voltage reflector modes usually results in more power output. Operation in the lower voltage reflector modes usually results in more electronic tuning.

DETAILED MECHANICAL INFORMATION

INSTALLATION

The types QK289 thru QK291 require a standard octal socket and may be mounted in any position. The output coupling flange should be rigidly clamped to a mating flange of the proper type. (See outline drawing)

Adequate cooling should be provided at all times due to relatively high input powers; forced air cooling is recommended.

SHIELDING

Where the types QK289 thru QK291 are to be operated in the presence of strong magnetic fields, shielding the resonator and reflector voltage leads is usually required in order to avoid undesirable modulation of the tube output. In extremely troublesome conditions, it may be advisable to place the tube in a metal chamber with polyiron chokes provided to bring the voltages into this chamber.

Printed in U.S.A.

MICROWAVE AND POWER TUBE DIVISION

RAYTHEON COMPANY

FOUNDRY AVE., WALTHAM 54, MASS.

QK 289-291 ELECTRON TUBE OUTLINE DRAWING

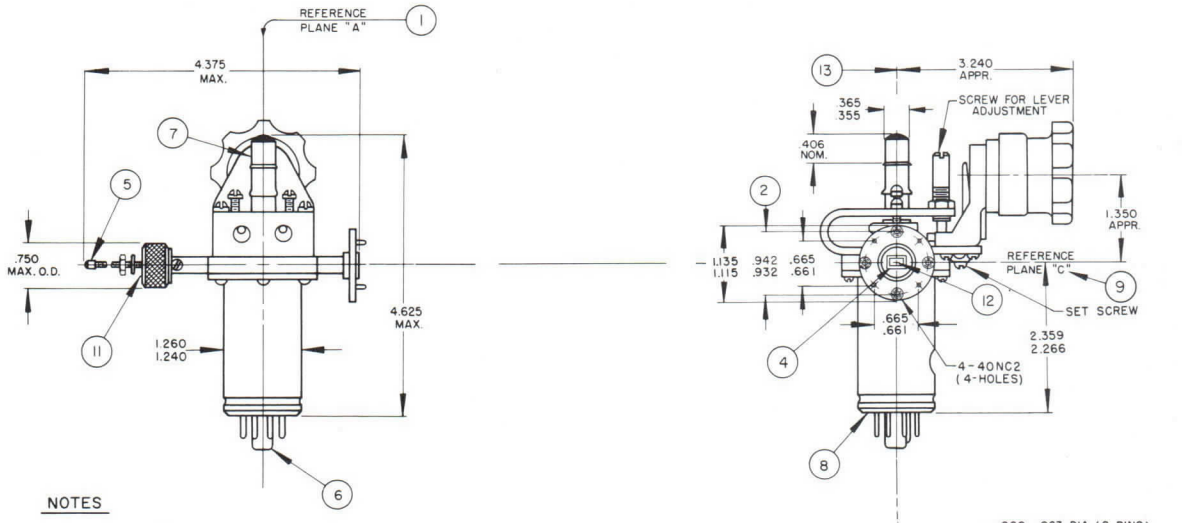

NOTES

1. REFERENCE PLANE "A" IS DEFINED AS A PLANE COINCIDENT WITH THE LONG AXIS OF BASE SHIELD, PASSING THRU CENTER WAVEGUIDE OPENING. REFERENCE PLANE "B" IS PERPENDICULAR TO REFERENCE PLANE "A" WITH THE LINE OF INTERSECTION COINCIDENT WITH LONG AXIS OF BASE SHIELD.
2. HOLES MUST BE CENTERED WITHIN .010 OF CENTERS OF WAVEGUIDE.
3. DIMENSION INCLUDES LATERAL AND ANGULAR DEVIATIONS OF OUTER SURFACE OF FLANGE.
4. RECTANGULAR TUBING = .140 X .280 I.D. X .040 WALL.
5. NUT TO PREVENT EXCESSIVE INWARD TRAVEL OF TUNER.
6. CENTER OF BASE TO BE CONCENTRIC WITH OUTSIDE DIAMETER OF CYLINDER WITHIN .125.
7. OUTSIDE DIAMETER OF TOP CAP TO BE CONCENTRIC WITH OUTSIDE DIAMETER OF CYLINDER WITHIN .125.
8. SMALL STANDARD OCTAL 8 PIN BASE.
9. REFERENCE PLANE "C" IS DEFINED AS A PLANE PASSING THRU CENTER OF WAVEGUIDE PERPENDICULAR TO "A" & "B".
10. APPLIES TO LOCATION OF KEYWAY ON BASE LUG WITH RESPECT TO CENTER OF WAVEGUIDE. (MEASURED AT END OF WAVEGUIDE AT FLANGE END.)
11. #5-40 ALLEN H'D SET SCREW IN TUNIG KNOB.
12. CENTER OF WAVEGUIDE PARALLEL TO SHORT DIMENSION MUST BE WITHIN .020 OF REFERENCE PLANE "B".
13. DIMENSIONS FOR TUNING KNOB AT OUTERMOST TUNING POSITION.

TYPES	WAVEGUIDE	DIMENSION							
		A	B	C	D	E	F	G	H
	RG 96 U	+.002" -.000"		± .001"		± .003"		± .003"	
QK 289 — QK 290 — QK 291	.280" x .140" ID x .040" WALL	.363"	.223"	.182"	.112"	.468"	1.125"	.937"	.114"

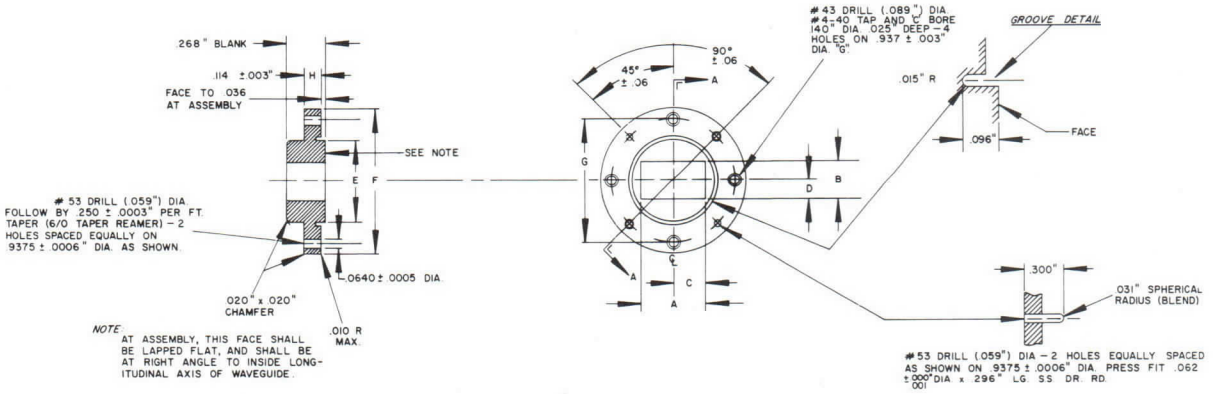

Printed in U.S.A.

MICROWAVE AND POWER TUBE DIVISION

RAYTHEON COMPANY

FOUNDRY AVE., WALTHAM 54, MASS.

TYPE QK292 thru QK295

Excellence in Electronics

The types QK292 thru QK295 are mechanically tuned velocity variation oscillators having an oxide coated unipotential cathode, and designed for operation in the 35,100 to 60,000 Mc range.

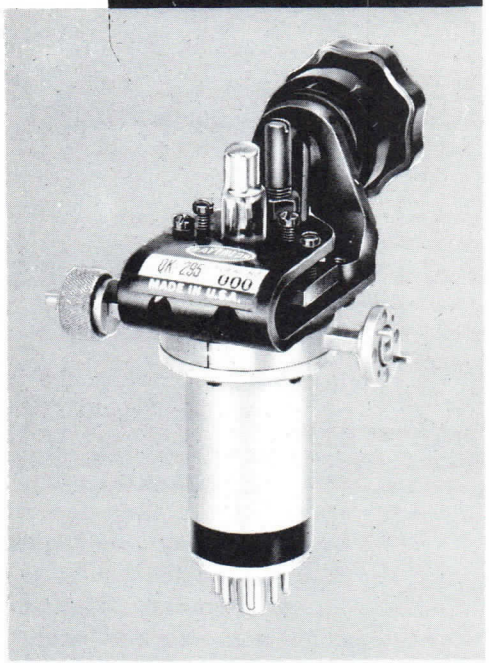

GENERAL CHARACTERISTICS

ELECTRICAL

Heater

Heater Voltage .	6.3 Volts A.C.-D.C.
Heater Current .	.58 Amperes

Maximum Ratings

Heater Voltage . .	6.3±10% Volts A.C.-D.C.
Resonator Potential .	3600 Volts D.C.
Cathode Current .	20 Milliamperes
Reflector Potential .	—50 to —450 Volts D.C.
Envelope Temperature	125° C.

The values specified above are based on the absolute system and must not be exceeded under any service condition. Operation above these limiting values may affect tube life and serviceability adversely. It does not necessarily follow that combinations of absolute maximum ratings can be attained simultaneously.

Typical Operation

Resonator Potential	2500-3600 Volts D.C. (Specified for each tube)
Focus Grid Potential	—20 to —200 Volts D.C.
Cathode Current	10 to 20 Milliamperes (Specified for each tube)
Reflector Potential	—50 to —200 Volts D.C.
Power Output QK292	5 Milliwatts Minimum
Power Output QK293	Approx. 5 Milliwatts
Power Output QK294	Approx. 5 Milliwatts
Power Output QK295	Approx. 2 Milliwatts
Frequency Range QK292	35,100-39,700 Mc.
Frequency Range QK293	37,100-42,600 Mc.
Frequency Range QK294	41,700-50,000 Mc.
Frequency Range QK295	50,000-60,000 Mc. (Approx. with two tubes)

MECHANICAL

Base	Intermediate octal.				
Pin No.	1	2	7	8	Small Top Cap.
Element	Focus	H	H	K	Reflector.
Bulb	Glass-copper disc seal construction.				
Mounting	Any position.				

Printed in U.S.A.

Cooling	Freely circulating or forced air (latter is preferable). Forced air mandatory for QK295.
Maximum Overall Dimension	Height: Max. 4.625" Base to Top Cap excluding Pins. Diameter: Max. 4.375" including Tuning Screw and Waveguide.
Waveguide	Type QK292 .280" x .140" I.D. x .040" Wall; RG 96/U. Type QK293, 294 .224" x .112" I.D. x .040" Wall; RG 97/U. Type QK295 .148" x .074" I.D. x .040" Wall; RG 98/U.

DETAILED ELECTRICAL INFORMATION

CATHODE

In most applications, the metal shell (resonator) of the QK292 thru QK295 types is operated at ground potential. The cathode is therefore negative with respect to ground by the amount of the resonator potential and must not be grounded. The cathode may be connected to one side of the heater or to the center tap of the heater transformer secondary. When cathode and heater are connected together, connections to the cathode should be made directly to the cathode on the tube socket and never to the heater lead. When cathode or heater are not connected together, the heater cathode voltage should not exceed ±50 volts. In all cases where the resonator is operated at ground potential the heater transformer must be insulated to withstand the maximum resonator voltage.

In applications where the metal envelope (resonator) of the QK292 thru QK295 is not at ground potential, it is essential that the tube be surrounded by a grounding shield to avoid injury to the operator. Adequate ventilation must be provided through this shield to keep the ambient temperature of the chamber below a maximum value.

The cathode current in these types must be adjusted to the proper value (between 10.0 and 20.0 mA) by adjusting the focus grid voltage. For optimum results, it is imperative that the cathode current be maintained at the value specified for each tube.

REFLECTOR

The reflector electrode is connected to the small cap on the top of the tube. The glass stem supporting the reflector electrode must be carefully protected against rough handling. If the glass stem comes in contact with other objects, damage may result which will cause the tube's characteristics to change.

The power supply furnishing the reflector potential must be insulated to withstand the total resonator and reflector voltage. The reflector must never be allowed to become positive with respect to the cathode. If this precaution is not observed, damage to the reflector may result. In cases where modulating potentials bring the reflector voltage close to zero volts, or where extremely high reflector circuit impedances are required, a diode should be connected between cathode and reflector to prevent the reflector from going positive. Also, it is required that the application of reflector voltage precede the application of resonator voltage.

FREQUENCY STABILITY

To obtain the most stable operation from these tubes, the reflector and resonator voltage supplies should be very well regulated. It is also essential that these types be operated at a near constant ambient temperature.

The materials used in the tuning mechanism have been selected in such a way that their thermal expansion coefficient will produce a desirable ambient temperature vs. frequency coefficient.

After the back tuning stub has been adjusted for maximum power output, the lock nut on the plunger screw and Allen set screw should be tightened. Failure to observe this precaution may result in noisy and unstable operation.

Printed in U.S.A.

MICROWAVE AND POWER TUBE DIVISION

RAYTHEON COMPANY

FOUNDRY AVE., WALTHAM 54, MASS.

3669 — 7-57

MECHANICAL TUNING MECHANISM

The mechanical tuning mechanism of these types is designed to permit occasional frequency adjustments. Clockwise rotation of the tuning knob increases the frequency. Care should be taken not to exceed the maximum clockwise limit of the tuning knob, since further rotation may damage the tuning mechanism.

ELECTRONIC TUNING

With the mechanical tuner adjusted so that the tube is operating near the desired frequency, vernier frequency adjustment may be made by varying the reflector voltage. Maximum power output for a given mechanical tuner setting, however, will be obtained at only one value of reflector voltage. If the mechanical tuner and reflector voltage are mutually adjusted for maximum power output at a given frequency, and if then the reflector voltage is varied above and below the value for maximum power output such that the power output is reduced by one half, the frequency change between the half power values is defined as the electronic tuning range. The electronic tuning range and linearity depend on the type of load and coupling use. A highly reactive load may shorten the electronic tuning range and cause non-linear variation of frequency with reflector voltage.

MODES OF OPERATION

Oscillation may be obtained in a given tube with several combinations of resonator and reflector voltages at a given frequency. The regions where oscillation occurs within the reflector voltage range are referred to as voltage modes. Data cards are furnished with each tube showing various modes of operation power. Operation in the higher voltage reflector modes usually results in more power output. Operation in the lower voltage reflector modes usually results in more electronic tuning.

DETAILED MECHANICAL INFORMATION

INSTALLATION

The types QK292 thru QK295 require a standard octal socket and may be mounted in any position. The output coupling flange should be rigidly clamped to a mating flange of the proper type. (See outline drawing)

Adequate cooling should be provided at all times due to relatively high input powers; forced air cooling is recommended.

SHIELDING

Where the types QK292 thru QK295 are to be operated in the presence of strong magnetic fields, shielding the resonator and reflector voltage leads is usually required in order to avoid undesirable modulation of the tube output. In extremely troublesome conditions, it may be advisable to place the tube in a metal chamber with polyiron chokes to bring the voltages into this chamber.

Printed in U.S.A.

MICROWAVE AND POWER TUBE DIVISION

RAYTHEON COMPANY

FOUNDRY AVE., WALTHAM 54, MASS.

OUTLINE DRAWING
ELECTRON TUBE QK292-QK294

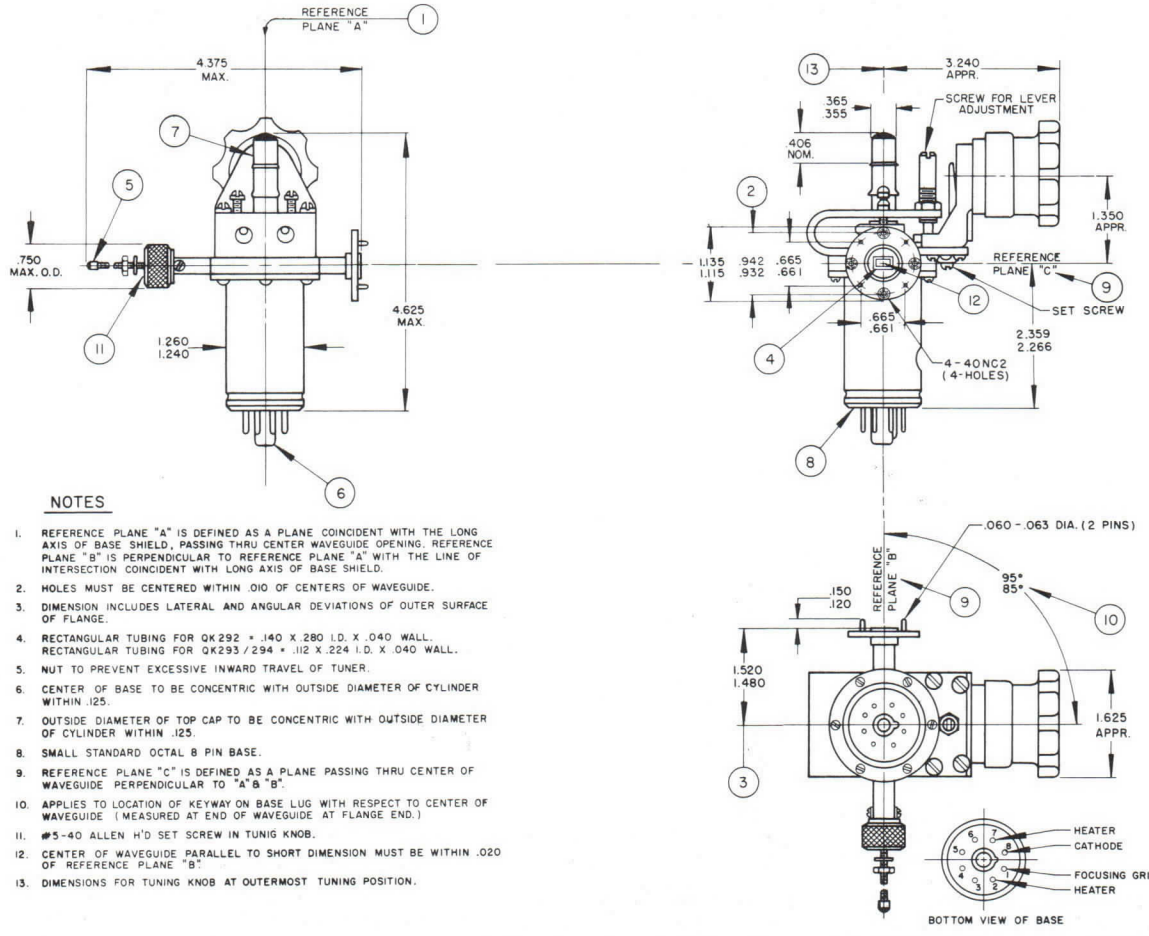

NOTES

1. REFERENCE PLANE "A" IS DEFINED AS A PLANE COINCIDENT WITH THE LONG AXIS OF BASE SHIELD, PASSING THRU CENTER WAVEGUIDE OPENING. REFERENCE PLANE "B" IS PERPENDICULAR TO REFERENCE PLANE "A" WITH THE LINE OF INTERSECTION COINCIDENT WITH LONG AXIS OF BASE SHIELD.
2. HOLES MUST BE CENTERED WITHIN .010 OF CENTERS OF WAVEGUIDE.
3. DIMENSION INCLUDES LATERAL AND ANGULAR DEVIATIONS OF OUTER SURFACE OF FLANGE.
4. RECTANGULAR TUBING FOR QK292 = .140 X .280 I.D. X .040 WALL. RECTANGULAR TUBING FOR QK293/294 = .112 X .224 I.D. X .040 WALL.
5. NUT TO PREVENT EXCESSIVE INWARD TRAVEL OF TUNER.
6. CENTER OF BASE TO BE CONCENTRIC WITH OUTSIDE DIAMETER OF CYLINDER WITHIN .125.
7. OUTSIDE DIAMETER OF TOP CAP TO BE CONCENTRIC WITH OUTSIDE DIAMETER OF CYLINDER WITHIN .125.
8. SMALL STANDARD OCTAL 8 PIN BASE.
9. REFERENCE PLANE "C" IS DEFINED AS A PLANE PASSING THRU CENTER OF WAVEGUIDE PERPENDICULAR TO "A" & "B".
10. APPLIES TO LOCATION OF KEYWAY ON BASE LUG WITH RESPECT TO CENTER OF WAVEGUIDE (MEASURED AT END OF WAVEGUIDE AT FLANGE END.)
11. #5-40 ALLEN H'D SET SCREW IN TUNIG KNOB.
12. CENTER OF WAVEGUIDE PARALLEL TO SHORT DIMENSION MUST BE WITHIN .020 OF REFERENCE PLANE "B"
13. DIMENSIONS FOR TUNING KNOB AT OUTERMOST TUNING POSITION.

TYPES	WAVEGUIDE	DIMENSION							
		A	B	C	D	E	F	G	H
	RG 97 U	+.002" -.000"		± .001"		± .003"		± .003"	
QK292 – QK293 – QK294	.224" x .113" ID x .040" WALL.	.307"	.196"	.154"	.098"	.406"	1.125"	.937"	.114"

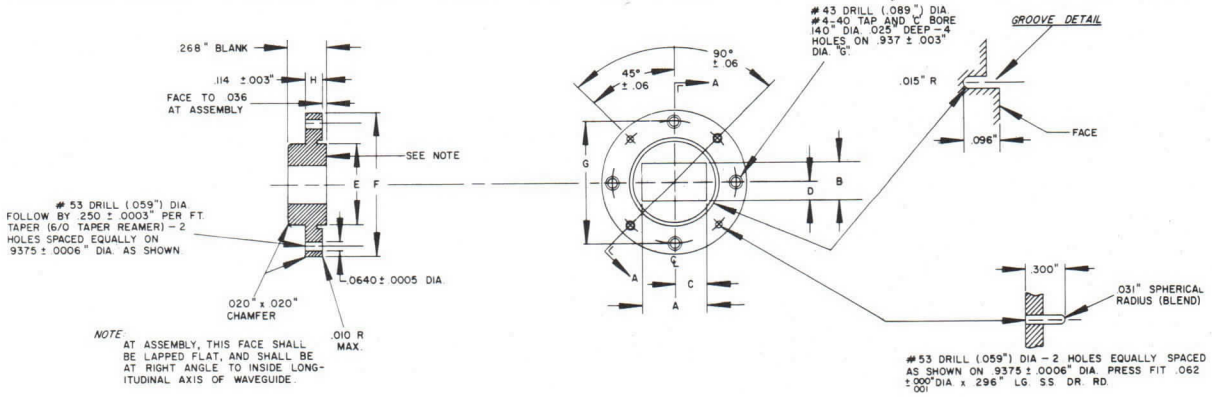

Printed in U.S.A.

MICROWAVE AND POWER TUBE DIVISION

RAYTHEON COMPANY

FOUNDRY AVE., WALTHAM 54, MASS.

ELECTRON TUBE QK295
OUTLINE DRAWING

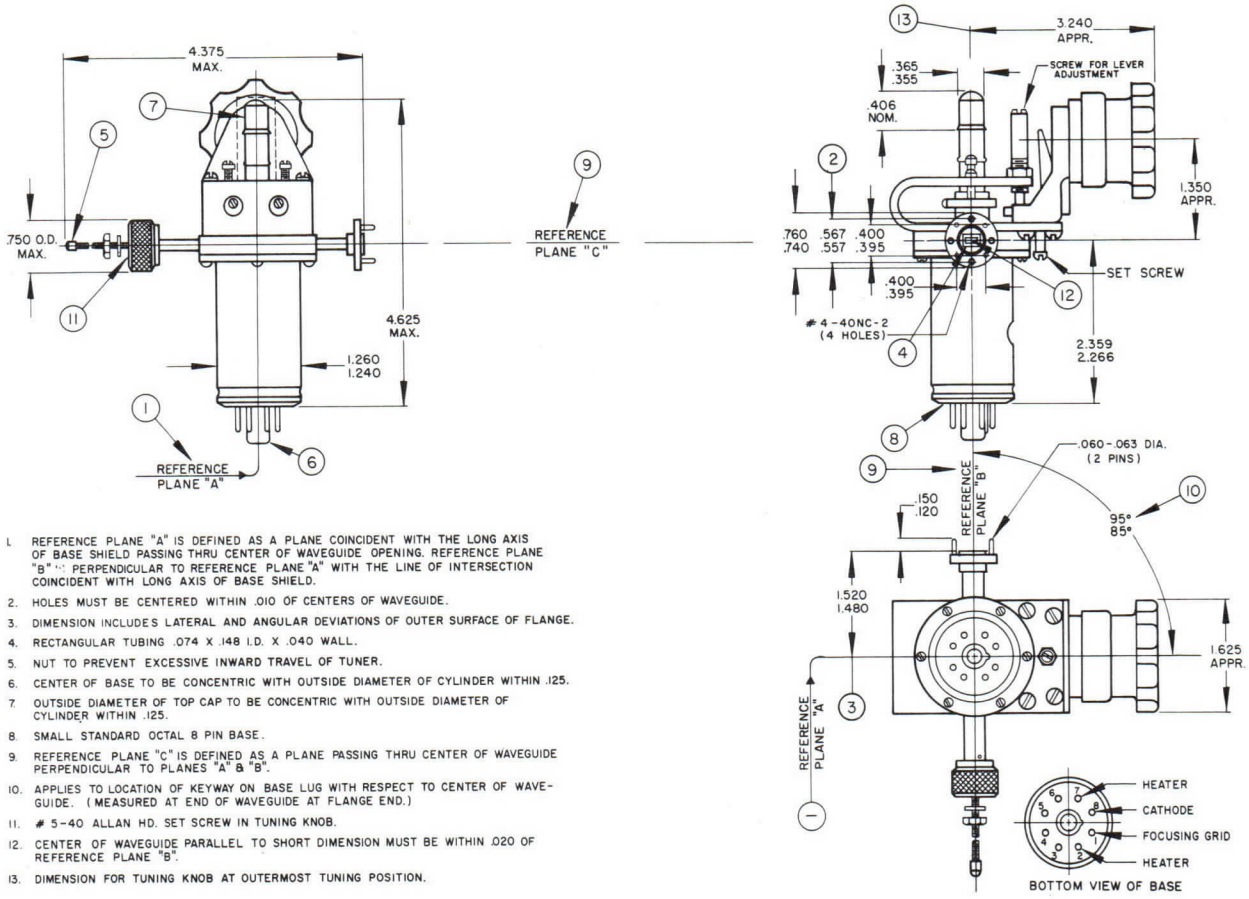

1. REFERENCE PLANE "A" IS DEFINED AS A PLANE COINCIDENT WITH THE LONG AXIS OF BASE SHIELD PASSING THRU CENTER OF WAVEGUIDE OPENING. REFERENCE PLANE "B" IS PERPENDICULAR TO REFERENCE PLANE "A" WITH THE LINE OF INTERSECTION COINCIDENT WITH LONG AXIS OF BASE SHIELD.
2. HOLES MUST BE CENTERED WITHIN .010 OF CENTERS OF WAVEGUIDE.
3. DIMENSION INCLUDES LATERAL AND ANGULAR DEVIATIONS OF OUTER SURFACE OF FLANGE.
4. RECTANGULAR TUBING .074 X .148 I.D. X .040 WALL.
5. NUT TO PREVENT EXCESSIVE INWARD TRAVEL OF TUNER.
6. CENTER OF BASE TO BE CONCENTRIC WITH OUTSIDE DIAMETER OF CYLINDER WITHIN .125.
7. OUTSIDE DIAMETER OF TOP CAP TO BE CONCENTRIC WITH OUTSIDE DIAMETER OF CYLINDER WITHIN .125.
8. SMALL STANDARD OCTAL 8 PIN BASE.
9. REFERENCE PLANE "C" IS DEFINED AS A PLANE PASSING THRU CENTER OF WAVEGUIDE PERPENDICULAR TO PLANES "A" & "B".
10. APPLIES TO LOCATION OF KEYWAY ON BASE LUG WITH RESPECT TO CENTER OF WAVEGUIDE. (MEASURED AT END OF WAVEGUIDE AT FLANGE END.)
11. # 5-40 ALLAN HD. SET SCREW IN TUNING KNOB.
12. CENTER OF WAVEGUIDE PARALLEL TO SHORT DIMENSION MUST BE WITHIN .020 OF REFERENCE PLANE "B".
13. DIMENSION FOR TUNING KNOB AT OUTERMOST TUNING POSITION.

TYPE	WAVEGUIDE	DIMENSION							
		A	B	C	D	E	F	G	H
	RG 97 U	+.002" -.000"		± .001		± .003"		± .003"	
QK295	.148" x .074" ID x .040" WALL.	.231"	.157"	.116"	.079"	.328"	.750"	.562"	.126"

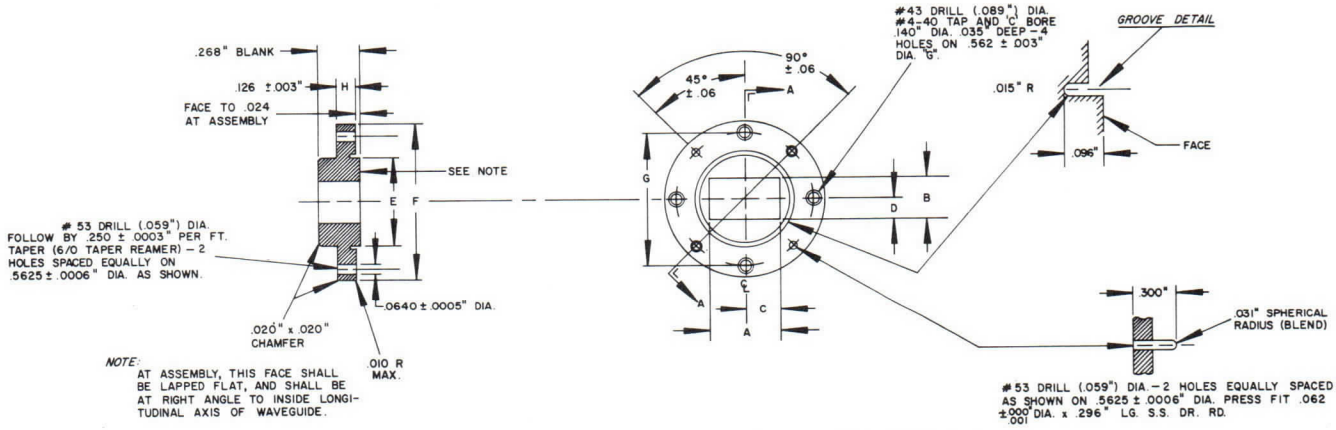

Printed in U.S.A.

MICROWAVE AND POWER TUBE DIVISION

RAYTHEON COMPANY

FOUNDRY AVE., WALTHAM 54, MASS.

RAYTHEON

TECHNICAL INFORMATION

VARIATION OSCILLATOR

Excellence in Electronics

TYPE QK306 & RK6253 and 2K33 & RK6254

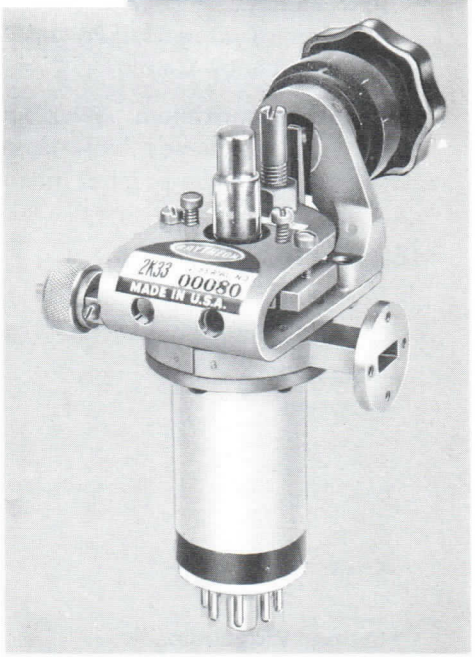

The types QK306 and 2K33 are velocity variation oscillators employing self-contained cavities. The QK-306 is designed for operation in the frequency range of 18,000 to 22,000 megacycles. The 2K33 is designed for operation in the frequency range of 22,000 to 25,000 megacycles. The tubes are operable at any frequency within the specified range and have an average power output of 40 milliwatts. The mechanical tuning mechanism provides a simple method of making wide frequency adjustments. In addition, the QK306 and 2K33 can be electrically tuned to give a 40 megacycle vernier adjustment.

All the information in this data sheet pertains to the RK6253 and RK6254 as well as the QK306 and 2K33. The only difference between these types is in the output flange as outlined in the mechanical section.

GENERAL CHARACTERISTICS

ELECTRICAL

Heater

Voltage (AC or DC)	6.3 Volts
Current	0.58 Amperes
Cathode	Oxide Coated Unipotential

Maximum Ratings

Heater Voltage (AC or DC)	6.3 ±10% Volts
DC Resonator Voltage	2300 Volts
DC Reflector Voltage	
Positive Value	0 Max. Volts
Negative Value	—500 Max. Volts

The values specified above are based on the absolute system and must not be exceeded under any service condition. Operation above these limiting values may affect tube life and serviceability adversely. It does not necessarily follow that combinations of absolute maximum ratings can be attained simultaneously.

Typical Operation

Frequency Range of Type QK306	18,000 to 22,000 Mc.
Frequency Range of Type 2K33	22,000 to 25,000 Mc.
DC Resonator Voltage	1,800 Volts
DC Focus Electrode Voltage	—20 to —100 Volts
DC Reflector Voltage Range*	—20 to —220 Volts
DC Cathode Current	6.0 to 9.0 mAdc Specified for each tube

Printed in U.S.A.

MICROWAVE AND POWER TUBE DIVISION

RAYTHEON COMPANY

FOUNDRY AVE., WALTHAM 54, MASS.

Power Output	40 mW.
Electronic Tuning (Half Power)**	
Frequency Change	40 Mc.

*Adjusted for maximum power output at the desired frequency.
**Change in frequency between the two ½ power points when the reflector voltage is varied above and below the point of maximum power output corresponding to the given frequency.

MECHANICAL

Mounting					Any Position
Overall Dimensions					See Outline Drawing
Resonator					Resonator, tuner, waveguide output fittings, and base are part of tube holder. Tubes are supplied mounted in the tube holder.
Base					Standard intermediate octal
Output Waveguide					Commercial rectangular tubing ¼" x ½" O.D. .040" wall thickness.
Output Flange		QK306 & 2K33			Round 1" diameter 4 4-40 threaded holes
		RK6253 & RK6254			UG-425/U
Pin No.	1	2	7	8	Top Cap
Element	Focus	H	H	K	Reflector

INSTALLATION

The QK306 or 2K33 requires a standard octal socket and may be mounted in any position. The output coupling flange should be rigidly clamped to a mating choke flange of the proper type. (See outline drawing)

Adequate cooling should be provided at all times due to relatively high input powers. In applications where the tube is to be enclosed in a chamber, forced air cooling is required.

SHIELDING

Where the QK306 or 2K33 are to be operated in the presence of strong magnetic fields, shielding the resonator and reflector voltage leads is usually required in order to avoid undesirable modulation of the tube output. In extremely troublesome conditions, it may be advisable to place the tube in a metal chamber with polyiron chokes to bring the voltages into this chamber.

CATHODE

In most applications, the metal shell (resonator) of the QK306 or 2K33 types is operated at ground potential. The cathode is therefore negative with respect to ground by the amount of the resonator potential and must not be grounded. The cathode may be connected to one side of the heater or to the center tap of the heater transformer secondary. When cathode and heater are connected together, connections to the cathode should be made directly to the cathode on the tube socket and never to the heater lead. When cathode or

heater are not connected together, the heater-cathode voltage should not exceed ±50 volts. In all cases where the resonator is operated at ground potential the heater transformer must be insulated to withstand the maximum resonator voltage.

In applications where the metal envelope (resonator) of the QK306 or 2K33 is not at ground potential, it is essential that the tube be surrounded by a grounding shield and mechanically tuned with an insulated tool. Adequate ventilation must be provided through this shield to keep the ambient temperature of the chamber below a maximum value.

The cathode current in the types QK306 and 2K33 must be adjusted to the proper value (specified for each tube) by adjusting the focus grid voltage. For optimum results, it is imperative that the cathode current be maintained at this value.

REFLECTOR

The reflector electrode is connected to the small cap on the top of the tube. The glass stem supporting the reflector electrode must be carefully protected against rough handling. If the glass stem receives even a slight blow, the tube characteristics are quickly changed.

The power supply furnishing the reflector potential must be insulated to withstand the total resonator and reflector voltage. The reflector must never be allowed to become positive with respect to the cathode. If this precaution is not observed, damage to the reflector may result. In cases where modulating potentials bring the reflector voltage close to zero volts, or where extremely high reflector circuit impedances are required, a diode should be connected between cathode and reflector to prevent the reflector from going positive. Also, it is essential that the reflector voltage be applied to the QK306 or 2K33 before the resonator voltage.

MECHANICAL TUNING MECHANISM

The mechanical tuning mechanism of the QK306 and 2K33 is designed to permit occasional frequency adjustments. Clockwise rotation of the tuning knob increases the frequency. Care should be taken not to exceed the maximum clockwise limit of the tuning knob, since further rotation may damage the tuning mechanism.

ELECTRONIC TUNING

With the mechanical tuning mechanism set near the desired frequency, vernier adjustment of the frequency may be accomplished by varying the reflector voltage. Maximum power output for a fixed mechanical tuner position, however, will be obtained at only one reflector voltage value. If the mechanical tuning mechanism and the reflector voltage are mutually adjusted for maximum power output, at a given frequency, and if the reflector voltage is then varied above and below the value for maximum power output, such that the power output is reduced one-half, the frequency change between the half power values is defined as electronic tuning range.

The amount of electronic tuning and the linearity of its variation with reflector voltage is dependent upon the type of load used, and the coupling to the load. When maximum electronic tuning range is required, it is recommended that the output coupling be operated into a resistive load. A highly reactive load will shorten the electronic tuning range and cause non-linear variation of frequency with reflector voltage.

FREQUENCY STABILITY

To obtain the most stable operation from the QK306 or 2K33, the reflector and resonator voltage supplies should be very well regulated. It is also essential for frequency stability that the QK306-2K33 be operated at a near constant ambient temperature.

The materials used in the tuning mechanism have been selected in such a way that their thermal expansion coefficient will produce a desirable ambient temperature vs. frequency coefficient.

After the back tuning stub has been adjusted for maximum power output, the lock nut on the plunger screw and the Allen set screw should be tightened. Failure to tighten these may result in noisy and unstable operation.

Printed in U.S.A.

MICROWAVE AND POWER TUBE DIVISION

RAYTHEON COMPANY

FOUNDRY AVE., WALTHAM 54, MASS.

MODES OF OPERATION

Oscillation may be obtained in a given tube with several combinations of resonator and reflector voltages at a given frequency. The regions where oscillation occurs within the reflector voltage range are referred to as voltage modes. Data cards are furnished with each tube showing various modes of operation with corresponding power output in each mode. Operation in the higher voltage reflector modes usually results in more power output. Operation in the lower voltage reflector modes usually results in more electronic tuning.

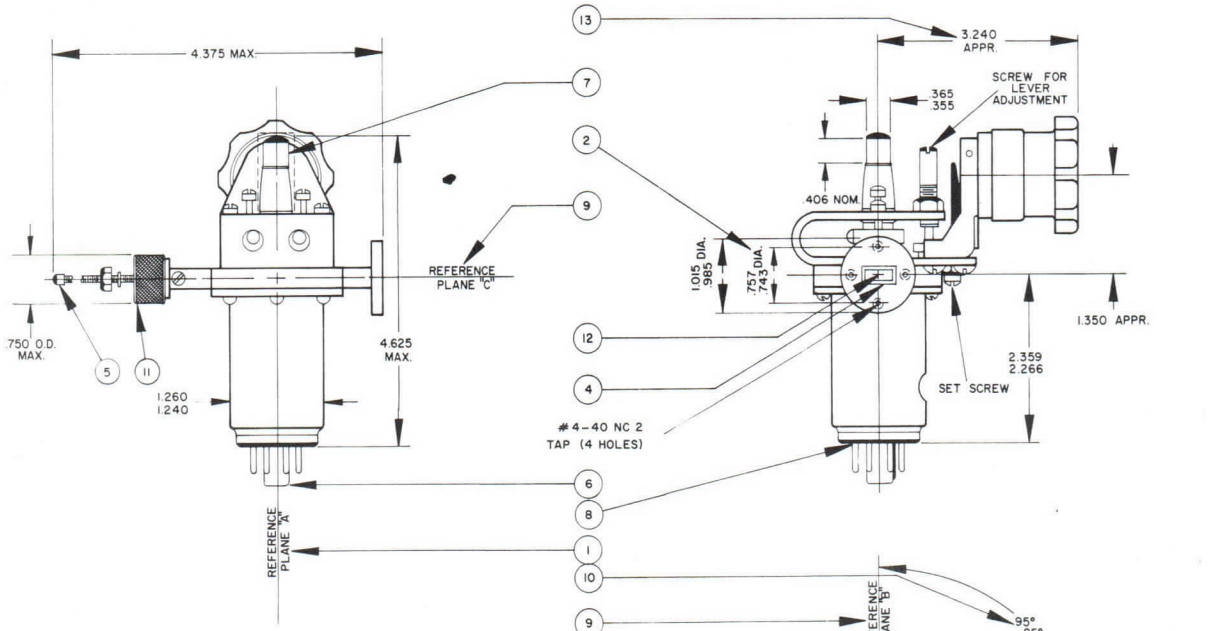

NOTES:

1. REFERENCE PLANE "A" IS DEFINED AS A PLANE COINCIDENT WITH THE LONG AXIS OF BASE SHIELD, PASSING THROUGH CENTER OF WAVEGUIDE OPENING. REFERENCE PLANE "B" IS PERPENDICULAR TO REFERENCE PLANE "A" WITH THE LINE OF INTERSECTION COINCIDENT WITH THE LONG AXIS OF BASE SHIELD.
2. HOLES MUST BE CENTERED WITHIN .010 OF CENTERS OF WAVEGUIDE.
3. DIMENSION INCLUDES LATERAL AND ANGULAR DEVIATIONS OF OUTER SURFACE OF FLANGE.
4. RECTANGULAR TUBING .250 X .500 O.D. X .040 WALL.
5. NUT TO PREVENT EXCESSIVE INWARD TRAVEL OF TUNER.
6. CENTER OF BASE TO BE CONCENTRIC WITH OUTSIDE DIAMETER OF CYLINDER WITHIN .125.
7. OUTSIDE DIAMETER OF TOP CAP TO BE CONCENTRIC WITH OUTSIDE DIAMETER OF CYLINDER WITHIN .125.
8. SMALL STANDARD OCTAL 8 PIN BASE.
9. REFERENCE PLANE "C" DEFINED AS PLANE PASSING THROUGH CENTER OF WAVEGUIDE, PERPENDICULAR TO PLANES "A" & "B".
10. APPLIES TO LOCATION OF KEYWAY ON BASE LUG WITH RESPECT TO CENTER OF WAVEGUIDE (MEASURED AT END OF WAVEGUIDE AT FLANGE END.
11. #5-40 ALLEN HEAD SET SCREW IN TUNING KNOB.
12. CENTER OF WAVEGUIDE PARALLEL TO SHORT DIMENSION, MUST BE WITHIN .020 OF REFERENCE PLANE "B".
13. DIMENSION FOR TUNING KNOB AT OUTER-MOST TUNING POSITION.

2K33 ELECTRON TUBE

OUTLINE DRAWING

2K33 MATING CHOKE COUPLING

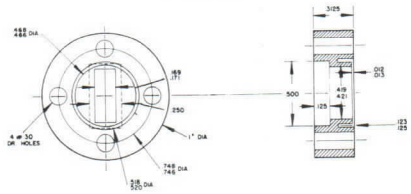

NOTE: THIS PART MAY BE MADE IN 2 PIECES USING THE .218 DIA LINE AS A JOINT. ACCURATELY LINE UP & PRESS FIT TOGETHER, & SOLDER OR BRAZE JOINT ON FACE CONTAINING .250 x .500 HOLE

RAYTHEON

TECHNICAL INFORMATION

VELOCITY VARIATION OSCILLATOR

TYPE QK386

Excellence in Electronics

The type QK-386 is a thermally tuned velocity variation oscillator of the single cavity (integral) reflex type designed for CW or pulsed operation in the 8500 to 9660 Mc range with an average power output of 30 milliwatts. Sufficient cooling for this type is usually provided by freely circulating air. It is a coaxial output type tube intended to couple into standard 1" x ½" waveguide through a suitable tranducer. The QK-386 is an extremely rugged tube intended for pulsed operation where remote frequency adjustment is required.

The QK-386 is essentially an RK6116 with base pin connections modified to facilitate pulsed operation. Pulsing of the klystron cathode anode circuit of the 6116 is not recommended due to an interaction between the fields of the reflector in the klystron and the plate of the tuner diode which results in modulation of the klystron output frequency. This field interaction problem is eliminated during pulsed operation in the type QK-386 by applying a steady DC potential to the reflector shield which is negative with respect to the resonator. This is readily accomplished in the type QK-386 inasmuch as the reflector shield is brought out to base pin #5.

For further information refer to data for the type RK6116.

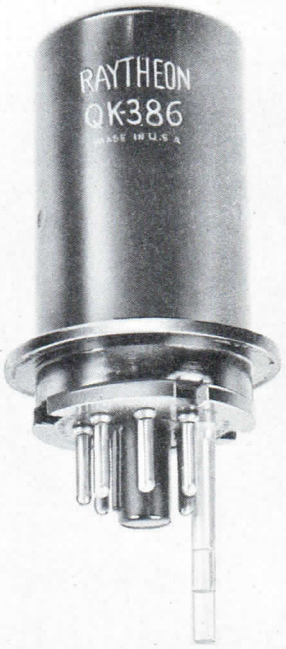

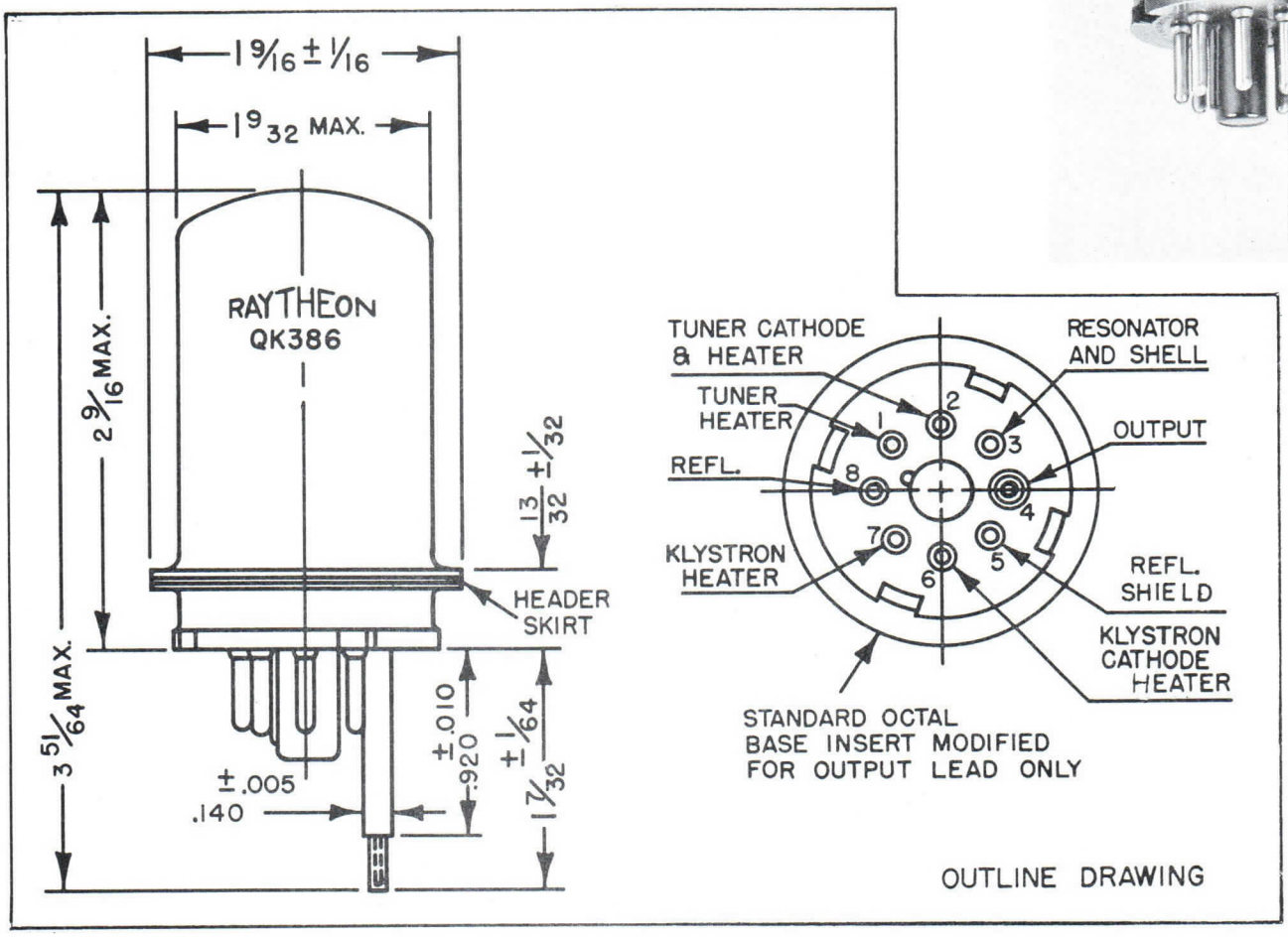

Printed in U.S.A.

MICROWAVE AND POWER TUBE DIVISION
RAYTHEON COMPANY
FOUNDRY AVE., WALTHAM 54, MASS.

RAYTHEON

TECHNICAL INFORMATION

VELOCITY VARIATION OSCILLATOR

TENTATIVE DATA

Excellence in Electronics

TYPE QK422

The QK-422 is a mechanically tuned velocity variation oscillator of the single cavity (integral) reflex type designed for CW operation in the 7125 to 8125 Mc range with a minimum power output of 100 milliwatts. It is a flange mounted waveguide output type tube with a mica window which couples to a 1½" x ¾" waveguide employing a miniaturized flange. Sufficient cooling for this type is usually provided by freely circulating air. This klystron is primarily designed for use as a local oscillator or transmitting tube in microwave relay systems.

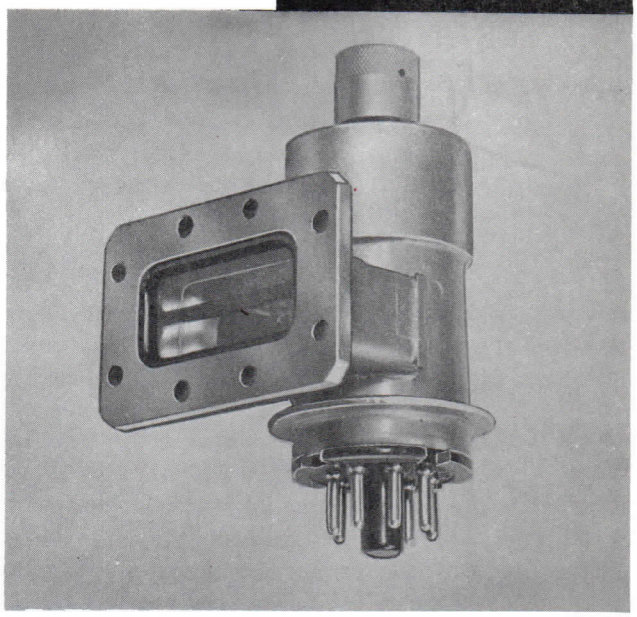

GENERAL CHARACTERISTICS

ELECTRICAL

Heater Characteristics

Heater Voltage	6.3 V
Heater Current	.44 A

Maximum Ratings

DC Resonator Voltage	350 Vdc
DC Resonator Current	42 mA
DC Reflector Voltage	
Positive Value	O Vdc
Negative Value	—350 Vdc
Heater Cathode Voltage	±100 V
Shell Temperature	150°C
VSWR	1.5/1

Typical Operation

Reflector Transit Mode	2 ¾ cycles
Frequency Range	7125 to 8125 Mc
DC Resonator Voltage	300 Vdc
DC Resonator Current	32 mA
DC Reflector Voltage (max. Po) @ 7125 Mc	—130 Vdc
DC Reflector Voltage (max. Po) @ 8125 Mc	—210 Vdc
Power Output 7125 to 8125 Mc	100 m W min.
Electronic Tuning (to half power points) @ 7600	25 Mc min.
Modulation Sensitivity @ 7600 (10 V pk. to pk. mod. volt)	.5 Mc/V min.

MECHANICAL

Mounting Position	Any
Overall Dimensions	See Outline Dwg.
Envelope	Metal
Base	Small Wafer Octal
Tuner	Allen Head, Single Screw

TENTATIVE DATA

DETAILED ELECTRICAL INFORMATION

CATHODE

In applications where the metal envelope (resonator) of the tube is operated at ground potential, the cathodes will be negative with respect to ground by the amount of resonator and tuner diode potentials respectively. The klystron cathode may be connected to one side of the heater or the center tap of the heater transformer secondary. When the klystron cathode and heater are connected together, connections to the cathode should be made directly to the cathode contacts on the tube socket and never to a heater lead. When the cathode and heater are not tied together, the heater-cathode voltage should not exceed ±100 volts. In all cases where the resonator is operated at ground potential, the heater transformers must be insulated to withstand the maximum resonator and diode voltages respectively.

In applications where the metal envelope is operated above ground potential, the tube should be surrounded by a grounded enclosure or insulating device for the protection of the operator. Adequate ventilation must be provided through this enclosure or insulating device to keep the ambient below the maximum specified values.

REFLECTOR

The reflector electrode is connected to pin #5 on the base of the tube. The power supply furnishing the reflector potential must be insulated to withstand the total resonator and reflector voltage. The reflector must never be allowed to become positive with respect to the cathode. If this precaution is not observed, damage to the reflector may result. In cases where modulating potentials bring the reflector potential close to zero volts, or where extremely high reflector circuit impedance is required, a diode should be connected between cathode and reflector to prevent the reflector from going positive.

MECHANICAL TUNING

The tuning mechanism is designed to provide linear tuning with tuner screw rotation and backlash free operation. Approximately eight turns of the tuner screw are required to tune the QK-422 through its range. The tuning screw has a 5/32" Allen head and is conically recessed to facilitate a blind engagement with an Allen wrench. Fig. 1 is a plot of tuner turns vs. frequency.

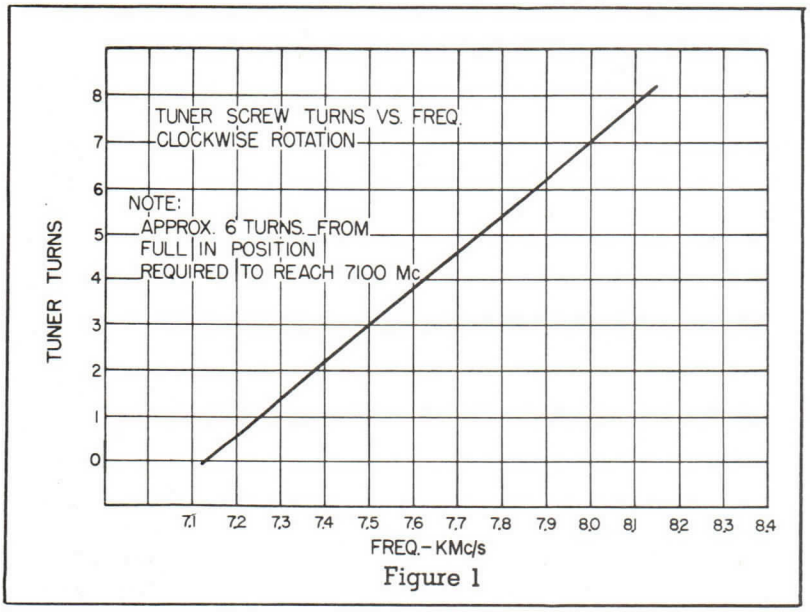

Figure 1

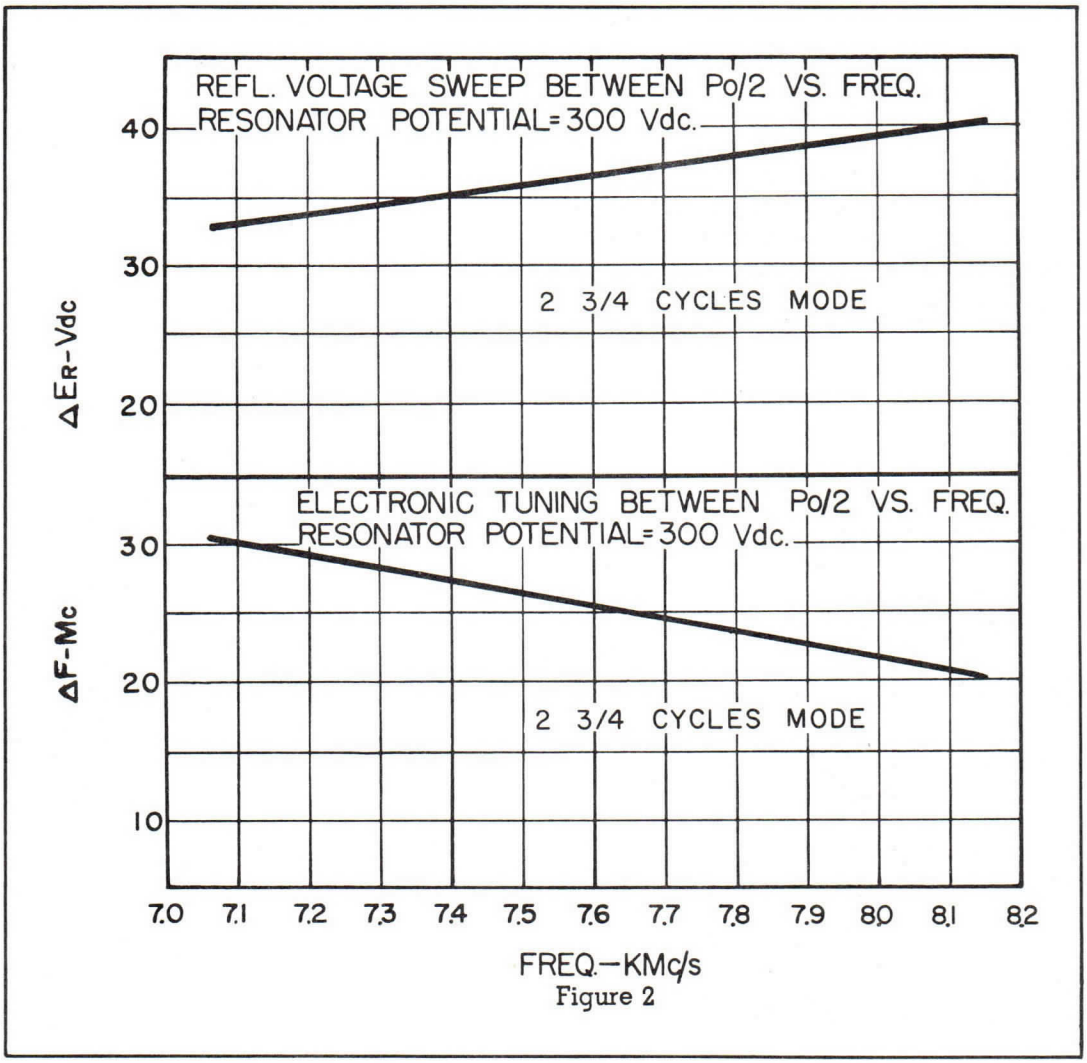

Figure 2

ELECTRONIC TUNING

With the mechanical tuner adjusted so that the tube is operating near the desired frequency, vernier frequency adjustment may be made by varying the reflector voltage. Maximum power output for a given mechanical tuner setting, however, will be obtained at only one value of reflector voltage. If the mechanical tuner and reflector voltage are mutually adjusted for maximum power output at a given frequency, and if then the reflector voltage is varied above and below the value for maximum power output, such that the power output is reduced by one half, the frequency between the half power values is defined as the electronic tuning range. The electronic tuning range and linearity depend on the type of load and coupling used. A highly reactive load may shorten the electronic tuning range, and cause non-linear variation of frequency with reflector voltage. (See Fig. 2.)

TENTATIVE DATA

MODES OF OPERATION

Oscillation may be obtained in a given tube with several combinations of resonator and reflector voltages at a particular frequency. The regions where oscillations occur, within the reflector voltage range, are referred to as voltage modes. The curves of Fig. 3 show the characteristics of the QK-422 in the recommended mode. This mode has been chosen because it represents the best compromise between optimum power output and wide electronic tuning range.

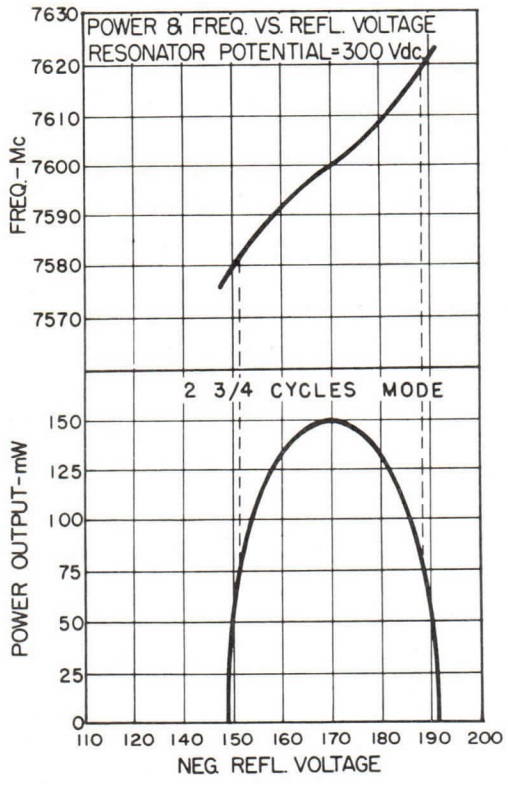

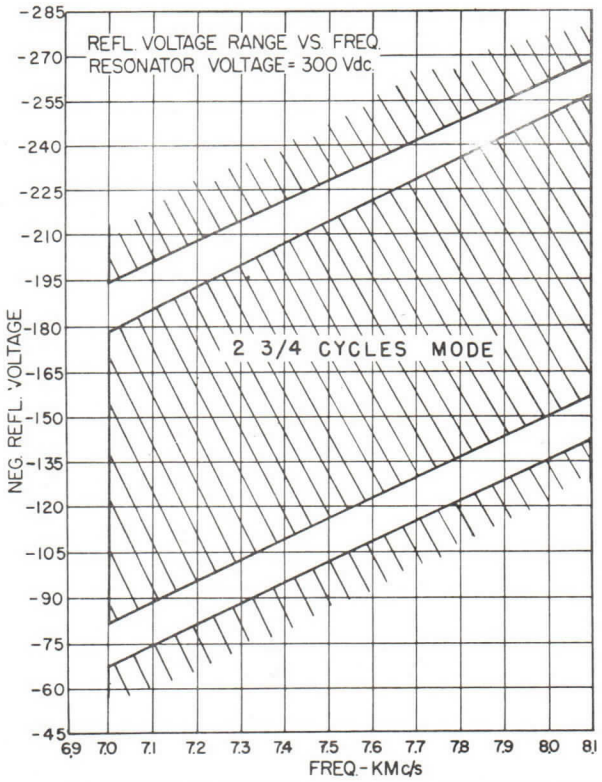

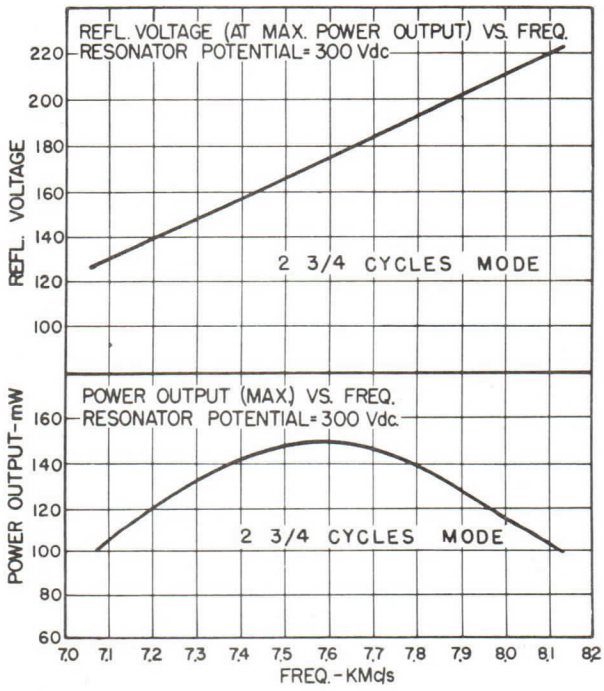

Figure 3

SHIELDING

Operation of the QK-422 in the presence of a strong magnetic field usually requires shielding of the resonator and reflector leads to avoid undesirable modulation of the tube output. In extremely troublesome magnetic environments, it may be necessary to place the QK-422 in a metal chamber with polyiron chokes provided to bring the voltages into the chamber.

INSTALLATION

The tube has a standard octal base (B8-21) and mounts in any position supported by the miniaturized waveguide flange. See Fig. 4 for pin connections.

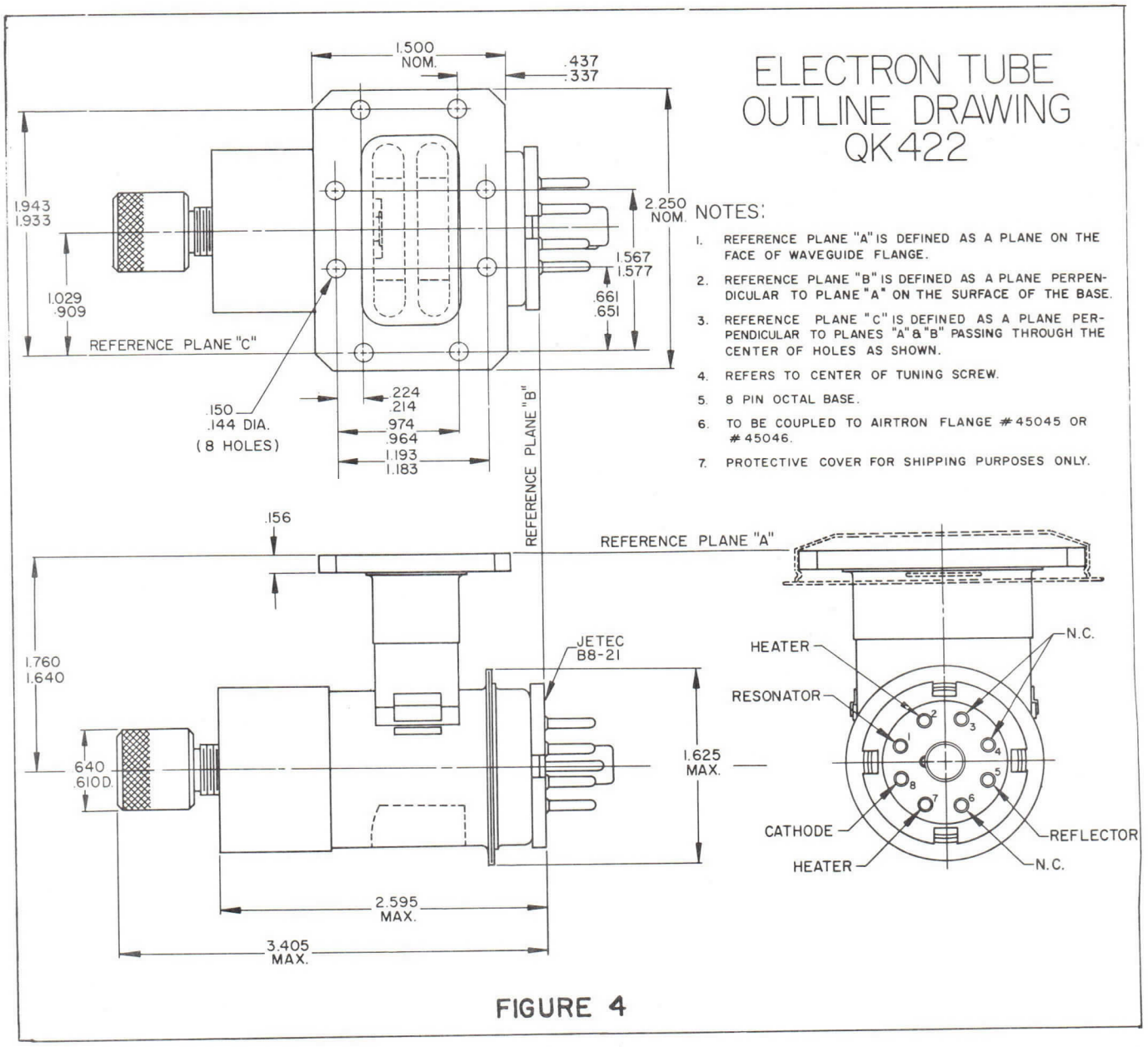

FIGURE 4

The technical information on this data sheet is of a proprietory nature and is furnished as a customer service for private use only.

QK673

PRELIMINARY

DATA SHEET

RAYTHEON *Excellence in Electronics*

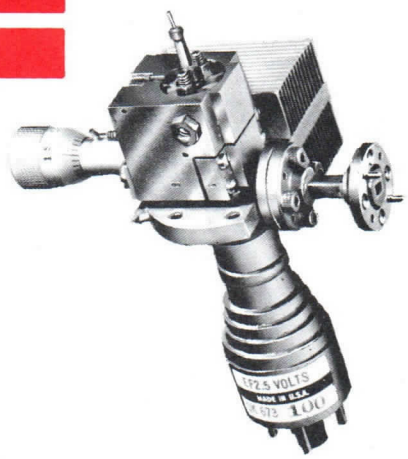

Type QK673 is a mechanically tuned reflex klystron oscillator designed for operation in the 88,000 to 92,000 megacycle range with minimum output of 3 milliwatts. The RF output is through waveguide sealed by a mica window. The output flange mates with a standard UG387/U flange.

GENERAL CHARACTERISTICS

ELECTRICAL

Heater Characteristics

Heater Voltage	2.5 Volts
Heater Current	1.45 Amperes

Maximum Ratings

Resonator Voltage	1700 Volts
Resonator Current	50 Milliamps
Focus Electrode Voltage	-20 to -400 Volts
Reflector Electrode Voltage	-40 to -400 Volts
Heater Voltage	2.75 Volts ac or dc
Heater Current at 2.5 Volts	1.58 Amperes

Typical Operation

Resonator Voltage	1400-1700 Volts
Resonator Current	40 Milliamps
Focus Electrode Voltage	-150 Volts
Reflector Voltage Range (4 3/4 Mode)	-100 to -150 Volts
Power Output (Minimum)	3 Milliwatts
Electronic Tuning (Minimum)	90 Mc
Frequency Range	
QK673	88,000 to 92,000 Mc

MECHANICAL

Base	Dwarf Octal
Cooling	Forced Air (7 cu. ft./min)
Tuner Turns Required to Cover Range	4 Approximately
Overall Dimensions including Waveguide	5 x 2 5/8 x 4 Inches
Flange	UG-387/U
Waveguide	RG-99/U

Pin #	2	3	5	7	Top Cap
Element	Heater	Focus Electrode	Cathode	Heater	Reflector

The specifications for this tube have not been finalized. The tube is being manufactured in limited quantities and is available for engineering analysis purposes only. This engineering information and/or delivery of sample tubes do not imply availability of tubes with the same electrical and/or mechanical characteristics. Changes in ratings and/ or dimensions may be made at our discretion as deemed advisable by manufacturing experience or other considerations. For current information concerning this tube contact the nearest Microwave and Power Tube Regional Sales Representative.

RAYTHEON

Excellence in Electronics

preliminary data sheet

OUTLINE DRAWING OF QK673

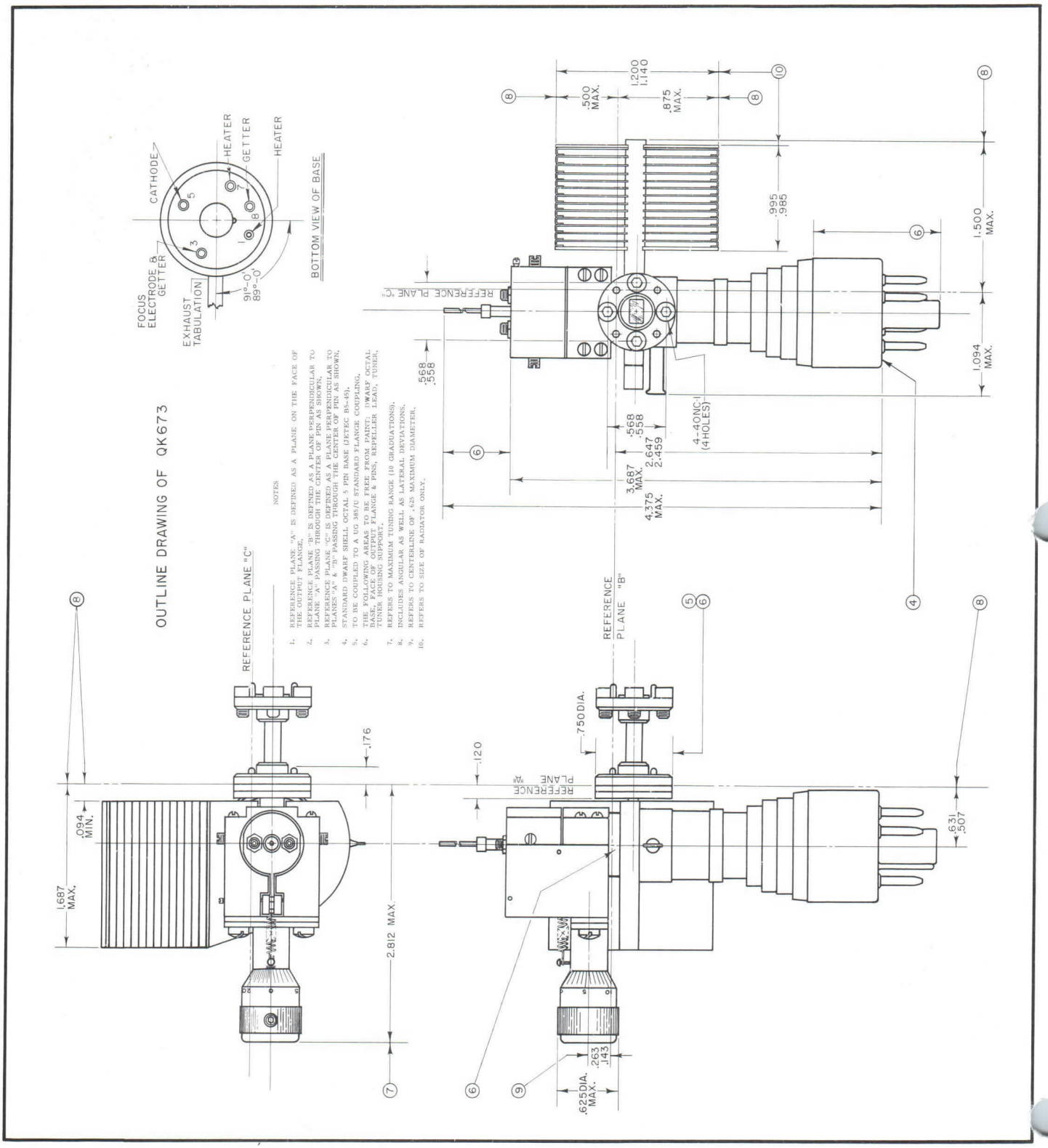

NOTES

1. REFERENCE PLANE "A" IS DEFINED AS A PLANE ON THE FACE OF THE OUTPUT FLANGE.
2. REFERENCE PLANE "B" IS DEFINED AS A PLANE PERPENDICULAR TO PLANE "A" PASSING THROUGH THE CENTER OF PIN NO. 3 OF BASE.
3. REFERENCE PLANE "C" IS DEFINED AS A PLANE PERPENDICULAR TO PLANES "A" & "B" PASSING THROUGH THE CENTER OF PIN AS SHOWN.
4. STANDARD DWARF SHELL OCTAL 5 PIN BASE (JETEC B5-49).
5. TO BE COUPLED TO A UG 385/U STANDARD FLANGE COUPLING.
6. THE FOLLOWING AREAS TO BE FREE FROM PAINT: DWARF OCTAL BASE, FACE OF OUTPUT FLANGE & PINS, REPELLER LEAD, TUNER, TUNING RING & SUPPORT.
7. REFERS TO MAXIMUM TUNING RANGE (10 GRADUATIONS).
8. INCLUDES ANGULAR AS WELL AS LATERAL DEVIATIONS.
9. REFERS TO CENTERLINE OF .625 MAXIMUM DIAMETER.
10. REFERS TO SIZE OF RADIATOR ONLY.

RAYTHEON

Excellence in Electronics

TYPE 726C
VELOCITY VARIATION OSCILLATOR



The type 726C is a velocity variation oscillator of the single cavity (integral) reflex type, designed for CW operation in the frequency range of 2700 to 2960 megacycles with an average power output of 100 milliwatts at 2800 Mc. The mechanical tuning mechanism provides a simple method of making wide frequency adjustments. In addition, the 726C can be electrically tuned to give a 25 megacycle vernier adjustment. Forced air cooling is not required, and the tube can be coupled to a 50 ohm coaxial line by means of the 726C transducer. The 726C is designed for operation at any frequency within the specified range, and is particularly suited for local oscillator service in microwave receivers. It is useful, also, as a local oscillator in microwave spectrum analyzers, as a pulse generator for testing circuit response, and as a microwave source for test purposes.

GENERAL CHARACTERISTICS

Heater, for oxide coated unipotential cathode:	
Voltage (A.C. or D.C.)	6.3 ± 0.5 Volts
Current	0.44 Amperes
Frequency Range	2700 to 2960 Mc.

MAXIMUM RATINGS, Absolute Values:

D.C. Resonator Voltage	330 Max. Volts
D.C. Resonator Current	35 Ma.
D.C. Reflector Voltage	
Positive Value	0 Max. Volts
Negative Value	—250 Max. Volts
Heater-Cathode Voltage:	
Heater negative with respect to cathode	50 Max. Volts
Heater positive with respect to cathode	50 Max. Volts
Ambient Temperature of Air Around Shell	110 Max. °C.
Temperature of coaxial output line	75 Max. °C
VSWR mismatch	1.5

TYPICAL OPERATING CONDITIONS: C.W. Oscillator: Frequency 2800 Mc.

D.C. Resonator Voltage	300 Volts
D.C. Resonator Current	30 Ma. max.
D.C. Reflector Voltage Range*	—75 to —135 Volts
D.C. Reflector Current	Less than 7 μa
Electronic Tuning (Half Power)**	
Frequency Change	40 Mc.
Modulation Sensitivity (Mc/V)	1.15
Power Output	100 Milliwatts
Thermal Compensation	—.10 to ± .05 Mc./°C

*Adjusted for maximum power output at 2800 Mc.

**Change in frequency between the two ½ power points when the reflector voltage is varied above and below the point of max. power output corresponding to the given frequency.

MECHANICAL

Mounting	Any Position
Overall Dimensions	See Outline Drawing
Resonator Cavity	Integral part of tube
Envelope	Metal
Cap	Miniature
Base	To fit standard octal with No. 4 pin enlarged and tapped to admit transducer
Vibration	10 G
Altitude	50000 ft.
Humidity	100%
Net Weight	1.5 Ounces

RAYTHEON MANUFACTURING COMPANY
POWER TUBE DIVISION — WALTHAM 54, MASS.

MODES OF OPERATION

Oscillation may be obtained in a given tube with several combinations of resonator and reflector voltages at a particular frequency. The regions where oscillation occurs within the reflector voltage range are referred to as voltage modes. The curves show characteristics of the average 726C in the recommended mode. This mode has been chosen because it represents the best compromise between optimum power output and wide electronic tuning range.

Electrical Characteristics

THE FOLLOWING DATA IS REPRESENTATIVE OF AVERAGE TUBES
TUBES DESIGNED FOR USE IN MODE A

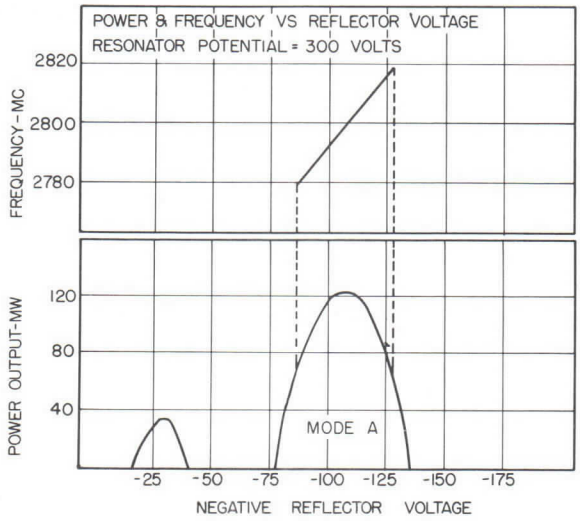

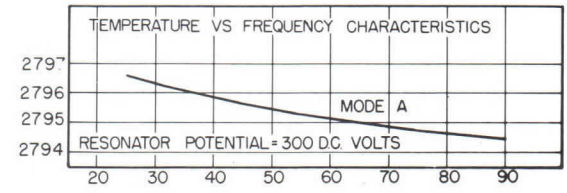

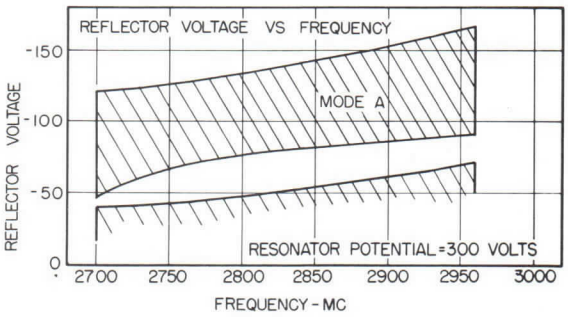

THE EXACT VALUE OF REFLECTOR VOLTAGE, PRODUCING MAXIMUM OUTPUT AT A CERTAIN FREQUENCY, VARIES FROM TUBE TO TUBE.
THE VOLTAGE FOR ALL TUBES, AT EACH MODE, WILL FALL WITHIN THE SHADED AREA INDICATED ABOVE.

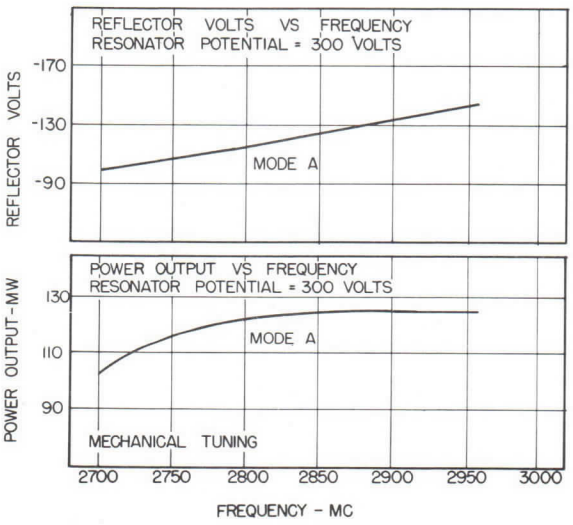

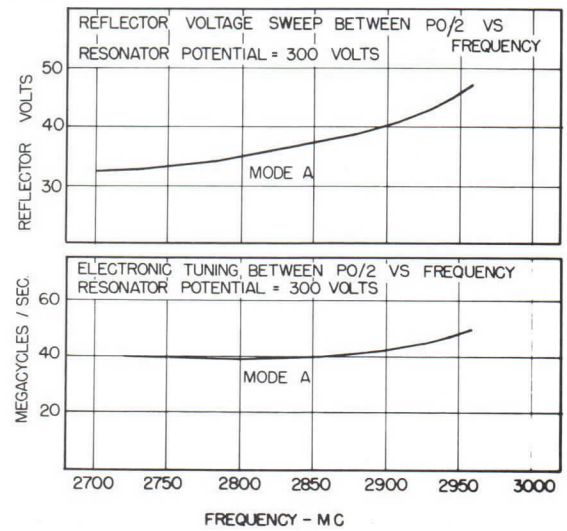

INSTALLATION

The 726C requires a standard octal socket modified with No. 4 pin enlarged and tapped to admit the coaxial transducer. The tube may be mounted in any position but should be rigidly clamped to insure proper contact of the tube with the transducer, and to guard against excessive strains on the coaxial output line. The tube must be clamped on or below the shoulder of the header skirt.

The coaxial output line is coupled into type N connector through a wide band transducer coupling unit (see outline drawing for transducer). All the tabulated data contained in this data sheet was taken using this transducer operating into a matched load.

It is important that this transducer, or its electrical equivalent, be used to insure tube interchangeability, and satisfactory tuning range characteristics. The standing wave ratio at the transducer should not exceed a VSWR of 1.1.

SHIELDING

Where the 726C is to be operated in the presence of strong magnetic fields, shielding of the resonator and reflector voltage leads is usually required in order to avoid undesirable modulation of the tube output. In extremely troublesome conditions ,it may be advisable to place the 726C in a metal chamber with poly-iron chokes provided to bring the voltages into the chamber.

CATHODE

In most applications, the metal envelope (resonator) of the 726C is operated at ground potential. The cathode is therefore negative with respect to ground by the amount of the resonator potential, and must not be grounded. The cathode may be connected to one side of the heater or the center tap of the heater transformer secondary. When cathode and heater are connected together, connections to the cathode should be made directly to the cathode contacts on the tube socket and never to a heater lead. When cathode and heater are not connected together, the heater-cathode voltage

OUTLINE DRAWING

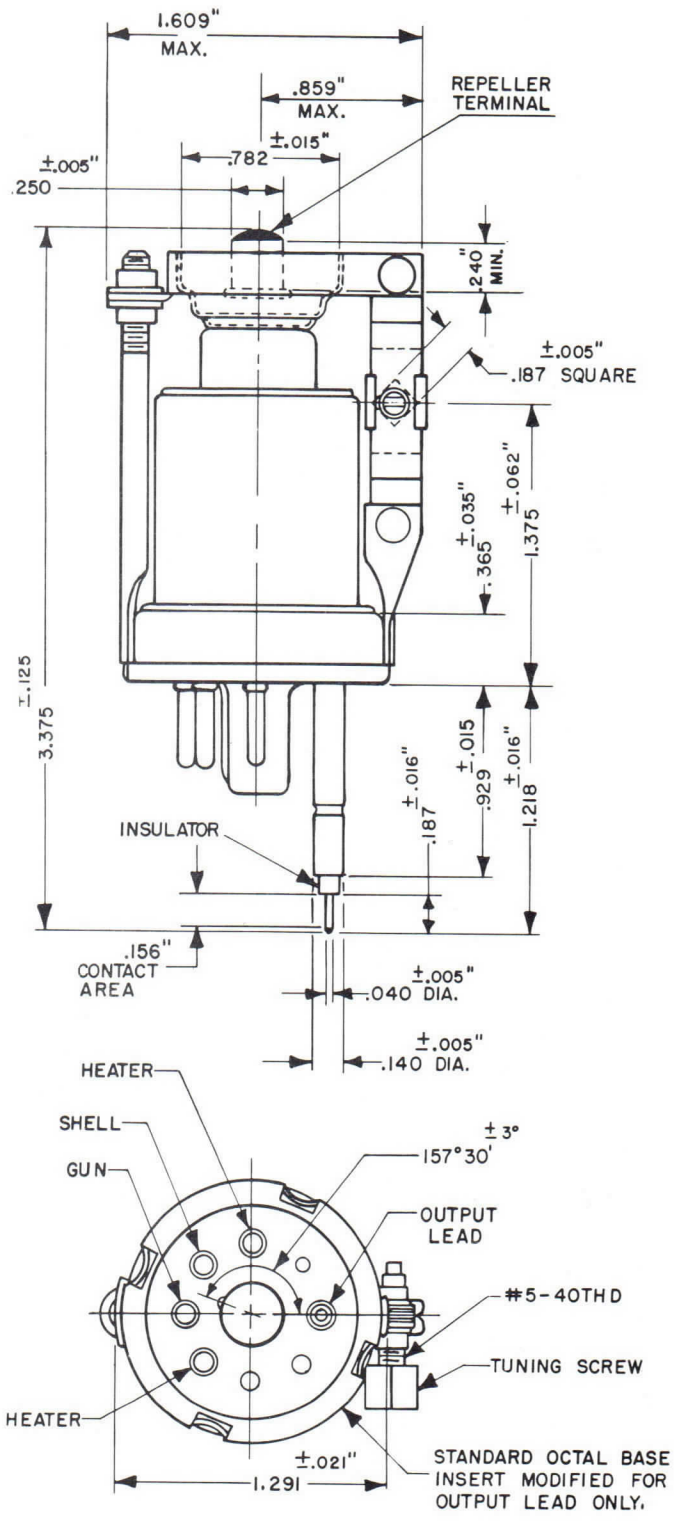

should not exceed ± 50 volts. In all cases where the resonator is operated at ground potential, the heater transformer must be insulated to withstand the maximum resonator voltage.

In applications where the metal envelope (resonator) of the 726C is not at ground potential, it is essential that the tube be surrounded by a grounding shield, and be mechanically tuned with an insulated tool. Adequate ventilation must be provided through this shield to keep the ambient temperature of the chamber below the maximum specified value.

REFLECTOR

The reflector electrode is connected to the small cap on the top of the tube. The power supply furnishing the reflector potential must be insulated to withstand the total resonator and reflector voltage. The reflector must never be allowed to become positive with respect to the cathode. If this precaution is not observed, damage to the reflector may result. In cases where modulating potentials bring the reflector voltage close to zero volts, or where extremely high reflector circuit impedances are required, a diode should be connected between cathode and reflector to prevent the reflector from going positive.

MECHANICAL TUNING MECHANISM

The mechanical tuning mechanism of the 726C is designed to permit occasional frequency adjustments. Rotating the tuning screw in a clockwise direction reduces the frequency. Approximately 3 revolutions of the tuning nut are required to cover the recommended frequency range of the tube.

When the tube is first put into service, it should be mechanically tuned to the desired frequency. The tuning bows should then be flexed several times to relax the strains in the tuning mechanism. In this process the tuning screws should be adjusted to overshoot the desired frequency several times, each time decreasing the amount of tuning screw movement.

ELECTRONIC TUNING

With the mechanical tuning mechanism set near the desired frequency, vernier adjustment of the frequency may be accomplished by varying the reflector voltage. Maximum power output for a fixed mechanical tuner position, however, will be obtained at only one reflector value. If the mechanical tuning mechanism and the reflector voltage are mutually adjusted for a maximum power output at a given frequency, and if the reflector voltage is then varied above and below the value for maximum power output such that the power output is reduced to one half, the frequency change between the half-power values is defined as electronic tuning range.

The amount of the electronic tuning and the linearity of its variation with reflector voltage is dependent upon the type of load used, and the coupling to the load. When maximum electronic tuning range is required, it is recommended that the transducer be operated into a resistive load. A highly reactive load will shorten the electronic tuning range and cause non-linear variation of frequency with reflector voltage.

FREQUENCY STABILITY

To obtain the most stable operation from the 726C the reflector and resonator voltage supplies should be very well regulated. It is also essential that the 726C be operated at a near constant ambient temperature. Under no circumstances should the temperature exceed the maximum specified values.

The materials used in the mechanical tuning mechanism of the 726C have been selected in such a way that their thermal expansion coefficient will produce a desirable ambient temperature vs. frequency coefficient. In order that this desirable temperature coefficient will not be interfered with, a tube should not be clamped above the header skirt.

Wide Band Transducer Coupling

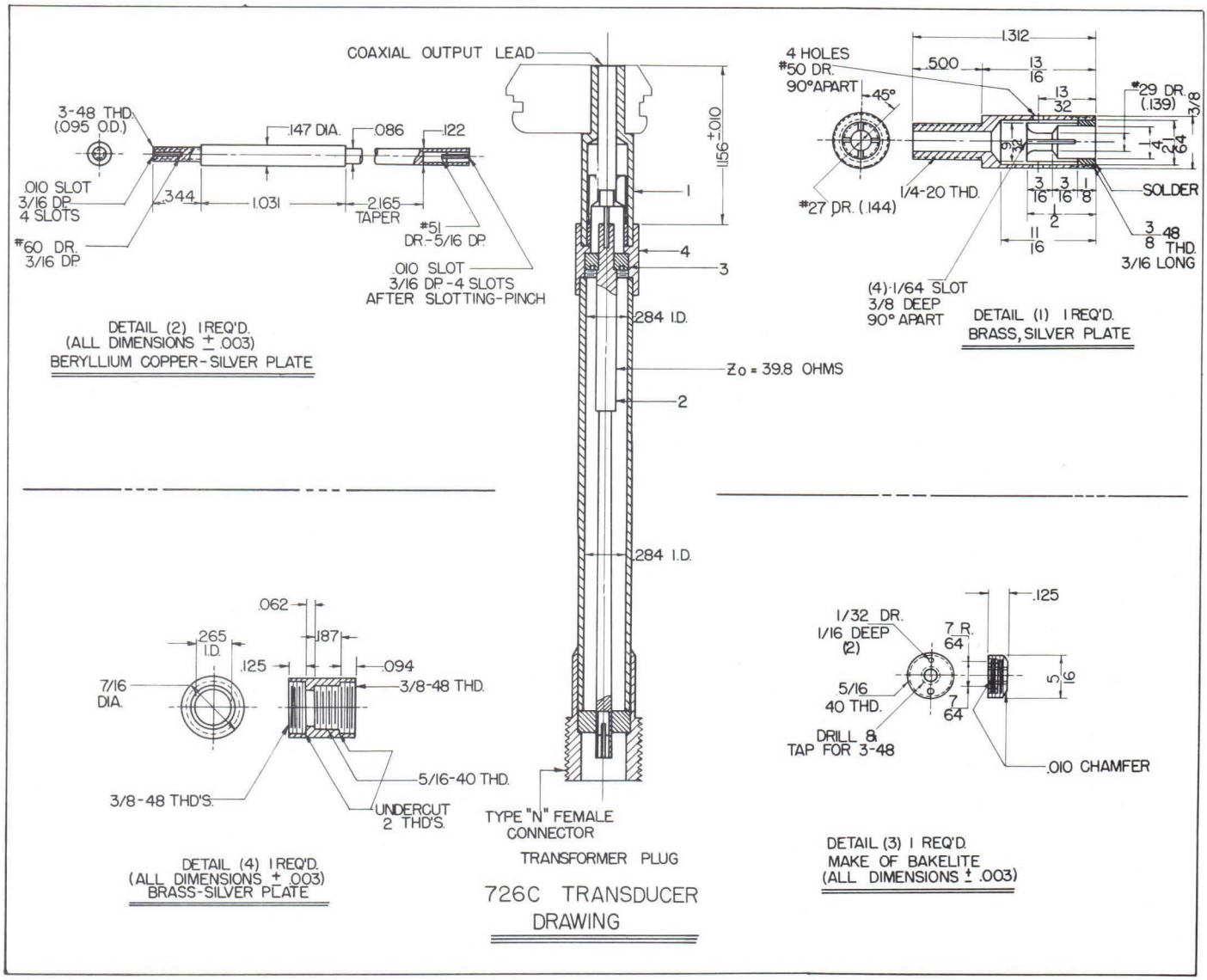

The technical information on this data sheet is of a proprietory nature and is furnished as a customer service for private use only.

QKK673

PRELIMINARY DATA SHEET

RAYTHEON



Tube type QKK673 is a mechanically tuned reflex klystron oscillator designed for operation in the 82,000 to 92,000 megacycle range with an average power output of 40 milliwatts. This tube offers single vernier adjustment and single mode operation for full frequency coverage. The RF output is through waveguide sealed by a mica window.

GENERAL CHARACTERISTICS

ELECTRICAL

Heater

Heater Voltage	2.5 Volts ±10%
Heater Current	1.45 Amperes

Maximum Ratings

Resonator Potential	1800 Volts
Cathode Current	60 mA
Reflector Potential	-40 to -500 Volts
Focus Grid Potential	-20 to -300 Volts
Anode Block Temperature	100° C

The values specified above must not be exceeded under any service condition. The ratings are limiting values above which the serviceability of any individual tube may be impaired. It does not necessarily follow that combinations of maximum ratings can be attained simultaneously.

TYPICAL OPERATION

Resonator Potential (Fixed)	1700 Volts
Focus Grid Potential (Fixed)	-20 to -300 Volts
Cathode Current	50 mA
Reflector Potential	-40 to -450 Volts
Power Output (Minimum into a matched load)	25 mW
Frequency Range	82,000 to 92,000 Mc

MECHANICAL

Base					Dwarf Octal	
Pin Number	1	3	5	7	Shell	Top Cap
Element	H	Focus Electrode	K	H	Anode	Reflector

Mounting ..... Any Position

Cooling ..... Forced Free Air (7 cu. ft/min)

RAYTHEON COMPANY | Microwave and Power Tube Division | WALTHAM 54, MASS.

The specifications for this tube have not been finalized. The tube is being manufactured in limited quantities and is available for engineering analysis purposes only. This engineering information and/or delivery of sample tubes do not imply availability of tubes with the same electrical and/or mechanical characteristics. Changes in ratings and/or dimensions may be made at our discretion as deemed advisable by manufacturing experience or other considerations. For current information concerning this tube contact the nearest Microwave and Power Tube Regional Sales Representative.

Frequency Range ..... 4 to 10 Turns of Tuner Knob
Overall Dimensions Including Waveguide ..... 5 x 2 3/8 x 4 Inches
Flange (mates with) UG-387/U
Waveguide RG-99/U

DETAILED ELECTRICAL INFORMATION

(1) WARNING

ANY ATTEMPT TO OPERATE THIS TUBE WITH THE REFLECTOR NOT CONNECTED OR WITH MORE THAN 100,000 OHMS BETWEEN REFLECTOR AND CATHODE WILL SEVERELY DAMAGE THE TUBE. Make certain that the reflector lead is connected before applying any voltages. If the reflector circuit is fused, provide a 10,000 ohm resistor as a bypass around the fuse to prevent operating the tube with no reflector connection should the fuse blow.

CATHODE

In most applications, the metal shell (resonator) is operated at ground potential. The cathode is therefore negative with respect to ground by the amount of the resonator potential and must not be grounded. THIS TUBE TYPE MAY DEVELOP A HEATER TO CATHODE SHORT. THEREFORE, TO PREVENT HEATER BURNOUT, THE CATHODE SHOULD NOT BE CONNECTED TO THE HEATER. Heater to cathode short will not cause tube malfunction or shortness of life if this simple rule is observed. In all cases where the resonator is operated at ground potential the heater transformer must be insulated to withstand the maximum resonator voltage.

In applications where the metal envelope (resonator) is not at ground potential, it is essential that the tube be surrounded by a grounding shield to avoid injury to the operator. Adequate ventilation must be provided through this shield to keep the ambient temperature of the chamber below a maximum value. The cathode current can be adjusted to the proper value by adjusting the focus grid voltage.

REFLECTOR

The reflector electrode is connected to the small cap on the top of the tube. The ceramic stem supporting the reflector electrode must be carefully protected against rough handling.

The power supply furnishing the reflector potential must be insulated to withstand the total resonator and reflector voltage. The reflector must never be allowed to become positive with respect to the cathode. If this precaution is not observed, damage to the reflector will result. In cases where modulating potentials bring the reflector voltage close to the minimum specified value a diode should be connected between cathode and reflector to prevent the reflector from going positive. ALSO, IT IS REQUIRED THAT THE APPLICATION OF REFLECTOR VOLTAGE PRECEDE THE APPLICATION OF RESONATOR VOLTAGE.

FREQUENCY STABILITY

To obtain the most stable operation from this tube, the reflector and resonator voltage supplies should be very well regulated. It is also essential that this tube be operated at a near constant ambient temperature.

MECHANICAL TUNING MECHANISM

Clockwise rotation of the tuning knob decreases the frequency. Care should be taken not to exceed the maximum clockwise limit of the tuning knob, since further rotation may damage the tuning mechanism.

ELECTRONIC TUNING

With the mechanical tuner adjusted so that the tube is operating near the desired frequency, vernier frequency adjustment may be made by varying the reflector voltage. Maximum power output for a given mechanical tuner setting, however, will be obtained at only one value of reflector voltage. If the mechanical tuner and reflector voltage are mutually adjusted for maximum power output at a given frequency, and if then the reflector voltage is varied above and below the value for maximum power output such that the power output is reduced by one half, the frequency change between the half power values is defined as the electronic tuning range. The electronic tuning range and linearity depend on the type of load and coupling used. A highly reactive load may shorten the electronic tuning range and cause non-linear variation of frequency with reflector voltage.

MODES OF OPERATION

Oscillation may be obtained in a given tube with several combinations of resonator and reflector voltages at a given frequency. The regions where oscillation occurs within the reflector voltage range are referred to as voltage modes. A card is furnished with each tube showing the optimum mode of operation. Operation in the higher voltage reflector modes usually results in more output. Operation in the lower voltage reflector modes usually results in more electronic tuning.

DETAILED ELECTRICAL INFORMATION

(2) WARNING

The window which forms the vacuum seal across the RF output is 0.001" thick. Damage to this vacuum seal will ruin the tube. This window is more than adequate to withstand atmospheric pressure, but it will not withstand blows, dents, or scratches. A glass fillet surrounds the mica window and seals it into place. Bending of the output flange can break this glass, destroying the vacuum seal and rendering the tube inoperative. To reduce this possibility and to afford some protection against puncturing, a short straight section of waveguide which has a flat surface to mate with the window flange is furnished with each tube. Removal of this flange will expose the output window to possible damage. If this straight section is not used, it is suggested that whatever flange is fastened to the tube be machined in a similar manner.

INSTALLATION

This tube requires a dwarf octal socket and may be mounted in any position. The output coupling flange should be rigidly clamped to a mating flange of the proper type. (see outline drawing.)

Adequate cooling should be provided at all times due to relatively high input powers; forced air cooling is required. (7 cu. ft/min.)

SHIELDING

Should this tube be operated in the presence of strong magnetic fields, shielding the resonator and reflector voltage leads may be required in order to avoid undesirable modulation of the tube output. In extremely troublesome conditions, it may be advisable to place the tube in a metal chamber with polyiron chokes to bring the voltages in this chamber.

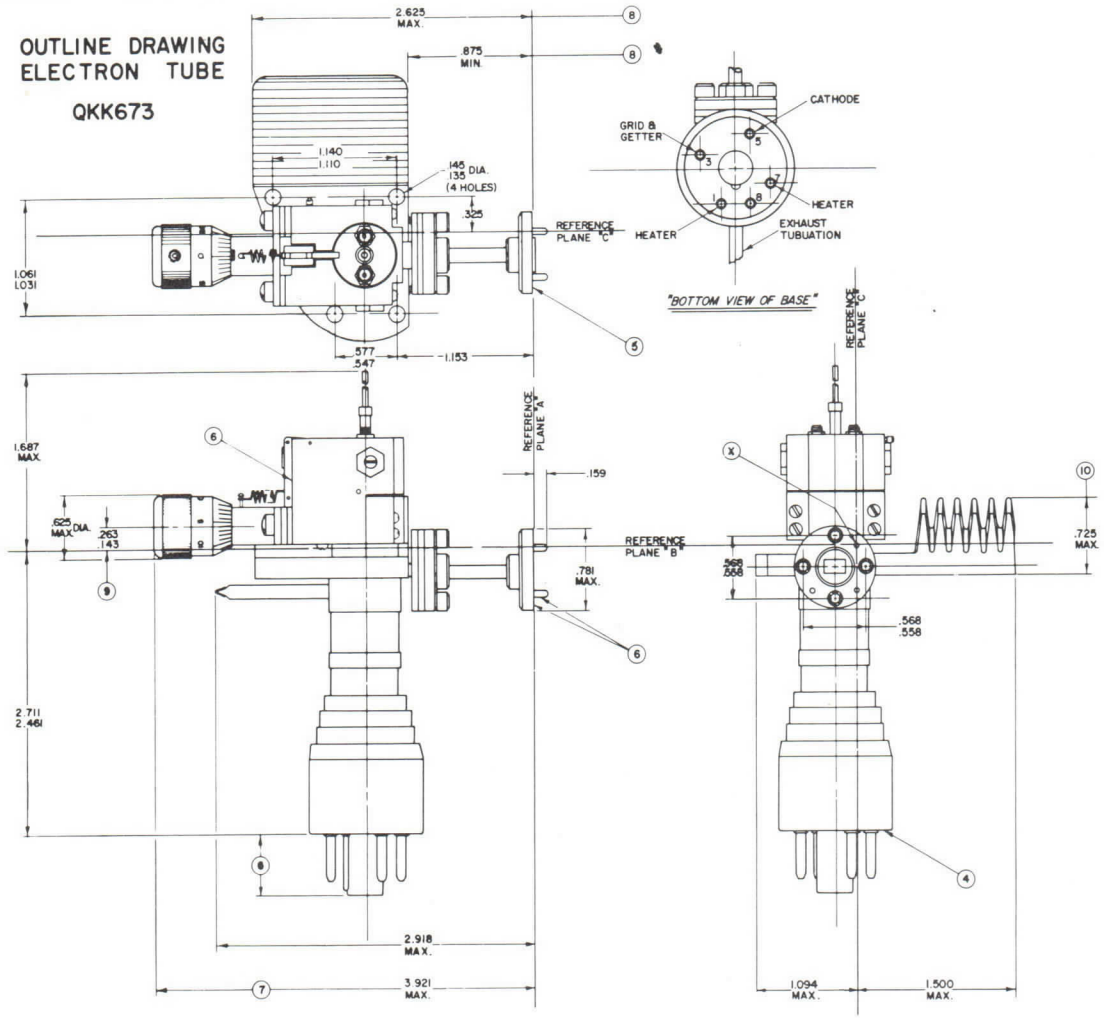

NOTES

1. REFERENCE PLANE "A" IS DEFINED AS A PLANE PASSING ALONG THE FACE OF THE OUTPUT FLANGE.
2. REFERENCE PLANE "B" IS DEFINED AS A PLANE PERPENDICULAR TO PLANE "A" AND PASSING THRU THE CENTER OF HOLE "X" AT PLANE "A" AS SHOWN.
3. REFERENCE PLANE "C" IS DEFINED AS A PLANE MUTUALLY PERPENDICULAR TO PLANES "A" AND "B" PASSING THRU THE CENTER OF HOLE "X" AT PLANE "A" AS SHOWN.
4. STANDARD DWARF SHELL OCTAL 5 PIN BASE (JETEC B5-45).
5. (A) QKK863, QKK864 & QKK865 TO MATE WITH STANDARD UG-385/U FLANGE COUPLING. (WAVEGUIDE TYPE RG-98/U)
   (B) QKK673, QKK866 & QKK867 TO MATE WITH STANDARD UG-387/U FLANGE COUPLING. (WAVEGUIDE TYPE RG-99/U)
   (C) QKK1074, QKK1075 & QKK1076 TO MATE WITH STANDARD UG-387/U FLANGE COUPLING. (WAVEGUIDE TYPE RG-138/U)
6. THE FOLLOWING AREAS TO BE FREE OF PAINT: PINS (DWARF OCTAL BASE), FACE OF OUTPUT & PINS, REPELLER LEAD, TUNER & TUNER HOUSING SUPPORT.
7. REFERS TO MAXIMUM TUNING RANGE.
8. INCLUDES ANGULAR AS WELL AS LATERAL DEVIATIONS.
9. REFERS TO CENTER-LINE OF 625 MAXIMUM DIAMETER.
10. REFERS TO SIZE OF RADIATOR ONLY.

The technical information on this data sheet is of a proprietory nature and is furnished as a customer service for private use only.

QKK752/QKK753

PRELIMINARY DATA SHEET

RAYTHEON



GENERAL DESCRIPTION

The types QKK752 and QKK753 are velocity variation oscillators of the single cavity (integral) reflex type designed for operation in the 7050 to 8475 Mc. range with an average power output of 120 milliwatts. These tubes are of the coaxial output type and are connected to standard RG51/U waveguide as indicated on page 4.

GENERAL CHARACTERISTICS

ELECTRICAL

Heater Characteristics

Heater Voltage	6.3 V
Heater Current	0.440 A

Maximum Ratings

Resonator Voltage	330 Vdc
Cathode Current	35 mAdc
Reflector Voltage	
Maximum	-380 Vdc
Minimum	-35 Vdc
Heater-Cathode Voltage	± 100 Vdc

The values specified above must not be exceeded under any service condition. The ratings are limiting values above which the serviceability of any individual tube may be impaired. It does not necessarily follow that combinations of maximum ratings can be achieved simultaneously.

Typical Operating Conditions

Resonator Voltage	300 Vdc
Cathode Current	25 mAdc
Temperature Coefficient (Max.)	± 0.2 Mc/^{o}C

Typical Operation in the 2 3/4 Reflector Mode

Frequency Range	
QKK752	7125 to 7770 Mc.
QKK753	7740 to 8400 Mc.

RAYTHEON COMPANY | MICROWAVE AND POWER TUBE DIVISION | WALTHAM 54, MASS.

The specifications for this tube have not been finalized. The tube is being manufactured in limited quantities and is available for engineering analysis purposes only. This engineering information and/or delivery of sample tubes do not imply availability of tubes with the same electrical and/or mechanical characteristics. Changes in ratings and/ or dimensions may be made at our discretion as deemed advisable by manufacturing experience or other considerations. For current information concerning this tube contact the nearest Microwave and Power Tube Regional Sales Representative.

Power Output (Min.)	90 mW
Reflector Voltage	-235 to -295 Vdc
Electronic Tuning Range (Min.)	15 Mc.
Reflector Modulation Sensitivity (Nominal)	0.5 $Mc/_V$

Typical Operation in the 3 3/4 Reflector Mode

Frequency Range	
QKK752	7050 to 7845 Mc.
QKK753	7665 to 8475 Mc.
Power Output (Min.)	60 mW
Reflector Voltage	-100 to -150 Vdc
Electronic Tuning Range (Min.)	25 Mc.
Reflector Modulation Sensitivity (Nominal)	1.4 $Mc/_V$

MECHANICAL

Mounting Position	Any
Dimensions	See Drawing.
Base	Standard Octal with No. 4 Pin Enlarged
Maximum Ambient Temperature	100°C

REFLECTOR

The power supply furnishing the reflector potential must be insulated to withstand the total resonator and reflector voltage. In cases where modulating potentials bring the reflector voltage close to the minimum voltage, or where extremely high reflector circuit impedance is required, a diode should be connected between cathode and reflector to prevent the reflector from going positive. If this precaution is not observed, damage to the reflector may result.

ELECTRONIC TUNING

With the mechanical tuning mechanism set near the desired frequency, vernier adjustment of the frequency may be accomplished by varying the reflector voltage. Maximum power output for a fixed mechanical tuner position, however, will be obtained at only one reflector value. If the mechanical tuning mechanism and reflector voltage are mutually adjusted for a maximum power output, at a given frequency, and if the reflector voltage is then varied above and below the value for maximum power output such that the power output is reduced to one-half, the frequency change between the half-power values is defined as electronic tuning range.

INSTALLATION

Under normal operation freely circulating air is sufficient to maintain these tubes within the maximum specified shell temperature. In a confined environment it may be necessary to supply cooling, but under no circumstances should the ambient temperature exceed 100° C.

The operating characteristics listed herein will be achieved only if the tube is used with the recommended coax to waveguide transducer operating into a VSWR of 1.1 to 1.0 maximum.

The technical information on this data sheet is of a proprietory nature and is furnished as a customer service for private use only.

QK754 **PRELIMINARY**

DATA SHEET

RAYTHEON *Excellence in Electronics*

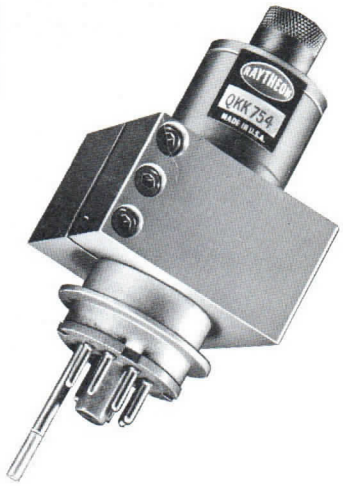

GENERAL DESCRIPTION

The QK754 is a mechanically tuned velocity variation oscillator of the single cavity (integral) reflex type designed for C.W. operation in the 5925-6425 Mc. range with a minimum power output of 1.0 watt. It is a coaxial type output tube which couples to an RG50/U waveguide. Sufficient cooling for this tube type should be provided to maintain the shell temperature below 135°C. This tube type will be provided with either a plate for attaching to a heat sink or with fins for forced air cooling. This klystron is primarily designed for use as a transmitting tube in microwave relay systems.

GENERAL CHARACTERISTICS

ELECTRICAL

Heater Characteristics

Heater Voltage	6.3 V
Heater Current	0.675 A

Maximum Ratings

DC Resonator Voltage	800 Vdc
DC Resonator Current	100 mA
DC Reflector Voltage	
Maximum	-600 Vdc
Minimum	-200 Vdc
Heater Cathode Voltage	±100 V
Shell Temperature	135°C

TYPICAL OPERATION

VSWR	1.1 to 1.0
Reflector Transit Mode	2 3/4 cycles
Frequency Range	5925-6425 Mc.
DC Resonator Voltage	750 Vdc
DC Resonator Current	70 mA
DC Reflector Voltage (Max Po) @ 5925 Mc.	-300 Vdc
DC Reflector Voltage (Max Po) @ 6425 Mc.	-360 Vdc
Power Output @ 6175 Mc.	1.8 Watts
Electronic Tuning (to half power points) @ 6175	36 Mc.
Modulation Sensitivity @ 6175 (10V pk to pk mod volt)	0.4 Mc/V

The specifications for this tube have not been finalized. The tube is being manufactured in limited quantities and is available for engineering analysis purposes only. This engineering information and/or delivery of sample tubes do not imply availability of tubes with the same electrical and/or mechanical characteristics. Changes in ratings and/ or dimensions may be made at our discretion as deemed advisable by manufacturing experience or other considerations. For current information concerning this tube contact the nearest Microwave and Power Tube Regional Sales Representative.

RAYTHEON

Excellence in Electronics

preliminary data sheet

MECHANICAL

Mounting Position	Any
Overall Dimensions	See Outline Drawing
Envelope	Metal
Base	Small Wafer Octal
Tuner	Allen Head, Single Screw
Cooling	Forced Air or Heat Sink

PIN CONNECTIONS

1	2	3	4	5	6	7	8
Shell and Resonator	Heater	Beam Shield	Output Coax.	NC	Reflector	Heater	Cathode

DETAILED ELECTRICAL INFORMATION

Cathode

In applications where the metal envelope (resonator) of the tube is operated at ground potential, the cathode will be negative with respect to ground by the amount of this potential. The klystron cathode may be connected to one side of the heater or the center tap of the heater transformer secondary. When the klystron cathode and heater are connected together, connections to the cathode should be made directly to the cathode contacts on the tube socket and never to a heater lead. When the cathode and heater are not tied together, the heater-cathode voltage should not exceed ± 100 volts. In all cases where the resonator is operated at ground potential, the heater transformers must be insulated to withstand the maximum resonator voltage.

In applications where the metal envelope is operated above ground potential, the tube should be surrounded by a grounded enclosure or insulating device for the protection of the operator. Adequate cooling must be provided to keep the shell temperature below the maximum specified values.

Reflector

The reflector electrode is connected to pin #6 on the base of the tube. The power supply furnishing the reflector potential must be insulated to withstand the total resonator and reflector voltage. The reflector must never be allowed to become positive with respect to the cathode. If this precaution is not observed, damage to the reflector may result. In cases where modulating potentials bring the reflector potential close to zero volts, or where extremely high reflector circuit impedance is required, a diode should be connected between cathode and reflector to prevent the reflector from going positive.

MECHANICAL TUNING

The tuning mechanism is designed to provide linear tuning with tuner screw rotation and back-lash free operation. Approximately five turns of the tuner screw are required to turn the QK754 through its range. The tuning screw has a 5/32" Allen head and is conically recessed to facilitate a blind engagement with an Allen head wrench.

ELECTRONIC TUNING

With the mechanical tuner adjusted so that the tube is operating near the desired frequency, the vernier frequency adjustment may be made by varying the reflector voltage. Maximum power output for a given mechanical tuner setting, however, will be obtained at only one value of reflector voltage. If the mechanical tuner and reflector voltage are mutually adjusted for maximum power output at a given frequency, and if then the reflector voltage is varied above and below the value for maximum power output, such that the power output is reduced by one half, the frequency between the half power values is defined as the electronic tuning range. The electronic tuning range and linearity depend on the type of load and coupling used. A highly reactive load may shorten the electronic tuning range, and cause non-linear variation of frequency with reflector voltage.

MODES OF OPERATION

Oscillation may be obtained in a given tube with several combinations of resonator and reflector voltages at a particular frequency. The regions where oscillations occur, within the reflector voltage range, are referred to as voltage modes. The curves attached show the characteristics of the QK754 in the recommended mode. This mode has been chosen because it represents the best compromise between optimum power output and wide electronic tuning range.

SHIELDING

Operation of the QK754 in the presence of a strong magnetic field usually requires shielding of the resonator and reflector leads to avoid undesirable modulation of the tube output. In extremely troublesome magnetic environments it may be necessary to place the QK754 in metal chamber with polyiron chokes provided on the leads bringing the voltages into the chamber.

INSTALLATION

The tube has a standard octal base (B9-220) and mounts in any position.

QK754 REFLECTOR VOLTAGE VS. FREQUENCY

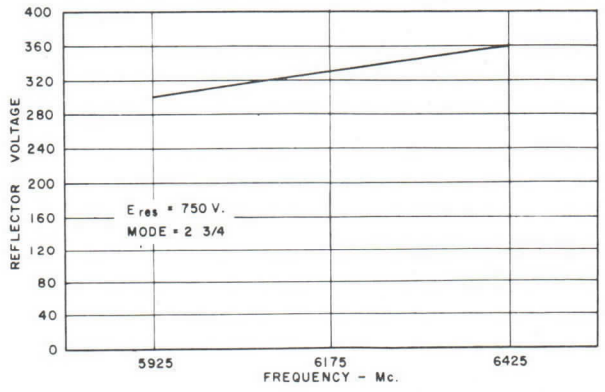

QK754 POWER OUTPUT VS. FREQUENCY

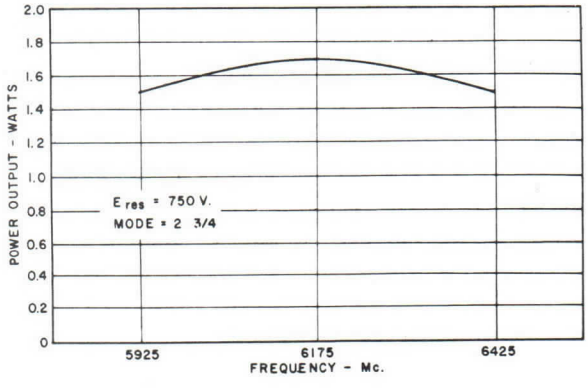

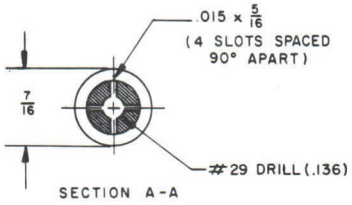

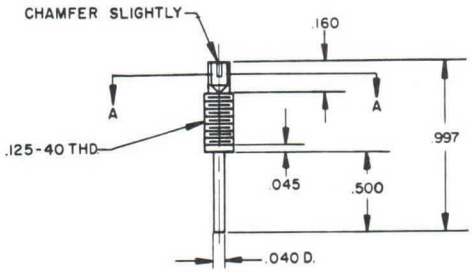

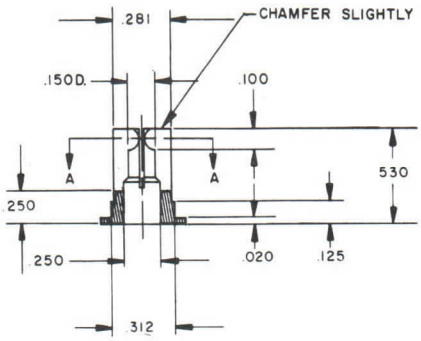

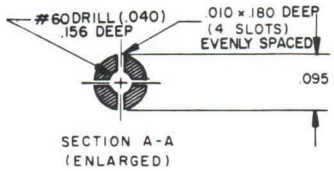

1 Allow .0005 on each surface for silver plate
2 Heat treat at 600° F. for 2 hours rock "C" 40-45

BERYLCO #25 or #40

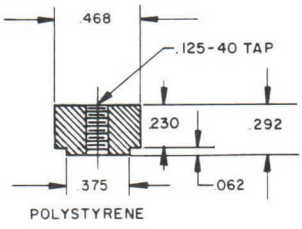

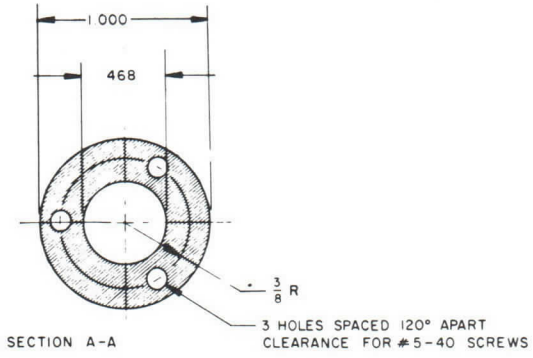

TRANSDUCER COUPLING DETAILS

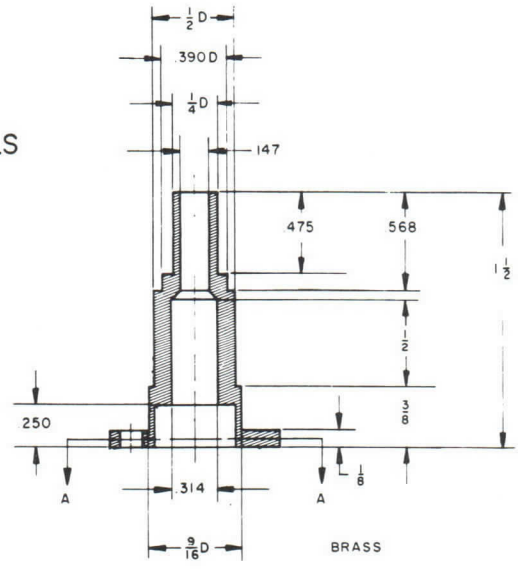

NOTES

1. All decimal dimensions ± .001
2. All fractional dimensions ± 1/64
3. All diameters to be concentric ± .001
4. All dimensions to be given as finished

RAYTHEON

Excellence in Electronics

preliminary data sheet

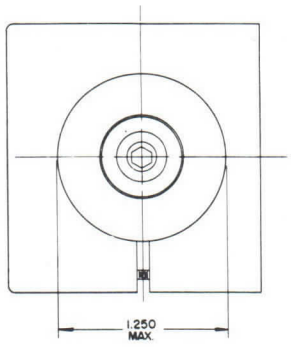

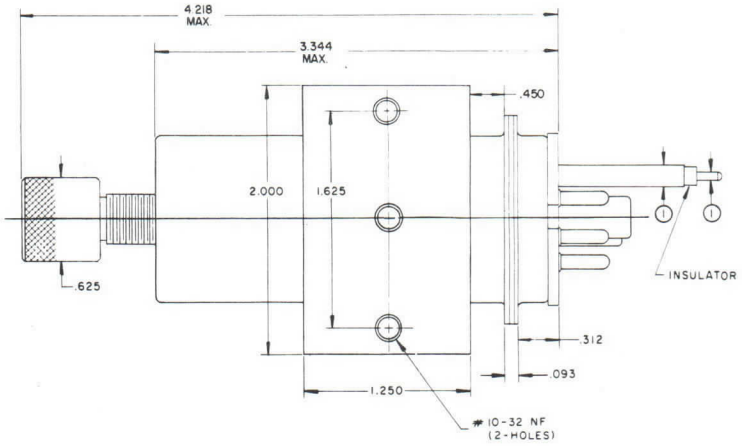

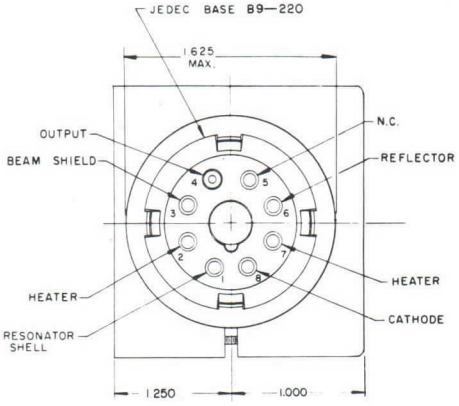

NOTE 1. THESE DIAMETERS SHALL BE CONCENTRIC WITH EACH OTHER, WITHIN .010

QK 754 OUTLINE DRAWING

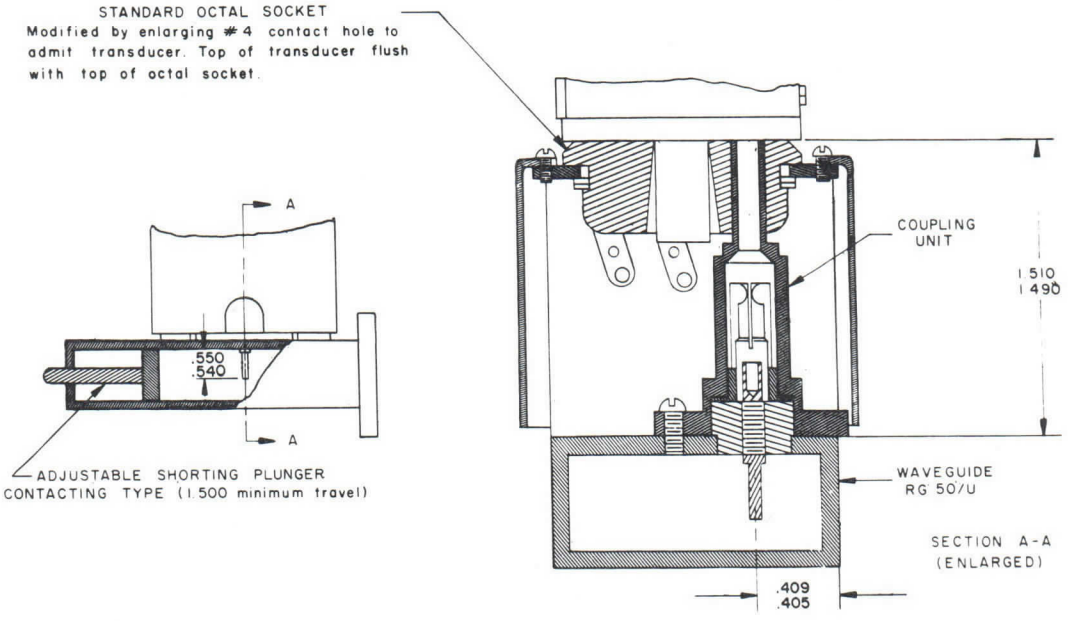

The technical information on this data sheet is of a proprietory nature and is furnished as a customer service for private use only.

QKK755/QKK756

PRELIMINARY

DATA SHEET

RAYTHEON *Excellence in Electronics*

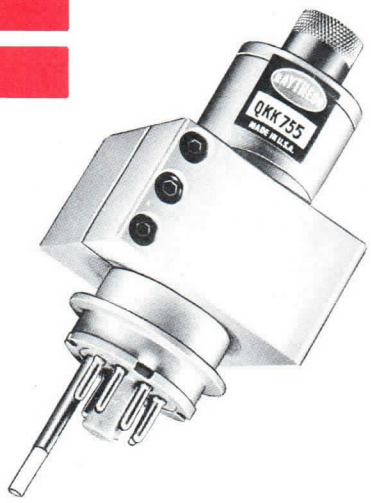

GENERAL DESCRIPTION

The types QKK755 and QKK756 are velocity modulated oscillators of the single cavity (integral) reflex type designed for operation in the 6575 to 7125 Mc. range with a minimum power output of 1.0 watt. These tubes are of the coaxial output type and are connected to standard RG50/U waveguide as indicated on the attached drawing. In order to provide sufficient cooling, the tubes are provided with either a flange to be attached to a heat sink or with cooling fins for forced air cooling.

GENERAL CHARACTERISTICS

ELECTRICAL

Heater Characteristics

Heater Voltage	6.3 V
Heater Current	0.675 A

Maximum Ratings

Resonator Voltage	800 Vdc
Resonator Current	100 mAdc
Reflector Voltage	
Minimum	-200 Vdc
Maximum	-600 Vdc
Heater-Cathode Voltage	± 100 Vdc

The values specified above must not be exceeded under any service condition. The ratings are limiting values above which the serviceability of any individual tube may be impaired. It does not necessarily follow that combinations of maximum ratings can be achieved simultaneously.

Typical Operating Conditions (VSWR 1.1 Max.)

Resonator Voltage	750 Vdc
Resonator Current	75 mAdc
Reflector Voltage	-250 -450 Vdc
Electronic Tuning Range	35 Mc.
Modulation Sensitivity	0.4 Mc/Volt

The specifications for this tube have not been finalized. The tube is being manufactured in limited quantities and is available for engineering analysis purposes only. This engineering information and/or delivery of sample tubes do not imply availability of tubes with the same electrical and/or mechanical characteristics. Changes in ratings and/ or dimensions may be made at our discretion as deemed advisable by manufacturing experience or other considerations. For current information concerning this tube contact the nearest Microwave and Power Tube Regional Sales Representative.

Frequency Range	
QKK755	6575 - 6875 Mc.
QKK756	6875 - 7125 Mc.
Power Output	1.5 Watt

MECHANICAL

Mounting Position	Any Position
Dimensions	See Drawing
Base	Standard Octal with Enlarged No. 4 Pin
Maximum Shell Temperature	135°C

REFLECTOR

The power supply furnishing the reflector potential must be insulated to withstand the total resonator and reflector voltage. In cases where modulating potentials bring the reflector voltage close to the minimum voltage, or where an extremely high reflector circuit impedance is required, a diode should be connected between cathode and reflector to prevent the reflector from going positive. If this precaution is not observed, damage to the reflector may result.

ELECTRONIC TUNING

With the mechanical tuning mechanism set near the desired frequency, vernier adjustment of the frequency may be accomplished by varying the reflector voltage. Maximum power output for a fixed mechanical tuner position, however, will be obtained at only one reflector value. If the mechanical tuning mechanism and the reflector voltage are mutually adjusted for a maximum power output, at a given frequency, and if the reflector voltage is then varied above and below the value for maximum power output, such that the power output is reduced to one-half, the frequency change between the half-power values is defined as electronic tuning range.

INSTALLATION

The tubes can be supplied with cooling fins for forced air cooling or with a flange as shown, to be attached to a heat sink. In either case, care should be taken to insure that the shell temperature does not exceed 135°C.

The operating characteristics listed herein will be achieved only if the tube is used with the recommended coax to waveguide transducer operating into a VSWR of 1.1 or less.

RAYTHEON

Excellence in Electronics

preliminary data sheet

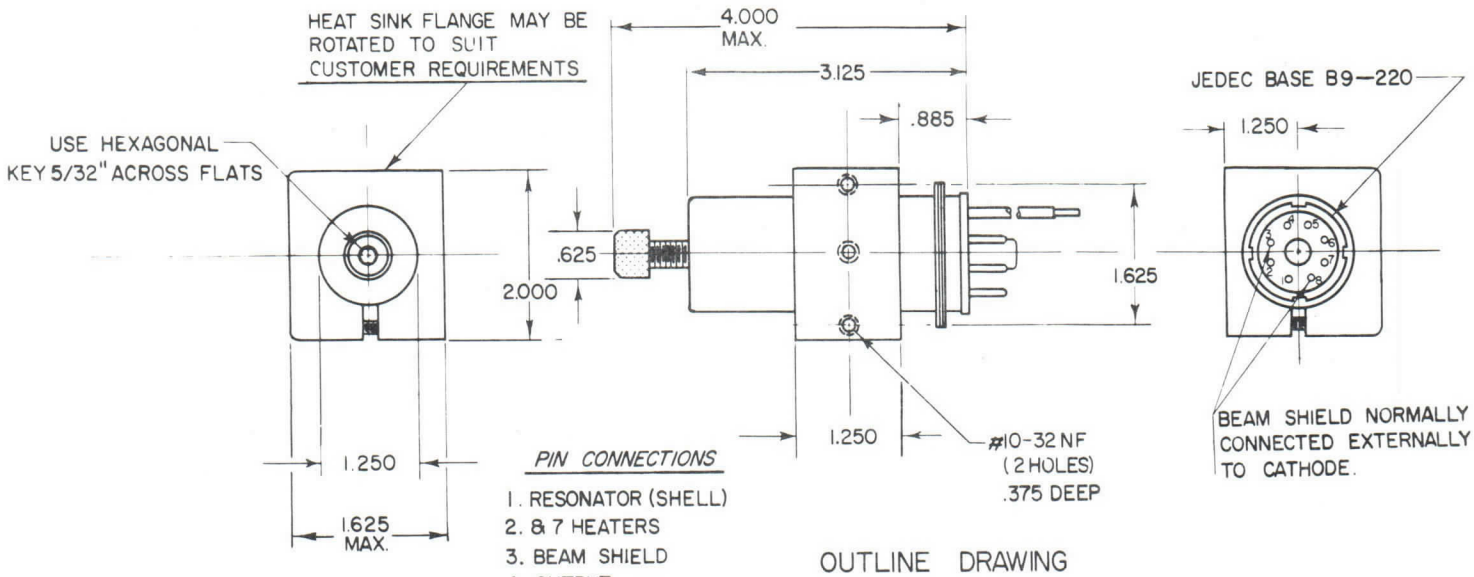

PIN CONNECTIONS

1. RESONATOR (SHELL)
2. & 7 HEATERS
3. BEAM SHIELD
4. OUTPUT
5. NO CONNECTION
6. REFLECTOR
8. CATHODE

OUTLINE DRAWING
QKK755—QKK756

LAUNCHING SECTION DETAILS FOR QKK755—QKK756

NOTES

1. All decimal dimensions ± .001
2. All fractional dimensions ± 1/64
3. All diameters to be concentric ± .001
4. All dimensions to be given as finished

STANDARD OCTAL SOCKET
Modified by enlarging #4 contact hole to admit transducer. Top of transducer flush with top of octal socket.

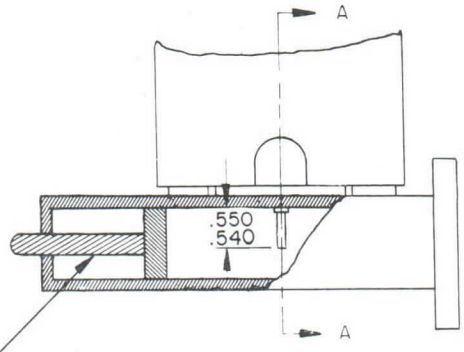

ADJUSTABLE SHORTING PLUNGER
CONTACTING TYPE (1.500 minimum travel)

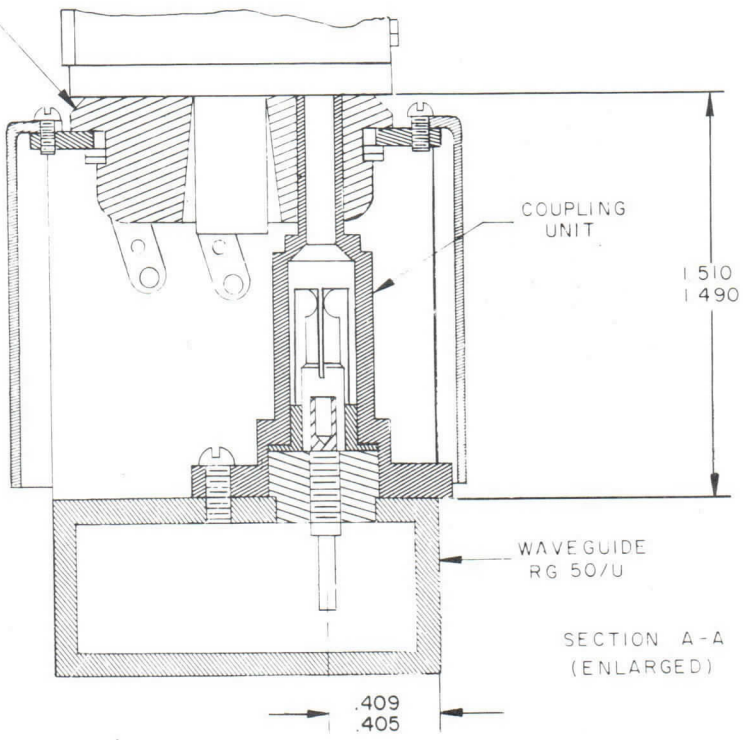

SECTION A-A (ENLARGED)

preliminary data sheet

RAYTHEON

Excellence in Electronics

LAUNCHING SECTION DETAILS

TRANSDUCER COUPLING DETAILS

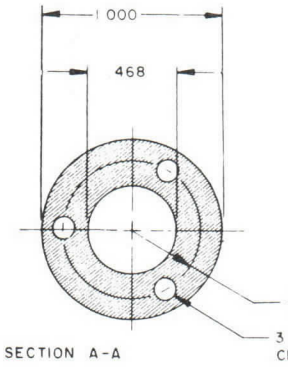

SECTION A-A

1. All decimal dimensions ± .001
2. All fractional dimensions ± 1/64

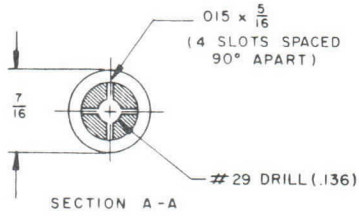

SECTION A-A

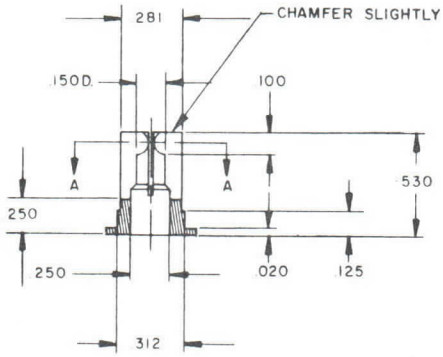

BERYLCO #25 or #40

1. Allow .0005 on each surface for silver plate
2. Heat treat at 600° F. for 2 hours rock "C" 40-45

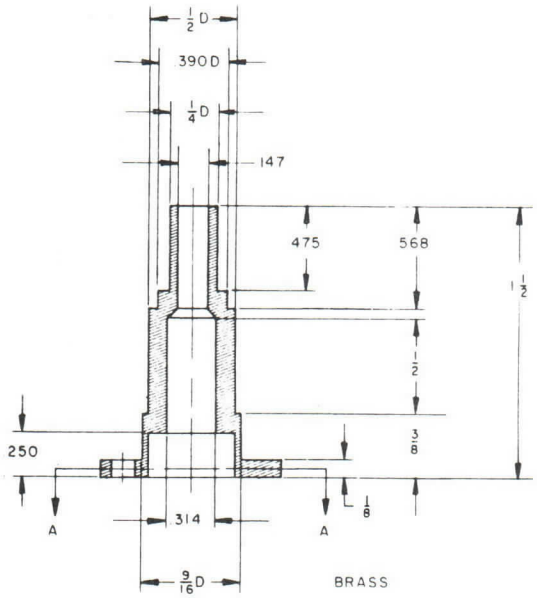

BRASS

1. Allow .0005 on each surface for silver plate
2. Heat treat at 600° F. for 2 hours rock "C" 40-45

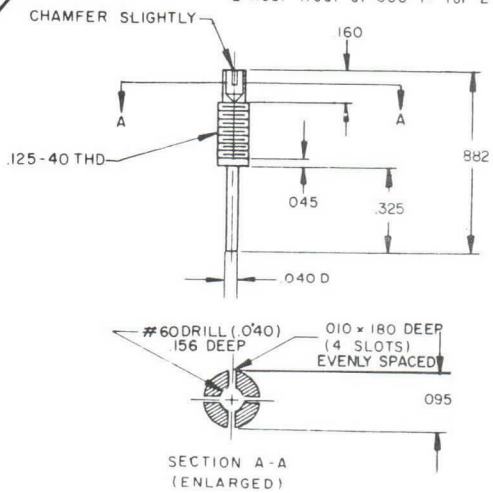

SECTION A-A
(ENLARGED)

BERYLCO #25 or #40

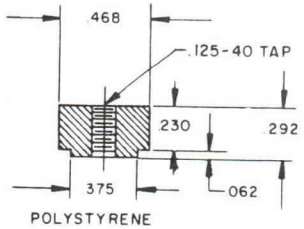

POLYSTYRENE

The technical information on this data sheet is of a proprietory nature and is furnished as a customer service for private use only.

QKK758 / QKK759

PRELIMINARY

DATA SHEET

RAYTHEON *Excellence in Electronics*



GENERAL DESCRIPTION

The types QKK758 and QKK759 are velocity modulated oscillators of the single cavity (integral) reflex type designed for operation in the 7125 to 8400 Mc. range with a minimum power output of 1.0 watts. These tubes are of the coaxial output type and are connected to standard RG51/U waveguide as indicated on the attached drawing. In order to provide sufficient cooling, the tubes are provided with either a flange to be attached to a heat sink or with cooling fins for forced air cooling.

GENERAL CHARACTERISTICS

ELECTRICAL

Heater Characteristics

Heater Voltage	6.3 V
Heater Current	0.675 A

Maximum Ratings

Resonator Voltage	1000 Vdc
Resonator Current	100 mAdc
Reflector Voltage	
Minimum	-100 Vdc
Maximum	-500 Vdc
Heater-Cathode Voltage	±100 Vdc

The values specified above must not be exceeded under any service condition. The ratings are limiting values above which the serviceability of any individual tube may be impaired. It does not necessarily follow that combinations of maximum ratings can be achieved simultaneously.

Typical Operating Conditions (VSWR 1.1 Max.)

Resonator Voltage	750 Vdc
Resonator Current	75 mAdc
Reflector Voltage	-250 - 450 Vdc
Electronic Tuning Range	35 Mc.

The specifications for this tube have not been finalized. The tube is being manufactured in limited quantities and is available for engineering analysis purposes only. This engineering information and/or delivery of sample tubes do not imply availability of tubes with the same electrical and/or mechanical characteristics. Changes in ratings and/ or dimensions may be made at our discretion as deemed advisable by manufacturing experience or other considerations. For current information concerning this tube contact the nearest Microwave and Power Tube Regional Sales Representative.

Modulation Sensitivity	0.4 Mc/Volt
Frequency Range	
QKK758	7125 - 7750 Mc.
QKK759	7750 - 8400 Mc.
Power Output	1.5 Watt

MECHANICAL

Mounting Position	Any Position
Dimensions	See Drawing
Base	Standard Octal with Enlarged No. 4 Pin.
Maximum Shell Temperature	125°C

REFLECTOR

The power supply furnishing the reflector potential must be insulated to withstand the total resonator and reflector voltage. In cases where modulating potentials bring the reflector voltage close to the minimum voltage, or where an extremely high reflector circuit impedance is required, a diode should be connected between cathode and reflector to prevent the reflector from going positive. If this precaution is not observed, damage to the reflector may result.

ELECTRONIC TUNING

With the mechanical tuning mechanism set near the desired frequency, vernier adjustment of the frequency may be accomplished by varying the reflector voltage. Maximum power output for a fixed mechanical tuner position, however, will be obtained at only one reflector value. If the mechanical tuning mechanism and the reflector voltage are mutually adjusted for a maximum power output, at a given frequency, and if the reflector voltage is then varied above and below the value for maximum power output, such that the power output is reduced to one-half, the frequency change between the half-power values is defined as electronic tuning range.

INSTALLATION

The tubes can be supplied with cooling fins for forced air cooling or with a flange as shown, to be attached to a heat sink. In either case, care should be taken to insure that the shell temperature does not exceed 125°C.

The operating characteristics listed herein will be achieved only if the tube is used with the recommended coax to waveguide transducer operating into a VSWR of 1.1 or less.

preliminary data sheet

RAYTHEON

Excellence in Electronics

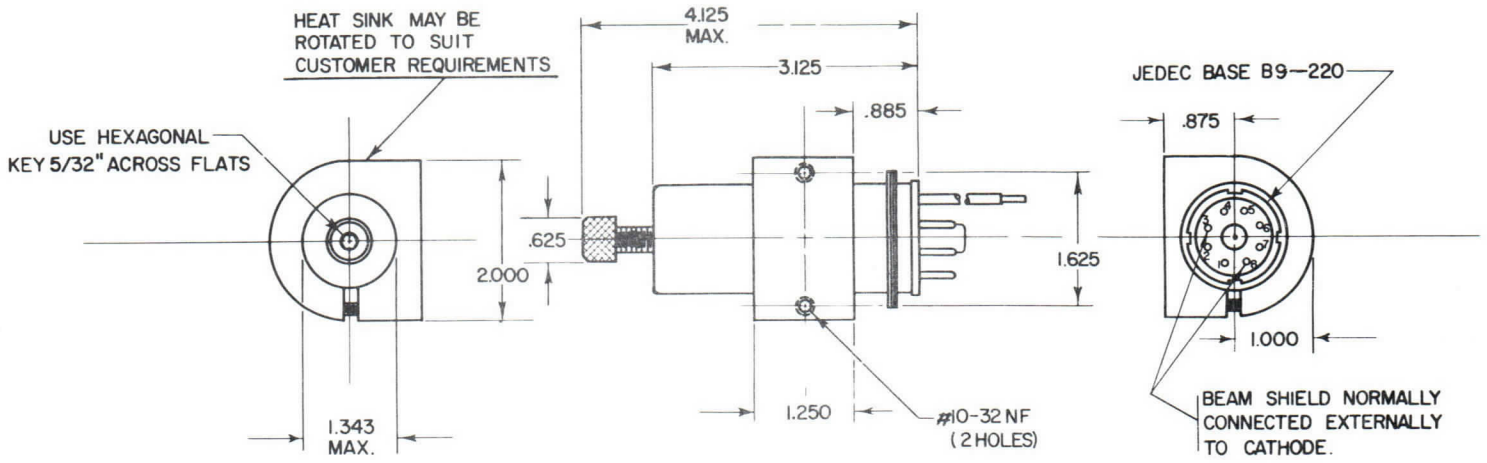

OUTLINE DRAWING
QKK758 — QKK759

PIN CONNECTIONS

1. RESONATOR (SHELL)
2. & 7 HEATERS
3. BEAM SHEILD
4. OUTPUT
5. NO CONNECTION
6. REFLECTOR
8. CATHODE

LAUNCHING SECTION DETAILS FOR QKK758 & QKK759

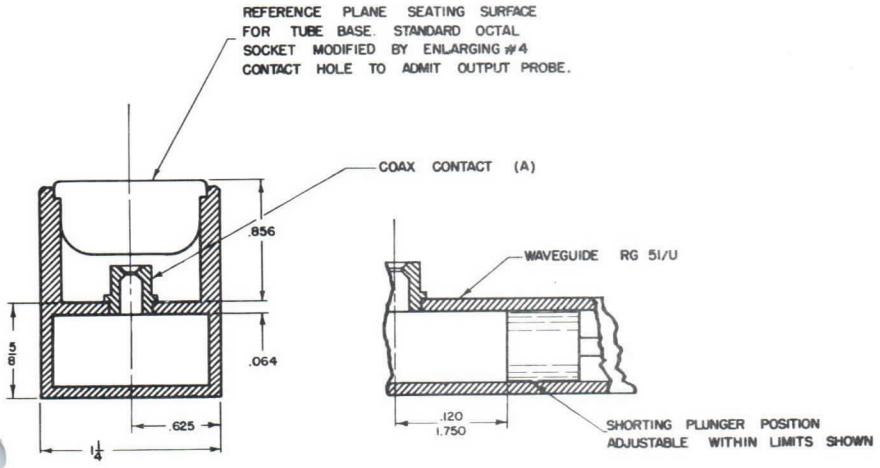

(A)

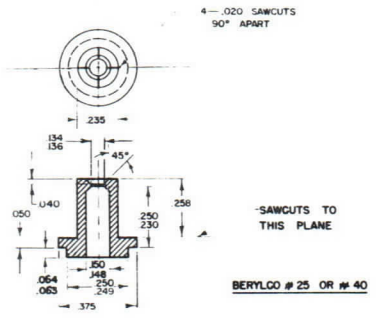

THIS PART TO BE TEMPERED AND SILVER PLATED. THEN IT IS TO BE SOFT SOLDERED INTO WAVEGUIDE WITH INNER SURFACE FLUSH WITH INNER SURFACE OF GUIDE.

The technical information on this data sheet is of a proprietory nature and is furnished as a customer service for private use only.

QKK758 / QKK759

PRELIMINARY

DATA SHEET

RAYTHEON *Excellence in Electronics*

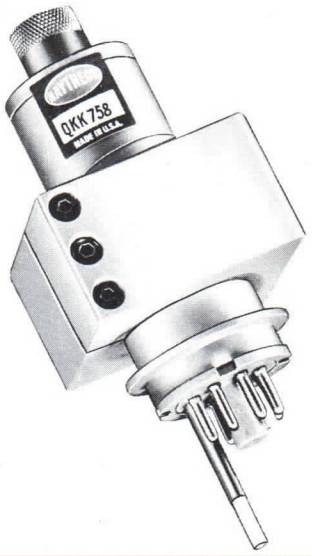

The types QKK758 and QKK759 are velocity modulated oscillators of the single cavity (integral) reflex type designed for operation in the 7125 to 8400 Mc. range with a minimum power output of 1.0 watt. These tubes are of the coaxial output type and are connected to standard RG51/U waveguide as indicated on the attached drawing. In order to provide sufficient cooling, the tubes are provided with either a flange to be attached to a heat sink or with cooling fins for forced air cooling.

ELECTRICAL

Heater Characteristics

Heater Voltage	6.3 V
Heater Current	0.675 A

Maximum Ratings

Resonator Voltage	800 Vdc
Resonator Current	100 mAdc
Reflector Voltage	
Minimum	-200 Vdc
Maximum	-600 Vdc
Heater-Cathode Voltage	±100 Vdc

The values specified above must not be exceeded under any service condition. The ratings are limiting values above which the serviceability of any individual tube may be impaired. It does not necessarily follow that combinations of maximum ratings can be achieved simultaneously.

Typical Operating Conditions (VSWR 1.1 Max.)

Resonator Voltage	750 Vdc
Resonator Current	75 mAdc
Reflector Voltage	-250 - 450 Vdc
Electronic Tuning Range	35 Mc.

RAYTHEON COMPANY | MICROWAVE AND POWER TUBE DIVISION | WALTHAM 54, MASS.

The specifications for this tube have not been finalized. The tube is being manufactured in limited quantities and is available for engineering analysis purposes only. This engineering information and/or delivery of sample tubes do not imply availability of tubes with the same electrical and/or mechanical characteristics. Changes in ratings and/ or dimensions may be made at our discretion as deemed advisable by manufacturing experience or other considerations. For current information concerning this tube contact the nearest Microwave and Power Tube Regional Sales Representative.

Modulation Sensitivity	0.4 Mc/Volt
Frequency Range	
QKK758	7125 - 7750 Mc.
QKK759	7750 - 8400 Mc.
Power Output	1.5 Watt

MECHANICAL

Mounting Position	Any Position
Dimensions	See Drawing
Base	Standard Octal with Enlarged No. 4 Pin.
Maximum Shell Temperature	135°C

REFLECTOR

The power supply furnishing the reflector potential must be insulated to withstand the total resonator and reflector voltage. In cases where modulating potentials bring the reflector voltage close to the minimum voltage, or where an extremely high reflector circuit impedance is required, a diode should be connected between cathode and reflector to prevent the reflector from going positive. If this precaution is not observed, damage to the reflector may result.

ELECTRONIC TUNING

With the mechanical tuning mechanism set near the desired frequency, vernier adjustment of the frequency may be accomplished by varying the reflector voltage. Maximum power output for a fixed mechanical tuner position, however, will be obtained at only one reflector value. If the mechanical tuning mechanism and the reflector voltage are mutually adjusted for a maximum power output, at a given frequency, and if the reflector voltage is then varied above and below the value for maximum power output, such that the power output is reduced to one-half, the frequency change between the half-power values is defined as electronic tuning range.

INSTALLATION

The tubes can be supplied with cooling fins for forced air cooling or with a flange as shown, to be attached to a heat sink. In either case, care should be taken to insure that the shell temperature does not exceed 135°C

The operating characteristics listed herein will be achieved only if the tube is used with the recommended coax to waveguide transducer operating into a VSWR of 1.1 or less.

preliminary data sheet

RAYTHEON

Excellence in Electronics

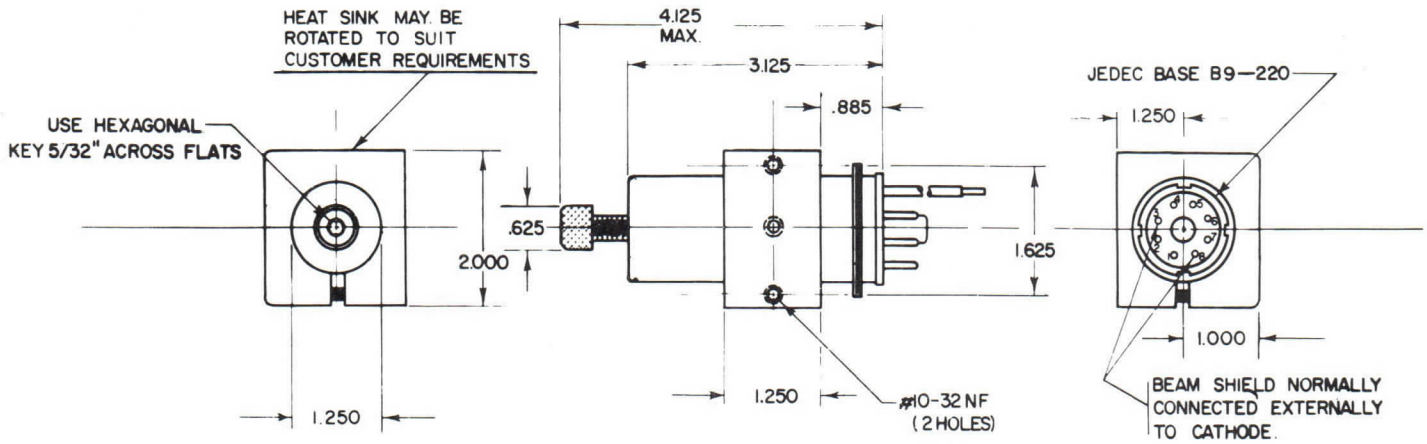

OUTLINE DRAWING
QKK758 — QKK759

PIN CONNECTIONS

1. RESONATOR (SHELL)
2. & 7 HEATERS
3. BEAM SHIELD
4. OUTPUT
5. NO CONNECTION
6. REFLECTOR
8. CATHODE

LAUNCHING SECTION DETAILS FOR QKK758 & QKK759

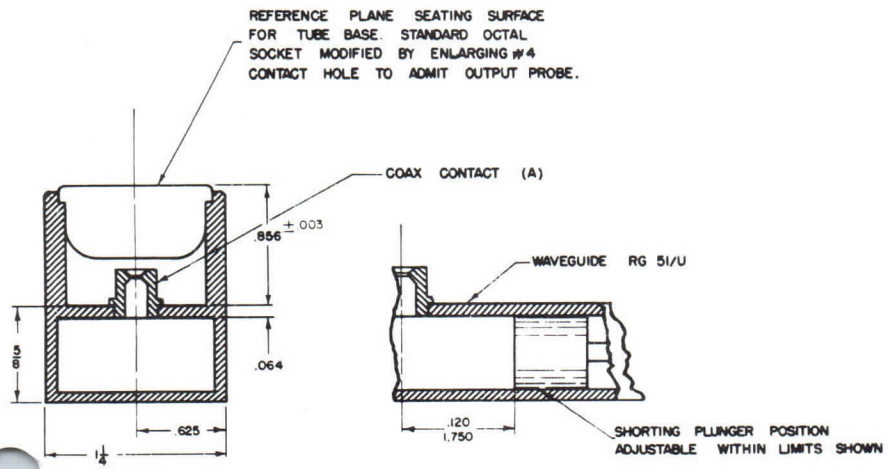

(A)

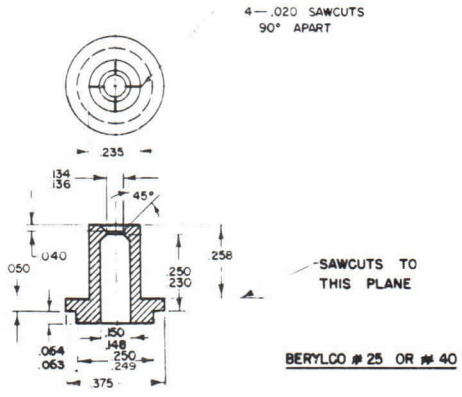

THIS PART TO BE TEMPERED AND SILVER PLATED. THEN IT IS TO BE SOFT SOLDERED INTO WAVEGUIDE WITH INNER SURFACE FLUSH WITH INNER SURFACE OF GUIDE.

The technical information on this data sheet is of a proprietory nature and is furnished as a customer service for private use only.

QKK815 OBJECTIVE DATA SHEET

RAYTHEON *Excellence in Electronics*

The QKK815 is a rugged K_u band reflex klystron designed for use as a local oscillator in airborne receivers or in any other application which requires very reliable operation under severe environmental conditions. It is a waveguide output type with molded base and flying leads for high altitude operation.

GENERAL CHARACTERISTICS

ELECTRICAL

Heater Characteristics

Heater Voltage	6.3 ± 5% Volts
Heater Current	1.25 Amps

Maximum Ratings

Resonator Voltage	350 Vdc
Resonator Current	45 mAdc
Reflector Voltage	-500 Vdc
Body Temperature	200°C
Altitude	No Limit

Typical Operation - CW

Frequency Range	16,000 - 17,000 Mc
Resonator Current	38 mAdc
Reflector Voltage (4 3/4 Mode)	-100 to -200 Vdc
Load V.S.W.R.	1.1:1 Max.
Power Output (16,200-16,760 Mc)	20 mW Min.
Electronic Tuning Range (16,200-16,760 Mc)	55 Mc Min.
Reflector Modulation Sensitivity (16,200-16,760 Mc.)	2.5 Mc/V
Heater Voltage Coefficient (E_f=6.0 to 6.6 V)	8 Mc/Volt Max.
Temperature Coefficient	-350 kc/°C
Shock (150G's 4 ms.)	ΔF = 4 Mc Max.
Vibration (10G's, 50-1000 cps, any plane)	ΔF = ± .025 Mc Max.
Life	500 Hrs.

Typical Operation - Reflector Pulsing

Pulse Repitition Frequency	100-4000 p.p.s.
Pulse Width	.25 to 5.0 usec
Rise Time and Fall Time (.020 on input)	.100 usec
Pulse Delay	.150 usec Max.
Leading Edge Jitter	.030 usec Max.

MECHANICAL

Input Connector	Molded Rubber Leads
Output Connector	UG-419/U Flange
Cooling	Forced Air
Tuner	Slotted Screw
Mounting Position	Any

Color Code

Lead Color	yellow	white	green	grey
Element	Heater	Heater-Cathode	Cathode	Reflector

The specifications for this tube have not been finalized. The tube is in the development stage and is available for engineering analysis purposes only. This engineering information and/or delivery of sample tubes do not imply availability of tubes with the same electrical and/or mechanical characteristics. Changes in ratings and/or dimensions may be made at our discretion as deemed advisable by manufacturing experience or other considerations. For current information concerning this tube contact the nearest Microwave and Power Tube Regional Sales Representative.

The technical information on this data sheet is of a proprietory nature and is furnished as a customer service for private use only.

QKK822 **PRELIMINARY**

DATA SHEET

RAYTHEON



GENERAL DESCRIPTION

The type QKK822 is a velocity variation oscillator of the single cavity (integral) reflex type designed for operation in the 12,200 to 12,700 Mc. range with an average power output of 100 milliwatts. These tubes are of the coaxial output type and are connected to standard WR75 waveguide as indicated on page 3.

GENERAL CHARACTERISTICS

ELECTRICAL

Heater Characteristics

Heater Voltage	6.3 V
Heater Current	0.440 A

Maximum Ratings

Resonator Voltage	425 Vdc
Cathode Current	45 mAdc
Reflector Voltage	
Maximum	-380 Vdc
Minimum	-25 Vdc
Heater-Cathode Voltage	± 100 Vdc

The values specified above must not be exceeded under any service condition. The ratings are limiting values above which the serviceability of any individual tube may be impaired. It does not necessarily follow that combinations of maximum ratings can be achieved simultaneously.

Typical Operating Conditions

Resonator Voltage	400 Vdc
Cathode Current	30 mAdc
Temperature Coefficient	± 0.3 Mc/° C

Typical Operation in the 3 3/4 Reflector Mode

Frequency Range	12,200 to 12,700 Mc.
Power Output (Min.)	80 mW

The specifications for this tube have not been finalized. The tube is being manufactured in limited quantities and is available for engineering analysis purposes only. This engineering information and/or delivery of sample tubes do not imply availability of tubes with the same electrical and/or mechanical characteristics. Changes in ratings and/ or dimensions may be made at our discretion as deemed advisable by manufacturing experience or other considerations. For current information concerning this tube contact the nearest Microwave and Power Tube Regional Sales Representative.

Reflector Voltage	-170 to -300 Vdc
Electronic Tuning Range	20 Mc.
Reflector Modulation Sensitivity (Nominal)	1.0 Mc/v

Typical Operation in the 4 3/4 Reflector Mode

Frequency Range	12,100 to 12,800 Mc.
Power Output (Min.)	35 mW
Reflector Voltage	-60 to -160 Vdc
Electronic Tuning Range	35 Mc.
Reflector Modulation Sensitivity (Nominal)	1.8 Mc/v

MECHANICAL

Mounting Position	Any
Dimensions	See Drawing
Base	Standard Octal with No. 4 Pin Enlarged
Maximum Shell Temperature	185° C
Maximum Output Lead Temperature	90° C

REFLECTOR

The power supply furnishing the reflector potential must be insulated to withstand the total resonator and reflector voltage. In cases where modulating potentials bring the reflector voltage close to the minimum voltage, or where an extremely high reflector circuit impedance is required, a diode should be connected between cathode and reflector to prevent the reflector from going positive. If this precaution is not observed, damage to the reflector may result.

ELECTRONIC TUNING

With the mechanical tuning mechanism set near the desired frequency, vernier adjustment of the frequency may be accomplished by varying the reflector voltage. Maximum power output for a fixed mechanical tuner position, however, will be obtained at only one reflector value. If the mechanical tuning mechanism and reflector voltage are mutually adjusted for a maximum power output, at a given frequency, and if the reflector voltage is then varied above and below the value for maximum power output such that the power output is reduced to one-half, the frequency change between the half-power values is defined as electronic tuning range.

INSTALLATION

Under normal operation freely circulating air is sufficient to maintain these tubes within the maximum specified shell temperature. In a confined environment it may be necessary to supply cooling, but under no circumstances should the ambient temperature exceed 90° C.

The operating characteristics listed herein will be achieved only if the tube is used with the recommended coax to waveguide transducer operating into a VSWR of 1.1 to 1.0 maximum.

LAUNCHING SECTION DETAILS FOR QKK822

REFERENCE PLANE SEATING SURFACE FOR TUBE BASE. STANDARD OCTAL SOCKET MODIFIED BY ENLARGING #4 CONTACT HOLE TO ADMIT OUTPUT PROBE.

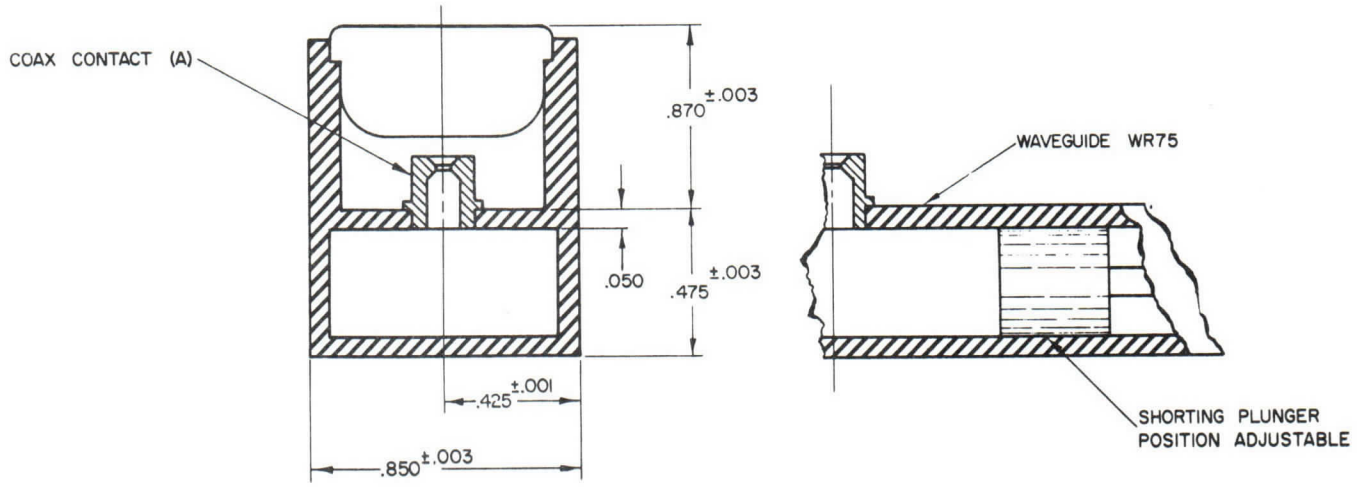

(A)

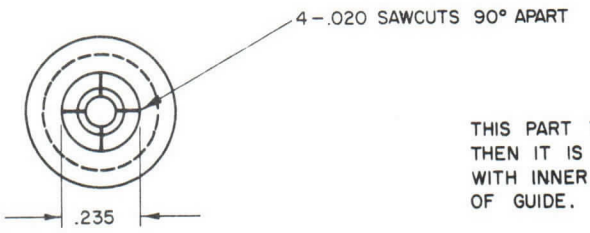

THIS PART TO BE TEMPERED AND SILVER PLATED THEN IT IS TO BE SOFT SOLDERED INTO WAVEGUIDE WITH INNER SURFACE FLUSH WITH INNER SURFACE OF GUIDE.

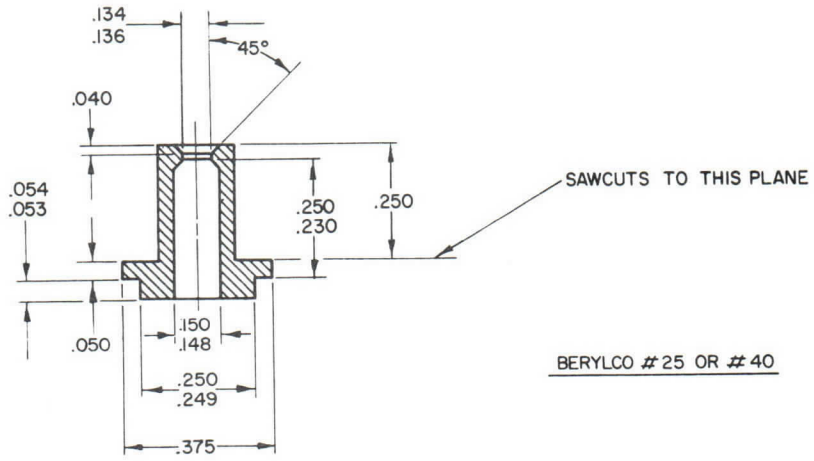

BERYLCO #25 OR #40

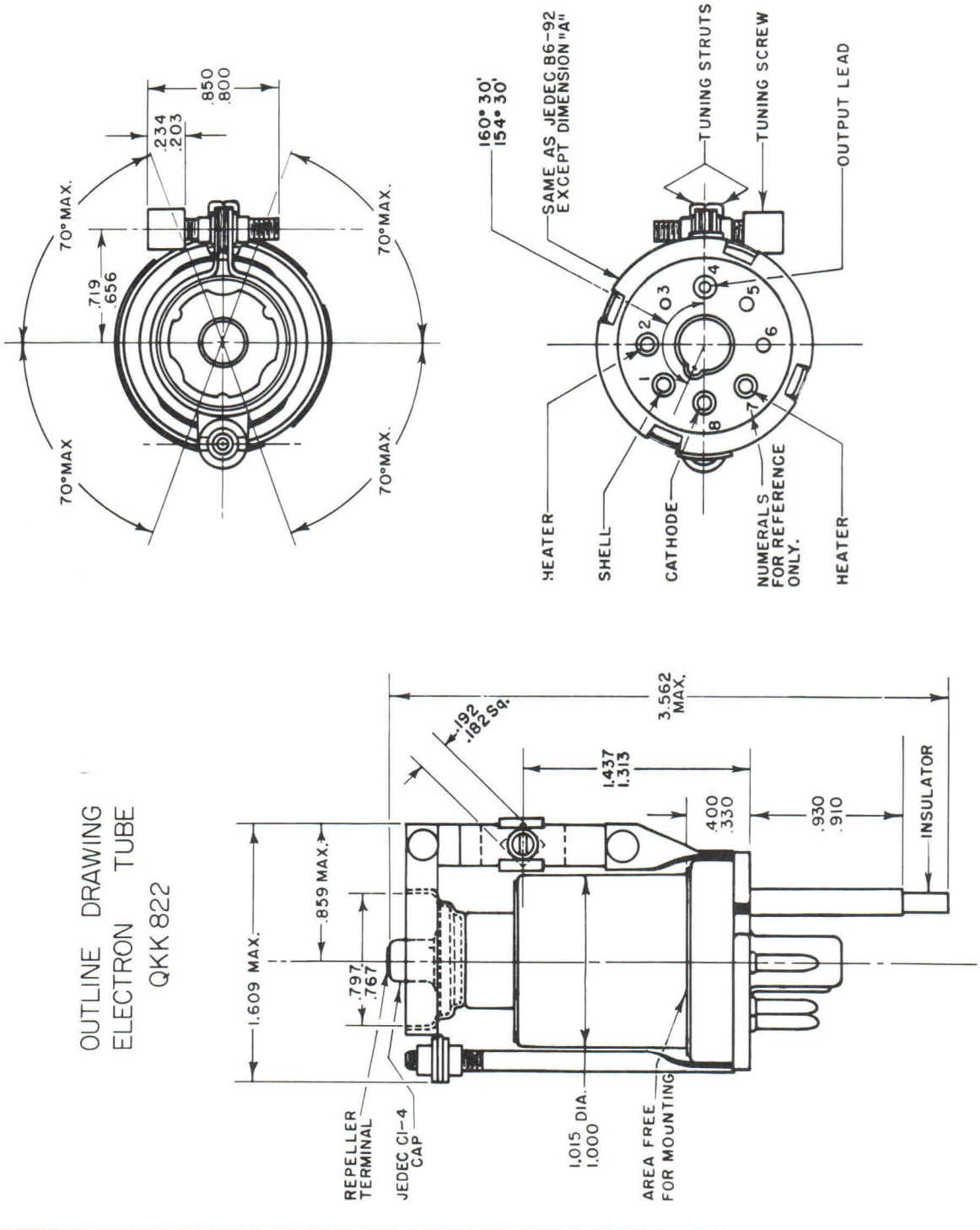

OUTLINE DRAWING
ELECTRON TUBE
QKK 822

The technical information on this data sheet is of a proprietory nature and is furnished as a customer service for private use only.

QKK826

PRELIMINARY

DATA SHEET

RAYTHEON



The type QKK826 is a velocity variation oscillator of the single cavity (integral) reflex type designed for operation in the 10,700 to 11,700 Mc range with an average power output of 100 milliwatts. These tubes are of the coaxial output type and are connected to standard WR 75 waveguide as indicated on Page 3.

GENERAL CHARACTERISTICS

ELECTRICAL

Heater Characteristics

Heater Voltage	6.3 V
Heater Current	0.440 A

Maximum Ratings

Resonator Voltage	440 Vdc
Cathode Current	45 mAdc
Reflector Voltage	
Maximum	-380 Vdc
Minimum	-25 Vdc
Heater-Cathode Voltage	±100 Vdc

The values specified above must not be expected under any service condition. The ratings are limiting values above which the serviceability of any individual tube may be impaired. It does not necessarily follow that combinations of maximum ratings can be achieved simultaneously.

Typical Operating Conditions

Resonator Voltage	400 Vdc
Cathode Current	30 mAdc

Typical Operation in the 3 3/4 Reflector Mode

Frequency Range	10,700 to 11,700 Mc.
Power Output (Min.)	90 mW
Reflector Voltage	-200 to -350 Vdc
Electronic Tuning Range	20 Mc
Reflector Modulation Sensitivity (Nominal)	1.0 Mc/v

RAYTHEON COMPANY | MICROWAVE AND POWER TUBE DIVISION | WALTHAM 54, MASS.

The specifications for this tube have not been finalized. The tube is being manufactured in limited quantities and is available for engineering analysis purposes only. This engineering information and/or delivery of sample tubes do not imply availability of tubes with the same electrical and/or mechanical characteristics. Changes in ratings and/ or dimensions may be made at our discretion as deemed advisable by manufacturing experience or other considerations. For current information concerning this tube contact the nearest Microwave and Power Tube Regional Sales Representative.

Typical Operation in the 4 3/4 Reflector Mode

Frequency Range	10,600 to 11,800 Mc
Power Output (Min.)	30 mW
Reflector Voltage	-80 to -200 Vdc
Electronic Tuning Range	35 Mc
Reflector Modulation Sensitivity (Nominal)	1.8 Mc/v

MECHANICAL

Mounting Position	Any
Dimensions	See Drawing
Base	Standard Octal with No. 4 Pin Enlarged
Maximum Shell Temperature	175° C
Maximum Output Lead Temperature	90° C

REFLECTOR

The power supply furnishing the reflector potential must be insulated to withstand the total resonator and reflector voltage. In cases where modulating potentials bring the reflector voltage close to the minimum voltage, or where an extremely high reflector circuit impedance is required, a diode should be connected between cathode and reflector to prevent the reflector from going positive. If this precaution is not observed, damage to the reflector may result.

ELECTRONIC TUNING

With the mechanical tuning mechanism set near the desired frequency, vernier adjustments of the frequency may be accomplished by varying the reflector voltage. Maximum power output for a fixed mechanical tuner position, however, will be obtained at only one reflector value. If the mechanical tuning mechanism and reflector voltage are mutually adjusted for a maximum power output, at a given frequency, and if the reflector voltage is then varied above and below the value for maximum power output such that the power output is reduced to one-half, the frequency change between the half-power values is defined as electronic tuning range.

INSTALLATION

Under normal operation freely circulating air is sufficient to maintain these tubes within the maximum specified shell temperature. In a confined environment it may be necessary to supply cooling, but under no circumstances should the ambient temperature exceed 90° C.

The operating characteristics listed herein will be achieved only if the tube is used with the recommended coax to waveguide transducer operating into a VSWR of 1.1 to 1.0 maximum.

LAUNCHING SECTION DETAILS FOR QKK826

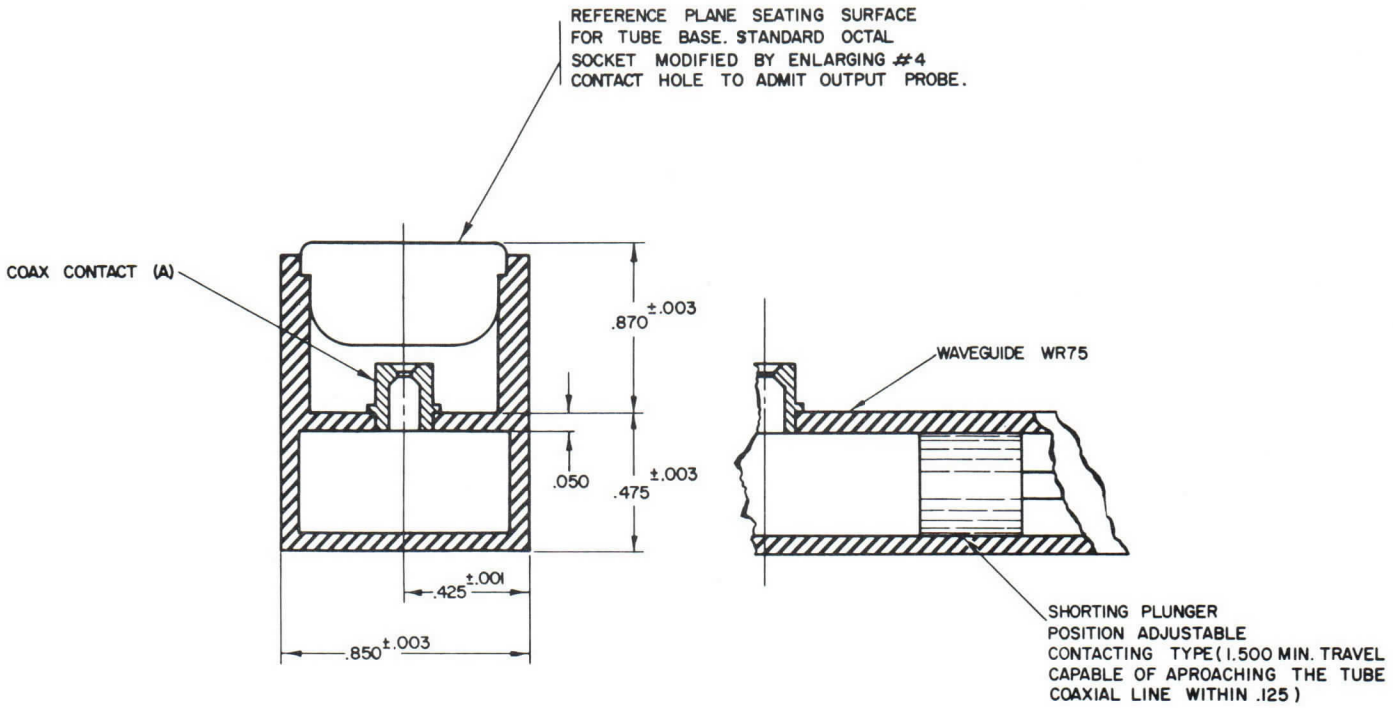

(A)

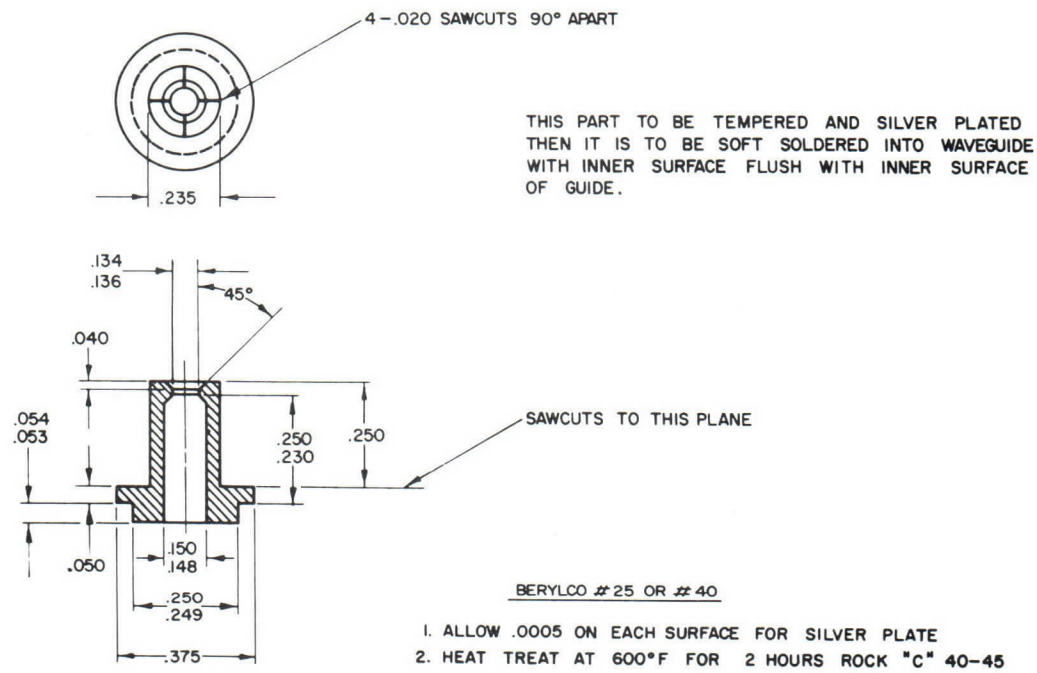

BERYLCO #25 OR #40

1. ALLOW .0005 ON EACH SURFACE FOR SILVER PLATE
2. HEAT TREAT AT 600°F FOR 2 HOURS ROCK "C" 40–45

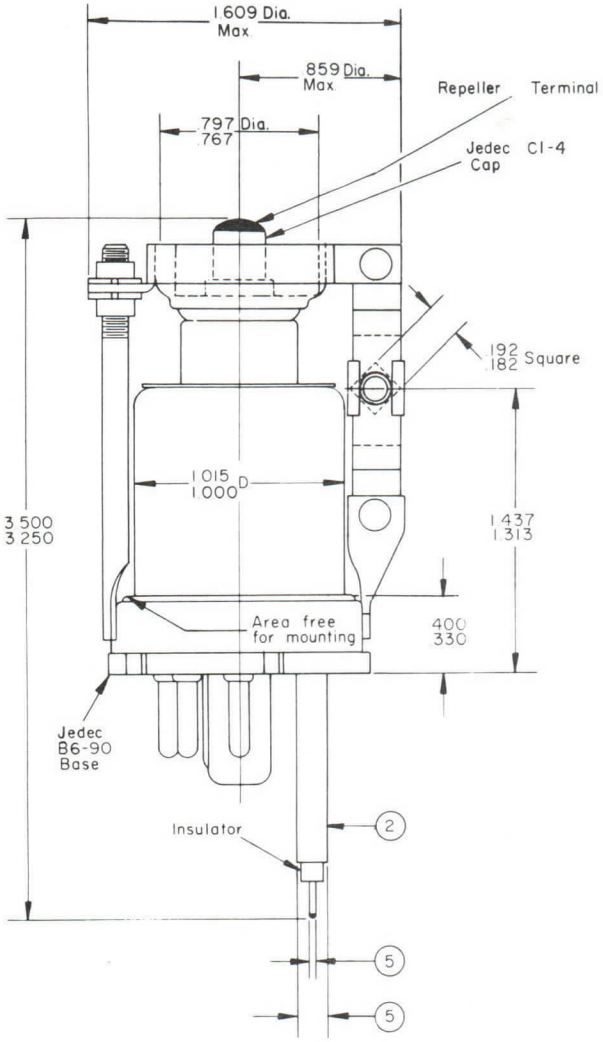

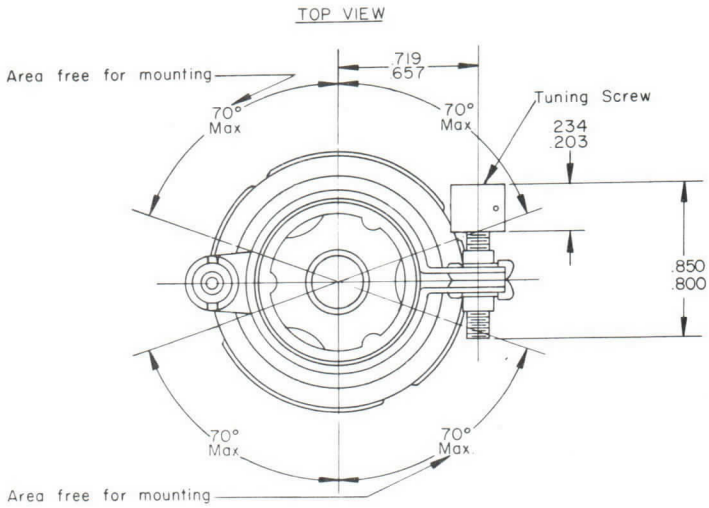

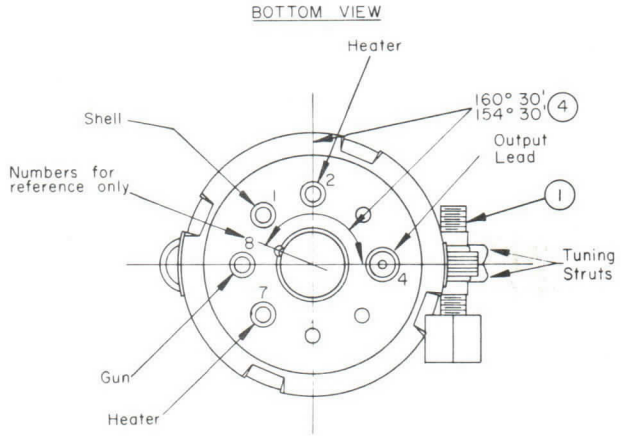

NOTES

1. THE TUNING SCREW SHALL BE LUBRICATED WITH OILDAG OR EQUIVALENT NON-CORROSIVE LUBRICANT. IT SHALL BE CAPABLE OR BEING OPERATED SMOOTHLY THROUGH ITS ENTIRE RANGE WITHOUT PERCEPTABLE BINDING.
2. NICKEL (30 M.S.I. SILVER PLATE PERMISSABLE.)
3. ALL DIMENSIONS ARE IN INCHES UNLESS OTHERWISE SPECIFIED.
4. APPLIES TO CENTERLINE OF OUTPUT LEAD AND CENTERLINE OF TUNER THROUGH STRUTS.
5. SHALL BE CONCENTRIC WITH EACH OTHER WITHIN .010.

QKK826 ELECTRON TUBE
OUTLINE DRAWING

The technical information on this data sheet is of a proprietory nature and is furnished as a customer service for private use only.

QKK833 **OBJECTIVE DATA SHEET**

RAYTHEON *Excellence in Electronics*



The type QKK833 is a velocity variation oscillator of the single cavity (integral) reflex type, designed for operation in the 12,200 to 12,700 Mc range with an average power output of 1.0 watts. In order to provide sufficient cooling the tybes are provided with either a flange to be attached to a heat sink or with cooling fins for forced air cooling.

GENERAL ELECTRICAL CHARACTERISTICS

Heater Characteristics

Heater Voltage	6.3 V
Heater Current	0.675 A

Typical Operating Conditions (CW) (VSWR $\leq$ 1.1:1.0)

Resonator Voltage	750 Vdc
Resonator Current	75 mAdc
Reflector Voltage	250 - 450 Vdc
Electronic Tuning Range (to half power)	35 Mc Nominal
Modulation Sensitivity	0.4 Mc/Volt Nominal
Frequency Range	12,200 to 12,700 Mc
Power Output	0.5 Watt Minimum

MECHANICAL

Mounting	Any Position
Base	To fit standard octal with #4 pin enlarged
Maximum Shell Temperature	125°C

REFLECTOR

The power supply furnishing the reflector potential must be insulated to withstand the total resonator and reflector voltage. In cases where modulating potentials bring the reflector voltage close to the minimum voltage, or where an extremely high reflector circuit impedance is required, a diode should be connected between cathode and reflector to prevent the reflector from going positive. If this precaution is not observed, damage to the reflector may result.

The specifications for this tube have not been finalized. The tube is in the development stage and is available for engineering analysis purposes only. This engineering information and/or delivery of sample tubes do not imply availability of tubes with the same electrical and/or mechanical characteristics. Changes in ratings and/or dimensions may be made at our discretion as deemed advisable by manufacturing experience or other considerations. For current information concerning this tube contact the nearest Microwave and Power Tube Regional Sales Representative.

ELECTRONIC TUNING

With the mechanical tuning mechanism set near the desired frequency, vernier adjustment of the frequency may be accomplished by varying the reflector voltage. Maximum power output for a fixed mechanical tuner position, however, will be obtained at only one reflector value. If the mechanical tuning mechanism and the reflector voltage are mutually adjusted for a maximum power output, at a given frequency, and if the reflector voltage is then varied above and below the value for maximum power output, such that the power output is reduced to one-half, the frequency change between the half-power values is defined as electronic tuning range.

INSTALLATION

The tube may be supplied with cooling fins for forced air cooling or with a flange, to be attached to a heat sink. In either case, care should be taken to insure that the shell temperature does not exceed 125°C.

The operating characteristics listed herein will be achieved only if the tube is used with the recommended coax to waveguide transducer operating into a VSWR of 1.1 to 1.0 or less. For details on the recommended transducer please contact:

Applications Engineering Department
Microwave & Power Tube Division
Raytheon Company
Foundry Avenue
Waltham 54, Massachusetts

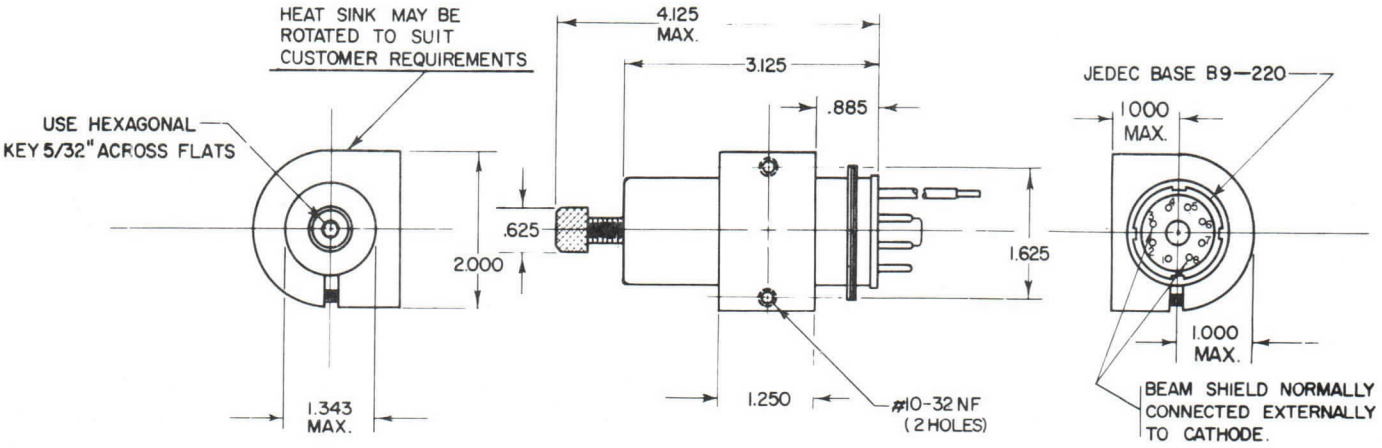

OUTLINE DRAWING
QKK833

PIN CONNECTIONS

1. RESONATOR (SHELL)
2. & 7 HEATERS
3. BEAM SHEILD
4. OUTPUT
5. NO CONNECTION
6. REFLECTOR
8. CATHODE

RAYTHEON

Excellence in Electronics

objective data sheet

LAUNCHING SECTION DETAILS FOR QKK833

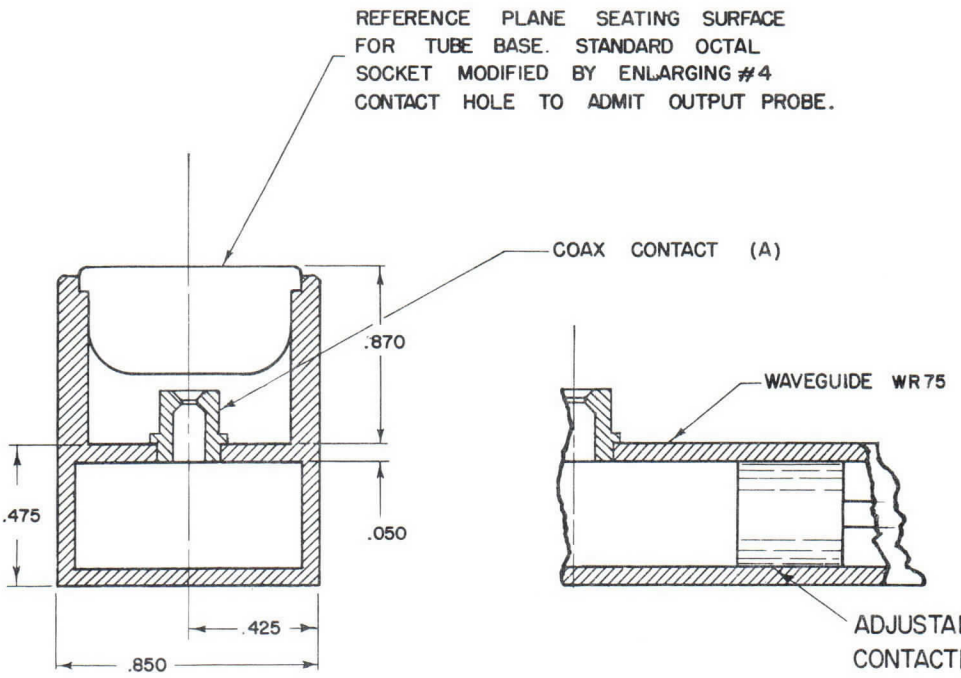

(A)

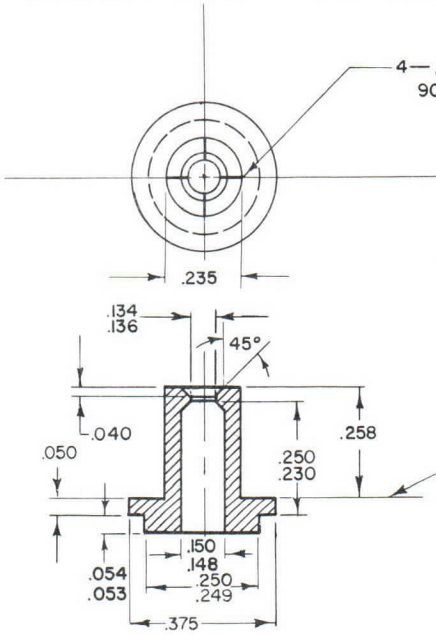

THIS PART TO BE TEMPERED AND SILVER PLATED. THEN IT IS TO BE SOFT SOLDERED INTO WAVEGUIDE WITH INNER SURFACE FLUSH WITH INNER SURFACE OF GUIDE.

BERYLCO # 25 OR # 40

The technical information on this data sheet is of a proprietory nature and is furnished as a customer service for private use only.

QKK834

OBJECTIVE DATA SHEET

RAYTHEON

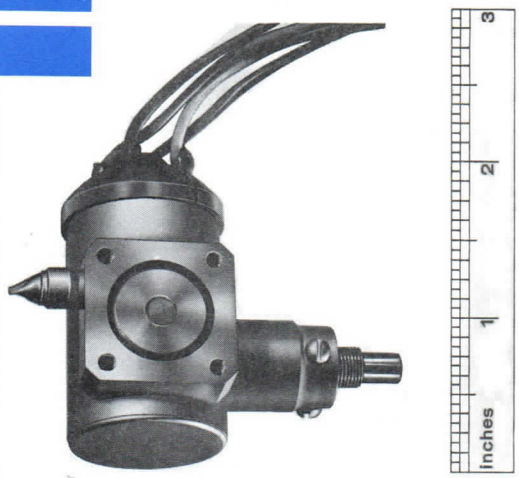

The type QKK834 is a rugged reflex klystron oscillator of all metal ceramic design. The mechanical tuner provides tuning over the 34,000 to 35,600 Mc range with a minimum power output of 10 mW. The RF output is through waveguide sealed by a ceramic window. The output flange mates with a standard UG-599/U cover-flange or a UG-600/U choke-flange.

GENERAL CHARACTERISTICS

ELECTRICAL

Heater Characteristics

Heater Voltage	6.3 Volts
Heater Current	600 Milliamps

Typical Operation

Resonator Voltage	400 Volts
Resonator Current	27 Milliamps
Reflector Voltage Range	-65 to -105 Volts
Power Output	20 Milliwatts
Electronic Tuning	110 Mc
Frequency Range	34,000 to 35,600 Mc
Temperature Coefficient	$\pm$0.5 Mc/^{o}C

MECHANICAL

Base	Potted, with flying leads
Lead Color	Yellow Green Red Gray
Element	Heater H-K Resonator Reflector
Cooling	Convection (No blower required)
Tuner Turns Required to Cover Range	10 Approx. (See Design Features)
Overall Dimensions-Including Waveguide	1 5/8 x 1 1/16 x 2 Inches
Flange	UG-599/U
Waveguide	RG-96/U

DESIGN FEATURES

MECHANICAL TUNING

Mechanical tuning is accomplished by the motion of a dielectric rod, controlled by the external allen-head tuning knob and a differential screw. This arrangement

RAYTHEON COMPANY | MICROWAVE AND POWER TUBE DIVISION | WALTHAM 54, MASS.

The specifications for this tube have not been finalized. The tube is in the development stage and is available for engineering analysis purposes only. This engineering information and/or delivery of sample tubes do not imply availability of tubes with the same electrical and/or mechanical characteristics. Changes in ratings and/or dimensions may be made at our discretion as deemed advisable by manufacturing experience or other considerations. For current information concerning this tube contact the nearest Microwave and Power Tube Regional Sales Representative.

provides great flexibility, in that the tuner may be placed anywhere on the circumference of the resonator at least 90° from the output, and the differential screw can be modified to supply any desired tuning rate. (See outline drawing for an example of an alternate location of the tuner.)

This tuner provides the ruggedness and frequency stability advantages of a fixed cavity, and is less sensitive to load impedance variations than external cavity tuning.

POWER OUTPUT

The improved electron gun and low interception vane grid permit operation at higher input power levels if increased power output is desired.

TUBE LIFE

Advanced electrical and mechanical design coupled with the most modern fabricating techniques assure thousands of hours of operating life, extended shelf life, and stable performance. The tuner is capable of many thousands of tuning cycles.

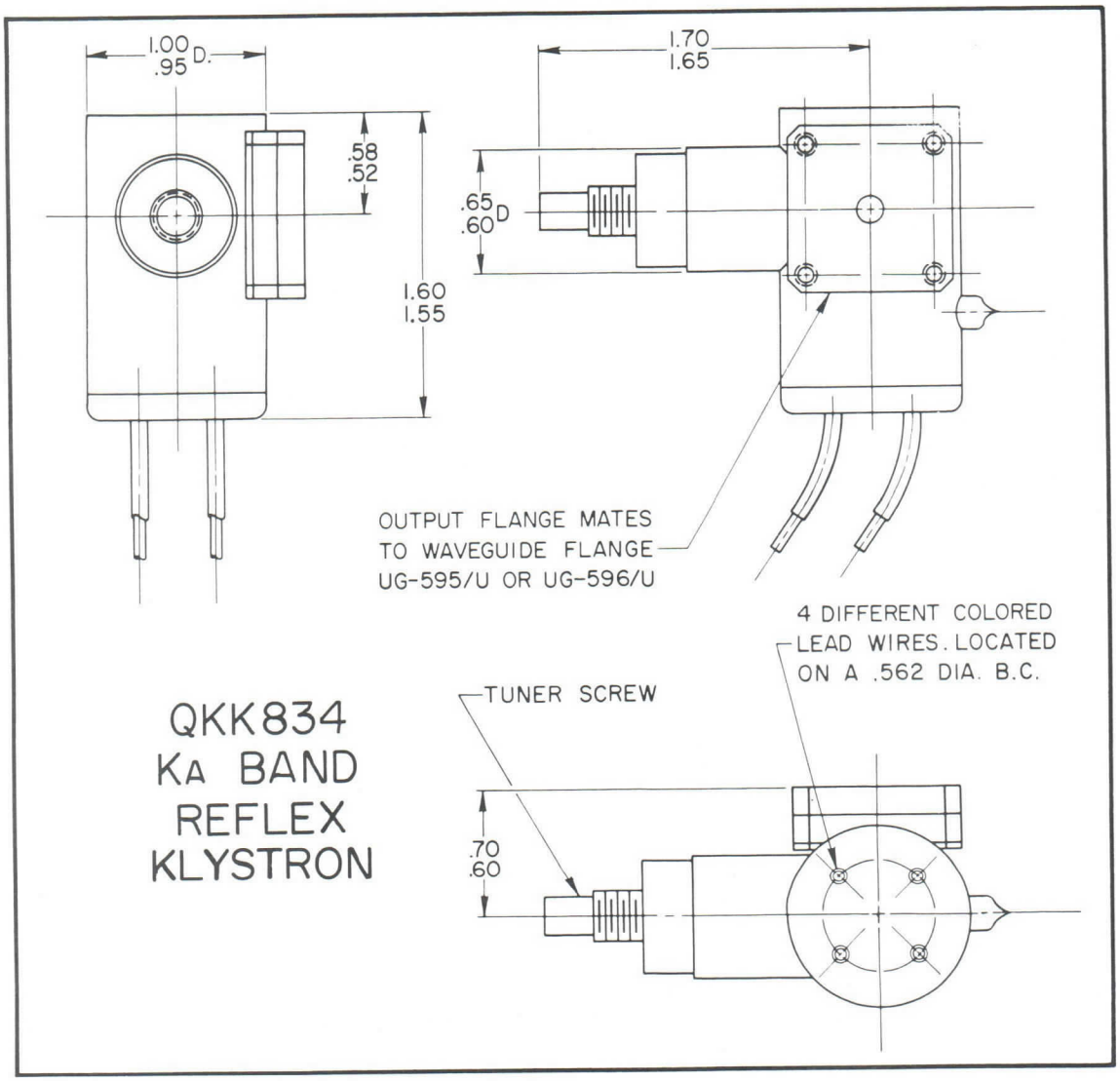

The technical information on this data sheet is of a proprietory nature and is furnished as a customer service for private use only.

QKK837 QKK838

PRELIMINARY

DATA SHEET

RAYTHEON *Excellence in Electronics*

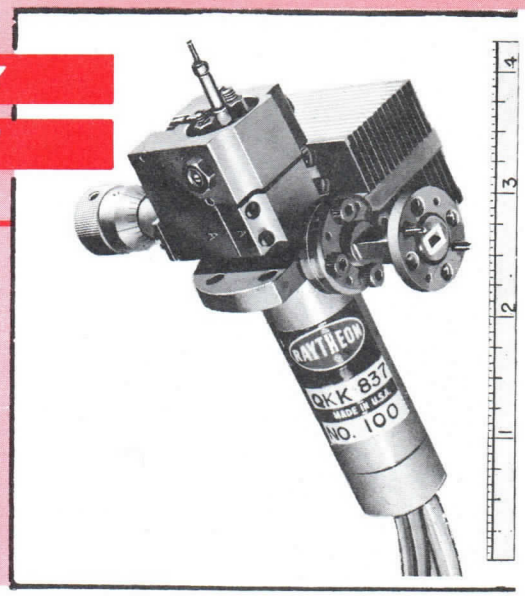

QKK837

The types QKK837 and QKK838 are mechanically tuned reflex klystron oscillators designed for operation in the 67,000 to 73,000 megacycle range with minimum output of 15 milliwatts. The RF output is through waveguide sealed by a mica window. The output flange mates with a standard UG385/U cover-flange.

GENERAL CHARACTERISTICS

ELECTRICAL

Heater Characteristics	
Heater Voltage	2.5 Volts
Heater Current	1.45 Amperes
Maximum Ratings	
Resonator Voltage	1400 Volts
Resonator Current	40 Milliamps
Focus Electrode Voltage	-20 to -400 Volts
Reflector Electrode Voltage	-40 to -400 Volts
Heater Voltage	2.75 Volts ac or dc
Heater Current at 2.5 Volts	1.58 Amperes
Typical Operation	
Resonator Voltage	1100-1400 Volts
Resonator Current	30 Milliamps
Focus Electrode Voltage	-150 Volts
Reflector Voltage Range (4 3/4 Mode)	-100 to -150 Volts
Power Output (Minimum)	15 Milliwatts
Electronic Tuning (Minimum)	75 Mc
Frequency Range	
QKK837	67,000 to 70,100 Mc
QKK838	69,900 to 73,000 Mc

MECHANICAL

Base	Potted, with flying leads
Lead Color	Brown Green Yellow Top Cap
Element	Heater Grid Cathode Reflector
Cooling	Forced Air (7 cu. ft./min)
Tuner Turns Required to Cover Range	4 Approximately
Overall Dimensions including Waveguide	4 1/4 x 2 5/8 x 4 Inches
Flange	UG-385/U
Waveguide	RG-98/U

The tabulated data is representative of only a small sample and is presented as general information for the circuit designer. They should not be interpreted as completely defining the expected spread of the tube's characteristics.

The specifications for this tube have not been finalized. The tube is being manufactured in limited quantities and is available for engineering analysis purposes only. This engineering information and/or delivery of sample tubes do not imply availability of tubes with the same electrical and/or mechanical characteristics. Changes in ratings and/ or dimensions may be made at our discretion as deemed advisable by manufacturing experience or other considerations. For current information concerning this tube contact the nearest Microwave and Power Tube Regional Sales Representative.

The technical information on this data sheet is of a proprietory nature and is furnished as a customer service for private use only.

QKK839 **OBJECTIVE DATA SHEET**

RAYTHEON *Excellence in Electronics*

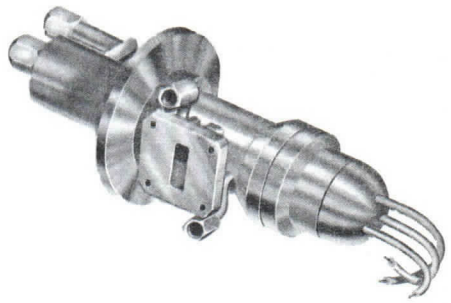

The QKK839 is a 2.0 kilowatt, electrostatically focused, C.W. type Monofier designed for operation in the 10,000 megacycle range. A Monofier is a self contained Oscillator-Amplifier of the Klystron type, thus inherently having extreme frequency stability, low noise, comparatively good efficiency. One Monofier replaces two tubes in a conventional system. This type is ideally suited for compact airborne C.W. Radar systems.

GENERAL CHARACTERISTICS

ELECTRICAL

Heater Characteristics

Heater Voltage (D.C. recommended for low noise)	5.0 Vdc or ac
Heater Current	9.0 Amperes
Cathode Heating Time	30 Seconds

Typical Characteristics

Focus Current	250 Microamperes
Focus Voltage	-400 Vdc
Beam Voltage	14.0 kv
Average Beam Current	700 mAdc
Power Output	2.0 Kilowatts
A.M. Noise (2-100 kc)	102 db
F.M. Noise (2-100 kc)	3 cps
Frequency Range (Fixed Tuned)	9800 - 10,500 Mc.
Thermal Frequency Stability	20 kc/°C

MECHANICAL

Input Connections	Flying Leads
Mounting Position	Any
Weight	7 Lbs.
Output Couplings (1/2 x 1 waveguide)	UG39/V
Cooling (Liquid)	
Collector (Using Water)	4.8 gpm @ 22 psia
Body (Using Water)	.6 gpm @ 15 psia

RAYTHEON COMPANY | MICROWAVE AND POWER TUBE DIVISION | WALTHAM 54, MASS.

The specifications for this tube have not been finalized. The tube is in the development stage and is available for engineering analysis purposes only. This engineering information and/or delivery of sample tubes do not imply availability of tubes with the same electrical and/or mechanical characteristics. Changes in ratings and/or dimensions may be made at our discretion as deemed advisable by manufacturing experience or other considerations. For current information concerning this tube contact the nearest Microwave and Power Tube Regional Sales Representative.

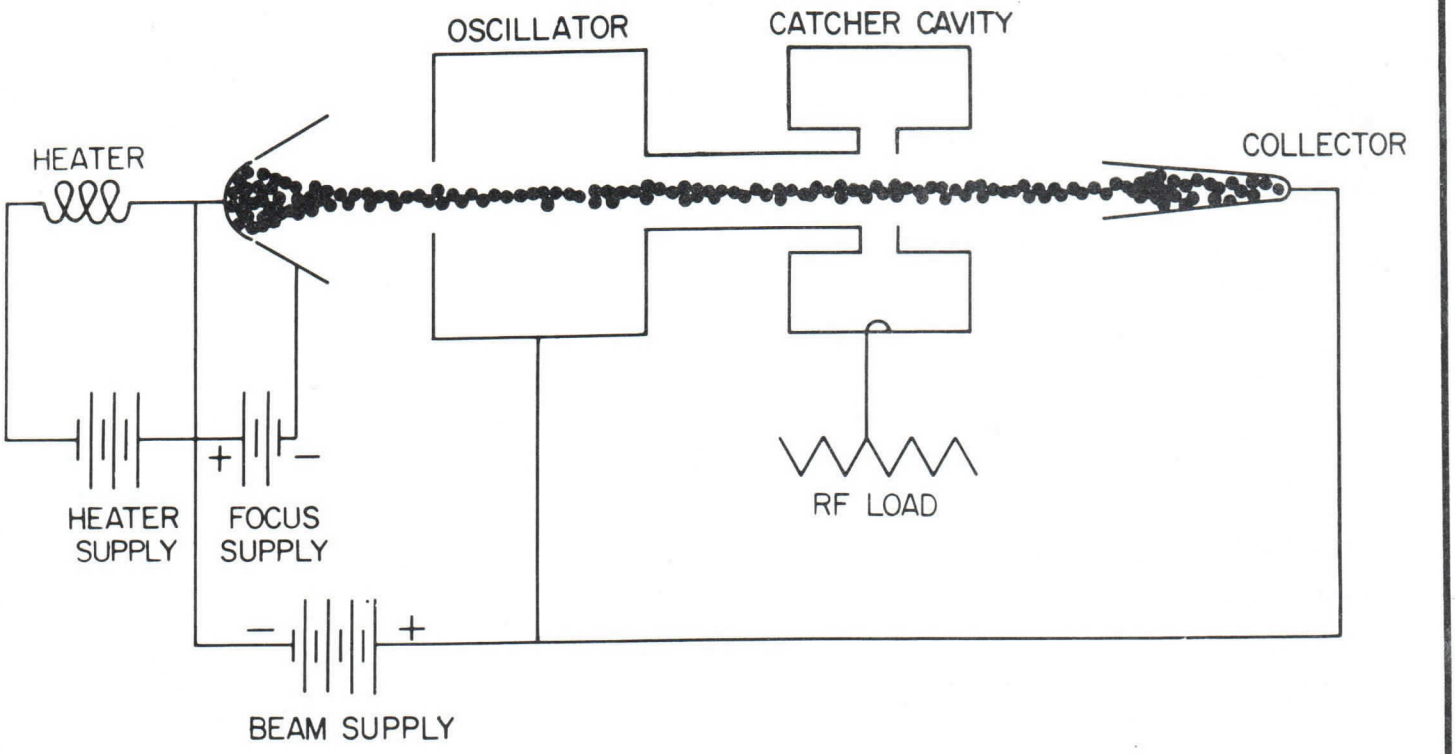

TYPICAL MONIFIER SCHEMATIC DIAGRAM

The technical information on this data sheet is of a proprietory nature and is furnished as a customer service for private use only.

QKK863-QKK867

PRELIMINARY

DATA SHEET

RAYTHEON

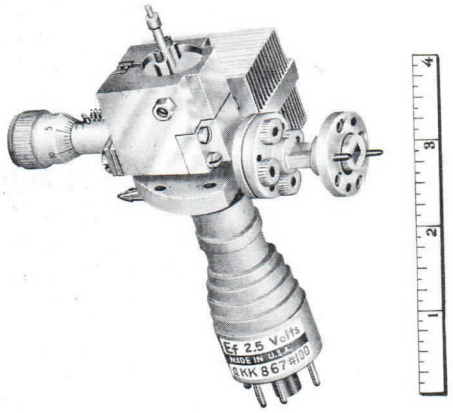

The types QKK863 through QKK867 are mechanically tuned reflex klystron oscillators designed for operation in the 50,000 to 101,000 megacycle range with an average power output of 40 milliwatts. The RF output is through waveguide sealed by a mica window.

GENERAL CHARACTERISTICS

ELECTRICAL

Heater

Heater Voltage	2.5 Volts ± 10%
Heater Current	1.45 Amperes

Maximum Ratings

Resonator Potential	
QKK863 - QKK867	1700 Volts
Cathode Current	
QKK863 - QKK867	60 mA
Reflector Potential	-40 to -450 Volts
Anode Block Temperature	100° C
Focus Grid Potential	-20 to -300 Volts

TYPICAL OPERATION

Resonator Potential (Fixed For Each Tube)	
QKK863 - QKK866	1400 Volts
QKK867	1700 Volts
Focus Grid Potential (Fixed for each tube)	-100 Volts
Cathode Current	
QKK863 - QKK866	40 mA
QKK867	50 mA
Reflector Potential	-40 to -450 Volts
Frequency Range	
QKK863	50,000 to 57,000 Mc
QKK864	56,000 to 65,000 Mc
QKK865	64,000 to 74,000 Mc
QKK866	73,000 to 83,000 Mc
QKK867	82,000 to 101,000 Mc

The specifications for this tube have not been finalized. The tube is being manufactured in limited quantities and is available for engineering analysis purposes only. This engineering information and/or delivery of sample tubes do not imply availability of tubes with the same electrical and/or mechanical characteristics. Changes in ratings and/ or dimensions may be made at our discretion as deemed advisable by manufacturing experience or other considerations. For current information concerning this tube contact the nearest Microwave and Power Tube Regional Sales Representative.

Power Output (Minimum) into a matched load

QKK863 - QKK866	25 mW
QKK867	10 mW

MECHANICAL

Base				Dwarf Octal		
Pin Number	1	3	5	7	Shell	Top Cap
Element	H	Focus Electrode	K	H	Anode	Reflector
Mounting	Any Position					
Cooling	Forced Air (7 cu. ft/minute)					
Frequency Range	4 to 10 Turns of Tuner Knob					
Overall Dimensions Including Waveguide	5 x 2 3/8 x 4 Inches					
Flange						
QKK863 - QKK865	UG-385/U					
QKK866 - QKK867	UG-387/U					
Waveguide						
QKK863 - QKK865	RG-98/U					
QKK866 - QKK867	RG-99/U					

DETAILED ELECTRICAL INFORMATION

(1) WARNING

Any ATTEMPT TO OPERATE THESE TUBES WITH THE REFLECTOR NOT CONNECTED OR WITH MORE THAN 100,000 OHMS BETWEEN REFLECTOR AND CATHODE WILL SEVERELY DAMAGE THE TUBE. Make certain that the reflector lead is connected before applying any voltages. If the reflector circuit is fused, provide a 10,000 ohm resistor as a bypass around the fuse to prevent operating the tube with no reflector connection should the fuse blow.

CATHODE

In most applications, the metal shell (resonator) is operated at ground potential. The cathode is therefore negative with respect to ground by the amount of the resonator potential and must not be grounded. THIS TUBE TYPE MAY DEVELOP A HEATER TO CATHODE SHORT. THEREFORE, TO PREVENT HEATER BURNOUT, THE CATHODE SHOULD NOT BE CONNECTED TO THE HEATER. Heater to cathode short will not cause tube malfunction or shortness of life if this simple rule is observed. In all cases where the resonator is operated at ground potential the heater transformer must be insulated to withstand the maximum resonator voltage.

In applications where the metal envelope (resonator) is not at ground potential, it is essential that the tube be surrounded by a grounding shield to avoid injury to the operator. Adequate ventilation must be provided through this shield to keep the ambient temperature of the chamber below the maximum value. The cathode current can be adjusted to the proper value by adjusting the focus grid voltage.

REFLECTOR

The reflector electrode is connected to the small cap on the top of the tube. The ceramic stem supporting the reflector electrode must be carefully protected against rough handling. If the ceramic stem comes in contact with other objects, damage may result which will cause the tube's characteristics to change.

The power supply furnishing the reflector potential must be insulated to withstand the total resonator and reflector voltage. The reflector must never be allowed to become positive with respect to the cathode. If this precaution is not observed, damage to the reflector will result. In cases where modulating potentials bring the reflector voltage close to the minimum specified value a diode should be connected between cathode and reflector to prevent the reflector from going positive. Also, it is required that the application of REFLECTOR VOLTAGE PRECEDE THE APPLICATION OF RESONATOR VOLTAGE.

FREQUENCY STABILITY

To obtain the most stable operation from these tubes, the reflector and resonator voltage supplies should be very well regulated. It is also essential that these types be operated at a near constant ambient temperature.

MECHANICAL TUNING MECHANISM

Clockwise rotation of the tuning knob decreases the frequency. Care should be taken not to exceed the maximum clockwise limit of the tuning knob, since further rotation may damage the tuning mechanism.

ELECTRONIC TUNING

With the mechanical tuner adjusted so that the tube is operating near the desired frequency, vernier frequency adjustment may be made by varying the reflector voltage. Maximum power output for a given mechanical tuner setting, however, will be obtained at only one value of reflector voltage. If the mechanical tuner and reflector voltage are mutually adjusted for maximum power output at a given frequency, and if then the reflector voltage is varied above and below the value for maximum power output such that the power output is reduced by one half, the frequency change between the half power values is defined as the electronic tuning range. The electronic tuning range and linearity depend on the type of load and coupling used. A highly reactive load may shorten the electronic tuning range and cause non-linear variation of frequency with reflector voltage.

MODES OF OPERATION

Oscillation may be obtained in a given tube with several combinations of resonator and reflector voltages at a given frequency. The regions where oscillation occurs within the reflector voltage range are referred to as voltage modes. A card is furnished with each tube showing the optimum mode of operation. Operation in the higher voltage reflector modes usually results in more power output. Operation in the lower voltage reflector modes usually results in more electronic tuning.

DETAILED MECHANICAL INFORMATION

(2) WARNING

The window which forms the vacuum seal across the R.F. output of the QKK863 thru QKK867 is 0.001" thick. Damage to this vacuum seal will ruin the tube. This window is more than adequate to withstand atmospheric pressure, but it will not withstand blows, dents, or scratches. A glass fillet surrounds the mica window and seals it into place. Bending of the output flange can break this glass, destroying the vacuum seal and rendering the tube inoperative. To eliminate this possibility and to afford some protection against puncturing, a short straight section of waveguide which has a flat surface to mate with the window flange is furnished with each tube. Removal of this flange will expose the output window to possible damage. If this straight section is not used, it is suggested that whatever flange is fastened to the tube be machined in a similar manner.

INSTALLATION

The types QKK863 thru QKK867 require a dwarf octal socket and may be mounted in any position. The output coupling flange should be rigidly clamped to a mating flange of the proper type. (See outline drawing).

Adequate cooling should be provided at all times due to the relatively high input powers; forced air cooling is required. (7 cu. ft./min.)

SHIELDING

Where the types QKK863 thru QKK867 are to be operated in the presence of strong magnetic fields, shielding the resonator and reflector voltage leads may be required in order to avoid undesirable modulation of the tube output. In extremely troublesome conditions, it may be advisable to place the tube in a metal chamber with polyiron chokes provided to bring the voltages into this chamber.

OUTLINE DRAWING
QKK863-QKK867

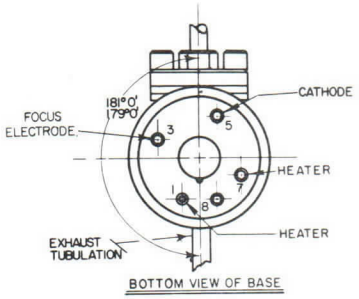

BOTTOM VIEW OF BASE

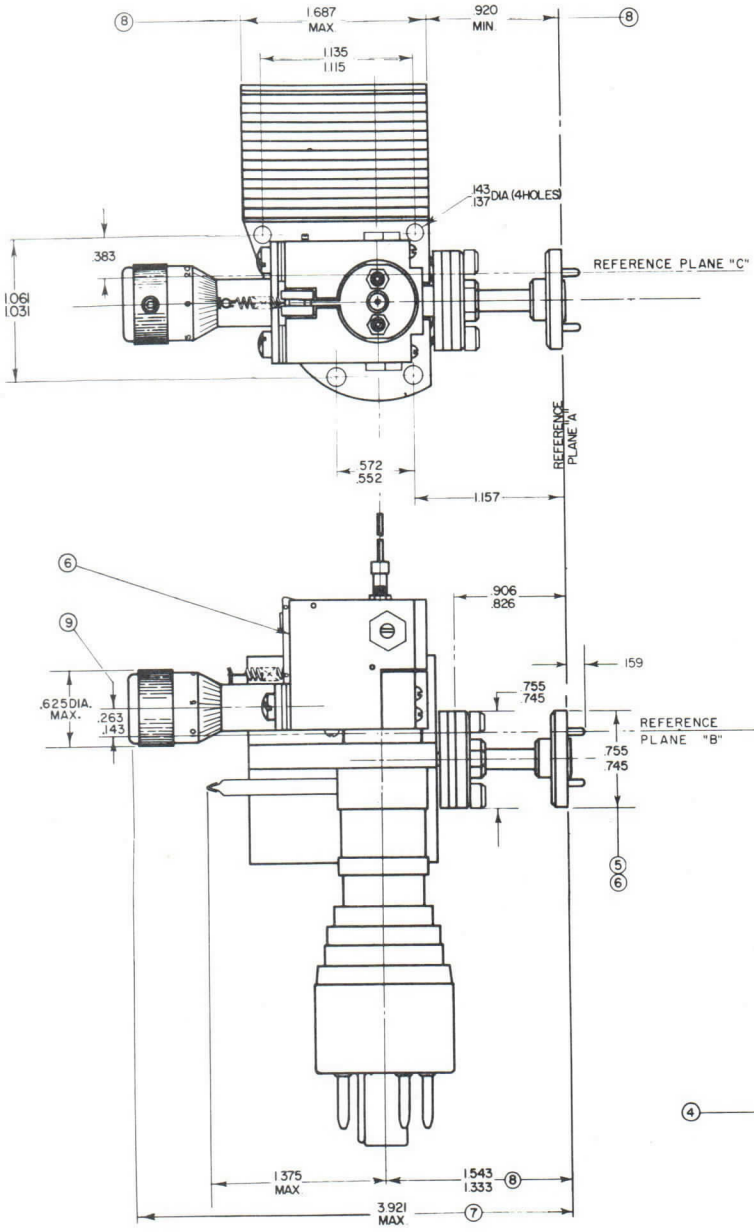

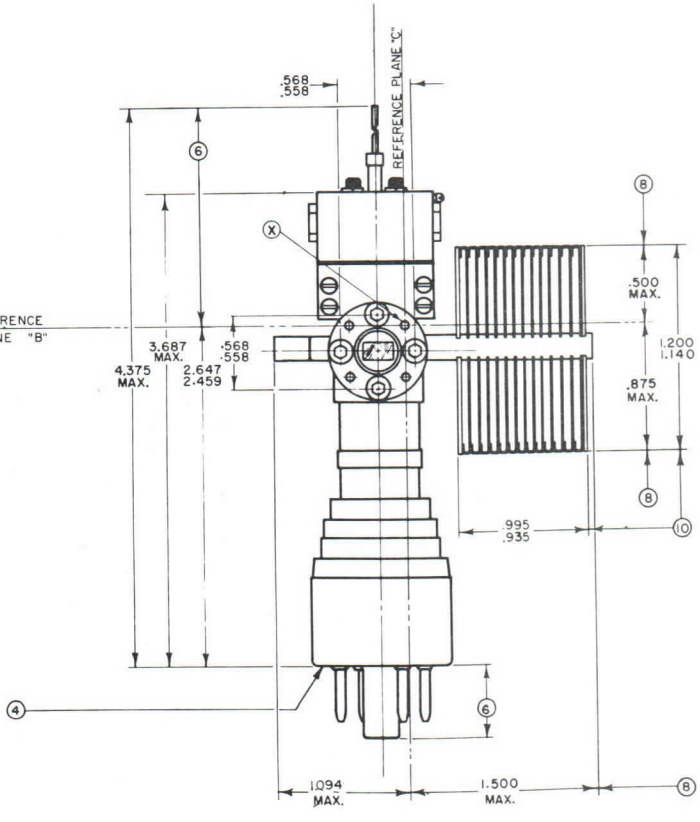

NOTES

1. REFERENCE PLANE "A" IS DEFINED AS A PLANE PASSING ALONG THE FACE OF THE OUTPUT FLANGE.
2. REFERENCE PLANE "B" IS DEFINED AS A PLANE PERPENDICULAR TO PLANE "A" AND PASSING THRU THE CENTER OF PIN "X" AT PLANE "A" AS SHOWN.
3. REFERENCE PLANE "C" IS DEFINED AS A PLANE MUTUALLY PERPENDICULAR TO PLANES "A" AND "B" PASSING THRU THE CENTER OF PIN "X" AT PLANE "A" AS SHOWN.
4. STANDARD DWARF SHELL OCTAL 5 PIN BASE (JECTEC B5-45).
5. (A) QKK863, QKK864 AND QKK865 TO MATE WITH STANDARD UG 385/U FLANGE COUPLING.
   (B) QKK866 AND QKK867 TO MATE WITH STANDARD UG 387/U FLANGE COUPLING.
6. THE FOLLOWING AREAS TO BE FREE FROM PAINT: PINS (DWARF OCTAL BASE), FACE OF OUTPUT FLANGE, AND PINS, REPELLER LEAD, TUNER AND TUNER HOUSING SUPPORT.
7. REFERS TO MAXIMUM TUNING RANGE (10 GRADUATION).
8. INCLUDES ANGULAR AS WELL AS LATERAL DEVIATIONS.
9. REFERS TO CENTER-LINE OF .625 MAXIMUM DIAMETER.
10. REFERS TO SIZE OF RADIATOR ONLY.

The technical information on this data sheet is of a proprietory nature and is furnished as a customer service for private use only.

QKK866

PRELIMINARY

DATA SHEET

RAYTHEON

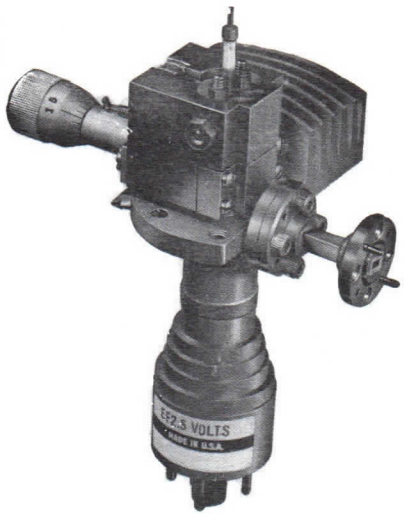

Tube type QKK866 is a mechanically tuned reflex klystron oscillator designed for operation in the 73,000 to 83,000 megacycle range with an average power output of 40 milliwatts. This tube offers single vernier adjustment and single mode operation for full frequency coverage. The R F output is through waveguide sealed by a mica window.

GENERAL CHARACTERISTICS

ELECTRICAL

Heater

Heater Voltage	2.5 Volts ± 10%
Heater Current	1.45 Amperes

Maximum Ratings

Resonator Potential	1800 Volts
Cathode Current	60 mA
Reflector Potential	-40 to -500 Volts
Focus Grid Potential	-20 to -300 Volts
Anode Block Temperature	100° C

The values specified above must not be exceeded under any service condition. The ratings are limiting values above which the serviceability of any individual tube may be impaired. It does not necessarily follow that combinations of maximum ratings can be attained simultaneously.

TYPICAL OPERATION

Resonator Potential (Fixed)	1400 Volts
Focus Grid Potential (Fixed)	-20 to -300 Volts
Cathode Current	40 mA
Reflector Potential	-40 to -450 Volts
Power Output (Minimum)	25 mW
Frequency Range	73,000 to 83,000 Mc

MECHANICAL

Base				Dwarf Octal		
Pin Number	1	3	5	7	Shell	Top Cap
Element	H	Focus Electrode	K	H	Anode	Reflector
Mounting				Any Position		
Cooling				Forced Free Air (7 cu. ft/min)		

RAYTHEON COMPANY | MICROWAVE AND POWER TUBE DIVISION | WALTHAM 54, MASS.

The specifications for this tube have not been finalized. The tube is being manufactured in limited quantities and is available for engineering analysis purposes only. This engineering information and/or delivery of sample tubes do not imply availability of tubes with the same electrical and/or mechanical characteristics. Changes in ratings and/ or dimensions may be made at our discretion as deemed advisable by manufacturing experience or other considerations. For current information concerning this tube contact the nearest Microwave and Power Tube Regional Sales Representative.

Frequency Range	4 to 10 Turns of Tuner Knob
Overall Dimensions Including Waveguide	5 x 2 3/8 x 4 Inches
Flange (mates with)	UG-387/U
Waveguide	RG-99/U

DETAILED ELECTRICAL INFORMATION

(1) WARNING

ANY ATTEMPT TO OPERATE THIS TUBE WITH THE REFLECTOR NOT CONNECTED OR WITH MORE THAN 100,000 OHMS BETWEEN REFLECTOR AND CATHODE WILL SEVERELY DAMAGE THE TUBE. Make certain that the reflector lead is connected before applying any voltages. If the reflector circuit is fused, provide a 10,000 ohm resistor as a bypass around the fuse to prevent operating the tube with no reflector connection should the fuse blow.

CATHODE

In most applications, the metal shell (resonator) of the QKK673 is operated at ground potential. The cathode is therefore negative with respect to ground by the amount of the resonator potential and must not be grounded. THIS TUBE TYPE MAY DEVELOP A HEATER TO CATHODE SHORT. THEREFORE, TO PREVENT HEATER BURNOUT, THE CATHODE SHOULD NOT BE CONNECTED TO THE HEATER. Heater to cathode short will not cause tube malfunction or shortness of life if this simple rule is observed. In all cases where the resonator is operated at ground potential the heater transformer must be insulated to withstand the maximum resonator voltage.

In applications where the metal envelope (resonator) is not at ground potential, it is essential that the tube be surrounded by a grounding shield to avoid injury to the operator. Adequate ventilation must be provided through this shield to keep the ambient temperature of the chamber below a maximum value. The cathode current can be adjusted to the proper value by adjusting the focus grid voltage.

REFLECTOR

The reflector electrode is connected to the small cap on the top of the tube. The ceramic stem supporting the reflector must be carefully protected against rough handling.

The power supply furnishing the reflector potential must be insulated to withstand the total resonator and reflector voltage. The reflector must never be allowed to become positive with respect to the cathode. If this precaution is not observed, damage to the reflector will result. In cases where modulating potentials bring the reflector voltage close to the minimum specified value a diode should be connected between cathode and reflector to prevent the reflector from going positive. ALSO, IT IS REQUIRED THAT THE APPLICATION OF REFLECTOR VOLTAGE PRECEDE THE APPLICATION OF RESONATOR VOLTAGE.

FREQUENCY STABILITY

To obtain the most stable operation from this tube, the reflector and resonator voltage supplies should be very well regulated. It is also essential that this type be operated at a near constant ambient temperature.

MECHANICAL TUNING MECHANISM

Clockwise rotation of the tuning knob decreases the frequency. Care should be taken not to exceed the maximum clockwise limit of the tuning knob, since further rotation may damage the tuning mechanism.

ELECTRONIC TUNING

With the mechanical tuner adjusted so that the tube is operating near the desired frequency, vernier frequency adjustment may be made by varying the reflector voltage. Maximum power output for a given mechanical tuner setting, however, will be obtained at only one value of reflector voltage. If the mechanical tuner and reflector voltage are mutually adjusted for maximum power output at a given frequency, and if then the reflector is varied above and below the value for maximum power output such that the power output is reduced by one-half, the frequency change between the half power values is defined as the electronic tuning range. The electronic tuning range and linearity depend on the type of load and coupling used. A highly reactive load may shorten the electronic tuning range and cause non-linear variation of frequency with reflector voltage.

MODES OF OPERATION

Oscillation may be obtained in a given tube with several combinations of resonator and reflector voltages at a given frequency. The regions where oscillation occurs within the reflector voltage range are referred to as voltage modes. A card is furnished with each tube showing the optimum mode of operation. Operation in the higher voltage reflector modes usually results in more power output. Operation in the lower voltage reflector modes usually results in more electronic tuning.

DETAILED MECHANICAL INFORMATION

(2) WARNING

The window which forms the vacuum seal across the R.F. output is 0.001" thick. Damage to this vacuum seal will ruin the tube. This window is more than adequate to withstand atmospheric pressure, but it will not withstand blows, dents, or scratches. A glass fillet surrounds the mica window and seals it into place. Bending of the output flange can break this glass, destroying the vacuum seal and rendering thet tube inoperative. To reduce this possibility and to afford some protection against puncturing, a short straight section of waveguide which has a flat surface to mate with the window flange is furnished with each tube. Removal of this flange will expose the output window to possible damage. If this straight section is not used, it is suggested that whatever flange is fastened to the tube be machined in a similar manner.

INSTALLATION

This tube requires a dwarf octal socket and may be mounted in any position. The output coupling flange should be rigidly clamped to a mating flange of the proper type. (See outline drawing)

Adequate cooling should be provided at all times due to relatively high input powers; forced air cooling is required. (7 cu. ft/min.)

SHIELDING

Should this tube be operated in the presence of strong magnetic fields, shielding the resonator and reflector voltage leads may be required in order to avoid undesirable modulation of the tube output. In extremely troublesome conditions, it may be advisable to place the tube in a metal chamber with polyiron chokes provided to bring the voltages into this chamber.

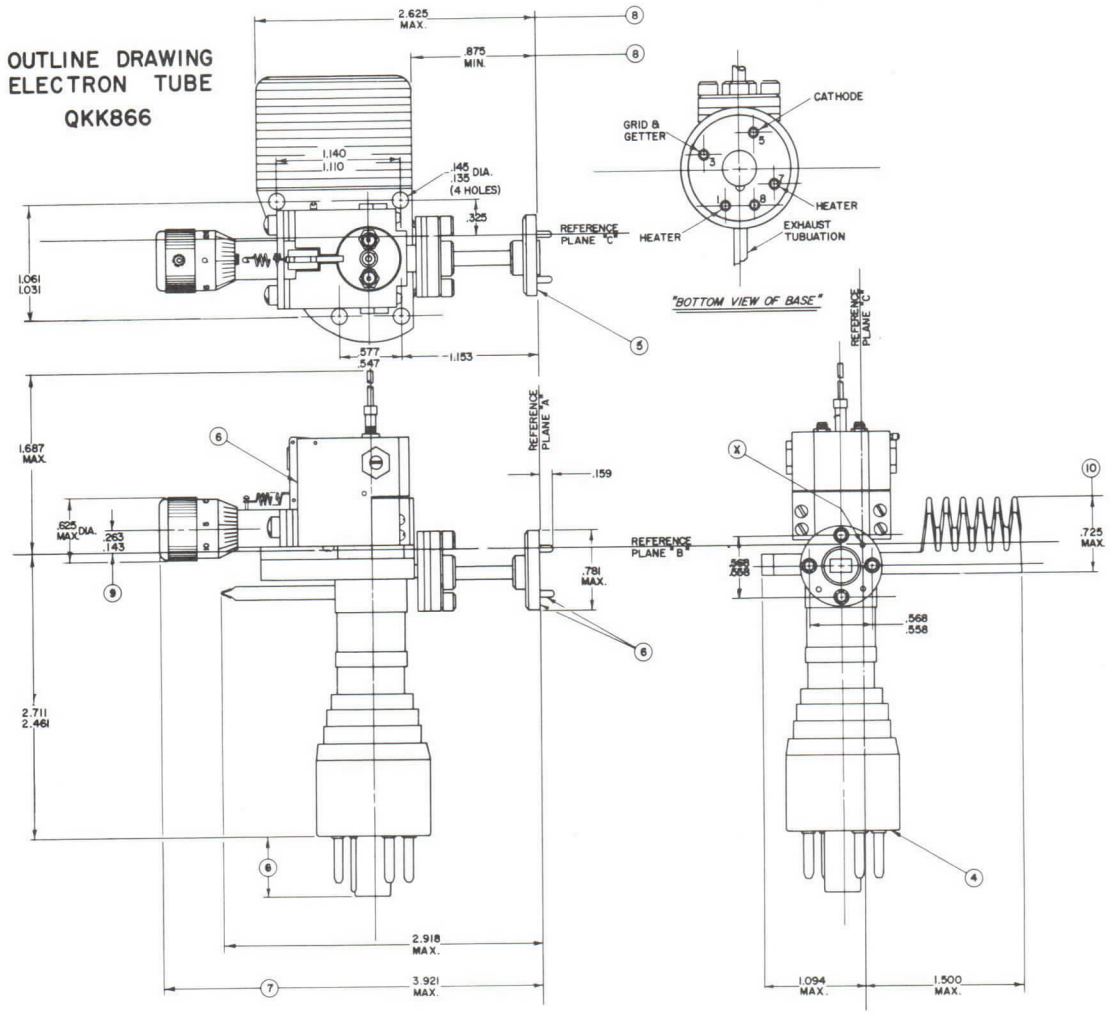

NOTES

1. REFERENCE PLANE "A" IS DEFINED AS A PLANE PASSING ALONG THE FACE OF THE OUTPUT FLANGE.
2. REFERENCE PLANE "B" IS DEFINED AS A PLANE PERPENDICULAR TO PLANE "A" AND PASSING THRU THE CENTER OF HOLE "X" AT PLANE "A" AS SHOWN.
3. REFERENCE PLANE "C" IS DEFINED AS A PLANE MUTUALLY PERPENDICULAR TO PLANES "A" AND "B" PASSING THRU THE CENTER OF HOLE "X" AT PLANE "A" AS SHOWN.
4. STANDARD DWARF SHELL OCTAL 5 PIN BASE (JETEC B5-45).
5. (A) QKK863, QKK864 & QKK865 TO MATE WITH STANDARD UG-385/U FLANGE COUPLING. (WAVEGUIDE TYPE RG-98/U)
   (B) QKK673, QKK866 & QKK867 TO MATE WITH STANDARD UG-387/U FLANGE COUPLING. (WAVEGUIDE TYPE RG-99/U)
   (C) QKK1074, QKK1075 & QKK1076 TO MATE WITH STANDARD UG-387/U FLANGE COUPLING. (WAVEGUIDE TYPE RG-138/U)
6. THE FOLLOWING AREAS TO BE FREE OF PAINT: PINS (DWARF OCTAL BASE), FACE OF OUTPUT & PINS, REPELLER LEAD, TUNER & TUNER HOUSING SUPPORT.
7. REFERS TO MAXIMUM TUNING RANGE.
8. INCLUDES ANGULAR AS WELL AS LATERAL DEVIATIONS.
9. REFERS TO CENTER-LINE OF 625 MAXIMUM DIAMETER.
10. REFERS TO SIZE OF RADIATOR ONLY.

The technical information on this data sheet is of a proprietory nature and is furnished as a customer service for private use only.

QKK869 **PRELIMINARY**

DATA SHEET

RAYTHEON



The type QKK869 is a velocity variation oscillator of the single cavity (integral) reflex type designed for operation in the 11,700 to 12,200 Mc range with an average power output of 100 milliwatts. These tubes are of the coaxial output type and are connected to standard WR 75 waveguide as indicated on page 3.

GENERAL CHARACTERISTICS

ELECTRICAL

Heater Characteristics

Heater Voltage	6.3 V
Heater Current	0.440 A

Maximum Ratings

Resonator Voltage	425 Vdc
Cathode Current	45 mAdc
Reflector Voltage	
Maximum	-380 Vdc
Minimum	-25 Vdc
Heater-Cathode Voltage	±100 Vdc

The values specified above must not be expected under any service condition. The ratings are limiting values above which the serviceability of any individual tube may be impaired. It does not necessarily follow that combinations of maximum ratings can be achieved simultaneously.

Typical Operating Conditions

Resonator Voltage	375 Vdc
Cathode Current	30 mAdc

Typical Operation in the 3 3/4 Reflector Mode

Frequency Range	11,700 to 12,200 Mc
Power Output (Min.)	90 mW
Reflector Voltage	-180 to -310 Vdc
Electronic Tuning Range	20 Mc
Reflector Modulation Sensitivity (Nominal)	1.0 Mc/v

RAYTHEON COMPANY | MICROWAVE AND POWER TUBE DIVISION | WALTHAM 54, MASS.

The specifications for this tube have not been finalized. The tube is being manufactured in limited quantities and is available for engineering analysis purposes only. This engineering information and/or delivery of sample tubes do not imply availability of tubes with the same electrical and/or mechanical characteristics. Changes in ratings and/ or dimensions may be made at our discretion as deemed advisable by manufacturing experience or other considerations. For current information concerning this tube contact the nearest Microwave and Power Tube Regional Sales Representative.

Typical Operation in the 4 3/4 Reflector Mode

Frequency Range	11,600 to 12,300
Power Output (Min.)	30 mW
Reflector Voltage	-80 to -180 Vdc
Electronic Tuning Range	35 Mc
Reflector Modulation Sensitivity (Nominal)	1.8 Mc/v

MECHANICAL

Mounting Position	Any
Dimensions	See Drawing
Base	Standard Octal with No. 4 Pin Enlarged
Maximum Shell Temperature	175° C
Maximum Output Lead Temperature	95° C

REFLECTOR

The power supply furnishing the reflector potential must be insulated to withstand the total resonator and reflector voltage. In cases where modulating potentials bring the reflector voltage close to the minimum voltage, or where an extremely high reflector circuit impedance is required, a diode should be connected between cathode and reflector to prevent the reflector from going positive. If this precaution is not observed, damage to the reflector may result.

ELECTRONIC TUNING

With the mechanical tuning mechanism set near the desired frequency, vernier adjustments of the frequency may be accomplished by varying the reflector voltage. Maximum power output for a fixed mechanical tuner position, however, will be obtained at only one reflector value. If the mechanical tuning mechanism and reflector voltage are mutually adjusted for a maximum power output, at a given frequency, and if the reflector voltage is then varied above and below the value for maximum power output such that the power output is reduced to one-half, the frequency change between the half-power values is defined as electronic tuning range.

INSTALLATION

Under normal operation freely circulating air is sufficient to maintain these tubes within the maximum specified shell temperature. In a confined environment it may be necessary to supply cooling, but under no circumstances should the ambient temperature exceed 90° C.

The operating characteristics listed herein will be achieved only if the tube is used with the recommended coax to waveguide transducer operating into a VSWR of 1.1 to 1.0 maximum.

LAUNCHING SECTION DETAILS FOR QKK869

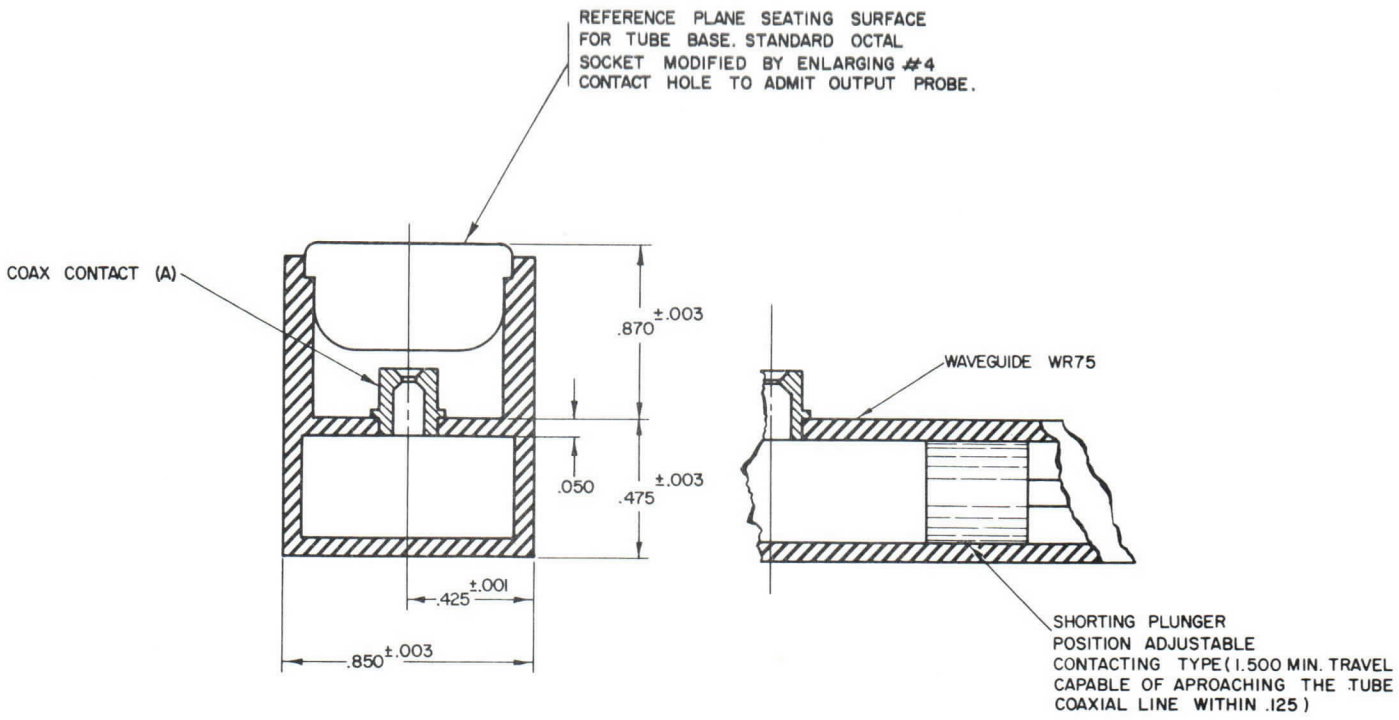

(A)

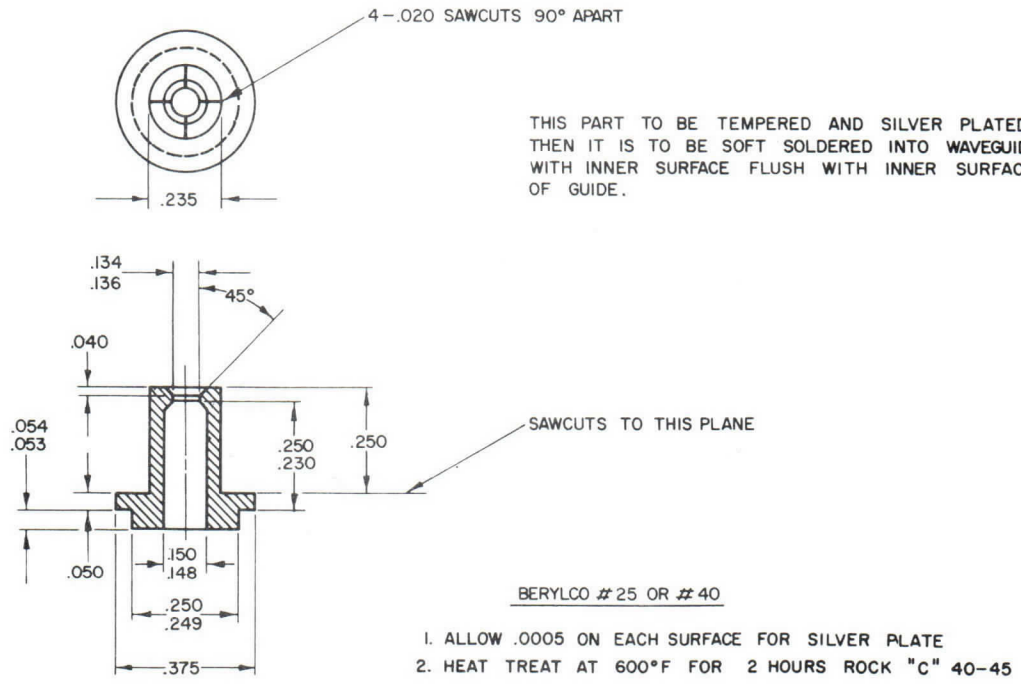

BERYLCO #25 OR #40

1. ALLOW .0005 ON EACH SURFACE FOR SILVER PLATE
2. HEAT TREAT AT 600°F FOR 2 HOURS ROCK "C" 40–45

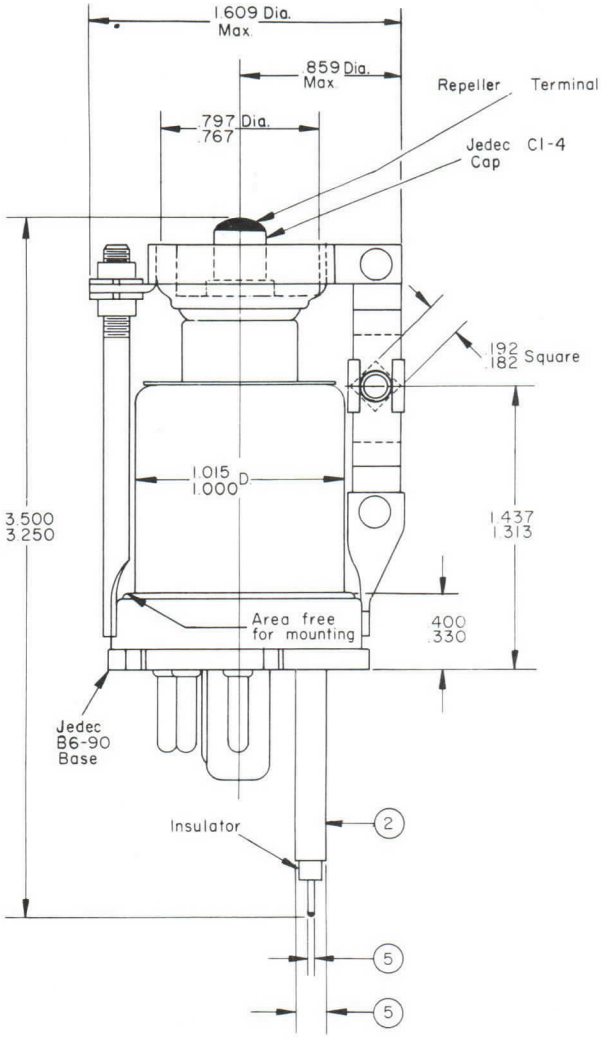

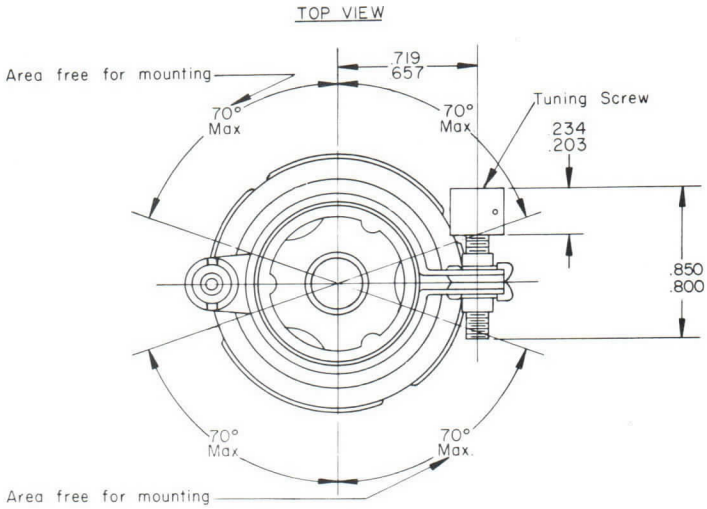

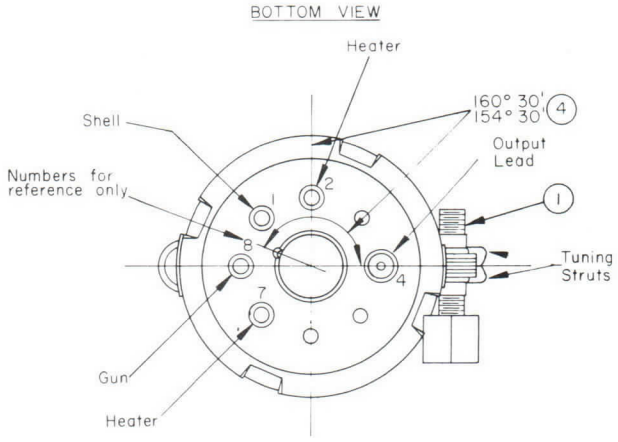

NOTES

1. THE TUNING SCREW SHALL BE LUBRICATED WITH OILDAG OR EQUIVALENT NON-CORROSIVE LUBRICANT. IT SHALL BE CAPABLE OR BEING OPERATED SMOOTHLY THROUGH ITS ENTIRE RANGE WITHOUT PERCEPTABLE BINDING.
2. NICKEL (30 M.S.I. SILVER PLATE PERMISSABLE.)
3. ALL DIMENSIONS ARE IN INCHES UNLESS OTHERWISE SPECIFIED.
4. APPLIES TO CENTERLINE OF OUTPUT LEAD AND CENTERLINE OF TUNER THROUGH STRUTS.
5. SHALL BE CONCENTRIC WITH EACH OTHER WITHIN .010.

OUTLINE DRAWING
ELECTRON TUBE
QKK869

The technical information on this data sheet is of a proprietory nature and is furnished as a customer service for private use only.

QKK874

OBJECTIVE

DATA SHEET

RAYTHEON



The type QKK874 is a velocity variation oscillator of the single cavity (integral) reflex type designed for operation in the 14,000 to 15,000 Mc. range with an average power output of 100 milliwatts. These tubes are of the coaxial output type and are connected to standard RG91/U waveguide as indicated on page 3.

GENERAL CHARACTERISTICS

ELECTRICAL

Heater Characteristics

Heater Voltage	6.3 V
Heater Current	0.440 A

Maximum Ratings

Resonator Voltage	440 Vdc
Cathode Current	45 mAdc
Reflector Voltage	
Maximum	-380 Vdc
Minimum	-25 Vdc
Heater-Cathode Voltage	±100 Vdc

The values specified above must not be exceeded under any service condition. The ratings are limiting values above which the serviceability of any individual tube may be impaired. It does not necessarily follow that combinations of maximum ratings can be achieved simultaneously.

Typical Operating Conditions

Resonator Voltage	400 Vdc
Cathode Current	50 mAdc
Temperature Coefficient	±0.3 Mc/°C

Typical Operation in the 4 3/4 Reflector Mode

Frequency Range	14,000 to 15,000 Mc.
Power Output (Min)	50 mW
Reflector Voltage	-170 to -300 Vdc
Electronic Tuning Range	35 Mc.
Reflector Modulation Sensitivity (Nominal)	1.8 Mc/v

RAYTHEON COMPANY | MICROWAVE AND POWER TUBE DIVISION | WALTHAM 54, MASS.

The specifications for this tube have not been finalized. The tube is in the development stage and is available for engineering analysis purposes only. This engineering information and/or delivery of sample tubes do not imply availability of tubes with the same electrical and/or mechanical characteristics. Changes in ratings and/or dimensions may be made at our discretion as deemed advisable by manufacturing experience or other considerations. For current information concerning this tube contact the nearest Microwave and Power Tube Regional Sales Representative.

Typical Operation in the 5 3/4 Reflector Mode

Frequency Range	13,900 to 15,100 Mc.
Power Output (Min.)	25 mW
Reflector Voltage	-60 to -160 Vdc
Electronic Tuning Range	75 Mc
Reflector Modulation Sensitivity (Nominal)	2.7 Mc/v

MECHANICAL

Mounting Position	Any
Dimensions	See Drawing
Base	Standard Octal with No. 4 Pin Enlarged
Maximum Shell Temperature	175° C
Maximum Output Lead Temperature	90° C

REFLECTOR

The power supply furnishing the reflector potential must be insulated to withstand the total resonator and reflector voltage. In cases where modulating potentials bring the reflector voltage close to the minimum voltage, or where an extremely high reflector circuit impedance is required, a diode should be connected between cathode and reflector to prevent the reflector from going positive. If this precaution is not observed, damage to the reflector may result.

ELECTRONIC TUNING

With the mechanical tuning mechanism set near the desired frequency, vernier adjustment of the frequency may be accomplished by varying the reflector voltage. Maximum power output for a fixed mechanical tuner position, however, will be obtained at only one reflector value. If the mechanical tuning mechanism and reflector voltage are mutually adjusted for a maximum power output, at a given frequency, and if the reflector voltage is then varied above and below the value for maximum power output such that the power output is reduced to one-half, the frequency change between the half-power values is defined as electronic tuning range.

INSTALLATION

Under normal operation freely circulating air is sufficient to maintain these tubes within the maximum specified shell temperature. In a confined environment it may be necessary to supply cooling, but under no circumstances should the ambient temperature exceed 90° C.

The operating characteristics listed herein will be achieved only if the tube is used with the recommended coax to waveguide transducer operating into a VSWR of 1.1 to 1.0 maximum.

LAUNCHING SECTION DETAILS FOR QKK874

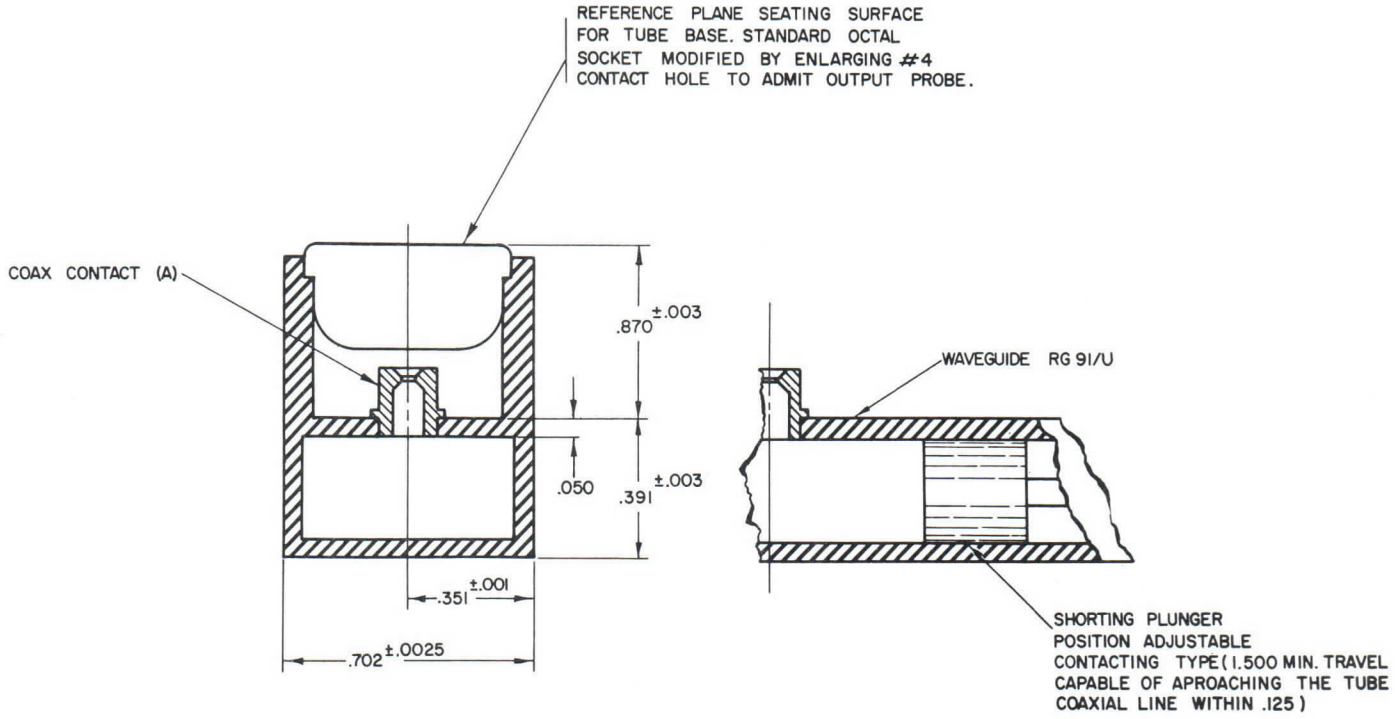

(A)

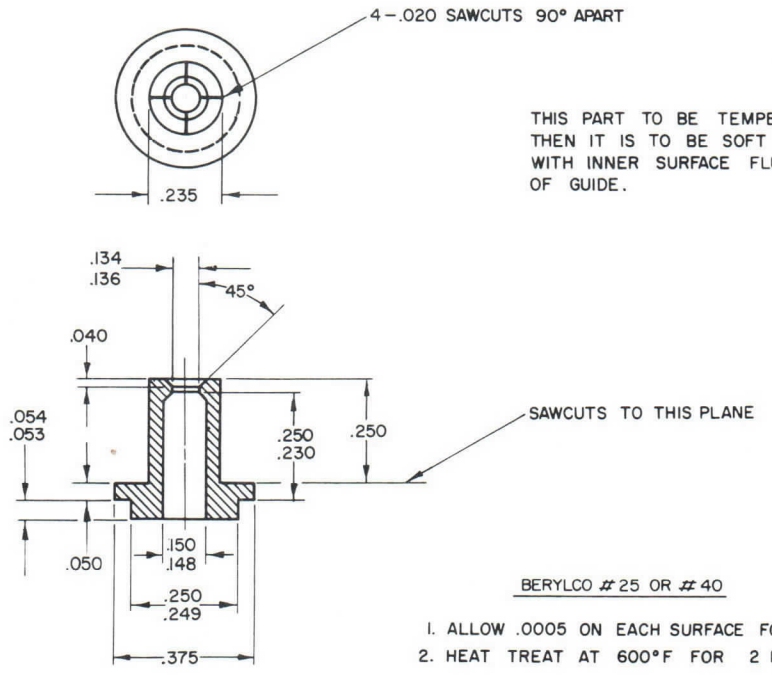

BERYLCO #25 OR #40

1. ALLOW .0005 ON EACH SURFACE FOR SILVER PLATE
2. HEAT TREAT AT 600°F FOR 2 HOURS ROCK "C" 40-45

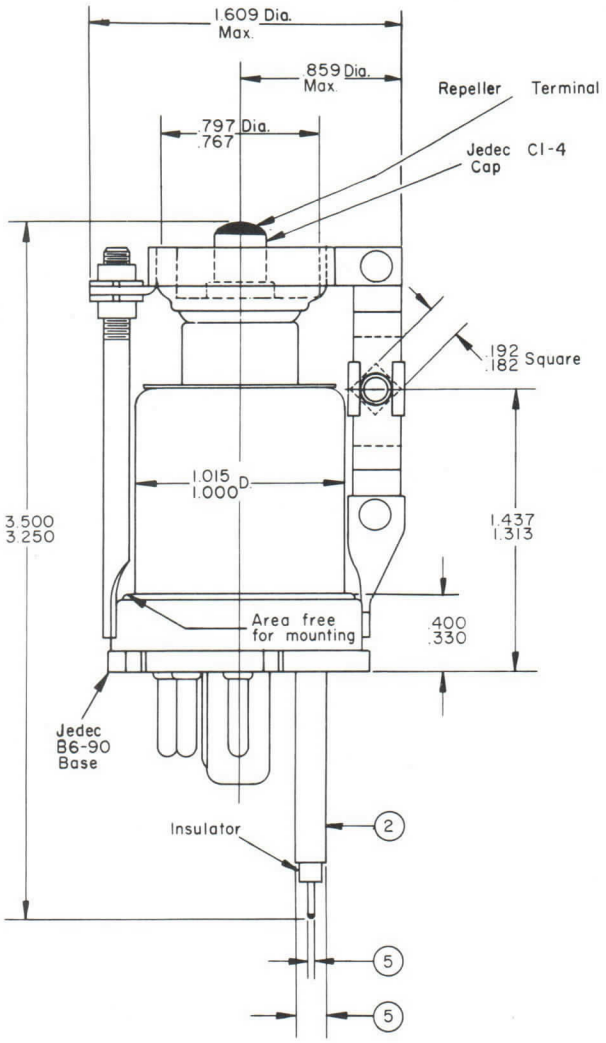

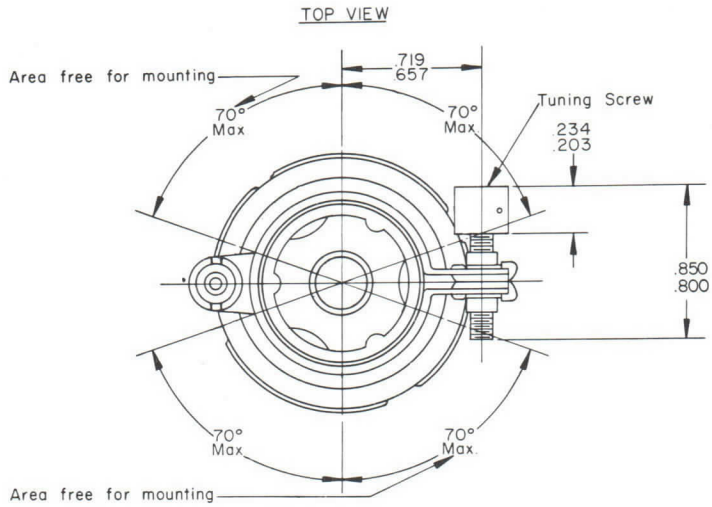

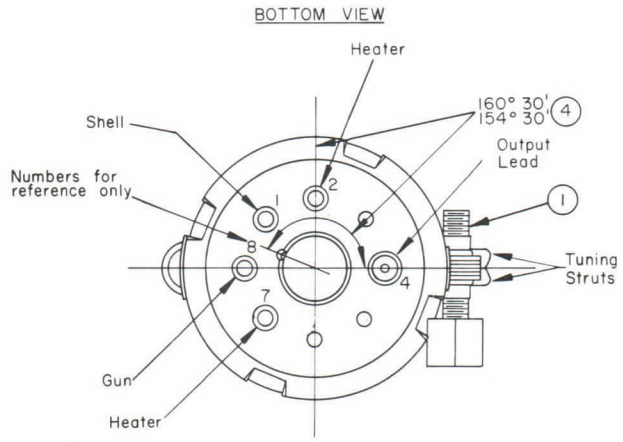

NOTES

1. THE TUNING SCREW SHALL BE LUBRICATED WITH OILDAG OR EQUIVALENT NON-CORROSIVE LUBRICANT. IT SHALL BE CAPABLE OR BEING OPERATED SMOOTHLY THROUGH ITS ENTIRE RANGE WITHOUT PERCEPTABLE BINDING.
2. NICKEL (30 M.S.I. SILVER PLATE PERMISSABLE.)
3. ALL DIMENSIONS ARE IN INCHES UNLESS OTHERWISE SPECIFIED.
4. APPLIES TO CENTERLINE OF OUTPUT LEAD AND CENTERLINE OF TUNER THROUGH STRUTS.
5. SHALL BE CONCENTRIC WITH EACH OTHER WITHIN .010.

OUTLINE DRAWING ELECTRON TUBE QKK874

The technical information on this data sheet is of a proprietory nature and is furnished as a customer service for private use only.

QKK877 **OBJECTIVE**

DATA SHEET

RAYTHEON



The type QKK877 is a velocity variation oscillator of the single cavity (integral) reflex type designed for operation in the 12,700 to 13,250 Mc. range with an average power output of 100 milliwatts. These tubes are of the coaxial output type and are connected to standard RG91/U waveguide as indicated on page 3.

GENERAL CHARACTERISTICS

ELECTRICAL

Heater Characteristics

Heater Voltage	6.3 V
Heater Current	0.440 A

Maximum Ratings

Resonator Voltage	440 Vdc
Cathode Current	45 mAdc
Reflector Voltage	
Maximum	-380 Vdc
Minimum	-25 Vdc
Heater-Cathode Voltage	±100 Vdc

The values specified above must not be exceeded under any service condition. The ratings are limiting values above which the serviceability of any individual tube may be impaired. It does not necessarily follow that combinations of maximum ratings can be achieved simultaneously.

Typical Operating Conditions

Resonator Voltage	400 Vdc
Cathode Current	40 mAdc
Temperature Coefficient	±0.3 Mc/°C

Typical Operation in the 3 3/4 Reflector Mode

Frequency Range	12,700 to 13,250
Power Output (min.)	70 mW
Reflector Voltage	-170 to -300 Vdc
Electronic Tuning Range	20 Mc.
Reflector Modulation Sensitivity (Nominal)	1.0 Mc/v

RAYTHEON COMPANY | MICROWAVE AND POWER TUBE DIVISION | WALTHAM 54, MASS.

The specifications for this tube have not been finalized. The tube is in the development stage and is available for engineering analysis purposes only. This engineering information and/or delivery of sample tubes do not imply availability of tubes with the same electrical and/or mechanical characteristics. Changes in ratings and/or dimensions may be made at our discretion as deemed advisable by manufacturing experience or other considerations. For current information concerning this tube contact the nearest Microwave and Power Tube Regional Sales Representative.

Typical Operation in the 4 3/4 Reflector Mode

Frequency Range	12,600 to 13,300 Mc.
Power Output (min.)	30 mW
Reflector Voltage	-60 to -160 Vdc
Electronic Tuning Range	35 Mc.
Reflector Modulation Sensitivity (Nominal)	1.8 Mc/v

MECHANICAL

Mounting Position	Any
Dimensions	See Drawing
Base	Standard Octal with No. 4 Pin Enlarged
Maximum Shell Temperature	175° C
Maximum Output Lead Temperature	90° C

REFLECTOR

The power supply furnishing the reflector potential must be insulated to withstand the total resonator and reflector voltage. In cases where modulating potentials bring the reflector voltage close to the minimum voltage, or where an extremely high reflector circuit impedance is required, a diode should be connected between cathode and reflector to prevent the reflector from going positive. If this precaution is not observed, damage to the reflector may result.

ELECTRONIC TUNING

With the mechanical tuning mechanism set near the desired frequency, vernier adjustment of the frequency may be accomplished by varying the reflector voltage. Maximum power output for a fixed mechanical tuner position, however, will be obtained at only one reflector value. If the mechanical tuning mechanism and reflector voltage are mutually adjusted for a maximum power output, at a given frequency, and if the reflector voltage is then varied above and below the value for maximum power output such that the power output is reduced to one-half, the frequency change between the half-power values is defined as electronic tuning range.

INSTALLATION

Under normal operation freely circulating air is sufficient to maintain these tubes within the maximum specified shell temperature. In a confined environment it may be necessary to supply cooling, but under no circumstances should the ambient temperature exceed 90° C.

The operating characteristics listed herein will be achieved only if the tube is used with the recommended coax to waveguide transducer operating into a VSWR of 1.1 to 1.0 maximum.

LAUNCHING SECTION DETAILS FOR QKK877

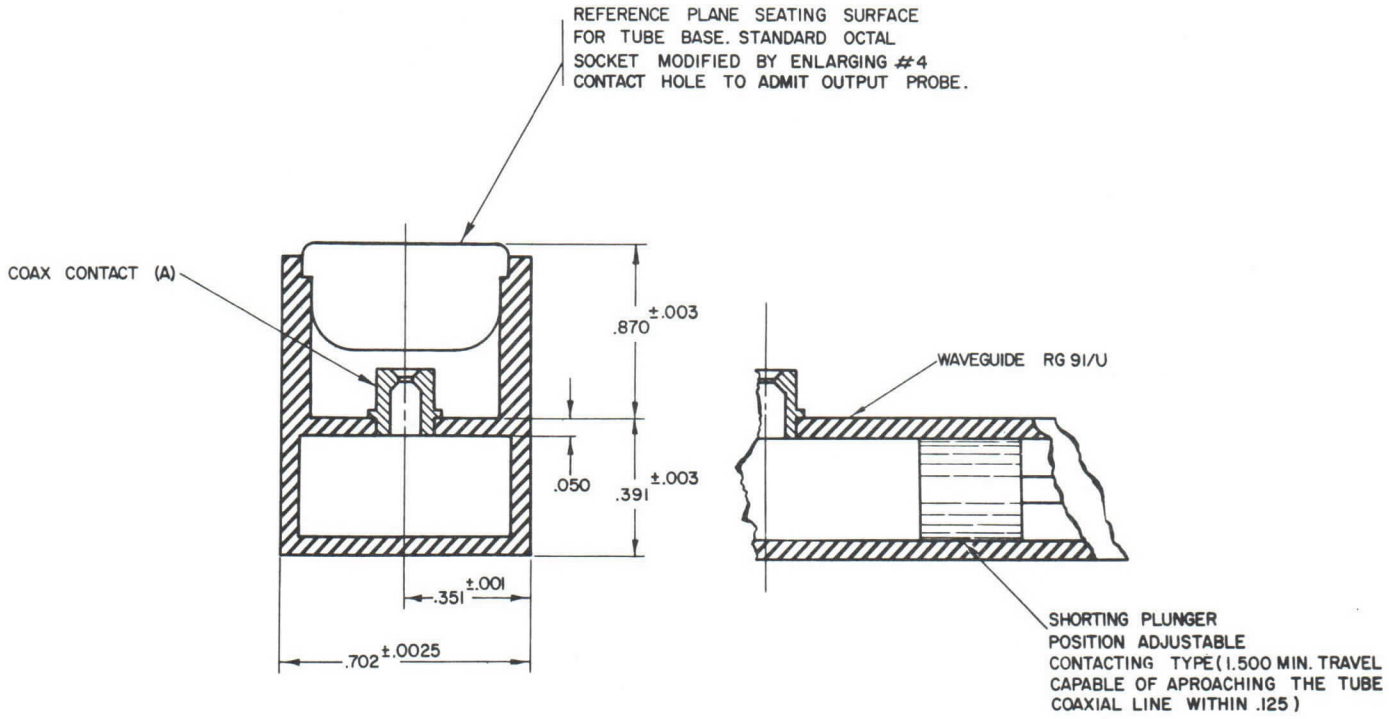

(A)

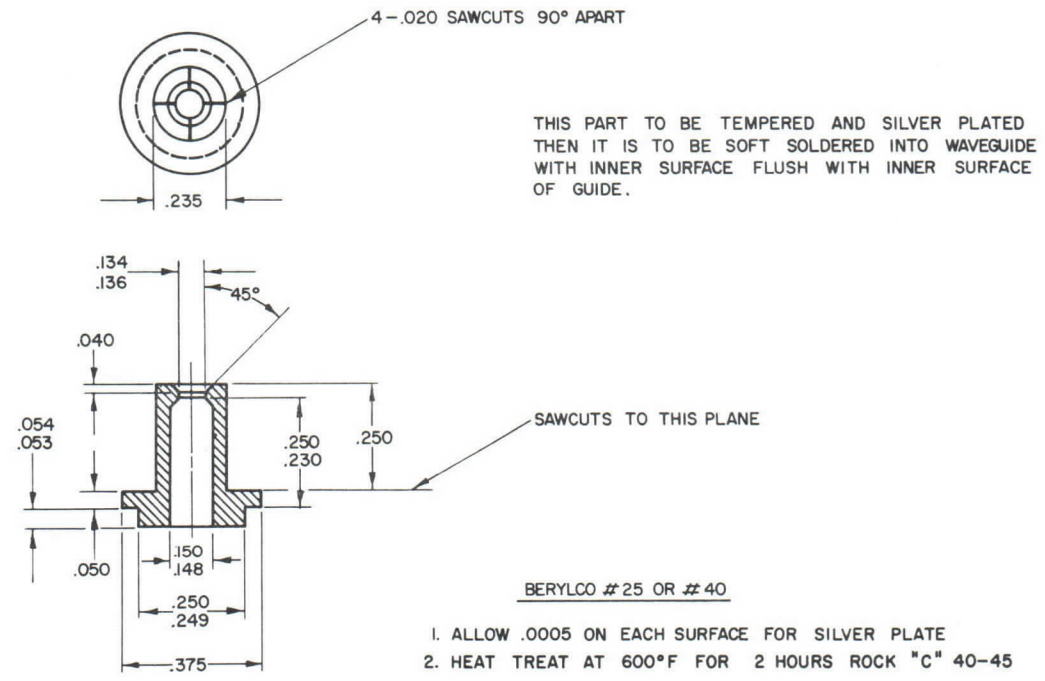

QKK877 (TYPICAL VALUES)

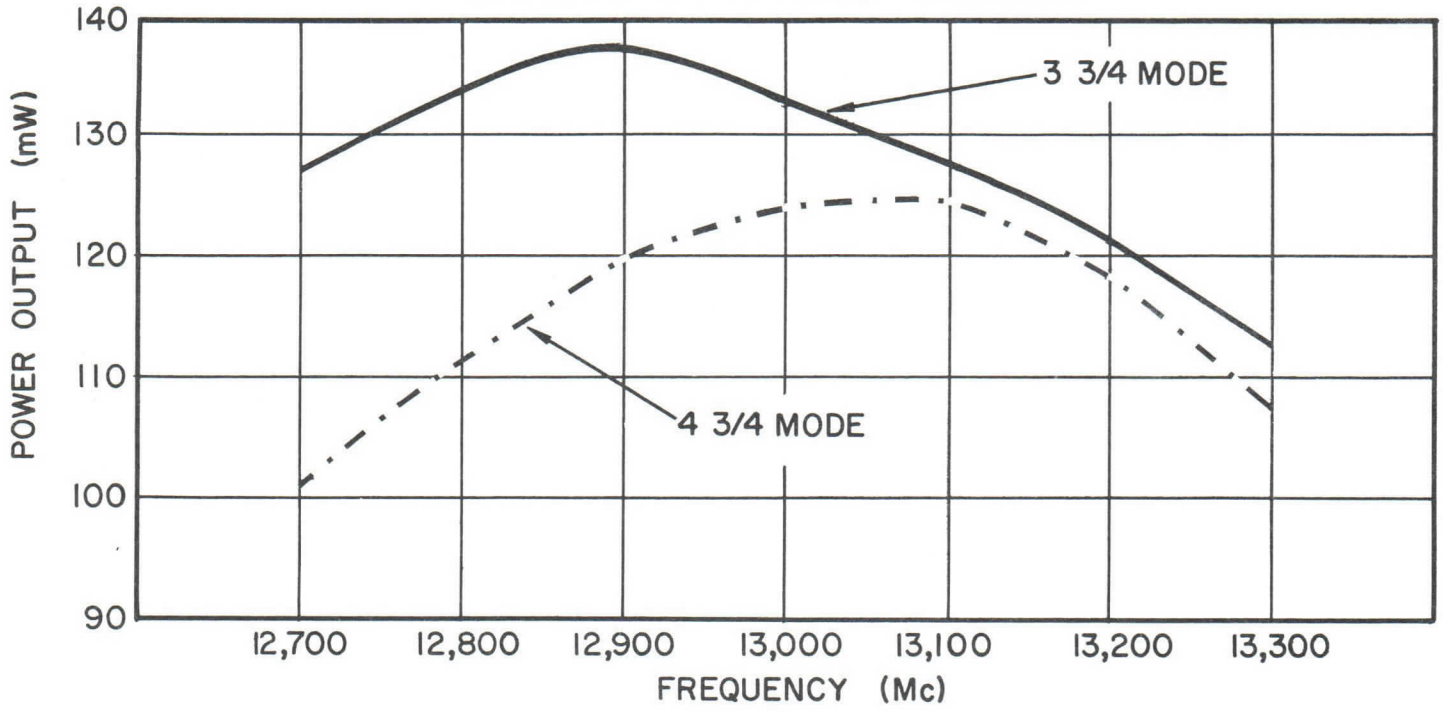

QKK877 (TYPICAL VALUES)

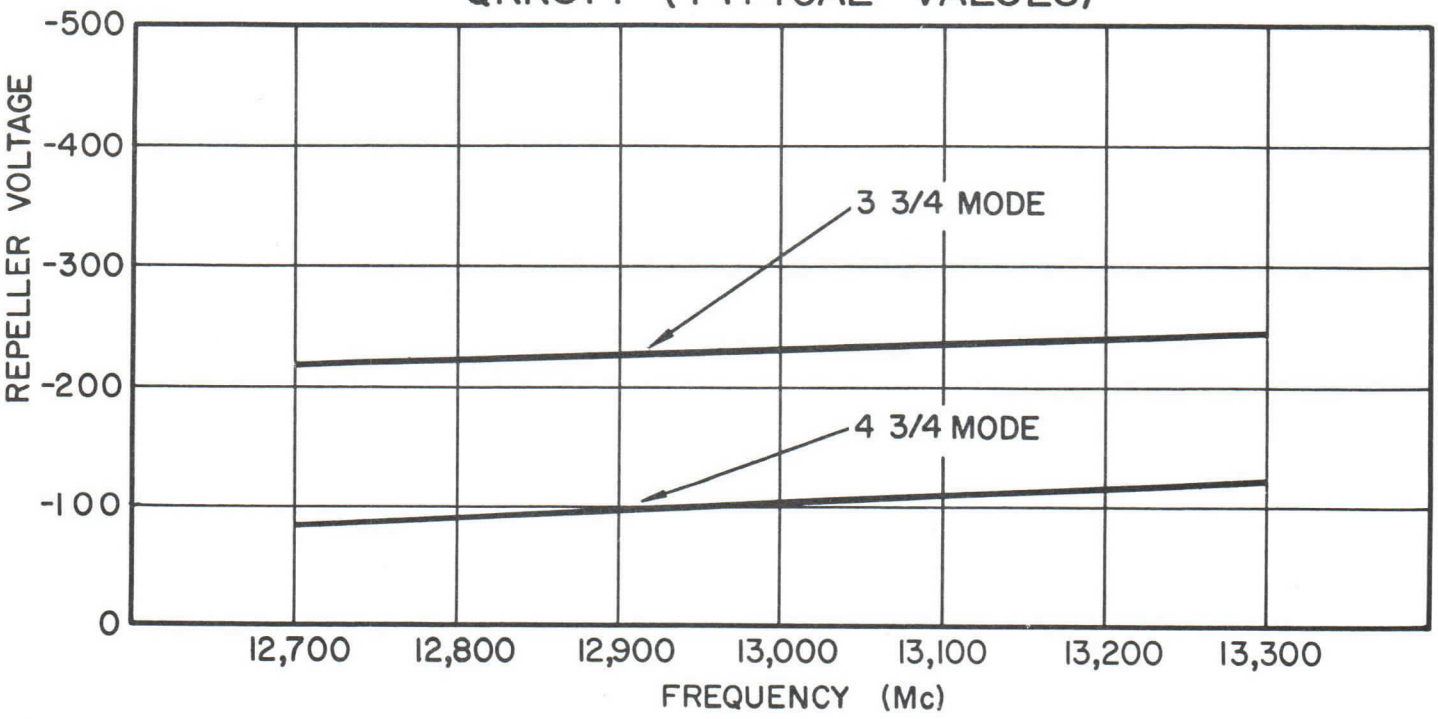

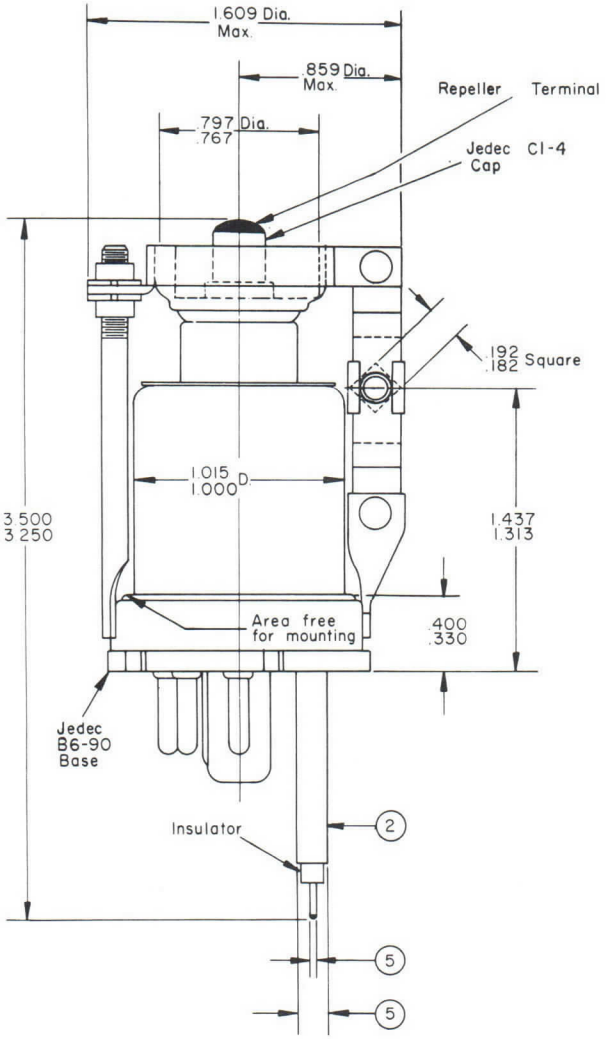

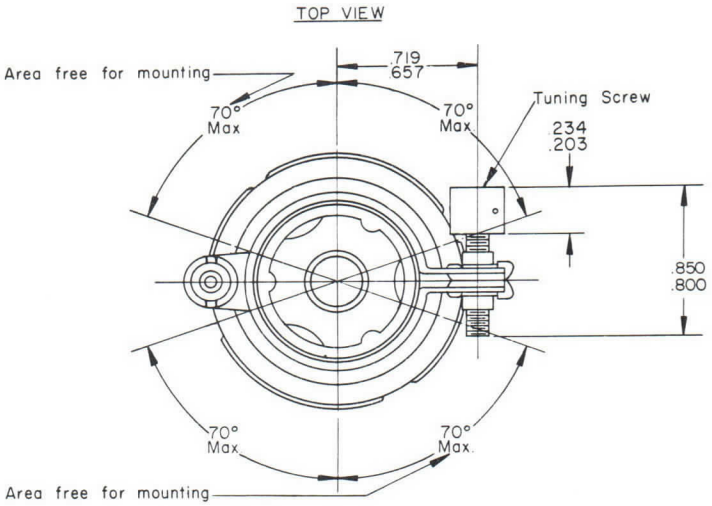

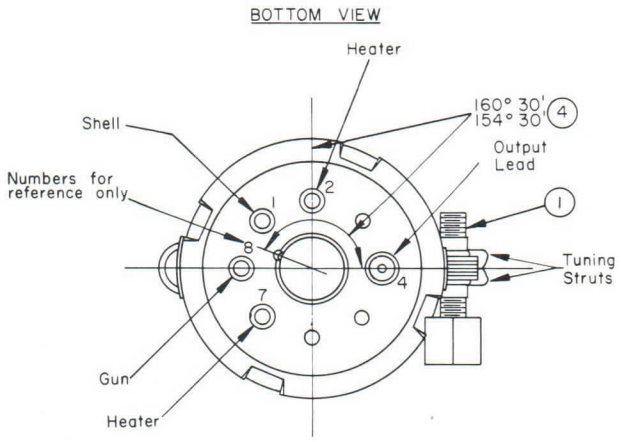

NOTES

1. THE TUNING SCREW SHALL BE LUBRICATED WITH OILDAG OR EQUIVALENT NON-CORROSIVE LUBRICANT. IT SHALL BE CAPABLE OR BEING OPERATED SMOOTHLY THROUGH ITS ENTIRE RANGE WITHOUT PERCEPTABLE BINDING.
2. NICKEL (30 M.S.I. SILVER PLATE PERMISSABLE.)
3. ALL DIMENSIONS ARE IN INCHES UNLESS OTHERWISE SPECIFIED.
4. APPLIES TO CENTERLINE OF OUTPUT LEAD AND CENTERLINE OF TUNER THROUGH STRUTS.
5. SHALL BE CONCENTRIC WITH EACH OTHER WITHIN .010.

OUTLINE DRAWING ELECTRON TUBE QKK877

The technical information on this data sheet is of a proprietory nature and is furnished as a customer service for private use only.

QKK910

PRELIMINARY

DATA SHEET

RAYTHEON



The QKK910 is a velocity modulated oscillator of the single integral cavity reflex type designed for CW operation in 6575 to 6875 Mc range with a minimum power output of 1.0 watt. This tube is of the coaxial output type and connects to standard RG-50/U waveguide as indicated on the attached drawing. In order to provide sufficient cooling, the tube is supplied with a flange to be attached to a heat sink. The tube is specifically designed for use in the operation band, microwave links, and provides extremely long life. A control electrode offers the unique advantage of close frequency control without deviating from the minimum distortion point on the reflector mode.

GENERAL CHARACTERISTICS

ELECTRICAL

Heater Characteristics

Heater Voltage	6.3 V
Heater Current	0.675 A

Maximum Ratings

Resonator Voltage	800 Vdc
Resonator Current	100 mAdc
Reflector Voltage	
Minimum	-200 Vdc
Maximum	-600 Vdc
Heater-Cathode Voltage	±100 Vdc

The values specified above must not be exceeded under any service condition. The ratings are limiting values above which the serviceability of any individual tube may be impaired. It does not necessarily follow that combinations of maximum ratings can be achieved simultaneously.

Typical Operating Conditions (VSWR 1.1 Max.)

Resonator Voltage	750 Vdc
Resonator Current	75 mAdc
Reflector Voltage	-250 to -450 Vdc
Electronic Tuning Range	30 Mc
Reflector Modulation Sensitivity	0.3 Mc/Volt
Frequency Range	6575 - 6875 Mc

The specifications for this tube have not been finalized. The tube is being manufactured in limited quantities and is available for engineering analysis purposes only. This engineering information and/or delivery of sample tubes do not imply availability of tubes with the same electrical and/or mechanical characteristics. Changes in ratings and/ or dimensions may be made at our discretion as deemed advisable by manufacturing experience or other considerations. For current information concerning this tube contact the nearest Microwave and Power Tube Regional Sales Representative.

Power Output	1.5 Watts
Control Electrode Voltage	-42 V
Control Electrode Modulation Sensitivity	1.3 Mc/V

MECHANICAL

Mounting Position	Any
Dimensions	See Drawing
Base	Standard Octal with enlarged no. 4 pin
Maximum Shell Temperature	135° C

CONTROL GRID

The control electrode provides an electronic means in addition to the reflector whereby the operating frequency of the klystron can be varied. When used with a suitable AFC circuit, this electrode provides a means for compensation of unwanted frequency drift while maintaining the reflector voltage at the optimum power and distortion point on the reflector mode. This method eliminates the signal distortion which occurs when the reflector is used to control the carrier frequency. In addition, as shown in Figure 2, the frequency change is accomplished with slight variation in the power output.

REFLECTOR

The power supply furnishing the reflector potential must be insulated to withstand the total resonator and reflector voltage. In cases where modulating potentials bring the reflector voltage close to the minimum voltage, or where an extremely high reflector circuit impedance is required, a diode should be connected between cathode and reflector to prevent the reflector from going positive. If this precaution is not observed, damage to the reflector may result.

ELECTRONIC TUNING

With the mechanical tuning mechanism set near the desired frequency, vernier adjustment of the frequency may be accomplished by varying the reflector voltage. Maximum power output for a fixed mechanical tuner position, however, will be obtained at only one reflector value. If the mechanical tuning mechanism and the reflector voltage are mutually adjusted for a maximum power output, at a given frequency, and if the reflector voltage is then varied above and below the value for maximum power output, such that the power output is reduced to one-half, the frequency change between the half-power values is defined as electronic tuning range.

INSTALLATION

The tube is supplied with a flange as shown, to be attached to a heat sink. Care should be taken to insure that the shell temperature does not exceed 135° C.

The operating characteristics listed herein will be achieved only if the tube is used with the recommended coax to waveguide transducer operating into a VSWR of 1.1 or less.

Figure 1.

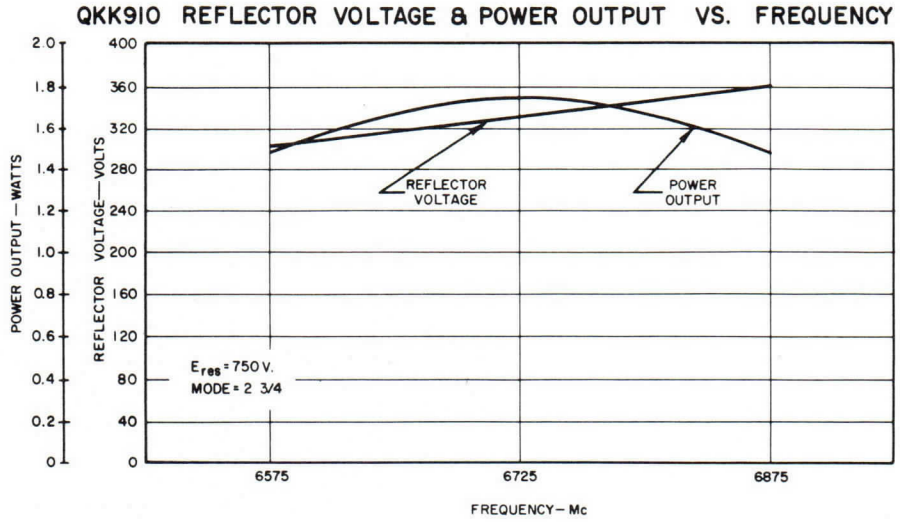

Figure 2.

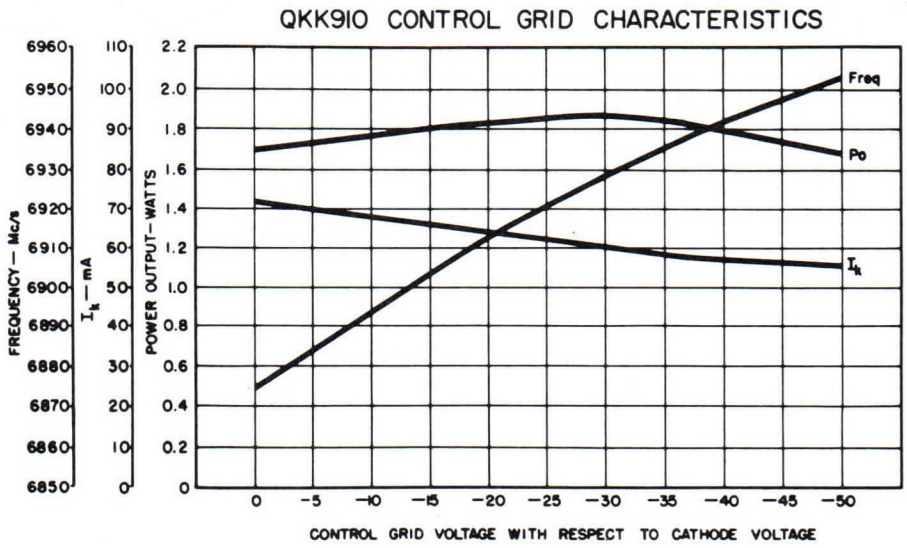

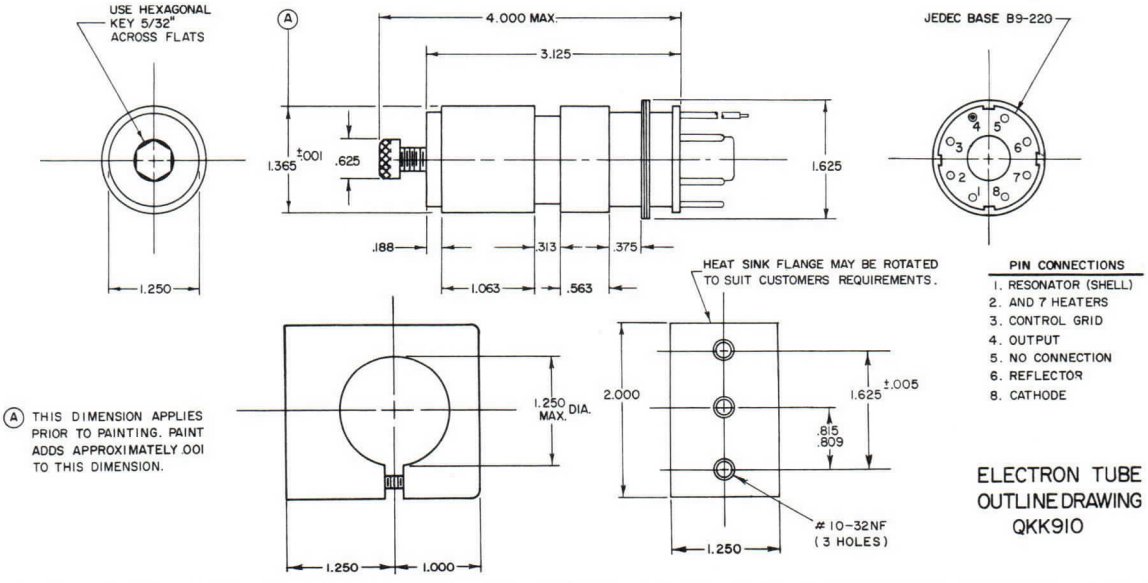

ELECTRON TUBE OUTLINE DRAWING QKK910

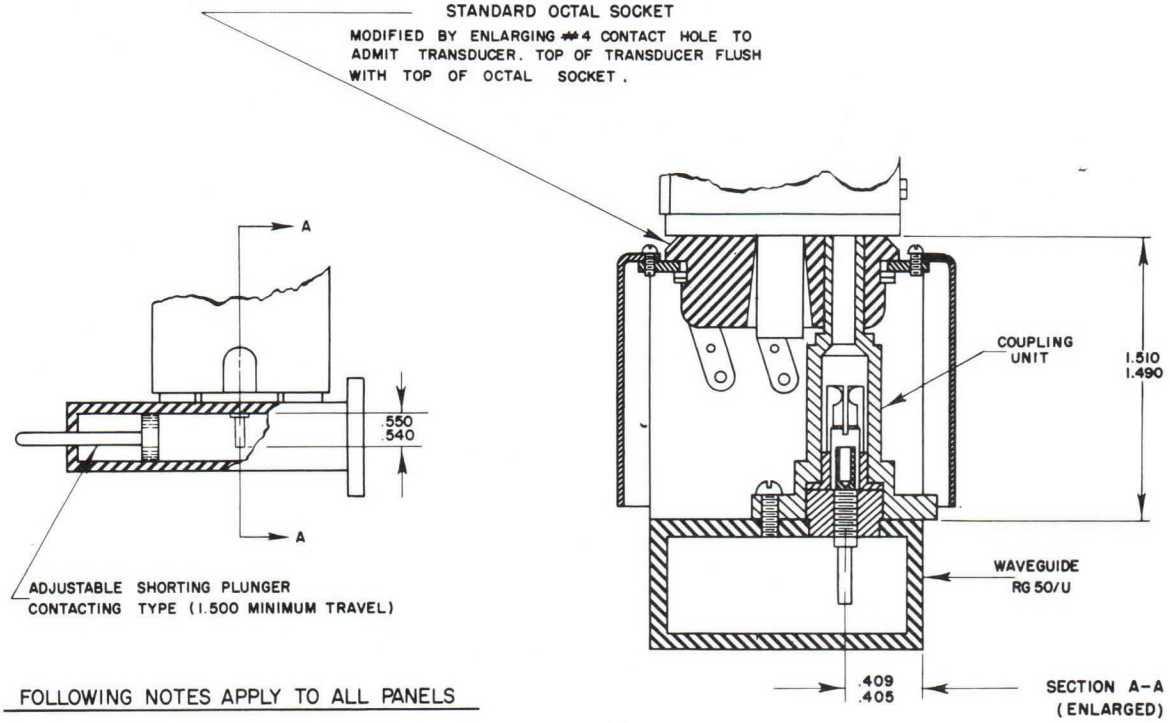

FOLLOWING NOTES APPLY TO ALL PANELS

1. ALL DECIMAL DIMENSIONS ±.001
2. ALL FRACTIONAL DIMENSIONS ± 1/64
3. ALL DIAMETERS TO BE CONCENTRIC ± .001
4. ALL DIMENSIONS GIVEN AS FINISHED

LAUNCHING SECTION
FOR QKK910

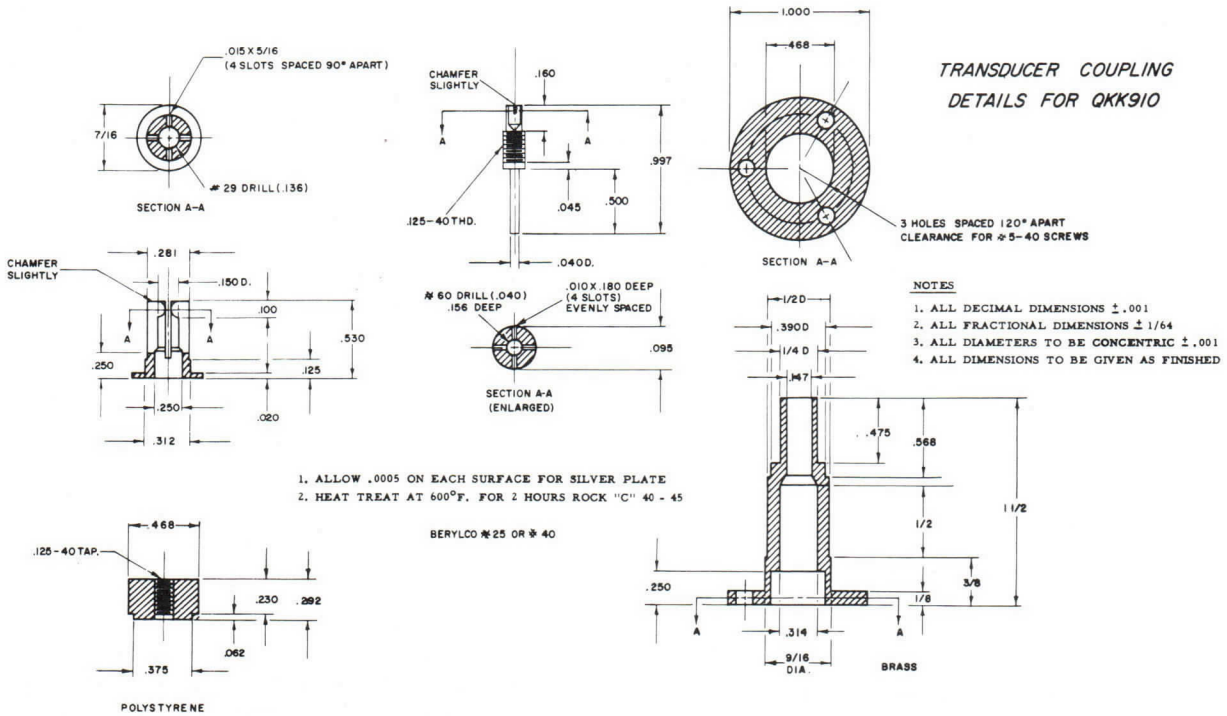

TRANSDUCER COUPLING DETAILS FOR QKK910

NOTES

1. ALL DECIMAL DIMENSIONS ± .001
2. ALL FRACTIONAL DIMENSIONS ± 1/64
3. ALL DIAMETERS TO BE CONCENTRIC ± .001
4. ALL DIMENSIONS TO BE GIVEN AS FINISHED

1. ALLOW .0005 ON EACH SURFACE FOR SILVER PLATE
2. HEAT TREAT AT 600°F. FOR 2 HOURS ROCK "C" 40 - 45

BERYLCO #25 OR #40

The technical information on this data sheet is of a proprietory nature and is furnished as a customer service for private use only.

QKK923 OBJECTIVE DATA SHEET

RAYTHEON

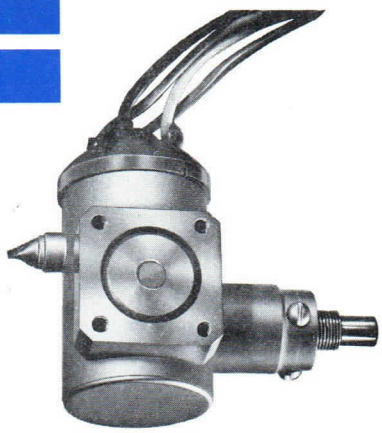

The type QKK923 is a rugged reflex klystron oscillator of all metal ceramic design. The mechanical tuner provides tuning over the 23,500 to 24,500 Mc. range with a minimum power output of 10 mW. The RF output is through waveguide sealed by a ceramic window. The output flange mates with a standard UG-595/U cover-flange or a UG-596/U choke-flange.

GENERAL CHARACTERISTICS

ELECTRICAL

Heater Characteristics

Heater Voltage	6.3 Volts
Heater Current	680 Milliamps

Typical Operation

Resonator Voltage	375 Volts
Resonator Current	35 Milliamps
Reflector Voltage Range	-100 to -150 Volts
Power Output	30 Milliwatts
Electronic Tuning	100 Mc
Frequency Range	23,500 to 24,500 Mc
Temperature Coefficient	$\pm$0.5 Mc/°C

MECHANICAL

Base	Potted, with flying leads
Lead Color	Yellow Green Brown Gray
Element	Heater H-K Resonator Reflector
Cooling	Convection (No blower required)
Tuner Turns Required to Cover Range	10 Approx. (See Design Features)
Overall Dimensions-Including Waveguide	1.6" x 2.2" x 1"
Flange	UG-595/U
Waveguide	RG-66/U, RG-53/U

DESIGN FEATURES

MECHANICAL TUNING

Mechanical tuning is accomplished by the motion of a dielectric rod, controlled by the external allen-head tuning knob and a differential screw. This arrangement provides a great flexibility, in that the tuner may be placed anywhere on the cir-

The specifications for this tube have not been finalized. The tube is in the development stage and is available for engineering analysis purposes only. This engineering information and/or delivery of sample tubes do not imply availability of tubes with the same electrical and/or mechanical characteristics. Changes in ratings and/or dimensions may be made at our discretion as deemed advisable by manufacturing experience or other considerations. For current information concerning this tube contact the nearest Microwave and Power Tube Regional Sales Representative.

cumference of the resonator at least 90° from the output, and the differential screw can be modified to supply any desire tuning rate.

This tuner provides the ruggedness and frequency stability advantages of a fixed cavity, and is less sensitive to load impedance variations than external cavity tuning.

POWER OUTPUT

The improved electron gun and low interception vane grid permit operation at higher input power levels if increased power output is desired.

TUBE LIFE

Advanced electrical and mechanical design coupled with the most modern fabricating techniques assure thousands of hours of operating life, extended shelf life, and stable performance. The tuner is capable of many thousands of tuning cycles.

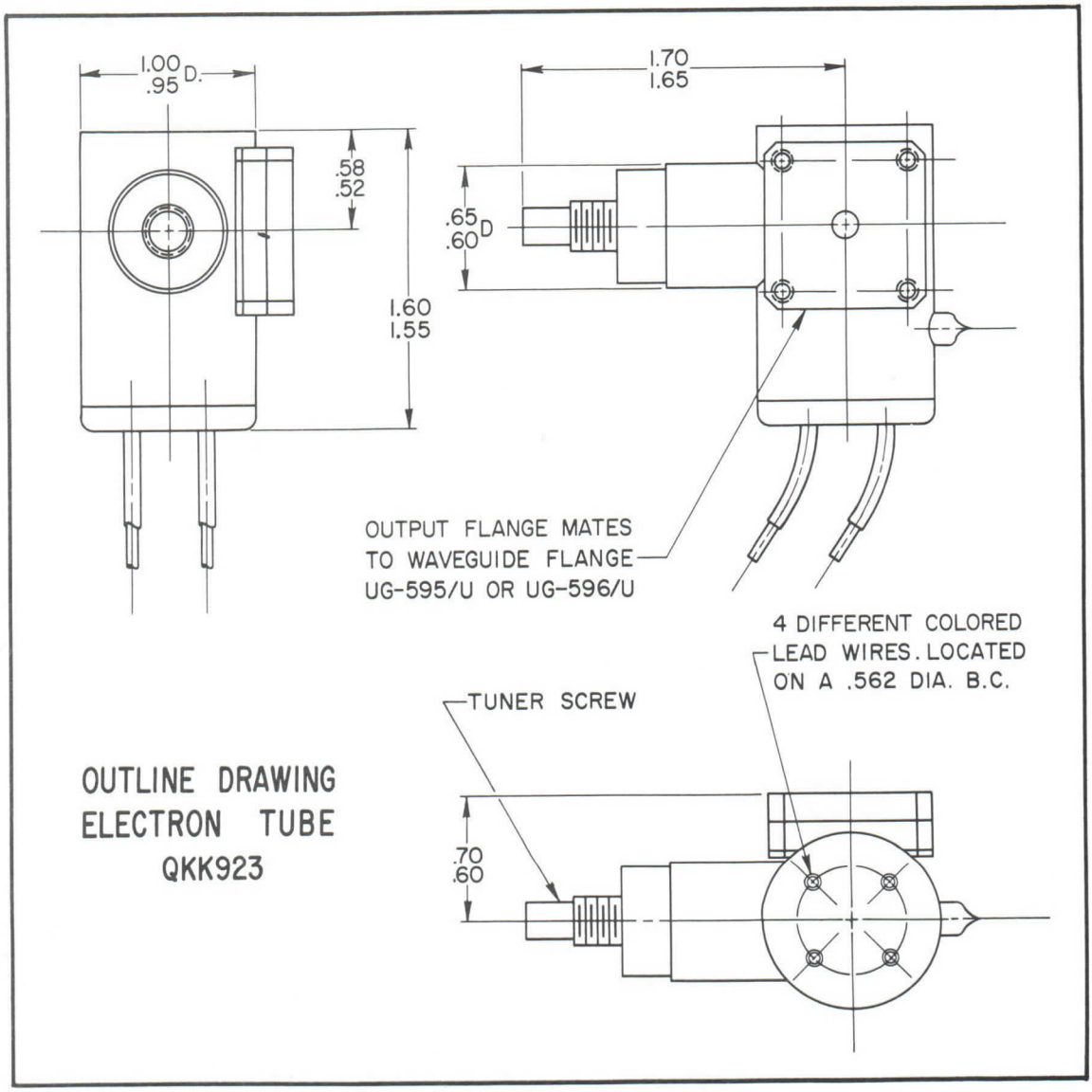

OUTLINE DRAWING
ELECTRON TUBE
QKK923

The technical information on this data sheet is of a proprietory nature and is furnished as a customer service for private use only.

QKK971 **OBJECTIVE DATA SHEET**

RAYTHEON

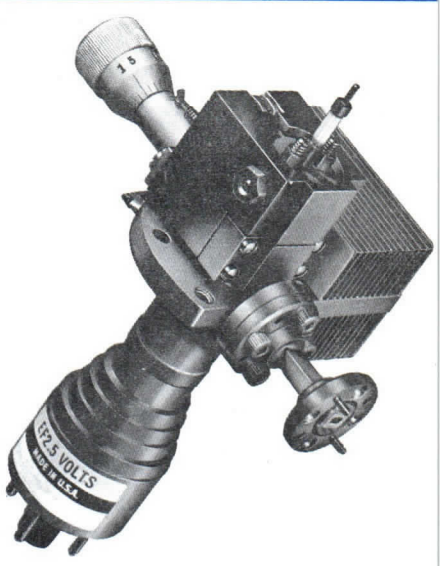

The QKK971 is a mechanically tuned reflex klystron oscillator designed for operation in the 100,000 to 120,000 megacycle range with an average power output of 20 milliwatts. The RF output is through waveguide sealed by a mica window.

GENERAL CHARACTERISTICS

ELECTRICAL

Heater

Heater Voltage	2.5 Volts ac - dc
Heater Current	1.45 Amperes

Maximum Ratings

Heater Voltage	2.75 Volts ac - dc
Resonator Potential	1800 Volts
Cathode Current	70 mA
Reflector Potential	-40 to -450 Volts
Anode Block Temperature	100° C

The values specified above must not be exceeded under any service condition. The ratings are limiting values above which the serviceability of any individual tube may be impaired. It does not necessarily follow that combinations of maximum ratings can be attained simultaneously.

TYPICAL OPERATION

Resonator Potential (fixed for each tube)	1400 to 1800 Volts
Focus Grid Potential (fixed for each tube)	-20 to -300 Volts
Cathode Current	50 mA
Reflector Potential	-40 to -450 Volts
Power Output (Minimum)	5 mW

MECHANICAL

Base					Dwarf Octal	
Pin Number	1	3	5	7	Shell	Top Cap
Element	H	Focus Electrode	K	H	Resonator	Reflector

6/61

The specifications for this tube have not been finalized. The tube is in the development stage and is available for engineering analysis purposes only. This engineering information and/or delivery of sample tubes do not imply availability of tubes with the same electrical and/or mechanical characteristics. Changes in ratings and/or dimensions may be made at our discretion as deemed advisable by manufacturing experience or other considerations. For current information concerning this tube contact the nearest Microwave and Power Tube Regional Sales Representative.

Mounting	Any Position
Cooling	Forced Air (7 cu. ft/minute)
Frequency Range	4 to 10 Turns of Tuner Knob
Overall Dimensions Including Waveguide	5 x 2 3/8 x 4 Inches
Flange	DBW 1000 Type
Waveguide	RG 138/U

DETAILED ELECTRICAL INFORMATION

(1) WARNING

Any attempt to operate this tube with the reflector not connected or with more than 100,000 ohms between reflector and cathode will severely damage the tube. Make certain that the reflector lead is connected before applying any voltages. If the reflector circuit is fused, provide a 10,000 ohm resistor as a bypass around the fuse to prevent operating the tube with no reflector connection should the fuse blow.

CATHODE

In most applications, the metal shell (resonator) of the tube is operated at ground potential. The cathode is therefore negative with respect to ground by the amount of the resonator potential and must not be grounded. This tube type may develop a heater to cathode short. Therefore, to prevent heater burnout, the cathode should not be connected to the heater. Heater to cathode short will not cause tube malfunction or shortness of life if this simple rule is observed. In all cases where the resonator is operated at ground potential the heater transformer must be insulated to withstand the maximum resonator voltage.

In applications where the metal envelope (resonator) of the tube is not at ground potential, it is essential that the tube be surrounded by a grounding shield to avoid injury to the operator. Adequate ventilation must be provided through this shield to keep the ambient temperature of the chamber below a maximum value. The cathode current in this type can be adjusted to the proper value by adjusting the focus grid voltage. Heater and cathode life will be increased if the heater temperature is lowered. Cathode life may also be increased by lowered cathode at lower heater voltage and/or reduced anode voltage. Reflector voltage and focus voltage must then be readjusted to new optimum values.

REFLECTOR

The reflector electrode is connected to the small cap on the top of the tube. The ceramic stem supporting the reflector electrode must be carefully protected against rough handling. If the ceramic stem comes in contact with other objects, damage may result which will cause the tube's characteristics to change.

The power supply furnishing the reflector potential must be insulated to withstand the total resonator and reflector voltage. The reflector must never be allowed to become positive with respect to the cathode. If this precaution is not observed, damage to the reflector will result. In cases where modulating potentials bring the reflector voltage close to the minimum specified value a diode should be connected between cathode and reflector to prevent the reflector from going positive. Also, it is required that the application of reflector voltage precede the application of resonator voltage.

FREQUENCY STABILITY

To obtain the most stable operation from this tube, the reflector and resonator voltage supplies should be very well regulated. It is also essential that this type be operated at a near constant ambient temperature.

MECHANICAL TUNING MECHANISM

Clockwise rotation of the tuning knob decreases the frequency. Care should be taken not to exceed the maximum clockwise limit of the tuning knob, since further rotation may damage the tuning mechanism.

ELECTRONIC TUNING

With the mechanical tuner adjusted so that the tube is operating near the desired frequency, vernier frequency adjustments may be made by varying the reflector voltage. Maximum power output for a given mechanical tuner setting, however, will be obtained at only one value of reflector voltage. If the mechanical tuner and reflector voltage are mutually adjusted for maximum power output at a given frequency, and if then the reflector voltage is varied above and below the value for maximum power output such that the power output is reduced by one half the frequency change between the half power values is defined as the electronic tuning range. The electronic tuning range and linearity depend on the type of load and coupling used. A highly reactive load may shorten the electronic tuning range and cause non-linear variation of frequency with reflector voltage.

MODES OF OPERATION

Oscillation may be obtained in a given tube with several combinations of resonator and reflector voltages at a given frequency. The regions where oscillation occurs within the reflector voltage range are referred to as voltage modes. A card is furnished with each tube showing the optimum mode of operation. Operation in the higher voltage reflector modes usually results in more power output. Operation in the lower voltage reflector modes usually results in more electronic tuning.

SHIELDING

Where this type is to be operated in the presence of strong magnetic fields, shielding the resonator and reflector voltage leads may be required in order to avoid undesirable modulation of the tube output. In extremely troublesome conditions, it may be advisable to place the tube in a metal chamber with polyiron chokes provided to bring the voltages into this chamber.

DETAILED MECHANICAL INFORMATION

(2) WARNING

The window which forms the vacuum seal across the R.F. output is 0.001" thick. Damage to this vacuum seal will ruin the tube. This window is more than adequate to withstand atmospheric pressure, but it will not withstand blows, dents, or scratches. A glass fillet surrounds the mica window and seals it into place. Bending of the output flange can break this glass, destroying the vacuum seal and rendering the tube inoperative. To eliminate this possibility and to afford some protection against puncturing, a short straight section of waveguide which has a flat surface to mate with the window flange is furnished with each tube. Removal of this flange will expose the output window to possible damage. If this straight section is not used, it is suggested that whatever flange is fastened to the tube be machined in a similar manner.

INSTALLATION

This tube requires a dwarf octal socket and may be mounted in any position. The output coupling flange should be rigidly clamped to a mating flange of the proper type. (See outline drawing).

Adequate cooling should be provided at all times due to relatively high input powers; forced air cooling is recommended.

NOTES FOR OUTLINE DRAWING

1. REFERENCE PLANE "A" IS DEFINED AS A PLANE PASSING ALONG THE FACE OF THE OUTPUT FLANGE.
2. REFERENCE PLANE "B" IS DEFINED AS A PLANE PERPENDICULAR TO PLANE "A" AND PASSING THRU THE CENTER OF PIN AT PLANE "A" AS SHOWN.
3. REFERENCE PLANE "C" IS DEFINED AS A PLANE MUTUALLY PERPENDICULAR TO PLANES "A" AND "B" PASSING THRU THE CENTER OF PIN AT PLANE "A" AS SHOWN.
4. STANDARD DWARF SHELL OCTAL 5 PIN BASE (JETEC B5-45).
5. TO BE COUPLED TO A "DBW 1000 TYPE" FLANGE COUPLING.
6. THE FOLLOWING AREAS TO BE FREE FROM PAINT: PINS (DWARF OCTAL BASE), FACE OF OUTPUT FLANGE, AND PINS, REPELLER LEAD, TUNER AND TUNER HOUSING SUPPORT.
7. REFERS TO MAXIMUM TUNING RANGE (10 GRADUATION)
8. INCLUDES ANGULAR AS WELL AS LATERAL DEVIATIONS.
9. REFERS TO CENTER-LINE OF .625 MAXIMUM DIAMETER.
10. REFERS TO SIZE OF RADIATOR ONLY.

RAYTHEON

ELECTRON TUBE OUTLINE DRAWING

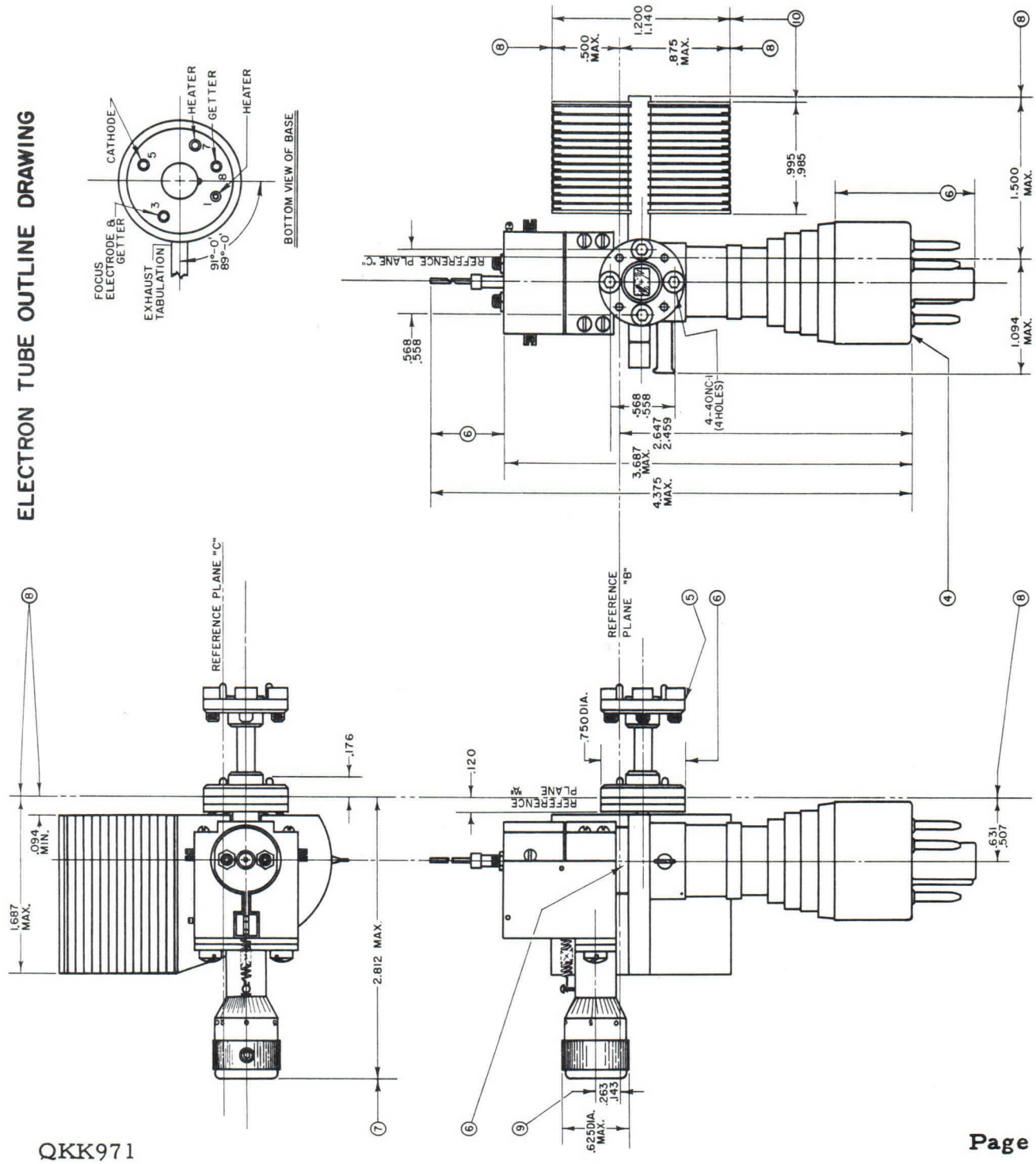

QKK971

The technical information on this data sheet is of a proprietory nature and is furnished as a customer service for private use only.

QKK965

PRELIMINARY

DATA SHEET

RAYTHEON *Excellence in Electronics*

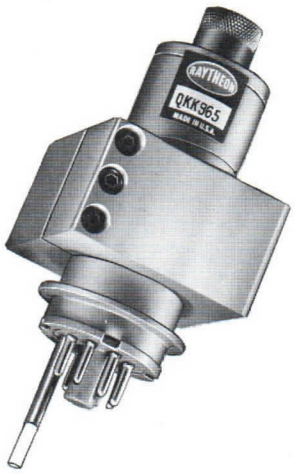

GENERAL DESCRIPTION

The type QKK965 is a velocity modulated oscillator of the single cavity (integral) reflex type designed for operation in the 5925 to 6425 Mc. range with a minimum power output of 1.0 watt. A control grid offers the unique advantage of close frequency control without deviating from the minimum distortion point on the reflector mode. This tube is of the coaxial output type and is connected to standard RG50/U waveguide as indicated on the attached drawing. In order to provide sufficient cooling, the tube is provided with either a flange to be attached to a heat sink or with cooling fins for forced air cooling.

GENERAL CHARACTERISTICS

ELECTRICAL

Heater Characteristics

Heater Voltage	6.3 V
Heater Current	0.675 A

Maximum Ratings

Resonator Voltage	800 Vdc
Resonator Current	100 mAdc
Reflector Voltage	
Minimum	-200 Vdc
Maximum	-600 Vdc
Heater-Cathode Voltage	± 100 Vdc

The values specified above must not be exceeded under any service condition. The ratings are limiting values above which the serviceability of any individual tube may be impaired. It does not necessarily follow that combinations of maximum ratings can be achieved simultaneously.

Typical Operating Conditions (VSWR 1.1 Max.)

Resonator Voltage	750 Vdc
Resonator Current	75 mAdc
Reflector Voltage	-250 -450 Vdc

RAYTHEON COMPANY | MICROWAVE AND POWER TUBE DIVISION | WALTHAM 54, MASS.

The specifications for this tube have not been finalized. The tube is being manufactured in limited quantities and is available for engineering analysis purposes only. This engineering information and/or delivery of sample tubes do not imply availability of tubes with the same electrical and/or mechanical characteristics. Changes in ratings and/ or dimensions may be made at our discretion as deemed advisable by manufacturing experience or other considerations. For current information concerning this tube contact the nearest Microwave and Power Tube Regional Sales Representative.

Electronic Tuning Range	35 Mc.
Modulation Sensitivity	0.4 Mc/Volt
Frequency Range	5925 - 6425 Mc.
Power Output	1.5 Watt

MECHANICAL

Mounting Position	Any Position
Dimensions	See Drawing
Base	Standard Octal with Enlarged No. 4 Pin
Maximum Shell Temperature	135°C

CONTROL GRID

At a fixed mechanical tuner setting a small frequency adjustment can be obtained by varying the control grid voltage. This special feature in conjunction with an AFC circuit permits compensation of temperature caused frequency drift while maintaining the reflector voltage at the maximum power and minimum distortion point on the operating mode.

REFLECTOR

The power supply furnishing the reflector potential must be insulated to withstand the total resonator and reflector voltage. In cases where modulating potentials bring the reflector voltage close to the minimum voltage, or where an extremely high reflector circuit impedance is required, a diode should be connected between cathode and reflector to prevent the reflector from going positive. If this precaution is not observed, damage to the reflector may result.

ELECTRONIC TUNING

With the mechanical tuning mechanism set near the desired frequency, vernier adjustment of the frequency may be accomplished by varying the reflector voltage. Maximum power output for a fixed mechanical tuner position, however, will be obtained at only one reflector value. If the mechanical tuning mechanism and the reflector voltage are mutually adjusted for a maximum power output, at a given frequency, and if the reflector voltage is then varied above and below the value frequency change between the half-power values is defined as electronic tuning range.

INSTALLATION

The tubes can be supplied with cooling fins for forced air cooling or with a flange as shown, to be attached to a heat sink. In either case, care should be taken to insure that the shell temperature does not exceed 135°C.

The operating characteristics listed herein will be achieved only if the tube is used with the recommended coax to waveguide transducer operating into a VSWR of 1.1 or less.

NOTES

1. THESE DIAMETERS SHALL BE CONCENTRIC WITH EACH OTHER WITHIN .010.
2. NICKEL (30 MSI SILVER PLATE PERMISSIBLE).
3. PITCH DIAMETER MUST ACCEPT CLASS 2 "GO" GAGE ONLY.
4. MINOR DIAMETER MUST NOT BE GREATER THAN .186.
5. USE HEXAGONAL KEY 5/32 ACROSS FLATS.
6. HEAT SINK MAY BE ROTATED TO SATISFY CUSTOMER REQUIREMENTS.
7. OTHER HEAT SINKS WITH SIMILAR COOLING CAPACITIES MAY BE SUBSTITUTED.

OUTLINE DRAWING
ELECTRON TUBE
QKK965

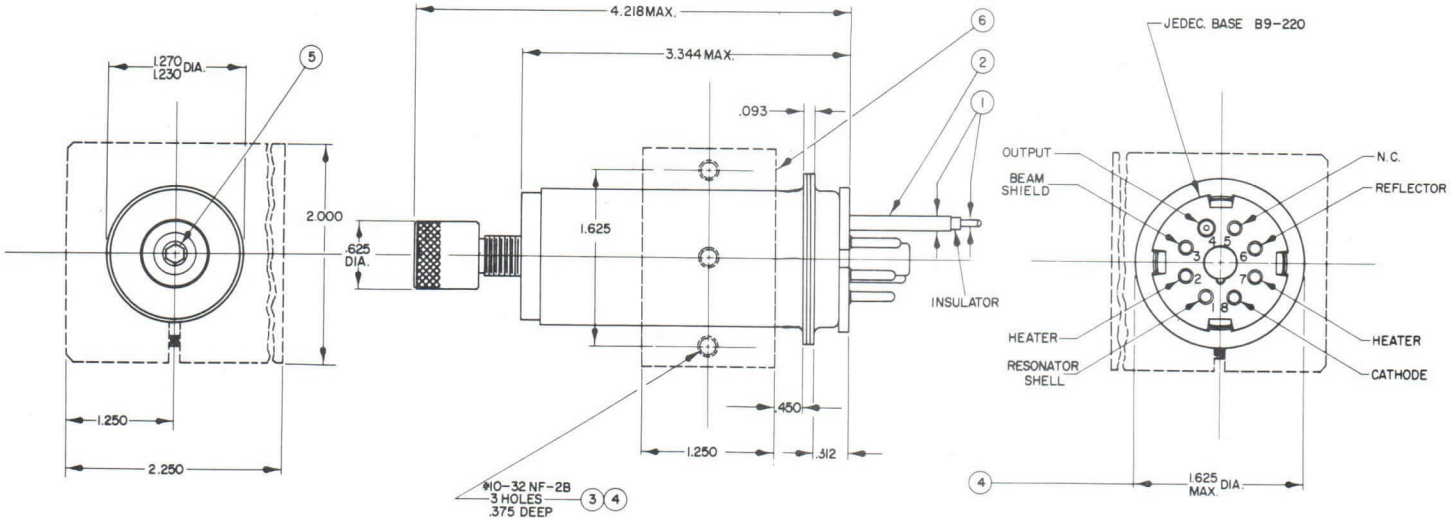

STANDARD OCTAL SOCKET
MODIFIED BY ENLARGING #4 CONTACT HOLE TO ADMIT TRANSDUCER. TOP OF TRANSDUCER FLUSH WITH TOP OF ACTUAL SOCKET.

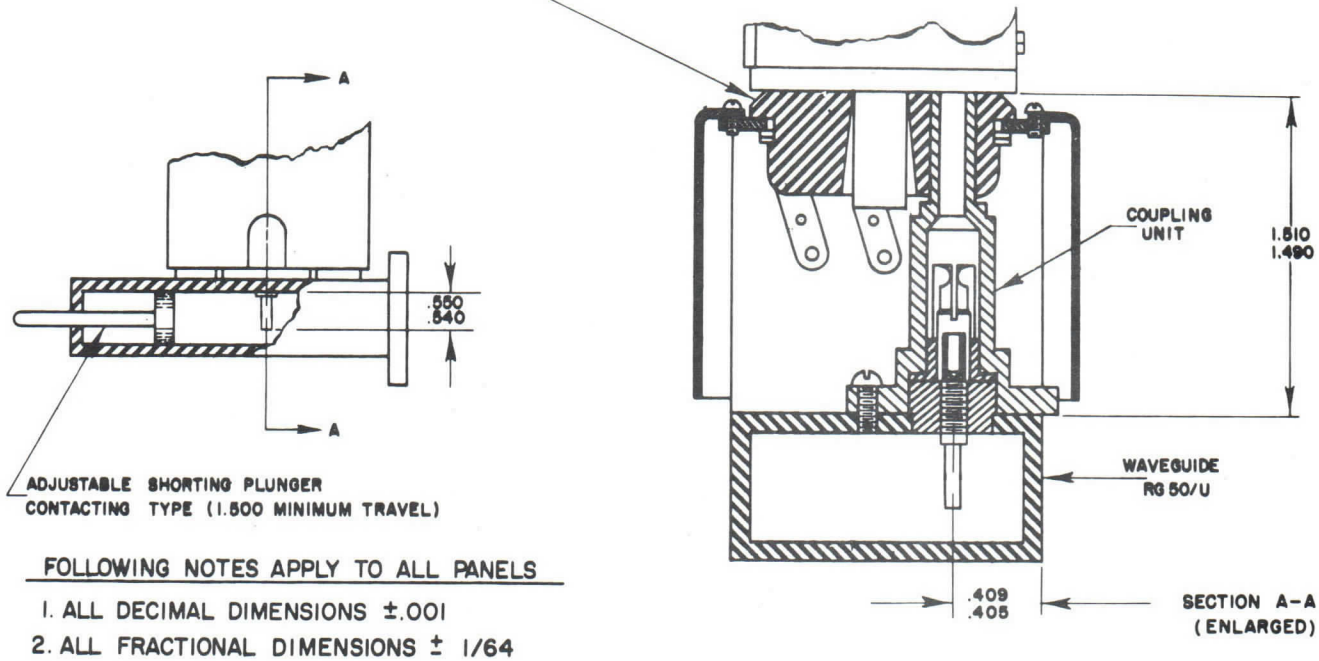

ADJUSTABLE SHORTING PLUNGER
CONTACTING TYPE (1.500 MINIMUM TRAVEL)

FOLLOWING NOTES APPLY TO ALL PANELS

1. ALL DECIMAL DIMENSIONS ±.001
2. ALL FRACTIONAL DIMENSIONS ± 1/64
3. ALL DIAMETERS TO BE CONCENTRIC ± .001
4. ALL DIMENSIONS GIVEN AS FINISHED

LAUNCHING SECTION DETAILS FOR QKK965

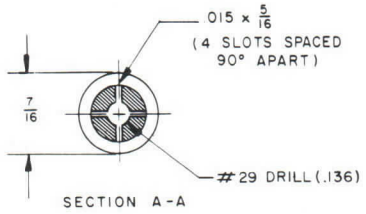

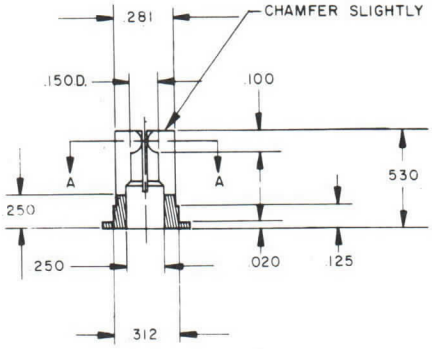

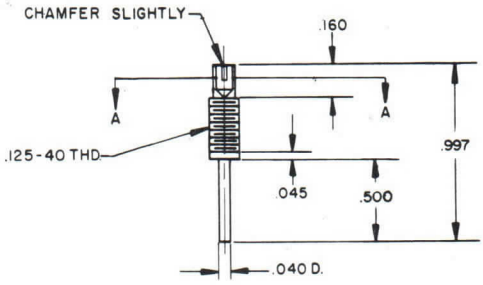

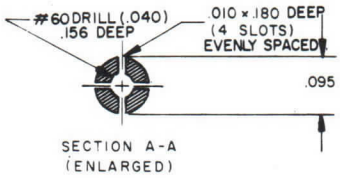

1. Allow .0005 on each surface for silver plate
2. Heat treat at 600° F. for 2 hours rock "C" 40-45

BERYLCO #25 or #40

TRANSDUCER COUPLING DETAILS

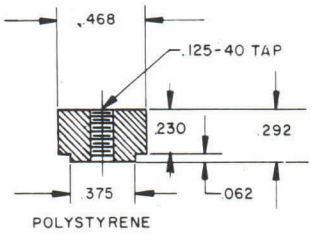

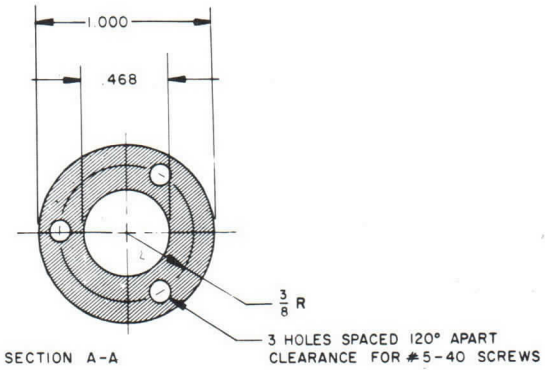

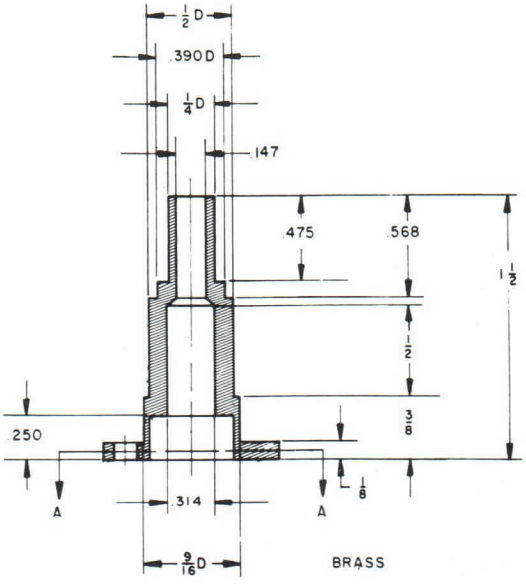

NOTES

1. All decimal dimensions ± .001
2. All fractional dimensions ± 1/64
3. All diameters to be concentric ± .001
4. All dimensions to be given as finished

The technical information on this data sheet is of a proprietory nature and is furnished as a customer service for private use only.

QKK977

PRELIMINARY

DATA SHEET

RAYTHEON

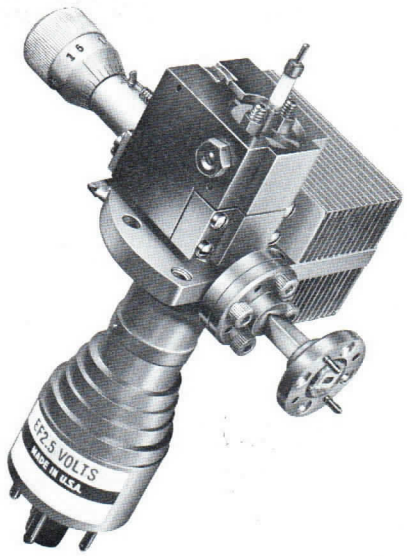

The QKK977 is a mechanically tuned reflex klystron oscillator designed for operation in the 88 to 101 Gc range with minimum output of 25 milliwatts. The RF output is through RG 138/U waveguide sealed by a mica window.

GENERAL CHARACTERISTICS

ELECTRICAL

Heater Characteristics

Heater Voltage	2.5 Volts
Heater Current	1.45 Amperes

Maximum Ratings

Resonator Voltage	1700 Volts
Resonator Current	60 Milliamps
Focus Electrode Voltage	-20 to -400 Volts
Reflector Electrode Voltage	-40 to -400 Volts
Heater Voltage	2.75 Volts AC or DC
Heater Current at 2.5 Volts	1.58 Amperes

Typical Operation

Resonator Voltage	1400 to 1700 Volts
Resonator Current	40 Milliamps
Focus Electrode Voltage	-150 Volts
Reflector Voltage Range (4 3/4 Mode)	-100 to -150 Volts
Power Output (Minimum)	25 Milliwatts
Electronic Tuning (Minimum)	90 Mc
Frequency Range	88,000 to 101,000 Mc

MECHANICAL

Base	Dwarf Octal
Cooling	Forced Air (7 cu. ft. / min.)
Tuner Turns Required to Cover Range	4 Approximately
Overall Dimensions including Waveguide	5 x 2 5/8 x 4 Inches
Waveguide	RG 138/U

Pin #	2	3	5	7	Top Cap
Element	Heater	Focus Electrode	Cathode	Heater	Reflector

8/61

The specifications for this tube have not been finalized. The tube is being manufactured in limited quantities and is available for engineering analysis purposes only. This engineering information and/or delivery of sample tubes do not imply availability of tubes with the same electrical and/or mechanical characteristics. Changes in ratings and/ or dimensions may be made at our discretion as deemed advisable by manufacturing experience or other considerations. For current information concerning this tube contact the nearest Microwave and Power Tube Regional Sales Representative.

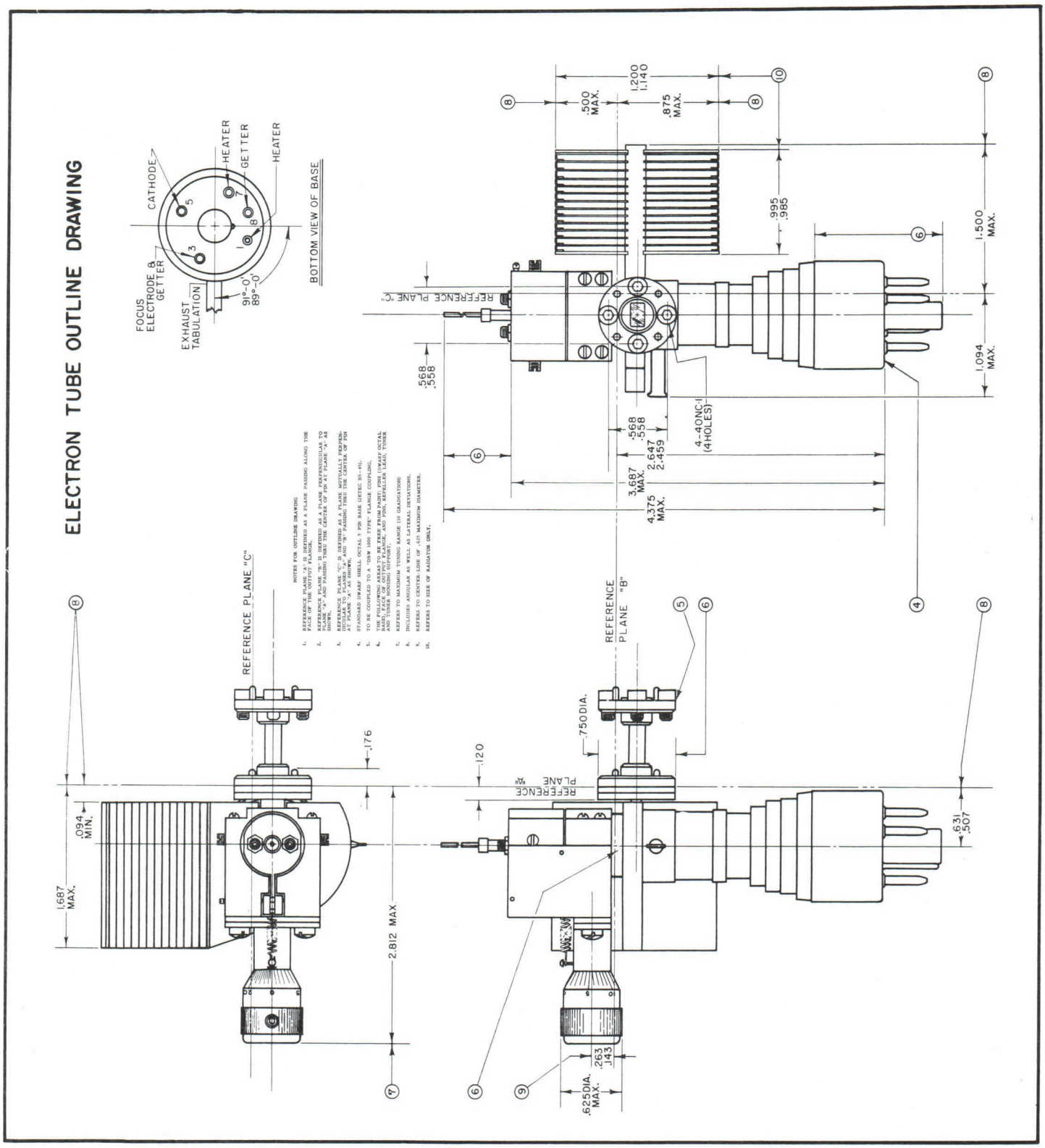

NOTES FOR OUTLINE DRAWING

1. REFERENCE PLANE "A" IS DEFINED AS A PLANE PASSING ALONG THE FACE OF THE OUTPUT FLANGE.
2. REFERENCE PLANE "B" IS DEFINED AS A PLANE PERPENDICULAR TO PLANE "A" AND PASSING THRU THE CENTER OF PIN AT PLANE "A" AS SHOWN.
3. REFERENCE PLANE "C" IS DEFINED AS A PLANE MUTUALLY PERPENDICULAR TO PLANES "A" AND "B" PASSING THRU THE CENTER OF PIN AT PLANE "A" AS SHOWN.
4. STANDARD DWARF SHELL OCTAL 5 PIN BASE (JETEC 35-45).
5. TO BE COUPLED TO A "DBW 1000 TYPE" FLANGE COUPLING.
6. THE FOLLOWING AREAS TO BE FREE FROM PAINT: PINS (DWARF OCTAL BASE), FACE OF OUTPUT FLANGE, AND PINS, REFELLER LEAD, TUNER AND TUNER HOUSING SUPPORT.
7. REFERS TO MAXIMUM TUNING RANGE (10 GRADUATION)
8. INCLUDES ANGULAR AS WELL AS LATERAL DEVIATIONS.
9. REFERS TO CENTER-LINE OF .625 MAXIMUM DIAMETER.
10. REFERS TO SIZE OF RADIATOR ONLY.

The technical information on this data sheet is of a proprietory nature and is furnished as a customer service for private use only.

QKK991 OBJECTIVE DATA SHEET

RAYTHEON

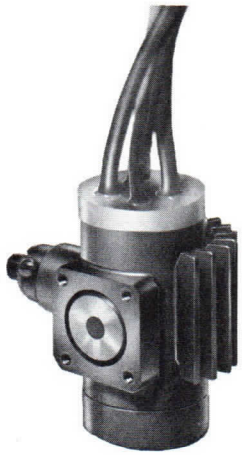

The QKK991 is a rugged reflex klystron oscillator of all metal and ceramic design. The mechanical tuner provides tuning over the 24,800 to 25,200 Mc. range with a typical power output of 250 mW. The RF output is through waveguide sealed by a ceramic window. The output flange mates with a standard UG595/U cover-flange or a UG596/U choke-flange.

ELECTRICAL CHARACTERISTICS

Heater Voltage	6.3 V
Heater Current	680 A
Resonator Voltage	600 V
Resonator Current	65 mA typical, 75 mA max.
Reflector Voltage Range	-250 to -350 V
Power Output	200 mW min. 250 mW typical
Electronic Tuning	100 Mc typical, 65 Mc min.
Frequency Range	24,800 to 25,200 Mc
Temperature Coefficient	0.5 Mc/°C

MECHANICAL CHARACTERISTICS

Base				Potted, with flying leads
Lead Color	Yellow	Green	Brown	Grey
Element	Heater	H - K	Resonator	Reflector
Cooling				Forced air, 10 cf m
Tuner turns required to cover range				Approx. 10
Overall dimensions including waveguide				1.6 x 2.2 x 1"
Flange				UG595/U
Waveguide				RG66/U, RG53/U

TUNING

Mechanical tuning is accomplished by the motion of a dielectric rod, controlled by the external allen-head tuning knob and a differential screw. This arrangement provides a great flexibility, in that the tuner may be placed anywhere on the circumference of the resonator at 90° from the output, and the differential screw can be modified to supply any desired tuning rate.

6/62

RAYTHEON COMPANY | Microwave and Power Tube Division | WALTHAM 54, MASS.

The specifications for this tube have not been finalized. The tube is in the development stage and is available for engineering analysis purposes only. This engineering information and/or delivery of sample tubes do not imply availability of tubes with the same electrical and/or mechanical characteristics. Changes in ratings and/or dimensions may be made at our discretion as deemed advisable by manufacturing experience or other considerations. For current information concerning this tube contact the nearest Microwave and Power Tube Regional Sales Representative.

This tuner provides the ruggedness and frequency stability advantages of a fixed cavity, and is less sensitive to load impedance variations than external cavity tuning.

POWER OUTPUT

The improved electron gun and low interception vane grid permit operation at higher input power levels if increased power output is desired.

TUBE LIFE

Advanced electrical and mechanical design coupled with the most modern fabricating techniques assure thousands of hours of operating life, extended shelf life, and stable performance. The tuner is capable of many thousands of tuning cycles.

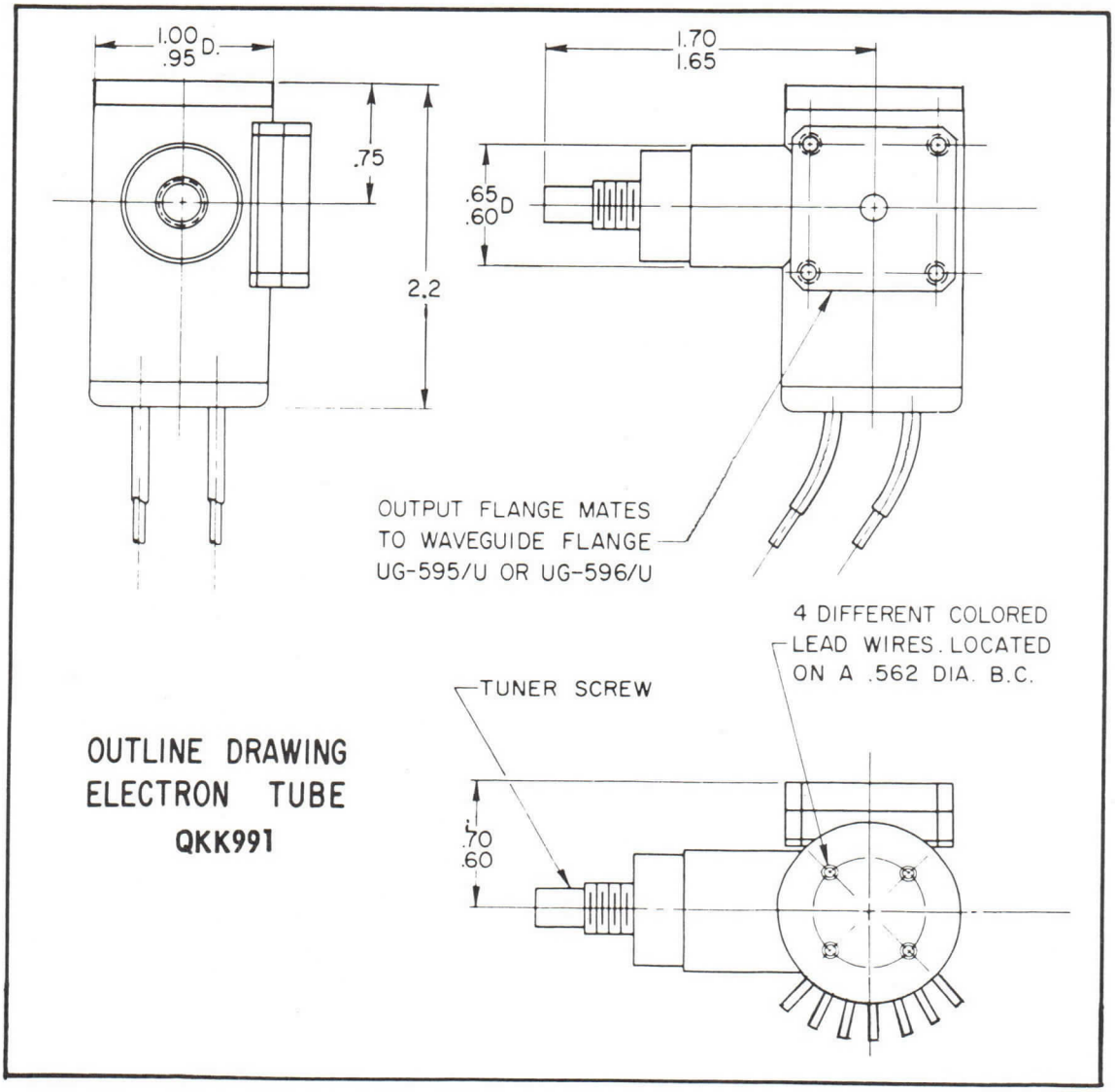

OUTLINE DRAWING
ELECTRON TUBE
QKK991

The technical information on this data sheet is of a proprietory nature and is furnished as a customer service for private use only.

QKK1017

OBJECTIVE

DATA SHEET

RAYTHEON

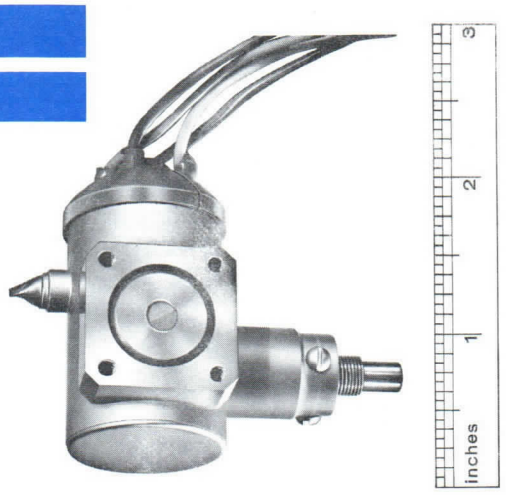

The type QKK 1017 is a rugged reflex klystron oscillator of all metal ceramic design. The mechanical tuner provides tuning over the 23,500 to 24,500 Mc. range with a minimum power output of 50 mW. The RF output is through waveguide sealed by a ceramic window. The output flange mates with a standard UG-595/U cover-flange or a UG-596/U choke-flange.

GENERAL CHARACTERISTICS

ELECTRICAL

Heater Characteristics

Heater Voltage	6.3 Volts
Heater Current	680 Milliamps

Typical Operation

Resonator Voltage	425 Volts
Resonator Current	60 Milliamps
Reflector Voltage Range	-100 to -150 Volts
Power Output	60 Milliwatts
Electronic Tuning	100 Mc
Frequency Range	23,500 to 24,500 Mc
Temperature Coefficient	$\pm$ 0.5 Mc/°C

MECHANICAL

Base	Potted, with flying leads
Lead Color	Yellow Green Brown Grey
Element	Heater H-K Resonator Reflector
Cooling	Convection (No blower required)
Tuner Turns Required to Cover Range	10 Approx. (See Design Features)
Overall Dimensions-Including Waveguide	1.6" x 2.2" x 1"
Flange	UG-595/U
Waveguide	RG-66/U, RG-53/U

DESIGN FEATURES

MECHANICAL TUNING

Mechanical tuning is accomplished by the motion of a dielectric rod, controlled by the external allen-head tuning knob and a differential screw. This arrangement provides a great flexibility, in that the tuner may be placed anywhere on the circumference of the resonator at least 90° from the output, and the differential screw can be modified to supply any desired tuning rate.

9/1/61

The specifications for this tube have not been finalized. The tube is in the development stage and is available for engineering analysis purposes only. This engineering information and/or delivery of sample tubes do not imply availability of tubes with the same electrical and/or mechanical characteristics. Changes in ratings and/or dimensions may be made at our discretion as deemed advisable by manufacturing experience or other considerations. For current information concerning this tube contact the nearest Microwave and Power Tube Regional Sales Representative.

This tuner provides the ruggedness and frequency stability advantages of a fixed cavity, and is less sensitive to load impedance variations than external cavity tuning.

POWER OUTPUT

The improved electron gun and low interception vane grid permit operation at higher input power levels if increased power output is desired.

TUBE LIFE

Advanced electrical and mechanical design coupled with the most modern fabricating techniques assure thousands of hours of operating life, extended shelf life, and stable performance. The tuner is capable of many thousands of tuning cycles.

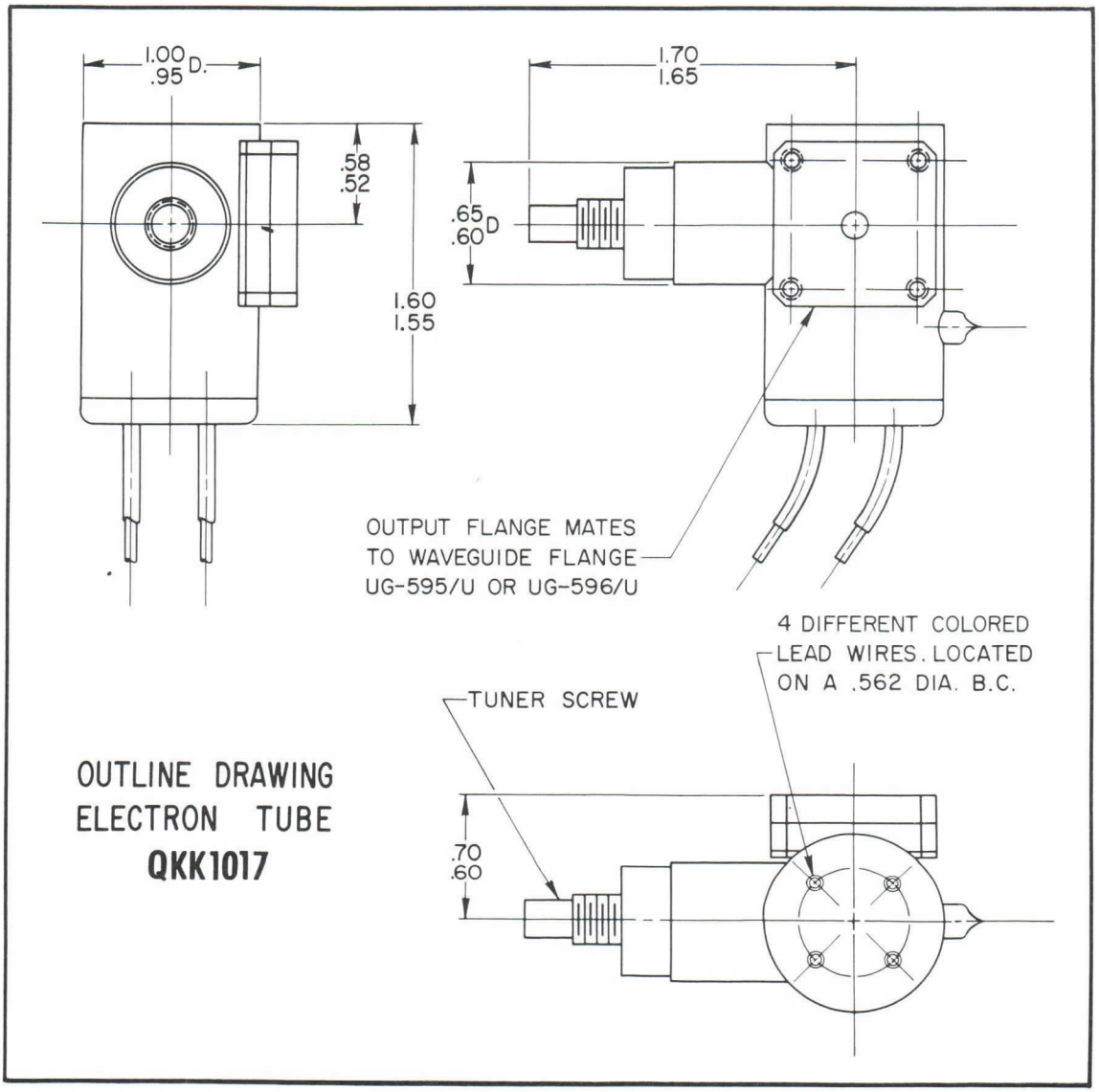

The technical information on this data sheet is of a proprietory nature and is furnished as a customer service for private use only.

QKK1022 OBJECTIVE DATA SHEET

RAYTHEON

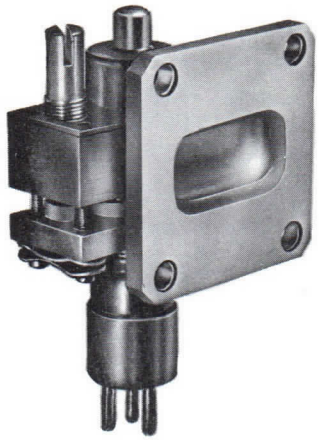

The QKK1022 is a rugged reflex klystron oscillator designed specifically for parametric amplifier pump applications. The mechanical tuner provides tuning over the 9.5 to 10.9 kMc range with typical power output of 125 mW.

ELECTRICAL CHARACTERISTICS

Heater Voltage	6.3 V
Heater Current	1.2 A
Resonator Voltage	350 V (typical); 450 V (max.)
Resonator Current	35 mA (typical); 40 mA (max.)
Reflector Voltage Range (4 3/4 mode)	-200 to -300 V
Electronic Tuning	50 Mc (typical); 30 Mc (min.)
Frequency Range	9500 to 10,900 Mc
Power	100 mW (min.)

MECHANICAL CHARACTERISTICS

Cooling	Forced Air Normally Required: 10 cfm
Max. Shell Temperature	150° C
Max. Base or Cap Temperature	120° C
Base	Three-pin Pee Wee
Flange	UG 39/U
Waveguide	RG 52/U

6/62

RAYTHEON COMPANY | Microwave and Power Tube Division | WALTHAM 54, MASS.

The specifications for this tube have not been finalized. The tube is in the development stage and is available for engineering analysis purposes only. This engineering information and/or delivery of sample tubes do not imply availability of tubes with the same electrical and/or mechanical characteristics. Changes in ratings and/or dimensions may be made at our discretion as deemed advisable by manufacturing experience or other considerations. For current information concerning this tube contact the nearest Microwave and Power Tube Regional Sales Representative.

REF.	DIMENSIONS
A	1.284 MAX 1.276 MIN.
B	.187 NOM.
C	.070 MAX .010 MIN.
D	1.224 MAX. 1.216 MIN.
E	3.125 MAX
F	1.00 MAX.
G	.219 DIA. NOM. WITH .185 DIA.
	NOM REMOVABLE INSERTS
H	.160 MIN
J	.936 MAX. .850 MIN.
K	1.75 MAX
L	1.75 MAX.
M	.437 NOM.

NOTE:

EYELET-TYPE INSERTS IN THE FLANGE MOUNTING HOLES ARE 0.219 OD., 0.185 I.D., NOMINAL, AND ARE EASILY REMOVABLE FROM REAR OF FLANGE. WITH INSERTS IN PLACE, THE MOUNTING HOLES PROVIDE CLEARANCE FOR #8 SCREWS. WITH INSERTS REMOVED, THE MOUNTING HOLES PERMIT USE OF INSULATING BUSHINGS WHERE d-c ISOLATION BETWEEN TUBE FLANGE AND WAVEGUIDE SYSTEM IS DESIRED.

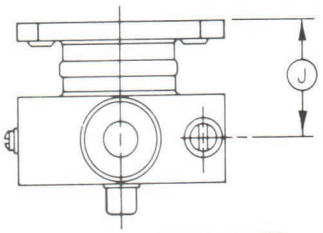

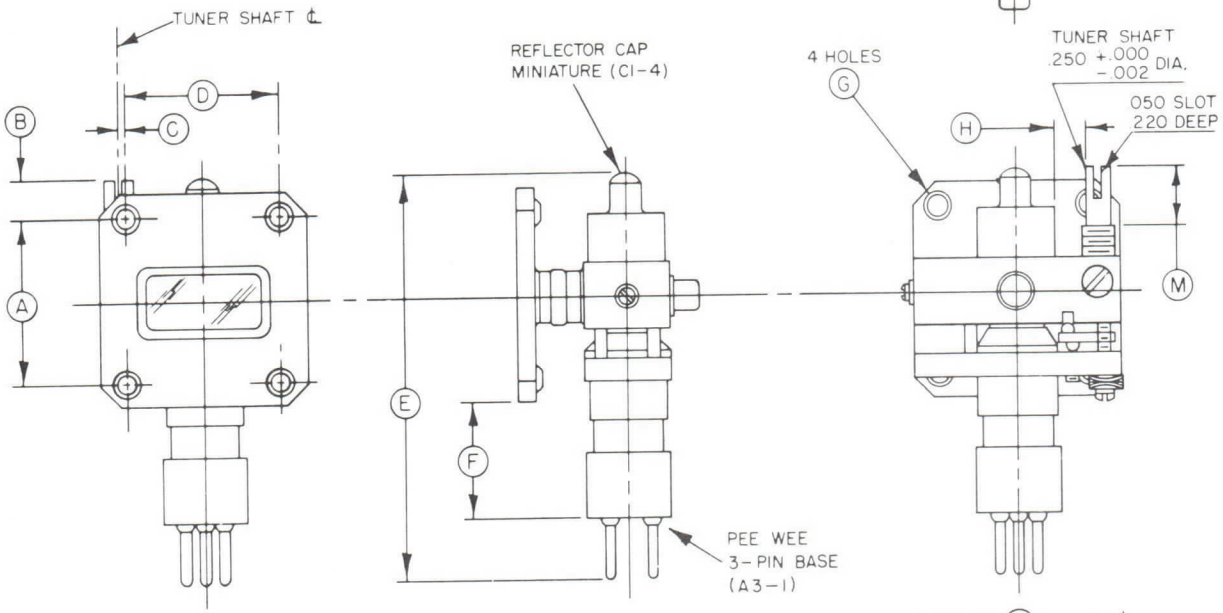

BASE CONNECTIONS

PIN 1* HEATER
PIN 2* CATHODE
PIN 3 HEATER

* PINS 1&2 ARE INTERNALLY CONNECTED

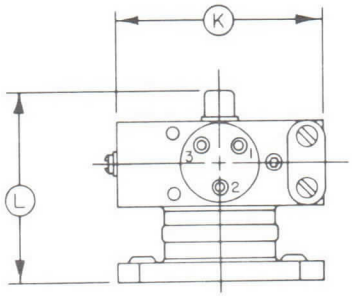

OUTLINE DRAWING
QKK1022

The technical information on this data sheet is of a proprietory nature and is furnished as a customer service for private use only.

QKK1043 **OBJECTIVE DATA SHEET**

RAYTHEON *Excellence in Electronics*

The QKK1043 is a rugged reflex klystron oscillator of all metal and ceramic design. The mechanical tuner provides tuning over the 17,000 - 18,000 Mc range with a minimum power output of 300 mW. The RF output is through waveguide sealed by a ceramic window.

ELECTRICAL CHARACTERISTICS

Heater Voltage	6.3 V
Heater Current	1.0 A
Resonator Voltage	750 V
Resonator Current	70 mA
Reflector Voltage Range	-100 to -300 V
Power Output	300 mW
Electronic Tuning	60 Mc
Frequency Range	17,000 to 18,000 Mc

MECHANICAL CHARACTERISTICS

Base	Potted, with flying leads			
Lead Color	Yellow	Green	Brown	Grey
Element	Heater	H-K	Resonator	Reflector
Cooling	Forced air, 10 cfm			
Tuner turns to cover range	Approx. 10.			
Overall dimensions including waveguide	1 1/4" square			

MECHANICAL TUNING

Mechanical tuning is accomplished by the motion of a dielectric rod, controlled by the external allen-head tuning knob and a differential screw. This arrangement provides a great flexibility, in that the tuner may be placed anywhere on the circumference of the resonator at 90° from the output, and the differential screw can be modified to supply any desired tuning rate.

6/62

The specifications for this tube have not been finalized. The tube is in the development stage and is available for engineering analysis purposes only. This engineering information and/or delivery of sample tubes do not imply availability of tubes with the same electrical and/or mechanical characteristics. Changes in ratings and/or dimensions may be made at our discretion as deemed advisable by manufacturing experience or other considerations. For current information concerning this tube contact the nearest Microwave and Power Tube Regional Sales Representative.

The technical information on this data sheet is of a proprietory nature and is furnished as a customer service for private use only.

QKK1045 OBJECTIVE DATA SHEET

RAYTHEON

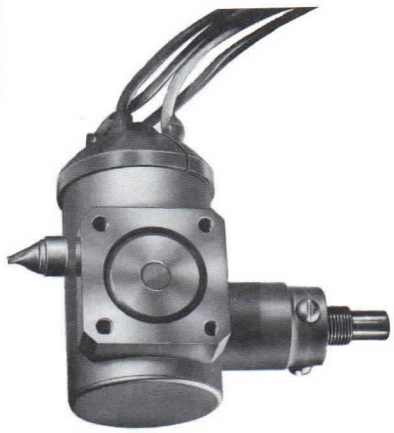

The type QKK1045 is a rugged reflex klystron oscillator of all metal and ceramic design. The mechanical tuner provides tuning over the 23,500 to 24,500 Mc range with a minimum power output of 100 mW. The RF output is through waveguide sealed by a ceramic window. The output flange mates with a standard UG595/U cover-flange or a UG596/U choke-flange.

ELECTRICAL CHARACTERISTICS

Heater Voltage	6.3 V
Heater Current	680 mA
Resonator Voltage	450 V
Resonator Current	60 mA
Reflector Voltage Range	-200 to -300 V
Power Output	125 mW typical, 100 mW min.
Electronic Tuning	100 Mc
Frequency Range	23,500 to 24,500 Mc
Temperature Coefficient	0.5 Mc/°C

MECHANICAL CHARACTERISTICS

Base	Potted, with flying leads			
Lead Color	Yellow	Green	Brown	Grey
Element	Heater	H - K	Resonator	Reflector
Cooling	Convection			
Tuner turns to cover range	Approx. 10			
Overall dimension including waveguide	1.6 x 2.2 x 1"			
Weight	5 oz.			
Flange	UG595/U			
Waveguide	RG66/U, RG52/U			

TUNING

Mechanical tuning is accomplished by the motion of a dielectric rod, controlled by the external allen-head tuning knob and a differential screw. This arrangement provides a great flexibility in that the tuner may be placed anywhere on the circumference of the resonator at least 90° from the output, and the differential screw can be modified to supply any desired tuning rate.

6/62

RAYTHEON COMPANY | Microwave and Power Tube Division | WALTHAM 54, MASS.

The specifications for this tube have not been finalized. The tube is in the development stage and is available for engineering analysis purposes only. This engineering information and/or delivery of sample tubes do not imply availability of tubes with the same electrical and/or mechanical characteristics. Changes in ratings and/or dimensions may be made at our discretion as deemed advisable by manufacturing experience or other considerations. For current information concerning this tube contact the nearest Microwave and Power Tube Regional Sales Representative.

This tuner provides the ruggedness and frequency stability advantages of a fixed cavity, and is less sensitive to load impedance variations than external cavity tuning.

POWER OUTPUT

The improved electron gun and low interception vane grid permit operation at higher input power levels if increased power output is desired.

TUBE LIFE

Advanced electrical and mechanical design coupled with the most modern fabricating techniques assure thousands of hours of operating life, extended shelf life, and stable performance. The tuner is capable of many thousands of tuning cycles.

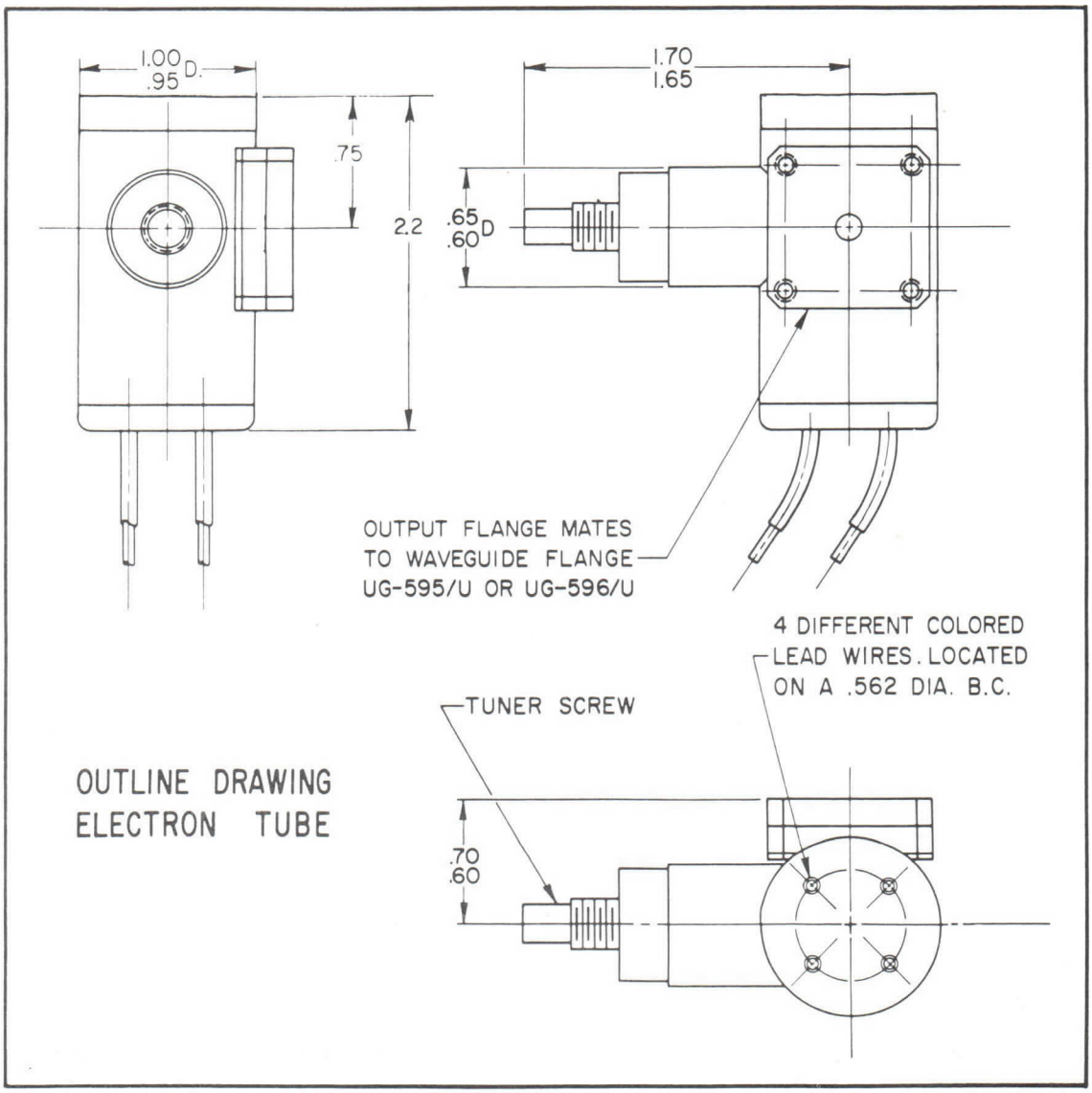

OUTLINE DRAWING
ELECTRON TUBE

The technical information on this data sheet is of a proprietory nature and is furnished as a customer service for private use only.

QKK1048 **OBJECTIVE DATA SHEET**

RAYTHEON *Excellence in Electronics*

GENERAL DESCRIPTION

The QKK1048 is a rugged reflex klystron oscillator designed specifically for parametric amplifier pump applications. The mechanical tuner provides tuning over the 10.5 to 12.4 kMc range with typical power output of 180 mW.

ELECTRICAL CHARACTERISTICS

Heater Voltage	6.3 V
Heater Current	1.2 A
Resonator Voltage	400 V typical, 450 V max.
Resonator Current	40 mW typical, 50 mA max.
Reflector Voltage Range (4 3/4 mode)	-200 to -300 V
Electronic Tuning	50 Mc typical, 30 Mc min.
Frequency Range	10,500 to 12,400 Mc
Power	150 mW min., 180 mW typical

MECHANICAL CHARACTERISTICS

Cooling	Forced Air Cooling Normally Required (10 cfm)
Max. Shell Temperature	150° C
Max. Base & Pin Temperature	120° C
Base	Three-pin Pee Wee
Flange	UG 39/U
Waveguide	RK 52/U

6/62

The specifications for this tube have not been finalized. The tube is in the development stage and is available for engineering analysis purposes only. This engineering information and/or delivery of sample tubes do not imply availability of tubes with the same electrical and/or mechanical characteristics. Changes in ratings and/or dimensions may be made at our discretion as deemed advisable by manufacturing experience or other considerations. For current information concerning this tube contact the nearest Microwave and Power Tube Regional Sales Representative.

OUTLINE DRAWING ELECTRON TUBE QKK1048

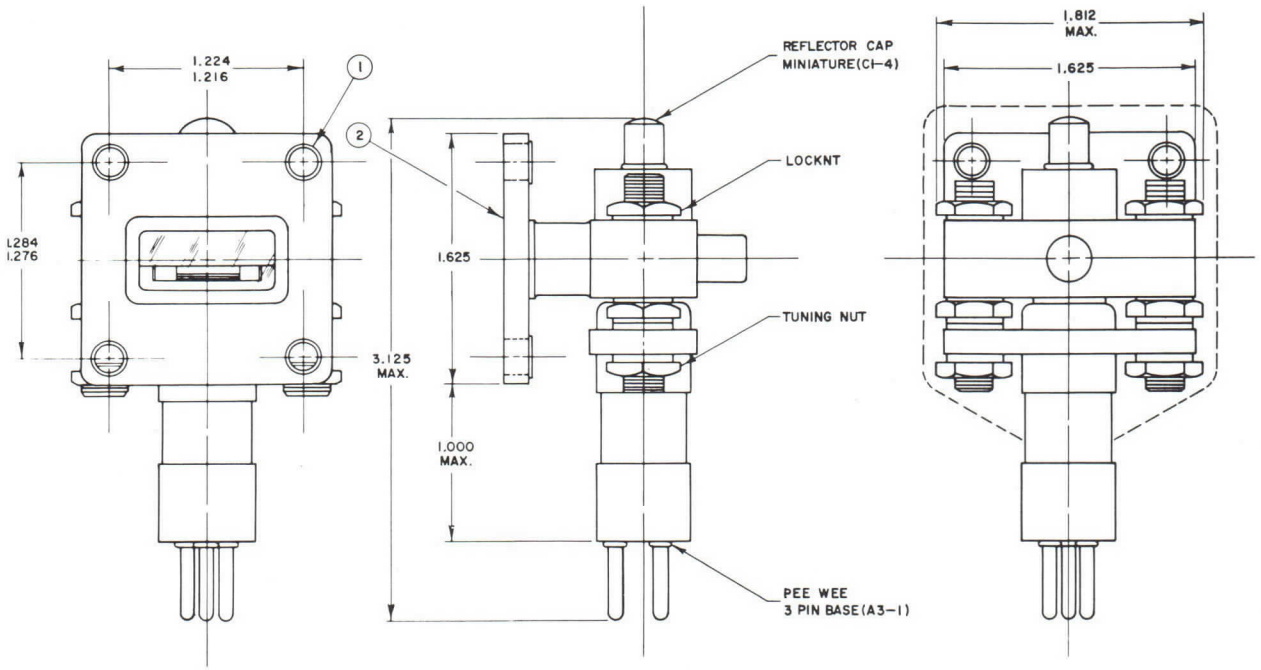

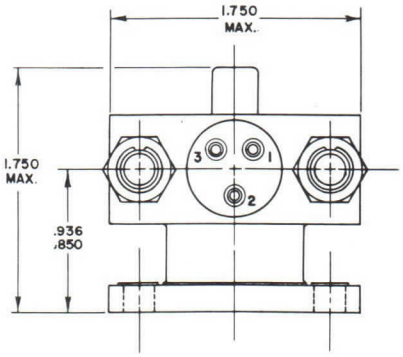

1. 4 HOLES .219 DIA. WITH .185 DIA. REMOVABLE INSERT.
2. TO BE COUPLED TO A UG 39/U OR EQUIVALENT STANDARD FLANGE

BASE CONNECTIONS
PIN # 1 HEATER
PIN # 2 CATHODE
PIN # 3 HEATER

PINS 1 AND 2 ARE INTERNALL CONNECTED

The technical information on this data sheet is of a proprietory nature and is furnished as a customer service for private use only.

QKK 1041 OBJECTIVE DATA SHEET

RAYTHEON

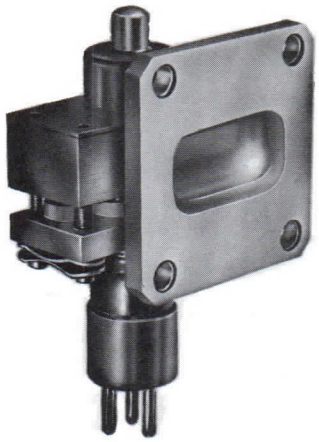

GENERAL DESCRIPTION

The QKK1041 is a rugged reflex klystron oscillator designed specifically for parametric amplifier pump applications. The mechanical tuner provides tuning over the 10,950 to 11,050 Mc range with typical power output of 150 mW.

ELECTRICAL CHARACTERISTICS

Heater Voltage	6.3 V
Heater Current	1.2 A
Resonator Voltage	350 V typical, 450 V max.
Resonator Current	35 mA typical, 45 mA max.
Reflector Voltage Range (4 3/4 mode)	-250 to -350 V
Electronic Tuning	50 Mc typical, 30 mC min.
Frequency Range	10,950 to 11,050 Mc.
Power	100 mW min., 150 mW typical

MECHANICAL CHARACTERISTICS

Cooling	Forced Air Cooling Normally required 10 cfm
Max. Shell Temperature	150° C
Max. Base or Cap Temperature	120° C
Base	Three-pin Pee Wee
Flange	UF 39/U
Waveguide	RG52/U

6/62

RAYTHEON COMPANY | Microwave and Power Tube Division | WALTHAM 54, MASS.

The specifications for this tube have not been finalized. The tube is in the development stage and is available for engineering analysis purposes only. This engineering information and/or delivery of sample tubes do not imply availability of tubes with the same electrical and/or mechanical characteristics. Changes in ratings and/or dimensions may be made at our discretion as deemed advisable by manufacturing experience or other considerations. For current information concerning this tube contact the nearest Microwave and Power Tube Regional Sales Representative.

REF.	DIMENSIONS
A	1.284 MAX. 1.276 MIN.
B	.187 NOM.
C	.070 MAX .010 MIN.
D	1.224 MAX. 1.216 MIN.
E	3.125 MAX.
F	1.00 MAX.
G	.219 DIA. NOM. WITH .185 DIA.
	NOM REMOVABLE INSERTS
H	.160 MIN.
J	.936 MAX. .850 MIN.
K	1.75 MAX.
L	1.75 MAX.
M	.437 NOM.

NOTE:

EYELET-TYPE INSERTS IN THE FLANGE MOUNTING HOLES ARE 0.219 O.D., 0.185 I.D., NOMINAL, AND ARE EASILY REMOVABLE FROM REAR OF FLANGE. WITH INSERTS IN PLACE, THE MOUNTING HOLES PROVIDE CLEARANCE FOR # 8 SCREWS. WITH INSERTS REMOVED, THE MOUNTING HOLES PERMIT USE OF INSULATING BUSHINGS WHERE d-c ISOLATION BETWEEN TUBE FLANGE AND WAVEGUIDE SYSTEM IS DESIRED.

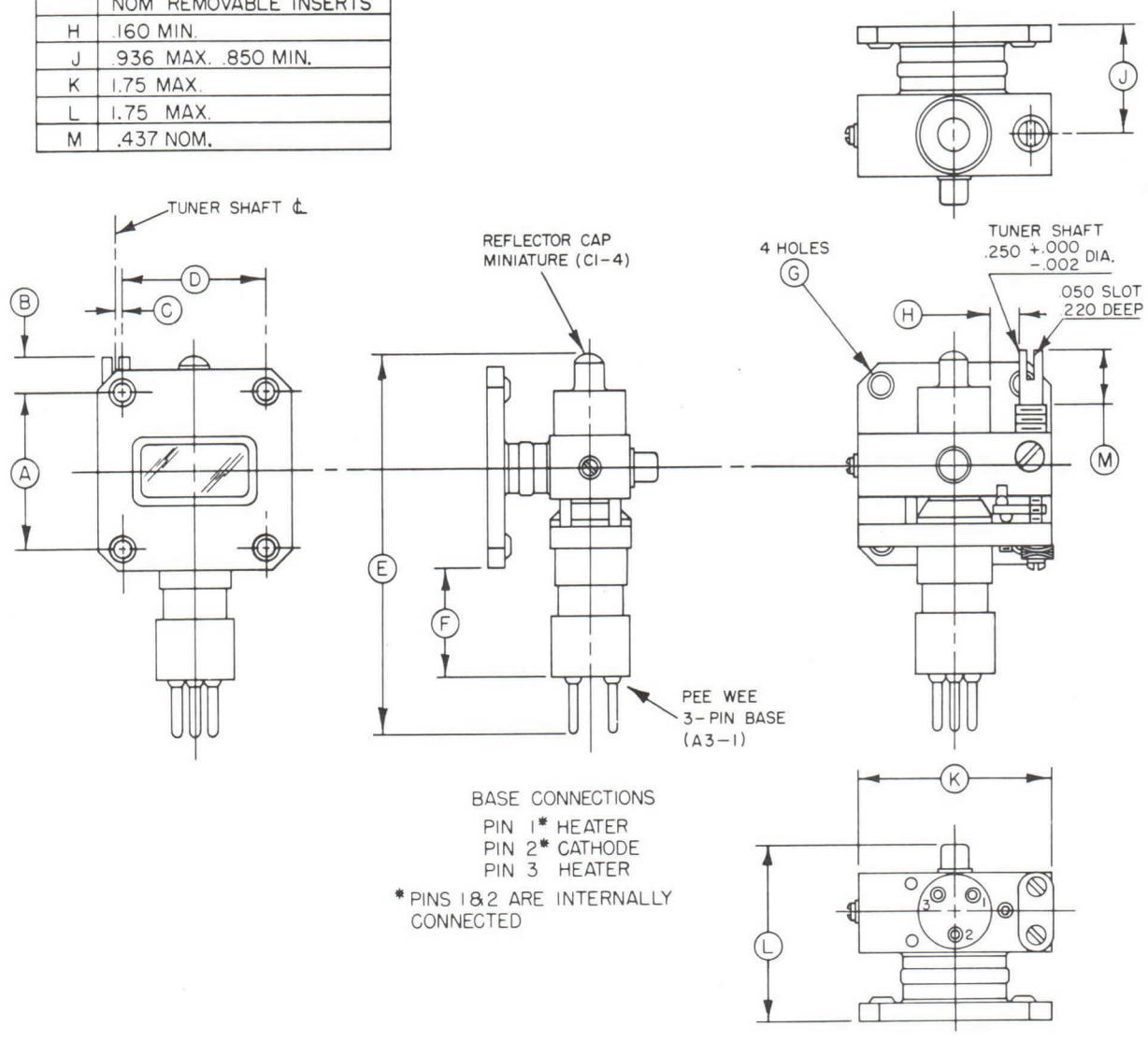

BASE CONNECTIONS

PIN 1* HEATER
PIN 2* CATHODE
PIN 3 HEATER

* PINS 1&2 ARE INTERNALLY CONNECTED

OUTLINE DRAWING

The technical information on this data sheet is of a proprietory nature and is furnished as a customer service for private use only.

QKK 1074 / 1075 / 1076

PRELIMINARY

DATA SHEET

RAYTHEON

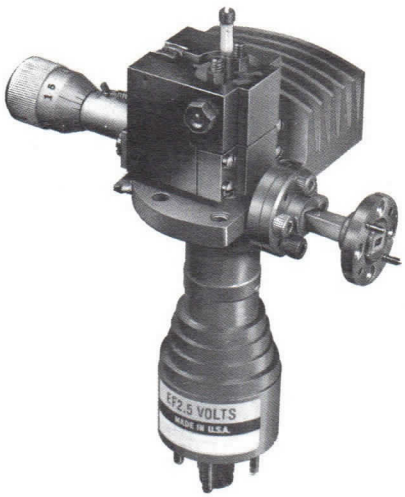

These tube types are mechanically tuned reflex klystron oscillators designed for operation in the 91,000 to 120,000 megacycle range with an average power output of 25 milliwatts. These tubes offer single vernier adjustment and single mode operation for full frequency coverage. The RF output is through waveguide sealed by a mica window.

GENERAL CHARACTERISTICS

Heater

Heater Voltage	2.5 Volts ± 10%
Heater Current	1.45 Amperes

Maximum Ratings

Resonator Potential	1800 Volts
Cathode Current - QKK1074	60 mA
Cathode Current - QKK1075 - QKK1076	70 mA
Reflector Potential	-40 to -500 Volts
Focus Grid Potential	-20 to -300 Volts
Anode Block Temperature	100° C

The values specified above must not be exceeded under any service condition. The ratings are limiting values above which the serviceability of any individual tube may be impaired. It does not necessarily follow that combinations of maximum ratings can be attained simultaneously.

TYPICAL OPERATION

Resonator Potential (Fixed for each tube)	
QKK1074	1700 Volts
QKK1075 - QKK1076	1800 Volts
Focus Grid Potential (Fixed for each tube)	-20 to -300 Volts
Cathode Current	
QKK1074	50 mA
QKK1075 - QKK1076	60 mA
Reflector Potential	-40 to -450 Volts
Power Output (Minimum into a matched load)	
QKK1074	10 mW
QKK1075 - QKK1076	5 mW
Frequency Range	
QKK1074	91,000 to 101,000
QKK1075	100,000 to 110,000
QKK1076	109,000 to 120,000

6/62

The specifications for this tube have not been finalized. The tube is being manufactured in limited quantities and is available for engineering analysis purposes only. This engineering information and/or delivery of sample tubes do not imply availability of tubes with the same electrical and/or mechanical characteristics. Changes in ratings and/ or dimensions may be made at our discretion as deemed advisable by manufacturing experience or other considerations. For current information concerning this tube contact the nearest Microwave and Power Tube Regional Sales Representative.

MECHANICAL

Base					Dwarf Octal	
Pin Number	1	3	5	7	Shell	Top Cap
Element	H	Focus Electrode	K	H	Anode	Reflector

Mounting ..... Any Position
Cooling ..... Forced Air (7 cu. ft/min)
Frequency Range ..... 7 to 12 Turns of Tuner Knob
Overall Dimensions Including Waveguide ..... 5 x 2 3/8 x 4 Inches
Flange (mates with) UG-387/U
Waveguide RG-138/U

DETAILED ELECTRICAL INFORMATION

(1) WARNING

ANY ATTEMPT TO OPERATE THESE TUBES WITH THE REFLECTOR NOT CONNECTED OR WITH MORE THAN 100,000 OHMS BETWEEN REFLECTOR AND CATHODE WILL SEVERELY DAMAGE THE TUBE. Make certain that the reflector lead is connected before applying any voltages. If the reflector circuit is fused, provide a 10,000 ohm resistor as a bypass around the fuse to prevent operating the tube with no reflector connection should the fuse blow.

CATHODE

In most applications, the metal shell (resonator) is operated at ground potential. The cathode is therefore negative with respect to ground by the amount of the resonator potential and must not be grounded. THESE TUBE TYPES MAY DEVELOP A HEATER TO CATHODE SHORT. THEREFORE, TO PREVENT HEATER BURNOUT, THE CATHODE SHOULD NOT BE CONNECTED TO THE HEATER. Heater to cathode short will not cause tube malfunction or shortness of life if this simple rule is observed. In all cases where the resonator is operated at ground potential the heater transformer must be insulated to withstand the maximum resonator voltage.

In applications where the metal envelope (resonator) is not at ground potential, it is essential that the tube be surrounded by a grounding shield to avoid injury to the operator. Adequate ventilation must be provided through this sheild to keep the ambient temperature of the chamber below a maximum value. The cathode current can be adjusted to the proper value by adjusting the focus grid voltage.

REFLECTOR

The reflector electrode is connected to the small cap on the top of the tube. The ceramic stem supporting the reflector must be carefully protected against rough handling.

The power supply furnishing the reflector potential must be insulated to withstand the total resonator and reflector voltage. The reflector must never be allowed to become positive with respect to the cathode. If this precaution is not observed, damage to the reflector will result. In cases where modulating potentials bring the reflector voltage close to the minimum specified value a diode should be connected between cathode and reflector to prevent the reflector from going positive. ALSO, IT IS REQUIRED THAT THE APPLICATION OF REFLECTOR VOLTAGE PRECEDE THE APPLICATION OF RESONATOR VOLTAGE.

FREQUENCY STABILITY

To obtain the most stable operation from this tube, the reflector and resonator voltage supplies should be very well regulated. It is also essential that this tube be operated at a near constant ambient temperature.

MECHANICAL TUNING MECHANISM

Clockwise rotation of the tuning knob decreases the frequency. Care should be taken not to exceed the maximum clockwise limit of the tuning knob, since further rotation may damage the tuning mechanism.

ELECTRONIC TUNING

With the mechanical tuner adjusted so that the tube is operating near the desired frequency, vernier frequency adjustment may be made by varying the reflector voltage. Maximum power output for a given mechanical tuner setting, however, will be obtained at only one value of reflector voltage. If the mechanical tuner and reflector voltage are mutually adjusted for maximum power output at a given frequency, and if then the reflector is varied above and below the value for maximum power output such that the power output is reduced by one-half, the frequency change between the half power values is defined as the electronic tuning range. The electronic tuning range and linearity depend on the type of load and coupling used. A highly reactive load may shorten the electronic tuning range and cause non-linear variation of frequency with reflector voltage.

MODES OF OPERATION

Oscillation may be obtained in a given tube with several combinations of resonator and reflector voltages at a given frequency. The regions where oscillation occurs within the reflector voltage range are referred to as voltage modes. A card is furnished with each tube showing the optimum mode of operation. Operation in the higher voltage reflector modes usually results in more power output. Operation in the lower voltage reflector modes usually results in more electronic tuning.

DETAILED MECHANICAL INFORMATION

(2) WARNING

The window which forms the vacuum seal across the R.F. output is 0.001" thick. Damage to this vacuum seal will ruin the tube. This window is more than adequate to withstand atmospheric pressure, but it will not withstand blows, dents, or scratches. A glass fillet surrounds the mica window and seals it into place. Bending of the output flange can break this glass, destroying the vacuum seal and rendering the tube inoperative. To reduce this possibility and to afford some protection against puncturing, a short straight section of waveguide which has a flat surface to mate with the window flange is furnished with each tube. Removal of this flange will expose the output window to possible damage. If this straight section is not used, it is suggested that whatever flange is fastened to the tube be machined in a similar manner.

INSTALLATION

These tubes require a dwarf octal socket and may be mounted in any position. The output coupling flange should be rigidly clamped to a mating flange of the proper type. (D (See outline drawing.)

Adequate cooling should be provided at all times due to relatively high input powers; forced air cooling is required. (7 cu. ft/min).

SHIELDING

Should these tubes be operated in the presence of strong magnetic fields, shielding the resonator and reflector voltage leads may be required in order to avoid undesirable modulation of the tube output. In extremely troublesome conditions, it may be advisable to place the tube in a metal chamber with polyiron chokes provided to bring the voltages into this chamber.

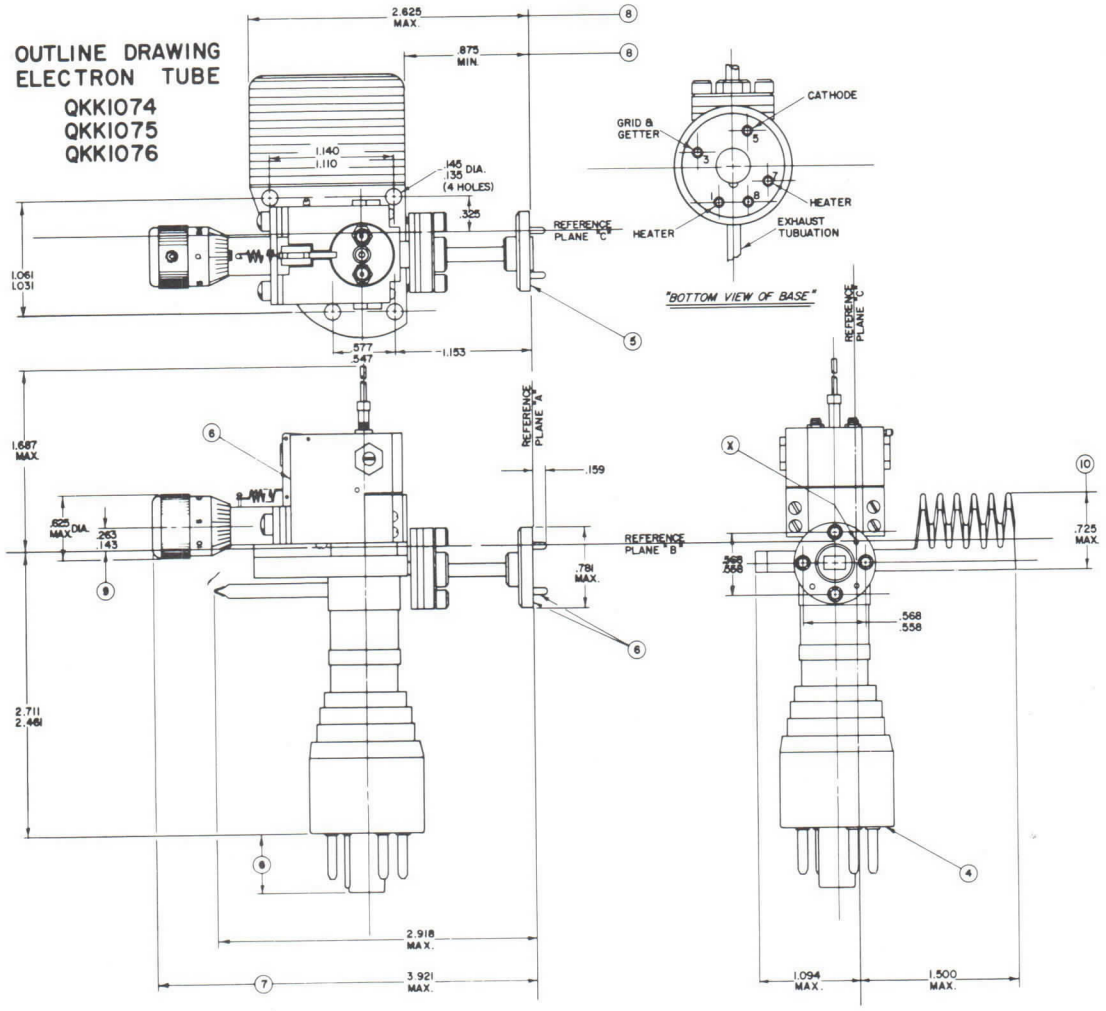

NOTES

1. REFERENCE PLANE "A" IS DEFINED AS A PLANE PASSING ALONG THE FACE OF THE OUTPUT FLANGE.
2. REFERENCE PLANE "B" IS DEFINED AS A PLANE PERPENDICULAR TO PLANE "A" AND PASSING THRU THE CENTER OF HOLE "X" AT PLANE "A" AS SHOWN.
3. REFERENCE PLANE "C" IS DEFINED AS A PLANE MUTUALLY PERPENDICULAR TO PLANES "A" AND "B" PASSING THRU THE CENTER OF HOLE "X" AT PLANE "A" AS SHOWN.
4. STANDARD DWARF SHELL OCTAL 5 PIN BASE (JETEC B5-45).
5. (A) QKK863, QKK864 & QKK865 TO MATE WITH STANDARD UG-385/U FLANGE COUPLING. (WAVEGUIDE TYPE RG-98/U)
   (B) QKK673, QKK866 & QKK867 TO MATE WITH STANDARD UG-387/U FLANGE COUPLING. (WAVEGUIDE TYPE RG-99/U)
   (C) QKK1074, QKK1075 & QKK1076 TO MATE WITH STANDARD UG-387/U FLANGE COUPLING. (WAVEGUIDE TYPE RG-138/U)
6. THE FOLLOWING AREAS TO BE FREE OF PAINT: PINS (DWARF OCTAL BASE), FACE OF OUTPUT & PINS, REPELLER LEAD, TUNER & TUNER HOUSING SUPPORT.
7. REFERS TO MAXIMUM TUNING RANGE.
8. INCLUDES ANGULAR AS WELL AS LATERAL DEVIATIONS.
9. REFERS TO CENTER-LINE OF 625 MAXIMUM DIAMETER.
10. REFERS TO SIZE OF RADIATOR ONLY.

The technical information on this data sheet is of a proprietory nature and is furnished as a customer service for private use only.

QKK1078, 1079, 1080

PRELIMINARY DATA SHEET

RAYTHEON

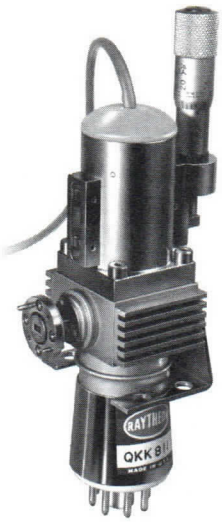

The millimeter klystrons described in this data sheet are the QKK1078, QKK1079, and the QKK1080. They are mechanically tuned reflex klystron oscillators designed for operation in the 50 to 70 kilomegacycle range with an average power output of 50 milliwatts. All tubes offer single vernier adjustment and SINGLE MODE OPERATION for full band coverage. The RF output is through waveguide sealed by a glass window.

GENERAL CHARACTERISTICS

ELECTRICAL

Heater

Heater Voltage	6.3 Volts
Heater Current	2.0 Amperes

Maximum Ratings

Resonator Potential	1500 Volts
Cathode Current	40 mA
Reflector Potential	-40 to -450 Volts
Focus Grid Potential	-20 to -400 Volts
Anode Block Temperature	100° C
Heater Current	2.5 Amperes

The values specified above must not be exceeded under any service condition. The ratings are limiting values above which the serviceability of any individual tube may be impaired. It does not necessarily follow that combinations of maximum ratings can be attained simultaneously.

TYPICAL OPERATION

Resonator Potential (Fixed for each tube)	1400 Volts
Focus Grid Potential (Fixed for each tube)	-40 to -300 Volts
Cathode Current	35 mA
Reflector Potential	-40 to -450 Volts
Power Output (Typical)	50 mW
Frequency Range	
QKK1078	50,000 to 57,000 Mc
QKK1079	56,000 to 65,000 Mc
QKK1080	64,000 to 74,000 Mc

4/62

The specifications for this tube have not been finalized. The tube is being manufactured in limited quantities and is available for engineering analysis purposes only. This engineering information and/or delivery of sample tubes do not imply availability of tubes with the same electrical and/or mechanical characteristics. Changes in ratings and/ or dimensions may be made at our discretion as deemed advisable by manufacturing experience or other considerations. For current information concerning this tube contact the nearest Microwave and Power Tube Regional Sales Representative.

MECHANICAL

Base	Dwarf Octal					
Pin Number	1	3	5	7	Shell	Top Lead
Element	H	Focus Electrode	K	H	Anode	Reflector
Mounting	Any Position					
Cooling	Forced Air (7 cu. ft./min.)					
Frequency Range	3 to 15 turns of tuner knob					
Overall Dimensions Including Waveguide	See attached drawing					
Flange	UG 385/U					
Waveguide	RG-98/U					

DETAILED ELECTRICAL INFORMATION

(1) WARNING

Any ATTEMPT TO OPERATE THESE TUBES WITH THE REFLECTOR NOT CONNECTED OR WITH MORE THAN 100,000 OHMS BETWEEN REFLECTOR AND CATHODE WILL SEVERELY DAMAGE THE TUBE. Make certain that the reflector lead is connected before applying any voltages. If the reflector circuit is fused, provide a 10,000 ohm resistor as a bypass around the fuse to prevent operating the tube with no reflector connection should the fuse blow.

CATHODE

In most applications, the metal shell (resonator) of these tube types is operated at ground potential. The cathode is therefore negative with respect to ground by the amount of the resonator potential and must not be grounded. THIS TUBE TYPE MAY DEVELOP A HEATER TO CATHODE SHORT. THEREFORE, TO PREVENT HEATER BURNOUT, THE CATHODE SHOULD NOT BE CONNECTED TO THE HEATER. Heater to cathode short will not cause tube malfunction or shortness of life if this simple rule is observed. In all cases where the resonator is operated at ground potential the heater transformer must be insulated to withstand the maximum resonator voltage.

In applications where the metal envelope (resonator) is not at ground potential, it is essential that the tube be surrounded by a grounding shield to avoid injury to the operator. Adequate ventilation must be provided through this shield to keep the ambient temperature of the chamber below a maximum value. The cathode current in these types can be adjusted to the proper value by adjusting the focus grid voltage. Heater and cathode life will be increased if the heater temperature is lowered. Cathode life may also be increased by lowered cathode current, therefore, if maximum output is not needed, the tube may be operated at lower heater voltage. Reflector voltage and focus voltage must then be readjusted to new optimum values.

REFLECTOR

The reflector electrode is connected to a flying lead at the top of the tube.

The power supply furnishing the reflector potential must be insulated to withstand the total resonator and reflector voltage. The reflector must never be allowed to become positive with respect to the cathode. If this precaution is not

REFLECTOR (Con't.)

observed, damage to the reflector will result. In cases where modulating potentials bring the reflector voltage close to the minimum specified value a diode should be connected between cathode and reflector to prevent the reflector from going positive. Also, it is required that the application of reflector voltage precede the application of resonator voltage.

FREQUENCY STABILITY

To obtain the most stable operation from these tubes, the reflector and resonator voltage supplies should be very well regulated. It is also essential that these types be operated at a near constant ambient temperature.

MECHANICAL TUNING MECHANISM

Clockwise rotation of the tuning knob degreases the frequency. Care should be taken not to exceed the maximum clockwise limit of the tuning knob, since further rotation may damage the tuning mechanism.

ELECTRONIC TUNING

With the mechanical tuner adjusted so that the tube is operating near the desired frequency, vernier frequency adjustment may be made by varying the reflector voltage. Maximum power output for a given mechanical tuner setting, however, will be obtained at only one value of reflector voltage. If the mechanical tuner and reflector voltage are mutually adjusted for maximum power output at a given frequency, and if then the reflector voltage is varied above and below the value for maximum power output such that the power output is reduced by one-half, the frequency change between the half power values is defined as the electronic tuning range. The electronic tuning range and linearity depend on the type of load and coupling used. A highly reactive load may shorten the electronic tuning range and cause non-linear variation of frequency with reflector voltage.

MODES OF OPERATION

Oscillation may be obtained in a given tube with several combinations of resonator and reflector voltages at a given frequency. The regions where oscillation occurs within the reflector voltage range are referred to as voltage modes. A card is furnished with each tube showing the optimum mode of operation. Operation in the higher voltage reflector modes usually results in more power output. Operation in the lower voltage reflector modes usually results in more electronic tuning.

INSTALLATION

These tubes require a dwarf octal socket and may be mounted in any position. The output coupling flange should be rigidly clamped to a mating flange of the proper type. (See outline drawing).

Adequate cooling should be provided at all times due to relatively high input powers; forced air cooling is recommended. (7 cu. ft / min.)

SHIELDING

Where these tubes are to be operated in the presence of strong magnetic fields, shielding the resonator and reflector voltage leads may be required in order to avoid undesirable modulation of the tube output. In extremely troublesome conditions, it may be advisable to place the tube in a metal chamber with poly-iron chokes, provided to bring the voltages into this chamber.

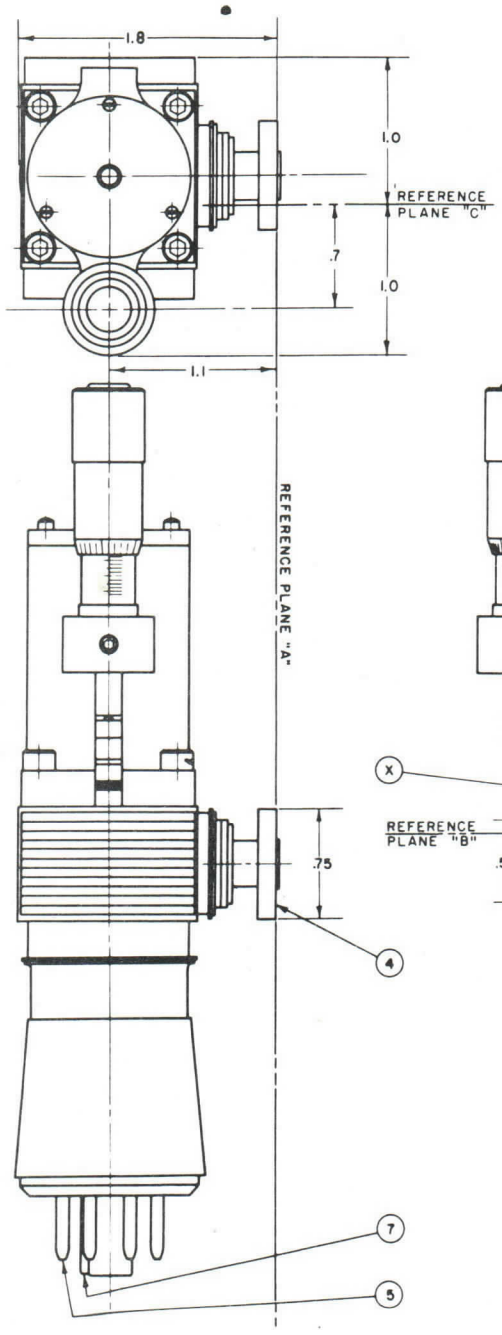

1. REFERENCE PLANE "A" IS DEFINED AS THE PLANE PASSING ALONG THE FACE OF THE OUTPUT FLANGE.
2. REFERENCE PLANE "B" IS DEFINED AS THE PLANE PERPENDICULAR TO PLANE "A" AND PASSING THROUGH THE CENTERS OF HOLE "X" AND HOLE "Y" AT PLANE "A" AS SHOWN.
3. REFERENCE PLANE "C" IS DEFINED AS THE PLANE MUTUALLY PERPENDICULAR TO PLANES "A" AND "B" PASSING THROUGH THE CENTER OF HOLE "X" AT PLANE "A" AS SHOWN.
4. FLANGE TO MATE WITH A STANDARD UG 385/U COUPLING.
5. BASE B8-21.
6. ALL DIMENSIONS ARE REFERENCE DIMENSIONS.
7. THIS KEY TO BE LOCATED 180° FROM OUTPUT AS SHOWN.

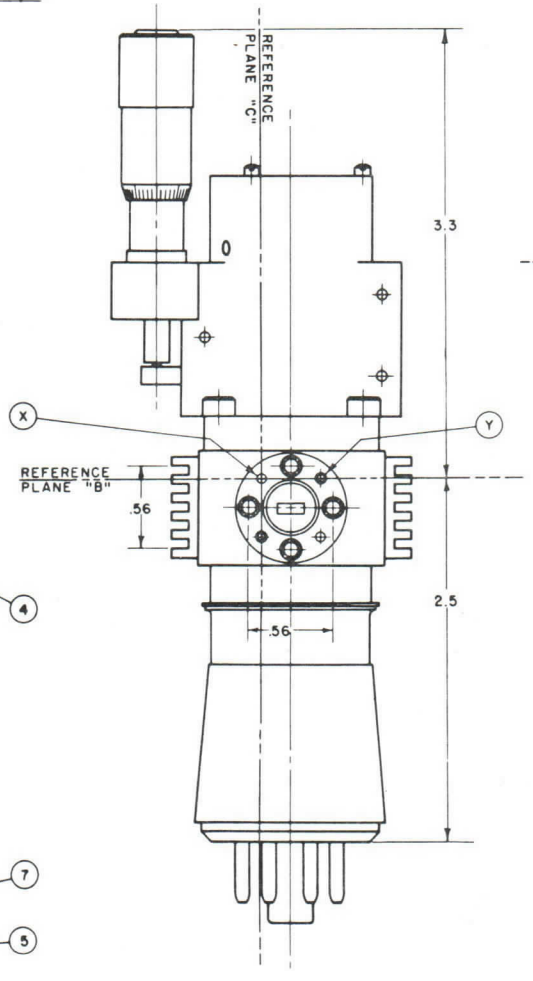

QKK1078,1079,1080

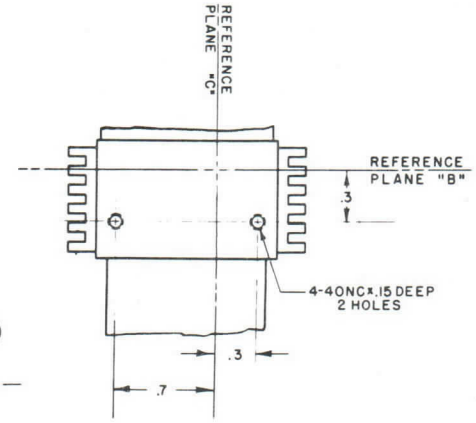

DETAIL OF MOUNTING HOLES

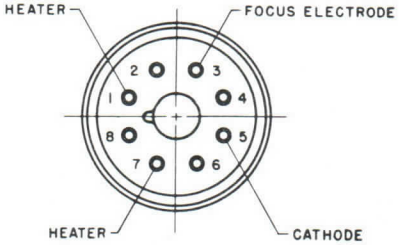

DETAIL OF HEADER CONNECTIONS

TYPE RK5721



VELOCITY VARIATION OSCILLATOR

The type RK5721 is a reflex velocity variation oscillator designed for use with a coaxial cavity in CW or pulsed operation over the 4290 to 8340 Mc range with an average power output of 125 milliwatts. Freely circulating and in some cases forced air is required for cooling of the grid ring cavity contacts. The extremely wide frequency range of this tube makes it ideally suited for signal generator and special local oscillator applications. A special control grid permits the tube to be pulsed easily with low voltages. Special cavities and certain reflector modes can be used with the RK5721 to obtain an extended frequency coverage of 2500 to 11000 Mc.

GENERAL CHARACTERISTICS

HEATER CHARACTERISTICS:

Heater Voltage	6.3 ± 0.5 V
Heater Current	0.58 A

RATINGS - ABSOLUTE MAXIMUM VALUES (CW Oscillator):

DC Resonator Voltage	1250 Vdc
DC Resonator Current	20 mA
DC Reflector Voltage	
Minimum Negative Value	—15 Vdc
Maximum Negative Value	—800 Vdc
DC Control Electrode Voltage	
Maximum Value	+25 Vdc
Minimum Value	—25 Vdc
DC Control Electrode Current	6 mA
DC Reflector Current	1 mA
Heater-Cathode Voltage	
Positive Value	50 V
Negative Value	50 V
Dissipation (exclusive of heater power)	25.5 W
Temperature of G_3 sleeve	160 °C

TYPICAL OPERATING CONDITIONS:

Coaxial Cavity as per Figure 2	
Reflector Voltage Transit Mode	2¾ cycles
Cavity Mode	¾ wavelength
Frequency Range	4290-8340 Mc
DC Resonator Voltage	1000 Vdc
DC Resonator Current (exclusive of control electrode current)	20 mA
DC Reflector Voltage ★	—50 to —625 V
DC Reflector Current	0 mA
DC Control Electrode Voltage •	+4 to +18 Vdc
DC Control Electrode Current	5 mA (max.)

Printed in U.S.A.

TYPICAL OPERATING CONDITIONS (cont):

Control Electrode Cutoff Voltage	—8 to —23 Vdc
Electronic Tuning (Half Power)◈ Frequency Change	12 Mc (min.)
Reflector Modulation Sensitivity (8340 Mc)	0.1 Mc/volt
Power Output (Minimum CW)	100 mW
Power Output (Maximum CW)	250 mW
Power Output (Average CW)	160 mW
Thermal Compensation (tube without cavity)	25 kc/°C

AUXILIARY OPERATION A:

Coaxial Cavity as per Figure 2

Reflector Voltage Transit Mode	1¾ cycles
Cavity Mode	¾ wavelength
Frequency Range	2500-4500 Mc
DC Resonator Voltage	1000 Vdc
DC Resonator Current (exclusive of control electrode current)	20 mA
DC Reflector Voltage Range ★	—80 to —400 Vdc
DC Reflector Current	0 mA
DC Control Electrode Voltage •	+4 to +18 Vdc
DC Control Electrode Current	5 mA (max.)
Control Electrode Cutoff Voltage	—8 to —23 Vdc
Power Output (Average CW)	150 mW
Power Output (Minimum CW)	50 mW

AUXILIARY OPERATION B:

Coaxial Cavity	Special Design Required
Reflector Mode	3¾, 4¾ cycles
Cavity Mode	¾ wavelength
Frequency Range	7000-11000 Mc
DC Resonator Voltage	1250 Vdc
DC Resonator Current (exclusive of control electrode current)	20 mA
DC Reflector Voltage Range ★	—120 to —450 Vdc
DC Reflector Current	0 mA
DC Control Electrode Voltage •	+4 to +18 Vdc
DC Control Electrode Current	5 mA (max.)
Control Electrode Cutoff Voltage	—3 to —23 Vdc
Power Output (Average CW)	40 mW
Power Output (Minimum CW)	20 mW

★ *Adjusted for maximum power output.*

• *Adjusted for 20 milliamperes resonator current.*

◈ *Change in frequency between the two ½ power points when the reflector voltage is varied above and below the point of maximum power output corresponding to the given frequency.*

GENERAL MECHANICAL CHARACTERISCTICS:

Mounting Position	Any
Over-all Dimensions	See Outline Drawing
Envelope	Glass
Seals	Glass to Copper Oxide
Banana Jack	Required Ucinite #152005 Mating Plug or Equivalent
Base	Special Miniature 4 Pin Fits Amphenol #78-S4S Socket or Equivalent
Vibration	10 G at 50 cps
Altitude	50000 ft (max.)

DETAILED ELECTRICAL INFORMATION

REFLECTOR

The reflector electrode is connected to the small banana jack on the top of the tube. The power supply furnishing the reflector potential must be insulated to withstand the total resonator and reflector voltage. The reflector must never be allowed to become more postive than —15 volts with respect to the cathode. If this precaution is not observed, damage to the reflector may result. Under conditions of vigorous oscillation and light loading, it is possible that excessive reflector current (in the order of one milliampere) will be drawn on the long wavelength end of the range. No damage will result except in cases where high reflector circuit impedances and secondary emission from the reflector will cause the reflector potential with respect to cathode to swing increasingly positive. Where high reflector circuit impedances are used, it is advisable to shunt the high impedance and the power supply with a small diode.

CATHODE

In most applications, the metal cavity to be used with the RK5721 is operated at ground potential. The cathode is therefore negative with respect to ground by the amount of the resonator potential and must not be grounded. The cathode may be connected to one side of the heater or to one side of the heater secondary. When cathode and heater are connected together, connection to the cathode should be made directly to the cathode contacts on the tube socket and never to a heater lead. When cathode and heater are not connected together, the heater-cathode voltage should not exceed ±50 volts. In all cases where the resonator is operated at ground potential, the heater transformer must be insulated to withstand the maximum resonator voltage. To obtain maximum tube life, it is recommended that the heater be allowed to warm up for 30 seconds before other voltages are applied. Application of the beam potential must not precede the application of any of the other voltages.

Printed in U.S.A.

MICROWAVE AND POWER TUBE DIVISION

RAYTHEON COMPANY

FOUNDRY AVE., WALTHAM 54, MASS.

3224 — 1-55

CONTROL ELECTRODE

For CW operation the control grid in the RK5721 should be adjusted and maintained at the potential (+4 to +18 volts well regulated) which allows 20 milliamperes of beam current.

In applications where the RK5721 is to be used in both CW and pulsed operation, the circuit in Figure 1 is recommended.

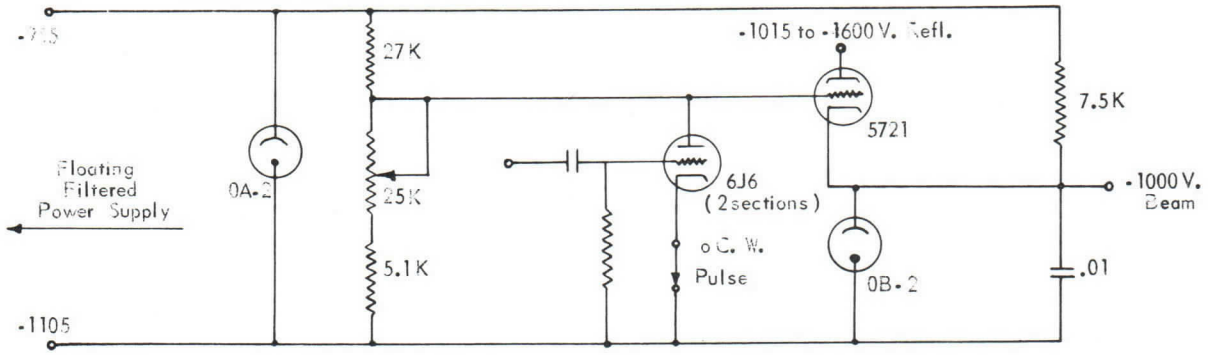

Figure 1

For CW operation the 6J6 keyer tube is removed from the circuit by opening the cathode connection so that the bias on the RK5721 may be set by a potentiometer. When the cathode circuit to the 6J6 is closed for pulse operation, the current drawn by that tube biases the RK5721 beyond cutoff. A negative pulse on the keyer grid of suitable amplitude will then reduce the current through this tube to zero and restore the grid of the RK5721 to the same level as that previously set for CW operation.

ELECTRONIC TUNING

Vernier adjustment of the frequency of the RK5721 is accomplished by varying the reflector voltage. If the mechanical tuning mechanism employed in the external cavity and the reflector voltage are mutually adjusted to yield a maximum power output at a given frequency, and if then the reflector voltage is varied above and below the value for maximum power such that the power output is reduced to one half, the frequency change between the half power values is defined as the electronic tuning range. The range of electronic tuning and the linearity of its variation with reflector voltage is a function of the type of load and coupling used. Maximum electronic tuning range will be achieved with operation into a resistive load. Operation into a highly reactive load may be attended by excessive hysteresis, and nonlinear variation of frequency with reflector voltage.

FREQUENCY STABILITY

The regulation of the voltages applied to the reflector, resonator, and control grid will be reflected directly in the stability of the output frequency, hence the regulation of those voltage supplies must be commensurate with the stability requirements of the application.

The thermal frequency drift experienced with the type RK5721 will mainly depend upon the change in the physical size of the resonant chamber with temperature. The RK5721 without a cavity is temperature compensated to the extent that its coefficient alone is 25 kc/°C. The amount by which the combined tube and external cavity exceeds 25 kc/°C is therefore dependent only on the thermal properties of the cavity. Careful consideration should therefore be given to the material from which the external cavity is constructed.

MODES OF OPERATION

The RK5721 is designed to cover the 4290 to 8340 Mc range in one reflector mode (2¾). Wider frequency ranges require the combined use of several different reflector modes. The tube is designed for use with noncontacting plunger coaxial cavities. Design and construction of such cavities can be quite troublesome, and certain precautions must be observed to avoid interference from circumferential resonances, one quarter wavelength modes, and multifrequency bunching. An extensive treatment of the design of wide-range coaxial cavities is beyond the scope of this publication; however, the following references contain adequate information, pertinent to their design.

1. W. H. Huggins. "Multifrequency Bunching in Reflex Klystrons," *Proc. I. R. E.*, xxxvi, 624-30.
2. W. H. Huggins. "Broad Band Non-Contacting Short Circuits for Coaxial Lines," *Proc. I. R. E.*, xxxv, 1324-28.
3. Radio Research Laboratory Staff. *Very High Frequency Techniques.* New York: McGraw-Hill, 1947. II, 916-19 and 900-11.

DETAILED MECHANICAL INFORMATION

INSTALLATION

The tube mounts in any position and requires a special, miniature, 4-prong socket such as Amphenol Type 78-545 or low-loss equivalent. Clamping to the G_2 ring should be made in such a manner that no mechanical strain be set up in the glass between G_2 and G_3 rings. A toroidal spring contact between the cavity and the G_2 ring, as shown in Figure 2 is recommended.

Temperatures of the G_3 sleeve in excess of 160°C cannot be tolerated; and in cavities where conduction is insufficient to hold this tolerance, forced air cooling is required. The center conductor of wide range coaxial cavities will in general have sufficient mass to provide adequate conduction. However, in situations where conduction is not adequate, a center conductor made of coin silver will improve conduction sufficiently to obviate forced-air cooling.

Optimum broad-band operation is best achieved with a load termination of 50 ohms and VSWR's not greater than 1.25/1.

SHIELDING

Where the RK5721 is to be operated in the presence of strong magnetic fields, shielding of the resonator and reflector voltage leads is usually required in order to avoid undesirable modulation of the tube output. In extremely troublesome conditions, it may be advisable to place the portions of the RK5721 not covered by the cavity in a metal chamber with polyiron chokes provided to bring the voltages into the chamber. Care must always be taken not to exceed the maximum operating temperature of 160°C on the G_3 sleeve.

Printed in U.S.A.

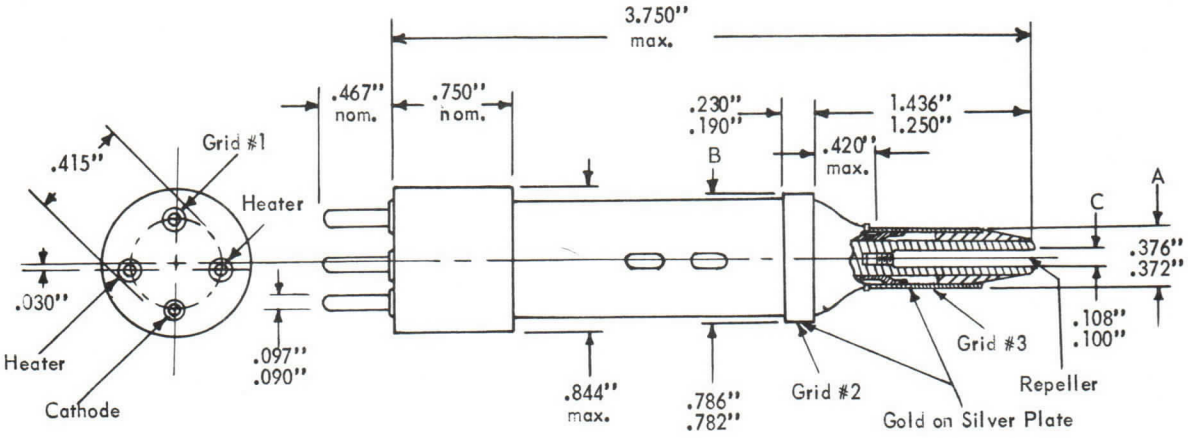

NOTES:

A — Reference diameter.

B — This diameter to be concentric to "A" within .005".

C — This diameter to be concentric to "A" within .015".

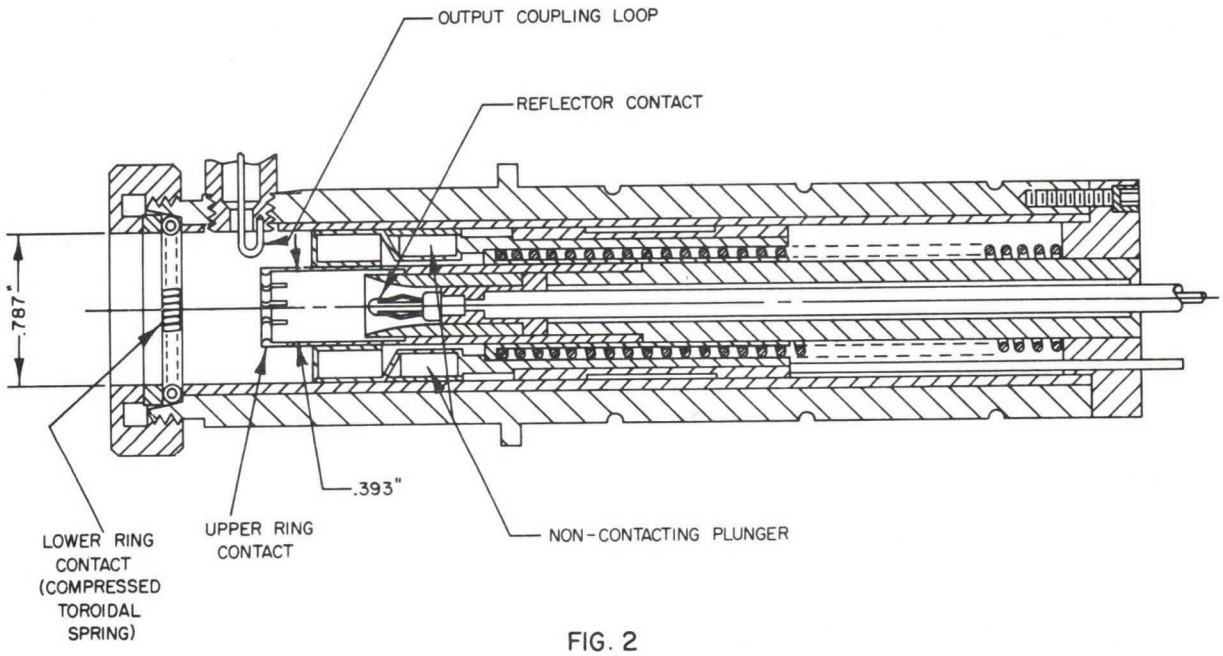

FIG. 2

VELOCITY VARIATION OSCILLATOR

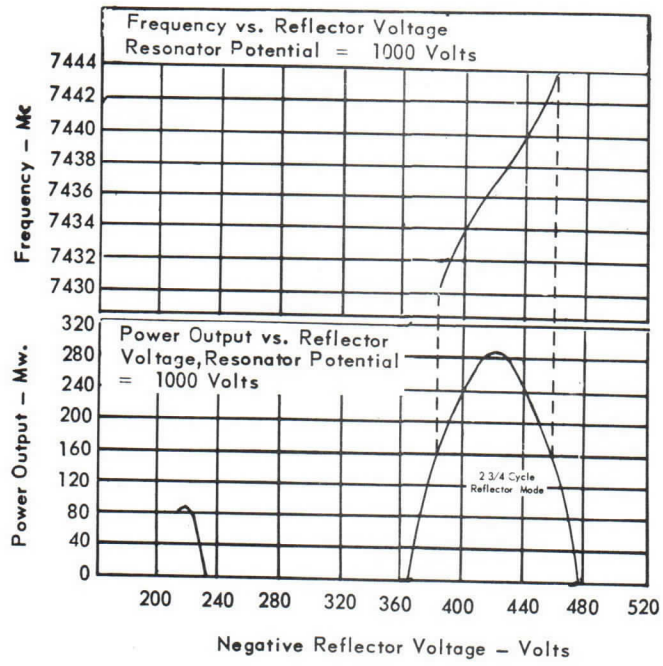

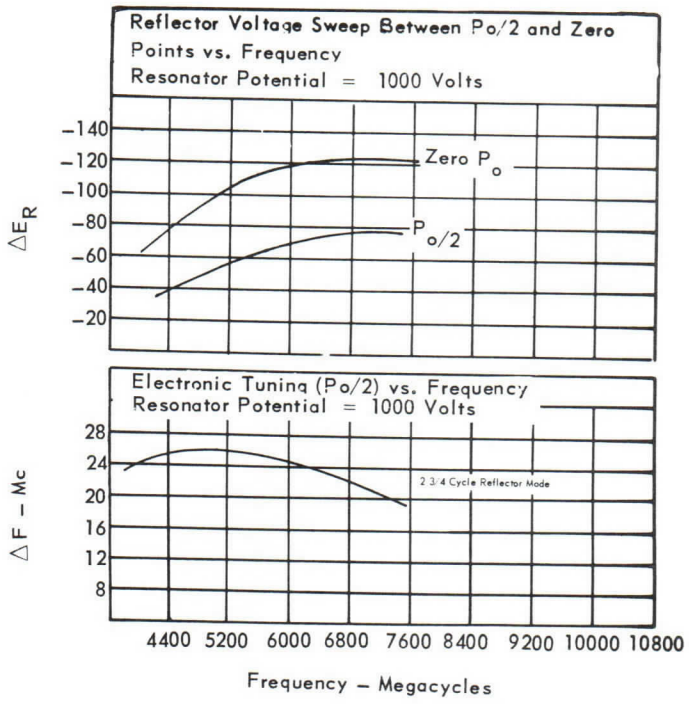

The exact value of reflector voltage producing maximum output at a certain frequency varies from tube to tube. The voltage for all tubes, at each mode, will fall within the shaded area indicated below.

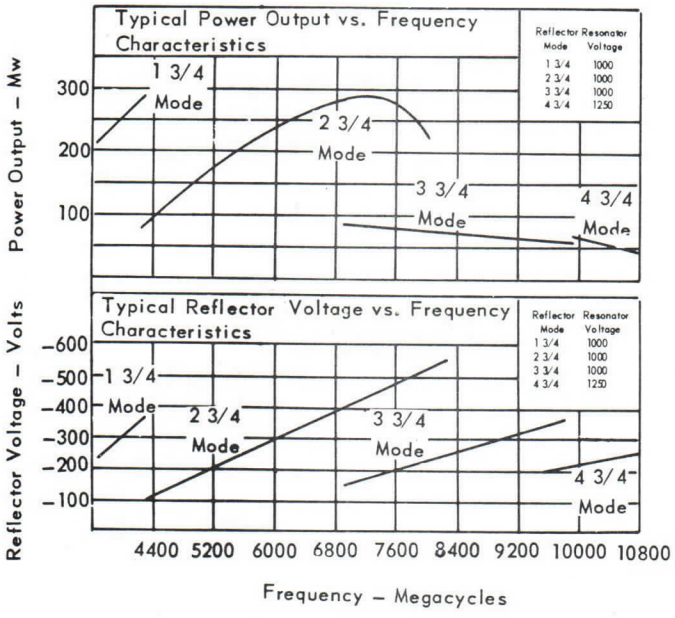

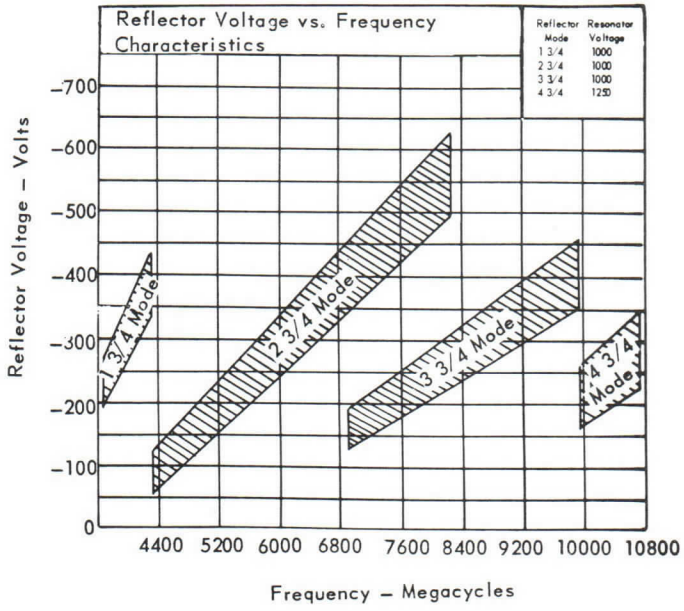

Printed in U.S.A.

TYPE RK-5836

The type RK5836 is a reflex velocity variation oscillator designed for use with a coaxial cavity in CW or pulsed operation over the 1600 to 4600 Mc range with an average power output of 150 milliwatts. Freely circulating air is required for cooling of the grid ring cavity contacts. The wide frequency range of this tube makes it ideally suited for signal generator and special local oscillator applications. A special control grid facilitates low voltage pulsed modulation.



VELOCITY VARIATION OSCILLATOR

GENERAL CHARACTERISTICS

ELECTRICAL

Heater Characteristics

Heater Voltage	6.3 ± 0.5 V
Heater Current	0.68 A

Ratings — Absolute Maximum Values (CW Oscillator)

Resonator Voltage	350 Vdc
Resonator Current	35 mAdc
Reflector Voltage	
Minimum Negative Value	—15 Vdc
Maximum Negative Value	—700 Vdc
Reflector Current	2 uAdc
Control Electrode Voltage	
Maximum Value	+20 Vdc
Minimum Value	—150 Vdc
Control Electrode Current	7 mAdc
Heater-Cathode Voltage	±50 V
Power Input (Exclusive of Heater Power)	11.2 W
Contact Rings Seal Temperature	150°C

(A) Typical Operating Conditions (CW)

Reflector Transit Mode	1¾ cycles
Cavity Mode	¾ wavelength
Frequency Range	1600-4000 Mc
Resonator Voltage	300 Vdc
Cathode Current	25 mAdc
*Reflector Voltage	—80 to —550 Vdc
Reflector Current	0 uAdc
Control Electrode Voltage	
Full Power Output	10 Vdc
Power Output Cutoff	3 Vdc
Beam Current Cutoff	—10 Vdc
Control Electrode Current at Full Power	5 mAdc
**Electronic Tuning (Half Power)	6 Mc
Modulation Sensitivity at 2800 Mc	.11 Mc/V
Power Output Over The Band	
Minimum	100 mW
Maximum	250 mW
Average	175 mW

Printed in U.S.A.

MICROWAVE AND POWER TUBE DIVISION

RAYTHEON COMPANY

FOUNDRY AVE., WALTHAM 54, MASS.

(B) Typical Operation (CW)

Reflector Transit Mode	2¾ cycles
Cavity Mode	¾ wavelength
Frequency Range	2100-4500 Mc
Resonator Voltage	300 Vdc
Cathode Current	25 mAdc
*Reflector Voltage	—25 to —350 Vdc
Reflector Current	0 uAdc
Control Electrode Voltage	
Full Power Output	10 Vdc
Power Output Cutoff	3 Vdc
Beam Current Cutoff	—10 Vdc
Control Electrode Current at Full Power	5 mAdc
**Electronic Tuning (Half Power)	10 Mc
Modulation Sensitivity at 3200 Mc	0.31 Mc/V
Power Output Over The Band	
Minimum	50 mW
Maximum	130 mW
Average	100 mW

Adjusted for maximum power output.

***Change in frequency between the two half power points when the reflector voltage is varied above and below the point of maximum power output corresponding to the given frequency.*

Typical Operating Conditions (Pulsed)

Pulse Repetition Rate	40-4000 pps
Pulse Duration (Minimum)	0.5 us
Rise Time	0.1 us
Fall Time	0.1 us
Beam Current During Off Time	Less than 10 uAdc

The general conditions for pulsed operation are the same as those given above for CW operation. Power output for pulsed operation is not more than 1.5 db below the power output for CW operation over the band.

MECHANICAL

Mounting Position	Any
Overall Dimensions	See Outline Dwg.
Envelope	Glass
Seals	Copper Oxide to Glass
Base	JETEC A4-76, Pee-wee, 4-Pin
Cap	JETEC C1-3 Skirted Miniature
Vibration	10G at 50 cps
Altitude	10,000' (max.)

DETAILED ELECTRICAL INFORMATION

REFLECTOR

The power supply furnishing the reflector potential must be insulated to withstand the total resonator and reflector voltage. The reflector must never be allowed to become positive with respect to the cathode. If this precaution is not observed, damage to the reflector may result. In cases where modulating potentials bring the reflector voltage close to zero volts, or where extremely high reflector circuit impedances are required, a diode should be connected between cathode and reflector to prevent the reflector from going positive.

CATHODE

In most applications, the metal cavity used with the RK5836 is operated at ground potential, and the cathode will be negative with respect to ground by the amount of this resonator potential. The cathode may be connected to one side of the heater or to the center tap of the heater transformer secondary. When the cathode and heater are connected together, connections to the cathode should be made directly to the cathode contacts on the tube socket and never to a heater lead. When the cathode and heater are not tied to-

gether, the heater-cathode voltage should not exceed ±50 volts. In all cases where the resonator is operated at ground potential, the heater transformer must be insulated to withstand the maximum resonator voltage. Maximum tube life will be realized if a 30-second heater warmup period precedes the application of other voltages. The beam potential must never be applied before other voltages.

ELECTRONIC TUNING

Vernier adjustment of the frequency of the RK5836 is accomplished by varying the reflector voltage. If the mechanical tuning mechanism employed in the external cavity, and the reflector voltage are mutually adjusted to yield a maximum power output at a given frequency, and if then the reflector voltage is varied above and below the value for maximum power such that the power output is reduced to one half, the frequency change between the half power values is defined as the electronic tuning range. The range of electronic tuning and the linearity of its variation with reflector voltage is a function of the type of load and coupling used. Maximum electronic tuning range will be achieved with operation into a resistive load. Operation into a highly reactive load may result in excessive hysteresis, and more nonlinear variation of frequency with reflector voltage.

FREQUENCY STABILITY

The regulation of the voltages applied to the reflector, resonator, and control grid will be reflected directly in the stability of the output frequency. Hence the regulation of those voltage supplies must be commensurate with the stability requirements of the application.

The thermal frequency drift experienced with the type RK5836 is mainly a function of the change in the physical size of the resonant chamber with temperature. Careful consideration should therefore be given to the material from which the external cavity is constructed.

MODES OF OPERATION

The RK5836 is designed to cover the 1600 to 4600 Mc range in two reflector modes (1¾ and 2¾). Wider frequency ranges require the combined use of several different reflector modes. The tube is designed for use with contacting or noncontacting plunger cavities. Design and construction of such cavities can be quite troublesome, in that certain precautions must be observed to avoid interference from circumferential resonances, one quarter wavelength modes, and multifrequency bunching. An extensive treatment of the design of wide range coaxial cavities is beyond the scope of this publication; however, the following references contain adequate information on cavity design:

1. W. H. Huggins. "Multifrequency Bunching in Reflex Klystrons," Proc. I.R.E., xxxvi, 624-30.
2. W. H. Huggins. "Broad Band Non-Contacting Short Circuits for Coaxial Lines," Proc. I.R.E., xxxv, 1324-28.
3. Radio Research Laboratory Staff. "Very High Frequency Techniques." New York: McGraw-Hill, 1947. II, 916-19 and 900-11.

DETAILED MECHANICAL INFORMATION

INSTALLATION

The tube mounts in any position and requires a special, miniature, 4-prong socket to fit the Jetec A4-76 Tube Base. Clamping to the resonator grids should be made in such a manner that no mechanical strain is set up in the glass between the rings. A toroidal spring contact between the cavity and the larger diameter ring, as shown in Figure 2, is recommended.

Grid ring temperatures in excess of 150° C cannot be tolerated. In cavities where heat conduction of the center conductor is insufficient to hold the grid ring temperatures below this figure, forced-

air cooling is required. However, a center conductor made of coin silver will usually provide enough conduction to make forced-air cooling unnecessary.

Optimum broad-band operation is best achieved with a load termination of 50 ohms and VSWR's not greater than 1.25/1.

SHIELDING

Operation of the RK 5836 in the presence of strong magnetic fields usually requires shielding of the resonator and reflector leads to avoid undesirable modulation of the tube output. In extremely troublesome environments, it may be necessary to use special shielding with polyiron chokes provided in the leads bringing the voltages into the shielded chamber.

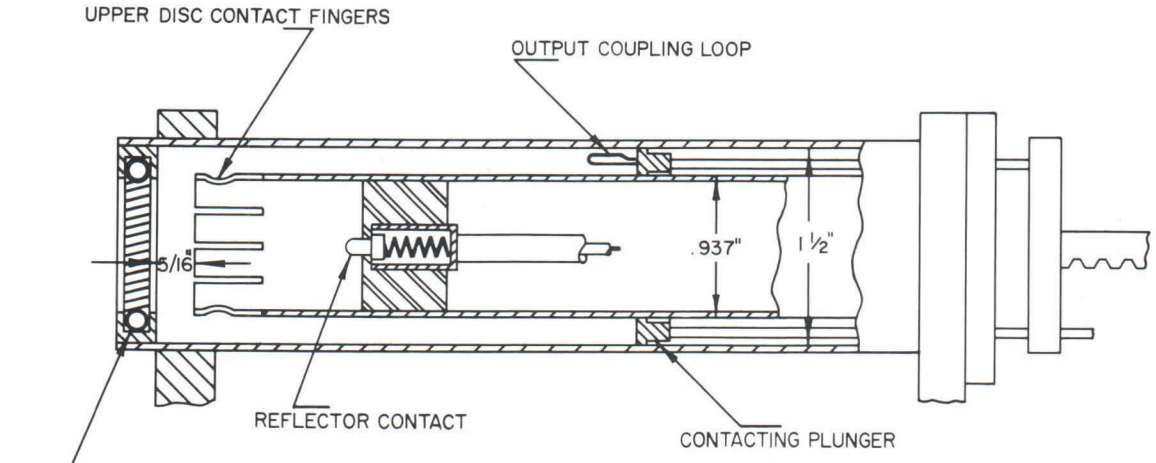

ESSENTIAL DIMENSIONS

LOOP SIZE FOR 1600-4000 Mc. ——9/16"
LOOP SIZE FOR 2100-4600 Mc. ——9/32"
LOOP WIDTH FOR BOTH BANDS ——.175"

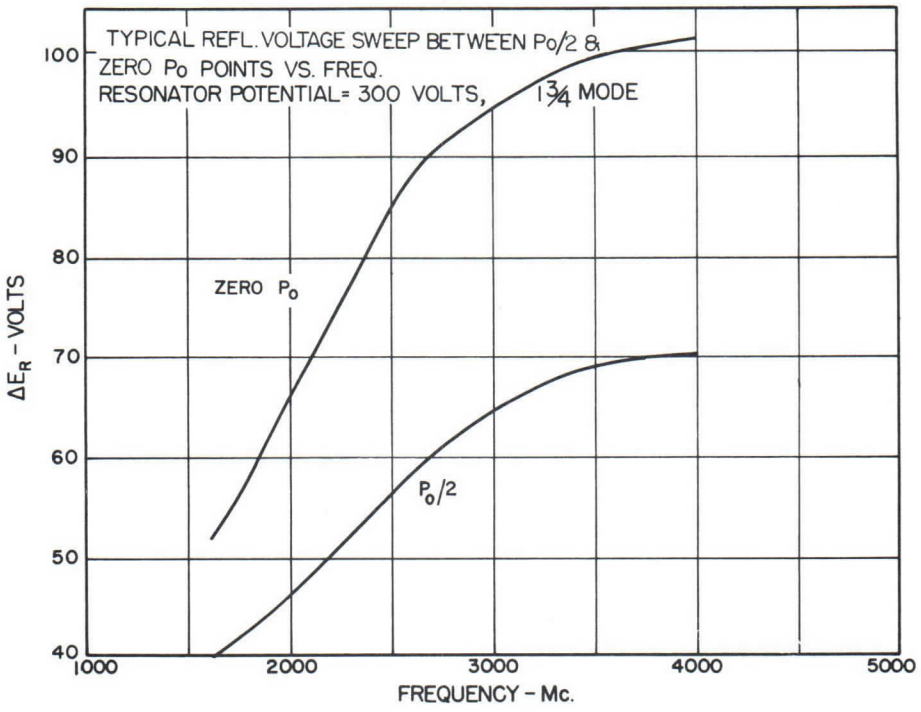

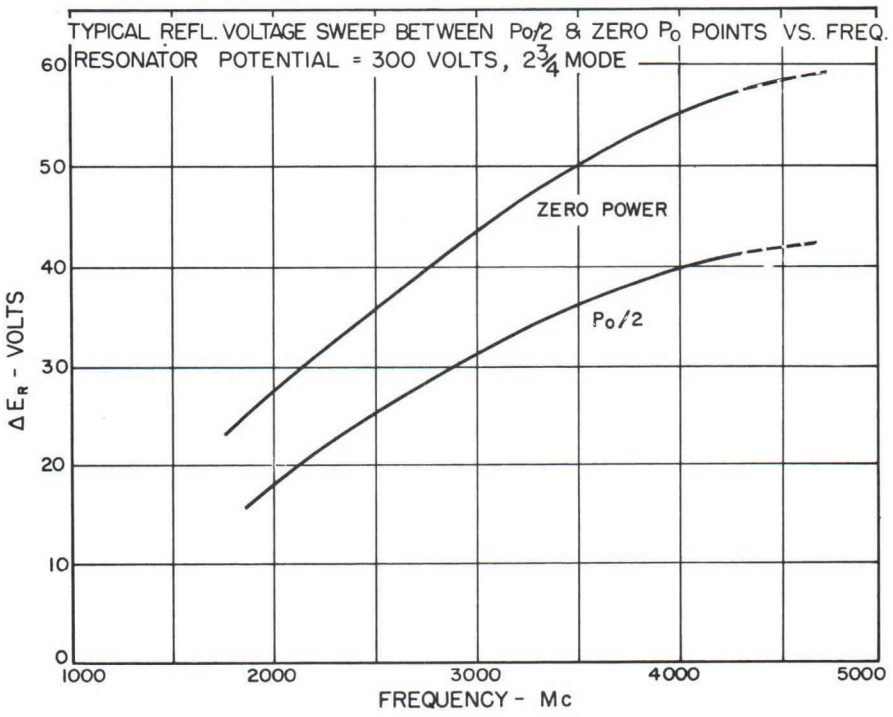

Printed in U.S.A.

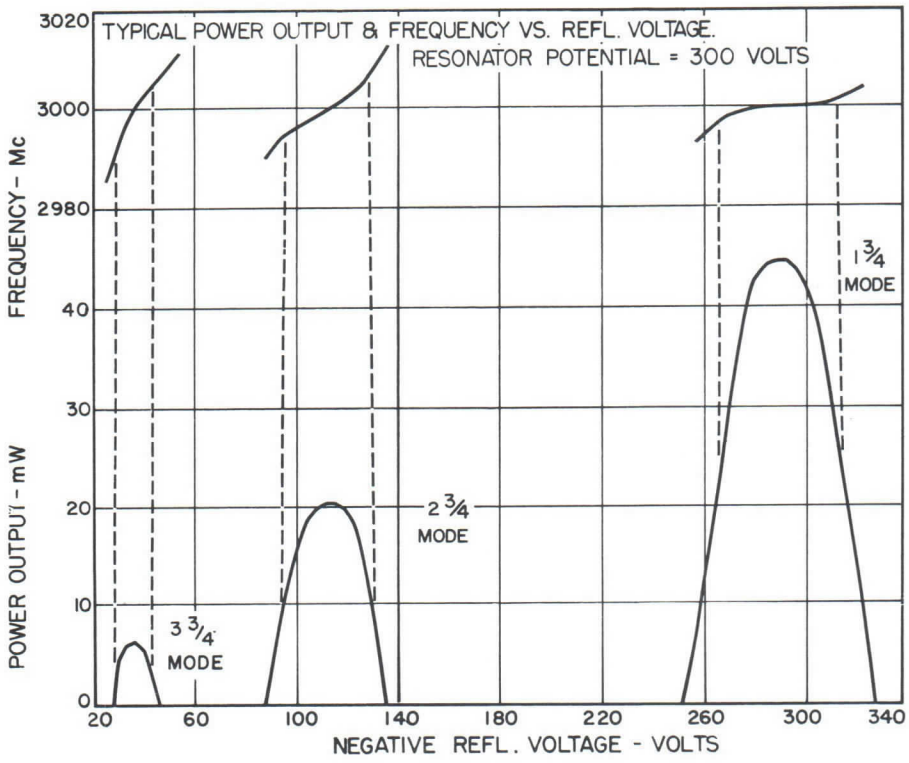
TYPICAL POWER OUTPUT & FREQUENCY VS. REFL. VOLTAGE.
RESONATOR POTENTIAL = 300 VOLTS
FREQUENCY - Mc
POWER OUTPUT - mW
3020
3000
2980
40
30
20
10
0
20
60
100
140
180
220
260
300
340
NEGATIVE REFL. VOLTAGE - VOLTS
3 3/4 MODE
2 3/4 MODE
1 3/4 MODE

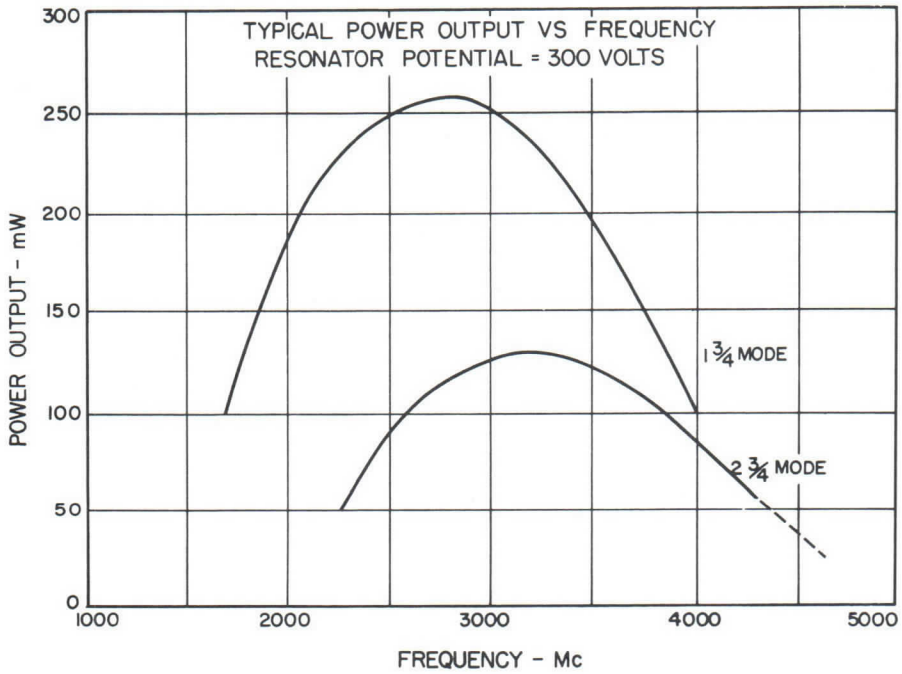
TYPICAL POWER OUTPUT VS FREQUENCY
RESONATOR POTENTIAL = 300 VOLTS
POWER OUTPUT - mW
300
250
200
150
100
50
0
1000
2000
3000
4000
5000
FREQUENCY - Mc
1 3/4 MODE
2 3/4 MODE

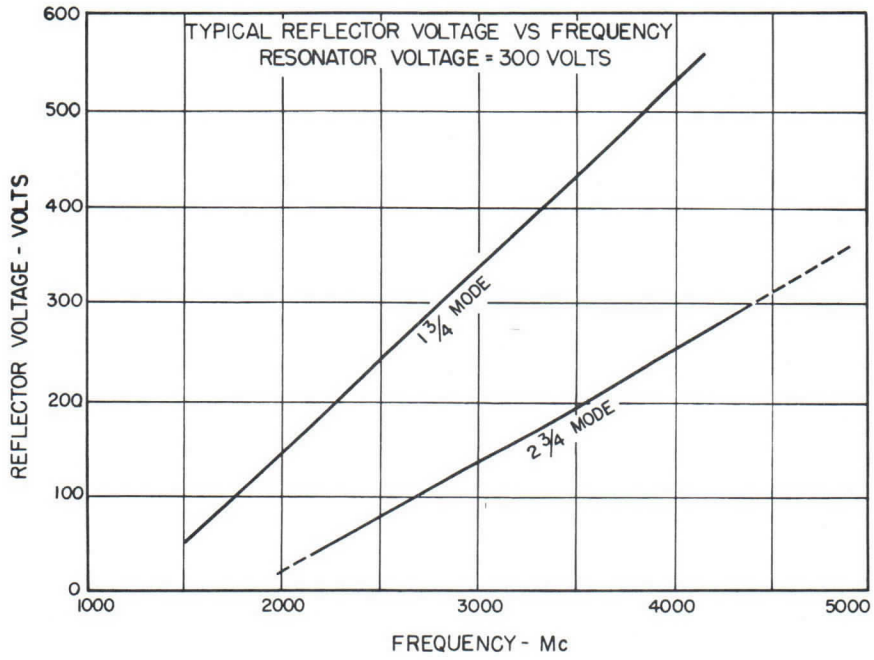

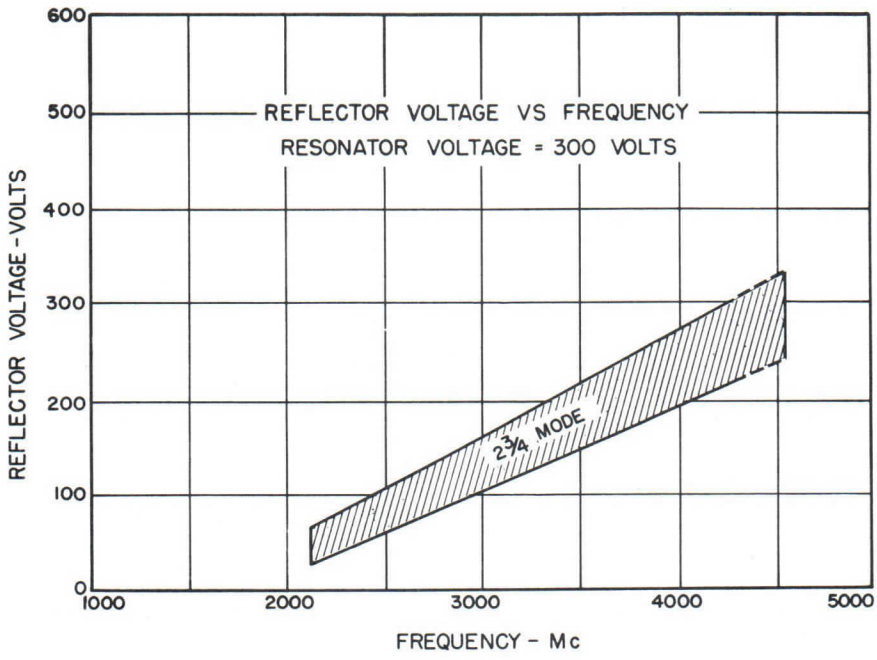

Printed in U.S.A.

MICROWAVE AND POWER TUBE DIVISION

RAYTHEON COMPANY

FOUNDRY AVE., WALTHAM 54, MASS.

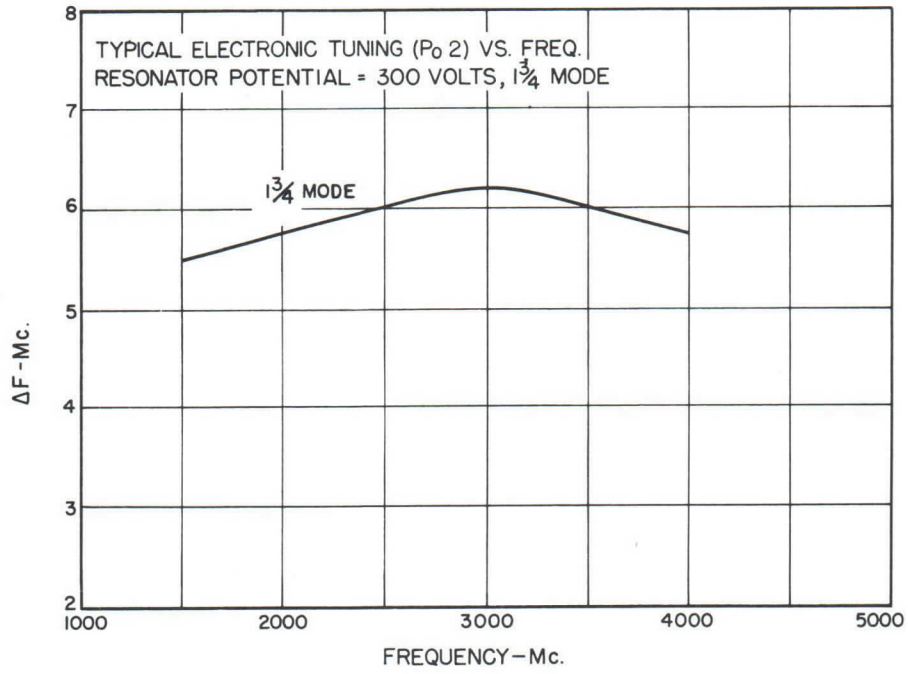

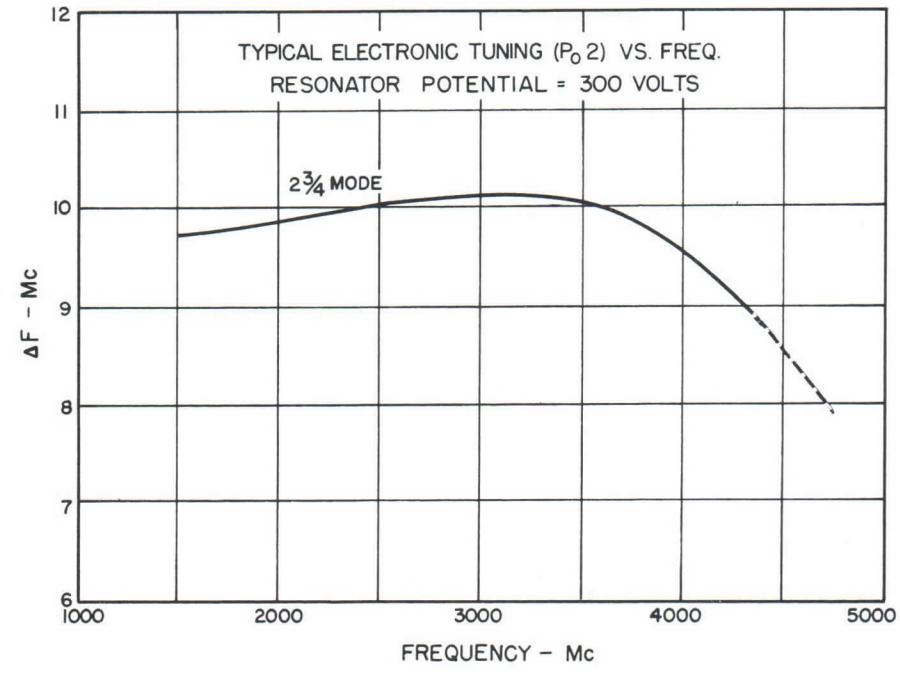

Printed in U.S.A.

MICROWAVE AND POWER TUBE DIVISION

RAYTHEON COMPANY

FOUNDRY AVE., WALTHAM 54, MASS.

ELECTRON TUBE OUTLINE
TYPE RK 5836

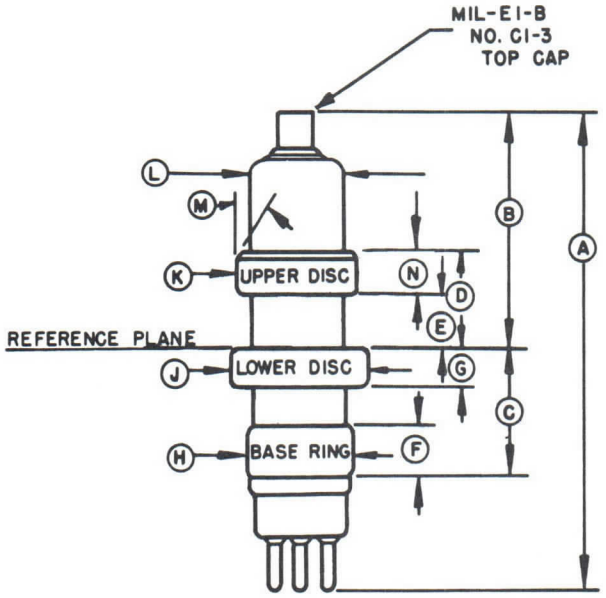

A	3.093	± .125
B	1.438	± .062
C	.797	± .031
D	.573	± .020
E	.260	± .010
F	.375	NOMINAL
G	.250	± .062 / .000
H	.812	NOMINAL
J	1.000	± .000 / .010
K	.890	± .000 / .010
L	.750 MAX.	
M	30°	± 5°
N	.313	NOMINAL

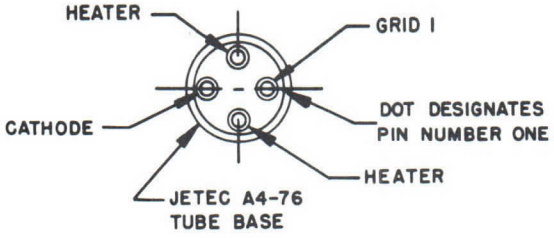

Printed in
U.S.A.

MICROWAVE AND POWER TUBE DIVISION

RAYTHEON COMPANY

FOUNDRY AVE., WALTHAM 54, MASS.

Excellence in Electronics

TYPE 5976
VELOCITY VARIATION OSCILLATOR

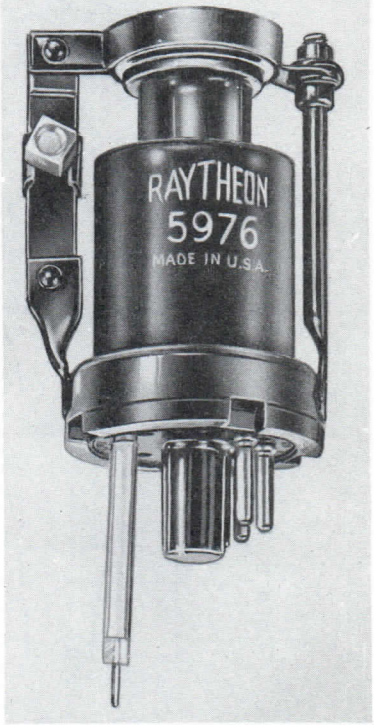

The type 5976 is a velocity variation oscillator of the single cavity (integral) reflex type, designed for operation in the frequency range of 6250 to 7425 megacycles with an average power output of 90 milliwatts. The mechanical tuning mechanism provides a simple method of making wide frequency adjustments. In addition, the 5976 can be electrically tuned to give a 40 megacycle vernier adjustment. The 5976 is designed for operation at any frequency within the specified range, and it is particularly suited for local oscillator service in microwave receivers. It is useful, also, as a local oscillator in microwave spectrum analyzers, as a pulse generator for testing circuit response and as a frequency modulated source in microwave relay links.

GENERAL CHARACTERISTICS

Heater, for oxide coated unipotential cathode	
Voltage (A.C. or D.C.)	6.3 ± .5 Volts
Current	0.44 Amperes
Frequency Range	6250 to 7425 Mc.

MAXIMUM RATINGS, Absolute Values:

D.C. Resonator Voltage	330 Max. Volts
D.C. Resonator Current	35 Ma.
D.C. Reflector Voltage	
Positive Value	0 Max. Volts
Negative Value	–350 Max. Volts
Heater-Cathode Voltage:	
Heater negative with respect to cathode	50 Max. Volts
Heater positive with respect to cathode	50 Max. Volts
Ambient Temperature of Air around Shell	110 Max. °C
Temperature of coaxial output line	75 Max. °C

TYPICAL OPERATING CONDITIONS: C.W. Oscillator: Frequency 6750 Mc.

D.C. Resonator Voltage	300 Volts
D.C. Resonator Current	24.0 Ma.
D.C. Reflector Voltage Range*	–78 to –158 Volts
D.C. Reflector Current	Less than 7 μa
Electronic Tuning (Half Power)**	
Frequency Change	49 Mc.
Power Output	110 Mw.

*Adjusted for maximum power output at 6750 Mc.

**Change in frequency between the two ½ power points when the reflector is varied above and below the point of maximum power output corresponding to the given frequency.

MECHANICAL

Mounting	Any Position
Overall Dimensions	See Outline Drawing
Resonator Cavity	Integral part of tube
Envelope	Metal
Cap	Miniature
Base	To Fit Standard Octal with No. 4 pin enlarged to admit transducer
Net Weight	1.5 Ounces

Printed in U.S.A.

MICROWAVE AND POWER TUBE DIVISION
RAYTHEON COMPANY
FOUNDRY AVE., WALTHAM 54, MASS.

MODES OF OPERATION

Oscillation may be obtained in a given tube with several combinations of resonator and reflector voltages at a particular frequency. The regions where oscillation occurs within the reflector voltage range are referred to as voltage modes. The curves show characteristics of the average 5976 in the recommended mode. This mode has been chosen because it represents the best compromise between optimum power output and wide electronic tuning range.

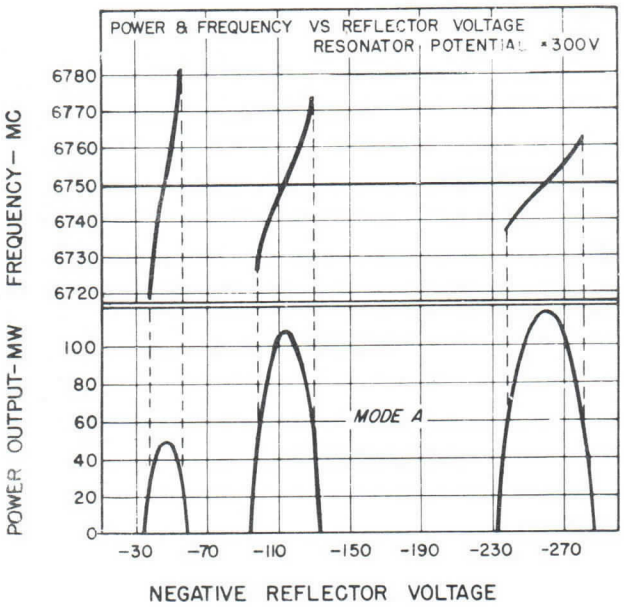

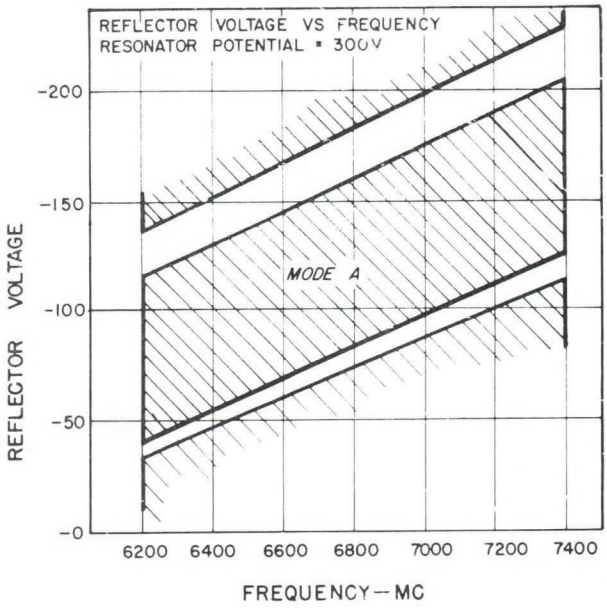

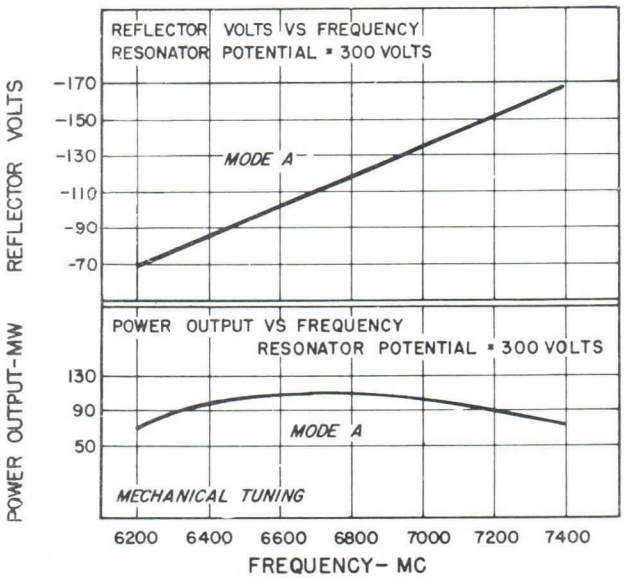

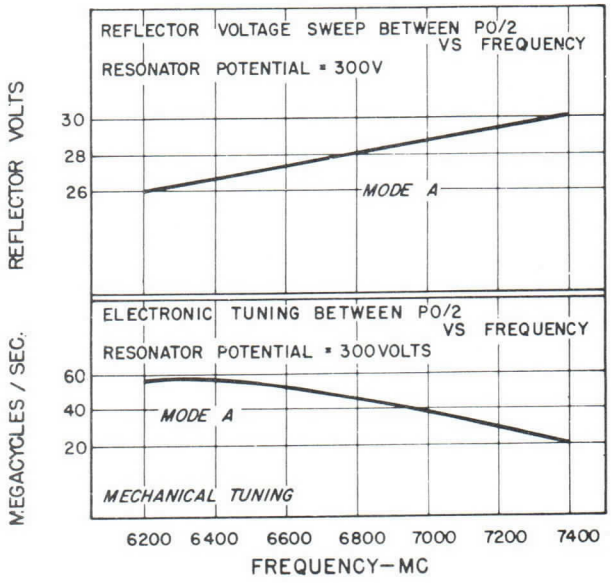

INSTALLATION

The 5976 requires a standard octal rigidly clamped to insure proper contact of the tube with the transducer and to guard be mounted in any position but should be rigidly clamped to insure proper contact of the tube with the transducer and to guard against excessive strains on the coaxial output line. The tube must be clamped on or below the header skirt.

The tube is coupled into the waveguide 1½" x ¾" through a wide band transducer coupling unit. (See outline drawing for transducer.) All the tabulated data contained in this data sheet was taken using this transducer operating into a matched load.

It is important that this transducer or its electrical equipment be used to insure tube interchangeability and satisfactory tuning range characteristics. The standing wave ratio at the transducer should not exceed a VSWR of 1.1.

SHIELDING

Where the 5976 is to be operated in the presence of strong magnetic fields, shielding of the resonator and reflector voltage leads is usually required in order to avoid undesirable modulation of the tube output. In extremely troublesome conditions, it may be advisable to place the 5976 in a metal chamber with polyiron chokes provided to bring the voltages into the chamber.

CATHODE

In most applications, the metal envelope (resonator) of the 5976 is operated at ground potential. The cathode is therefore negative with respect to ground by the amount of the resonator potential, and must not be grounded. The cathode may be connected to one side of the heater or the center tap of the heater transformer secondary. When the cathode and heater are connected together, connections to the cathode should be made directly to the cathode contacts on the tube socket and never to a heater lead. When cathode and heater are not connected together, the heater-cathode voltage should

TRANSDUCER COUPLING

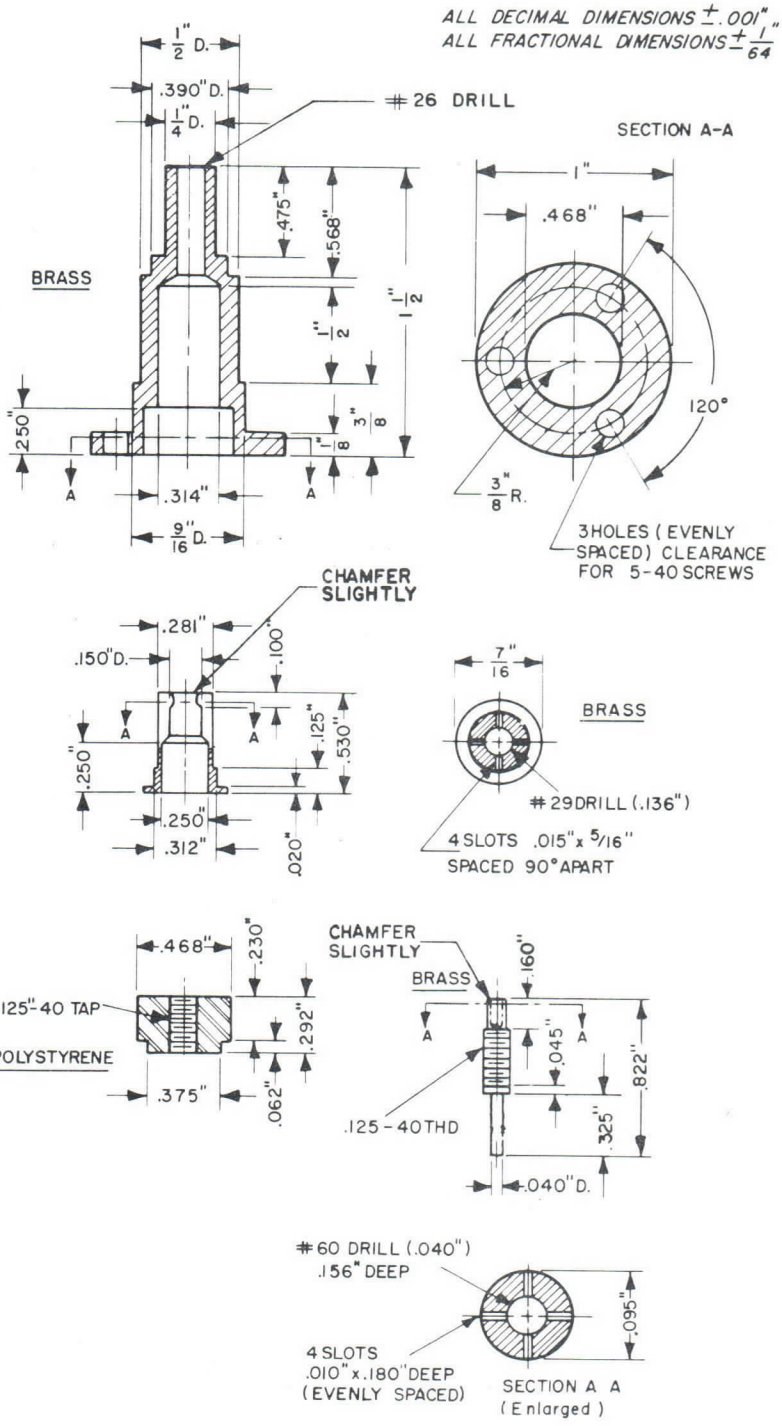

not exceed ±50 volts. In all cases where the resonator is operated at ground potential, the heater transformer must be insulated to withstand the maximum resonator voltage.

In applications where the metal envelope (resonator) of the 5976 is not at ground potential, it is essential that the tube be surrounded by a grounding shield, and be mechanically tuned with an insulated tool. Adequate ventilation must be provided through this shield to keep the ambient temperature of the chamber below the maximum specified value.

REFLECTOR

The reflector electrode is connected to the small cap on the top of the tube. The power supply furnishing the reflector potential must be insulated to withstand the total resonator and reflector voltage. The reflector must never be allowed to become positive with respect to the cathode. If this precaution is not observed, damage to the reflector may result. In cases where modulating potentials bring the reflector voltage close to zero volts, or where extremely high reflector circuit impedance are required, a diode should be connected between cathode and reflector to prevent the reflector from going positive.

MECHANICAL TUNING MECHANISM

The mechanical tuning mechanism of the 5976 is designed to permit occasional frequency adjustments. Rotating the tuning screw in a clockwise direction reduces the frequency. Approximately 3 revolutions of the tuning nut are required to cover the recommended frequency range of the tube.

When the tube is first put into service, it should be mechanically tuned to the desired frequency. The tuning bows should then be flexed several times to relax the strains in the tuning mechanism. In this process the tuning screws should be adjusted to overshoot the desired frequency several times, each time decreasing the amount of tuning screw movement.

ELECTRONIC TUNING

With the mechanical tuning mechanism set near the desired frequency, vernier adjustment of the frequency may be accomplished by varying the reflector voltage. Maximum power output for a fixed mechanical tuner position, however, will be obtained at only one reflector value. If the mechanical tuning mechanism and the reflector voltage are mutually adjusted for a maximum power

OUTLINE DRAWING

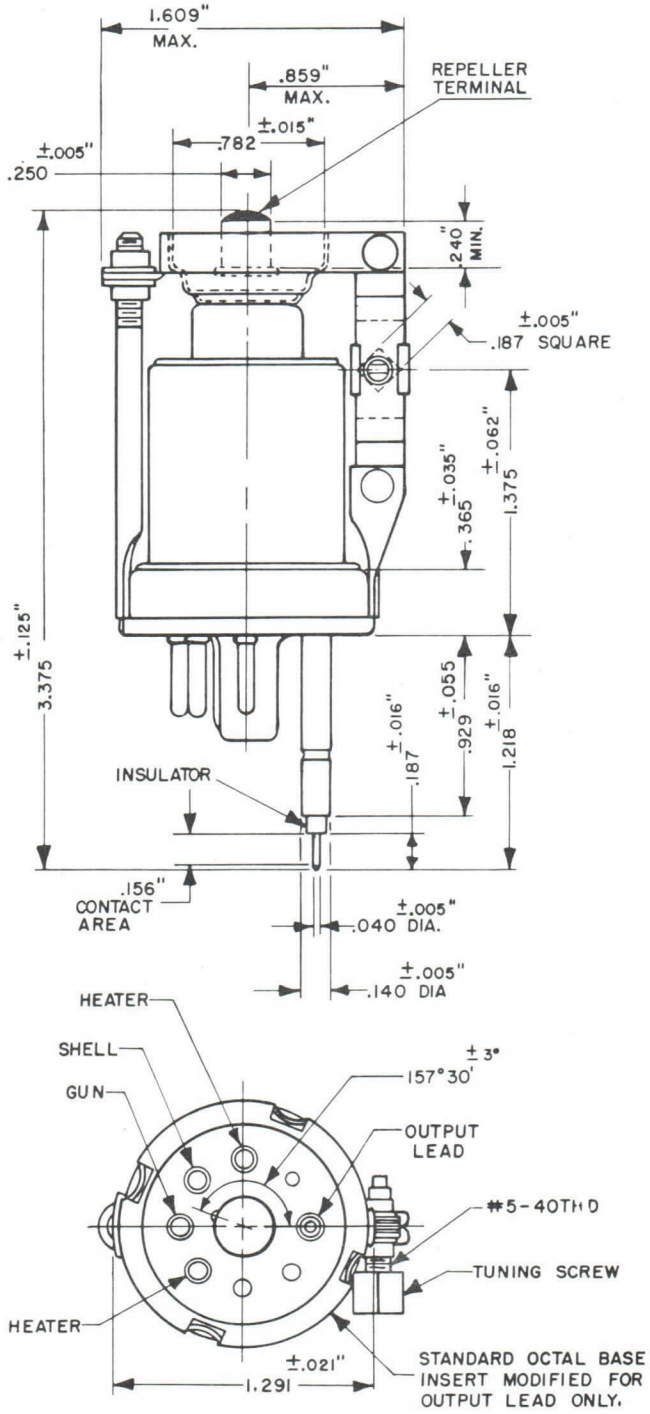

output, at a given frequency, and if the reflector voltage is then varied above and below the value for maximum power output, such that the power output is reduced to one-half, the frequency change between the half-power values is defined as electronic tuning range.

The amount of the electronic tuning and the linearity of its variation with reflector voltage is dependent upon the type of load used, and the coupling to the load. When maximum electronic tuning range is required, it is recommended that the transducer be operated into a resistive load. A 5976, the reflector and resonator voltage supplies To obtain the most stable operation from the frequency with reflector voltage.

FREQUENCY STABILITY

To obtain the most stable operation from the 5976, the reflector and resonator voltage supplies should be very well regulated. It is also essential that the 5976 be operated at a near constant ambient temperature. Under no circumstances should the temperature exceed the maximum specified values.

The materials used in the mechanical tuning mechanism of the 5976 have been selected in such a way that their thermal expansion coefficient will produce a desirable ambient temperature vs. frequency coefficient. In order that this desirable temperature coefficient will not be interfered with, a tube should not be clamped above the header skirt.

MODES OF OPERATION

Oscillation may be obtained in a given tube with several combinations of resonator and reflector voltages at a particular frequency. The regions where oscillation occurs within the reflector voltage range are referred to as voltage modes. The curves show characteristics of the average 5976 in the recommended mode. This mode has been chosen because it represents the best compromise between optimum power output and wide electronic tuning range.

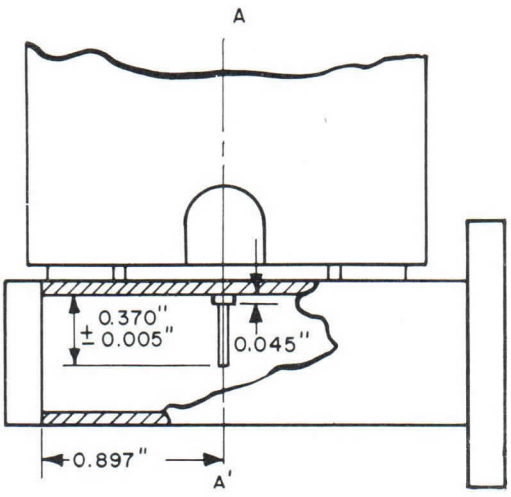

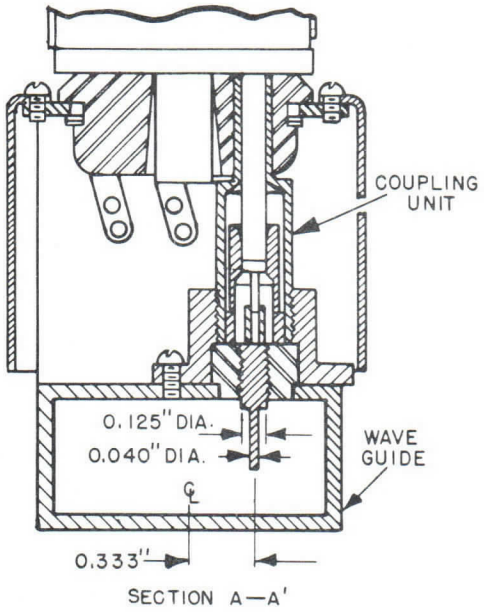

POSITION OF TRANSDUCER COUPLING UNIT WITH RESPECT TO 1 ½" x ¾" WAVEGUIDE

TYPE 5981



VELOCITY VARIATION OSCILLATOR

The tube type 5981 is a velocity variation oscillator of the single cavity (integral) reflex type, designed for operation in the frequency range of 1,245 to 1,460 megacycles with an average power output of 100 milliwatts. The mechanical tuning mechanism provides a simple method of making wide frequency adjustments. In addition, the type 5981 can be electronically tuned to give a 4 megacycle vernier adjustment. The type 5981 is designed for operation at any frequency within the specified range, and is particularly suited for local oscillator service in microwave receivers. It is useful, also, as a local oscillator in microwave spectrum analyzers, as a pulse generator for testing circuit response, and as a microwave source for test purposes.

GENERAL CHARACTERISTICS

ELECTRICAL

Heater

Heater, for oxide coated unipotential cathode:

Voltage (A.C. or D.C.)	6.3±0.5 V
Current	0.455 A

Maximum Ratings, Absolute Values

Resonator Voltage	250 Vdc
Resonator Current	50 mAdc
Reflector Voltage	
Min. Negative Value	—30 Vdc
Max. Negative Value	—220 Vdc
Heater-Cathode Voltage	±100V
Ambient Temperature of Air Around Shell	110 °C
Temperature of Coaxial Output Line	75 °C

Typical Operating Conditions

Frequency Range	1,245 to 1,460 Mc
Resonator Voltage	225 Vdc
Resonator Current	35 mAdc
Reflector Voltage Range*	—85 to —150 Vdc
Reflector Current	Less than 7 μAdc
Electronic Tuning (Half Power)**	
Frequency Change @ 1390 Mc	5 Mc
Power Output @ 1390 Mc	134 mW
Thermal Compensation	±.05 Mc/°C

*Adjusted for maximum output at 1390 Mc.

**Change in frequency between the two ½ power points when the reflector voltage is varied above and below the point of maximum power output corresponding to the given frequency.

MECHANICAL

Mounting	Any Position
Overall dimensions	See outline drawing
Resonator Cavity	Integral part of tube
Envelope	Metal
Cap	Miniature
Base	To fit standard octal with No. 4 pin enlarged and tapped to admit transducer.

Printed in U.S.A.

INSTALLATION

The type 5981 requires a standard octal socket modified with No. 4 pin enlarged and tapped to admit the coaxial transducer. The tube may be mounted in any position but should be rigidly clamped to insure proper contact of tube with the transducer, and to guard against excessive strains on the coaxial output line. The tube must be clamped on or below the shoulder of the header skirt.

The coaxial output line is coupled into a type "N" connector through a wide band transducer unit. (See outline drawing for transducer.) All the tabulated data contained in this data sheet has been taken using this transducer operating into a matched load.

It is important that this transducer or its electrical equivalent be used to insure tube interchangeability and satisfactory tuning range characteristics. The standing wave ratio at the transducer should not exceed a VSWR of 1.1.

SHIELDING

Where the type 5981 is to be operated in the presence of strong magnetic fields, shielding of the resonator and reflector voltage leads is usually required in order to avoid undesirable modulation of the tube output. In extremely troublesome conditions, it may be advisable to place the type 5981 in a metal chamber with polyiron chokes provided to bring the voltages into the chamber. Adequate ventilation must be provided.

CATHODE

In most applications, the metal envelope (resonator) of the type 5981 is operated at ground potential. The cathode circuit is therefore negative with respect to ground by the amount of the resonator potential and must not be grounded. The cathode may be connected to one side of the heater or to the center tap of the heater transformer secondary. When cathode and heater are connected together, connections to the cathode should be made directly to the cathode contacts on the tube socket and never to the heater lead. When cathode and heater are not connected together, the heater-cathode voltage should not exceed ± 100 volts.

In all cases where the resonator is operated at ground potential, the heater transformer must be insulated to withstand the maximum resonator voltage.

In applications where the metal envelope (resonator) of the type 5981 is not at ground potential, it is essential that the tube be surrounded by a grounding shield, and be mechanically tuned with an insulated tool. Adequate ventilation must be provided through this shield to keep the ambient temperature of the chamber below the maximum specified value.

REFLECTOR

The reflector electrode is connected to pin No. 5, on the base of the tube. The power supply furnishing the reflector potential must be insulated to withstand the total resonator and reflector voltage. The reflector must never be allowed to become positive with respect to the cathode. If this precaution is not observed, damage to the reflector may result. In cases where modulating potentials bring the reflector voltage close to zero volts, or where extremely high reflector circuit impedances are required, a diode should be connected between cathode and reflector to prevent the reflector from going positive.

MECHANICAL TUNING MECHANISM

The mechanical tuning mechanism of the type 5981 is designed to permit occasional frequency adjustments. Rotating the tuning screw in a clockwise direction increases the frequency. Approximately three revolutions of the tuning nut are required to cover the recommended frequency range of the tube.

When the tube is first put into service, it should be mechanically tuned to the desired frequency. The tuning nut should then be flexed several times to relax the strains in the tuning mechanism. In this process the tuning nut should be adjusted to overshoot the desired frequency several times, each time decreasing the amount of tuning nut movement.

Printed in U.S.A.

MICROWAVE AND POWER TUBE DIVISION

RAYTHEON COMPANY

FOUNDRY AVE., WALTHAM 54, MASS.

ELECTRONIC TUNING

With the mechanical tuning mechanism set near the desired frequency, vernier adjustment of the frequency may be accomplished by varying the reflector voltage. Maximum power output for a fixed mechanical tuner position, however, will be obtained at only one reflector value. If the mechanical tuning mechanism and the reflector voltage are mutually adjusted for a maximum power output at a given frequency, and if the reflector voltage is then varied above and below the value for maximum power output such that the power output is reduced to one half, the frequency change between the half-power values is defined as electronic tuning range. The amount of electronic tuning and the linearity of its variation with reflector voltage is dependent upon the type of load used, and the coupling to the load. When maximum electronic tuning range is required, it is recommended that the transducer be operated into a resistive load. A highly reactive load will shorten the electronic tuning range, and cause non-linear variation of frequency with reflector voltage.

FREQUENCY STABILITY

To obtain the most stable operation from the type 5981 the reflector and resonator voltage supplies should be very well regulated. It is also essential that the type 5981 be operated at a nearly constant ambient temperature. Under no circumstances should the temperature exceed the maximum specified values.

The materials used in the mechanical tuning mechanism of the type 5981 have been selected in such a way that their thermal expansion coefficient will produce a desirable ambient temperature vs. frequency coefficient. In order that this desirable temperature coefficient will not be interfered with, a tube should not be clamped above the header skirt.

MODES OF OPERATION

Oscillation may be obtained in a given tube with several combinations of resonator and reflector voltages at a particular frequency. The regions where oscillation occurs within the reflector voltage range are referred to as voltage modes. The curves show characteristics of the average type 5981 in the recommended mode. This mode has been chosen because it represents the best compromise between optimum power output and wide electronic tuning range.

OUTLINE DRAWING

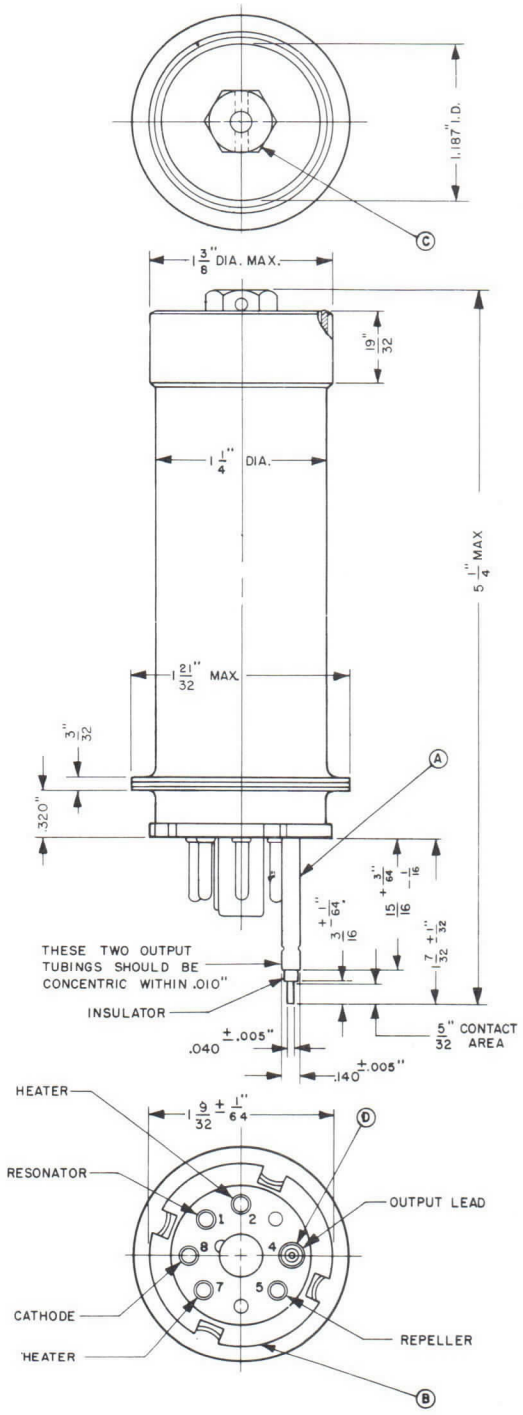

Printed in U.S.A.

MICROWAVE AND POWER TUBE DIVISION

RAYTHEON COMPANY

FOUNDRY AVE., WALTHAM 54, MASS.

AVERAGE CHARACTERISTICS

TUBES DESIGNED FOR USE IN MODE A

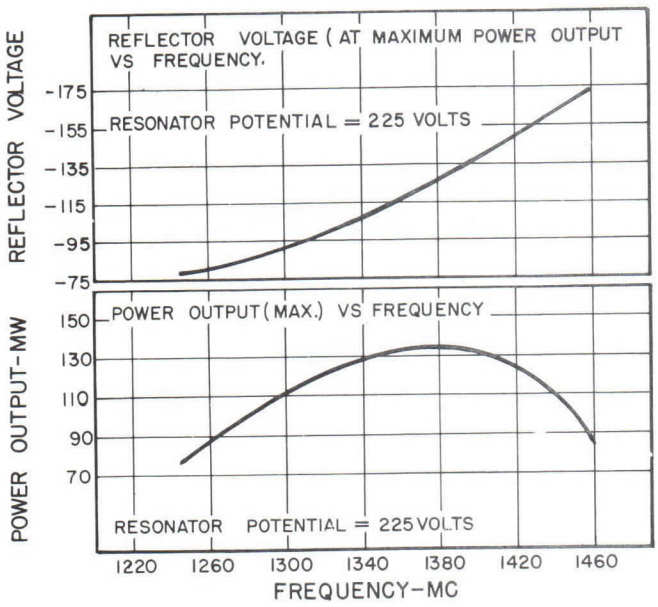

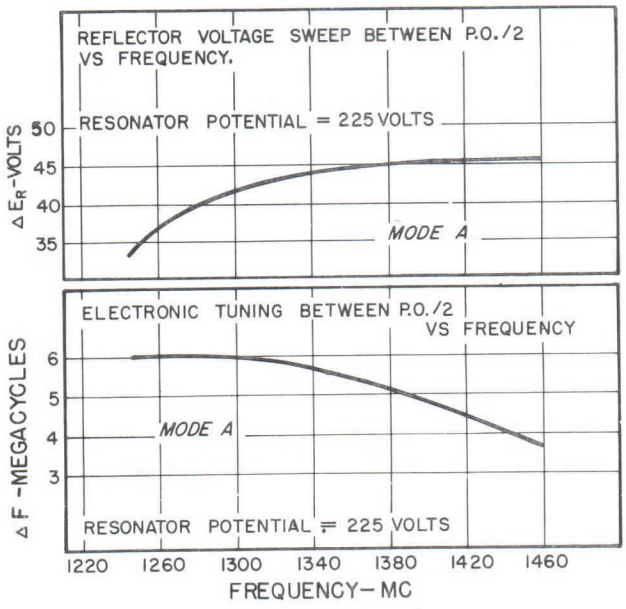

The exact value of reflector voltage, producing maximum output at a certain frequency varies from tube to tube. The voltage for all tubes, at each mode, will fall within the shaded area indicated below.

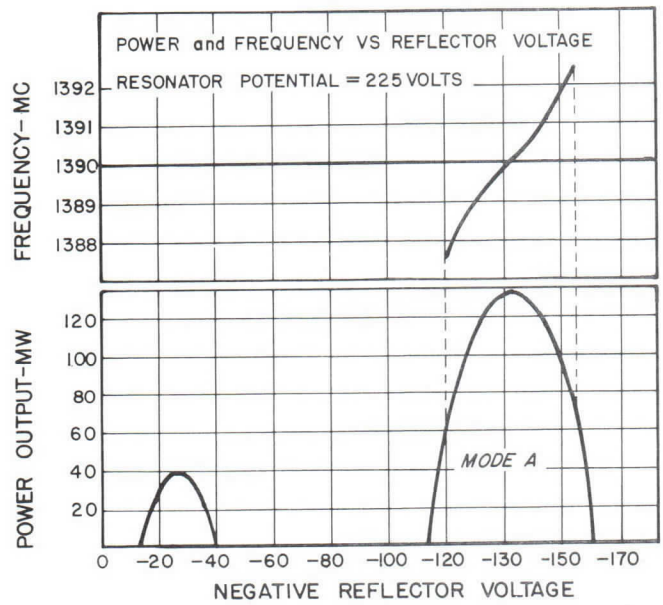

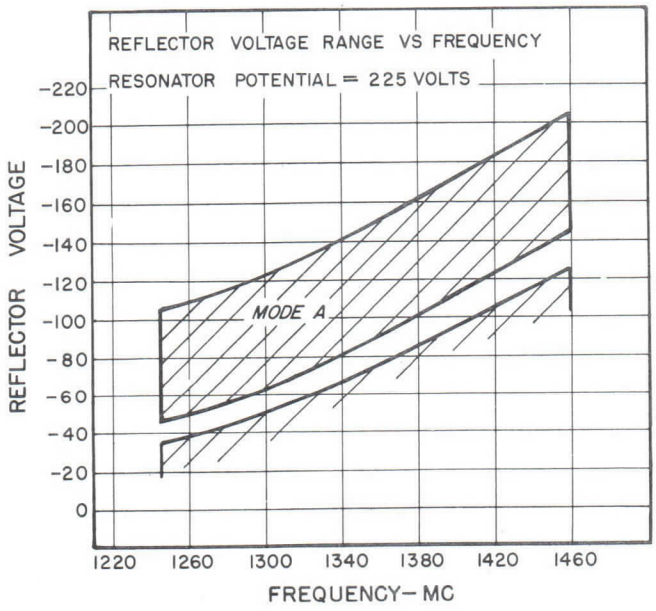

Printed in U.S.A.

MICROWAVE AND POWER TUBE DIVISION

RAYTHEON COMPANY

FOUNDRY AVE., WALTHAM 54, MASS.

5981 TRANSDUCER COUPLING

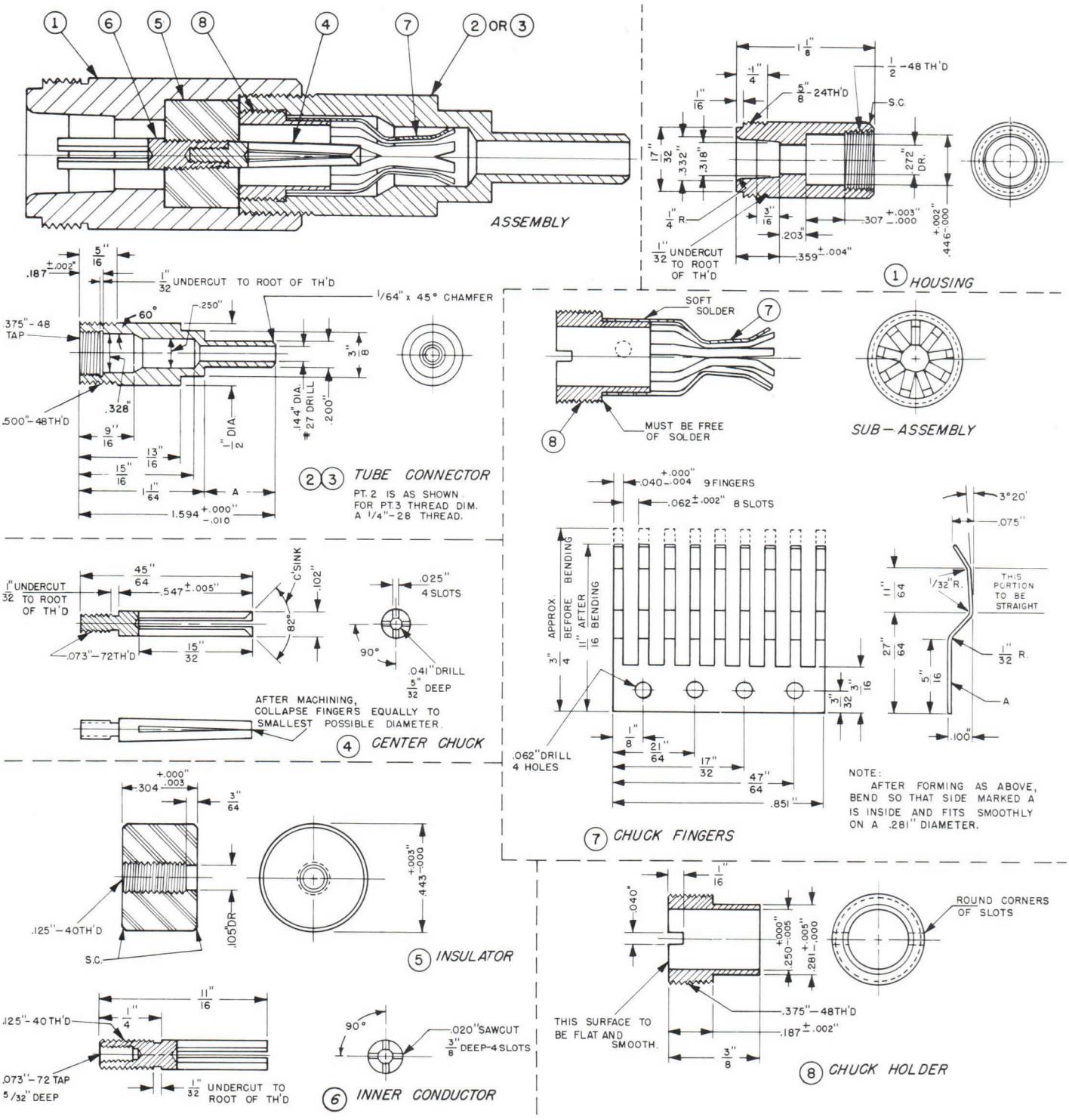

Printed in U.S.A.

MICROWAVE AND POWER TUBE DIVISION

RAYTHEON COMPANY

FOUNDRY AVE., WALTHAM 54, MASS.

3348 — 5-55

TYPE RK6043

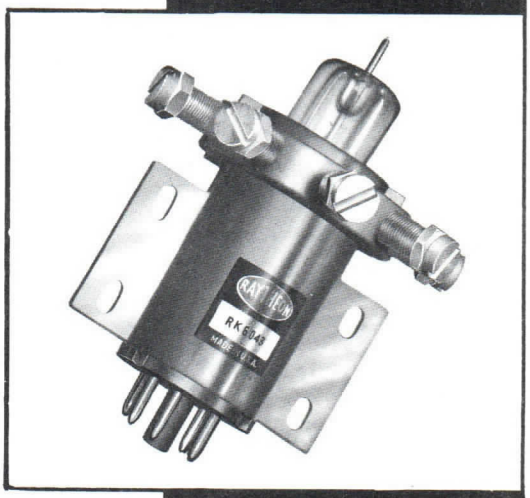

VELOCITY VARIATION OSCILLATOR

GENERAL DESCRIPTION

The type RK6043 is an integral cavity reflex velocity variation oscillator designed for CW operation over the 2950 to 3275 Mc range with a minimum power output of 25 milliwatts.

GENERAL CHARACTERISTICS

ELECTRICAL

Heater Characteristics

Heater Voltage	6.3V ± 5%
Heater Current	0.66 A

Ratings — Absolute Maximum Values

Grid #1 Voltage	330 Vdc
Grid #2 and #3 Voltage	330 Vdc
Cathode Current	45 mAdc
Reflector Voltage	
Minimum Value	−25 Vdc
Maximum Value	−500 Vdc
Reflector Current	7 uAdc
Heater-Cathode Voltage	±100V

The values specified above are based on the absolute system and must not be exceeded under any service condition. Operation above these limiting values may affect tube life and serviceability adversely. It does not necessarily follow that combinations of absolute maximum ratings can be attained simultaneously.

Typical Operating Conditions

Frequency Range	2950-3225 Mc
Reflector Voltage Transit Mode	3¾
Grid #1 Voltage	300 Vdc
Grid #2 and #3 Voltage	300 Vdc
Cathode Current	30 mAdc
Reflector Voltage Range	−35 to −110 Vdc
Electronic Tuning Range Po/2	20 Mc
Average Power Output	40 mW

Printed in U.S.A.

MECHANICAL

Mounting Position	Any
Overall Dimensions	See Outline Dwg.
Envelope	Glass
Base	Intermediate Octal, 4 Pin
Pin Connections	See Outline Dwg.

DETAILED ELECTRICAL INFORMATION

REFLECTOR

The power supply furnishing the reflector potential must be insulated to withstand the total resonator and reflector voltage. The reflector must never be allowed to become more positive than −25 volts with respect to the cathode. If this precaution is not observed, damage to the tube may result. Where high reflector circuit impedances are used, it is advisable to shunt the high impedance of the power supply with a small diode.

CATHODE

In most applications, the metal cavity used with the RK6043 is operated at ground potential and the cathode will be negative with respect to ground by the amount of the resonator potential. The cathode may be connected to one side of the heater or the center tap of the heater transformer secondary. When the cathode and heater are connected together, connections to the cathode should be made directly to the cathode contact on the tube socket and never to a heater lead. When the cathode and heater are not tied together the heater cathode voltage should not exceed ±100V. In all cases where the resonator is operated at ground potential, the heater transformer must be insulated to withstand the maximum resonator voltage. To obtain maximum tube life, it is recommended that the heater be allowed to warm up for 30 seconds before other voltages are applied. Application of the beam potential must not precede the application of any of the other voltages.

ELECTRONIC TUNING

Vernier adjustment of the frequency of the RK6043 is accomplished by varying the reflector voltage. If the mechanical tuning mechanism and the reflector voltage are mutually adjusted to yield a maximum power output at a given frequency, and if then the reflector voltage is varied above and below the value for maximum power such that the power output is reduced to one half, the frequency change between the half power values is defined as the electronic tuning range. The range of electronic tuning and the linearity of its variation with reflector voltage is a function of the type of load and coupling used. Maximum electronic tuning range will be achieved with operation into a resistive load. Operation into a highly reactive load may be attended by excessive hysteresis, and nonlinear variation of frequency with reflector voltage.

FREQUENCY STABILITY

The regulation of the voltages applied to the reflector and resonator will be reflected directly in the stability of the output frequency, hence the regulation of these supplies must be commensurate with the stability requirements of the application.

VELOCITY VARIATION OSCILLATOR

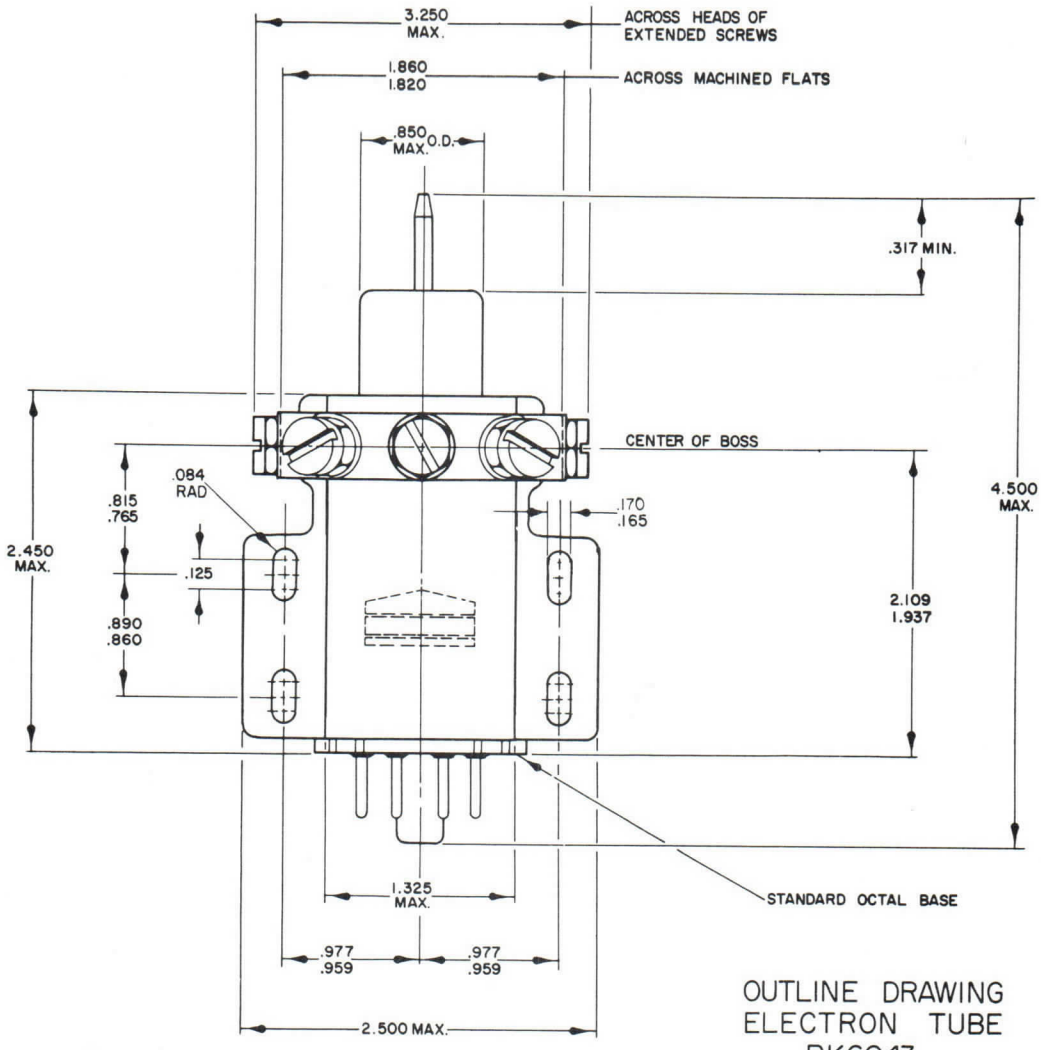

OUTLINE DRAWING
ELECTRON TUBE
RK6043

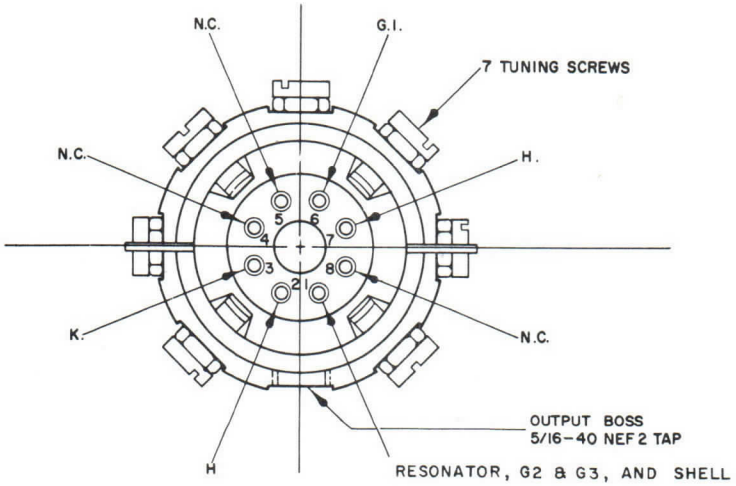

BOTTOM VIEW

Printed in
U.S.A.

RAYTHEON

Excellence in Electronics

TYPE 6115
VELOCITY VARIATION OSCILLATOR



The type 6115 is a velocity variation oscillator at the single cavity (integral) reflex type, designed for CW operation in the frequency range of 5100 to 5900 megacycles with an average power output at 100 milliwatts at 5500 Mc. The mechanical tuning mechanism provides a simple method of making occasional coarse frequency adjustments. In addition the 6115 can be electrically tuned to give a 30 megacycle vernier adjustment. Forced air cooling is not required during operation, and the tube couples into a 2" x 1" O.D. waveguide by means of the tube mount shown in this data. The 6115 is designed for operation at any frequency within the specified range, and it is particularly suited for local oscillator service in microwave receivers. It is useful, also, as a local oscillator in microwave spectrum analyzers, and as a microwave source for test purposes.

GENERAL CHARACTERISTICS

Heater, for oxide coated unipotential cathode:	
Voltage (A.C. or D.C.)	6.3 ± 0.5 Volts
Current	0.44 Amperes
Frequency Range	5100 to 5900Mc.

MAXIMUM RATINGS, Absolute Values:

D.C. Resonator Voltage	330 Max. Volts
D.C. Resonator Current	35 Ma.
D.C. Reflector Voltage	
Positive Value	0 Max. Volts
Negative Value	—350 Max. Volts
Heater-Cathode Voltage:	
Heater negative with respect to cathode	50 Max. Volts
Heater positive with respect to cathode	50 Max. Volts
Ambient Temperature of Air Around Shell	110 Max. °C.
Temperature of coaxial output line	75 Max. °C
VSWR mismatch	1.1

TYPICAL OPERATING CONDITIONS: C.W. Oscillator: Frequency 5500 Mc.

D.C. Resonator Voltage	300 Volts
D.C. Resonator Current	32 Ma. Max.
D.C. Reflector Voltage Range*	—115 to —175 Volts
D.C. Reflector Current	Less than 7 μa
Electronic Tuning (Half Power)**	
Frequency Change	50 Mc.
Modulation Sensitivity Mc/V	1.2
Power Output	100 mw. ave.
Thermal Compensation	—.10 to .05 Mc./°C

*Adjusted for maximum power output at 5500 Mc.

**Change in frequency between the two ½ power points when the reflector voltage is varied above and below the point of max. power output corresponding to the given frequency.

MECHANICAL

Mounting	Any Position
Overall Dimensions	See Outline Drawing
Resonator Cavity	Integral part of tube
Envelope	Metal
Cap	Miniature
Base	To fit standard octal with No. 4 pin enlarged to 11/64" Dia.
Vibration	10 G's
Altitude	50000 ft.
Humidity	100%
Net Weight	1.5 Ounces

RAYTHEON MANUFACTURING COMPANY
POWER TUBE DIVISION — WALTHAM 54, MASS.

MODES OF OPERATION

Oscillation may be obtained in a given tube with several combinations of resonator and reflector voltages at a particular frequency. The regions where oscillation occurs within the reflector voltage range are referred to as voltage modes. The curves show characteristics of the average 6115 in the recommended mode. This mode has been chosen because it represents the best compromise between optimum power output and wide electronic tuning range.

Electrical Characteristics

*THE FOLLOWING DATA IS REPRESENTATIVE OF AVERAGE TUBES
TUBES DESIGNED FOR USE IN MODE A

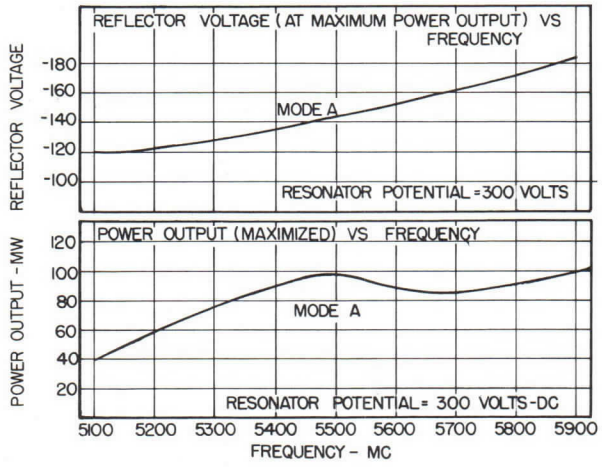

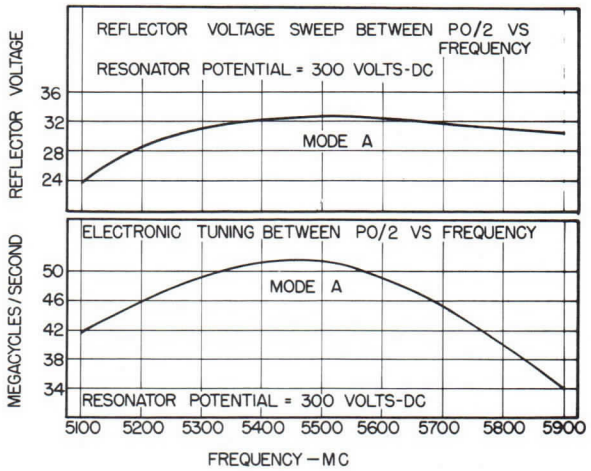

THE EXACT VALUE OF REFLECTOR VOLTAGE, PRODUCING MAXIMUM POWER OUTPUT AT A CERTAIN FREQUENCY, VARIES FROM TUBE TO TUBE THE VOLTAGE FOR ALL TUBES, AT EACH MODE, WILL FALL WITHIN THE SHADED AREA INDICATED BELOW.

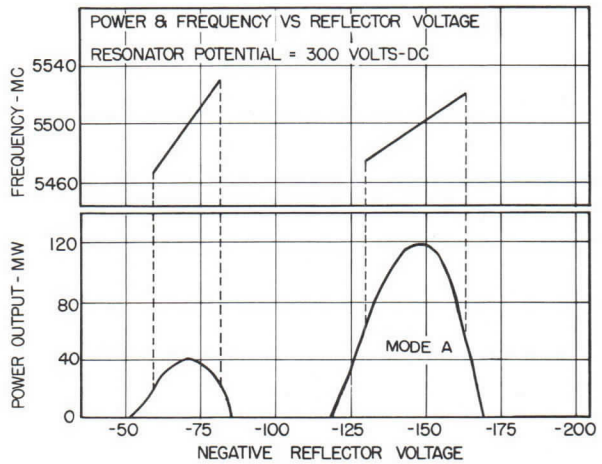

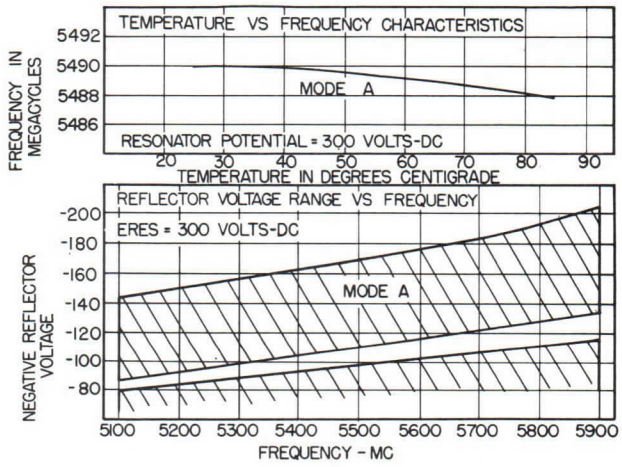

INSTALLATION

The 6115 requires a standard octal socket modified with No. 4 pin enlarged to admit the coaxial output line. The tube may be mounted in any position but should be rigidly clamped to insure the proper depth of the coaxial output line with respect to the waveguide and to guard against excessive strains on the output line. The tube must be clamped on or below the shoulder of the header skirt.

The tube is coupled into the waveguide through a spring finger contact with a brass antenna extension. (See outline drawing.) All the tabulated data contained in this data sheet was taken using this coupling arrangement operating into a matched load.

It is important that this system or its electrical equivalent, be used to insure tube interchangeability, and satisfactory tuning range characteristics. The standing wave ratio at the input section should not exceed a VSWR of 1.1.

SHIELDING

Where the 6115 is to be operated in the presence of strong magnetic fields, shielding of the resonator and reflector voltage leads is usually required in order to avoid undesirable modulation of the tube output. In extremely troubelsome conditions, it may be advisable to place the 6115 in a metal chamber with poly-iron chokes provided to bring the voltages into the chamber.

CATHODE

In most applications, the metal envelope (resonator) of the 6115 is operated at ground potential. The cathode is therefore negative with respect to ground by the amount of the resonator potential, and must not be grounded. The cathode may be connected to one side of the heater or the center tap of the heater transformer secondary. When cathode and heater are connected together, connections to the cathode should be made directly to the cathode contacts on the tube socket and never to a heater lead. When cathode and heater are not connected together, the heater-cathode voltage

OUTLINE DRAWING

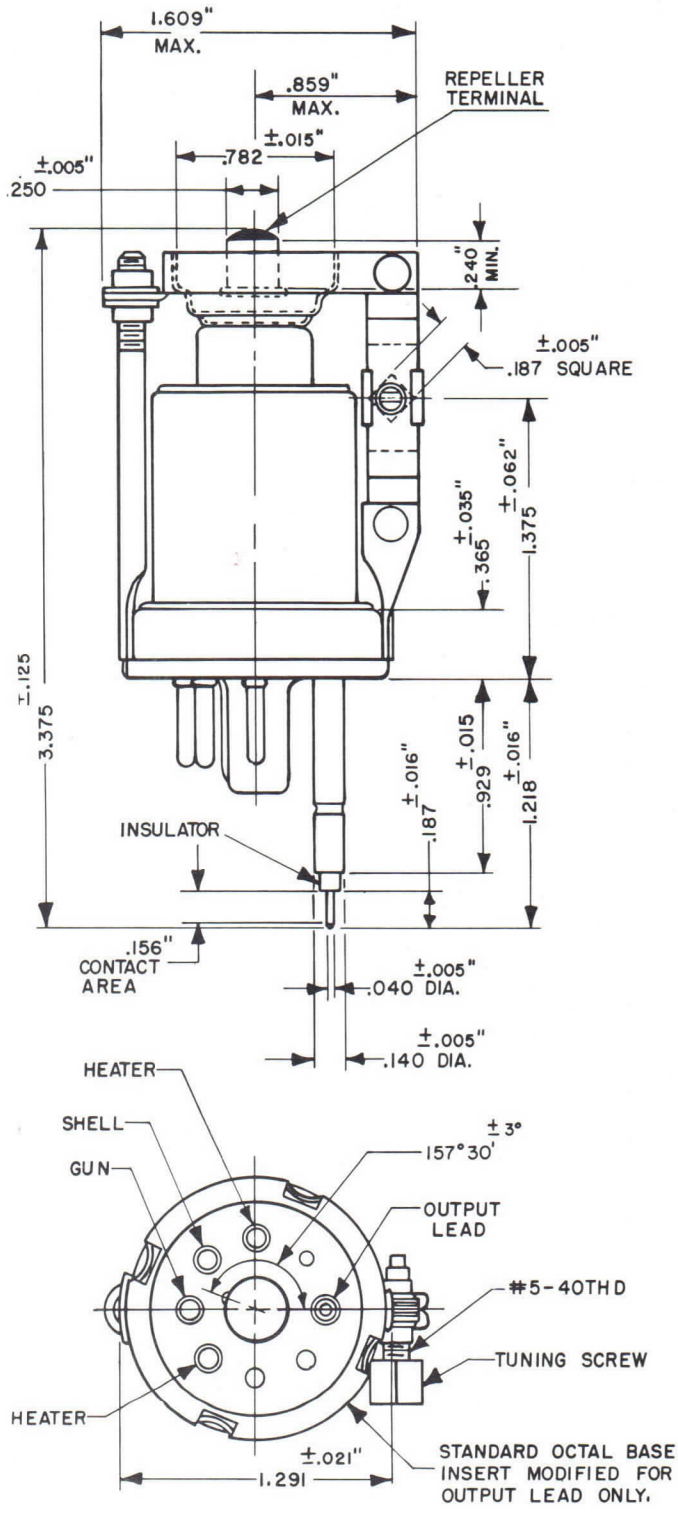

should not exceed ± 50 volts. In all cases where the resonator is operated at ground potential, the heater transformer must be insulated to withstand the maximum resonator voltage.

In applications where the metal envelope (resonator) of the 6115 is not at ground potential, it is essential that the tube be surrounded by a grounding shield, and be mechanically tuned with an insulated tool. Adequate ventilation must be provided through this shield to keep the ambient temperature of the chamber below the maximum specified value.

REFLECTOR

The reflector electrode is connected to the small cap on the top of the tube. The power supply furnishing the reflector potential must be insulated to withstand the total resonator and reflector voltage. The reflector must never be allowed to become positive with respect to the cathode. If this precaution is not observed, damage to the reflector may result. In cases where modulating potentials bring the reflector voltage close to zero volts, or where extremely high reflector circuit impedances are required, a diode should be connected between cathode and reflector to prevent the reflector from going positive.

MECHANICAL TUNING MECHANISM

The mechanical tuning mechanism of the 6115 is designed to permit occasional frequency adjustments. Rotating the tuning screw in a clockwise direction reduces the frequency. Approximately 3 revolutions of the tuning nut are required to cover the recommended frequency range of the tube.

When the tube is first put into service, it should be mechanically tuned to the desired frequency. The tuning bows should then be flexed several times to relax the strains in the tuning mechanism. In this process the tuning screws should be adjusted to overshoot the desired frequency several times, each time decreasing the amount of tuning screw movement.

ELECTRONIC TUNING

With the mechanical tuning mechanism set near the desired frequency, vernier adjustment of the frequency may be accomplished by varying the reflector voltage. Maximum power output for a fixed mechanical tuner position, however, will be obtained at only one reflector value. If the mechanical tuning mechanism and the reflector voltage are mutually adjusted for a maximum power output at a given frequency, and if the reflector voltage is then varied above and below the value for maximum power output such that the power output is reduced to one half, the frequency change between the half-power values is defined as electronic tuning range.

The amount of the electronic tuning and the linearity of its variation with reflector voltage is dependent upon the type of load used, and the coupling to the load. When maximum electronic tuning range is required, it is recommended that the tube be operated into a resistive load. A highly reactive load will shorten the electronic tuning range and cause non-linear variation of frequency with reflector voltage.

FREQUENCY STABILITY

To obtain the most stable operation from the 6115 the reflector and resonator voltage supplies should be very well regulated. It is also essential that the 6115 be operated at a near constant ambient temperature. Under no circumstances should the temperature exceed the maximum specified values.

The materials used in the mechanical tuning mechanism of the 6115 have been selected in such a way that their thermal expansion coefficient will produce a desirable ambient temperature vs. frequency coefficient. In order that this desirable temperature coefficient will not be interfered with, a tube should not be clamped above the header skirt.

Tube Mount Details

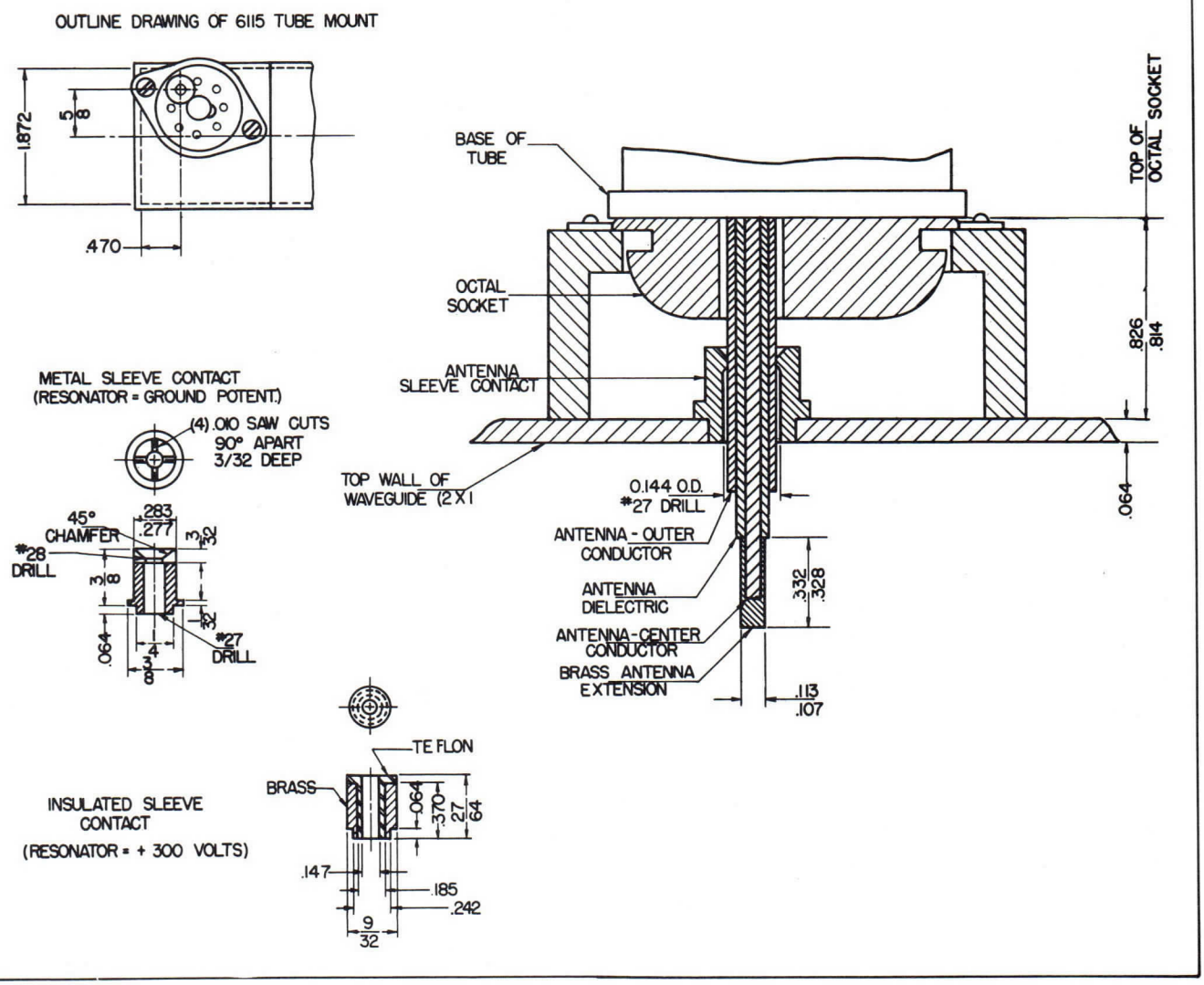

TYPE RK6116

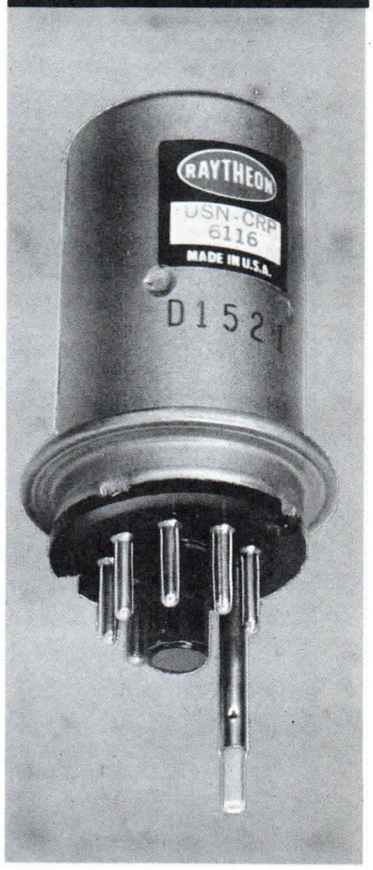

The RK6116 is a thermally tuned velocity variation oscillator of the single-cavity (integral) reflex type designed for CW operation in the 8500 to 9600 Mc range with an average power output of 30 mW. Sufficient cooling for this type is usually provided by freely circulating air. It is a coaxial output type tube intended to couple into standard 1" x ½" waveguide through a suitable transducer. The RK6116 is an extremely rugged tube designed for local oscillator service in microwave receivers where remote frequency adjustment is desired.

GENERAL CHARACTERISTICS

ELECTRICAL

Heater Characteristics

Heater Voltage	6.3 ± 0.5 V
Klystron Heater Current	0.52 A
Tuner Heater Current	0.80 A

Maximum Ratings

Resonator Voltage	350 Vdc
Resonator Current	32 mAdc
Reflector Voltage	0 to —350 Vdc
Tuner Diode Voltage	350 Vdc
Tuner Diode Current	59 mAdc
Tuner Diode Dissipation (9660-8500 Mc)	16.5 W
Tuner Diode Dissipation @ 8500 Mc or below	10.0 W
Thermal Tuning Time (9660-8500 Mc)	3 seconds
Thermal Tuning Time (8500-9660 Mc)	3 seconds
Electronic Tuning Range (minimum)	45 Mc
Heater-Cathode Voltage	± 100 V
Shell Ambient Temperature	110°C
Coaxial Output Line Ambient Temperature	90°C
Frequency Deviation @ 10 g (50 cps @ 9080 Mc)	± 1.3 Mc

Typical Operation

Frequency Range	8500-9660 Mc
Resonator Voltage	300 Vdc
Resonator Current	25 mAdc
Reflector Voltage (max. Po @ 9660 Mc)	—95 to —145 Vdc
Reflector Voltage (max. Po @ 8500 Mc)	—60 to —110 Vdc
Thermal Tuning Time 8500-9660 Mc	2 seconds
Thermal Tuning Time 9660 8500 Mc	2 seconds
Electronic Tuning Range @ 9080 Mc	100 Mc
Power Output 8500-9660 Mc	26 to 34 mW

MECHANICAL

Mounting Position	Any
Outline Dimensions	See outline dwg., Fig. 9

Printed in U.S.A.

Envelope	Metal
Base	Fits standard octal socket with #4 pin enlarged to $\frac{3}{16}$"
Shock (max.)	200 g
Vibration (max.)	10 g
Altitude (max.)	50,000 feet
Humidity	100%
Tube Life (guaranteed min.)	500 hours

DETAILED ELECTRICAL INFORMATION

CATHODE

In applications where the metal envelope (resonator) of the tube is operated at ground potential, the cathodes will be negative with respect to ground by the amount of resonator and tuner diode potentials respectively. The klystron cathode may be connected to one side of the heater or the center tap of the heater transformer secondary. When the klystron cathode and heater are connected together, connections to the cathode should be made directly to the cathode contacts on the tube socket and never to a heater lead. When the cathode and heater are not tied together, the heater-cathode voltage should not exceed ±100 volts. In all cases where the resonator is operated at ground potential, the heater transformers must be insulated to withstand the maximum resonator and diode voltages respectively.

In applications where the metal envelope is operated above ground potential, the tube should be surrounded by a grounded enclosure or insulating device for the protection of the operator. Adequate ventilation must be provided through this enclosure or insulating device to keep the ambient below the maximum specified values.

REFLECTOR

The power supply furnishing the reflector potential must be insulated to withstand the total resonator and reflector voltages in applications where the resonator is grounded. The reflector must never be allowed to become positive with respect to the cathode. Failure to observe this precaution may result in damage to the tube. In applying operating voltages to the tube, a negative reflector voltage should always be established before the resonator potential is applied. In cases where the modulating potentials bring the reflector potential close to zero volts, or where an extremely high reflector circuit impedance is required, a diode should be connected between the klystron cathode and reflector to prevent the reflector from going positive.

THERMAL TUNING

Thermal tuning is accomplished in the RK6116 by coupling the thermal-expansion characteristics of the anode of an integral diode to the top grid of the klystron cavity. Current changes in the diode (klystron tuning) are accomplished very smoothly by changing the grid bias on a control tube in the external circuit placed in series with the internal diode (see Fig. 1). Tuning through the range, or part of the range, with the maximum specified diode voltage (280 Vdc) will result in diode input powers as high as 16.5 W on limit tubes. Sustained tuner diode power input in excess of 10 W with the tube tuned below 8500 Mc may permanently damage the tube.

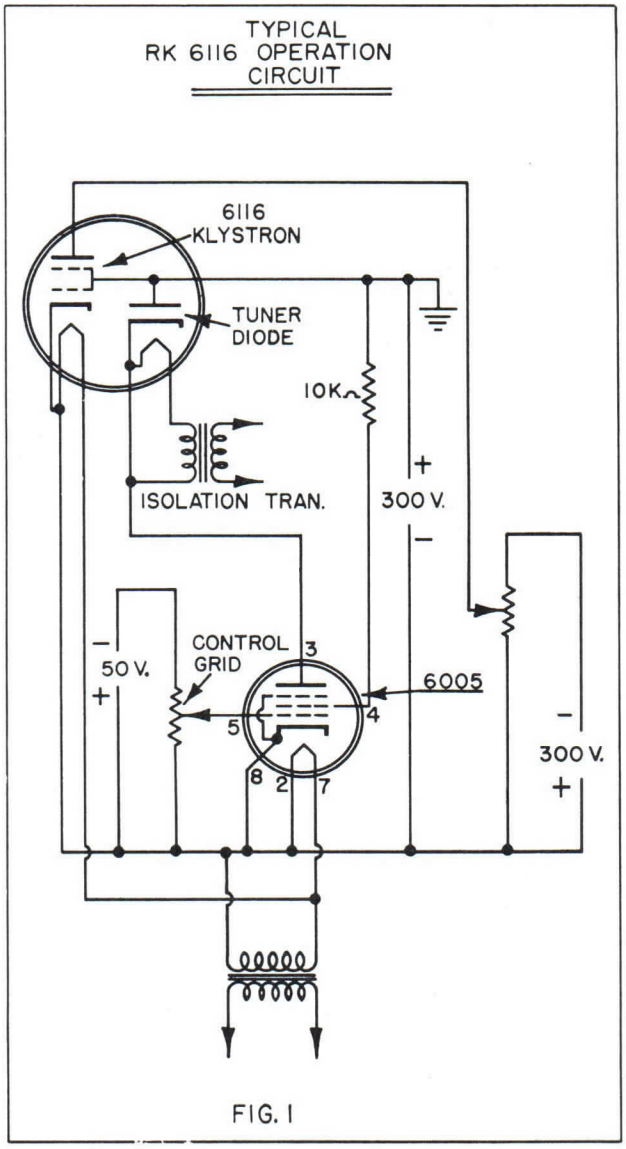

FIG. 1

THERMAL TIME CONSTANT*

The thermal time constant of the RK6116 has been determined by applying step variations of tuner current and plotting frequency as a function of time. Examination of the curves of Fig. 2 shows that the frequency variation of the tube with time approaches very closely that of a true exponential plot for $\tau = 1.2$ seconds. Because of the almost true exponential nature of this thermal time variation, the tube may be represented analytically by the function $f(t) = f_o + (1 - e^{\frac{-t}{\tau}})(f_\infty - f_o)$ (where $f(t)$ = frequency as a function of time, f_o = initial steady-state frequency, f_∞ = final steady-state frequency) for the purposes of AFC design.

*The data shown in the accompanying graphs are representative of typical tubes and are presented as general information for the circuit designer. They should not be interpreted as completely defining the expected spread of these characteristics. Detailed information necessary for specific applications may be obtained by contacting the Applications Engineering Department, Microwave and Power Tube Operations, Raytheon Manufacturing Company, Waltham 54, Massachusetts.

Printed in U.S.A.

MICROWAVE AND POWER TUBE DIVISION

RAYTHEON COMPANY

FOUNDRY AVE., WALTHAM 54, MASS.

3225 — 2-55

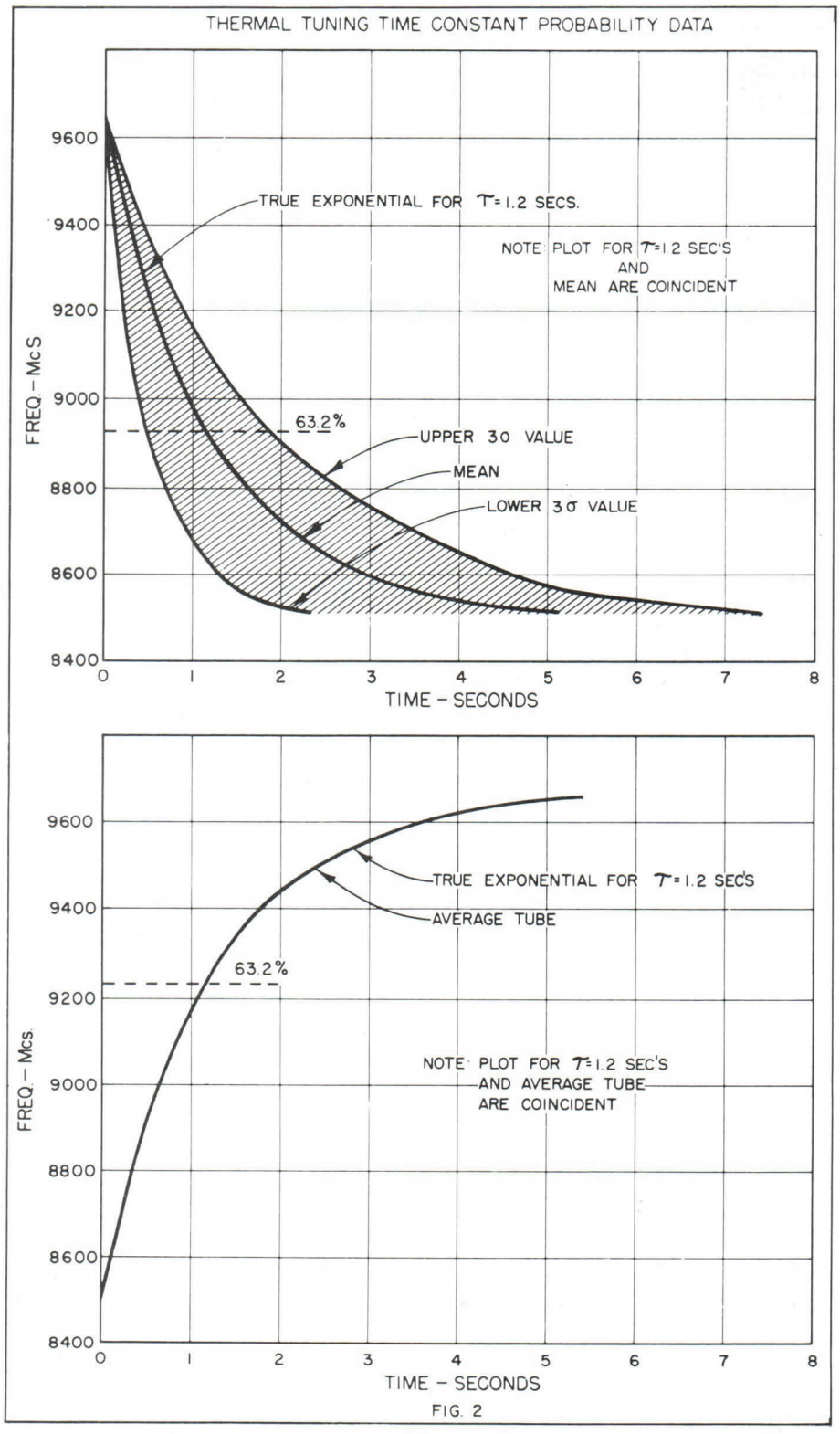
THERMAL TUNING TIME CONSTANT PROBABILITY DATA
9600
9400
9200
9000
8800
8600
8400
FREQ. – Mc S
TRUE EXPONENTIAL FOR T = 1.2 SECS.
NOTE PLOT FOR T = 1.2 SEC'S AND MEAN ARE COINCIDENT
63.2%
UPPER 3σ VALUE
MEAN
LOWER 3σ VALUE
0 1 2 3 4 5 6 7 8
TIME – SECONDS
9600
9400
9200
9000
8800
8600
8400
FREQ. – Mcs
TRUE EXPONENTIAL FOR T = 1.2 SEC'S
AVERAGE TUBE
63.2%
NOTE PLOT FOR T = 1.2 SEC'S AND AVERAGE TUBE ARE COINCIDENT
0 1 2 3 4 5 6 7 8
TIME – SECONDS

FIG. 2

ELECTRONIC TUNING

With the thermal tuner adjusted so that the tube is operating near the desired frequency, vernier frequency adjustment may be made by varying the reflector voltage. Maximum power output for a given thermal tuner setting, however, will be obtained at only one value of reflector voltage. If the thermal tuner and reflector voltage are mutually adjusted for maximum power output at a given frequency, and then if the reflector voltage is varied above and below the value for maximum power output so that the power output is reduced by one-half, the frequency change between the half-power values is defined as the electronic tuning range. A highly reactive load may shorten the electronic tuning range and cause nonlinear variation of frequency with reflector voltage (see Fig. 3).

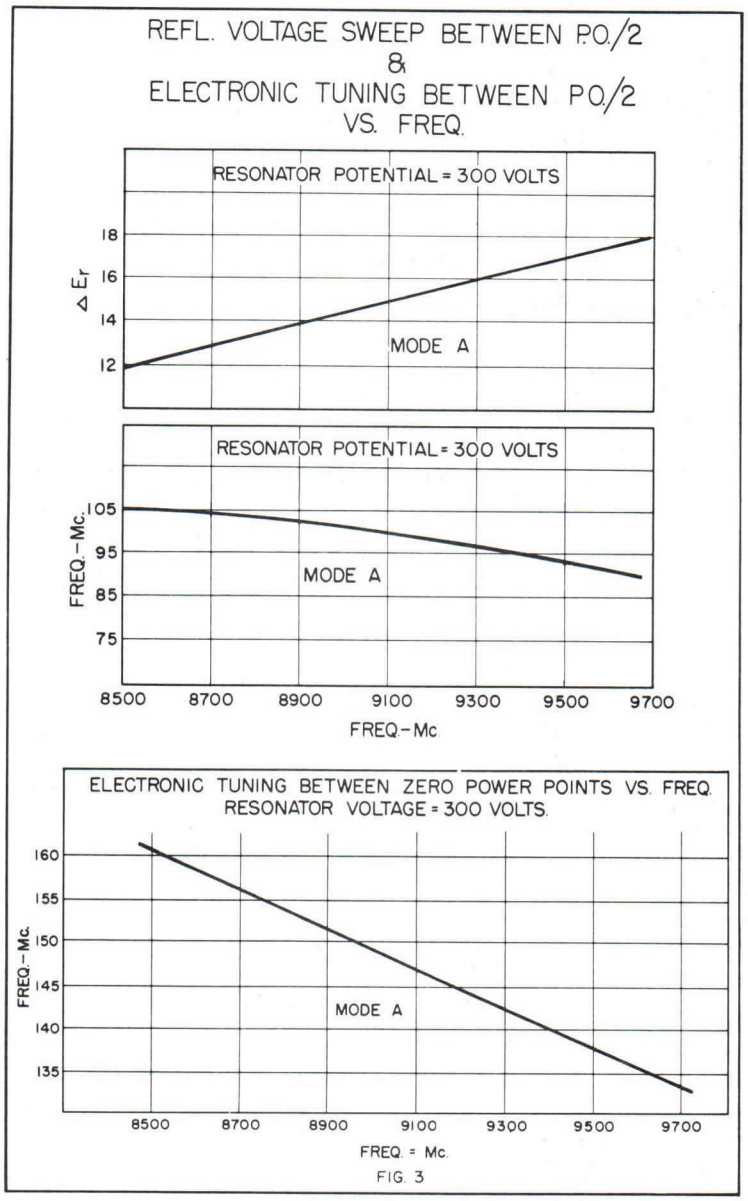

FIG. 3

Printed in U.S.A.

MODES OF OPERATION

Oscillation can be obtained in a given tube with several combinations of resonator and reflector voltage at a particular frequency. The regions where oscillations occur, within the reflector voltage range, are referred to as voltage modes. The curves of Fig. 4 show the characteristics of the RK6116 in the recommended mode (mode A). This mode has been chosen because it represents the best compromise between optimum power output and wide electronic tuning range.

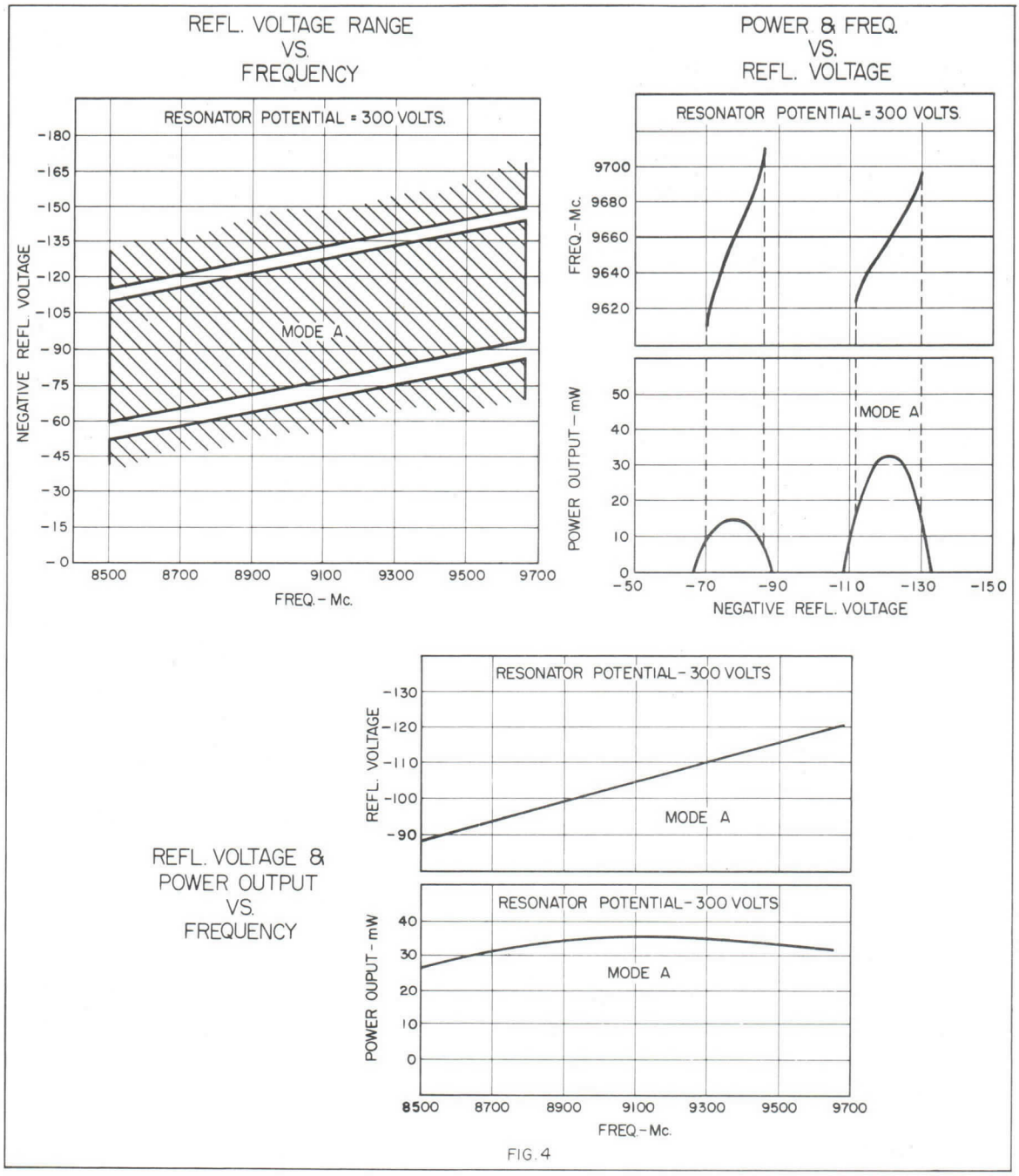

FIG. 4

TUNER CHARACTERISTICS*

Frequency is a nonlinear function of tuner diode current or voltage in the RK6116 klystron; and the usual plot of frequency vs. diode current or voltage is inadequate for equipment design purposes. Therefore, the normalized presentation of Fig. 5 is given with probability data that more completely defines the tube's characteristics and displays the information necessary for the design of nonlinearity-correcting networks. Fig. 6 illustrates the method used in plotting the curves of Fig. 5 with a 1000-Mc range taken for convenience. The tube may be cycled repeatedly over its entire tuning range throughout its life with no adverse effect on tube performance.

Since the thermal tuner will track a frequency up to several hundred cycles per second, full advantage of the frequency stability of this tube will not be realized unless power-supply ripple is minimized.

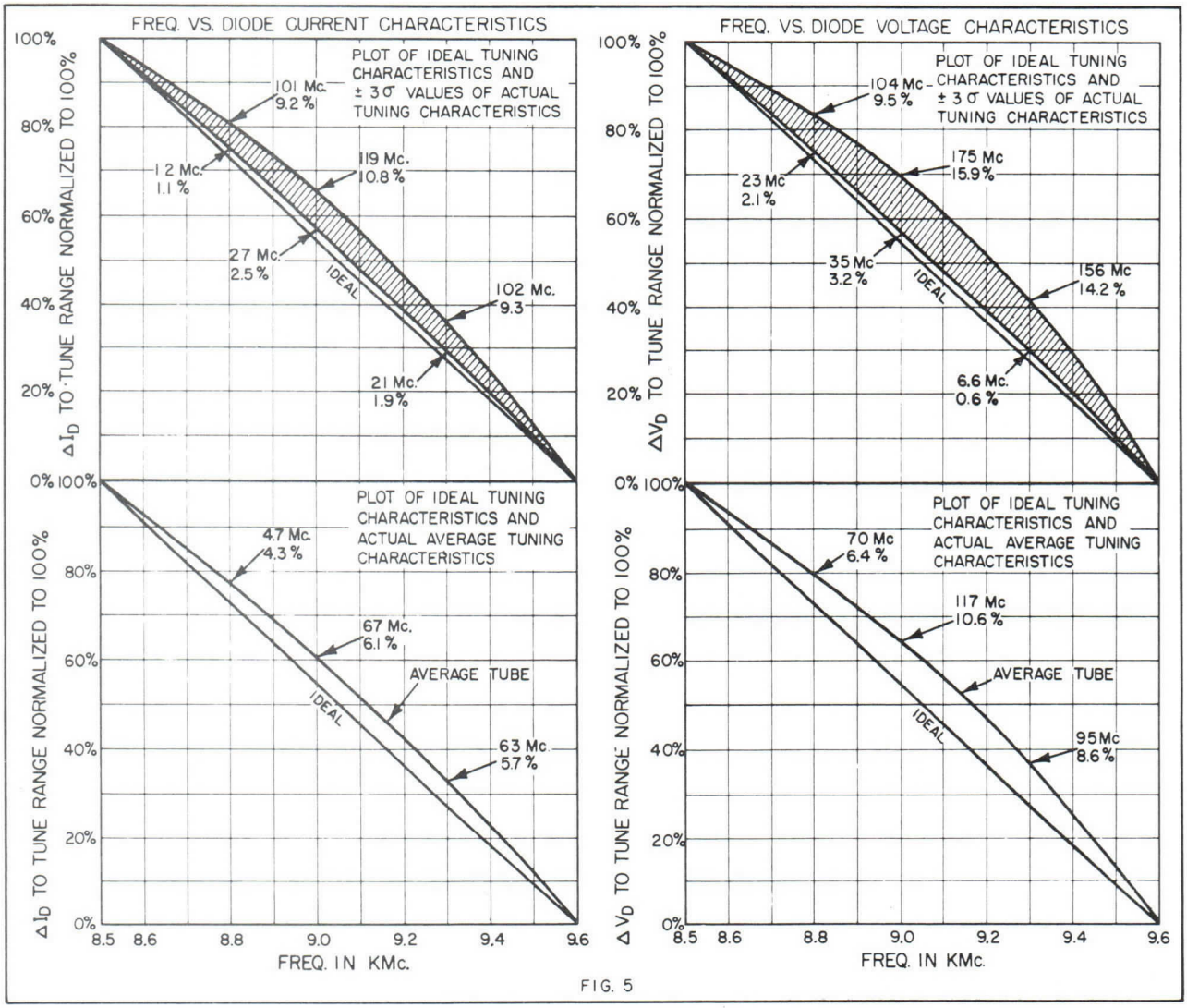

FIG. 5

*See footnote on page 3.

SAMPLE PLOT

DEFINITIONS:

I_D = TUNER DIODE CURRENT.

$\Delta I_D = I_D]_{8660} - I_D]_{9660}$

$\delta I_D = I_D]_f - I_D]_{9660}$

FREQ.	I_D	IDEAL TUBE $\frac{\delta I_D}{\Delta I_D} \times 100\%$	ACTUAL TUBE $\frac{\delta I_D}{\Delta I_D} \times 100\%$
8660	25.2	100%	100%
8860	22.8	80	84.2
9060	20.0	60	67.6
9260	17.0	40	46.0
9460	13.7	20	24.3
9660	10.0	0	0

PROCEEDURE:

1. PLOT FREQUENCY AS A FUNCTION OF $\frac{\delta I_D}{\Delta I_D} \times 100\%$ FOR IDEAL TUBE.
2. PLOT FREQUENCY AS A FUNCTION OF $\frac{\delta I_D}{\Delta I_D} \times 100\%$ FOR ACTUAL TUBE.
3. INDICATE CURRENT DEVIATIONS FROM IDEAL AT 200 Mc. INTERVALS.

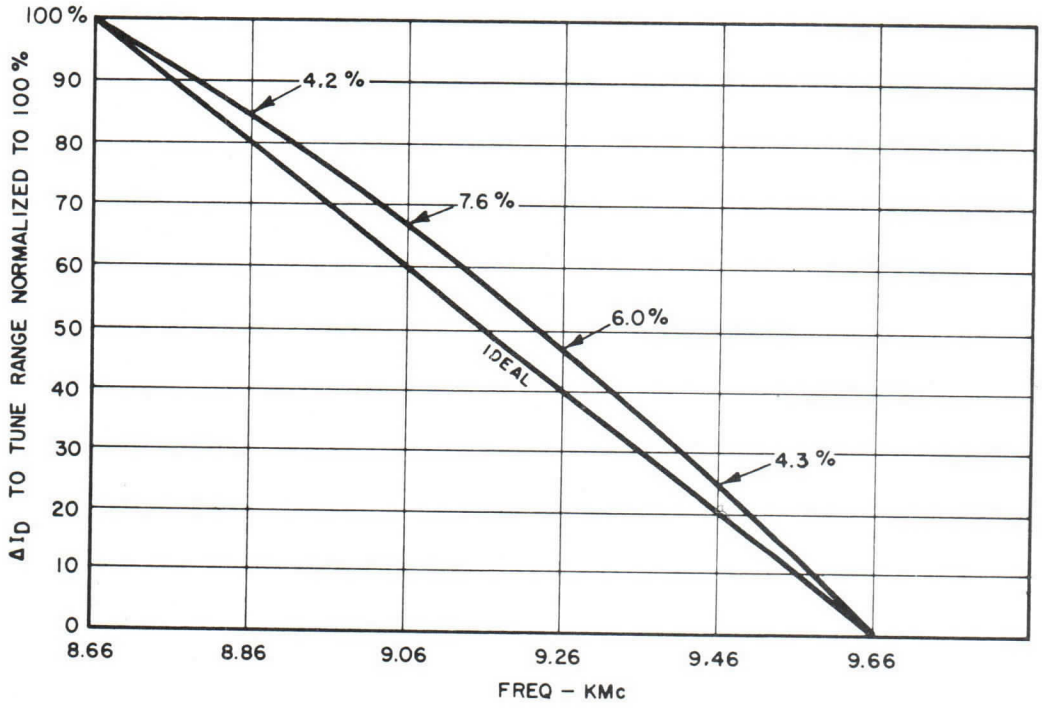

FIG. 6

DETAILED MECHANICAL INFORMATION

INSTALLATION

The RK6116 requires a modified standard octal socket with pin #4 enlarged. The tube may be mounted in any position, but should be rigidly clamped to ensure the proper depth of the coaxial output line in the waveguide and to guard against excessive strain in the coaxial output line. The tube should be clamped to the waveguide and socket assembly by the header skirt, but not so that excessive stress will be applied between the header skirt and the base. Under conditions of severe vibration, lack of rigidity in the clamping which will allow the tube to move with respect to the waveguide will contribute seriously to frequency variations.

The coaxial output line is coupled into the waveguide (1" x ½") through a transducer (see Fig. 7 for socket details). All tabulated data in this sheet were obtained using this type of coupling and a load presenting a VSWR less than 1.1:1. It is important that this tube coupling assembly, or its electrical equivalent, be used. To realize satisfactory tube performance, the voltage standing-wave ratio at the coupling assembly should not exceed 1.5:1.

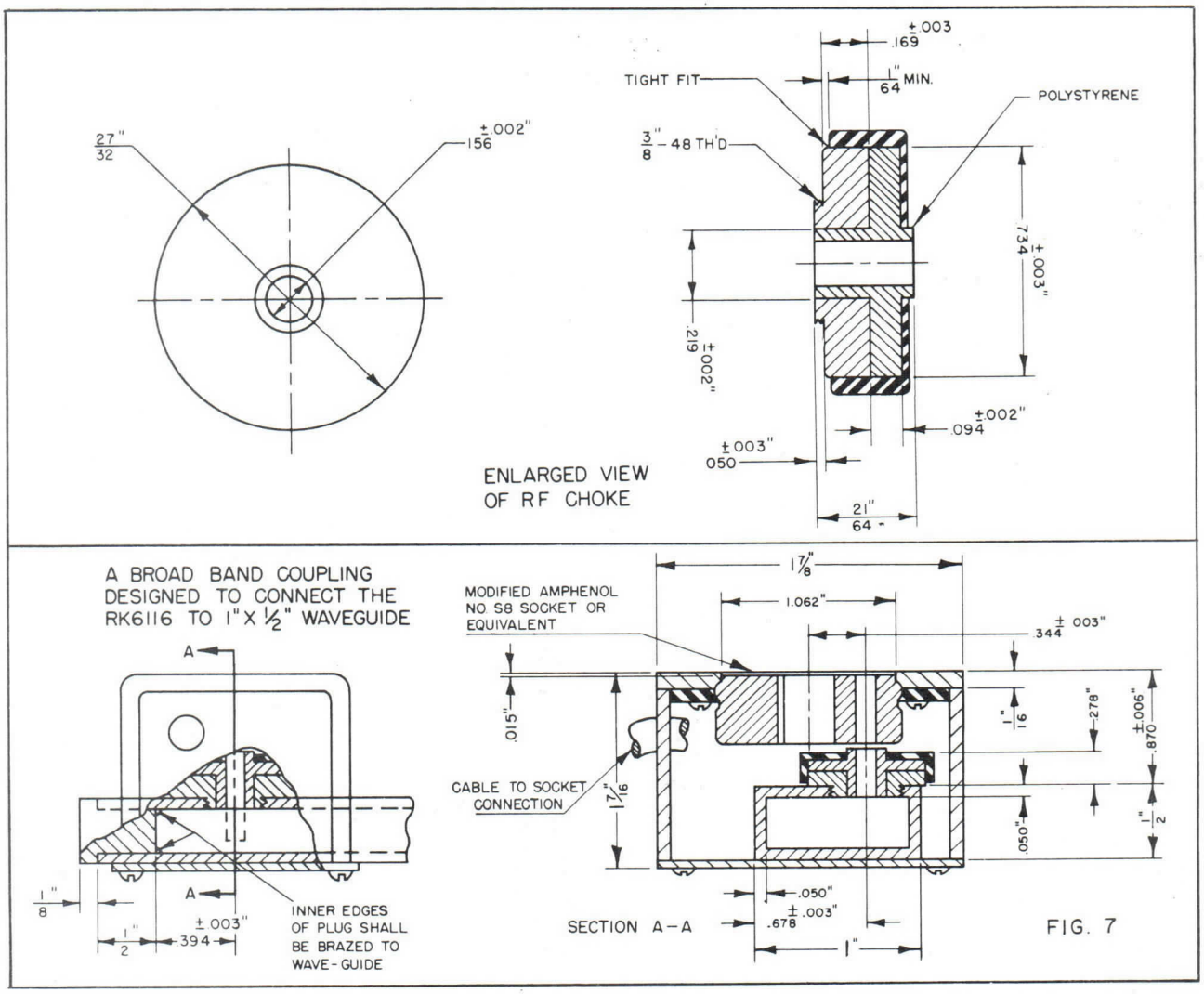

MICROWAVE AND POWER TUBE DIVISION

Printed in U.S.A.

SHIELDING

Operation of the RK6116 in the presence of a strong magnetic field usually requires shielding of the resonator and reflector leads to avoid undesirable modulation of the tube output. In extremely troublesome environments, it may be necessary to place the RK6116 in a metal chamber with polyiron chokes provided on the leads bringing voltages into the chamber.

MECHANICAL VIBRATION CHARACTERISTICS

Fig. 8 is a plot of operating frequency deviation as a function of acceleration due to vibration.

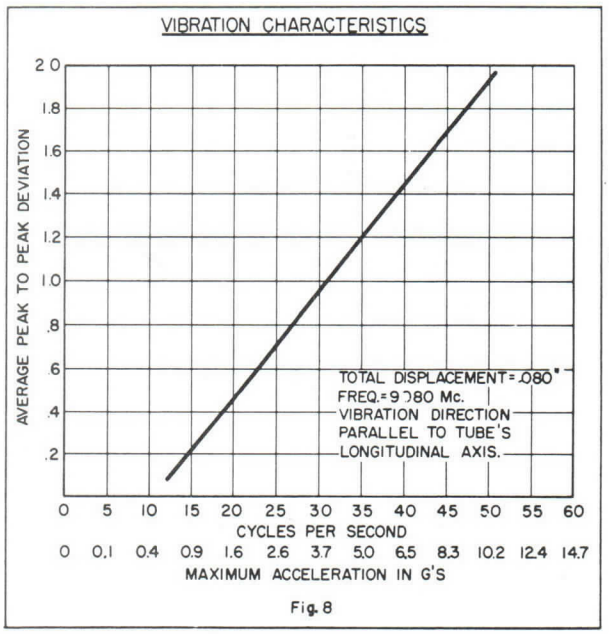

Fig. 8

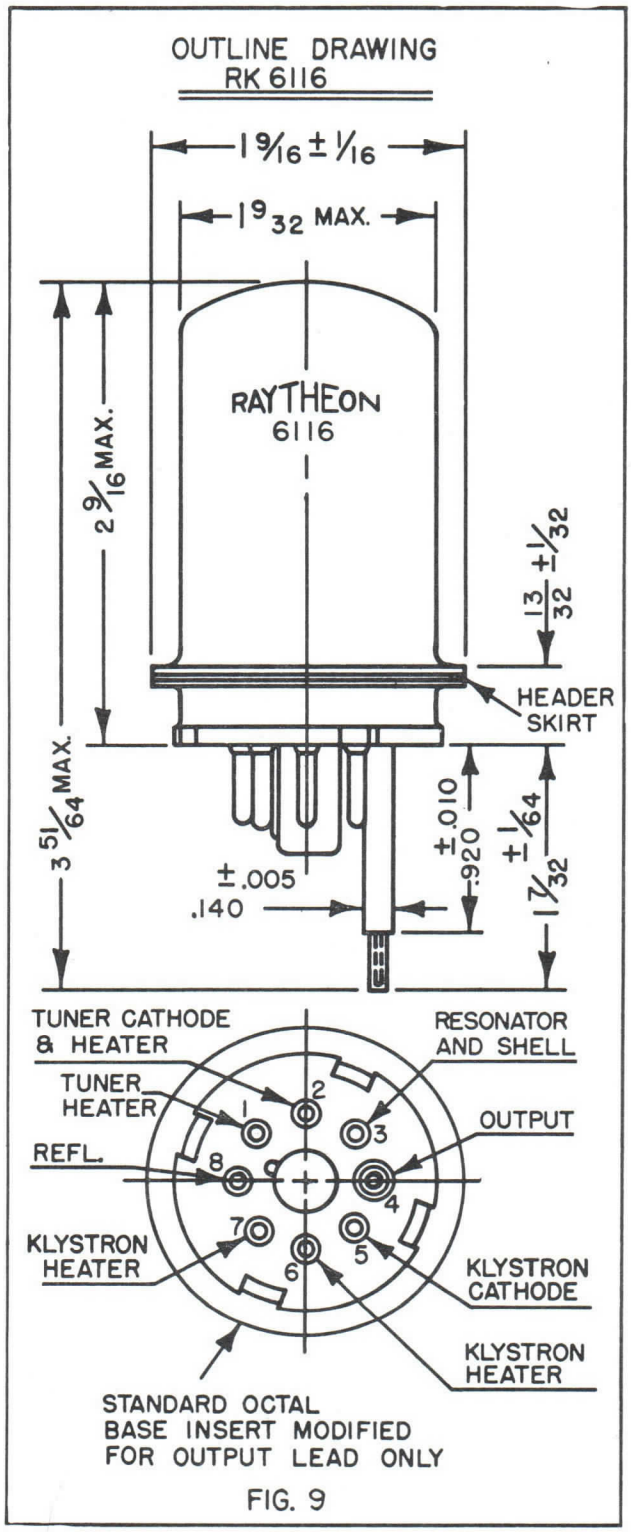

FIG. 9

TYPE RK6178/ QK297

The RK6178/QK297 is a mechanically tuned velocity variation oscillator of the single cavity (integral) reflex type designed for CW operation in the 15,500 to 16,500 Mc range with an average power output of 25 milliwatts. Adequate cooling for this type tube is usually provided by freely circulating air. It is a waveguide output type fitted with a fiber flange which is capable of insulating the shell of the tube from the coupling guide. It is therefore convenient to operate the shell of this tube above ground, and to power the resonator circuit from the same supply which furnishes plate potential to other tubes in an equipment. The compound lever system of the mechanical tuner is free of backlash and yields an extremely smooth fine tuning adjustment which is linear with tuner shaft rotation.

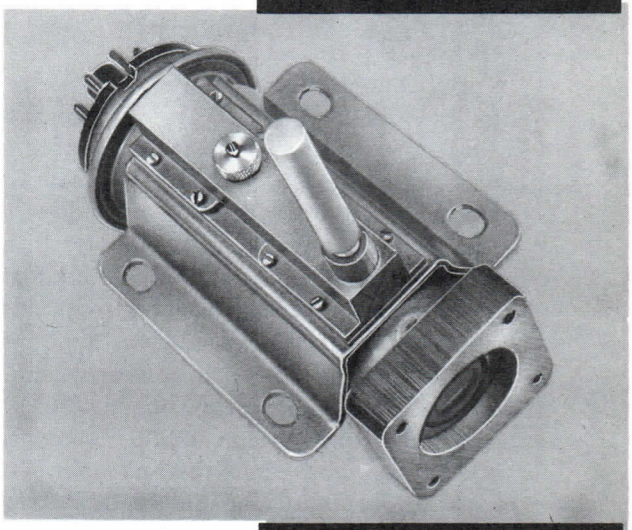

VELOCITY VARIATION OSCILLATOR

GENERAL CHARACTERISTICS

ELECTRICAL

Heater

Heater Voltage (AC or DC)	6.3 V
Heater Current @ 6.3 volts	450-600 mA

Maximum Ratings

Heater Voltage	6.3 ±10% V
Resonator Voltage	330 Vdc
Resonator Current	45 mAdc
Reflector Voltage	—25 to —300 Vdc
Heater Cathode Potential Difference	±45 V
Envelope Temperature	175° C

Typical Operation

Frequency Range	15750-16250 Mc
Resonator Voltage	300 Vdc
Resonator Current	30-45 mAdc
Reflector Voltage (15750 to 16250 Mc 4¾ cycle reflector mode)	—100 to —200 Vdc
Power Output (average)	25 mW
Electronic Tuning Range (to half power points)	75 Mc minimum

MECHANICAL

Mounting Position	Any
Overall Dimension	See Outline Dwg.
Envelope	Metal
Base	Std Intermediate Octal

Printed in U.S.A.

MICROWAVE AND POWER TUBE DIVISION

RAYTHEON COMPANY

FOUNDRY AVE., WALTHAM 54, MASS.

DETAILED ELECTRICAL INFORMATION

CATHODE

In applications where the metal envelope is operated at ground potential, the cathode is negative with respect to ground by the amount of the resonator potential and must not be grounded. The cathode may be connected to one side of the heater or to the center tap of the heater transformer secondary. When the cathode and heater are connected together, connections to the cathode should be made directly to the cathode contacts on the tube socket and never to a heater lead. When cathode and heater are not connected together, the heater cathode voltage should not exceed ± 45 volts. In all cases where the resonator is operated at ground potential, the heater transformer must be insulated to withstand the maximum resonator voltage.

In applications where the metal envelope is operated above ground potential, it is recommended that the tube be surrounded with a protective shield to eliminate the attendant shock hazard. This shield must be designed so as to allow sufficient convection circulation to maintain the shell temperature below the maximum specified value.

REFLECTOR

The reflector electrode is connected to pin #5 on the base of the tube. The power supply furnishing the reflector potential must be insulated to withstand the total resonator and reflector voltage. The reflector must never be allowed to become positive with respect to the cathode. If this precaution is not observed, damage to the reflector may result. In cases where modulating potentials bring the reflector voltage close to zero volts, or where extremely high reflector circuit impedance is required, a diode should be connected between cathode and reflector to prevent the reflector from going positive.

MECHANICAL TUNING

Extremely smooth, backlash free, mechanical tuning is obtained with a unique tuner design. A compound lever system actuated by a tuning shaft is linked mechanically to a diaphragm which is integral with the resonant cavity and coupled to the resonator grids. Tuning shaft rotation effects the flexing of the diaphragm, changing the geometry of the resonant cavity and altering the grid spacing in such a manner as to cause the frequency of the oscillator to track linearly with tuner shaft rotation. See Fig. 1.

ELECTRONIC TUNING

With the mechanical tuner adjusted so that the tube is operating near the desired frequency, vernier frequency adjustment may be made by varying the reflector voltage. Maximum power output for a given mechanical tuner setting, however, will be obtained at only one value of reflector voltage. If the mechanical tuner and reflector voltage are mutually adjusted for maximum power output at a given frequency, and if then the reflector voltage is varied above and below the value for maximum power output such that the power output is reduced by one half, the frequency change between the half power values is defined as the electronic tuning range. The electronic tuning range and linearity depend on the type of load and coupling used. A highly reactive load may shorten the electronic tuning range and cause non-linear variation of frequency with reflector voltage. See Fig. 2.

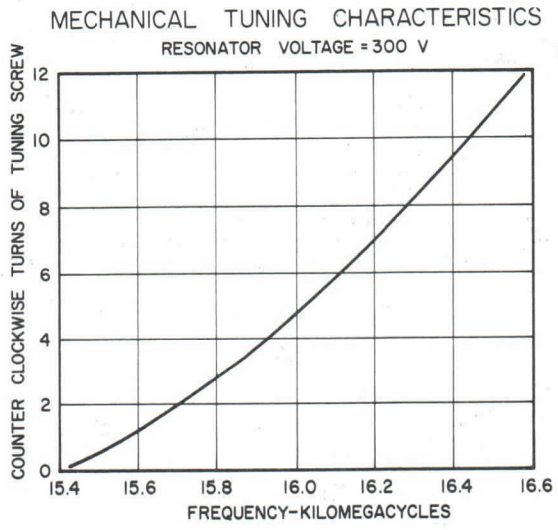

Figure 1

MODE OF OPERATION

Oscillation may be obtained in a given tube with several combinations of resonator and reflector voltage at a given frequency. The region where oscillations occur within the reflector voltage range are referred to as voltage modes. The curves of Figure 3 show the characteristics of the RK6178/QK297 in the recommended mode. This mode has been chosen because it represents the best compromise between optimum power and wide electronic tuning range.

INSTALLATION

The RK6178/QK297 requires a standard intermediate octal socket, and may be mounted in any position supported by either the output coupling flange, the mounting flange, or both.

The tube couples directly to standard RG91/U waveguide with UG541/U choke flange required. See tube outline drawing for pin connections.

SHIELDING

Operation of the RK6178/QK297 in the presence of a strong magnetic field usually requires shielding of the resonator and reflector leads to avoid undesirable modulation of the tube output. In extremely troublesome magnetic environments it may be necessary to place the RK6178/QK297 in a metal chamber with polyiron chokes provided to bring the voltages into the chamber.

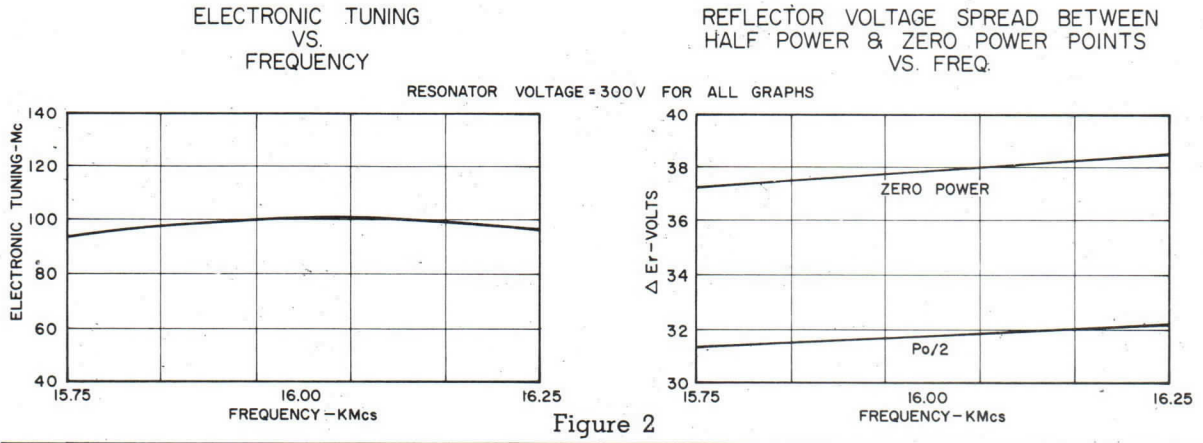

Figure 2

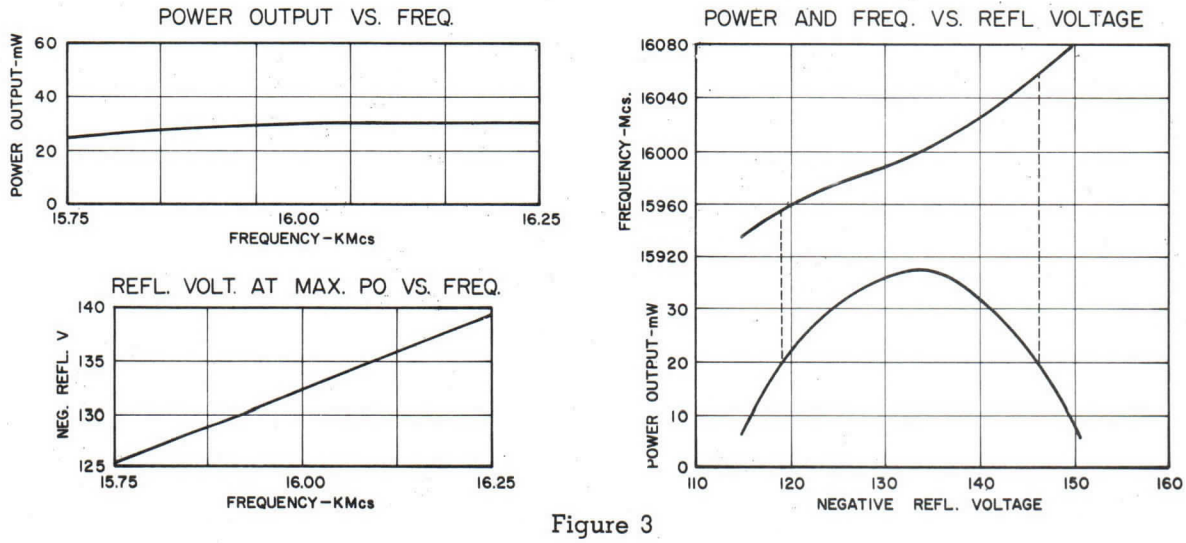

Figure 3

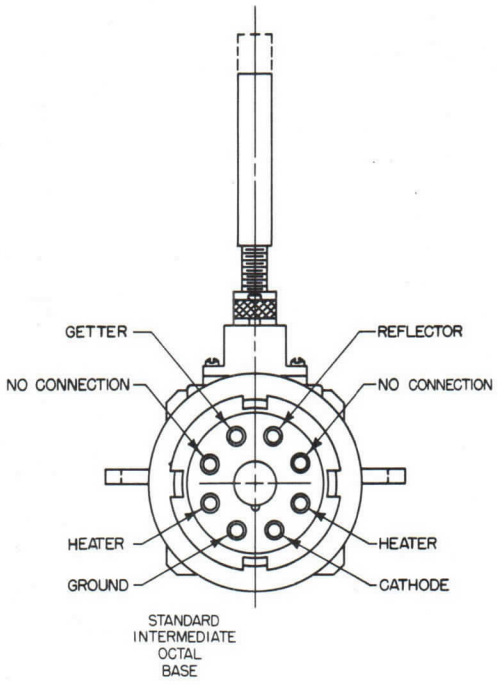

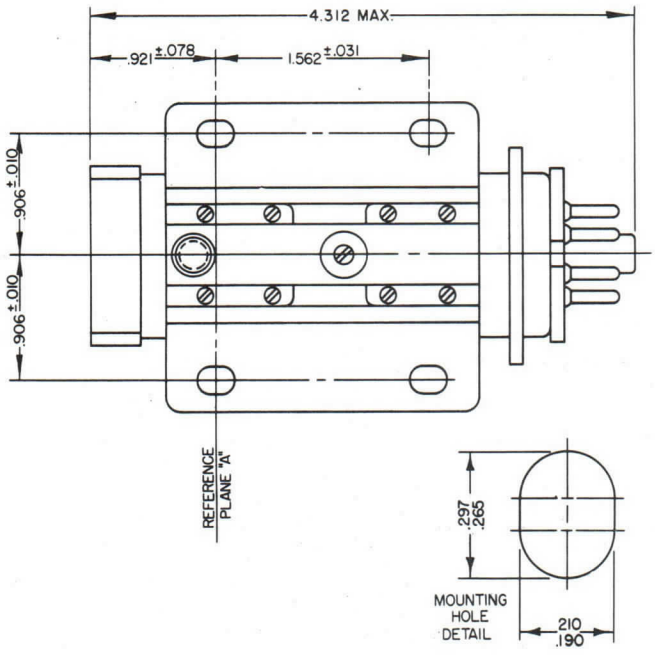

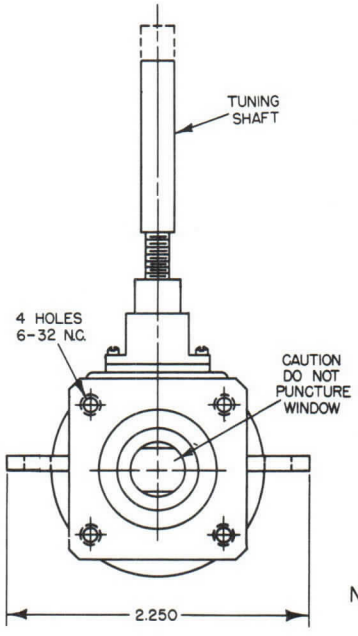

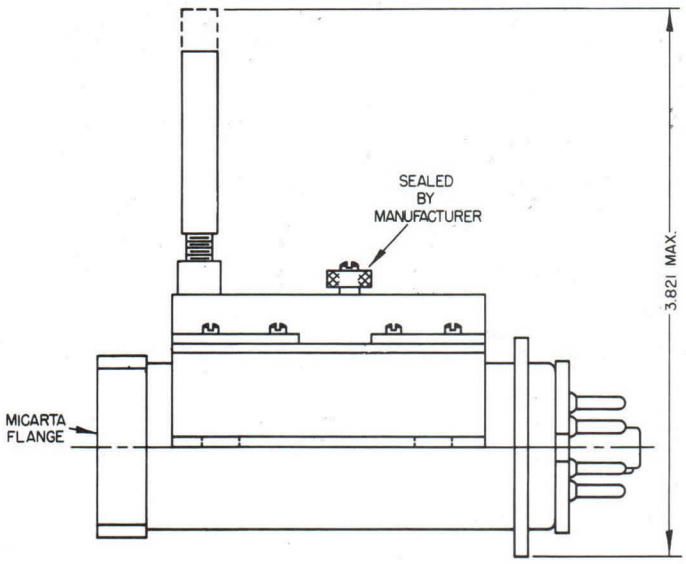

NOTE:
ALL DIM. ARE NOM.
& IN INCHES

RK 6178
TUBE OUTLINE
DRAWING

TYPE RK6236

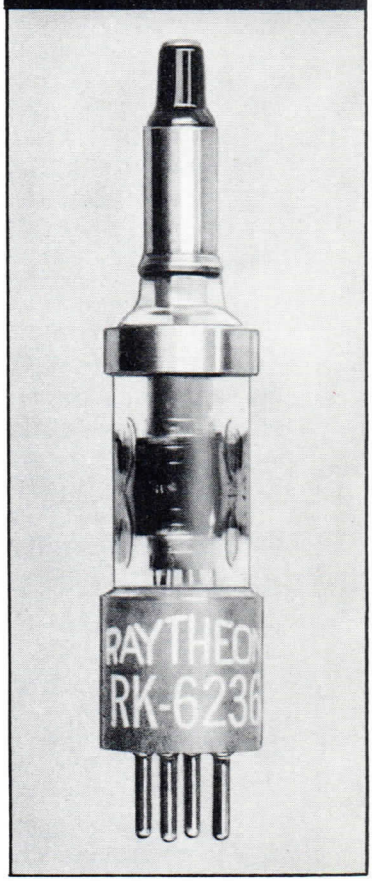

The type RK6236 is a reflex velocity variation oscillator designed for use with a coaxial cavity in CW or pulsed operation over the 3800 to 7600 Mc range with an average power output of 125 milliwatts. Freely circulating and in some cases forced air is required for cooling of the grid ring cavity contacts. The extremely wide frequency range of this tube makes it ideally suited for signal generator and special local oscillator applications. A special control electrode facilitates low-voltage, pulsed modulation.

GENERAL CHARACTERISTICS

ELECTRICAL

Heater Characteristics

Heater Voltage	6.3 ±0.5V
Heater Current	0.58 A

Ratings — Absolute Maximum Values

Resonator Voltage	1250 Vdc
Resonator Current	20 mAdc
Reflector Voltage	
Minimum Negative Value	—15 Vdc
Maximum Negative Value	—800 Vdc
Control Electrode Voltage	±25 V
Control Electrode Current	6 mA
Reflector Current	1 mAdc
Heater-Cathode Voltage	±50 V
Dissipation (Exclusive of Heater Power)	25.5 W
Temperature of G_3 Sleeve	160°C

Typical Operating Conditions (CW)

Coaxial Cavity as per Fig. 2	
Reflector Voltage Transit Mode	2¾ cycles
Cavity Mode	¾
Frequency Range	3800–7600
Resonator Voltage	1000 Vdc
Resonator Current (Exclusive of Control Electrode Current)	20 mAdc
*Reflector Voltage	—50 to —625 V
Reflector Current	0 mA
†Control Electrode Voltage	+4 to +18 Vdc
Control Electrode Current	5 mA (max.)
Control Electrode Cutoff Voltage	—8 to —23 Vdc
‡Electronic Tuning (Half Power)	12 Mc (min.)

*Adjusted for maximum power output.

†Adjusted for 20 milliamperes resonator current.

‡Change in frequency between the two ½ power points when the reflector voltage is varied above and below the point of maximum power output corresponding to the given frequency.

Reflector Modulation Sensitivity @ 7500 Mc	0.1 Mc/Volt
Power Output (Minimum)	90 mW
Power Output (Maximum)	150 mW
Power Output (Average)	100 mW
Thermal Compensation (Tube Without Cavity)	0.1 Mc/°C

Typical Operating Conditions (Pulsed)

Pulse Repetition Rate	40–4000 pps
Pulse Duration (Minimum)	0.5 μs
Rise Time	0.1 μs
Fall Time	0.1 μs
Beam Current During Off Time	10 μa

The general conditions for pulsed operation are the same as those given above for CW operation. Power output for pulsed operation will not be less than 1.5 db below the power output for CW operation over the band.

General Mechanical Characteristics

Mounting Position	Any
Over-all Dimensions	See Outline Drawing
Envelope	Glass
Seals	Glass to Copper Oxide
Banana Jack	Required Ucinite #152005 Mating Plug or Equivalent. Special Miniature 4 Pin, Fits Amphenol #78-545 Socket.
Base	Special
Vibration	10 G @ 50 cps
Altitude	50,000 ft (max.)

DETAILED ELECTRICAL INFORMATION

REFLECTOR

The reflector electrode is connected to the small banana jack on the top of the tube. Reflector voltages more positive than —15 volts with respect to the cathode may result in damage to the tube. Under conditions of vigorous oscillation and light loading, excessive reflector current may be drawn (in the order of one milliampere) on the long wavelength of the band. No damage will result, however, except in cases where the heavy reflector current flowing in a high reflector circuit impedance causes the reflector potential to swing increasingly positive with respect to the cathode. Where high reflector circuit impedances are used, it is advisable to shunt the reflector and cathode with a small diode to prevent the reflector from swinging positive.

CATHODE

In most applications, the metal cavity used with the RK6236 is operated at ground potential, and the cathode will be negative with respect to ground by the amount of this resonator potential. The cathode may be connected to one side of the heater or to the center tap of the heater transformer secondary. When the cathode and heater are connected together, connections to the cathode should be made directly to the cathode contacts on the tube socket and never to a heater lead. When the cathode and heater are not tied together, the heater-cathode voltage should not exceed ±50 volts. In all cases where the resonator is operated at ground potential, the heater transformer must be insulated to withstand the maximum resonator voltage. Maximum tube life will be realized if a 30-second heater warmup period precedes the application of other voltages. The beam potential must never be applied before any other voltages.

CONTROL ELECTRODE

In applications where the RK6236 is to be used in both CW and pulsed operation, the circuit in Fig. 1 is recommended. With the selector switch in the CW position, the 6J6 is effectively out of the circuit and the bias on the RK6236 is set at a value that will yield a 20-milliampere beam current. With the selector set at the pulsed position, the 6J6 shunts the lower portion of the potentiometer and the volt-

age division is such that the RK6236 is biased to cutoff. A negative pulse of suitable amplitude applied to the grid of the 6J6 will drive it to cutoff and restore the grid of the RK6236 to the level set for CW operation.

ELECTRONIC TUNING

Vernier adjustment of the frequency of the RK6236 is accomplished by varying the reflector voltage. If the mechanical tuning mechanism employed in the external cavity and the reflector voltage are mutually adjusted to yield a maximum power output at a given frequency, and if then the reflector voltage is varied above and below the value for maximum power such that the power output is reduced to one half, the frequency change between the half power values is defined as the electronic tuning range. The range of electronic tuning and the linearity of its variation with reflector voltage is a function of the type of load and coupling used. Maximum electronic tuning range will be achieved with operation into a resistive load. Operation into a highly reactive load may be attended by excessive hysteresis, and nonlinear variation of frequency with reflector voltage.

FREQUENCY STABILITY

The regulation of the voltages applied to the reflector, resonator, and control grid will be reflected directly in the stability of the output frequency. Hence, the regulation of those voltage supplies must be commensurate with the stability requirements of the application.

The thermal frequency drift experienced with the RK6236 depends mainly on the changes in physical size of the resonant chamber with temperature. The RK6236 is temperature-compensated so that thermal coefficient of frequency drift will not exceed 0.1 Mc/°C when operating in a constant size cavity. The amount by which the frequency drift exceeds 0.1 Mc/°C is therefore dependent only on the thermal properties of the cavity. Careful consideration should be given to the material from which the external cavity is constructed.

MODE OF OPERATION

The RK6236 is designed for operation with contacting or noncontacting plunger-type coaxial cavities over the 3800 to 7600 Mc band in the 2¾ reflector mode. Design and construction of the above-mentioned cavities can be extremely troublesome, and certain design precautions must be observed to avoid interference from circumferential resonances, one-quarter wavelength modes, and multifrequency bunching. An extensive treatment of the design of wide-range coaxial cavities is beyond the scope of this publication; however, the following references contain adequate information pertinent to their design.

1. W. H. Huggins. "Multifrequency Bunching in Reflex Klystrons," Proc. I.R.E., XXXVI, 624-30.
2. W. H. Huggins. "Broad Band Non-Contacting Short Circuits for Coaxial Lines," Proc. I.R.E., XXXV, 1324-28.
3. Radio Research Laboratory Staff. "Very High Frequency Techniques." New York: McGraw-Hill, 1947, II, 916-19 and 900-11.

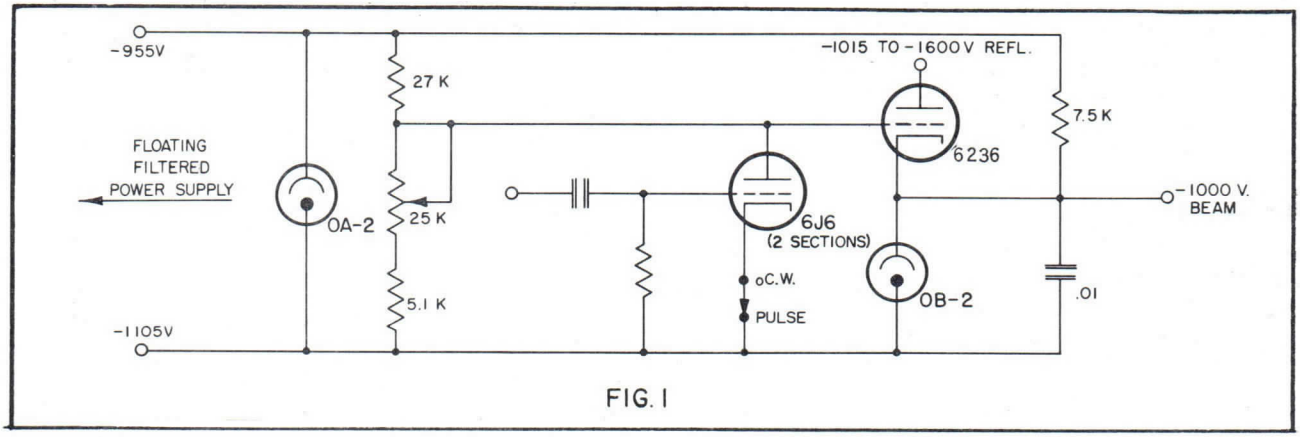

FIG. 1

DETAILED MECHANICAL INFORMATION

INSTALLATION

The tube mounts in any position and requires a special, miniature, 4-prong socket such as an Amphenol Type 78-545 or low-loss equivalent. Clamping to the G_2 ring should be made in such a manner that no mechanical strain be set up in the glass between G_2 and G_3 rings. A toroidal spring contact between the cavity and the G_2 ring, as shown in Fig. 2, is recommended.

Temperatures of the G_3 sleeve in excess of 160°C cannot be tolerated; and in cavities where center conductor conduction is insufficient to hold this tolerance, forced-air cooling is required. In general, the center conductor of wide-range coaxial cavities will have sufficient mass to provide adequate conduction. However, in situations where conduction is inadequate, a center conductor made of coin silver will improve conduction sufficiently to obviate forced-air cooling.

Optimum broad-band operation is best achieved with a load termination of 50 ohms and VSWR'S not greater than 1.25/1.

SHIELDING

Operation of the RK6236 in the presence of strong magnetic fields usually requires shielding of the resonator and reflector leads to avoid undesirable modulation of the tube output. In extremely troublesome environments, it may be necessary to place the parts of the RK6236 not covered by the cavity in a metal chamber with polyiron chokes provided on the leads bringing the voltages into the chamber.

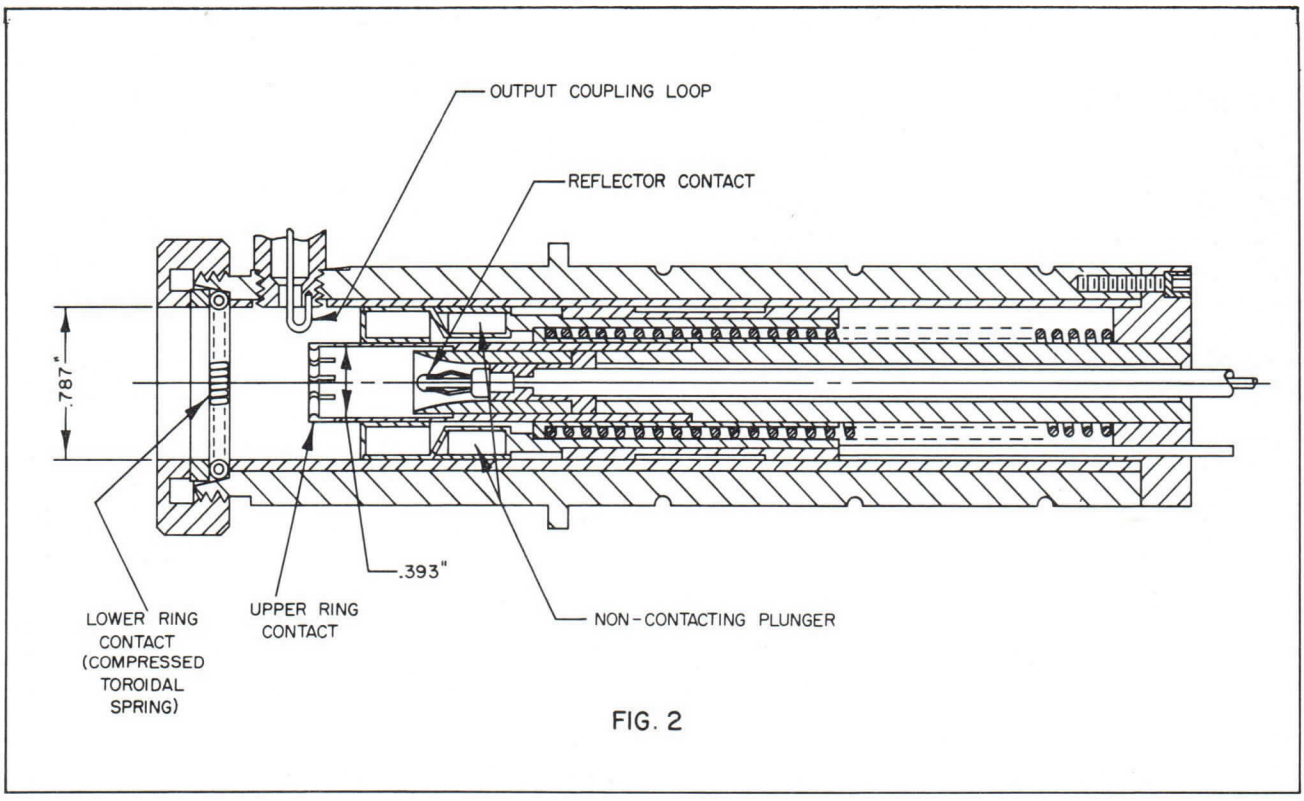

FIG. 2

VELOCITY VARIATION OSCILLATOR

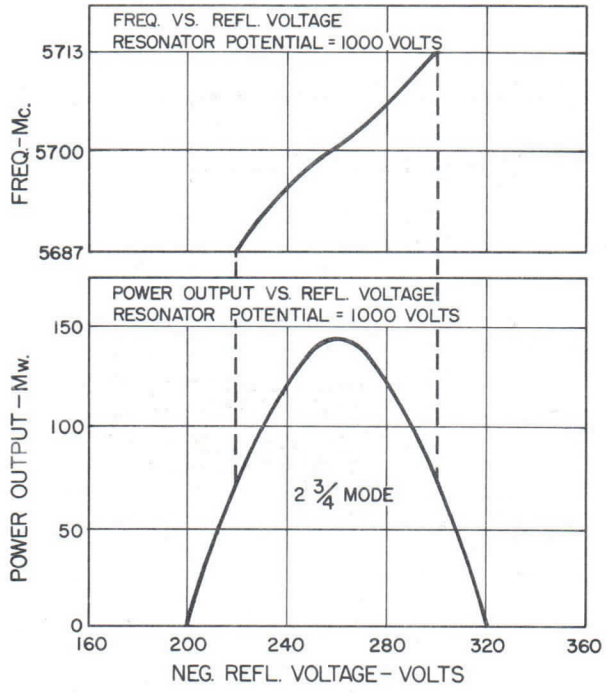

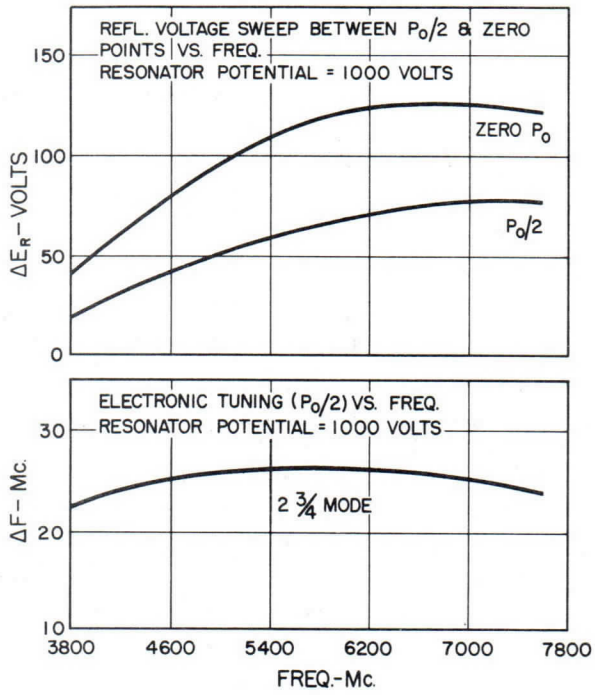

The exact value of reflector voltage producing maximum power output at a certain frequency varies from tube to tube. The voltage for all tubes, at each mode, will fall within the shaded area indicated below.

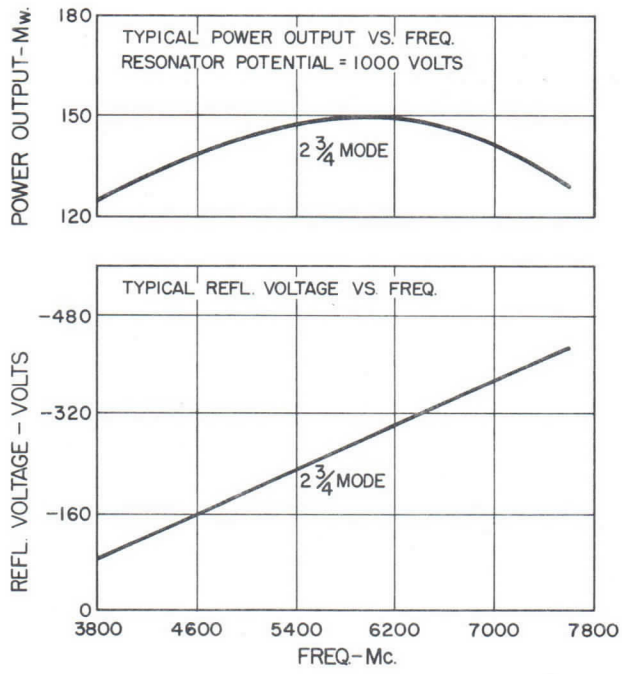

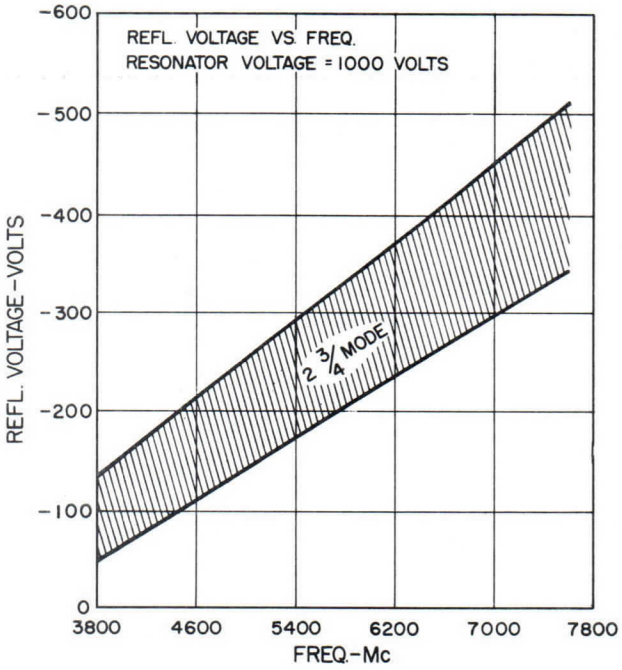

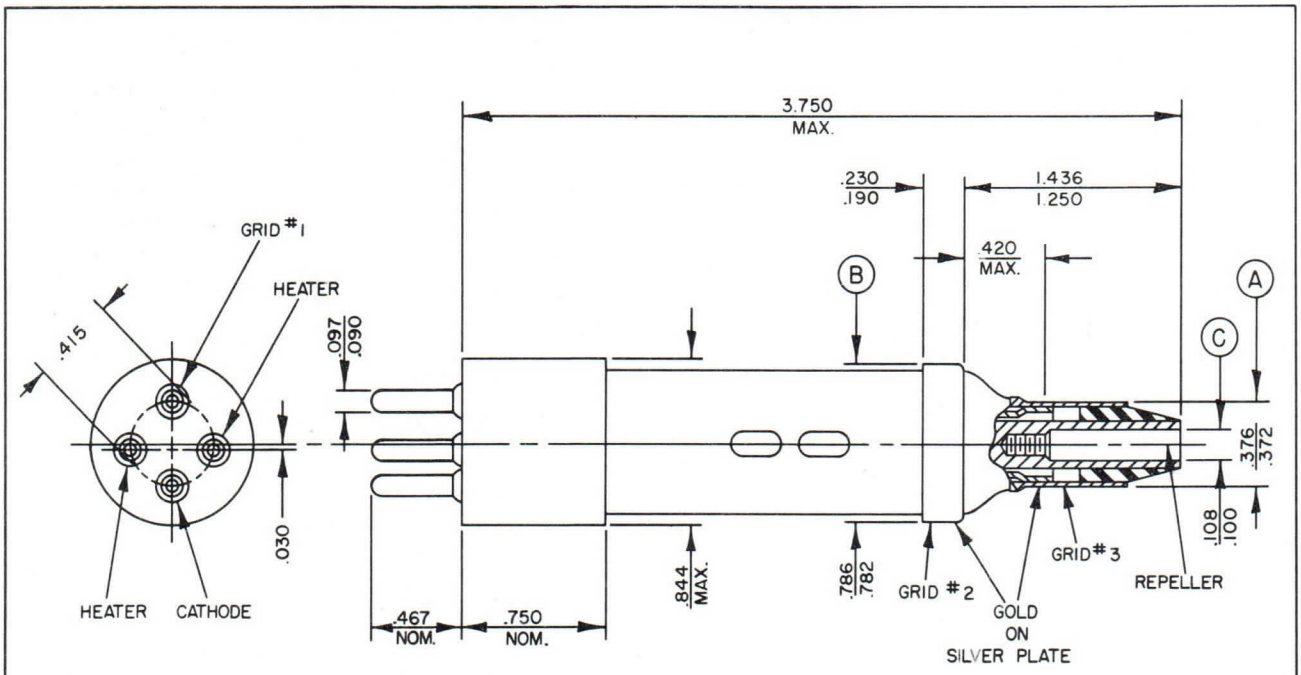

NOTES:

A – REFERENCE DIAMETER.
B – THIS DIAMETER TO BE CONCENTRIC TO "A" WITHIN .005.
C – THIS DIAMETER TO BE CONCENTRIC TO "A" WITHIN .015.

RK6236
ELECTRON TUBE
OUTLINE DRAWING

TYPE RK6310/ QK417

The RK6310/QK417 is a mechanically tuned velocity variation oscillator of the single cavity (integral) reflex type designed for CW operation in the 8500 to 10000 Mc range with an average power output of 40 milliwatts. No special provisions are ordinarily required for cooling the tube. It is a waveguide output type which can quite simply be fitted with a gasket and inserts capable of insulating the shell of the tube from the coupling guide. It is therefore convenient to operate the shell of this tube above ground, and to power the resonator circuit from the same supply which furnishes plate potential to other tubes in an equipment. The RK6310/QK417 is a rugged tube intended for radar applications where conditions of shock, vibration and sustained acceleration are encountered.

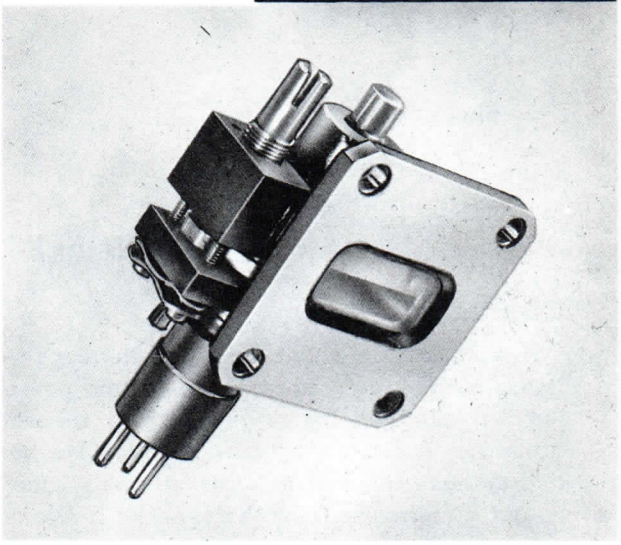

VELOCITY VARIATION OSCILLATOR

GENERAL CHARACTERISTICS

ELECTRICAL

Heater Characteristics

Heater Voltage	6.3 ±10% V
Heater Current	1.2 A

Maximum Ratings

Resonator Voltage	350 Vdc
Resonator Current	42 mAdc
Reflector Voltage	0 to −1000 Vdc
Ambient Temperature	150°C

Typical Operation

Frequency	9300 Mc
Mode	5¾
Resonator Voltage	300 Vdc
Resonator Current	28 mAdc
Reflector Voltage	−160 Vdc
Power Output	50 mW
Electronic Tuning Range	48 Mc
Modulation Sensitivity	1.5 Mc/v
Temperature Coefficient	60 Kc/°C

MECHANICAL

Mounting Position	Any
Overall Dimensions	See Outline Dwg.
Envelope	Metal
Base	Pee Wee, 3 Pin (A3-1)
Top Cap	Miniature (C1-4)
Tuner	Single Screw

Printed in U.S.A.

MICROWAVE AND POWER TUBE DIVISION

RAYTHEON COMPANY

FOUNDRY AVE., WALTHAM 54, MASS.

Output	Bolts to UG 39/U flange or UG 40/U Choke for 1" x ½" x .050" Waveguide
Weight	7 oz.
Shock	250 G (Max.)
Vibration	10 G

DETAILED ELECTRICAL INFORMATION

Cathode

In applications where the metal envelope (resonator) of the tube is operated at ground potential, the cathode will be negative with respect to ground by the amount of this potential. The heater and cathode are tied together internally and the heater transformer must therefore be insulated to withstand maximum resonator voltage for all applications where the resonator is operated at ground potential.

In applications where the metal envelope is operated above ground potential, the tube should be surrounded by a grounded enclosure or insulator for the protection of the operator. In such an installation, tuning and mechanical adjustments made while the tube is in operation require an insulated tool, and coupling must be made with an insulating gasket interposed between the flanges of the tube and waveguide, and with insulating bushings in the clearance holes of the tube flange.

Whenever an insulator or grounded enclosure is used, adequate ventilation must be provided to maintain the ambient below the maximum specified limit.

Reflector

The power supply furnishing the reflector potential must be insulated to withstand the total resonator and reflector voltage in applications where the resonator is grounded. The reflector must never be allowed to become positive with respect to the cathode. Failure to observe this precaution may result in damage to the tube. In cases where modulating potentials bring the reflector potential close to zero volts, or where an extremely high reflector circuit impedance is required, a diode should be connected between cathode and reflector to prevent the reflector from going positive.

MECHANICAL TUNING

The mechanical tuner is designed to permit occasional frequency adjustments over the operating frequency range. Rotation of the tuning screw indicated in the outline drawing distorts the flexible cavity wall altering the spacing between the resonator grids to effect a frequency change. High and low frequency mechanical stops are provided to prevent tuning so far outside the specified tuning range that damage to the tube will result.

ELECTRONIC TUNING

With the mechanical tuner adjusted so that the tube is operating near the desired frequency, vernier frequency adjustments may be made by varying the reflector voltage. Maximum power output for a given mechanical tuner setting, however, will be obtained at only one value of reflector voltage. If the mechanical tuner and reflector voltage are mutually adjusted for maximum power output at a given frequency, and if then the reflector voltage is varied above and below the value for maximum power output, such that the power output is reduced by one half, the frequency between the half power values is defined as the electronic tuning range. The electronic tuning range and linearity depend on the type of load and coupling used. A highly reactive load may shorten the electronic tuning range and cause nonlinear variation of frequency with reflector voltage. See Fig. 1.

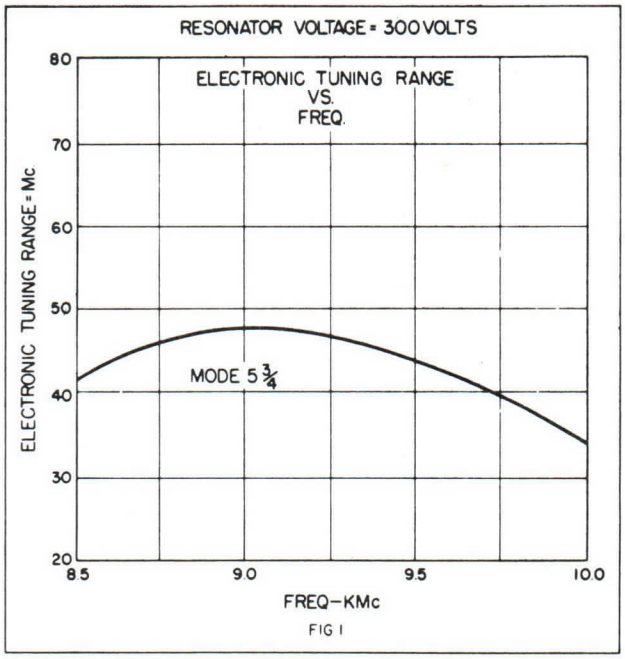

FIG 1

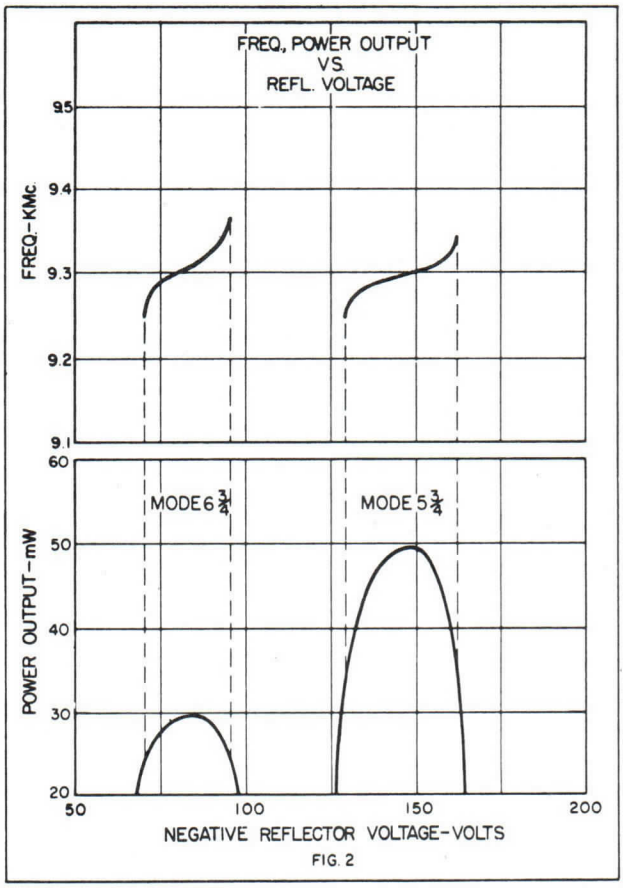

FIG. 2

MODE OF OPERATION

Oscillation may be obtained in a given tube with several combinations of resonator and reflector voltage at a particular frequency. See Fig. 2. The regions where oscillations occur within the reflector voltage range, are referred to as reflector transit modes. The curves of Fig. 3 show the RK6310/QK417 in the recommended 5¾ mode. This mode has been chosen because it represents the best compromise between optimum power and wide electronic tuning range. See Fig. 4.

VELOCITY VARIATION OSCILLATOR

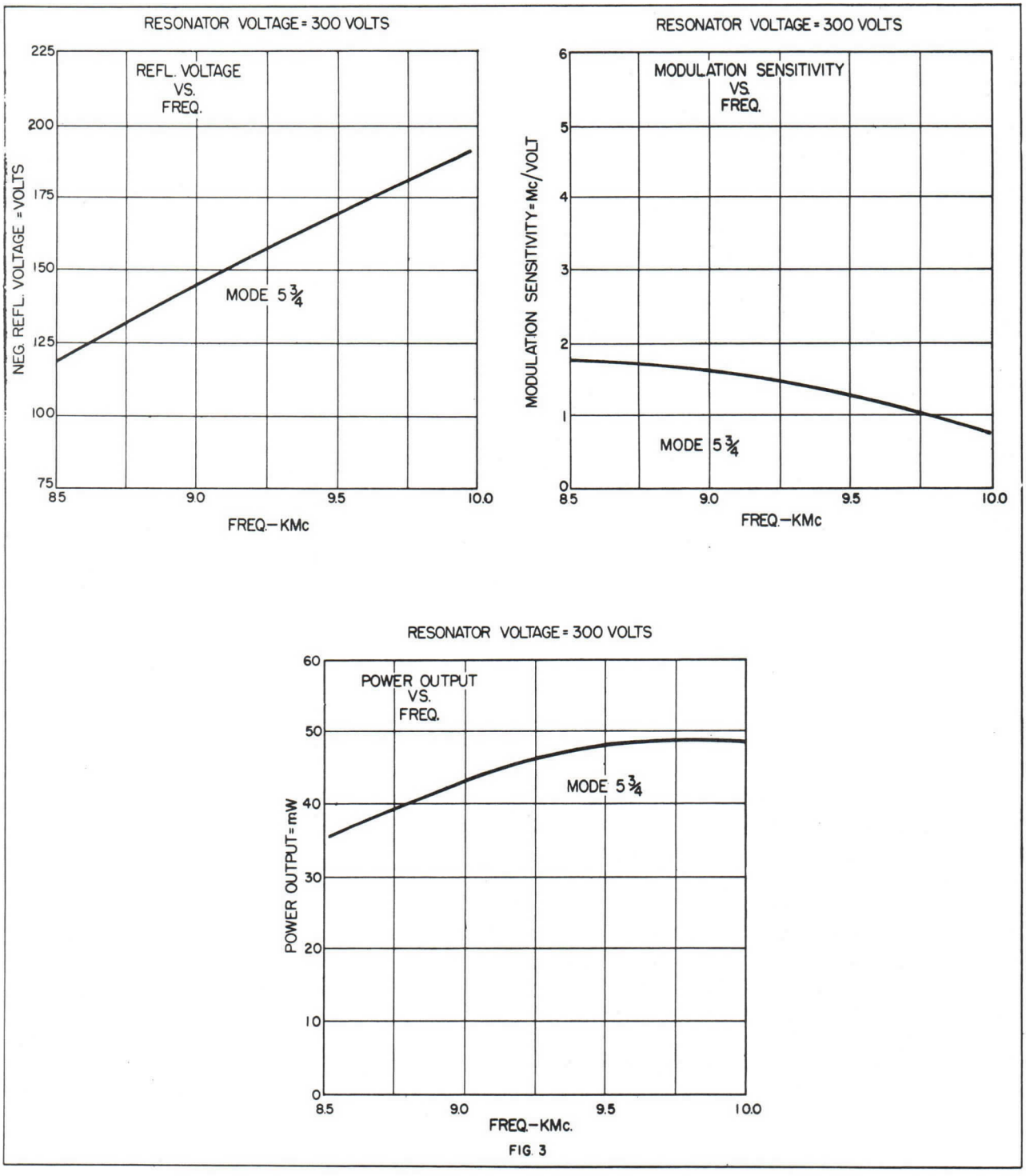

FIG. 3

MICROWAVE AND POWER TUBE DIVISION

RAYTHEON MANUFACTURING COMPANY

FOUNDRY AVE., WALTHAM 54, MASS.

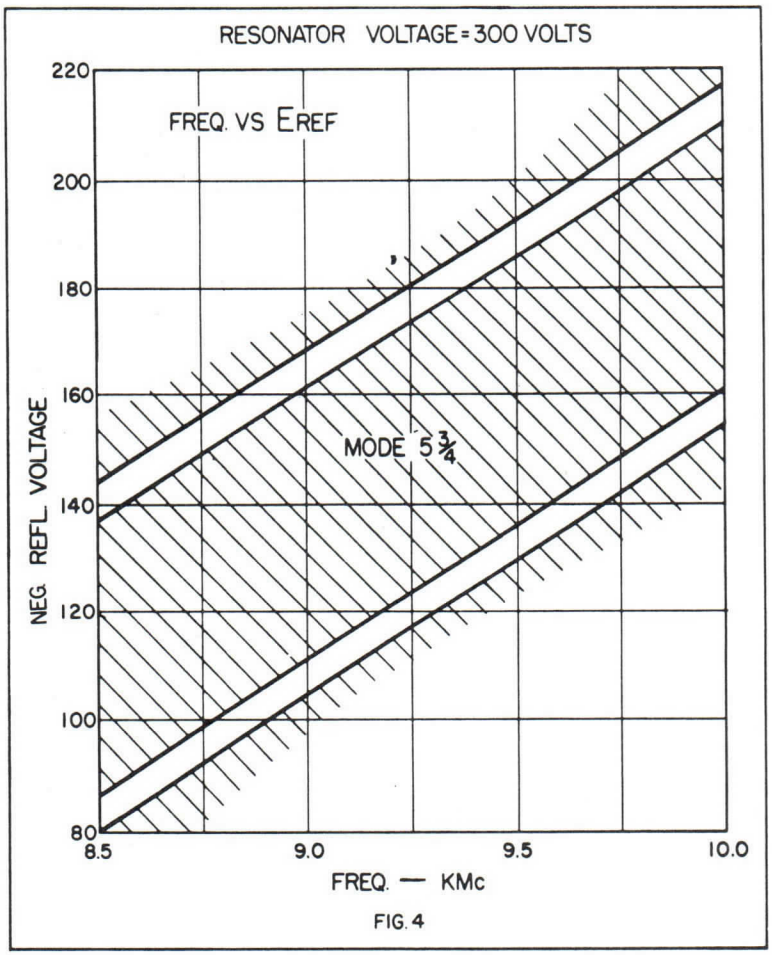

FIG. 4

DETAILED MECHANICAL INFORMATION

INSTALLATION

The RK6310/QK417 mounts in any position and is supported by the waveguide coupling flange.

SHIELDING

Operation of the RK6310/QK417 in the presence of strong magnetic fields usually requires shielding of the resonator and reflector leads to avoid undesirable modulation of the R.F. power output. In extremely troublesome envrionments, magnetic shielding of the whole tube may be necessary. Whenever shielding is used, adequate ventilation must be provided to keep the ambient below the maximum specified limit.

WAVEGUIDE WINDOW

The waveguide output section contains a thin, low reflection mica window which is part of the vacuum envelope. This window can be cleaned when necessary with a soft material. Care should be exercised not to scratch or puncture the mica.

VELOCITY VARIATION OSCILLATOR

REF.	DIMENSIONS
A	1.284 MAX. 1.276 MIN.
B	.187 NOM.
C	.070 MAX .010 MIN.
D	1.224 MAX. 1.216 MIN.
E	3.125 MAX.
F	1.00 MAX.
G	.219 DIA. NOM. WITH .185 DIA.
	NOM REMOVABLE INSERTS
H	.160 MIN.
J	.936 MAX. .850 MIN.
K	1.75 MAX.
L	1.75 MAX.
M	.437 NOM.

NOTE:

EYELET-TYPE INSERTS IN THE FLANGE MOUNTING HOLES ARE 0.219 O.D., 0.185 I.D., NOMINAL, AND ARE EASILY REMOVABLE FROM REAR OF FLANGE. WITH INSERTS IN PLACE, THE MOUNTING HOLES PROVIDE CLEARANCE FOR #8 SCREWS. WITH INSERTS REMOVED, THE MOUNTING HOLES PERMIT USE OF INSULATING BUSHINGS WHERE d-c ISOLATION BETWEEN TUBE FLANGE AND WAVEGUIDE SYSTEM IS DESIRED.

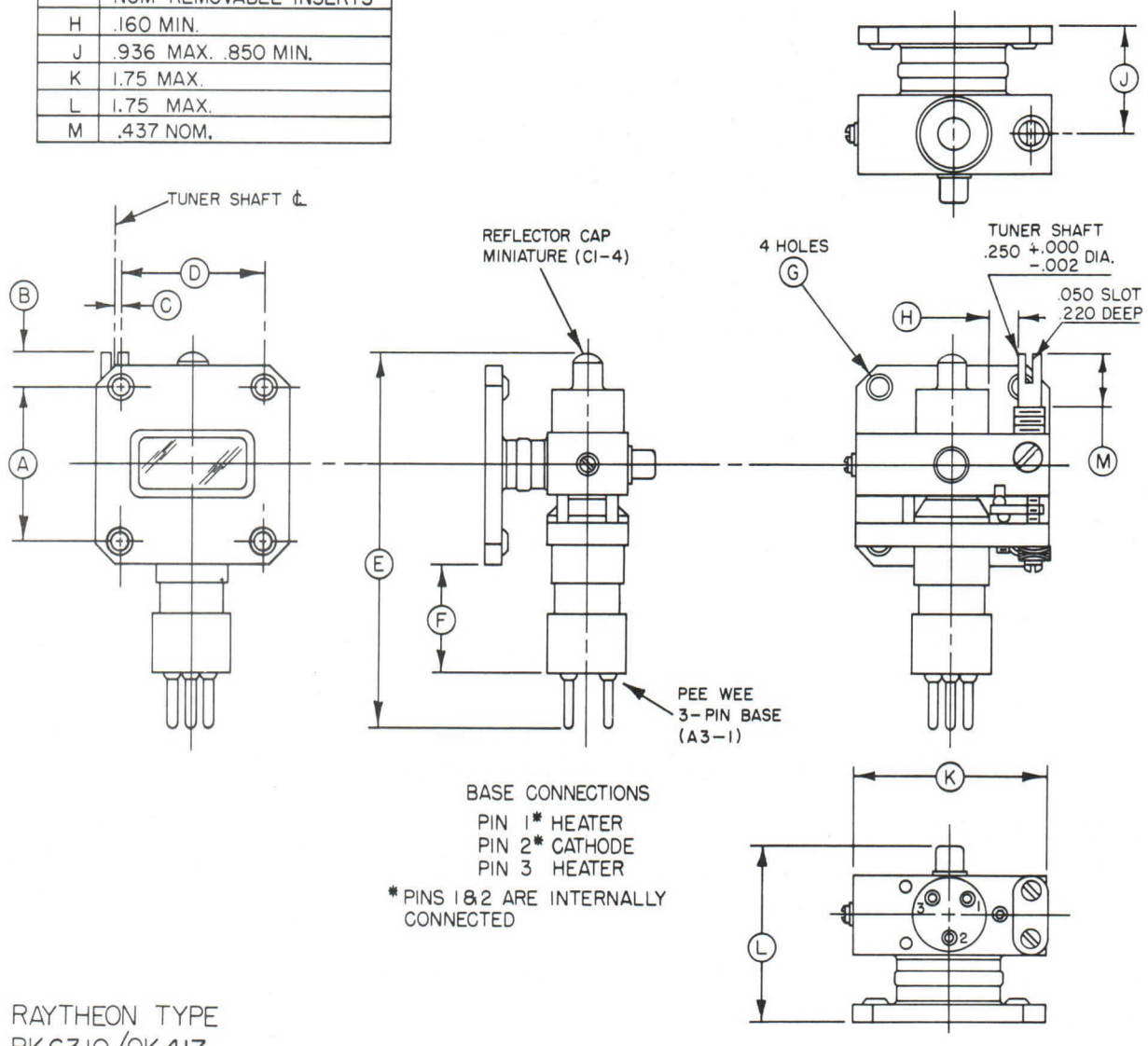

BASE CONNECTIONS

PIN 1* HEATER
PIN 2* CATHODE
PIN 3 HEATER

* PINS 1&2 ARE INTERNALLY CONNECTED

RAYTHEON TYPE
RK6310/QK417
OUTLINE DRAWING

TYPE RK6312/ QK420

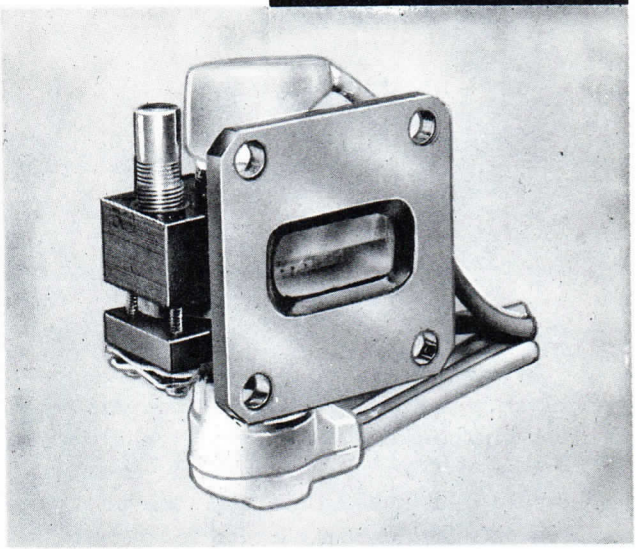

The RK6312/QK420 is a mechanically tuned velocity variation oscillator of the single cavity (integral) reflex type designed for CW operation in the 8500 to 10000 Mc range with an average power output of 40 milliwatts. No special provisions are ordinarily required for cooling the tube. It is a waveguide output type which can quite simply be fitted with a gasket and inserts capable of insulating the shell of the tube from the coupling guide. It is therefore convenient to operate the shell of this tube above ground, and to power the resonator circuit from the same supply which furnishes plate potential to other tubes in an equipment. The RK6312/QK420 is a rugged tube intended for high altitude radar applications where conditions of shock, vibration and sustained acceleration are encountered.

GENERAL CHARACTERISTICS

ELECTRICAL

Heater Characteristics

Heater Voltage	6.3 ±10% V
Heater Current	1.2 A

Maximum Ratings

Resonator Voltage	350 Vdc
Resonator Current	42 mAdc
Reflector Voltage	0 to –1000 Vdc
Ambient Temperature	150°C

Typical Operation

Frequency	9300 Mc
Mode	5¾
Resonator Voltage	300 Vdc
Resonator Current	28 mAdc
Reflector Voltage	–160 Vdc
Power Output	50 mW
Electronic Tuning Range	48 Mc
Modulation Sensitivity	1.5 Mc/v
Temperature Coefficient	60 Kc/°C

MECHANICAL

Mounting Position	Any
Overall Dimensions	See Outline Dwg.
Envelope	Metal
Base	Molded Flexible Leads 18" Long

Printed in U.S.A.

Tuner	Single Screw
Output	Bolts to UG 39/U flange or UG 40/U Choke for 1" x ½" x .050" Waveguide
Weight	7 oz.
Shock	250 G (Max.)
Vibration	10 G

DETAILED ELECTRICAL INFORMATION

Cathode

In applications where the metal envelope (resonator) of the tube is operated at ground potential, the cathode will be negative with respect to ground by the amount of this potential. The heater and cathode are tied together internally and the heater transformer must therefore be insulated to withstand maximum resonator voltage for all applications where the resonator is operated at ground potential.

In applications where the metal envelope is operated above ground potential, the tube should be surrounded by a grounded enclosure or insulator for the protection of the operator. In such an installation, tuning and mechanical adjustments made while the tube is in operation require an insulated tool, and coupling must be made with an insulating gasket interposed between the flanges of the tube and waveguide, and with insulating bushings in the clearance holes of the tube flange.

Reflector

The power supply furnishing the reflector potential must be insulated to withstand the total resonator and reflector voltage in applications where the resonator is grounded. The reflector must never be allowed to become positive with respect to the cathode. Failure to observe this precaution may result in damage to the tube. In cases where modulating potentials bring the reflector potential close to zero volts, or where an extremely high reflector circuit impedance is required, a diode should be connected between cathode and reflector to prevent the reflector from going positive.

MECHANICAL TUNING

The mechanical tuner is designed to permit occasional frequency adjustments over the operating frequency range. Rotation of the tuning screw indicated in the outline drawing distorts the flexible cavity wall altering the spacing between the resonator grids to effect a frequency change. High and low frequency mechanical stops are provided to prevent tuning so far outside the specified tuning range that damage to the tube will result.

ELECTRONIC TUNING

With the mechanical tuner adjusted so that the tube is operating near the desired frequency, vernier frequency adjustments may be made by varying the reflector voltage. Maximum power output for a given mechanical tuner setting, however, will be obtained at only one value of reflector voltage. If the mechanical tuner and reflector voltage are mutually adjusted for maximum power output at a given frequency, and if then the reflector voltage is varied above and below the value for maximum power output, such that the power output is reduced by one half, the frequency between the half power values is defined as the electronic tuning range. The electronic tuning range and linearity depend on the type of load and coupling used. A highly reactive load may shorten the electronic tuning range and cause nonlinear variation of frequency with reflector voltage. See Fig. 1.

VELOCITY VARIATION OSCILLATOR

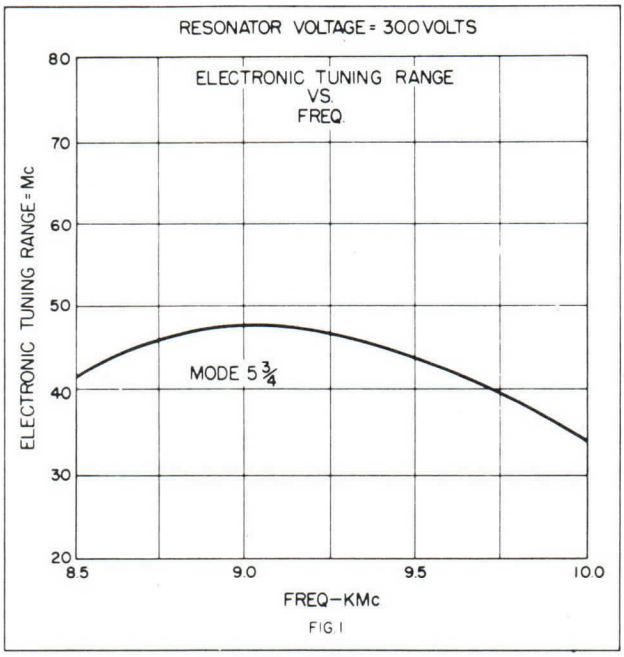

FIG. 1

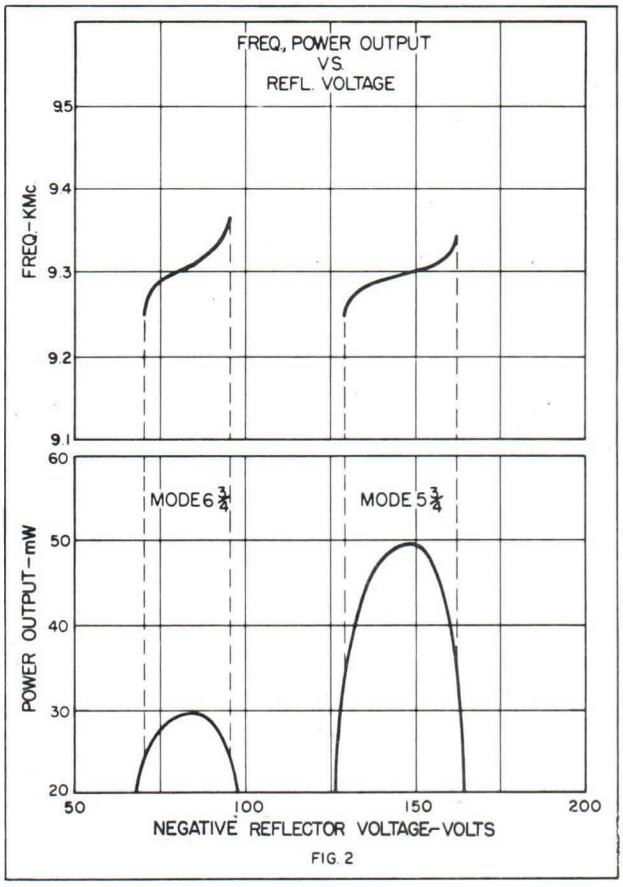

FIG. 2

MODE OF OPERATION

Oscillation may be obtained in a given tube with several combinations of resonator and reflector voltage at a particular frequency. See Fig. 2. The regions where oscillations occur within the reflector voltage range, are referred to as refletcor transit modes. The curves of Fig. 3 show the RK6312/QK420 in the recommended 5¾ mode. This mode has been chosen because it represents the best compromise between optimum power and wide electronic tuning range. See Fig. 4.

VELOCITY VARIATION OSCILLATOR

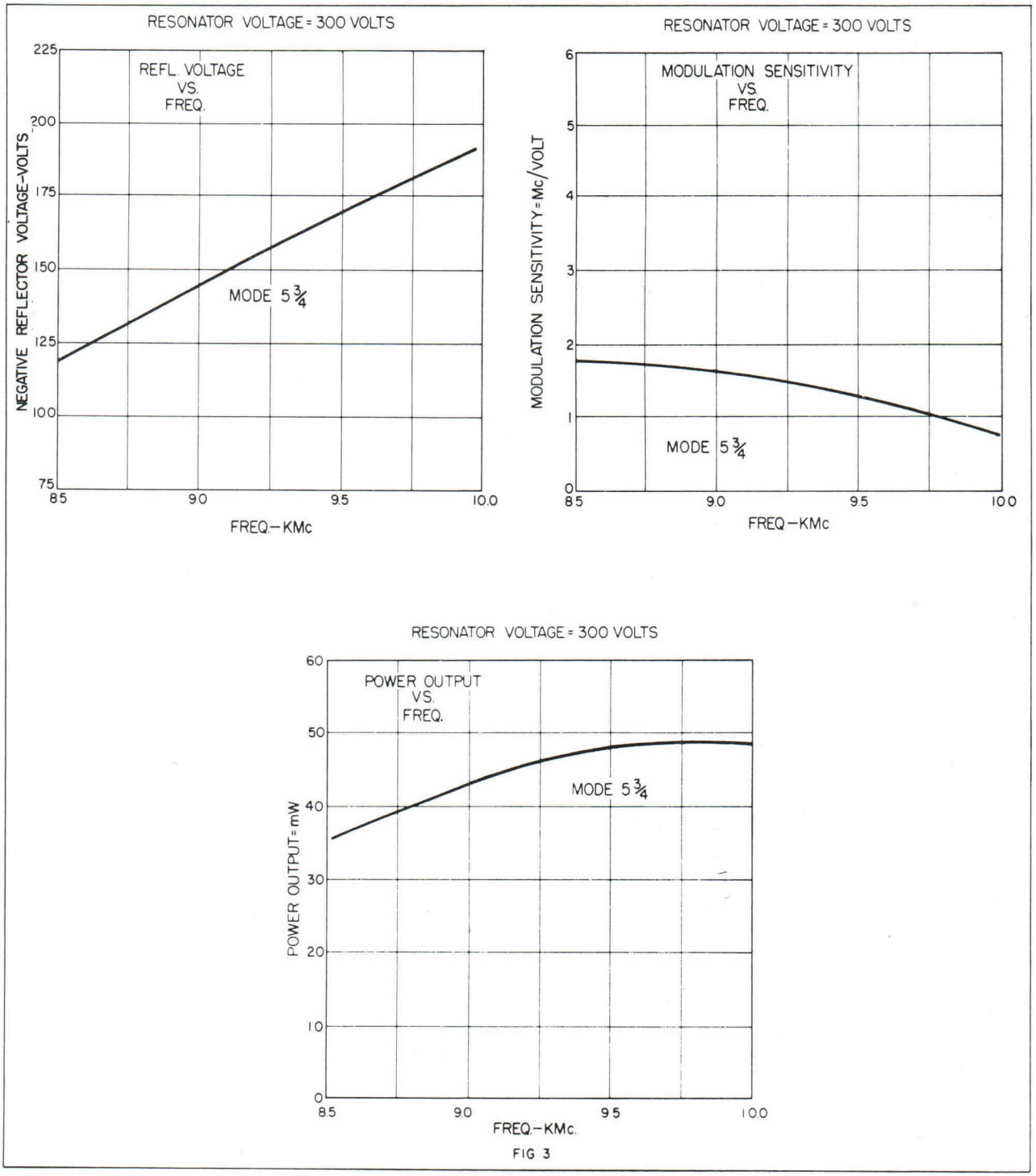

FIG 3

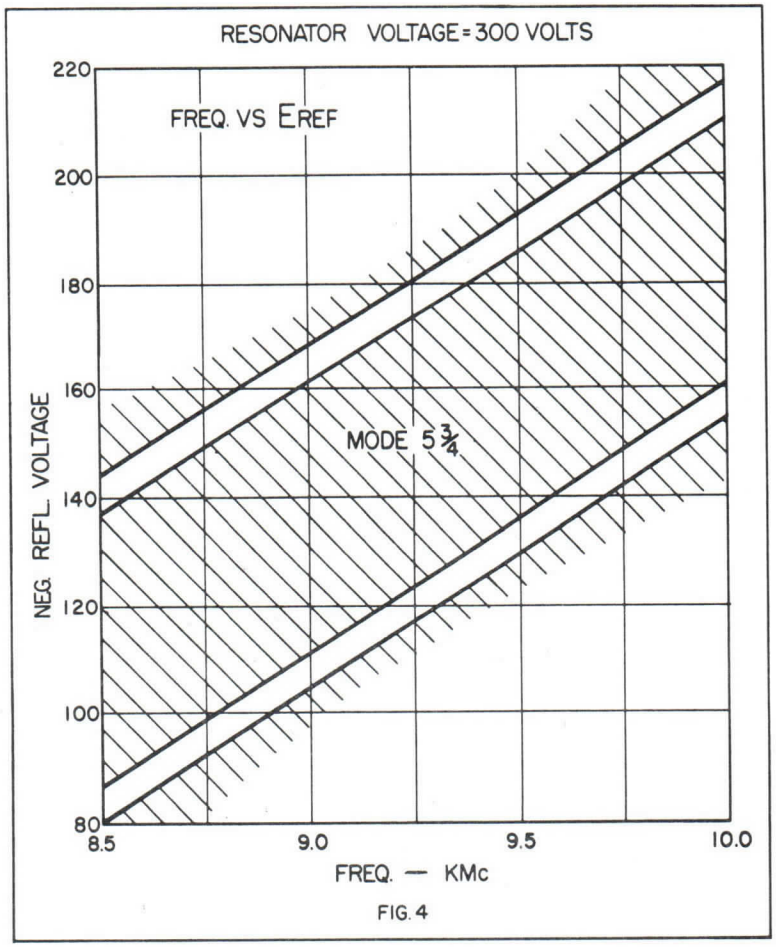

FIG. 4

DETAILED MECHANICAL INFORMATION

INSTALLATION

The RK6312/QK420 mounts in any position and is supported by the waveguide coupling flange. Care should be exercised to avoid excessive tension in the cable in the installation. Other cable lengths and connectors can be supplied upon request.

SHIELDING

Operation of the RK6312/QK420 in the presence of strong magnetic fields usually requires shielding of the resonator and reflector leads to avoid undesirable modulation of the R.F. power output. In extremely troublesome environments, magnetic shielding of the whole tube may be necessary. Whenever shielding is used, adequate ventilation must be provided to keep the ambient below the maximum specified limit.

WAVEGUIDE WINDOW

The waveguide output section contains a thin, low reflection mica window which is part of the vacuum envelope. This window can be cleaned when necessary with a soft material. Care should be exercised not to scratch or puncture the mica.

VELOCITY VARIATION OSCILLATOR

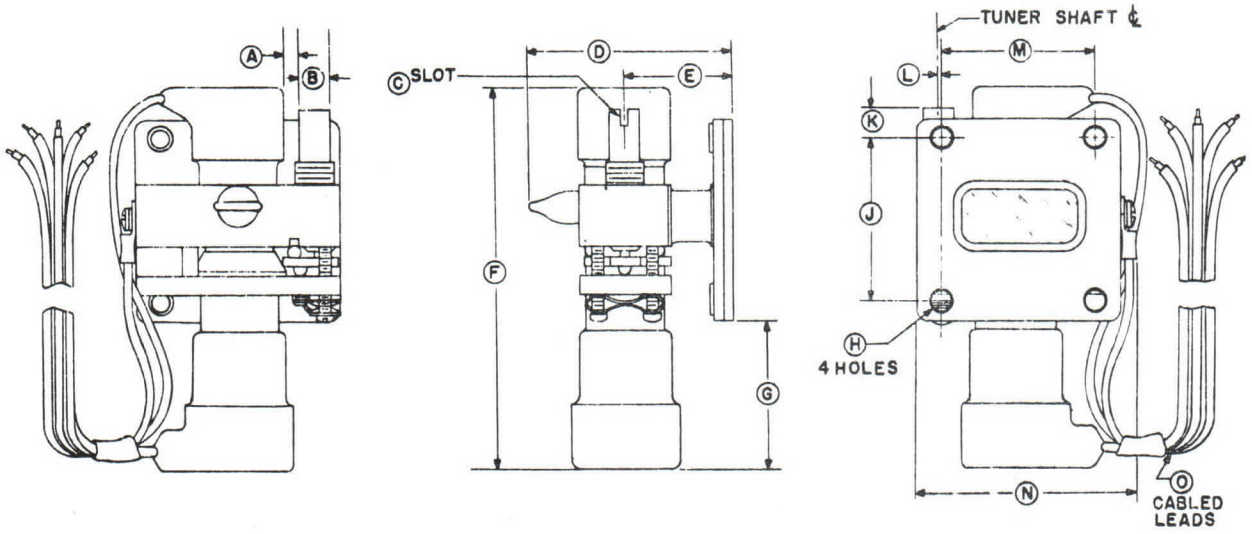

CABLE CONNECTIONS

YELLOW – HEATER
WHITE – HEATER } INTERNALLY
GREEN – CATHODE } CONNECTED
GREY – REFLECTOR
BROWN – BODY

REF.	DIMENSIONS
A	.125 NOM.
B	.250 MAX. .248 MIN.
C	.050 WIDE X .220 DEEP NOM.
D	1.813 MAX.
E	.936 MAX. .850 MIN.
F	3.000 MAX.
G	1.00 MAX.
H	.219 DIA. NOM. WITH .185 DIA. NOM. REMOVABLE INSERTS
J	1.284 MAX. 1.276 MIN.
K	.260 MAX.
L	.070 MAX. .010 MIN.
M	1.224 MAX. 1.216 MIN.
N	1.875 MAX.
O	18 NOM.

NOTE: Eyelet-type inserts in the flange mounting holes are 0.219 O.D., 0.185 I.D., nominal, and are easily removable from rear of flange. With inserts in place, the mounting holes provide clearance for #8 screws. With inserts removed, the mounting holes permit use of insulating bushings where d.c. isolation between tube flange and waveguide system is desired.

RAYTHEON TYPE
RK6312/QK420
OUTLINE DRAWING

TYPE RK6316/ QK436

The RK6316/QK436 is a mechanically tuned velocity variation oscillator of the single cavity (integral) reflex type designed for CW operation in the 8500 to 10000 Mc range with an average power output of 50 milliwatts. No special provisions are ordinarily required for cooling the tube. It is a waveguide output type which can quite simply be fitted with a gasket and inserts capable of insulating the shell of the tube from the coupling guide. It is therefore convenient to operate the shell of this tube above ground, and to power the resonator circuit from the same supply which furnishes plate potential to other tubes in an equipment. The RK6316/QK436 is an extremely rugged tube intended for high altitude radar applications where conditions of severe shock, vibration and sustained acceleration are encountered.

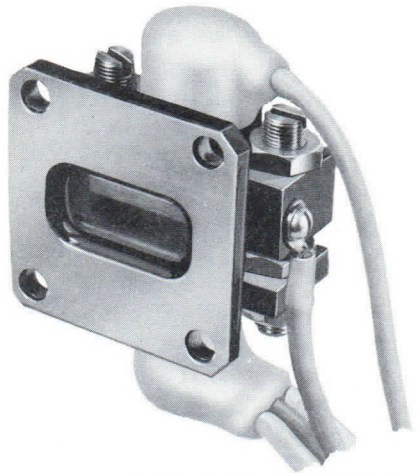

VELOCITY VARIATION OSCILLATOR

GENERAL CHARACTERISTICS

ELECTRICAL

Heater Characteristics

Heater Voltage	6.3 ±10% V
Heater Current	1.2 A

Maximum Ratings

Resonator Voltage	350 Vdc
Resonator Current	42 mAdc
Reflector Voltage	0 to –1000 Vdc
Ambient Temperature	110°C

Typical Operation

Frequency	9300 Mc
Mode	5¾
Resonator Voltage	300 Vdc
Resonator Current	28 mAdc
Reflector Voltage	–160 Vdc
Power Output	50 mW
Electronic Tuning Range	48 Mc
Modulation Sensitivity	1.5 Mc/v
Temperature Coefficient	60 Kc/°C

MECHANICAL

Mounting Position	Any
Overall Dimensions	See Outline Dwg.
Envelope	Metal
Base	Viking Connector (VP5/2AA1 Plug & V57/23C1 Hood)

Printed in U.S.A.

Tuner	Lock Nut
Output	Bolts to UG 39/U flange or UG 40/U Choke for 1" x ½" x .050" Waveguide
Weight	7 oz.
Shock	250 G
Vibration	10 G

DETAILED ELECTRICAL INFORMATION

Cathode

In applications where the metal envelope (resonator) of the tube is operated at ground potential, the cathode will be negative with respect to ground by the amount of this potential and must not be grounded. The heater and cathode are tied together internally and the heater transformer must therefore be insulated to withstand maximum resonator voltage for all applications where the resonator is operated at ground potential.

In applications where the metal envelope is operated above ground potential, the tube should be surrounded by a grounded enclosure or insulating device for the protection of the operator. In such an installation, tuning or mechanical adjustments made while the tube is in operation requires an insulated tool, and coupling to the waveguide must be made with insulating gasket and inserts for the flange and clearance holes.

Whenever an insulator or grounded enclosure is used, adequate ventilation must be provided to maintain the ambient below the maximum specified limit.

Reflector

The reflector electrode is connected to the gray lead of the cable. The power supply furnishing the reflector potential must be insulated to withstand the total resonator and reflector voltage in applications where the resonator is grounded. The reflector must never be allowed to become positive with respect to the cathode. Failure to observe this precaution may result in damage to the reflector. In cases where modulating potentials bring the reflector potential close to zero volts, or where an extremely high reflector circuit impedance is required, a diode should be connected between cathode and reflector to prevent the reflector from going positive.

MECHANICAL TUNING

The mechanical tuner is designed to permit occasional frequency adjustments over the operating frequency range. Rotation of the tuning nuts indicated in the outline drawing place the cavity in tension and alter the cavity geometry to effect a frequency change. Optimum operation will be realized at any given frequency setting if approximate symmetry of tuning nuts position is maintained. High and low frequency mechanical stops are provided to prevent tuning outside the specified range.

ELECTRONIC TUNING

With the mechanical tuner adjusted so that the tube is operating near the desired frequency, vernier frequency adjustments may be made by varying the reflector voltage. Maximum power output for a given mechanical tuner setting, however, will be obtained at only one value of reflector voltage. If the mechanical tuner and reflector voltage are mutually adjusted for maximum power output at a given frequency, and if then the reflector voltage is varied above and below the value for maximum power output, such that the power output is reduced by one half, the frequency between the half power values is defined as the electronic tuning range. The electronic tuning range and linearity depend on the type of load and coupling used. A highly reactive load may shorten the electronic tuning range and cause nonlinear variation of frequency with reflector voltage. See Fig. 1.

VELOCITY VARIATION OSCILLATOR

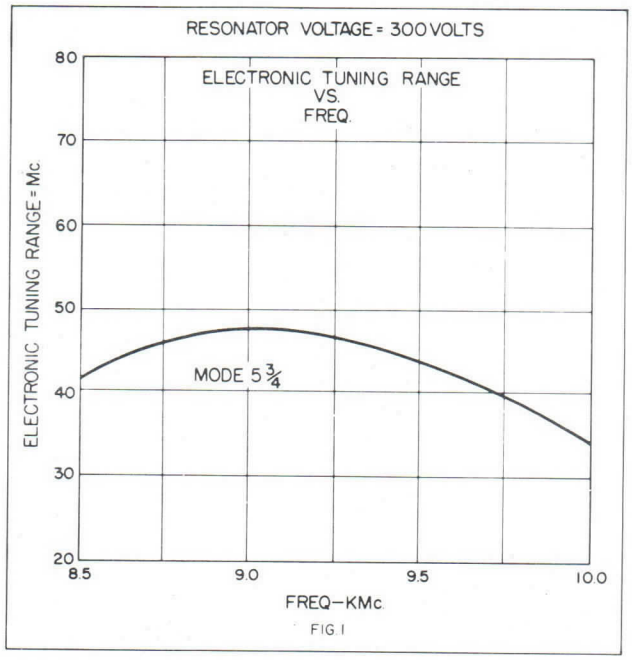

FIG. 1

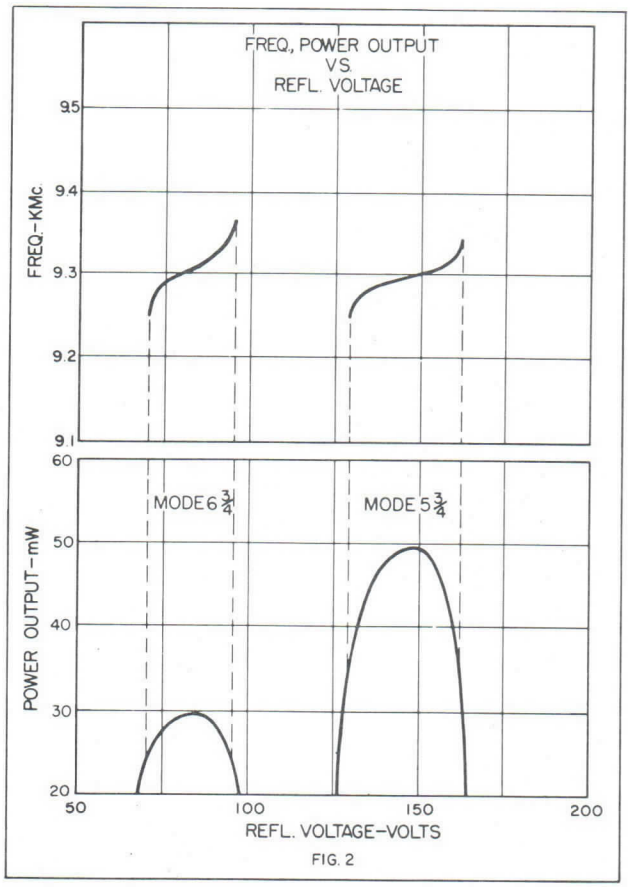

FIG. 2

MODE OF OPERATION

Oscillation may be obtained in a given tube with several combinations of resonator and reflector voltage at a particular frequency. See Fig. 2. The regions where oscillations occur within the reflector voltage range, are referred to as reflector transit modes. The curves of Fig. 3 show the RK6316/QK436 in the recommended 5¾ mode. This mode has been chosen because it represents the best compromise between optimum power and wide electronic tuning range. See Fig. 4.

Printed in U.S.A.

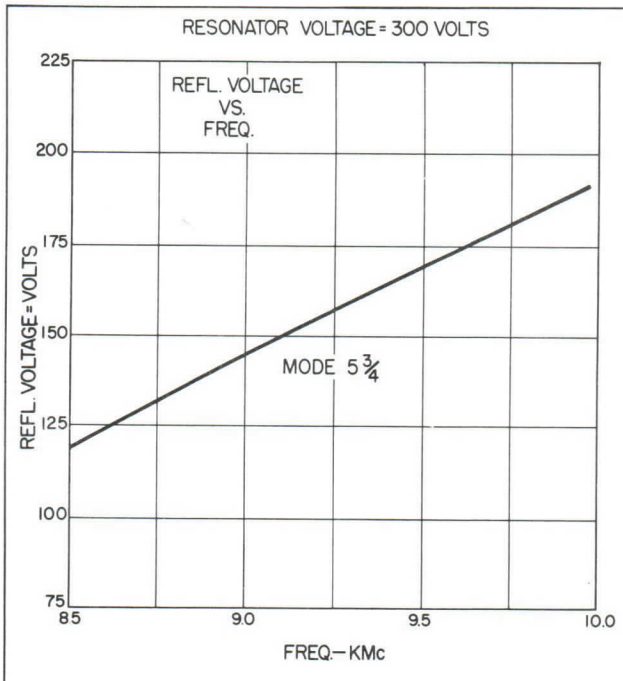
RESONATOR VOLTAGE = 300 VOLTS
REFL. VOLTAGE VS. FREQ.
MODE 5 3/4
REFL. VOLTAGE = VOLTS
225
200
175
150
125
100
75
8.5
9.0
9.5
10.0
FREQ.—KMc

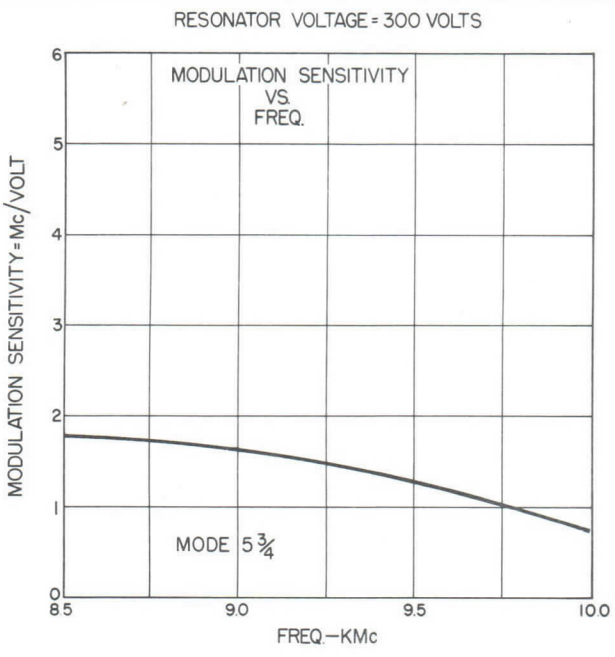
RESONATOR VOLTAGE = 300 VOLTS
MODULATION SENSITIVITY VS. FREQ.
MODE 5 3/4
MODULATION SENSITIVITY = Mc/VOLT
6
5
4
3
2
1
0
8.5
9.0
9.5
10.0
FREQ.—KMc

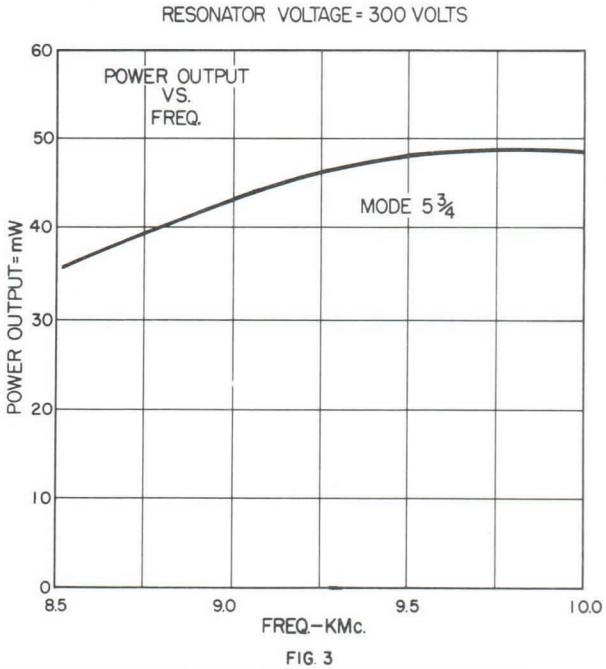
RESONATOR VOLTAGE = 300 VOLTS
POWER OUTPUT VS. FREQ.
MODE 5 3/4
POWER OUTPUT = mW
60
50
40
30
20
10
0
8.5
9.0
9.5
10.0
FREQ.—KMc.

FIG. 3

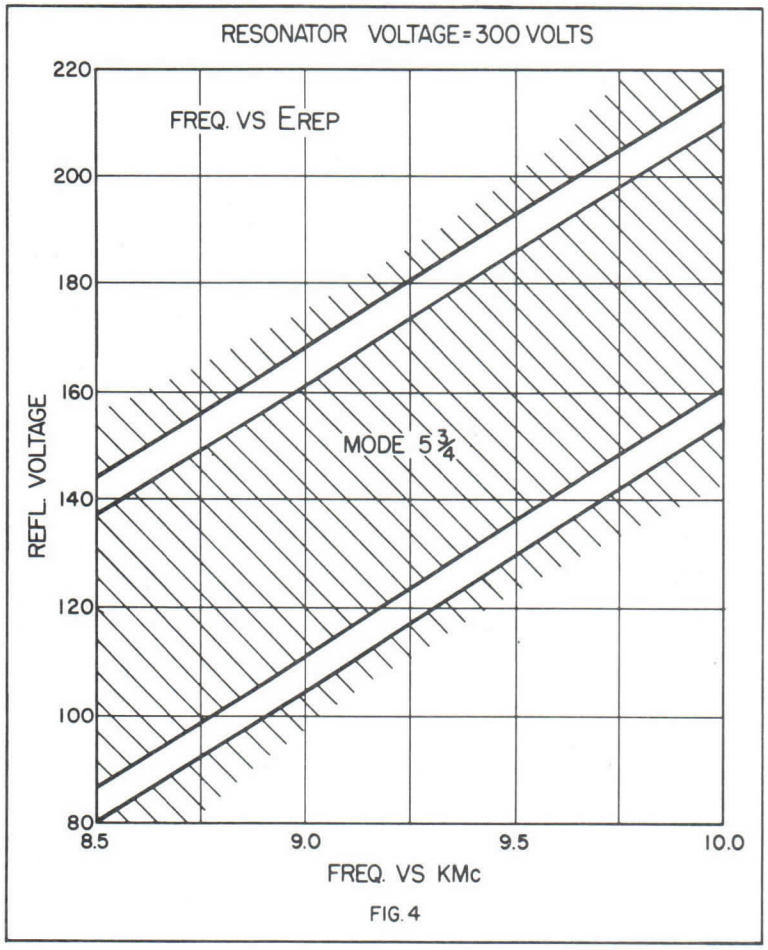

FIG. 4

DETAILED MECHANICAL INFORMATION

INSTALLATION

The RK6316/QK436 mounts in any position and is supported by the waveguide coupling flange. Care should be exercised to avoid excessive tension in the cable in the installation. The cable is terminated in a Viking Connector (VP5/2AA1 Plug & V57/23C1 Hood) with the electrical connections indicated on the tube outline drawing (Fig. 5). Any desired cable length and connector can be supplied upon request.

SHIELDING

Operation of the RK6316/QK436 in the presence of strong magnetic fields usually requires shielding of the resonator and reflector leads to avoid undesirable modulation of the R.F. power output. In extremely troublesome environments, magnetic shielding of the whole tube may be necessary. Whenever shielding is used, adequate ventilation must be provided to keep the ambient below the maximum specified limit.

WAVEGUIDE WINDOW

The waveguide output section contains a thin low reflection mica window which is part of the vacuum envelope. This window can be cleaned when necessary with a soft material. Care should be exercised not to scratch or puncture the mica.

Printed in U.S.A.

VELOCITY VARIATION OSCILLATOR

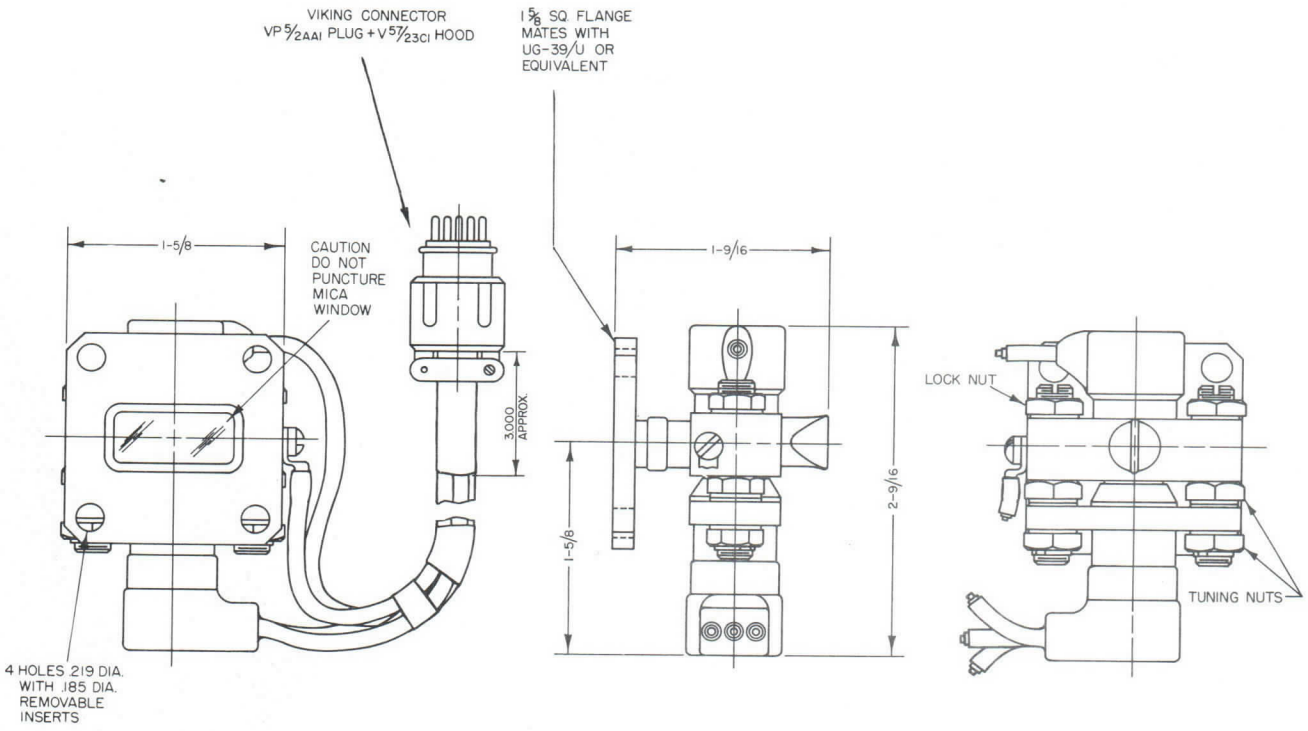

CABLE CONNECTIONS

YELLOW — HEATER
WHITE — HEATER *
GREEN — CATHODE *
BROWN — BODY
GREY — REFLECTOR
*INTERNALLY CONNECTED

ALL DIMENSIONS
ARE IN INCHES
AND MAXIMUM

OUTLINE DRAWING
RK6316/QK436
KLYSTRON

FIG. 5

TYPE RK6390

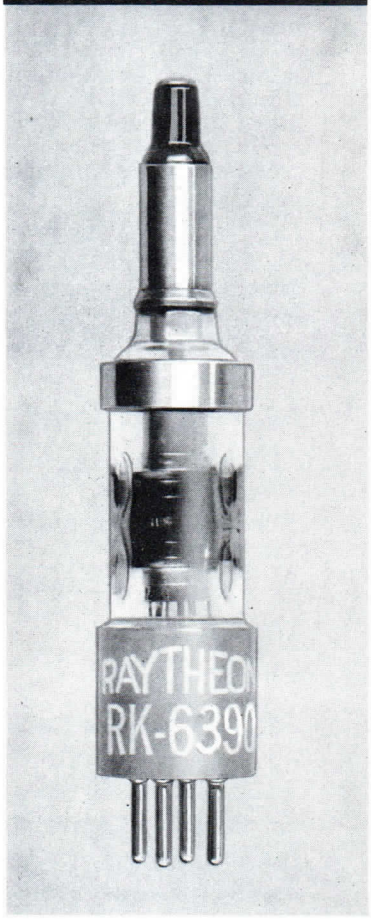

VELOCITY VARIATION OSCILLATOR

The type RK6390 is a reflex velocity variation oscillator designed for use with a coaxial cavity in CW or pulsed operation over the 6700 to 11050 Mc range with an average power output of 60 milliwatts. Freely circulating and in some cases forced air is required for cooling of the grid ring cavity contacts. The extremely wide frequency range of this tube makes it ideally suited for signal generator and special local oscillator applications. A special control electrode facilitates low-voltage, pulsed modulation.

GENERAL CHARACTERISTICS

ELECTRICAL

Heater Characteristics

Heater Voltage	6.3 ±0.5V
Heater Current	0.58 A

Ratings — Absolute Maximum Values

Resonator Voltage	1250 Vdc
Resonator Current	20 mAdc
Reflector Voltage	
Minimum Negative Value	—50 Vdc
Maximum Negative Value	—700 Vdc
Control Electrode Voltage	±25 V
Control Electrode Current	6 mA
Reflector Current	1 mAdc
Heater-Cathode Voltage	±50 V
Dissipation (Exclusive of Heater Power)	25.5 W
Temperature of G_3 Sleeve	160°C

Typical Operating Conditions (CW)

Coaxial Cavity	Special Design Required
Reflector Mode	3¾, 4¾ cycles
Cavity Mode	¾ wavelength
Frequency Range	7000-11000 Mc
DC Resonator Voltage	1250 Vdc
DC Resonator Current (exclusive of control electrode current)	20 mA
DC Reflector Voltage Range ★	—140 to —375 Vdc
DC Reflector Current	0 mA
DC Control Electrode Voltage •	+2 to +16 Vdc
DC Control Electrode Current	5 mA (max.)
Control Electrode Cutoff Voltage	—3 to —23 Vdc
Power Output (Average CW)	60 mW
Power Output (Minimum CW)	45 mW
Electronic Tuning (Half Power) ◈ Bandwidth	12 Mc (min.)
Reflector Modulation Sensitivity @ 8340 Mc	0.1 Mc/Volt
Thermal Compensation (Tube Without Cavity)	0.1 Mc/°C

★ *Adjusted for maximum power output.*

• *Adjusted for 20 milliamperes resonator current.*

◈ *Change in frequency between the two ½ power points when the reflector voltage is varied above and below the point of maximum power output corresponding to the given frequency.*

Printed in U.S.A.

MICROWAVE AND POWER TUBE DIVISION

RAYTHEON COMPANY

FOUNDRY AVE., WALTHAM 54, MASS.

Typical Operating Conditions (Pulsed)

Pulse Repetition Rate	40–4000 pps
Pulse Duration (Minimum)	0.5 μs
Rise Time	0.1 μs
Fall Time	0.1 μs
Beam Current During Off Time	10 μa

The general conditions for pulsed operation are the same as those given above for CW operation. Power output for pulsed operation will be less than 1.5 db below the power output for CW operation over the band.

General Mechanical Characteristics

Mounting Position	Any
Over-all Dimensions	See Outline Drawing
Envelope	Glass
Seals	Glass to Copper Oxide
Banana Jack	Required Ucinite #152005 Mating Plug or Equivalent.
Base	Special Miniature 4 Pin, Fits Amphenol #78-545 Socket.
Vibration	10 G @ 50 cps
Altitude	50,000 ft (max.)

DETAILED ELECTRICAL INFORMATION

REFLECTOR

The reflector electrode is connected to the small banana jack on the top of the tube. Reflector voltages more positive than —50 volts with respect to the cathode may result in damage to the tube. Under conditions of vigorous oscillation and light loading, excessive reflector current may be drawn (in the order of one milliampere) on the long wavelength of the band. No damage will result, however, except in cases where the heavy reflector current flowing in a high reflector circuit impedance causes the reflector potential to swing increasingly positive with respect to the cathode. Where high reflector circuit impedances are used, it is advisable to shunt the reflector and cathode with a small diode to prevent the reflector from swinging positive.

CATHODE

In most applications, the metal cavity used with the RK6390 is operated at ground potential, and the cathode will be negative with respect to ground by the amount of this resonator potential. The cathode may be connected to one side of the heater or to the center tap of the heater transformer secondary. When the cathode and heater are connected together, connections to the cathode should be made directly to the cathode contacts on the tube socket and never to a heater lead. When the cathode and heater are not tied together, the heater-cathode voltage should not exceed ±50 volts. In all cases where the resonator is operated at ground potential, the heater transformer must be insulated to withstand the maximum resonator voltage. Maximum tube life will be realized if a 30-second heater warmup period precedes the application of other voltages. The beam potential must never be applied before any other voltages.

CONTROL ELECTRODE

In applications where the RK6390 is to be used in both CW and pulsed operation, the circuit in Fig. 1 is recommended. With the selector switch in the CW position, the 6J6 is effectively out of the circuit and the bias on the RK6390 is set at a value that will yield a 20-milliampere beam current. With the selector set at the pulsed position, the 6J6 shunts the lower portion of the potentiometer and the voltage division is such that the RK6390 is biased to cutoff. A negative pulse of suitable amplitude applied to the grid of the 6J6 will drive it to cutoff and restore the grid of the RK6390 to the level set for CW operation.

ELECTRONIC TUNING

Vernier adjustment of the frequency of the RK6390 is accomplished by varying the reflector voltage. If the mechanical tuning mechanism employed in the external cavity and the reflector voltage are mutually adjusted to yield a maximum power output at a given frequency, and if then the reflector voltage is varied above and below the value for maximum power such that the power output is reduced to one half, the frequency change between the half power values is defined as the electronic tuning range. The range of electronic tuning and the linearity of its variation with reflector voltage is a function of the type of load and coupling used. Maximum electronic tuning range will be achieved with operation into a resistive load. Operation into a highly reactive load may be attended by excessive hysteresis, and nonlinear variation of frequency with reflector voltage.

FREQUENCY STABILITY

The regulation of the voltages applied to the reflector, resonator, and control grid will be reflected directly in the stability of the output frequency. Hence, the regulation of those voltage supplies must be commensurate with the stability requirements of the application.

The thermal frequency drift experienced with the RK6390 depends mainly on the changes in physical size of the resonant chamber with temperature. The RK6390 is temperature-compensated so that thermal coefficient of frequency drift will not exceed 0.1 Mc/°C when operating in a constant size cavity. The amount by which the frequency drift exceeds 0.1 Mc/°C is therefore dependent only on the thermal properties of the cavity. Careful consideration should be given to the material from which the external cavity is constructed.

MODE OF OPERATION

The RK6390 is designed for operation with contacting or noncontacting plunger-type coaxial cavities over the 6700 to 11050 Mc band in the 3¾ and 4¾ reflector modes. Design and construction of the above-mentioned cavities can be extremely troublesome, and certain design precautions must be observed to avoid interference from circumferential resonances, one-quarter wavelength modes, and multifrequency bunching. An extensive treatment of the design of wide-range coaxial cavities is beyond the scope of this publication; however, the following references contain adequate information pertinent to their design.

1. W. H. Huggins. "Multifrequency Bunching in Reflex Klystrons," Proc. I.R.E., XXXVI, 624-30.
2. W. H. Huggins. "Broad Band Non-Contacting Short Circuits for Coaxial Lines," Proc. I.R.E., XXXV, 1324-28.
3. Radio Research Laboratory Staff. "Very High Frequency Techniques." New York: McGraw-Hill, 1947, II, 916-19 and 900-11.

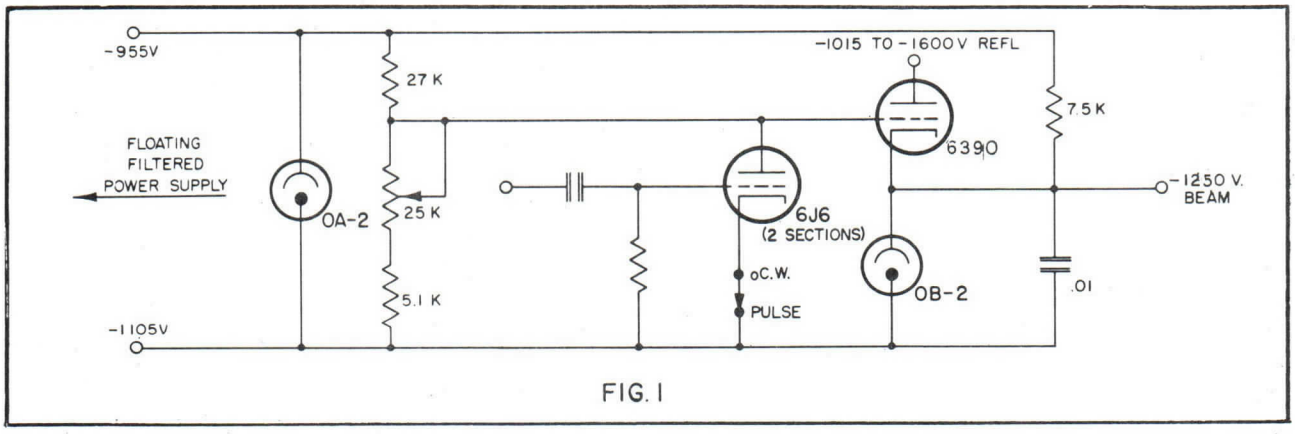

FIG. 1

DETAILED MECHANICAL INFORMATION

INSTALLATION

The tube mounts in any position and requires a special, miniature, 4-prong socket such as an Amphenol Type 78-545 or low-loss equivalent. Clamping to the G_2 ring should be made in such a manner that no mechanical strain be set up in the glass between G_2 and G_3 rings. A toroidal spring contact between the cavity and the G_2 ring, as shown in Fig. 2, is recommended.

Temperatures of the G_3 sleeve in excess of 160°C cannot be tolerated; and in cavities where center conductor conduction is insufficient to hold this tolerance, forced-air cooling is required. In general, the center conductor of wide-range coaxial cavities will have sufficient mass to provide adequate conduction. However, in situations where conduction is inadequate, a center conductor made of coin silver will improve conduction sufficiently to obviate forced-air cooling.

Optimum broad-band operation is best achieved with a load termination of 50 ohms and VSWR'S not greater than 1.25/1.

SHIELDING

Operation of the RK6390 in the presence of strong magnetic fields usually requires shielding of the resonator and reflector leads to avoid undesirable modulation of the tube output. In extremely troublesome environments, it may be necessary to place the parts of the RK6390 not covered by the cavity in a metal chamber with poly-iron chokes provided on the leads bringing the voltages into the chamber.

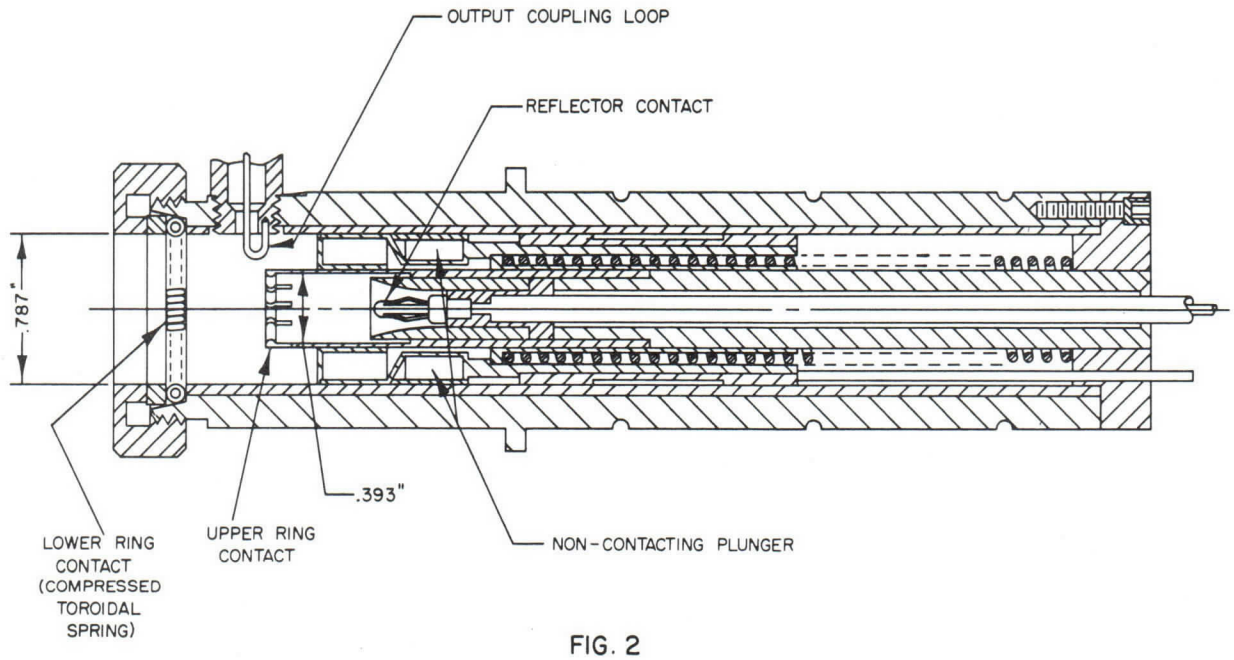

FIG. 2

VELOCITY VARIATION OSCILLATOR

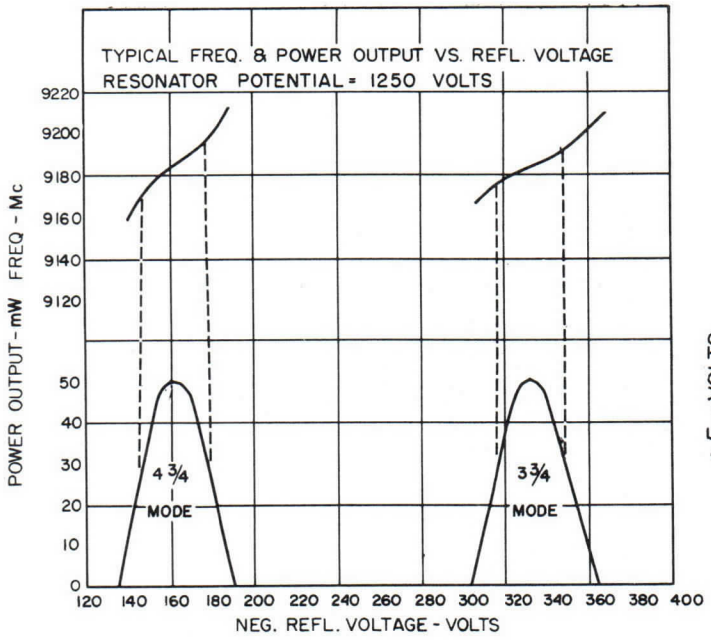

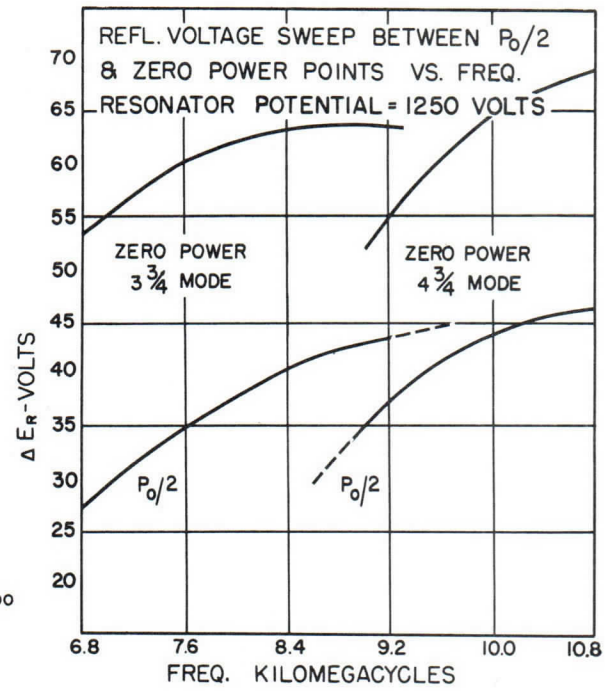

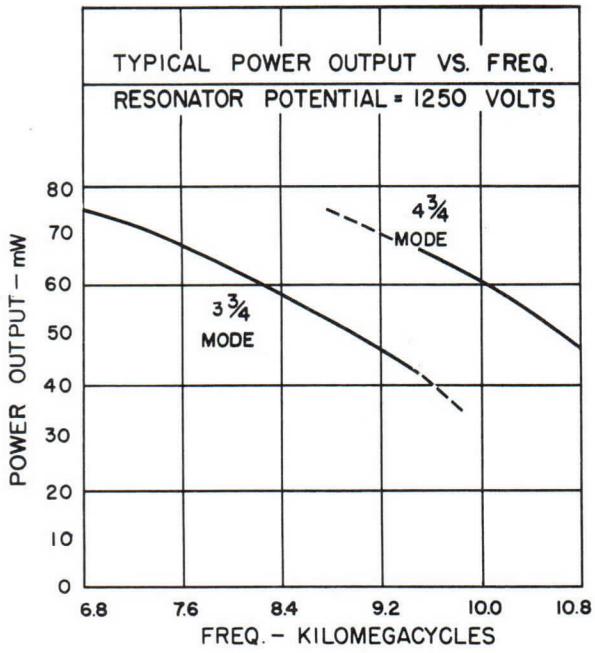

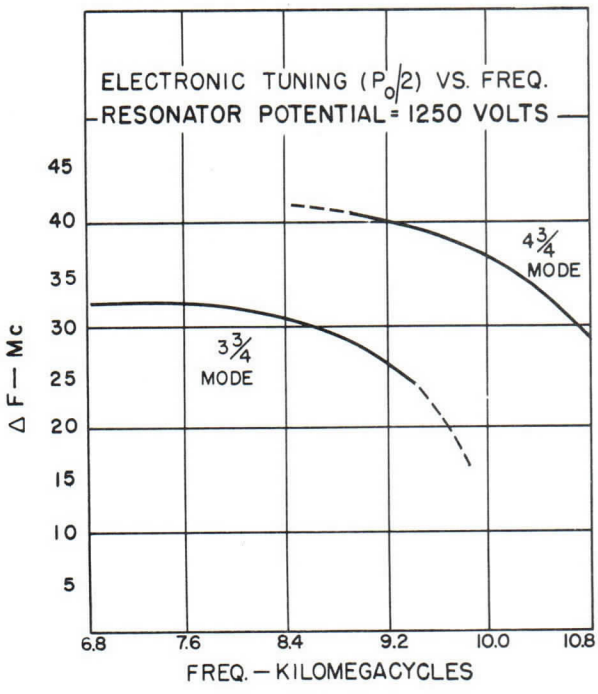

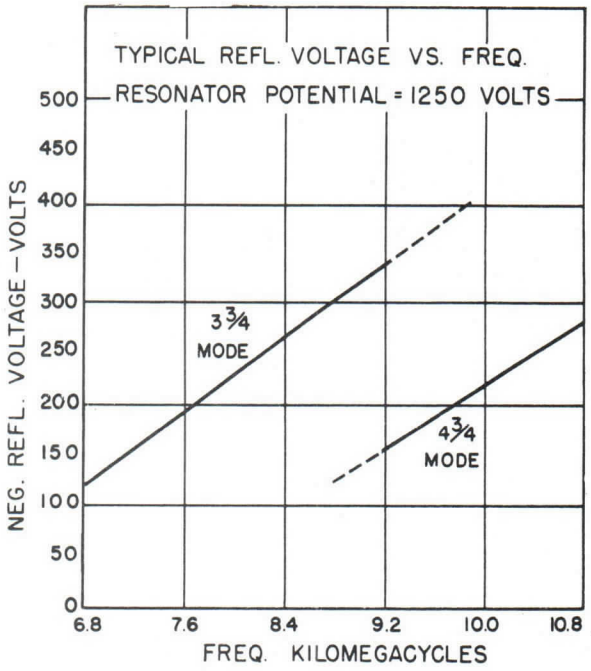

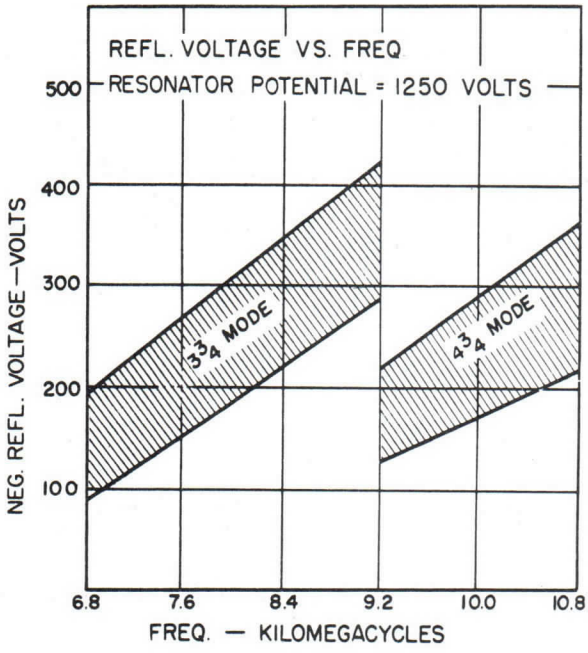

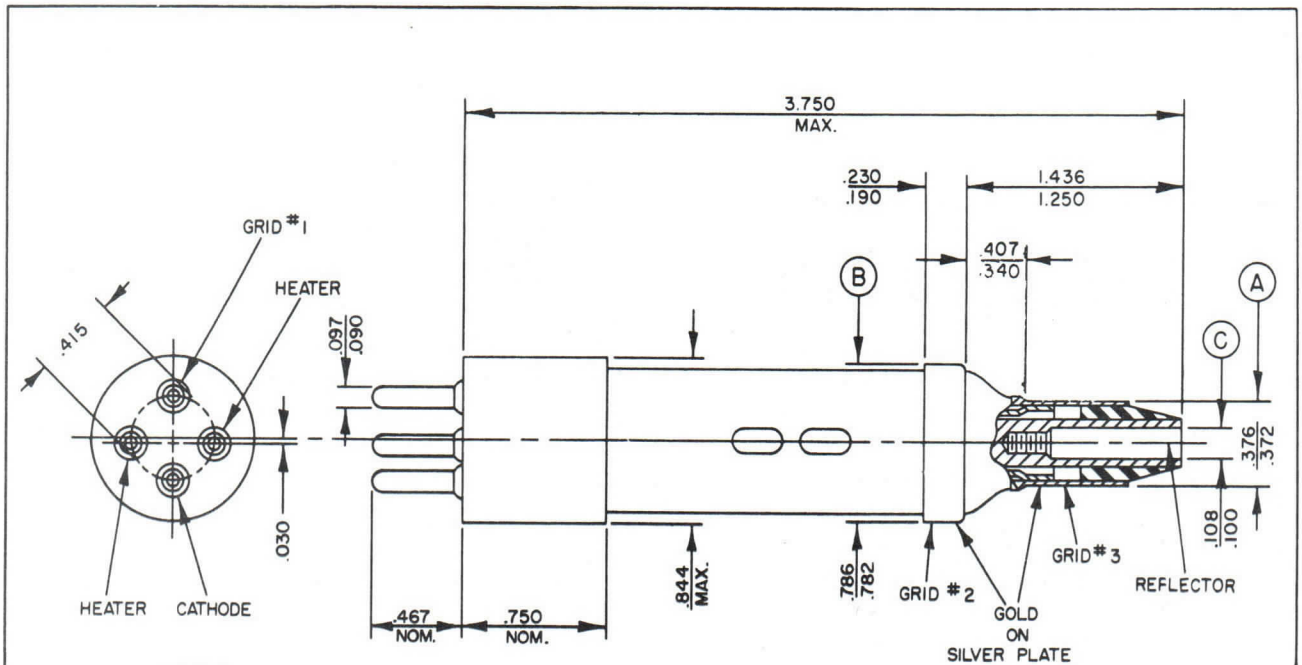

NOTES:

A – REFERENCE DIAMETER.
B – THIS DIAMETER TO BE CONCENTRIC TO "A" WITHIN .005.
C – THIS DIAMETER TO BE CONCENTRIC TO "A" WITHIN .015.

RK6390
ELECTRON TUBE
OUTLINE DRAWING

RAYTHEON

TECHNICAL INFORMATION

VARIATION OSCILLATOR

Excellence in Electronics

TYPE RK6573/ QK483

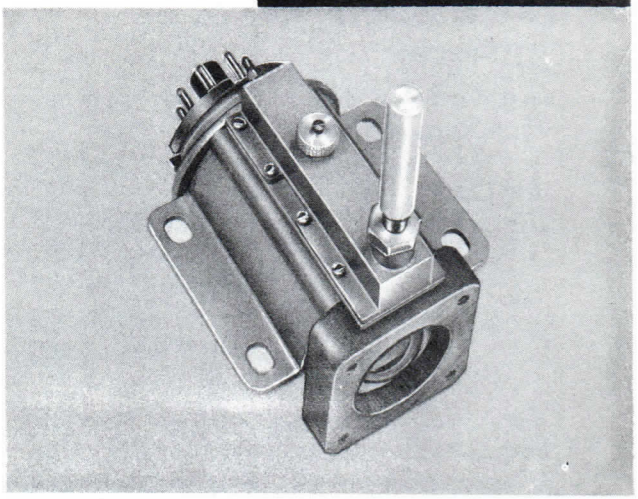

The RK6573/QK483 is a mechanically tuned velocity variation oscillator of the single cavity (integral) reflex type designed for CW operation in the 15,500 to 17,000 Mc range with an average power output of 40 milliwatts. Adequate cooling for this type tube is usually provided by freely circulating air. It is a waveguide output type fitted with a fiber flange which is capable of insulating the shell of the tube from the coupling guide. It is therefore convenient to operate the shell of this tube above ground, and to power the resonator circuit from the same supply which furnishes plate potential to other tubes in an equipment. The compound lever system of the mechanical tuner is free of backlash and yields an extremely smooth fine tuning adjustment which is linear with tuner shaft rotation.

GENERAL CHARACTERISTICS

ELECTRICAL:

Heater Characteristics:

Heater Voltage (AC or DC)	6.3 V
Heater Current @ 6.3 volts	450-600 mAdc

Maximum Ratings:

Heater Voltage	6.3 ±8% V
DC Resonator Voltage	330 Vdc
DC Resonator Current	45 mA
DC Reflector Voltage	—25 to —300 Vdc
Heater Cathode Potential Difference	±45 V
Envelope Temperature	175° C

Typical Operation:

Frequency Range	15500-17000 Mc
DC Resonator Voltage	300 Vdc
DC Resonator Current	30-45 mA
DC Reflector Voltage (15500 to 17000 Mc 4¾ cycle reflector mode)	—60 to —210 Vdc
Power Output (average)	40 mW
Electronic Tuning Range (to half power points)	75 Mc minimum

MECHANICAL:

Mounting Position	Any
Overall Dimension	See Outline Dwg.
Envelope	Metal
Base	Std Intermediate Octal

Printed in U.S.A.

MICROWAVE AND POWER TUBE DIVISION

RAYTHEON COMPANY

FOUNDRY AVE., WALTHAM 54, MASS.

DETAILED ELECTRICAL INFORMATION

CATHODE

In applications where the metal envelope is operated at ground potential, the cathode is negative with respect to ground by the amount of the resonator potential and must not be grounded. The cathode may be connected to one side of the heater or to the center tap of the heater transformer secondary. When the cathode and heater are connected together, connections to the cathode should be made directly to the cathode contacts on the tube socket and never to a heater lead. When cathode and heater are not connected together, the heater cathode voltage should not exceed ±45 volts. In all cases where the resonator is operated at ground potential, the heater transformer must be insulated to withstand the maximum resonator voltage.

In applications where the metal envelope is operated above ground potential, it is recommended that the tube be surrounded with a protective shield to eliminate the attendant shock hazard. This shield must be designed so as to allow sufficient convection circulation to maintain the shell temperature below the maximum specified value.

REFLECTOR

The reflector electrode is connected to pin #5 on the base of the tube. The power supply furnishing the reflector potential must be insulated to withstand the total resonator and reflector voltage. The reflector must never be allowed to become positive with respect to the cathode. If this precaution is not observed, damage to the reflector may result. In cases where modulating potentials bring the reflector voltage close to zero volts, or where extremely high reflector circuit impendance is required, a diode should be connected between cathode and reflector to prevent the reflector from going positive.

MECHANICAL TUNING

Extremely smooth, backlash free, mechanical tuning is obtained with a unique tuner design. A compound lever system actuated by a tuning shaft is linked mechanically to a diaphragm which is integral with the resonant cavity and coupled to the resonator grids. Tuning shaft rotation effects the flexing of the diaphragm, changing the geometry of the resonant cavity and altering the grid spacing in such a manner as to cause the frequency of the oscillator to track linearly with tuner shaft rotation. See Fig. 1.

MECHANICAL TUNING CHARACTERISTICS

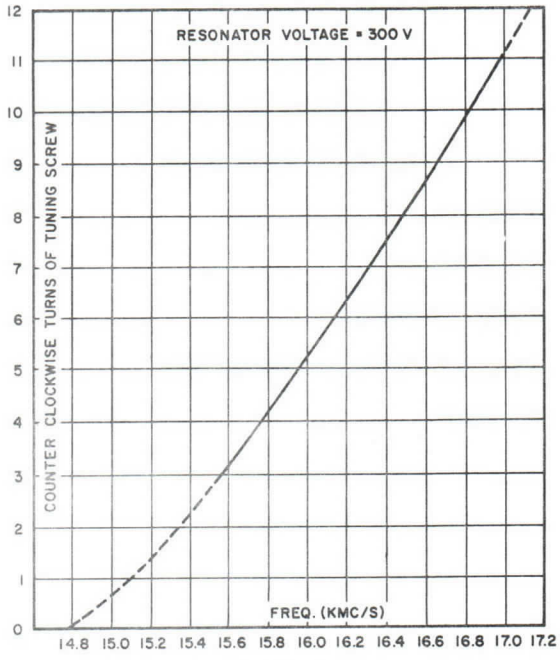

FIGURE 1

ELECTRONIC TUNING

With the mechanical tuner adjusted so that the tube is operating near the desired frequency, vernier frequency adjustment may be made by varying the reflector voltage. Maximum power output for a given mechanical tuner setting, however, will be obtained at only one value of reflector voltage. If the mechanical tuner and reflector voltage are mutually adjusted for maximum power output at a given frequency, and if then the reflector voltage is varied above and below the value for maximum power output such that the power output is reduced by one half, the frequency

change between the half power values is defined as the electronic tuning range. The electronic tuning range and linearity depend on the type of load and coupling used. A highly reactive load may shorten the electronic tuning range and cause non-linear variation of frequency with reflector voltage. See Fig. 2.

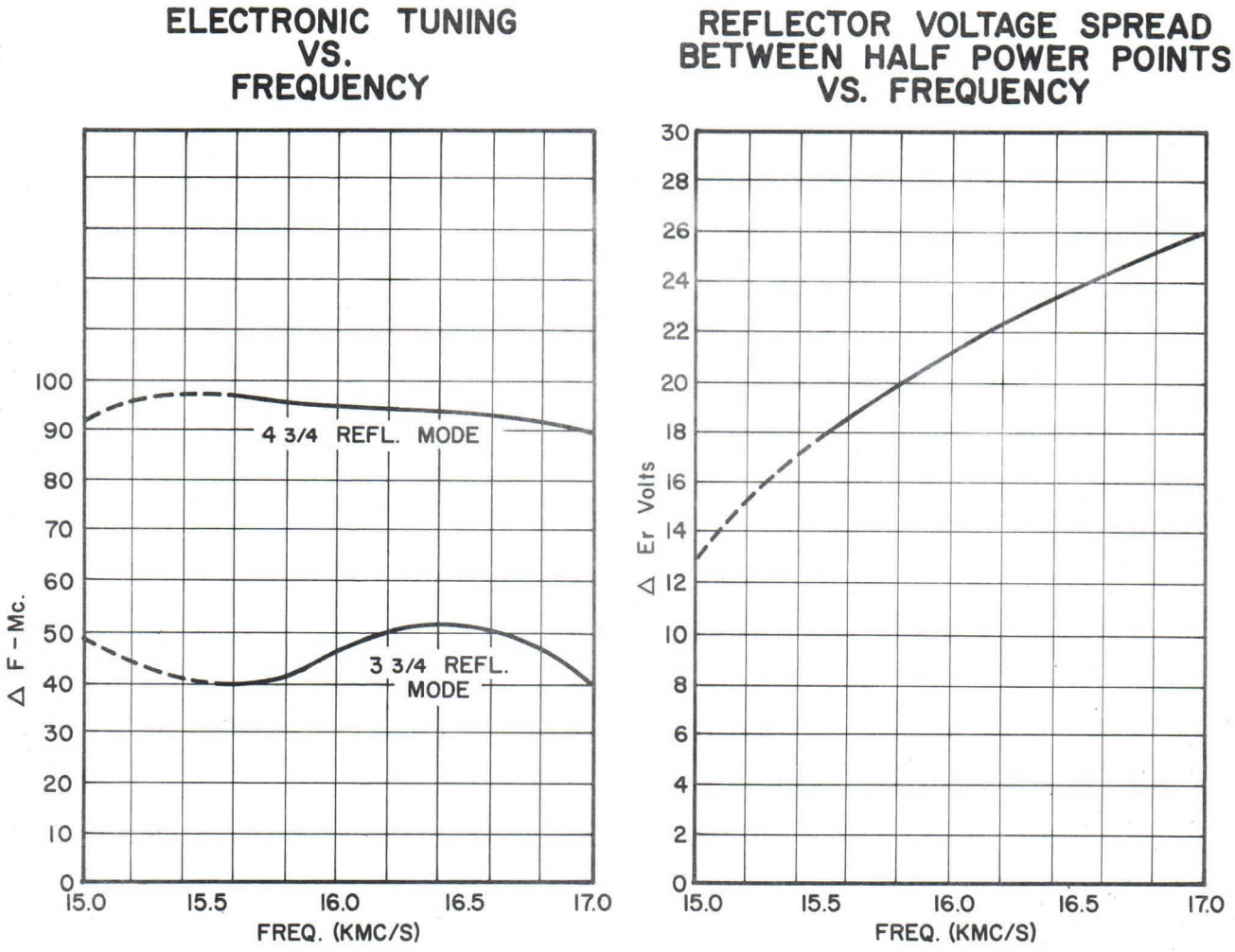

RESONATOR VOLTAGE = 300 VOLTS

FIGURE 2

MODE OF OPERATION

Oscillation may be obtained in a given tube with several combinations of resonator and reflector voltage at a given frequency. The region where oscillations occur within the reflector voltage range are referred to as voltage modes. The curves of Figure 3 show the characteristics of the RK6573/QK483 in the recommended mode. The 4¾ mode has been chosen because it represents the best compromise between optimum power and wide electronic tuning range.

Printed in U.S.A.

REFLECTOR VOLTAGE (AT MAX. POWER OUTPUT) VS. FREQUENCY

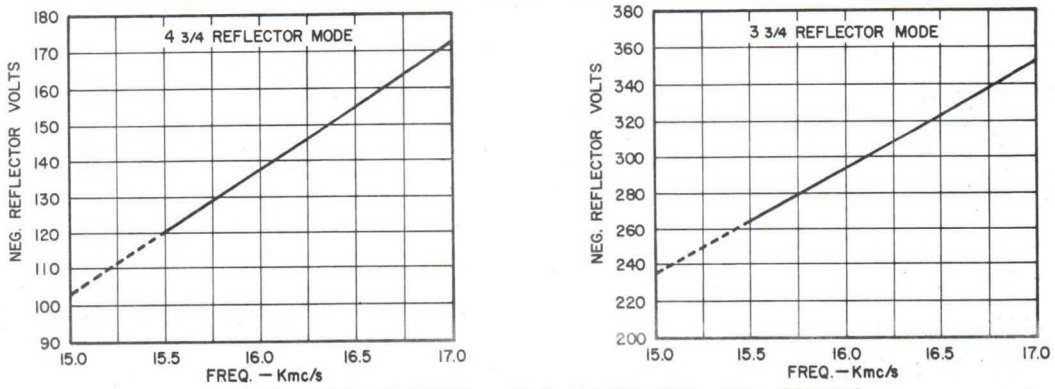

RESONATOR VOLTAGE = 300 VOLTS FOR ALL GRAPHS

POWER OUTPUT VS. FREQUENCY

POWER & FREQUENCY VS. REFLECTOR VOLTAGE

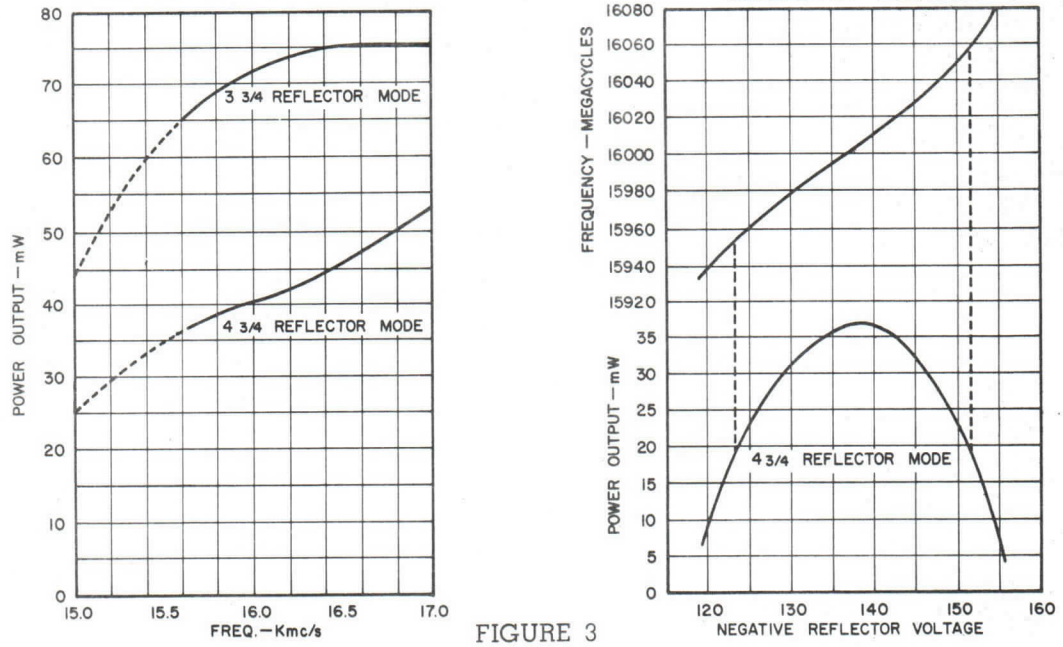

FIGURE 3

INSTALLATION

The RK6573/QK483 requires a standard intermediate octal socket, and may be mounted in any position supported by either the output coupling flange, the mounting flange, or both.

The tube couples directly to standard RG91/U waveguide with UG541/U choke flange required. See tube outline drawing for pin connections.

SHIELDING

Operation of the RK6573/QK483 in the presence of a strong magnetic field usually requires shielding of the resonator and reflector leads to avoid undesirable modulation of the tube output. In extremely troublesome magnetic environments it may be necessary to place the RK6573/QK483 in a metal chamber with polyiron chokes provided to bring the voltages into the chamber.

RK 6573/QK483 OUTLINE DRAWING

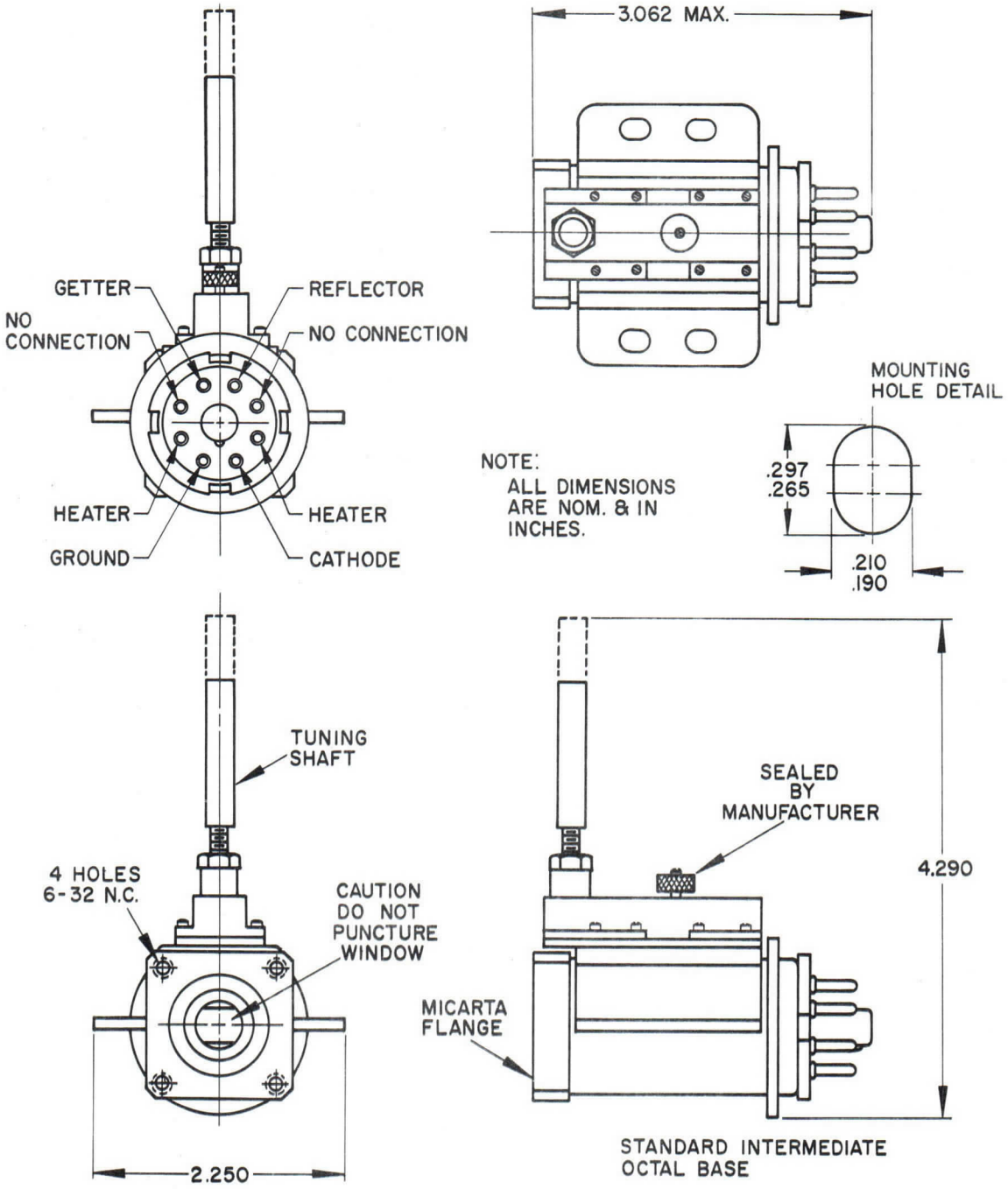

Printed in U.S.A.

MICROWAVE AND POWER TUBE DIVISION

RAYTHEON COMPANY

FOUNDRY AVE., WALTHAM 54, MASS.

3229 — 7-57

RAYTHEON®

Excellence in Electronics

THE DATA IN THIS SECTION FORMS A PART OF THE RAYTHEON TECHNICAL DATA BOOK FOR

MICROWAVE and POWER TUBES

For replacement data sheets or for additional copies of this book, contact

TECHNICAL INFORMATION SERVICE
RAYTHEON COMPANY
55 Chapel Street,
Newton 58, Massachusetts

RAYTHEON

DATA SERVICE

ELECTRON TUBES
MICROWAVE

CONTENTS

MAGNETRONS

TYPE	PAGE	DATE
RK2J42	1-7	2-55
RK2J49	1-7	5-57
RK2J50 (see RK2J49)		
RK2J51	1-10	1-55
RK2J55	1-7	5-55
RK2J56 (see RK2J55)		
RK2J70	1-7	6-55
RK4J31	1-8	1-55
RK4J35 (see RK4J31)		
RK4J36	1-6	7-57
RK4J41 (see RK4J36)		
RK4J54	1-5	12-58
RK4J59 (see RK4J54)		
RK5J26	1-6	9-58
QK172 (see 6959/QK172)		
QK235 (see 6344/QK235)		
QK254 (see 6518/QK254)		
QK338 (see 6410/QK338)		
QK358 (see 6517/QK358)		
QK428 (see 6406/QK428)		
QK456	1-7	9-56
QK665	1-2	Prelim
QK666 (see QK665)		
QK702 (see 7630/QK702)		
RK725A	1-5	11-58
QK735	1-2	12-58
QKH790	1-2	
QK798	1-2	Prelim
QK821	1-2	Prelim

TYPE	PAGE	DATE
QKH883	1-2	Prelim
QKH898	1	Prelim
QKH899	1	Prelim
QKH904	1-2	8-62
QKH959/960	1-2	8-62
QKH1000		Bulletin
RK5586	1-2	12-60
RK5657	1-2	2-61
RK6249A	1-11	3-58
RK6344/QK235	1-8	2-55
RK6406/QK428	1-9	6-56
RK6410/QK338	1-9	9-55
RK6517/QK358	1-10	12-56
RK6518/QK254	1-10	9-56
RK6841	1-7	2-56
RK6959/QK172	1-7	9-58
RK7156	1-7	11-59
RK7449	1-2	Prelim
RK7452	1-2	Prelim
RK7461	1-2	9-59
RK7484	1-2	Prelim
RK7521	1	Prelim
RK7528	1-2	Prelim
RK7529	1-2	Prelim
RK7547	1-2	Prelim
RK7578	1-2	10-59
RK7630/QK702	1-2	Prelim
RK7718	1-2	Prelim

TYPE RK2J42

The RK2J42 is a fixed-frequency, pulsed-type oscillator operating in the frequency region of 9345 to 9405 Mc with a minimum peak power output of 7 kw. It is an integral magnet type tube with a coaxial-to-waveguide transition type output coupling. Cooling will ordinarily be by radiation and convection, except in environments of high ambient temperatures or under operation at high power inputs.

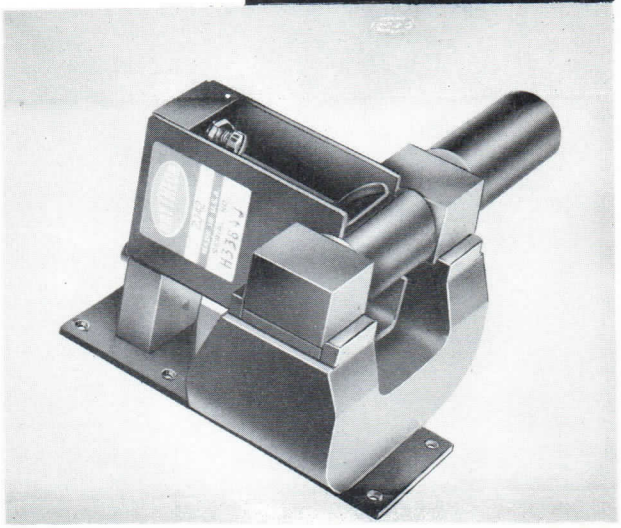

PULSED MAGNETRON OSCILLATOR

GENERAL PRECAUTIONS

Reliable operation and maximum magnetron life can be achieved if the over-all radar transmitter is designed with the magnetron characteristics and peculiarities clearly in mind. This technical data, prepared by the Applications Group of Raytheon Manufacturing Company, rather than the MIL-E-1B Government purchase specifications, should be used as a guide for equipment designers.

As with other electrical components, if magnetrons are operated continuously at their maximum ratings, some deterioration in life will result. There are many problems peculiar to magnetrons in general which must be given special consideration in system design. Many of these problems are discussed in detail on the following pages. If for any reason it is desired to operate the RK2J42 under conditions other than those recommended in this technical data sheet, the company's Magnetron Applications Engineering Group should be consulted.

GENERAL CHARACTERISTICS

ELECTRICAL

Heater Characteristics

Heater Voltage — Preheat	6.3 V ± 10%
Heater Current @ 6.3 volts	0.43-0.60 A
Minimum Preheat Time	2 minutes
Cold Heater Resistance	1.3 Ω

Maximum Ratings

The values specified below must not be exceeded under any service conditions. The ratings are limiting values above which the serviceability of any individual tube may be impaired. It does not necessarily follow that combinations of absolute maximum ratings can be attained simultaneously.

Heater Voltage	7.0 V
Peak Anode Voltage	6.0 kv
Peak Anode Current	5.5 a
Peak Anode Power Input	33 kw
Average Anode Power Input	82.5 W
Anode Temperature	120° C
Pulse Duration	2.5 μs
Duty Cycle	0.0025
Frequency Change Due to Change of Steady-State Temp.	0.25 Mc/°C
VSWR	1.5/1
Pulling @ VSWR = 1.5/1	15 Mc

Printed in U.S.A.

Typical Operation

Heater Voltage (operating)	6.3 V
Pulse Duration	0.4 μs
Pulse Recurrence Rate	800 pps
Peak Anode Voltage	5.5 kv
Peak Anode Current	4.5 a
Peak Power Output	7.0 kw
Frequency	9345-9405 Mc

MECHANICAL

Mounting Position	Any
Over-all Dimensions	See Outline Dwg.
Net Weight	3¼ lbs
Cooling	Convection
Pressurization	45 psia
Output Coupling	UG 40 A/U

DETAILED ELECTRICAL INFORMATION

HEATER

The cathode must be preheated at Ef = 6.3 V ± 10% for a period of at least 2 minutes prior to the application of anode high voltage. Heater voltage must be reduced to the value recommended by the manufacturer within 3 seconds after the application of anode high voltage. Heater current surges in excess of 3 amps cannot be tolerated.

ANODE CURRENT

Satisfactory operation will be obtained with peak anode currents anywhere between 3.5 and 5.5 amps. Operation outside this range may result in malfunctioning of or damage to the magnetron and should be avoided.

STARTING NEW TUBE

Aging of the 2J42 is rarely necessary. If, however, some instability is observed in a new magnetron, it is recommended that it be seasoned under the prevailing conditions of oscillation until it stabilizes and normal operation is attained.

PULSE LENGTH AND DUTY CYCLE

The 2J42 has been designed and tested for operation at the following conditions:

tpc μs	Du	Ef V	Ib mA
0.4	0.00032	6.3	1.44
1.0	0.002	4.5	9.0
2.0	0.001	6.0	4.5

For operation at conditions different than above, please consult the manufacturer.

PULSE CHARACTERISTICS

The smooth peak of a pulse is defined as the maximum value of a smooth curve through the average of the fluctuation over the top portion of the pulse. The pulse width is the time interval between the two points on the current pulse at which instantaneous current is 50 percent of the smooth peak. (True only for approximately rectangular waveshapes.) The rise time is the time interval between points of 20 and 85 percent of the smooth peak. Figure 1 shows graphically the definitions mentioned.

The voltage rate of rise boundaries are currently under investigation; it is anticipated they will be published at some later date in a supplementary data sheet. Stable operation, however, will be realized for the oscillation conditions stated at a voltage rate of rise of 60 kv/μs. Too fast a rate of rise will lead to moding. The ripple on the top of the current pulse must be kept at a minimum to avoid pushing effects which will tend to widen the spectrum. The trailing edge or decay time of the voltage pulse must be as short as possible to obtain optimum performance and high operating efficiencies. Excessive backswing may cause instability and/or noise. The backswing should not exceed 20 percent of the applied pulse.

For optimum pulse shaping, the magnetron, pulse transformer, and pulse line must be treated as a unit. Careful tailoring of the pulse line in any application is recommended.

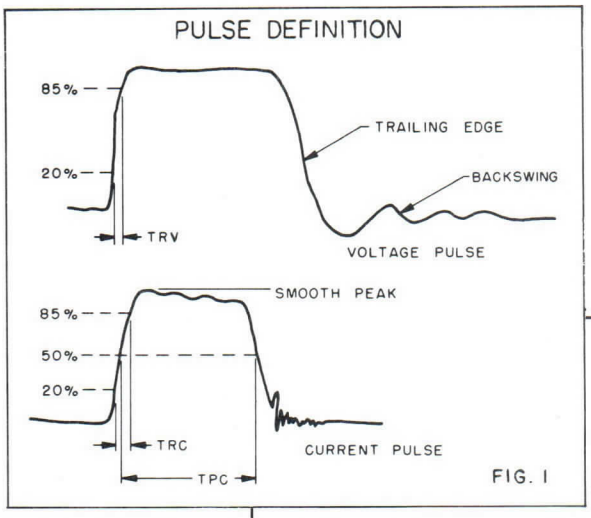

FIG. 1

LOAD DIAGRAM

Fig. 2 is a load diagram of a typical 2J42 magnetron. The contours of constant power output and frequency change are related to voltage standing-wave ratios introduced by mismatched loads at various phase positions. Values of VSWR as high as 3:1 are plotted, but operation with ratios greater than 1.5:1 is not recommended.

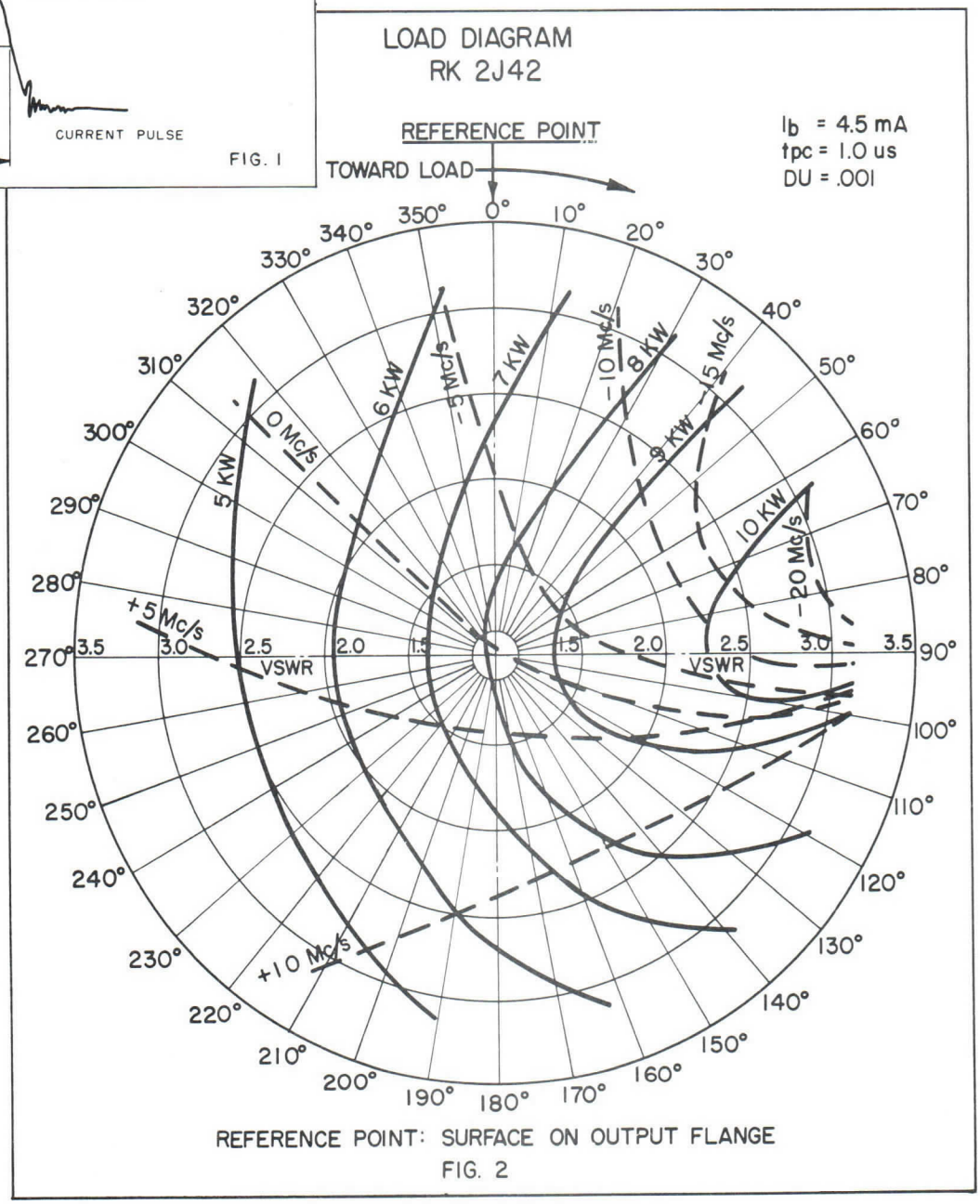

REFERENCE POINT: SURFACE ON OUTPUT FLANGE

FIG. 2

COOLING

For duty cycles less than 0.001, cooling by convection and radiation will be adequate except in environments of abnormally high ambient temperatures where forced-air cooling will be required. Anode operating temperatures below 100°C are recommended, although temperature as high as 120°C may be tolerated at the risk of somewhat shortened tube life. The point at which the anode temperature should be monitored is indicated on the tube outline drawing.

FREQUENCY DRIFT

After operation of the 2J42 is initiated, its temperature rises with time until thermal equilibrium is reached. During this transient period, the geometry of the tube changes slightly and is attended by a small frequency change or drift. If the tube temperature is changed after thermal equilibrium has been established, the operating frequency will also change until thermal equilibrium is again attained and tube geometry stabilizes. The frequency change between two equilibrium positions will not exceed 0.25 Mc/°C.

LOAD AND LINE LENGTH CONSIDERATIONS

If an oscillator is loaded by an electrically long transmission line which is terminated by an impedance different from that of the line, the impedance of the load will be a periodic function of frequency. Operation of the oscillator under these conditions gives rise to phenomena collectively termed "long-line effects." Although these phenomena are usually associated with an electrically long transmission line, they can also be exhibited by a short line terminated by a sufficiently mismatched impedance. In any case, the extent to which the long-line effect is exhibited depends upon the amount of coupling between the load and oscillator as well as the degree of mismatch in the line. Figure 3 shows the relation between the VSWR and the line length with respect to the critical condition of skip. This skip condition occurs when the tube is changing frequency (thermal drift) and causes breaks in the ordinarily smooth drift curve. This condition is not too serious in the RK2J42 because the tube is not tunable. Of far more serious consequence, however, is the broadening and deterioration of the spectra caused by this phenomena. It may, in some cases, permit spectra of two frequencies to appear simultaneously. By operating into loads specified under the region of recommended operation in Fig. 3, satisfactory operation should be obtained. In this region no significant broadening of the spectrum will take place, although, for close control of bandwidth, the VSWR should be kept as low as possible.

More detailed information on the theories and remedies of long-line effects are available upon request.

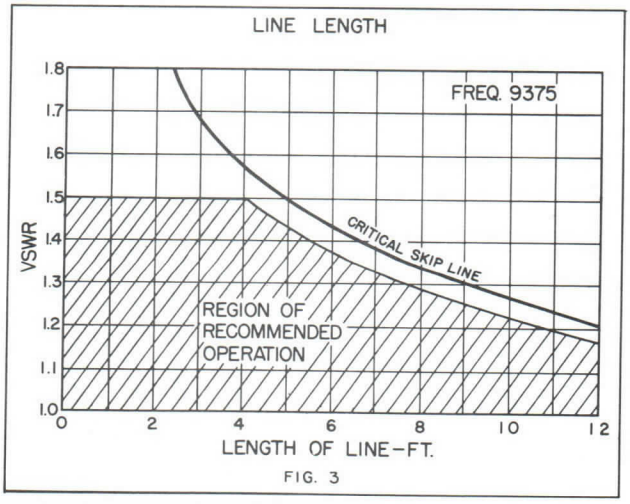

FIG. 3

LOAD AND LINE LENGTH CONSIDERATIONS — Continued

RF RADIATION FROM CATHODE

The 2J42 is designed to minimize the generally negligible radiation from the cathode stem. It is not possible, however, to guarantee that the radiation will be negligible; and in particularly critical environments, shielding of the stem may be necessary to avoid radiation difficulties.

OPERATING CHARACTERISTICS

Fig. 4 is a plot of peak power output, peak anode voltage, and efficiency as a function of anode current. Maximum and minimum deviations from the average are shown by the shaded areas of the graph.

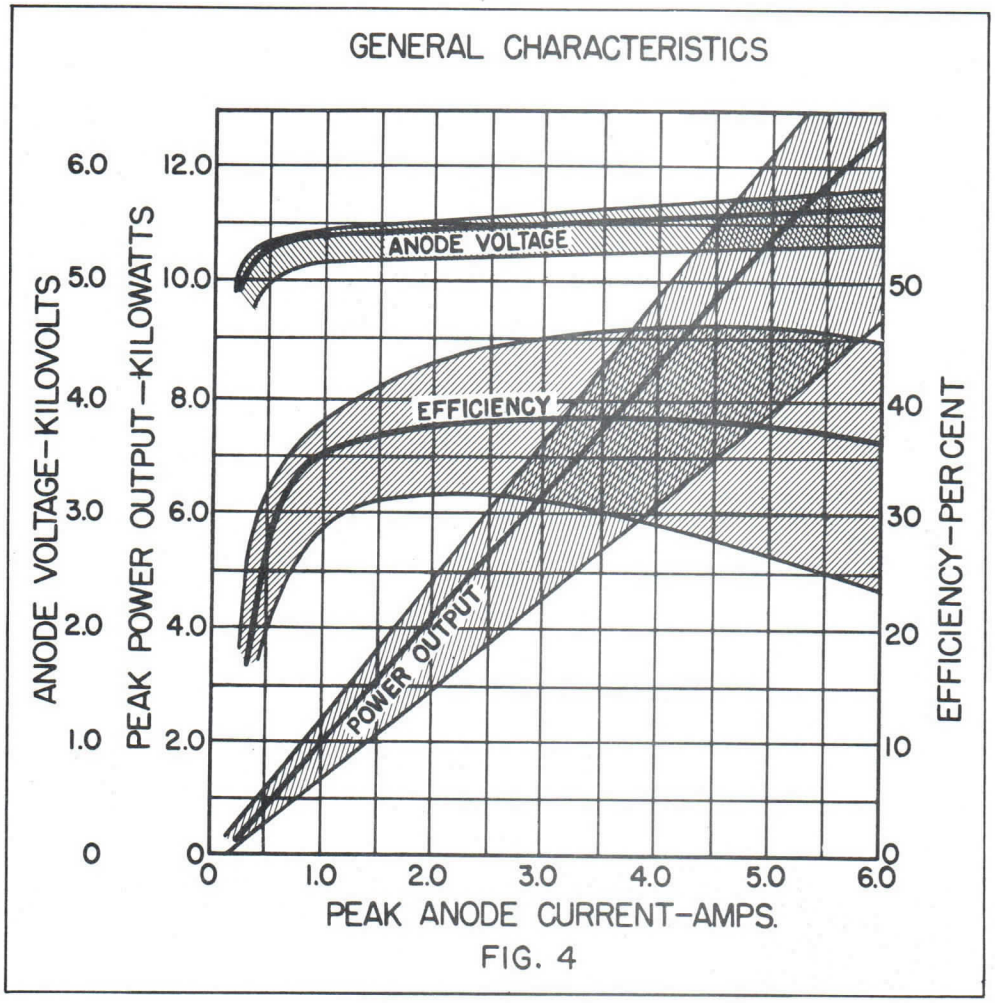

FIG. 4

DETAILED MECHANICAL INFORMATION

OUTLINE DRAWING

The detailed mechanical dimensions are given in Fig. 5. These dimensions should be used in designing the mechanical layout rather than those of a sample tube.

INSTALLATION AND HANDLING PRECAUTIONS

No mechanical stress should be applied to the high-voltage bushing or output flange in handling or mounting the magnetron. Care should be taken to keep steel, iron, or magnets 2 inches away from the tube, since deterioration of the magnetic field results in low power and instability.

Unnecessary jarring of the tube must be avoided. Although a packaged magnetron appears to have great structural strength, the internal structure is delicate and involves critical alignment of parts.

MOUNTING

The tube mounts in any position with a common flange (UG 40A/U) for output coupling and mounting. It has six clearance holes to accommodate the six 8-32 coupling and mounting screws.

ELECTRICAL CONNECTIONS

Electrical input connections are made to the frame of the tube and to the standard miniature bayonet lamp base. Positive high voltage is grounded to the frame, preferably at the mounting surface. The center terminal of the lamp base connects to one side of the heater; the other terminal is common to the cathode high voltage and remaining heater connections. Care must be exercised in making the lamp-base connection, as torques in excess of 1½ inch-pounds may fracture the glass cathode bushing.

Further information on the operation and capabilities of this and other type magnetrons can be obtained from the Applications Engineering Department, Microwave and Power Tube Operations, Raytheon Manufacturing Company, Waltham 54, Massachusetts.

NOTES:

1. Ref. Plane "B" passes through the centers of the two top holes of the mounting plate as shown and is perpendicular to plane "A."
2. Ref. Plane "C" passes through the upper left hole on mounting as shown and is mutually perpendicular to planes "A" and 'B."
3. The axis of the filament lead protector must be within 5° of a normal to reference plane "C."
4. Stabilizing tuner is optional. Dotted line shows permissable location of stabilizing tuner if used.
5. Surface "A" with tube resting on a flat surface a feeler gauge .020 thick and ⅛ wide shall not enter more than ⅛ at any point.
6. The clearance between the inside surface of the protector and the ⅜ diameter cylindrical surface of the bayonet base shall not be less than ⅛.
7. All metal surface except surface "A" and the bayonet base shall be painted black.
8. All solder joints on waveguide assem. shall be soldered to provide an hermetic seal.
9. The position of waveguide hole is not specified on this drawing since tubes are tested and used into coupler Army-Navy designation UG-40/U (see note 11)
10. Soft solder to be used.
11. Surface "A" and interior surface of waveguide shall be plated 10 MSI of gold or 30 MSI of silver.
12. It shall be possible for a cylinder .330 dia. centered in the holes shown to clear the side of magnet.

PULSED-TYPE MAGNETRON OSCILLATOR

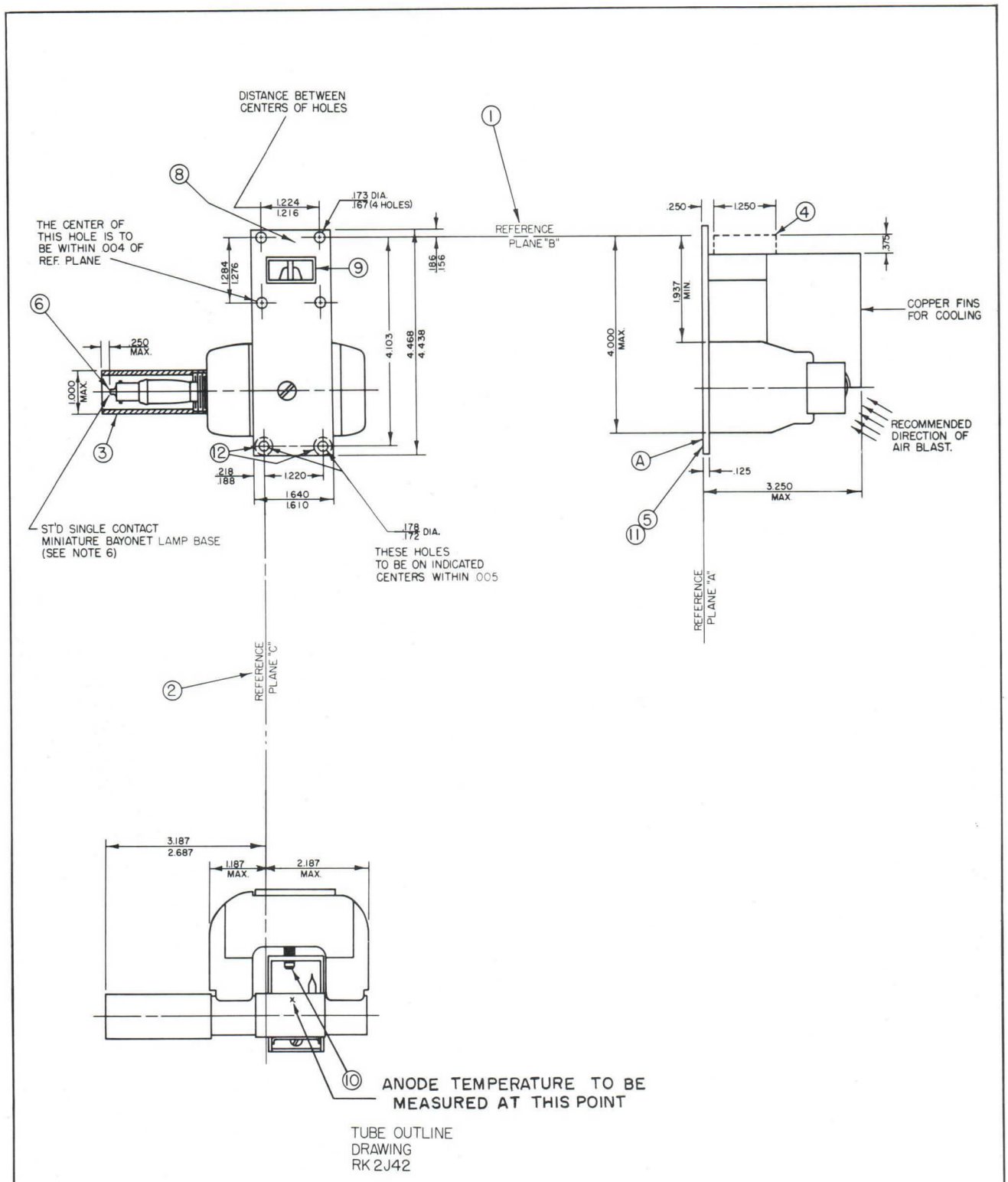

TYPE 2J49-2J50

GENERAL DESCRIPTION

The type 2J49-2J50 magnetron is a fixed frequency oscillator with internal resonant circuits, designed to operate in the "X Band" range, and capable of delivering a minimum of 40 kilowatts of peak power under pulsed conditions.

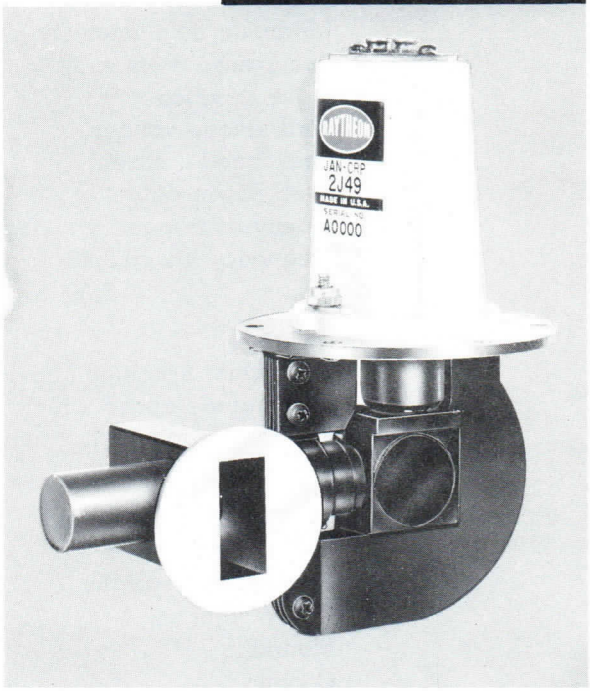

GENERAL PRECAUTIONS

Reliable operation and maximum magnetron life can be achieved only if the over-all radar transmitter is designed with the magnetron characteristics and peculiarities clearly in mind. This technical data should be used as a guide for equipment designers rather than the Government purchase specifications.

There are many problems peculiar to magnetrons in general which must be given special consideration in system design. These problems are discussed in detail on the following pages. If for any reason it is desirable to operate the 2J49-2J50 under conditions other than those recommended in this technical data sheet, the Magnetron Applications Engineering Group at Raytheon should be consulted.

GENERAL CHARACTERISTICS

ELECTRICAL

Heater Characteristics

Indirectly heated, oxide coated, unipotential cathode.

Heater voltage	6.3 V
Heater current	1.0 A
Minimum heating time	2 minutes

Maximum Ratings

Heater voltage	7.0 V
Peak anode voltage	16.0 KV
Peak anode current	16.0 a
Duty Cycle	.0012
Pulse duration	2.5 usec
Average input power	180 W
Frequency pulling @ VSWR 1.5/1	15 Mc
Anode temperature	100° C

The tube should not be operated longer than 5 microseconds in any 100 microsecond interval.

Printed in U.S.A.

Typical Operation

Heater voltage	(See operating notes)
Magnetic field intensity	5400 Gauss
Recurrence frequency	1000 cps
Pulse duration	1.0 usec
Peak anode voltage	12.0 kv
Peak anode current	12.0 a
Peak power output	50 kw
Maximum frequency change due to temperature	.25 Mc/°C
Frequency (fixed) 2J49	9000-9160 Mc
2J50	8750-8900 Mc

The values specified above must not be exceeded under any service condition. The ratings are limiting values above which the serviceability of any individual tube may be impaired. It does not necessarily follow that combinations of maximum ratings can be attained simultaneously.

MECHANICAL

Over-all Dimensions	5.5" x 3.25" x 6.6"
Net Weight	1 lb. 7 oz.
Mounting	Any position
Cooling	Forced air

DETAILED ELECTRICAL INFORMATION

HEATER

The cathode must be preheated at Ef = 6.3 volts for a period of at least 2 minutes prior to the application of anode voltage. The heater voltage should then be reduced in proportion to the average power input according to the schedule outlined graphically in Figure 1.

OPERATING NOTES

New magnetrons, or those which have not been operated in some time, may contain small quantities of gas. The presence of gas may give rise to arcing when initially running the tube up to its rated current. It is therefore recommended that the tube be "seasoned" under prevailing conditions of oscillation to the point where it becomes stable and normal operating values are obtained.

It is recommended that the magnetic field be produced between circular pole tips 0.750 ± .015 inches in diameter separated by 0.635 + .005-.000 inches tapering uniformly from the tips to 1.156 ± .015 inch diameter in .430 ± .005 inches measured along the axis of each pole tip element. The tube should be operated with the North-seeking pole of the magnet adjacent to the cathode connection ("C").

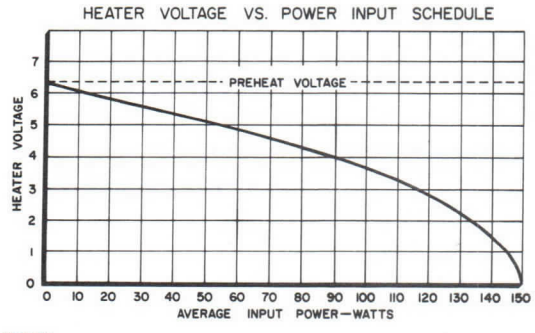

NOTES:
1) EF = 0 FOR ALL VALUES OF INPUT POWER GREATER THAN 150 W.
2) MAXIMUM DEVIATION OF HEATER VOLTAGE SHOULD NOT EXCEED ± 10% OF RATED SCHEDULE

FIGURE 1

Printed in U.S.A.

MICROWAVE AND POWER TUBE DIVISION

RAYTHEON COMPANY

FOUNDRY AVE., WALTHAM 54, MASS.

PULSE CHARACTERISTICS

The 2J49-50 magnetion has been designed and tested for operation at the following pulse conditions. See Figure 2

tpc = 1.0 ± 10% usec @ .001 Du
trv = 0.1 to 0.2 usec measured 20% to 85%
tfv = less than 0.4 usec

If operation at pulse conditions different from those given above is anticipated, the manufacturer should be consulted for further information.

No spike or ripple should exceed ±7% of the average peak value of voltage or current. Inverse voltage should not exceed 20% of the forward voltage. Post voltages should be held to a minimum as they may cause post-pulse noise or oscillation and increased leakage current.

Optimum tube performance will be realized only if proper consideration is given to pulse shaping. Voltage rise times faster than specified will result in moding and/or arcing and cannot be tolerated. Excessive ripple at the top of the current pulse causes frequency pushing and broadening of the spectrum. Most magnetrons draw a small amount of leakage or diode current at anode voltages as low as 100 volts. This leakage current may amount to several milliamperes if the current fall time is greater than 1.5 usec, and at a given duty cycle the calculated peak current will be in error. It is therefore advisable that equipment design effect as rapid a decay as possible to prevent leakage. It is also advisable to prevent the positive voltage backswing from becoming negative again.

Optimum pulse shaping can best be achieved by treating the magnetron, pulse transformer, and pulse line as a unit; hand-tailoring the line and transformer for magnetron compatibility is recommended.

The duty cycle product must not exceed 0.0007 for a peak power input of 150 kw or greater and must not exceed .0012 under any circumstances.

POST PULSE NOISE

It is possible that some 2J49-50 magnetrons may exhibit RF noise output unless the post pulse backswing is controlled very closely. A backswing in the negative or the positive direction of several hundred volts may be enough to cause an RF output in the order of a microwatt. If this low level energy is fed directly to the receiver, noise or false targets will appear on the radar indicators. By judicious matching of the pulse line, pulse transformer and magnetron, and by the use of a clipper tube across the primary of the pulse transformer, the voltage backswing can be controlled so that its magnitude is quite small; and more important, that the backswing is completely damped out within a very short interval after the pulse.

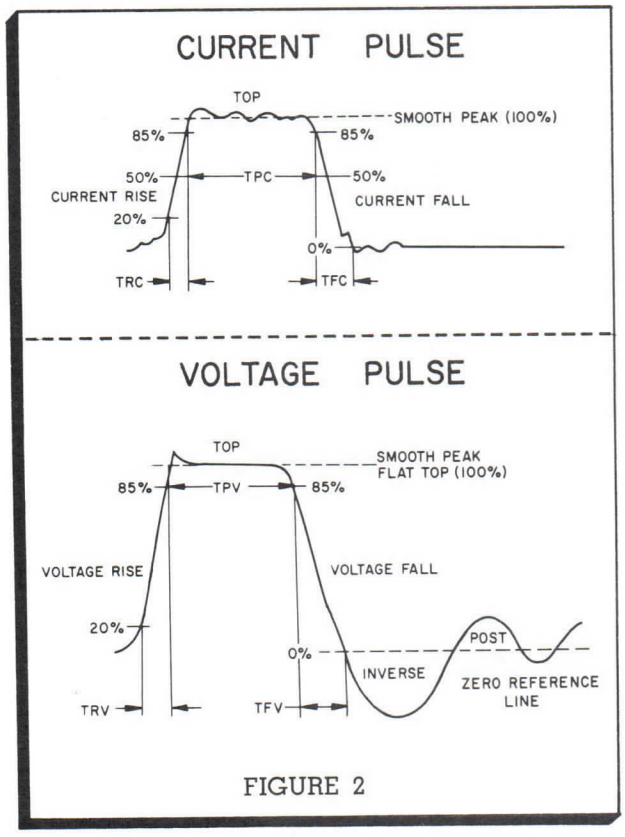

FIGURE 2

OPERATING CHARACTERISTICS

Figure 3, Rieke Diagram, shows the power and frequency contours for a typical tube operating into a ½"×1⅛" (internal dimensions) waveguide with standing wave ratio and phase angle varied. The pulling figure at 1.5 ratio in voltage is 11.7 megacycles. It should be noted that this data is representative of average tubes and was taken under conditions simulating typical operating characteristics. Slight variations may be expected with different tubes in different systems.

Figure 4, Average Performance Characteristics, shows the magnetic field, peak power output, frequency and efficiency contours as a function of pulsed voltage and current for a typical tube.

Figure 5, Vibration Characteristics, shows the change of frequency (effective spectrum width) as a function of sinusoidal acceleration (G) for a typical tube.

2J49/50 AVERAGE PERFORMANCE CHARACTERISTICS

RIEKE DIAGRAM

OPERATING CONDITIONS

PRF = 1000 CPS TPC = 1.0 MICROSECOND ib = 12.0 AMPS

MAGNETIC FIELD = 5400 GAUSS

RECOMMENDED LOAD FOR 2J49/50 AT CENTER OF DIAGRAM.

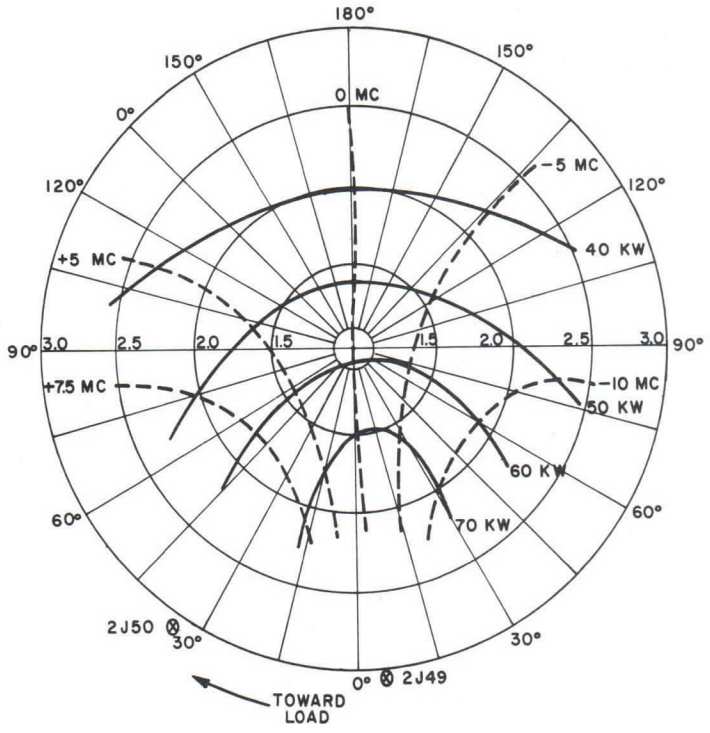

AVERAGE LOCATIONS OF FREQUENCY CONVERGENCE FOR THE 2J49 AND 2J50 ARE INDICATED ON THE CIRCUMFERENCE OF THE DIAGRAM.

——— POWER OUTPUT CONTOURS (PEAK KW)

– – – – FREQUENCY CONTOURS (MEGACYCLES DEVIATIONS FROM FREQUENCY OF MAGNETRON FEEDING INTO A MATCHED LINE)

FIGURE 3

Printed in U.S.A.

MICROWAVE AND POWER TUBE DIVISION

RAYTHEON COMPANY

FOUNDRY AVE., WALTHAM 54, MASS.

AVERAGE PERFORMANCE CHARACTERISTICS

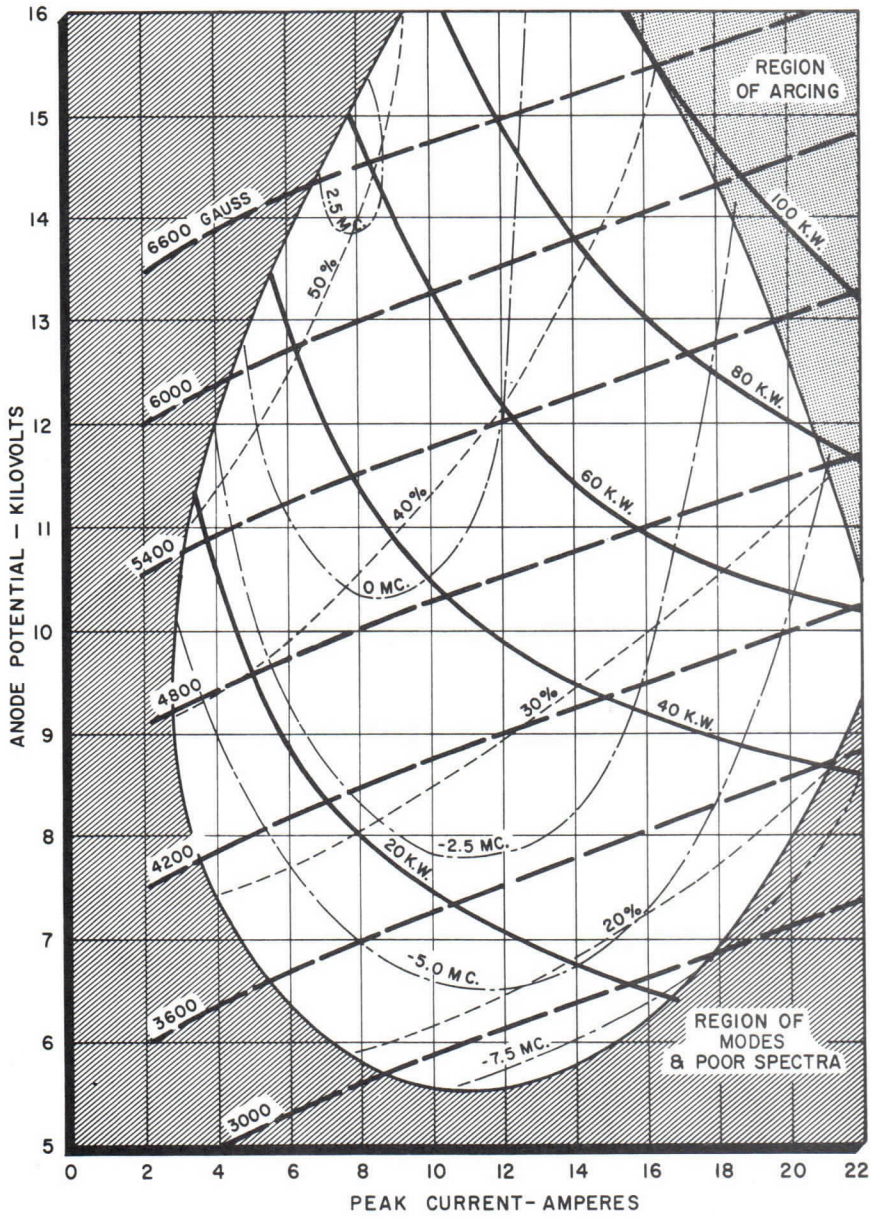

prf = 1000 cps tpc = 1 MICROSECOND

——— MAGNETIC FIELD (GAUSS)

——— PEAK POWER OUTPUT (KILOWATTS)

- - - - - - - EFFICIENCY (PER CENT)

——·—·— FREQUENCY CONTOURS (MEGACYCLES DEVIATION FROM MEAN FREQUENCY AS DETERMINED BY CORRESPONDING RIEKE DIAGRAM, AND TAKEN UNDER CONDITIONS OF CONSTANT TEMPERATURE).

FIGURE 4

Printed in U.S.A.

AVERAGE VIBRATION PERFORMANCE CHARACTERISTICS

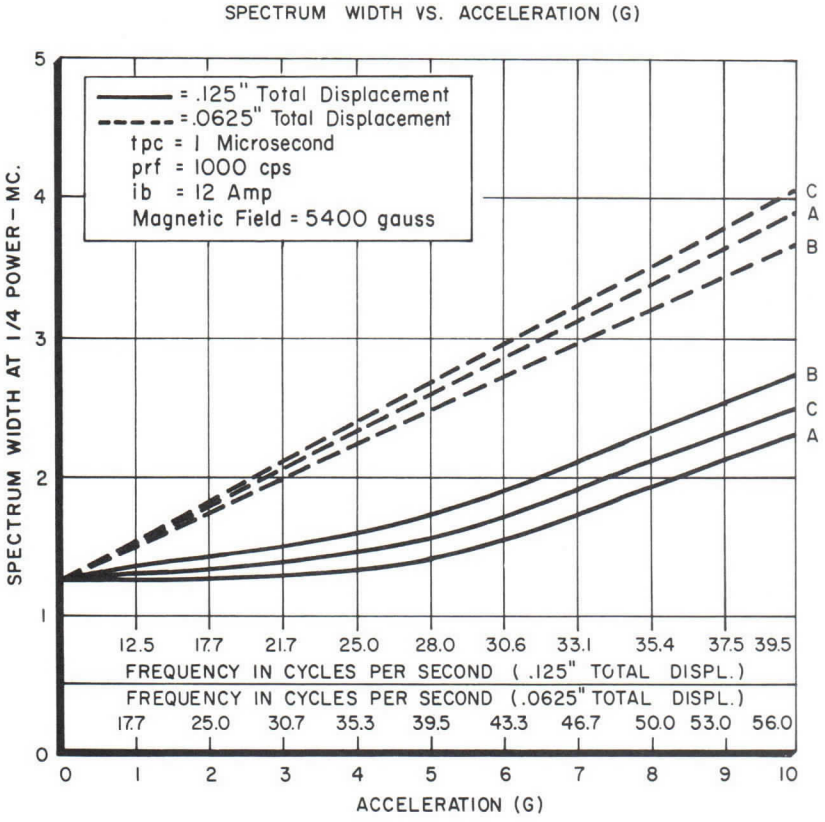

CURVE A = Displacement perpendicular both to length of cathode and filament ends.

CURVE B = Displacement perpendicular to filament leads and along length of cathode.

CURVE C = Displacement perpendicular to length of cathode and along length of filament leads.

FIGURE 5

DETAILED MECHANICAL INFORMATION

The outline drawing (Figure 6) shows the principal external dimensions, arrangement of heater-cathode terminals, and output coupling flange. The letter "C" etched on the protector indicates the common heater-cathode terminal which is connected internally to one end of the heater. It is this cathode terminal which is connected to the pulsating high voltage.

The tube is mounted from the circular flange and may be operated in any orientation. The output circuit of the tube is preplumbed to have a certain frequency pulling figure for operation into a waveguide load and is designed for optimum frequency insensitivity and breakdown characteristics. The coaxial to the waveguide junction is matched so that little or no electrical reflection exists in any part of the output circuit.

Both mounting flange and R.F. output flange are suitable for application where pressure seals are required.

2J49-2J50 ELECTRON TUBE OUTLINE DRAWING

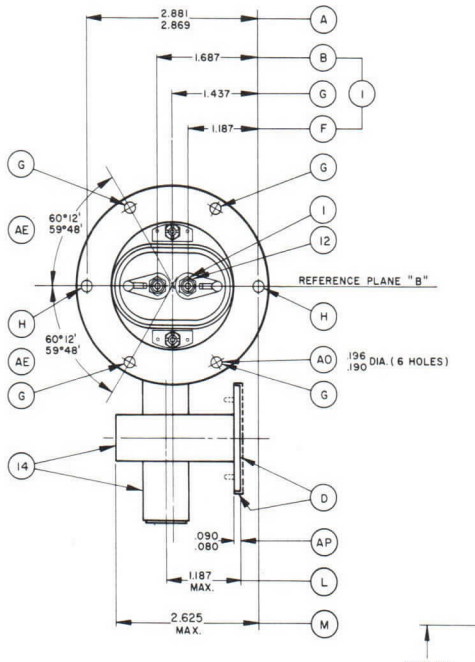

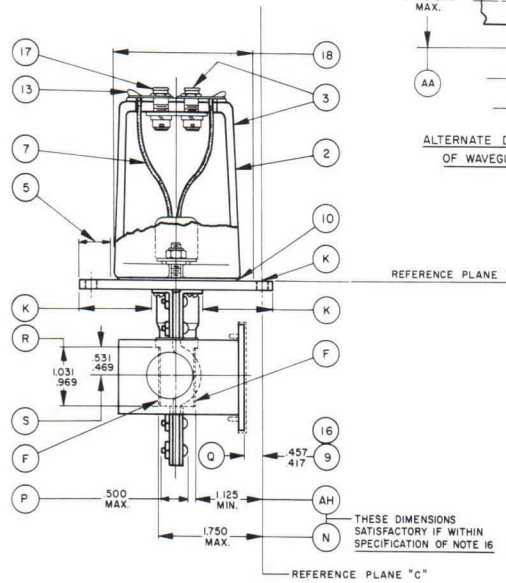

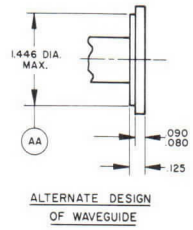

ALTERNATE DESIGN OF WAVEGUIDE

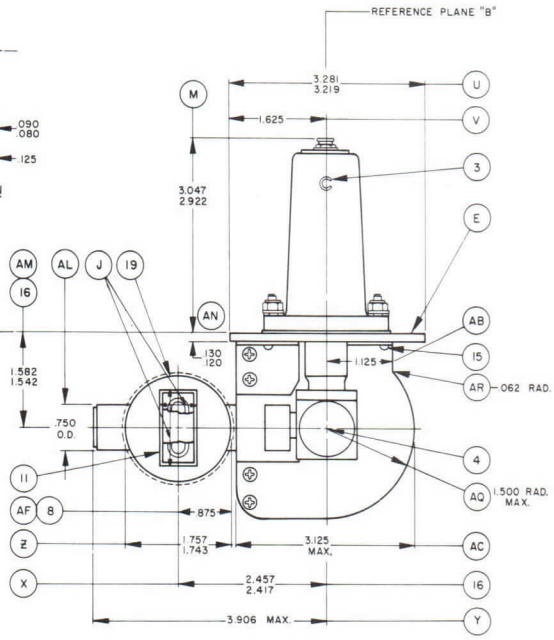

NOTES

REF.		DIMENSIONS		
		NOM.	MAX.	MIN.
*	A		2.881	2.869
	B	1.687		
	C	1.437		
	D	WAVEGUIDE FLANGE		
	E	MOUNTING PLATE (TOP)		
	F	1.187		
	G	4 HOLES		
	H	2 HOLES		
*	J	1.250 X .625 O.D. X .064 ± .005 WALL		
	K	METAL SURFACES		
	L		1.187	
*	M		2.625	
	N		1.750	
	P		.500	
	Q		.457	.417
*	R		1.031	.969
	S		.531	.469
*	U		3.281	3.219
**	V	1.625		
*	W		3.047	2.922
	X	NOTE 16	2.457	2.417
*	Y		3.906	
	Z		1.757	1.743
	AA		1.446	
**	AB	1.125		
*	AC		3.125	
**	AE		60°12'	59°48'
	AF	.875		
	AH			1.125
	AL	.750		
	AM	NOTE 16	1.582	1.542
*	AN		.130	.120
*	AO		.196	.190
	AP		.090	.080
*	AQ		1.500	
**	AR	.062		

1. THE JACK HOLES SHALL BE WITHIN A RADIUS OF .023 OF THE TRUE LOCATION SPECIFIED BUT SHALL BE SPACED 0.500 ± .010 WITH RESPECT TO EACH OTHER. THE CENTER LINES OF THE HOLES SHALL BE PERPENDICULAR TO REFERENCE PLANE "A" WITHIN 3°.
** 2. PYREX GLASS, PORCELAIN OR APPROVED EQUIVALENT.
3. INDICATE COMMON CATHODE CONNECTION BY LETTER "C".
4. THIS POINT DEFINES THE LOCATION OF ANODE AXIS.
* 5. WITH THE FLANGE RESTING ON A PLANE SURFACE, THE FLATNESS OF THE MOUNTING PLATE .500 FROM THE OUTER EDGE SHALL BE SUCH THAT A .010 THICKNESS GAGE .125 WIDE SHALL NOT ENTER FOR A DISTANCE OF MORE THAN .250.
** 6. ALL METAL SURFACES EXCEPT "D" AND "K" COVERED BY BLACK PAINTED FINISH.
** 7. FILAMENT LEADS SHALL BE FLEXIBLE AND SLACK.
* 8. OUTPUT FLANGE TO BE CONCENTRIC WITH THE OPEN END OF THE GUIDE TO WITHIN .010.
9. TOLERENCE INCLUDES ANGULAR AS WELL AS LATERAL DEVIATIONS OF THE SURFACE.
** 10. 1/32 ASBESTOS GASKET (OPTIONAL.)
* 11. 1.250 X .625 O.D. X .064 W. COMMERCIAL RECT. BRASS TUBING.
* 12. HEX. HEAD BANANA PIN LOCKING JACK, 19/32 LONG HOLE .169 ± .005.
13. LEADS SOLDERED TO TERMINAL CLIP.
14. ALL SOLDER JOINTS ON WAVEGUIDE ASSEM. SHALL BE SOLDERED TO PROVIDE AN HERMETIC SEAL AT FLANGE "D".
15. ALL SOLDER JOINTS ON MOUNTING PLATE AND COAXIAL TUBE SHALL BE SOLDERED TO PROVIDE AN HERMETIC SEAL AT SURFACE "E."
16. WITH THE SURFACE "E" CLAMPED ON A PLANE AND MOUNTED ON SIX STUDS THROUGH HOLES "H" & "G", .176 DIA. LOCATED ON THE SPECIFIED CENTERS, SURFACES "F" "F" SHALL BE CAPABLE OF BEING INSERTED BETWEEN PARALLEL FACES 13/16 DIA. WHOSE CENTERS COINCIDE WITH THE ANODE AXIS (SEE NOTE 4.) NORMAL TO THE SURFACE "H" AND WHOSE FACES ARE .625 APART, SPACED EQUIDISTANT FROM THE FOUR STUDS "G" WHEN MOUNTED AS ABOVE, THE LIMITS ON THE DIMENSIONS DEFINING AND LOCATING THE WAVEGUIDE 1.417-.457, 1.542-1.582 AND 2.417-2.457) MAY BE CONSIDERED SATISFIED IF THE SURFACE "D" FITS WITHIN, AND THE SURFACES "J" FIT ABOUT PLANES DEFINED BY THE REFERRED TO DIMENSIONS AND THEIR LIMITS.
17. HEATER CONNECTION.
18. ANY PORTION OF THE ASSEMBLY EXTENDING ABOVE THIS SURFACE SHALL BE WITHIN A 1.109 RADIUS OF THE TRUE CENTER OF THE PLATE.
19. COVER REQUIRED FOR SHIPPING PURPOSES ONLY.
20. REFERENCE PLANE "A" IS DEFINED AS A PLANE PASSING ALONG THE FACE OF THE MOUNTING PLATE.
21. REFERENCE PLANE "B" IS DEFINED AS A PLANE PERPENDICULAR TO PLANE "A" PASSING THROUGH THE CENTER OF HOLES AS SHOWN.
22. REFERENCE PLANE "C" IS DEFINED AS A PLANE MUTUALLY PERPENDICULAR TO PLANES "A" & "B" PASSING THROUGH THE CENTER OF THE HOLE AS SHOWN.

FIGURE 6

TYPE RK2J51

GENERAL DESCRIPTION

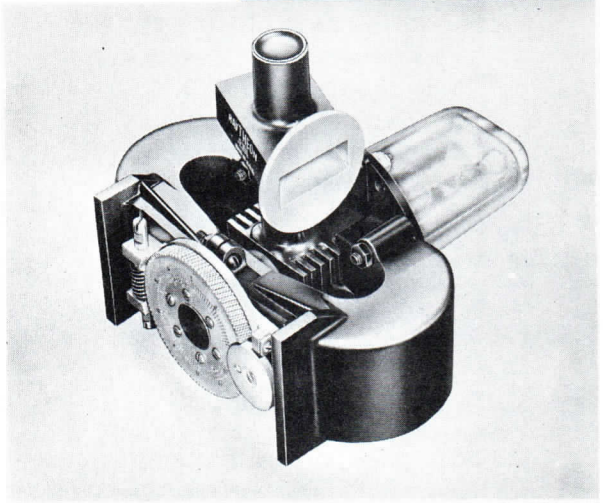

The RK-2J51 magnetron is a mechanically tunable pulsed type oscillator with a peak power output of 50 kilowatts capable of rapid hand or motor tuning to any desired frequency in the 8500 to 9600 Mc range. It is an integral magnet type requiring forced air cooling, and is designed for coupling to a standard 5/8" x 1¼" waveguide. Four attachable magnetic shunts permit operation of the tube at any one of the five different magnetic field levels. The wide tuning range and convenient mechanical details make the RK-2J51 a popular replacement for many fixed frequency magnetrons in the 9000 Mc region.

GENERAL PRECAUTIONS

Reliable operation and maximum magnetron life can be achieved if the overall radar transmitter is designed with the magnetron characteristics and peculiarities clearly in mind. This technical data, prepared by the Applications Group of Raytheon Manufacturing Company, rather than the MIL-E-1B government purchase specifications, should be used as a guide to equipment designers. As is the case with other electrical components, some deterioration in life will result if magnetrons are operated continuously at their maximum ratings. There are many problems peculiar to magnetrons in general that must be given special consideration in system design such as RF radiation, pulse shaping, VSWR and length of transmission line to the antenna. These problems are discussed in detail on the following pages. If for any reason it is desired to operate RK-2J51 under conditions other than those recommended in this technical data sheet, the Magnetron Applications Group must be consulted; and in some cases additional life test must be run.

GENERAL CHARACTERISTICS

ELECTRICAL

Heater Characteristics

Heater voltage — preheat	6.3 V
Heater current @ 6.3 V	1.0 ± 0.1 A
Minimum preheat time	2 minutes
Cold heater resistance	0.9 ± 10% ~

Maximum Ratings

The values specified below are based on the absolute system and must not be exceeded under any service conditions. The ratings are limiting values above which the serviceability of any individual tube may be impaired. It does not necessarily follow that combinations of absolute maximum ratings can be attained simultaneously.

Heater voltage	7.0 V
Peak anode current	15.5a
Peak anode voltage	16 kv

Printed in U.S.A.

Average anode power input	230 W
Peak anode power input	260 kw
Maximum anode temp. at point specified in Fig. 11	150°C
Maximum pulse duration	3.4 us
Minimum pulse duration	0.10 us
Maximum duty cycle	0.0011
Minimum voltage pulse rise time	.08 us
Maximum pulse rate	6000 pps
Maximum frequency change due to change of steady state temp.	.25 Mc/°C
Maximum VSWR	1.5/1

Tube life is largely dependent on the rate at which the cathode loses its emissive properties. In general, cathode life will be inversely proportional to pulse duration and duty cycle. Appreciable tube life reduction may be avoided if low pulse repetition rates are used when operating at high peak powers.

TYPICAL OPERATION

Oscillation 1

Current pulse duration	0.10 us
Duty cycle	.0004
Voltage pulse rise time	0.1 us
Number of magnetic shunts	2
Heater voltage start	6.3 V
Heater voltage operate	See Fig. 1
Frequency	9000 Mc
Peak anode voltage	12 kv
Peak power output	54 kw
Average power output	22 W
Peak current	14 a

Oscillation 2

Current pulse duration	1.0 us
Duty cycle	.001
Number of magnet shunts	No shunts
Heater voltage preheat	6.3 V
Heater voltage operate	See Fig. 1
Peak anode current	14 a
Frequency	9000 Mc
Peak anode voltage	13.8 kv
Peak power output	64 kw
Average power output	64 W
Peak current	14 a

Mechanical

Mounting	Any position
Overall dimensions	See outline dwg.
Net weight	4 lb. 14 oz. Approx.
Cooling	Forced air
Pressurization	40-45 psia
Output coupling	Choke UG52/AU
Vibration (non-operating)	50 cps @ 10G

DETAILED ELECTRICAL INFORMATION

HEATER

The cathode must be heated at Ef = 6.3 ± 10% volts AC or DC for a period of at least two minutes prior to the application of anode high voltage. Immediately after the high voltage is applied, the heater voltage should be reduced in accordance with the graph of anode power input vs. heater voltage, Figure 1. If tube operation is interrupted for any reason the heater schedule must be repeated. Failure to observe the above precautions may result in severe damage to the cathode and shorter tube life.

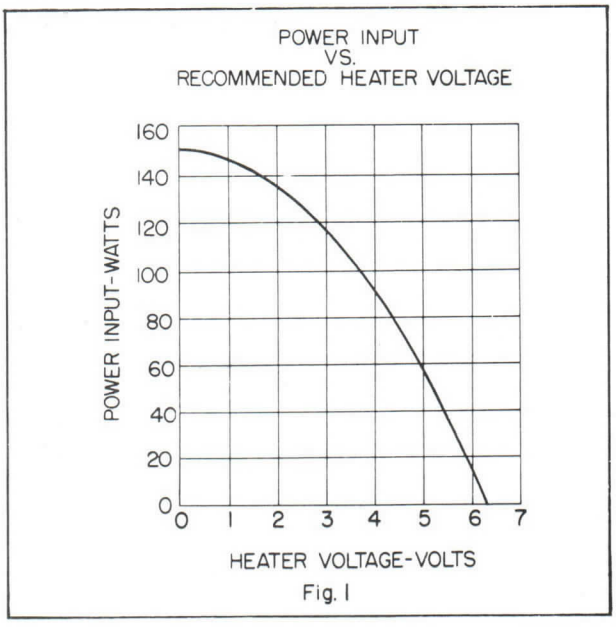

Fig. 1

OPERATION

The operating characteristics of an average RK-2J51 are described in the paragraphs which follow. All measurements were made under conditions of typical performance. Variation of these characteristics can be expected from tube to tube or from use of the same tube in different systems. For all tests involving a magnetron load, a $\frac{5}{8}$ x $1\frac{1}{4}$ inch waveguide was used.

PULSE CHARACTERISTICS

The smooth peak is the maximum value of a smooth curve through the average of the fluctuations over the top portion of the pulse. The pulse width is the time interval between the two points on the current pulse at which instantaneous current is 50 percent of the smooth peak. The rise time is the time interval between points of 20 and 85 percent of the smooth peak. Figure 2 shows graphically the definitions mentioned.

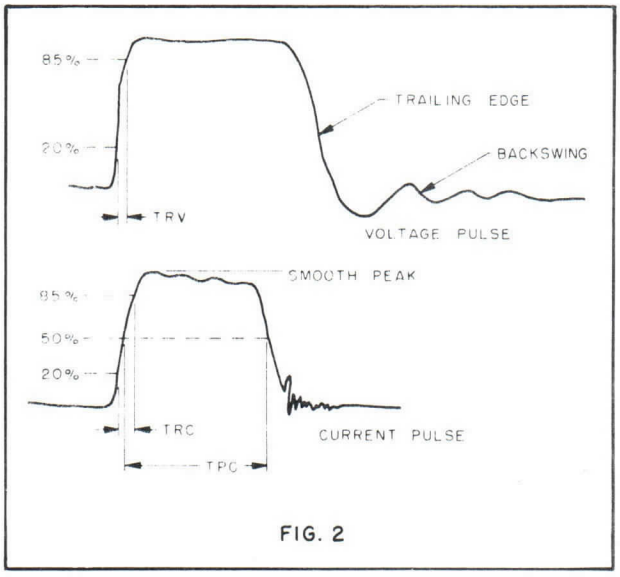

FIG. 2

The voltage rise time must not be less than .08 usec for .1 usec pulse nor less than .10 usec for the 1 and 3.25 usec pulses, to realize good tube performance. Too fast a rise time will lead to moding or arcing. It is necessary to form the pulse so that the current pulse shows no sign of jitter and no large spikes on the leading edge as these conditions also may cause moding or arcing. The ripple on the top of the current pulse must be kept at a minimum to avoid pushing effects which will tend to widen the spectrum.

The decay time of the voltage pulse must be kept as short as possible to prevent excessive diode current. Diode current in a magnetron may be defined as current drawn to the anode after the anode potential with respect to the cathode drops below the critical value required to sustain oscillation. At an average anode current of 15 Ma, diode current may amount to a few milliamperes if the pulse has a long fall time. Although this diode current gives a falsely exaggerated indication of the actual peak current at which the magnetron is operating (more pronounced at short pulses where the leakage may amount to a major portion of the average anode current), it is usually not harmful to the magnetron.

The backswing of the voltage pulse applied to the RK-2J51 must be kept below 20% of the amplitude of the applied pulse. Excessive backswing will usually cause noise signals to appear on the PPI of the radar. Diode current and instability may also result.

For optimum pulse shaping, the magnetron, pulse transformer, and pulse line must be treated as a unit. In setting up to operate the RK-2J51 it is advisable to build an experimental pulse line and hand tailor it for optimum magnetron current and voltage pulse shape with the pulse transformer at hand.

As regards the pulse transformer, it is impossible to design one which gives optimum results on both long and short pulses. It is, therefore, necessary to decide which pulse is the more important and optimize the pulse transformer for the desired operation.

LOAD DIAGRAMS

Figure 3 is a load diagram of a typical RK-2J51 operating at frequencies of 8500, 9000 and 9600 megacycles. The contours of constant power output and frequency change are related to the voltage standing wave ratios introduced by mismatched loads at various phase positions. Values of VSWR's as high as 3.5/1 are plotted, but operation at ratios greater than 1.5 to 1 is not recommended.

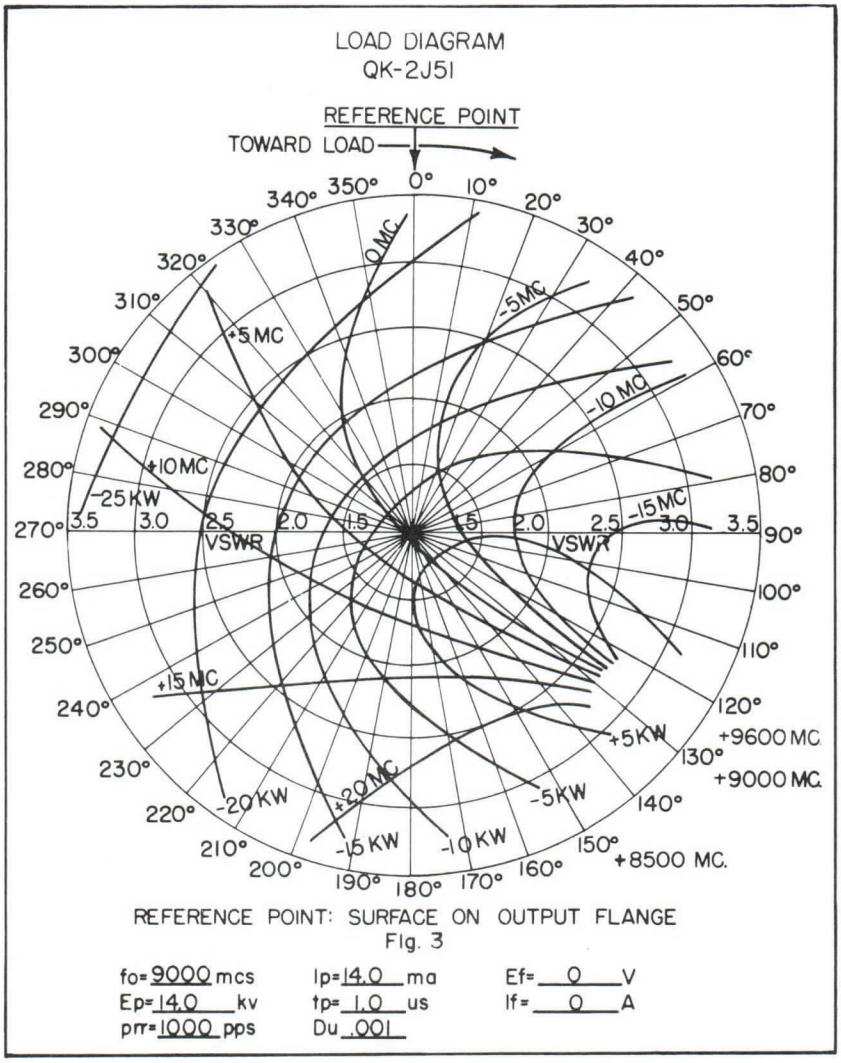

REFERENCE POINT: SURFACE ON OUTPUT FLANGE

Fig. 3

fo= 9000 mcs	Ip= 14.0 ma	Ef= 0 V
Ep= 14.0 kv	tp= 1.0 us	If= 0 A
prr= 1000 pps	Du .001	

PERFORMANCE CHARTS

Figures 4 through 8 are performance charts of a typical RK-2J51 magnetron operating at frequencies of 8500, 9000 and 9600 megacycles. These charts show peak anode voltage, power and efficiency as a function of peak anode current for various load, frequency and VSWR combinations. The five gauss levels (lines of constant magnetic field intensity) are obtained by proper use of the four magnetic shunts. Regions of instability and excessive RF spectrum width are indicated by crosshatched areas. Operation in these regions should be avoided.

When used with the regulation characteristics of the modulator power supply, the performance charts show changes of power output and efficiency that result from line voltage variations.

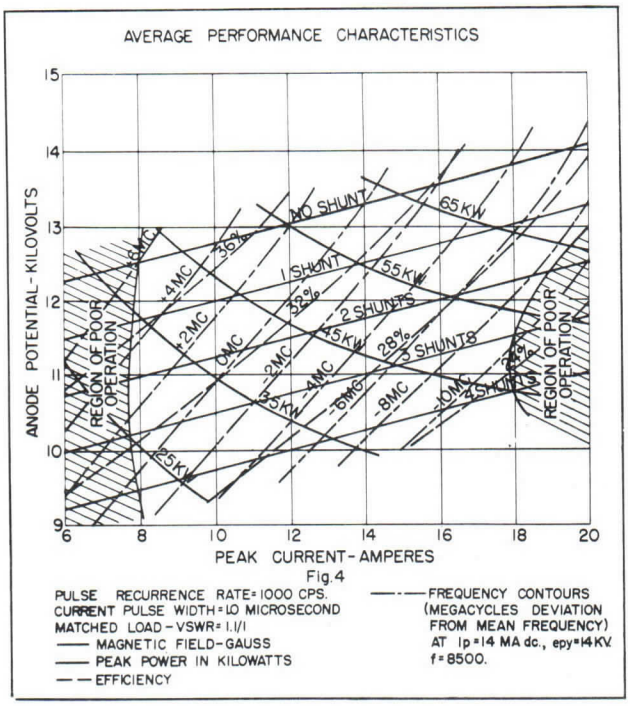

Fig.4

PULSE RECURRENCE RATE = 1000 CPS.
CURRENT PULSE WIDTH = 1.0 MICROSECOND
MATCHED LOAD - VSWR = 1.1/1
—— MAGNETIC FIELD - GAUSS
—— PEAK POWER IN KILOWATTS
— — EFFICIENCY

—·—·— FREQUENCY CONTOURS (MEGACYCLES DEVIATION FROM MEAN FREQUENCY) AT Ip = 14 MA dc., epy = 14 KV. f = 8500.

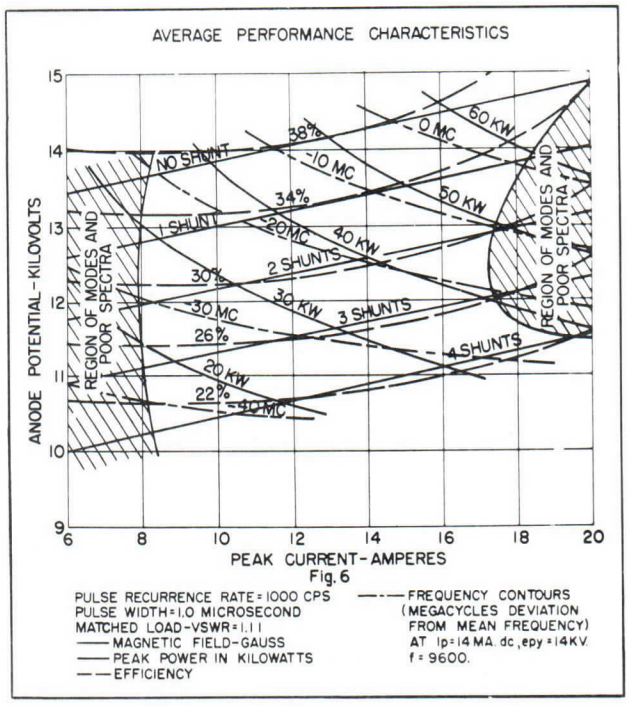

Fig. 6

PULSE RECURRENCE RATE = 1000 CPS
PULSE WIDTH = 1.0 MICROSECOND
MATCHED LOAD - VSWR = 1.1 1
—— MAGNETIC FIELD - GAUSS
—— PEAK POWER IN KILOWATTS
— — EFFICIENCY

—·—·— FREQUENCY CONTOURS (MEGACYCLES DEVIATION FROM MEAN FREQUENCY) AT Ip = 14 MA. dc, epy = 14 KV. f = 9600.

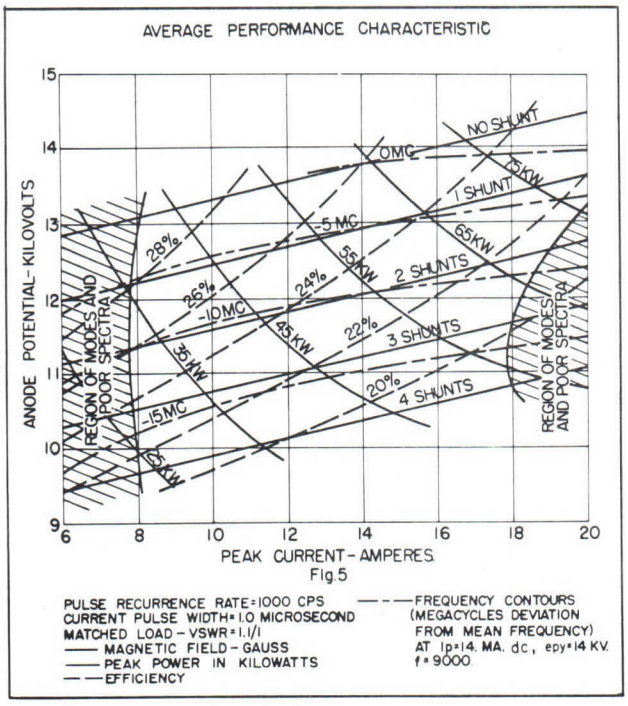

Fig.5

PULSE RECURRENCE RATE = 1000 CPS
CURRENT PULSE WIDTH = 1.0 MICROSECOND
MATCHED LOAD - VSWR = 1.1/1
—— MAGNETIC FIELD - GAUSS
—— PEAK POWER IN KILOWATTS
— — EFFICIENCY

— — — FREQUENCY CONTOURS (MEGACYCLES DEVIATION FROM MEAN FREQUENCY) AT Ip = 14. MA. dc, epy = 14 KV. f = 9000

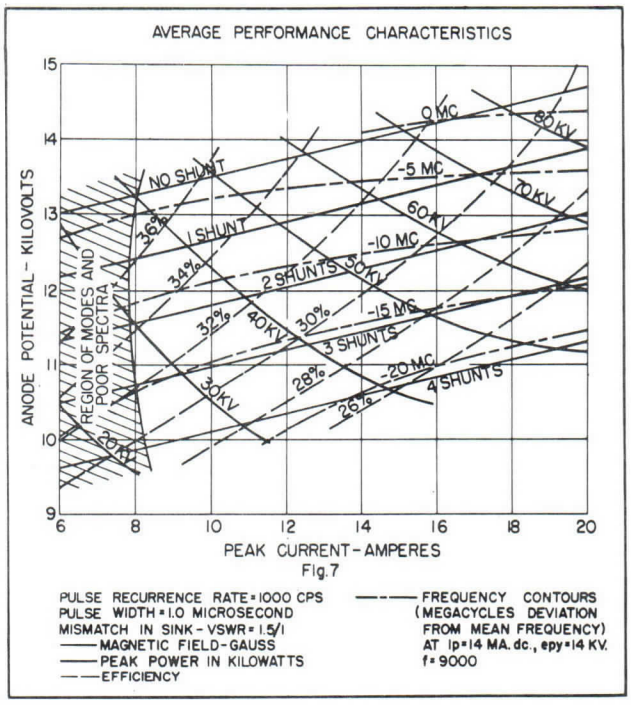

Fig.7

PULSE RECURRENCE RATE = 1000 CPS
PULSE WIDTH = 1.0 MICROSECOND
MISMATCH IN SINK - VSWR = 1.5/1
—— MAGNETIC FIELD - GAUSS
—— PEAK POWER IN KILOWATTS
— — EFFICIENCY

— — — FREQUENCY CONTOURS (MEGACYCLES DEVIATION FROM MEAN FREQUENCY) AT Ip = 14 MA. dc., epy = 14 KV. f = 9000

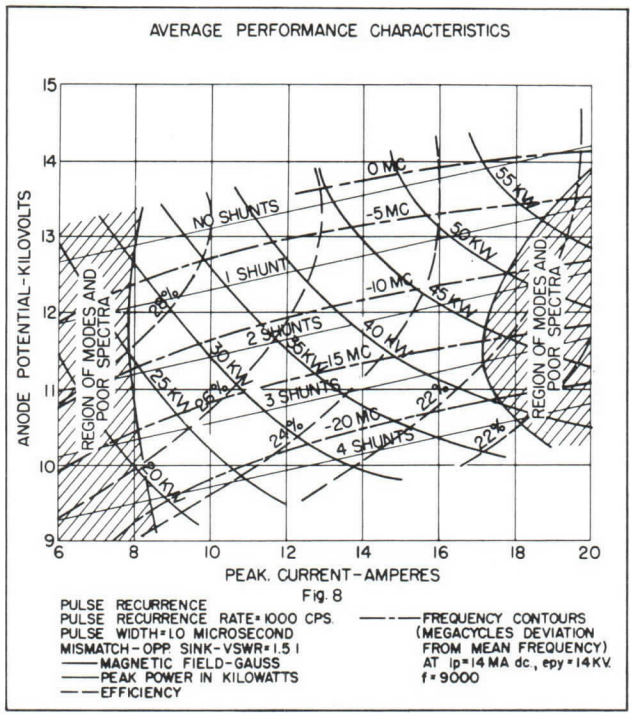

Fig. 8

FREQUENCY CHARACTERISTICS

Figure 9 reveals the manner in which frequency, power output and anode voltage vary with tuner position for five different gauss levels with a repetition rate of 1000 cps, a current pulse width of 1.0 us and a peak anode current of 14 amperes.

FREQUENCY DRIFT CHARACTERISTICS

After operation of the RK-2J51 is initiated, its temperature rises with time until thermal equilibrium is reached. During this transient period the geometry of the tube changes slightly and is attended by a slight frequency change or drift. This drift may be either positive or negative as the tube moves towards thermal equilibrium.

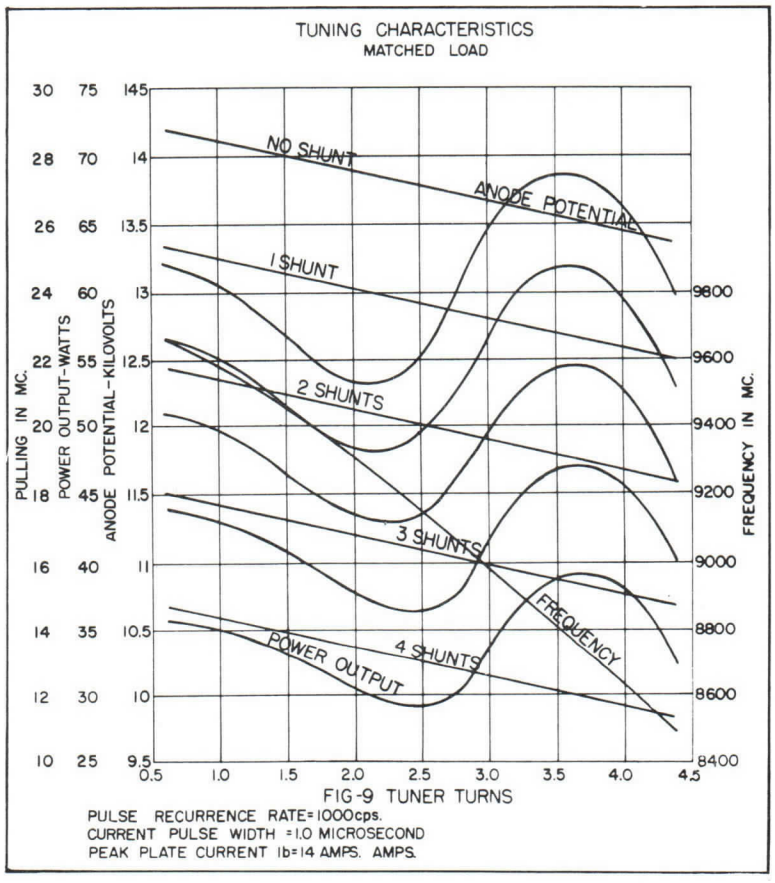

COOLING CHARACTERISTICS

The cooling air stream for the RK-2J51 should be directed at the radiating fins of the anode. During tube operation an anode temperature below 100°C is recommended, although temperatures as high as 150°C may at times be tolerated at the risk of somewhat shortened tube life. The point at which the anode temperature should be monitored is indicated on the outline drawing.

LOAD LINE LENGTH CONSIDERATIONS

If an oscillator is loaded by an electrically long transmission line which is terminated by an impedance differing from that of the line, the impedance of the load will be a periodic function of frequency. Operation of the oscillator under these conditions gives rise to phenomena collectively termed "long line effects." Although these phenomena are usually associated with an electrically long transmission lines, they can also be exhibited by a short line terminated by a sufficiently mismatched impedance. In any case, the extent to which the long line effect is exhibited depends on the amount of coupling between the load and the oscillator, as well as the degree of mismatch. Figure 10 shows the relation between the VSWR and the line length with respect to the critical condition at which frequency skipping will occur. The frequency skip will be noticed as the tube is mechanically tuned. It may also prove troublesome as the frequency changes due to thermal drift with breaks appearing in the ordinarily smooth drift curve. Even more serious consequences of "long line effect" may be the broadening and deterioration of spectra. In some cases spectra of two frequencies may appear simultaneously. Operation into loads specified in the recommended region of Figure 10 should eliminate the above difficulties, although the VSWR of the load should be kept as low as possible if minimum bandwidth is important.

More detailed information on "long line effects" is available upon request.

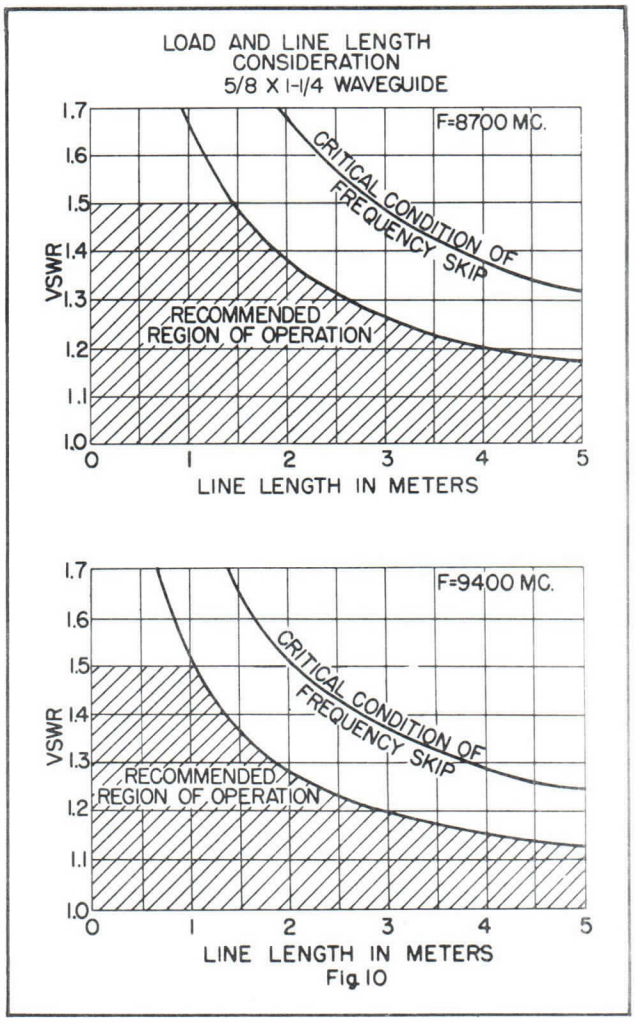

Fig. 10

DETAILED MECHANICAL INFORMATION

OUTLINE DRAWING

The detailed mechanical dimensions for the RK-2J51 are given in Figure 11. In designing the mechanical layout for an equipment, these dimensions rather than those of a sample tube should be used.

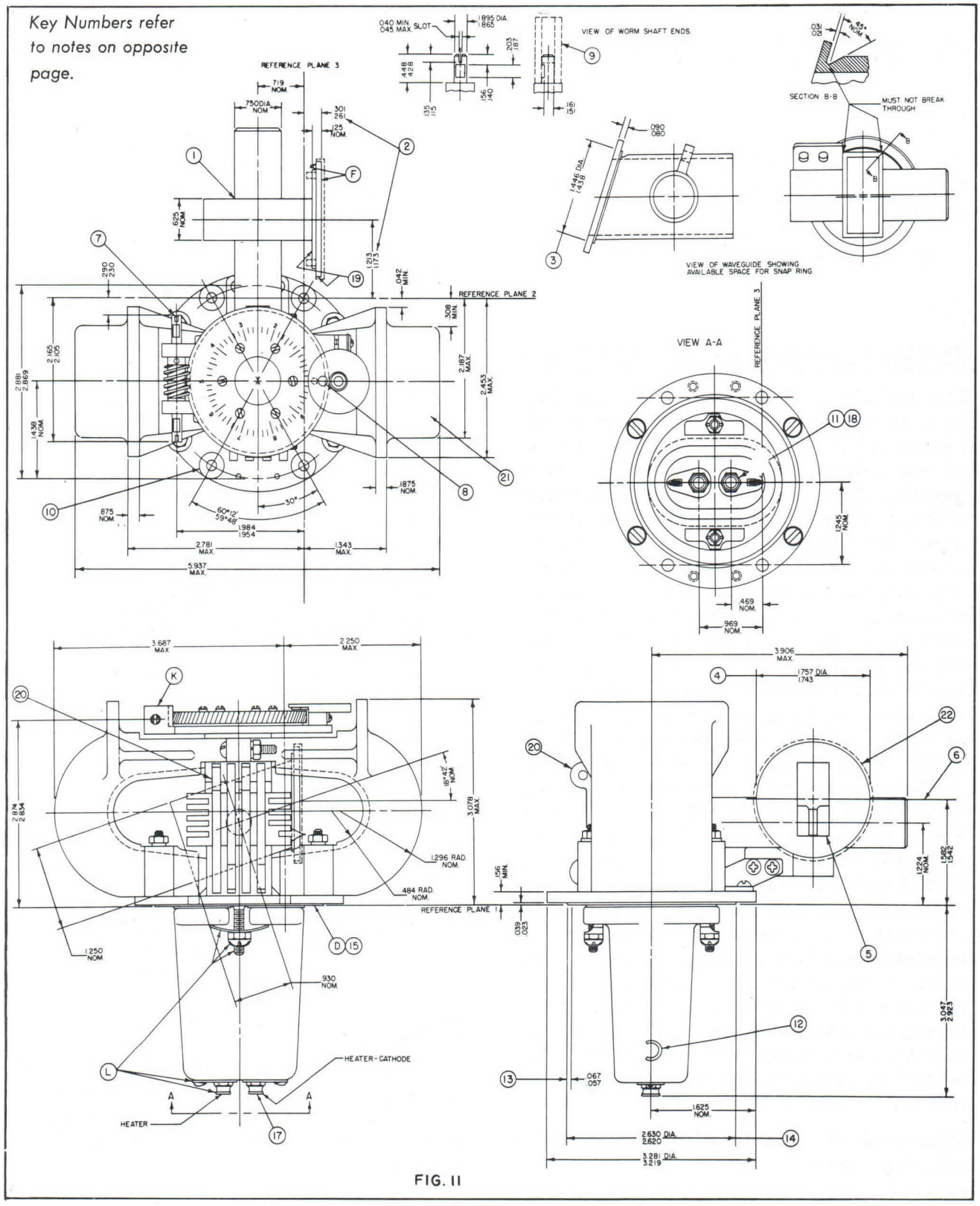
Key Numbers refer to notes on opposite page.
REFERENCE PLANE 3
REFERENCE PLANE 2
REFERENCE PLANE 1
VIEW OF WORM SHAFT ENDS.
VIEW OF WAVEGUIDE SHOWING AVAILABLE SPACE FOR SNAP RING
SECTION B-B
MUST NOT BREAK THROUGH
VIEW A-A
HEATER-CATHODE
HEATER

FIG. 11

NOTES:

1. All solder joints on waveguide assembly shall be soldered to provide a hermatic seal at surface "F."
2. The ±0.020" tolerance of 0.281" dimension includes angular as well as lateral deviations of the surface. These dimensions define relation of surface "F" to respective holes.
3. This diameter shall be concentric with the diameter of the flange within 0.005".
4. This diameter shall be concentric with opening in waveguide within 0.010".
5. The opening in the waveguide shall be enclosed by a dust cover when the tube is not in use.
6. Center line of waveguide opening.
7. To increase frequency, drive this end of worm shaft in counterclockwise direction. Complete frequency range covered in approx. 125 turns. Tuning mechanism shall operate smoothly over the entire mechanical range when subjected to a torque of 1-½ in. -lbs. applied at the worm shaft. In equipment no less than 1½ in. -lbs. nor more than 2½ in. -lbs. shall be applied at drive shaft. The gear and worm threads must be free from corrosion, paint, and other imperfections.
8. Number appearing here indicates number of complete revolutions of gear from 0 to 6. With the Geneva and gear seat at 3 and 0 respectively, the frequency of tube is 9000 ± 25 mc under oscillation 3 on TSS.
9. It shall be possible for a sleeve 0.195" I.D. x 0.406" O.D. x 1" long to pass over ends of shaft to face of worm bracket.
10. Four 0.193" ± 0.003" dia. holes 7/32" min. clearance around four holes at base plate. This clearance shall be free from black finish.
11. The jack holes shall be within a radius of 0.023" of the specified location but shall be spaced 0.500" ± 0.010" with respect to each other. The center line of the jack holes shall be perpendicular to mounting plate within 3°.
12. "C" indicates adjacent jack is the common heater-cathode connection.
13. With 1/16" seat resting on a plane surface, the flatness of the seat shall be such that a 0.010" thickness gauge ⅛" wide shall not pass under.
14. All solder joints on base plate shall be soldered to provide a hermatic seal.
15. Any portion of the assembly extending below this surface shall be within a 1-7/64" radius on the true center of the plate.
16. All metal surfaces covered by black finish except surfaces "D" and "F," drive and stop mechanism "K," surface around holes as specified in Note 10, parts associated with glass insulator "L," and shunts.
17. Locking-type jack — see latest issue of JAN-1A.
18. Hex-head banana pin jack 19/32" long, hole 0.169" ± 0.005" dia.
19. Black finish may be omitted from the edges and back of waveguide.
20. Four magnet shunts. For number of magnet shunts to be retained, see Technical Information. To remove surplus, grip firmly at tabs with suitable pliers and pull away from tube.
21. WARNING — Maintain 2"-min. clearance between this magnet and magnetic materials (magnet, steel tools, plates, etc.).
22. Waveguide cover required for shipping purposes only.

INSTALLATIONS AND HANDLING PRECAUTIONS

The output waveguide is protected by a guard cover during shipment. This cover must be removed before the tube is installed in its associated equipment. No mechanical stress should be applied to the bushing or output window in handling or mounting the magnetron. Care should be taken to keep magnetic materials two inches away from the magnets, since deterioration of the magnetic field results in low power and instability.

Unnecessary jarring of the tube must be avoided. Although a packaged magnetron lends the appearance of great structural strength, the internal structure is delicate and involves critical alignment of parts.

MOUNTING

The tube is mounted by four bolts passed through four clearance holes on the mounting plate, and may be mounted in any position. The tube should in no case be supported by the coupling to the waveguide output flange alone.

ELECTRICAL CONNECTIONS

Electrical connections are made to the frame of the tube and to the two jacks mounted on the glass cathode bushing insulating boot. The positive high voltage should be "grounded" to the tube, preferably at the mounting plate. The two jacks serve as the heater and cathode connectors. The jack nearest the letter "C" on the insulating boot is common to heater and cathode; the other is, of course, the remaining heater connector.

COUPLING AND PRESSURIZATION

The magnetron output flange is designed to couple to standard 5/8 x 1¼ inch waveguide. The tube is suitable for pressurized operation with all joints in the waveguide output assembly and output flange making hermetic seals. To minimize the possibility of arcing in the waveguide and to achieve optimum tube performance, the VSWR should be kept as low as possible.

TUNER CHARACTERISTICS

Approximately 125 turns of the turning shaft, at a minimum applied torque of 1½ inch pounds, are required to tune the RK-2J51 through its frequency range. Mechanical stops designed to withstand a maximum torque of 2½ inch pounds are placed at either end of the tuning range to prevent damage to the tube. Figure 12 is a plot of the tuner turns versus frequency.

Further information on the operation and capabilities of this and other type magnetrons may be obtained on request from the Applications Engineering Department, Microwave & Power Tube Operations, Raytheon Manufacturing Company, Waltham, Massachusetts.

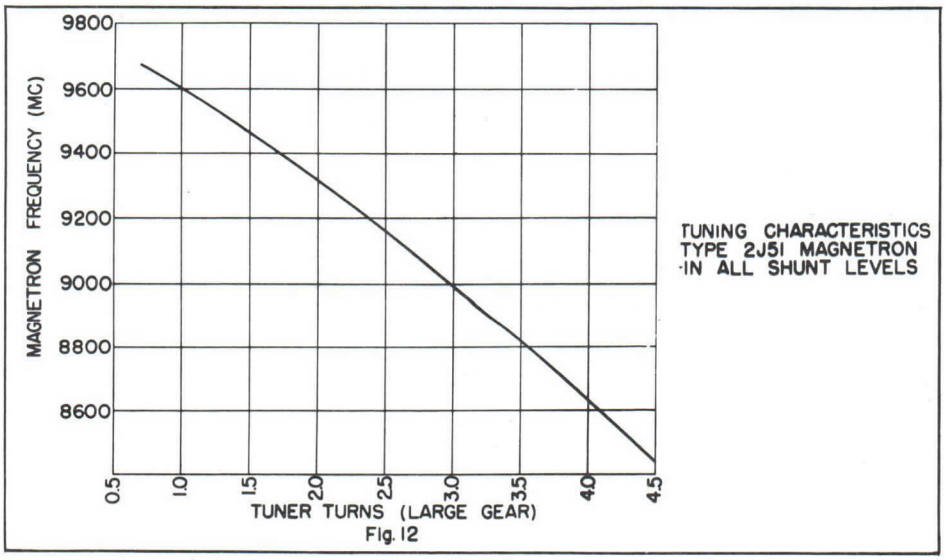

Fig. 12

TYPE 2J55-2J56



PULSED-TYPE MAGNETRON OSCILLATOR

The type 2J55-2J56 magnetron tube with integral magnet, is a super-high frequency oscillator with internal resonant circuits, designed to operate in the 3 centimeter band and capable of delivering 70 kilowatts of peak power under pulsed conditions.

GENERAL ELECTRICAL CHARACTERISTICS

Heater

Indirectly heated, oxide coated, unipotential cathode.

Heater voltage	6.3 V
Heater current	1.0 A
Minimum heating time	1 Minute

Maximum Ratings

Heater voltage	7.0 V
Peak anode voltage	16 kv
Peak anode current	16 a
Maximum duty cycle product	.001
Maximum pulse duration	2.5 μs
Average input power	180 W
Frequency pulling (at a standing wave ratio of 1.5 in voltage)	15 Mc
Anode temperature	100° C.

The tube should not be operated longer than 5 microseconds in any 100 microsecond interval.

Minimum pressure at which output circuit will pass 50 kw. without breakdown — .5 Atmosphere

Typical Operation

Heater voltage	(See operating notes)
Recurrence frequency	1000 Pulses per second
Pulse duration	1 μs
Peak anode voltage	12.8 kv
Peak anode current	12.0 a
Peak power output	50 kw
Maximum frequency change due to temperature	.25 Mc./°C.
Frequency (fixed frequency in the following range)	
2J55	9345 —9405 Mc.
2J56	9215 — 9275 Mc.

DETAILED MECHANICAL INFORMATION

The outline drawing shows the principal external dimensions and arrangement of the magnet, cooling fins, heater, common heater-cathode terminals, and R.F. output coupling flange. The letter

Printed in U.S.A.

"C" etched on the glass protector indicates the common heater-cathode terminal which is connected to the pulsating high voltage. No direct connection is made to the output circuit of the tube.

The tube is mounted from the circular flange and may be operated in any orientation. The output circuit of the tube is preplumbed to have a certain frequency pulling figure for operation into a waveguide load and is designed for optimum frequency insensitivity and breakdown characteristics. The coaxial to the waveguide junction is matched so that little or no electrical reflection exists in any part of the output circuit.

Both mounting flange and R.F. output flange are suitable for application whre pressure seals are required.

Net weight of 2J55-2J56 magnetron 3 Lb. 2 Oz.

OPERATING CHARACTERISTICS

Figure 1, Rieke Diagram, shows the power and frequency contours for a typical tube operating into a ½"×1⅛" (internal dimensions) waveguide with standing wave ratio and phase angle varied. The pulling figure at 1.5 ratio in voltage is 11.5 megacycles. It should be noted that this data is representative of average tubes and was taken under conditions simulating typical operating characteristics. Slight variations may be expected with different tubes in different systems.

Figure 2, Operating Characteristics, shows peak power output, frequency, efficiency, R.F. bandwidth at ¼ power, and peak anode potential contours, as a function of peak current for a typical tube.

Figure 3, Vibration Characteristics, shows the change of frequency (effective spectrum width) as a function of sinusoidal acceleration (G) for a typical tube.

OPERATING NOTES

Satisfactory operation of the tube will depend largely on the waveform characteristics of the input voltage pulse which should fulfill the following conditions:

Voltage time of rise	— 0.1 to 0.2 microsecond
Voltage time of fall	— less than 0.4 microsecond
Current variation	— less than ±10% of average pulse current

A poor pulse shape may cause excessive frequency modulation and general instability.

Adequate forced air should be provided to keep anode temperature of the tube less than 100°C.

The life of the 2J55-2J56 packaged magnetron is limited by the usefulness of the cathode. In general, magnetron life is inversely proportional to pulse width and duty cycle. It is therefore recommended that the tube be operated at a low recurrence rate when high peak power is required. The use of a transmission line not properly matched to the magnetron is another factor reducing the life of the tube. This is due to excessive cathode heating.

The maximum ratings with respect to pulse voltage, pulse current, and pulse duration, represent limiting values for each quantity independently. They do not form a set of values at which the tube can be satisfactorily operated.

The duty cycle product must not exceed 0.0007 for peak power input of 150 kw or greater, and must not exceed 0.001 under any circumstances.

Extreme care should be used in handling and mounting the 2J55-2J56 packaged magnetron. The integral magnet has a protective coating to minimize the loss of magnetism resulting from direct contact with magnetic materials. When the tube is mounted in a system, the spacing between the magnet and other magnetic material should be at least 2 inches, along the circular section and at the poles.

In starting a new magnetron a temporary unsteadiness in its operation may result. It is recommended that the tube be "seasoned" under prevailing conditions of oscillation to the point where it becomes stable and normal operating values are obtained.

Heater voltage (6.3 volts) should be turned on one minute before the high voltage pulsations are applied. During high voltage pulse operation at recurrence rates below 500 pulses per second, it is essential to maintain the heater voltage at 3.0 volts. At recurrence rates above 500 pulses per second, the heater voltage should be reduced in proportion to the average power input according to the schedule below. Failure to start the tube at the rated heater voltage, or to improperly reduce the heater voltage after oscillation starts, may seriously reduce the life of the tube.

HEATER VOLTAGE VS. INPUT POWER SCHEDULE

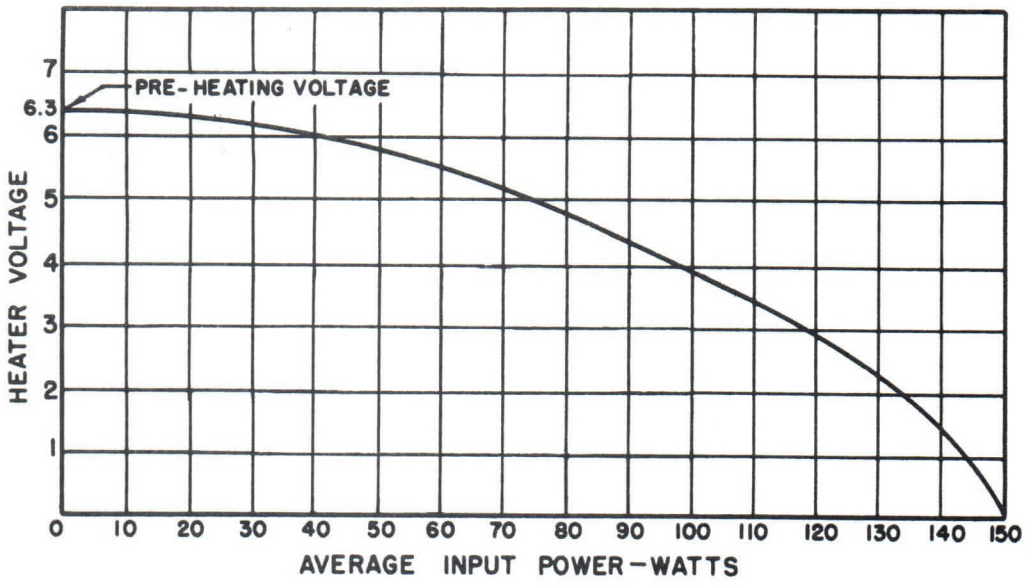

NOTES: E_f = 0 FOR ALL VALUES OF INPUT POWER GREATER THAN 150 WATTS

MAXIMUM DEVIATION OF HEATER VOLTAGE SHOULD NOT EXCEED ±10% OF RATED SCHEDULE.

Printed in U.S.A.

MICROWAVE AND POWER TUBE DIVISION

RAYTHEON COMPANY

FOUNDRY AVE., WALTHAM 54, MASS.

AVERAGE PERFORMANCE CHARACTERISTICS

FREQUENCY-POWER CONTOUR DIAGRAM

Average location of frequency convergence for the 2J55 and 2J56 are indicated on the circumference of the Rieke diagram.

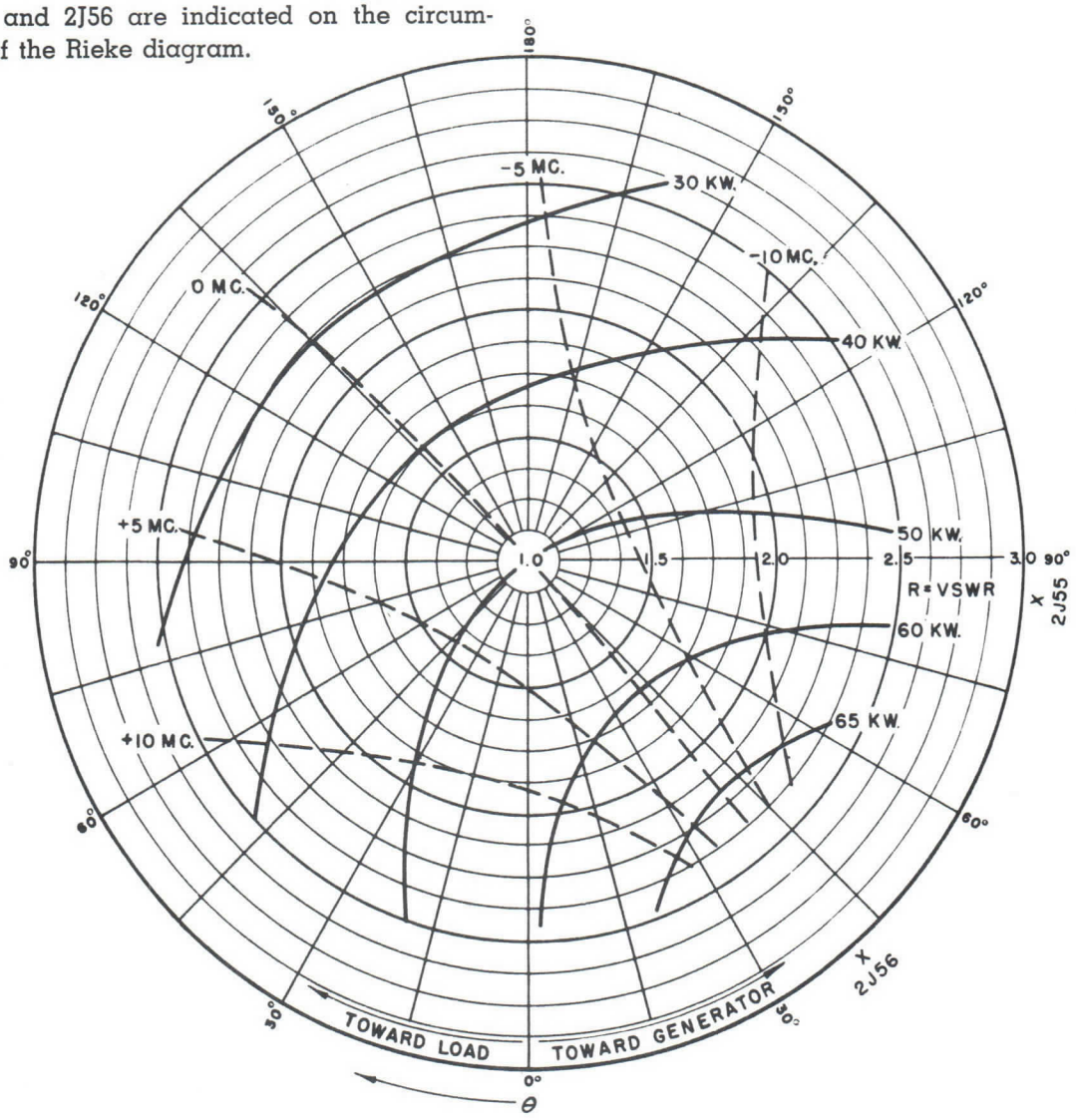

RIEKE DIAGRAM

FIGURE 1

OPERATING CONDITIONS

Recurrence rate = 1000 cps.

Pulse duration = 1 microsecond.

Peak magnetron current = 12.0 a

Recommended load for 2J55-2J56 at center of diagram.

R = Standing wave ratio in voltage.

θ = Distance of standing wave minimum from face of output flange of tube toward load.

——— = Power contours (peak kw).

– – – = Frequency contours (megacycles deviation from frequency of magnetron feeding into a matched waveguide).

Printed in U.S.A.

MICROWAVE AND POWER TUBE DIVISION

RAYTHEON COMPANY

FOUNDRY AVE., WALTHAM 54, MASS.

AVERAGE PERFORMANCE CHARACTERISTICS

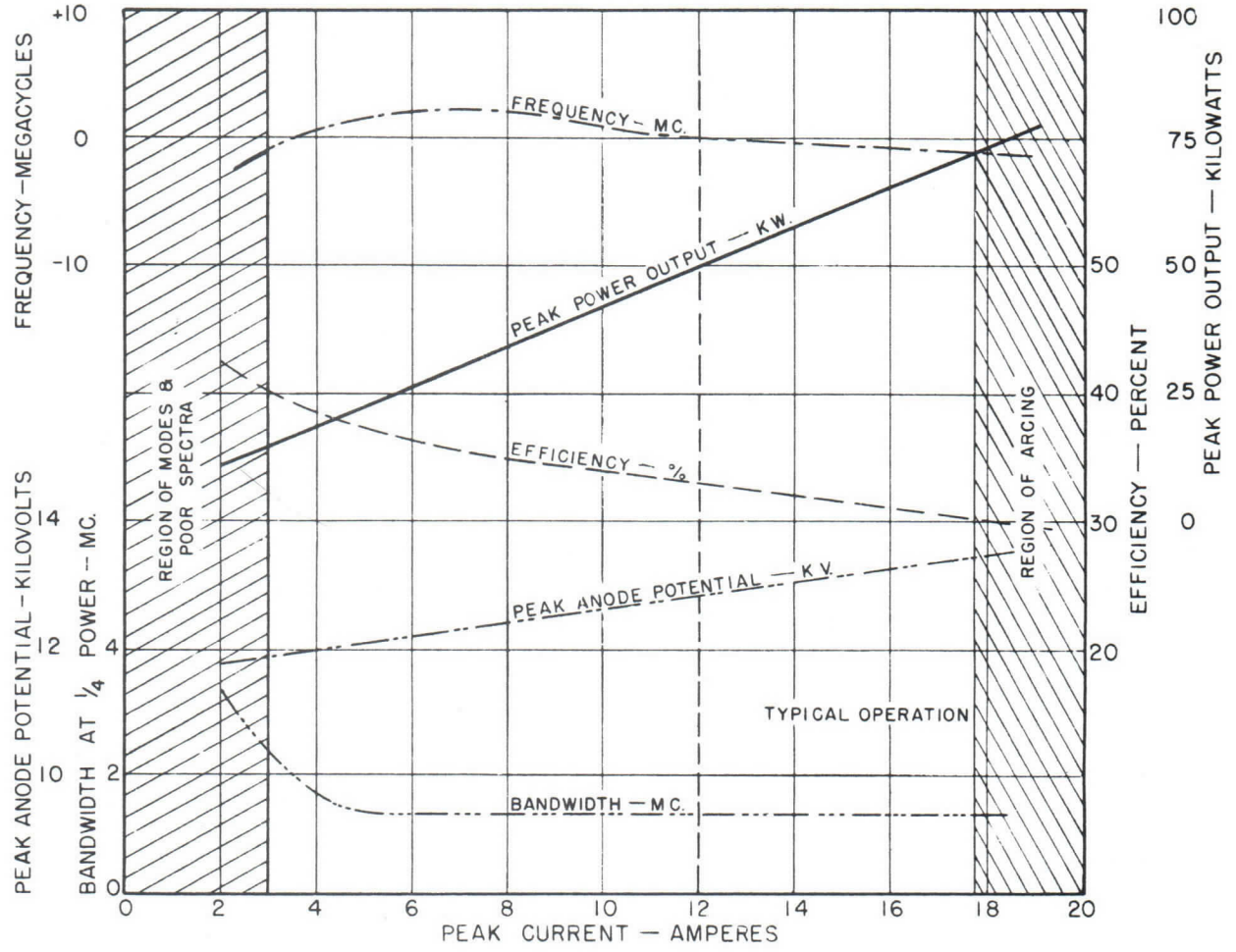

OPERATING CHARACTERISTICS

FIGURE 2

Pulse duration = 1 microsecond

Recurrence rate = 1000 pulses per second

— - - — = Peak anode potential (kilovolts)

———— = Peak power output (kilovolts)

— — — = Efficiency (per cent)

—- - - — = Bandwidth @ ¼ power (megacycles).

— - — = Frequency (megacycles deviation from mean frequency as determined by corresponding Rieke Diagram, and taken under conditions of constant temperature.)

AVERAGE PERFORMANCE CHARACTERISTICS

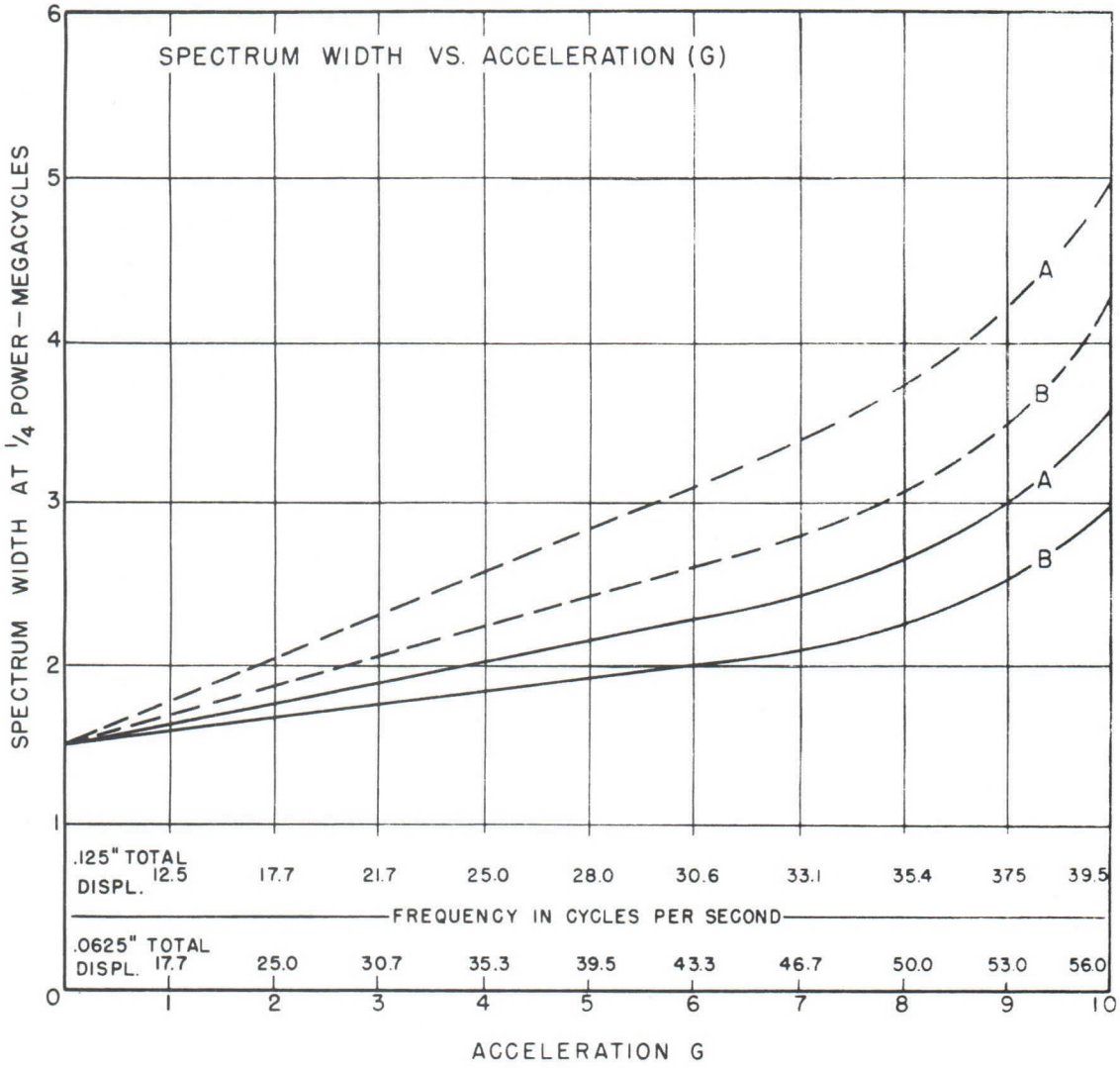

VIBRATION CHARACTERISTICS

FIGURE 3

— — — = .0625″ Total Displacement

——— = .125″ Total Displacement

Pulse duration = 1 microsecond

Recurrence rate = 1000 pulses per second

Peak magnetron current = 12 a

Curve A = Displacement perpendicular to the cathode and its associated lead in any plane at 360°.

Curve B = Displacement parallel to the cathode and its associated lead in any plane of 360°.

Printed in U.S.A.

MICROWAVE AND POWER TUBE DIVISION

RAYTHEON COMPANY

FOUNDRY AVE., WALTHAM 54, MASS.

OUTLINE DRAWING

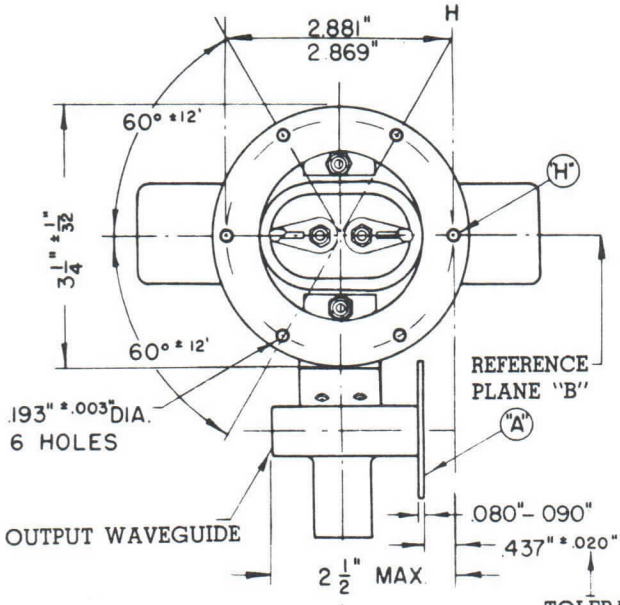

SOLDERED JOINTS IN THE PRESSURE PLATE ARE VACUUM TIGHT TO PROVIDE A HERMETIC SEAL. ALL POINTS ON REFERENCE SURFACE ARE FLAT TO WITHIN .010" FOR ½' IN FROM OUTER EDGE.

OUTPUT WAVEGUIDE — COMMERCIAL RECTANGULAR BRASS TUBING, 1¼" × ⅝" OUTSIDE DIMENSIONS × .050" WALL THICKNESS.

ALL JOINTS IN THE WAVEGUIDE ASSEMBLY ARE VACUUM TIGHT, SO THAT THE WAVEGUIDE MAY BE USED TO PROVIDE A HERMETIC SEAL AT SURFACE "A."

TWO 5/16" LOCKING TYPE PIN JACKS, 13/32" IN LENGTH. THEIR HOLES ARE .169" +.005 DIA. AND WILL FIT STANDARD G. R. NO. 274 BANANA PINS.

TOLERANCE OF .020" INCLUDES ANGULAR AS WELL AS LATERAL DEVIATIONS OF THE SURFACE.

THE JACK HOLES ARE WITHIN A RADIUS OF .023" OF THE SPECIFIED LOCATION.

COMMON HEATER-CATHODE CONNECTION INDICATED BY LETTER "C".

LINE H — H IS THE CENTERLINE OF REFERENCE HOLE "H."

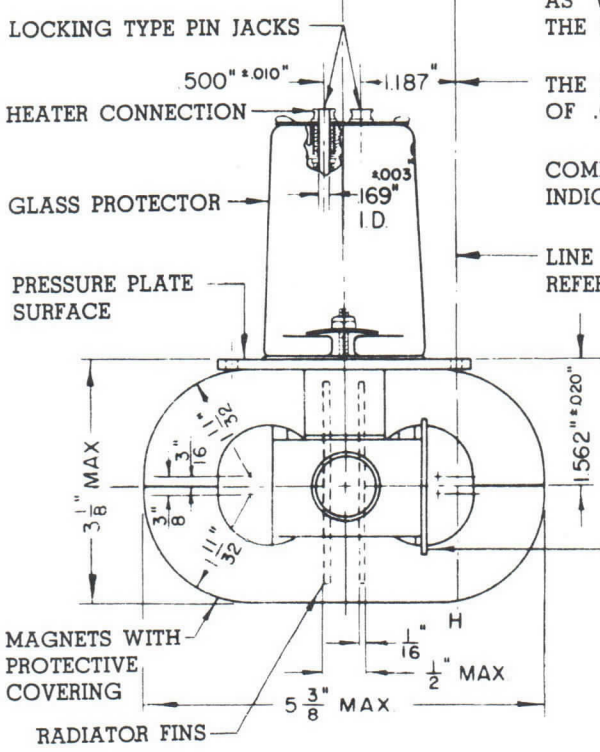

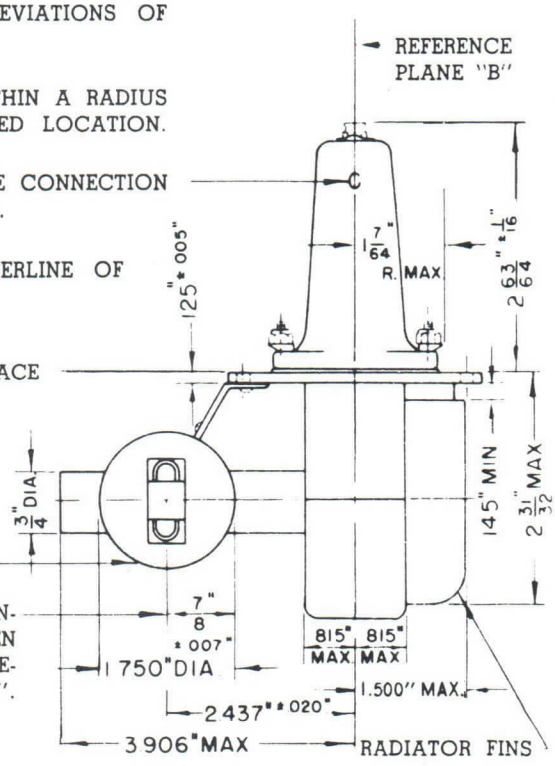

FLANGE IS CONCENTRIC WITH THE OPEN END OF THE WAVEGUIDE WITHIN .010".

TYPE 2J70

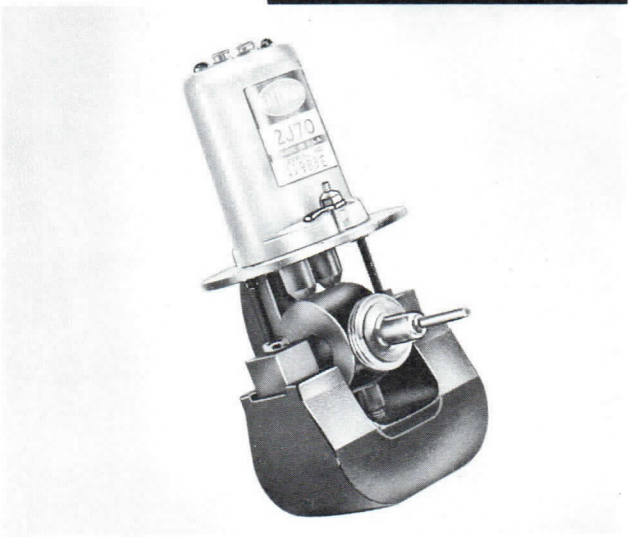

The RK2J70 is a fixed-frequency, pulsed-type oscillator operating in the frequency region of 3030 to 3110 Mc with a minimum peak power output of 20 kw. It is an integral magnet, coaxial output type tube requiring forced air cooling.

GENERAL PRECAUTIONS

Reliable operation and maximum magnetron life will be achieved only if the over-all radar transmitter is designed with the magnetron characteristics and peculiarities clearly in mind. This technical data should be used as a guide for equipment designers rather than the MIL-E-1B purchase specifications.

There are many problems peculiar to magnetrons in general which must be given special consideration in system design. These problems are discussed in detail on the following pages. If for any reason it is desired to operate the RK2J70 under conditions other than those recommended in this technical data sheet, the company's Magnetron Applications Engineering Group should be consulted.

GENERAL CHARACTERISTICS

ELECTRICAL

Heater

Heater Voltage — Preheat	6.3 V ± 10%
Heater Current @ 6.3V	1.10 — 1.40 A
Minimum Preheat Time	3 minutes

Maximum Ratings

The values specified below must not be exceeded under any service condition. The ratings are limiting values above which the serviceability of any tube may be impaired. It does not necessarily follow that combinations of absolute maximum ratings can be attained simultaneously.

Heater Voltage	7.0 V
Peak Anode Voltage	7.5 kv
Peak Anode Current	15 a
Peak Anode Power Input	100 kw
Average Anode Power Input	200 W
Anode Temperature	120°C
Pulse Duration	2.0 μs
Duty Cycle	.002
Frequency Change Due to Change of Steady State Temp.	.07 Mc/°C
VSWR	1.5/1
Pulling @ VSWR = 1.5/1	13 Mc

Printed in U.S.A.

Typical Operation

Heater Voltage (operating)	6.3 V
Pulse Duration	1.0 μs
Pulse Recurrence Rate	1000 pps
Peak Anode Voltage	7.0 kv
Peak Anode Current	8.0 a
Peak Power Output	25 kw
Frequency	3030 - 3110 Mc

MECHANICAL

Mounting Position	Any
Overall Dimensions	See Outline Dwg.
Net Weight	3¾ lbs
Cooling	Forced Air
Output Coupling	See Outline Dwg.

DETAILED ELECTRICAL INFORMATION

HEATER

The cathode must be preheated at Ef = 6.3 V ± 10% for a period of at least 3 minutes prior to the application of anode high voltage. For operation at conditions different than those under typical operation, the manufacturer must be consulted for a heater schedule. Heater current surges in excess of 6 amps cannot be tolerated.

STARTING NEW TUBE

Aging of the RK2J70 is rarely necessary. If, however, some instability is observed in a new magnetron, it is recommended that it be seasoned under the prevailing conditions of oscillation until it stabilizes and normal operation is attained.

PULSE CHARACTERISTICS

The smooth peak of a pulse is defined as the maximum value of a smooth curve through the average of the fluctuation over the top portion of the pulse. The pulse width is the time interval between the two points on the current pulse at which instantaneous current is 50 percent of the smooth peak. (True only for approximately rectangular waveshapes.) The rise time is the time interval between points of 20 and 85 percent of the smooth peak. Figure 1 shows graphically the definitions mentioned.

The voltage rate of rise boundaries are currently under investigation; it is anticipated they will be published at some later date in a supplementary data sheet. Too fast a rate of rise will lead to moding. The ripple on the top of the current pulse must be kept at a minimum to avoid pushing effects which will tend to widen the spectrum. The trailing edge or decay time of the voltage pulse must be as short as possible to obtain optimum performance and high operating efficiencies. Excessive backswing may cause instability and/or noise. The backswing should not exceed 20 percent of the applied pulse.

For optimum pulse shaping, the magnetron, pulse transformer, and pulse line must be treated as a unit. Careful tailoring of the pulse line in any application is recommended.

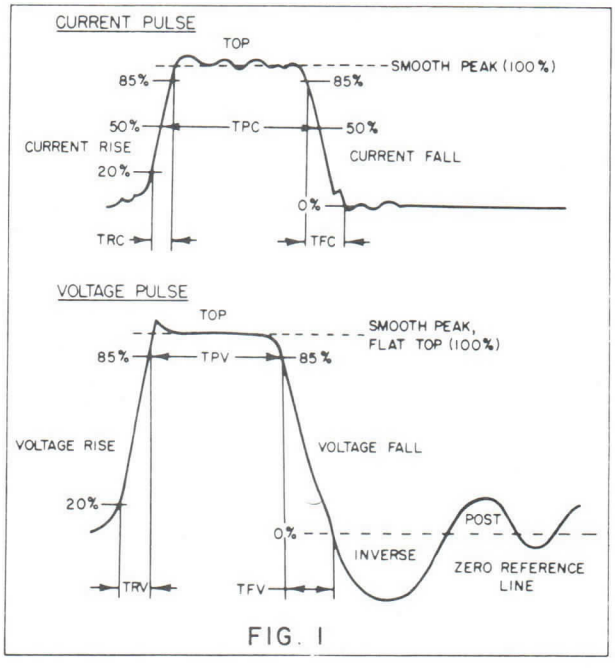

FIG. 1

LOAD DIAGRAM

Fig. 2 is a load diagram of a typical RK2J70 magnetron. The contours of constant power output and frequency change are related to voltage standing-wave ratios introduced by mismatched loads at various phase positions. Values of VSWR as high as 4:1 are plotted, but operation with ratios greater than 1.5:1 is not recommended.

COOLING

Anode operating temperatures below 100°C are recommended, although temperature as high as 120°C may be tolerated at the risk of somewhat shortened tube life. The point at which the anode temperature should be monitored is indicated on the tube outline drawing.

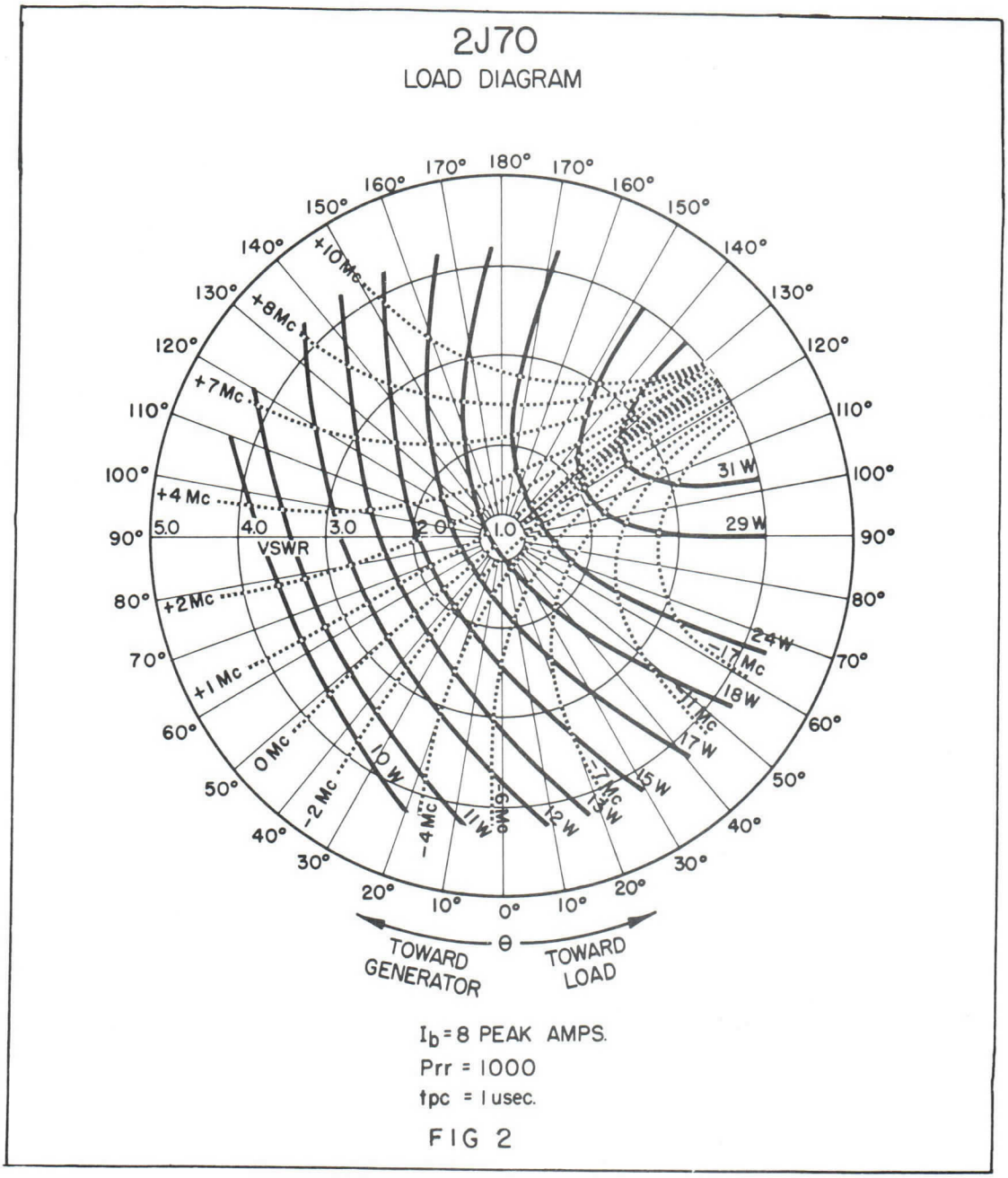

I_b = 8 PEAK AMPS.
Prr = 1000
tpc = 1 usec.

FIG 2

FREQUENCY DRIFT

After operation of the 2J70 is initiated, its temperature rises with time until thermal equilibrium is reached. During this transient period, the geometry of the tube changes slightly and is attended by a small frequency change or drift. If the tube temperature is changed after thermal equilibrium has been established, the operating frequency will also change until thermal equilibrium is again attained and tube geometry stabilizes. The frequency change between two equilibrium positions will not exceed 0.07 Mc/°C.

LOAD AND LINE LENGTH CONSIDERATIONS

If an oscillator is loaded by an electrically long transmission line which is terminated by an impedance different from that of the line, the impedance of the load will be a periodic function of frequency. Operation of the oscillator under these conditions gives rise to phenomena collectively termed "long-time effects." Although these phenomena are usually associated with an electrically long transmission line, they can also be exhibited by a short line terminated by a sufficiently mismatched impedance. In any case, the extent to which the long-time effect is exhibited depends upon the amount of coupling between the load and oscillator as well as the degree of mismatch in the line. Figure 3 shows the relation between the VSWR and the line length with respect to the critical condition of skip. This skip condition occurs when the tube is changing frequency (thermal drift) and causes breaks in the ordinarily smooth drift curve. This condition is not too serious in the RK2J70 because the tube is not tunable. Of far more serious consequence, however, is the broadening and deterioration of the spectra caused by this phenomena. It may, in some cases, permit spectra of two frequencies to appear simultaneously. By operating into loads specified under the region of recommended operation in Fig. 3, satisfactory operation should be obtained. In this region no significant broadening of the spectrum will take place, although, for close control of bandwidth, the VSWR should be kept as low as possible.

More detailed information on the theories and remedies of long-line effects are available upon request.

RF RADIATION FROM CATHODE

The RK2J70 is designed to minimize the generally negligible radiation from the cathode stem. It is not possible, however, to guarantee that the radiation will be negligible; and in particularly critical environments, shielding of the stem may be necessary to avoid radiation difficulties.

OPERATING CHARACTERISTICS

Fig. 4 is a plot of peak power output and peak anode voltage, as a function of anode current.

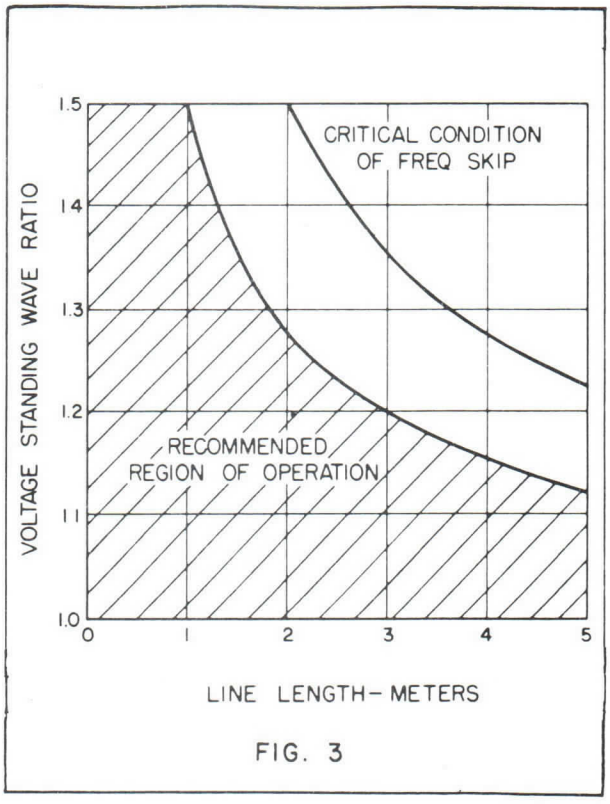

FIG. 3

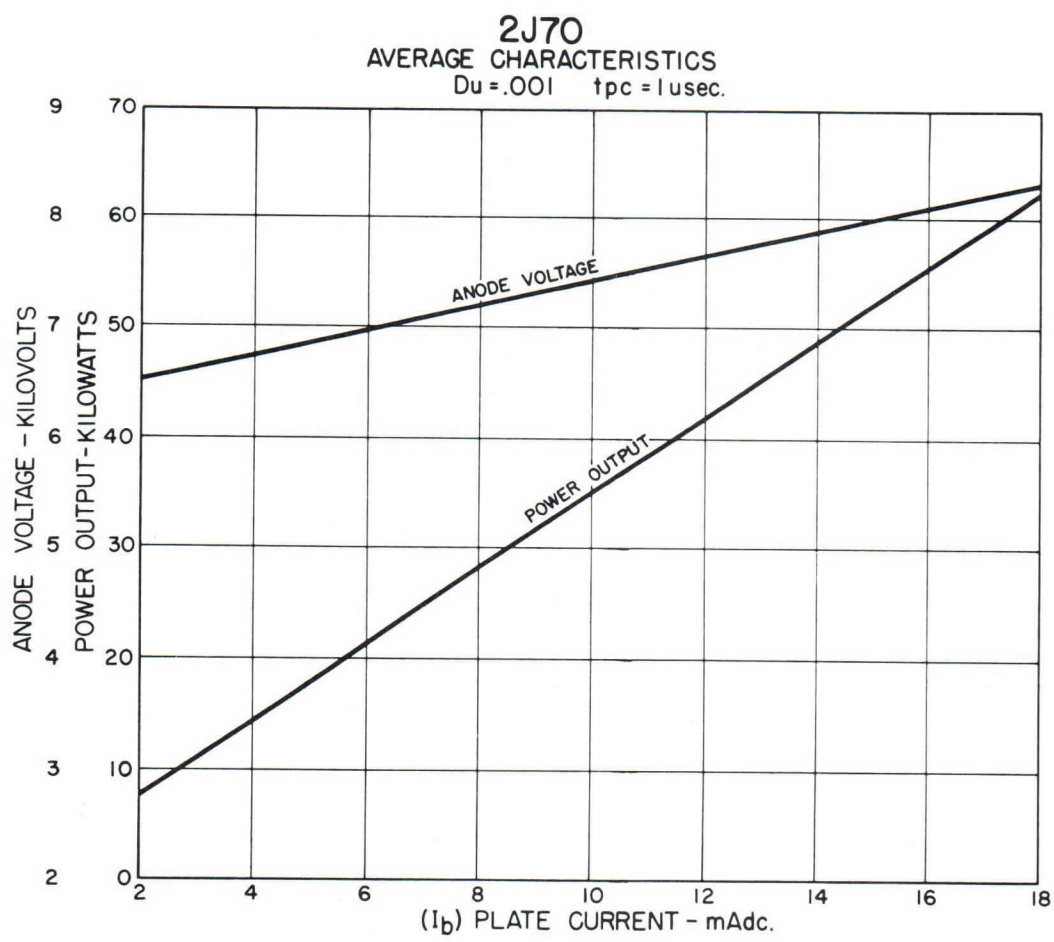

FIGURE 4

DETAILED MECHANICAL INFORMATION

OUTLINE DRAWING

The detailed mechanical dimensions are given in Fig. 5. These dimensions should be used in designing the mechanical layout rather than those of a sample tube.

INSTALLATION AND HANDLING PRECAUTIONS

Unnecessary jarring or rough handling of the tube must be avoided. Although a packaged magnetron appears to have great structural strength, the internal structure is delicate and involves critical alignment of parts. In particular, the center conductor of the coaxial output should not be subjected to sharp blows or excessive strains that may destroy its fragile metal to glass seal.

ELECTRICAL CONNECTIONS

Electrical connections are made to the frame of the tube and to the two jacks mounted on the glass cathode bushing insulating boot. The positive high voltage should be "grounded" to the tube, preferably at the mounting plate. The two jacks serve as the heater and cathode connectors. The jack nearest the letter "C" on the insulating boot is common to heater and cathode; the other is of course, the remaining heater connector.

NOTES:

1. The jack holes shall be within a radius of .023 of the location specified but shall be spaced .500 ± .010 with respect to each other. The center line of the holes shall be perpendicular to ref. plane "A" within 3°.
2. Leads (2) shall be flexible and slack.
3. Pyrex glass, porcelain, or approved equivalent.
4. Gasket may be omitted by cementing the base to the plate.
5. Indicate common cathode connection by letter "C" on this surface.
6. Heater pipe and seal off teats shall not touch inside wall of base.
7. Any portion of the assembly extending above this surface shall be within a 1.109 R. of true center of the plate.
8. Hex-head banana locking $^{19}/_{32}$ LG. .169 ± .005 hole.
9. Common cathode connection.
10. Areas between and including these planes shall be painted with a black, heat-resistant, noncorrosive paint.
11. Protective black coating over magnet.
12. This dimension applies to adapter.
13. Center line of lead shall be concentric with adapter within .020.
14. Pressure plate surface to be flat within .010 for .500 from outer edge.
15. Output cylinder shall be noncorrosive material or painted black plated min. 20 M.S.I. silver or 10 M.S.I. gold.
16. Periphery of countersunk hole or head of #8-32 screw may extend into .191-.195 dia. holes on ref. plane "B".

RAYTHEON

PULSED-TYPE MAGNETRON OSCILLATOR

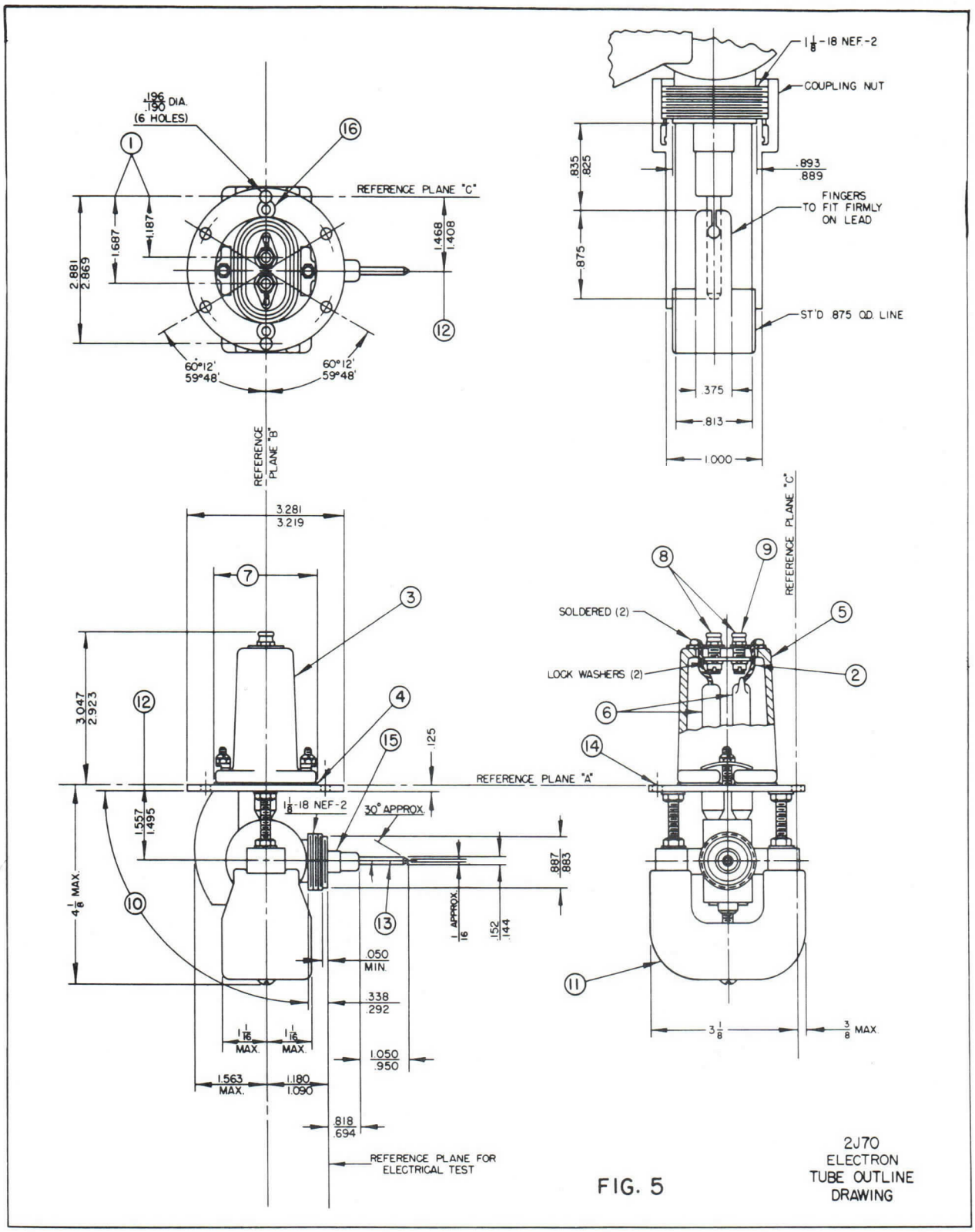

FIG. 5

2J70 ELECTRON TUBE OUTLINE DRAWING

Printed in U.S.A.

RAYTHEON

TECHNICAL INFORMATION

MAGNETRON OSCILLATOR

Excellence in Electronics

TYPE 4J31-4J35

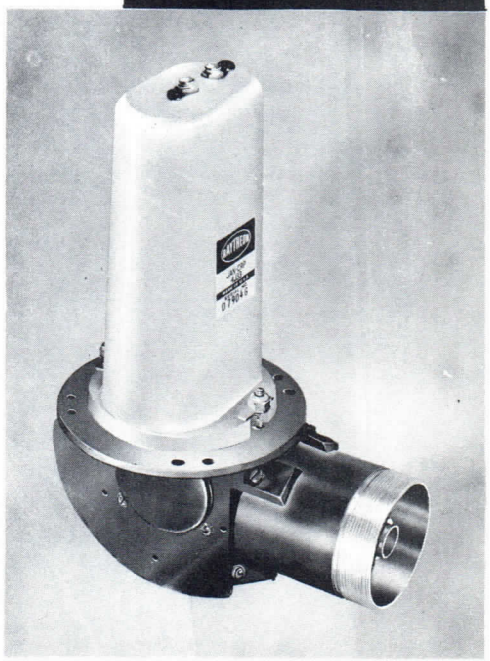

The type 4J31-4J35 magnetron tube is a super-high frequency oscillator with internal resonant circuits, designed to operate in the 10 centimeter band and capable of delivering 900 kilowatts of peak power under pulsed conditions.

GENERAL CHARACTERISTICS

Indirectly heated, oxide coated, unipotential cathode		
Heater voltage	16.0	Volts
Heater current	3.1	Amperes
Minimum heating time	2	Minutes

MAXIMUM RATINGS

Heater voltage	16.0 ± 10%	Volts
Peak anode voltage	30	Kilovolts
Peak anode current	70	Amperes
Duty cycle product	.001	
Pulse duration	2.5	Microseconds
Average input power	1200	Watts
Frequency pulling (at a standing wave ratio of 1.5 in voltage)	15	Megacycles
Anode temperature	100°	Centigrade

The tube should not be operated longer than 5 microseconds in any 100 microsecond interval.

TYPICAL OPERATION

Heater voltage	See operating notes
Magnetic field intensity	2700 Gauss
Recurrence frequency	400 Pulses per second
Pulse duration	1 Microsecond
Peak anode voltage	26.3 Kilovolts
Peak anode current	50 Amperes
Peak power output	685 Kilowatts
Maximum frequency change due to temperature	.07 Mc C°
Frequency (fixed frequency in the following range)	
4J31	2860 — 2900 Megacycles
4J32	2820 — 2860 Megacycles
4J33	2780 — 2820 Megacycles
4J34	2740 — 2780 Megacycles
4J35	2700 — 2740 Megacycles

MECHANICAL

The outline drawing shows the principal external dimensions, arrangement of cooling fins, heater, heater-cathode, and R.F. output terminals. The letter "C" stamped on the corona ring of the glass protector indicates the common heater-cathode terminal which is connected to one end of the heater. It is this cathode terminal which is connected to the pulsating high voltage.

The tube is mounted from the circular flange and may be operated in any orientation. The output pipe (guard pipe) is provided with a thread designed for direct contact coupling to the outer conductor of the R.F. system. Inner conductor contact is provided by inserting the inner coaxial conductor into the conductor insert using a light hand force fit. Both mounting flange and output pipe are suitable for application where pressure seals are required.

Net weight of 4J31-4J35 Magnetron . . . . . 5 Lbs.

Printed in U.S.A.

MICROWAVE AND POWER TUBE DIVISION
RAYTHEON COMPANY
FOUNDRY AVE., WALTHAM 54, MASS.

RIEKE DIAGRAM

FREQUENCY-POWER CONTOUR DIAGRAM

Average location of frequency convergence for the 4J31-4J35 are indicated on the circumference of the Rieke diagram.

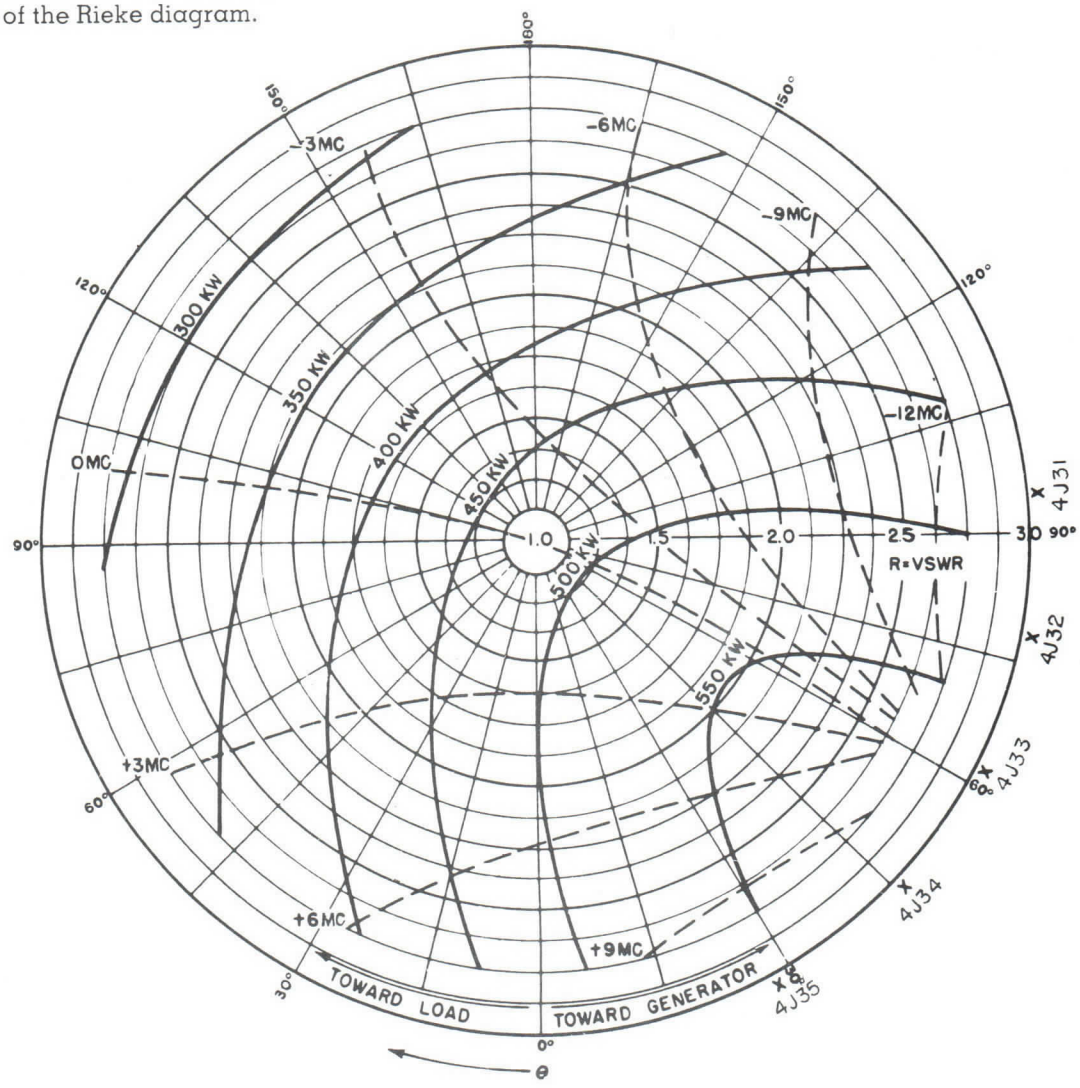

FIGURE 1

OPERATING CONDITIONS

Recurrence rate = 500 P.P.S.

Pulse duration = 1 microsecond

Magnetic field intensity = 2100 gauss

Peak magnetron current = 50 amp

Recommended load for 4J31-4J35 at center of diagram

R = Standing wave ratio in voltage

θ = Distance of standing wave minimum from extreme edge of outer coaxial conductor (toward load)

——— = Power contours (peak kw)

– – – = Frequency contours (megacycles deviation from frequency of magnetron feeding into a matched line)

OPERATING CHARACTERISTICS

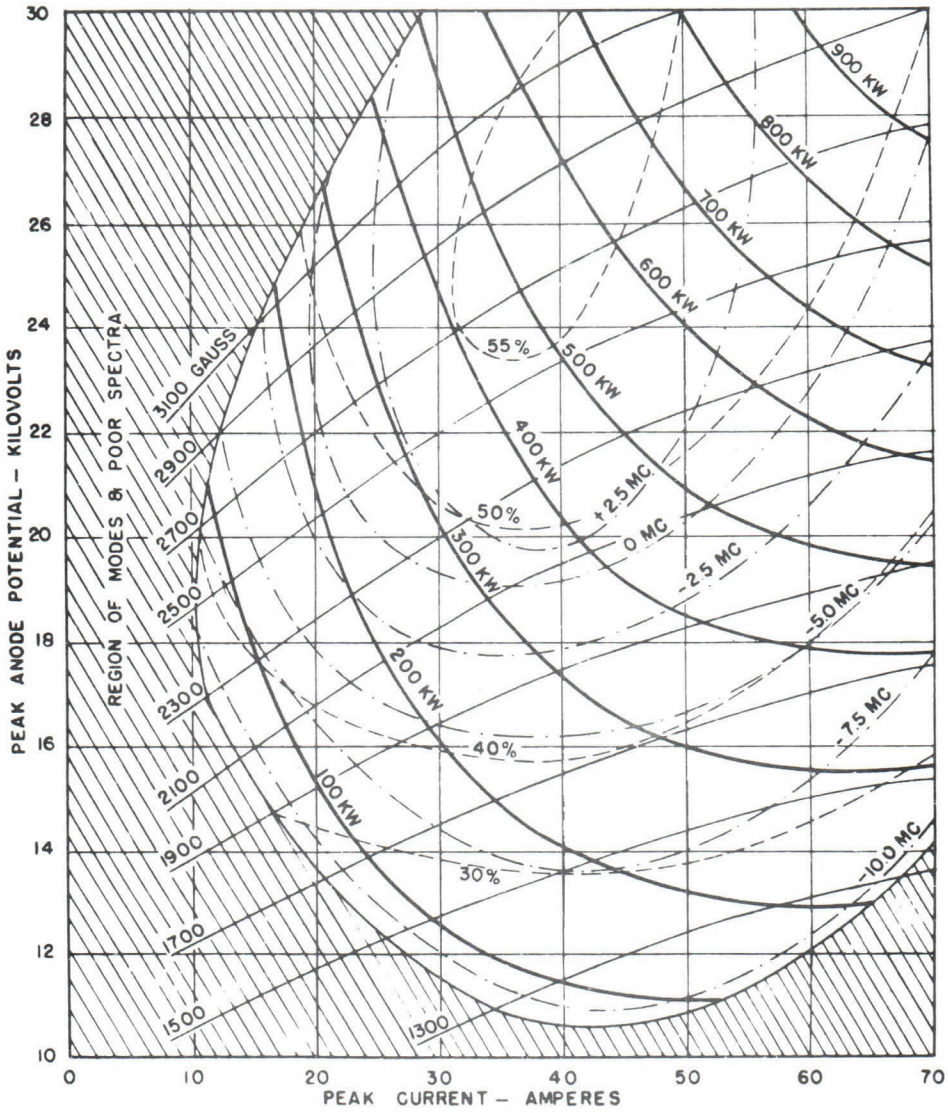

FIGURE 2

Recurrence rate = 500 P.P.S.
Pulse duration = 1 microsecond
——— = Magnetic field (gauss)
——— = Peak power output (kilowatts)
– – – – = Efficiency (per cent)
– · – · – = Frequency contours (megacycles deviation from mean frequency as determined by corresponding Rieke Diagram, and taken under conditions of constant temperature)

Printed in U.S.A.

MICROWAVE AND POWER TUBE DIVISION

RAYTHEON COMPANY

FOUNDRY AVE., WALTHAM 54, MASS.

3233 — 1-55

VIBRATION CHARACTERISTICS

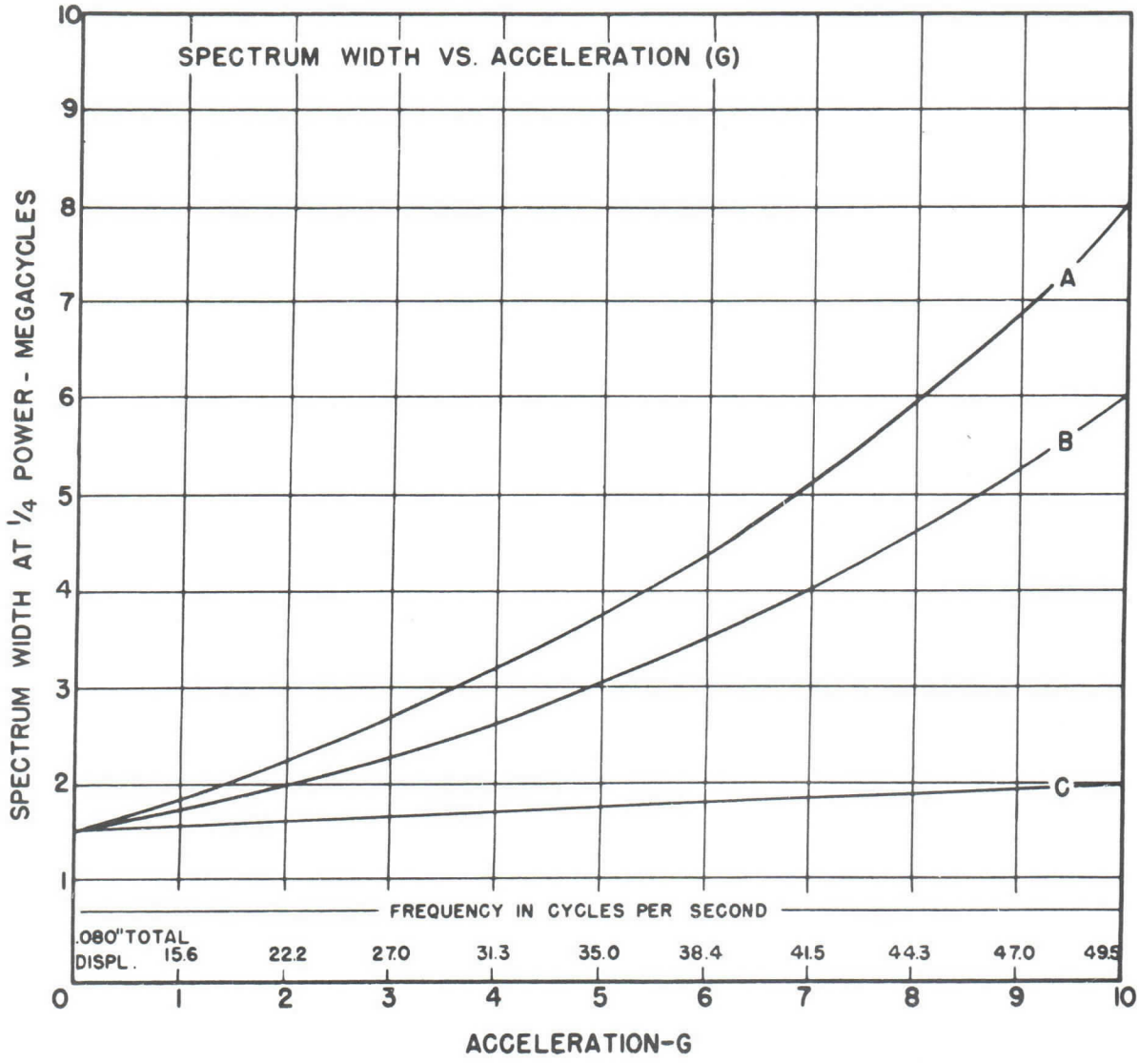

FIGURE 3

.080" Total Displacement

Recurrence rate = 500 P.P.S.

Pulse duration = 1 microsecond

Peak magnetron current = 50 amperes

Curve A = Displacement perpendicular both to length of cathode and filament leads

Curve B = Displacement perpendicular to filament leads and along length of cathode

Curve C = Displacement perpendicular to length of cathode and along length of filament leads

OPERATING CHARACTERISTICS

Figure 1, Rieke Diagram, shows the power and frequency contours for a typical tube operating into a 48 ohm coaxial line, with standing wave ratio and phase angle varied. The pulling figure at 1.5 ratio in voltage is 6.5 megacycles. It should be noted that this data is representative of average tubes and was taken under conditions simulating typical operating characteristics.

Figure 2, Operating Characteristics, shows the magnetic field, peak power output, frequency and efficiency contours as a function of pulsed voltage and current for a typical tube.

Figure 3, Vibration Characteristics, shows the change of frequency (effective spectrum width) as a function of sinusoidal acceleration (G) of a typical tube.

OPERATING NOTES

Satisfactory operation of the tube will depend largely on the waveform characteristics of the input voltage pulse and should fulfill the following conditions:

Voltage time of rise — 0.1 to 0.2 microsecond.

Voltage time of fall —less than 0.4 microsecond.

Current variation —less than ± 10% of average pulse current.

A poor pulse shape may cause excessive frequency modulation and general instability.

It is recommended that the magnetic field be produced between circular pole tips 1.5 inches in diameter separated by 1.5 inches and located concentrically along the axis of the tube. The tube should be operated with the north-seeking pole of the magnet adjacent to the cathode.

Adequate forced air should be provided to keep the anode temperature of the tube less than 100 C.

The life of the 4J31-4J35 magnetron is limited by the usefulness of the cathode. In general, magnetron life is inversely proportional to pulse duration and duty cycle. It is therefore recommended that the tube be operated at a low recurrence rate when high peak power is required. The use of a transmission line not properly matched to the magnetron is another factor reducing the life of the magnetron. This is due to excessive cathode heating.

The maximum ratings with respect to peak anode potential, peak anode current and pulse duration represent limiting values for each quantity independently. They do not form a set of values at which the tube can be satisfactorily operated.

The 4J31-4J35 magnetrons evolve small traces of gas when stored for a period of time. This condition is particularly noticeable of tubes operating in the high voltage region. Since a temporary unsteadiness in operation may result, it is recommended that the tube be seasoned to the point where it again becomes stable, and normal operating values are obtained.

Printed in U.S.A.

MICROWAVE AND POWER TUBE DIVISION

RAYTHEON COMPANY

FOUNDRY AVE., WALTHAM 54, MASS.

OPERATING NOTES — Continued

Heater voltage (16.0 volts) should be turned on two minutes before the high voltage pulsations are applied and then reduced in proportion to the average power input according to the schedule below. Failure to start the tube at the rated heater power, or to improperly reduce to heater power after oscillation starts, may seriously reduce the life of the tube.

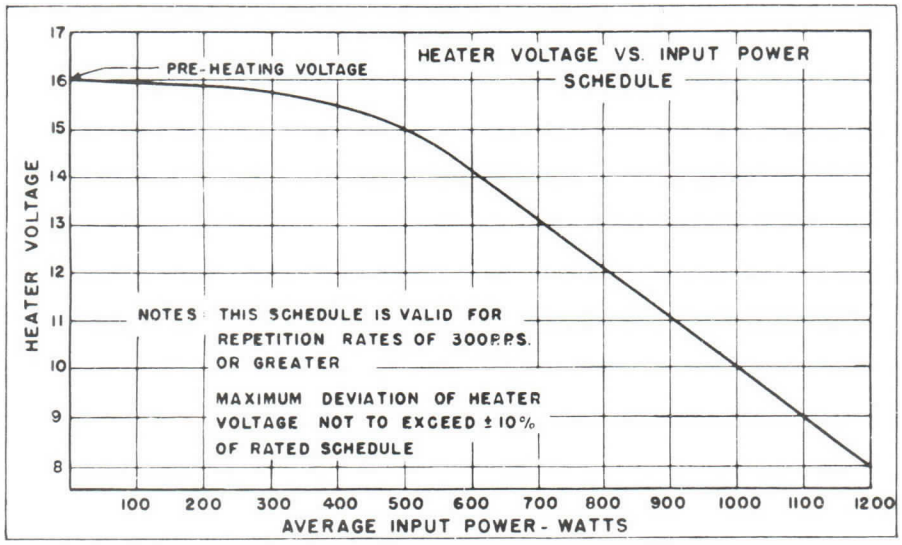

GENERAL PRECAUTIONS

Reliable operation and maximum magnetron life will be achieved if the overall radar transmitter is designed with the magnetron characteristics and peculiarities clearly in mind. This technical data should be used as a guide for equipment designers rather than the MIL-E-1B Government purchase specifications.

As is the case with other electrical components, some deterioration in magnetron life will result if the magnetrons are operated continuously at their maximum ratings. There are many problems peculiar to magnetrons which must be given special consideration in system design. If for any reason it is desired to operate the 4J31-4J35 magnetrons under conditions other than those recommended in this data sheet, the company's Magnetron Application Engineering Group should be consulted.

Further information on the operation and capabilities of these and other type magnetrons may be obtained from the Applications Engineering Department, Microwave and Power Tube Operations, Raytheon Manufacturing Company, Waltham 54, Mass.

OUTLINE DRAWING

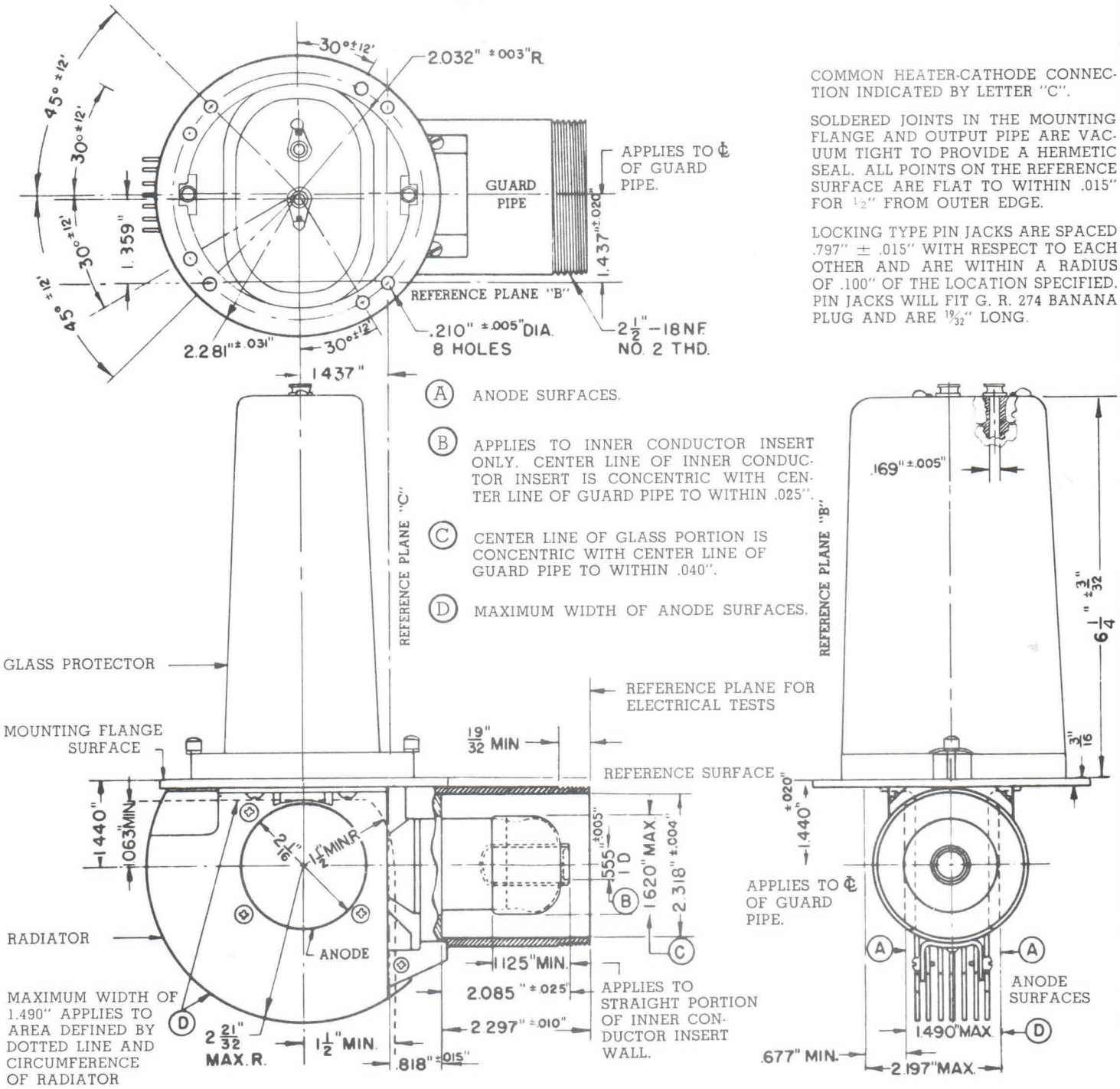

Ⓐ ANODE SURFACES.

Ⓑ APPLIES TO INNER CONDUCTOR INSERT ONLY. CENTER LINE OF INNER CONDUCTOR INSERT IS CONCENTRIC WITH CENTER LINE OF GUARD PIPE TO WITHIN .025".

Ⓒ CENTER LINE OF GLASS PORTION IS CONCENTRIC WITH CENTER LINE OF GUARD PIPE TO WITHIN .040".

Ⓓ MAXIMUM WIDTH OF ANODE SURFACES.

COMMON HEATER-CATHODE CONNECTION INDICATED BY LETTER "C".

SOLDERED JOINTS IN THE MOUNTING FLANGE AND OUTPUT PIPE ARE VACUUM TIGHT TO PROVIDE A HERMETIC SEAL. ALL POINTS ON THE REFERENCE SURFACE ARE FLAT TO WITHIN .015" FOR ½" FROM OUTER EDGE.

LOCKING TYPE PIN JACKS ARE SPACED .797" ± .015" WITH RESPECT TO EACH OTHER AND ARE WITHIN A RADIUS OF .100" OF THE LOCATION SPECIFIED. PIN JACKS WILL FIT G. R. 274 BANANA PLUG AND ARE 19/32" LONG.

Printed in U.S.A.

MICROWAVE AND POWER TUBE DIVISION

RAYTHEON COMPANY

FOUNDRY AVE., WALTHAM 54, MASS.

INDIVIDUAL MILITARY SPECIFICATION SHEET

MIL-E-1/765
16 July 1954

ELECTRON TUBE, MAGNETRON, FIXED FREQUENCY, PULSE TYPE JAN-4J31-35

This specification sheet forms a part of the latest issue of Military Specification MIL-E-1.

Ratings:	Ef	epy	ib	pi	Pi	tk	Du	tp	Anode T	Alt.
Absolute	V	kv	a	kw	W	sec	—	us	°C	ft.
Maximum:	16.0+10%	30	70	2000	1200	—	.001	2.5	100	10,000
Minimum:	—	—	—	—	—	120	—	—	—	

Pulsing Service Note 1

**Cathode: Oxide Coated Unipotential

For miscellaneous requirements, see Paragraph 3.3 Inspection Instructions for Electron Tubes.

Ref.	*Test*	*Conditions*		*Min.*	*Max.*	
3.1	Qualification Approval:	Required for JAN Marking				
4.5	Holding Period:	t = 168 hours				
4.8	Insulation of Electrodes:	Omit				
4.9.8	**Salt Spray Corrosion:	Omit				
4.9.18.1.8	Carton Drop:	(i) Package Group 9 Carton Size E				
4.9.19.1	*Vibration:	No voltage				
4.9.19.2	**Vibration:	No voltage				
4.9.2	Dimensions:	Per drawing 240-JAN				←
3.7.1.3	Marking:					
4.16.1	**Cooling:					
4.9.13	Pressurizing:	40 to 45 lbs./sq. in. (absolute)				
4.10.8	Heater Current:	Ef = 16.0V	If:	2.8	3.4	A
4.16.3	*Oscillation (1)*:					
——	Coupling:	Per drawing 240-JAN				
4.16.3.1	Magnetic Field:	H = 2700 gauss; Coil No. 400; Pole Tip Fig. No. 1				
4.16.3.2	Heater:	tk = 120 (max) at Ef = 16.0V; Ef = 10.0V for test				
4.16.3.3	Pulse Characteristics:	tp = 0.9 to 1.1 us; Du = .0005; trv = 0.2 us (max)				
4.16.3.4	Average Anode Current:	Ib = 35mAdc				
	Standing Wave Ratio:	σ′ = 1.15/1 (max)				
4.16.3.5	Pulse Voltage:		epy:	26	30	kv
4.16.3.6.2	Power Output:	t = 300 (max)	Po:	400	—	W
4.10.7.3	Frequency:		4J31 F:	2860	2900Mc	
			4J32 F:	2820	2860Mc	
			4J33 F:	2780	2820Mc	
			4J34 F:	2740	2780Mc	
			4J35 F:	2700	2740Mc	
4.16.3.7	†R.F. Bandwidth:		Bandwidth:	——	2.5Mc	
4.16.5	*Pulling Factor:	Ib = 20 to 35mAdc	ΔF:	——	15Mc	
4.16.7	Stability:	Note 2				
4.16.3	*Oscillation (2)*:					
——	Coupling:	Per drawing 240-JAN				
4.16.3.1	Magnetic Field:	H = 2700 gauss; Coil No. 400; Pole Tip Fig. No. 1				
4.16.3.2	Heater:	tk = 120 (max.) at Ef = 16.0V; Ef = 10.0V for test				
4.16.3.3	Pulse Characteristics:	tp = 1.8 to 2.2 us; Du = .0006; trv = 0.2 us (max.)				
4.16.3.4	Average Anode Current:	Ib = 45mAdc				
	Standing Wave Ratio:	σ′ = 1.15/1 (max.)				
4.9.14	**Temperature Coefficient:		ΔF:	——	.07Mc/°C	
4.9.15	**Low Temperature: Operation:	tk = 180 (max);				
4.11	Life Test:	Group D; Osc. (1)	t:	500	—hrs.	
4.11.4	Life Test End Point:	Osc. (1)	Po:	320	—W	
			Bandwidth:	——	2.5Mc	

Note 1: During high voltage operation it is essential to operate the heater according to the following schedule:

Pi (watts)	*Ef (volts)*
1000-1200	8
800-1000	10.5
600- 800	13
400- 600	15
Less than 400	16

The above schedule is valid only for repetition rates of 300 pps or greater.

Note 2: The tube is considered to be operating stably when the average current is constant, showing no appreciable kicks which are accompanied by flicker in a neon lamp used as an indicator of RF output, or by wide variations in the oscilloscope trace of input current or voltage. Stable operation shall be demonstrated over the last 30 seconds of a test interval not to exceed 5 minutes.

Note 3: Reference specification shall be of the issue in effect on the date of invitation for bid.

TYPE 4J36-4J41

The type 4J36-4J41 magnetron tube is a super-high frequency oscillator with internal resonant circuits, designed to operate in the 10 centimeter band and capable of delivering 850 kilowatts of peak power under pulsed conditions.

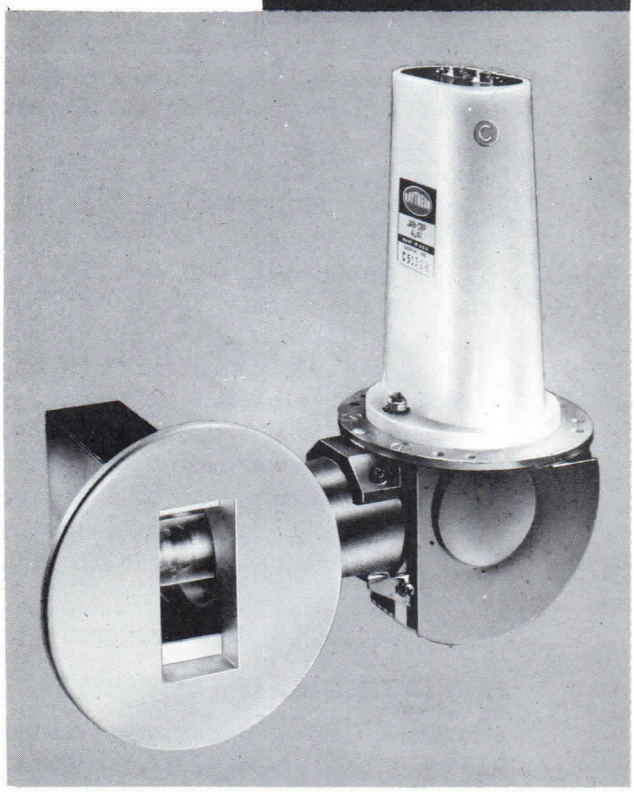

GENERAL ELECTRICAL CHARACTERISTICS

Heater

Indirectly heated, oxide coated, unipotential cathode.

Heater voltage — Preheat	16.0 V
Heater current @ 16.0 V	3.1 ± 0.3 A
Minimum preheat time	2 Minutes

Maximum Ratings

Heater voltage	16.0 + 10% V
Peak anode voltage	30 kv
Peak anode current	70 a
Maximum duty cycle product	.001
Maximum pulse duration	2.5 μs
Average input power	1200 W
Frequency pulling VSWR 1.5	10 Mc
Anode temperature	100 °C.

The tube should not be operated longer than 5 microseconds in any 100 microsecond interval.

Typical Operation

Heater voltage	(See operating notes)
Magnetic field intensity	2500 Gauss
Recurrence frequency	400 pps
Pulse duration	1 μs
Peak anode voltage	25.5 kv
Peak anode current	35 a
Peak power output	450 kw
Maximum frequency change due to temperature	.07 Mc/°C.

Frequency (fixed frequency in the following range)

4J36	3650 — 3700 Mc
4J37	3600 — 3650 Mc
4J38	3550 — 3600 Mc
4J39	3500 — 3550 Mc
4J40	3450 — 3500 Mc
4J41	3400 — 3450 Mc

Printed in U.S.A.

DETAILED MECHANICAL INFORMATION

The outline drawing shows the principal external dimensions, arrangement of the cooling fins, heater, heater-cathode terminals, and R.F. output coupling flange. The letter "C" stamped on the input terminal protector indicates the common heater-cathode terminal which is connected internally to one end of the heater. It is this cathode terminal which is connected to the pulsating high voltage. No direct connection is made to the output circuit of the tube. The tube is mounted from the circular flange and may be operated in any orientation. The output circuit of the tube is preplumbed to have a certain frequency pulling figure for operation into a waveguide load and is designed for optimum frequency insensitivity and breakdown characteristics. The coaxial to the waveguide junction is matched so that little or no electrical reflection exists in any part of the output circuit.

Net weight of 4J36-4J41 magnetron . . . 8 Lbs., 7 Oz.

OPERATING CHARACTERISTICS

Figure 1, Rieke Diagram, shows the power and frequency contours for a typical tube operating into a 1½"×3"×.080" wall waveguide with standing wave ratio and phase angle varied. The pulling figure at a VSWR of 1.5 is 7.5 megacycles. It should be noted that this data is representative of average tubes and was taken under conditions simulating typical operating characteristics. Slight variations may be expected with different tubes in different systems.

Figure 2, Operating Characteristics, shows the magnetic field, peak power output, frequency and efficiency contours, as a function of pulsed voltage and current for a typical tube.

Figure 3, Vibration Characteristics, shows the change of frequency (effective spectrum width) as a function of sinusoidal acceleration (G) for a typical tube.

OPERATING NOTES

Satisfactory operation of the tube will depend largely on the waveform characteristics of the input voltage pulse and should fulfill the following conditions:

Voltage time of rise — 0.1 to 0.2 microsecond

Voltage time of fall — less than 0.4 microsecond

Current variation — less than ±10% of average pulse current

A poor pulse shape may cause excessive frequency modulation and general instability.

It is recommended that the magnetic field be produced between circular pole tips 1.5 inches in diameter separated by 1.5 inches and located concentrically along the axis of the tube. The tube should be operated with the north-seeking pole of the magnet adjacent to the cathode.

Adequate forced air should be provided to keep the anode temperature of the tube less than 100° C.

The life of the 4J36-4J41 magnetron is limited by the usefulness of the cathode. In general, magnetron life is inversely proportional to pulse duration and duty cycle. It is therefore recommended that the tube be operated at a low recurrence rate when high peak power is required. The use of a transmission line not properly matched to the magnetron is another factor reducing the life of the magnetron. This is due to excessive cathode heating.

The maximum ratings with respect to peak anode potential, peak anode current, and pulse duration, represent limiting values for each quantity independently. They do not form a set of values at which the tube can be satisfactorily operated.

The 4J36-4J41 magnetrons may evolve small traces of gas when stored for a period of time. This condition is particularly noticeable of tubes operating in the high voltage region. Since a temporary unsteadiness in operation may result, it is recommended that the tube be seasoned to the point where it again becomes stable, and normal operating values are obtained.

Heater voltage (16.0 volts) should be turned on two minutes before the high voltage pulsations are applied and then reduced in proportion to the average power input according to the schedule below. Failure to start the tube at the rated heater power, or to improperly reduce the heater power after oscillation starts, may seriously reduce the life of the tube.

Printed in U.S.A.

MICROWAVE AND POWER TUBE DIVISION

RAYTHEON COMPANY

FOUNDRY AVE., WALTHAM 54, MASS.

HEATER VOLTAGE VS. INPUT POWER SCHEDULE

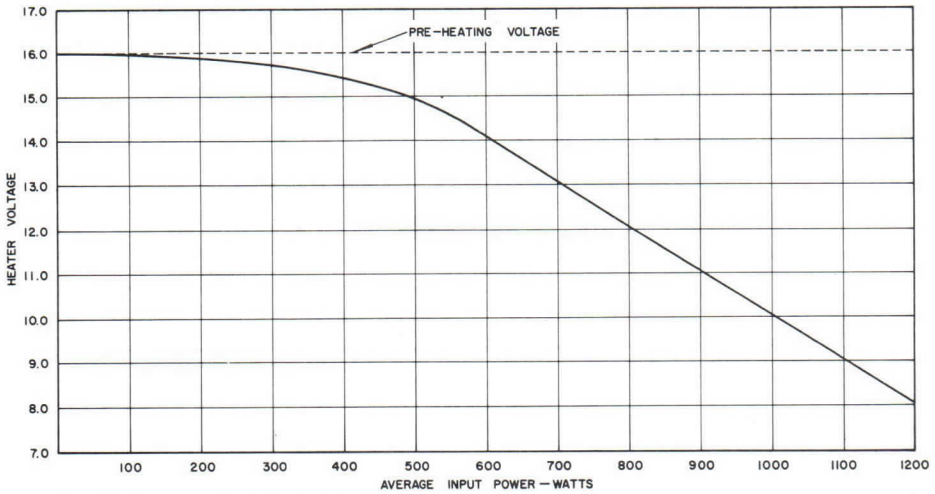

This schedule is valid for repetition rates of 300 p.p.s. or greater.
Maximum deviation of heater voltage not to exceed ± 10% of rated schedule.

RIEKE DIAGRAM

4J36/41 FREQUENCY-POWER CONTOUR DIAGRAM

Average locations of frequency convergence for the 4J36/41 are indicated on the circumference of the Rieke diagram. ▨

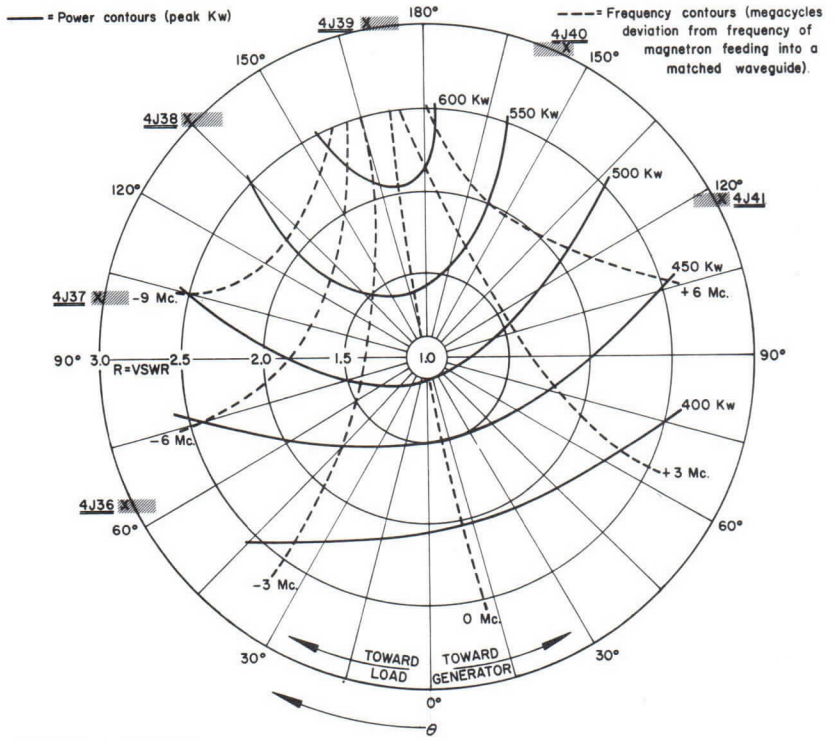

OPERATING CONDITIONS
prf = 500 pps
Du = 1.0 usec.
ib = 40 a
Magnetic field intensity = 2500 gauss

Recommended load for 4J36/41 at center of diagram.
R = Standing wave ratio in voltage.
θ = Distance of standing wave minimum from face of output flange of tube toward load.

FIGURE 1

Printed in U.S.A.

OPERATING CHARACTERISTICS

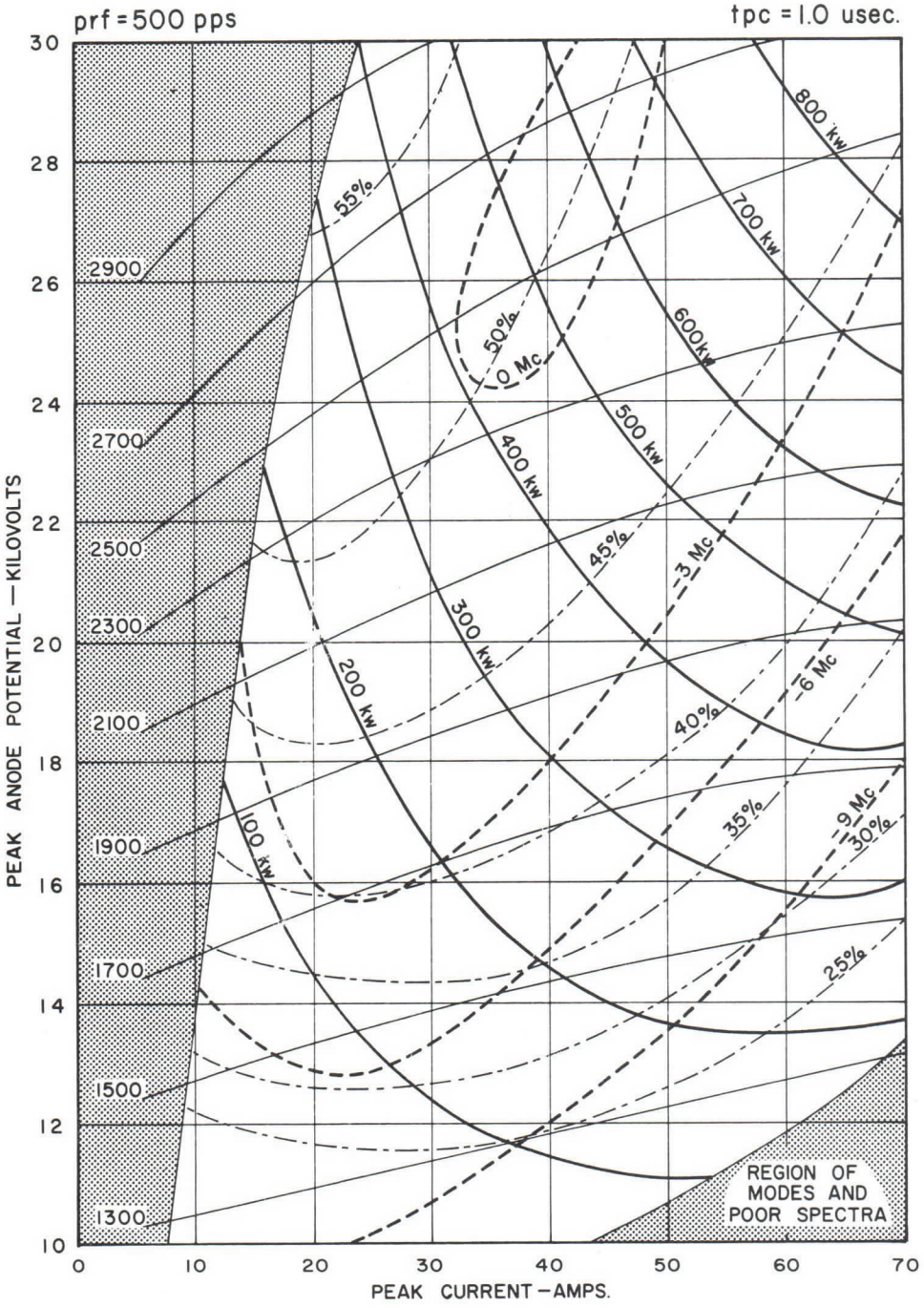

FIGURE 2

Printed in U.S.A.

MICROWAVE AND POWER TUBE DIVISION

RAYTHEON COMPANY

FOUNDRY AVE., WALTHAM 54, MASS.

VIBRATION CHARACTERISTICS

SPECTRUM WIDTH VS. ACCELERATION (G)

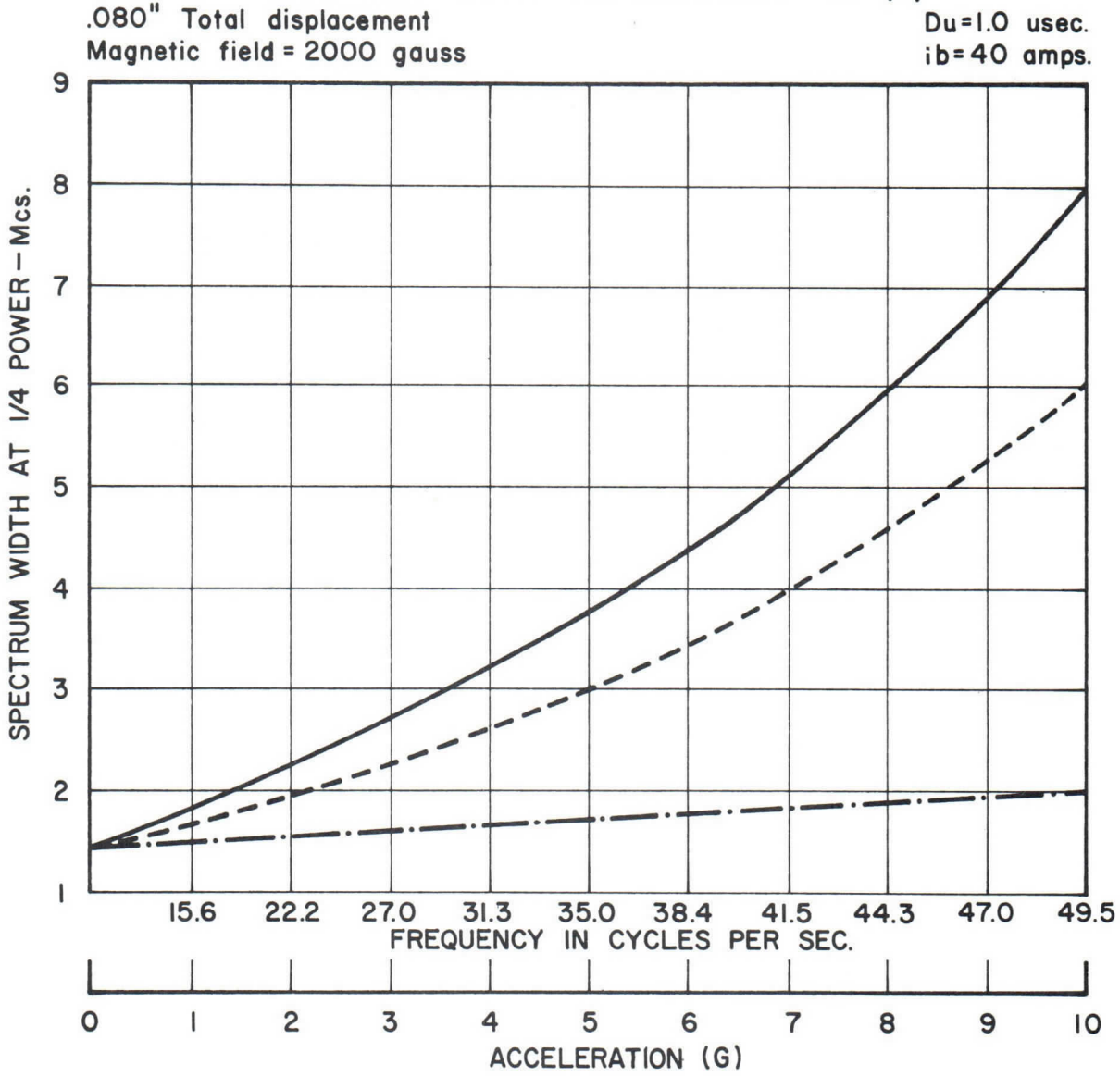

——— Displacement perpendicular to both length of cathode and filament leads.

– – – – Displacement perpendicular to filament leads and along length of cathode.

—·—· Displacement perpendicular to length of cathode and along length of filament leads.

FIGURE 3

Printed in U.S.A.

MICROWAVE AND POWER TUBE DIVISION

4J36/41 ELECTRON TUBE OUTLINE DRAWING

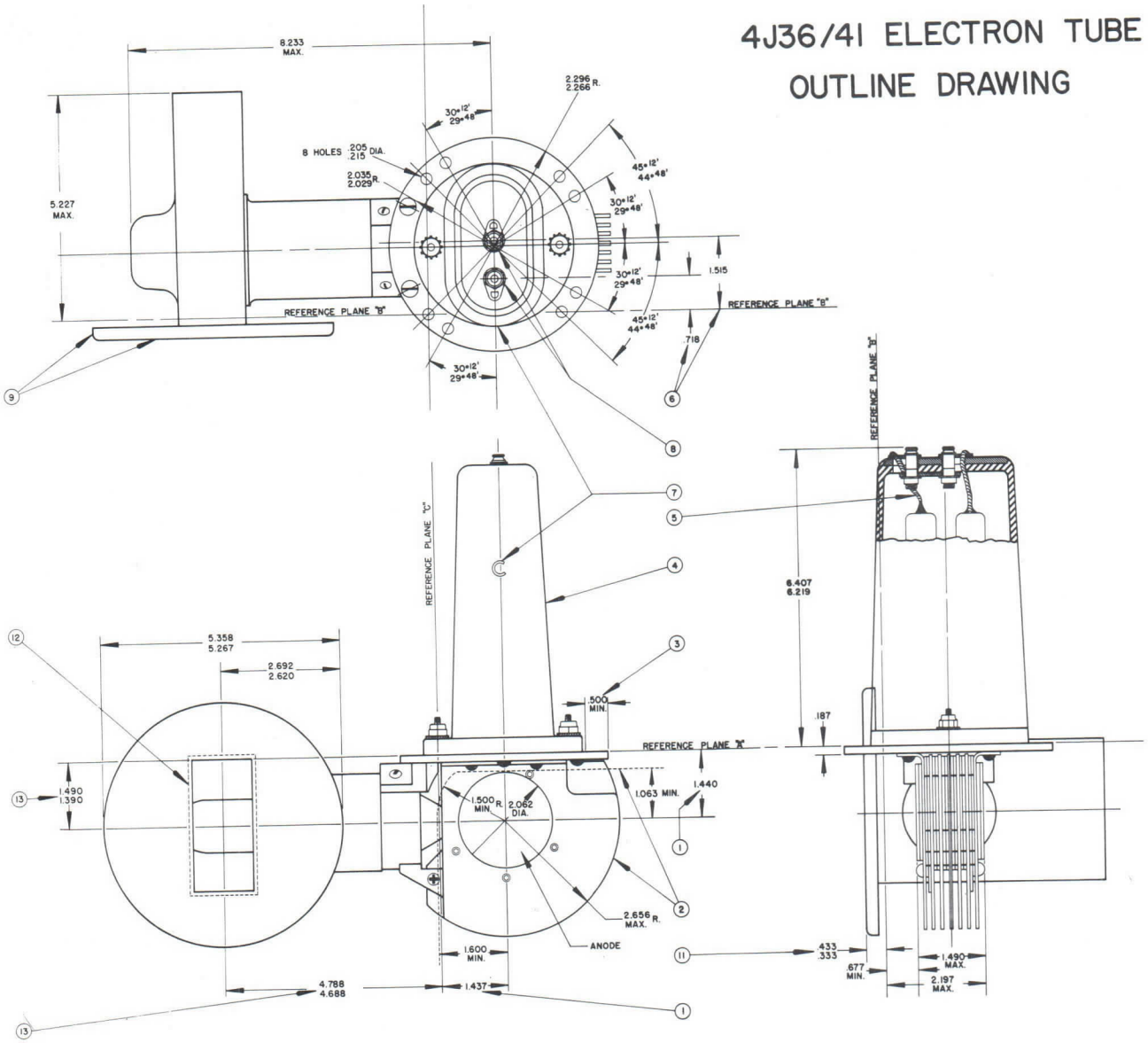

NOTES:

1) THE PERIPHERY OF THE ANODE SHALL BE WITHIN A 2.160 DIA. CIRCLE LOCATED AS SPECIFIED.
2) MAX. WIDTH SPECIFIED APPLIES TO AREA DEFINED BY BROKEN LINE AND CIRCUMFERENCE OF RADIATOR.
3) THIS ANNULAR AREA SHALL BE FLAT WITHIN .015 (A THICKNESS GAGE .125 WIDE SHALL NOT ENTER MORE THAN .250)
4) PYREX GLASS OR APPROVED EQUIVALENT.
5) LEAD SHALL BE FLEXIBLE AND SLACK.
6) THE JACK HOLES SHALL BE WITHIN A RADIUS OF .100 OF THE LOCATION SPECIFIED BUT SHALL BE SPACED .797 ± .015 WITH RESPECT TO EACH OTHER.
7) COMMON CATHODE CONNECTION MARKED WITH LETTER "C".
8) HEX. LOCKING HEAD BANANA PIN JACK 19/32 LONG, WITH HOLE .169 ± .005.
9) PAINT WITH BLACK HEAT RESISTANT, NON CORROSIVE PAINT. THE FOLLOWING SHALL BE FREE FROM PAINT: TOP SURFACE AND PARTS ABOVE MOUNTING PLATE, INSIDE AREA, FLANGE FACE AND EDGE OF WAVEGUIDE.
10) ALL SOLDER JOINTS ON MOUNTING PLATE SHALL BE SOLDERED TO PROVIDE HERMETIC SEAL.
11) TOLERANCE INCLUDES ANGULAR AND LATERAL DEVIATIONS OF THE SURFACE.
12) COMMERCIAL RECTANGULAR BRONZE TUBING 1 1/2 x 3 x .080 WALL.
13) APPLIES TO CENTER OF WAVEGUIDE.

Printed in U.S.A.

MICROWAVE AND POWER TUBE DIVISION

RAYTHEON COMPANY

FOUNDRY AVE., WALTHAM 54, MASS.

RAYTHEON

TECHNICAL INFORMATION

Excellence in Electronics

TYPE 4J54-4J59

The type 4J54-4J59 magnetron tube with integral magnet is a super-high frequency oscillator with internal resonant circuits, designed to operate in the 4.5 centimeter band. It is capable of delivering 300 kilowatts of peak power under pulsed conditions.

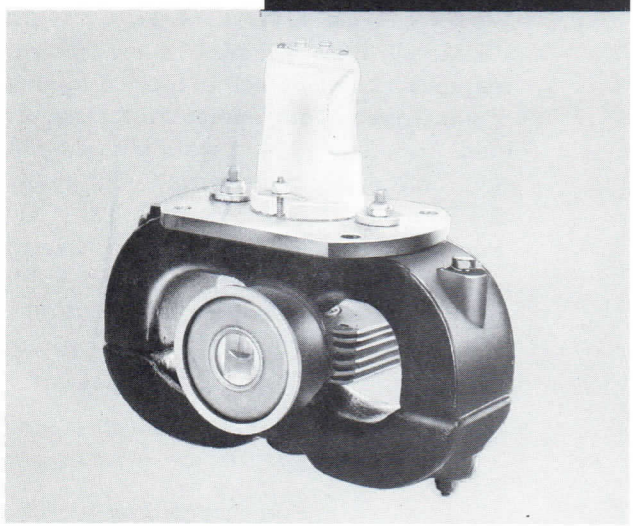

PULSED-TYPE MAGNETRON OSCILLATOR

GENERAL ELECTRICAL CHARACTERISTICS

Heater:

Indirectly heated, oxide coated, unipotential cathode.

Heater voltage — preheat	12.6 V
Heater current @ Ef = 12.6V	3.25A to 4.00 A
Minimum preheat time	2 Minutes

Maximum Ratings

Heater voltage (see heater schedule)	13.8 V
Peak anode voltage	25 kv
Peak anode current	35 a
Maximum duty cycle product	.001
Maximum pulse duration	2.5 μs
Average input power	650 W
Frequency pulling (at a standing wave ratio of 1.5 in voltage)	15 Mc
Anode temperature	100°C

The tube should not be operated longer than 5 microseconds in any 100 microsecond interval.

Minimum pressure at which output circuit will pass 250 kw. without breakdown . . . . . 0.5 Atmosphere

Typical Operation

Heater voltage (see operating notes — Heater schedule)	
Recurrence frequency	1000 pps
Pulse duration	1 μs
Peak anode voltage	17.5 kv
Peak anode current	30 a
Peak power output	250 kw
Maximum frequency change due to temperature	0.25 Mc/°C.
Frequency (fixed frequency in the following range)	
4J54	6875 — 6775 Mc
4J55	6775 — 6675 Mc
4J56	6675 — 6575 Mc
4J57	6575 — 6475 Mc
4J58	6475 — 6375 Mc
4J59	6375 — 6275 Mc

Printed in U.S.A.

MICROWAVE AND POWER TUBE DIVISION

RAYTHEON COMPANY

FOUNDRY AVE., WALTHAM 54, MASS.

DETAILED ELECTRICAL INFORMATION

OPERATING CHARACTERISTICS

Figure 1, Rieke Diagram, shows the power and frequency contours for a typical tube operating into a waveguide (commercial rectangular waveguide $\frac{3}{4}'' \times 1\frac{1}{2}'' \times \frac{1}{16}''$ wall) with standing wave ratio and phase angle varied. The pulling figure at 1.5 VSWR is 9.0 megacycles. It should be noted that this data is representative of average tubes and was taken under conditions simulating typical operating characteristics. Slight variations may be expected with different tubes in different systems.

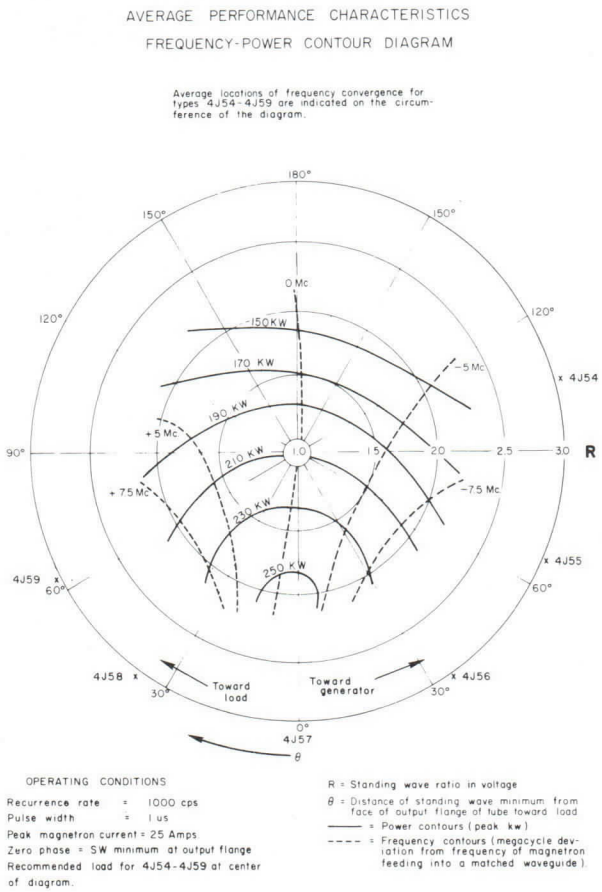

Figure 1

Figure 2, Operating Characteristics, shows peak power output, frequency, efficiency change, and peak anode potential contours as a function of peak current for a typical tube.

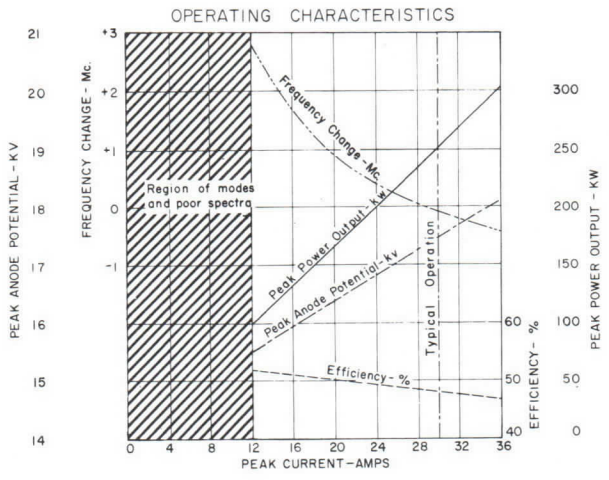

Figure 2

Figure 3, Vibration Characteristics, shows the change of frequency (effective spectrum width) as a function of sinusoidal acceleration (G) for a typical tube.

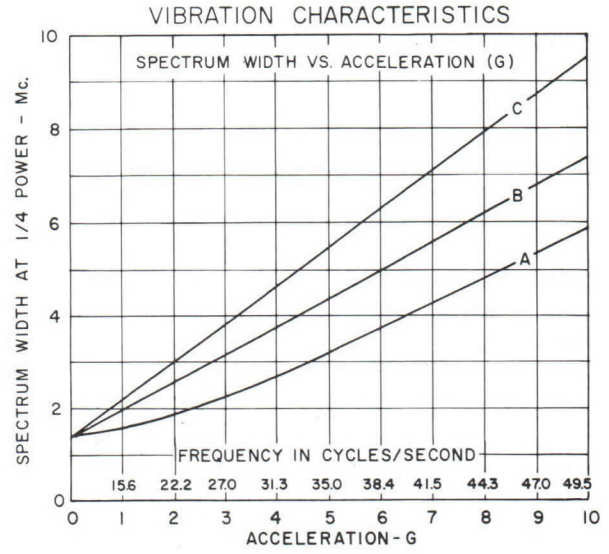

0.80" Total displacement
Pulse duration = 1 us
Recurrence rate = 1000 pps
Peak magnetron current = 25a.

Curve A = Displacement perpendicular to lead and cathode and parallel to plane of magnet.

Curve B = Displacement perpendicular to lead and cathode and perpendicular to plane of magnet.

Curve C = Displacement parallel to lead and cathode and parallel to plane of magnet.

Figure 3

OPERATING NOTES

Satisfactory operation of the tube will depend largely on the waveform characteristics of the input voltage pulse which should fulfill the following conditions:

Voltage time of rise — 0.1 to 0.2 microsecond

Voltage time of fall — less than 0.4 microsecond

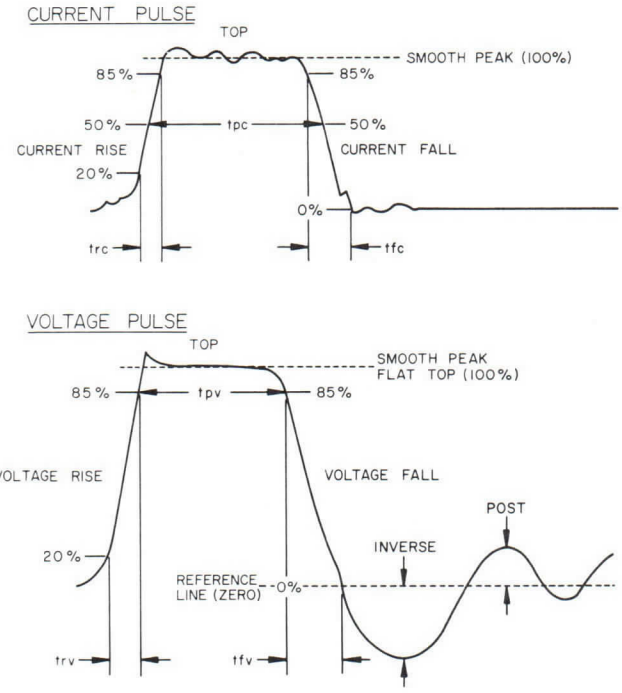

Figure 4

Current variation — less than ±10% of average pulse current

A poor pulse shape may cause excessive frequency modulation and general instability.

The maximum ratings with respect to pulse voltage, pulse current, and pulse duration represent limiting values for each quantity independently. They do not form a set of values at which the tube can be satisfactorily operated.

Adequate forced air should be provided to keep the anode temperature of the tube less than 100°C. Forced air should be supplied to the open end of the protector in order to dissipate excessive temperatures that ordinarily develop in this region.

The life of the 4J54-4J59 packaged magnetron is limited to the usefulness of the cathode. In general, magnetron life is inversely proportional to pulse width and duty cycle. It is therefore recommended that the tube be operated at a low recurrence rate when high peak power is required. The use of a transmission line not properly matched to the magnetron is another factor reducing the life of the tube. This is due to excessive cathode heating.

In starting a new magnetron a temporary unsteadiness in its operation may result. It is recommended that the tube be "seasoned" under prevailing conditions of oscillation to the point where it becomes stable and normal operating values are obtained.

Heater voltage (12.6 volts) should be turned on two minutes before the high voltage pulsations are applied and then reduced in proportion to the average power input according to the schedule below. Failure to start the tube at the rated heater voltage, or to improperly reduce the heater voltage after oscillation starts, may seriously reduce the life of the tube.

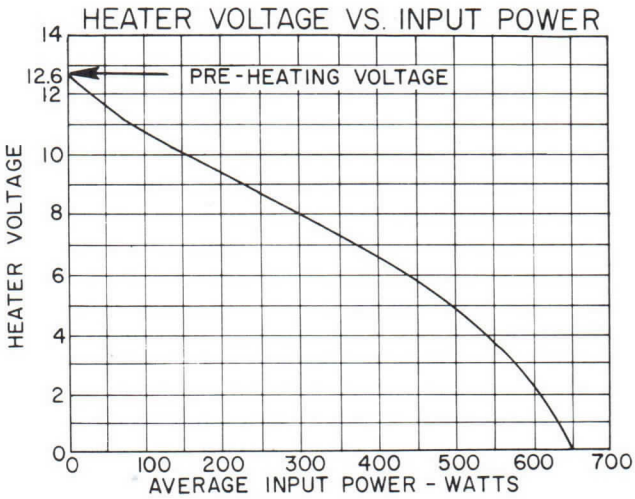

NOTES:

This schedule is valid for repetition rates of 325 pps or greater.

Maximum deviation of heater voltage not to exceed ± 10% of rated schedule.

Figure 5

DETAILED MECHANICAL INFORMATION

Extreme care should be used in handling and mounting the 4J54-4J59 packaged magnetron. The integral magnet has a protective coating to minimize the loss of magnetism resulting from direct contact with magnetic materials. When the tube is mounted in a system, the spacing between the magnet and other magnetic material should be at least 2 inches, along the circular section and at the poles.

The outline drawing shows the principal external dimensions and arrangement of the magnet, cooling fins, heater, common heater-cathode terminals, and R.F. output coupling flange. The letter "C" etched on the protector indicates the common heater-cathode terminal which is connected internally to one end of the heater. It is this cathode terminal which is connected to the pulsating high voltage. No direct connection is made to the output circuit of the tube.

The tube is supported by the mounting flange and may be operated in any orientation.

The output circuit of the tube is designed for optimum frequency insensitivity and breakdown characteristics, and is matched so that little or no electrical reflection exists in any portion of the coupling.

The R.F. output flange is suitable for application where a pressure seal is required.

Net weight of 4J54-4J59 . . 11 Lbs. 12 Oz.

NOTES FOR OUTLINE DRAWING

1 THE JACK HOLES SHALL BE WITHIN A RADIUS OF .023 OF THE TRUE LOCATION SPECIFIED BUT SHALL BE SPACED .500 ± .010 WITH RESPECT TO EACH OTHER. THE AXIS OF THE HOLES SHALL BE PERPENDICULAR TO REFERENCE PLANE "A" WITHIN 3°.

2 NYLON PORCELAIN OR APPROVED EQUIVALENT.

3 INDICATE COMMON CATHODE CONNECTOR BY LETTER "C".

4 ALL SURFACES BELOW TOP SURFACE OF MOUNTING PLATE TO BE COVERED WITH BLACK PAINTED FINISH EXCEPT AS SPECIFIED BY NOTE 14.

5 TOLERANCE INCLUDES ANGULAR AND LATERAL DEVIATION OF THE SURFACE.

6 1/32 ASBESTOS GASKET (OPTIONAL).

7 NO PORTION OF TUBE MUST EXTEND OUTWARD BEYOND THIS SURFACE.

8 HEX HEAD BANANA PIN LOCKING JACK 19/32 LONG, HOLE .169 ± .005.

9 MEASUREMENT ON CATHODE STEM TEMPERATURE IS MADE BY LOCATING THERMOCOUPLE ON THE KOVAR, ADJACENT TO THE KOVARGLASS SEAL, ON THE CATHODE STEM. THERMOCOUPLE IS FASTENED WITH SAUEREISEN CEMENT OR EQUIVALENT.

10 HEATER CONNECTION.

11 ANY PORTION OF THE ASSEMBLY EXTENDING ABOVE THIS SURFACE SHALL BE WITHIN A 1.109 RADIUS OF THE TRUE CENTER OF THE PLATE EXCEPT BOLT HEADS AND WASHERS. BOLT HEADS AND WASHERS SHALL LIE WITHIN A 1.250 DIA. CIRCLE CENTERED AS SHOWN.

12 APPLIES TO LOCATION OF AXIS OF OUTPUT FLANGE ONLY.

13 APPLIES TO LOCATION OF CENTERS OF JACK HOLES, BOLTS AND WASHERS ONLY.

14 THESE SURFACES TO BE FREE FROM PAINT.

15 MINIMUM CLEARANCE BETWEEN AXIS OF PLATE HOLES AND SURFACE OF MAGNET COVERING TO BE .312.

16 REFERENCE PLANE "A" IS DEFINED AS A PLANE PASSING ALONG THE FACE OF THE MOUNTING PLATE.

17 REFERENCE PLANE "B" IS DEFINED AS A PLANE PERPENDICULAR TO PLANE "A" PASSING THROUGH THE CENTER OF HOLES AS SHOWN.

18 REFERENCE PLANE "C" IS DEFINED AS A PLANE MUTUALLY PERPENDICULAR TO PLANES "A" & "B" PASSING THROUGH THE CENTER OF THE HOLE AS SHOWN.

19 RECOMMENDED AIR GAP 1/32 BETWEEN OUTPUT FLANGE OF TUBE AND CHOKE COUPLING.

Printed in U.S.A.

MICROWAVE AND POWER TUBE DIVISION

RAYTHEON COMPANY

FOUNDRY AVE., WALTHAM 54, MASS.

4J54-4J59 ELECTRON TUBE OUTLINE DRAWING

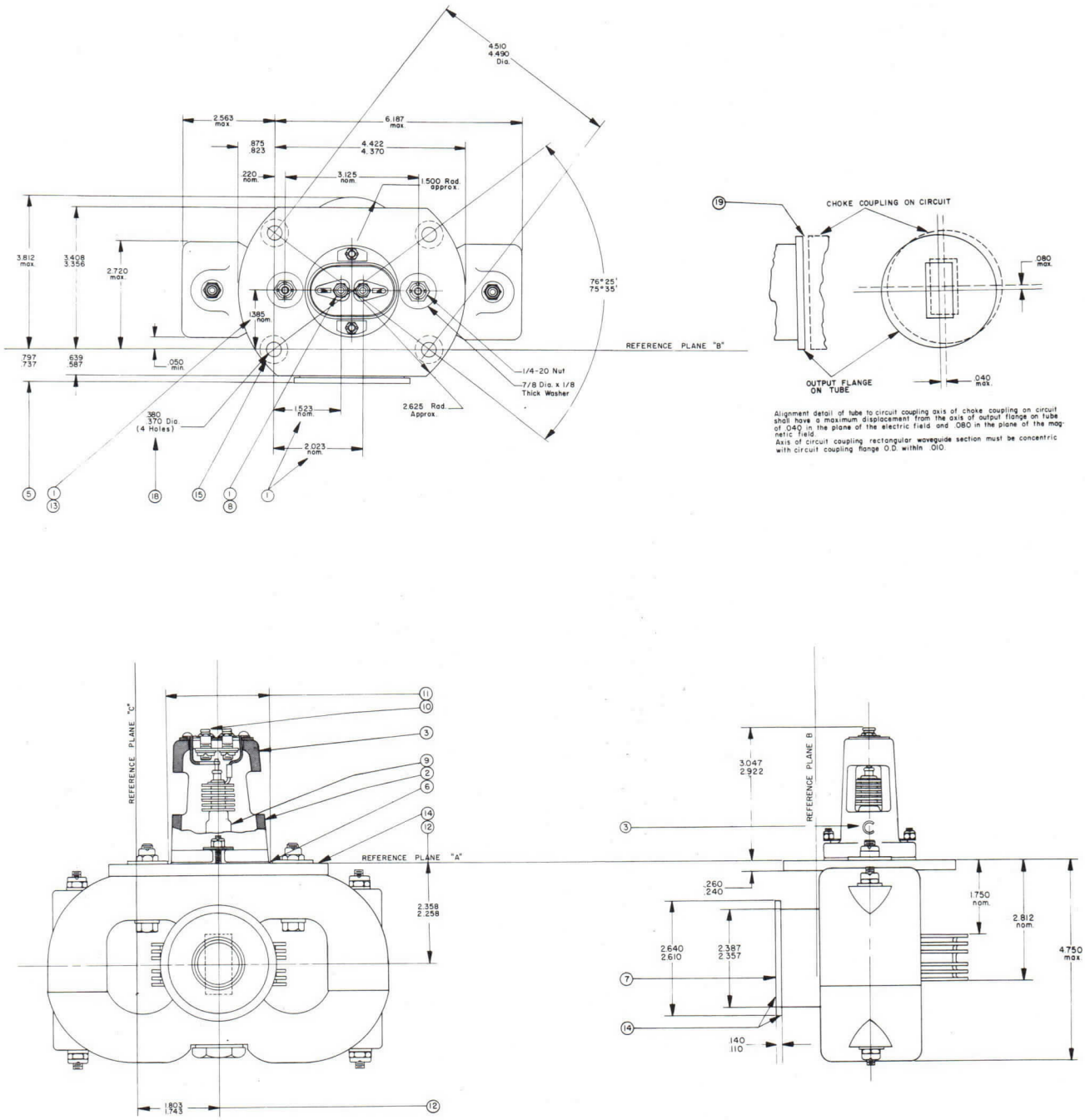

TYPE 5J26

GENERAL DESCRIPTION

The RK5J26 magnetron is a tunable pulsed-type oscillator operating between the frequencies of 1220 to 1350 megacycles with a minimum peak power output of 400 kilowatts. It is an unpackaged, coaxial output type tube requiring forced air cooling and is designed for coupling to standard 1⅝" coaxial line.

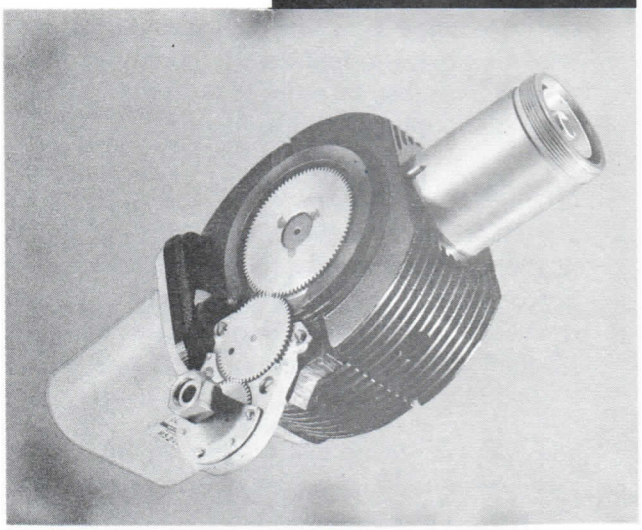

TUNABLE PULSED-TYPE OSCILLATOR

GENERAL PRECAUTIONS

Reliable operation and maximum magnetron life can be achieved only if the over-all radar transmitter is designed with the magnetron characteristics and peculiarities clearly in mind. This technical data should be used as a guide for equipment designers rather than the Government purchase specifications.

There are many problems peculiar to magnetrons in general which must be given special consideration in system design. These problems are discussed in detail on the following pages. If for any reason it is desirable to operate the 5J26 under conditions other than those recommended in this technical data sheet, the Magnetron Applications Engineering Group at Raytheon should be consulted.

GENERAL CHARACTERISTICS

ELECTRICAL

Heater Characteristics

Indirectly heated, oxide coated, unipotential cathode

Heater voltage	23.5 Volts
Heater current	2.0 — 2.4 Amperes
Minimum heating time	3 Minutes

Typical Operation

Heater voltage	15.5 Volts
Magnetic field intensity	1400 Gauss
Duty cycle product	.001
Pulse duration	1 to 5 Microseconds
Peak anode voltage	28.2 Kilovolts
Peak anode current	46 Amperes
Peak power output	550 Kilowatts
Frequency, tunable	1220-1350 Megacycles

MECHANICAL

Over-all dimensions	See Outline Drawing
Net Weight	19 lbs. 14 oz.
Mounting	Any position
Cooling	Forced air

Printed in U.S.A.

HEATER

For typical operation, the tube must be preheated at 23.5 volts for a minimum of 3 minutes. Heater voltage must then be reduced to 15.5 volts immediately after applying high voltage.

Operating Notes

The RK5J26 may exhibit initial instability when first operated after a prolonged period of non-operation or storage. Tests for initial instability are made in the factory and "missing r.f. pulses" resulting from such instability are less than 2%.

The following procedure for "seasoning" a tube is recommended. The tuning mechanism should be adjusted until the approximate highest frequency position is reached. After a three minute preheat interval, apply pulse voltage (preferably of one microsecond duration) until one half of normal operating power is reached.

Simultaneously reduce heater voltage. As soon as the average anode current indicates stable operation, increase pulse voltage until typical operating conditions are reached.

As soon as the tube is operating stably, gradually adjust the tuning mechanism until the lowest frequency end of the band is reached. After operating stably at this frequency, normal operating values should be obtained.

It is recommended that the magnetic field be produced between circular pole tips 4.0 inches in diameter separated by 3.64 inches and located concentrically along the axis of the tube. It should be emphasized that improper location of the tube within the magnetic field may result in instability and general poor performance. The tube should be operated with the north-seeking pole of the magnet adjacent to the cathode.

Adequate forced air should be provided to keep the anode temperature of the tube less than 100° Centigrade.

The life of the RK5J26 magnetron is limited by the usefulness of the cathode. In general, magnetron life is inversely proportional to pulse duration and duty cycle. It is therefore recommended that the tube be operated at low recurrence frequency when high peak power is required. The use of a transmission line not properly matched to the magnetron is another factor reducing the life of the tube. This is due to excessive cathode heating.

PULSE CHARACTERISTICS

The 5J26 magnetron has been designed and tested for operation at the following pulse conditions. See Figure 1

tpc = 1.0 usec @ .001 Du
trv = 0.2 — 0.3 usec measured 20% to 85%
tfc = 0.25 us maximum
tpc = 4.2 ± 10% usec @ .001 Du
trv = 0.3 — 0.5
tfc = 1.2 us maximum

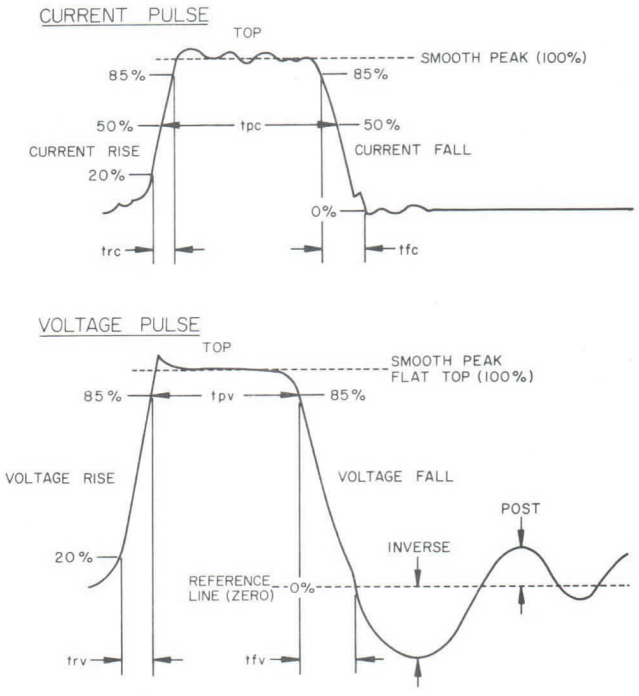

Figure 1

If operation at pulse conditions different from those given above is anticipated, the manufacturer should be consulted for further information.

No spike or ripple should exceed ± 10% of the average peak value of voltage or current. Inverse voltage should not exceed 35% of the forward voltage. Post voltages should be held to a minimum as they may cause post-pulse noise or oscillation and increased leakage current.

Optimum tube performance will be realized only if proper consideration is given to pulse shaping.

Voltage rise times faster than specified will result in moding and/or arcing and cannot be tolerated. Excessive ripple at the top of the current pulse causes frequency pushing and broadening of the spectrum. Most magnetrons draw a small amount of leakage or diode current at anode voltages as low as 100 volts. This leakage current may amount to several milliamperes if the current fall time is greater than specified, and at a given duty cycle the calculated peak current will be in error. It is therefore advisable that equipment design effect as rapid a decay as possible to prevent leakage. It is also advisable to prevent the positive voltage backswing from becoming negative again.

Optimum pulse shaping can best be achieved by treating the magnetron, pulse transformer, and pulse line as a unit; hand-tailoring the line and transformer for magnetron compatibility is recommended.

POST PULSE NOISE

It is possible that some 5J26 magnetrons may exhibit RF noise output unless the post pulse backswing is controlled very closely. A backswing in the negative or the positive direction of several hundred volts may be enough to cause an RF output in the order of a microwatt. If this low level energy is fed directly to the receiver, noise or false targets will appear on the radar indicators. By judicious matching of the pulse line, pulse transformer and magnetron, and by the use of a clipper tube across the primary of the pulse transformer, the voltage backswing can be controlled so that its magnitude is quite small; and more important, that the backswing is completely damped out within a very short interval after the pulse.

OPERATING CHARACTERISTICS

Figure 2, Average Performance Characteristics, shows the magnetic field, peak power output, and efficiency as functions of pulsed voltage and current. Manfacturing limits may result in slight variations with different tubes but general characteristics remain the same.

RK5J26 AVERAGE PERFORMANCE CHARACTERISTICS

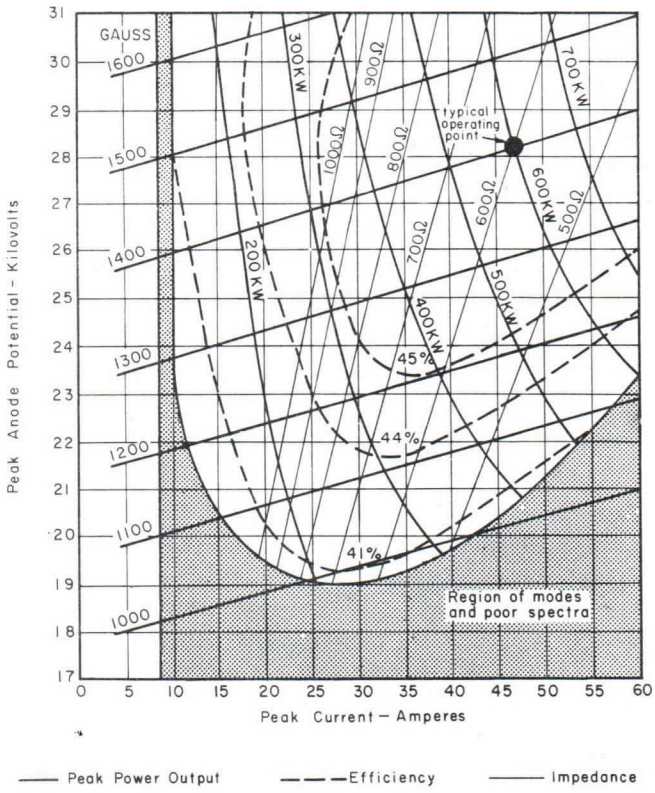

Figure 2

Figure 3, Average Tuning Characteristics, shows the variation of peak power output, frequency, and anode potential over the tuning range of the magetron.

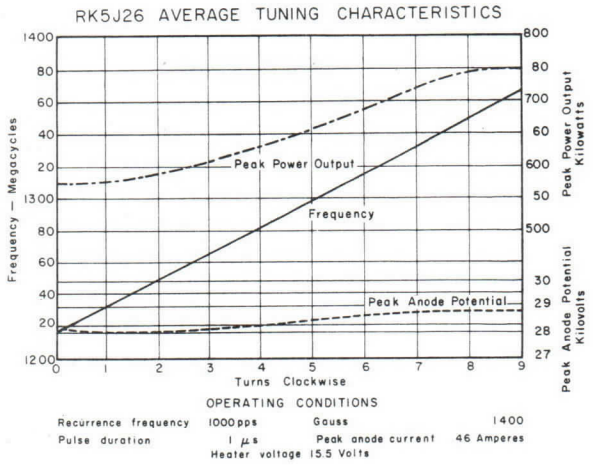

Figure 3

DETAILED MECHANICAL INFORMATION

The Outline Drawing shows the principal external dimensions and the arrangement of heater, cathode, output terminals, and tuning assembly. The "C" etched on the base tube insulator indicates the common heater-cathode terminal. It is this cathode terminal which is connected to the pulsating high-voltage.

The tuning gear assembly provides the variable frequency control of the 5J26 magnetron. The tuning assembly includes a stopping device at the specified frequency extremes. The maximum torque necessary to tune the assembly does not exceed 8 inch pounds. All electrical characteristics are specified with relation to the rotation of the square holes in the assembly.

The tube may be operated in any position. The output pipe is designed for coupling to 1⅝" O.D. standard coaxial transmission line. (See operating notes.)

NOTES FOR OUTLINE DRAWING

1 The concentricity of these dimensions with respect to each other shall be considered satisfied if they meet the following conditions: concentric tubes and plug measuring 2.315 I.D., 1.926 O.D. x 1.600 I.D. and .530 dia. must pass freely into or over these parts to the distances indicated in Notes 2 and 5.

2 Depth to which the 1.926 O.D. x 1.600 I.D. tube of Note 1 must penetrate.

3 Zone "A-A" must be capable of being inserted between two parallel planes 3.640 apart; which are equidistant from the axis of A 2.315 dia. tube into which the support tube is inserted. The locating pin must fall between parallel planes .150 apart equidistant from the "X-X" axis and normal to the above noted planes 3.640 apart.

4 This countersink shall be capable of accepting a cone having a 60° included angle and base dia. of .234 and shall reject a similar cone having a base dia. of .254.

5 Depth to which the .530 dia. plug of Note 1 must penetrate.

6 Rounded edges.

7 Contour of glass. May vary from that shown within limiting bounds defined by concentric cylinders and plugs referred to in Note 1.

8 Gears shall be underflush with respect to gear housing.

9 The opening in the support tubing shall be protected by a dust cover when not in use.

10 Jack holes .169 ± .005 x $^{19}/_{32}$ deep min. not including tapered section.

11 Cathode-heater lead identification.

12 All surfaces in this area to have a black heat resistant finish except gears, gear bearing surfaces, gear supports and gear housing.

13 Number of radiator fins may vary.

14 2.312—16NS 5 full threads minimum.
Max. maj. dia. 2.1320
Min. maj. dia. 2.2980
Max. pitch dia. 2.2714
Min. pitch dia. 2.2629
Max. minor dia. 2.2353

15 Reference Plane II shall be parallel to either face of the anode. Reference Planes II and III shall be at right angles to each other and intersect at the axis of the support tubing.

16 The jack shall be concentric with respect to the hole in the glass boot within .062. The centers of the holes in the glass boot shall be within a radius of .062 of the specified centers.

17 These two gears rotate clockwise when increasing frequency.

18 Complete frequency range covered in approx. 9½ turns of driving gear.

19 Visible movable parts must be free from corrosion, paint or other surface imperfections. The tuning mechanism shall operate over the entire mechanical range with a maximum torque of 8 inch pounds applied to the driving gear.

20 Lubricant to appear on visible bearing surfaces of all movable parts.

21 Dimensions without tolerances are for reference purposes only and need not be inspected.

22 All screws to be non-magnetic, non-corrosive material or to have non-corrosive heat resistant finish. Screw heads may be hexagon, hexagon socket or straight slotted.

23 Matched arrows indicate approximate midband frequencies.

24 This round hole shall be concentric with the square hole within .003.

25 In this zone there shall be a cylindrical clearance of .360 dia. centered on axis of rotation of driver gear.

26 This dimension applies to the tip of the radiator fins.

COUPLING TO THE R.F. OUTPUT SYSTEM

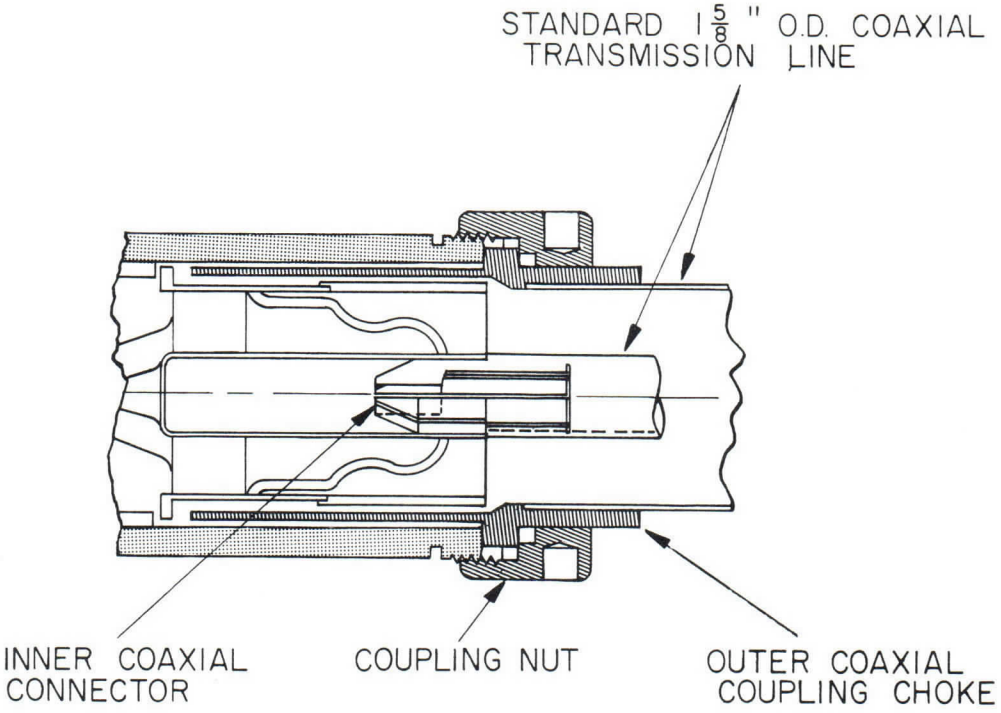

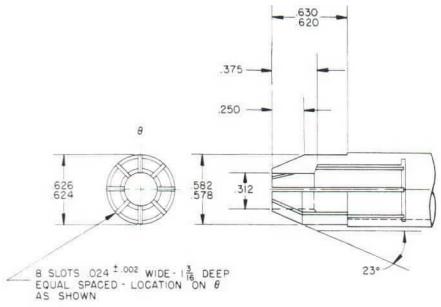

INNER COAXIAL CONNECTOR

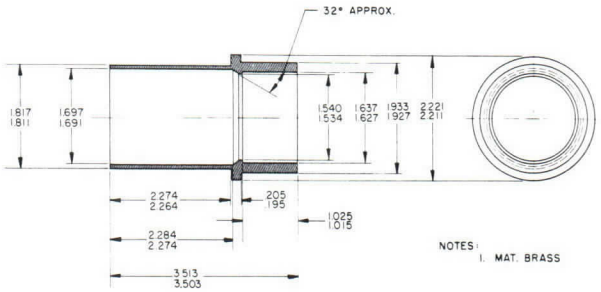

OUTER COAXIAL COUPLING CHOKE

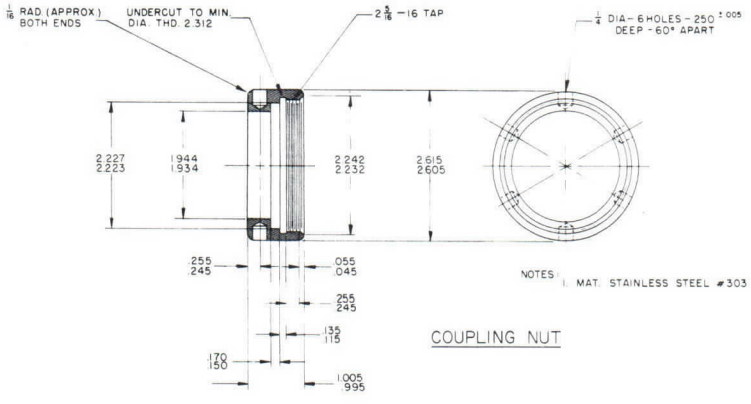

COUPLING NUT

RK5J26 ELECTRON TUBE OUTLINE DRAWING

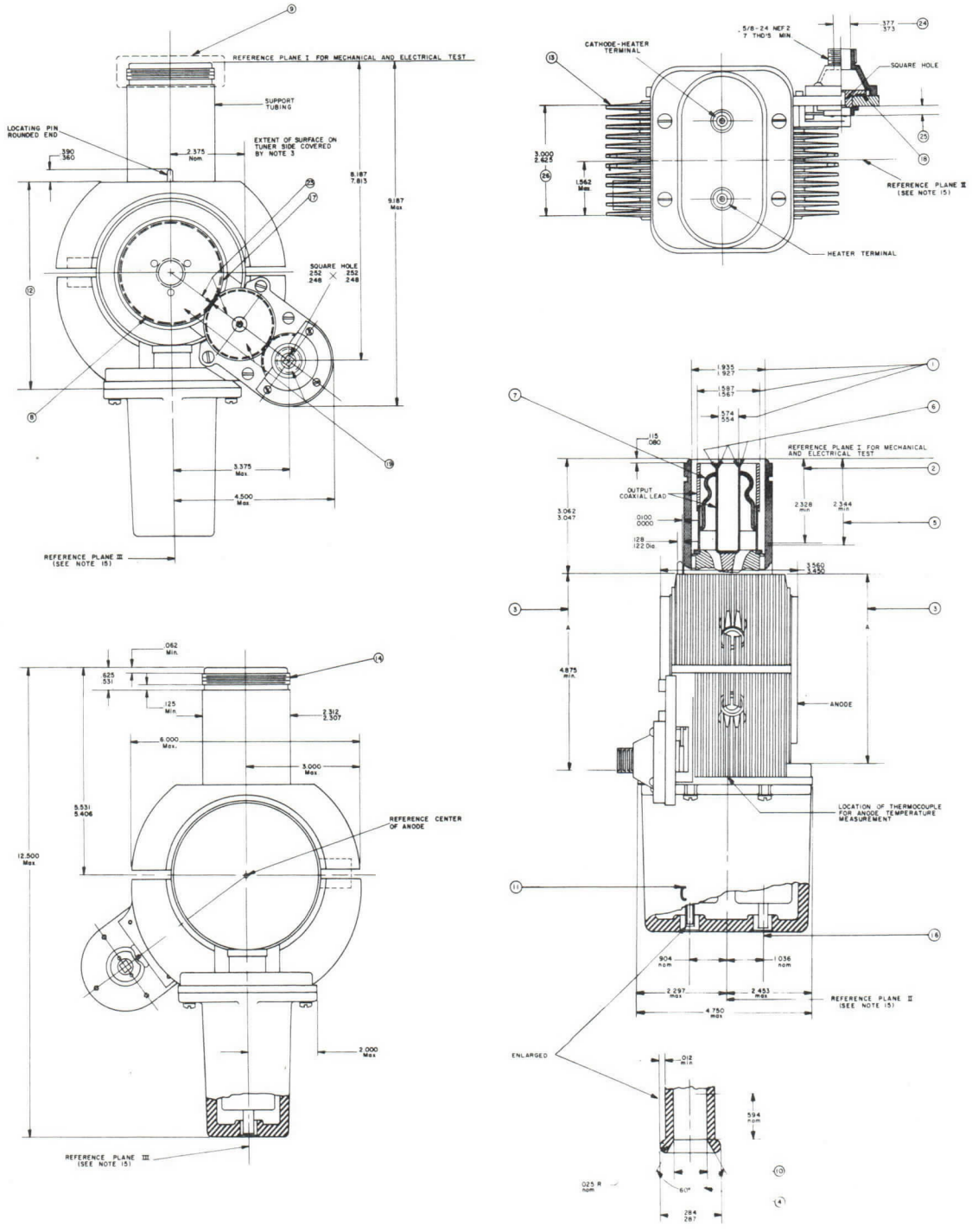

RAYTHEON

TECHNICAL INFORMATION

MAGNETRON OSCILLATOR

TENTATIVE DATA

Excellence in Electronics

TYPE QK456

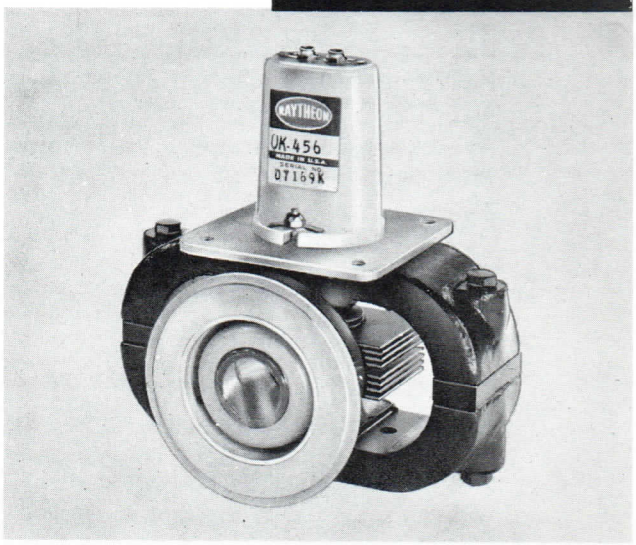

The QK456 magnetron is a fixed frequency pulsed type oscillator operating in the frequency region of 5380 to 5420 megacycles with a nominal peak power output of 90 kilowatts. It is an integral magnet, waveguide output type tube requiring forced air cooling and is designed for coupling to standard 1" x 2" waveguide.

GENERAL PRECAUTIONS

Reliable operation and maximum magnetron life can be achieved only if the over-all radar transmitter is designed with the magnetron characteristics and peculiarities clearly in mind. This technical data should be used as a guide for equipment designers rather than the MIL-E-1B Government purchase specifications.

There are many problems peculiar to magnetrons in general which must be given special consideration in system design. These problems are discussed in detail on the following pages. If for any reason it is desired to operate the QK456 under conditions other than those recommended in this technical data sheet, the company's Magnetron Application Engineering Group should be consulted.

GENERAL CHARACTERISTICS

ELECTRICAL

Heater Characteristics

Heater Voltage (preheat)	6.3 V
Heater Current @ 6.3 V	1.0 — 2.0 A
Minimum Preheat Time	3 minutes

Maximum Ratings

Heater Voltage	7.5 V
Heater Current	6.0 A (surge)
Peak Anode Voltage	16 kv
Peak Anode Current	20 a
Peak Power Input	320 W
Pulse Duration	3.0 usec
Voltage Pulse Rise Time	.10 min. —.20 max.
Duty Cycle	.001
VSWR	1.5/1
Pulling @ VSWR = 1.5/1	15 Mc
Anode Temperature	125°C
Output Pressurization	45 psia
Input Bushing Pressurization	45 psia

The values specified above must not be exceeded under any service condition. The ratings are limiting values above which the serviceability of any individual tube may be impaired. It does not necessarily follow that combinations of absolute maximum ratings can be attained simultaneously.

Printed in U.S.A.

MICROWAVE AND POWER TUBE DIVISION

RAYTHEON MANUFACTURING COMPANY

FOUNDRY AVE., WALTHAM 54, MASS.

TENTATIVE DATA

Typical Operation

Heater Voltage (operate)	4.5 V
Pulse Duration	2.0 usec ±10%
Duty Cycle	.0008
Peak Anode Voltage	14.2 kv
Peak Anode Current	14.0 a
Average Anode Current	11.2 mAdc
Peak Power Output	105 kw
Average Power Output	84 W
Useful Range of Peak Current	10-20 a
VSWR	1.1/1
Frequency Region	5386-5420 Mc

MECHANICAL

Over-all Dimensions	See Outline Dwg.
Net Weight	7.7 lbs. (approx)
Mounting Position	Any
Output Coupling	1" x 2" Choke Flange
Cooling	Forced Air
Vibration (non-operating)	50 cycles @ 10G
Shock (non-operating)	15G
Magnet Protection	2"

DETAILED ELECTRICAL INFORMATION

HEATER

The cathode must be preheated at Ef = 6.3 V ±10% for a period of at least 3 minutes prior to the application of anode voltage. Immediately subsequent to the application of anode high voltage, the heater voltage must be reduced to 3.0 volts. For combinations of pulse widths and duty cycles different from those shown under typical operation, the manufacturer must be consulted for optimum heater schedules. Optimum operation and maximum tube life will be realized only if provisions are made to maintain the specified heater voltage within the ±10% tolerance. Heater current surges in excess of 6 amps cannot be tolerated.

STARTING NEW MAGNETRON

In starting a new magnetron or one that has not been operated for some time, sparking and some instability may occur. Sporadic arcing will not harm the magnetron, but if the tube tends to arc continuously, the following seasoning procedure is recommended:

1. Preheat magnetron for 3 minutes.
2. Gradually raise the magnetron current to a level just below that which produces continuous arcing. Allow the magnetron current to remain at this level for a few minutes until the arcing begins to decrease.
3. Repeat step #2 for succeedingly higher levels of magnetron current until the desired operating point is reached.

It is usually possible to attain the desired operating point within 15 minutes.

PULSE LENGTH AND DUTY CYCLE

The QK456 magnetron has been designed and tested for operation at the following pulse condition: See Fig. 1.

tpc = 2.0 ±10% usec @ DU = .001

No spike or ripple shall exceed ±7% of the average peak value of voltage or current. Inverse voltage should not exceed 20% of the forward voltage. Post voltages should be held to a minimum as they may cause post pulse noise or oscillation.

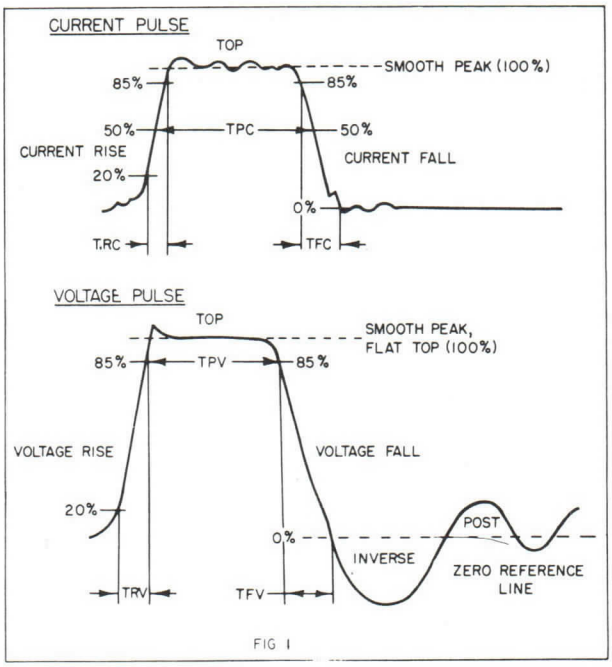

FIG 1

MICROWAVE AND POWER TUBE DIVISION

RAYTHEON MANUFACTURING COMPANY

Short pulse operation is currently under investigation and the preliminary results indicate that operation at the following pulse width and duty cycle is feasible:

tpc = 0.1 usec @ Du = .0004

If operation at the short pulse condition is anticipated, the manufacturer should be consulted for further information.

Optimum tube performance will be realized only if proper consideration is given to pulse shaping. Voltage rise times greater than maximum specified will result in moding and/or arcing and cannot be tolerated. Excessive ripple on the top of the current pulse causes frequency pushing and broadening of the spectrum. Most magnetrons draw a small amount of leakage or diode current at anode voltages as low as 100 volts.

This leakage current may amount to several milliamperes if the voltage fall time is greater than 2.5 usec, and at a given duty cycle the calculated peak current will be in error. It is therefore advisable that the equipment design effect as rapid a decay time as possible. Inverse and post voltages may result in undesirable noise radiation and should be damped. Judicious matching of the pulse-forming network and pulse transformer will in most cases reduce post and inverse voltage amplitudes sufficiently to eliminate noise difficulties. For short-range radar applications where noise due to inverse and post voltages is most troublesome, it is recommended that a diode clipper be placed across the primary of the pulse transformer.

Optimum pulse shaping can best be achieved by treating the magnetron, pulse transformer, and pulse line as a unit; hand-tailoring the line and transformer for magnetron compatibility is recommended.

If operation at both long and short pulses is anticipated, the pulse transformer should be designed to optimize the more important pulse.

COOLING

Forced air cooling of the QK456 magnetron is required. Anode temperatures in excess of 125°C cannot be tolerated. The flow rate necessary to maintain the anode temperature within the maximum specified limit will be dictated by the ambient temperature. Fig. 2 is a plot anode temperature and back pressure as a function of air flow.

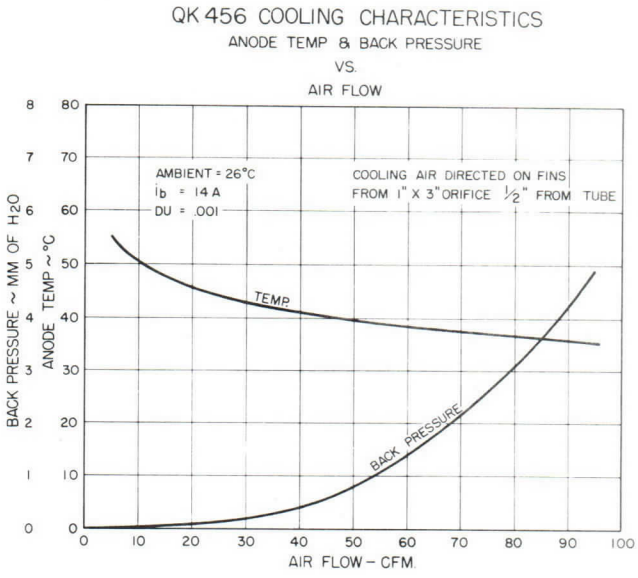

FIG 2

LOAD AND LINE LENGTH CONSIDERATIONS

If an oscillator is loaded by an electrically long transmission line which is terminated by an impedance different from that of the line, the impedance of the load will be a periodic function of frequency. Operation of the oscillator under these conditions gives rise to phenomena collectively termed "long-line effects." Although these phenomena are usually associated with an electrically long transmission line, they can also be exhibited by a short line terminated by a sufficiently mismatched impedance. In any case the extent to which the long-line effect is exhibited depends on the amount of coupling between the

load and oscillator as well as the degree of mismatch in the line. Fig. 3 shows the relation between the VSWR and the line length with respect to the critical condition of skip. This skip condition occurs when the tube is changing frequency (thermal drift) and causes breaks in the ordinarily smooth drift curve. This condition is not critical in the QK456 because the tube is not tunable. Of far more serious consequence, however, is the broadening and deterioration of the spectrum caused by this phenomena. It may in some cases permit spectra of two frequencies to appear simultaneously. By operating into loads specified under the region of recommended operation in Fig. 3, satisfactory operation should be obtained. In this region no significant broadening of the spectrum will take place, although for close control of bandwidth the VSWR should be kept as low as possible.

More detailed information on the theories and remedies of long-line effects are available upon request.

LOAD & LINE LENGTH CONSIDERATION

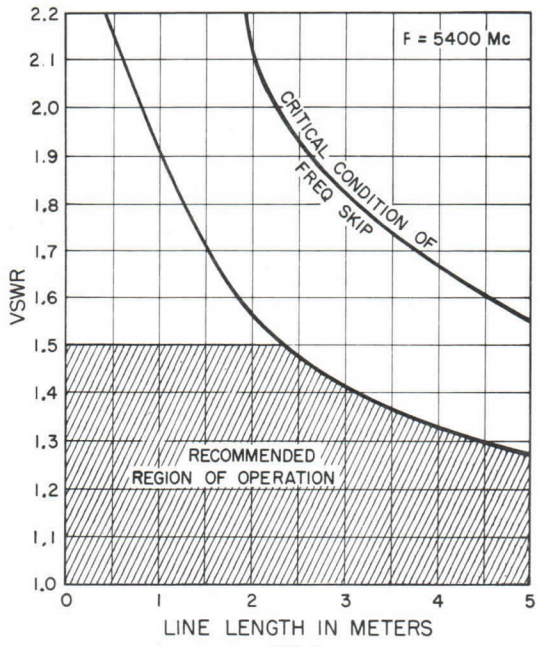

FIG 3

FREQ. DRIFT CHARACTERISTICS

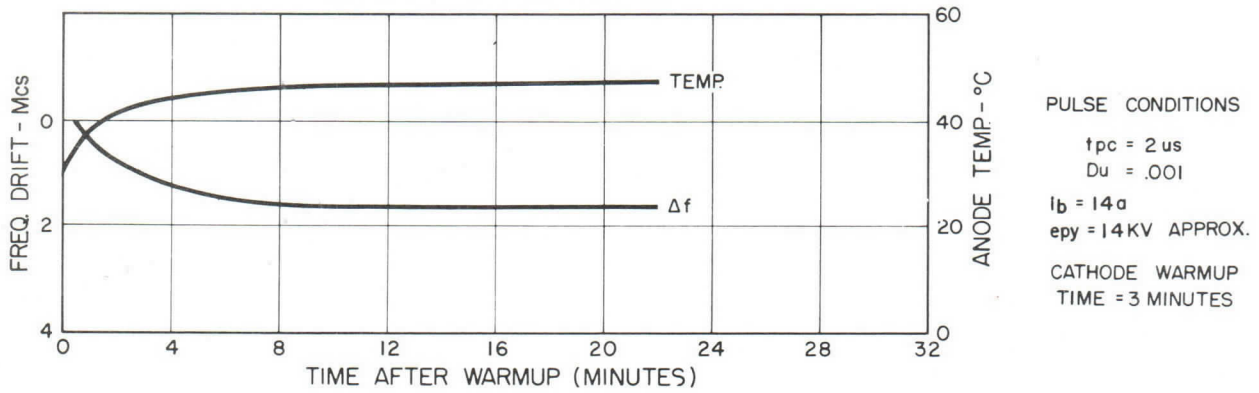

PULSE CONDITIONS

tpc = 2 us
Du = .001
I_b = 14a
epy = 14KV APPROX.

CATHODE WARMUP TIME = 3 MINUTES

FIG. 4

FREQUENCY DRIFT

After operation of the QK456 is initiated, its temperature rises with time until thermal equilibrium is reached. During this transient period the geometry of the tube changes slightly and is attended by a slight frequency change or drift. Frequency drift and anode temperature are plotted as a function of time in Fig. 4.

If the tube temperature is changed after thermal equilibrium has been established, the operating frequency will also change until thermal equilibrium is again attained and tube geometry stabilizes. The frequency change will not exceed 0.25 Mc/°C between 40° and 70° anode temperature.

RF RADIATION FROM CATHODE

The QK456 is designed to minimize radiation from the cathode bushing which will in general be negligible. It is not possible, however, to guarantee it as being negligible, and in particularly critical environments shielding of the cathode bushing may be necessary to avoid radiation difficulties.

OPERATING CHARACTERISTICS

Fig. 5 is a plot of peak power output, anode voltage and efficiency as a function of peak anode current showing the maximum and minimum deviation from the average.

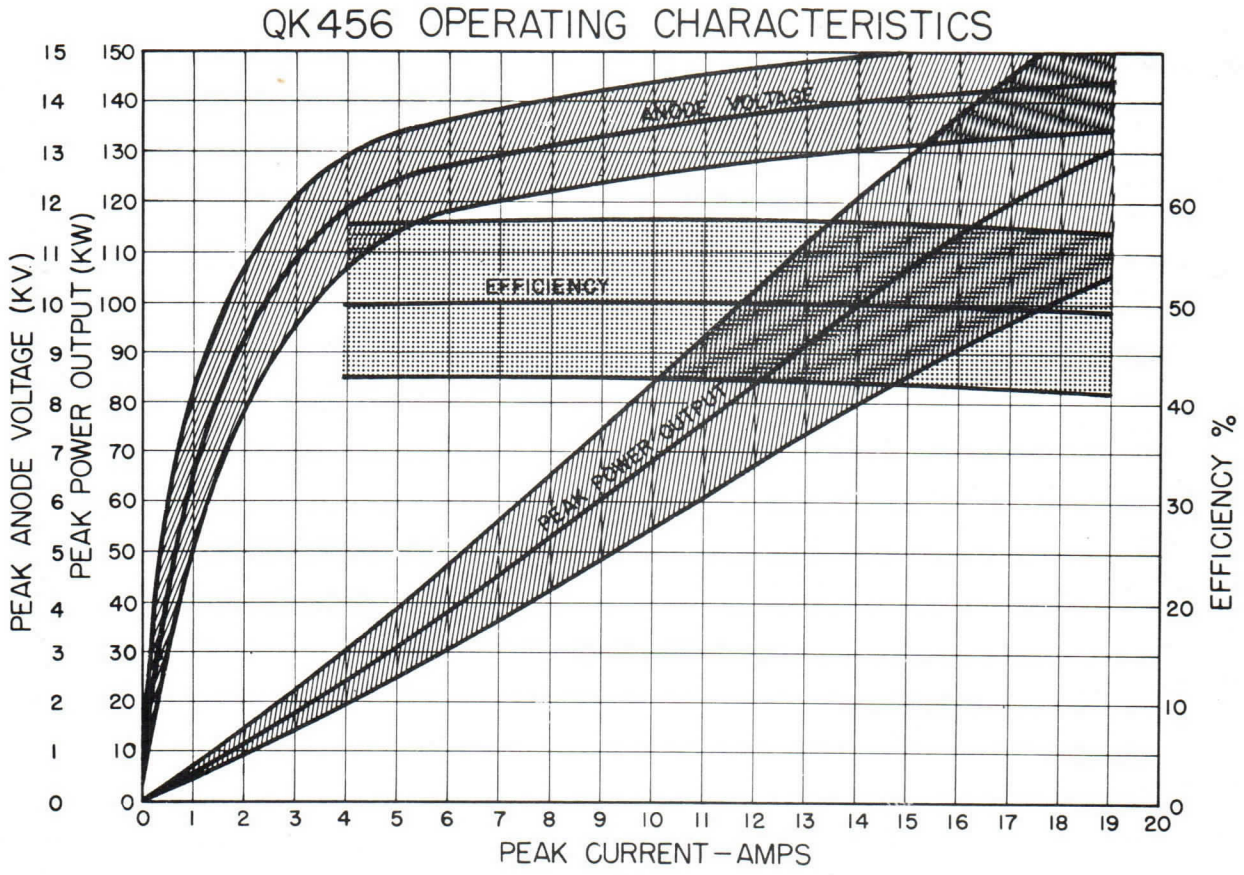

FIG. 5

DETAILED MECHANICAL INFORMATION

INSTALLATION AND HANDLING PRECAUTIONS

Although magnetrons give the appearance of great structural strength, they are in reality quite fragile and may be easily damaged in handling or installation. Damage to the magnetron will be avoided if the following installation and handling precautions are carefully observed.

1. Leave magnetron in its shipping crate until ready to be used.
2. Avoid setting up mechanical strains in output window when handling or mounting.
3. Avoid unnecessary jarring or rough handling.
4. Do not let magnetron rest on its output window.
5. If a magnetron has been stored in a freezing environment, examine it closely for traces of frost or moisture on the RF window and wipe dry before application of high voltage.
6. Do not place tube in closer proximity to magnetic materials than is indicated on tube magnet.

ELECTRICAL CONNECTIONS

Electrical connections are made to the frame of the tube and to the two terminals on the high voltage cathode bushing. The positive high voltage should be grounded at the mounting surfaces. Heater and cathode connections are made to the terminals on the cathode bushing. Heater connectors should be designed to minimize contact resistance.

COUPLING AND PRESSURIZATION

The magnetron output flange is designed to couple to standard 1" x 2" waveguide. Mechanical details of the recommended choke flange to mate to the magnetron are illustrated in the outline drawing.

NOTES:

1. Reference Plane "A" is defined as a plane on the face of mounting plate as shown.
2. Reference Plane "B" is defined as a plane perpendicular to Plane "A" passing through the center of holes as shown.
3. Reference Plane "C" is defined as a plane perpendicular to Planes "A" and "B" passing through the center of holes shown.
4. The jack holes shall be within a radius of 0.023 of the true location specified, but shall be spaced 0.500 ±.010 with respect to each other. The centerlines of the holes shall be perpendicular to Ref. Plane "A" within 3°0′.
5. Pyrex glass, porcelain or approved equivalent.
6. Indicate common cathode connection by letter "C."
7. Surface of plate extending beyond a 1.125 radius from the center of plate to be flat within .015.
8. Filament leads to be flexible and slack.
9. Tolerance includes angular as well as lateral deviations.
10. .031 asbestos gasket (optional).
11. Hex head banana pin locking jack 0.593 long — 0.169 ±.005 diameter hole.
12. Leads soldered to terminal clips.
13. All solder joints on mounting plate and output section shall be such as to provide an hermetic seal at surface "X."
14. Heater connection.
15. Any portion of the assembly extending above this surface shall be within a 1.109 radius of true center of plate.
16. Magnet with protective coating.
17. Radiator fins.
18. #6-32 elastic stop nut 0.312 across flats.
19. All areas except top of insulator to bottom edge of mounting plate, face, edge, and angle of flange to be painted with black lacquer.
20. These dimensions apply to radiator size only.
21. Point at which temperature of tube is measured.
22. Refers to centerline of output flange, as determined by 3.306-3.318 diameter.
23. Dimension applies to radiator.

TENTATIVE

The manufacturer assumes no responsibility for equipment built to fit this tube's experimental limits. Dimensions shown are calculated from parts used in this model only and may vary in future models.

RAYTHEON

TYPE QK456

PULSED-TYPE MAGNETRON OSCILLATOR

TENTATIVE DATA

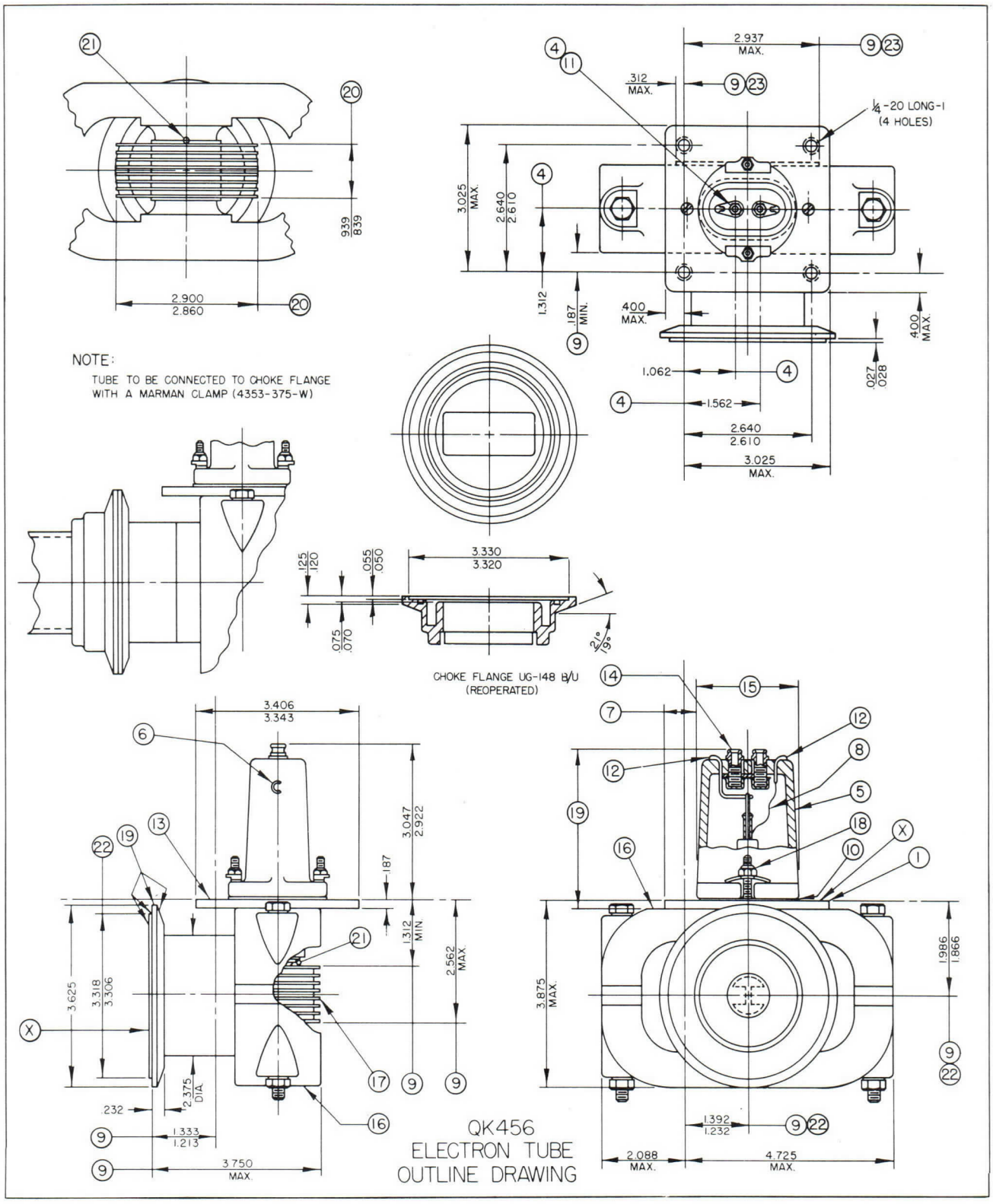

MICROWAVE AND POWER TUBE DIVISION

RAYTHEON MANUFACTURING COMPANY

FOUNDRY AVE., WALTHAM 54, MASS.

TYPE QK630

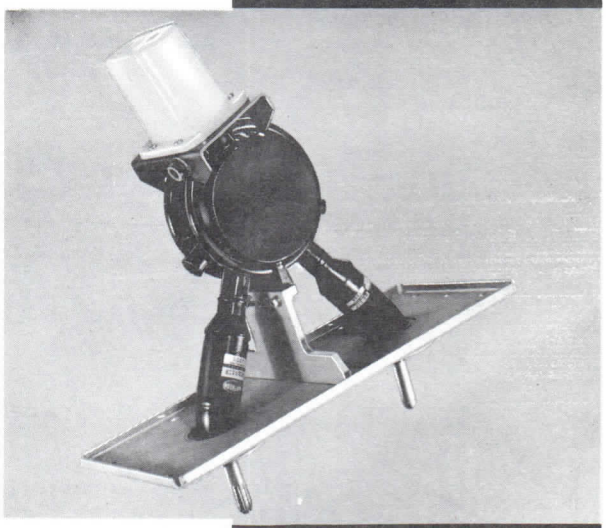

PULSED-TYPE STABILOTRON OSCILLATOR

GENERAL DESCRIPTION

The QK630 is a self-excited oscillator capable of producing a minimum of 550 kilowatts peak power output. Used with a tunable, external cavity the combination is an oscillator frequency stabilized to a high degree and tunable from 1270 to 1350 Mc.

The information contained herein is representative of a small number of prototypes and is not necessarily representative of the final tube. Detailed information on specific applications may be obtained by contacting the Applications Engineering Department, Microwave and Power Tube Division, Raytheon Company, Waltham 54, Massachusetts.

GENERAL CHARACTERISTICS

ELECTRICAL

Heater Characteristics

Heater current preheat	2.4 A
Heater current operate	2.4 A
Heater voltage @ 2.4 A	27-33 V
Minimum preheat time	3 Minutes
Cold heater resistance	2.0 ohms (Approx.)

Typical Operation

Pulse duration	3.0 usec
Duty cycle	.0024
Peak anode voltage	35 kv
Peak anode current	37 A
Average anode current	89 mAdc
Peak power output	550 kw
Average power output	1320 W
VSWR	1.1/1
Frequency region	1270-1350 Mc
RF bandwidth	0.67 Mc

MECHANICAL

Overall dimensions	19.625" x 18.3" x 8.125"
Net weight: tube	16 lbs.
magnet, typically	40 lbs.
Mounting	Any
Output coupling	Round flange, 3 5/8" diameter
Input coupling	Round flange, 3 5/8" diameter

Printed in USA

MICROWAVE AND POWER TUBE DIVISION

RAYTHEON COMPANY

FOUNDRY AVE., WALTHAM 54, MASS.

Output Pressure	35 psia
Input Pressure	35 psia
Cooling	Forced Water
Cathode bushing	Glass @ atmos. Press.
Vibration	50 cps @ 2.5G
Shock	15G
Magnet Protection	12"

DETAILED ELECTRICAL INFORMATION

HEATER-CATHODE

The cathode must be preheated at 2.4 amperes for at least three minutes prior to the application of the high voltage pulse. Heater current surges in excess of five amperes may cause damage to the tube. When the average anode current is greater than 50 milliamperes, the heater current should be reduced to zero. The application of heater power without forced liquid cooling may cause permanent damage to the tube.

TYPICAL OPERATION

As illustrated in Figure 1 the Stabilotron circuit consists of a Stabilotron tube, a high Q tunable stabilizing system and a feedback mismatch in the output circuit of the tube. The circuit will oscillate when the following conditions are satisfied.

1. $|\Gamma_1|\,|\Gamma_2|\,\text{Gain} \geq 1$
2. Total loop phase shift from plane $l\ l^1$ to plane $r\ r^1$ is an integral multiple of 360 degrees.

A portion of the output power is reflected from the reference plane $l\ l^1$. This reflected power travels back through the Stabilotron network with little or no attenuation or reflection and out to the reference plane $r\ r^1$. The energy at the resonant frequency of the cavity is again reflected, amplified by the backward wave principle and arrives at the reference plane $l\ l^1$ at full power level. The energy not at the resonant frequency of the cavity is absorbed by the damping resistor. A line stretcher provides phase adjustment for optimum system performance.

Figure 2 shows a QK630 Stabilotron tube used with a QK629 Stabilizing System. The input of the QK630 is connected to a 1⅝" coax line stretcher which in turn is connected to a cylindrical, tunable cavity. A damping resistor for the purpose of absorbing off resonant energy is connected through a fixed length of 1⅝" coax line to the other side of the cavity. As the cavity is tuned it moves physically toward or away from the tube, changing the line length between the cavity and tube and thus maintaining proper loop phase shift.

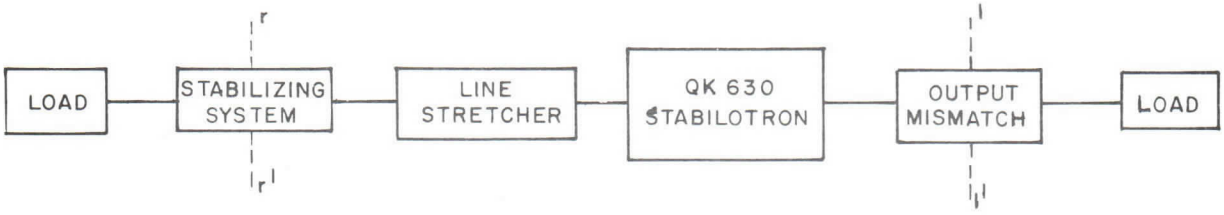

Figure 1

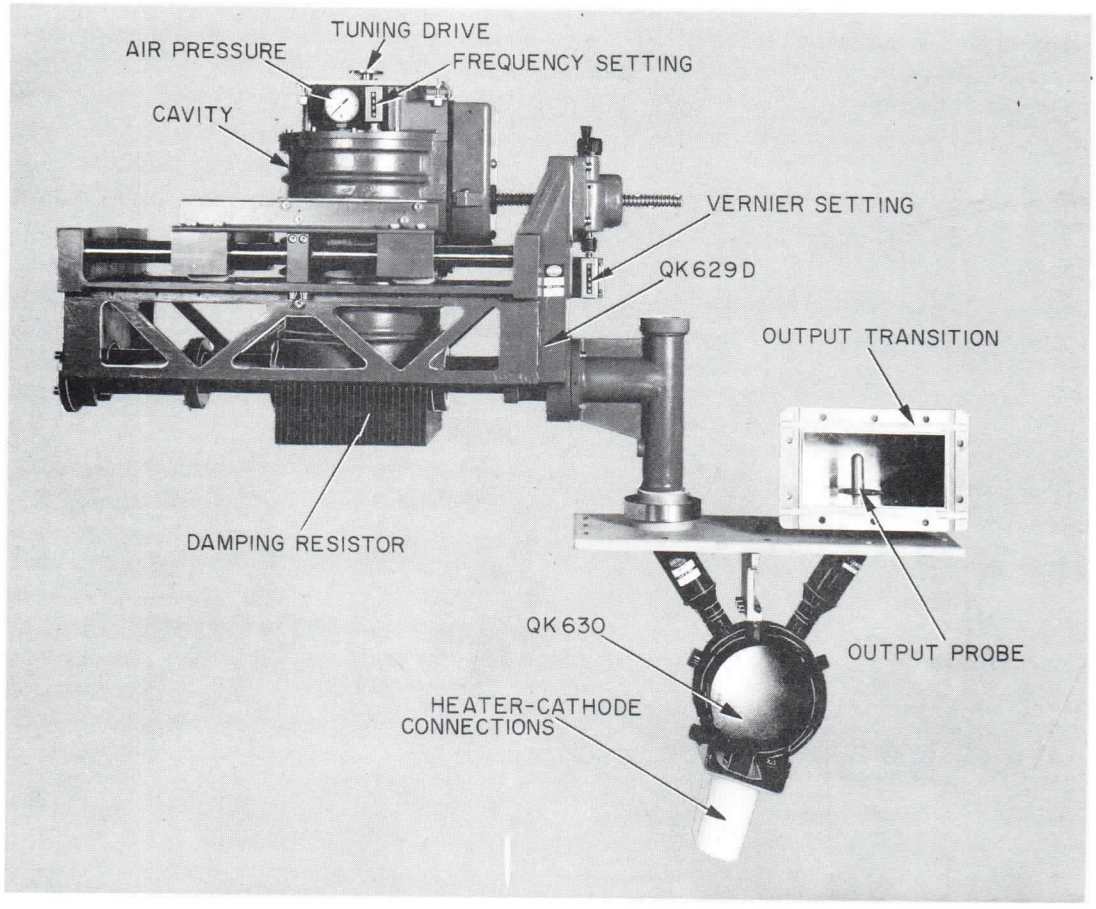

Figure 2

FREQUENCY STABILITY

The phase shift vs frequency characteristics of the stabilizing cavity in the region of cavity resonance has a slope many times greater than that of any other element in the circuit. A slight change in frequency will result when the cavity is subjected to a substantial shift in phase which might be introduced by the antenna load, frequency pushing, etc. Figure 3 demonstrates the frequency shift which occurs for the same phase shift increment in a stabilized and unstabilized system. It is seen that in the stabilized case the resulting frequency change, Δfs, caused by the $\Delta\theta$ increment of phase is much less than the frequency change, Δ fu, in the unstabilized case.

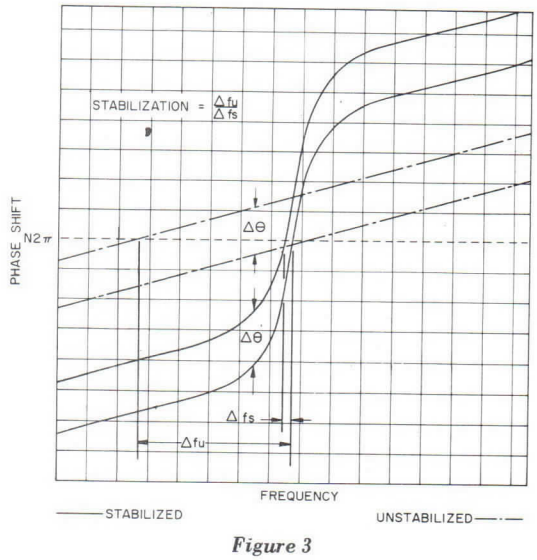

Figure 3

Printed in U.S.A.

OPERATING CHARACTERISTICS

Figure 4 is a plot of peak power output, peak anode voltage, efficiency, and bandwidth variation with respect to frequency.

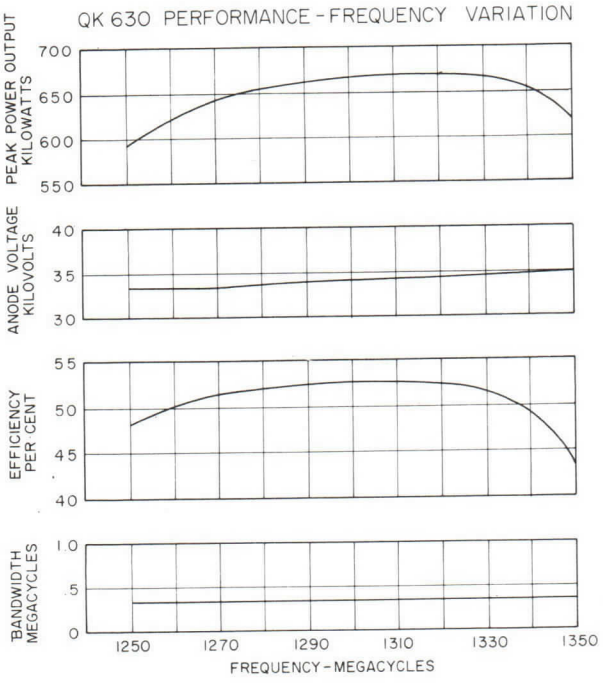

Figure 4

COOLING

The QK630 Stabilotron is a forced liquid cooled tube. The input temperature of the coolant will dictate the flow rate necessary to maintain the anode temperature below the specified maximum of 125°C. Figure 5 shows cooling water flow versus the total input power plotted for different values of anode temperature rise, Δt above the inlet temperature of the coolant. The relationship of back pressure and water flow is also shown.

PULSE LENGTH AND DUTY CYCLE

The QK630 Stabilotron has been designed and tested at the following pulse conditions. See Figure 6.

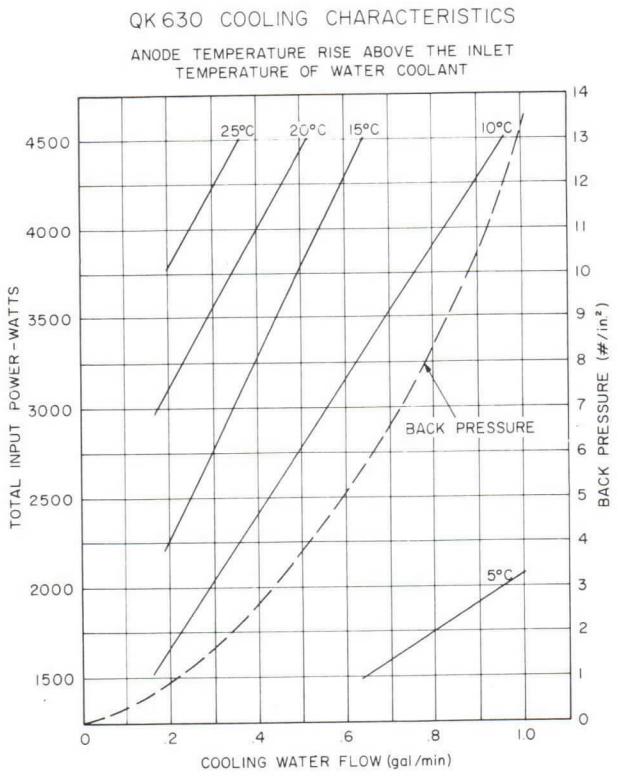

Figure 5

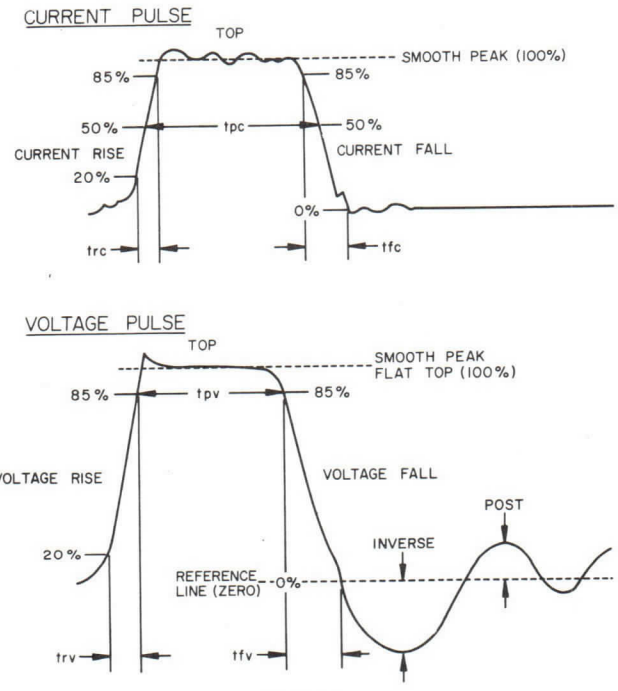

Figure 6

t_{pc} = 3.0 usec (measured at 50%)
t_{rc} = 0.20 usec (measured 20 to 85%)
t_{fc} = 1.30 usec (measured 0 to 85%)
t_{rv} = 0.45 usec (measured 20 to 85%)
t_{fv} = 2.0 usec (measured 0 to 85%)

No spike or ripple should exceed ±2.5% of the average peak value of current or voltage. Inverse voltage should not exceed 25% of the forward voltage. Post voltages should be held to a minimum to avoid post pulse noise or oscillations. If operation at pulse conditions different from those given above is anticipated, the manufacturer should be consulted for further information.

LOAD DIAGRAMS

Figures 7, 8, and 9 are load diagrams of the QK630 Stabilotron at 1270 Mc, 1300 Mc, and 1350 Mc. The output spectrum, peak power output and frequency deviation are shown at a matched load position and several phase positions with a load VSWR of 1.5/1.

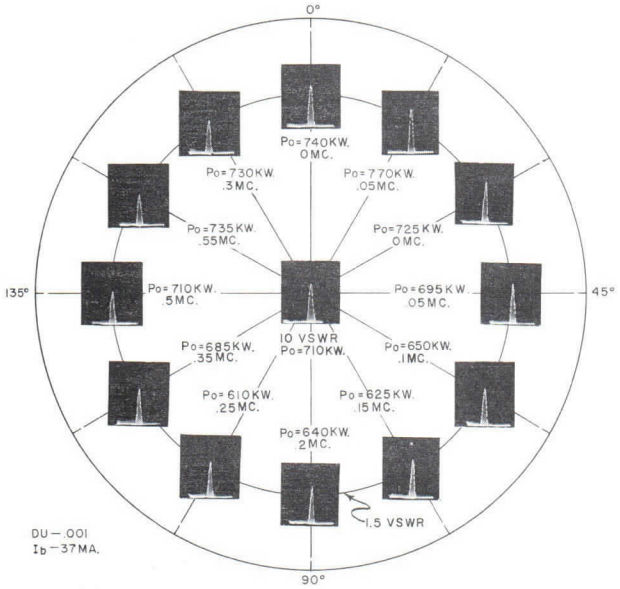

QK630-LOAD DIAGRAM
FREQUENCY-1270MC/S

Figure 7

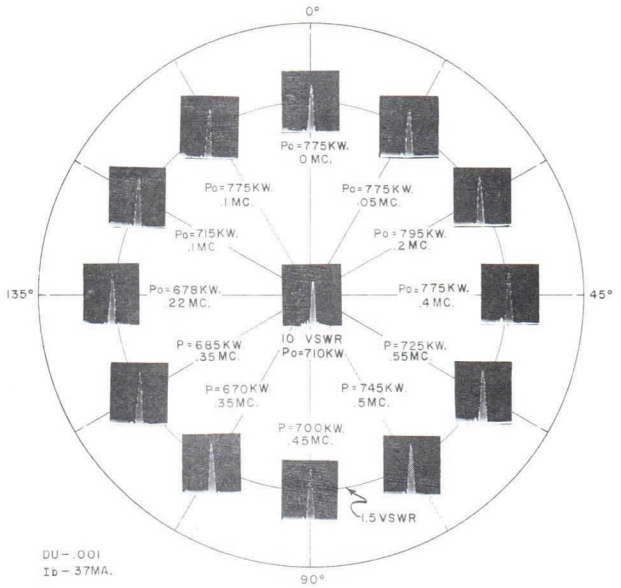

QK 630-LOAD DIAGRAM
FREQUENCY-1300MC/S.

Figure 8

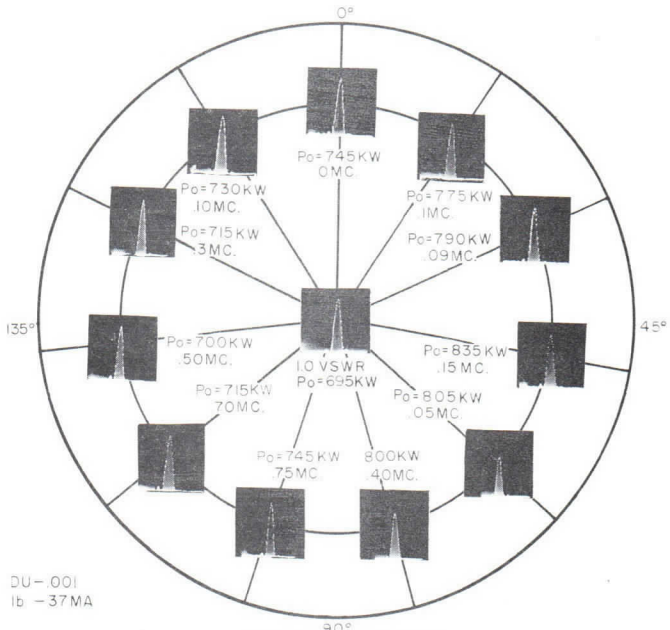

QK630-LOAD DIAGRAM
FREQUENCY-1350MC/S

Figure 9

ELECTRICAL CONNECTIONS

Electrical connections are made to the frame of the tube and to the two terminals located on the

high voltage cathode bushing. The positive high voltage should be grounded on the mounting surface. Heater connections should be designed to minimize contact resistance and lateral forces on the heater terminals. The common heater-cathode terminal is marked with the letter "C". Drawings of suitable heater-cathode connecting devices are available on request.

MOUNTING

The tube is mounted within the equipment by twelve bolts passed through clearance holes in the rectangular mounting plate. The relative position of the tube is unimportant. Details of the mounting plate are shown in the outline drawing.

COUPLING AND PRESSURIZATION

The input pipe of the tube has been designed to mate with the connection of the QK629 Stabilizing System. The output pipe, identical to the input pipe, is intended to couple into a standard 3" x 6" waveguide (RG-69/U) through the mounting flange shown in the outline drawing. Pressurization of the input and output RF transmission system to 35 psia is required to prevent arcing in the system.

REFERENCES

Final Engineering Report, Volume I on the Design and Development of the Platinotron, Amplitron and Stabilotron: W. C. Brown, Signal Corps Contract No. DA-36-039-sc-56644, December, 1955.

Description and Operating Characteristics of the Platinotron — A New Microwave Tube Device: W. C. Brown, Proceedings of the IRE, September 1957.

Raytheon Technical Information Bulletin — Eng. I: June 1958.

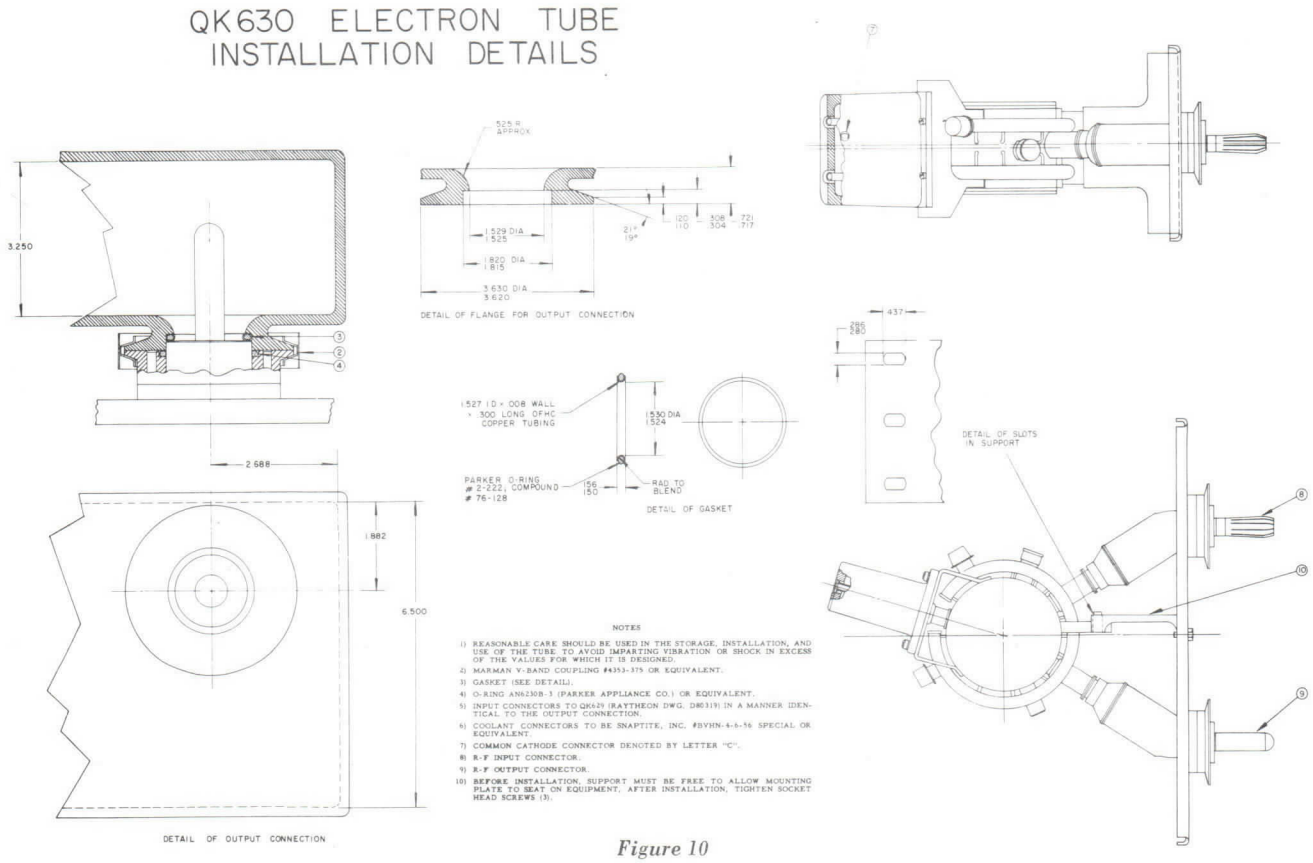

Figure 10

QK630 ELECTRON TUBE OUTLINE DRAWING

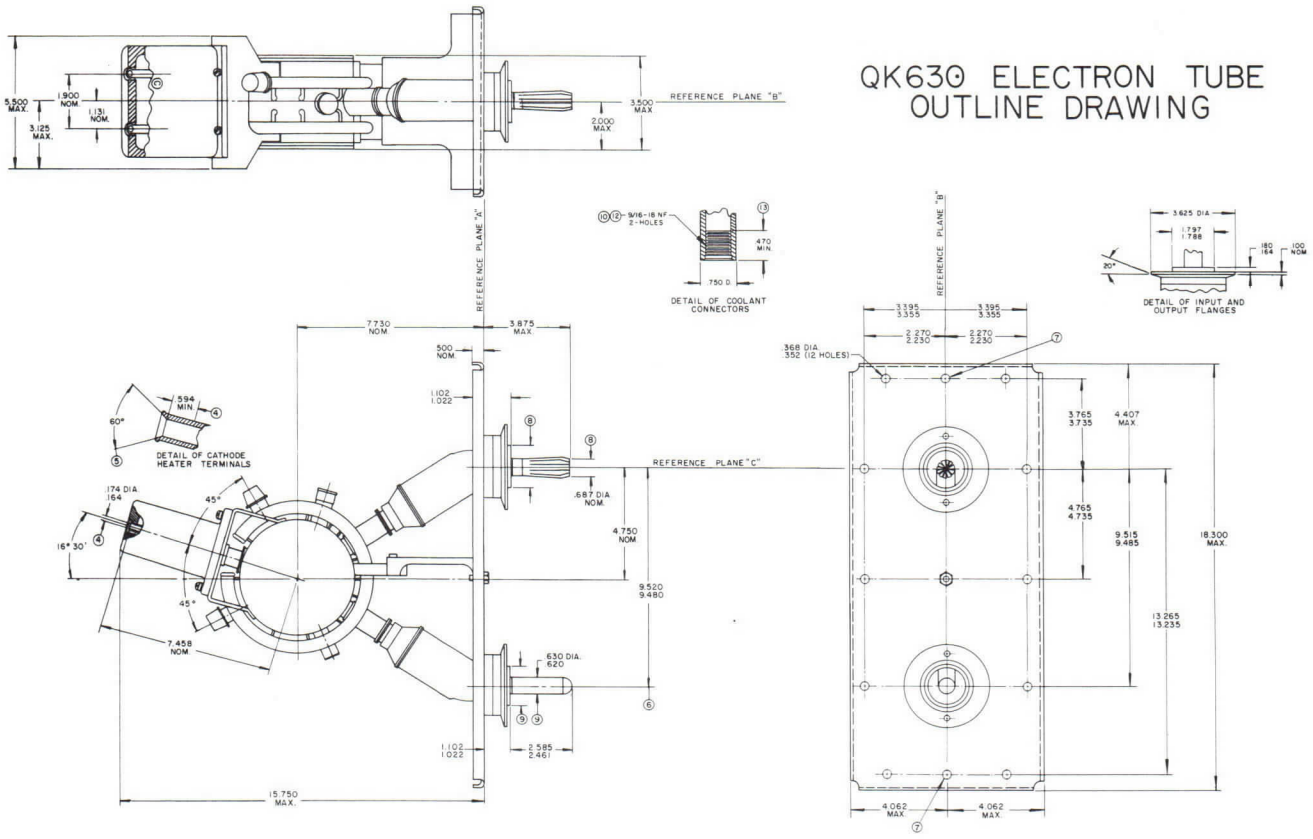

NOTES

1) REFERENCE PLANE "A" IS DEFINED AS A PLANE PASSING ALONG THE FACE OF THE MOUNTING PLATE AS SHOWN
2) REFERENCE PLANE "B" IS DEFINED AS A PLANE PERPENDICULAR TO REFERENCE PLANE "A" AND PASSING THROUGH THE CENTERS OF DIAMETERS "XX" AND "YY" AS SHOWN
3) REFERENCE PLANE "C" IS DEFINED AS A PLANE PERPENDICULAR TO REFERENCE PLANES "A" AND "B" AND PASSING THROUGH THE CENTER OF DIAMETER "XX" AS SHOWN
4) JACK HOLE DIAMETERS APPLY FOR DEPTH SHOWN
5) THIS COUNTERSINK SHALL BE CAPABLE OF ACCEPTING A CONE HAVING A 60° INCLUDED ANGLE AND A BASE DIAMETER OF 0.234 AND SHALL REJECT A SIMILAR CONE HAVING A BASE DIAMETER OF 0.254
6) THIS DIMENSION REFERS TO THE CENTERLINE OF DIAMETER "Y"
7) THESE HOLES TO BE LOCATED ON REFERENCE PLANE "B" WITHIN .015
8) WITH A GAGE HAVING AN 1.820 I.D. AND CONCENTRIC 0.640 I.D. PLACED OVER THESE DIAMETERS, ALL FINGERS OF THE INPUT CONNECTOR MUST CONTACT THE 0.640 DIAMETER
9) A GAGE HAVING A 1.797 I.D. AND CONCENTRIC 0.655 I.D. MUST PASS OVER THESE DIAMETERS
10) PITCH DIAMETER MUST ACCEPT CLASS 2 "GO" GAGE ONLY
11) MINOR DIAMETER MUST NOT BE GREATER THAN 0.513
12) APPLIES TO DEPTH OF FULL THREAD

Figure 11

6517 is another type 3500 hours

The technical information on this data sheet is of a proprietory nature and is furnished as a customer service for private use only.

QK665/666 **PRELIMINARY DATA SHEET**

RAYTHEON *Excellence in Electronics*

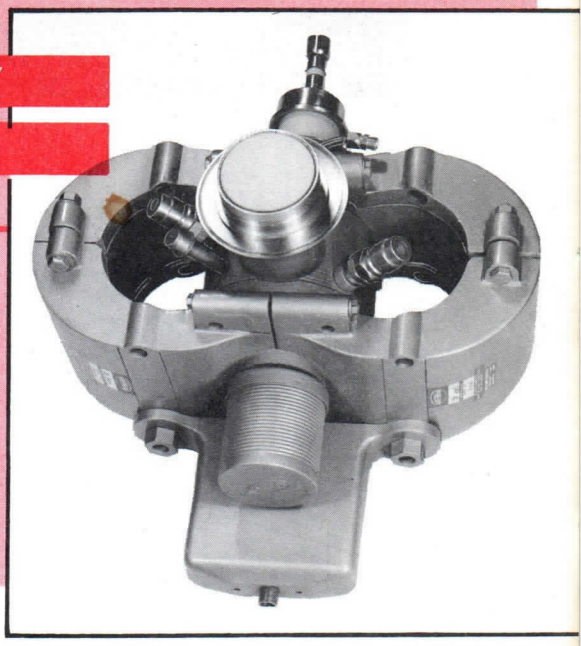

GENERAL DESCRIPTION

The QK665 and QK666 magnetrons are fixed frequency, high power, pulsed oscillators which are capable of delivering a minimum of 5.0 megawatts peak power and 9000 watts average power. The QK665 operates within 1250-1285 megacycles and the QK666 within 1320-1350 megacycles. The tubes have an integral magnet, unipotential cathode, waveguide output coupling and are liquid cooled.

The QK665/QK666 magnetrons are adaptable for use in MTI radar systems which require the generation of r.f. pulse energy that is relatively free from frequency jitter and time jitter.

These magnetrons contain moveable magnetic shunts which provide an approximate ±2 Kilovolts adjustment of peak anode voltage, thereby permitting both tubes to be operated in parallel from a common modulator.

Mechanical Data

Mounting Position	Cathode Vertical
Net Weight	125 lbs.
Cooling	Liquid
Input Bushing	Oil Immersed
Pressurization (Output)	50 p.s.i.a. Min.

Typical Electrical Data

Heater Current (Preheat - 600 sec.)	150 Amperes *
Heater Voltage @ 150 A	15 Volts *
Pulse Duration	5 usec
Duty Cycle	.0018
Peak Anode Voltage	72 Kilovolts
Voltage Rise Time	0.6 usec min.
Peak Anode Current	150 Amperes
Maximum VSWR	1.5
Average Power Output	9900 Watts
R.F. Bandwidth	2.0/tpc. Max.
Life - 1.5 VSWR, Off-On Cycle	500 Hrs. Min.

* Not Final Values

Reliable operation and optimum magnetron life can be achieved only if the overall radar transmitter is designed with the magnetron characteristics and peculiarities clearly in mind. This preliminary data sheet is intended only to acquaint the reader with the basic characteristics of the magnetrons and should not be used as

The specifications for this tube have not been finalized. The tube is being manufactured in limited quantities and is available for engineering analysis purposes only. This engineering information and/or delivery of sample tubes do not imply availability of tubes with the same electrical and/or mechanical characteristics. Changes in ratings and/ or dimensions may be made at our discretion as deemed advisable by manufacturing experience or other considerations. For current information concerning this tube contact the nearest Microwave and Power Tube Regional Sales Representative.

an absolute guide. Detailed test specifications are available upon request, and specific problems pertaining to applications should be directed to the Applications Engineering Department, Microwave and Power Tube Division at Raytheon, Waltham, Massachusetts.

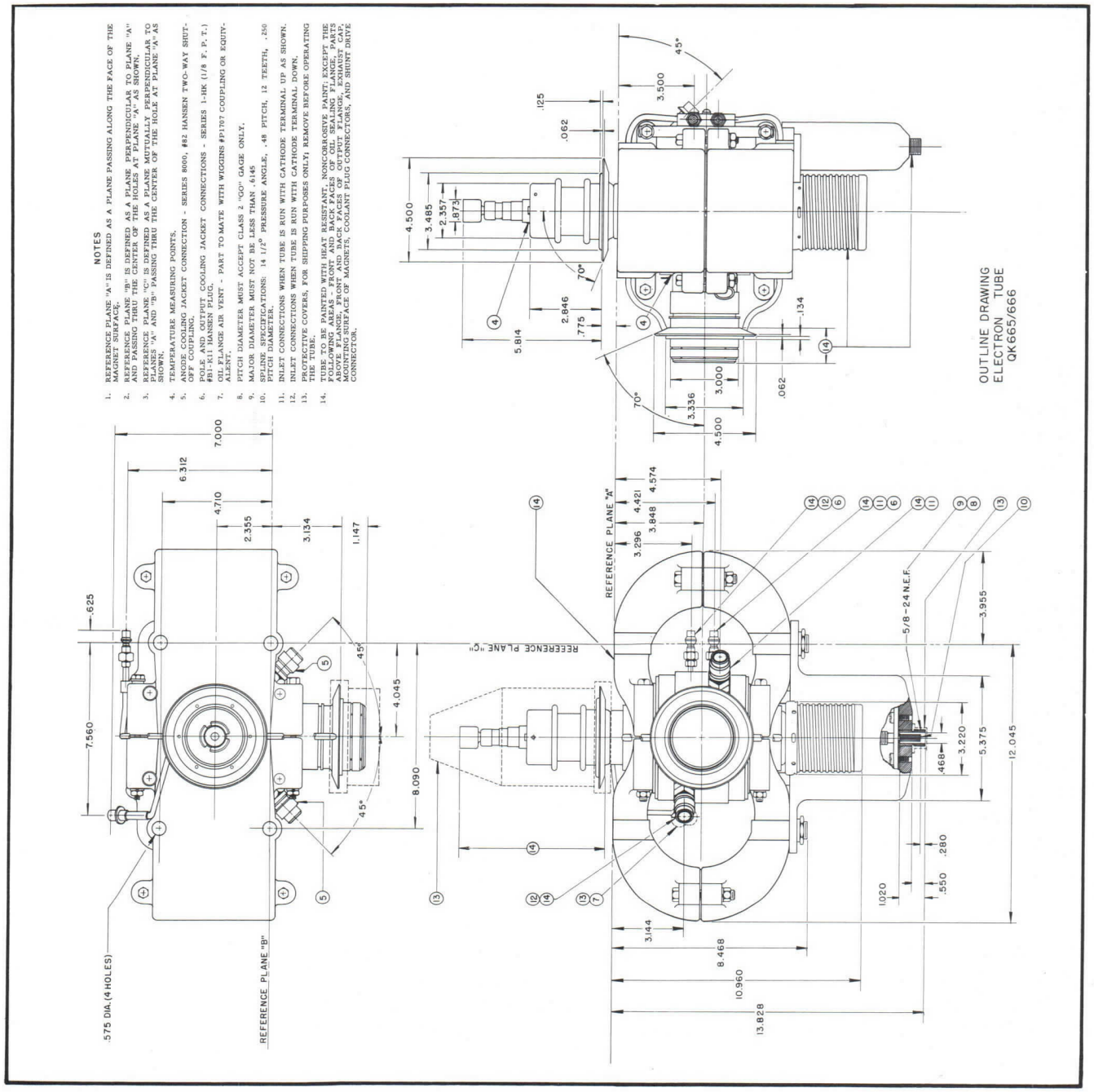

RAYTHEON

TECHNICAL INFORMATION

Excellence in Electronics

TYPE 725-A

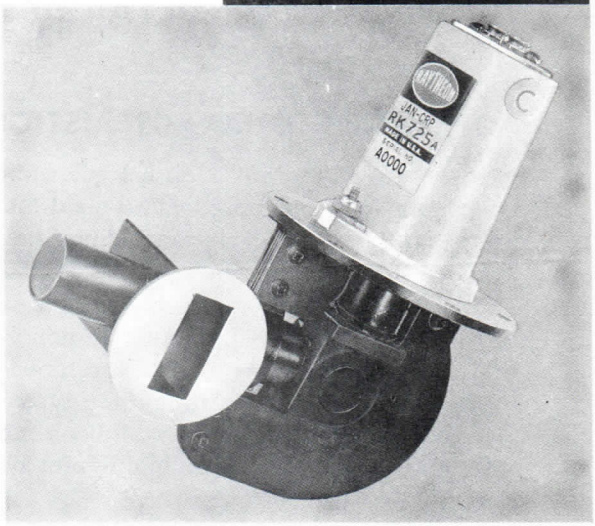

PULSED-TYPE MAGNETRON OSCILLATOR

GENERAL DESCRIPTION

The type 725-A magnetron tube is a super-high frequency oscillator with internal resonant circuits, designed to operate in the "X Band." It is capable of delivering 60 kilowatts of peak power under pulsed conditions.

GENERAL ELECTRICAL CHARACTERISTICS

Heater

Indirectly heated, oxide coated, unipotential cathode.

Heater voltage — preheat	6.3 V
Heater current @ EF = 6.3V	1.0 A
Minimum preheat time	1 Minute

Maximum Ratings

Heater voltage	6.3+10% V
Peak anode voltage	16 kv
Peak anode current	16 a
Maximum duty cycle	.001
Maximum pulse width	2.5 μs
Average input power	180 W
Frequency pulling @ VSWR = 1.5	15 Mc
Anode temperature	100 °C.

The tube should not be operated longer than 5 microseconds in any 100 microsecond interval.

Minimum pressure at which output circuit will pass 50 kw. without breakdown –0.3 Atmosphere

Typical Operation

Magnetic field intensity	5400 gauss
Recurrence frequency	1000 cycles per second
Pulse width	1 μs
Peak anode voltage	12 kv
Peak anode current	12 a
Peak power output	50 kw
Frequency change due to temperature	.25 mc/°C. Max.
Frequency (fixed frequency in the following range)	9345-9405 Mc

Printed in U.S.A.

MICROWAVE AND POWER TUBE DIVISION
RAYTHEON COMPANY
FOUNDRY AVE., WALTHAM 54, MASS.

DETAILED ELECTRICAL INFORMATION

OPERATING CHARACTERISTICS

The Rieke Diagram, Figure 1, shows the power and frequency contours for a typical tube operating into a $1\frac{1}{4}'' \times \frac{5}{8}''$ (internal dimensions) waveguide with standing wave ratio and phase angle varied. The pulling figure at 1.5 ratio in voltage is 11.5 megacycles. It should be noted that this data is representative of average tubes and was taken under conditions simulating typical operating characteristics. Slight variations may be expected with different tubes in different systems.

RK725A
FREQUENCY-POWER CONTOUR DIAGRAM

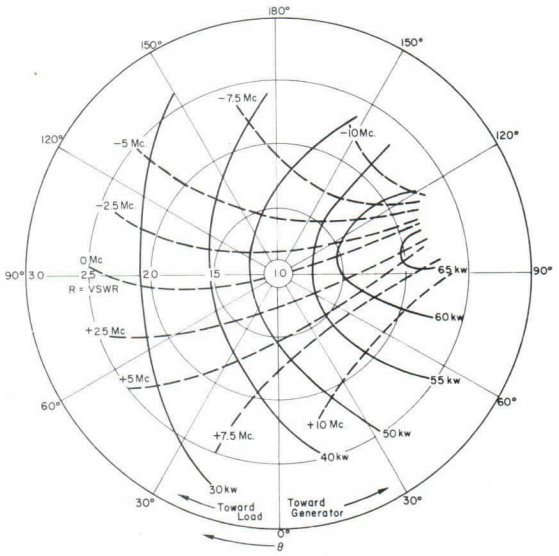

OPERATING CONDITIONS

Recurrence rate = 1000 cps
Pulse width = 1 us
Magnetic field = 5400 gauss
Average magnetron current = 12.0 mAdc
Recommended load for RK725A at center of diagram

R = Standing wave ratio in voltage.
θ = Distance of standing wave minimum from face of output flange of tube toward load.
—— = Power contours (peak kw)
— — = Frequency contours (megacycles deviations from frequency of magnetron feeding into a matched line).

Figure 1

Figure 2 shows the magnetic field, peak power output, frequency and efficiency contours as a function of pulsed voltage and current for a typical tube.

RK725A OPERATING CHARACTERISTICS

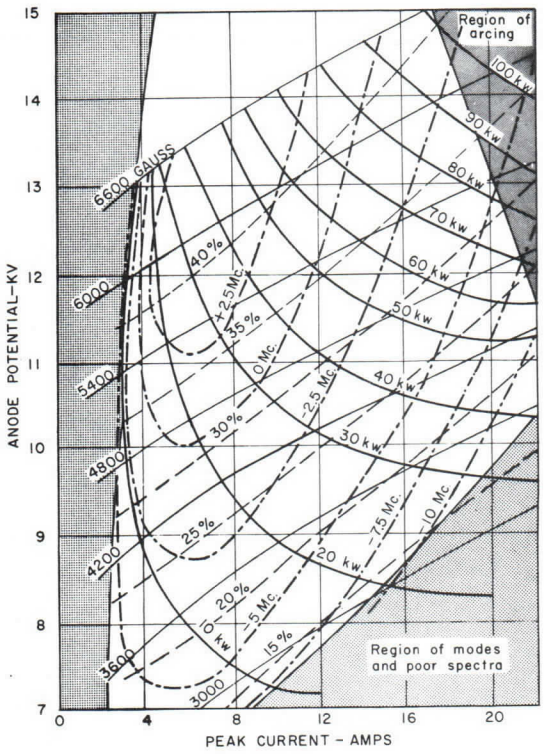

Recurrence rate = 1000 cps
Pulse width = 1 us
—— = Magnetic field (gauss)
—— = Peak power (kilowatts)
— — — = Efficiency
— · — = Frequency contours (megacycles deviation from mean frequency as determined by corresponding Rieke Diagram and taken under conditions of constant temperature).

Figure 2

Figure 3 shows the change of frequency as a function of sinusoidal acceleration (G) for a typical tube.

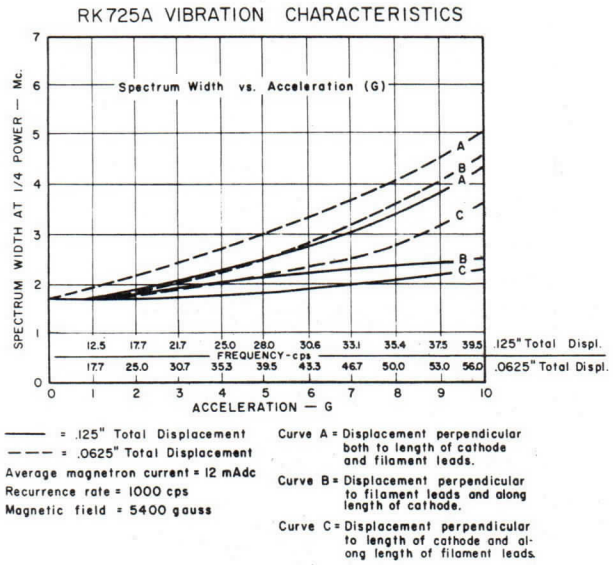

Figure 3

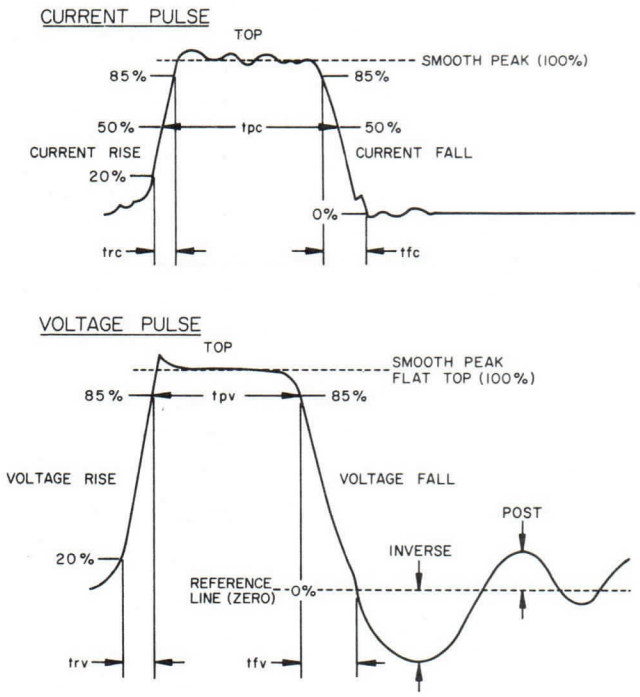

Figure 4

OPERATING NOTES

Satisfactory operation of the tube will depend largely on the waveform characteristics of the input voltage pulse, which should fulfill the following conditions:

Time of rise — 0.1 to 0.2 microsecond.

Time of fall — less than 0.4 microsecond.

Variation of voltage — less than 10% of total at top of pulse.

A poor pulse shape may cause excessive frequency modulation and general instability.

It is recommended that the magnetic field be produced between circular pole tips 0.750±.015 inches in diameter separated by 0.635+.005—.000 inches tapering uniformly from the tips to 1.156 ±.015 inch diameter in .430±.005 inches measured along the axis of each pole tip element. The tube should be operated with the North-seeking pole of the magnet adjacent to the cathode.

Adequate forced air should be provided to keep the anode temperature of the tube less than 100° C.

The life of the 725-A magnetron is limited by the usefulness of the cathode. In general, magnetron life is inversely proportional to pulse width and duty cycle. It is therefore recommended that the tube be operated at a low recurrence rate when high peak power is required. The use of a transmission line not properly matched to the magnetron is another factor reducing the life of the magnetron. This is due to excessive cathode heating.

Heater voltage should be turned on one minute before the high voltage pulsations are applied. The tube is to be started at the rated heater power and then reduced in proportion to the average total dissipation such that it becomes zero at 50 watts dissipation. For high voltage pulsed operation at recurrence rates exceeding 500 cycles per second, it is essential to reduce the heater voltage to zero for a duty cycle of 0.001 for average input powers of 100 watts or greater. Reduction of heater voltage to 3.0 volts for duty cycle of 0.0005

for average input powers of 100 watts or greater, and to intermediate values from 0 to 6.3 volts for other duty cycles and power input combinations is recommended. At pulse recurrence rates less than 500 cycles per second, 2.5 volts minimum heater potential should be applied. Failure to start the tube at the rated heater power or to improperly reduce the heater power after oscillation starts may seriously reduce the life of the tube.

In starting a new magnetron, a temporary unsteadiness in its operation may result. It is recommended that the tube be "seasoned" under prevailing conditions of oscillation to the point where it becomes stable and normal operating values are obtained.

DETAILED MECHANICAL INFORMATION

The tube is mounted from the circular flange and may be operated in any orientation. The output circuit of the tube is preplumbed to have a certain frequency pulling figure for operation into a waveguide load and is designed for optimum frequency insensitivity and breakdown characteristics. The coaxial to the waveguide junction is matched so that a little or no electrical reflection exists in any part of the output circuit.

Both mounting flange and R.F. output flange are suitable for application where pressure seals are required.

Net weight of 725-A magnetron 1 Lb. 7 Oz.

NOTES FOR OUTLINE DRAWING

1 The jack holes shall be within a radius of .023 of the true location specified but shall be spaced 0.500 ±.010 with respect to each other. The center lines of the holes shall be perpendicular to reference plane "A" within 3°.

2 Pyrex glass, porcelain or approved equivalent.

3 Indicate common cathode connection by letter "C".

4 This point defines the location of anode axis.

5 With the flange resting on a plane surface, the flatness of the mounting plate .500 from the outer edge shall be such that a .010 thickness gage .125 wide shall not enter for a distance of more than .250.

6 All metal surfaces except "D" and "K" to be covered with black painted finish.

7 Filament leads shall be flexible and slack.

8 Output flange to be concentric with the open end of the guide to within .010.

9 Tolerance includes angular as well as lateral deviations of the surface.

10 $\frac{1}{32}$ asbestos gasket (optional).

11 1.250 x .625 O.D. x .050W commercial rect. brass tubing.

12 Hex head banana pin locking jack $\frac{19}{32}$ long, hole ±.005.

13 Leads soldered to terminal clip.

14 All solder joints on waveguide assem. shall be soldered to provide an hermetic seal at flange "D".

15 All solder joints on mounting and coaxial tube shall be soldered to provide an hermetic seal at surface "E".

16 With the surface "E" clamped on a plane and mounted on six studs through holes "H" & "G", .176 dia. located on the specified centers surfaces "H". "H" shall be capable of being inserted between parallel faces $\frac{13}{16}$ dia. whose centers coincide with anode axis (see note 4) normal to the surface "H" and whose faces are .625 apart spaced equidistant from the four studs "G". When mounted as above the limits on the dimensions defining and locating the wave guide (.417-.457, 1.542-1,582, and 2.417-2.457) may be considered satisfied if the surface "D" fits the surfaces "J" fit about planes defined by the referred to dimensions and their limits.

17 Heater connection.

18 Any portion of the assem. extending above this surface shall be within 1.109 rad. of this true center of the plate.

19 Cover required for shipping purposes only.

RK725A ELECTRON TUBE OUTLINE DRAWING

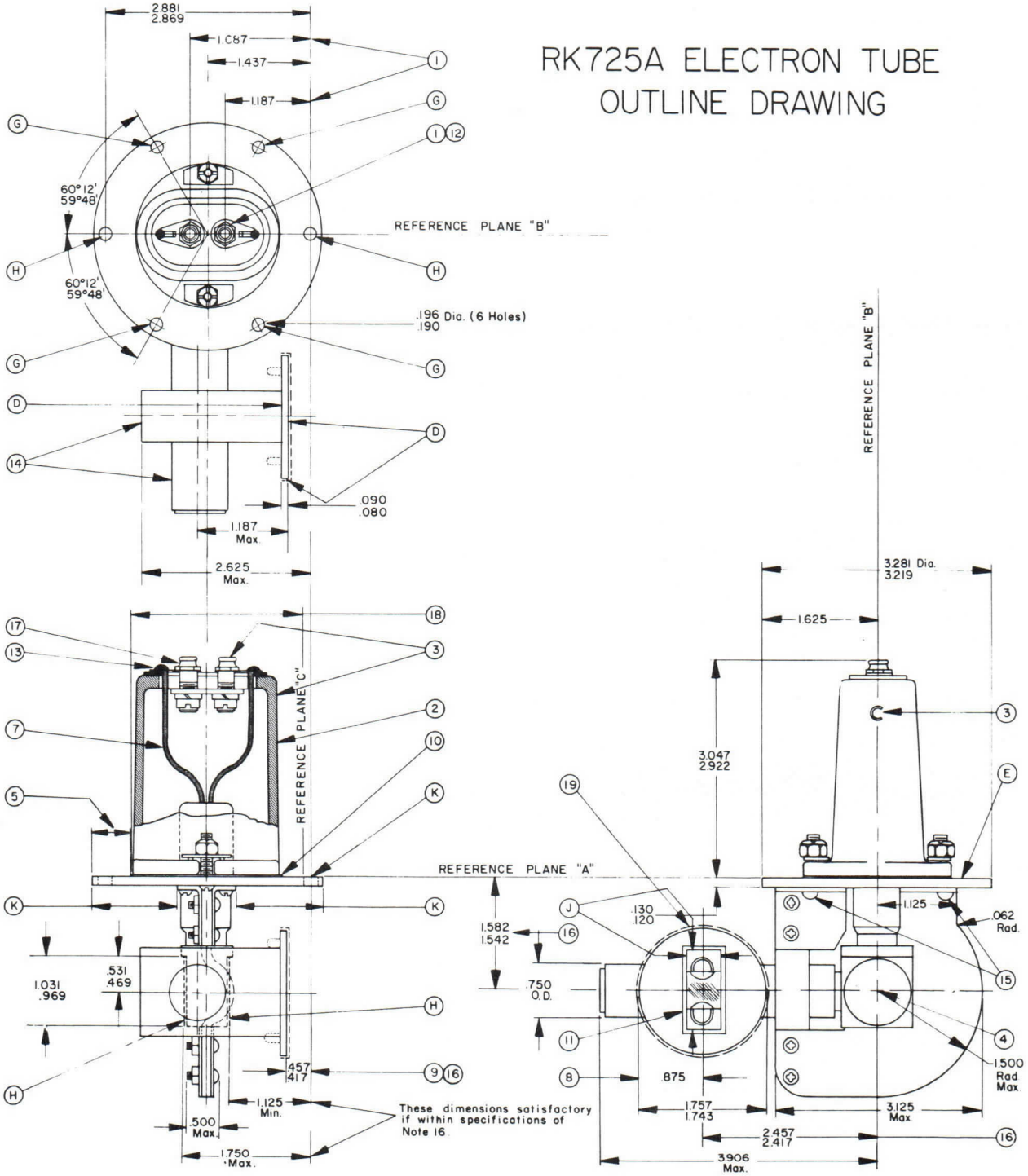

RAYTHEON

TECHNICAL INFORMATION

TENTATIVE DATA

Excellence in Electronics

TYPE QK735

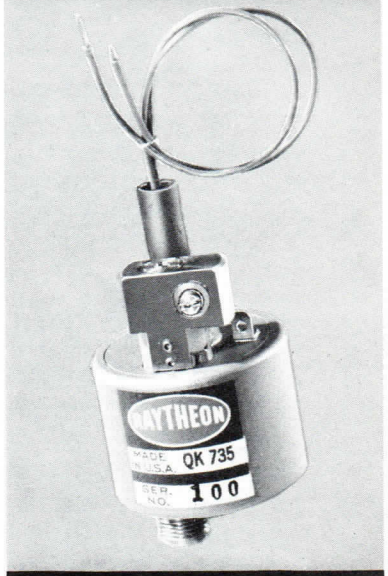

PULSED-TYPE MAGNETRON OSCILLATOR

GENERAL DESCRIPTION

The QK735 is a mechanically tunable pulsed-type magnetron oscillator delivering a peak power output of 400 to 600 watts. It is capable of being tuned to any frequency within the 5400 to 5900 Mc range.

The QK735 is small (1.5" dia. x 3.0") lightweight (8 ounces) and has been designed primarily for missile beacon transponder applications where extreme environmental conditions are encountered. The QK735 is capable of sustaining shock acceleration of 25G and vibrational acceleration during operation of 15G at frequencies up to 2000 cycles per second.

GENERAL PRECAUTIONS

The precautions to be observed during the application of the QK735 magnetron are the same as for any oscillator of this type. Experience has indicated that the areas where application problems frequently arise include the magnetron voltage pulse shape — particularly its rate of rise, the load VSWR, and anode current regulation. It is recommended that the Applications Engineering Department be consulted regarding the details of any contemplated equipment design utilizing the QK735.

GENERAL CHARACTERISTICS

ELECTRICAL

Heater Voltage — Preheat and Operate	5.0 to 6.0 Volts
Heater Current	1 Ampere at 5.0 Volts
Minimum Preheat Time	30 Seconds
Temperature Coefficient	± 0.1 Mc/°C Maximum
Operational Altitude	70,000 Feet Maximum
Operational Vibration Frequency Deviation at 15G, 28 to 2000 cps	10 Mc Peak to Peak Maximum
Frequency Shift Due to Shock 25G, 11 Milli-seconds	2 Mc Maximum

Typical Operation

Pulse Duration	0.25 to 1.0 Microseconds
Duty Cycle	.0003 to .003
Peak Anode Current	1.5 Amperes
Peak Anode Voltage	1.9 to 2.3 Kilovolts
Peak Power Output	400 to 600 Watts
Voltage Rise Time (20 to 85%)	0.12 us

Printed in U.S.A.

MICROWAVE AND POWER TUBE DIVISION
RAYTHEON COMPANY
FOUNDRY AVE., WALTHAM 54, MASS.

DETAILED MECHANICAL INFORMATION

MOUNTING

The tube may be mounted in any position and must be supported by a suitably designed holder made of non-ferrous material which will utilize the diameter of the tube for support. Magnetic material should not be mounted within 2 inches of the tube.

INPUT CONNECTIONS

Two flexible leads approximately 5 inches long provide connections for heater voltage and pulse voltage. One lead is black, the other red. The red lead is the common heater-cathode to which negative high voltage should be connected. A "ground" lug on the body of the tube provides for positive high voltage connection.

R.F. OUTPUT COUPLING

Mates with TNC connector or TNC to 1½" x ¾" O.D. Waveguide Transition.

TUNER

The tuning mechanism is actuated by a screwdriver adjustable shaft. Bristol set screws are provided to lock the shaft in position prior to the subjection of the tube to environmental conditions. Care should be taken not to mechanically tune the tube beyond the extremes of its normal operating range, 5400 to 5900 Mc.

DIMENSIONS

Figure 1 is the mechanical outline drawing.

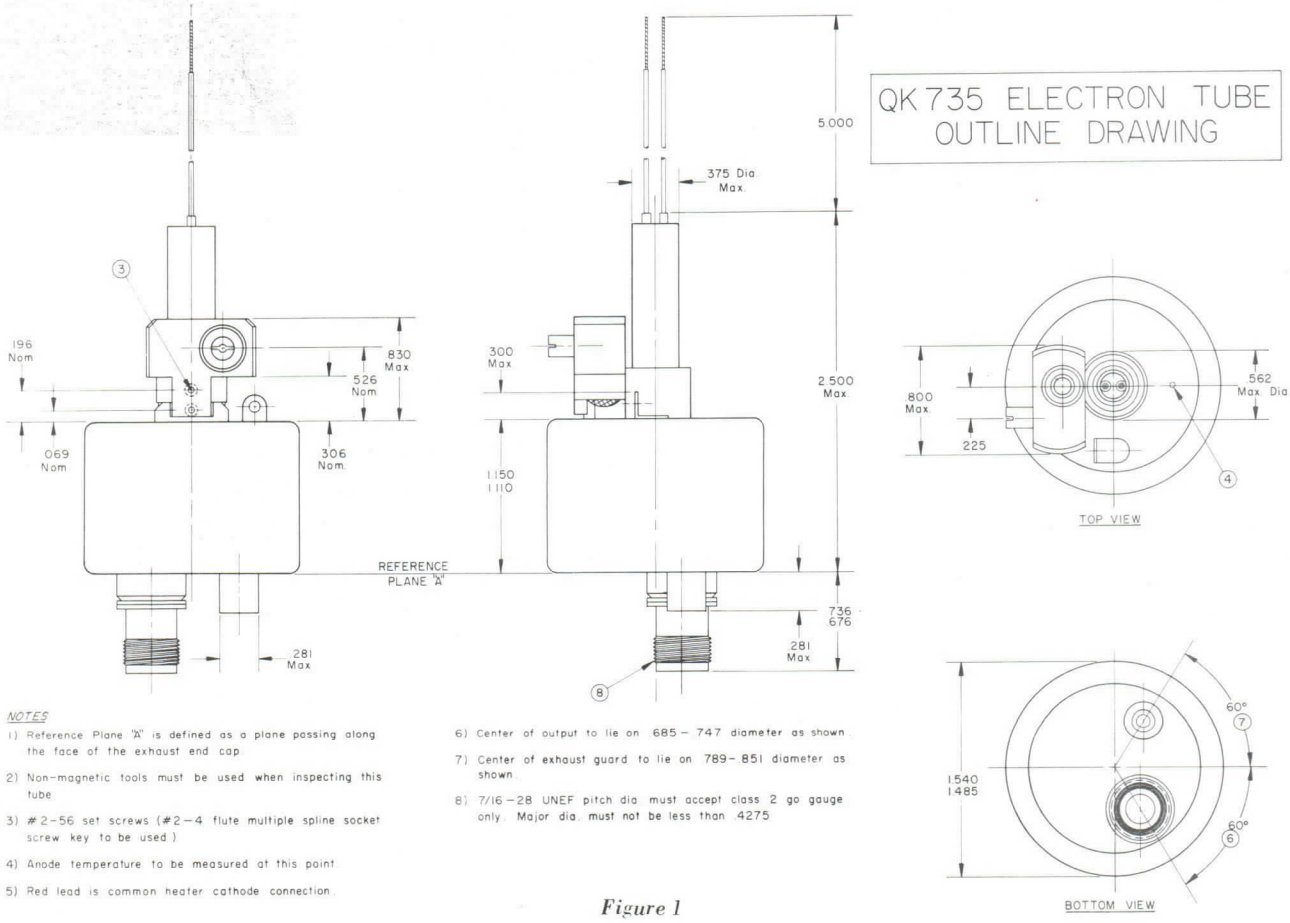

NOTES

1) Reference Plane "A" is defined as a plane passing along the face of the exhaust end cap.
2) Non-magnetic tools must be used when inspecting this tube.
3) #2-56 set screws (#2-4 flute multiple spline socket screw key to be used.)
4) Anode temperature to be measured at this point.
5) Red lead is common heater cathode connection.
6) Center of output to lie on .685 – .747 diameter as shown.
7) Center of exhaust guard to lie on .789 – .851 diameter as shown.
8) 7/16 – 28 UNEF pitch dia. must accept class 2 go gauge only. Major dia. must not be less than .4275.

Figure 1

QKH790

The technical information on this data sheet is of a proprietory nature and is furnished as a customer service for private use only.

QK790 **PRELIMINARY DATA SHEET**

RAYTHEON *Excellence in Electronics*



GENERAL DESCRIPTION

QKH-790

The QK-790 is a small 1.0 kilowatt pulsed magnetron tunable over the range of 8900 to 9400 megacycles. The QK-790 is designed primarily for missile beacon equipment.

GENERAL CHARACTERISTICS

Heater Characteristics

Heater Voltage	5.0 Volts
Heater Current	.45 Amperes
Cathode Heating Time	25 Seconds (minimum)

Typical Electrical Data

Pulsed Duration	0.5 Microseconds
Duty Cycle	.001
Peak Anode Current	1.0 Amperes
Peak Anode Voltage	4.5 Kilovolts
Peak Power Output	1000 Watts (minimum)
R. F. Bandwidth	2.5 Megacycles

tpc

Mechanical Data

Magnet	Integral
Mounting Position	Any
Weight	1.5 Pounds (approx.)
Cooling	None Required
Output Coupling	Mates with UG 40 A/U
Input Connections	Flying Leads

Reliable operation and maximum magnetron life can be achieved only if the overall radar transmitter is designed with the magnetron characteristics clearly in mind. This preliminary Data Sheet is intended as an introduction to this type magnetron and not as an absolute guide to users. Inquiries on this magnetron and its application should be directed to the Applications Engineering Department at Raytheon Company, Burlington, Massachusetts.

The specifications for this tube have not been finalized. The tube is being manufactured in limited quantities and is available for engineering analysis purposes only. This engineering information and/or delivery of sample tubes do not imply availability of tubes with the same electrical and/or mechanical characteristics. Changes in ratings and/ or dimensions may be made at our discretion as deemed advisable by manufacturing experience or other considerations. For current information concerning this tube contact the nearest Microwave and Power Tube Regional Sales Representative.

RAYTHEON

Excellence in Electronics

preliminary data sheet

1. REFERENCE PLANE "A" IS DEFINED AS A PLANE PASSING ALONG THE FACE OF THE WAVEGUIDE FLANGE.
2. REFERENCE PLANE "B" IS DEFINED AS A PLANE PERPENDICULAR TO PLANE "A" PASSING THROUGH THE CENTER OF HOLES AS SHOWN.
3. REFERENCE PLANE "C" IS DEFINED AS A PLANE MUTUALLY PERPENDICULAR TO PLANES "A" & "B" PASSING THROUGH CENTER OF THE HOLE AS SHOWN.
4. HEATER CATHODE COMMON-RED, HEATER-WHITE, LENGTH OF LEADS 12.000.
5. INCLUDES ANGULAR AS WELL AS LATERAL DEVIATION.
6. PARTS ON THIS CENTERLINE MAY VARY FROM TRUE LOCATION BY 1/8 MAXIMUM.
7. TO BE COUPLED TO A AN-UG-40 A/U STANDARD CHOKE FLANGE COUPLING.
8. MEASURE ANODE TEMPERATURE AT THIS POINT.
9. PITCH DIAMETER TO ACCEPT #8-32NC "GO" GAUGE ONLY. MINOR DIAMETER OF THREAD .140 MAXIMUM.
10. APPLIES TO O.D. OF HOUSING EXCLUSIVE OF CAP.

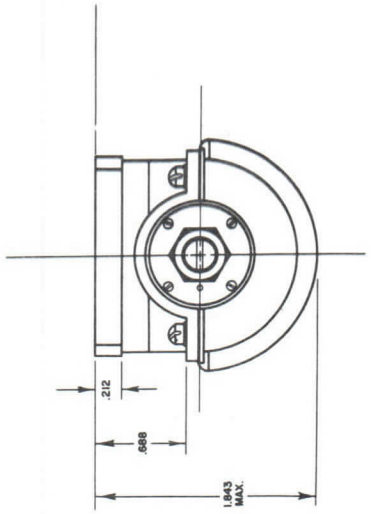

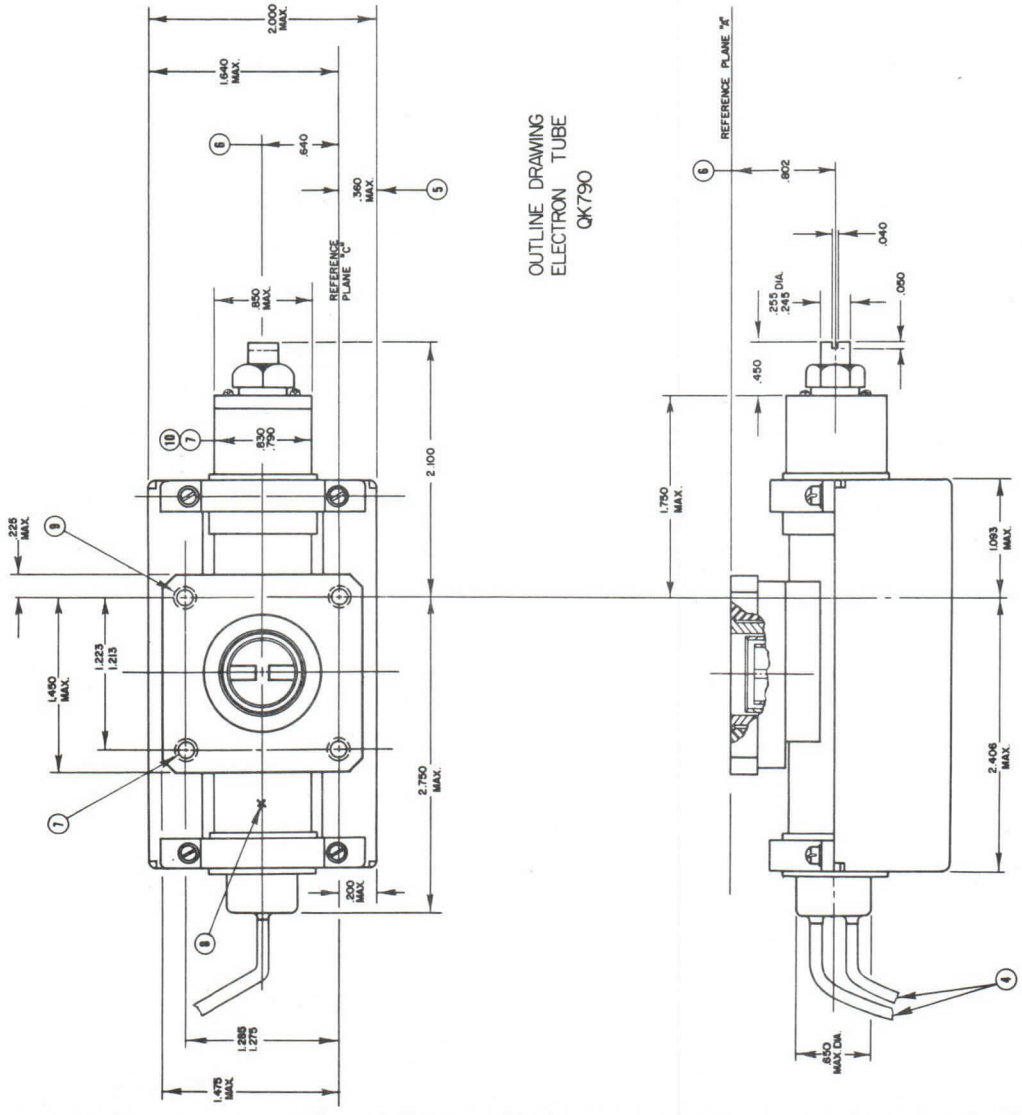

OUTLINE DRAWING
ELECTRON TUBE
QK790

The technical information on this data sheet is of a proprietory nature and is furnished as a customer service for private use only.

QK798 **PRELIMINARY**

DATA SHEET

RAYTHEON *Excellence in Electronics*

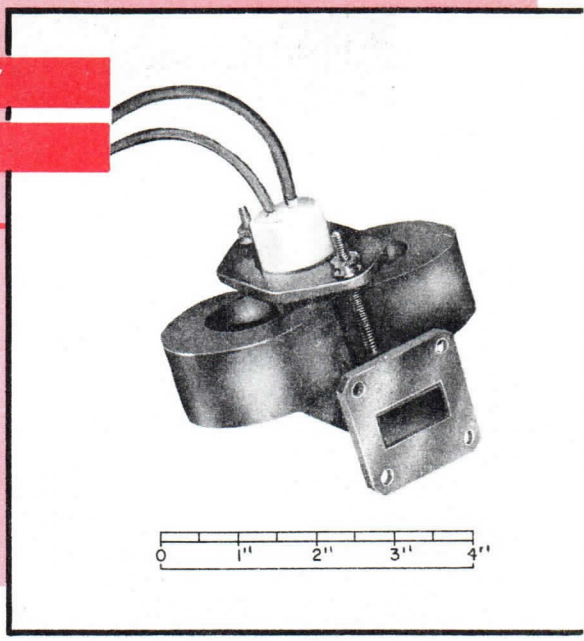

QK798

GENERAL DESCRIPTION

The QK798 is a new, 5.0 kilowatt, inexpensive X-Band magnetron designed for commerical applications such as small boat and small plane radars. The tube is a fixed frequency pulsed magnetron of the non-integral magnet type with a probe output. The tube fits in a magnet and waveguide assembly which is supplied by Raytheon or can be manufactured from Raytheon drawings. Replacement of the tube is accomplished by loosening the thumb screws, removing the old tube, and inserting the new one. Location holes in the waveguide mate with studs on the tube to prevent improper tube locations. The tube is small and light, and since no integral magnet is necessary, storage and shipping problems are greatly reduced.

MECHANICAL DATA

Mounting Position	Any
Cooling	Conduction and Convection

TYPICAL ELECTRICAL DATA

Heater Voltage	5.0 Volts
Heater Current	.65 Amperes
Pulse Duration	0.2 usec
Duty Cycle	.0003
Peak Anode Voltage	5.0 Kilovolts
Peak Anode Current	3.5 Amperes
Peak Power Output	5.0 Kilowatts
Frequency	9410 $\pm$ 50 Mcs.
Life	500 Hrs. Min.

These operating values are typical. Other operating points in this area are practicable and the manufacturer should be consulted for additional data.

Reliable operation and optimum magnetron life can be achieved only if the overall radar transmitter is designed with the magnetron characteristics and peculiarities clearly in mind. This preliminary data sheet is intended only to acquaint the reader with the basic characteristics of the magnetrons and should not be used as an absolute guide. Detailed test specifications are available upon request, and specific problems pertaining to applications should be directed to the Applications Engineering Department, Microwave and Power Tube Division at Raytheon, Burlington, Massachusetts.

The specifications for this tube have not been finalized. The tube is being manufactured in limited quantities and is available for engineering analysis purposes only. This engineering information and/or delivery of sample tubes do not imply availability of tubes with the same electrical and/or mechanical characteristics. Changes in ratings and/ or dimensions may be made at our discretion as deemed advisable by manufacturing experience or other considerations. For current information concerning this tube contact the nearest Microwave and Power Tube Regional Sales Representative.

RAYTHEON

Excellence in Electronics

preliminary data sheet

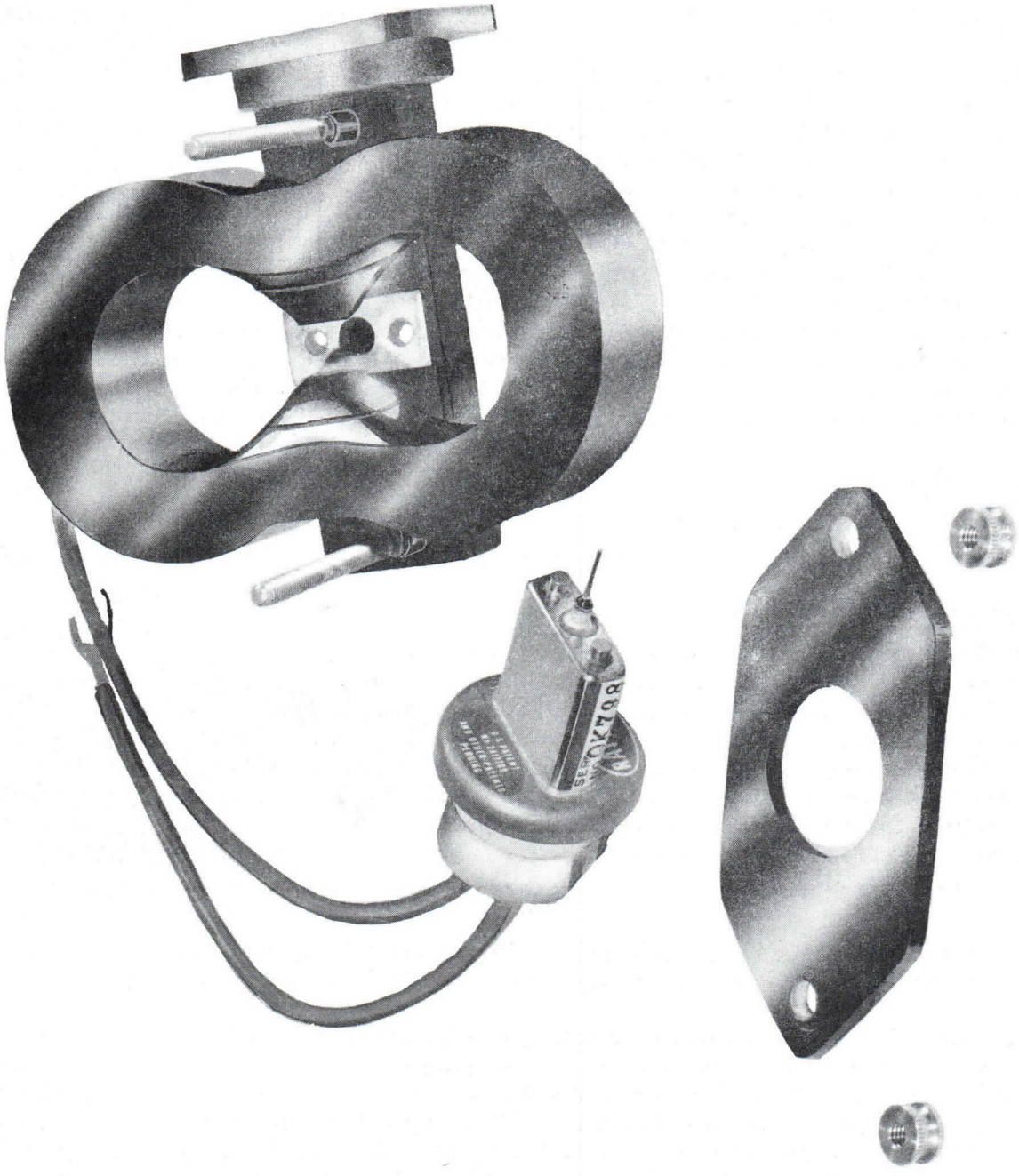

The technical information on this data sheet is of a proprietory nature and is furnished as a customer service for private use only.

QK821

PRELIMINARY DATA SHEET

RAYTHEON *Excellence in Electronics*



GENERAL DESCRIPTION

The QK821 is a mechanically tunable pulsed-type magnetron oscillator delivering a minimum peak power output of 2500 watts. It is capable of being tuned to any frequency within the 5400 to 5900 Mc range.

The QK821 is small (1.75" dia. x 3.5") lightweight (19 ounces) and has been designed primarily for missile beacon transponder applications where extreme environmental conditions are encountered. The QK821 is capable of sustaining shock acceleration of 100G and vibrational acceleration during operation of 15G at frequencies up to 2000 cycles per second.

GENERAL PRECAUTIONS

The precautions to be observed during the application of the QK821 magnetron are the same as for any oscillator of this type. Experience has indicated that the areas where application problems frequently arise include the magnetron voltage pulse shape--particularly its rate of rise, the load VSWR, and anode current regulation. It is recommended that the Applications Engineering Department be consulted regarding the details of any contemplated equipment design utilizing the QK821.

GENERAL CHARACTERISTICS

ELECTRICAL

Heater Voltage - Preheat and Operate	4.5 to 5.5 Volts
Heater Current	1.8 Ampere at 5.0 Volts
Minimum Preheat Time	30 Seconds
Temperature Coefficient	+0.1 Mc/°C Maximum
Operational Altitude	70,000 Feet Maximum
Frequency Deviation During Vibration Of 15G, 20 to 2000 cps	1.5 Mc Peak to Peak Max.
Frequency Shift Due to Shock 100G, 1 Millisecond	1 Mc Maximum
Frequency Shift Due to 100G Acceleration	1 Mc Maximum

TYPICAL OPERATION

Pulse Duration	0.25 to 0.75 Microseconds
Duty Cycle	.000025 to .002
Peak Anode Current	3.0 Amperes
Peak Anode Voltage	3.7 Kilovolts
Peak Power Output Minimum	2500 Watts
Voltage Rise Time (20 to 85%)	0.11 us

The specifications for this tube have not been finalized. The tube is being manufactured in limited quantities and is available for engineering analysis purposes only. This engineering information and/or delivery of sample tubes do not imply availability of tubes with the same electrical and/or mechanical characteristics. Changes in ratings and/ or dimensions may be made at our discretion as deemed advisable by manufacturing experience or other considerations. For current information concerning this tube contact the nearest Microwave and Power Tube Regional Sales Representative.

MOUNTING

The tube may be mounted in any position and must be supported by a suitably designed holder made of non-ferrous material which will utilize the diameter of the tube for support. Magnetic material should not be mounted within 2 inches of the tube.

INPUT CONNECTIONS

Two flexible leads approximately 5 inches long provide connections for heater voltage and pulse voltage. One lead is black, the other red. The red lead is the common heater-cathode to which negative high voltage should be connected. A "ground" lug on the body of the tube provides for positive high voltage connection.

R.F. OUTPUT COUPLING

Mates with TNC coaxial Fitting or TNC to 3/4"x 1 1/2" or 1" x 2" O.D. Waveguide Transition.

TUNER

The tuning mechanism is actuated by a screwdriver adjustable shaft. A set screw is provided to lock the shaft in position prior to the subjection of the tube to environmental conditions. Care should be taken not to mechanically tune the tube beyond extremes of its normal operating range, 5400 to 5900 Mc.

DIMENSIONS

Figure 1 is the mechanical outline drawing.

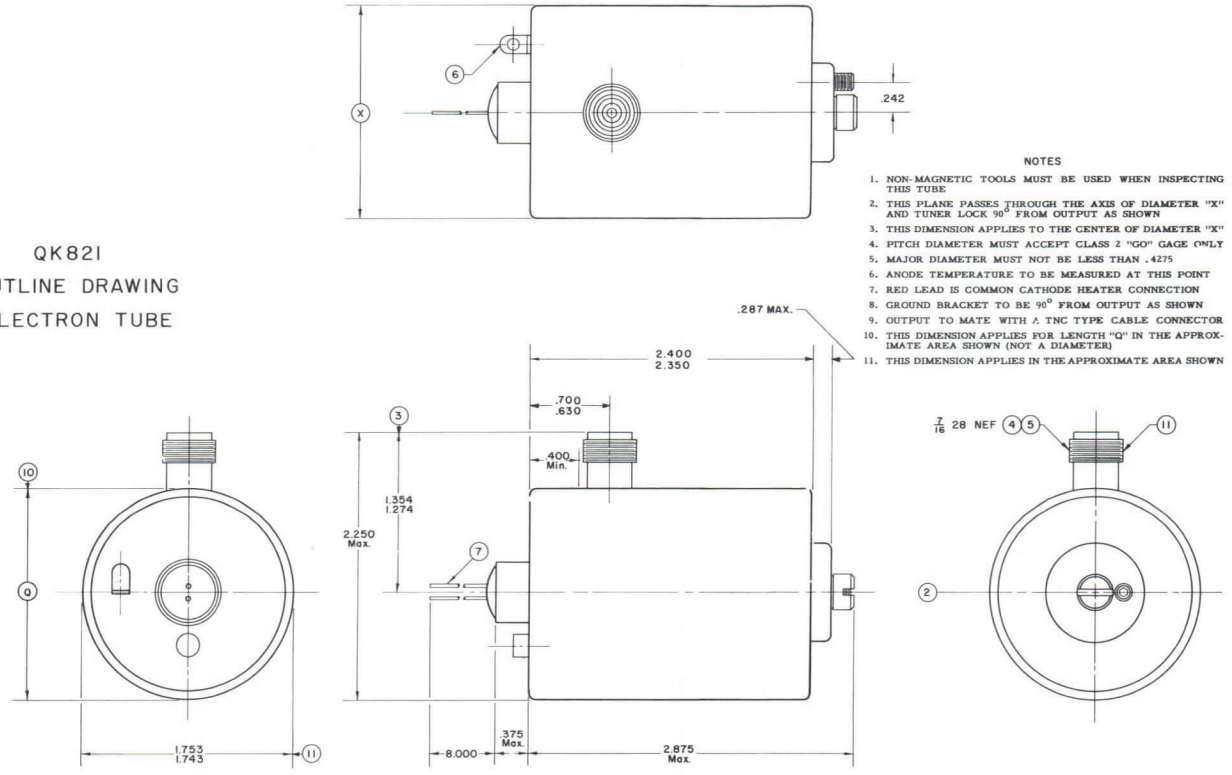

QK821
OUTLINE DRAWING
ELECTRON TUBE

Figure 1

The technical information on this data sheet is of a proprietory nature and is furnished as a customer service for private use only.

QKH883

PRELIMINARY

DATA SHEET

RAYTHEON *Excellence in Electronics*

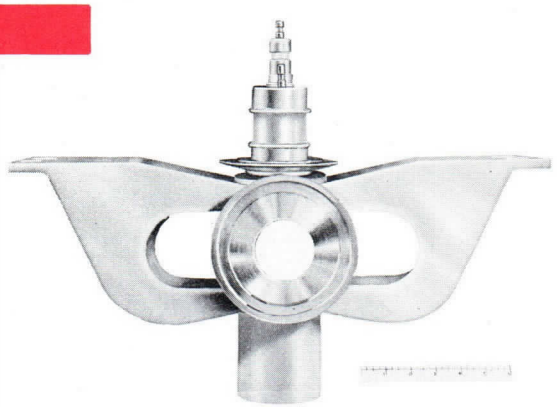

QKH883

GENERAL DESCRIPTION

The QKH883 magnetron is a frequency adjustable, high power, pulsed-type oscillator which is capable of delivering a minimum of 4.5 megawatts peak power and 3600 watts average power. The QKH883 may be hand tuned over a 30 Mc. frequency band in the 2750 to 2860 megacycle region. It is an integral magnet, unipotential cathode type tube requiring liquid cooling, with an output designed to couple directly into a 1 1/2" x 3" waveguide.

The QKH883 has been designed for use in radar systems that require tuneability to alleviate interference problems between systems while at the same time providing some degree of anti-jam capability. It may also be used in systems which require the frequency to be held at discreet values with life. The tube is completely interchangeable with the RK6410A/QK338A thereby enabling the above features to be achieved in radar systems already using the QK338A at the same low unit tube cost.

Mechanical Data

Mounting Position	Cathode Vertical
Net Weight	60 Lbs.
Cooling	Forced Liquid
Input Bushing	Oil Immersed (Note C)
Pressurization (Output)	45 p.s.i.a. Min.

Typical Electrical Data

Heater Current (Preheat - 300 Sec.)	79 Amperes
Heater Voltage @ 79 Amperes	8.0 Volts
Pulse Duration (tpc)	2.0 usec
Peak Anode Voltage	70 Kilovolts
Peak Anode Current	130 Amperes
Average Power Output	4000 Watts
Voltage Rise Time	0.3 usec Min.
Maximum VSWR	1.5
RF Bandwidth (@ 6.0 db)	3.0/tpc Max.
Life (1.5 VSWR, Cycled)	800 Hours Min.

Reliable operation and maximum magnetron life can be achieved only if the overall radar transmitter is designed with the magnetron characteristics and peculiarities clearly in mind. This preliminary Data Sheet is intended to serve as an introduction only and should not be used as an absolute guide to users. Detailed tube specifications are available on request, specific problems and applications should be directed to the Applications Engineering Department, Microwave and Power Tube Division, Raytheon Company, Burlington, Massachusetts.

The specifications for this tube have not been finalized. The tube is being manufactured in limited quantities and is available for engineering analysis purposes only. This engineering information and/or delivery of sample tubes do not imply availability of tubes with the same electrical and/or mechanical characteristics. Changes in ratings and/ or dimensions may be made at our discretion as deemed advisable by manufacturing experience or other considerations. For current information concerning this tube contact the nearest Microwave and Power Tube Regional Sales Representative.

RAYTHEON

Excellence in Electronics

preliminary data sheet

Notes

1. "SCREW DRIVER ACTUATOR"
2. REFERENCE PLANE "A" LIES ON MOUNTING SURFACE OF MAGNETS.
3. REFERENCE PLANE "B" PASSES THROUGH ℄ OF HOLES IN BRACKET AND IS PERPENDICULAR TO REFERENCE PLANE "A".
4. REFERENCE PLANE "C" PASSES THROUGH ℄ OF HOLES IN BRACKET AND IS PERPENDICULAR TO REFERENCE PLANES "A" AND "B".
5. INCLUDES ANGULAR AS WELL AS LATERAL DEVIATIONS.
6. REFERS TO ℄ OF WAVEGUIDE.
7. PARTS ON THIS ℄ MAY VARY FROM TRUE LOCATION BY 0.125".
8. HANSEN B3-T20 COUPLING PLUG.
9. COMMON CATHODE CONNECTION.
10. ALL SOLDER JOINTS ON OUTPUT SECTION SHALL BE SOLDERED TO PROVIDE AN HERMETIC SEAL.
11. THE FOLLOWING SHALL BE FREE FROM PAINT: FRONT AND BACK FACES OF OIL SEALING SLEEVE, PARTS ABOVE FLANGE, FRONT AND BACK FACES OF OUTPUT FLANGE, EXHAUST CAP, MOUNTING SURFACE ON MAGNETS AND COOLANT PLUG CONNECTORS.
12. CATHODE STEM TEMPERATURE MEASURED AT THIS POINT.
13. ANODE TEMPERATURE MEASURED AT RIGHT SIDE (FACING OUTPUT) OF OUTPUT TRANSFORMER.
14. EQUIPMENT FLANGES MATING TO OIL SEALING FLANGE AND TO OUTPUT FLANGE SHOULD PROVIDE COMPLIANCE AS BY MEANS OF A BELLOWS OR OTHER FLEXIBLE UNION. THESE FLANGES MAY NOT BE USED IN SUPPORTING THE TUBE. ENTIRE WEIGHT IS TO BE HELD BY MAGNET BRACKETS.
15. THESE SURFACES TO BE COPLANER WITHIN 0.032".
16. WARNING: MAINTAIN 8 INCHES MINIMUM CLEARANCE BETWEEN MAGNETS AND FERROMAGNETIC MATERIALS EXCEPT AT BRACKET ENDS WHERE MINIMUM CLEARANCE MAY BE 3 INCHES. MAINTAIN 12 INCHES MINIMUM CLEARANCE TO OTHER CHARGED MAGNETS.
17. PROTECTIVE COVER FOR SHIPPING PURPOSES ONLY.
18. PAINT WITH HEAT RESISTANT, NON-CORROSIVE PAINT.
19. PARTS ON THIS CENTER LINE MAY VARY FROM TRUE LOCATION BY 0.188".

A MINIMUM DISTANCE FROM HIGH VOLTAGE TO GROUND SHOULD BE 1.500" THROUGH OIL AND 10.000" THROUGH AIR AT ATMOSPHERIC PRESSURE.

B PLUGS INTO HANSEN 3-S20 SOCKET.

C USE "UNIVOLT 35" TRANSFORMER OIL OR EQUIVALENT FOR FLUID INSULATING MEDIUM.

D OIL FLANGE AIR VENT - PART TO MATE WITH WIGGINS #P1707 COUPLING OR EQUIVALENT.

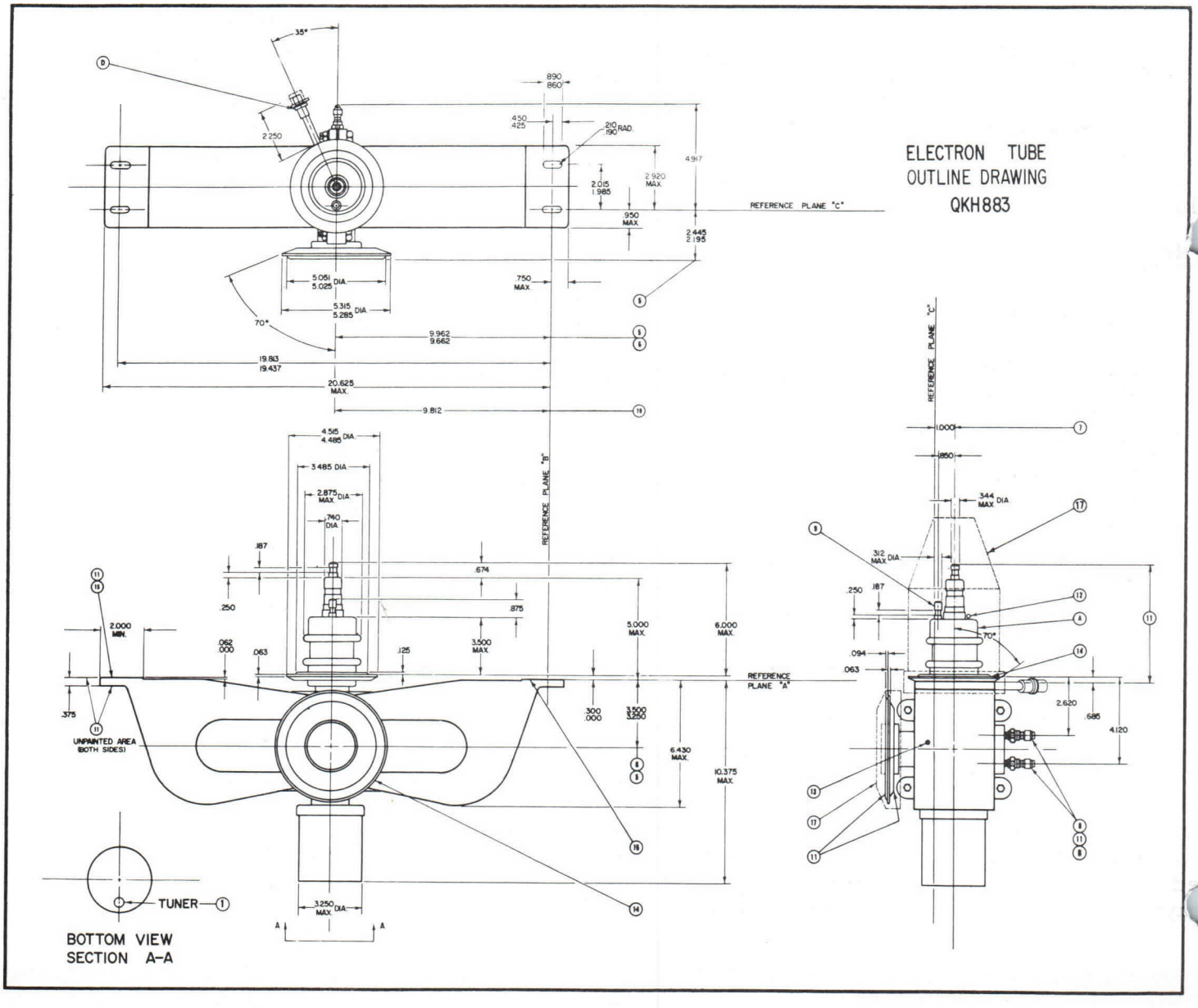

The technical information on this data sheet is of a proprietory nature and is furnished as a customer service for private use only.

QKH898 **PRELIMINARY DATA SHEET**

RAYTHEON *Excellence in Electronics*

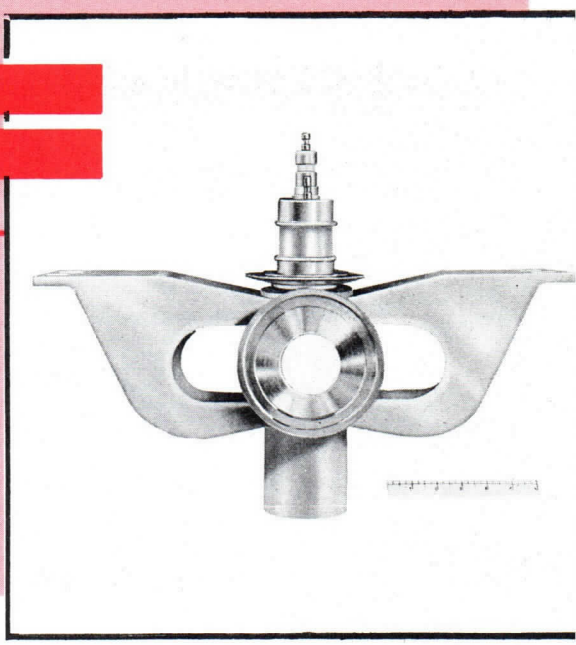

GENERAL DESCRIPTION

The QKH898 magnetron is a frequency adjustable, high power, pulsed-type oscillator which is capable of delivering a minimum of 4.5 megawatts peak power and 3600 watts average power. The QKH898 may be hand tuned over a 20 Mc. frequency band centered upon 2856 megacycles. It is an integral magnet, unipotential cathode type tube requiring liquid cooling, with an output designed to couple directly into a 1 1/2" x 3" waveguide.

The QKH898 has been designed for use in linear accelerators and in radar systems that require tuneability to alleviate interference problems between systems while at the same time providing some degree of anti-jam capability. It may also be used in systems which require the frequency to be held at discreet values with life.

Mechanical Data

Mounting Position	Cathode Vertical
Net Weight	60 Lbs.
Cooling	Forced Liquid
Input Bushing	Oil Immersed
Pressurization (Output)	45 p.s.i.a. Min.

Typical Electrical Data

Heater Current (Preheat - 300 Sec.)	79 Amperes
Heater Voltage @ 79 Amperes	8.0 Volts
Pulse Duration (tpc)	2.0 usec
Peak Anode Voltage	70 Kilovolts
Peak Anode Current	130 Amperes
Average Power Output	4000 Watts
Voltage Rise Time	0.3 usec Min.
Maximum VSWR	1.5
RF Bandwidth (@ 6.0 db)	3.0/tpc Max.
Life (1.5 VSWR, Cycled)	800 Hours Min.
Duty Cycle	.0008

Reliable operation and maximum magnetron life can be achieved only if the overall radar transmitter is designed with the magnetron characteristics and peculiarities clearly in mind. This preliminary Data Sheet is intended to serve as an introduction only and should not be used as an absolute guide to users. Detailed tube specifications are available on request, specific problems and applications should be directed to the Applications Engineering Department, Microwave and Power Tube Division, Raytheon Company, Burlington, Massachusetts.

The specifications for this tube have not been finalized. The tube is being manufactured in limited quantities and is available for engineering analysis purposes only. This engineering information and/or delivery of sample tubes do not imply availability of tubes with the same electrical and/or mechanical characteristics. Changes in ratings and/ or dimensions may be made at our discretion as deemed advisable by manufacturing experience or other considerations. For current information concerning this tube contact the nearest Microwave and Power Tube Regional Sales Representative.

The technical information on this data sheet is of a proprietory nature and is furnished as a customer service for private use only.

QKH899

PRELIMINARY DATA SHEET

RAYTHEON *Excellence in Electronics*



GENERAL DESCRIPTION

The QKH899 magnetron is a frequency adjustable, high power, pulsed-type oscillator which is capable of delivering a minimum of 2.5 megawatts peak power and 1500 watts average power. The QKH899 may be hand tuned over a 20 Mc. frequency band centered upon 2856 megacycles. It is an integral magnet, unipotential cathode type tube requiring liquid cooling, with an output designed to couple directly into a 1 1/2" x 3" waveguide.

The QKH899 has been designed for use in linear accelerators and in radar systems that require tuneability to alleviate interference problems between systems while at the same time providing some degree of anti-jam capability. It may also be used in systems which require the frequency to be held at discreet values with life.

Mechanical Data

Mounting Position	Cathode Vertical
Net Weight	40 Lbs. (Approx.)
Cooling	Forced Liquid
Input Bushing	Oil Immersed
Pressurization (Output)	45 p.s.i.a.

Typical Electrical Data

Heater Current (Preheat - 300 Sec.)	79 Amperes
Heater Voltage @ 79 Amperes	8.0 Volts
Pulse Duration (tpc)	2.0 usec
Peak Anode Voltage	52 Kilovolts
Peak Anode Current	85 Amperes
Average Power Output	1650 Watts
Voltage Rise Time	0.3 usec Min.
Maximum VSWR	1.5
RF Bandwidth (@ 6.0 db)	3.0/tpc Max.
Life (1.5 VSWR, Cycled)	800 Hours Min.
Duty Cycle	.0006

Reliable operation and maximum magnetron life can be achieved only if the overall radar transmitter is designed with the magnetron characteristics and peculiarities clearly in mind. This preliminary Data Sheet is intended to serve as an introduction only and should not be used as an absolute guide to users. Detailed tube specifications are available on request, specific problems and applications should be directed to the Applications Engineering Department, Microwave and Power Tube Division, Raytheon Company, Burlington, Massachusetts.

The specifications for this tube have not been finalized. The tube is being manufactured in limited quantities and is available for engineering analysis purposes only. This engineering information and/or delivery of sample tubes do not imply availability of tubes with the same electrical and/or mechanical characteristics. Changes in ratings and/ or dimensions may be made at our discretion as deemed advisable by manufacturing experience or other considerations. For current information concerning this tube contact the nearest Microwave and Power Tube Regional Sales Representative.

The technical information on this data sheet is of a proprietory nature and is furnished as a customer service for private use only.

QKH904 **OBJECTIVE DATA SHEET**

RAYTHEON

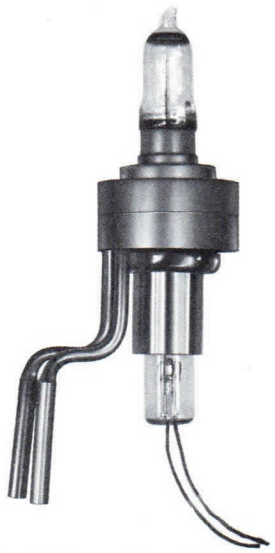

GENERAL DESCRIPTION

The QKH904 magnetron is a fixed frequency continuous wave oscillator designed for use in domestic and commercial microwave heating applications. High voltage for the tube is provided directly from the high voltage transformer without filtering or rectification. Magnetic field is supplied by passing the tube current through an external electromagnet.

MECHANICAL DATA

Mounting Position	Any
Net Weight	2 lbs.
Cooling	Liquid

TYPICAL ELECTRICAL DATA

Preheat:

Time	6 Seconds
Filament Voltage	4.4 Volts
Filament Current	28 A

Operate:

Filament Voltage	4.15 Volts
Filament Current	25 A
Average Anode Current	500 mA
Anode Voltage	4.5 kv
Power Output	1250 Watts
VSWR	4:1 Maximum
Frequency	2450 Mc

Reliable operation and maximum magnetron life can be achieved only if the over-all power supply is designed with the magnetron characteristics and peculiarities clearly in mind. This Objective Data Sheet is intended to serve as an introduction only and should not be used as an absolute guide to users. Detailed tube specifications are available on request. Specific problems and applications should be directed to the Applications Engineering Department, Microwave and Power Tube Division, Raytheon Company, Spencer Laboratory, Burlington, Massachusetts.

8/62

The specifications for this tube have not been finalized. The tube is in the development stage and is available for engineering analysis purposes only. This engineering information and/or delivery of sample tubes do not imply availability of tubes with the same electrical and/or mechanical characteristics. Changes in ratings and/or dimensions may be made at our discretion as deemed advisable by manufacturing experience or other considerations. For current information concerning this tube contact the nearest Microwave and Power Tube Regional Sales Representative.

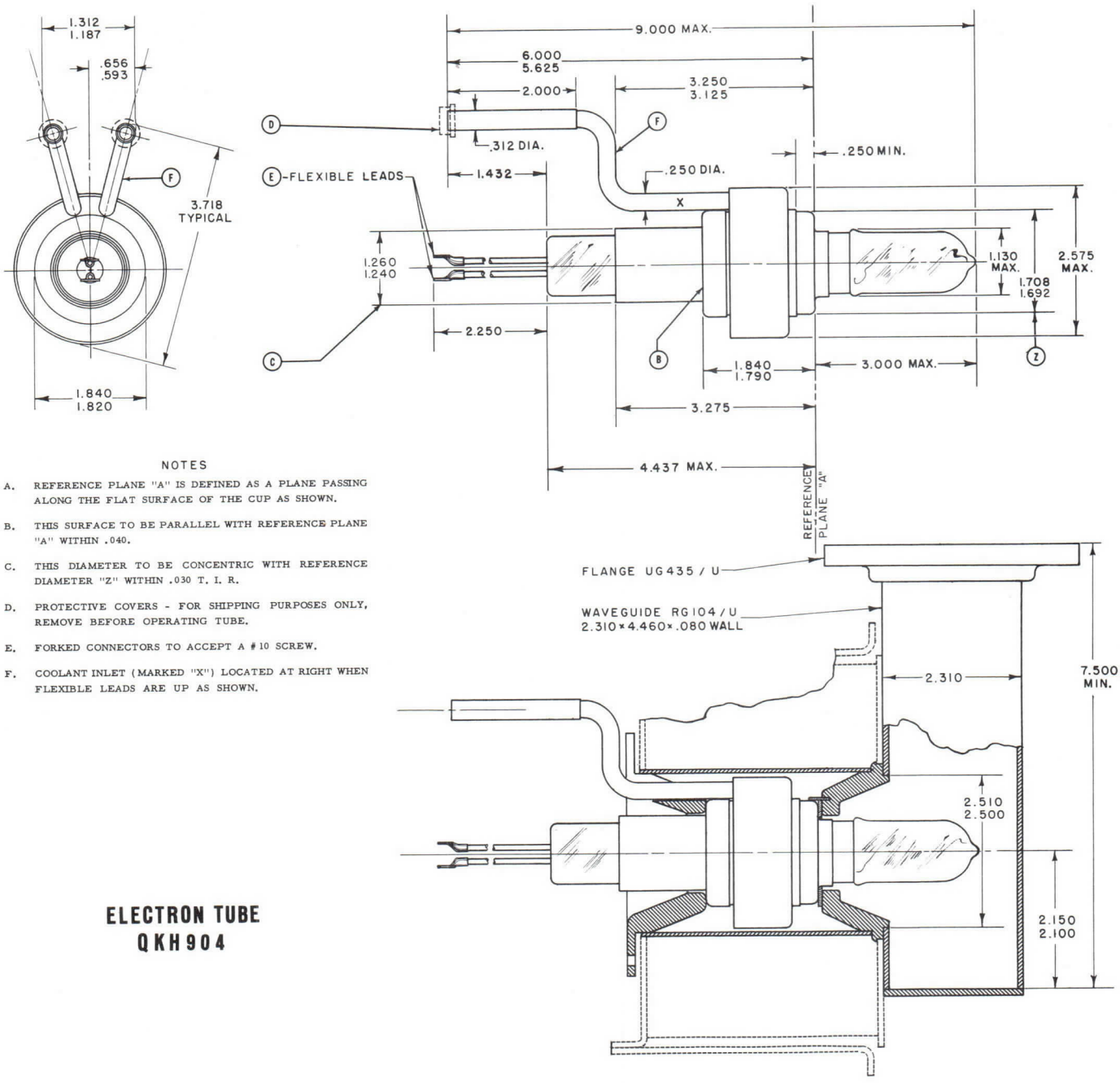

NOTES

A. REFERENCE PLANE "A" IS DEFINED AS A PLANE PASSING ALONG THE FLAT SURFACE OF THE CUP AS SHOWN.

B. THIS SURFACE TO BE PARALLEL WITH REFERENCE PLANE "A" WITHIN .040.

C. THIS DIAMETER TO BE CONCENTRIC WITH REFERENCE DIAMETER "Z" WITHIN .030 T. I. R.

D. PROTECTIVE COVERS - FOR SHIPPING PURPOSES ONLY, REMOVE BEFORE OPERATING TUBE.

E. FORKED CONNECTORS TO ACCEPT A #10 SCREW.

F. COOLANT INLET (MARKED "X") LOCATED AT RIGHT WHEN FLEXIBLE LEADS ARE UP AS SHOWN.

ELECTRON TUBE
QKH904

The technical information on this data sheet is of a proprietory nature and is furnished as a customer service for private use only.

QKH959/QKH960 PRELIMINARY DATA SHEET

RAYTHEON

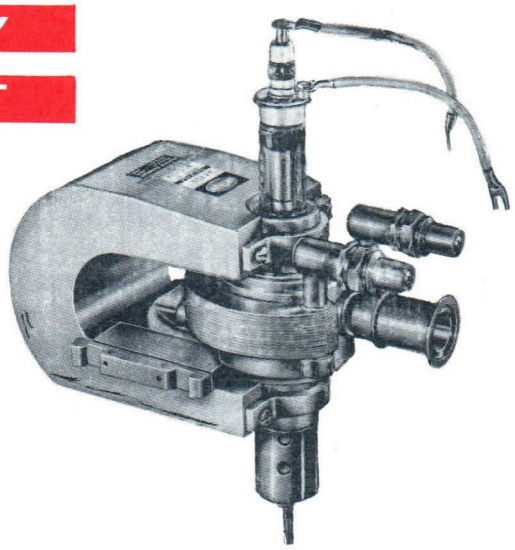

The QKH959 and QKH960 are tunable, medium power CW type oscillators operating within the frequency limits of 950 - 1525 and 2350 - 3600 megacycles respectively. These magnetrons are coaxial output type requiring liquid cooling and are designed for coupling to 7/8" coaxial line fitted with Flange # HF-885-1, using Raytheon connector # HF-1027 and clamp # W 14-6002.

GENERAL CHARACTERISTICS

MECHANICAL DATA

Mounting Position	Cathode Vertical
Net Weight	23.5 lbs. approx.
Cooling	Liquid
Magnet	Integral

TYPICAL OPERATION	QKH959	QKH960	UNITS
Anode Current	200	225	mAdc
Anode Voltage	2.7 - 3.1	2.7 - 3.2	Kv
Preheat Filament Voltage 300 Sec.	6.3	6.6	Volts
Operating Filament Voltage	6.3	5.7	Volts
Filament Current @ Preheat Voltage	12 - 16	12 - 16	Amps.
Power Output	185	190	Watts
Frequency	950 - 1525	2350 - 3600	Mcs

This Preliminary Data Sheet is intended as an introduction to this type magnetron and not as an absolute guide to users. Specific inquiries on this magnetron and its applications should be directed to the Applications Engineering Department at Raytheon Company, Spencer Laboratory, Burlington, Massachusetts.

8/62

The specifications for this tube have not been finalized. The tube is being manufactured in limited quantities and is available for engineering analysis purposes only. This engineering information and/or delivery of sample tubes do not imply availability of tubes with the same electrical and/or mechanical characteristics. Changes in ratings and/or dimensions may be made at our discretion as deemed advisable by manufacturing experience or other considerations. For current information concerning this tube contact the nearest Microwave and Power Tube Regional Sales Representative.

RAYTHEON

preliminary data sheet.

NOTES

1. REFERENCE PLANE "A" IS DEFINED AS THE PLANE IN WHICH THE BOTTOM SURFACE OF THE TUNER HOUSING LIES.
2. REFERENCE PLANE "B" IS DEFINED AS A PLANE PERPENDICULAR TO PLANE "A" ON THE OUTER EDGE OF THE MOUNTING FLANGE.
3. REFERENCE PLANE "C" IS A PLANE PASSING THROUGH A POINT ON FACE OF THE OUTPUT PERPENDICULAR TO PLANES "A" AND "B". REMAINDER OF FLANGE MUST BE SUCH THAT A .030 THICKNESS GAUGE .125 WIDE SHALL NOT ENTER.
4. CENTERLINE OF INNER CONDUCTOR SHALL BE CONCENTRIC TO CENTERLINE OF REFERENCE DIAMETER "Z" WITHIN .025.
5. APPLIES TO STRAIGHT PORTION OF INNER CONDUCTOR WALL.
6. COMMON CATHOD CONNECTION.
7. CONNECTOR TO SUIT # 10 SCREW.
8. DIMENSION APPLIES TO CENTER OF DIAMETER "Z".
9. INCLUDES ANGULAR AS WELL AS LATERAL DEVIATION.
10. CENTERLINE OF COOLING ADAPTERS TO BE PARALLEL WITH CENTERLINE OF OUTPUT WITHIN 4°.
11. FILL WITH OS-45 COOLING LIQUID BEFORE SHIPPING.
12. EARS ON MAGNET NOT TO BE PAINTED FOR THIS DISTANCE.
13. LOCATION FOR MEASUREMENT FOR ANODE TEMPERATURE AT BOTTOM CENTER OF THERMOSTAT MOUNT.
14. LOCATION FOR MEASUREMENT OF CATHODE BUSHING TEMPERATURE.
15. SHIM AND SET SCREW MAY BE REMOVED TO INSTALL TUBE IN EQUIPMENT AND TO ADJUST THE POSITION OF THE TUBE IN MAGNET. DIMENSIONS AM, AC, AND AD MUST BE SATISFIED AT ONE POSITION OF THE TUBE IN MAGNET.
16. BOTTOM SURFACE OF FOUR SET SCREWS, MUST BE WITHIN .005 OF EACH OTHER AS MEASURED FROM REFERENCE PLANE "A".
17. THREAD MUST ACCEPT PITCH DIAMETER "GO" GAGE ONLY. MAJOR DIAMETER NOT TO BE LESS THAN .2385.
18. 1.435 - 1.437 DIAMETER APPLY FOR THIS DISTANCE.
19. THERMOSTAT (P-19 OF INSTALLATION DETAILS) MUST FIT SECURELY IN MOUNT WHEN TUBE IS POSITIONED WITH MOUNT DOWN.
20. COUPLINGS - E. B. WIGGINS # P 1866.

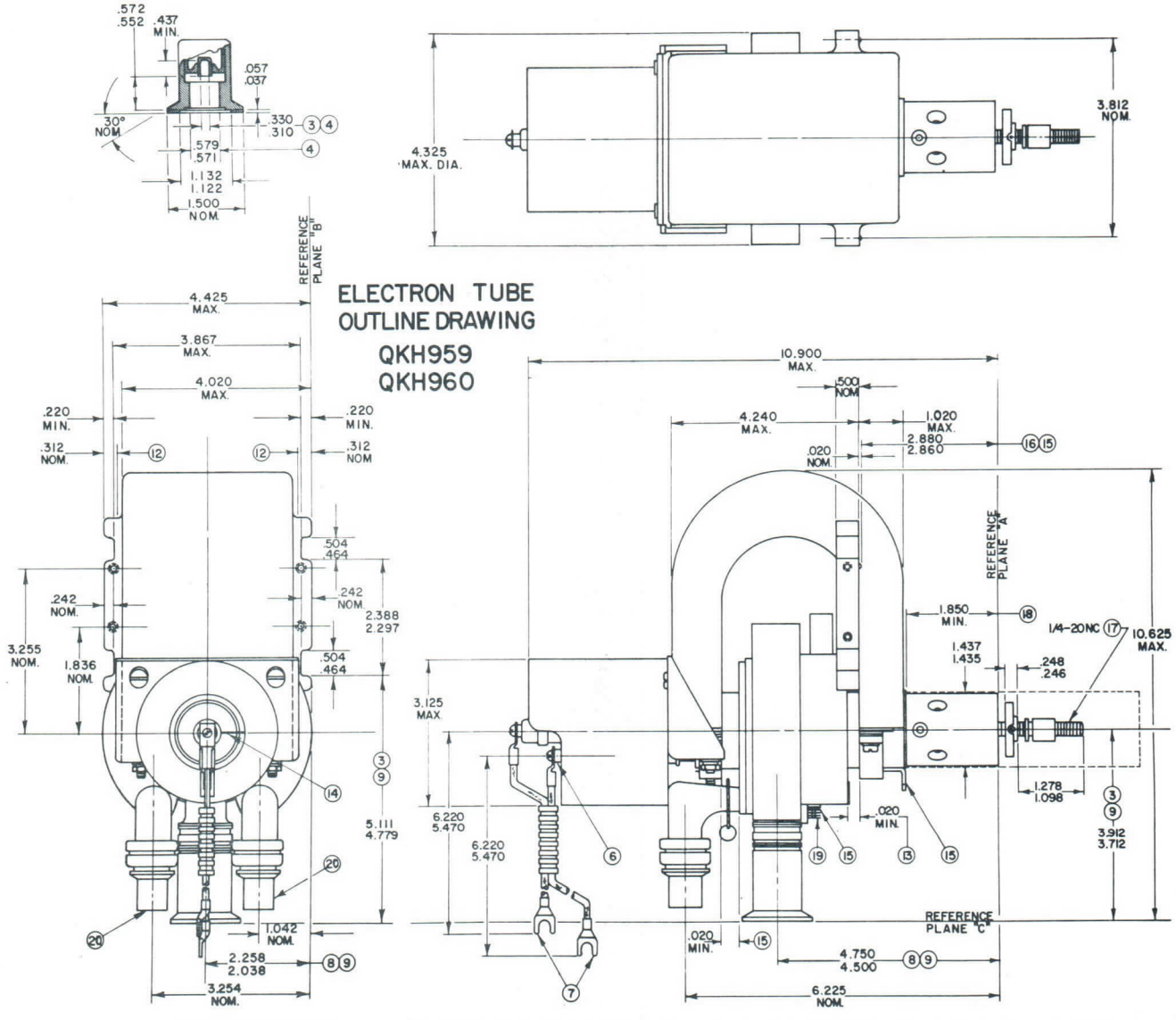

ELECTRON TUBE OUTLINE DRAWING

QKH959
QKH960

QKH1000

RAYTHEON

MICROWAVE AND
POWER TUBE DIVISION

Improved airborne radar performance

INFORMATION BULLETIN

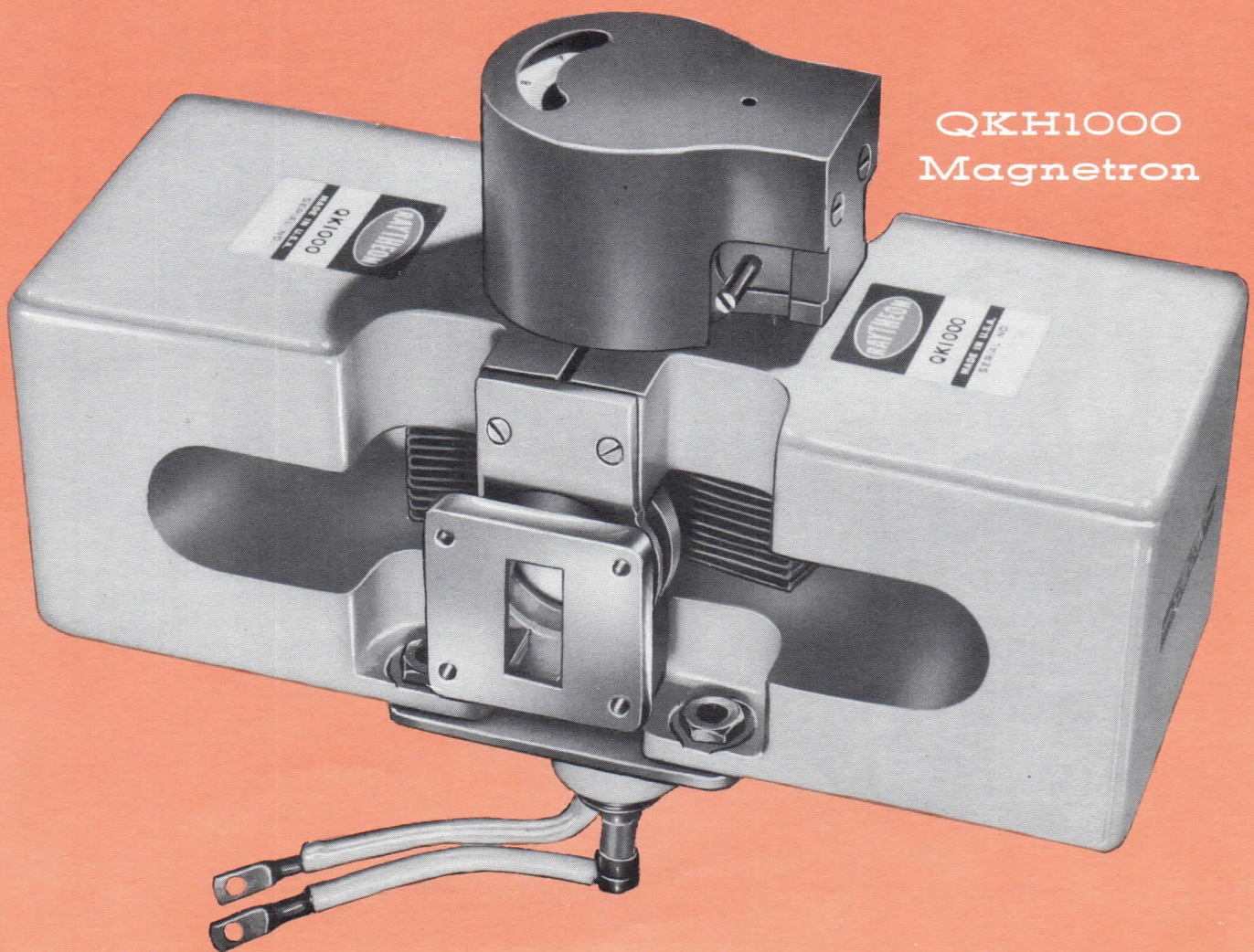

QKH1000
Magnetron

RAYTHEON

MICROWAVE AND
POWER TUBE DIVISION

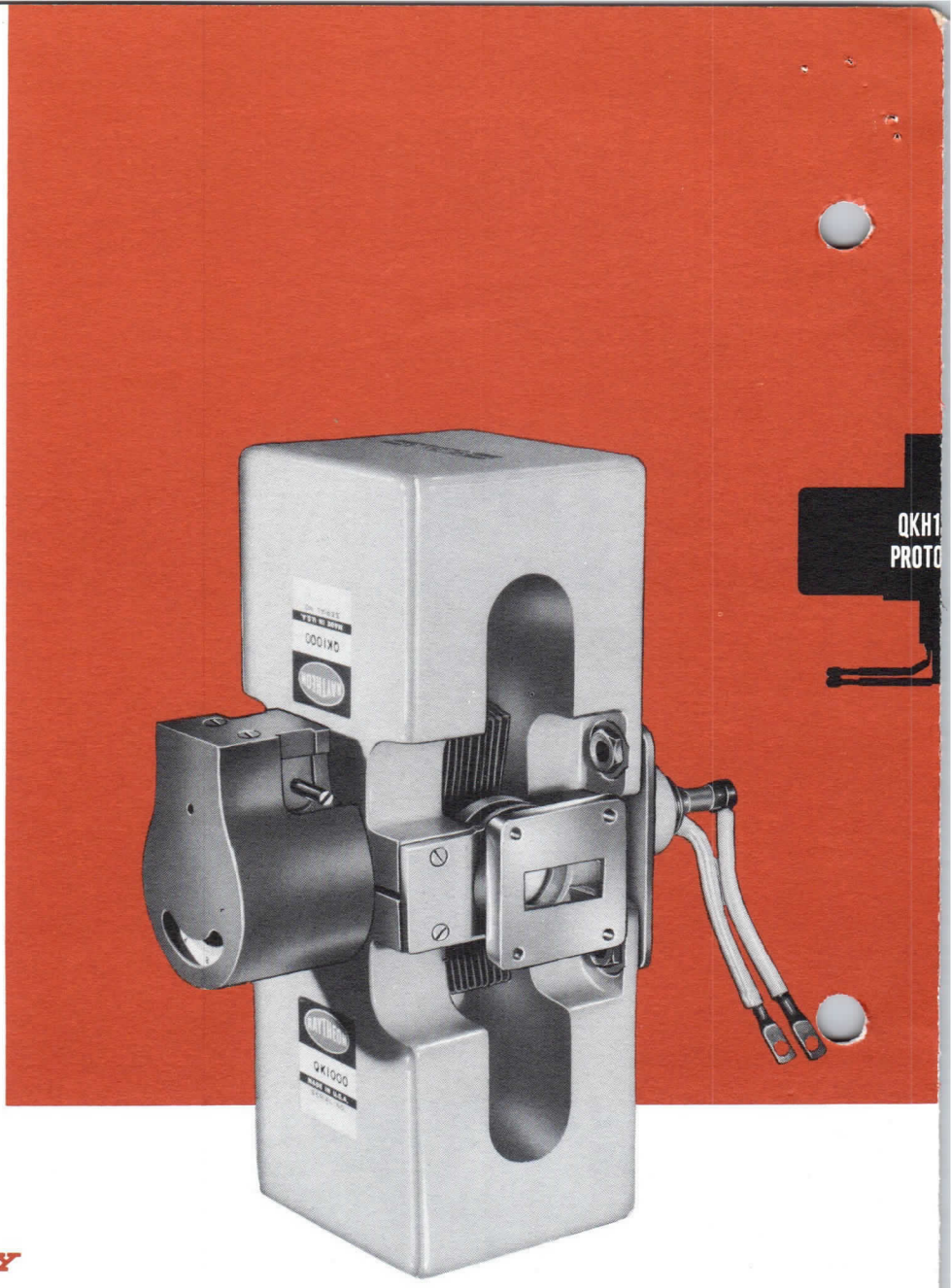

Raytheon's new QKH1000 is a rapidly tunable 250 kw X-band pulsed magnetron designed to improve the performance of existing airborne radar systems and provide increased capability for new systems.

The fundamental approach utilized in the QKH1000 employs a new concept in anode design to assure uniformity of r.f. field distribution under the generally disturbing variations of input power and output load, and yet retain the simplicity of an easily tunable structure. In conjunction with r.f. field uniformity, a larger anode than that found in other tubes of similar ratings provides better power dissipation area, resulting in improved voltage stability, longer life, and better utilization of cathode emission capability.

All ceramic and metal construction enables the use of higher processing temperatures during manufacture, and assures the adaptability of state-of-the-art advances in vacuum technology. The ceramic output window has greater ability to withstand waveguide malfunctions. The ceramic input bushing is less susceptible to handling damage. New cooling fins improve cooling efficiency by introducing turbulant air flow.

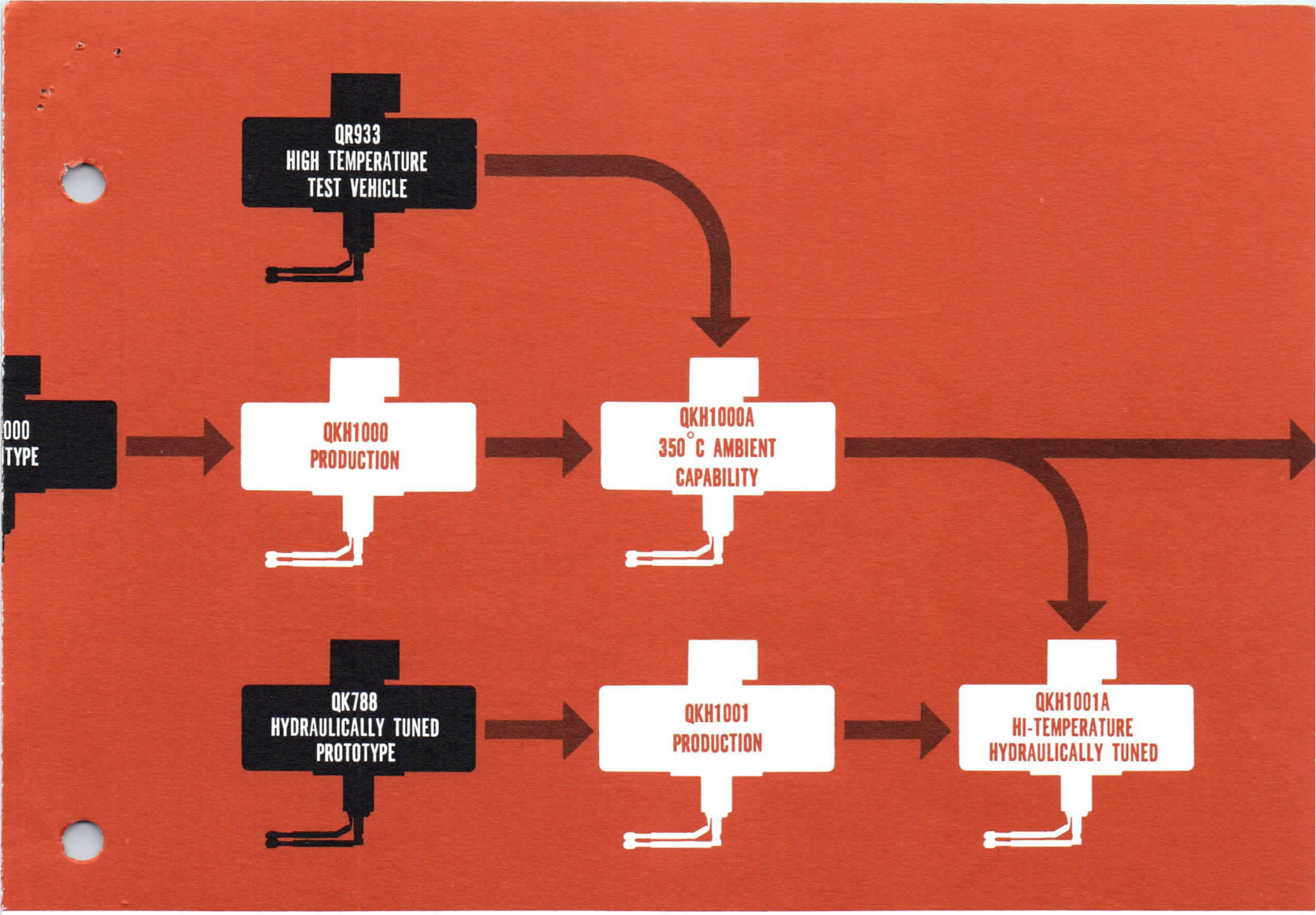

The QKH1000 is currently in the prototype stage. Preparations have been made for volume manufacture in any desired quantities. There are parallel development programs underway to achieve a high ambient temperature capability and to provide rapid hydraulic tuning. Test vehicles, designated the QR933, are being life tested at anode temperatures of nearly 300°C. An hydraulically tuned version, the QKH1001, is now available as the prototype QK788, and is designed to achieve tuning rates of 100,000 Mc/sec/sec in response to a controlled waveform. Typical hydraulic fluid input requirements are 1 to 4 gpm at 1000 psi. Tuner life is 27,000,000 cycles.

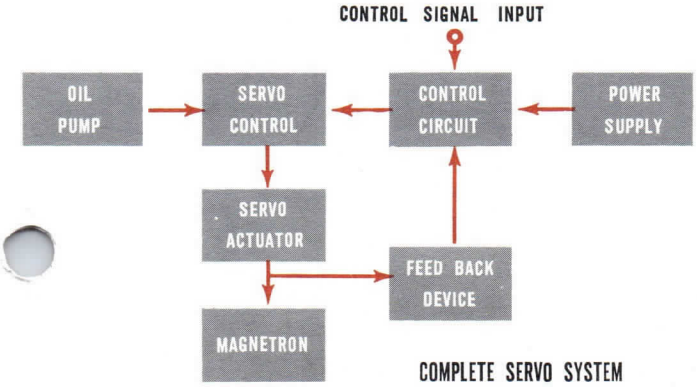

COMPLETE SERVO SYSTEM

Operating conditions permit the QKH1000 to be used as a direct replacement for the 6249 magnetron in existing systems. With 25 amperes peak anode current at pulse widths up to 3.3 microseconds an anode voltage of 27.5±1.5 kilovolts covers the frequency band of 8500 to 9600 Mc. Typical minimum peak power output is 235 kilowatts.

Complete specifications for the QKH1000 are being finalized as contemplated equipment requirements become known. The specifications will include near theoretical limits for bandwidth, and frequency stability over a broad current and frequency range.

The unique design features of the QKH1000 are the outgrowth of Raytheon's long experience in quantity production of tunable X-band magnetrons for use in airborne radar systems. Over the last several years, Raytheon has delivered more than 46,000 tubes of similar type, giving the company a record of extensive use unequalled by any other manufacturer. In addition to the invaluable field experience accumulated, use of Raytheon magnetrons in this volume has contributed materially to the development and improvement of airborne equipment of this general capability.

You are invited to submit your specific requirements and detailed application needs to your nearest Raytheon sales office, listed on the back page of this brochure.

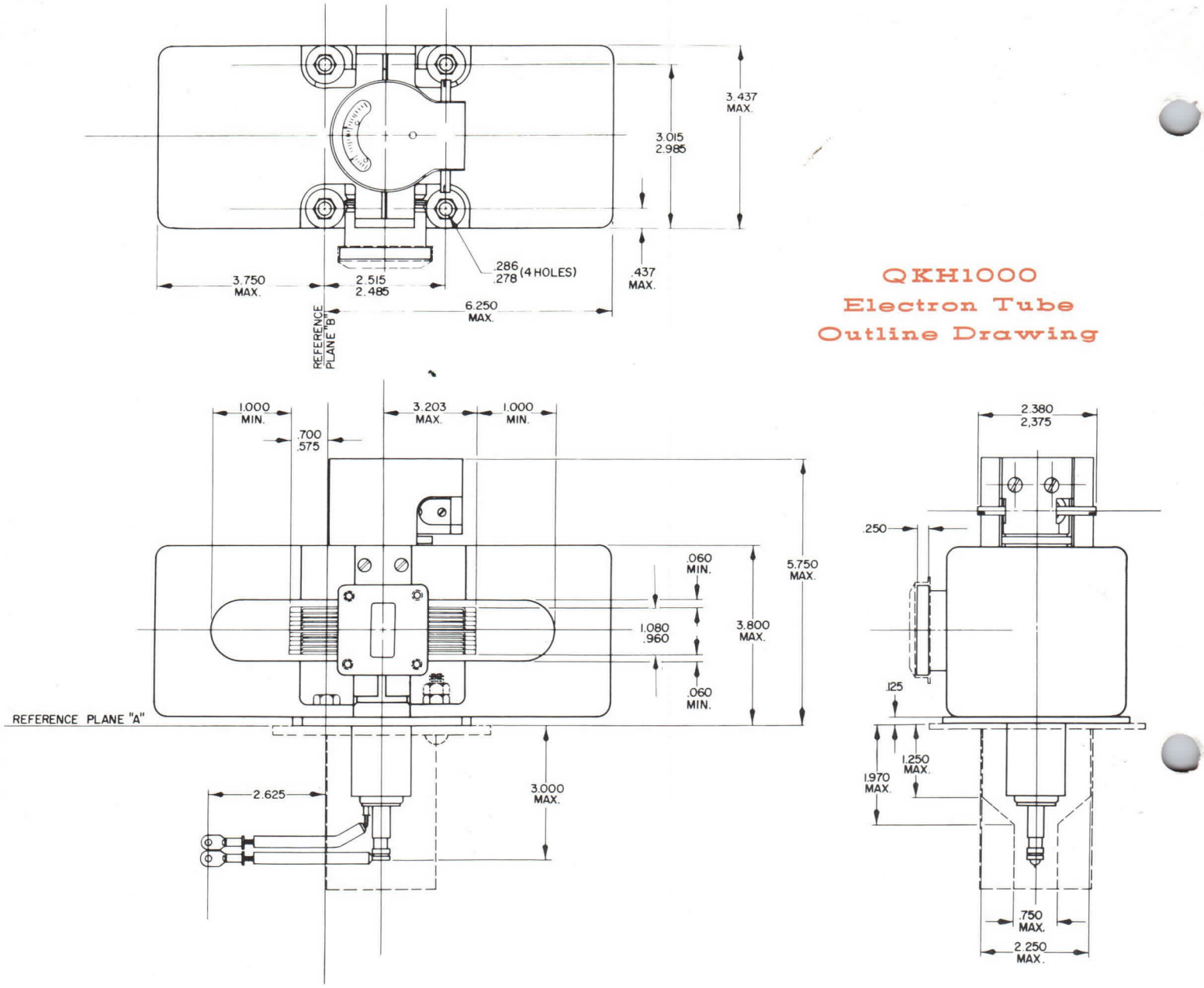

QKH1000
Electron Tube
Outline Drawing

RAYTHEON COMPANY

RAYTHEON

MICROWAVE AND POWER TUBE DIVISION

REGIONAL SALES OFFICES

NEW ENGLAND AREA AND UPPER NEW YORK STATE
Spencer Laboratory
Wayside Avenue
Burlington, Massachusetts
BRowning 2-9600

SOUTH ATLANTIC AREA
100 Roesler Road
Glen Burnie, Maryland
SOuthfield 1-0450

NEW YORK AREA
210 Sylvan Avenue
Englewood Cliffs, New Jersey
LOwell 7-4911

Mailing Address
P.O. Box 8
Englewood, New Jersey

MID-WEST AREA
9501 Grand Avenue
Franklin Park, Illinois
NAtional 5-4000

WEST COAST AREA
225 North Van Ness
Hawthorne, California
PLymouth 7-3151

RAYTHEON CANADA LTD.
400 Phillips Street
Waterloo, Ontario
SHerwood 5-6831

WASHINGTON
The Solar Building, Suite 601
100 Sixteenth Street, N.W.
Washington 6, D.C.

DAYTON
333 W. First Street
Room 455
Dayton 2, Ohio

Preliminary Data*

ISSUED 6/64

RAYTHEON

QKH1014 ROTARY TUNED MAGNETRON

GENERAL DESCRIPTION

The QKH1014 is an integral magnet, air cooled, rotary tuned L-Band magnetron with a peak power output of 1.0 megawatt. System applications include frequency agile radars, frequency scan systems, and mutual interference reduction. Simplicity of design permits direct field replacement of fixed or manually tuned tubes.

The rotary tuning mechanism comprises a slotted disk suspended above the anode cavities and magnetically coupled to a variable speed motor located outside the tube. As the disk rotates, the slots alternately vary both the inductance and capacitance of the anode producing a frequency sweep across the tuning range. Completely random frequency agility can be obtained by modulating the motor speed or by varying the modulator pulse rate. Receiver tracking information is obtained from an integral transducer.

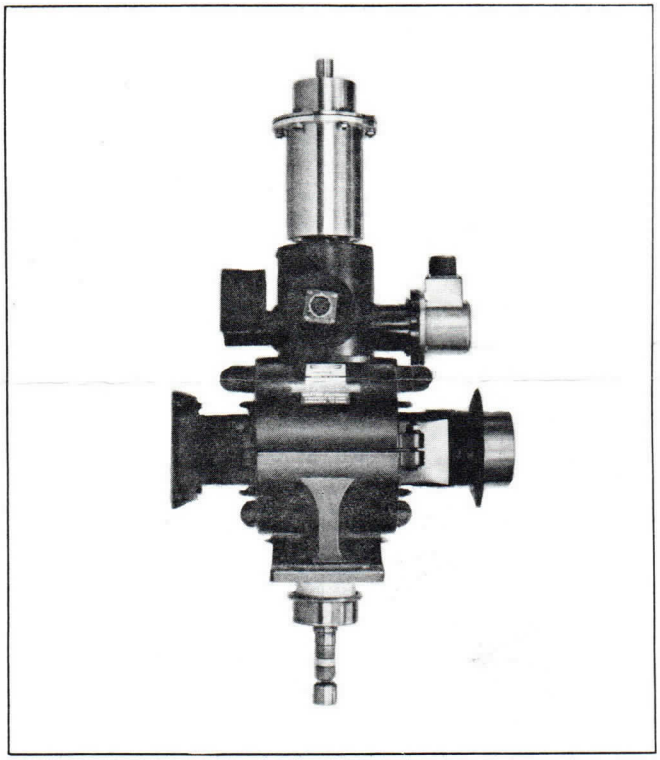

TYPICAL ELECTRICAL CHARACTERISTICS

Frequency Range	1250-1350 Mcs
Peak Power Output	1.0 Megawatts minimum
Anode Voltage	55 Kilovolts
Peak Anode Current	50 Amperes
Pulse Width	5.0 usec maximum
Duty Cycle	.00112

ROTARY TUNING CHARACTERISTICS

Time to tune full band at 2400 RPM	1/800 sec.
Tuner Life	720,000,000 cycles (minimum)
Rotation Rate	up to 3000 RPM

MECHANICAL CHARACTERISTICS

Cooling	Forced Air
Weight	90 lbs.
Output	Waveguide

RAYTHEON COMPANY • MICROWAVE AND POWER TUBE DIVISION • WALTHAM 54, MASSACHUSETTS

*The specifications for this tube have not been finalized. The tube is being manufactured in limited quantities and is available for engineering analysis purposes only. This engineering information does not imply availability of tubes with the same electrical and/or mechanical characteristics. For current information concerning this tube contact the nearest Microwave and Power Tube Regional Sales Representative.

PRINTED IN U.S.A.

The technical information on this data sheet is of a proprietory nature and is furnished as a customer service for private use only.

RK5586 **PRELIMINARY DATA SHEET**

RAYTHEON *Excellence in Electronics*

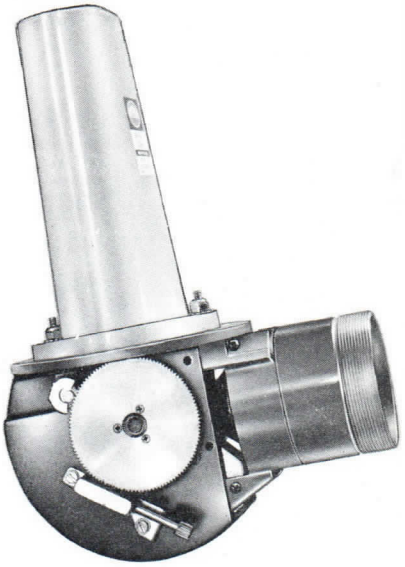

GENERAL DESCRIPTION

The RK5586 is a tunable, medium power pulsed type oscillator operating within the frequency limits of 2700-2900 megacycles. The magnetron is a coaxial output type requiring forced air cooling and external magnet and is designed for coupling to either 1 5/8", 50 ohm coaxial line or transition.

GENERAL CHARACTERISTICS

Mechanical Data

Mounting Position	Any
Net Weight	6 Lbs. 4 Oz. Approx.
Cooling	Forced Air
Maximum Altitude	10,000 Ft.

Electrical Data

Heater Voltage - Preheat/120 Sec.	16 Volts
Heater Current at 16 Volts	2.8 - 3.4 Amperes
Voltage Rise Time	0.1 - 0.2 usec
R.F. Bandwidth	2.5/tpc Max.
Maximum V.S.W.R.	1.5

Typical Operation

Pulse Duration	2.0 usec
Duty Cycle	.0006
Gauss Level	2700
Peak Anode Current	58 Amperes
Peak Anode Voltage	29 KV
Average Power Output	400 Watts

Reliable operation can be achieved only if the overall radar transmitter is designed with the magnetron characteristics clearly in mind. For most satisfactory operation both a DC filament supply and a load isolator are highly recommended. This preliminary Data Sheet is intended as an introduction to this type magnetron and not as an absolute guide to users. Inquiries on this magnetron and its application should be directed to the Applications Engineering Department at Raytheon Company, Burlington, Massachusetts.

12/60

The specifications for this tube have not been finalized. The tube is being manufactured in limited quantities and is available for engineering analysis purposes only. This engineering information and/or delivery of sample tubes do not imply availability of tubes with the same electrical and/or mechanical characteristics. Changes in ratings and/ or dimensions may be made at our discretion as deemed advisable by manufacturing experience or other considerations. For current information concerning this tube contact the nearest Microwave and Power Tube Regional Sales Representative.

preliminary data sheet

Excellence in Electronics

RAYTHEON

OUTLINE DRAWING
ELECTRON TUBE
RK 5586

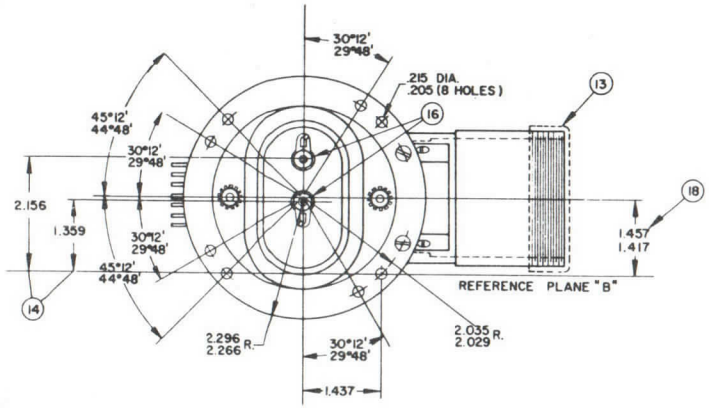

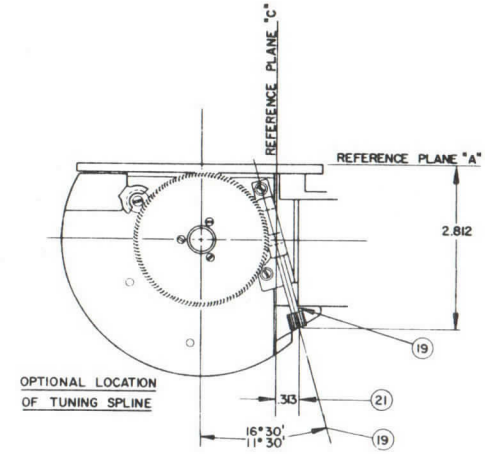

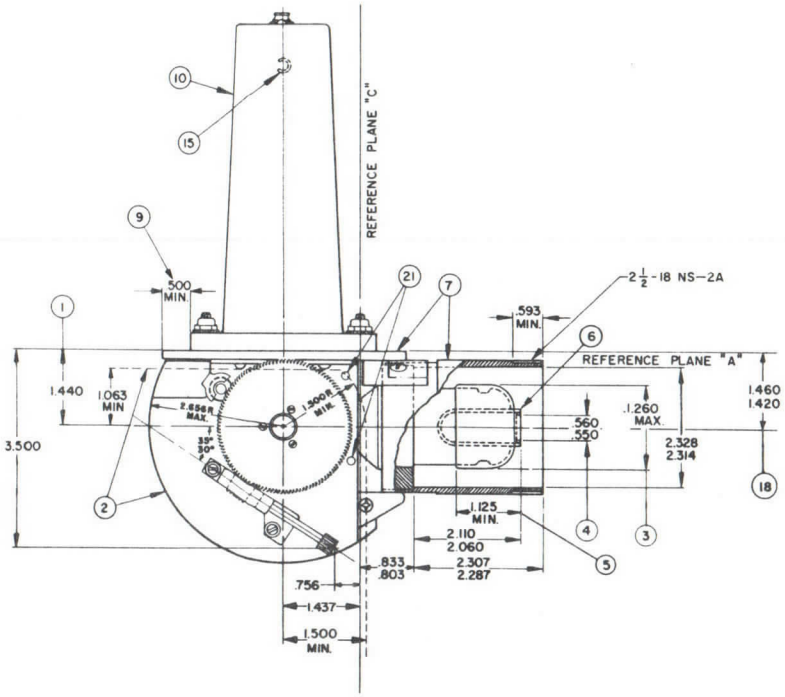

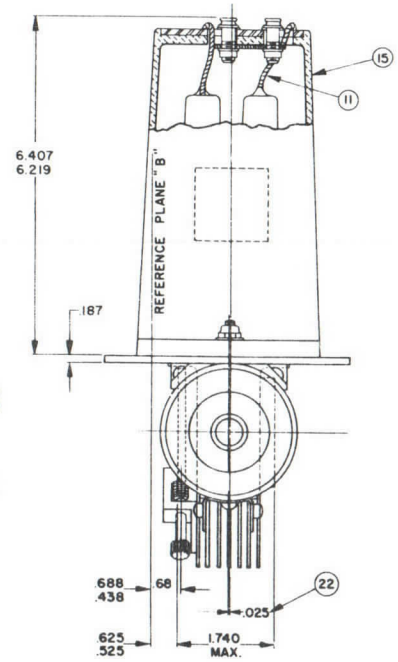

NOTES

1. THE PERIPHERY OF THE ANODE SHALL LIE WITHIN A 2.160 DIAMETER CIRCLE LOCATED AS SPECIFIED FOR NONTUNABLE SIDE OF ANODE.
2. MAXIMUM WIDTH SPECIFIED APPLIES TO AREA DEFINED BY BROKEN LINE AND CIRCUMFERENCE OF RADIATOR.
3. ℄ OF MAXIMUM DIAMETER SHALL BE CONCENTRIC WITH ℄ OF GUARD PIPE TO WITHIN .040.
4. APPLIES TO INNER CONDUCTOR INSERT ONLY. ℄ OF INNER CONDUCTOR INSERT SHALL BE CONCENTRIC WITH ℄ OF GUARD PIPE TO WITHIN .025.
5. APPLIES TO STRAIGHT PORTION OF INNER CONDUCTOR WALL.
6. NO SHARP EDGES ON OUTSIDE DIAMETER AT END OF INNER CONDUCTOR.
7. TUBE MAY BE SUPPORTED BY PLATE (MOUNTING) OR GUARD PIPE.
8. SPLINE FOR ADJUSTING TUNING MECHANISM IS AS FOLLOWS - 12 TEETH, 48 PITCH, .250 PITCH DIAMETER.
9. THIS ANNULAR AREA SHALL BE FLAT WITHIN .015. (A THICKNESS GAGE .125 WIDE SHALL NOT ENTER MORE THAN .250.)
10. PYREX GLASS OR APPROVED EQUIVALENT.
11. LEADS SHALL BE FLEXIBLE AND SLACK.
12. TUNING MECHANISM WILL PROVIDE FULL RANGE OF TUNING WITH FIVE MAXIMUM REVOLUTIONS OF LARGE TUNING GEAR.
13. PROTECTIVE GUARD FOR SHIPPING PURPOSES.
14. THE CENTER OF THE JACK HOLES SHALL BE WITHIN A RADIUS OF .100 OF THE LOCATION SPECIFIED BUT SHALL BE SPACED .797 ± .015 WITH RESPECT TO EACH OTHER.
15. COMMON CATHODE CONNECTION MARKED WITH LETTER "C".
16. HEX LOCKING HEAD BANANA PIN JACK 19/32 LONG, HOLE .169 ± .005.
17. PAINT WITH HEAT RESISTANT NONCORROSIVE PAINT. THE FOLLOWING SHALL BE FREE FROM PAINT - TOP SURFACE OF MOUNTING PLATE, PARTS ABOVE MOUNTING PLATE, SCREW THREADS ON GUARD PIPE AND ALL SURFACES INSIDE GUARD PIPE, TUNING GEAR, STOP ASSEMBLY, AND WORM SHAFT ASSEMBLY.
18. APPLIES TO LOCATION OF CENTER OF GUARD PIPE ONLY.
19. CLEARANCE TO ADAPTER GUARD PIPE MUST BE SUFFICIENT TO ALLOW USE OF S.S. WHITE #2666 X END FITTING (13/32 DIAMETER).
20. ALL SOLDER JOINTS ON MOUNTING PLATE AND GUARD PIPE SHALL BE SOLDERED TO PROVIDE AN HERMATIC SEAL.
21. OPTIONAL LOCATION OF TUNING SPLINE. TUBE TO BE SUPPLIED WITH SPLINE LOCATED AS SPECIFIED BY CUSTOMER.
22. THIS DIMENSION SHOWS RELATION BETWEEN A PLANE PASSING THRU LATERAL CENTER OF ANODE AND A PLANE THRU CENTER OF GUARD PIPE.
23. REFERENCE PLANE "A" IS DEFINED AS A PLANE PASSING ALONG THE FACE OF THE MOUNTING PLATE.
24. REFERENCE PLANE "B" IS DEFINED AS A PLANE PERPENDICULAR TO PLANE "A" PASSING THROUGH THE CENTER OF THE HOLES AS SHOWN.
25. REFERENCE PLANE "C" IS DEFINED AS A PLANE MUTUALLY PERPENDICULAR TO PLANES "A" & "B" PASSING THROUGH THE CENTER OF THE HOLE AS SHOWN.
26. THE LETTER "A" HAS BEEN ADDED TO INDICATE EXTERNAL THREAD, NOT UNIFIED THREAD.

The technical information on this data sheet is of a proprietory nature and is furnished as a customer service for private use only.

RK5657 **PRELIMINARY DATA SHEET**

RAYTHEON *Excellence in Electronics*

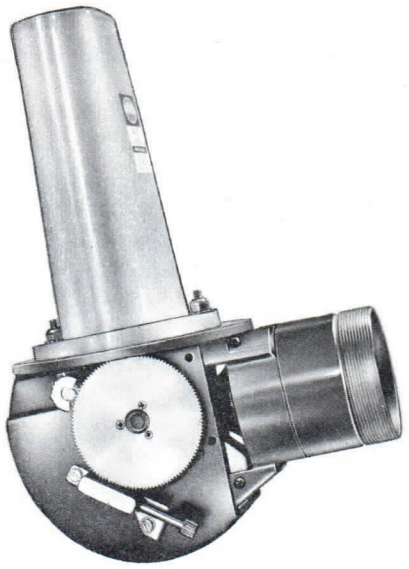

GENERAL DESCRIPTION

The RK5657 is a tunable, medium power pulsed type oscillator operating within the frequency limits of 2900-3100 megacycles. The magnetron is a coaxial output type requiring forced air cooling and external magnet and is designed for coupling to either 1 5/8", 50 ohm coaxial line or transition.

GENERAL CHARACTERISTICS

Mechanical Data

Mounting Position	Any
Net Weight	6 Lbs. 4 Oz. Approx.
Cooling	Forced Air
Maximum Altitude	10,000 Ft.

Electrical Data

Heater Voltage - Preheat/120 Sec.	16 Volts
Heater Current at 16 Volts	2.8 - 3.4 Amperes
Voltage Rise Time	0.1 - 0.2 usec
R.F. Bandwidth	2.5/tpc Max.
Maximum V.S.W.R.	1.5

Typical Operation

Pulse Duration	2.0 usec
Duty Cycle	.0006
Gauss Level	2700
Peak Anode Current	58 Amperes
Peak Anode Voltage	30 KV
Average Power Output	400 Watts

Reliable operation can be achieved only if the overall radar transmitter is designed with the magnetron characteristics clearly in mind. For most satisfactory operation both a DC filament supply and a load isolator are highly recommended. This preliminary Data Sheet is intended as an introduction to this type magnetron and not as an absolute guide to users. Inquiries on this magnetron and its application should be directed to the Applications Engineering Department at Raytheon Company, Burlington, Massachusetts.

2-61

The specifications for this tube have not been finalized. The tube is being manufactured in limited quantities and is available for engineering analysis purposes only. This engineering information and/or delivery of sample tubes do not imply availability of tubes with the same electrical and/or mechanical characteristics. Changes in ratings and/ or dimensions may be made at our discretion as deemed advisable by manufacturing experience or other considerations. For current information concerning this tube contact the nearest Microwave and Power Tube Regional Sales Representative.

preliminary data sheet

RAYTHEON

Excellence in Electronics

OUTLINE DRAWING ELECTRON TUBE RK5657

NOTES

1. THE PERIPHERAY OF THE ANODE SHALL LIE WITHIN A 2.140 DIAMETER CIRCLE LOCATED AS SPECIFIED FOR NONTUNABLE SIDE OF ANODE.
2. MAXIMUM WIDTH SPECIFIED APPLIES TO AREA DEFINED BY BROKEN LINE AND CIRCUMFERENCE OF RADIATOR.
3. ⅝" OF MAXIMUM DIAMETER SHALL BE CONCENTRIC WITH ⅝" OF GUARD PIPE TO WITHIN .060.
4. APPLIES TO INNER CONDUCTOR INSERT ONLY. ⅝" OF INNER CONDUCTOR INSERT SHALL BE CONCENTRIC WITH ⅝" OF GUARD PIPE TO WITHIN .025.
5. APPLIES TO STRAIGHT PORTION OF INNER CONDUCTOR WALL.
6. NO SHARP EDGES ON OUTSIDE DIAMETER AT END OF INNER CONDUCTOR.
7. TUBE MAY BE SUPPORTED BY PLATE (MOUNTING OR GUARD PIPE.
8. SPLINE FOR ADJUSTING TUNING MECHANISM IS AS FOLLOWS - 12 TEETH, 48 PITCH, 37½° PRESSURE ANGLE.
9. THIS ANNULAR AREA SHALL BE FLAT WITHIN .015. (A THICKNESS GAGE .125 WIDE SHALL NOT ENTER MORE THAN .250.)
10. PYREX GLASS OR APPROVED EQUIVALENT.
11. LEADS SHALL BE FLEXIBLE AND SLACK.
12. TUNING MECHANISM WILL PROVIDE FULL RANGE OF TUNING WITH FIVE MAXIMUM REVOLUTIONS OF LARGE TUNING GEAR.
13. PROTECTIVE GUARD FOR SHIPPING PURPOSES.
14. THE CENTER OF THE JACK HOLES SHALL BE WITHIN A RADIUS OF .100 OF THE LOCATION SPECIFIED BUT SHALL BE SPACED .797 ± .015 WITH RESPECT TO EACH OTHER.
15. COMMON CATHODE CONNECTION MARKED WITH LETTER "C".
16. HEX LOCKING HEAD BANANA PIN JACK 19/32 LONG, HOLE .169 ± .005.
17. PAINT WITH HEAT RESISTANT NONCORROSIVE PAINT. THE FOLLOWING SHALL BE FREE FROM PAINT - TOP SURFACE OF MOUNTING PLATE, PARTS ABOVE MOUNTING PLATE, SOLDER THREADS ON GUARD PIPE, ALL SURFACES OF METALLIC SEAL, TUNING GEAR, STOP ASSEMBLY, AND WORM SHAFT ASSEMBLY.
18. APPLIES TO LOCATION OF CENTER OF GUARD PIPE ONLY.
19. CLEARANCE TO ADAPTER GUARD PIPE MUST BE SUFFICIENT TO ALLOW USE OF U.S. WHITE #2666 X END FITTING (1/32 DIAMETER).
20. ALL SOLDER JOINTS ON MOUNTING PLATE AND GUARD PIPE SHALL BE SOLDERED TO PROVIDE AN HERMATIC SEAL.
21. OPTIONAL LOCATION OF TUNING SPLINE. TUBE TO BE SUPPLIED WITH SPLINE LOCATED AS SPECIFIED BY CUSTOMER.
22. THIS DIMENSION SHOWS RELATION BETWEEN A PLANE PASSING THRU LATERAL CENTER OF ANODE AND A PLANE THRU CENTER OF GUARD PIPE.
23. REFERENCE PLANE "A" IS DEFINED AS A PLANE PASSING ALONG THE FACE OF THE MOUNTING PLATE.
24. REFERENCE PLANE "B" IS DEFINED AS A PLANE PERPENDICULAR TO PLANE "A" PASSING THROUGH THE CENTER OF THE HOLES AS SHOWN.
25. REFERENCE PLANE "C" IS DEFINED AS A PLANE INITIALLY PERPENDICULAR TO PLANE "A" & "B" PASSING THROUGH THE CENTER OF THE HOLE AS SHOWN.
26. THE LETTER "A" HAS BEEN ADDED TO INDICATE EXTERNAL THREAD, NOT UNIFIED THREAD.

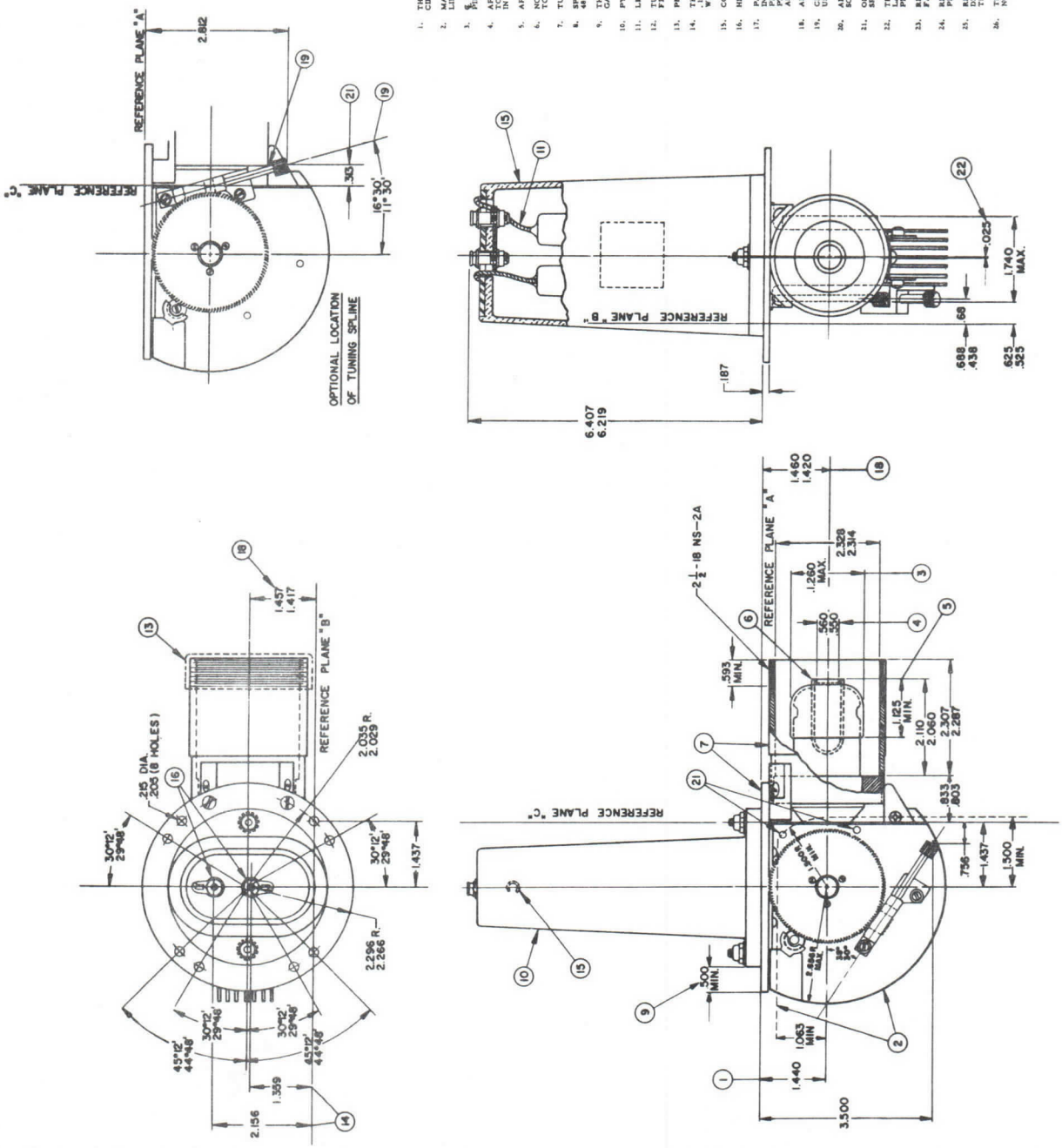

RAYTHEON

TECHNICAL INFORMATION

RK6002 MAGNETRON

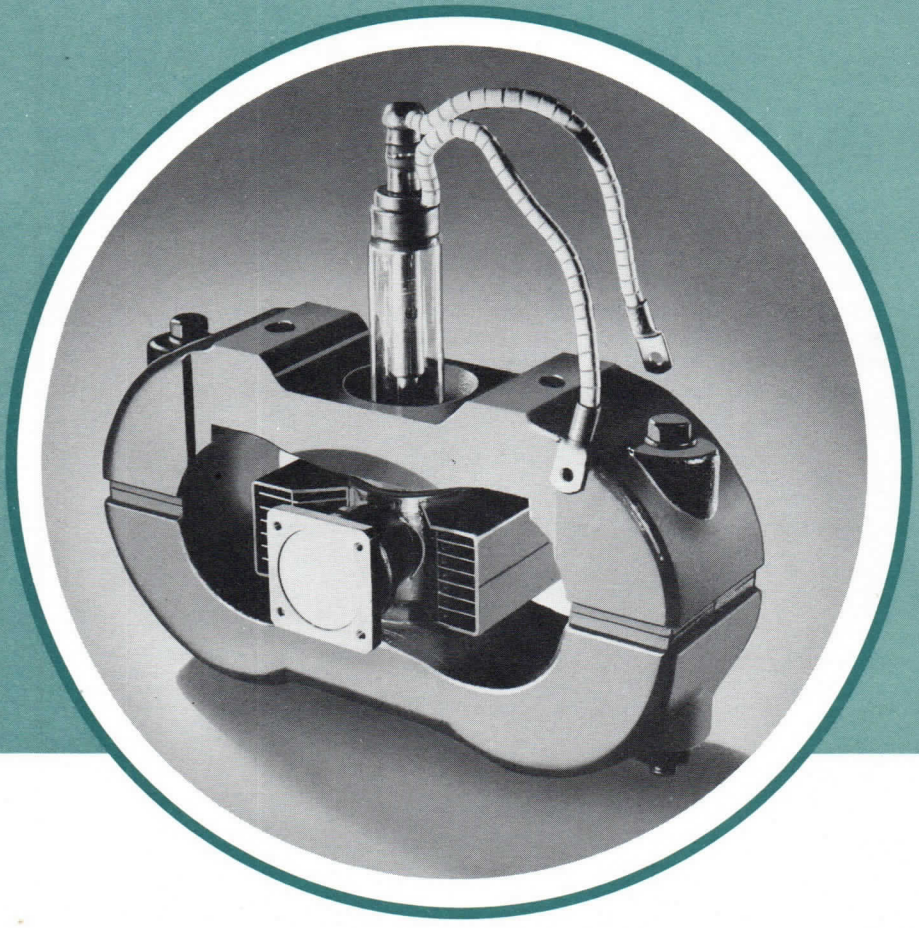

Excellence in Electronics

RAYTHEON MANUFACTURING COMPANY

POWER TUBE DIVISION – WALTHAM 54, MASS.

GENERAL CHARACTERISTICS

ELECTRICAL

Heater Characteristics

Heater voltage — preheat	4.0 ± 5% volts
Heater current @ 4.0 volts	36–44 amps
Minimum preheat time	2 minutes
Cold heater resistance	.012 ohms

Maximum Ratings

Heater voltage	4.5 volts
Peak current	32 peak amps
Peak anode voltage	30 kilovolts
Average power input	960 watts
Maximum frequency pulling at VSWR 1.5/1	15 megacycles
Anode temperature	130° C
Maximum pulse duration	5.3 microseconds
Maximum duty cycle	.001
Minimum pulse voltage rise time	.10 microseconds
Maximum VSWR	1.5/1

The values specified are based on the "absolute system" and are not to be exceeded under any service conditions. The ratings are limiting values above which serviceability of any individual tube may be impaired. It does not necessarily follow that combinations of absolute maximum ratings can be attained simultaneously.

TYPICAL OPERATION

	Osc. 1	*Osc. 2*	*Osc. 3*
Pulse recurrence frequency	200	1000	500 pps
Pulse duration	5.0	.5	2.0 μs
Peak anode voltage	28	28	28 kv
Peak anode current	25	30	30 a
Average anode current	25	15	30 mA
Useful range of average current	20–30	10–15	20–30 mA
Input capacitance		12 μμf	

MECHANICAL

Mounting	Cathode vertical
Overall dimensions	11½ x 9¾ x 5½ inches
Net weight	24 lbs.
Cooling	Forced air
Pressurization	30 psi abs.
Output coupling	Choke flange UG52A/U
Shock (non-operating)	35 G
Vibration (non-operating)	50 cycles — 10G
Maximum altitude	8000 ft.

RK6002 MAGNETRON

The RK6002 Magnetron, developed and produced by Raytheon Manufacturing Company, is a fixed frequency, pulse type oscillator operating in a frequency region of 9230 to 9404 Mcs with a peak power output of 250 kilowatts. It is an integral magnet type tube, requiring forced air cooling and designed for coupling to standard 5/8" x 1¼" waveguide. The RK6002 is the RTMA designation of the Raytheon QK221.

GENERAL PRECAUTIONS

Reliable operation and maximum magnetron life can be achieved if the overall radar transmitter is designed with the magnetron characteristics and peculiarities clearly in mind. This technical data, prepared by the Applications Group of Raytheon Manufacturing Company, rather than the MIL-E-1B Government purchase specifications, should be used as a guide to equipment designers.

As is the case with other electrical components, if magnetrons are operated continuously at their maximum ratings, some deterioration in life will result. There are many problems peculiar to magnetrons in general that must be given special consideration in system design such as RF radiation, pulse shaping, VSWR and length of transmission line to the antenna. These problems are discussed in detail on the following pages. If for any reason it is desired to operate the RK6002 under conditions other than those recommended in this technical data sheet, the Magnetron Application Group must be consulted; and in some cases additional life test must be run.

DETAILED ELECTRICAL INFORMATION

HEATER

The preheat voltage is 4 volts. The minimum preheat interval is two minutes although five minutes is recommended where possible. For .001 duty cycle at peak currents over 20 amperes the heater voltage should be reduced to 3.4 volts. For duty cycles of .0005 to .00025 the heater voltage should be maintained at 4 volts. For duty cycles less than .00025 consult the manufacturer for optimum heater schedule. Heater voltage should be kept at ± 5% of specified value. See Figure 1 for heater current vs heater voltage curve.

Heater surge current must be under 60 amperes. Excessive heater surge current will cause the heater in the magnetron to open.

If the tube has been running at reduced heater voltage and high voltage is temporarily removed, it will be necessary to preheat tube again at 4.0 volts to resume normal operation.

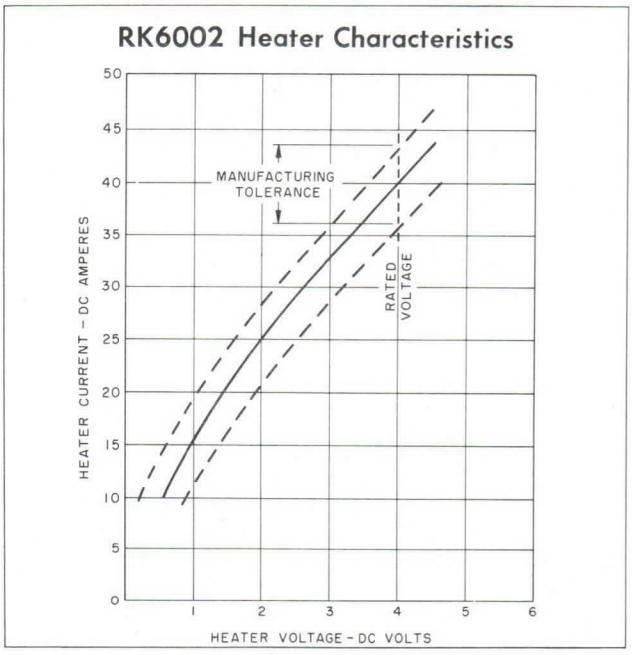

Figure 1

Excellence in Electronics

OPERATION

Anode Current — The maximum recommended anode current is 30 peak amperes for the 2 and .5 microsecond pulse lengths. For the 5 microsecond operation it may be necessary to reduce peak currents to 25 amperes. If required, currents higher than 30 peak amperes can be drawn on short pulse operation, but such an application of the tube is outside the test specifications and any such operation should be discussed with the manufacturer and verified by life test.

Starting New Tube — In starting up a new tube or one which has not been operated recently, some sparking and general roughness of operation is possible. If the sparking is light, i.e., under 20 flicks of the current meter per minute, no undue harm to the magnetron will occur. If sparking is excessive the following "aging in" schedule is recommended:

1. Preheat tube for 15 minutes.
2. Run up tube on the shortest pulse available and at reduced current levels.
3. Increase the magnetron current up to the level at which arcing or moding occurs, then quickly reduce current to level at which arcing rate is about 20 flicks per minute.
4. Continue to increase the current until rated value is reached. Be careful to reduce current immediately if large bursts of arcs occur. The success of the aging process depends to a great extent on the experience and alertness of the operator watching the current meter for arcs. The current should be gradually increased as the tube ages in, and should be quickly reduced to a safe level when necessary.
5. After tube has been brought up to the specified current level at a narrow pulse width, operation can be switched to a wider pulse with the above running-in procedure repeated.
6. Ordinarily aging of the RK6002 will not be necessary. If aging is found to be necessary it will not require more than 15 minutes unless the tube has been subjected to shelf life of several months. On a rare occasion, however, it may take several hours to salvage an unstable tube.
7. Malfunctioning of the RK6002 will generally consist of either arcing or moding. Moding tends to occur at conditions of short pulse width, reduced heater, and VSWR phased in the sink region. Arcing on the other hand, will tend to occur at conditions of wide pulse and VSWR phase opposite the sink. The VSWR must be kept under 1.5/1 and should be kept as low as possible. If the VSWR of an equipment is adverse, a tube may have to be re-aged before its operation will be stable.

PULSE LENGTH AND DUTY CYCLE

The RK6002 has been designed and tested for the following pulse lengths and duty cycles.

1. 0.5 microseconds at .0005 duty cycle
2. 2.0 microseconds at .001 duty cycle
3. 5.0 microseconds at .001 duty cycle

Operation of the magnetron at any pulse duration between these values and at any duty cycle not greater than .001 is entirely satisfactory but may require a revised heater schedule. Consultation with the manufacturer is recommended before employing such operations.

PULSE CHARACTERISTICS

The smooth peak is the maximum value of a smooth curve through the average of the fluctuation over the top portion of the pulse. The pulse width is the time interval between the two points on the current pulse at which instantaneous current is 50 percent of the smooth peak. The rise time is the time interval between points of 20 and 85 percent of the smooth peak. Figure 2 shows graphically the definitions mentioned.

The voltage rise time must not be less than .10 usec for .5 usec pulse nor less than .15 usec for the 2 and 5 usec pulses, to realize good tube performance. Too fast a rise time will lead to moding or arcing. It is necessary to form the pulse so that the current pulse shows no sign of jitter and no large spikes on the

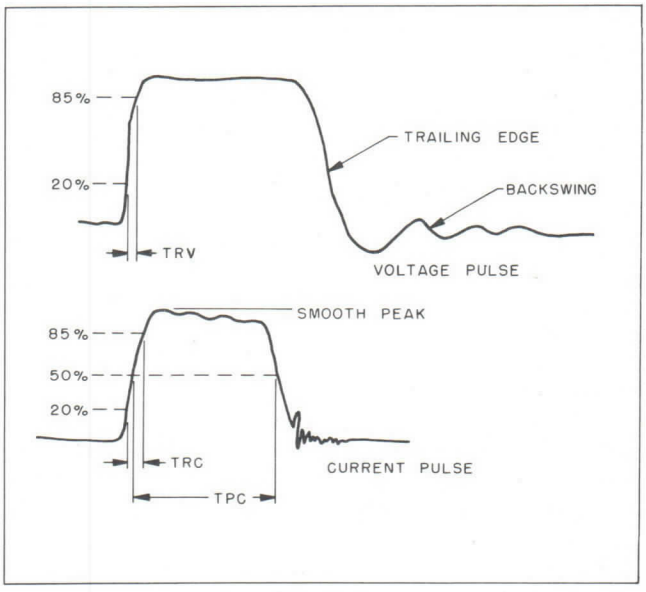

Figure 2

leading edge as these conditions also may cause moding or arcing. The ripple on the top of the current pulse must be kept at a minimum to avoid pushing effects which will tend to widen the spectrum. The trailing edge or decay time of the voltage pulse must be as short as possible to obtain optimum performance and high operating efficiencies. Excessive backswing may cause instability and/or noise. The backswing should not exceed 20% of the applied pulse.

Many magnetrons draw a certain amount of leakage or diode current at anode voltages as low as 100 volts. For this reason it is not only advisable to keep the time duration of the voltage pulse trailing edge as short as possible; but also to prevent the positive voltage backswing from becoming negative again. This diode current can amount to several milliamperes at an average current of 30 milliamperes. Except for giving falsely exaggerated indication as to the actual peak current at which the magnetron is operating, diode current is not harmful, unless it becomes excessive.

For optimum pulse shaping, the magnetron, pulse transformer, and pulse line must be treated as a unit. We advise building up an experimental pulse line and hand tailoring it for optimum magnetron current and voltage pulse shape when used in conjunction with the pulse transformer and the RK6002.

It is impossible to design a pulse transformer to give optimum results on both long and short pulses. It is, therefore, necessary to decide which pulse is the more important and optimize the pulse transformer for the desired operation.

RK6002 Load Diagram

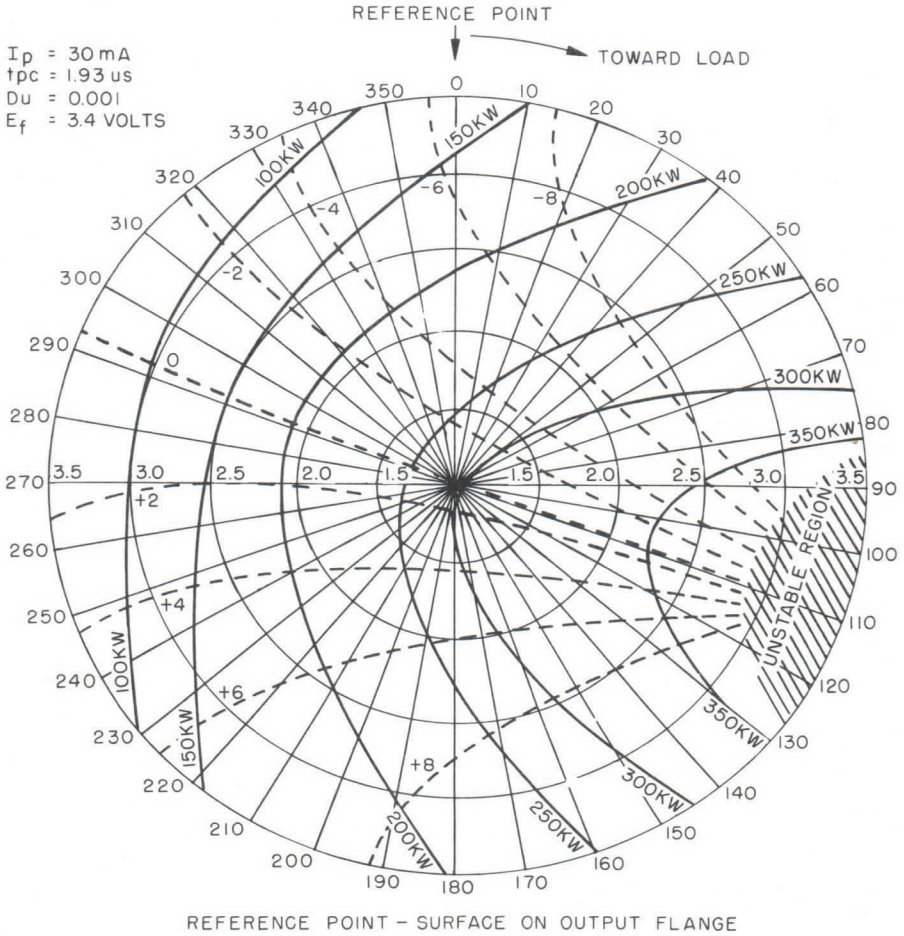

Figure 3

Excellence in Electronics

POST PULSE NOISE

It is possible that some RK6002's will exhibit RF noise output unless the post pulse backswing is controlled very closely. A backswing in the negative or the positive direction of several hundred volts may be enough to cause an RF output in the order of a microwatt. If this low level energy is fed directly to the receiver, noise or false targets will appear on the radar indicators. By judicious matching of the pulse line, pulse transformer and magnetron, and by the use of a clipper tube across the primary of the pulse transformer, the voltage backswing can be controlled so that its magnitude is quite small; and more important, that the backswing is completely damped out within a very short interval after the pulse.

LOAD DIAGRAM

Figure 3 is a load diagram of a typical RK6002 magnetron. The contours of constant power output and frequency change are related to the voltage standing wave ratios introduced by mismatched loads at various phase positions. Values of VSWR as high as 3.5/1 are plotted but operation at ratios greater than 1.5 to 1 is not recommended.

The region of unstable operation is shown on this diagram.

COOLING

The air stream for cooling the RK6002 should be directed to the air inlet of the radiator through a close fitting duct. During tube operation an anode temperature below 100° C is recommended, although temperatures as high as 130° C can be tolerated. Figure 4 shows the relation between air flow in cubic feet per minute and back pressure in inches of water at the entrance to the RK6002 cooling fin structure. Figure 5 shows the anode temperature as a function of forced air flow through the cooling fins at different values of anode input power (exclusive of heater power). These measurements were made at an ambient temperature of 26 degrees centigrade and normal atmospheric pressure. Higher ambient temperatures will result in correspondingly higher anode temperatures.

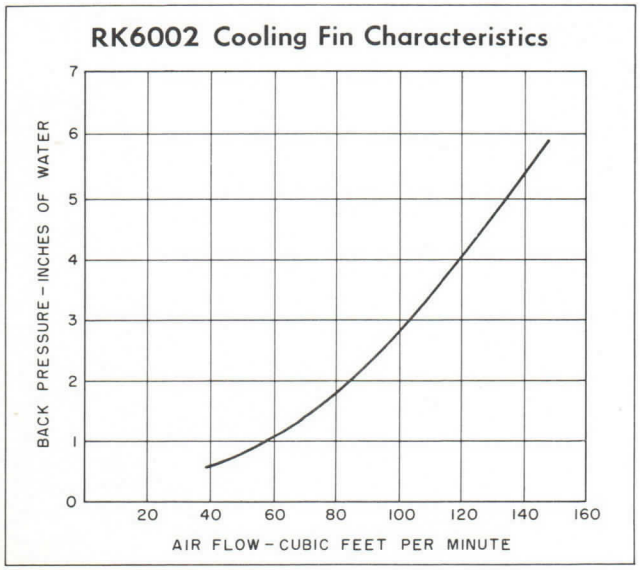

Figure 4

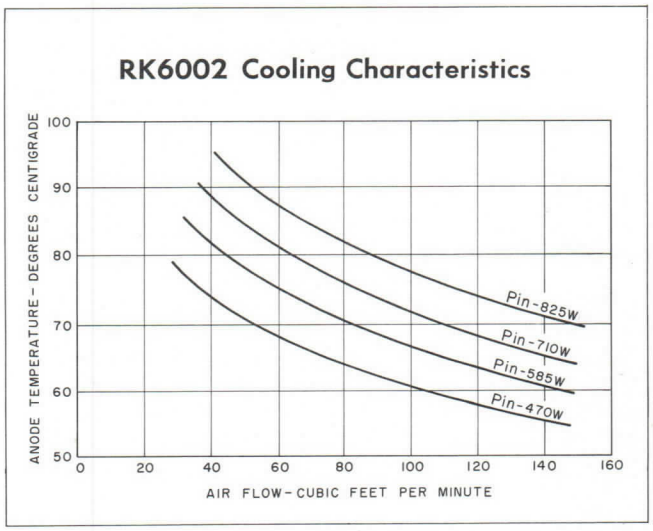

Figure 5

Sufficient circulating air, or equivalent cooling, must be supplied around the cathode bushing so that the cathode bushing temperature will never exceed 270° C. The exact point at which this temperature is measured is indicated on the electron tube drawing, Figure 10.

FREQUENCY DRIFT

After operation of the RK6002 is initiated, the tube's temperature increases with time until thermal equilibrium is reached. During this period the dimensions of the tube change slightly and consequently the operating frequency changes or drifts. The frequency drift characteristics of the RK6002 magnetron as well as the rate of anode temperature change after starting at room temperature is presented in Figure 6. If the tube temperature is changed after thermal equilibrium has been established, the operating frequency will also change until the new equilibrium is reached. The resulting frequency change in this case will be less than .25 mcs per degree centigrade change.

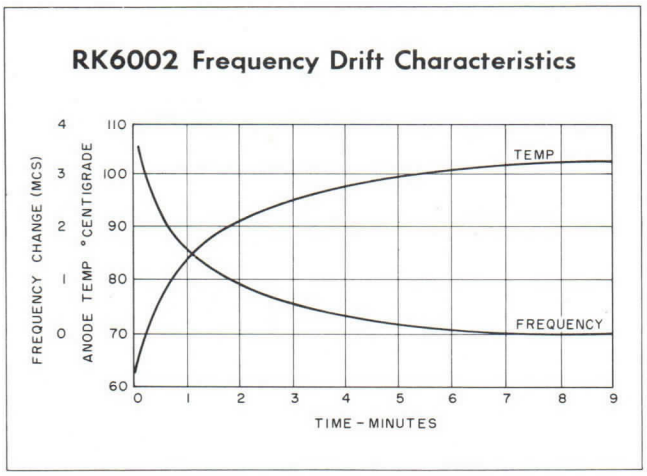

Figure 6

LOAD AND LINE LENGTH CONSIDERATIONS

If an oscillator is loaded by an electrically long transmission line which is terminated by an impedance different from that of the line, the impedance of the load will be a periodic function of frequency. Operation of the oscillator under these conditions gives rise to phenomena collectively termed "long line effects." Although these phenomena are usually associated with an electrically long transmission line, they can also be exhibited by a short line terminated by a sufficiently mismatched impedance. In any case the extent to which the long line effect is exhibited depends on the amount of coupling between the load and oscillator as well as the degree mismatch in the line. Figure 7 shows the relation between the VSWR and the line length with respect to the critical condition of skip. This skip condition occurs when the tube is changing frequency (thermal drift) and causes breaks in the ordinarily smooth drift curve. This condition is not too serious in the RK6002 because the tube is not tunable. Of far more serious consequences, however, is the broadening and deterioration of the spectra caused by this phenomena. It may in some cases permit spectra of two frequencies to appear simultaneously. By operating into loads specified under the region of recommended operation in Figure 9, satisfactory operation should be obtained. In this region no significant broadening of the spectrum will take place, although for close control of bandwidth the VSWR should be kept as low as possible.

More detailed information on the theories and remedies of "long line effects" are available upon request.

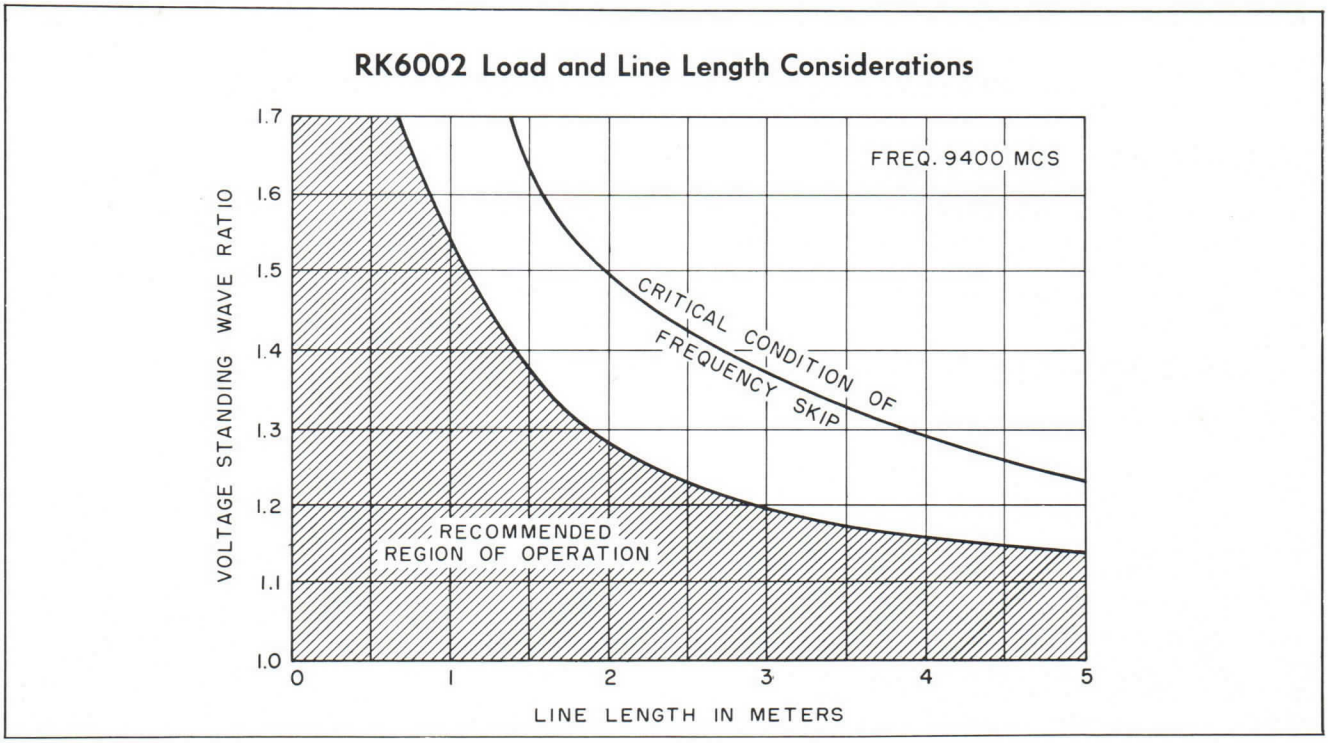

Figure 7

Excellence in Electronics

RF RADIATION FROM CATHODE

The RK6002 has been designed to minimize the RF radiation from the cathode stem. However, it is impossible to guarantee that no radiation will be present. In designing equipments for the RK6002 it is recommended that the receiver be shielded by some means from the cathode stem and associated circuitry to prevent troubles which may occur due to this radiation.

OPERATING CHARACTERISTICS

Figure 8 shows the peak power output, peak anode voltage and efficiency plotted against the peak anode current of the magnetron. Maximum and minimum deviations from the average are also shown.

CIRCUIT EFFICIENCY AND Q VALUES

The circuit efficiency and Q values for a typical RK6002 magnetron are given below:

nc	74%
Qu	1550
Ql	410
Qe	540

This data was obtained during "cold" tests in which all input voltages normally applied to the tube were absent. It is presented for general information only.

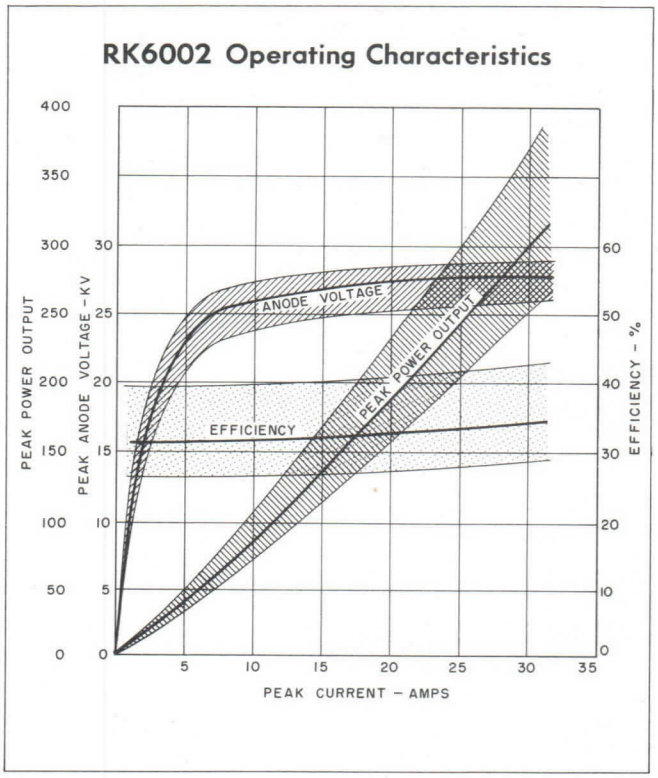

Figure 8

DETAILED MECHANICAL INFORMATION

OUTLINE DRAWING

The detailed mechanical dimensions for the RK6002 are given in Figure 10. In designing the mechanical layout for an equipment, these dimensions rather than those of some sample tubes should be used.

INSTALLATION AND HANDLING PRECAUTIONS

The high voltage bushing and the output window are protected by guard covers during shipment. These covers must be removed before the tube is installed in its associated equipment. No mechanical strain should be applied to the bushing or the output window in handling or mounting the magnetron.

Care should be taken to keep magnetic materials 4 inches away and ferromagnetic materials 12 inches away from the magnets. The celastic coating on the magnets minimizes the danger of demagnetization by contact, but cannot be guaranteed completely effective. Deterioration of the magnetic field will cause low power and instability.

Unnecessary jarring of the tube must be avoided. While a packaged magnetron may give an appearance of massiveness and great structural strength, the internal structure is delicate and involves critical alignment of parts. In the event of careless handling the resulting shock may easily exceed 35G, which is the maximum allowable for this tube type.

MOUNTING

The tube is mounted by two 3/8 inch bolts passed through the two clearance holes of the mounting surface on the magnets. The magnetron must be mounted so that the longitudinal axis of the cathode high voltage bushing is vertical. The tube should be operated in this position, although small angular deviations can be tolerated for short intervals as long as the mean position of the above axis remains vertical during the period of operation. If the mean position of the tube differs from that described, the heater may become short circuited.

ELECTRICAL CONNECTIONS

Electrical input connections are made to the frame of the tube and to two flexible leads terminated in lugs with clearance holes for #10-32 screws. The positive high voltage should be "grounded" to the tube, preferably at the mounting surface. Two flexible leads project from the cathode bushing as shown in the Electron Tube drawing. One lead, identified by a brown band on the lug at the end of the lead, serves as the common heater connection and negative high voltage cathode terminal. The other lead is connected to the other side of the heater supply.

COUPLING AND PRESSURIZATION

The magnetron output flange is designed to couple to standard 5/8" x 1¼" waveguide. A standard X-band choke flange type UG52A/U with holes modified to provide clearance for #8-32 screws, mates with the tube output flange.

For anode currents above 20 peak amperes the waveguide must be pressurized with 30 lb/sq in. (absolute) of air or equivalent means of preventing waveguide breakdown must be employed. If breakdown occurs, there is danger of puncturing the ceramic window. To minimize the possibility of arcing in the waveguide, and to achieve optimum tube performance, the standing wave ratio should be kept as low as possible; VSWR values greater than 1.5/1 are not recommended.

TEST SPECIFICATION

The joint Army-Navy test specifications MIL-E-1B for the RK6002 are included in Figure 9. The Electron Tube outline drawing, which is part of this specification, is included in Figure 10.

It is highly recommended that this technical data sheet rather than the test specification MIL-E-1B be used as a guide for the use of the RK6002 in any new application.

Further information on the operation and capabilities of this and other type magnetrons may be obtained from the Applications Engineering Department, Power Tube Division, Raytheon Manufacturing Company, Waltham, Massachusetts.

FIG. 9 MIL-E-1B-6002 SPECIFICATION

The provisions of specification MIL-E-1B apply to this specification.
Description: Magnetron, Fixed Frequency, Pulsed, with Integral Magnet

Ratings:	If	Ef	epy	ib	pi	Pi	tk	Du	tp	Anode T	Cathode Stem T
Absolute	A	V	kv	a	kw	W	sec	—	us	°C	°C
Maximum:	45	4.5	30	40	1200	870	—	.002	5.3	130	270
Minimum:	—	—	—	—	—	—	120	—	0.45	—	—
	Note 1									Note 2&3	Note 3

Mounting Position: Note 4
Cooling Note 2
Magnet: Note 5

**Cathode: Thoria coated, unipotential

Ref.	*Test*	*Conditions*	*Min.*	*Max.*
3.1	Qualification Approval:	Required for JAN marking		
4.5	Holding Period:	t = 168 hours		
4.9.9	**Humidity:	Note 6		
4.9.13	Pressurizing:	45 psi absolute		
4.9.2	Dimensions:	Per attached drawing		
4.9.18	*Carton Drop:			
4.9.19.1	*Vibration:	No voltage; t = 60; F = 25; Note 7		
4.9.19.2	**Vibration:	No voltage; t = 60; F = 50; G = 10		
4.10.8	Heater Current:	Ef = 4.0 V	If: 36	44 A
4.16.3	*Oscillation (1):*			
——	Coupling:	Per attached drawing; Note 8		
——	Standing Wave Ratio:	$\sigma' = 1.10/1$ (max.)		
4.16.3.2	Heater:	tk = 120 secs (max.) at Ef = 4.0 V; Ef = 3.4 V for test; Note 9		
4.16.3.3	Pulse Characteristics:	tp = 4.5 to 5.3 us; Du = .001; trv = .15 us (min.)		

Continued on Next Page

Continued from Previous Page

Ref.	*Test*	*Conditions*		*Min.*	*Max.*
4.16.3.4	Average Anode Current:	Ib = 25 to 30 mAdc; Note 10			
4.16.3.6	Power Output:	Method B; t = 300 (max.)	Po:	225	—— W
4.10.7.3.1	Frequency:		F:	9230	9404 Mc
4.16.3.7	†RF Bandwidth:		Bandwidth:	——	2 Mc
4.16.7	Stability	Note 11			
4.16.3	*Oscillation (2):*				
——	Coupling:	Per attached drawing; Note 8			
——	Standing Wave Ratio:	$\sigma' = 1.10/1$ (max.)			
4.16.3.2	Heater:	tk = 120 secs (max.) at Ef = 4.0 V; Ef = 4.0 V for test; Note 9			
4.16.3.3	Pulse Characteristics:	tp = 0.45 to 0.55 us; Du = .0005 trv = .10 us (min.)			
4.16.3.4	Average Anode Current:	Ib = 15 mAdc			
4.16.3.5	Pulse Voltage:		epy:	26	29 kv
4.16.3.6	Power Output:	Method B; t = 300 (max.)	Po:	125	—— W
4.10.7.3.1	Frequency:		F:	9230	9404 Mc
4.16.3.7	†RF Bandwith:		Bandwidth:	——	6 Mc
4.16.5	*Pulling Factor:		△F:	——	15 Mc
4.16.3	*Oscillation (3):*				
——	Coupling:	Per attached drawing; Note 8			
——	Standing Wave Ratio:	$\sigma' = 1.10/1$ (max.)			
4.16.3.2	Heater:	tk = 120 secs (max.) at Ef = 4.0 V; Ef = 3.4 V for test; Note 9			
4.16.3.3	Pulse Characteristics:	tp = 1.8 to 2.2 us; Du = .001; trv = .15 us (min.)			
4.16.3.4	Average Anode Current:	Ib = 30 mAdc			
4.16.3.5	Pulse Voltage:		epy:	26	29 kv
4.16.3.6	Power Output:	Method B; t = 300 (max.)	Po:	250	—— W
4.16.7	Stability:	Note 11; Note 12			
4.10.7.3.1	Frequency:		F:	9230	9404 Mc
4.16.3.7	*†RF Bandwidth:	Note 13	Bandwidth:	——	3 Mc
4.16.6	**Pushing:	Note 14	△F:	——	2.5 Mc
4.19.14	**Thermal Factor:		△F/△T:	——	0.25 Mc/°C
4.9.15	**Low Temperature Operation:	tk = 180 secs (max.)			
4.9.16	**High Temperature Operation:	tk = 120 secs (max.)			
——	**Low Pressure Operation:	Note 15			
4.11	Life Test:	Note 4; Group D; Osc (1)	t:	250	—— hrs.
4.11.4	Life Test End Point:	Osc (1)	Po:	180	—— W
			Bandwidth:	——	2.5 Mc

Note 1: When first applying heater voltage, heater surge current must not exceed 60 A at any time.

Note 2: Air cooling at sea level for the test conditions in Oscillation (1) requires a minimum delivery of air to the radiator duct of 200 cubic feet per minute at a back pressure of 2 inches of water. Maximum ambient temperature must not exceed 70° C.

Note 3. The temperature is to be measured at the point indicated on the attached drawing.

Note 4: To satisfy the minimum limit of 250 hours for this test (4.11), the tube must be operated with the mounting plate horizontal.

Note 5: Ferromagnetic materials must not be permitted at any time closer than 4 inches from the magnet. Energized magnets must not be permitted at any time closer than 12 inches from the tube magnet.

Note 6: All of Ref. 4.9.9 shall apply except provisions for paint and superficial rust.

Note 7: On evidence of satisfactory quality, the inspector may limit this test to ten (10) tubes per month when the tube is in continuous production.

Note 8: For operation in excess of 20 peak amperes, means to prevent electrical breakdown in the waveguide must be employed equivalent in effectiveness to the action of 30 lb/sq. in. (absolute) air pressure. Maximum absolute pressure must not exceed 40 lb/sq. in. except as specified for test.

Note 9: The tube shall operate satisfactorily within the specific limits when the heater voltage is varied plus or minus 5%.

Note 10: The average anode current for Osc (1) tests will be stamped on the tube at the place designated on the outline drawing. The current shall be between 25 and 30 mA.

Note 11: Under test conditions of specified oscillation, the stability shall be tested by counting arcs with a biased diode arc detector circuit and an electronic arc counter. An arc will be defined as a current pulse which exceeds the normal pulse by 10%. The number of arcs shall not exceed 1% of the pulses applied during the last five minutes of a test interval not exceeding 15 minutes.

Note 12: This test will be performed into a 1.5/1 VSWR with phase adjusted for maximum arcing.

Note 13: This test will be performed into a 1.5/1 VSWR with phase adjusted for widest spectrum.

Note 14: Pushing is measured as the frequency excursion when the average anode current is varied between 25 and 30 ma.

Note 15: In an obsolute pressure of 22 inches of mercury, the tube should operate satisfactorily, should not change frequency, or should not exceed the limits specified, as indicated under either oscillation condition. In addition, there should be no arc-overs or harmful corona exhibited.

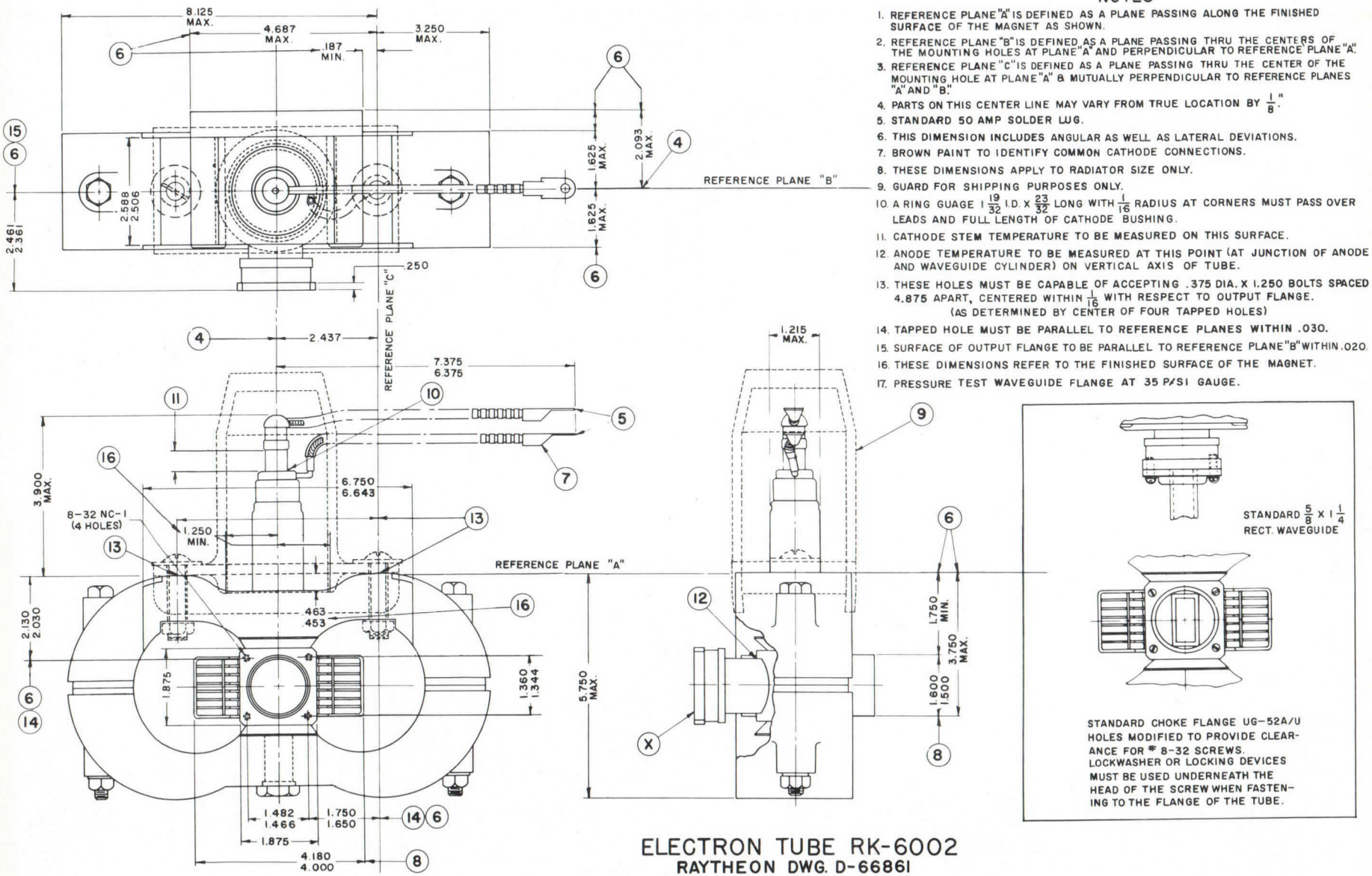

NOTES

1. REFERENCE PLANE "A" IS DEFINED AS A PLANE PASSING ALONG THE FINISHED SURFACE OF THE MAGNET AS SHOWN.
2. REFERENCE PLANE "B" IS DEFINED AS A PLANE PASSING THRU THE CENTERS OF THE MOUNTING HOLES AT PLANE "A" AND PERPENDICULAR TO REFERENCE PLANE "A".
3. REFERENCE PLANE "C" IS DEFINED AS A PLANE PASSING THRU THE CENTER OF THE MOUNTING HOLE AT PLANE "A" & MUTUALLY PERPENDICULAR TO REFERENCE PLANES "A" AND "B."
4. PARTS ON THIS CENTER LINE MAY VARY FROM TRUE LOCATION BY $\frac{1}{8}$".
5. STANDARD 50 AMP SOLDER LUG.
6. THIS DIMENSION INCLUDES ANGULAR AS WELL AS LATERAL DEVIATIONS.
7. BROWN PAINT TO IDENTIFY COMMON CATHODE CONNECTIONS.
8. THESE DIMENSIONS APPLY TO RADIATOR SIZE ONLY.
9. GUARD FOR SHIPPING PURPOSES ONLY.
10. A RING GUAGE 1 $\frac{19}{32}$ I.D. X $\frac{23}{32}$ LONG WITH $\frac{1}{16}$ RADIUS AT CORNERS MUST PASS OVER LEADS AND FULL LENGTH OF CATHODE BUSHING.
11. CATHODE STEM TEMPERATURE TO BE MEASURED ON THIS SURFACE.
12. ANODE TEMPERATURE TO BE MEASURED AT THIS POINT (AT JUNCTION OF ANODE AND WAVEGUIDE CYLINDER) ON VERTICAL AXIS OF TUBE.
13. THESE HOLES MUST BE CAPABLE OF ACCEPTING .375 DIA. X 1.250 BOLTS SPACED 4.875 APART, CENTERED WITHIN $\frac{1}{16}$ WITH RESPECT TO OUTPUT FLANGE. (AS DETERMINED BY CENTER OF FOUR TAPPED HOLES)
14. TAPPED HOLE MUST BE PARALLEL TO REFERENCE PLANES WITHIN .030.
15. SURFACE OF OUTPUT FLANGE TO BE PARALLEL TO REFERENCE PLANE "B" WITHIN .020.
16. THESE DIMENSIONS REFER TO THE FINISHED SURFACE OF THE MAGNET.
17. PRESSURE TEST WAVEGUIDE FLANGE AT 35 P/SI GAUGE.

ELECTRON TUBE RK-6002
RAYTHEON DWG. D-66861

Figure 10

RK6002 MAGNETRON

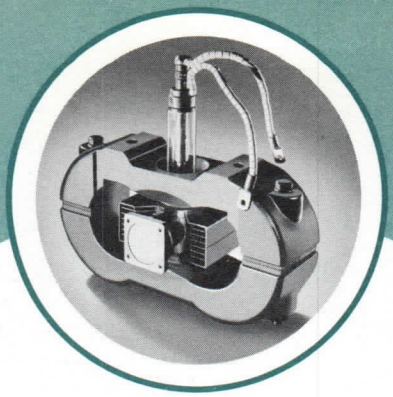

RK6002

Fixed freq. — 9320-9404 mc
Peak pulse power — 250 kw



RK2J32

Fixed freq. — 2780-2820 mc
Peak pulse power — 285 kw

RAYTHEON

Excellence in Electronics



RK2J51

Tunable — 8500-9600 mc
Peak pulse power — 45 kw

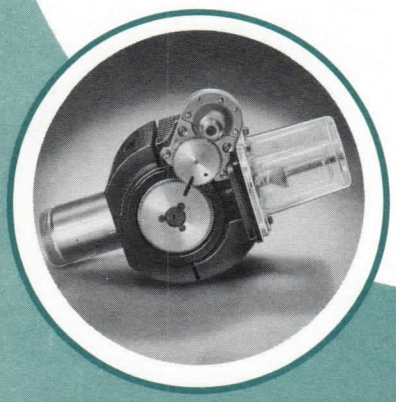

RK5J26

Tunable — 1200-1350 mc
Peak pulse power — 400 kw



RK5586

Tunable — 2700-2900 mc
Peak pulse power — 900 kw

Further information on the operation and capabilities of these and other magnetron tubes can be obtained from the Applications Group, Power Tube Division, Raytheon Manufacturing Co., Waltham, Mass.

Form No. 2866

TYPE RK-6249A

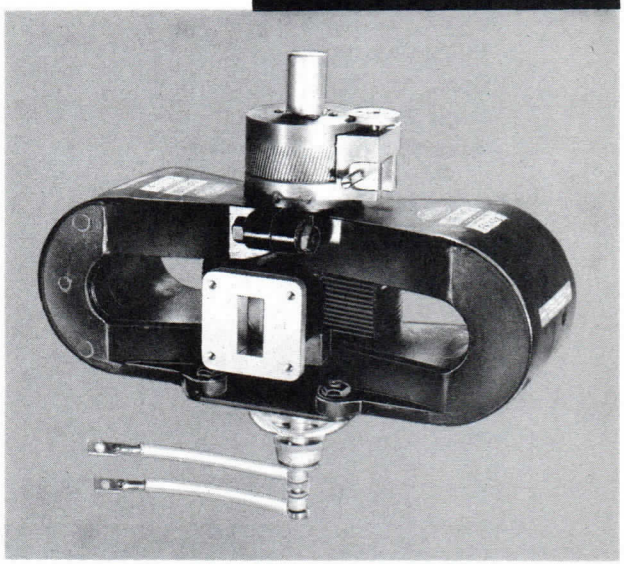

TUNABLE PULSED-TYPE OSCILLATOR

GENERAL DESCRIPTION

The RK6249A magnetron is a mechanically tunable pulsed-type oscillator with a nominal peak power output of 240 kilowatts. This magnetron is capable of either rapid hand or motor tuning to any desired frequency in the 8500 to 9600 megacycle range. It is an integral magnet type, requiring forced air cooling, and is designed for coupling to a standard 5/8" x 1¼" pressurized waveguide.

GENERAL PRECAUTIONS

As is the case with other electrical components, if magnetrons are operated continuously at their maximum ratings, some deterioration in life will result. There are many problems peculiar to magnetrons in general which must be given special consideration in system design, such as r.f. radiation, pulse shaping, VSWR, and length of transmission line to the antenna. These problems are discussed in detail in the following pages. If for any reason it is desired to operate the RK6249A under conditions other than those recommended in this technical data sheet, the Applications Group at Raytheon must be consulted. In some special cases, additional evaluation and life test will be necessary.

Reliable operation and maximum magnetron life can be achieved only if the overall radar transmitter is designed with the magnetron characteristics and peculiarities clearly in mind. This technical data sheet rather than the MIL-E-1C Government Purchase Specification should be used as a guide to equipment designers.

GENERAL CHARACTERISTICS

ELECTRICAL

Heater Characteristics

Heater Voltage — Preheat	9.0 Volts
Heater Current @ 9.0 Volts	12.8-15.6 Amperes
Minimum Preheating Time	3 minutes

Maximum Ratings

Heater Voltage	10.0 Volts
Peak Current	32.0 Amperes
Peak Power Input	1000 Kilowatts
Duty Cycle	.0013
Minimum Pulse Voltage Rise Time	.1 us.
Maximum VSWR	1.5
Anode Temperature	125°C.

The values specified above are based on the "absolute system," and are not to be exceeded under any service conditions. The ratings are limiting values above which serviceability of any individual tube can be impaired. It does not necessarily follow that combinations of absolute maximum ratings can be attained simultaneously.

Printed in U.S.A.

MICROWAVE AND POWER TUBE DIVISION

RAYTHEON COMPANY

FOUNDRY AVE., WALTHAM 54, MASS.

Typical Operation	Oscillation (1)	Oscillation (2)
Pulse Recurrence Frequency	2000	400
Pulse Duration	.5	2.5 us.
Peak Anode Voltage	28.0	28.0 kv
Peak Anode Current	25.0	25.0 a
Average Anode Current	25.0	25.0 mAdc

MECHANICAL

Mounting Position	Any
Detailed Dimensions	See Outline Drawing (Fig. 9)
Net Weight	16 lbs., 4 oz. (Approx.)
Cooling	Forced Air
Pressurization	45 p.s.i. Absolute
Output Coupling Flange	UG 52/U
Tuner Torque	6" lbs. Maximum

DETAILED ELECTRICAL INFORMATION

HEATER

The RK6249A should be preheated at 9.0 volts for a minimum time of 3 (three) minutes. For a .001 duty cycle on both the .5 and 2.5 usec pulse, the heater voltage should be reduced to 6.0 volts. If, however, the tube is to operate at a .0005 duty cycle, the operating heater voltage should be at 8.0 volts. Heater voltage must be kept at ±10% of the specified values at all times. Heater surge current must not exceed 2½ times the maximum rated current. Excessive heater surge current will cause the heater in the magnetron to fail.

See Figure 1 for heater voltage vs. input power curve.

RK6249A HEATER VOLTAGE VS. INPUT POWER

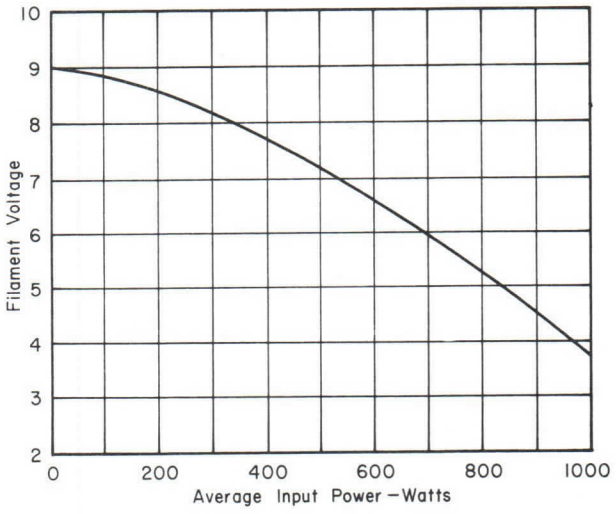

Figure 1

PULSE LENGTH AND DUTY CYCLE

The RK6249A has been utilized in systems which operate the tube at pulse lengths from 0.25 to 3.2 microseconds, and at duty cycles up to .001. Operation at pulse durations and duty cycles within these limits is entirely satisfactory. Consultation with the Applications Engineering Department is recommended before finalizing the operating conditions of any contemplated equipment design. The RK6249A is normally tested in the factory at a .001 duty cycle and 0.5 and 2.5 microseconds.

PULSE CHARACTERISTICS

The smooth peak is the maximum value of a smooth curve through the average of the fluctuation over the top portion of the pulse. The pulse width is the time interval between the two points on the current pulse at which the instantaneous current is 50 per cent of the smooth peak. The rise time is the time interval between points of 20 and 85 per cent of the smooth peak. Figure 2 shows

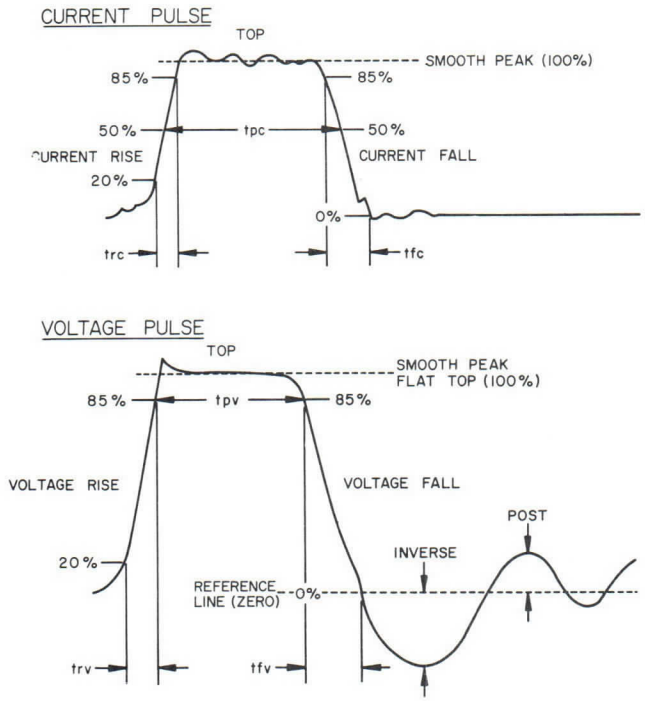

Figure 2

graphically the definitions mentioned. The voltage rise time must not be less than .10 usec for both the .5 and 2.5 usec pulse widths to realize good tube performance. Too fast a rise time may lead to instability. It is necessary to form the pulse so that the current pulse shows no sign of jitter and no large spikes on the leading edge, as these conditions also may cause instability. The ripple on the top of the current pulse must be kept at a minimum to avoid pushing effects which will tend to widen the spectrum. The trailing edge or decay time of the voltage pulse must be as short as possible to obtain optimum performance and high operating efficiencies.

Many magnetrons draw a certain amount of leakage or diode current at anode voltages as low as 100 volts. For this reason, it is not only advisable to keep the time duration of the voltage pulse trailing edge as short as possible; but also to prevent the positive voltage backswing from becoming negative again. The diode current can amount to several milliamperes at an average current of 25 milliamperes. Except for giving falsely exaggerated indications as to the actual peak current at which the magnetron is operating, diode current is not harmful unless it becomes excessive.

For optimum pulse shaping, the magnetron, pulse transformer, and pulse line must be treated as a unit. It is advisable to build up an experimental pulse line and hand tailoring it for optimum magnetron current and voltage pulse shape when used in conjunction with the pulse transformer and the RK6249A.

"Close in returns" or "false echoes" have frequently been related to the generation of r.f. noise from magnetrons during the duration of pulse backswing when voltage is present across the tube but of insufficient value to cause normal oscillation. There has been no experience of this sort with the RK6249A. If this is encountered more information regarding this phenomenon in general may be obtained from the Applications Engineering Department.

INITIAL OPERATION

No unusual precautions should be taken when first operating a new tube or one that has been in storage for some time. If any instability of the RK6249A is observed, however, it is usually very short term and its manifestation is related to the sensitivity of the modulator overload circuit and the pulse duration. Seldom is any initial instability encountered with magnetrons at pulse durations of less than one microsecond unless there is a basic problem (i.e., rise time) with the design of the modulator pulse shape. For pulse lengths greater than one microsecond, initial instability may occur. Every RK6249A is tested for "starting stability" at the factory at a 2.5 microsecond pulse width. The criteria for acceptance is a 1% maximum allowable number of "missing r.f. pulses" during the initial test interval immediately following the application of high voltage. This is a standard MIL-E-1C test procedure.

The sensitivity of the overload circuit and the operational requirements of a system are items which should be thoroughly discussed with the Applications Engineering Department.

LOAD DIAGRAM

Figure 3 is a load diagram of a typical RK6249A magnetron. The contours of constant power output and frequency change are related to the voltage standing wave ratios introduced by mismatched loads at various phase positions. Values of VSWR as high as 3.5/1.0 are plotted, but operation at ratios greater than 1.5/1.0 is not recommended.

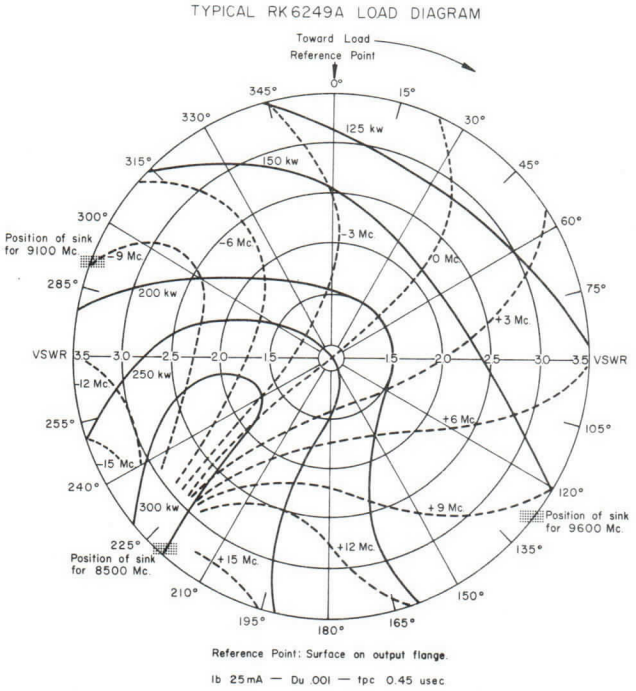

Figure 3

POWER INPUT

The impedance of the RK6249A is initially established at the factory by adjustment of the magnetic field. At a frequency of 9000 Mc (3.0 on the tuning dial) and at a peak anode current of approximately 25 amperes, the peak voltage is within the range of 27 to 29 kilovolts, corresponding to an impedance of 1080 to 1160 ohms. The impedance of the magnetron varies as its frequency is tuned. The change in voltage required to maintain a constant current from 8500 to 9600 Mc is 2.75 kilovolts.

If the RK6249A is used in a circuit which requires tunability without regulation of anode current, the power input to the tube will be determined by the load line characteristic of the modulator. If such is the case, and a conventional line type modulator is used, it is recommended that the power input be initially adjusted for the nominal anode current when the tuning gear is set at 3.0 on the dial. The power output may then be lower or higher than the published data, depending upon the anode current deviations from the rated value as the tube is tuned. If a hard tube modulator is used, regulation of anode current is mandatory.

LOAD AND LINE LENGTH CONSIDERATIONS

If an oscillator is loaded by an electrically long transmission line which is terminated by an impedance different from that of the line, the impedance of the load will be a periodic function of frequency. Operation of the oscillator under these conditions gives rise to phenomena collectively termed "Long Line Effects." Although these phenomena are usually associated with an electrically long transmission line, they can also be exhibited by a short line terminated by a sufficiently mismatched impedance. In any case, the extent to which the long line effect is exhibited depends on the amount of coupling between the load and the oscillator as well as the degree of mismatch in the line. Figure 4 shows the relation between the VSWR and the line length with respect to the critical condition of the skip. This skip condition occurs when the tube is changing frequency (thermal drift) and causes breaks in the tube's ordinarily smooth drift curve.

PRESSURIZATION

The waveguide output section must be pressurized with 15 p.s.i.a. of clean dry air or equivalent means to prevent electrical breakdown.

The input bushing is capable of operation without pressurization up to an altitude of 10,000 ft.

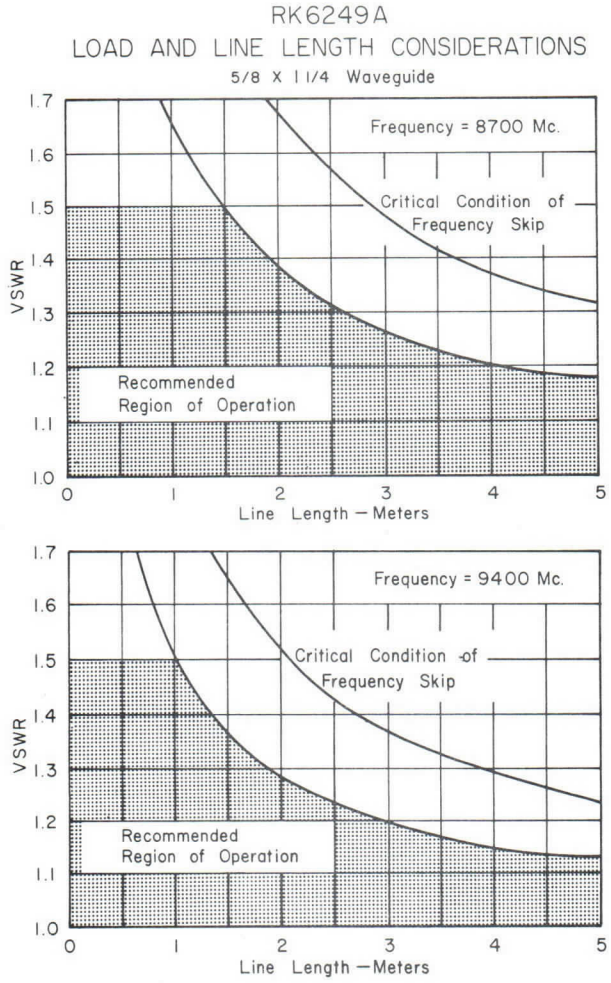

Figure 4

WAVEGUIDE BREAKDOWN

If an arc occurs anywhere in the waveguide run, it may immediately be reflected back to the magnetron output window. The arc effectively short circuits the magnetron output, heats the window, resulting in implosion of the glass.

The minimum power specification for the tube is 200kw at an average current of 25mAdc; however, an average tube can yield 240kw into a matched load, 300kw into a VSWR of 1.5/1.0 at 25mA, and 375kw into a VSWR of 1.5/1.0 at an average current of 28mAdc. For this reason, a large size "X" band waveguide is recommended, and *all* waveguide components should be capable of withstanding 400kw.

COOLING

The air stream for cooling the RK6249A should be directed to the air inlet of the radiator through a close fitting duct. Anode temperatures of 100°C or lower are recommended, although temperatures as high as 125°C can be tolerated. Sufficient circulating air or equivalent cooling must be supplied around the input bushing so that the bushing temperature will never exceed 270°C. See Figure 5 for cooling characteristics.

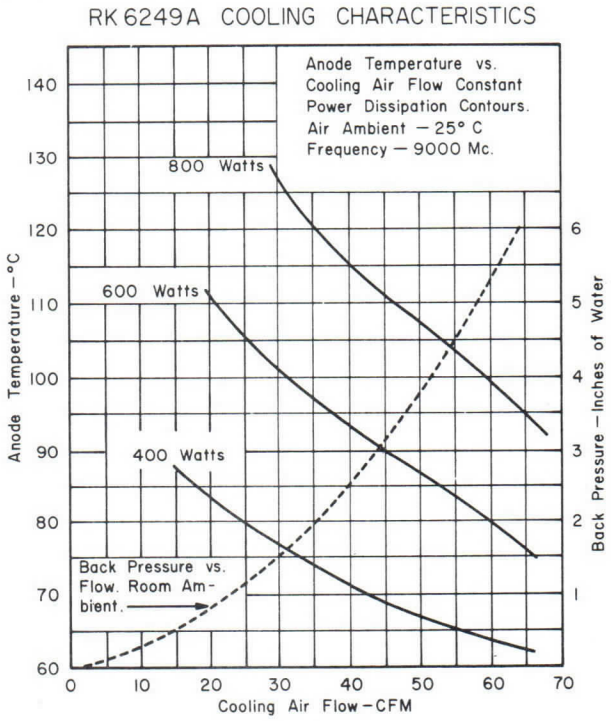

Figure 5

FREQUENCY DRIFT

After operation of the RK6249A is initiated, the tube's temperature increases with time until thermal equilibrium is reached. During this period, the dimensions of the tube change slightly and consequently the operating frequency changes or drifts. The average frequency drift characteristics of the RK6249A after starting at room temperature is presented in Figure 6. If the tube temperature is changed after thermal equilibrium has been established, such as will be the case with changes in ambient temperature or changing duty cycles, the operating frequency will also change until

the new equilibrium is reached. The resulting frequency change in this case will be less than .25 megacycles per centigrade degree.

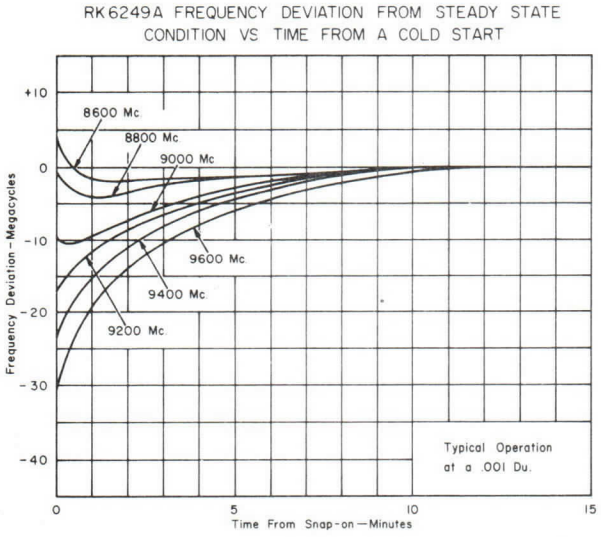

Figure 6

FILAMENT SUPPLY FREQUENCY

The RK6249A has a large alnico magnet which supplies the field energy. Interaction between the magnetic field and the AC field of the filament coil may excite electro-mechanical resonances of the filament structure. For this reason, variable frequency supplies must be avoided. Frequencies of 60, 400, or 1600 cycles should be used, as these regions have been investigated, and have been found to contain no resonances.

It may be necessary in MTI applications to use a DC source in order to avoid heater modulation.

R. F. SPECTRUM BANDWIDTH

The r.f. spectrum is related directly, but not exclusively to the shape of the input pulse. The property of the tube which contributes to the spectrum shape is called "pushing." Pushing is related to electron density within the interaction space. Electron density in turn is related to pulse width and current. As the pulse width increases the deviation of the spectrum from its direct relationship to the input pulse may be more pronounced.

With pulse widths shorter than 1 microsecond, a theoretical spectrum should not be expected until the magnetron current pulse shape has attained comparable properties, particularly a fast fall time. With pulse widths greater than 2 usec, the spectrum may deviate from the ideal at discrete currents usually above 9,000 mcs. Ordinarily this phenomenon of spectrum broadening is only apparent over very narrow phase changes in the reflections of loads having a high VSWR.

Factory specifications allow a maximum bandwidth of 1.5 Mcs. measured at the —6db point on the power spectrum. The test is performed at a pulsewidth of 2.5 usec. with an r.f. load having a 1.5 minimum VSWR phased for maximum bandwidth.

It is recommended in applications where VSWR's in excess of 1.3 are unavoidable that a ferrite type r.f. load isolator be used in conjunction with the magnetron.

POWER OUTPUT

At the nominal anode current of 25 amperes, the minimum power output from the RK6249A is 200 kilowatts. The actual distribution of power is greater, however, with the average minimum being 240 kilowatts. If the anode current is maintained constant as the magnetron is tuned, the power output is greater at each frequency extreme than at the minimum power frequency which occurs in the middle of the band.

The power output is directly related to the power input with the value being directly proportional to the anode current. The effect of load VSWR can result in a further variation as great as ±20% with a VSWR of 1.5.

In a typical system, under extreme conditions of line voltage, load VSWR, and frequency, the RK6249A may deliver 375 kilowatts of peak power.

During the operational life of the tube, power output may vary. Military specifications for any

magnetron consider a tube acceptable in this regard as long as the power output does not decrease by more than 20%. Such a decrease in power output rarely occurs in practice.

Absolute power measurements should only be made with a calorimetric standard.

R. F. RADIATION FROM CATHODE

All magnetrons radiate r.f. energy or noise from the input bushing. Proper shielding should be provided to prevent this energy from affecting sensitive circuits. This is normally accomplished if the magnetron is mounted in a compartment of a pulse transformer assembly.

X-RADIATION

Radiation from the internal anode structure of the RK6249A during oscillation emanates in a conical pattern through the glass of the input bushing and from the waveguide output window.

Exposure to this radiation, although not considered harmful, should be avoided inasmuch as the national trend is toward minimization of unnecessary exposure.

In normal mounting of the tube in a completed system where the input bushing is immersed in a compartment of oil and the waveguide output is connected to the r.f. plumbing, there is sufficient attenuation to absorb or shield the radiation. As a further precaution, the inside of the housing which the bushing fits into may be coated with a lead paint. The Applications Engineering Department can supply the details for procurement of this material.

In laboratory setups, care should be taken to shield these areas or by appropriate mounting to direct the input bushing away from personnel. Observation of the cathode in an oscillating tube by viewing through the output window should be avoided unless lead glass is used.

TUNER TORQUE

Not less than 10″ ounces nor more than 6″ pounds should be applied to the drive shaft of the tuner.

TUNING

Tuning is accomplished by rotating the double ended worm shaft driving the tuning dial gear. Counter clockwise rotation of the tuning gear increases the operating frequency of the tube.

155 ±15 turns of the tuning shaft (worm gear) covers the entire 1100 mc tuning range. The turns ratio of the worm gear to the dial gear is 25 to 1. Under the factory test conditions, dial readings corresponding to the following frequencies are stamped on the magnet of each tube.

Dial Reading	*Approximate Frequency*
A	8750 Mc
B	9250 Mc
C	9375 Mc

In addition, the dial gear is adjusted so that at a reading of 3.0 the frequency is approximately 9,000 Mc. Tuning linearity is a consistent characteristic of the RK6249A. The variation of any tube from the average tuning curve is within ±25 Mc. Refer to Figure 7.

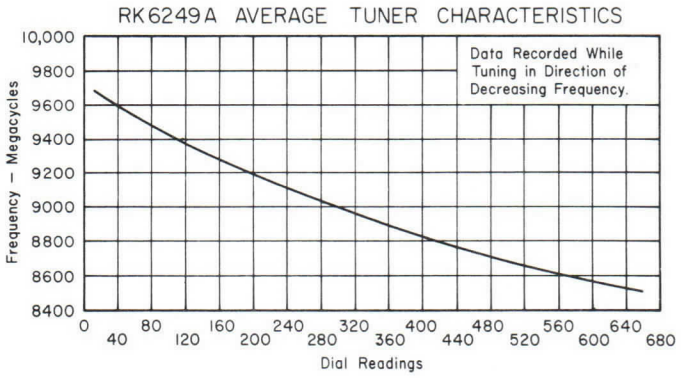

Figure 7

The RK6249A has been designed for rapid tunability. No appreciable wear, backlash, or changes in characteristics will occur for at least 5,000 cycles at tuning speeds of the drive shaft as high as 1500 rpm. Even higher speeds are feasible.

The tuning mechanism requires a maximum torque of 12 inch oz. under the most extreme conditions of temperature, minus 55°C. The stop mechanism is designed to withstand not more than 6 in. lbs. without damage.

RK6249A AVERAGE PERFORMANCE CHARACTERISTICS

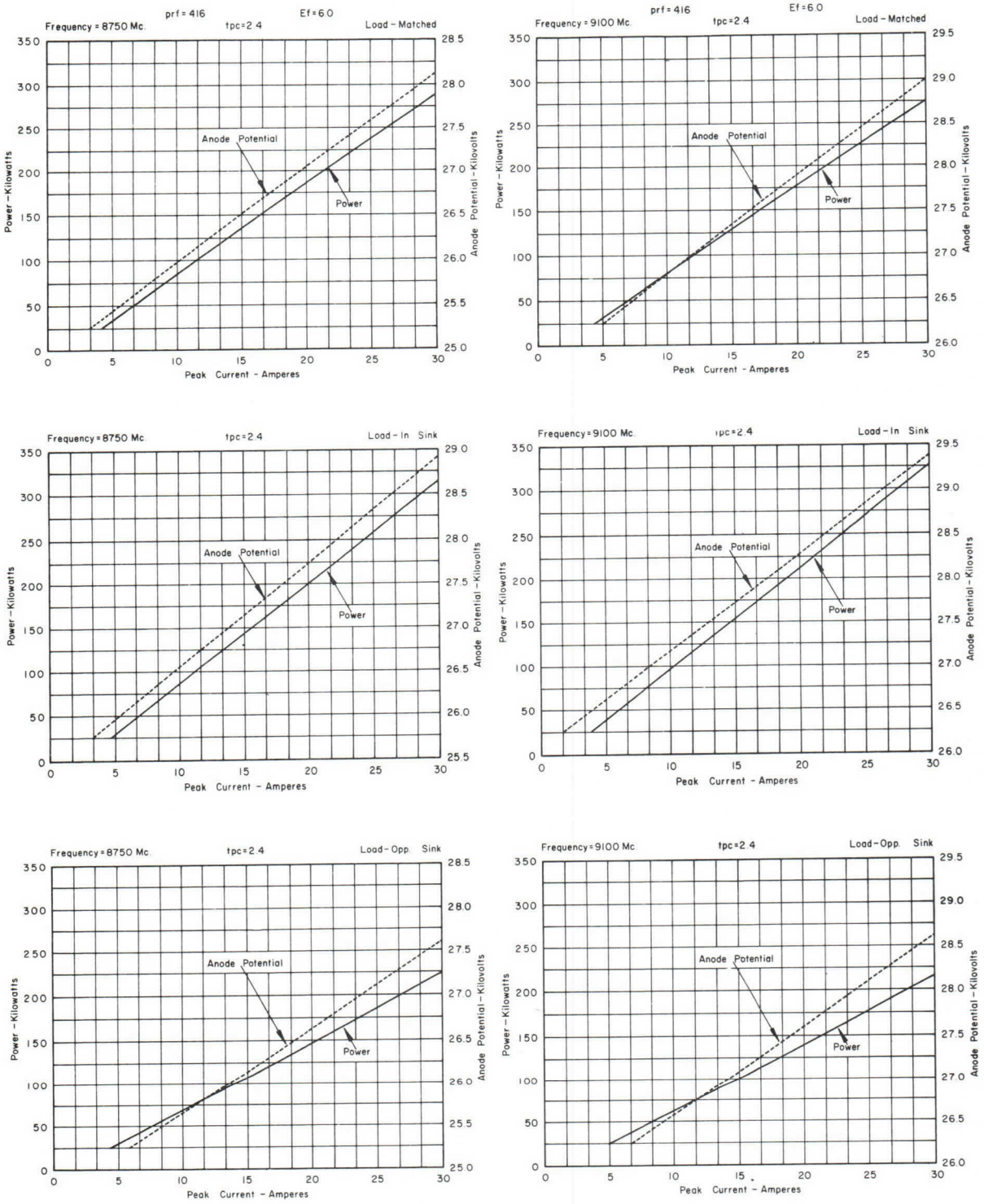

Figure 8

RK6249A AVERAGE PERFORMANCE CHARACTERISTICS

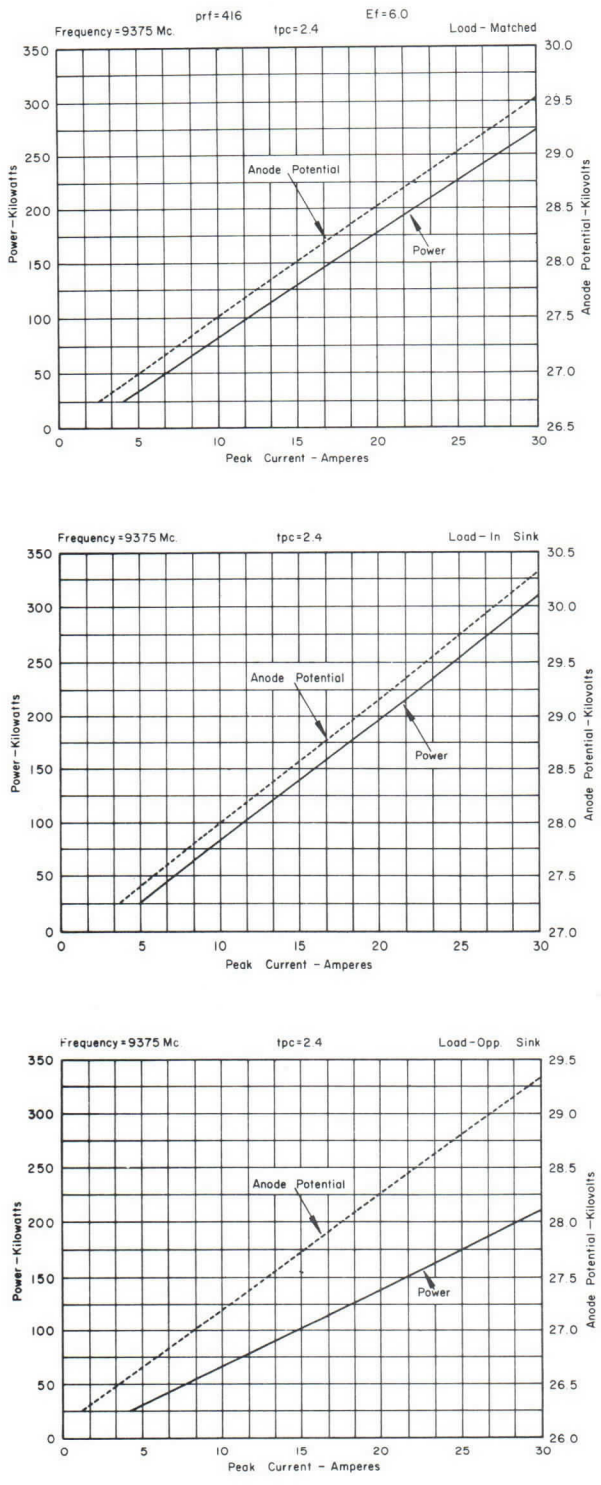

Figure 8

DETAILED MECHANICAL INFORMATION

INSTALLATION AND HANDLING PRECAUTIONS

The high voltage bushing and the output window are protected by guard covers during shipment. These covers must be removed before the tube is installed in its associated equipment. No mechanical strain should be applied to the bushing or the output window in handling or mounting the magnetron.

Care should be taken to keep magnetic materials 4" away and ferro-magnetic materials 12" away from the magnets. The aluminum coating on the magnets minimizes the danger of demagnetization by contact but cannot be guaranteed completely effective. Deterioration of the magnetic field will cause low power and instability.

Unnecessary jarring of the tube must be avoided. While a packaged magnetron may give an appearance of massiveness and great strength, the internal structure is delicate and involves critical alignment of parts. In the event of careless handling, the resulting shock may easily exceed the maximum allowable.

MOUNTING

The tube is mounted from the four holes in the mounting flange which provide clearance for ¼" bolts. The RK6249A may be mounted in any position.

ELECTRICAL CONNECTIONS

Electrical input connections are made to the frame of the tube and to two flexible leads terminated in lugs with clearance holes for #10-32 bolts. The positive high voltage lead should be grounded to the tube, preferably at the mounting surface. The heater lead projects radially from the extreme end of the cathode bushing. The other lead provides a common heater and cathode connection and can be identified by a band of brown paint.

When making connections to the filament, the circuit should be studied and arranged to prevent any portion of the filament supply voltage from being applied between the anode and cathode

of the magnetron. The magnetron would rectify this low ac voltage, and the average anode current meter would indicate a few milliamperes. Depending upon the circuit, this false indication of current could be exaggerated if the filament-cathode connections were reversed.

COUPLING

The magnetron output flange is designed to couple to a standard 5/8" x 1 1/4" pressurized waveguide. A standard X-band flange, type UG-52/U with holes modified to provide clearance for #8-32 bolts, mates with the tube output flange.

NOTES:

1 Reference Plane "A" is defined as a plane passing along the face of the mounting plate.

2 Reference Plane "B" is defined as a plane perpendicular to plane "A," passing through the center of holes as shown.

3 Reference Plane "C" is defined as a plane mutually perpendicular to planes "A" and "B" passing through the center of holes as shown.

4 Includes angular as well as lateral deviation.

5 Center line of tapped holes must be parallel to planes "A" and "B" within .030.

6 Brown paint to identify common cathode connection.

7 Refers to radiator size only.

8 Lug (25 amp).

9 It shall be possible for a sleeve .195 I.D. x .406 O.D. x 1" long to pass ends of shaft to face of worm bracket.

10 Entire surface outside a 1.187 radius from the center of circle through the nominal centers of the four mounting holes shall be flat within .020. The mounting plate shall extend to a radius not less than 1.750 from its center as here defined.

11 ***WARNING!!!*** Maintain min. 4 inches clearance between magnet and magnetic materials (magnets, steel tools, plates, etc.).

12 Refers to opening in cooling fins.

13 All joints in mounting plate must be vacuum tight to provide a hermetic seal at surface "A."

14 All joints in waveguide assembly to be vacuum tight to provide a hermetic seal at surface "B."

15 Anode temperature to be measured at this point on surface of waveguide 1.500" back from face to waveguide flange.

16 Bushing temperature to be measured at this point.

17 Slot in flange to be centered within .005 with respect to 4 tapped holes.

18 All points on cathode stem within 1.250 max. from Ref. Plane "A" shall fall within the circumference of a 2.250 max. dia. cylinder constructed concentric to a circle drawn through the nominal center of the 4 mounting holes, and perpendicular to Ref. Plane "A." All points on cathode stem beyond 1.970 max. from Ref. Plane "A" exclusive of leads must fall within a similarly constructed cylinder of .750 max. dia. and finally all points between 1.250 and 1.970 from Ref. Plane "A" must fall within a similarly constructed conical section of 2.250 major dia. and .750 minor dia. as shown.

19 Refers to projected radius of mounting plates.

20 The frequency increases as the tuner shaft is driven in a counter clockwise direction as viewed in direction indicated by arrow.

21 The complete frequency range is covered by approximately 175 turns of the tuner shaft.

22 Leads must be capable of being bent as shown (detail viewed in direction of arrow).

23 Two No. 6-32 tapped holes with screws inserted are located as shown. The addition of the tapped holes and screws satisfy an Air Force equipment, and the magnetron serviceability will not be impaired with the screws inserted or removed.

24 Clearance between radiator and inside magnet leg.

RK6249A AVERAGE PERFORMANCE CHARACTERISTICS

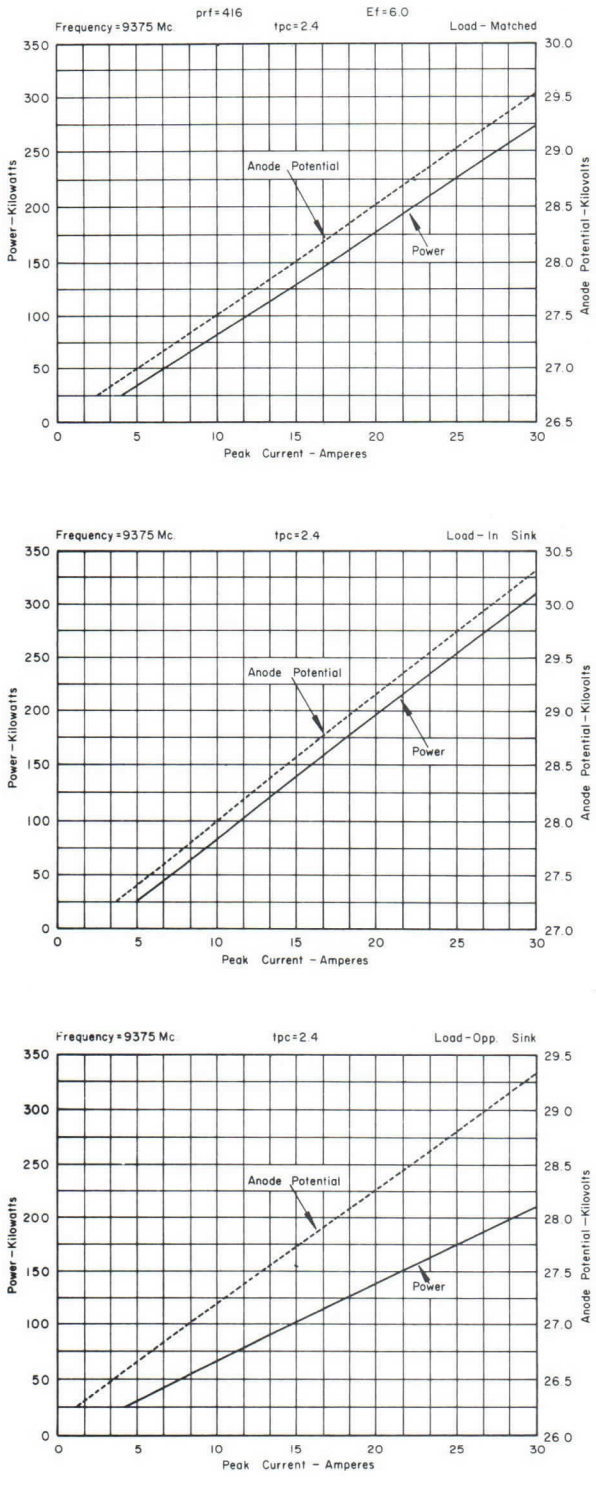

Figure 8

DETAILED MECHANICAL INFORMATION

INSTALLATION AND HANDLING PRECAUTIONS

The high voltage bushing and the output window are protected by guard covers during shipment. These covers must be removed before the tube is installed in its associated equipment. No mechanical strain should be applied to the bushing or the output window in handling or mounting the magnetron.

Care should be taken to keep magnetic materials 4" away and ferro-magnetic materials 12" away from the magnets. The aluminum coating on the magnets minimizes the danger of demagnetization by contact but cannot be guaranteed completely effective. Deterioration of the magnetic field will cause low power and instability.

Unnecessary jarring of the tube must be avoided. While a packaged magnetron may give an appearance of massiveness and great strength, the internal structure is delicate and involves critical alignment of parts. In the event of careless handling, the resulting shock may easily exceed the maximum allowable.

MOUNTING

The tube is mounted from the four holes in the mounting flange which provide clearance for ¼" bolts. The RK6249A may be mounted in any position.

ELECTRICAL CONNECTIONS

Electrical input connections are made to the frame of the tube and to two flexible leads terminated in lugs with clearance holes for #10-32 bolts. The positive high voltage lead should be grounded to the tube, preferably at the mounting surface. The heater lead projects radially from the extreme end of the cathode bushing. The other lead provides a common heater and cathode connection and can be identified by a band of brown paint.

When making connections to the filament, the circuit should be studied and arranged to prevent any portion of the filament supply voltage from being applied between the anode and cathode

of the magnetron. The magnetron would rectify this low ac voltage, and the average anode current meter would indicate a few milliamperes. Depending upon the circuit, this false indication of current could be exaggerated if the filament-cathode connections were reversed.

COUPLING

The magnetron output flange is designed to couple to a standard ⅝" x 1¼" pressurized waveguide. A standard X-band flange, type UG-52/U with holes modified to provide clearance for #8-32 bolts, mates with the tube output flange.

NOTES:

1 Reference Plane "A" is defined as a plane passing along the face of the mounting plate.

2 Reference Plane "B" is defined as a plane perpendicular to plane "A," passing through the center of holes as shown.

3 Reference Plane "C" is defined as a plane mutually perpendicular to planes "A" and "B" passing through the center of holes as shown.

4 Includes angular as well as lateral deviation.

5 Center line of tapped holes must be parallel to planes "A" and "B" within .030.

6 Brown paint to identify common cathode connection.

7 Refers to radiator size only.

8 Lug (25 amp).

9 It shall be possible for a sleeve .195 I.D. x .406 O.D. x 1" long to pass ends of shaft to face of worm bracket.

10 Entire surface outside a 1.187 radius from the center of circle through the nominal centers of the four mounting holes shall be flat within .020. The mounting plate shall extend to a radius not less than 1.750 from its center as here defined.

11 ***WARNING!!!*** Maintain min. 4 inches clearance between magnet and magnetic materials (magnets, steel tools, plates, etc.).

12 Refers to opening in cooling fins.

13 All joints in mounting plate must be vacuum tight to provide a hermetic seal at surface "A."

14 All joints in waveguide assembly to be vacuum tight to provide a hermetic seal at surface "B."

15 Anode temperature to be measured at this point on surface of waveguide 1.500" back from face to waveguide flange.

16 Bushing temperature to be measured at this point.

17 Slot in flange to be centered within .005 with respect to 4 tapped holes.

18 All points on cathode stem within 1.250 max. from Ref. Plane "A" shall fall within the circumference of a 2.250 max. dia. cylinder con structed concentric to a circle drawn through the nominal center of the 4 mounting holes, and perpendicular to Ref. Plane "A." All points on cathode stem beyond 1.970 max. from Ref. Plane "A" exclusive of leads must fall within a similarly constructed cylinder of .750 max. dia. and finally all points between 1.250 and 1.970 from Ref. Plane "A" must fall within a similarly constructed conical section of 2.250 major dia. and .750 minor dia. as shown.

19 Refers to projected radius of mounting plates.

20 The frequency increases as the tuner shaft is driven in a counter clockwise direction as viewed in direction indicated by arrow.

21 The complete frequency range is covered by approximately 175 turns of the tuner shaft.

22 Leads must be capable of being bent as shown (detail viewed in direction of arrow).

23 Two No. 6-32 tapped holes with screws inserted are located as shown. The addition of the tapped holes and screws satisfy an Air Force equipment, and the magnetron serviceability will not be impaired with the screws inserted or removed.

24 Clearance between radiator and inside magnet leg.

RAYTHEON

TUNABLE PULSED-TYPE OSCILLATOR

RK 6249A ELECTRON TUBE OUTLINE DRAWING

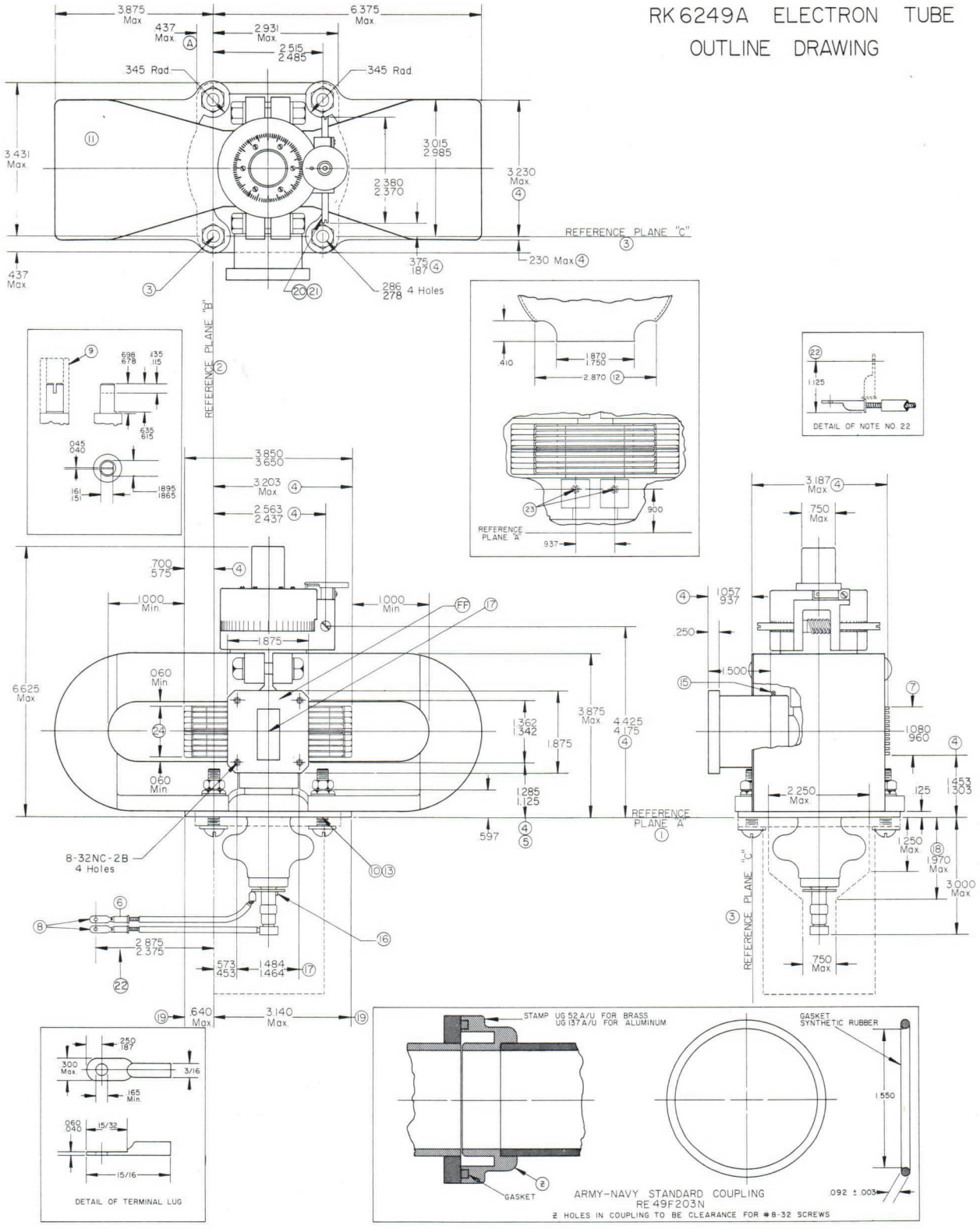

Printed in U.S.A.

TYPE RK6344/ QK-235

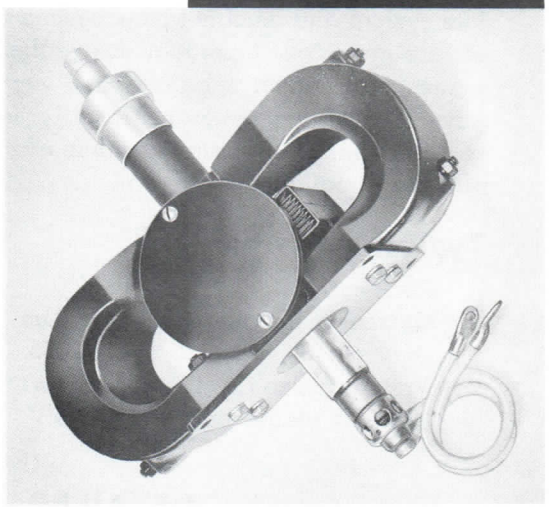

The RK6344/QK-235 is a mechanically tunable magnetron designed for pulsed operation in the frequency range of 5450 to 5825 megacycles. It is an integral magnet type tube rated for a minimum peak power of 175 kilowatts. It requires forced air cooling over fins integral with the anode block and is designed for coupling to standard 1 x 2 inch waveguide. Tuner construction facilitates rapid hand or motor tuning to any desired frequency within the specified range.

GENERAL PRECAUTIONS

Reliable operation and maximum magnetron life can be achieved if the overall radar transmitter is designed with the magnetron characteristics and peculiarities clearly in mind. This technical data, prepared by the Applications Group of Raytheon Manufacturing Company, rather than the MIL-E-1B Government purchase specifications, should be used as a guide to equipment designers. As is the case with other electrical components, if magnetrons are operated continuously at their maximum ratings, some deterioration in life will result. There are many problems peculiar to magnetrons in general that must be given special consideration in system design such as RF radiation, pulse shaping, VSWR and length of transmission line to the antenna. These problems are discussed in detail on the following pages. If for any reason it is desired to operate the QK-235 under conditions other than those recommended in this technical data sheet, the Magnetron Application Group must be consulted; and in some cases additional life test must be run.

GENERAL CHARACTERISTICS

ELECTRICAL

Heater Characteristics

Heater voltage — preheat	11 V
Heater current @ 11 volts	10-12 A
Minimum preheat time	3 minutes

Maximum Ratings

Heater voltage	12.5 V
Peak anode current	30 a
Peak anode voltage	24 kv
Average anode power input	720 W
Peak anode power input	720 kw
Max. freq. pulling at VSWR = 1.5/1	15 Mc
Max. anode temp. at point specified on outline drawing	120° C
Maximum pulse duration	3.0 us
Maximum duty cycle	.001
Max. voltage pulse rise time	0.2 us
Min. voltage pulse rise time	0.1 us
Max. freq. change per degree change of temp.	.25Mc/°C

Printed in U.S.A.

MICROWAVE AND POWER TUBE DIVISION

RAYTHEON COMPANY

FOUNDRY AVE., WALTHAM 54, MASS.

The values specified above are based on the absolute system and must not be exceeded under any service condition. Operation above these limiting values may affect tube life and serviceability adversely. It does not necessarily follow that combinations of absolute maximum ratings can be attained simultaneously.

Typical Operation

Peak current	22 a
Current pulse duration	1.35 us
Duty cycle	.00085
Voltage pulse rise time	0.1 us min.
Heater voltage start	11.0 V
Heater voltage operate	10.5 V
VSWR	1.5/1 (max)
Frequency	5450-5825 Mc
Peak anode voltage	21.5 kv
Peak power output	260 kw
Average power output	221 W

MECHANICAL

Mounting	Cathode vertical
Overall dimensions	See drawing
Net weight	25 lbs.
Tuner torque required	30 inch ounces
Pressurization	30 inch Hg
Output coupling	UG 148B/U Choke

DETAILED ELECTRICAL INFORMATION

HEATER

The cathode must be preheated at Ef = 11 volts for a period of at least three minutes prior to the application of anode high voltage. Immediately subsequent to the application of anode high voltage, heater voltage must be reduced to 10 volts. For combinations of pulse widths and duty cycles different from those shown under typical operation, the manufacturer must be consulted for optimum heater schedules. Provisions must be made to keep heater current surges below 30 amps. Surges in excess of 30 amps may open the heater circuit and render the tube worthless. Any interruption of tube operation requires that the heater schedule be repeated.

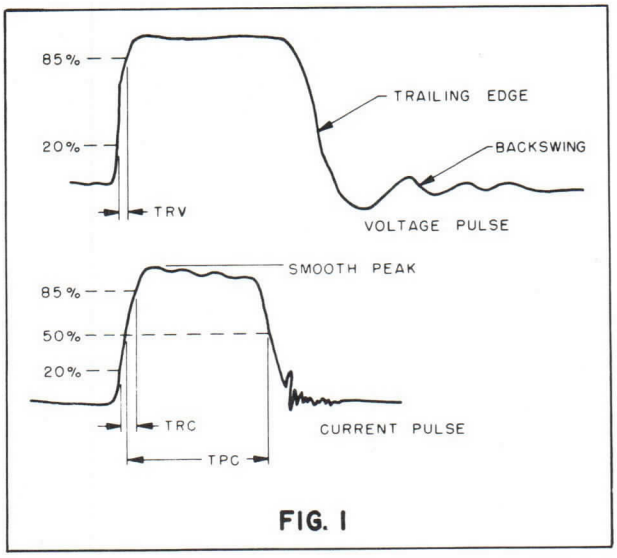

FIG. 1

PULSE CHARACTERISTICS

The smooth peak is the maximum value of a smooth curve through the average of the fluctuation over the top portion of the pulse. The pulse width is the time interval between the two points on the current pulse at which instantaneous current is 50 percent of the smooth peak. The rise time is the time interval between points of 20 and 85 percent of the smooth peak. Figure 1 shows graphically the definitions mentioned.

The voltage rise time must not be less than .10 usec for .4 usec pulse to realize good tube performance. Too fast a rise time will lead to moding or arcing. It is necessary to form the pulse so that the current pulse shows no sign of jitter and no large spikes on the leading edge as these conditions also may cause moding or arcing. The ripple on the top of the current pulse must be kept at a minimum to avoid pushing effects which will tend to widen the spectrum. Excessive backswing may cause noise. The backswing should not exceed 20% of the applied pulse.

Many magnetrons draw a certain amount of leakage or diode current at anode voltages as low as 100 volts. For this reason it is not only advisable

to keep the time duration of the voltage pulse trailing edge as short as possible; but also to prevent the positive voltage backswing from becoming negative again. This diode current can amount to several milliamperes at an average current of 30 milliamperes. Except for giving falsely exaggerated indication as to the actual peak current at which the magnetron is operating, diode current is not harmful, unless it becomes excessive.

For optimum pulse shaping the magnetron, pulse transformer, and pulse line must be treated as a unit. We advise building up an experimental pulse line and hand tailoring it for optimum magnetron current and voltage pulse shape when used in conjunction with the pulse transformer and the QK-235.

It is impossible to design a pulse transformer to give optimum results on both long and short pulses. It is, therefore, necessary to decide which pulse is the more important and optimize the pulse transformer for the desired operation.

OPERATION

The operating characteristics of an average QK-235 are described in the following paragraphs and illustrated in Figures 2, 3. All measurements were made under conditions of typical performance. Variation of these characteristics can be expected from tube to tube or from use of the same tube in different systems. A 1 x 2 inch waveguide was used for all tests involving a magnetron load.

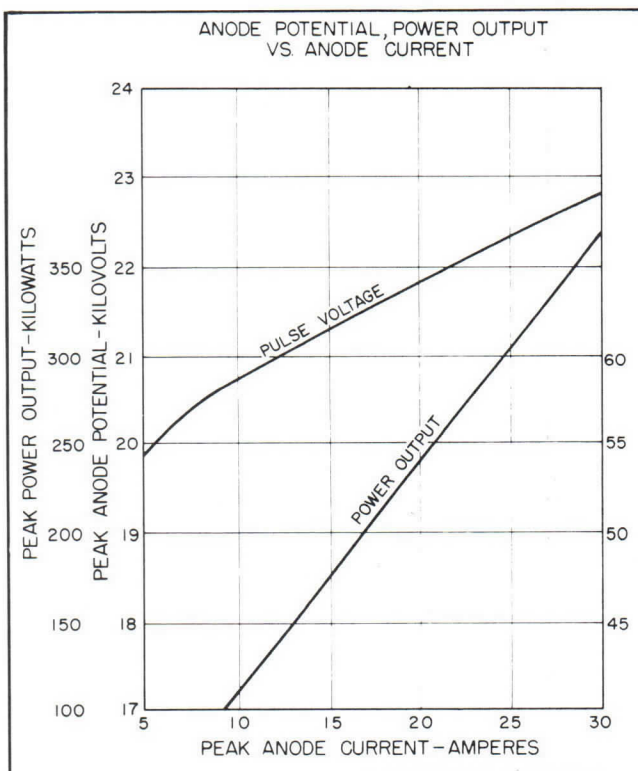

FIG. 2 -PERFORMANCE CHARACTERISTICS OF TYPICAL QK 235 MAGNETRON 5825 Mc.-1.0/1 VSWR

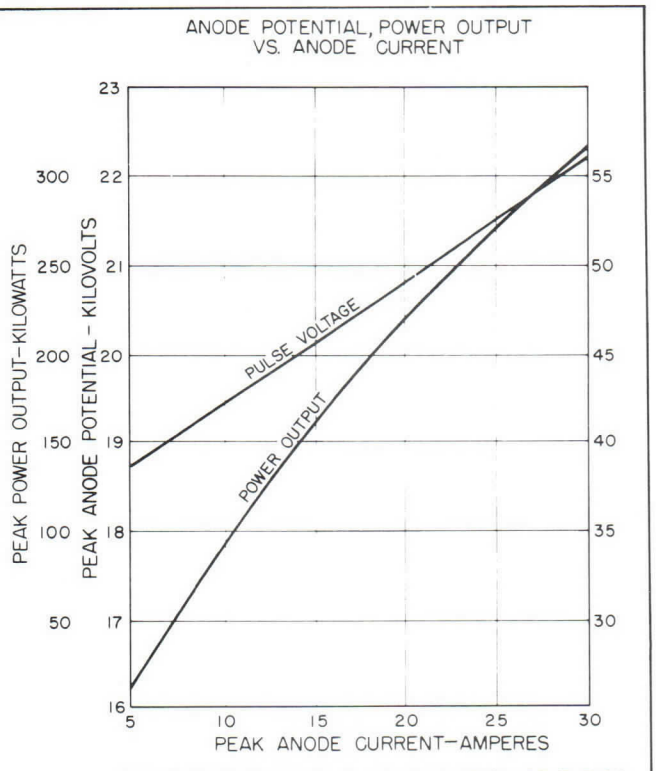

FIG. 3-PERFORMANCE CHARACTERISTICS OF TYPICAL QK 235 MAGNETRON 5450Mc.-1.0/1 VSWR

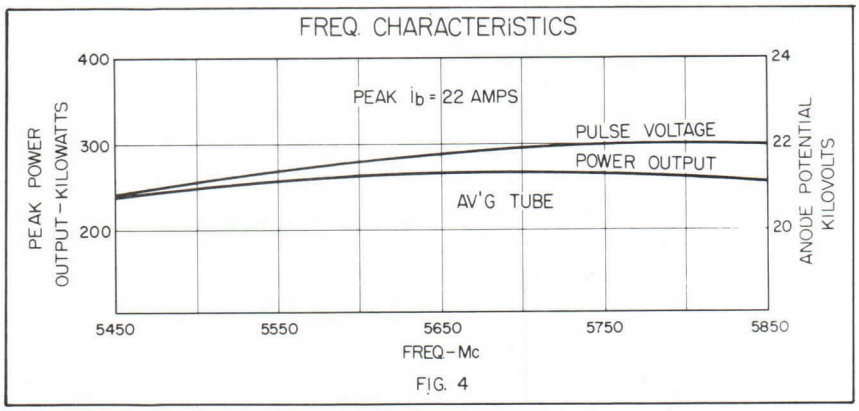

FIG. 4

FREQUENCY CHARACTERISTICS

The manner in which anode voltage and power output, vary with frequency is revealed in Figure 4.

LOAD DIAGRAMS

Figure 5 is a load diagram of a typical QK-235 magnetron operating at frequencies of 5500, 5700 and 5800 megacycles respectively. The contours of constant power output and frequency change are related to voltage standing wave ratios introduced by mismatched loads at various phase positions. Values of VSWR as high as 3.5/1 are plotted but ratios greater than 1.5/1 are not recommended.

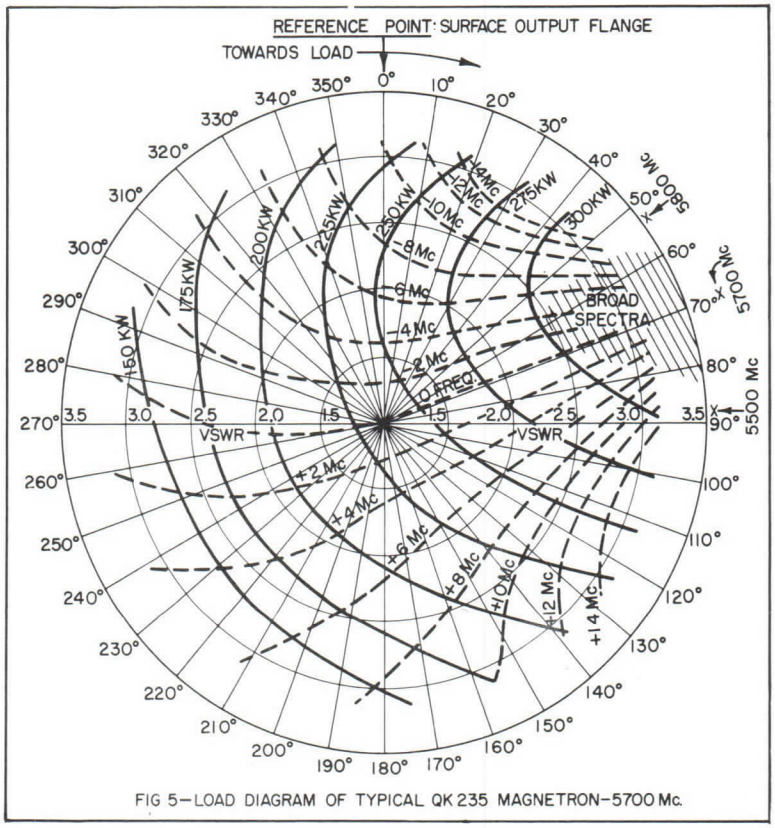

FIG 5—LOAD DIAGRAM OF TYPICAL QK 235 MAGNETRON—5700 Mc.

FREQUENCY DRIFT CHARACTERISTICS

After operation of the QK-235 is initiated, its temperature rises with time until thermal equilibrium is reached. During this transient period the geometry of the tube changes slightly and is attended by a slight frequency change or drift. Frequency drift and anode temperature are plotted as a function of time in Figure 6.

If the tube temperature is changed after thermal equilibrium has been established, the operating frequency will also change until thermal equilibrium is again attained and tube geometry stabilizes.

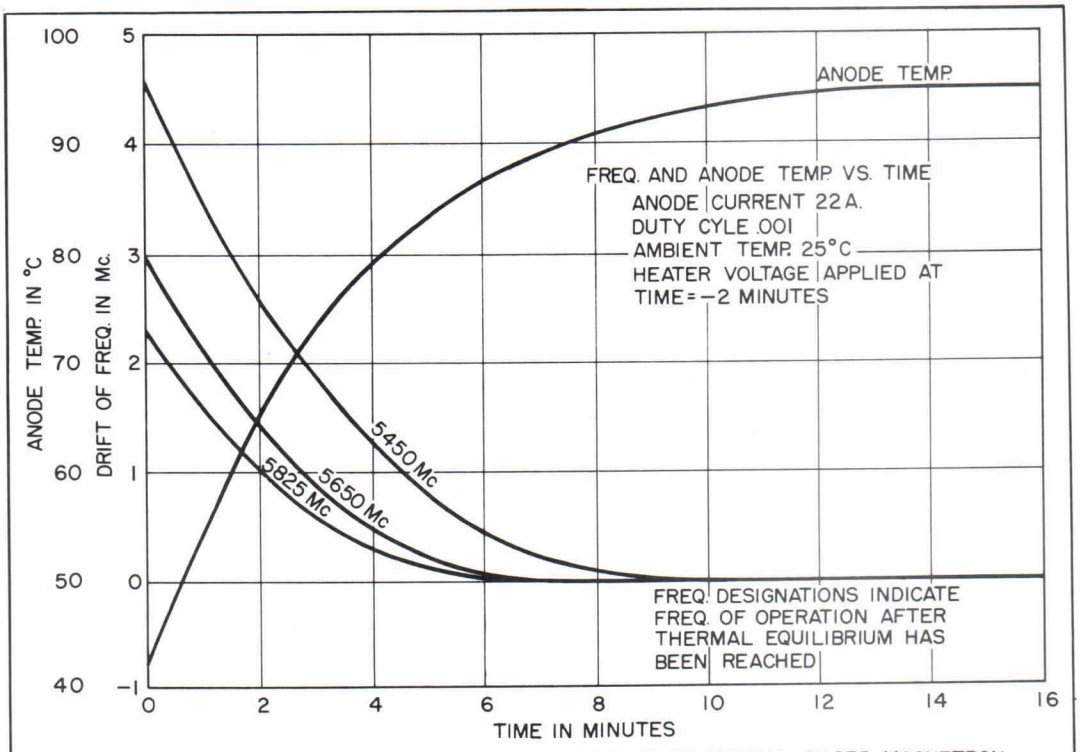

FIG. 6—FREQ. DRIFT CHARACTERISTICS FROM COLD START OF TYPICAL QK 235 MAGNETRON

LOAD AND LINE LENGTH CONSIDERATIONS

Operation of the QK-235 into a line exceeding some critical length and terminated in an impedance different from the line or a short line terminated in a severe mismatch gives rise to undesirable phenomena collectively termed long line effects. Tuner curve discontinuities, spectrum broadening and intolerable attenuation are some of the associated phenomena. Figure 7 shows the line length and VSWR recommended for use with the QK-235. Although the curves apply specifically to an operating frequency of 5650 Mc, they do not change significantly at other frequencies in the tuning range. The critical conditions of frequency skip, where breaks in the tuning curve first appear depend somewhat on the pulling figure of individual tubes. However, operation within the recommended region indicated on the figure will yield satisfactory operation of all QK-235 magnetrons. An extensive treatment of long line effects is beyond the scope of this publication; however, additional information may be obtained on request from the Sales Department, Microwave & Power Tube Operations, Raytheon Mfg. Company.

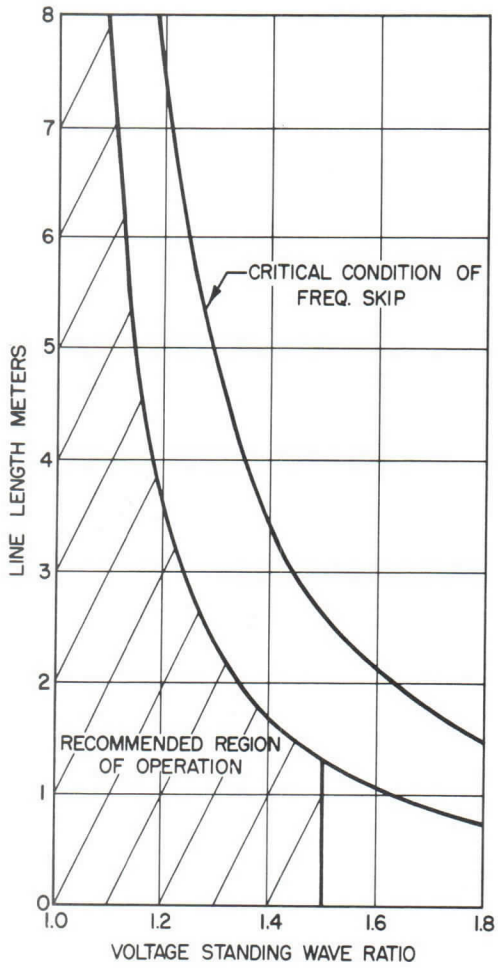

FIG. 7—QK 235 LOAD AND LINE LENGTH CONSIDERATIONS 1"x2" WAVE GUIDE

COOLING

The cooling air stream for the QK-235 should be directed to the air inlet of the radiator through a close fitting duct. Operating anode temperatures below 90°C are recommended although temperatures as high as 120°C can be tolerated.

Figure 8 reveals the relationship between air flow (ft^3/min.) and back pressure (inches H_2O). Figure 9 shows anode temperature as a function of rate of air flow over the radiator at four values of power input. Tests were made at 30 in. Hg and an ambient temperature of 25°C. Higher ambient temperatures will result in correspondingly higher anode temperatures.

Use of a close fitting duct can be avoided if a compensating increase in rate of air flow is made.

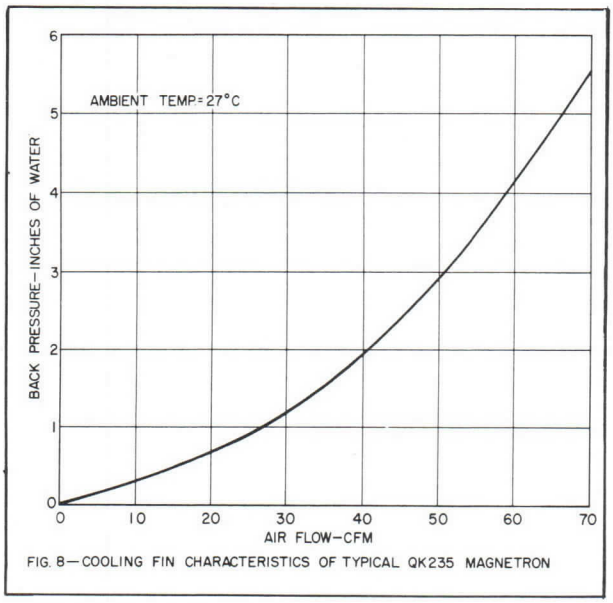

FIG. 8—COOLING FIN CHARACTERISTICS OF TYPICAL QK235 MAGNETRON

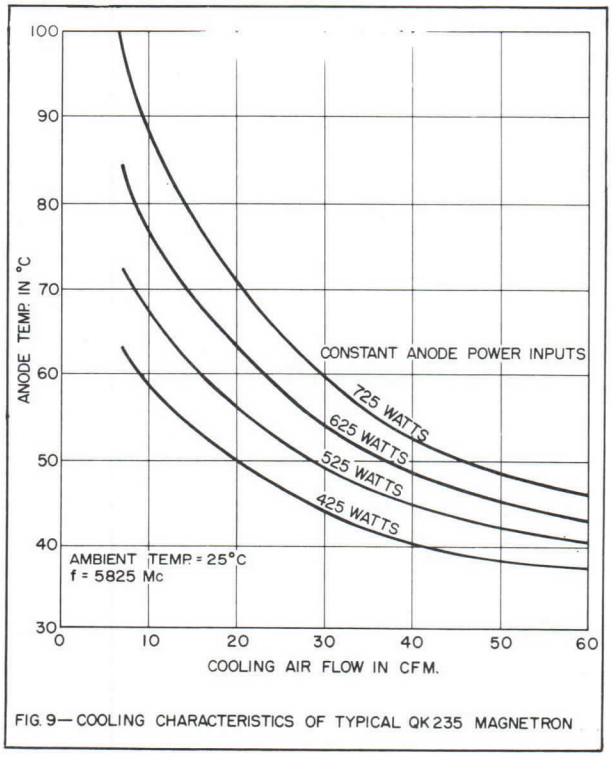

FIG. 9—COOLING CHARACTERISTICS OF TYPICAL QK235 MAGNETRON

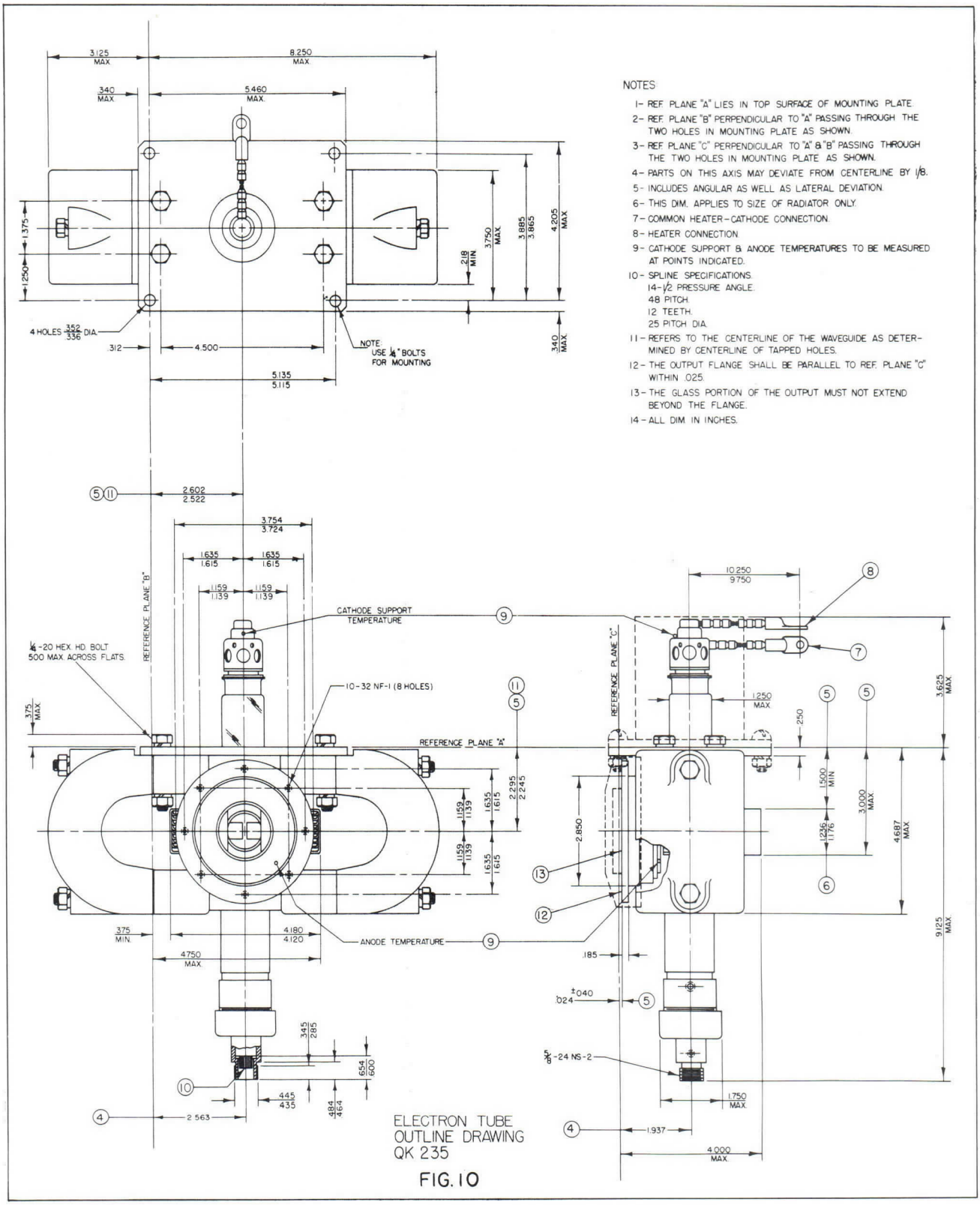

ELECTRON TUBE OUTLINE DRAWING QK 235

FIG. 10

DETAILED MECHANICAL INFORMATION

OUTLINE DRAWING

The detailed mechanical dimensions are given in Figure 10. These dimensions should be used in designing a mechanical layout for an equipment rather than the dimensions of a sample tube.

INSTALLATION & HANDLING PRECAUTIONS

The high voltage bushing and output window are protected by guard covers during shipment. These covers must be removed before the tube is installed in its associated equipment. The bushing or output window must not be subjected to any mechanical strain in the handling or mounting of the magnetron.

Care should be taken to keep magnetic material 12 inches away from the magnets, since deterioration of the magnetic field results in low power and instability.

Unnecessary jarring of the tube must be avoided. Although a packaged magnetron lends the appearance of great structural strength, it is in reality quite fragile and the resulting shock of careless handling may easily exceed its maximum allowable vibration or shock rating.

MOUNTING

The tube is mounted within the equipment by four ¼ inch bolts passed through the four clearance holes of the mounting plate. The tube must be mounted with the longitudinal axis of the cathode high voltage bushing vertical. The tube should be operated in this position although small angular deviations can be tolerated for short intervals as long as the mean position of the above axis remains vertical during the period of operation. If the mean position differs from that described, the heater may become short-circuited.

ELECTRICAL CONNECTIONS

Electrical input connections are made to the frame of the tube and to two flexible leads terminated in lugs with clearance holes for #10-32 screws. Positive high voltage is grounded to the frame, preferably the mounting plate. Both flexible leads project radially from the cathode high voltage bushing. The lead at the extreme end of the bushing is connected to the heater power supply; the other, identified by a brown band, serves as a common lead for the remaining heater connection and the negative high voltage cathode terminal.

COUPLING & PRESSURIZATION

The load is attached to the QK-235 output system through standard 1 x 2 inch waveguide connected to the tube output flange by a UG148B/U choke flange. The eight tapped holes of the choke flange should be drilled to provide clearance for #10-32 screws. The output section of the magnetron should not be used to support either the weight of the tube or that of the load.

The QK-235 magnetron is intended for operation at barometric pressure common to sea level. Electrical breakdown across the cathode high voltage bushing may occur at appreciably lower pressures. Also, if sustained arcing in the waveguide occurs, it will generally move along the guide towards the output window of the tube, and may result in failure of the window. To minimize the possibility of arcing in the guide and to achieve optimum tube performance, the VSWR in the guide should be kept as low as possible; VSWR values greater than 1.5/1 are not recommended.

TUNER CHARACTERISTICS

Approximately 13 turns of the tuner spline, at an applied torque of 1½ inch lbs., are required to tune the QK-235 through its frequency range. Internal mechanical tuner stops designed to withstand a torque of 200 inch ounces allow a slightly wider tuning range than specified, but operation out of the specified band is not recommended.

See Figure 12.

Further information on the operation and capabilities of this and other type magnetrons may be obtained on request from the Applications Engineering Department, Microwave & Power Tube Operations, Raytheon Manufacturing Company, Waltham, Mass.

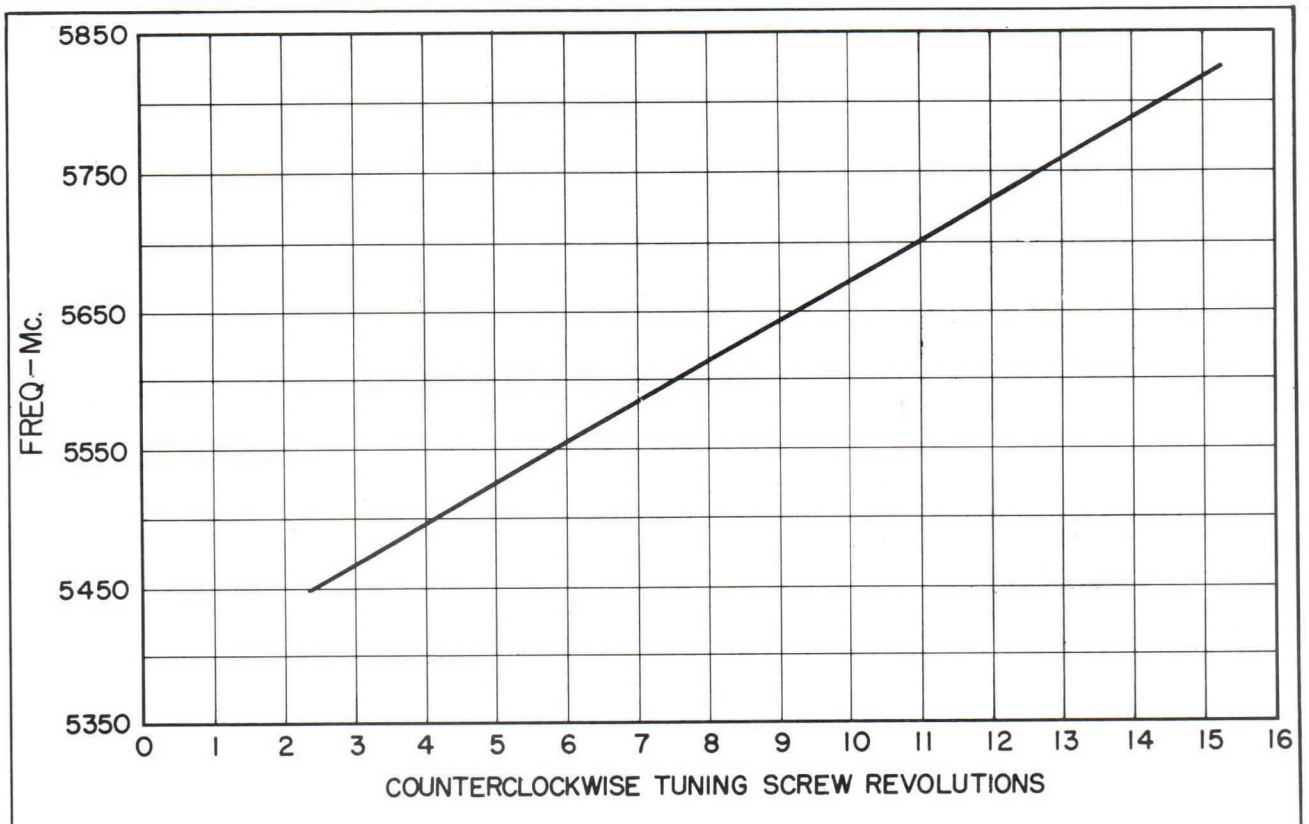

FIG. 11 – TUNING CHARACTERISTICS OF TYPICAL QK 235 MAGNETRON

TYPE RK6406/ QK428

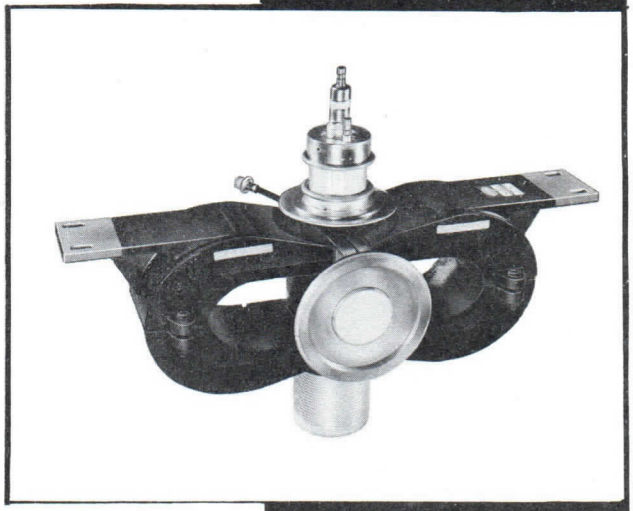

PULSED-TYPE MAGNETRON OSCILLATOR

The RK6406/QK428 magnetron is a fixed frequency pulsed type oscillator operating in the frequency region of 2850 to 2910 megacycles with a nominal peak power output of 2 megawatts. It is an integral magnet, waveguide output type tube requiring forced liquid cooling and is designed for coupling to standard 1.5" x 3" waveguide.

GENERAL PRECAUTIONS

Reliable operation and maximum magnetron life can be achieved only if the over-all radar transmitter is designed with the magnetron characteristics and peculiarities clearly in mind. This technical data should be used as a guide for equipment designers rather than the MIL–E–1B Government purchase specifications.

There are many problems peculiar to magnetrons in general which must be given special consideration in system design. These problems are discussed in detail on the following pages. If for any reason it is desirable to operate the RK6406/QK428 under conditions other than those recommended in this technical data sheet, the Magnetron Applications Engineering Group at Raytheon should be consulted.

GENERAL CHARACTERISTICS

ELECTRICAL

Heater Characteristics

Heater Current Preheat	85 A
Heater Voltage @ 85A	7.3 – 9.3 V
Minimum Preheat Time	3 minutes
Cold Heater Resistance	0.0087 ± 1% ohms

Maximum Ratings

Heater Current	88 A
Peak Anode Voltage	56 kv
Peak Anode Current	95 a
Average Power Input	3200 W
Pulse Duration	.2 usec
Voltage Pulse Rise Time	0.6 usec
Duty Cycle	0.0006
VSWR	1.5/1
Pulling @ VSWR = 1.5/1	10 Mc
Anode Temperature	100° C
Bushing Temperature	150° C
Output Pressurization	55 psia
Coolant Pressure	55 psia

The values specified above must not be exceeded under any service condition. The ratings are limiting values above which the serviceability of any individual tube may be impaired. It does not necessarily follow that combinations of absolute maximum ratings can be attained simultaneously.

Printed in U.S.A.

RAYTHEON

PULSED-TYPE MAGNETRON OSCILLATOR

Typical Operation

Heater Current-Operate	85 A
Pulse Duration	2.0 usec ± 10%
Duty Cycle	0.0006
Peak Anode Voltage	52 kv
Peak Anode Current	85 a
Average Anode Current	51 mAdc
Peak Power Output	2 Mw
Average Power Output	1200 W
Useful Range of Peak Current	75 — 95 a
VSWR	1.1/1
Frequency Region	2850 — 2910 Mc
RF Bandwidth	0.7 Mc (@ -6db level)

MECHANICAL

Over-all Dimensions	21.5" x 7.5" x 16"
Net Weight	40 lbs
Mounting	Cathode Vertical
Output Coupling	1.5" x 3" Choke Flange
Output Pressure	35 psia
Cooling	Forced Liquid
Cathode Bushing	Immersed in Oil
Vibration (nonoperating)	50 cycles @ 10 G
Shock (nonoperating)	15 G
Magnet Protection	12"

DETAILED ELECTRICAL INFORMATION

HEATER

The cathode must be preheated at $I_f = 85A \pm 3.5\%$ for a period of at least 3 minutes prior to the application of anode voltage. Optimum operation and maximum tube life will be realized only if provisions are made to maintain the specified heater current within the ± 3.5% tolerance. Heater current surges in excess of 100 amps cannot be tolerated. Operation of the tube at standby or preheat without forced liquid cooling may result in damage to the tube and is not permissible. See Fig. 1 for heater characteristics.

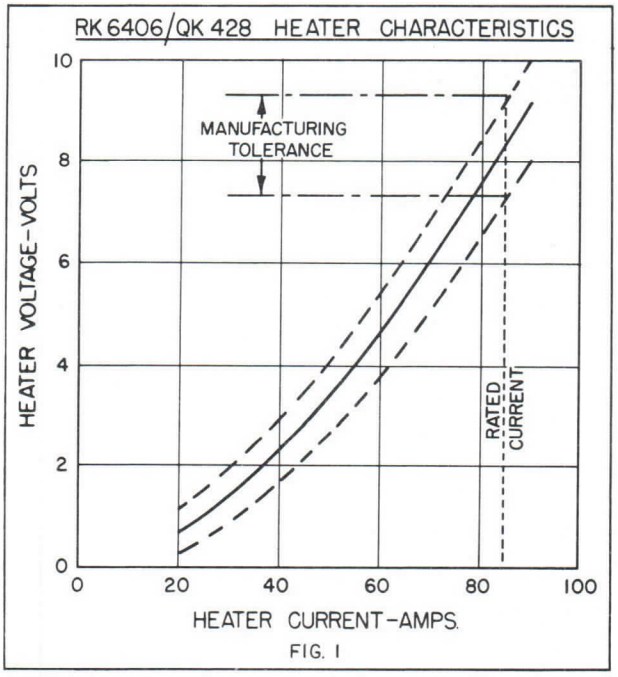

FIG. 1

STARTING NEW MAGNETRON

New magnetrons, or those which have not been operated for some time, may contain small quantities of gas. The presence of this gas may give rise to arcing when initially running the tube up to its rated current. If the arcing is sporadic with arc bursts of less than 5 seconds duration, the tube may be run up to rated current without hesitation. If, however, the arcing is severe — i.e., with arc bursts in excess of 5 seconds duration occurring frequently — it is essential that the following aging or gas clean-up procedure be employed:

1. Raise the average current level to a value just below that which produces sustained arcing. Allow the magnetron current to remain at this level until the arcing begins to decrease.

2. Repeat the above step for succeedingly higher levels of magnetron current until the desired operating point is reached.

NOTE: If difficulty is encountered in achieving stable operation at rated current, it is recommended that the tube be operated 2 or 3 mAdc above the rated current for a period of about 10 minutes. Stable operation will usually be attained in 5 to 15 minutes, although a considerably longer aging time may be required depending on the tube's condition and the skill of the operator.

NOTE: In equipments employing a runback or reverse current circuit, provisions must be made to allow desensitization of the device during the aging process. The runback circuit must be insensitive to arc bursts up to 5 seconds duration during aging, and insensitive to arc bursts of less than 2 seconds duration after aging.

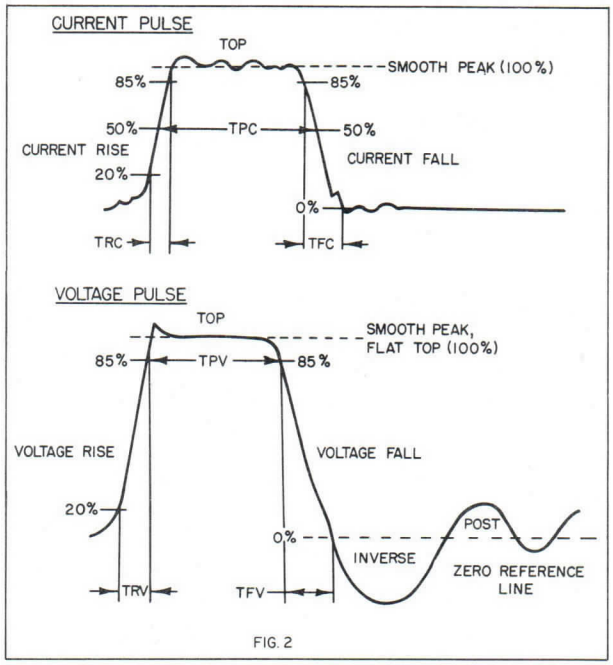

FIG. 2

PULSE LENGTH AND DUTY CYCLE

The RK6406/QK428 magnetron has been designed and tested for operation at the following pulse conditions: See Fig. 2.

tpc = 2.0 ± 10% usec @ DU = .0006
trc = 0.2 usec max. measured 20% to 85%
tfc = 0.5 usec max. measured 0% to 85%
trv = 0.6 usec max. measured 20% to 85%
tfv = 2.5 usec max. measured 0% to 85%

No spike or ripple shall exceed ± 7% of the average peak value of voltage or current. Inverse voltage should not exceed 20% of the forward voltage. Post voltages should be held to a minimum as they may cause post pulse noise or oscillation.

Short pulse operation is currently under investigation and the preliminary results indicate that operation at the following pulse width and duty cycle is feasible:

tpc — 0.6 usec @ Du = 0.0006

If operation at this short pulse condition is anticipated, the manufacturer should be consulted for further information.

Optimum tube performance will be realized only if proper consideration is given to pulse shaping. Voltage rise times greater than maximum specified will result in moding and/or arcing and cannot be tolerated. Excessive ripple on the top of the current pulse causes frequency pushing and broadening of the spectrum. Most magnetrons draw a small amount of leakage or diode current at anode voltages as low as 100 volts. This leakage current may amount to several milliamperes if the voltage fall time is greater than 2.5 usec, and at a given duty cycle the calculated peak current will be in error. It is therefore advisable that the equipment design effect as rapid a decay time as possible. Inverse and post voltages may result in undesirable noise radiation and should be damped. Judicious matching of the pulse-forming network and pulse transformer will in most cases reduce post and inverse voltage amplitudes sufficiently to eliminate noise difficulties. For short-range radar applications where noise due to inverse and post voltages is most troublesome, it is recommended that a diode clipper be placed across the primary of the pulse transformer.

Optimum pulse shaping can best be achieved by treating the magnetron, pulse transformer, and pulse line as a unit; hand-tailoring the line and transformer for magnetron compatibility is recommended.

If operation at both long and short pulses is anticipated, the pulse transformer should be designed to optimize the more important pulse.

LOAD DIAGRAM

Fig. 3 is a load diagram for a typical RK6406/-QK428 magnetron. The contours of constant power output and frequency change are related to voltage standing wave ratios introduced by mismatched loads at various phase positions. Values of VSWR as high as 2.5/1 have been plotted, but operation at ratios greater than 1.5/1 is not recommended. The RK6406/QK428 is capable of operation at a VSWR of 1.5/1 phased opposite the sink with virtually no arcing, and therefore readily lends itself for operation in systems requiring extremely stable performance.

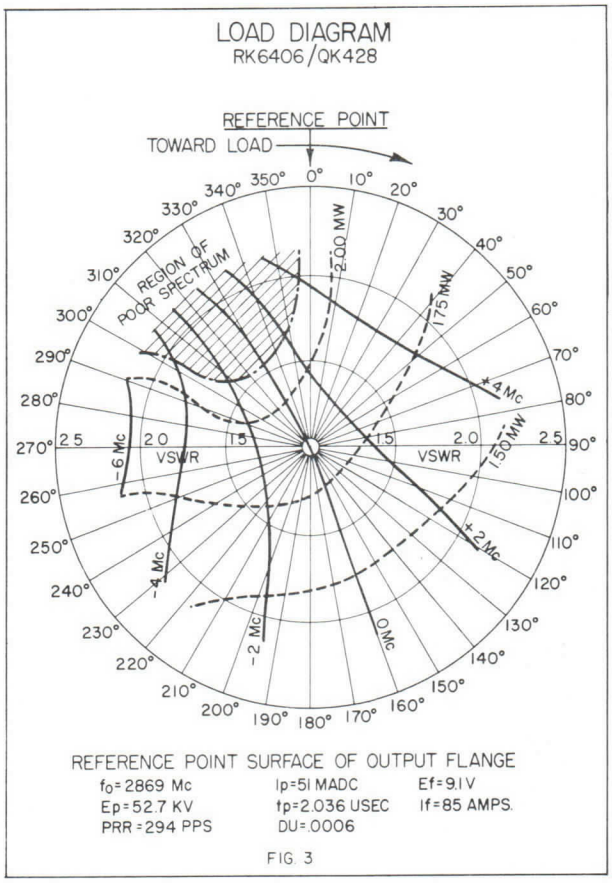

REFERENCE POINT SURFACE OF OUTPUT FLANGE

f_o = 2869 Mc	Ip = 51 MADC	Ef = 9.1 V
Ep = 52.7 KV	tp = 2.036 USEC	If = 85 AMPS.
PRR = 294 PPS	DU = .0006	

FIG. 3

COOLING

The RK6406/QK428 magnetron is a forced liquid cooled tube. The ambient temperature will dictate the type of coolant and flow rate necessary to maintain anode temperature below the specified maximum (100°C). Fig. 4 is a plot of anode temperature rise above ambient as a function of total power input and rate of water flow.

Sufficient cooling of the cathode insulating oil must also be provided to maintain the cathode bushing temperature below the maximum specified 150°C. If an insulating oil is used whose insulating properties deteriorate above normal operating temperatures, it is of course necessary to

maintain the oil temperature at a value below the deterioration level. It is recommended that Esso Univolt 35 or its equivalent be used.

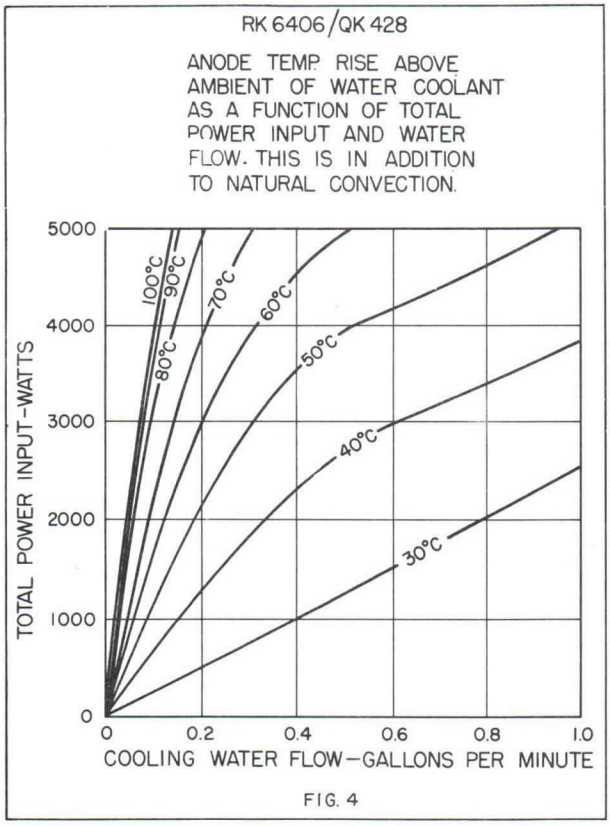

FIG. 4

LOAD AND LINE LENGTH CONSIDERATIONS

If an oscillator is loaded by an electrically long transmission line which is terminated by an impedance different from that of the line, the impedance of the load will be a periodic function of frequency. Operation of the oscillator under these conditions gives rise to phenomena collectively termed "long-line effects". Although these phenomena are usually associated with an electrically long transmission line, they can also be exhibited by a short line terminated by a sufficiently mismatched impedance. In any case the extent to which the long-line effect is exhibited depends on the amount of coupling between the load and oscillator as well as the degree of mismatch in the line. Fig. 5 shows the relation between the VSWR and the line length with respect to the critical condition of skip. This skip condition occurs when the tube is changing frequency (thermal drift) and causes breaks in the ordinarily smooth drift curve. This condition is not critical in the RK6406/QK428 because the tube is not tunable. Of far more serious consequence, however, is the broadening and deterioration of the spectrum caused by this phenomena. It may in some cases permit spectra of two frequencies to appear simultaneously. By operating into loads specified under the region of recommended operation in Fig. 5, satisfactory operation should be obtained. In this region no significant broadening of the spectrum will take place, although for close control of bandwidth the VSWR should be kept as low as possible.

More detailed information on the theories and remedies of long-line effects are available upon request.

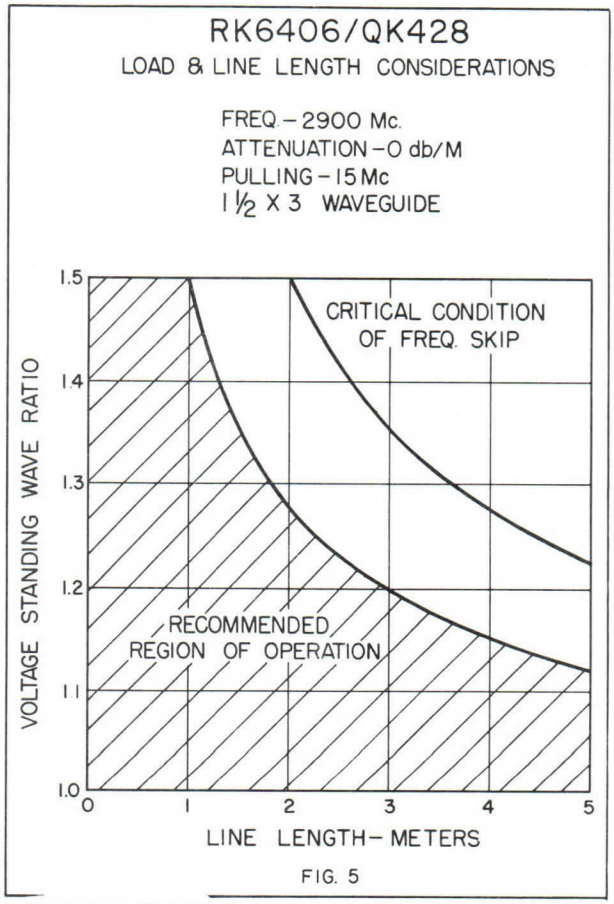

FIG. 5

FREQUENCY DRIFT

After operation of the RK6406/QK428 is initiated, its temperature rises with time until thermal equilibrium is reached. During this transient period the geometry of the tube changes slightly and is attended by a slight frequency change or drift. Frequency drift and anode temperature are plotted as a function of time in Fig. 6.

If the tube temperature is changed after thermal equilibrium has been established, the operating frequency will also change until thermal equilibrium is again attained and tube geometry stabilizes. The frequency change will not exceed 0.15 Mc/C° between 40° and 70°C anode temperature.

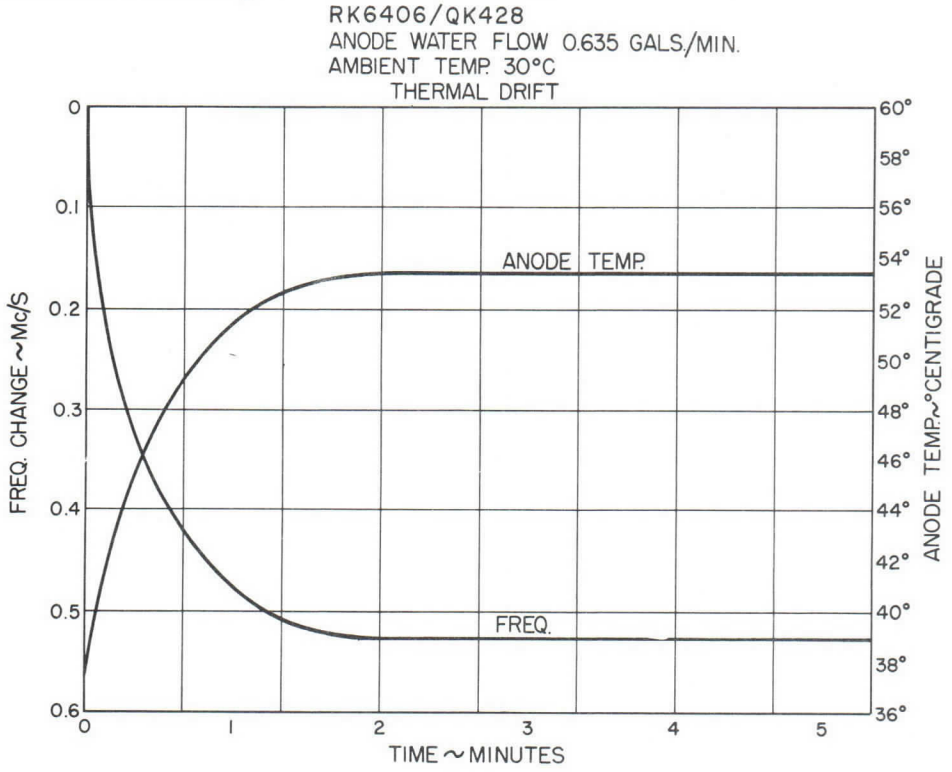

FIG. 6

CATHODE BUSHING PROTECTION

It is recommended that the RK6406/QK428 ceramic cathode bushing be immersed in a fluid insulating medium of "Univolt 35" transformer oil or equivalent. A minimum distance of 1½ inches must be maintained through the oil from high voltage to ground, with design considerations to avoid sharp edged objects in the vicinity of the ceramic cathode bushing.

For cases where it is necessary to mount the RK6406/QK428 magnetron such that the ceramic cathode bushing is situated vertically downward, extreme care should be exercised to remove all entrained air from the magnetron oil flange area. Any air trapped beneath this oil flange can impose a dangerous possibility of high voltage breakdown in oil resulting in ultimate puncture of the ceramic cathode bushing.

RF RADIATION FROM CATHODE

The RK6406/QK428 is designed to minimize radiation from the cathode bushing which will in general be negligible. It is not possible, however, to guarantee it as being negligible, and in particularly critical environments shielding of the cathode bushing may be necessary to avoid radiation difficulties.

OPERATING CHARACTERISTICS

Fig. 7 is a plot of peak power output, anode voltage and efficiency as a function of peak anode current showing the deviation from the average.

FIG. 7

RK6406/QK428 OPERATING CHARACTERISTICS

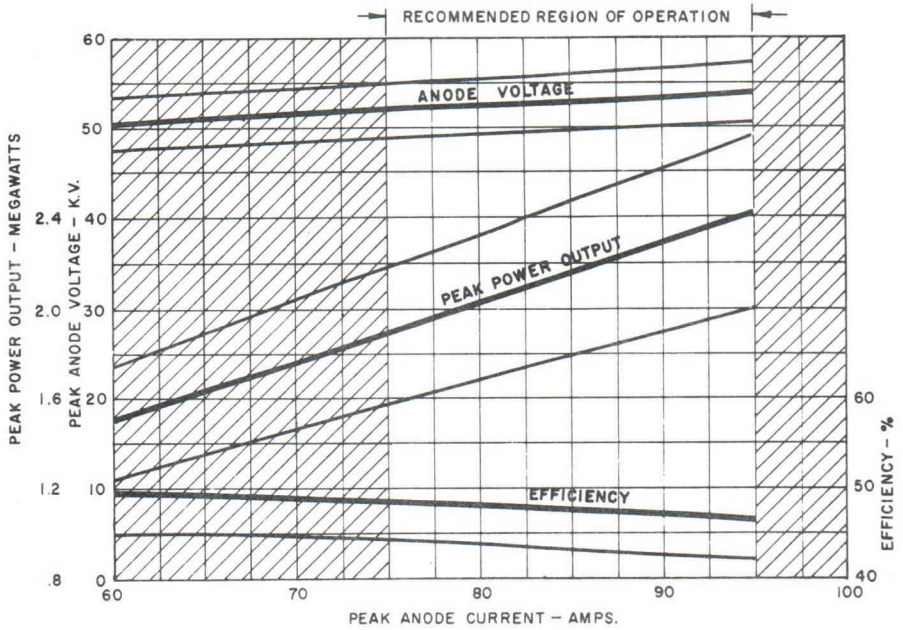

INSTALLATION AND HANDLING PRECAUTIONS

Although magnetrons give the appearance of great structural strength, they are in reality quite fragile and may be easily damaged in handling or installation. Damage to the magnetron will be avoided if the following installation and handling precautions are carefully observed.

1. Leave magnetron in its shipping crate until ready to be used.
2. Remove neoprene guard covers from the RF output window and cathode bushing before installing tube in equipment.
3. Avoid setting up mechanical strains in output window or cathode bushing when handling or mounting.
4. Avoid unnecessary jarring or rough handling.
5. Do not let magnetron rest on any of its parts normally protected by the shipping crate.
6. If magnetron has been operated with water as a coolant, be sure to drain water from the cooling jacket before storing in a freezing environment.
7. If a magnetron has been stored in a freezing environment, examine it closely for traces of frost or moisture on the RF window or cathode bushing and wipe dry before applications of high voltage.
8. Do not place tube in closer proximity to magnetic materials than is indicated on tube magnet.

MOUNTING

The tube is mounted within the equipment by four bolts passed through the clearance holes of the mounting brackets. The tube must be mounted with the longitudinal axis of the cathode high voltage bushing vertical. The tube should be operated in this position although small angular deviations (15 degrees) can be tolerated for short intervals as long as the mean position of the above axis remains vertical during the period of operation. If the mean position differs from that described, the heater may become short-circuited.

ELECTRICAL CONNECTIONS

Electrical connections are made to the frame of the tube and to the two terminals on the high voltage cathode bushing. The positive high voltage should be grounded at the mounting surfaces. Heater and cathode connections are made to the terminals on the cathode bushing (see note 9 of tube outline drawing). Heater connectors

should be designed to minimize contact resistance and lateral forces on the heater terminals. Drawings of suitable heater cathode connecting devices are available on request.

COUPLING AND PRESSURIZATION

The magnetron output flange is designed to couple to standard 1.5" x 3" waveguide. Mechanical details of the recommended choke flange to mate to the magnetron are illustrated in the outline drawing. See Fig. 8.

Waveguide pressurization to 35 psia is required. Pressurization lower than 35 psia may result in waveguide breakdown. If sustained arcing in the waveguide occurs, failure of the output window may result. To minimize the possibility of arcing in the guide and to achieve optimum tube performance, the VSWR of the waveguide system should be kept as low as possible; VSWR values greater than 1.5/1 are not recommended.

NOTES:

1. This dimension applies to a 4.812" minimum.
2. Reference plane "A" lies on the mounting surface of the magnets.
3. Reference plane "B" passes through the center line of the holes in the bracket and is perpendicular to reference planes "A" and "B."
4. Reference plane "C" passes through the center line of the holes in the bracket and is perpendicular to reference planes "A" and "B."
5. Includes angular as well as lateral deviations.
6. Refers to the center of the waveguide.
7. Parts on this center line may vary from the true location by 0.125".
8. Hansen 33-T20 coupling plug.
9. Common cathode connection.
10. All solder joints on the output section should be soldered to provide a hermetic seal.
11. The following should be free from paint: front and back faces of the oil-sealing sleeve, parts above the flange, front and back faces of the output flange, the exhaust cap, the mounting surface on the magnets, and the coolant plug connectors.
12. The cathode stem temperature is measured at this point.
13. Equipment flanges mating to the oil-sealing and output flanges should provide compliance by means of a bellows or other flexible union. These flanges cannot be used to support the tube. The entire weight must be held by the magnet brackets.
14. These surfaces must be coplaner within 0.032".
15. WARNING: Maintain a minimum clearance of 8" between the magnets and ferromagnetic materials, except at bracket ends where the minimum clearance can be 3". Maintain a minimum clearance of 12" to any other magnets.
16. Protective cover for shipping purposes only.
17. Coat with black, heat-resistant, noncorrosive paint.
18. Parts on this center line may vary from the true location by 0.188".
19. The anode temperature is measured at this point.

PULSED-TYPE MAGNETRON OSCILLATOR

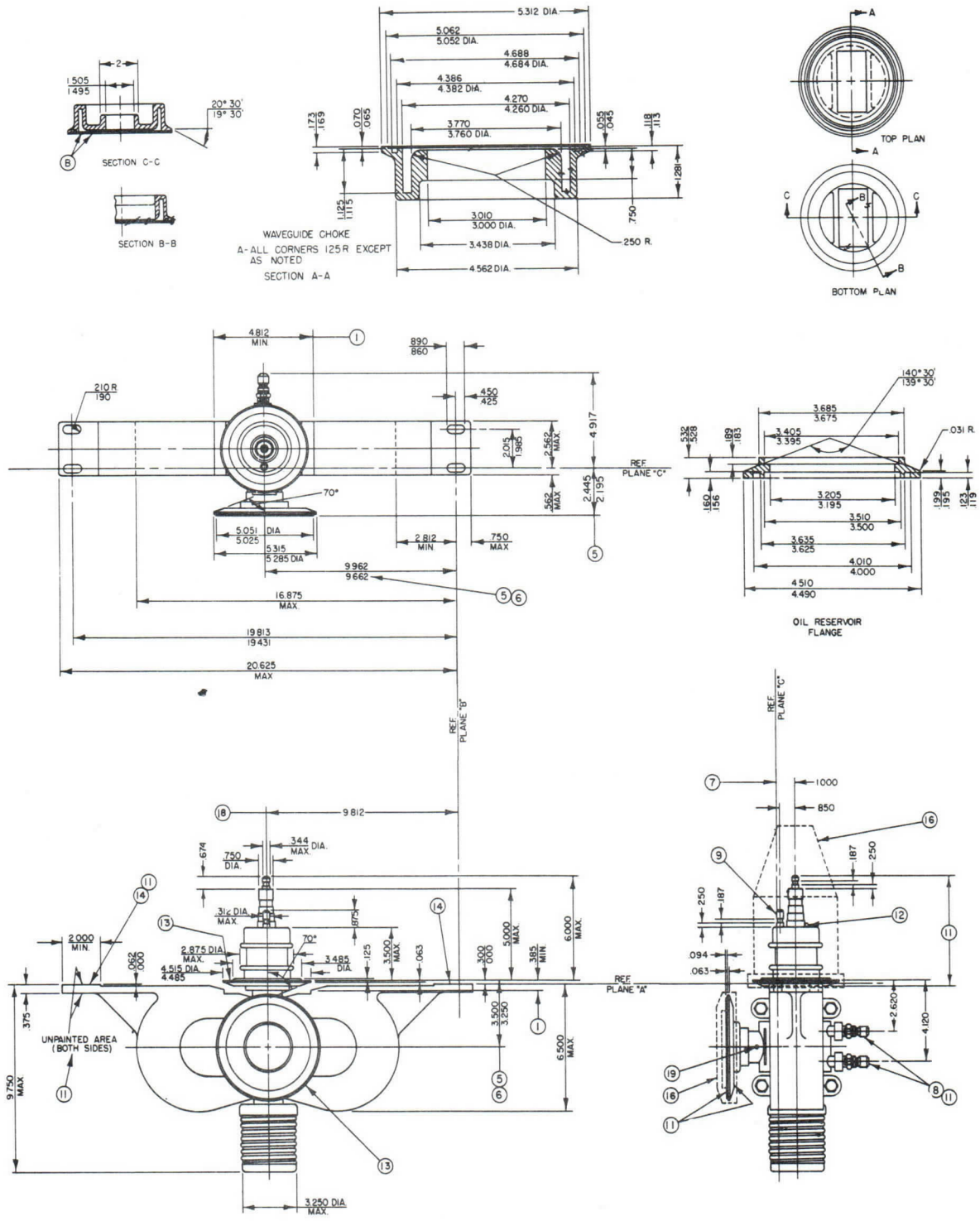

ELECTRON TUBE
OUTLINE DRAWING
RK 6406/QK428

FIG. 8

RAYTHEON

TECHNICAL INFORMATION

MAGNETRON OSCILLATOR

TENTATIVE DATA

Excellence in Electronics

TYPE RK6410/ QK338

The RK6410/QK338 magnetron is a fixed-frequency pulsed-type oscillator operating in the frequency region of 2750 to 2860 megacycles with a nominal peak-power output of 5.0 megawatts. It is an integral-magnet, waveguide-output type tube requiring forced liquid cooling and is designed for coupling to standard 1.5″ x 3″ waveguide.

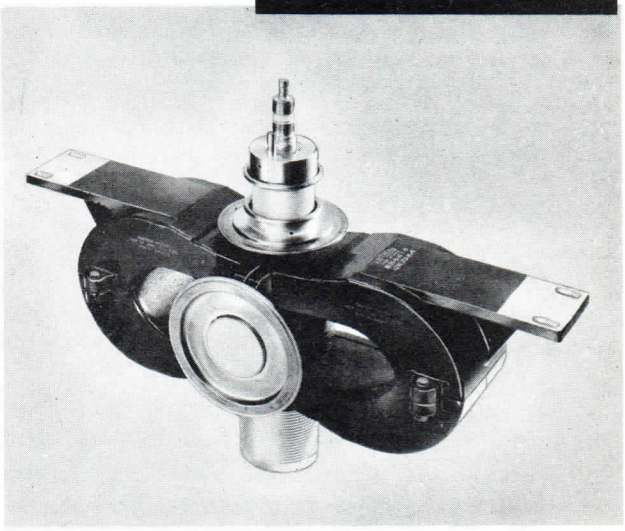

GENERAL PRECAUTIONS

Reliable operation and maximum magnetron life can be achieved only if the over-all radar transmitter is designed with the magnetron characteristics and peculiarities clearly in mind. This technical data should be used as a guide for equipment designers rather than the MIL-E-1B Government purchase specifications.

There are many problems peculiar to magnetrons in general which must be given special consideration in system design. These problems are discussed in detail on the following pages. If for any reason it is desired to operate the RK6410/QK338 under conditions other than those recommended in this technical data sheet, the company's Magnetron Application Engineering Group should be consulted.

GENERAL CHARACTERISTICS

ELECTRICAL

Heater Characteristics

Heater Current Preheat	85 A
Heater Voltage @ 85A	7.3 — 9.3 V
Minimum Preheat Time	3 minutes
Cold Heater Resistance	0.0087 ± 1%, ohms

Maximum Ratings

Heater Current	88 A
Peak Anode Voltage	76 kv
Peak Anode Current	135 a
Average Power Input	7000 W
Pulse Duration	2.2 usec
Voltage Pulse Rise Time	0.5 usec
Duty Cycle	.001
VSWR	1.5/1
Anode Temperature	100°C
Bushing Temperature	150°C
Output Pressurization	55 psia
Coolant Pressure	55 psia

Printed in U.S.A.

MICROWAVE AND POWER TUBE DIVISION

RAYTHEON COMPANY

FOUNDRY AVE., WALTHAM 54, MASS.

PULSED-TYPE MAGNETRON OSCILLATOR

TENTATIVE DATA

The values specified above must not be exceeded under any service condition. The ratings are limiting values above which the serviceability of any individual tube may be impaired. It does not necessarily follow that combinations of absolute maximum ratings can be attained simultaneously.

MECHANICAL

Over-all Dimensions	21.5" x 7.5" x 16"
Net Weight	58 lbs.
Mounting	Cathode Vertical
Output Coupling	1.5" x 3" Choke Flange
Output Pressure	35 psia
Cooling	Forced Liquid
Cathode Bushing	Immersed in Oil
Vibration (nonoperating)	50 cycles @ 10 G
Magnet Protection	12"

Typical Operation

Heater Current Preheat	85A ± 3.5%
Heater Current—Operate	82A ± 3.5%
Pulse Duration	2.0 usec ± 10%
Duty Cycle	.00072
Peak Anode Voltage	71 kv
Peak Anode Current	130 a
Average Anode Current	93.5 mAdc
Peak Power Output	4.8 Mw
Average Power Output	3450 W
Useful Range of Peak Current	90 — 135 a
VSWR	1.1/1
Frequency Region	2750 — 2860 Mc
RF Bandwidth	0.7 Mc @ (—6db level)

DETAILED ELECTRICAL INFORMATION

HEATER

The cathode must be preheated at 85A for a period of at least 3 minutes prior to the application of anode high voltage. Heater current surges in excess of 100 amperes cannot be tolerated. Optimum operation and maximum tube life will be realized only if provisions are made to hold the specified heater current within the ± 3.5% tolerance.

Even though operation at heater currents higher or lower than specified may not be attended by immediate malfunctioning of the tube, some deterioration of life and performance is likely to result.

Excessive cycling or extended standby operation is detrimental to heater life. Therefore, once a heater is energized, it should remain energized insofar as is practicable; i.e., except in cases where repair or maintenance require shutdown or when standby operation is going to exceed 48 hours.

Figure 1 shows the influence of heater current variations on various operating parameters for the operating conditions tabulated on the graph.

Operation at preheat or standby without forced

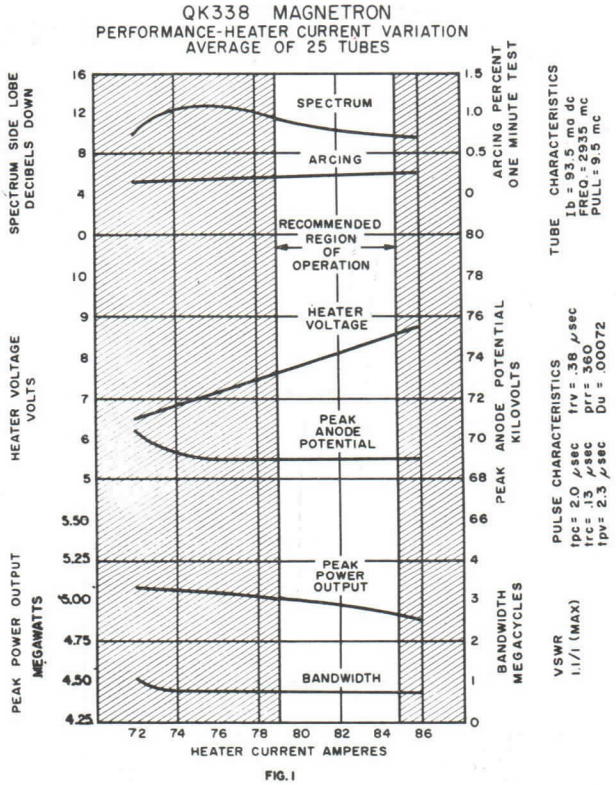

FIG. 1

MICROWAVE AND POWER TUBE DIVISION

RAYTHEON COMPANY

FOUNDRY AVE., WALTHAM 54, MASS.

3496 — 9-55

liquid cooling may damage the tube and cannot be tolerated.

STARTING NEW MAGNETRON

New magnetrons, or those which have not been operated for some time, may conatin small quantities of gas. The presence of this gas may give rise to arcing when initially running the tube up to its rated current. If the arcing is sporadic with arc bursts of less than 1 or 2 seconds duration, the tube may be run up to rated current without hesitation. If, however, the arcing is severe — i.e., with arc bursts of about 5 seconds duration occurring frequently — it is essential that the following aging or gas clean-up procedure be employed:

1. Raise the average current level to a value just below that which produces sustained arcing. Allow the magnetron current to remain at this level until the arcing begins to decrease.

2. Repeat the above step for succeedingly higher levels of magnetron current until the desired operating point is reached.

NOTE: If difficulty is encountered in achieving stable operation at rated current, it is recommended that the tube be operated 2 or 3 mAdc above the rated current for a period of about 10 minutes. Stable operation will usually be attained in 5 to 15 minutes, although a considerably longer aging time may be required depending on the tube's condition and the experience of the operator.

NOTE: In equipments employing a runback or reverse current circuit, provisions must be made to allow desensitization of the device during the aging process. The runback circuit must be insensitive to arc bursts up to 5 seconds duration during aging, and insensitive to arc bursts up to 2 seconds duration after aging.

PULSE LENGTH AND DUTY CYCLE

The RK6410/QK338 magnetron has been designed and tested for operation at the following pulse conditions: See Figure 2.

tpc = 2.0 ± 10% usec @ DU = .00072
trc = 0.25 usec max. measured 20% to 85%
tfc = 0.60 usec max. measured 0% to 85%
trv = 0.50 usec max. measured 20% to 85%
tfv = 2.5 usec max. measured 0% to 85%

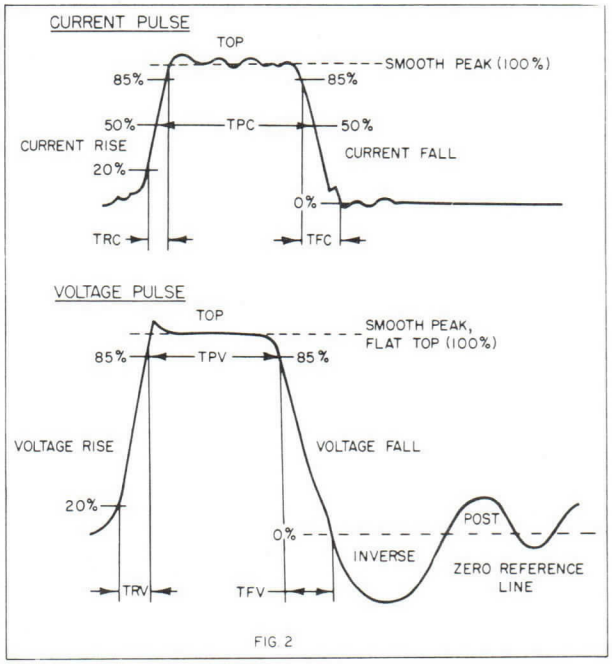

FIG. 2

No spike or ripple should exceed ± 7% of the average peak value of voltage or current. Inverse voltage should not exceed 20% of the forward voltage. Post voltages should be held to a minimum as they may cause post-pulse noise or oscillation and increased leakage current.

If operation at pulse conditions different from those given above is anticipated, the manufacturer should be consulted for further information.

Optimum tube performance will be realized only if proper consideration is given to pulse shaping. Voltage rise times slower than specified will result in moding and/or arcing and cannot be tolerated. Excessive ripple on the top of the current pulse causes frequency pushing and broadening of the spectrum. Most magnetrons draw a small amount of leakage or diode current at anode voltages as low as 100 volts. This leakage current may amount to several milliamperes if the voltage fall time is greater than 2.5 usec, and

at a given duty cycle the calculated peak current will be in error. It is therefore advisable that equipment design effect as rapid a decay as possible to prevent leakage. It is also advisable to prevent the positive voltage backswing from becoming negative again. Inverse and post-pulse voltages may result in undesirable noise radiation and should be damped. Judicious matching of the pulse-forming network and pulse transformer will, in most cases, reduce post and inverse voltage amplitudes sufficiently to eliminate noise difficulties. For short range radar applications where noise due to inverse and post voltages is most troublesome, it is recommended that a diode clipper be placed across the primary of the pulse transformer.

Optimum pulse shaping can best be achieved by treating the magnetron, pulse transformer, and pulse line as a unit; hand-tailoring the line and transformer for magnetron compatibility is recommended.

If operation at both long and short pulses is anticipated, the pulse transformer should be designed to optimize the more important pulse.

COOLING

The RK6410/QK338 magnetron is a forced-liquid cooled tube. The ambient temperature will dictate the type of coolant and flow rate necessary to maintain anode temperature below the specified maximum (100°C). Figure 3 is a plot of anode temperature rise above inlet water coolant temperature as a function of total power input and rate of water flow. Figure 4 is a plot of anode temperature rise above inlet water coolant temperature vs. waterflow for standby conditions.

Sufficient cooling of the cathode insulating oil must also be provided to maintain the cathode bushing temperature below the maximum specified 150°C. If the insulating oil used has insulating properties which deteriorate above the normal operating temperatures, it is of course necessary to maintain the oil temperature at a value below the deterioration level. It is recommended that Esso Univolt 35 or its equivalent be used.

LOAD AND LINE LENGTH CONSIDERATIONS

If an oscillator is loaded by an electrically long transmission line which is terminated by an impedance different from that of the line, the impedance of the load will be a periodic function of frequency. Operation of the oscillator under these conditions gives rise to phenomena collectively

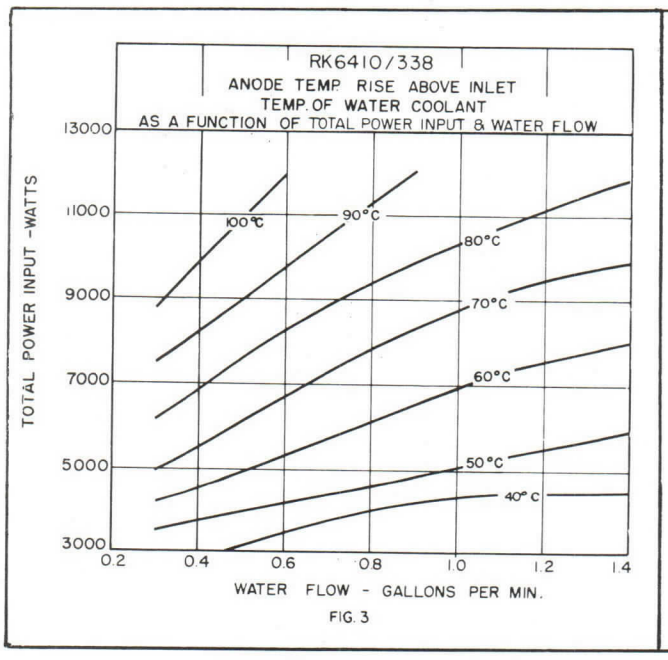

FIG. 3

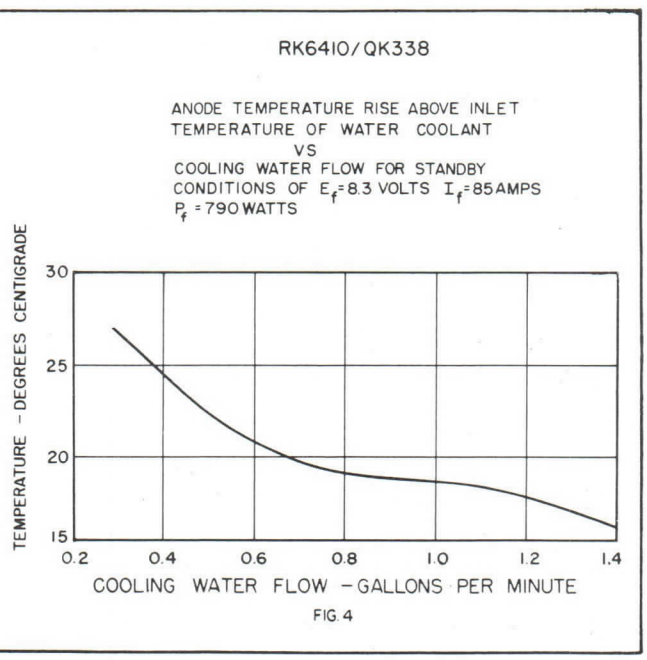

FIG. 4

termed "long-line effects". Although these phenomena are usually associated with an electrically long transmission line, they can also be exhibited by a short line terminated by a sufficiently mismatched impedance. In any case, the extent to which the long-line effect is exhibited depends on the amount of coupling between the load and oscillator as well as the degree of mismatch in the line. Figure 5 shows the relation between the VSWR and the line length with respect to the critical condition of skip. This skip condition occurs when the tube is changing frequency (thermal drift) and causes breaks in the ordinarily smooth drift curve. This condition is not critical in the RK6410/QK338 because the tube is not tunable. Of far more serious consequence, however, is the broadening and deterioration of the spectrum caused by this phenomena. It may in some cases permit spectra of two frequencies to appear simultaneously. By operating into loads specified under the region of recommended operation in Figure 5, satisfactory operation should be obtained. In this region no significant broadening of the spectrum will take place, although for close control of bandwidth the VSWR should be kept as low as possible.

More detailed information on the theories and remedies of long-line effects is available upon request.

FREQUENCY DRIFT

After operation of the RK6410/QK338 is initiated, its temperature rises with time until thermal equilibrium is reached. During this transient period, the geometry of the tube changes slightly and is attended by a slight frequency change or drift. Frequency drift and anode temperature are plotted as a function of time in Figure 6.

If the tube temperature is changed after thermal equilibrium has been established, the operating frequency will also change until thermal equilibirum is again attained and tube geometry stabilizes. It might also be noted at this point, that there is some frequency drift during life due to erosion of internal tube parts.

DYNAMIC PUSHING

Figure 7 displays the dynamic pushing characteristics of the RK6410/QK338 magnetron for anode current excursions of ± 16.8%. Examination of the curve reveals that minimum pushing (Kc/α) occurs at rated plate current.

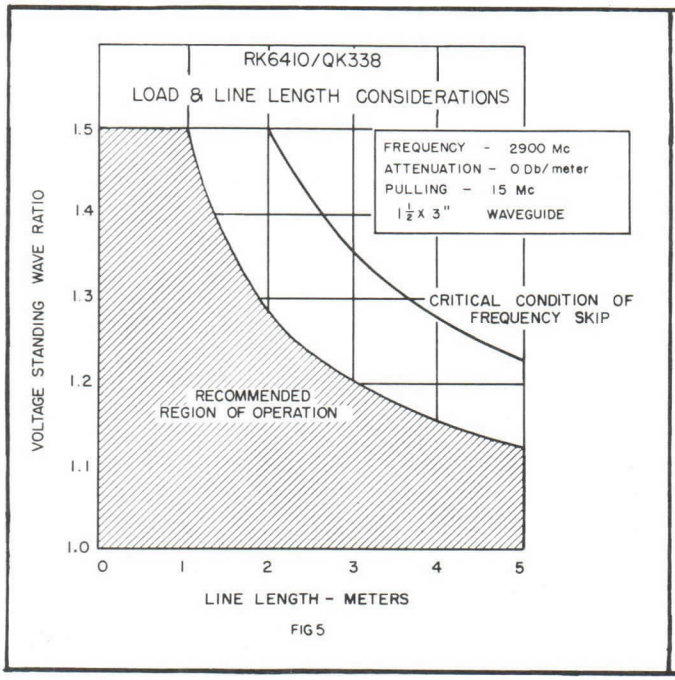

FIG 5

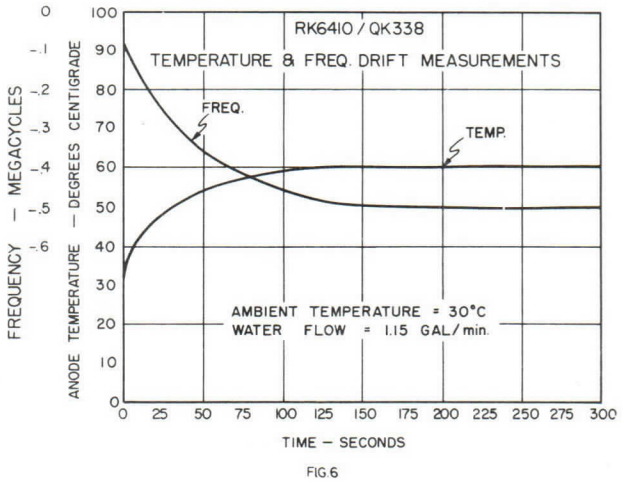

FIG 6

Printed in U.S.A.

MICROWAVE AND POWER TUBE DIVISION

RAYTHEON COMPANY

FOUNDRY AVE., WALTHAM 54, MASS.

3496 — 9-55

TENTATIVE DATA

RF RADIATION FROM CATHODE

The RK6410/QK338 is designed to minimize radiation from the cathode bushing which will in general be negligible. It is not possible, however, to guarantee it as being negligible; in particularly critical environment, shielding of the cathode bushing may be necessary to avoid radiation difficulties.

CATHODE BUSHING PROTECTION

It is recommended that the RK6410/QK338 ceramic cathode bushing be immersed in a fluid insulating medium of "Univolt 35" transformer oil or equivalent. A minimum distance of 1½ inches must be maintained through the oil from high voltage to ground, with design considerations to avoid sharp edged objects in the vicinity of the ceramic cathode bushing.

For cases where it is necessary to mount the RK6410/QK338 magnetron such that the ceramic cathode bushing is situated vertically downward, extreme care should be exercised to remove all entrained air from the magnetron oil flange area. Any air trapped beneath this oil flange can impose a dangerous possibility of high voltage breakdown in oil resulting in ultimate puncture of the ceramic cathode bushing.

OPERATING CHARACTERISTICS

Figure 8 is a plot of peak power output, anode voltage, arc stability, bandwidth and efficiency as a function of peak anode current.

INSTALLATION AND HANDLING PRECAUTIONS

Although magnetrons give the appearance of great structural strength, they are in reality quite fragile and may be easily damaged during handling or installation. Damage to the magnetron will be avoided if the following installation and handling precautions are carefully observed:

1. Leave the magnetron in its shipping crate until it is ready to be used.
2. Remove the neoprene guard covers from the RF output window and cathode bushing just before installing the tube in the equipment.
3. Avoid setting up mechanical strains in the output window or cathode bushing when handling or mounting.
4. Avoid unnecessary jarring or rough handling.
5. Do not let the magnetron rest on any of its parts normally protected by the shipping crate.
6. If the magnetron has been operated with water as a coolant, be sure to drain the water from the cooling jacket before storing the tube in a freezing environment.

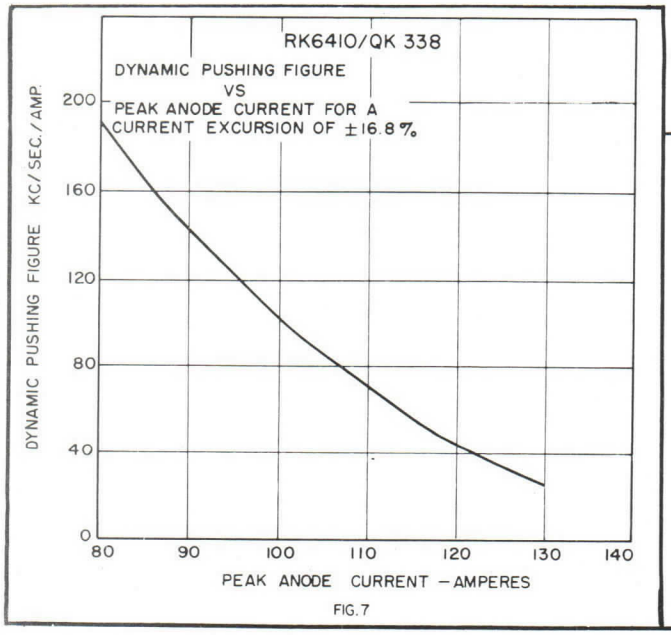

FIG. 7

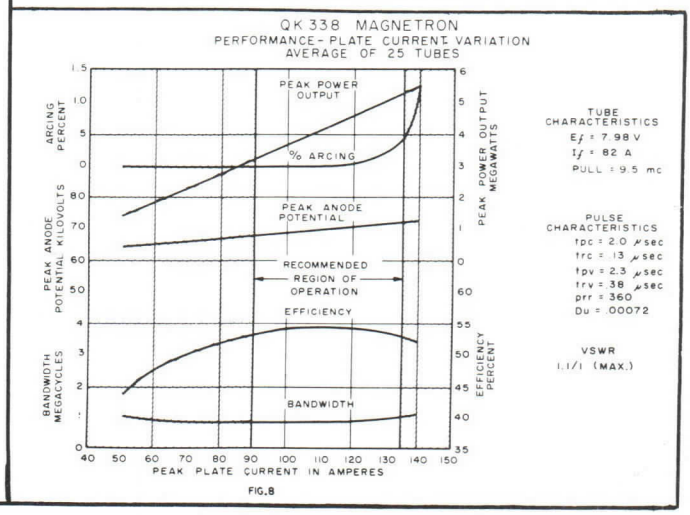

FIG. 8

7. If a magnetron has been stored in a freezing environment, examine it closely for traces of frost or moisture on the RF window or cathode bushing and wipe them dry before application of high voltage.
8. Do not place the tube in closer proximity to magnetic materials than is indicated on the tube magnet.

MOUNTING

The tube is mounted within the equipment by four bolts passed through the clearance holes of the mounting brackets. The tube must be mounted with the longitudinal axis of the cathode high-voltage bushing vertical. The tube should be operated in this position although small angular deviations (15 degrees) can be tolerated for short intervals as long as the mean position of the above axis remains vertical during the period of operation. If the mean position differs from that described, the heater may become short-circuited.

ELECTRICAL CONNECTIONS

Electrical connections are made to the frame of the tube and to the two terminals on the high-voltage cathode bushing. The positive high voltage should be grounded at the mounting surfaces. Heater and cathode connections are made to the terminals on the cathode bushing. Heater connectors should be designed to minimize contact resistance and lateral forces on the heater terminals. Drawings of suitable heater cathode connecting devices are available on request.

RK6410/QK338
ELECTRON TUBE
OUTLINE DRAWING

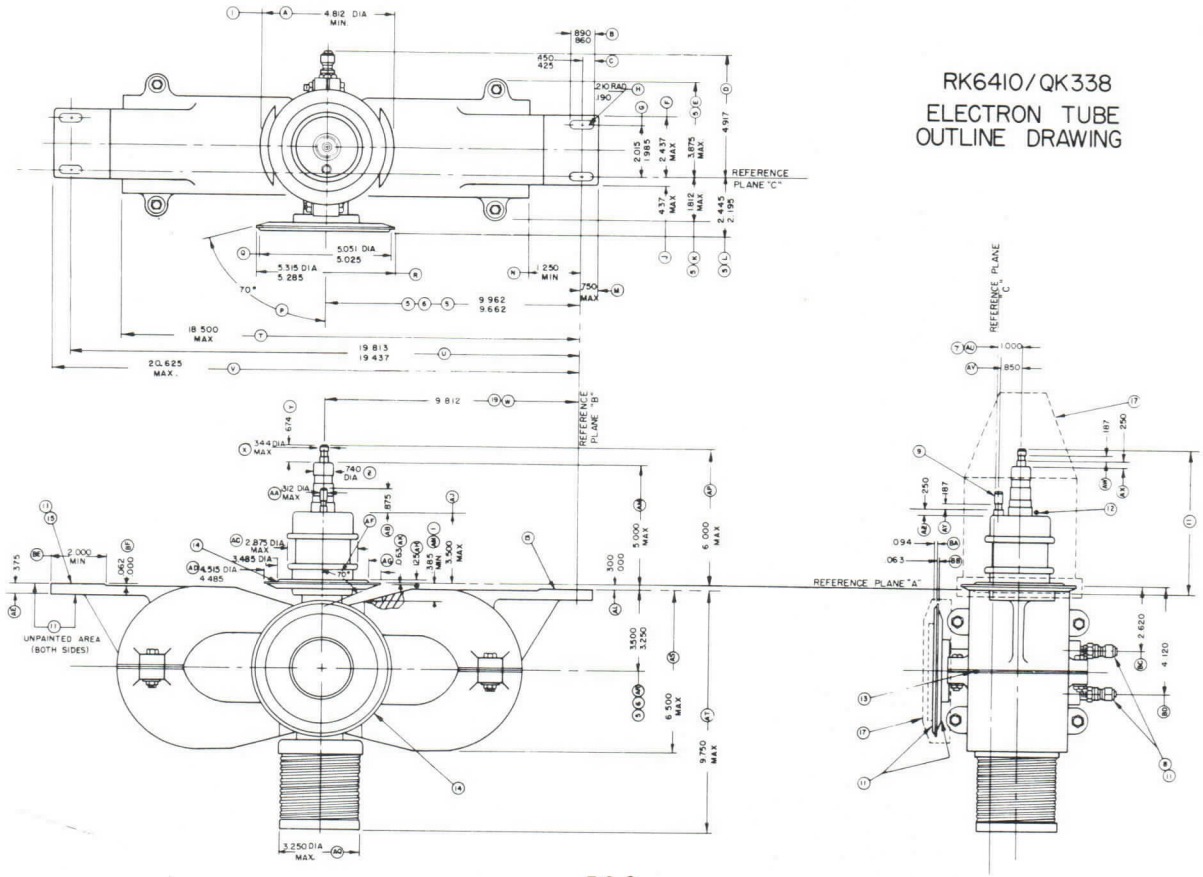

FIG. 9

Printed in U.S.A.

MICROWAVE AND POWER TUBE DIVISION

RAYTHEON COMPANY

FOUNDRY AVE., WALTHAM 54, MASS.

COUPLING AND PRESSURIZATION

The magnetron output flange is designed to couple to standard 1.5" x 3" waveguide. Mechanical details of the recommended choke flange to mate to the magnetron are illustrated in the outline drawing. See Figure 9.

Waveguide pressurization to 35 psia is required. Pressurization lower than 35 psia may result in waveguide breakdown. If sustained arcing in the waveguide occurs, failure of the output window may result. To minimize the possibility of the tube arcing in the guide and to achieve optimum tube performance, the VSWR of the waveguide system should be kept as low as possible; VSWR values greater than 1.5/1 are not recommended.

NOTES —

1 — THIS DIMENSION APPLIES TO 4.812" MIN DIAMETER.
2 — REFERENCE PLANE "A" LIES ON MOUNTING SURFACE OF MAGNETS.
3 — REFERENCE PLANE "B" PASSES THROUGH OF HOLES IN BRACKET AND IS PERPENDICULAR TO REFERENCE PLANE "A".
4 — REFERENCE PLANE "C" PASSES THROUGH OF HOLES IN BRACKET AND IS PERPENDICULAR TO REFERENCE PLANES "A" & "B".
5 — INCLUDES ANGULAR AS WELL AS LATERAL DEVIATIONS.
6 — REFERS TO OF WAVEGUIDE.
7 — PARTS ON THIS MAY VARY FROM TRUE LOCATION BY 0.125".
8 — HANSEN B3-T20 COUPLING PLUG.
9 — COMMON CATHODE CONNECTION.
10 — ALL SOLDER JOINTS ON OUTPUT SECTION SHALL BE SOLDERED TO PROVIDE AN HERMETIC SEAL.
11 — THE FOLLOWING SHALL BE FREE FROM PAINT: FRONT AND BACK FACES OF OIL SEALING SLEEVE, PARTS ABOVE FLANGE, FRONT AND BACK FACES OF OUTPUT FLANGE, EXHAUST CAP, MOUNTING SURFACE ON MAGNETS AND COOLANT PLUG CONNECTORS.
12 — CATHODE STEM TEMPERATURE MEASURED AT THIS POINT.
13 — ANODE TEMPERATURE MEASURED AT RIGHT SIDE (FACING OUTPUT) OF OUTPUT TRANSFORMER BY INSERTING TAPERED THERMOCOUPLE PLUG. (SEE INSTALLATION DETAILS DWG.)
14 — EQUIPMENT FLANGES MATING TO OIL SEALING FLANGE AND TO OUTPUT FLANGE SHOULD PROVIDE COMPLIANCE AS BY MEANS OF A BELLOWS OR OTHER FLEXIBLE UNION. THESE FLANGES MAY NOT BE USED IN SUPPORTING THE TUBE. ENTIRE WEIGHT IS TO BE HELD BY MAGNET BRACKETS.
15 — THESE SURFACES TO BE COPLANER WITHIN 0.032".
16 — WARNING: MAINTAIN 8 INCHES MIN. CLEARANCE BETWEEN MAGNETS AND FERROMAGNETIC MATERIALS EXCEPT AT BRACKET ENDS WHERE MIN. CLEARANCE MAY BE 3 INCHES. MAINTAIN 12 INCHES MIN. CLEARANCE TO OTHER CHARGED MAGNETS.
17 — PROTECTIVE COVER FOR SHIPPING PURPOSES ONLY.
18 — PAINT WITH BLACK HEAT RESISTANT, NON CORROSIVE PAINT.
19 — PARTS ON THIS CENTERLINE MAY VARY FROM TRUE LOCATION BY 0.188".

NOTES —

A — MINIMUM DISTANCE FROM HIGH VOLTAGE TO GROUND SHOULD BE 1.500" THROUGH OIL AND 10.000" THROUGH AIR AT ATMOSPHERIC PRESSURE.
B — PLUGS INTO HANSEN 3-S20 SOCKET.
C — LEADS MUST BE LARGE ENOUGH TO CARRY AT LEAST 100 AMPERES RMS.
D — USE "UNIVOLT 35" TRANSFORMER OIL OR EQUIVALENT FOR FLUID INSULATING MEDIUM.
E — FERROMAGNETIC MATERIALS MUST NOT BE PERMITTED AT ANY TIME CLOSER THAN 8" FROM TUBE MAGNET EXCEPT AT ENDS TO WHICH MOUNTING BRACKETS ARE ATTACHED WHERE CLEARANCE MAY BE 3" MINIMUM. ENERGIZED MAGNETS MUST NOT BE PERMITTED AT ANY TIME CLOSER THAN 12" FROM TUBE MAGNET.

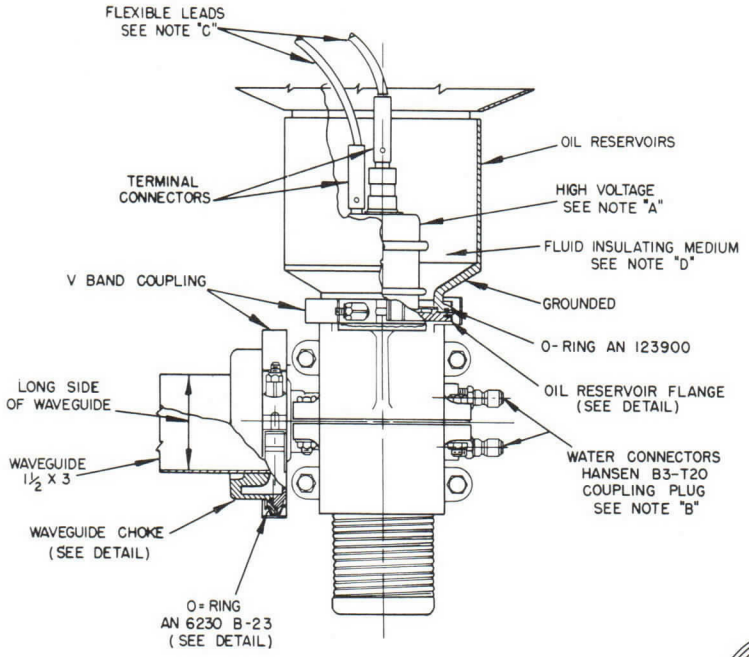

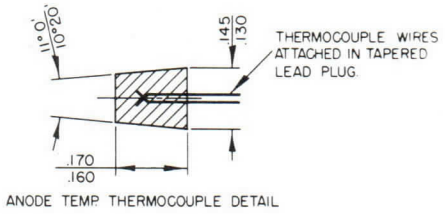

ANODE TEMP. THERMOCOUPLE DETAIL

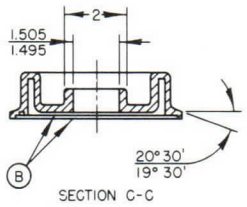

SECTION C-C

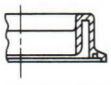

SECTION B-B

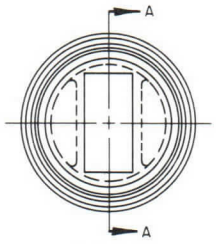

TOP PLAN

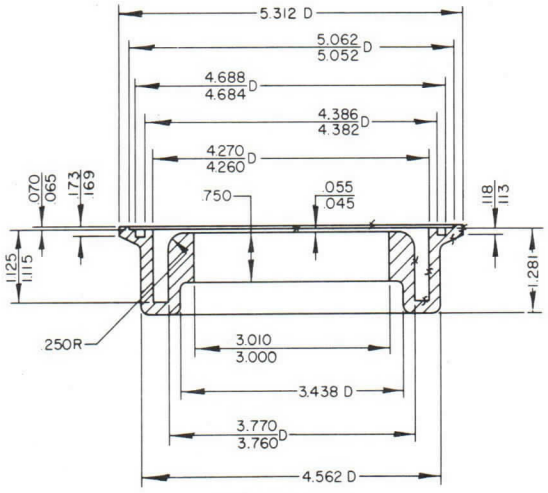

WAVEGUIDE CHOKE

ALL CORNERS .125 R EXCEPT AS NOTED

SECTION A-A

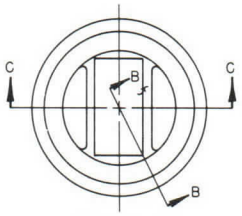

BOTTOM PLAN

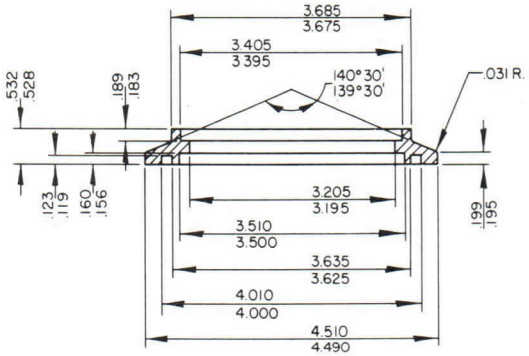

OIL RESERVOIR FLANGE

RK6410 / QK338

INSTALLATION DETAILS

TYPE RK6517/ QK358

The RK 6517/QK 358 magnetron is a mechanically tunable pulsed type oscillator with a nominal peak power output of 1.3 megawatts and capable of rapid hand or motor tuning to any desired frequency in the 1250 to 1350 megacycle region. It is an integral magnet type requiring forced air cooling and is designed for coupling to a standard 3" x 6" waveguide.

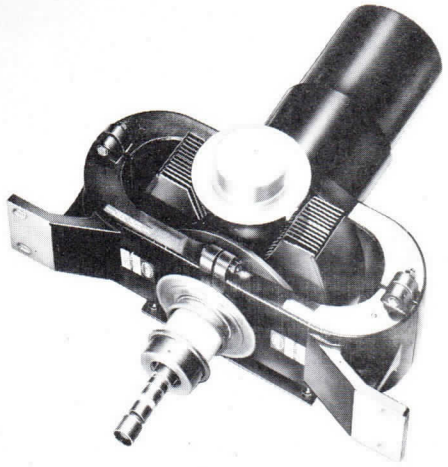

GENERAL PRECAUTIONS

Reliable operation and maximum magnetron life can be achieved only if the over-all radar transmitter is designed with the magnetron characteristics and peculiarities clearly in mind. This technical data should be used as a guide for equipment designers rather than the Government technical specification sheet.

There are many problems peculiar to magnetrons in general which must be given special consideration in system design. These problems are discussed in detail on the following pages. If for any reason it is desired to operate the RK 6517/QK 358 under conditions other than those recommended in this technical data sheet, the manufacturer should be consulted.

GENERAL CHARACTERISTICS

ELECTRICAL

Heater Characteristics

Heater current preheat	75 A
Heater voltage @ 75 A	2.6 — 3.0 V
Minimum preheat time	10 minutes
Cold heater resistance	.00752 ohms (approx.)

Maximum Ratings

Heater current	90 A
Peak anode voltage	70 Kv
Peak anode current	60 a
Average power input	4300 W
Peak power input	3.5 Mw
VSWR	1.5/1
Frequency pulling at VSWR = 1.5/1	5 Mc
Pulse duration	3.3 μsec
Duty Cycle	.0013
Voltage pulse rise time	.8 μsec
Anode temperature	100° C
Bushing temperature	150° C
Output pressurization	45 psia

The values specified above must not be exceeded under any service condition. The ratings are limiting values above which the serviceability on any individual tube may be impaired. It does not necessarily follow that combinations of absolute ratings can be attained simultaneously.

Printed in USA

PULSED-TYPE MAGNETRON OSCILLATOR

Typical Operation

Heater current-preheat	75 A ± 3.5%
Heater current-operate	75 A ± 3.5%
Pulse duration	3.0 μsec
Duty cycle	0.00125
Peak anode voltage	54 kv
Peak anode current	50 a
Average anode current	62.5 mAdc
Peak power output	1.3 Mw
Average power output	1630 W
Useful range of peak current	35 — 55 a
VSWR	1.1/1
Frequency region	1250 — 1350 Mc
RF Bandwidth	0.45 Mc (—6 db level)

MECHANICAL

Overall dimensions	22.2" x 12.1" x 18.4"
Net weight	90 lbs. (approx.)
Mounting	Cathode vertical
Output coupling	Round Flange, 4½" diameter
Output pressure	15 psia (normally)
Cooling	Forced air
Cathode bushing	Immersed in oil
Vibration (non-operating)	25 cps @ 2.5 G
Magnet protection	12"

DETAILED ELECTRICAL INFORMATION

HEATER

The cathode must be preheated at 75 amperes for a period of at least ten minutes prior to the application of pulse high voltage. Heater current surges in excess of 100 amperes cannot be tolerated. Optimum operation and maximum tube life will be realized only if provisions are made to hold the specified heater current within the ± 3.5% tolerance.

Even though operation at heater currents higher or lower than specified may not be attended by immediate malfunctioning of the tube, some deterioration of life and performance is likely to result.

Figure 1 shows the influence of heater current variation on various operating parameters for the operating conditions tabulated on the graph.

Operation at preheat or standby without forced air cooling may damage the tube and cannot be tolerated.

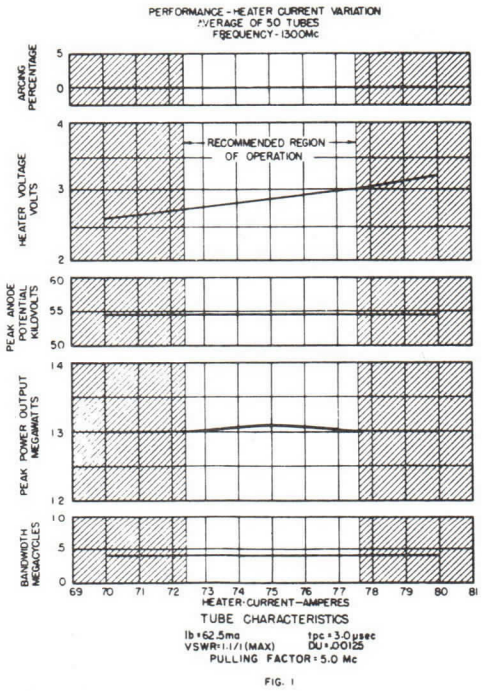

FIG. 1

PULSED-TYPE MAGNETRON OSCILLATOR

STARTING NEW MAGNETRON

New magnetrons, or those which have not been operated for some time, may contain small quantities of gas. The presence of this gas may give rise to arcing when initially running the tube up to its rated current. If the arcing is sporadic with arc bursts of less than 1 or 2 seconds duration, the tube may be run up to rated current without hesitation. If, however, the arcing is severe; i.e., with arc bursts of about 5 seconds duration occurring frequently, it is essential that the following aging or gas clean-up procedure be employed:

1. Raise the average current level to a value just below that which produces sustained arcing. Allow the magnetron current to remain at this level until the arcing begins to decrease.
2. Repeat the above step for succeedingly higher levels of magnetron current until the desired operating point is reached.

NOTE: If difficulty is encountered in achieving stable operation at rated current, it is recommended that the tube be operated 2 or 3 mAdc above the rated current for a period of about 10 minutes. Stable operation will usually be attained in 5 to 15 minutes, although a considerably longer aging time may be required depending on the tube's condition and the skill of the operator.

NOTE: In equipments employing a reverse current and high voltage run down circuit, provisions must be made to allow desensitization of the device during the aging process. The runback circuit must be insensitive to arc bursts up to 5 seconds duration during aging, and insensitive to arc bursts up to 1 second duration after aging.

PULSE LENGTH AND DUTY CYCLE

The RK 6517/QK 358 magnetron has been designed and tested for operation at the following pulse conditions: (See figure 2)

tpc = 3.0 μsec (measured at 50%)

trc = 0.25 μsec (measured 20 to 85%)

tfc = 1.5 μsec (measured 0 to 85%)

trv = 0.70 μsec (measured 20 to 85%)

tfv = 3.0 μsec (measured 0 to 85%)

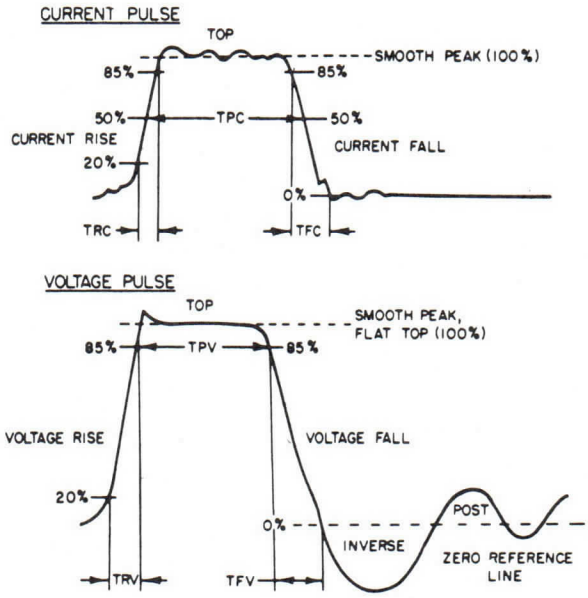

Figure 2

No spike or ripple should exceed ± 5% of the average peak value of voltage or current. Inverse voltage should not exceed 12% of the forward voltage. Post voltages should be held to a minimum as they may cause post-pulse noise or oscillation.

If operation at pulse conditions different from those given above is anticipated, the manufacturer should be consulted for further information.

Optimum tube performance will be realized only if proper consideration is given to pulse shaping. Voltage rise times less than 0.6 μsec will result in moding and/or arcing and cannot be tolerated.

Excessive ripple on the top of the current pulse causes frequency pushing and broadening of the spectrum. Most magnetrons draw a small amount of leakage or diode current at anode voltages as low as 100 volts. This leakage current may amount to several milliamperes if the voltage fall time is greater than specified, and at a given duty cycle the calculated peak current will be in error.

It is therefore advisable that the equipment design effect as rapid a decay time as possible. Inverse and post-pulse voltages may result in undesirable noise radiation and should be damped. Judicious matching of the pulse forming network and the pulse transformer will, in most cases, reduce post and inverse voltage amplitudes sufficiently to eliminate noise difficulties. For short range radar applications where noise due to inverse and post voltages is most troublesome, it is recommended that a diode clipper be placed across the primary of the pulse transformer.

Optimum pulse shaping can best be achieved by treating the magnetron, pulse transformer and pulse line as a unit; hand tailoring the line and transformer for magnetron compatibility is recommended.

If operation at both long and short pulses is anticipated, the pulse transformer should be designed to optimize the more important pulse.

LOAD AND LINE LENGTH CONSIDERATIONS

If an oscillator is loaded by an electrically long transmission line which is terminated by an impedance differing from that of the line, the impedance of the load will be a periodic function of frequency. Operation of the oscillator under these conditions gives rise to phenomena collectively termed "long line effects". Although these phenomena are usually associated with electrically long transmission lines, they can also be exhibited by a short line terminated by a sufficiently mismatched impedance. In any case, the extent to which the long line effect is exhibited depends on the amount of coupling between the load and the oscillator, as well as the degree of mismatch.

Figure 3 shows the relation between the VSWR and the line length with respect to the critical condition at which frequency skipping will occur. The frequency skips will be noticed as the tube is mechanically tuned. It may also prove troublesome as the frequency changes due to thermal drift with breaks appearing in the ordinarily smooth drift curve. Even more serious consequences of "long line effect" may be the broadening deterioration of spectra. In some cases spectra of two frequencies may appear simultaneously. Operation into loads specified in the recommended region of figure 3 should eliminate the above difficulties, although the VSWR of the load should be kept as low as possible if minimum bandwidth is important.

More detailed information on "long line effects" is available upon request.

RK-6517/QK358
LOAD AND LINE LENGTH
CONSIDERATIONS

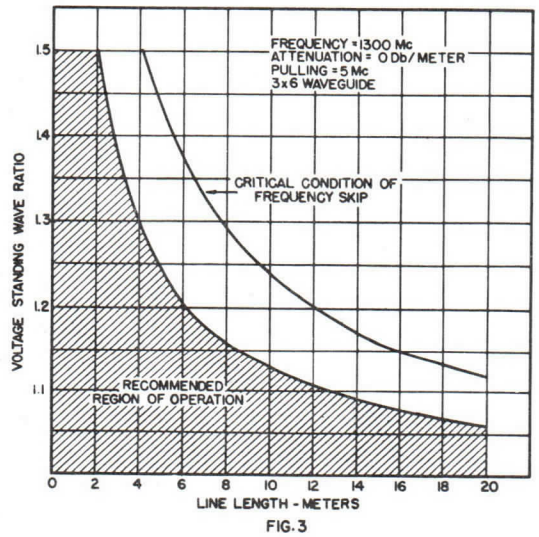

FIG. 3

PULSED-TYPE MAGNETRON OSCILLATOR

LOAD DIAGRAMS

Figures 4, 5, and 6 are load diagrams of a typical RK 6517/QK 358 operating at frequencies of 1250, 1300, and 1350 megacycles. The contours of constant power output and frequency change are related to the voltage standing wave ratios introduced by mismatched loads at various phase positions. Values of VSWRs as high as 3.0/1 are plotted but operation at ratios greater than 1.5/1 is not recommended.

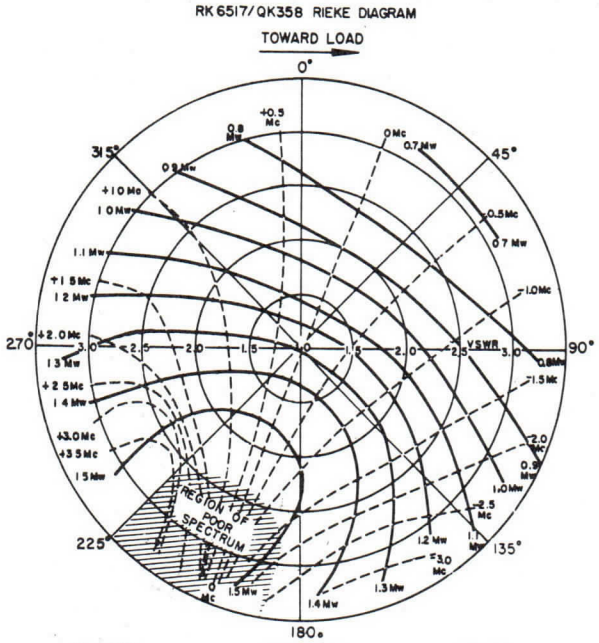

tpc - 3.2
prf - 391
DU - .00125
Ib - 62.5 mAdc
ib - 50a

FREQUENCY
1250Mc

——— POWER
--------- FREQ

FIG. 4

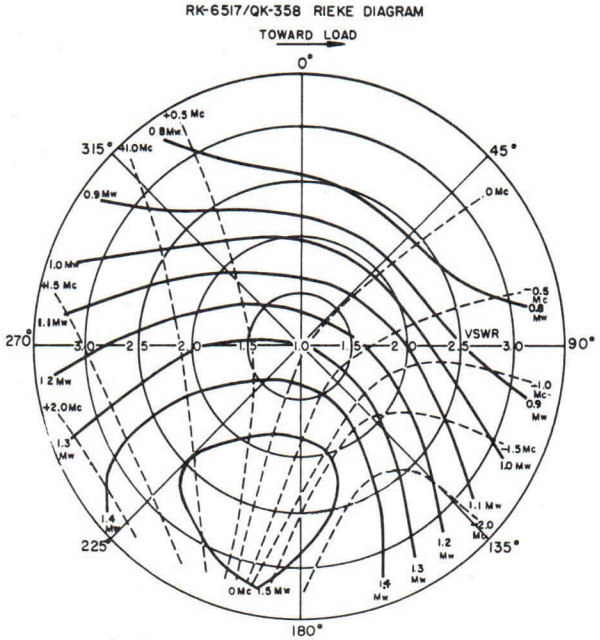

tpc-3.2
Prf-391
DU-.00125
Ib - 62.5 mAdC
ib - 50a

FREQUENCY
1300Mc

FIG. 5

——— POWER
-------- FREQ.

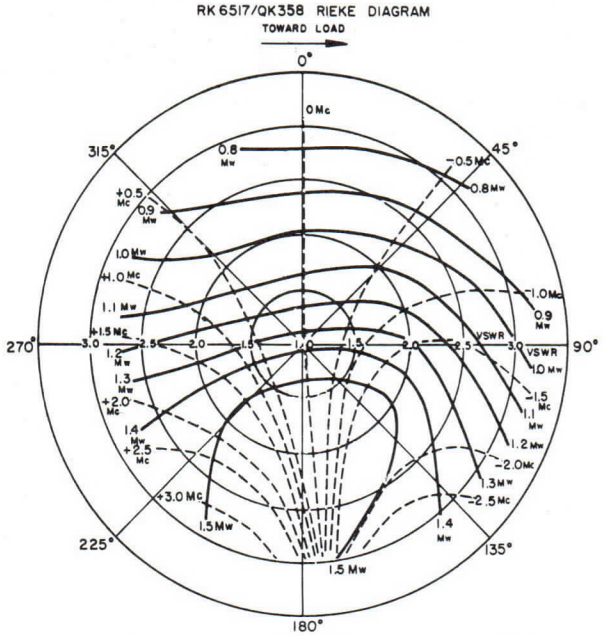

tpc - 3.2
prf - 391
DU - 00125
Ib - 62.5mAdc
ib - 50a

FREQUENCY
1350Mc

FIG. 6

——— POWER
----- FREQ.

FREQUENCY CHARACTERISTICS

The manner in which anode voltage and power output vary with frequency is revealed in Figure 7.

RK 6517/QK358 FREQUENCY CHARACTERISTICS

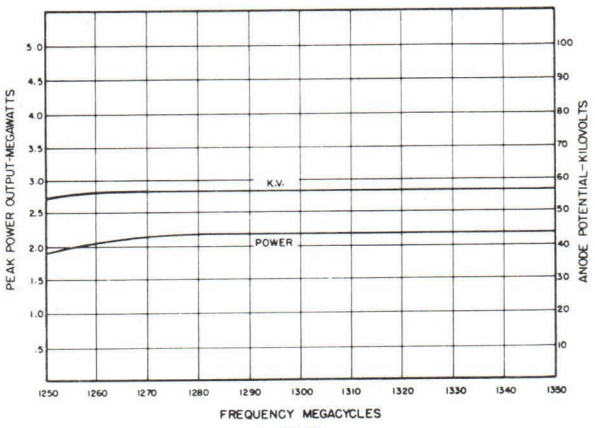

FIG. 7

FREQUENCY DRIFT

After operation of the RK 6517/QK 358 is initiated, its temperature rises with time until thermal equilibrium is reached. During this transient period the geometry of the tube changes slightly and is attended by a slight frequency change or drift. Frequency drift is plotted as a function of time in Figure 8. If the tube temperature is changed after thermal equilibrium has been established, the operating frequency will also change until thermal equilibrium is again attained and tube geometry stabilizes. Because of cavity dimensions and the mass of metal involved in a magnetron at these low frequencies, thermal equilibrium from a cold start will naturally take considerable time.

RK-6517/QK358 FREQUENCY DRIFT CHARACTERISTICS

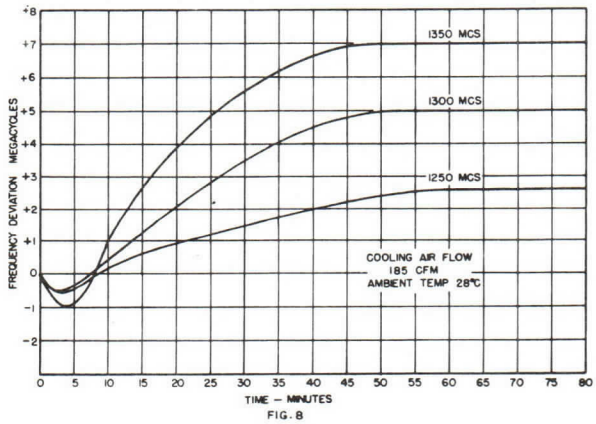

FIG. 8

OPERATING CHARACTERISTICS

Figure 9 is a plot of efficiency, arc stability, bandwidth, anode voltage, and peak power output as a function of peak anode current.

RK-6517/QK358

PERFORMANCE - PLATE CURRENT VARIATION

AVERAGE OF 50 TUBES

FREQUENCY - 1300Mc

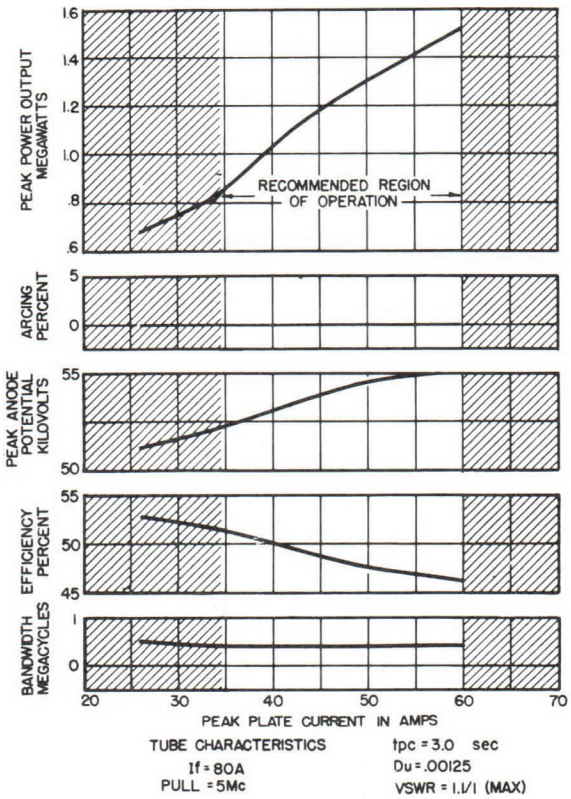

TUBE CHARACTERISTICS

If = 80A

PULL = 5Mc

tpc = 3.0 sec

Du = .00125

VSWR = 1.1/1 (MAX)

FIG. 9

PULSED-TYPE MAGNETRON OSCILLATOR

RF RADIATION FROM CATHODE

The RK 6517/QK 358 magnetron is designed to minimize radiation from the cathode bushing which will in general be negligible. It is not possible, however, to guarantee it as being negligible; in particularly critical environments, shielding of the cathode bushing may be necessary to avoid radiation difficulties.

INSTALLATION & HANDLING PRECAUTIONS

Although magnetrons give the appearance of great structural strength, they are in reality quite fragile and may be easily damaged during handling or installation. Damage to the magnetron will be avoided if the following installation and handling precautions are carefully observed.

1. Leave the magnetron in its shipping crate until it is ready to be used.
2. Remove the neoprene guard covers from the RF output window and cathode bushing just before installing the tube in the equipment.
3. Avoid setting up mechanical strains in the output window or cathode bushing when handling or mounting.
4. Avoid unnecessary jarring or rough handling.
5. Do not let the magnetron rest on any of its parts normally protected by the shipping crate.
6. If the magnetron has been stored in a freezing environment, examine it closely for traces of frost or moisture on the RF window or cathode bushing and wipe them dry before application of high voltage.
7. Do not place the tube in closer proximity to magnetic materials than indicated on the tube magnet.

MOUNTING

The tube is mounted within the equipment by four bolts passed through the clearance holes of the mounting brackets. The tube must be mounted with the longitudinal axis of the high voltage cathode bushing vertical. The tube should be operated in this position although small angular deviations ($\pm$ 15°) can be tolerated for short intervals as long as the mean position of the above axis remains vertical during the period of operation. If the mean position differs from that described, the heater may become short circuited.

ELECTRICAL CONNECTIONS

Electrical connections are made to the frame of the tube and to the two terminals on the high voltage cathode bushing. The positive high voltage should be grounded at the mounting surfaces. Heater and cathode connections are made to the terminals on the cathode bushing. Heater connectors should be designed to minimize contact resistance and lateral forces on the heater terminals. Drawings of suitable heater-cathode connecting devices are available on request.

COUPLING AND PRESSURIZATION

The magnetron output flange is designed to couple to standard 3" x 6" waveguide. Mechanical details of the recommended flange to mate to the magnetron are illustrated in the outline drawing. See figure 12

Waveguide pressurization is not required at altitudes up to 10,000 feet. If sustained arcing in the waveguide occurs, failure of the output window may result. To minimize the possibility of the tube arcing in the guide and to achieve optimum tube performance, the VSWR of the waveguide system should be kept as low as possible; VSWR values greater than 1.5/1 are not recommended.

COOLING

The RK 6517/QK 358 magnetron is a forced air cooled tube. The ambient temperature will dictate the flow rate necessary to maintain anode temperature below the specified maximum (100° C). Figure 10 is a plot of anode temperature rise above ambient as a function of cooling fin air flow and anode power dissipation. It is also a plot of back pressure as a function of rate of air flow. (c.f.m.)

Sufficient cooling of the cathode insulating oil must be provided to maintain the cathode bushing temperature below the maximum specified 150° C. If the insulating oil used has insulating properties which deteriorate above the normal operating temperatures, it is, of course, necessary to maintain the oil temperature at a value below the deterioration level.

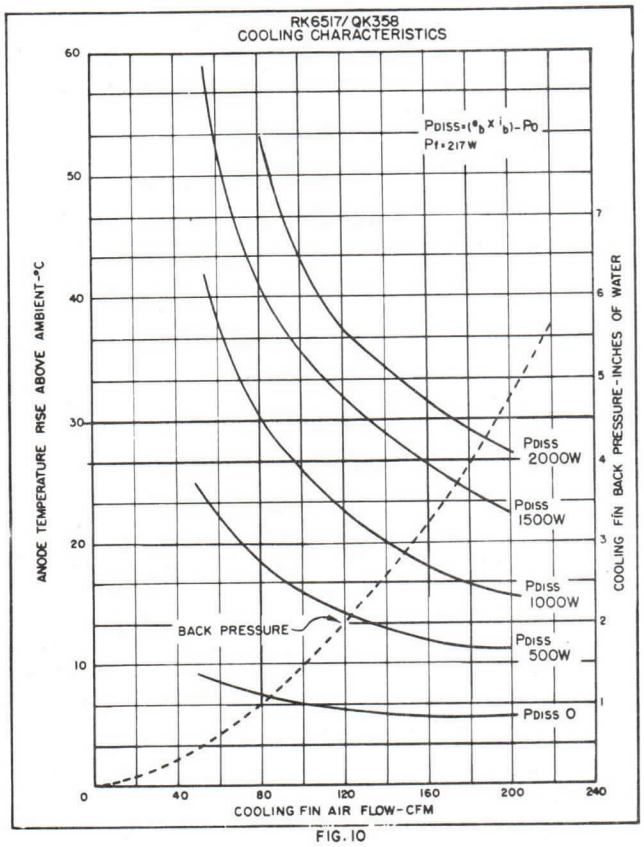

FIG. 10

CATHODE BUSHING PROTECTION

It is recommended that the RK 6517/QK 358 ceramic cathode bushing be immersed in a fluid insulating medium of "Univolt 35" transformer oil or equivalent. A minimum distance of 1½" must be maintained through the oil from high voltage to ground with design considerations to avoid sharp edged objects in the vicinity of the ceramic cathode bushing.

In cases where it is necessary to mount the RK 6517/QK 358 magnetron such that the ceramic cathode bushing is situated vertically downward, extreme care should be exercised to remove all entrained air from the magnetron oil flange area.

Any air trapped beneath this oil flange can impose a dangerous possibility of high voltage breakdown in oil resulting in ultimate puncture of the ceramic cathode bushing.

DYNAMIC PUSHING

Dynamic pushing is the change in frequency with a given change of anode peak current. With a peak current variation between 45 amperes and 55 amperes, RK6517/QK358 pushing has been found to be less than 26 KC/ampere.

TUNER CHARACTERISTICS

Approximately 34 turns of the tuner spline at an applied torque of 70 inch-ounces are required to tune the tube through its frequency range.

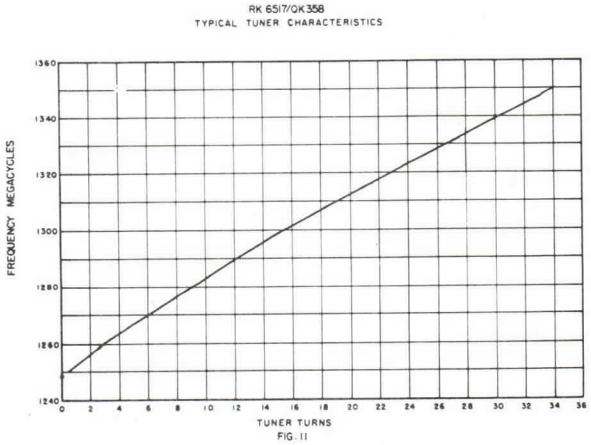

FIG. 11

PULSED-TYPE MAGNETRON OSCILLATOR

OUTLINE DRAWING
ELECTRON TUBE
RK6517 / QK358

NOTES:

1. REFERENCE PLANE "A" LIES ON FINISHED SURFACE OF MOUNTING BRACKETS
2. REFERENCE PLANE "B" IS PERPENDICULAR TO REFERENCE PLANE "A" PASSING THROUGH THE CENTER OF SLOTS IN BRACKETS AS SHOWN
3. REFERENCE PLANE "C" IS PERPENDICULAR TO REFERENCE PLANES "A & B" PASSING THROUGH THE CENTER OF SLOTS IN BRACKETS AS SHOWN
4. INCLUDES ANGULAR AS WELL AS LATERAL DEVIATION
5. PARTS ON THIS CENTERLINE MAY VARY FROM TRUE LOCATION BY .125
6. REFERS TO CENTERLINE OF OUTPUT AS DETERMINED BY THE CENTER OF THE FLANGE.
7. APPLIES TO 5.500 MIN DIA ℄ FOR MARMON CLAMP
8. SPLINE SPECIFICATIONS
   14 1/2° PRESSURE ANGLE
   48 PITCH
   16 TEETH
   .250 PITCH DIA
9. 5/8-24 (MUST ACCEPT GO THREAD PITCH DIA GAGE ONLY) MAJOR DIA NOT TO BE LESS THAN .6145
10. BUSHING TEMPERATURE
11. ANODE TEMPERATURE
12. TUNER TEMPERATURE
13. COMMAN CATHODE CONNECTION
14. HEATER CONNECTION
15. ALL SOLDER JOINTS ON OUTPUT & OIL SEALING FLANGES TO PROVIDE A HERMETIC SEAL
16. THESE SURFACES TO BE COPLANER WITHIN .025
17. A DOUBLE DIAMETER PLUG GAUGE 1.260 O.D. .925 I.D. WITH .0625 X 45° CHAMFER ON THE O.D. SHALL PASS OVER THE CATHODE TERMINAL AND DROP A MINIMUM .125 BELOW THE SURFACE INDICATED.
18. A HOLE ON THE UPPER CORONA SHIELD OF THE CATHODE BUSHING TO BE USED FOR HEATER ADAPTER ORIENTATION SHALL LIE WITHIN 2° OF A PLANE PASSING THROUGH THE CENTER OF THE CATHODE BUSHING AND THE ℄ OF THE OUTPUT

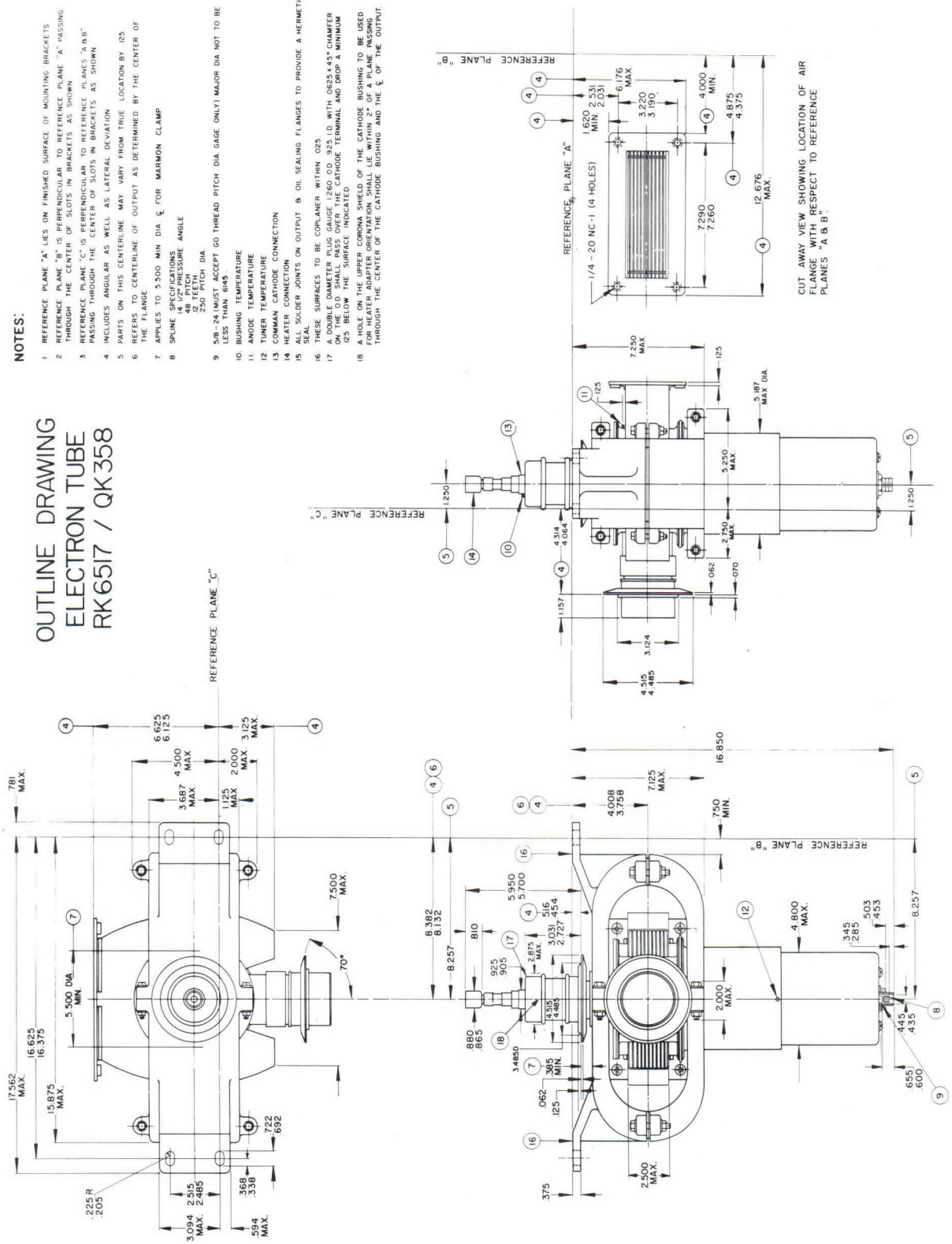

RAYTHEON

PULSED-TYPE MAGNETRON OSCILLATOR

RK6517/QK358
ELECTRON TUBE INSTALLATION DETAILS

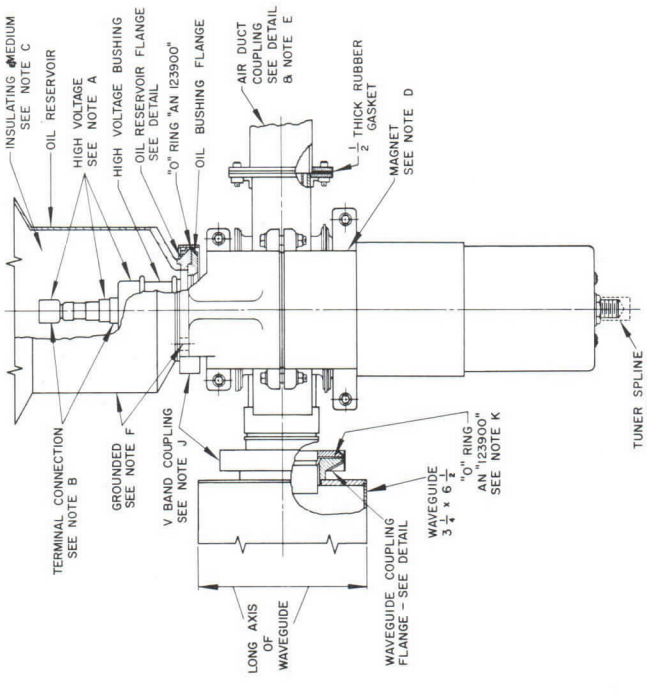

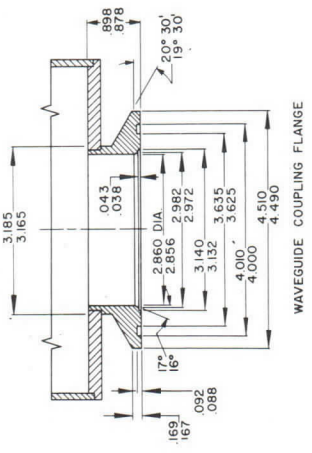

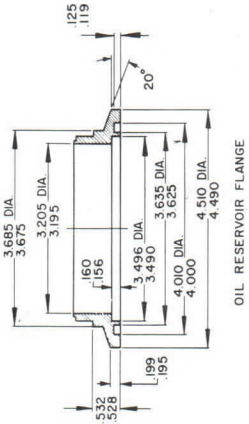

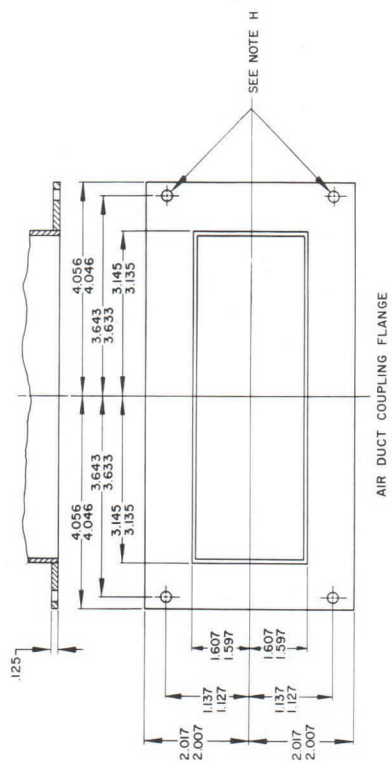

NOTES:

A. MINIMUM DISTANCE FROM HIGH VOLTAGE TO GROUND SHOULD BE 1.500 THROUGH FLUID INSULATING MEDIUM AS SPECIFIED IN NOTES "C" AND 10,000 THROUGH AIR AT ATMOSPHERIC PRESSURE.

B. HEATER TERMINAL CONNECTORS MUST BE LARGE ENOUGH TO CARRY AT LEAST 150 AMPERES RMS.

C. THIS SPACE TO BE FILLED WITH FLUID HAVING INSULATING PROPERTIES AT LEAST EQUIVALENT TO UNIVOLT 35 (ESSO ST'D OIL CO.)

D. MAGNET, FERROMAGNETIC MATERIALS, MUST NOT BE PERMITTED AT ANY TIME CLOSER THAN 8" FROM MAGNET EXCEPT AT THE ENDS WHERE THE CLEARENCE MAY BE 3" ENERGIZED MAGNETS MUST NOT BE PERMITTED AT ANY TIME CLOSER THAN 12" FROM TUBE MAGNET.

E. AIR DUCT COUPLING:
ANODE COOLING INLET FLANGE, DUCT WORK FOR SUPPLYING AIR TO TUBE COOLING SYSTEM MUST BE SUCH AS TO INSURE DELIVERY OF AIR TO ENTIRE CROSS SECTION PROVIDED FOR ADMITTANCE OF COOLANT.

F. ANODE MUST BE THOROUGHLY GROUNDED THROUGH MOUNTING BRACKETS, OUTPUT FLANGE OR HIGH VOLTAGE BUSHING FLANGE.

G. COUNTER CLOCKWISE ROTATION OF TUNER SPLINE INCREASES FREQUENCY.

H. 4 HOLES, CLEARANCE FOR 1/4 SCREW, SIZE OF HOLES AND FREEDOM OF FASTENING SCREWS MUST BE SUCH THAT DISTANCE BETWEEN CENTERLINES OF FASTENING SCREWS CAN DEVIATE ±.020 OUTSIDE LIMITS SHOWN FOR DISTANCE BETWEEN CENTERLINES OF HOLES.

I. INSTALLATION WITH CATHODE TERMINALS AS SHOWN HERE IS FOR TEST PURPOSES ONLY. TUBE MOUNTING IS DESIGNED FOR INSTALLATION IN EQUIPMENT WITH CATHODE TERMINALS DOWN. USE OF BELLOWS IS RECOMMENDED TO ACCOMODATE DIMENSIONAL VARIATIONS BETWEEN PLANE OF MOUNTING BRACKETS AND PLANE OF OIL RESERVOIR FLANGE. PROVISIONS MUST BE MADE FOR DISSIPATING HEAT INTRODUCED IN OIL THROUGH CATHODE TERMINALS.

J. V BAND COUPLING MARMON PRODUCT CO. INC. PART # 4369-462 WITH ST. ST. BOLT & NUT OR EQUIVELENT.

K. "O" RING AN 123900 AVAILABLE FROM PARKER APPLIANCE CO. PART # AMS 7274.

Excellence in Electronics

TYPE RK6518/ QK254

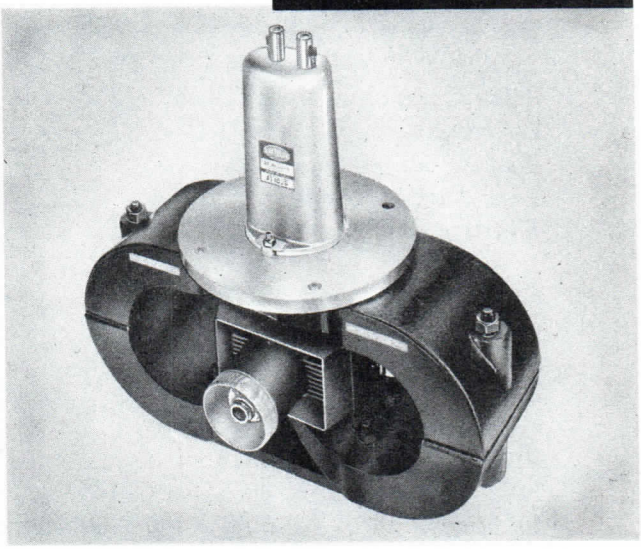

The RK6518/QK254 is a fixed frequency pulsed-type oscillator operating in the frequency region of 2860 to 2900 megacycles with a nominal peak power output of 2 megawatts. It is an integral magnet coaxial output type tube requiring forced air cooling and designed for coupling to standard 1⅝", 50 ohm, coaxial line.

GENERAL PRECAUTIONS

Reliable operation and maximum magnetron life can be achieved only if the over-all radar transmitter is designed with the magnetron characteristics and peculiarities clearly in mind. This technical data should be used as a guide for equipment designers rather than the MIL-E-1B Government purchase specifications.

There are many problems peculiar to magnetrons in general which must be given special consideration in system design. These problems are discussed in detail on the following pages. If for any reason it is desired to operate the RK6518/QK254 under conditions other than those recommended in this technical data sheet, the company's Magnetron Application Engineering Group should be consulted.

GENERAL CHARACTERISTICS

ELECTRICAL

Heater

Heater Voltage Preheat	13.0 V ±4.5%
Heater Current @ 13 V	36 — 44 A
Minimum Preheat Time	3 minutes

Maximum Ratings

Heater Voltage	13.6 V
Peak Anode Voltage	48 kv
Peak Anode Current	92 a
Average Power Input	3000 W
Pulse Duration	2.2 μsec
Voltage Pulse Rise Time	0.3 μsec
Duty Cycle	.0007
VSWR	1.5/1
Pulling @ VSWR = 1.5/1	16 Mc
Anode Temperature	100° C
Input Bushing Pressure	45 psia
Output Pressurization	45 psia

The values specified above must not be exceeded under any service condition. The ratings are limiting value above which the serviceability of any individual tube may be impaired. It does not necessarily follow that combinations of absolute maximum ratings can be attained simultaneously.

Printed in U.S.A.

MICROWAVE AND POWER TUBE DIVISION
RAYTHEON COMPANY
FOUNDRY AVE., WALTHAM 54, MASS.

Typical Operation

Heater Voltage Operate	13.0 V ±4.5%
Pulse Duration	2.0 μsec ±10%
Duty Cycle	0.0006
Peak Anode Voltage	41 kv
Peak Anode Current	87.5 a
Average Anode Current	52.5 mAdc
Peak Power Output	2.1 Mw
Average Power Output	1260 W
Useful Range of Peak Current	65 — 92 a
VSWR	1.1/1
Frequency Region	2860 — 2900 Mc
RF Bandwidth	0.7 Mc (@ —6db level)

MECHANICAL

Over-all Dimensions	16.4" x 8.5" x 16.3"
Net Weight	82 lbs.
Mounting	Cathode Vertical
Output Coupling	1⅝" coax
Output Pressure	35 psia
Cooling	Forced Air
Cathode Bushing	Pressurized
Vibration (nonoperating)	50 cycles @ 10 G
Shock (nonoperating)	15 G
Magnet Protection	12"

DETAILED ELECTRICAL INFORMATION

HEATER

The cathode must be preheated at Ef = 13.0 V ±4.5% for a period of at least 3 minutes prior to the application of anode voltage. Optimum operation and maximum tube life will be realized only if provisions are made to maintain the specified heater voltage within the ±4.5% tolerance. Heater current surges in excess of 200 amps cannot be tolerated. Operation of the tube at standby or preheat without forced air cooling may result in damage to the tube and is not permissible. See Fig. 1 for heater characteristics.

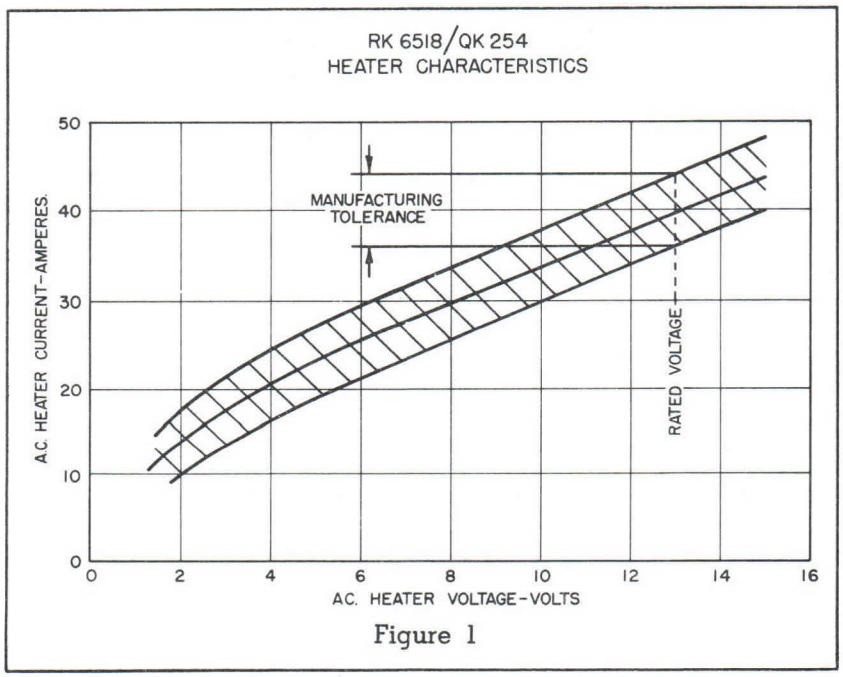

Figure 1

STARTING NEW MAGNETRON

In starting a new magnetron or one that has not been operated for some time, sparking and some instability may occur. Sporadic arcing will not harm the magnetron, but if the tube tends to arc continuously, the following seasoning procedure is recommended:

1. Preheat magnetron for 15 minutes.
2. Gradually raise the magnetron current to a level just below that which produces continuous arcing. Allow the magnetron current to remain at this level for a few minutes until the arcing begins to decrease.
3. Repeat the above process for succeedingly higher levels of magnetron current until the desired operating point is reached.

It is usually possible to attain the desired operating point within 15 minutes.

NOTE:—Once a tube has been aged in at the specified operating level, it is recommended that the tube be operated throughout its life as close to this level as is feasible. Operation at plate currents lower than the aged in level results in the cathode conditioning itself to this new lower level, and attempts to resume operation at the specified level may be attended by excessive arcing and require the aging process to be repeated.

PULSE LENGTH AND DUTY CYCLE

The RK6518/QK254 magnetron has been designed and tested for operation at the following pulse conditions: See Fig. 2.

tpc = 2.0 ±10% μsec @ DU = .0006

trc = 0.25 μsec max. measured 20% to 85%

tfc = 0.60 μsec max. measured 0% to 85%

trv = 0.15 — 0.30 μsec max. measured 20% to 85%

tfv = 2.5 μsec max. measured 0% to 85%

No spike or ripple shall exceed ±5% of the average peak value of voltage or current. Inverse voltage should not exceed 10% of the forward voltage. Post voltages should be held to a minimum as they may cause post pulse noise or oscillation.

Optimum tube performance will be realized only if proper consideration is given to pulse shaping. Voltage rise times greater than maximum specified will result in moding and/or arcing and cannot be tolerated. Excessive ripple on the top of the current pulse causes frequency pushing and broadening of the spectrum. Most magnetrons draw a small amount of leakage or diode current at anode voltages as low as 100 volts. This leakage current may amount to several milliamperes if the voltage fall time is greater than 2.5 μsec, and at a given duty cycle the calculated peak current will be in error. It is therefore advisable that the equipment design effect as rapid a decay time as possible. Inverse and post voltages may result in undesirable noise radiation and should be damped. Judicious matching of the pulse-forming network and pulse transformer will in most cases reduce post and inverse voltage amplitudes sufficiently to eliminate noise difficulties. For short-range radar applications where noise due to inverse and post voltages is most troublesome, it is recommended that a diode clipper be placed across the primary of the pulse transformer.

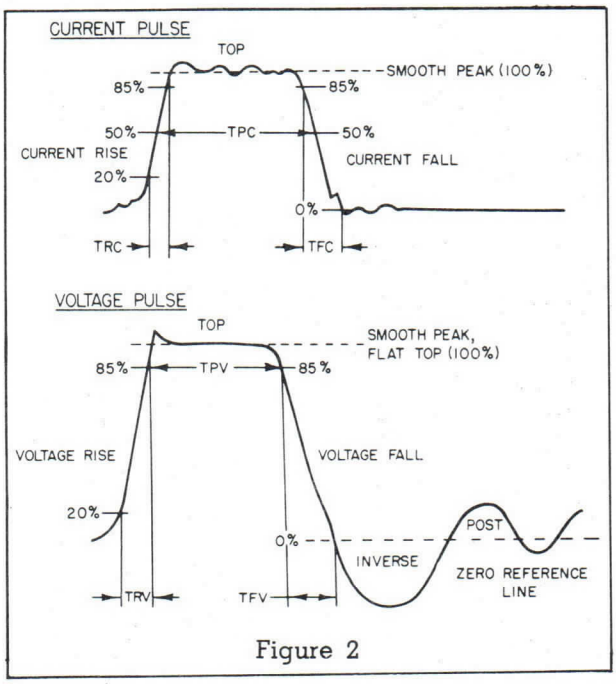

Figure 2

Optimum pulse shaping can best be achieved by treating the magnetron, pulse transformer, and pulse line as a unit; hand-tailoring the line and transformer for magnetron compatibility is recommended.

If operation at both long and short pulses is anticipated, the pulse transformer should be designed to optimize the more important pulse. For operation at pulse conditions different than above, the manufacturer should be consulted.

LOAD DIAGRAM

Fig. 3 is a load diagram for a typical RK6518/QK254 magnetron. The contours of constant power output and frequency change are related to voltage standing wave ratios introduced by mismatched loads at various phase positions. Values of VSWR as high as 2.2/1 have been plotted, but operation at ratios greater than 1.5/1 is not recommended.

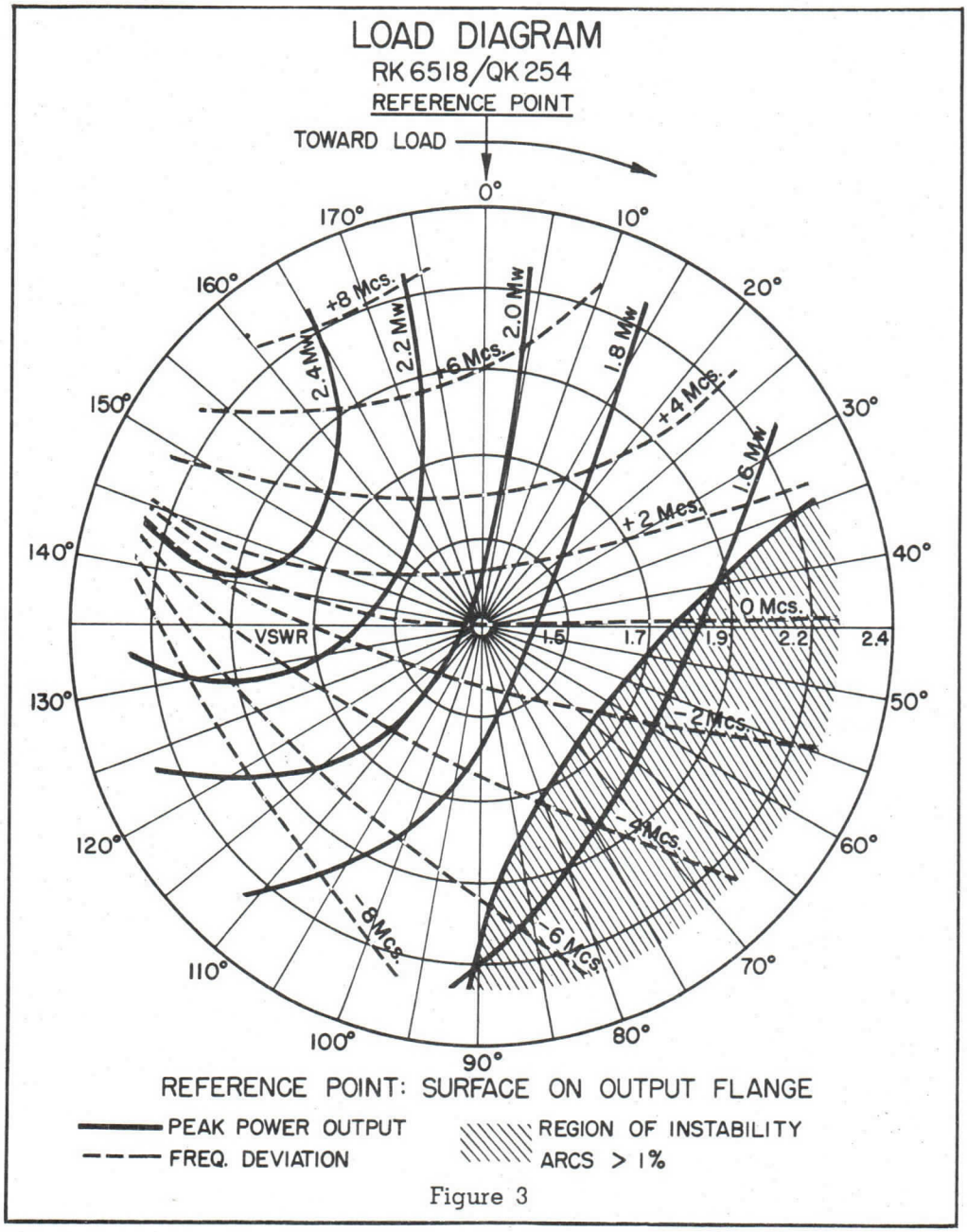

Figure 3

MICROWAVE AND POWER TUBE DIVISION

RAYTHEON COMPANY

FOUNDRY AVE., WALTHAM 54, MASS.

3394 — 9-56

COOLING

The RK6518/QK254 magnetron is a forced air cooled tube. The ambient temperature will dictate the flow rate necessary to maintain anode temperature below the specified maximum (100°C). Fig. 4 is a plot of anode temperature rise above ambient as a function of total power input and rate of air flow. Fig. 5 is a plot of back pressure as a function of rate of air flow (Cfm).

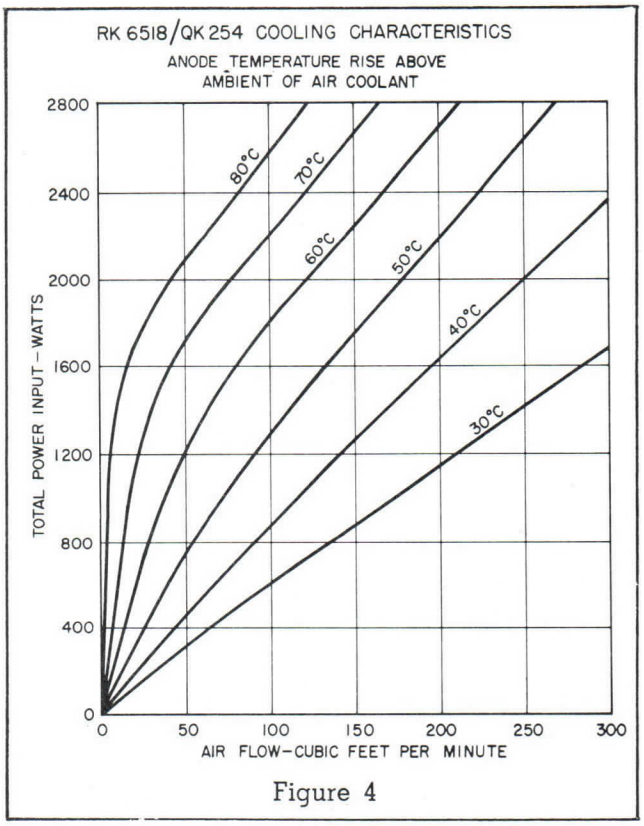

Figure 4

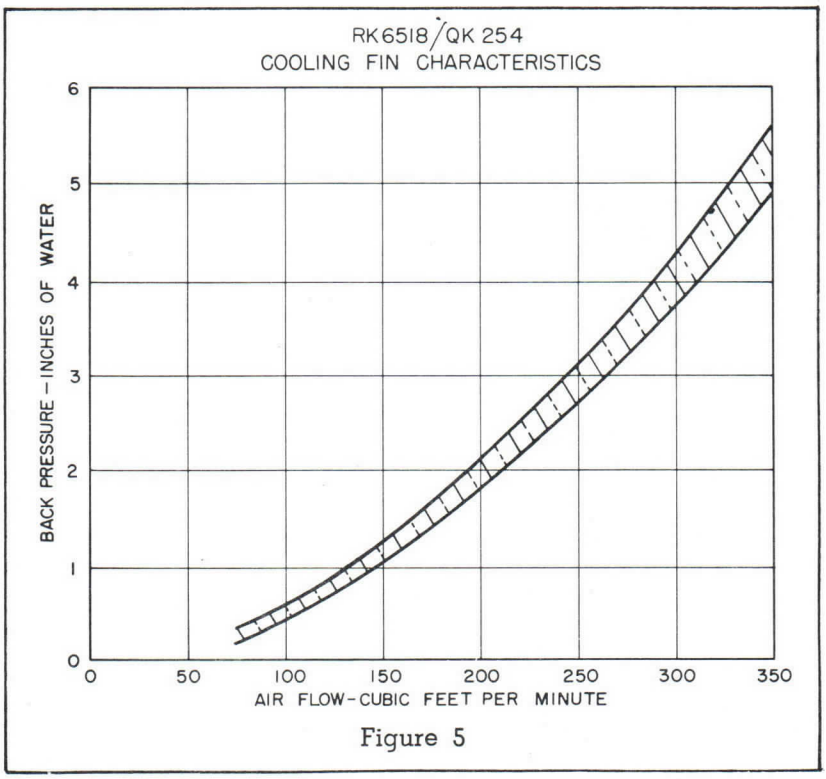

Figure 5

Printed in U.S.A.

LOAD AND LINE LENGTH CONSIDERATIONS

If an oscillator is loaded by an electrically long transmission line which is terminated by an impedance different from that of the line, the impedance of the load will be a periodic function of frequency. Operation of the oscillator under these conditions gives rise to phenomena collectively termed "long-line effects". Although these phenomena are usually associated with an electrically long transmission line, they can also be exhibited by a short line terminated by a sufficiently mismatched impedance. In any case the extent to which the long-line effect is exhibited depends on the amount of coupling between the load and oscillator as well as the degree of mismatch in the line. Fig. 6 shows the relation between the VSWR and the line length with respect to the critical condition of skip. This skip condition occurs when the tube is changing frequency (thermal drift) and causes breaks in the ordinarily smooth drift curve. This condition is not critical in the RK6518/QK254 because the tube is not tunable. Of far more serious consequence, however, is the broadening and deterioration of the spectrum caused by this phenomena. It may in some cases permit spectra of two frequencies to appear simultaneously. By operating into loads specified under the region of recommended operation in Fig. 6, satisfactory operation should be obtained. In this region no significant broadening of the spectrum will take place, although for close control of bandwidth the VSWR should be kept as low as possible.

More detailed information on the theories and remedies of long-line effects are available upon request.

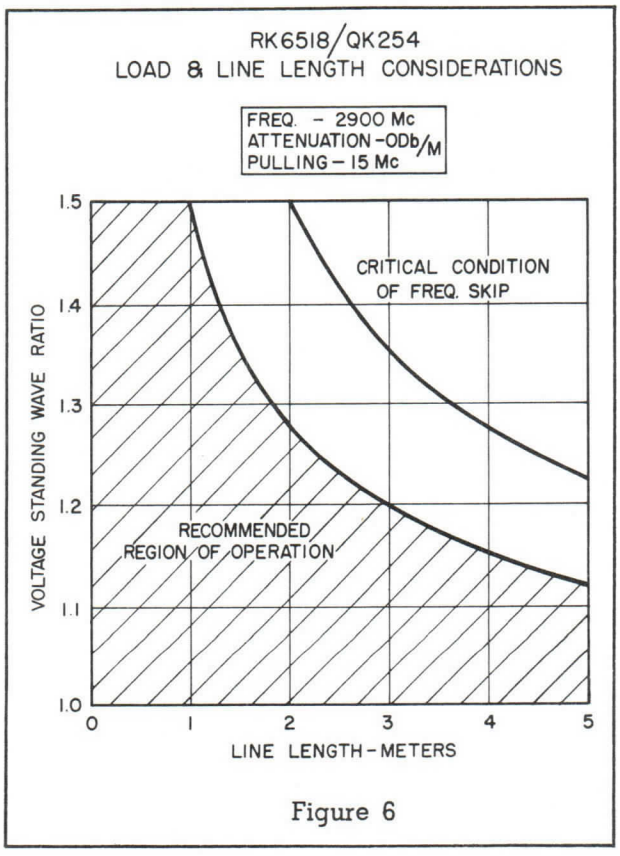

Figure 6

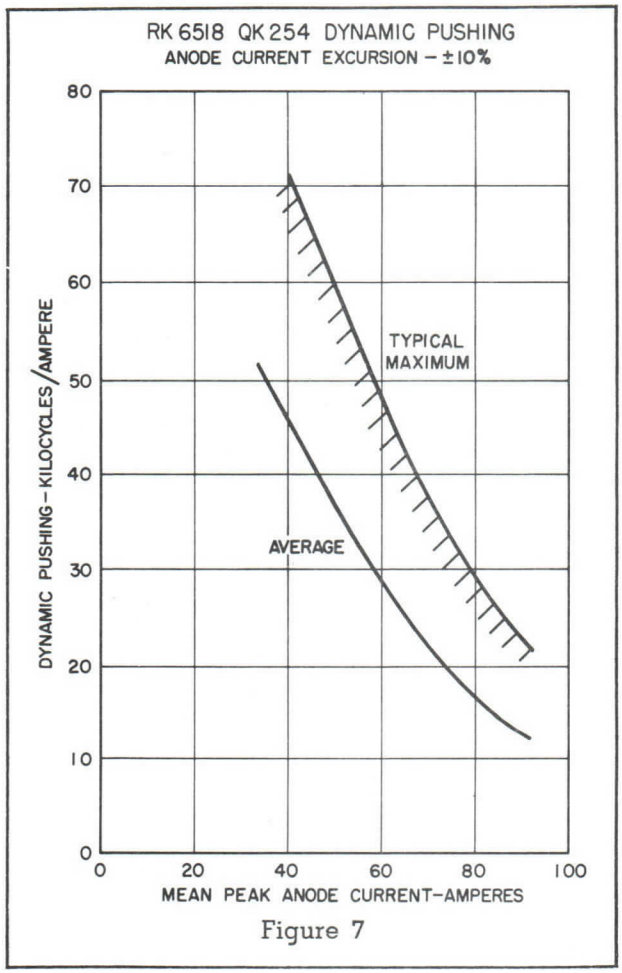

Figure 7

FREQUENCY DRIFT

After operation of the RK6518/QK254 is initiated, its temperature rises with time until thermal equilibrium is reached. During this transient period the geometry of the tube changes slightly and is attended by a slight frequency change or drift.

If the tube temperature is changed after thermal equilibrium has been established, the operating frequency will also change until thermal equilibrium is again attained and tube geometry stabilizes.

DYNAMIC PUSHING

Fig. 7 displays the dynamic pushing characteristics of the RK6518/QK254 magnetron for anode current excursions of ±10%. Examination of the curve reveals that minimum pushing (Kc/α) occurs at rated plate current.

RF RADIATION FROM CATHODE

The RK6518/QK254 is designed to minimize radiation from the cathode bushing which will in general be negligible. It is not possible, however, to guarantee it as being negligible, and in particularly critical environments shielding of the cathode bushing may be necessary to avoid radiation difficulties.

OPERATING CHARACTERISTICS

Fig. 8 is a plot of peak power output, anode voltage and efficiency as a function of peak anode current showing the typical deviation from the average. The minimum guaranteed peak power output at the rated operating current of 87.5 A. is 1.5 MW.
average.

The minimum guaranteed peak power output at the rated operating current of 87.5 A. is 1.5 MW.

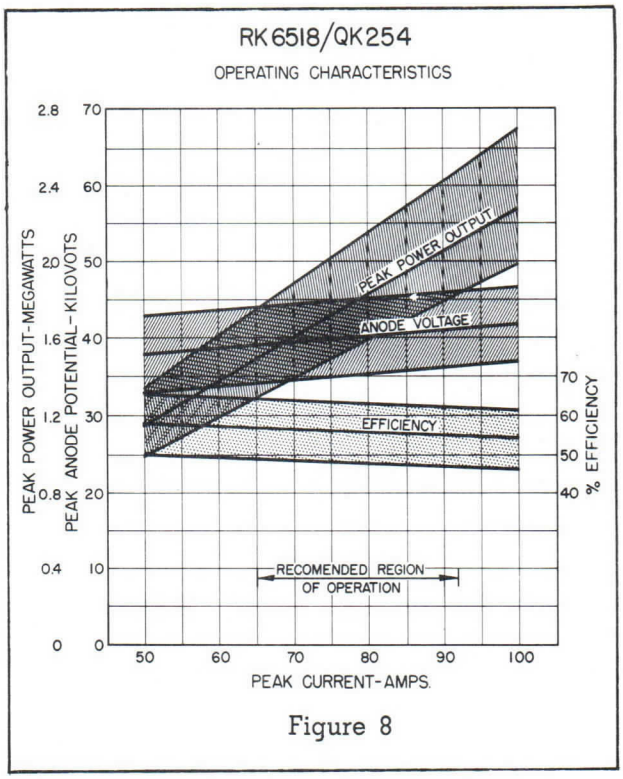

Figure 8

INSTALLATION AND HANDLING PRECAUTIONS

Although magnetrons give the appearance of great structural strength, they are in reality quite fragile and may be easily damaged in handling or installation. Damage to the magnetron will be avoided if the following installation and handling precautions are carefully observed.

1. Leave magnetron in its shipping crate until ready to be used.
2. Remove guard cover from the RF output pipe before installing tube in equipment.
3. Avoid setting up mechanical strains in R.F. output pipe or cathode bushing when handling or mounting.
4. Avoid unnecessary jarring or rough handling.
5. Do not let magnetron rest on any of its parts normally protected by the shipping crate.
6. It is essential that the bullet be properly aligned in the receptacle to avoid setting up mechanical strains in the glass to metal seal of the coaxial center conductor of the R.F. output.
7. If a magnetron has been stored in a freezing environment, examine it closely for traces of frost or moisture on the RF output pipe or base tube insulator and wipe dry before application of high voltage.

8. Do not place tube in closer proximity to magnetic materials than is indicated on tube magnet.

MOUNTING

The tube is mounted within the equipment by four bolts passed through the clearance holes of the circular mounting plate with the longitudinal axis of the cathode high voltage bushing vertical. Small angular deviations (15 degrees) can be tolerated for short intervals as long as the mean position of the above axis remains vertical during the period of operation. If the mean position differs from that described, the heater may become short-circuited.

ELECTRICAL CONNECTIONS

The positive high voltage should be grounded at the mounting surfaces. Heater and cathode connections are made to the terminals on the base tube insulator (see note 17 of tube outline drawing). Heater connectors should be designed to minimize contact resistance and lateral forces on the heater terminals.

CAUTION: R.F. arcing and melting of the metal to kovar seal of the center conductor of the coaxial output will result, if the bullet connector does not make positive contact and is not properly seated.

COUPLING AND PRESSURIZATION

The output pipe is designed for coupling to standard 1⅝", 50 ohm coaxial line. A coaxial to standard 1½" x 3" waveguide transition may be effected by use of a suitable doorknob coupler. Pressurization of the RF transmission system to 35 psia is required. Pressurization lower than 35 psia may result in arcing in the system. If sustained arcing in the coaxial output section occurs, failure of the metal to kovar seal of the coaxial center conductor is likely. To minimize the possibility of arcing in the RF transmission system and to achieve optimum tube performance, the VSWR should be kept as low as possible; VSWR values greater than 1.5/1 are not recommended. See outline dwg. for mechanical details of RF output coupling.

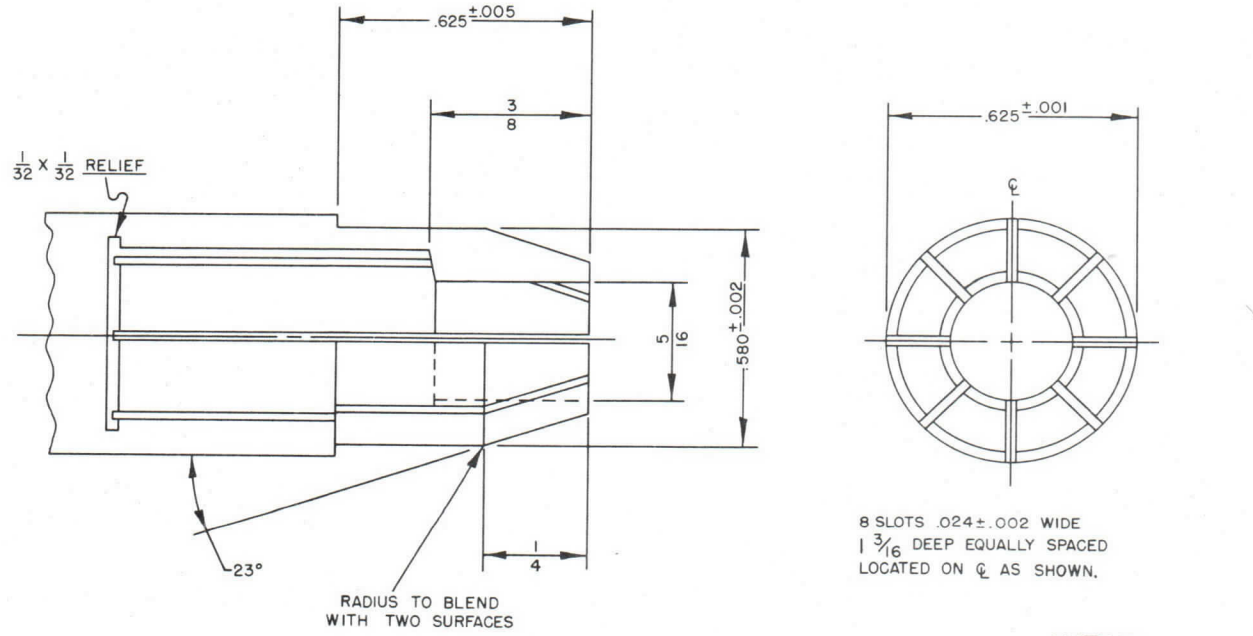

MATING BULLET DETAIL OUTLINE DRAWING

NOTES:

1. – REF. PLANE "A" IS DEFINED AS A PLANE PASSING ALONG THE FACE OF THE MOUNTING PLATE.
2. – REF. PLANE "B" IS DEFINED AS A PLANE PERPENDICULAR TO PLANE "A" PASSING THRU THE CENTER OF HOLES AS SHOWN.
3. – REF. PLANE "C" IS DEFINED AS A PLANE MUTUALLY PERPENDICULAR TO PLANE "A" & "B" PASSING THRU THE CENTER OF HOLES AS SHOWN.
4. - THIS DIM. INCLUDES ANGULAR AS WELL AS LATERAL DEVIATIONS.
6. - REFERS TO THE CENTER LINE OF THE GUARD PIPE.
7. - THE CENTER LINE OF THE JACK HOLES SHALL BE WITHIN A RADIUS OF .100 OF LOCATION SPECIFIED BUT SHALL BE SPACED 1.054 ± .015 WITH RESPECT TO EACH OTHER.
8. – BANANA PIN JACK .281 ± .005 HOLE DIA. 25/32 MIN. DEEP.
9. – THIS SURFACE TO BE FLAT WITHIN .015.
10. - LEADS SHOULD BE FLEXIBLE AND SLACK.
11. - PYREX GLASS OR EQUIVALENT.
12. - NO SHARP EDGES ON OUTSIDE DIA. AT END OF INNER CONDUCTOR.
13. - APPLIES TO STRAIGHT PORTION OF INNER CONDUTOR WALL.
14. - APPLIES TO INNER CONDUCTOR INSERT ONLY ℄ OF INNER CONDUCTOR INSERT SHALL BE CONCENTRIC WITH ℄ OF GUARD PIPE TO WITHIN .025.
15. - ℄ OF MAX. DIA. SHALL BE CONCENTRIC WITH ℄ OF GUARD PIPE WITHIN .040.
17. - COMMAN CATHODE CONNECTION MARKED WITH LETTER C.
18. - ALL SOLDER JOINTS ON MOUNTING PLATE & GUARD PIPE SHALL BE SOLDERED TO PROVIDE AN HERMETIC SEAL.
19. - PAINT WITH BLACK HEAT-RESISTANT NON-CORROSIVE PAINT. THE FOLLOWING SHALL BE FREE FROM PAINT, TOP SURFACE OF MOUNTING PLATE, PARTS ABOVE MOUNTING PLATE SCREW THR'DS ON GUARD PIPE AND ALL SURFACES INSIDE GUARD PIPE, BOTTOM SURFACE OF MAGNET PLATE, AND EDGE OF MOUNTING PLATE.
20. - MIN. CLEARENCE BETWEEN AXIS OF PLATE HOLES & SURFACE OF MAGNET TO BE .563.
21. - ANY PORTION OF THE ASSEMBLY EXTENDING ABOVE THIS SURFACE SHALL BE WITHIN 2.125 RADIUS OF THE TRUE CENTER OF THE PLATE.
22. - FERROMAGNETIC MATERIALS SHALL NOT BE BROUGHT WITHIN 12 INCHES OF TUBE MAGNETS.
23. - THE ANODE TEMPERATURE IS MEASURED AT THIS POINT.

Printed in U.S.A.

MICROWAVE AND POWER TUBE DIVISION

RAYTHEON COMPANY

FOUNDRY AVE., WALTHAM 54, MASS.

3394 — 9-56

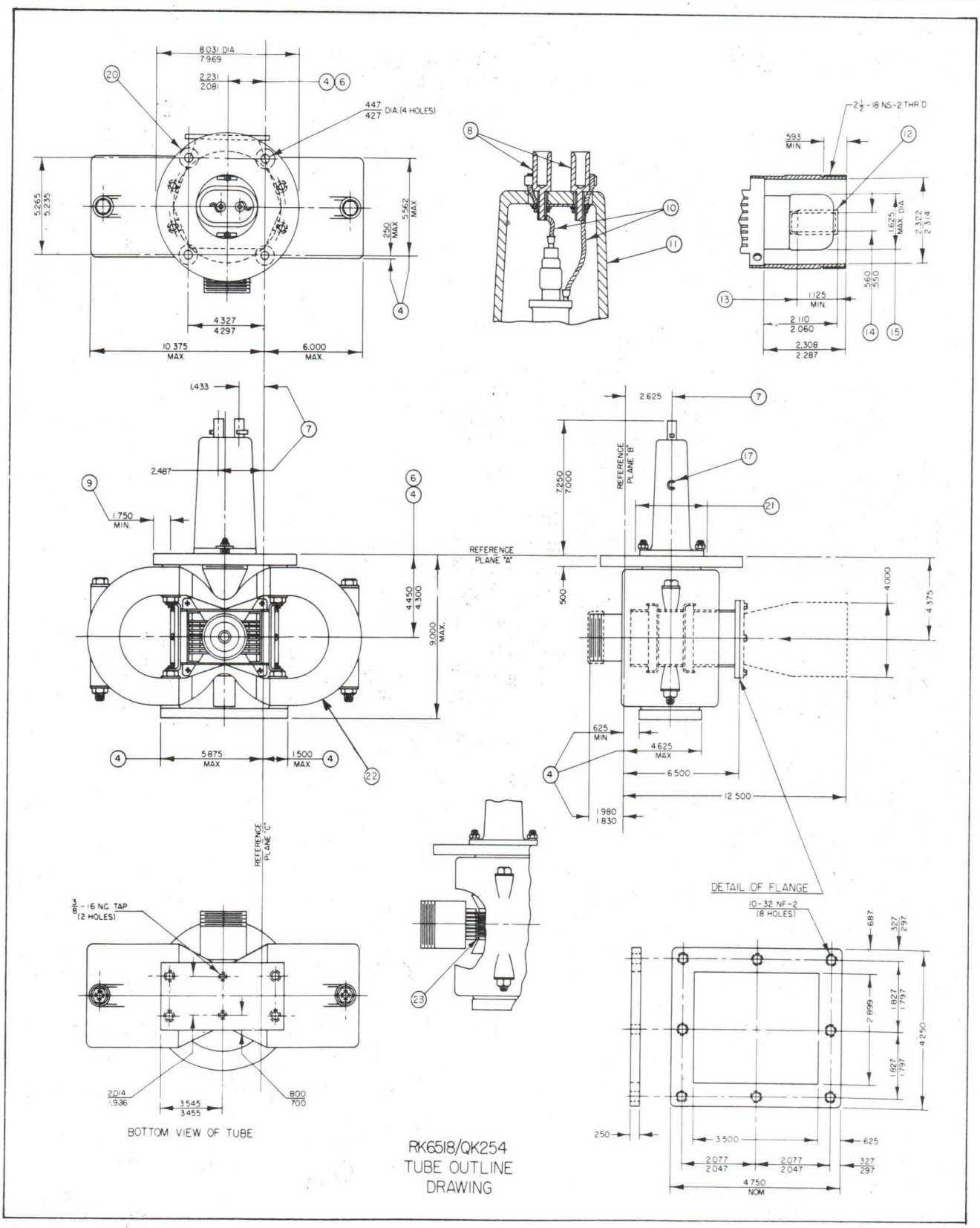

RK6518/QK254
TUBE OUTLINE
DRAWING

RAYTHEON

TECHNICAL INFORMATION

TENTATIVE DATA

Excellence in Electronics

PULSED-TYPE MAGNETRON OSCILLATOR

TYPE RK6841

The RK6841 is a fixed frequency pulsed type oscillator operating in the region of 16,500 megacycles with a minimum peak power output of 50 kilowatts. It is an integral magnet waveguide output type requiring forced air cooling, designed for coupling to standard RG-91/u waveguide. The RK6841 is a ruggedized, very compact, light-weight magnetron well suited for use in portable and aircraft equipment.

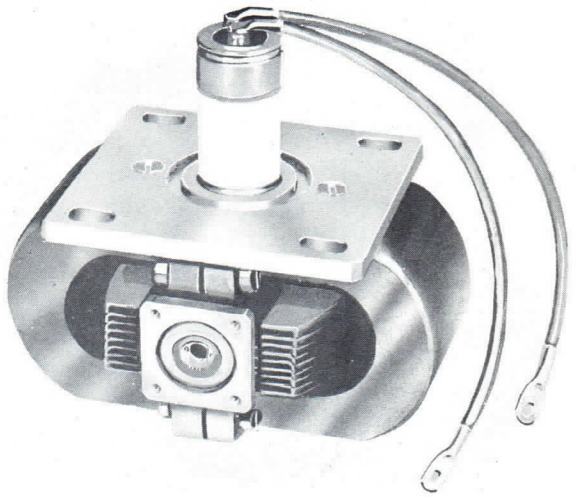

GENERAL PRECAUTIONS

Reliable operation and maximum magnetron life can be achieved only if the over-all radar transmitter is designed with the magnetron characteristics and peculiarities clearly in mind. This technical data sheet, rather than the MIL-E-1B Government test specifications, should be used as a guide to equipment designers.

There are many problems peculiar to magnetrons in general which must be given special consideration in system design. These problems are discussed in detail on the following pages. If for any reason it is desirable to operate the RK6841 under conditions other than those recommended in this technical data sheet, the manufacturer should be consulted. Operation of magnetrons at or near maximum ratings is not conducive to long life, economy, and reliability.

GENERAL CHARACTERISTICS

ELECTRICAL

Heater

Heater Voltage — Preheat	4.0 V ± 5%
Heater Current @ 4.0 V	10.5 A
Minimum Preheat Time	3 minutes

Maximum Ratings

The values specified below must not be exceeded under any service conditions. The ratings are limiting values above which the serviceability of any tube may be impaired. It does not necessarily follow that combinations of absolute maximum ratings can be attained simultaneously.

Heater Voltage	4.25 V
Peak Anode Voltage	19 kv
Peak Anode Current	16 A
Peak Anode Power Input	290 kw
Average Anode Power Input	290 W
Anode Temperature	125° C
Pulse Duration	3.5 us
Duty Cycle	.001
Frequency change due to change of steady state temperature	—0.4 Mc/°C
VSWR	1.5
Pulling @ VSWR = 1.5	15 Mc

Printed in U.S.A.

MICROWAVE AND POWER TUBE DIVISION
RAYTHEON COMPANY
FOUNDRY AVE., WALTHAM 54, MASS.

Typical Operation

Oscillation 1

Current pulse duration	0.3 μs
Duty cycle	.0009
Voltage pulse rise time	0.09 μs
Heater voltage start	4.0 V
Heater voltage operate	2.0 V
Frequency	16,500 Mc approx.
Peak anode voltage	16.5 kv
Peak power output (Min.)	50 kw
Average power output (Min.)	45 W
Peak current	14 A

Oscillation 2

Current pulse duration	3.0 μs
Duty cycle	.0009
Voltage pulse rise time	0.2 μs
Heater voltage start	4.0 V
Heater voltage operate	2.0 V
Frequency	16,500 Mc. approx.
Peak anode voltage	16.5 kv
Average power output (Min.)	45 W
Peak current	14 A

MECHANICAL

Mounting position	Cathode vertical
Over-all dimensions	See outline drawing
Net weight	5¾ lbs., approx.
Cooling	Forced air
Output cooling	See outline drawing

DETAILED ELECTRICAL INFORMATION

HEATER

The cathode must be preheated at Ef = 4.0 V ± 5% for a period of at least 3 minutes prior to the application of anode pulse voltage. Immediately after the application of anode pulse voltage, the heater voltage must be reduced to 2.0 V. Excessive heater current surges must be avoided. For operation at conditions differing from those under typical operation, the manufacturer should be consulted for the recommended value of heater voltage.

STARTING NEW TUBE

"Aging" of the RK6841 is rarely necessary. If, however, some instability is observed in a new magnetron, it is recommended that it be "seasoned" under the prevailing conditions of oscillations until stable operation is attained.

PULSE CHARACTERISTICS

The smooth peak of a pulse is defined as the maximum value of a smooth curve through the average of the fluctuation over the top portion of the pulse. The pulse width is the time interval between the two points on the current pulse at which the instantaneous current is 50% of the smooth peak. (True only for approximately rectangular waveshapes.) The rise time is the time interval between points 20 and 85% of the smooth peak. Figure 1 shows graphically the definitions mentioned.

The voltage rise time should not be greater than 0.22 μs or less than 0.18μs on the 3.0 μs pulse and not greater than 0.1 μs or less than 0.08μs on the 0.3 μs pulse. Too fast a rise time will lead to modding or arcing. The ripple on the top of the current pulse must be kept to a minimum to avoid pushing effects which will tend to widen the spectrum. The decay time of the trailing edge of the voltage pulse must be as short as possible to obtain optimum performance and high operating efficiencies. Backswing should not exceed 20% of the applied pulse.

For optimum pulse shaping, the magnetron pulse transformer and pulse line must be treated as a unit. Careful tailoring of the pulse line in any application is recommended.

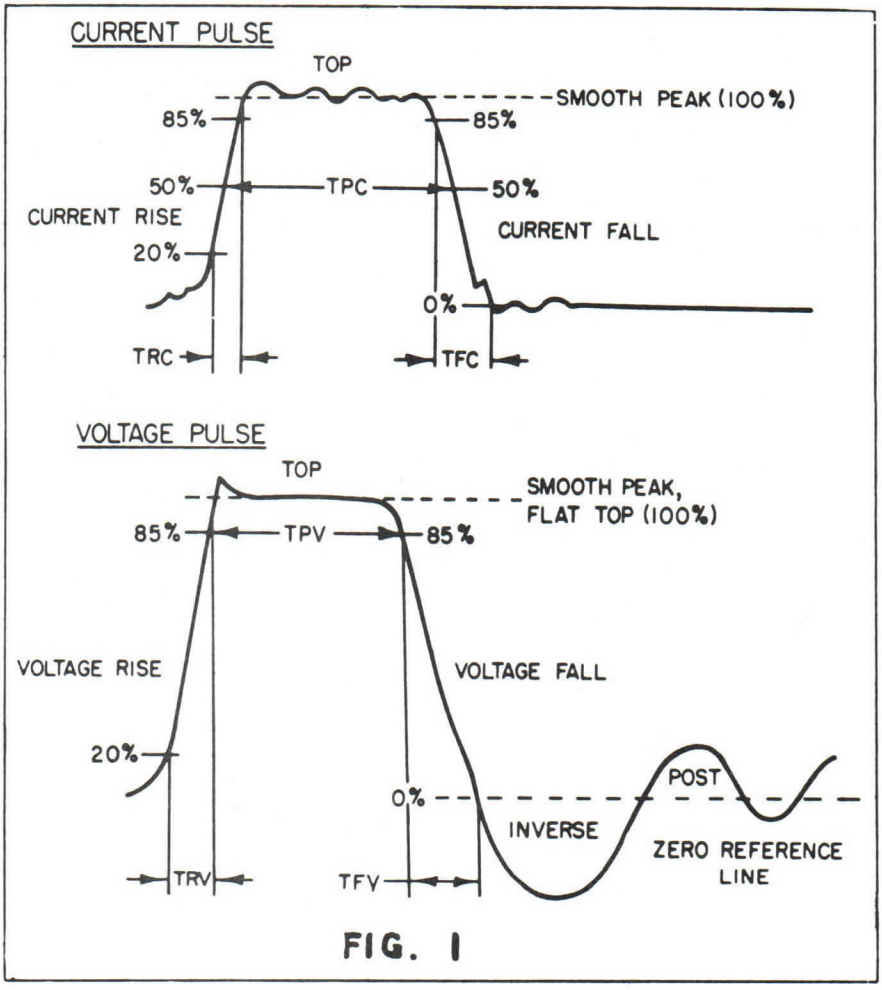

FIG. 1

Printed in U.S.A.

LOAD DIAGRAM

Figure 2 is a load diagram of a typical RK6841 magnetron. The contours of constant power output and frequency change are related to voltage standing wave ratios introduced by mismatched loads at various phase positions. Values of VSWR as high as 3:1 are plotted, but operation with ratios greater than 1.5:1 is not recommended.

FIG. 2

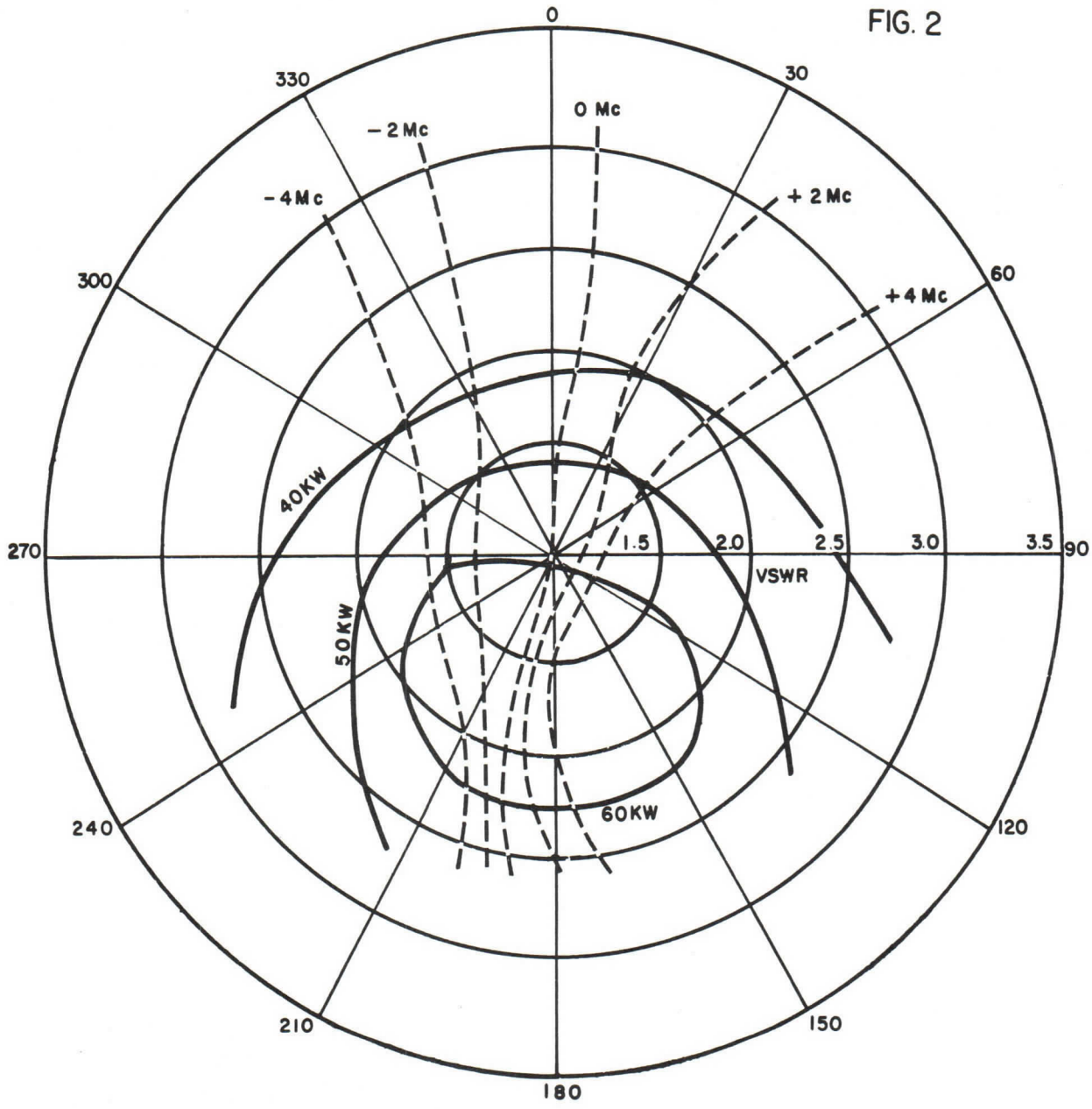

RK6841 TYPICAL LOAD DIAGRAM

COOLING

The RK6841 requires forced air for cooling. The ambient temperature will dictate the flow rate necessary to maintain the anode temperature below the maximum specified 115°C. Figure 3 is a plot of anode temperature and pressure drop as a function of air flow.

RK 6841
COOLING CHARACTERISTICS

FIG. 3

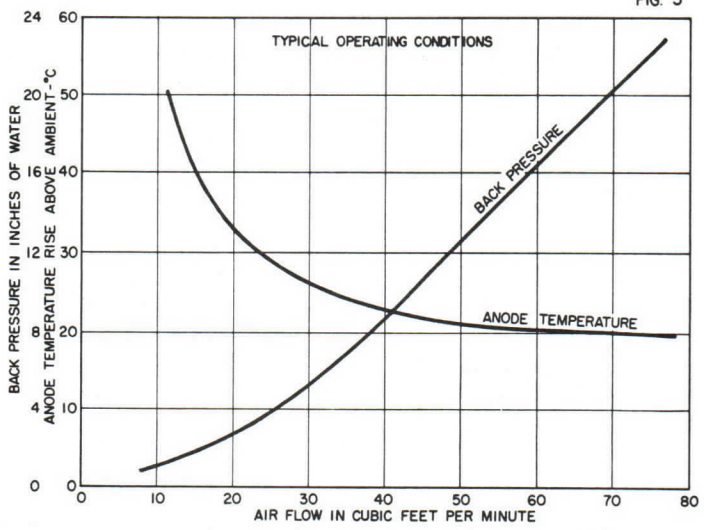

FIG. 4

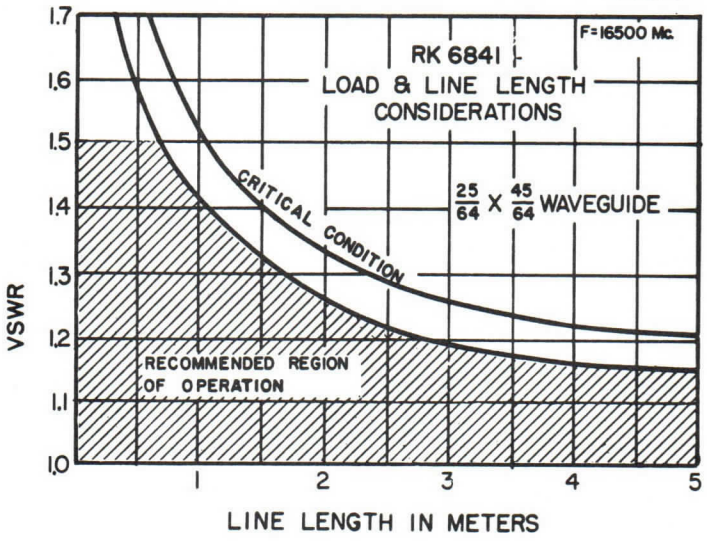

FREQUENCY DRIFT

After operation of the RK6841 is initiated, its temperature rises with time until thermal equilibrium is obtained. During this transient period, the geometry of the tube changes slightly and is attended by a slight frequency change or drift. If the tube temperature changes after thermal equilibrium has been established, the operating frequency will also change until thermal equilibrium is again attained. The frequency change between two equilibrium positions will not exceed —0.4 Mc/°C.

R.F. RADIATION FROM CATHODE

The RK6841 incorporates an R.F. choke in the cathode stem to minimize radiation from this end of the tube. It is not possible, however, to guarantee that the radiation will be negligible; and in particularly critical environments, shielding of the cathode stem may be necessary.

OPERATING CHARACTERISTICS

Figure 5 is a plot of peak power output and peak anode voltage as a function of anode current for a typical RK6841 magnetron.

FIG.5

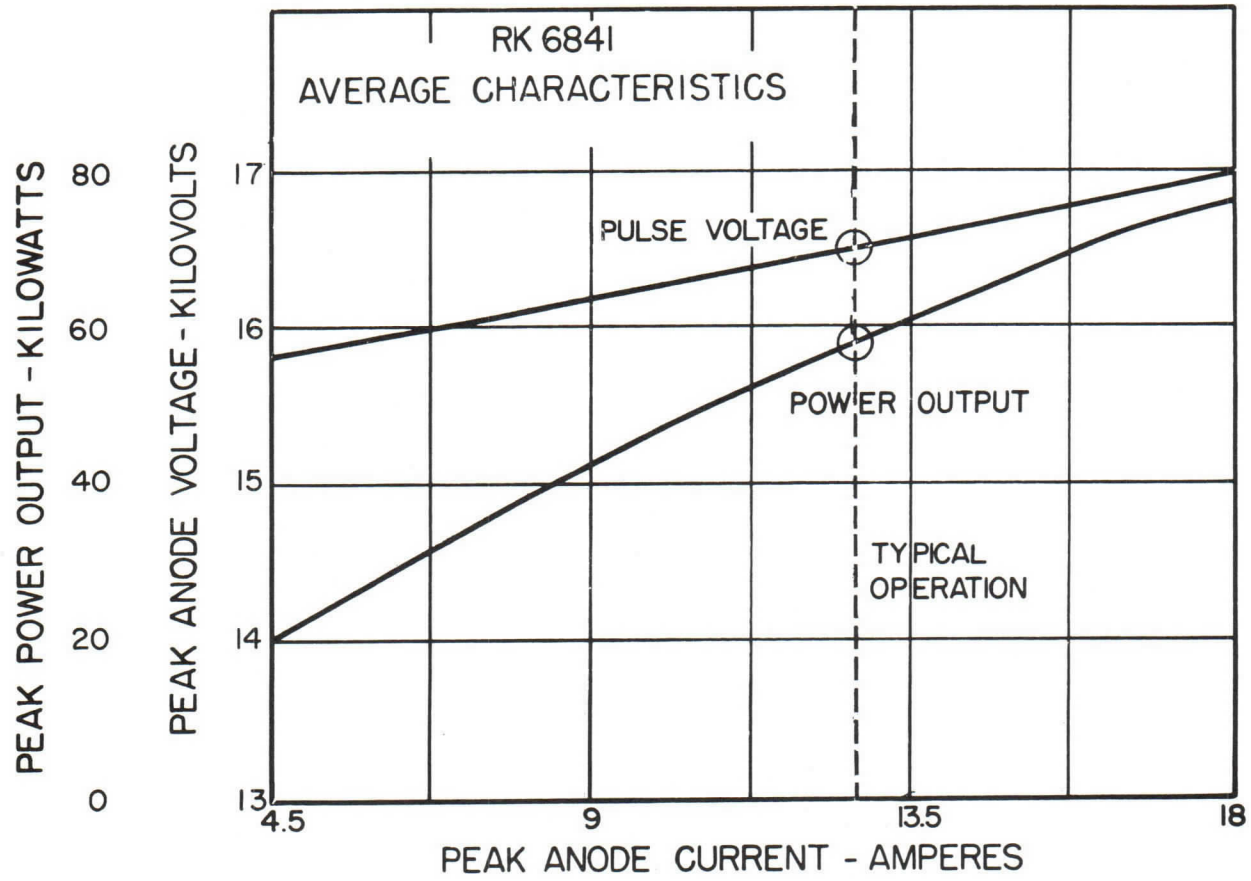

DETAILED MECHANICAL INFORMATION

OUTLINE DRAWING

The detailed mechanical dimensions of the RK 6841 are given in figure 6. These dimensions should be used in designing the mechanical layout of an equipment rather than those of a sample tube.

INSTALLATION AND HANDLING PRECAUTIONS

No mechanical stress should be applied to the high voltage bushing or output flange in handling or mounting the magnetron. Care should be taken to keep ferromagnetic materials such as steel, iron, or magnets 2 inches away from the tube, since deterioration of the magnetic field results in low power and instability.

Unnecessary jarring of the tube must be avoided. Although a packaged magnetron appears to have great structural strength, the internal structure is delicate, and involves critical alignment of parts.

RAYTHEON

PULSED-TYPE MAGNETRON OSCILLATOR

TYPE RK6841

TENTATIVE DATA

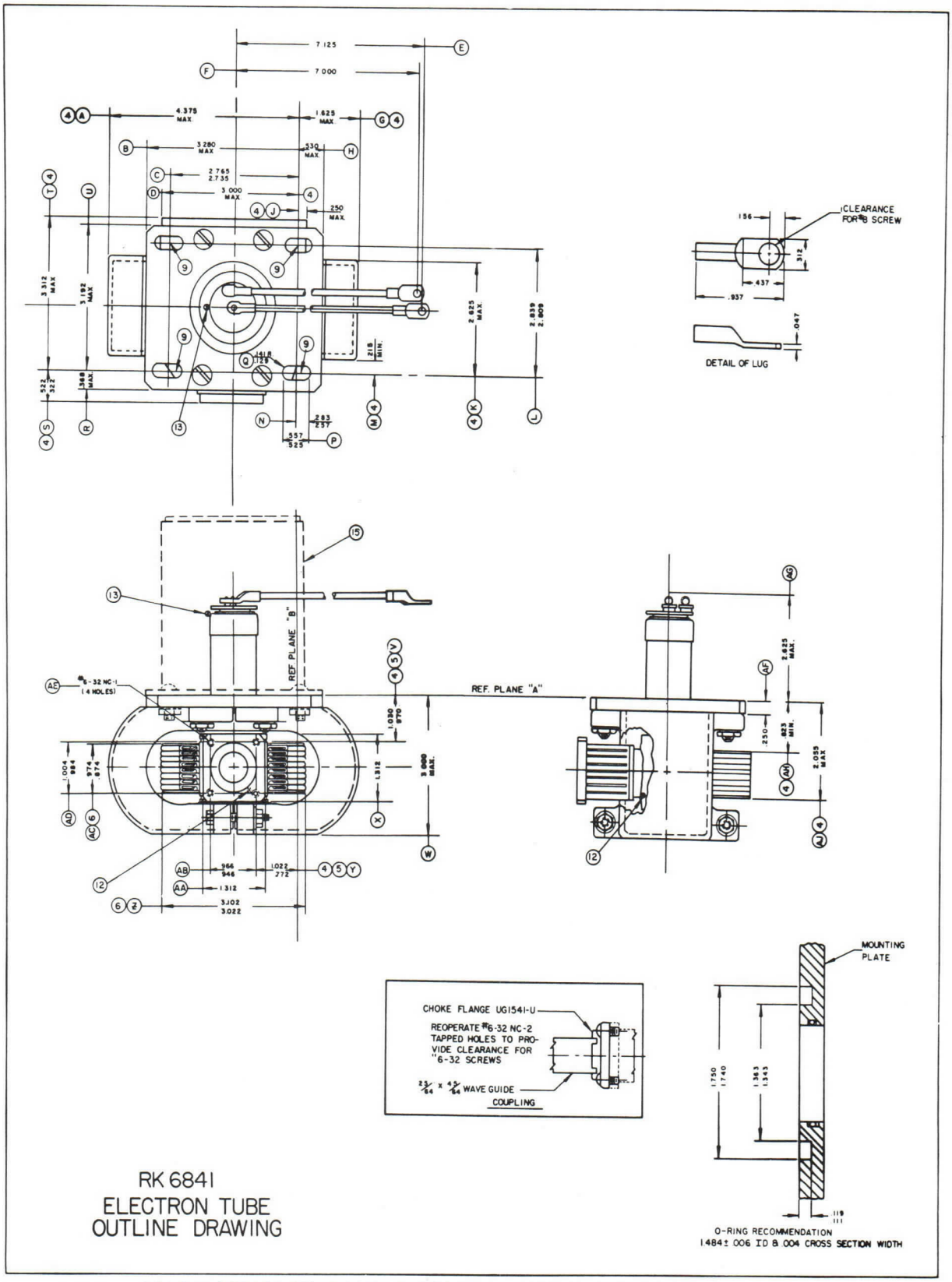

RK 6841
ELECTRON TUBE
OUTLINE DRAWING

Printed in U.S.A.

MICROWAVE AND POWER TUBE DIVISION

RAYTHEON COMPANY

FOUNDRY AVE., WALTHAM 54, MASS.

TYPE RK6959/ QK172

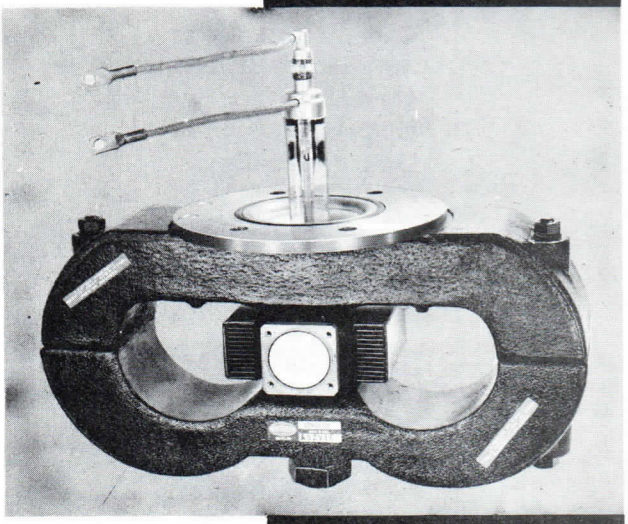

PULSED-TYPE MAGNETRON OSCILLATOR

GENERAL DESCRIPTION

The RK6959/QK172 magnetron is a fixed frequency pulsed type oscillator operating in the frequency region of 9330 to 9420 megacycles with a nominal peak power output of 500 kilowatts. It is an integral magnet type tube requiring forced air cooling and is designed for coupling to standard 5/8" x 1¼" waveguide.

GENERAL PRECAUTIONS

Reliable operation and maximum magnetron life can be achieved only if the over-all radar transmitter is designed with the magnetron characteristics and peculiarities clearly in mind. This technical data should be used as a guide for equipment designers rather than the MIL-E-1C Government purchase specifications. There are many problems peculiar to magnetrons in general which must be given special consideratic system design. These problems are discussed in d on the following pages. If for any reason it is desired to operate the RK6959/QK172 under conditions other than those recommended in this technical data sheet, the Applications Group at Raytheon must be consulted. In some special cases, additional evaluation and life test will be necessary.

GENERAL CHARACTERISTICS

ELECTRICAL

Heater Characteristics

Heater current @ 6.0 V	27 — 33 A
Minimum preheat time	5 minutes
Cold heater resistance	.025 ohms

Typical Operation

Heater voltage preheat	6.0 V	
Heater voltage operate	3.0 V	6.5 V
Pulse duration	3.2 μsec ± 10%	0.5 μsec ±10%
Duty cycle	.00105	.0003
Peak anode voltage	33 kv	33 kv
Peak anode current	38 a	67 a
Average anode current	40 mAdc	20 mAdc
Peak power output	500 kw	800 kw
Average power output	525 W	240 W
VSWR	1.5/1	1.5/1
Frequency region	9330 — 9420 Mc	9330 — 9420 Mc
RF bandwidth	1.1 Mc @ —6 db level	4.0 Mc @ —6 db level

Printed in U.S.A.

MICROWAVE AND POWER TUBE DIVISION

RAYTHEON COMPANY

FOUNDRY AVE., WALTHAM 54, MASS.

MECHANICAL

Over-all dimensions	15″ x 13″ x 4.5″
Net weight	45 lbs.
Mounting	Cathode vertical
Output coupling	5/8″ x 1¼″ Choke Flange
Output pressure	45 psia
Cooling	Forced air
Vibration (non-operating)	50 cycles @ 10 G
Magnet protection	6″

DETAILED ELECTRICAL INFORMATION

HEATER

The cathode must be preheated at Ef = 6.0 V ± 5.0% for a period of at least 5 minutes prior to the application of anode voltage. Optimum operation and maximum tube life will be realized only if provisions are made to maintain the specified heater current within the ± 5.0% tolerance. Heater current surges in excess of 55 amps cannot be tolerated. Operation of the tube at standby or preheat without forced air cooling may result in damage to the tube and is not permissible. See Figure 1 for heater characteristics.

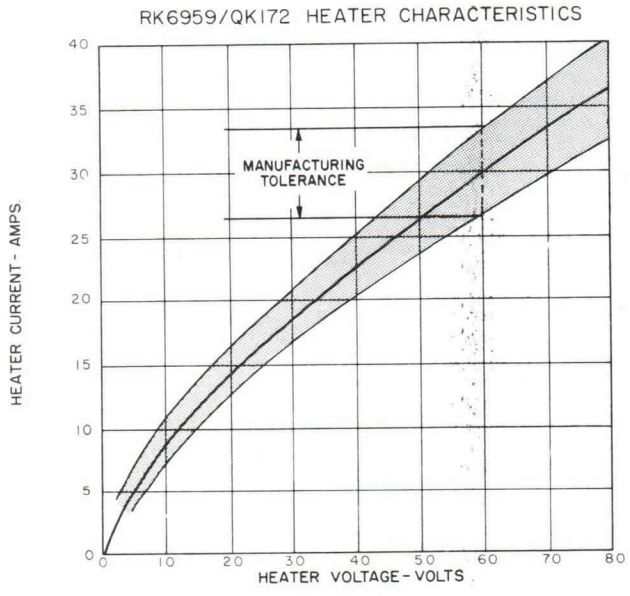

Figure 1

For .001 duty cycle at peak current over 25 amperes the heater voltage should be reduced to 3.0 volts. For other duty cycles the manufacturer should be consulted for the optimum heater schedule.

If the tube has been running at reduced heater voltage and high voltage is temporarily removed, it will be necessary to preheat the tube again at 6.0 volts to resume normal operation.

PULSE CHARACTERISTICS

The RK6959/QK172 Magnetron has been designed and tested for operation at the following pulse conditions. See Figure 2.

tpc = 3.2 ± 10% μsec @ Du = .00105	tpc = 0.5 ± 10% μsec @ Du = .003
tfc = 1.0 μsec Max.	tfc = 0.2 μsec Max.
rrv = 75 to 150 KV/μsec	rrv = 150 to 270 KV/-μsec
tfv = 2.5 μsec Max.	tfv = 0.5 μsec Max.

If operation at pulse conditions different from those given above is anticipated, the manufacturer should be consulted for further information. No spike or ripple should exceed ± 7% of the average peak value of voltage or current. Inverse voltage should not exceed 20% of the forward voltage.

Optimum tube performance will be realized only if proper consideration is given to pulse shaping. Rate of voltage rise faster than specified will result

RK6959/QK172

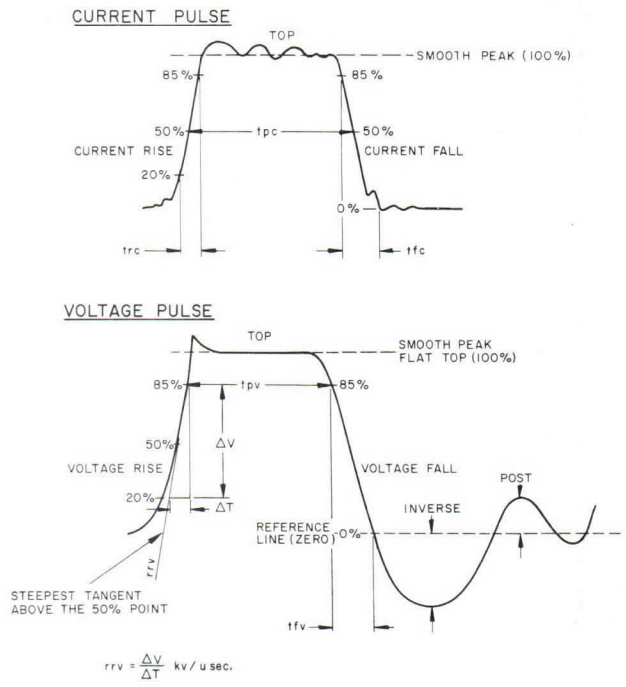

Figure 2

in moding and/or arcing and cannot be tolerated. Excessive ripple at the top of the current pulse causes frequency pushing and broadening of the spectrum. Most magnetrons draw a small amount of leakage or diode current at anode voltages as low as 100 volts. This leakage current may amount to several milliamperes if the voltage fall time is greater than 2.5 μsec, and at a given duty cycle the calculated peak current will be in error. It is therefore advisable that equipment design effect as rapid a decay as possible.

Optimum pulse shaping can best be achieved by treating the magnetron, pulse transformer, and pulse line as a unit; hand-tailoring the line and transformer for magnetron compatibility is recommended.

If operation at both long and short pulses is anticipated, the pulse transformer should be designed to optimize the more important pulse.

POST PULSE NOISE

It is possible that some RK6959/QK172 magnetrons may exhibit RF noise output unless the post pulse backswing is controlled very closely. A backswing in the negative direction of several hundred volts may be enough to cause an RF output in the order of a microwatt. If this low level energy is fed directly to the receiver, noise or false targets will appear on the radar indicators. By judicious matching of the pulse line, pulse transformer and magnetron, and by the use of a clipper tube across the primary of the pulse transformer, the voltage backswing can be controlled so that its magnitude is quite small; and more important, that the backswing is completely damped out within a very short interval after the pulse.

LOAD DIAGRAM

Figure 3 is a load diagram for a typical RK6959/QK172 magnetron. The contours of constant power output and frequency change are related to voltage standing wave ratios introduced by mismatched loads at various phase positions. Values of VSWR as high as 3.5/1 have been plotted, but operation at ratios greater than 1.5/1 is not recommended.

RK6959/QK172 TYPICAL LOAD DIAGRAM

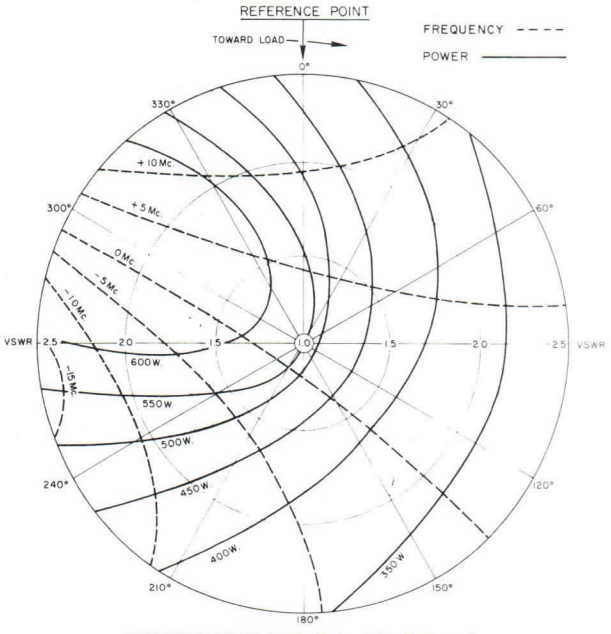

REFERENCE POINT SURFACE ON OUTPUT FLANGE

fo = 9410 Mc	tp = 3.0 us
Ep = 33.5 kv	Du = .00105
prr = 350 pps	Ef = 6.0 V.
Ip = 40 mA	If = 29.0 A

Figure 3

LOAD AND LINE LENGTH CONSIDERATIONS

If an oscillator is loaded by an electrically long transmission line which is terminated by an impedance different from that of the line, the impedance of the load will be a periodic function of frequency. Operation of the oscillator under these conditions gives rise to phenomena collectively termed "long-line effects". Although these phenomena are usually associated with an electrically long transmission line, they can also be exhibited by a short line terminated by a sufficiently mismatched impedance. In any case the extent to which the long-line effect is exhibited depends on the amount of coupling between the load and oscillator as well as the degree of mismatch in the line. Figure 4 shows the relation between the VSWR and the line length with respect to the critical condition of skip. This skip condition occurs when the tube is changing frequency (thermal drift) and causes breaks in the ordinarily smooth drift curve. This condition is not critical in the RK6959/QK172 because the tube is not tunable. Of far more serious consequence, however, is the broadening and deterioration of the spectrum caused by this phenomena. It may in some cases permit spectra of two frequencies to appear simultaneously. By operating into loads specified under the region of recommended operation in Figure 4, satisfactory operation should be obtained. In this region no significant broadening of the spectrum will take place, although for close control of bandwidth the VSWR should be kept as low as possible.

RK6959/QK172

LOAD AND LINE LENGTH CONSIDERATIONS

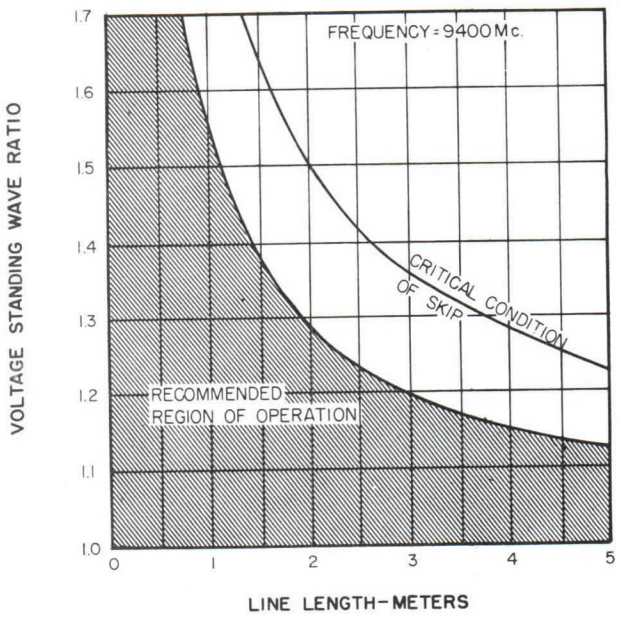

Figure 4

More detailed information on the theories and remedies of long-line effects is available upon request.

COOLING

The air stream for cooling the RK6959/QK172 should be directed to the air inlet of the radiator through a close fitting duct. During tube operation an anode temperature below 100° C is recommended, although temperatures as high as 130° C can be tolerated. Figure 5 shows the relation between air flow in cubic feet per minute and back pressure in inches of water at the entrance to the RK6959/QK172 cooling fin structure.

RK6959/QK172

COOLING FIN CHARACTERISTICS

Back Pressure vs. Air Flow

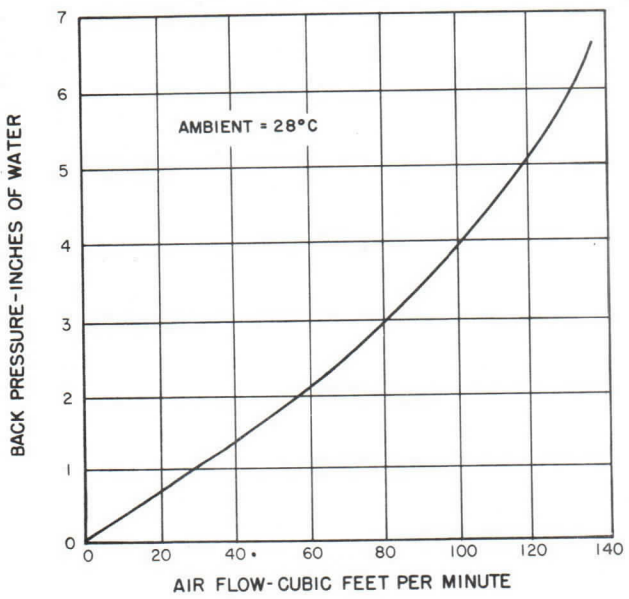

Figure 5

Figure 6 shows the anode temperature as a function of forced air flow through the cooling fins at different values of anode input power (exclusive of heater power). These measurements were made at an ambient temperature of 28 degrees centigrade and normal atmospheric pressure. Higher ambient temperatures will result in correspondingly higher anode temperatures.

RK6959/QK172

COOLING CHARACTERISTICS

Temperature vs. Power Input and Air Flow

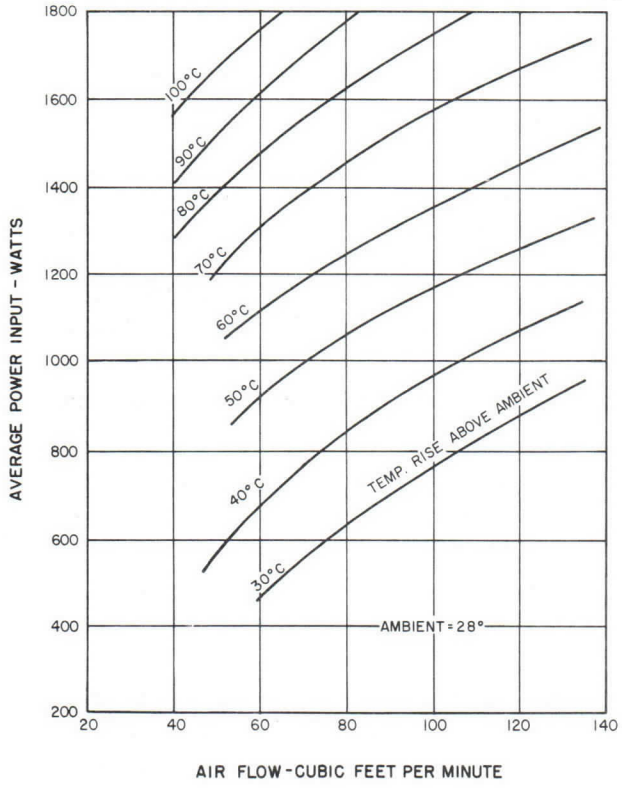

Figure 6

Sufficient circulating air, or equivalent cooling, must be supplied around the cathode bushing so that the cathode bushing temperature will never exceed 270° C. The exact point at which this temperature is measured is indicated on the electron tube drawing, Figure 9.

FREQUENCY DRIFT

After operation of the RK6959/QK172 is initiated, its temperature rises with time until thermal equilibrium is reached. During this transient period the geometry of the tube changes slightly and is attended by a slight frequency change or drift. Frequency drift and anode temperature are plotted as a function of time in Figure 7.

RK6959/QK172

FREQUENCY DRIFT CHARACTERISTICS

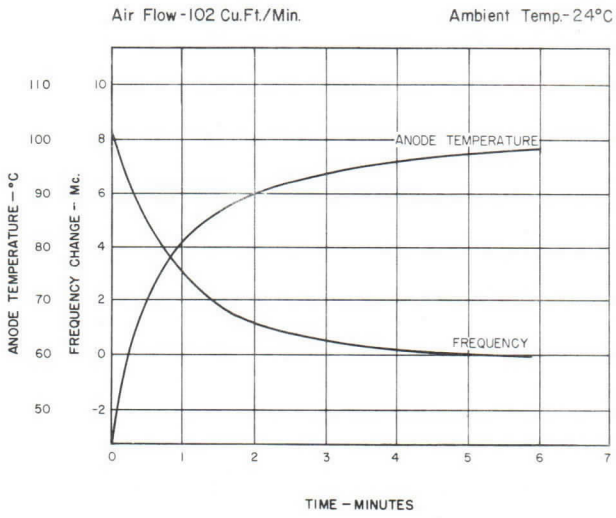

Figure 7

If the tube temperature is changed after thermal equilibrium has been established, the operating frequency will also change until thermal equilibrium is again attained and tube geometry stabilizes. The frequency change will not exceed ±0.40 Mc/C° of anode temperature.

OPERATING CHARACTERISTICS

Figure 8 is a plot of power output, anode voltage and efficiency as a function of peak anode current, showing the deviation from the average.

Printed in U.S.A.

MICROWAVE AND POWER TUBE DIVISION

RAYTHEON COMPANY

FOUNDRY AVE., WALTHAM 54, MASS.

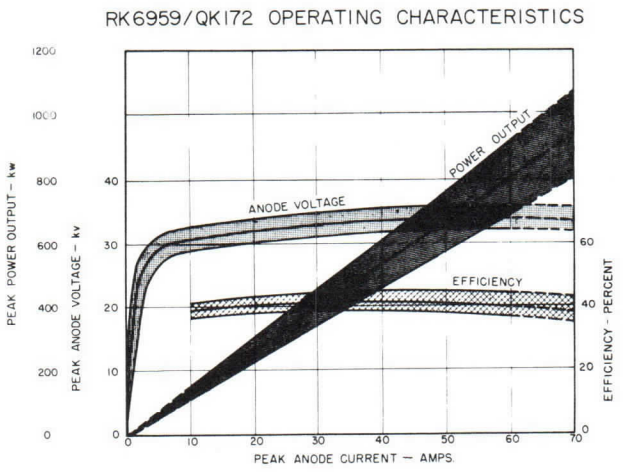

Figure 8

ELECTRICAL CONNECTIONS

Electrical connections are made to the frame of the tube and to the two terminals on the high voltage cathode bushing. The positive high voltage should be grounded at the mounting surfaces. Heater and cathode connections are made to the terminals on the cathode bushing (see note 11 of tube outline drawing).

RF RADIATION FROM CATHODE

The RK6959/QK172 is designed to minimize radiation from the cathode bushing which will in general be negligible. It is not possible, however, to guarantee it as being negligible, and in particular critical environment shielding of the cathode bushing may be necessary to avoid radiation difficulties.

COUPLING AND PRESSURIZATION

The magnetron output flange is designed to couple to standard 5/8 x 1 1/4 waveguides. Mechanical details of the recommended choke flange to mate to the magnetron are illustrated in the outline drawing. See Figure 9.

MOUNTING

The tube is mounted within the equipment by four bolts passed through the clearance holes of the mounting brackets. The tube must be mounted with the longitudinal axis of the cathode high voltage bushing vertical. The tube should be operated in this position although small angular deviations (15 degrees) can be tolerated for short intervals as long as the mean position of the above axis remains vertical during the period of operation. If the mean position differs from that described, the heater may become short-circuited.

INSTALLATION AND HANDLING PRECAUTIONS

Although magnetrons give appearance of great structural strength, they are in reality quite fragile and may easily be damaged in handling or installation. Damage to the magnetron will be avoided if the following installation and handling precautions are carefully observed.

1. Leave magnetron in its shipping crate until ready to be used.
2. Remove neoprene guard covers from the RF output window or cathode bushing before installing tube in equipment.
3. Avoid setting up mechanical strains in output window or cathode bushing when handling or mounting.
4. Avoid unnecessary jarring or rough handling.
5. Do not let magnetron rest on any of its parts normally protected by the shipping crate.
6. If a magnetron has been stored in a freezing environment, examine it closely for traces of frost or moisture on the RF window or cathode bushing and wipe dry before applying high voltage.
7. Do not place tube in closed proximity to magnetic materials than is indicated on tube magnet.

RK6959/QK172 ELECTRON TUBE OUTLINE DRAWING

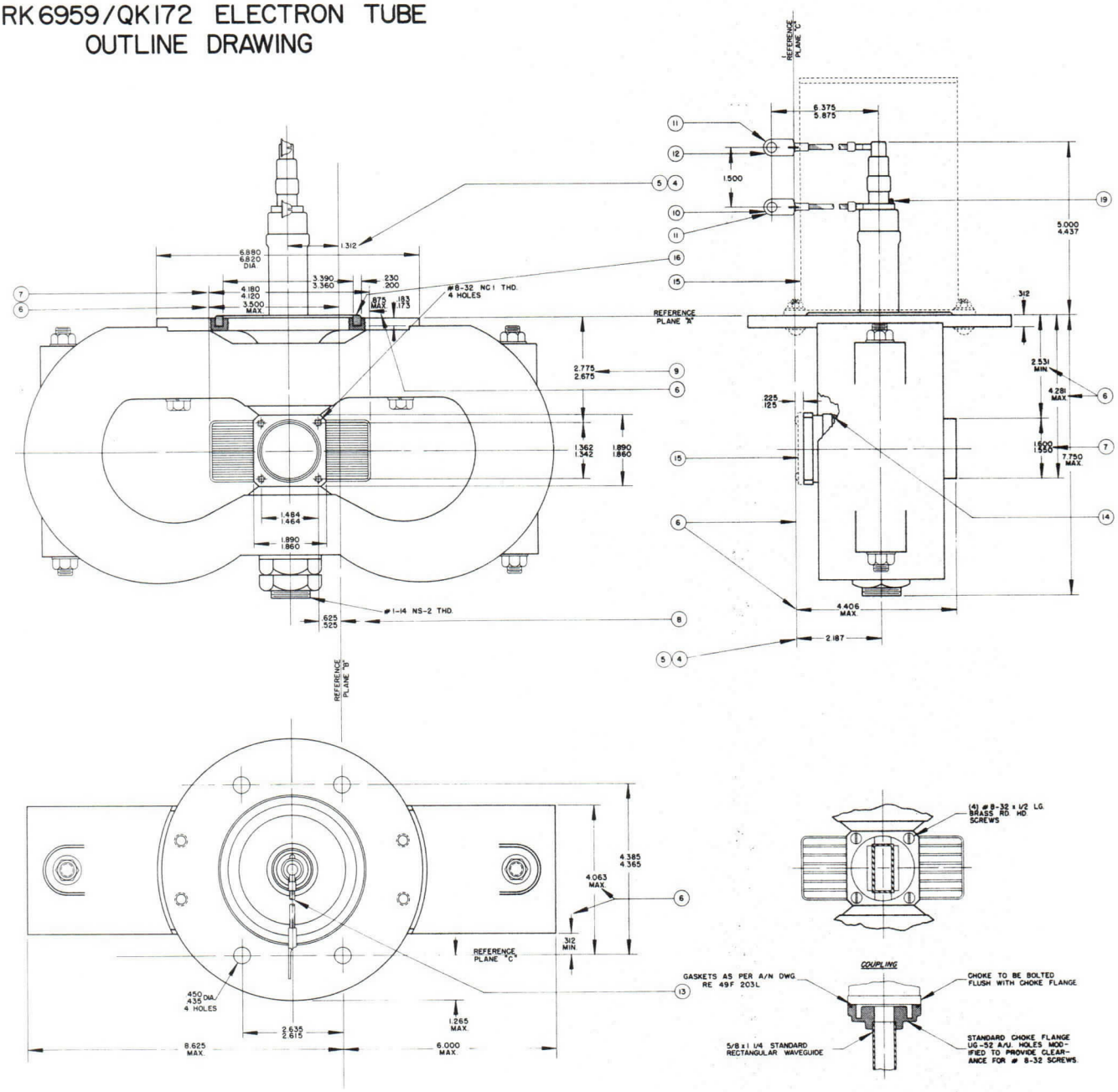

NOTES:

1) REFERENCE PLANE "A" LIES IN TOP SURFACE OF MOUNTING PLATE.
2) REFERENCE PLANE "B" IS PERPENDICULAR TO "A" PASSING THROUGH THE TWO HOLES OF MOUNTING PLATE AS SHOWN.
3) REFERENCE PLANE "C" IS MUTUALLY PERPENDICULAR TO "A" AND "B" PASSING THROUGH THE TWO HOLES IN MOUNTING PLATE AS SHOWN.
4) THIS DIMENSION REFERS TO THE CENTER LINE OF THE TUBE.
5) PARTS ON THIS CENTER LINE MAY VARY FROM TRUE LOCATION BY .125.
6) THIS DIMENSION INCLUDES ANGULAR AS WELL AS LATERAL DEVIATION.
7) THESE DIMENSIONS APPLY TO RADIATOR SIZE ONLY.
8) THIS DIMENSION IS TO END OF RADIATOR.
9) TAPPED HOLES MUST BE PARALLEL TO REF. PLANE WITHIN .030.
10) BROWN PAINT TO IDENTIFY COMMON HEATER-CATHODE CONNECTION.
11) STANDARD 50 AMP SOLDER LUGS, CLEARANCE FOR 1/4 DIA. BOLT.
12) HEATER CONNECTION.
13) HEATER LEADS TO BE PARALLEL TO REFERENCE PLANE "B" WITHIN 20°.
14) ANODE TEMPERATURE TO BE MEASURED AT THIS POINT.
15) GUARD FOR SHIPPING PURPOSES ONLY.
16) GROOVE FOR PARKER AIRCRAFT O-RING AN-6227B-43.
17) PRESSURE TEST WAVEGUIDE FLANGE WITH 55 PSI ABSOLUTE.
18) PRESSURE TEST OIL SEAL RING JOINTS AT MOUNTING PLATE WITH 30 PSI ABSOLUTE.
19) CATHODE SUPPORT TEMPERATURE.

Figure 9

Printed in U.S.A.

MICROWAVE AND POWER TUBE DIVISION

RAYTHEON COMPANY

FOUNDRY AVE., WALTHAM 54, MASS.

TYPE RK7156

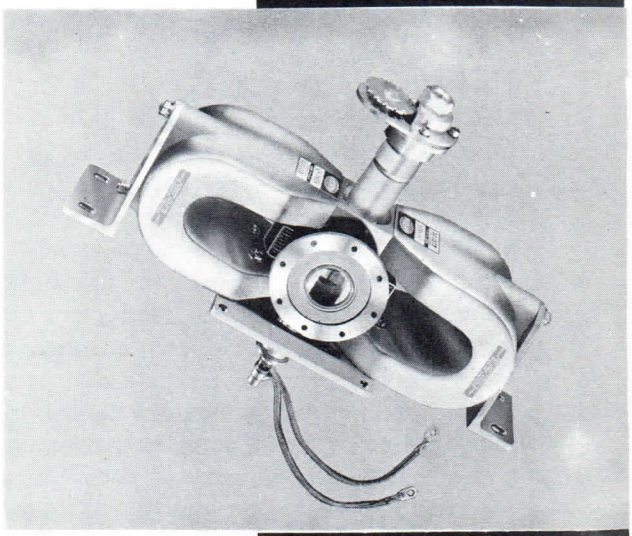

TUNABLE PULSED-TYPE MAGNETRON

The RK-7156 is a mechanically tunable magnetron designed for pulsed operation in the frequency range 5450 to 5825 megacycles. It is an integral magnet type tube rated for a minimum peak power output of 250 kilowatts. Forced air cooling over fins integral with the anode block is required, and output coupling is made to standard 1 x 2 inch waveguide. Tuner construction facilitates rapid hand or motor tuning to any desired frequency within the specified range.

GENERAL PRECAUTIONS

Reliable operation and maximum magnetron life can be achieved only if the overall radar transmitter is designed with the magnetron characteristics and peculiarities clearly in mind. There are many problems peculiar to magnetrons in general which must be given special consideration in system design. These problems are discussed in detail on the following pages. If for any reason it is desired to operate the RK-7156 under conditions other than those recommended in this technical data sheet, the manufacturers must be consulted.

GENERAL CHARACTERISTICS

ELECTRICAL

Heater Characteristics

Heater voltage — preheat	5.0 V
Heater current @ 5.0 volts	4.5 — 5.4 A
Minimum preheat time	3 minutes

Typical Operation

Peak current	24 a
Current pulse duration	2.0 us
Duty cycle	.001
Voltage pulse rise time	0.1 us min.
Heater voltage start	5.0 V
Heater voltage operate	0.0 V
VSWR	1.5/1 (max.)
Frequency	5450-5825 Mc.
Peak anode voltage	24.5 kv
Peak power output	300 kw
Average power output	300 W

MECHANICAL

Mounting	Any
Overall dimensions	See drawing
Net weight	35 lbs. (approx.)
Tuner torque required	30 inch oz.(approx.)
Pressurization	30 inch Hq
Output coupling	UG 148B/U Choke

Printed in U.S.A.

MICROWAVE AND POWER TUBE DIVISION

RAYTHEON COMPANY

FOUNDRY AVE., WALTHAM 54, MASS.

DETAILED ELECTRICAL INFORMATION

HEATER

The cathode must be preheated at Ef = 5.0 volts for a period of at least three minutes prior to the application of anode high voltage. Immediately after the application of anode high voltage, the heater voltage should be reduced to 0.0 volts. For combinations of pulse widths and duty cycles other than those shown under typical operation, the manufacturer should be consulted for optimum heater schedules. Provisions must be made to keep heater current surges below 30 amps. Surges in excess of 30 amps may open circuit the heater. The cathode preheat schedule must be repeated in case of any interruption in the operation of the tube.

PULSE CHARACTERISTICS

The smooth peak is defined as the value of a smooth curve through the average of the fluctuations over the top portion of the pulse. The pulse width is the time interval between the two points on the current pulse at which instantaneous current is 50 percent of the smooth peak. The rise time is the time interval between points of 20 and 85 percent of the smooth peak. Figure 1 shows graphically the definitions mentioned.

The voltage rise time must not be less than .10 usec for a .4 usec pulse to realize good tube performance. Too fast a rise time will lead to moding or arcing. It is necessary to form the pulse so that the current pulse shows no sign of jitter and no large spikes on the leading edge as these conditions also may cause moding or arcing. The ripple on the top of the current pulse must be kept at a minimum to avoid pushing effects which will tend to widen the spectrum. Excessive backswing in the voltage pulse may cause post pulse noise. The backswing should in no case exceed 20% of the applied pulse.

Many magnetrons draw a certain amount of leakage or diode current at anode voltages as low as 100 volts. For this reason it is not only advisable to keep the time duration of the voltage pulse trailing edge as short as possible; but also to prevent the positive voltage backswing from becoming negative again. This diode current can amount to several milliamperes at an average current of 30 milliamperes. Except for giving a false indication as to the actual peak current at which the magnetron is operating, diode current is not harmful unless it becomes excessive.

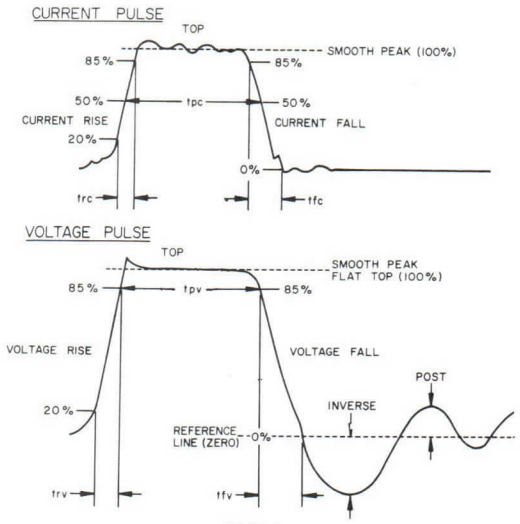

FIG. 1

For optimum pulse shaping, the magnetron, pulse transformer, and pulse line must be treated as a unit. It is advisable to hand tailor an experimental pulse line with careful observation of the current and voltage pulse shapes before a system is placed in production.

It is impossible to design a pulse transformer to give optimum results on both long and short pulses. It is, therefore, necessary to decide which pulse is the more important and to optimize the pulse transformer for the more important operation.

OPERATION

The operating characteristics of an average RK-7156 are described in the following paragraphs and illustrated in Figures 2, 3. All measurements were made under conditions of typical performance. Slight variations of these characteristics may be expected from tube to tube, or from use of the same tube in different systems. A 1 x 2 inch waveguide was used for all tests involving a magnetron load.

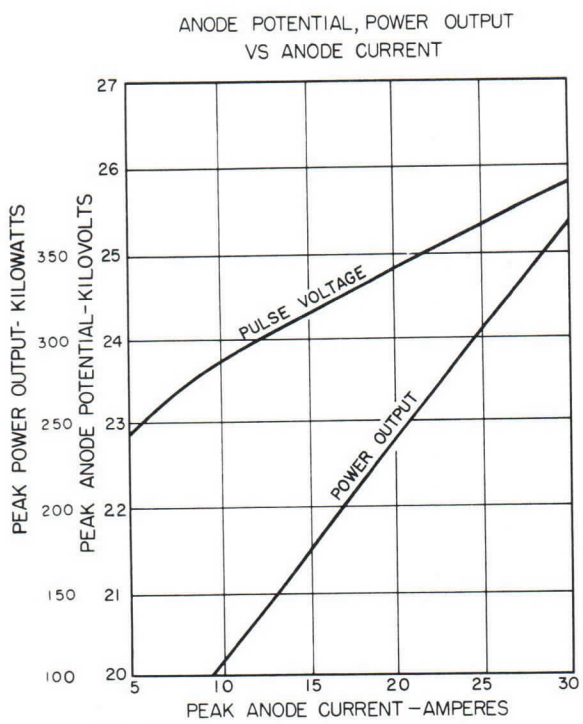

FIG.2 - PERFORMANCE CHARACTERISTICS OF TYPICAL RK 7156 MAGNETRON 5825 Mc.-1.1/1 VSWR

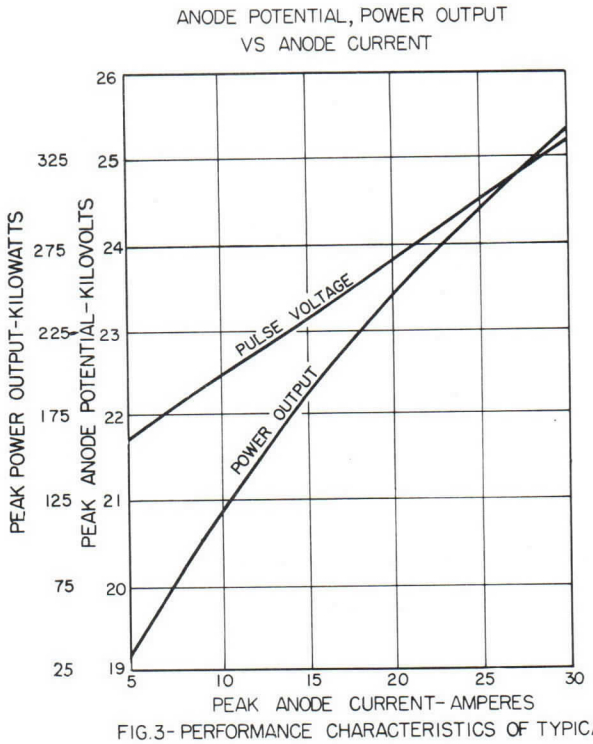

FIG.3- PERFORMANCE CHARACTERISTICS OF TYPICAL RK 7156 MAGNETRON 5450 Mc-1.1/1 VSWR

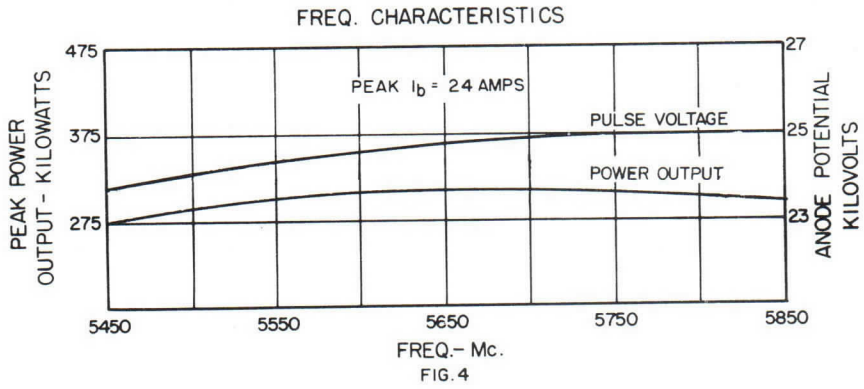

FIG. 4

FREQUENCY CHARACTERISTICS

The manner in which anode voltage and power output vary with frequency is shown in Figure 4.

LOAD DIAGRAMS

Figure 5 is a load diagram of a typical RK-7156 magnetron indicating the position of the sink region for frequencies of 5500, 5700 and 5800 megacycles. The contours of constant power output and frequency change are related to voltage standing wave ratios introduced by mismatched loads at various phase positions. Values of VSWR as high as 3.0/1 are plotted, but ratios greater than 1.5/1 are not recommended in systems operation.

FREQUENCY DRIFT CHARACTERISTICS

After operation of the RK-7156 is initiated, its temperature rises with time until thermal equilibrium is reached. During this transient period the geometry of the tube changes slightly and is attended by a slight frequency change or drift. Frequency drift and anode temperature are plotted as a function of time in Figure 6.

If the tube temperature is changed after thermal equilibrium has been established, the operating frequency will also change until thermal equilibrium is again attained and tube geometry stabilized.

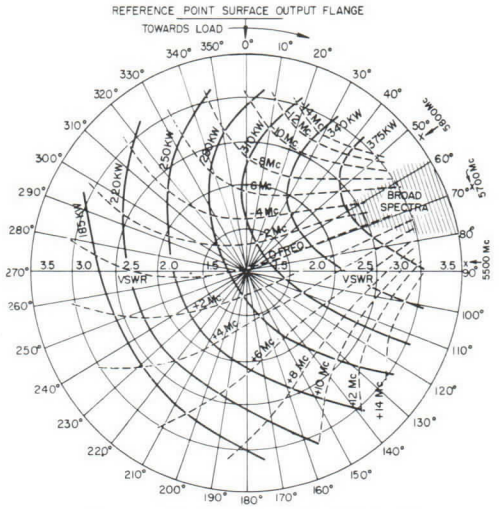

FIG. 5- LOAD DIAGRAM OF TYPICAL RK 7156 MAGNETRON- 5700 Mc

LOAD AND LINE LENGTH CONSIDERATIONS

Operation of the RK-7156 into a line exceeding a critical length and terminated in an impedance different from the line gives rise to undesirable phenomena collectively termed long line effects. Tuner curve discontinuities and spectrum broadening are samples of the associated results. Figure 7 shows the line length and VSWR recommended for use with the RK-7156. Although the curves apply specifically to an operating frequency of 5650 Mc, they do not change significantly at other frequencies in the tuning range. The critical conditions of frequency skip, where breaks in the tuning curve first appear depend somewhat on the pulling figure of individual tubes. Operation within the recommended region indicated on the figure will yield satisfactory operation of all RK-7156 magnetrons. An extensive treatment of long line effects is beyond the scope of this publication. Additional information may be obtained on request from the Applications Engineering Dept., Microwave & Power Tube Operations, Raytheon Mfg. Company.

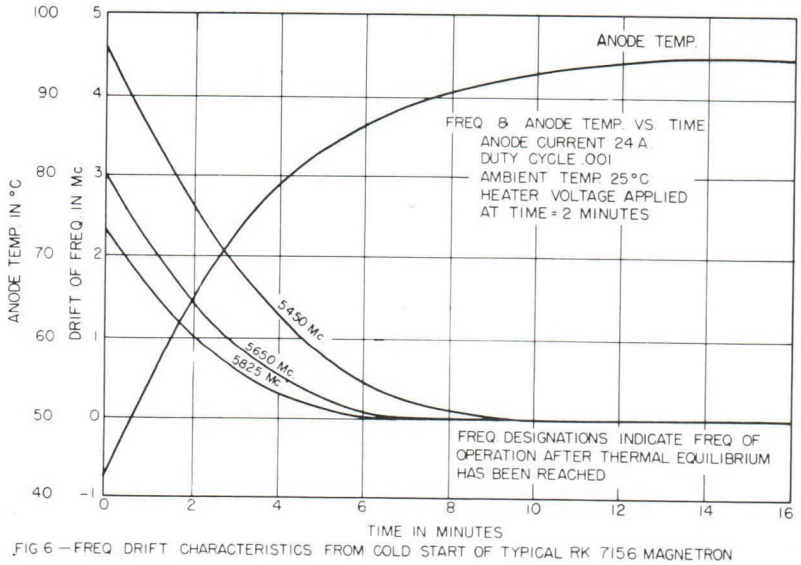

FIG 6 — FREQ. DRIFT CHARACTERISTICS FROM COLD START OF TYPICAL RK 7156 MAGNETRON

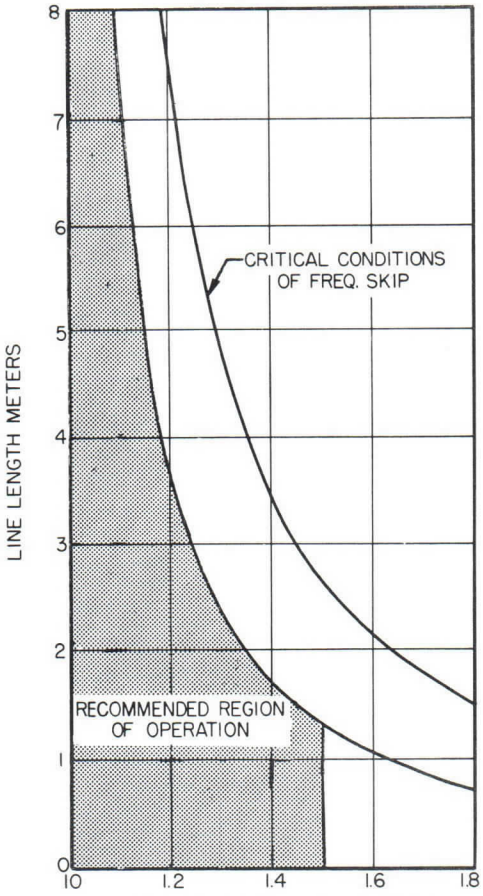

FIG. 7- RK 7156 LOAD & LINE LENGTH CONSIDERATIONS 1"x 2" WAVE GUIDE

COOLING

The cooling air stream for the RK-7156 should be directed to the air inlet of the radiator through a close fitting duct. Operating anode temperatures below 90°C are recommended although temperatures as high as 120°C can be tolerated.

Figure 8 shows the relationship between air flow (ft^3/min.) and back pressure (inches H_2O). Figure 9 shows anode temperature as a function of rate of air flow over the radiator at four values of power input. Tests were made at 30 in. Hg and an ambient temperature of 25°C. Higher ambient temperatures will result in correspondingly higher anode temperatures.

Use of a close fitting duct can be avoided if a compensating increase in rate of air flow is made.

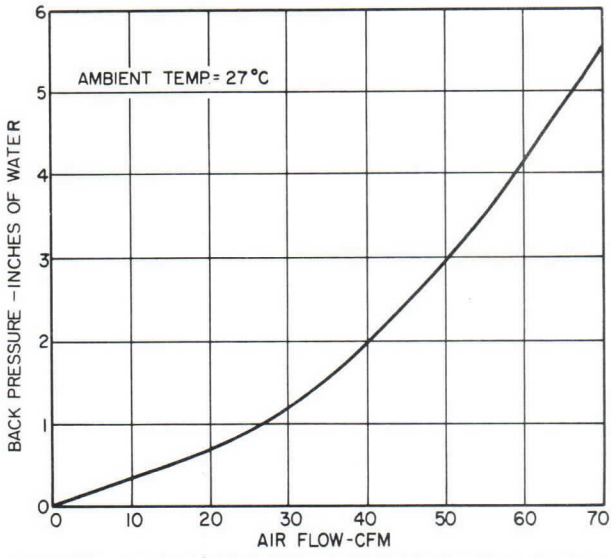

FIG. 8- COOLING FIN CHARACTERISTICS OF TYPICAL RK 7156 MAGNETRON

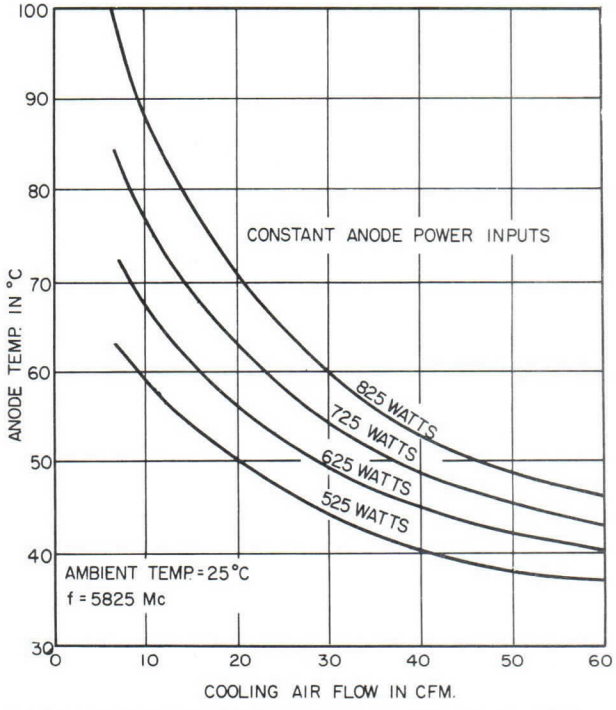

FIG. 9- COOLING CHARACTERISTICS OF TYPICAL RK 7156 MAGNETRON

DETAILED MECHANICAL INFORMATION

OUTLINE DRAWING

The detailed mechanical dimensions are given in Figure 11. These dimensions should be used in designing a mechanical layout for an equipment rather than the dimensions of a sample tube.

INSTALLATION & HANDLING PRECAUTIONS

The high voltage bushing and output window are protected by guard covers during shipment. These covers must be removed before the tube is installed in its associated equipment. The bushing or output window must not be subjected to any mechanical strain in the handling or mounting of the magnetron.

Care should be taken to keep magnetic material at least 12 inches away from the magnets, since deterioration of the magnetic field results in low power and instability.

Unnecessary jarring of the tube must be avoided. Although a packaged instrument lends the appearance of great structural strength, it is in reality quite fragile. The shocks of careless handling may easily exceed the maximum allowable shock rating.

MOUNTING

The tube is mounted within the equipment by four ¼ inch bolts passed through the four clearance holes of the mounting plate. The tube may be mounted with the longitudinal axis of the cathode high voltage bushing in any position.

ELECTRICAL CONNECTIONS

Electrical input connections are made to the frame of the tube and to two flexible leads terminated in lugs with clearance holes for #10-32 screws. Positive high voltage is grounded to the frame, preferably the mounting plate. Both flexible leads project radially from the cathode high voltage bushing. The lead at the extreme end of the bushing is connected to the heater power supply; the other, identified by a brown band, serves as a common lead for the remaining heater connection and the negative high voltage cathode terminal.

COUPLING & PRESSURIZATION

The load should be attached to the RK-7156 output system through standard 1 x 2 inch waveguide equipped with a type UG148B/U choke flange. The eight tapped holes of the choke flange should be drilled to provide clearance for #10-32 screws. The output section of the magnetron should not be used to support either the weight of the tube or that of the load.

The RK-7156 magnetron is intended for operation at the barometric pressure common at sea level. Electrical breakdown across the cathode high voltage bushing may occur at appreciably lower pressures. If sustained arcing in the waveguide occurs, it will generally move along the guide towards the output window of the tube, and may result in failure of the window. To minimize the possibility of arcing in the guide, and to achieve optimum tube performance, the VSWR in the guide should be kept as low as possible; VSWR values greater than 1.5/1 are not recommended.

TUNER CHARACTERISTICS

Approximately 13 turns of the tuner spline, at an applied torque of 1½ inch lbs., are required to tune the RK-7156 through its frequency range. Internal mechanical tuner stops designed to withstand a torque of 200 inch ounces allow a slightly wider tuning range than specified, but operation out of the specified band is not recommended. See Figure 10.

Further information on the operation and capabilities of this and other type magnetrons may be obtained on request from the Applications Engineering Department, Microwave & Power Tube Operations, Raytheon Manufacturing Company, Waltham, Mass.

TUNABLE PULSED-TYPE MAGNETRON

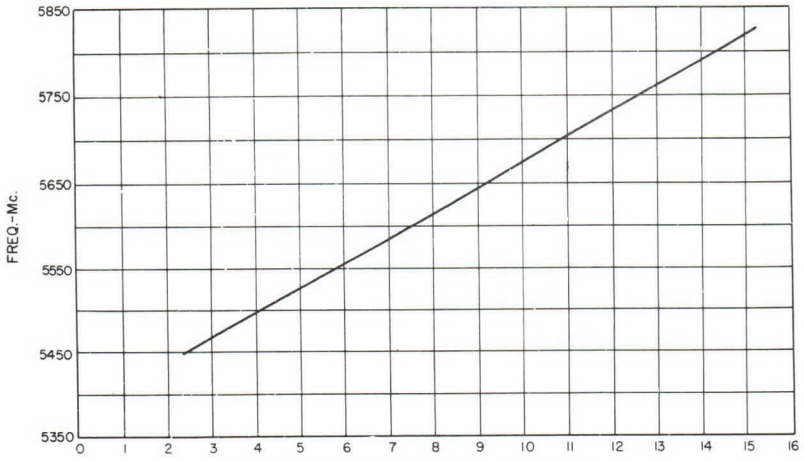

FIG. 10 – TUNING CHARACTERISTICS OF TYPICAL RK 7156 MAGNETRON

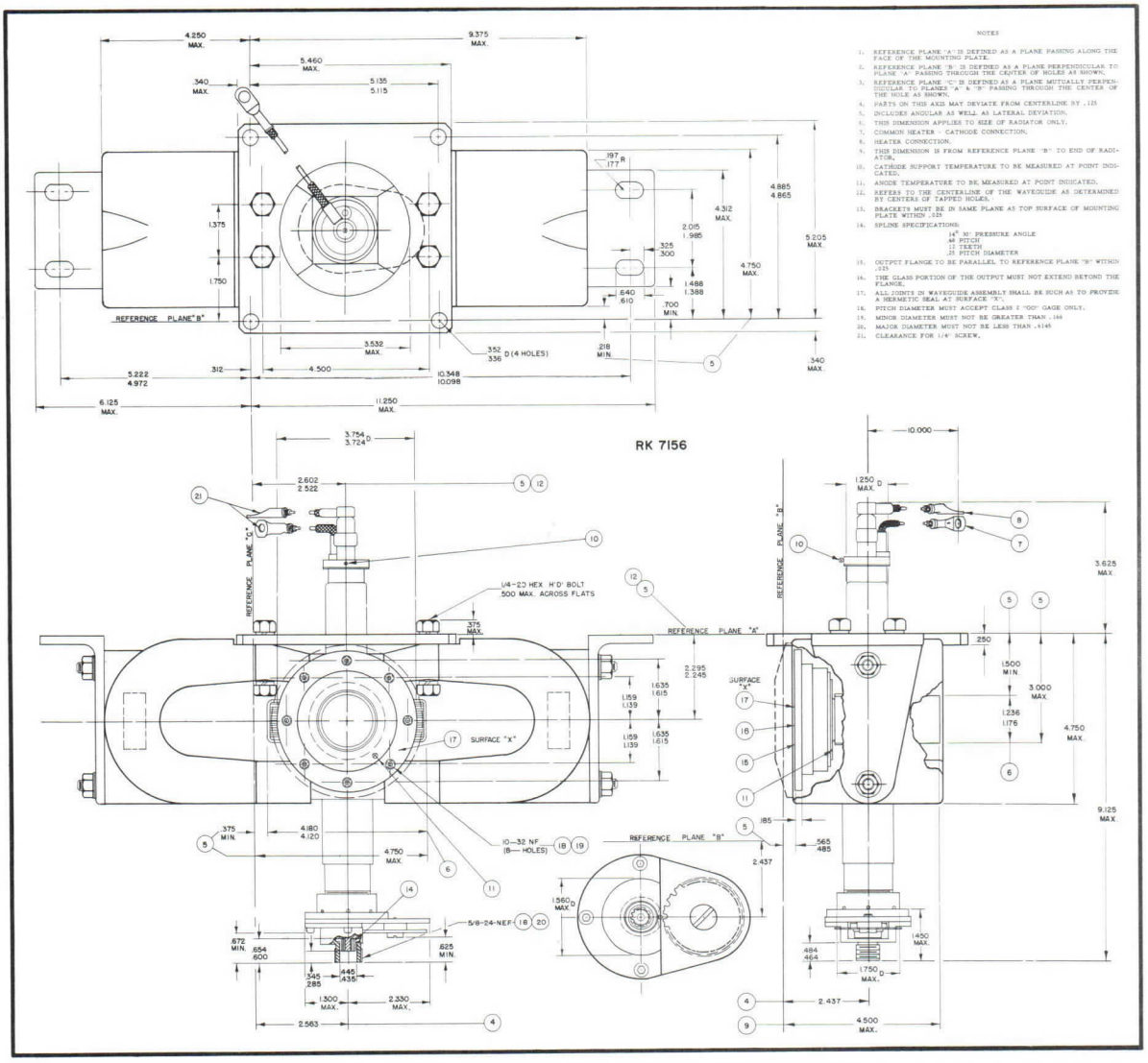

The technical information on this data sheet is of a proprietory nature and is furnished as a customer service for private use only.

RK 7449 **PRELIMINARY DATA SHEET**

RAYTHEON *Excellence in Electronics*

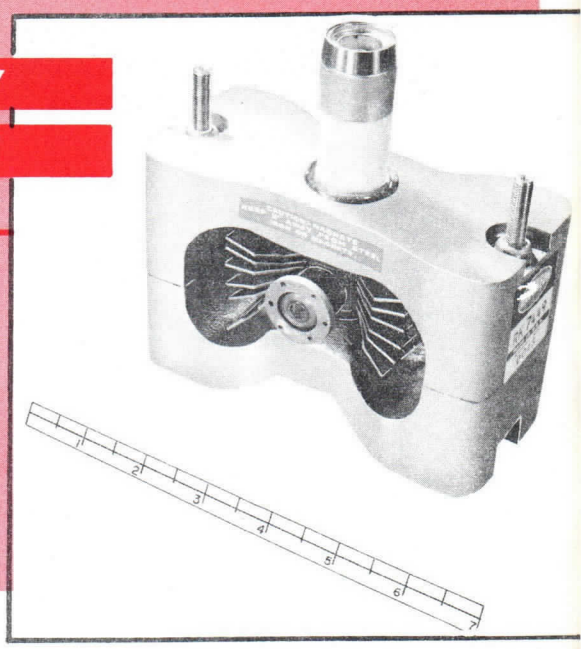

RK 7449

GENERAL DESCRIPTION

The RK7449 magnetron is a ruggedized, fixed frequency, pulsed-type oscillator operating in the frequency region of 23,700 to 24,300 megacycles, with a minimum power output of 45.0 kilowatts. It is an integral magnet, waveguide output type tube requiring forced air cooling.

The RK7449 is designed to operate while being subjected to vibration frequencies of 20 to 2000 c.p.s. at a constant acceleration of 30 G, (below 54 c.p.s. the maximum total excursion is 0.2 inches). It will also withstand 50 G shock acceleration on three mutually perpendicular axes.

Mechanical Data

Mounting Position	Any
Net Weight	7.5 Lbs.
Cooling	Forced Air
Pressurization (Input)	Required below 10 psia
Pressurization (Output)	Required (40 psia min.)

Electrical Data

Heater Voltage-Preheat/90 sec	5.0 Volts
Heater Current at 5.0 Volts	2.6-3.2 Amperes
Voltage Rise Time	0.02 usec Min.
R.F. Bandwidth	2.0/tpc Max.
Maximum V.S.W.R.	1.5

Typical Operation

Pulse Duration	0.02 to 0.09 usec
Duty Cycle	0.0003
Peak Anode Current	15 Amperes
Peak Power Output	55 kilowatts
Peak Anode Voltage	14 kilovolts

Reliable operation and maximum magnetron life can be achieved only if the overall radar transmitter is designed with the magnetron characteristics clearly in mind. This preliminary Data Sheet is intended as an introduction to this type magnetron and not as an absolute guide to users. Inquiries on this magnetron and its application should be directed to the Applications Engineering Department at Raytheon Company, Waltham, Massachusetts.

The specifications for this tube have not been finalized. The tube is being manufactured in limited quantities and is available for engineering analysis purposes only. This engineering information and/or delivery of sample tubes do not imply availability of tubes with the same electrical and/or mechanical characteristics. Changes in ratings and/ or dimensions may be made at our discretion as deemed advisable by manufacturing experience or other considerations. For current information concerning this tube contact the nearest Microwave and Power Tube Regional Sales Representative.

RK7449 ELECTRON TUBE OUTLINE DRAWING

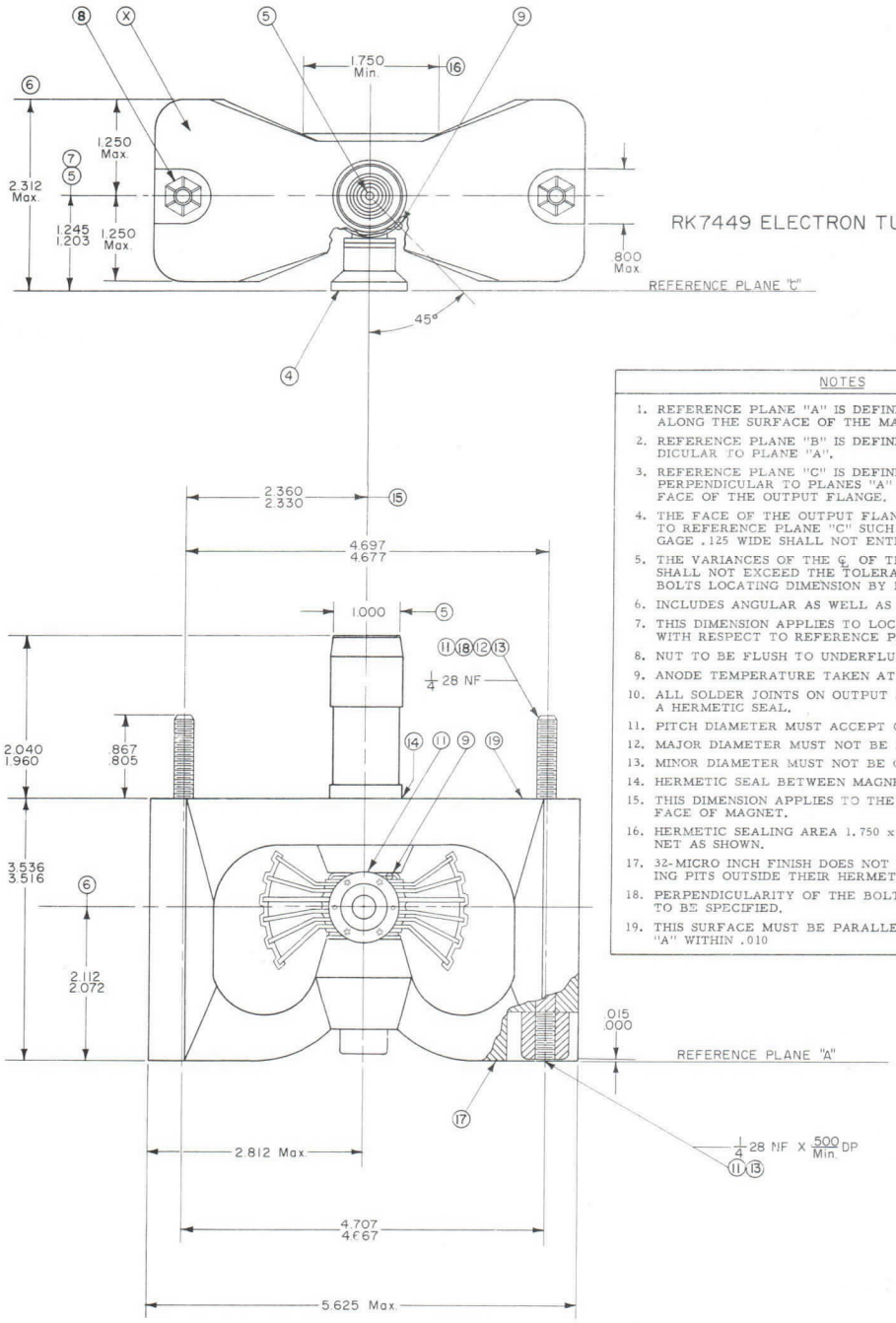

NOTES

1. REFERENCE PLANE "A" IS DEFINED AS A PLANE PASSING ALONG THE SURFACE OF THE MAGNET AS SHOWN.
2. REFERENCE PLANE "B" IS DEFINED AS A PLANE PERPENDICULAR TO PLANE "A".
3. REFERENCE PLANE "C" IS DEFINED AS A PLANE MUTUALLY PERPENDICULAR TO PLANES "A" & "B" PASSING ALONG THE FACE OF THE OUTPUT FLANGE.
4. THE FACE OF THE OUTPUT FLANGE MUST BE PARALLEL TO REFERENCE PLANE "C" SUCH THAT A .010 THICKNESS GAGE .125 WIDE SHALL NOT ENTER.
5. THE VARIANCES OF THE ℄ OF THE CATHODE BUSHING SHALL NOT EXCEED THE TOLERANCES OF THE MAGNET BOLTS LOCATING DIMENSION BY MORE THAN .0325
6. INCLUDES ANGULAR AS WELL AS LATERAL DEVIATION.
7. THIS DIMENSION APPLIES TO LOCATION OF MOUNTING BOLTS WITH RESPECT TO REFERENCE PLANE "C".
8. NUT TO BE FLUSH TO UNDERFLUSH WITH SURFACE "X".
9. ANODE TEMPERATURE TAKEN AT THIS POINT.
10. ALL SOLDER JOINTS ON OUTPUT SECTION SHALL PROVIDE A HERMETIC SEAL.
11. PITCH DIAMETER MUST ACCEPT CLASS 2 GO GAGE ONLY.
12. MAJOR DIAMETER MUST NOT BE LESS THAN .240
13. MINOR DIAMETER MUST NOT BE GREATER THAN .221
14. HERMETIC SEAL BETWEEN MAGNET AND CATHODE POLE.
15. THIS DIMENSION APPLIES TO THE AXIS OF CATHODE AT SURFACE OF MAGNET.
16. HERMETIC SEALING AREA 1.750 x 1.750 ON FACE OF MAGNET AS SHOWN.
17. 32-MICRO INCH FINISH DOES NOT APPLY TO MINUTE CASTING PITS OUTSIDE THEIR HERMETIC SEAL AREA.
18. PERPENDICULARITY OF THE BOLT TO THE MAGNET SURFACE TO BE SPECIFIED.
19. THIS SURFACE MUST BE PARALLEL TO REFERENCE PLANE "A" WITHIN .010

The technical information on this data sheet is of a proprietory nature and is furnished as a customer service for private use only.

RK 7452 **PRELIMINARY**

DATA SHEET

RAYTHEON *Excellence in Electronics*

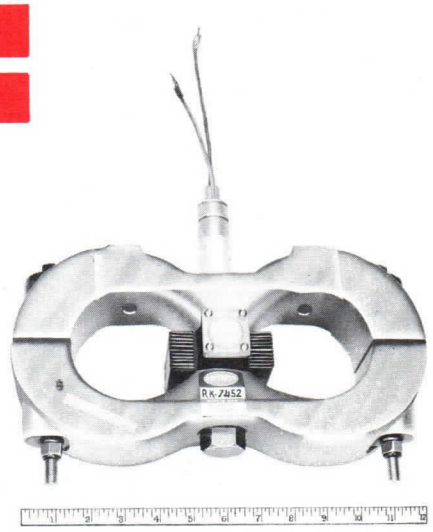

RK 7452

GENERAL DESCRIPTION

The RK7452 is a fixed frequency, pulsed-type oscillator operating within the frequency limits of 15,840 - 16,160 megacycles, with a minimum peak power output of 70 kilowatts. It is an integral magnet, waveguide output type tube requiring forced air cooling and is designed for coupling to standard RG 91 U waveguide (0.702 x 0.391).

Mechanical Data

Mounting Position	Cathode Vertical
Net Weight	25 Lbs.
Cooling	Forced Air
Output Pressurization	Required (25 psia Min.)

Electrical Data

Heater Voltage - Preheat/180 sec	4.8 Volts
Heater Current at 4.8 Volts	10.8 - 13.2 Amperes
Voltage Rise Time	.09 to .14 usec
R. F. Bandwidth	2.0/tpc Max.
Maximum V.S.W.R.	1.5

Typical Operation

Pulse Duration	0.25 usec
Duty Cycle	.00215
Average Anode Current	26 Milliamperes
Average Power Output	150 Watts (Min.)
Peak Anode Voltage	24 KV

Reliable operation and maximum magnetron life can be achieved only if the overall radar transmitter is designed with the magnetron characteristics clearly in mind. This preliminary Data Sheet is intended as an introduction to this type magnetron and not as an absolute guide to users. Inquiries on this magnetron and its application should be directed to the Applications Engineering Department at Raytheon Company, Waltham, Massachusetts.

The specifications for this tube have not been finalized. The tube is being manufactured in limited quantities and is available for engineering analysis purposes only. This engineering information and/or delivery of sample tubes do not imply availability of tubes with the same electrical and/or mechanical characteristics. Changes in ratings and/ or dimensions may be made at our discretion as deemed advisable by manufacturing experience or other considerations. For current information concerning this tube contact the nearest Microwave and Power Tube Regional Sales Representative.

OUTLINE DRAWING
ELECTRON TUBE
RK 7452

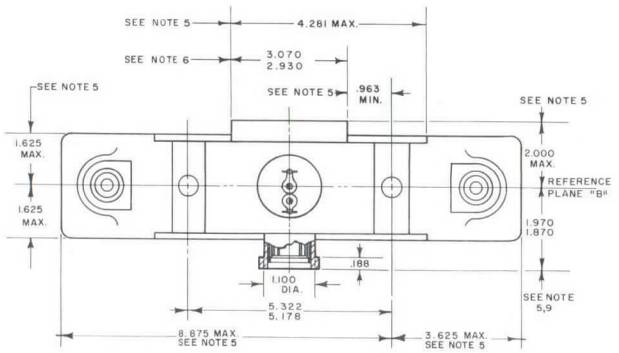

NOTES

1. REFERENCE PLANE "A" IS DEFINED AS A PLANE PASSING ALONG THE FINISHED SURFACE OF THE MAGNET AS SHOWN.
2. REFERENCE PLANE "B" IS DEFINED AS A PLANE PASSING THROUGH THE CENTERS OF THE MOUNTING HOLES AND PERPENDICULAR TO REFERENCE PLANE "A".
3. REFERENCE PLANE "C" IS DEFINED AS A PLANE PASSING THROUGH THE CENTER OF THE MOUNTING HOLE AND MUTUALLY PERPENDICULAR TO REFERENCE PLANES "A" AND "B".
4. BROWN PAINT TO IDENTIFY COMMON CATHODE CONNECTION, (OUTER TERMINAL).
5. TOLERANCE INCLUDES ANGULAR AS WELL AS LATERAL DEVIATION.
6. THESE DIMENSIONS APPLY TO RADIATOR SIZE ONLY.
7. PARTS ON THIS CENTERLINE MAY VARY BY 1/8".
8. THIS DIMENSION REFERS TO THE CENTERLINE OF TUBE.
9. SURFACE OF OUTPUT FLANGE TO BE PARALLEL TO REFERENCE PLANE "B" WITHIN .020".
10. TAPPED HOLES MUST BE PARALLEL TO REFERENCE PLANES WITHIN .030".
11. HEATER CONNECTION.
12. POINT AT WHICH TEMPERATURE SHALL BE MEASURED ON ANODE BODY.
13. MINIMUM DISTANCE FROM HIGH VOLTAGE TO GROUND SHOULD BE 1.500 THROUGH AIR AT ATMOSPHERIC PRESSURE.
14. ANODE COOLING FIN INLET DUCT FOR SUPPLYING AIR TO THE TUBE COOLING SYSTEM MUST BE SUCH AS TO INSURE DELIVERY OF AIR TO THE ENTIRE CROSS-SECTION OF THE INLET WITH MINIMUM SIDE LEAKAGE.
15. MAGNET FERRO-MAGNET MATERIALS MUST NOT BE PERMITTED AT ANYTIME CLOSER THAN 8 INCHES FROM THE MAGNET, EXCEPT AT THE ENDS WHERE THE CLEARANCE MAY BE 3 INCHES. ENERGIZED MAGNETS MUST NOT BE PERMITTED AT ANYTIME CLOSER THAN 12 INCHES FROM TUBE MAGNET.
16. WAVEGUIDE .622 x .311 I.D.
17. LONG AXIS OF WAVEGUIDE.
18. WAVEGUIDE CHOKE COUPLING FLANGE, MODIFIED UG-541/U. (SEE DETAIL) FIG. 3.)
19. ALL JOINTS OF WAVEGUIDE OUTPUT TO BE HERMETICALLY TIGHT. GASKET WITH "O" RING AN6227B-18 AT THIS SURFACE FOR TEST.
20. FOUR #6-32 SCREWS REQUIRED TO ATTACH WAVEGUIDE CHOKE TO TUBE.
21. HEATER CONNECTION (CENTER TERMINAL). HIGH VOLTAGE ELECTRODE CONNECTION. (OUTSIDE TERMINAL)
22. MOUNTING HOLES. ENTIRE SUPPORT AND FASTENING OF TUBE TO BE EFFECTED FROM THESE HOLES. SEE NOTE 23.
23. THE ANODE MUST BE GROUNDED EFFECTIVELY SUCH AS THROUGH THE MOUNTING BOLTS.
24. FLEXIBLE LEADS CONNECTING TERMINALS FIT #10 SCREW.

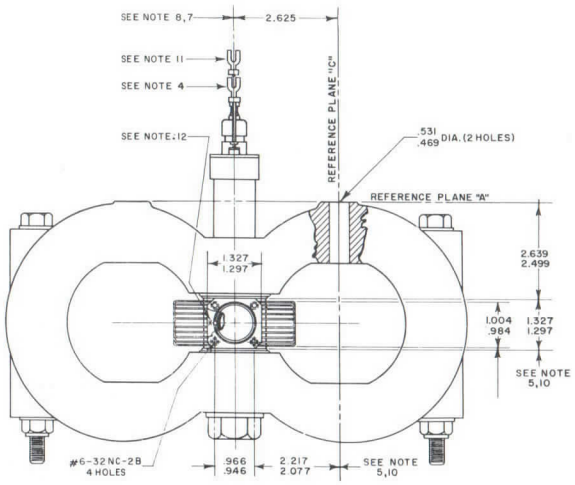

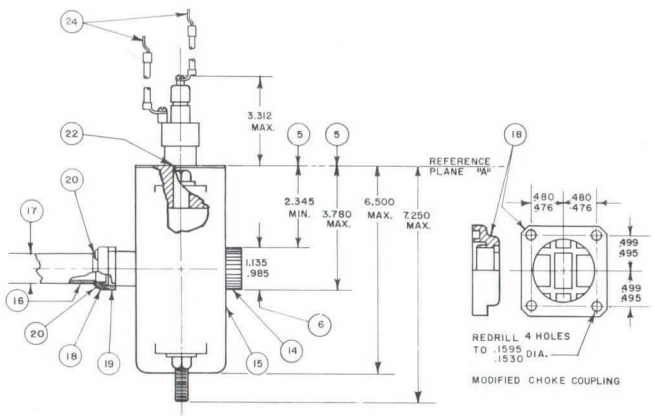

FOR NUMBERS IN BALOONS REFER TO NOTES

RAYTHEON

Excellence in Electronics

preliminary
data
sheet

TYPE RK7461

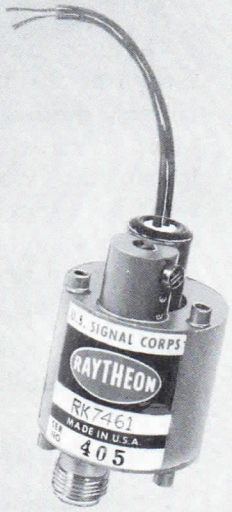

PULSED-TYPE MAGNETRON OSCILLATOR

GENERAL DESCRIPTION

The RK7461 is a mechanically tunable pulsed type magnetron oscillator delivering a peak power output of 60 to 120 watts. It is capable of being tuned to any frequency within the 9300 to 9500 Mc range.

The RK7461 is small (1.25" dia. × 2.5") lightweight (6 ounces) and has been designed primarily for missile beacon transponder applications where extreme environmental conditions are encountered. The RK7461 is capable of sustaining shock acceleration of 500G and vibrational acceleration during operation of 15G at frequencies up to 2000 cycles per second.

GENERAL PRECAUTIONS

The precautions to be observed during the application of the RK7461 magnetron are the same as for any oscillator of this type. Experience has indicated that the areas where application problems frequently arise include the magnetron voltage pulse shape — particularly its rate of rise — the load VSWR, and anode current regulation. It is recommended that the Applications Engineering Department be consulted regarding the details of any contemplated equipment design utilizing the RK7461.

GENERAL CHARACTERISTICS

ELECTRICAL

Heater Voltage — Preheat and Operate	5.0 to 5.5 volts
Heater Current	0.65 Ampere at 5.0 Volts
Minimum Preheat Time	45 seconds
Temperature Coefficient	±0.1 Mc/°C Maximum
Operational Altitude	50,000 Feet Maximum
Operational Vibration Frequency Deviation at 15G, 20 to 2000 cps	3.0/tp Mc, Max. Bandwidth
Frequency Shift due to constant acceleration 500G	2.5 Mc Maximum

Typical Operation

Pulse Duration	0.35 to 1.0 Microseconds
Duty Cycle	.0001 to .002
Peak Anode Current	0.95 Amperes
Peak Anode Voltage	1.35 to 1.55 Kilovolts
Peak Power Output	60 to 120 Watts
Voltage Rise Time (20 to 85%)	0.11 us

Printed in U.S.A.

MICROWAVE AND POWER TUBE DIVISION

RAYTHEON COMPANY

FOUNDRY AVE., WALTHAM 54, MASS.

DETAILED MECHANICAL INFORMATION

MOUNTING

The tube may be mounted in any position by means of the tapped mounting studs or by a suitably designed holder made of non-ferrous material which will utilize the diameter of the tube for support. When mounted by studs, both ends must be secured in order for the tube to meet environmental requirements. Compression, rather than tension, should be put on the studs when mounted in this manner.

Magnetic material should not be mounted within 2 inches of the tube.

INPUT CONNECTIONS

Two flexible leads approximately 5 inches long provide connections for heater voltage and pulse voltage. One lead is black, the other red. The red lead is the common heater-cathode to which negative high voltage should be connected. Ground return is accomplished through the output connector or the mounting screws.

R.F. OUTPUT COUPLING

Mates with TNC male coaxial fitting or TNC to ½″ × 1″ O.D. Waveguide Transition.

TUNER

The tuning mechanism is actuated by a screwdriver adjustable cam. Bristol set screws are provided to lock the tuner in position. The tuner must be locked prior to the subjection of the tube to environmental conditions. Care should be taken not to mechanically tune the tube beyond the extremes of its normal operating range, 9300 to 9500. Permanent damage may result from attempting to tune the tube with the tuner locked.

DIMENSIONS

Figure 1 is the mechanical outline drawing.

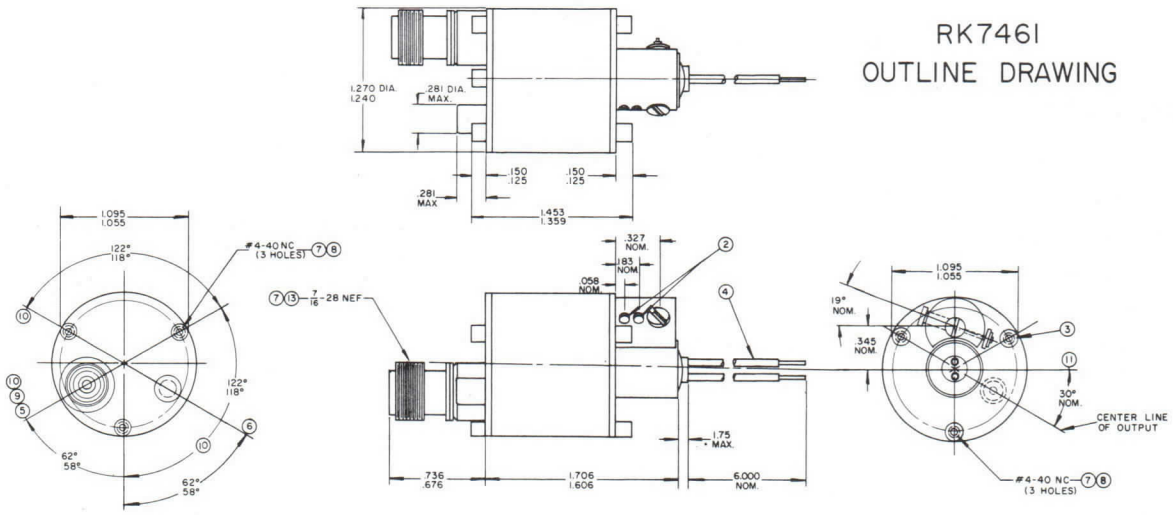

NOTES

1. NON-MAGNETIC TOOLS MUST BE USED WHEN INSPECTING THIS TUBE
2. LOCATION OF #2-56 SET SCREWS (NO. 2-4 FLUTE MULTIPLE-SPLINE SOCKET SCREW KEY TO BE USED)
3. TAPPED HOLE IN MOUNTING NUT TO BE USED FOR MEASURING ANODE TEMPERATURE
4. RED LEAD IS COMMON CATHODE CONNECTION
5. CENTER OF OUTPUT TO LIE ON .685-.747 DIAMETER CIRCLE AS SHOWN
6. CENTER OF EXHAUST GUARD TO LIE ON .789-.851 DIAMETER CIRCLE AS SHOWN
7. PITCH DIAMETER MUST ACCEPT CLASS 2 GO GAUGE ONLY
8. MINOR DIAMETER MUST NOT BE GREATER THAN .0960
9. LOCATION OF MOUNTING NUTS WITH RESPECT TO OUTPUT
10. LOCATION OF MOUNTING NUTS ON OPPOSITE END TO BE WITHIN 3° OF POSITION OF MOUNTING NUTS SHOWN
11. THIS PLANE PASSES THROUGH THE CENTER OF DIAMETER "XX" 30° FROM OUTPUT AS SHOWN
12. ONE OF THE FOLLOWING GENERAL RADIO STANDARD FITTINGS OR THEIR EQUIVALENT SHOULD BE USED TO ATTACH THE LOAD TO THE MAGNETRON:
    GRFF #166A (FITTING) WITH RG55 OR RG58 (CABLE)
    GRFF #2014 (FITTING) WITH RG9B OR RG87A (CABLE)
13. MAJOR DIAMETER MUST NOT BE LESS THAN .4275

Figure 1

Printed in U.S.A.

MICROWAVE AND POWER TUBE DIVISION

RAYTHEON COMPANY

FOUNDRY AVE., WALTHAM 54, MASS.

The technical information on this data sheet is of a proprietory nature and is furnished as a customer service for private use only.

RK 7484 **PRELIMINARY**

DATA SHEET

RAYTHEON *Excellence in Electronics*

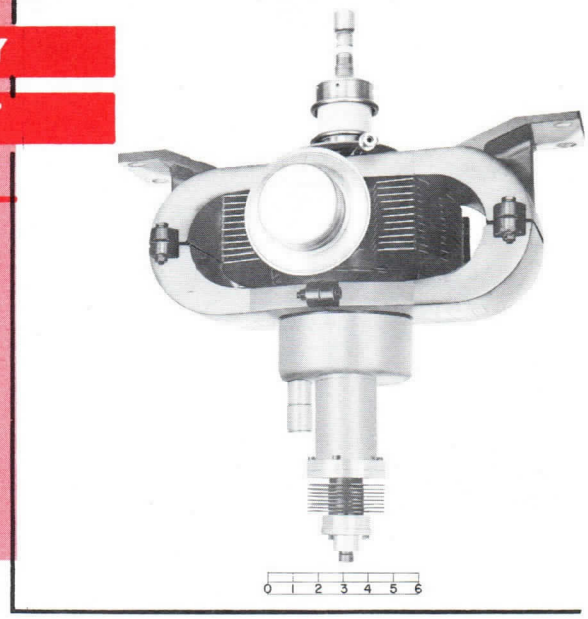

RK 7484

GENERAL DESCRIPTION

The RK7484/QK470 magnetron is a tuneable, high power, pulsed oscillator which is capable of delivering a minimum of 2.0 megawatts peak power and 2000 watts average power. The RK7484/QK470 is tuneable within the frequency region of 1250-1350 megacycles. The tube requires forced air cooling, is of the integral magnet type and the r.f. output is designed to couple directly to standard 3" x 6" waveguide.

The RK7484/QK470 magnetron may be used in MTI radar systems which require the generation of r.f. pulse energy that is relatively free from time, frequency, and amplitude jitter.

Mechanical Data

Mounting Position	Cathode Vertical
Net Weight	90 Pounds
Cooling	Forced Air
Input Bushing	Oil Immersed
Output Pressurization	25 p.s.i.a. Min.

Typical Electrical Data

Heater Current - Preheat	75 Amperes
Heater Voltage @ 75 A, 600 Sec.	2.7 Volts
Current Pulse Width (tpc)	2.0 usec
Duty Cycle	.001
Peak Anode Voltage	60 Kilovolts
Voltage Rise Time	0.55-0.65 usec
Peak Anode Current	90 Amperes
Maximum VSWR	1.5
Average Power Output	2250 Watts
R. F. Bandwidth - 1.5 VSWR	2 / tpc Max.
Life - 1.5 VSWR, Off-On Cycled	300 Hours
	1000 Hours Objective

Reliable operation and optimum magnetron life can be achieved only if the overall radar transmitter is designed with the magnetron characteristics and peculiarities clearly in mind. This preliminary data sheet is intended only to acquaint the reader with the basic characteristics of the magnetrons and should not be used as an absolute guide.

The specifications for this tube have not been finalized. The tube is being manufactured in limited quantities and is available for engineering analysis purposes only. This engineering information and/or delivery of sample tubes do not imply availability of tubes with the same electrical and/or mechanical characteristics. Changes in ratings and/ or dimensions may be made at our discretion as deemed advisable by manufacturing experience or other considerations. For current information concerning this tube contact the nearest Microwave and Power Tube Regional Sales Representative.

RAYTHEON

Excellence in Electronics

preliminary data sheet

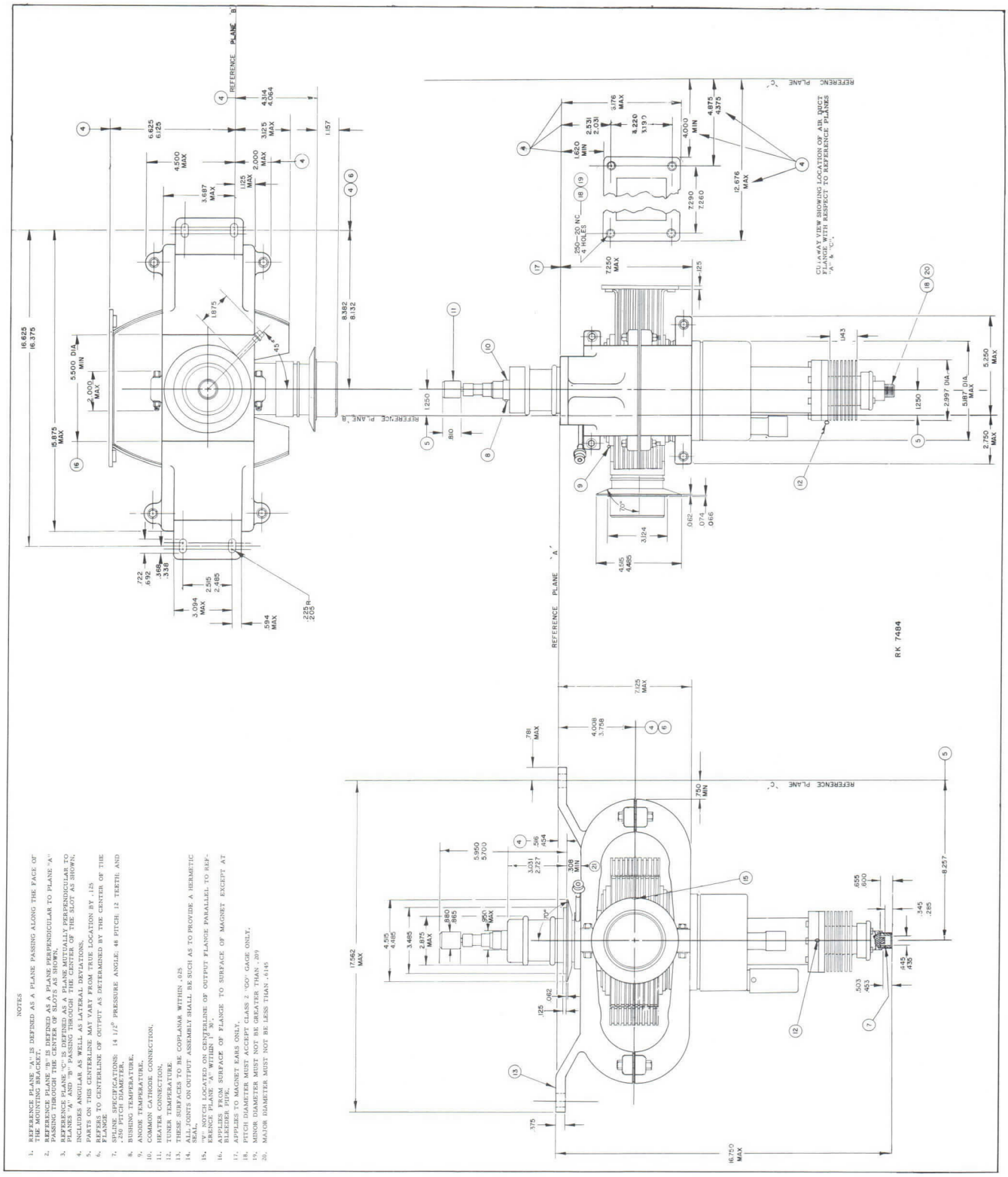

NOTES

1. REFERENCE PLANE "A" IS DEFINED AS A PLANE PASSING ALONG THE FACE OF THE MOUNTING BRACKET.
2. REFERENCE PLANE "B" IS DEFINED AS A PLANE PERPENDICULAR TO PLANE "A" PASSING THROUGH THE CENTER OF SLOTS AS SHOWN.
3. REFERENCE PLANE "C" IS DEFINED AS A PLANE PERPENDICULAR TO PLANES "A" AND "B" PASSING THROUGH THE CENTER OF THE SLOT AS SHOWN.
4. INCLUDES ANGULAR AS WELL AS LATERAL DEVIATIONS.
5. PARTS ON THIS CENTERLINE MAY VARY FROM TRUE LOCATION BY .125
6. REFERS TO CENTERLINE OF OUTPUT AS DETERMINED BY THE CENTER OF THE FLANGE.
7. SPLINE SPECIFICATIONS: 14 1/2° PRESSURE ANGLE, 48 PITCH, 12 TEETH, AND .250 PITCH DIAMETER.
8. BUSHING TEMPERATURE.
9. ANODE TEMPERATURE.
10. COMMON CATHODE CONNECTION.
11. HEATER CONNECTION.
12. TUNER TO BE SUPPLIED.
13. THESE SURFACES TO BE COPLANAR WITHIN .035
14. ALL JOINTS ON OUTPUT ASSEMBLY SHALL BE SUCH AS TO PROVIDE A HERMETIC SEAL.
15. "V" NOTCH LOCATED ON CENTERLINE OF OUTPUT FLANGE PARALLEL TO REFERENCE PLANE "A" WITHIN 5°.
16. APPLIES FROM SURFACE OF FLANGE TO SURFACE OF MAGNET EXCEPT AT BLEEDER PIPE.
17. APPLIES TO MAGNET EARS ONLY.
18. PITCH DIAMETER MUST ACCEPT CLASS 2 "GO" GAGE ONLY.
19. MINOR DIAMETER MUST NOT BE GREATER THAN .209
20. MAJOR DIAMETER MUST NOT BE LESS THAN .6145

The technical information on this data sheet is of a proprietory nature and is furnished as a customer service for private use only.

RK7521

PRELIMINARY

DATA SHEET

RAYTHEON *Excellence in Electronics*



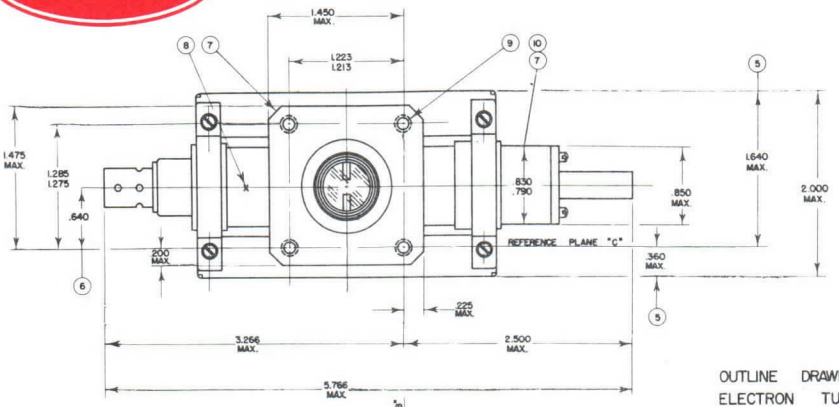

OUTLINE DRAWING
ELECTRON TUBE
QK797/RK7521

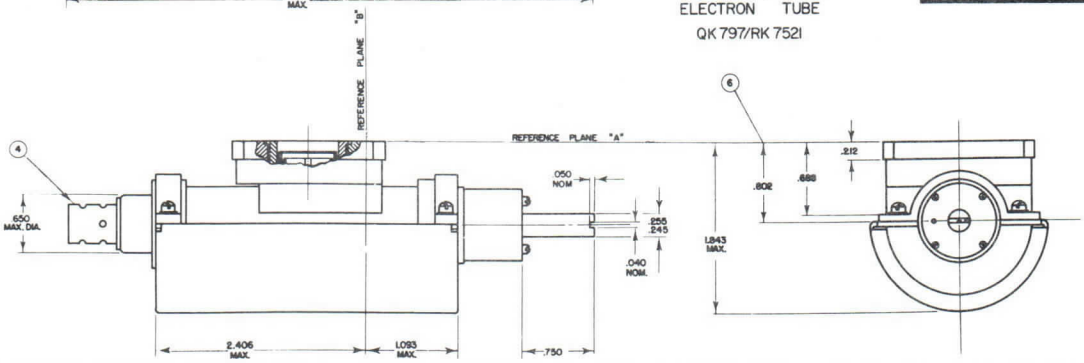

NOTES

1. REFERENCE PLANE "A" IS DEFINED AS A PLANE PASSING ALONG THE FACE OF THE WAVEGUIDE FLANGE.
2. REFERENCE PLANE "B" IS DEFINED AS A PLANE PERPENDICULAR TO PLANE "A" PASSING THROUGH THE CENTER OF HOLES AS SHOWN.
3. REFERENCE PLANE "C" IS DEFINED AS A PLANE MUTUALLY PERPENDICULAR TO PLANES "A" & "B" PASSING THROUGH CENTER OF THE HOLE AS SHOWN.
4. AN-UG 290 A/U BNC PANEL JACK.
5. INCLUDES ANGULAR AS WELL AS LATERAL DEVIATION.
6. PARTS ON THIS CENTERLINE MAY VARY FROM TRUE LOCATION BY 1/8 MAXIMUM.
7. TO BE COUPLED TO A AN-UG-60 A/U STANDARD CHOKE FLANGE COUPLING.
8. MEASURE ANODE TEMPERATURE AT THIS POINT.
9. PITCH DIAMETER TO ACCEPT #8-32 NC "GO" GAUGE ONLY. MINOR DIAMETER OF THREAD .140 MAXIMUM.
10. APPLIES TO O.D. OF HOUSING EXCLUSIVE OF CAP

GENERAL DESCRIPTION

The RK7521 is a small low power pulsed magnetron tunable over the range 8900 to 9400 megacycles. The RK7521 is designed primarily for small portable ground equipment or aircraft equipment.

MECHANICAL DATA

Magnet	Integral
Mounting Position	Any
Weight	Less than 1.5 Pounds
Cooling	None Required
Output Coupling	Mates with UG40A/U
Input Connections	BNC

TYPICAL ELECTRICAL DATA

Heater Voltage	5 Volts
Heater Current	.45 Amperes
Pulse Duration	.2 Microseconds
Duty Cycle	.001
Peak Anode Voltage	4.3 Kilovolts
Voltage Rise Time	.09 Microseconds
Peak Anode Current	.95 Amperes
Peak Power Output	950 Watts Minimum
RF Bandwidth	2.2 tpc
Life	300 Hours Minimum

The specifications for this tube have not been finalized. The tube is being manufactured in limited quantities and is available for engineering analysis purposes only. This engineering information and/or delivery of sample tubes do not imply availability of tubes with the same electrical and/or mechanical characteristics. Changes in ratings and/ or dimensions may be made at our discretion as deemed advisable by manufacturing experience or other considerations. For current information concerning this tube contact the nearest Microwave and Power Tube Regional Sales Representative.

The technical information on this data sheet is of a proprietory nature and is furnished as a customer service for private use only.

RK 7528 **PRELIMINARY DATA SHEET**

RAYTHEON *Excellence in Electronics*

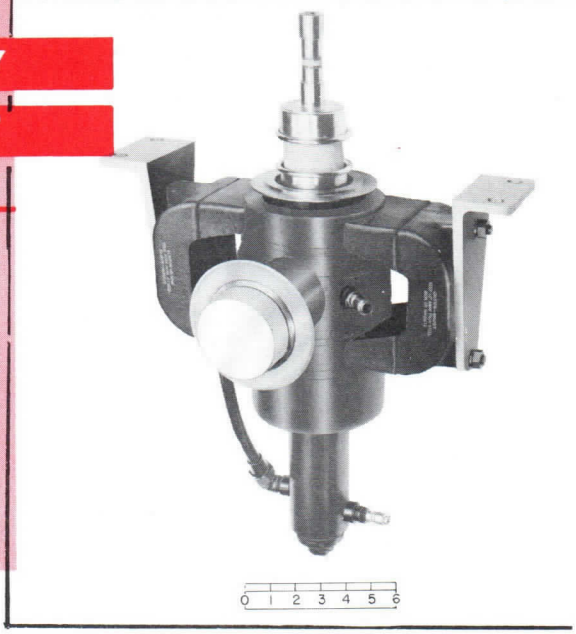

RK 7528

GENERAL DESCRIPTION

The RK7528/QK264 magnetron is a tuneable, high power, pulsed oscillator which is capable of delivering a minimum of 2.0 megawatts peak power and 2400 watts average power. The RK7528/QK264 is tuneable within the frequency region of 1250-1350 megacycles. The tube requires liquid cooling, is of the integral magnet type and the r.f. output is designed to couple directly to standard 3" x 6" waveguide.

The RK7528/QK264 magnetron may be used in MTI radar systems which require the generation of r.f. pulse energy that is relatively free from time, frequency, and amplitude jitter.

The generated power of this magnetron may be increased by 10-15% and satisfactory life still maintained by operating the tube into a 1.5 VSWR with the phase adjusted to the "in sink" position.

Mechanical Data

Mounting Position	Cathode Vertical
Net Weight	70 Pounds
Cooling	Liquid
Input Bushing	Oil Immersed
Output Pressurization	25 p.s.i.a. Min.

Typical Electrical Data

Heater Current - Preheat	90 Amperes
Heater Voltage @ 90 A - 600 Sec.	3.7 Volts
Current. Pulse Width (tpc)	4.3 usec
Duty Cycle	.0012
Peak Anode Voltage	60 Kilovolts
Voltage Rise Time	0.55-0.65 usec
Peak Anode Current	90 Amperes
Maximum VSWR	1.5
Average Power Output	2650 Watts
R.F. Bandwidth	2.1/tpc Max.
Life - 1.5 VSWR, Off-On Cycled	250 Hrs., 500 Hrs. Objective

Reliable operation and optimum magnetron life can be achieved only if the overall radar transmitter is designed with the magnetron characteristics and peculiarities clearly in mind. This preliminary data sheet is intended only to acquaint the reader with the basic characteristics of the magnetrons and should not be used as an absolute guide.

The specifications for this tube have not been finalized. The tube is being manufactured in limited quantities and is available for engineering analysis purposes only. This engineering information and/or delivery of sample tubes do not imply availability of tubes with the same electrical and/or mechanical characteristics. Changes in ratings and/ or dimensions may be made at our discretion as deemed advisable by manufacturing experience or other considerations. For current information concerning this tube contact the nearest Microwave and Power Tube Regional Sales Representative.

RAYTHEON

Excellence in Electronics

preliminary data sheet

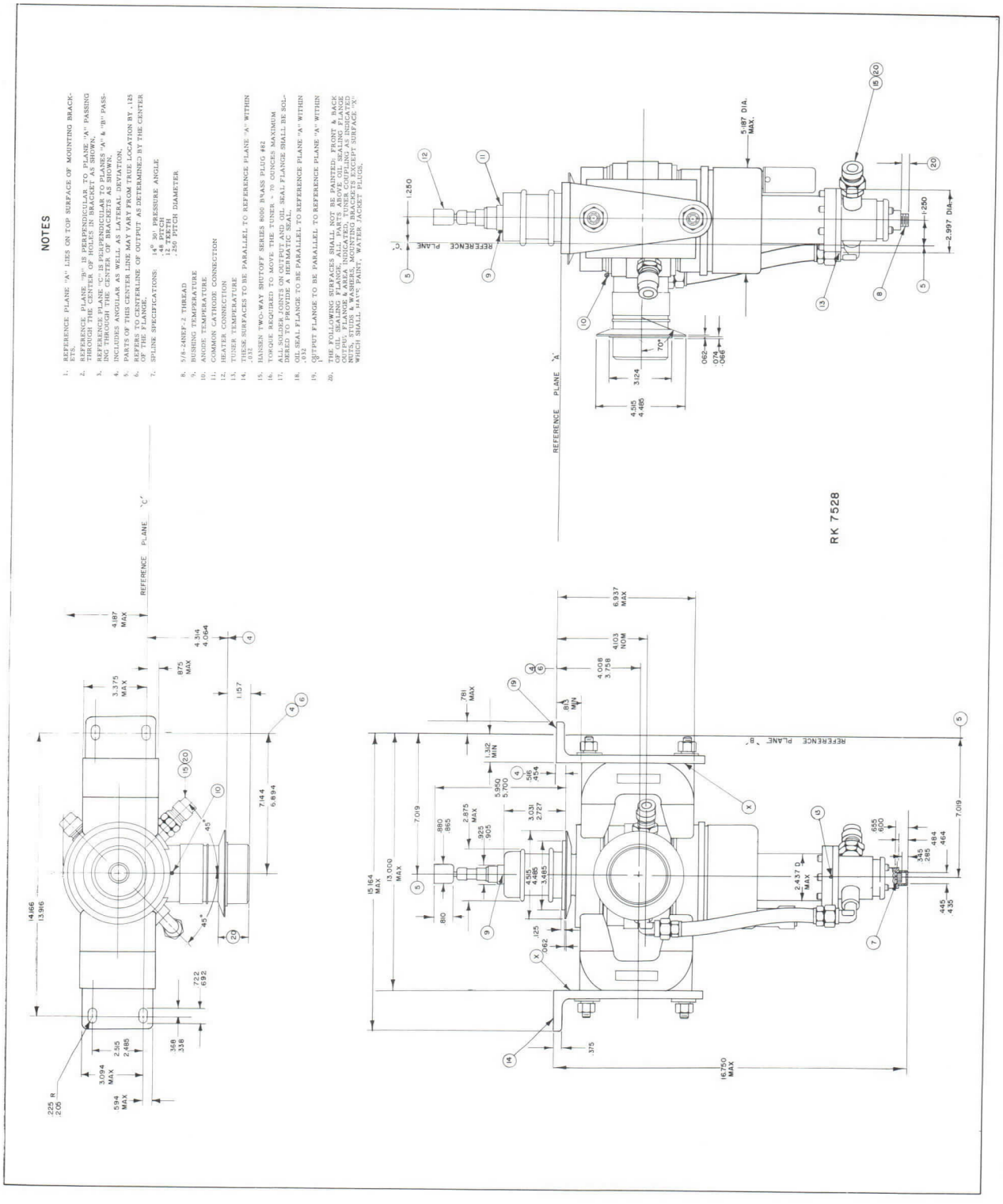

The technical information on this data sheet is of a proprietory nature and is furnished as a customer service for private use only.

RK 7529 **PRELIMINARY**

DATA SHEET

RAYTHEON *Excellence in Electronics*

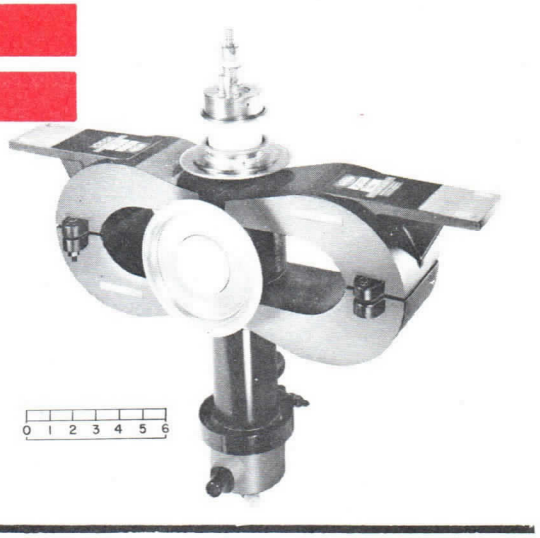

RK 7529

GENERAL DESCRIPTION

The RK7529 magnetron is a mechanically tunable, high power, pulsed-type oscillator which is capable of delivering a minimum of 3.5 megawatts peak power and 2520 watts average power. The RK7529 may be rapid hand or motor tuned to any desired frequency in the 2700 to 2850 megacycle region. It is an integral magnet, unipotential cathode type tube requiring liquid cooling, with an output designed to couple directly into a 1 1/2" x 3" waveguide.

This tube was designed to be interchangeable with the RK6410A/QK338A and at the present time is the highest power tunable S-band magnetron available.

Mechanical Data

Mounting Position	Cathode Vertical
Net Weight	66 lbs.
Cooling	Forced Liquid
Input Bushing	Oil Immersed
Pressurization (Output)	45 p.s.i.a. Min.

Typical Electrical Data

Heater Current (Preheat - 300 Sec.)	78 Amperes
Heater Voltage @ 78 Amperes	8.2 Volts
Pulse Duration (tpc)	2.0 usec
Peak Anode Voltage	62 Kilovolts
Peak Anode Current	115 Amperes
Average Power Output	2800 Watts
Voltage Rise Time	0.3 usec. Min.
Maximum VSWR	1.5
RF Bandwidth (@ 6.0 db)	3.0/tpc Max.
Life (1.5 VSWR, Cycled)	150 Hrs. Min.
	1000 Hrs. Min. Objective

Reliable operation and maximum magnetron life can be achieved only if the overall radar transmitter is designed with the magnetron characteristics and peculiarities clearly in mind. This preliminary Data Sheet is intended to serve as an introduction only and should not be used as an absolute guide to users. Detailed tube specifications are available on request, specific problems and applications should be directed to the Applications Engineering Department, Microwave and Power Tube Division, Raytheon Company, Waltham, Massachusetts.

The specifications for this tube have not been finalized. The tube is being manufactured in limited quantities and is available for engineering analysis purposes only. This engineering information and/or delivery of sample tubes do not imply availability of tubes with the same electrical and/or mechanical characteristics. Changes in ratings and/ or dimensions may be made at our discretion as deemed advisable by manufacturing experience or other considerations. For current information concerning this tube contact the nearest Microwave and Power Tube Regional Sales Representative.

RAYTHEON

Excellence in Electronics

preliminary data sheet

OUTLINE DRAWING
RK7529
ELECTRON TUBE

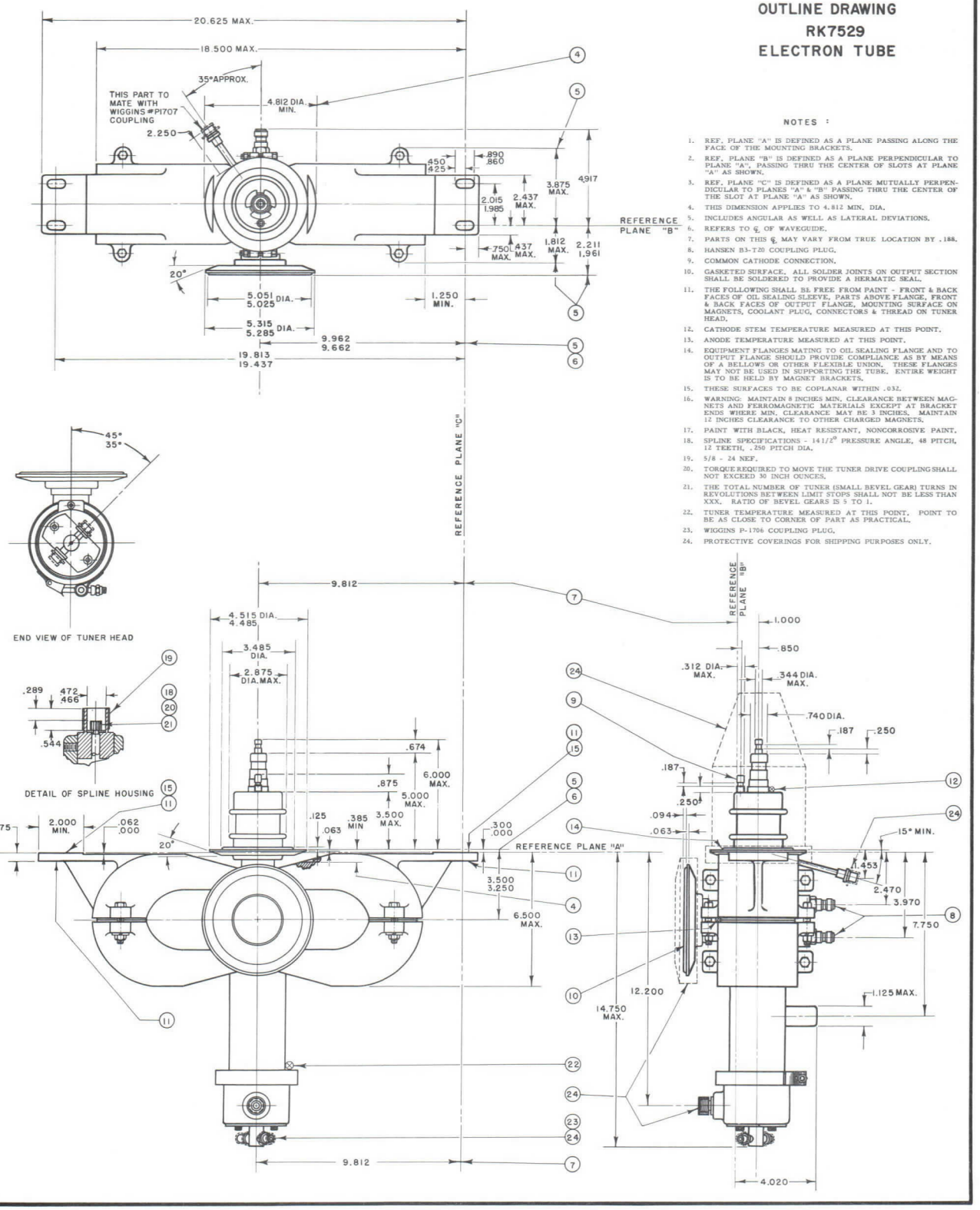

NOTES :

1. REF. PLANE "A" IS DEFINED AS A PLANE PASSING ALONG THE FACE OF THE MOUNTING BRACKETS.
2. REF. PLANE "B" IS DEFINED AS A PLANE PERPENDICULAR TO PLANE "A", PASSING THRU THE CENTER OF SLOTS AT PLANE "A" AS SHOWN.
3. REF. PLANE "C" IS DEFINED AS A PLANE MUTUALLY PERPENDICULAR TO PLANES "A" & "B" PASSING THRU THE CENTER OF THE SLOT AT PLANE "A" AS SHOWN.
4. THIS DIMENSION APPLIES TO 4.812 MIN. DIA.
5. INCLUDES ANGULAR AS WELL AS LATERAL DEVIATIONS.
6. REFERS TO ℄ OF WAVEGUIDE.
7. PARTS ON THIS ℄ MAY VARY FROM TRUE LOCATION BY .188.
8. HANSEN B3-T20 COUPLING PLUG.
9. COMMON CATHODE CONNECTION.
10. GASKETED SURFACE. ALL SOLDER JOINTS ON OUTPUT SECTION SHALL BE SOLDERED TO PROVIDE A HERMATIC SEAL.
11. THE FOLLOWING SHALL BE FREE FROM PAINT - FRONT & BACK FACES OF OIL SEALING SLEEVE, PARTS ABOVE FLANGE, FRONT & BACK FACES OF OUTPUT FLANGE, MOUNTING SURFACE ON MAGNETS, COOLANT PLUG, CONNECTORS & THREAD ON TUNER HEAD.
12. CATHODE STEM TEMPERATURE MEASURED AT THIS POINT.
13. ANODE TEMPERATURE MEASURED AT THIS POINT.
14. EQUIPMENT FLANGES MATING TO OIL SEALING FLANGE AND TO OUTPUT FLANGE SHOULD PROVIDE COMPLIANCE AS BY MEANS OF A BELLOWS OR OTHER FLEXIBLE UNION. THESE FLANGES MAY NOT BE USED IN SUPPORTING THE TUBE. ENTIRE WEIGHT IS TO BE HELD BY MAGNET BRACKETS.
15. THESE SURFACES TO BE COPLANAR WITHIN .032.
16. WARNING: MAINTAIN 8 INCHES MIN. CLEARANCE BETWEEN MAGNETS AND FERROMAGNETIC MATERIALS EXCEPT AT BRACKET ENDS WHERE MIN. CLEARANCE MAY BE 3 INCHES. MAINTAIN 12 INCHES CLEARANCE TO OTHER CHARGED MAGNETS.
17. PAINT WITH BLACK, HEAT RESISTANT, NONCORROSIVE PAINT.
18. SPLINE SPECIFICATIONS - $14\frac{1}{2}^{0}$ PRESSURE ANGLE, 48 PITCH, 12 TEETH, .250 PITCH DIA.
19. 5/8 - 24 NEF.
20. TORQUE REQUIRED TO MOVE THE TUNER DRIVE COUPLING SHALL NOT EXCEED 30 INCH OUNCES.
21. THE TOTAL NUMBER OF TUNER (SMALL BEVEL GEAR) TURNS IN REVOLUTIONS BETWEEN LIMIT STOPS SHALL NOT BE LESS THAN XXX. RATIO OF BEVEL GEARS IS 5 TO 1.
22. TUNER TEMPERATURE MEASURED AT THIS POINT. POINT TO BE AS CLOSE TO CORNER OF PART AS PRACTICAL.
23. WIGGINS P-1706 COUPLING PLUG.
24. PROTECTIVE COVERINGS FOR SHIPPING PURPOSES ONLY.

The technical information on this data sheet is of a proprietory nature and is furnished as a customer service for private use only.

RK 7547

PRELIMINARY

DATA SHEET

RAYTHEON *Excellence in Electronics*



GENERAL DESCRIPTION

The RK7547 magnetron is a mechanically tunable, high power, pulsed-type oscillator which is capable of delivering a minimum of 2.0 megawatts peak power and 3600 watts average power. The RK7547 may be rapid hand or motor tuned to any desired frequency in the 406 to 450 megacycle region. It is an integral magnet, unipotential cathode type tube requiring liquid cooling and having a 3 1/8" coaxial output.

Mechanical Data

Mounting Position	Cathode Vertical
Net Weight	220 Lbs.
Cooling	Forced Liquid
Input Bushing	Oil Immersed
Pressurization (Output)	30 p.s.i.a.

Typical Electrical Data

Heater Current (Preheat - 600 sec.)	55 Amperes
Heater Voltage @ 55 A.	6.5 Volts
Pulse Duration (tpc)	6.0 usec.
Peak Anode Voltage	55 Kilovolts
Peak Anode Current	97.2 Amperes
Average Power Output	3950 Watts
Voltage Rise Time	0.95 usec. Min.
Maximum VSWR	1.5
RF Bandwidth (@ 6 db level)	2.0/tpc Max.
Life (1.5 VSWR, Cycled)	1000 Hrs. Min.

Reliable operation and maximum magnetron life can be achieved only if the overall radar transmitter is designed with the magnetron characteristics and peculiarities clearly in mind. This preliminary Data Sheet is intended to serve as an introduction only and should not be used as an absolute guide to users. Detailed tube specifications are available on request, specific problems and applications should be directed to the Applications Engineering Department, Microwave and Power Tube Division, Raytheon Company, Waltham, Massachusetts.

The specifications for this tube have not been finalized. The tube is being manufactured in limited quantities and is available for engineering analysis purposes only. This engineering information and/or delivery of sample tubes do not imply availability of tubes with the same electrical and/or mechanical characteristics. Changes in ratings and/ or dimensions may be made at our discretion as deemed advisable by manufacturing experience or other considerations. For current information concerning this tube contact the nearest Microwave and Power Tube Regional Sales Representative.

RAYTHEON

Excellence in Electronics

preliminary data sheet

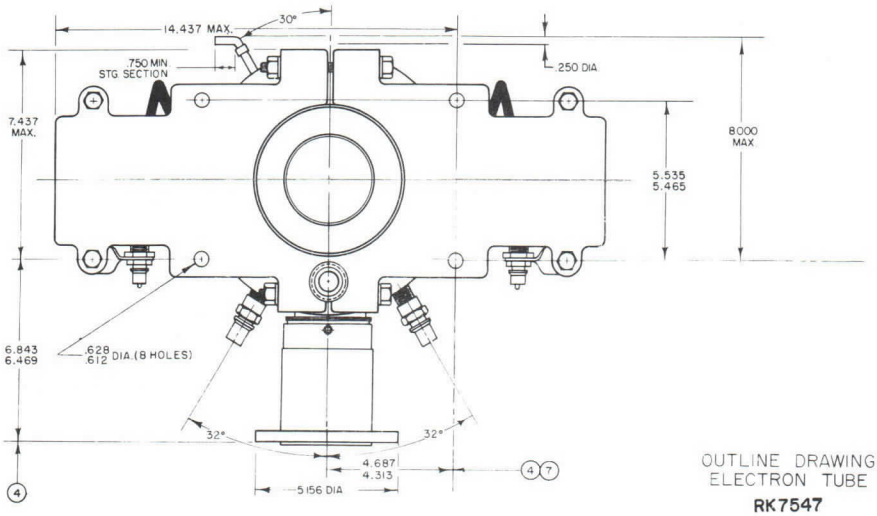

OUTLINE DRAWING
ELECTRON TUBE
RK7547

NOTES

1. REFERENCE PLANE "A" IS DEFINED AS A PLANE PASSING ALONG THE FACE OF THE MOUNTING SURFACE AS SHOWN.
2. REFERENCE PLANE "B" IS DEFINED AS A PLANE PERPENDICULAR TO PLANE "A" AND PASSING THROUGH THE CENTER OF HOLES AT PLANE "A" AS SHOWN.
3. REFERENCE PLANE "C" IS DEFINED AS A PLANE PERPENDICULAR TO PLANES "A" AND "B" PASSING THROUGH THE CENTER OF THE HOLE AT PLANE "A" AS SHOWN.
4. INCLUDES ANGULAR AS WELL AS LATERAL DEVIATION.
5. APPLIES TO STRAIGHT PORTION OF INNER CONDUCTOR WALL.
6. PARTS ON THIS CENTER-LINE MAY VARY FROM TRUE LOCATION BY .125
7. APPLIES TO CENTER OF DIAMETER "Z"
8. CENTER-LINE OF INNER CONDUCTOR SHALL BE CONCENTRIC WITH CENTER-LINE OF OUTER CONDUCTOR WITHIN .025
9. CENTER-LINE PASSING THROUGH THESE HOLES MUST BE PARALLEL TO REFERENCE PLANE "A" WITHIN .050 T.I.R.
10. THESE SURFACES MUST BE COPLANAR WITHIN .015
11. TEMPERATURE MEASURING POINTS.
12. PITCH DIAMETER MUST ACCEPT CLASS 1 "GO" GAGE ONLY.
13. MAJOR DIAMETER MUST NOT BE LESS THAN 1.362
14. REFERENCE PLANE "D" IS DEFINED AS A PLANE ALONG THE SURFACE OF THE OUTPUT FLANGE AS INDICATED.
15. EPOXY BASE PAINT HAVING EQUIVALENT PROPERTIES OF DURACHEM BAKING ENAMEL TO BE USED.

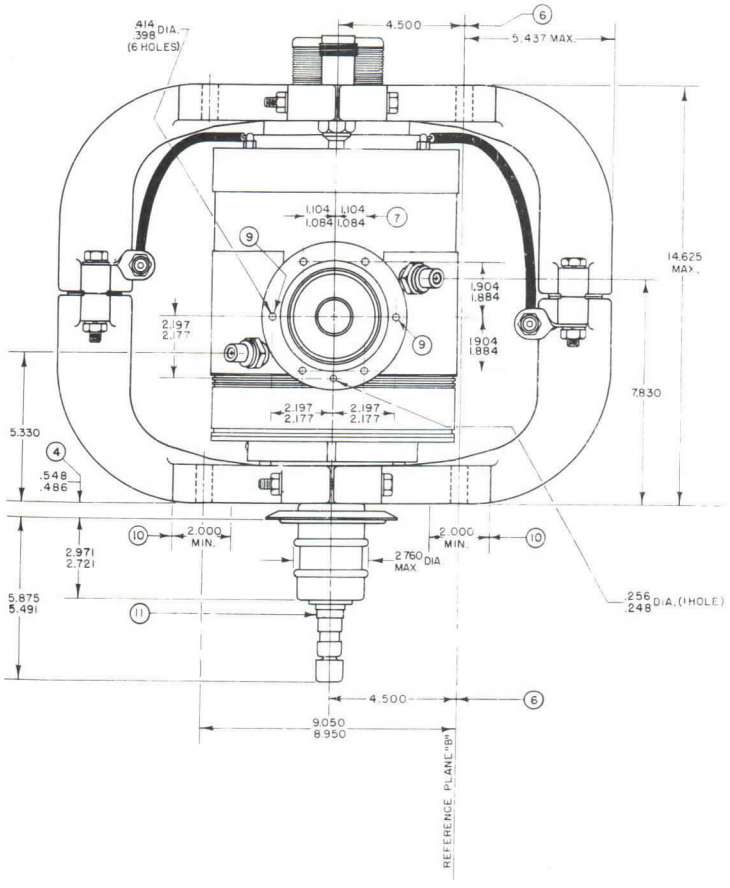

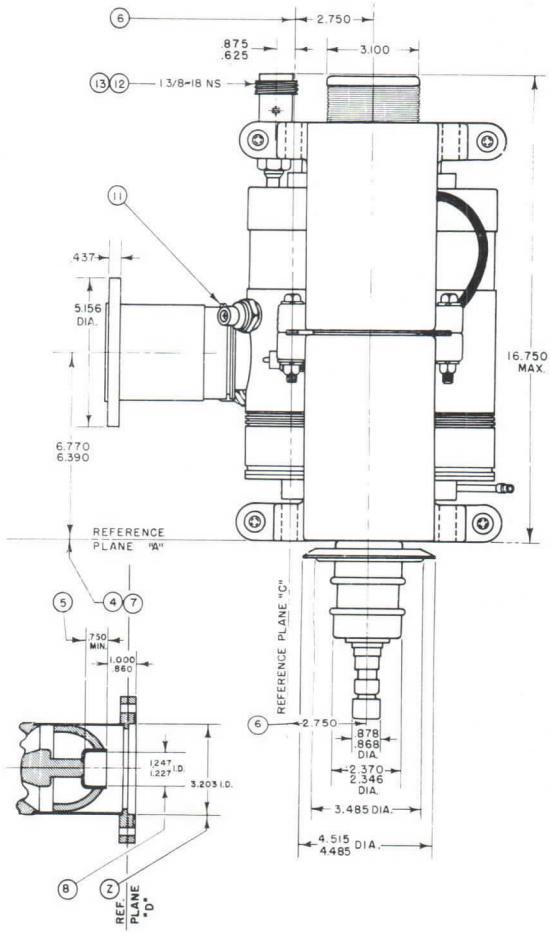

RAYTHEON

TECHNICAL INFORMATION

Excellence in Electronics

TYPE RK 7578



PULSED-TYPE MAGNETRON OSCILLATOR

GENERAL DESCRIPTION

The RK7578 is a mechanically tunable pulsed-type magnetron oscillator delivering a minimum peak power output of 800-1200 watts. It is capable of being tuned to any frequency within the 5400 to 5900 Mc range.

The RK7578 is small (1.75" dia. x 3.5") lightweight (14 ounces) and has been designed primarily for missile beacon transponder applications where extreme environmental conditions are encountered. The RK7578 is capable of sustaining shock acceleration of 100G and vibrational acceleration during operation of 15G at frequencies up to 2000 cycles per second.

GENERAL PRECAUTIONS

The precautions to be observed during the application of the RK7578 magnetron are the same as for any oscillator of this type. Experience has indicated that the areas where application problems frequently arise include the magnetron voltage pulse shape — particularly its rate of rise, the load VSWR, and anode current regulation. It is recommended that the Applications Engineering Department be consulted regarding the details of any contemplated equipment design utilizing the RK7578.

GENERAL CHARACTERISTICS

ELECTRICAL

Heater Voltage — Preheat and Operate	4.5 to 5.5 Volts
Heater Current	1.75 Ampere at 5.0 Volts
Minimum Preheat Time	30 Seconds
Temperature Coefficient	±0.1 Mc/°C Maximum
Operational Altitude	70,000 Feet Maximum
Operational Vibration Frequency Deviation at 15G, 20 to 2000 cps	1.5Mc Peak to Peak Maximum
Frequency Shift Due to Shock 100G, 1 Millisecond	1 Mc Maximum
Frequency Shift Due to 100G Acceleration	1 Mc Maximum

Typical Operation

Pulse Duration	0.25 to 0.75 Microseconds
Duty Cycle	.000025 to .002
Peak Anode Current	2.0 Amperes
Peak Anode Voltage	2.8 Kilovolts
Peak Power Output	800-1200 Watts
Voltage Rise Time (20 to 85%)	0.11 us

Printed in U.S.A.

MICROWAVE AND POWER TUBE DIVISION

RAYTHEON COMPANY

FOUNDRY AVE., WALTHAM 54, MASS.

DETAILED MECHANICAL INFORMATION

MOUNTING

The tube may be mounted in any position and must be supported by a suitably designed holder made of non-ferrous material which will utilize the diameter of the tube for support. Magnetic material should be mounted within 2 inches of the tube.

INPUT CONNECTIONS

Two flexible leads approximately 5 inches long provide connections for heater voltage and pulse voltage. One lead is black, the other red. The red lead is the common heater-cathode to which negative high voltage should be connected. A "ground" lug on the body of the tube provides for positive high voltage connection.

R.F. OUTPUT COUPLING

Mates with TNC coaxial Fitting or TNC to ¾" x1½" or 1" x 2" O.D. Waveguide Transition.

TUNER

The tuning mechanism is actuated by a screwdriver adjustable shaft. A set screw is provided to lock the shaft in position prior to the subjection of the tube to environmental conditions. Care should be taken not to mechanically tune the tube beyond the extremes of its normal operating range, 5400 to 5900 Mc.

DIMENSIONS

Figure 1 is the mechanical outline drawing.

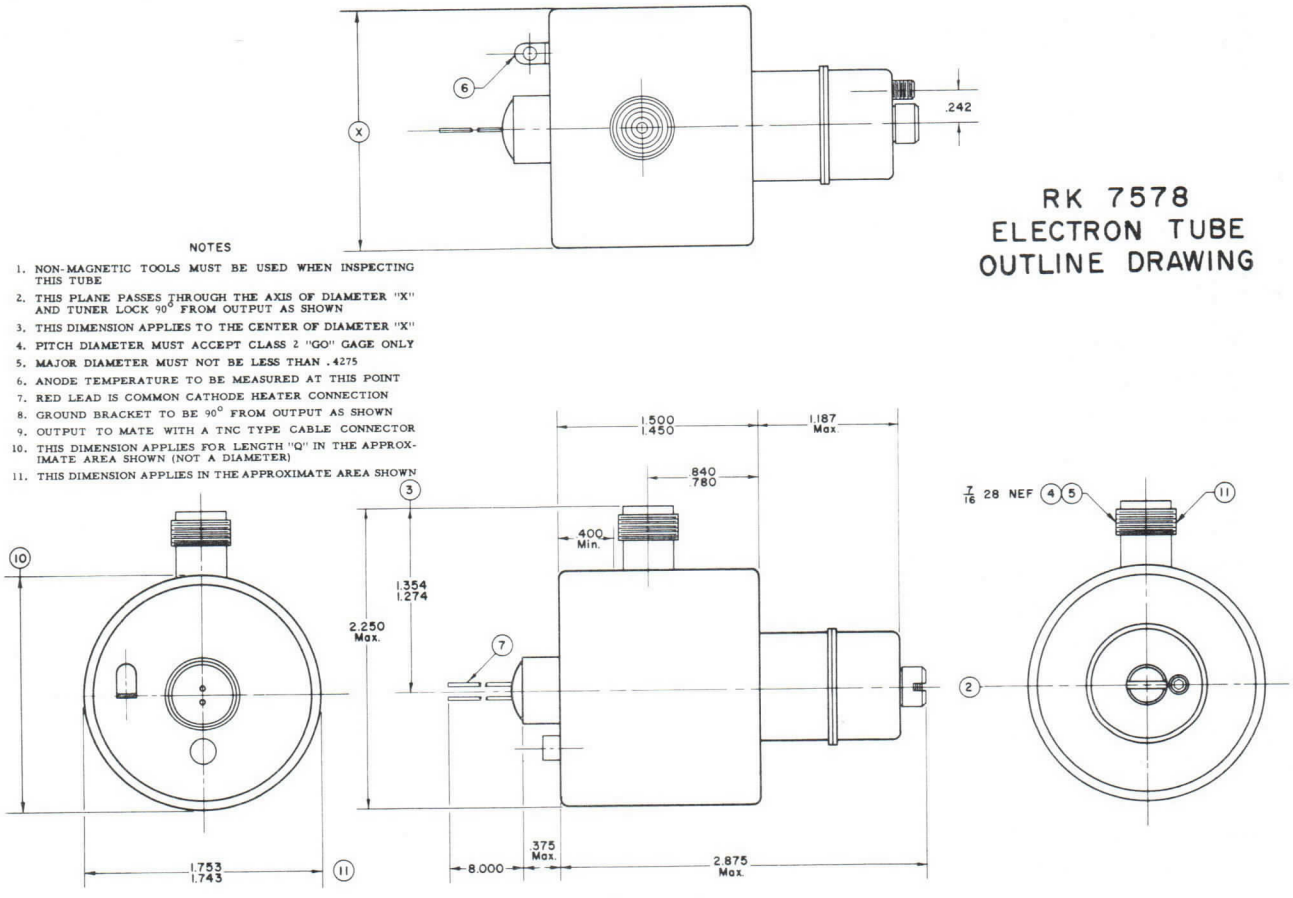

NOTES

1. NON-MAGNETIC TOOLS MUST BE USED WHEN INSPECTING THIS TUBE
2. THIS PLANE PASSES THROUGH THE AXIS OF DIAMETER "X" AND TUNER LOCK 90° FROM OUTPUT AS SHOWN
3. THIS DIMENSION APPLIES TO THE CENTER OF DIAMETER "X"
4. PITCH DIAMETER MUST ACCEPT CLASS 2 "GO" GAGE ONLY
5. MAJOR DIAMETER MUST NOT BE LESS THAN .4275
6. ANODE TEMPERATURE TO BE MEASURED AT THIS POINT
7. RED LEAD IS COMMON CATHODE HEATER CONNECTION
8. GROUND BRACKET TO BE 90° FROM OUTPUT AS SHOWN
9. OUTPUT TO MATE WITH A TNC TYPE CABLE CONNECTOR
10. THIS DIMENSION APPLIES FOR LENGTH "Q" IN THE APPROXIMATE AREA SHOWN (NOT A DIAMETER)
11. THIS DIMENSION APPLIES IN THE APPROXIMATE AREA SHOWN

RK 7578
ELECTRON TUBE
OUTLINE DRAWING

Figure 1

The technical information on this data sheet is of a proprietory nature and is furnished as a customer service for private use only.

RK7630/QK702 **PRELIMINARY DATA SHEET**

RAYTHEON *Excellence in Electronics*

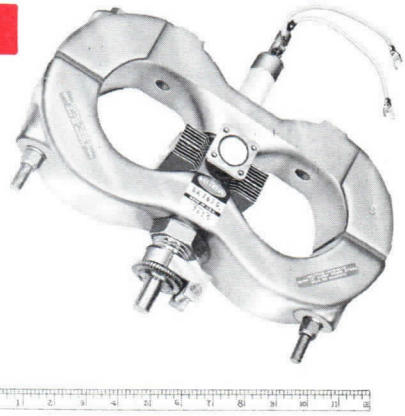

GENERAL DESCRIPTION

The RK7630/QK702 is a tunable, medium power, pulsed type oscillator capable of delivering 70 kilowatts of peak power. The RK7630/QK702 is tunable within the frequency region of 15,840 - 16,160 megacycles. The magnetron is an integral magnet, waveguide output type tube requiring forced air cooling and is designed for coupling to standard RG 91 U waveguide (0.702 x 0.391).

Mechanical Data

Mounting Position	Cathode Vertical
Net Weight	26 Lbs.
Cooling	Forced Air
Output Pressurization	Required (25 psia Min.)

Electrical Data

Heater Voltage - Preheat/180 sec	4.8 Volts
Heater Current at 4.8 Volts	10.8 - 13.2 Amperes
Voltage Rise Time	.09 to .14 usec
R. F. Bandwidth	2.0/tpc Max.
Maximum V.S.W.R.	1.5

Typical Operation

Pulse Duration	0.25 usec
Duty Cycle	.00215
Average Anode Current	26 Milliamperes
Average Power Output	150 Watts (Min.)
Peak Anode Voltage	24 KV

Reliable operation and maximum magnetron life can be achieved only if the overall radar transmitter is designed with the magnetron characteristics clearly in mind. This preliminary Data Sheet is intended as an introduction to this type magnetron and not as an absolute guide to users. Inquiries on this magnetron and its application should be directed to the Applications Engineering Department at Raytheon Company, Waltham, Massachusetts.

The specifications for this tube have not been finalized. The tube is being manufactured in limited quantities and is available for engineering analysis purposes only. This engineering information and/or delivery of sample tubes do not imply availability of tubes with the same electrical and/or mechanical characteristics. Changes in ratings and/ or dimensions may be made at our discretion as deemed advisable by manufacturing experience or other considerations. For current information concerning this tube contact the nearest Microwave and Power Tube Regional Sales Representative.

RAYTHEON

Excellence in Electronics

preliminary data sheet

NOTES

1. REFERENCE PLANE "A" IS DEFINED AS A PLANE PASSING ALONG THE FINISHED SURFACE OF THE MAGNET AS SHOWN.
2. REFERENCE PLANE "B" IS DEFINED AS A PLANE PERPENDICULAR TO PLANE "A" PASSING THROUGH THE CENTER OF HOLES AT PLANE "A" AS SHOWN.
3. REFERENCE PLANE "C" IS DEFINED AS A PLANE MUTUALLY PERPENDICULAR TO PLANES "A" & "B" PASSING THROUGH THE CENTER OF THE HOLE AT PLANE "A" AS SHOWN.
4. BROWN PAINT TO IDENTIFY COMMON CATHODE CONNECTION.
5. INCLUDES ANGULAR AS WELL AS LATERAL DEVIATION.
6. THESE DIMENSIONS APPLY TO RADIATOR SIZE ONLY.
7. PARTS ON THIS CENTERLINE MAY VARY BY 1/8".
8. PITCH DIAMETER MUST ACCEPT CLASS 2 "GO" GAGE ONLY.
9. FACE OF OUTPUT FLANGE TO BE PARALLEL TO REFERENCE PLANE "B" WITHIN .020
10. TAPPED HOLES MUST BE PARALLEL TO REFERENCE PLANES WITHIN .030
11. ANODE TEMPERATURE CHECK POINT.
12. HEATER CONNECTION.
13. MINOR DIAMETER MUST NOT BE GREATER THAN .116
14. APPLIES ONLY TO THAT PORTION OF RADIATOR WHICH EXTENDS BEYOND MAGNETS.

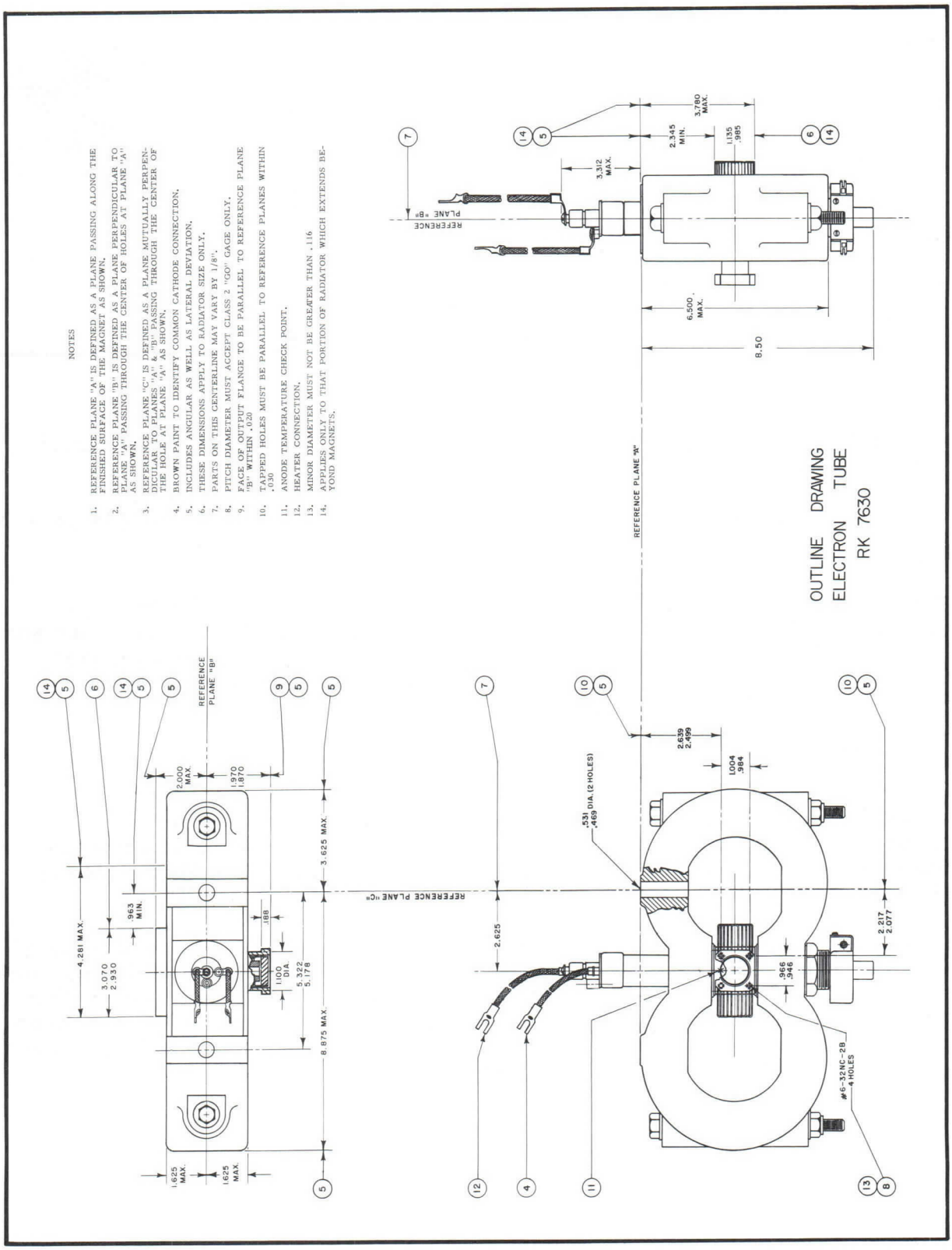

The technical information on this data sheet is of a proprietory nature and is furnished as a customer service for private use only.

RK7718 **PRELIMINARY**

DATA SHEET

RAYTHEON *Excellence in Electronics*

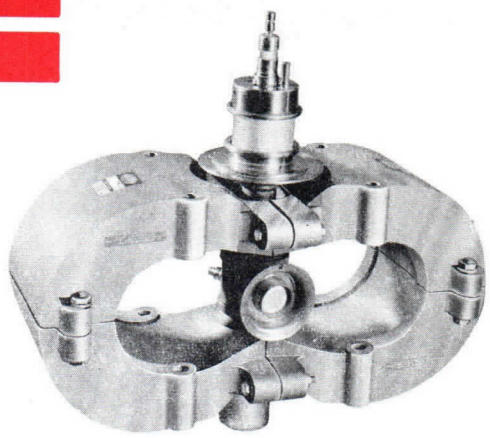

RK7718

GENERAL DESCRIPTION

The RK7718 magnetron is a fixed frequency, high power, pulsed oscillator which is capable of delivering a minimum of 1.0 megawatt peak power and 875 watts average power. The RK7718 operates within 9340-9440 megacycles. The tube has an integral magnet, unipotential cathode, waveguide output coupling and is liquid cooled.

Mechanical Data

Mounting Position	Cathode Vertical
Net Weight	80 lbs. Approx.
Cooling	Liquid
Input Bushing	Oil Immersed
Pressurization (Output)	45 p.s.i.a. Min.

Typical Electrical Data

Heater Current (Preheat - 600 sec.)	36 Amperes *
Heater Voltage @ 150 A	3.6 Volts *
Pulse Duration	2.0 usec
Duty Cycle	.000875
Peak Anode Voltage	39 Kilovolts
Voltage Rise Time	.45 usec Min.
Peak Anode Current	68.6 Amperes
Maximum VSWR	1.5
Average Power Output	975 Watts
R.F. Bandwidth	2.0/tpc. Max.
Objective Life - 1.5 VSWR, Off-On Cycle	1000 Hrs. Min.

* Not Final Values

Reliable operation and optimum magnetron life can be achieved only if the overall radar transmitter is designed with the magnetron characteristics and peculiarities clearly in mind. This preliminary data sheet is intended only to acquaint the reader with the basic characteristics of the magnetrons and should not be used as an absolute guide. Detailed test specifications are available upon request, and specific problems pertaining to applications should be directed to the Applications Engineering Department, Microwave and Power Tube Division at Raytheon, Waltham, Massachusetts.

The specifications for this tube have not been finalized. The tube is being manufactured in limited quantities and is available for engineering analysis purposes only. This engineering information and/or delivery of sample tubes do not imply availability of tubes with the same electrical and/or mechanical characteristics. Changes in ratings and/ or dimensions may be made at our discretion as deemed advisable by manufacturing experience or other considerations. For current information concerning this tube contact the nearest Microwave and Power Tube Regional Sales Representative.

RAYTHEON COMPANY | MICROWAVE AND POWER TUBE DIVISION | WALTHAM 54, MASS.

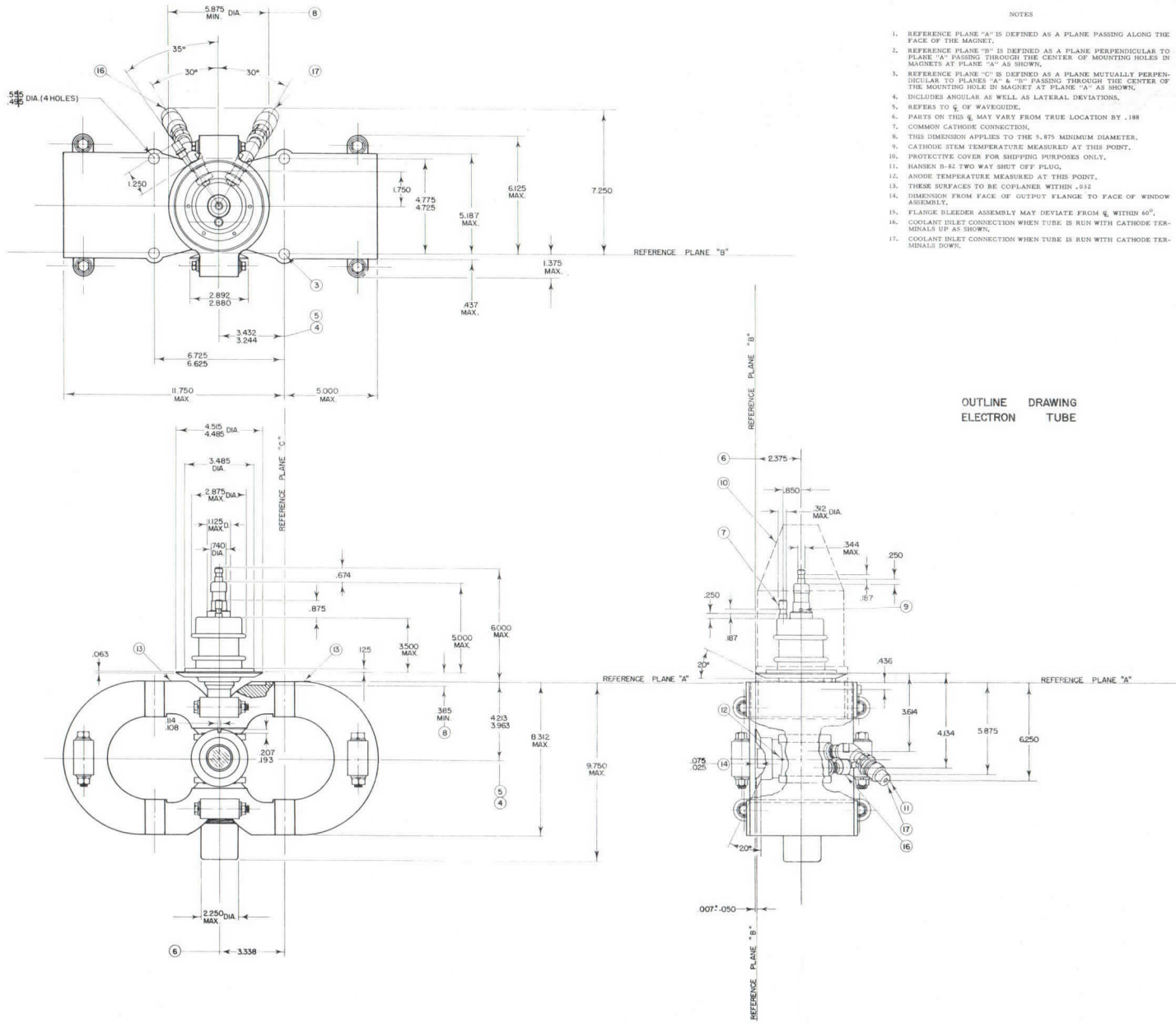

NOTES

1. REFERENCE PLANE "A" IS DEFINED AS A PLANE PASSING ALONG THE FACE OF THE MAGNET.
2. REFERENCE PLANE "B" IS DEFINED AS A PLANE PERPENDICULAR TO PLANE "A" PASSING THROUGH THE CENTER OF MOUNTING HOLES IN MAGNETS AT PLANE "A" AS SHOWN.
3. REFERENCE PLANE "C" IS DEFINED AS A PLANE MUTUALLY PERPENDICULAR TO PLANES "A" & "B" PASSING THROUGH THE CENTER OF THE MOUNTING HOLE IN MAGNET AT PLANE "A" AS SHOWN.
4. INCLUDES ANGULAR AS WELL AS LATERAL DEVIATIONS.
5. REFERS TO ℄ OF WAVEGUIDE.
6. PARTS ON THIS ℄ MAY VARY FROM TRUE LOCATION BY .188
7. COMMON CATHODE CONNECTION.
8. THIS DIMENSION APPLIES TO THE 5.875 MINIMUM DIAMETER.
9. CATHODE STEM TEMPERATURE MEASURED AT THIS POINT.
10. PROTECTIVE COVER FOR SHIPPING PURPOSES ONLY.
11. HANSEN B-82 TWO WAY SHUT OFF PLUG.
12. ANODE TEMPERATURE MEASURED AT THIS POINT.
13. THESE SURFACES TO BE COPLANER WITHIN .032
14. DIMENSION FROM FACE OF OUTPUT FLANGE TO FACE OF WINDOW ASSEMBLY.
15. FLANGE BLEEDER ASSEMBLY MAY DEVIATE FROM ℄ WITHIN 60°.
16. COOLANT INLET CONNECTION WHEN TUBE IS RUN WITH CATHODE TERMINALS UP AS SHOWN.
17. COOLANT INLET CONNECTION WHEN TUBE IS RUN WITH CATHODE TERMINALS DOWN.

OUTLINE DRAWING
ELECTRON TUBE

RAYTHEON
Excellence in Electronics

preliminary data sheet

RAYTHEON

DATA SERVICE

MICROWAVE & POWER TUBES

CONTENTS

SPECIAL PURPOSE TUBES

TYPE	PAGE	DATE
QK329	1-3	11-58
Infrared Detectors	1-2	Prelim

RAYTHEON®

Excellence in Electronics

THE DATA IN THIS SECTION FORMS A PART OF THE RAYTHEON TECHNICAL DATA BOOK FOR

MICROWAVE and POWER TUBES

For replacement data sheets or for additional copies of this book, contact

TECHNICAL INFORMATION SERVICE
RAYTHEON COMPANY
55 Chapel Street,
Newton 58, Massachusetts

DATA SERVICE

ELECTRON TUBES
MICROWAVE

CONTENTS

SPECIAL PURPOSE TUBES

TYPE	PAGE	DATE
QK329	1-3	11-58
QKN748	1-3	8-61
QKN884	1-3	8-61
QKN902	1-3	10-61
QKN1003	1-3	8-61
QKN1004	1-3	8-61

RAYTHEON

TECHNICAL INFORMATION

TENTATIVE DATA

Excellence in Electronics

TYPE QK329

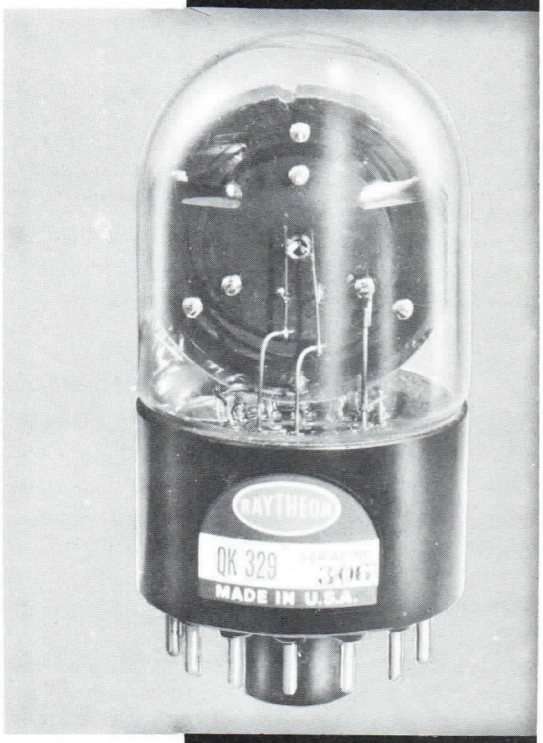

BEAM DEFLECTION SQUARE-LAW TUBE

GENERAL CHARACTERISTICS

The type QK-329 tube is a non-linear circuit element, operating as a beam deflection device to produce a square law output vs. input voltage characteristic. Application of electronic techniques to such problems as analog computing and automatic control has introduced the need for non-linear circuit elements. Preferably these elements will have accurate, reproducible, prescribed mathematical characteristics. They should be capable of operation at the speeds available in conventional circuits. The QK-329 finds application in linear modulators of suppressed carrier type, untuned frequency doublers, instantaneous phase meters, square law detectors, and function multipliers (quarter square principle). The tube has been operated successfully with input frequencies varying from zero (D.C.) to as high as 40 megacycles. Thus in the second application mentioned, an output frequency of 80 megacycles can result.

TENTATIVE DATA

1. Heater Characteristics
   - a. Heater Voltage . . . . . 6.3 Volts
   - b. Heater Current . . . . . 0.6 Amperes

2. Maximum Ratings
   - a. Deflectors (Bias) . . . . . 100 Volts
   - b. Target . . . . . 600 Volts
   - c. Collector . . . . . 600 Volts
   - d. Cathode Current . . . . . 20 mA

3. Typical Operation
   - a. Deflectors (Bias) . . . . . 90 Volts
   - b. Target . . . . . 300 Volts
   - c. Collector . . . . . 300 Volts
   - d. Cathode Current . . . . . 4 mA
   - e. Target Load Resistance . . . . . 10,000 Ohms
   - f. Input (Peak between deflector plates) . . . . . ± 75 Volts
   - g. Deflector Current Max. (through 10,000 ohm impedance) . . . . . 10 uA
   - h. Square law voltage output** . . . . . 12 Volts

   **That portion of the output voltage, measured from the minimum point, which follows a square law within 1½%.

4. Mechanical
   - a. Mounting Position . . . . . Any*
   - b. Length . . . . . 4"
   - c. Maximum Diameter . . . . . 2 9/32"

   *Tube, for best operation, should be located in a region free of magnetic fields.

Printed in U.S.A.

MICROWAVE AND POWER TUBE DIVISION
RAYTHEON COMPANY
FOUNDRY AVE., WALTHAM 54, MASS.

d. Base . . . . . Medium Shell Diheptal-14 pin.

e. Basing . . . . Pin #1 — Heater
Pin #10 — Target
Pin #4 — Deflector No. 1
Pin #11 and #12 — Collector
Pin #6 — Deflector No. 2
Pin #14 — Heater
Pin #8 — Cathode
All others — N. C.

5. Direct Inter-Electrode Capacitance.
   1. Input (between deflector plates) . . . . . 1.0 uuf
   2. Output (between target and all other electrodes) . . . . . 15.0 uuf
   3. Coupling (between deflector plates and target) . . . . . 5.0 uuf
   4. Inter-anode (between target and collector) . . . . . 8.0 uuf

PRINCIPLE OF OPERATION

The QK-329 achieves its square law output characteristic, in principle, by sweeping a beam across a parabolic aperture. Figure 1 is a cut-away sketch showing the actual structure. It has cylindrical symmetry about an axial cathode, resulting in a disc shaped beam. A target electrode having a series of small parabolic apertures (mathematical equivalent of a single large parabola) is interposed at the perimeter of focus. A ring surrounding the target collects those electrons penetrating the shaped apertures. Two washer-like plates, above and below the beam, serve both as the lens and as deflectors. A fixed bias is utilized to focus the beam. Input signals, centering around this bias, raise or lower the axial position of the beam. The tube operates with normal "receiving tube voltages," so that it can be made physically small (as compared with most beam deflection tubes). Figure 2 is an outline drawing of the tube.

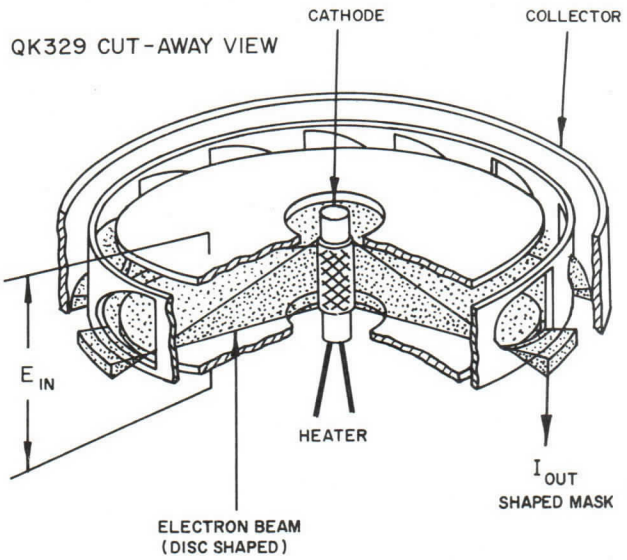

Figure 1

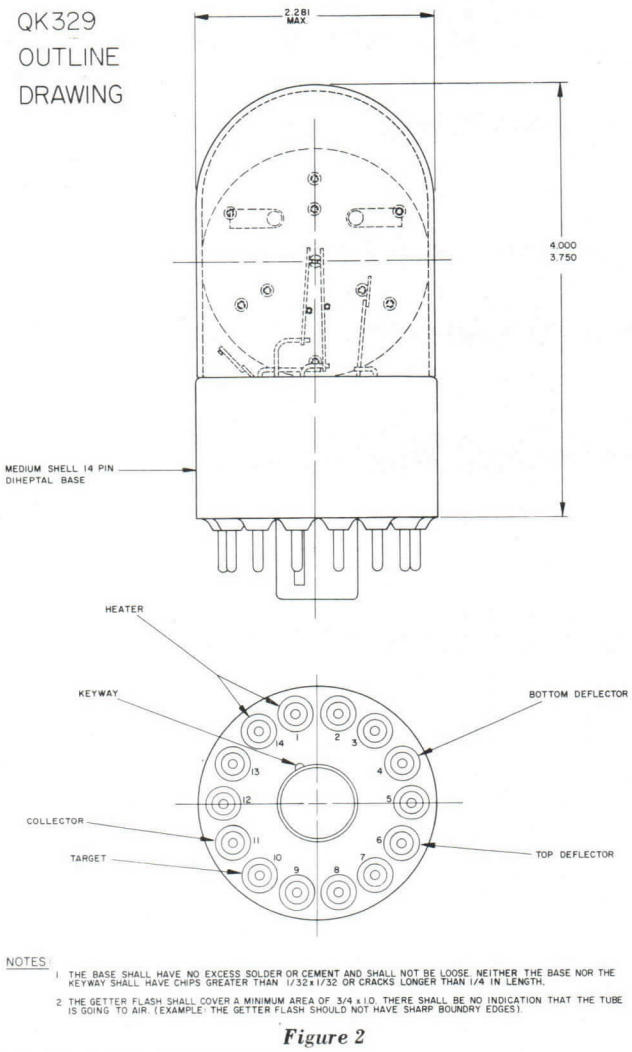

Figure 2

SQUARE LAW OPERATION

Figure 3 shows typical static characteristics of a QK-329. It will be noted that "land" current represents about one half of the current obtainable over the "usable" portion of parabolic or square law output. "Land" current may be defined as that current obtained when the operating point of the tube is at the origin of the parabola. (This point is not necessarily on the zero input signal line.) It represents a constant current level which can be eliminated, if necessary, in a number of ways, i.e. simple bucking circuit, transformer coupling, etc.

STATIC CHARACTERISTICS

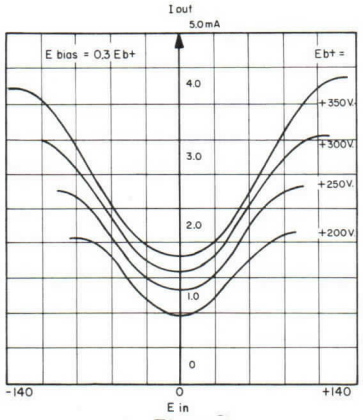

Figure 3

COMPARISON OF CURVED PORTIONS OF FIGURE 3 WITH PARABOLA

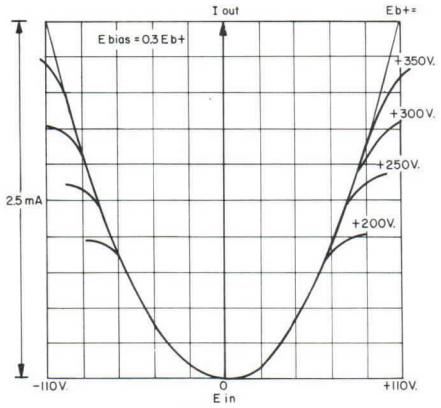

Figure 4

"Usable" output will depend on the required accuracy of the particular application envisioned. Figure 4 is a comparison of the square law portion of the output with a parabola. Accuracy of the order of 1½% of maximum output is obtainable over most of the range. At high input signal levels, the curves fall away from the parabola. It can be seen that some increase in output magnitude can be realized at a sacrifice of accuracy. For example, referring to the 350 volt curve of Figure 4, 1½ % accuracy would prevail up to a 1.75 ma level. 2.25 ma can be obtained if accuracy no greater than 12% is required.

If the parts and their alignment were perfect, minimum target current would occur with zero input signal. This is not, of course, a practical condition. Some provision must therefore be made for centering the beam with respect to the target. This can be accomplished with a correction voltage applied to the deflector plates. With 300 volts applied to the anodes, for example, no more than ± 4 volts will be needed.

Input voltage is applied between deflector plates, so that average value, or bias, remains constant. This is necessary in order to avoid beam defocusing with deflection. If we assume a 20 volts signal is applied, one plate is 10 volts below, and the other 10 volts above the bias level. Such a signal is shown on the graphs as having a 20 volt magnitude. Thus, if the anodes are operated at 350 volts and the bias at 105 volts a sine wave input of 66 volts RMS would provide utilization of the full output available with 1½% accuracy. (See Figure 4.)

FOUR QUADRANT FUNCTION MULTIPLIER APPLICATION

One of the uses for which the QK-329 has proven of value is in a function multiplier circuit. Given two functions, A and B, their product may be obtained simply with two squaring devices.

$$\frac{(A+B)^2-(A-B)^2}{4}=AB$$

The necessary algebraic addition and division require only resistance networks. Limitations imposed on the multiplier by the QK-329 might be listed as follows:

1. The Frequency Response — D. C. to VHF.
2. Dynamic Range — 40 db at input (80 db at output).

The technical information on this data sheet is of a proprietory nature and is furnished as a customer service for private use only.

QKN748 **PRELIMINARY DATA SHEET**

RAYTHEON



The QKN748 is a rugged, all-metal subminiature IR detector for missile and airborne applications. Cooled "P" type gold doped germanium gives very sensitive broad band performance with a fast time constant permitting high scanning rates.

ELECTRICAL CHARACTERISTICS

Detector Material:

Gold doped germanium, "P" type, is a photoconducting material where photoionization produces current carriers thereby changing the materials electrical conductivity.

Window Material:

Silicon (Si) has a very sharp short wave length cut off at 1.2 microns. The normal transmission in the wavelength range of this detector is approximately 50%. With special anti-reflection coating, supplied with this unit, a peaked transmission of greater than 90% may be obtained at any specified portion of the detector range. Standard QKN748's are peaked at 4.3 microns.

Detector Spectral Sensitivity: 1 - 9 microns

Response:

Grade 1:	D* above 2×10^9 cm/watt
Grade 2:	D* $1 - 2 \times 10^9$ cm/watt
Grade 3:	D* $.5 - 1 \times 10^9$ cm/watt

Data measured under the following test conditions:

A.	Detector Temperature	78°K
B.	Background Temperature.....	300°K
C.	Blackbody Temperature	500°K
D.	Chopping Frequency.....	800 CPS
E.	Bandwidth Referred To.....	1 CPS

Time Constant	Less than 1 microsecond
Impedance Range	50,000 - 1,000,000 ohms
Detector Aperture	1 mm x 1 mm square
Acceptance Angle.....	150 degrees

8/61

The specifications for this tube have not been finalized. The tube is being manufactured in limited quantities and is available for engineering analysis purposes only. This engineering information and/or delivery of sample tubes do not imply availability of tubes with the same electrical and/or mechanical characteristics. Changes in ratings and/ or dimensions may be made at our discretion as deemed advisable by manufacturing experience or other considerations. For current information concerning this tube contact the nearest Microwave and Power Tube Regional Sales Representative.

MECHANICAL CHARACTERISTICS

The QKN748 is of all-metal and ceramic construction with a hermetically sealed window at one end for viewing along the axis of the detector. A protective cap is mounted on the opposite end to protect the electrical terminals and hold the cooler securely in place.

Length	1 3/4"
Diameter (outer)	0.500"
Diameter (inner)	0.202 - 0.204"
Weight (empty)	11 grams

The use of metal provides a more rugged package than that of glass. Metal structures can be held to tight tolerances and the diameter of the QKN748 can be held to $\pm$.005 in. which will allow for precision fitting into optical systems.

Precautions:

It is recommended that detectors should not be completely immersed in liquid nitrogen nor should liquid nitrogen be brought in contact with the windows. The severe thermal shock may cause the window to crack and thereby make the detector inoperable.

Cooling Requirements:

The optimum operating region for "P" type gold doped germanium is 65° K.

A Joule-Thomson expansion cooler may be inserted into the QKN748 and using compressed nitrogen gas will provide adequate cooling. Care must be taken in installing the cooler to optimise the heat transfer characteristics.

SPECIAL OPTIONAL CHARACTERISTICS

Variations from the standard QKN748 may be obtained on Special Order and are listed below:

A. Window:

1. Sapphire 1 - 6 microns
2. Silicon window coating transmission characteristics peaked at wave lengths other than standard 4.3 microns.

B. Aperture: Maximum size is a square of 3 1/2 mm x 3 1/2 mm. Any shape can be provided that will fit within this area down to a minimum size of .5 mm diameter.

C. Acceptance Angle: Up to 150 degrees. Depends upon effective detector area.

OUTLINE DRAWING QKN748

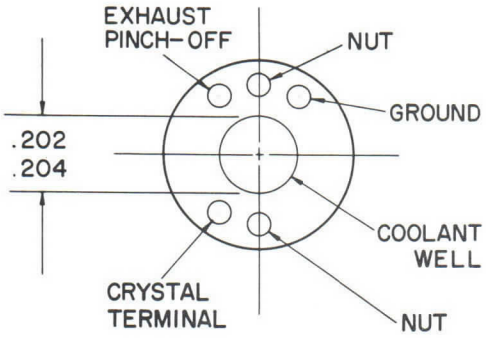

TERMINAL VIEW

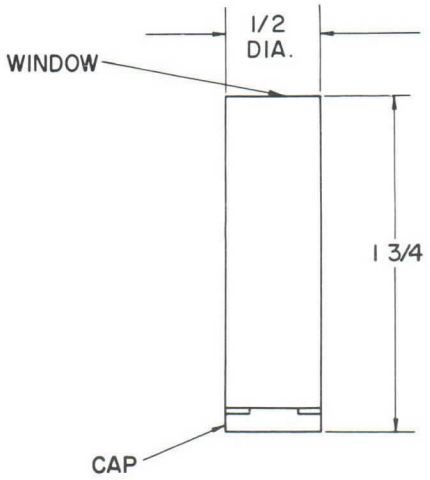

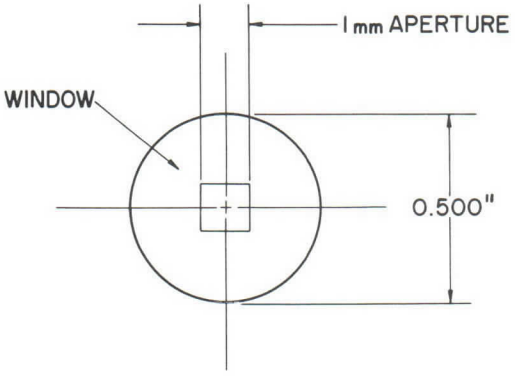

WINDOW VIEW

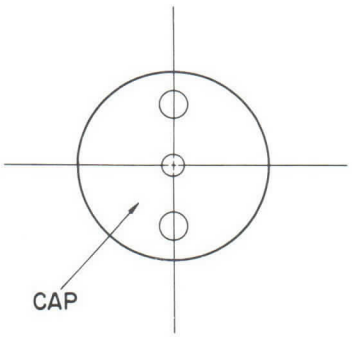

END VIEW

The technical information on this data sheet is of a proprietory nature and is furnished as a customer service for private use only.

QKN884

PRELIMINARY

DATA SHEET

RAYTHEON



The QKN 884 is a very sensitive broadband, cooled "P" type, gold doped germanium detector. A fast time constant makes it desirable where high resolution is required. It's rugged, miniature, all-metal construction with hermetically sealed windows make it ideal for airborne and missile-born applications as well as for laboratory use.

ELECTRICAL CHARACTERISTICS

Detector Material:

Gold doped germanium, "p" type, is a photoconducting material where photo-ionization produces current carriers thereby changing the material's electrical conductivity.

Window Material:

Silicon (Si) has a very sharp short wave length cut off at 1.2 microns. The normal transmission in the wavelength range of this detector is approximately 50%. With special antireflection coating, supplied with this unit, a peaked transmission of greater than 90% may be obtained at any specified portion of the detector range. Standard QKN 884's are peaked at 4.5 microns.

Detector Spectral Sensitivity: 1 - 9 microns

Response:

Grade 1:	D* above 2×10^9 cm/watt
Grade 2:	D* $1 - 2 \times 10^9$ cm/watt
Grade 3:	D* $.5 - 1 \times 10^9$ cm/watt

Data measured under the following test conditions:

A.	Detector Temperature	78° K
B.	Background Temperature	300° K
C.	Blackbody Temperature	500° K
D.	Chopping Frequency	800 CPS
E.	Bandwidth Referred To	1 CPS

8/61

The specifications for this tube have not been finalized. The tube is being manufactured in limited quantities and is available for engineering analysis purposes only. This engineering information and/or delivery of sample tubes do not imply availability of tubes with the same electrical and/or mechanical characteristics. Changes in ratings and/ or dimensions may be made at our discretion as deemed advisable by manufacturing experience or other considerations. For current information concerning this tube contact the nearest Microwave and Power Tube Regional Sales Representative.

Time Constant	Less than 1 microsecond
Impedance Range	50,000 - 1,000,000 ohms
Detector Aperture	1 mm x 1 mm square
Acceptance Angle	150 degrees

MECHANICAL CHARACTERISTICS

The QKN884 is of all-metal and ceramic construction with a hermetically sealed window at one end for viewing along the axis of the detector. A protective cap is mounted on the opposite end to protect the electrical terminals and hold the cooler securely in place.

Length	2 7/8"
Diameter (outer)	0.500"
Diameter (inner)	0.202 - 0.204"
Weight (empty)	20 grams

The use of metal provides a more rugged package than that of glass. Metal structures can be held to tight tolerences and the diameter of the QKN884 can be held to $\pm$.005 in. which will allow for precision fitting in optical systems.

The optimum operating region for "p" type gold doped germanium is 65° K. There are two basic techniques for cooling the QKN884.

1. The QKN 884 can be used as a liquid storage device for liquid nitrogen which has a boiling point of 78° K. One filling of the QKN 884 with liquid nitrogen will give up to 15 minutes operating time before refilling.

2. A Joule-Thomson expansion cooler may be inserted into the QKN 884 and using compressed nitrogen gas will provide adequate cooling. Care must be taken to optimize the heat transfer characteristics.

SPECIAL OPTIONAL CHARACTERISTICS

Variations from the standard QKN884 may be obtained on Special Order and are listed below.

A. Window:
   1. Sapphire 1 - 6 microns
   2. Silicon window coating transmission characteristics peaked at wave lengths other than standard 4.5 microns.

B. Aperture: Maximum size is a square of 3 1/2 mm x 3 1/2 mm. Any shape can be provided that will fit within this area down to a minimum size of .5 mm diameter.

C. Acceptance Angle: Up to 150 degrees. Depends upon effective detector area.

OUTLINE DRAWING QKN884

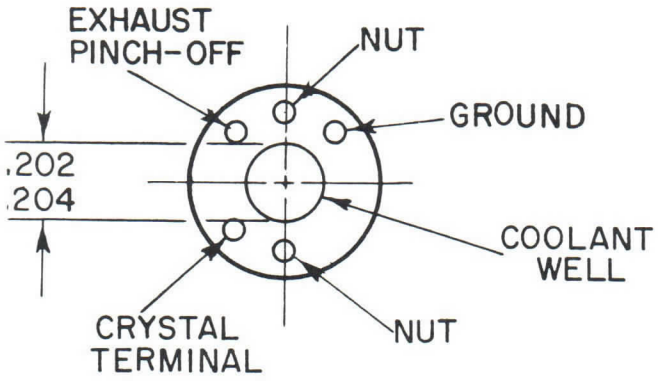

TERMINAL VIEW

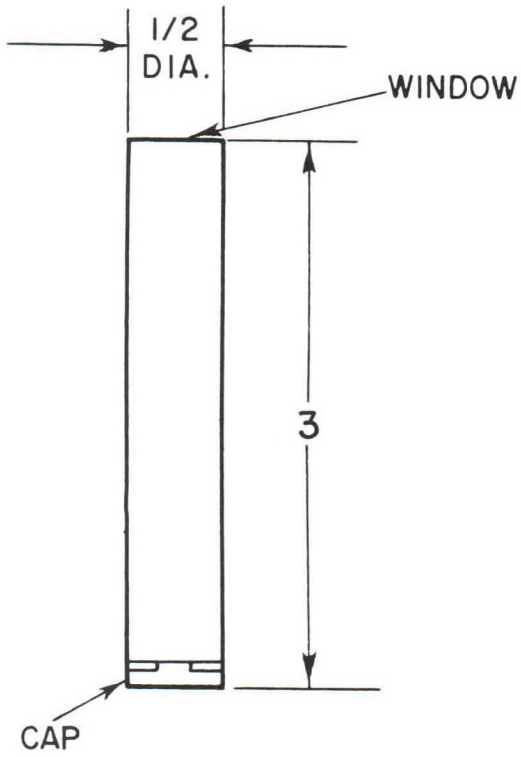

WINDOW VIEW

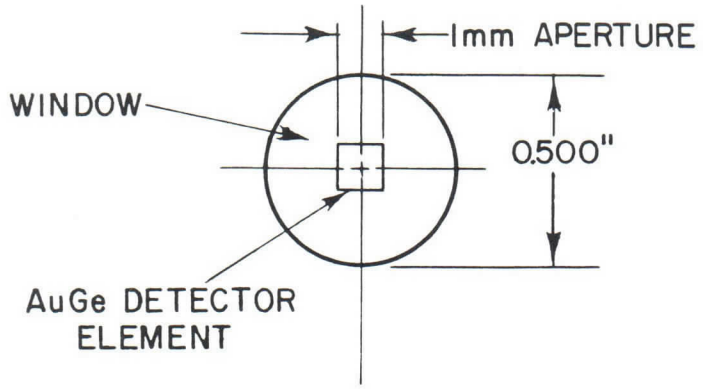

END VIEW

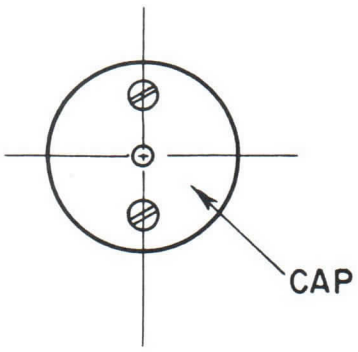

The technical information on this data sheet is of a proprietory nature and is furnished as a customer service for private use only.

QKN902

PRELIMINARY

DATA SHEET

RAYTHEON



The QKN902 is a very long wave length detector with a fast time constant making it useful for passive detection of ambient room temperature targets. The detector is mounted in a compact self-contained all-metal storage dewar providing 10 hours of unattended operation. This unit is suitable for both airborne and laboratory applications.

ELECTRICAL CHARACTERISTICS

Detector Material:

Copper activated germanium is a "p" type photoconducting material where photoionization produces current carriers thereby changing the material's electrical conductivity.

Window Material:

Barium Fluoride has an excellent transmission characteristic of greater than 90% over most of the range of this detector. It has a short wave length limit in the ultraviolet. The percentage of transmission stays at 90% out to about 10 microns where it tapers off gradually to about 50% at 14 microns.

Detector Spectral Sensitivity: 1 - 15 microns

Response: Average D* 1×10^{10} cm watt^{-1} sec $^{-1/2}$

The sensitivity will vary with the field of view and sensitive area. Generally it can be stated that the sensitivity will increase as the field of view decreases.

Data measured under the following test conditions:

A.	Detector Temperature	5° K
B.	Background Temperature	300° K
C.	Blackbody Temperature	500° K
D.	Chopping Frequency	800 CPS
E.	Bandwidth Referred To	1 CPS

Time Constant ..... Less than 1 microsecond

Impedance Range ..... 50,000 - 1,000,000 ohms

RAYTHEON COMPANY | MICROWAVE AND POWER TUBE DIVISION | WALTHAM 54, MASS.

The specifications for this tube have not been finalized. The tube is being manufactured in limited quantities and is available for engineering analysis purposes only. This engineering information and/or delivery of sample tubes do not imply availability of tubes with the same electrical and/or mechanical characteristics. Changes in ratings and/ or dimensions may be made at our discretion as deemed advisable by manufacturing experience or other considerations. For current information concerning this tube contact the nearest Microwave and Power Tube Regional Sales Representative.

Detector Aperture: The aperture is cooled to liquid helium temperature providing a heat shield for the detector. An additional heat shield at liquid nitrogen temperature is also provided.

Size (1/2 mm x 1/2 mm) to (5 mm x 5 mm)

Acceptance Angle ..... up to 120°; varies with detector size and aperture required.

MECHANICAL CHARACTERISTICS

The QKN902 is a compact long wavelength detector. The operating temperature of the detector is maintained by storing liquid nitrogen and helium within the unit and a single filling will provide 10 hours of operating time. The long storage time and small volume of liquified gas required have been achieved by special attention to the thermal isolation properties of the double dewar construction. Ruggedness was also a consideration in the design to insure that the detector will perform in operational environments.

Length	12 1/4"
Diameter	4 1/2"
Weight-Full	7.0 lbs.
Weight-Empty	6.1 lbs.

Signal Lead: Amphenol Subminax 27 Series 50 Ohms.

Mounting: A mounting ring with four No. 4-40 threaded holes is provided at the base of the detector. The detector should be operated in a vertical position, however, it will continue to operate at angles of about 45° from the vertical as long as these extreme angles are not maintained for long periods of time.

Vacuum Valve: A valve is provided for repumping of the vacuum if this is considered necessary.

Cooling: Cooling is accomplished with liquid nitrogen and helium. A certain amount of the gases will be boiled off during filling while the detector is being cooled down to operating temperatures. When operating temperatures are reached, the storage capacity of the detector is:

Liquid Nitrogen	1/2 liter
Liquid Helium	1/2 liter
Hold Time	10 hours

Precautions: Liquified gases should not be brought in direct contact with the window. The severe thermal shock may cause the window to crack and thereby making the detector inoperable.

SPECIAL OPTIONAL CHARACTERISTICS

Apertures outside of the specified range may be obtained.

OUTLINE DRAWING QKN902

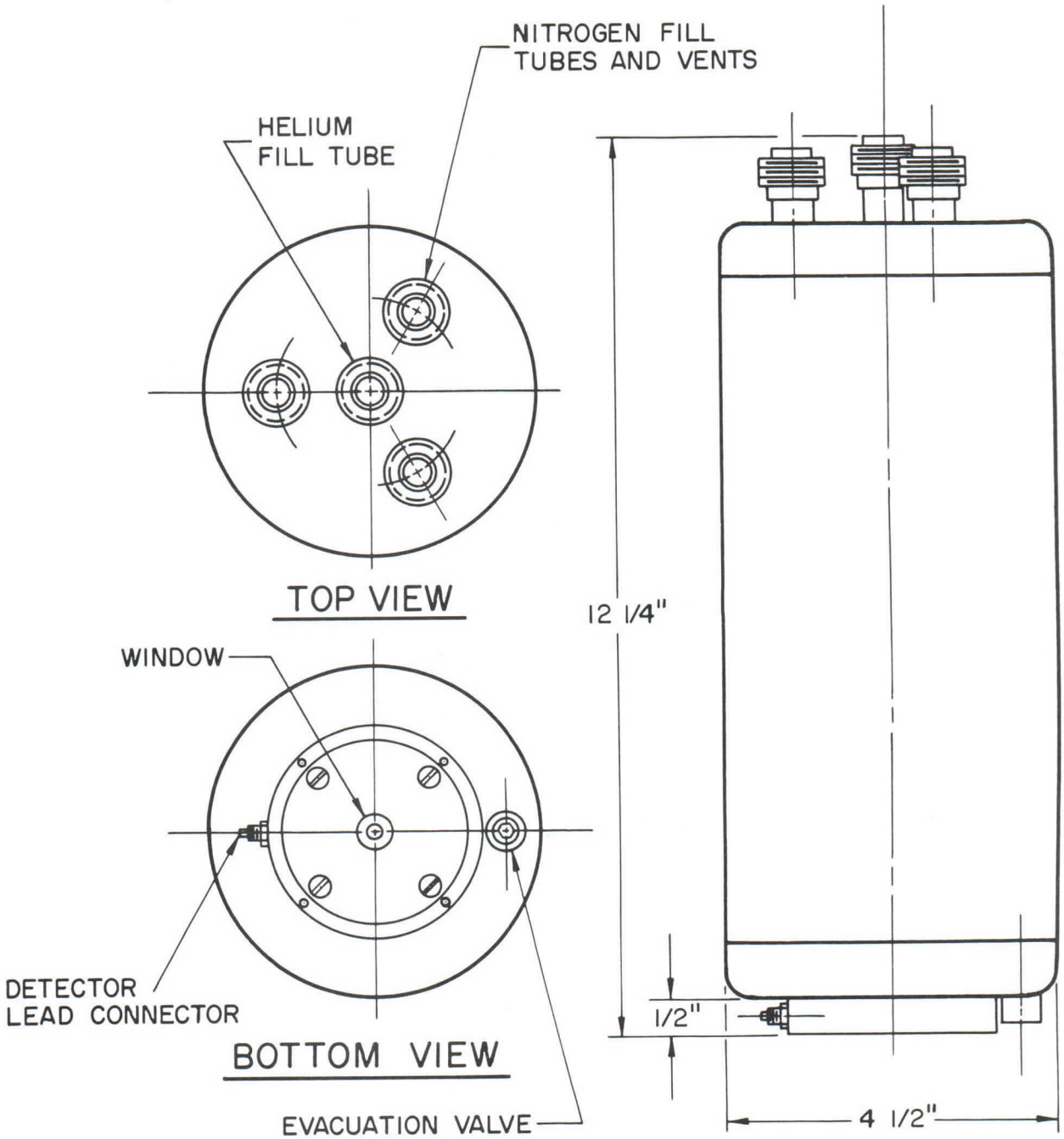

The technical information on this data sheet is of a proprietory nature and is furnished as a customer service for private use only.

QKN1003 **PRELIMINARY**

DATA SHEET

RAYTHEON



The QKN1003 is a rugged, all-metal subminiature IR detector for missile and airborne applications. Cooled "P" type gold doped germanium gives very sensitive broad band performance with a fast time constant permitting high scanning rates.

ELECTRICAL CHARACTERISTICS

Detector Material:

Gold doped germanium, "P" type, is a photoconducting material where photoionization produces current carriers thereby changing the materials electrical conductivity.

Window Material:

Barium Fluoride (BaF_2): Barium Fluoride transmits better than 90% of the energy over the enitre range of sensitivity of this detector and has a short wavelength limit in the ultraviolet.

Detector Spectral Sensitivity: 1 - 9 microns

Response:

Grade 1: D* above 2×10^9 cm/watt

Grade 2: D* $1 - 2 \times 10^9$ cm/watt

Grade 3: D* $.5 - 1 \times 10^9$ cm/watt

Data measured under the following test conditions:

A.	Detector Temperature	78° K
B.	Background Temperature	300° K
C.	Blackbody Temperature	500° K
D.	Chopping Frequency	800 CPS
E.	Bandwidth Referred To	1 CPS

Time Constant	Less than 1 microsecond
Impedance Range	50,000 - 1,000,000 ohms
Detector Aperture	1 mm x 1 mm square
Acceptance Angle	150 degrees

8/61

The specifications for this tube have not been finalized. The tube is being manufactured in limited quantities and is available for engineering analysis purposes only. This engineering information and/or delivery of sample tubes do not imply availability of tubes with the same electrical and/or mechanical characteristics. Changes in ratings and/ or dimensions may be made at our discretion as deemed advisable by manufacturing experience or other considerations. For current information concerning this tube contact the nearest Microwave and Power Tube Regional Sales Representative.

MECHANICAL CHARACTERISTICS

The QKN 1003 is of all-metal and ceramic construction with a hermetically sealed window at one end for viewing along the axis of the detector. A protective cap is mounted on the opposite end to protect the electrical terminals and hold the cooler securely in place.

Length	1 3/4"
Diameter (outer)	0.500"
Diameter (inner)	0.202 - 0.204"
Weight (empty)	11 grams

The use of metal provides a more rugged package than that of glass. Metal structures can be held to tight tolerances and the diameter of the QKN 1003 can be held to $\pm$.005 in. which will allow for precision fitting into optical systems.

Precautions:

It is recommended that detectors should not be completely immersed in liquid nitrogen nor should liquid nitrogen be brought in contact with the windows. The severe thermal shock may cause the window to crack and thereby make the detector inoperable.

Cooling Requirements:

The optimum operating region for "P" type gold doped germanium is 65° K.

A Joule-Thomson expansion cooler may be inserted into the QKN 1003 and using compressed nitrogen gas will provide adequate cooling. Care must be taken in installing the cooler to optimise the heat transfer characteristics.

SPECIAL OPTIONAL CHARACTERISTICS

Variations from the standard QKN 1003 may be obtained on Special Order and are listed below:

A. Window:

1. Sapphire 1 - 6 microns

B. Aperture: Maximum size is a square of 3 1/2 mm x 3 1/2 mm. Any shape can be provided that will fit within this area down to a minimum size of .5 mm diameter.

C. Acceptance Angle: Up to 150 degrees. Depends upon effective detector area.

OUTLINE DRAWING QKN1003

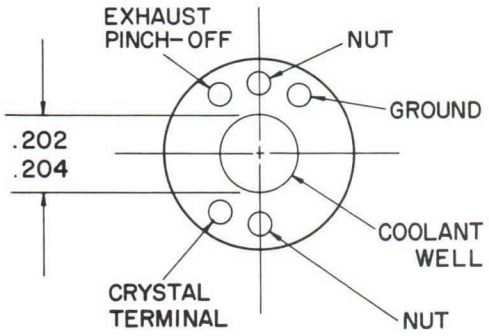

TERMINAL VIEW

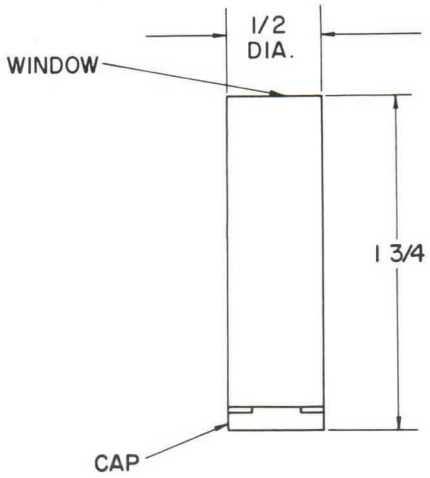

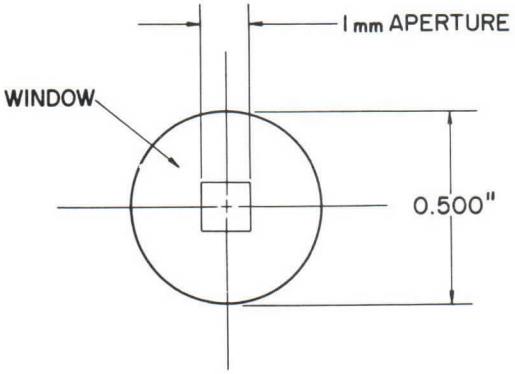

WINDOW VIEW

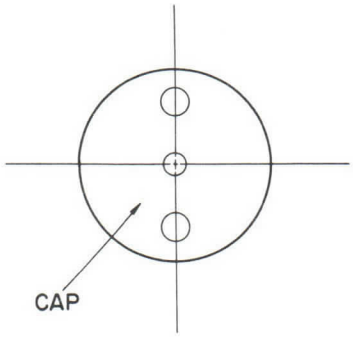

END VIEW

The technical information on this data sheet is of a proprietory nature and is furnished as a customer service for private use only.

QKN1004

PRELIMINARY

DATA SHEET

RAYTHEON



The QKN1004 is a very sensitive broadband, cooled "P" type gold doped germanium detector. A fast time constant makes it desirable where high resolution is required. It's rugged, miniature, all-metal construction with hermetically sealed windows make it ideal for airborne and missileborne applications as well as for laboratory use.

ELECTRICAL CHARACTERISTICS

Detector Material:

Gold doped germanium, "P" type, is a photoconducting material where photoization produces current carriers thereby changing the material's electrical conductivity.

Window Material:

Barium Fluoride (BaF_2): Barium Fluoride transmitts better than 90% of the energy over the entire range of sensitivity of this detector and has a short wavelength limit in the ultraviolet.

Detector Spectral Sensitivity: 1 - 9 microns

Response:

Grade 1: D* above 2×10^9 cm/watt

Grade 2: D* $1 - 2 \times 10^9$ cm/watt

Grade 3: D* $.5 - 1 \times 10^9$ cm/watt

Data measured under the following test conditions

A. Detector Temperature ..... 78° K
B. Background Temperature ... 300° K
C. Blackbody Temperature .... 500° K
D. Chopping Frequency ..... 800 CPS
E. Bandwidth Referred To ..... 1 CPS

Time Constant: ..... Less than 1 microsecond
Impedance Range: ..... 50,000 - 1,000,000 ohms
Detector Aperture: ..... 1 mm x 1 mm square
Acceptance Angle: ..... 150 degrees

8/61

The specifications for this tube have not been finalized. The tube is being manufactured in limited quantities and is available for engineering analysis purposes only. This engineering information and/or delivery of sample tubes do not imply availability of tubes with the same electrical and/or mechanical characteristics. Changes in ratings and/ or dimensions may be made at our discretion as deemed advisable by manufacturing experience or other considerations. For current information concerning this tube contact the nearest Microwave and Power Tube Regional Sales Representative.

MECHANICAL CHARACTERISITCS

The QKN1004 is of all-metal and ceramic construction with a hermetically sealed window at one end for viewing along the axis of the detector. A protective cap is mounted on the opposite end to protect the electrical terminals and hold the cooler securely in place.

Length	2 7/8"
Diameter (outer)	0.500"
Diameter (inner)	0.202 - 0.204"
Weight (empty)	20 grams

The use of metal provides a more rugged package than that of glass. Metal structures can be held to tight tolerances and the diameter of the QKN1004 can be held to $\pm$.005 in. which will allow for precision fitting in optical systems.

Cooling Requirements:

The optimum operating region for "P" type gold doped germanium is 65° K. There are two basic techniques for cooling the QKN1004.

1. The QKN1004 can be used as a liquid storage device for liquid nitrogen which has a boiling point of 78° K. One filling of the QKN884 with liquid nitrogen will give up to 15 minutes operating time before refilling.

2. A Joule-Thomson expansion cooler may be inserted into the QKN1004 and using compressed gas will provide adequate cooling. Care must be taken in installing the cooler to optimize the heat transfer characteristics.

SPECIAL OPTIONAL CHARACTERISTICS

Variations from the standard QKN1004 may be obtained on Special Order and are listed below:

A. Window:

1. Sapphire 1 - 6 microns

B. Aperture: Maximum size is a square of 3 1/2 mm x 3 1/2 mm. Any shape can be provided that will fit within this area down to a minimum size of .5 mm diameter.

C. Acceptance Angle: Up to 150 degrees. Depends upon effective detector area.

OUTLINE DRAWING QKN1004

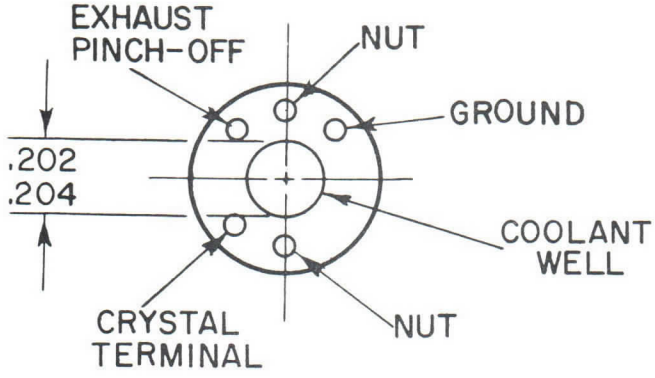

TERMINAL VIEW

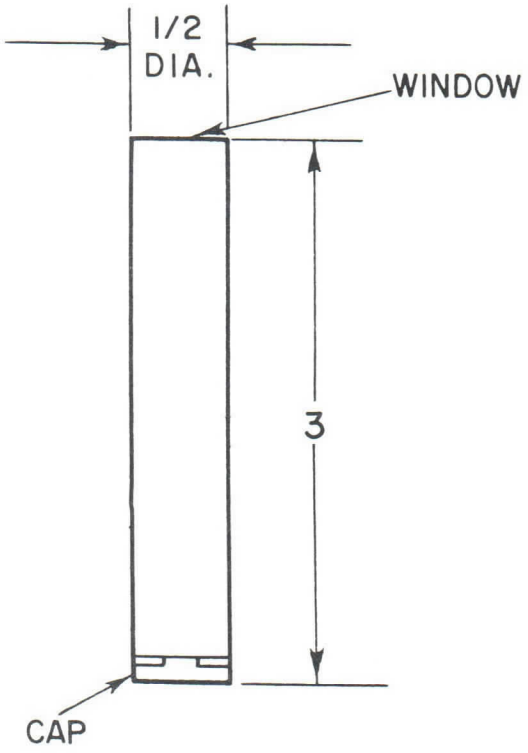

WINDOW VIEW

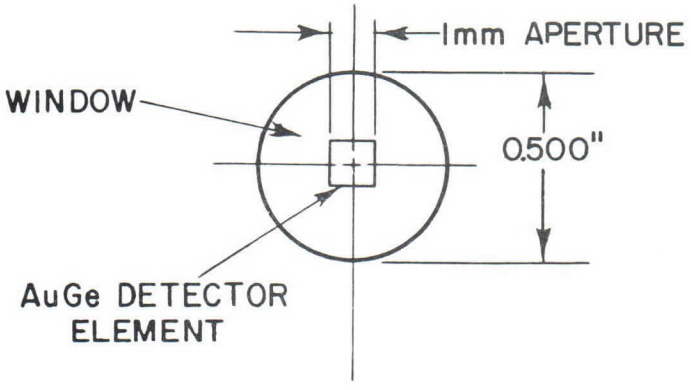

END VIEW

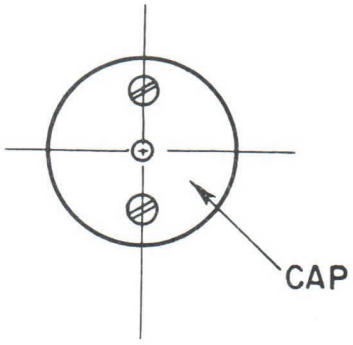

QK 748 **PRELIMINARY DATA SHEET**

RAYTHEON *Excellence in Electronics*



QK 748

GENERAL DESCRIPTION

The QK748 is a very sensitive P type gold doped germanium infrared detector of all metal construction with hermetically sealed windows. Due to its extremely small physical size and rugged metal envelope, it is ideally suited to airborne applications.

CHARACTERISTICS

Dewar
Of all metal construction with hermetically sealed windows

Detector Material
P type gold doped germanium

Operating Temperature
Liquid nitrogen (78° Kelvin), (Santa Barbara Research Corporation Subminiature Cooler Dimension .203 inch diameter x 1.22 inches long)

Window Material
Antireflection coated silicon or sapphire

Spectral Sensitivity Range
The detector proper is sensitive from about 2-9 microns; units with sapphire windows have a 6 micron longwave length cutoff, whereas units with silicon windows cover the whole range from 2-9 microns.

Detector Area
3.5 x 3.5 millimeters

Impedance Range
50,000 ohms to 1 megohm

Acceptance Angle
Approximately 100 degrees

Response
Measured with a blackbody at 500° Kelvin at 800 cycles and referred to 1 cycle bandwidth.

$$NEP = 7 \times 10^{-10} \text{ to } 7 \times 10^{-11} \text{ watts}$$

$$D^* = 5 \times 10^{8} \text{ to } 5 \times 10^{9} \text{ cm/watt}$$

Time Constant
Less than 1 microsecond

This preliminary Data Sheet is intended as an introduction to this infrared detector and not as an absolute guide to users. Inquiries on this detector and its application should be directed to the Applications Engineering Department at Raytheon Company, Waltham, Massachusetts.

RAYTHEON

QK 748
INFRARED DETECTOR
(ALL METAL TUBE)

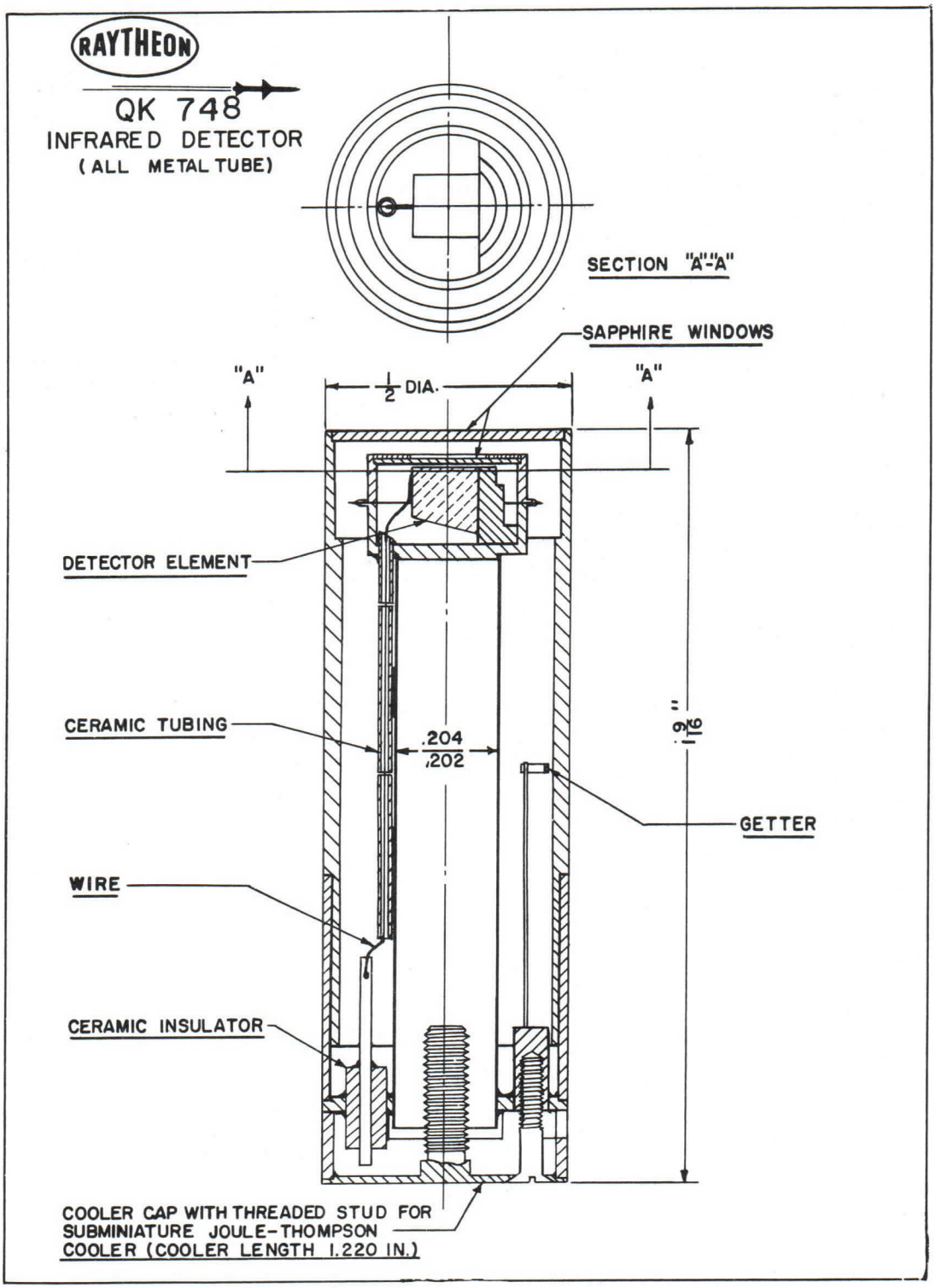

RAYTHEON®

Excellence in Electronics

THE DATA IN THIS SECTION FORMS A PART OF THE RAYTHEON TECHNICAL DATA BOOK FOR

MICROWAVE and POWER TUBES

For replacement data sheets or for additional copies of this book, contact

TECHNICAL INFORMATION SERVICE
RAYTHEON COMPANY
55 Chapel Street,
Newton 58, Massachusetts

RAYTHEON

DATA SERVICE

ELECTRON TUBES
MICROWAVE

CONTENTS

TRAVELING WAVE TUBES

TYPE	PAGE	DATE
QK542	1-2	Prelim
QKW669	1	Obj
QKW746	1	Obj
QKW825	1-3	Prelim
QKW928	1	5-61
QKW998	1	9-61
QKW1013	1	2-62
8128	1-2	12-61

The technical information on this data sheet is of a proprietory nature and is furnished as a customer service for private use only.

QK542 **PRELIMINARY DATA SHEET**

RAYTHEON *Excellence in Electronics*

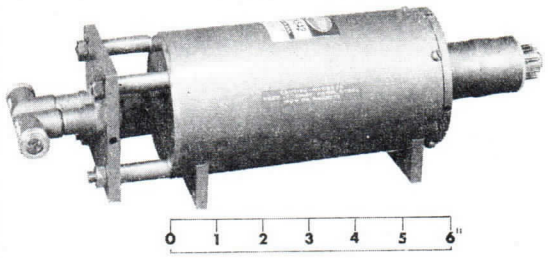

QK542

GENERAL DESCRIPTION

The QK542 is a broad band power amplifier traveling wave tube designed for C.W. or pulsed operation over the 4000 to 8000 Mc range with a minimum saturated power output of 1 watt. This tube type utilizes a permanent magnet and coaxial input and output connections. The QK542 is designed for use in countermeasures equipment or other applications requiring a broad band amplifier.

GENERAL CHARACTERISTICS

ELECTRICAL

Heater Voltage	6.3 V
Heater Current	1.0 A
Cathode Heating Time	1 Minute Minimum
Anode And Collector Voltage	1500 Vdc
Collector Current	40 mA Maximum
Focus Electrode Voltage	
Positive Value	0 Vdc
Negative Value	-300 Vdc
Frequency Range	4000-8000 Mc
VSWR (Input)	3:1 Maximum
VSWR (Output)	3:1 Maximum
Small Signal Gain	32-35 db
Small Signal Gain Variation (50 Mc band)	0.1 db Maximum
Gain (Saturation)	25-27 db
Input Power At Saturation	5 mW
Power Output (Saturation)	1 W Minimum

MECHANICAL

Overall Dimensions	3 1/2 x 11 1/2 Inches
Net Weight	10 Pounds Approximate
Cooling	Forced Air 10 cfm
Output Coupling	Coaxial Type "N"
Base	Intermediate Octal

PIN CONNECTIONS

1	2	3	4	5	6	7	8
NC	Heater	NC	Control Grid	NC	Anode and Helix	Heater	Cathode

The specifications for this tube have not been finalized. The tube is being manufactured in limited quantities and is available for engineering analysis purposes only. This engineering information and/or delivery of sample tubes do not imply availability of tubes with the same electrical and/or mechanical characteristics. Changes in ratings and/ or dimensions may be made at our discretion as deemed advisable by manufacturing experience or other considerations. For current information concerning this tube contact the nearest Microwave and Power Tube Regional Sales Representative

RAYTHEON

Excellence in Electronics

preliminary data sheet

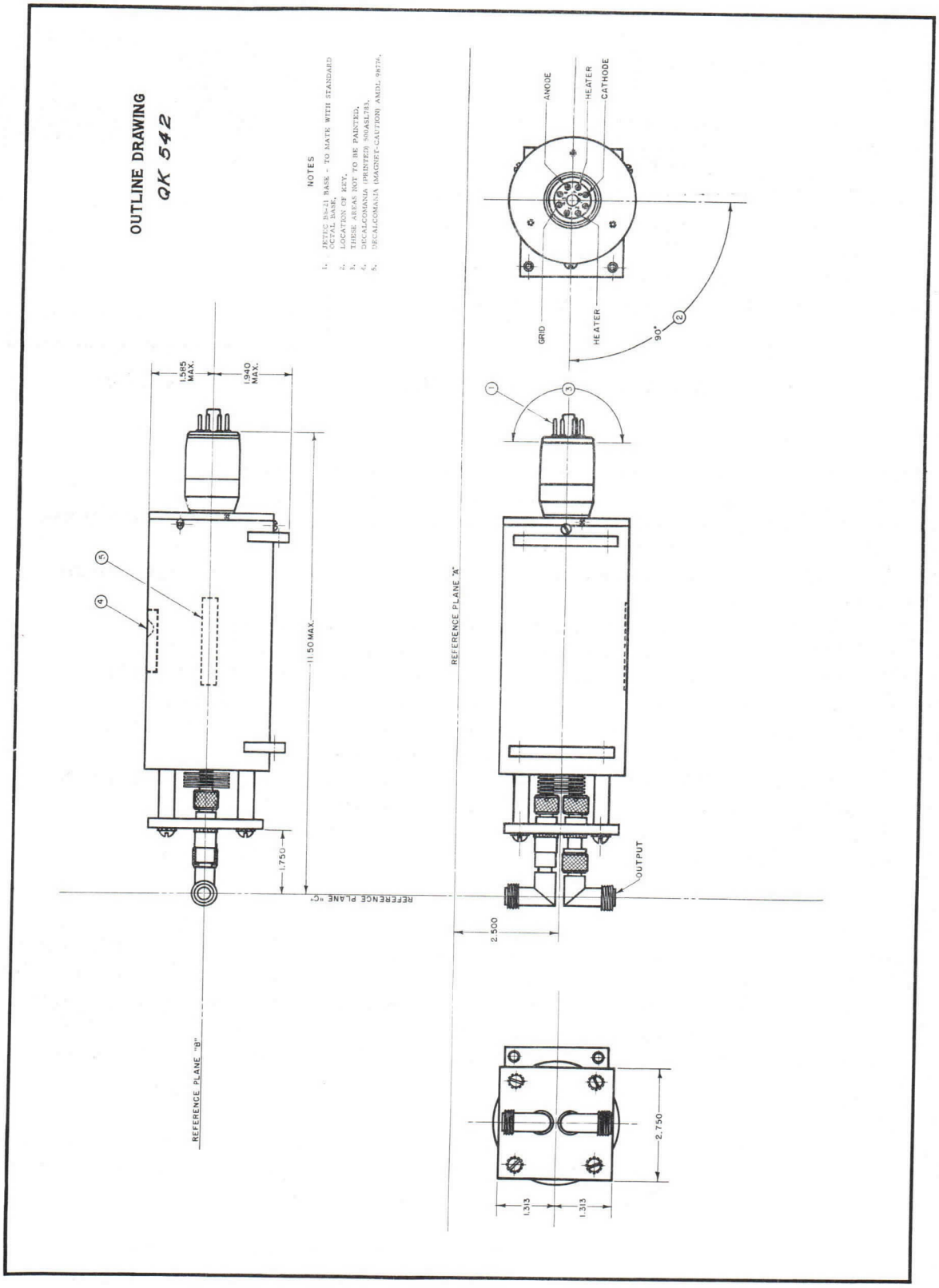

The technical information on this data sheet is of a proprietory nature and is furnished as a customer service for private use only.

QKW574 OBJECTIVE DATA SHEET

RAYTHEON



The QKW574 traveling wave amplifier is designed for pulsed operation in the UHF frequency band. The tube is conservatively rated for 30 db gain over a 30% frequency band at 3.0 kilowatts peak power. It is ideally suited for broad band, frequency diversity systems.

The tube requires a solenoid for the magnetic field. Two external terminations are required for the slow wave structure.

This objective data sheet is intended only to acquaint the reader with the basic characteristics of the tube and should not be used solely in the system design. Detailed information may be obtained by contacting the Product Programs Department, Microwave and Power Tube Division, Raytheon Company, Burlington, Massachusetts.

GENERAL CHARACTERISITCS

Typical Electrical Data

Heater Voltage	6.0 Volts
Heater Current	6.0 Amperes
Cathode Heating Time	5 Minutes
Frequency Range	510-690 megacycles
Peak Power	3.0 kilowatts (min.)
Average Power Output	27 Watts (min.)
Magnetic Field	650 Gauss
Pulse Width	8.0 usec
Duty Cycle	.009
Pulse Voltage	10 kilovolts
Peak Current	2.5 amperes
Perveance	2.5 up
Load VSWR	1.5 Max.

Mechanical Data

Overall Dimensions	See Outline Drawing
Net Weight	18 Pounds (approx.)
Cooling	Liquid
RF Coupling	Type N
Mounting Position	Any
Magnetic Field	Solenoid
Termination	Bird Model 80A or equiv.

6/63

The specifications for this tube have not been finalized. The tube is in the development stage and is available for engineering analysis purposes only. This engineering information and/or delivery of sample tubes do not imply availability of tubes with the same electrical and/or mechanical characteristics. Changes in ratings and/or dimensions may be made at our discretion as deemed advisable by manufacturing experience or other considerations. For current information concerning this tube contact the nearest Microwave and Power Tube Regional Sales Representative.

QKW574 OUTLINE DRAWING

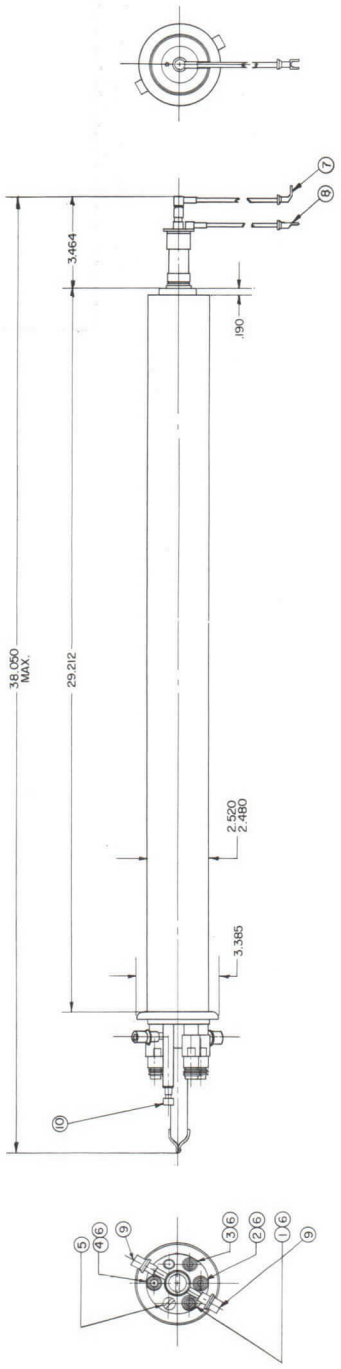

1. INPUT HELIX TERMINATION. MATES WITH BIRD ELECTRONICS MODEL 80A OR EQUIVALENT.
2. RF POWER OUTPUT.
3. OUTPUT HELIX TERMINATION.
4. RF POWER INPUT.
5. GROUND.
6. UG-23 BU CONNECTOR.
7. HEATER-CATHODE CONNECTOR.
8. HEATER CONNECTOR.
9. COOLANT CONNECTOR, HANSEN SERIES 3000 OR EQUIVALENT.
10. GETTER BUSHING.

The technical information on this data sheet is of a proprietory nature and is furnished as a customer service for private use only.

QKW575 OBJECTIVE DATA SHEET

RAYTHEON



The QKW575 traveling wave amplifier is designed for pulsed operation in the UHF frequency band. The tube is conservatively rated for 21 db gain over a 30% frequency band at 300 kilowatts peak power. It is ideally suited for broad band, frequency diversity systems. This tube requires a solenoid for the magnetic field. Two external terminations are required for the slow wave structure.

This objective data sheet is intended only to acquaint the reader with the basic characteristics of this tube and should not be used solely in the system design. Detailed information may be obtained by contacting the Product Program Department, Microwave and Power Tube Division, Raytheon Company, Burlington, Massachusetts.

GENERAL CHARACTERISTICS

Typical Electrical Data

Heater Voltage	30 Volts
Heater Current	7.0 Amperes
Cathode Heating Time	5 Minutes
Frequency Range	510-690 Megacycles
Peak Power	300 kilowatts (min.)
Average Power Output	1680 Watts (min.)
Magnetic Field	575 Gauss
Pulse Width	7.5 usec
Duty Cycle	.0056
Pulse Voltage	40 kilovolts
Peak Current	50 amperes
Perveance	2.0 up
Load VSWR	1.5 (max.)

Mechanical Data

Overall Dimensions	See Outline Drawing
New Weight	60 Pounds (approx.)
Cooling	Liquid
Input Coupling	7/8" coaxial line
Output Coupling	1 5/8" coaxial line
Mounting Position	Tube Axis Horizontal
Magnetic Field	Solenoid
Termination	Bird Model 82A or equiv.

6/63

The specifications for this tube have not been finalized. The tube is in the development stage and is available for engineering analysis purposes only. This engineering information and/or delivery of sample tubes do not imply availability of tubes with the same electrical and/or mechanical characteristics. Changes in ratings and/or dimensions may be made at our discretion as deemed advisable by manufacturing experience or other considerations. For current information concerning this tube contact the nearest Microwave and Power Tube Regional Sales Representative.

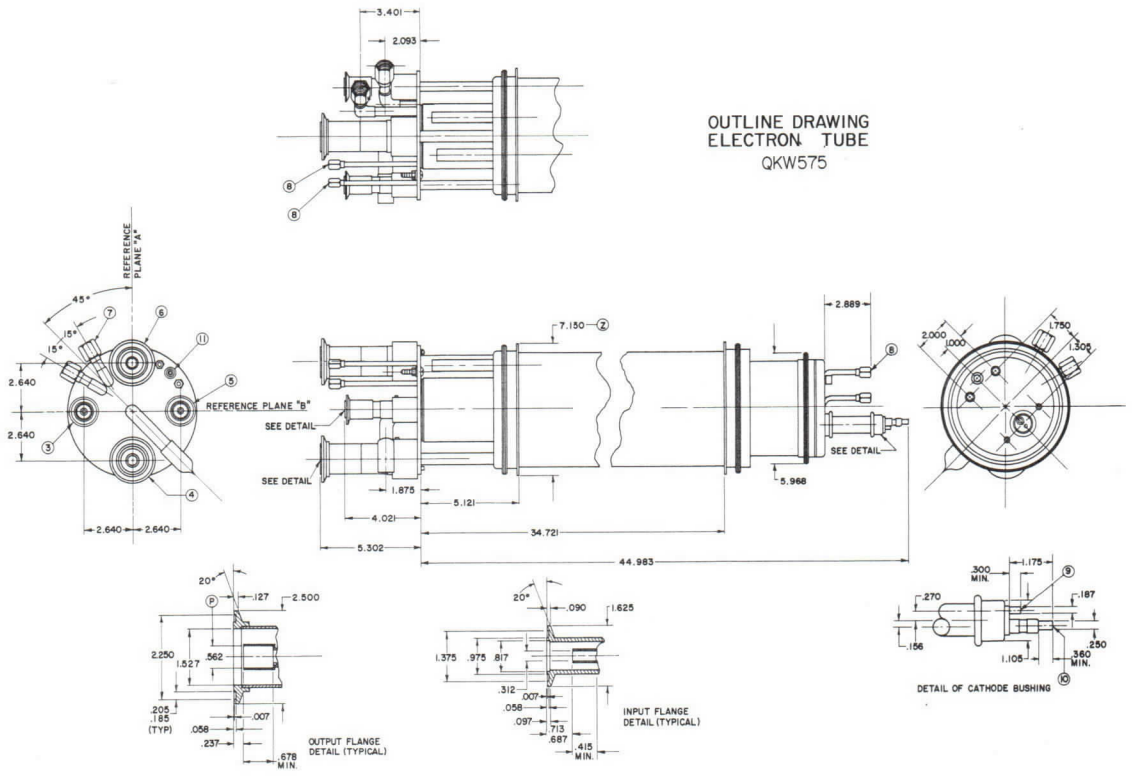

NOTES

1 - REFERENCE PLAN "A" IS A PLANE PASSING THRU THE AXIS OF REF "Z" AND THRU THE AXIS OF DIA. "P".
2 - REFERENCE PLANE "B" IS A PLANE PERPENDICULAR TO REF PLAN "A" AND PASSING THRU THE AXIS OF OF REF DIA. "Z".
3 - INPUT HELIX TERMINATION.
4 - OUTPUT HELIX TERMINATION.
5 - RF POWER INPUT
6 - RF POWER OUTPUT
7 - COOLING CONNECTORS, 37° FLARE TO MATE WITH 3/4-16 FITTING.
8 - COOLING CONNECTORS, 37° FLARE TO MATE WITH 7/16-20 FITTING.
9 - HEATER CATHODE CONNECTION
10 - HEATER CONNECTION
11 - GROUND, 1/4-20 ON 5.950 DIA. B.C.

The technical information on this data sheet is of a proprietory nature and is furnished as a customer service for private use only.

QKW669 **OBJECTIVE DATA SHEET**

RAYTHEON *Excellence in Electronics*

GENERAL DESCRIPTION

The QKW669 is a broad band power amplifier traveling wave tube designed for operation over the 7125 to 8500 Mc range with a nominal saturated power output of 12.6 watts. This tube type utilizes a permanent magnet and UG 52A/U waveguide type coupling flanges. The QKW669 is designed for use in microwave relay links or other applications requiring a broad band amplifier.

GENERAL CHARACTERISTICS

ELECTRICAL

Heater Voltage	6.3 V
Heater Current	1.0 A
Cathode Heating Time	1 Minute Minimum
Helix Voltage) Internally Connected Anode Voltage) Internally Connected	3 kVdc Max.
Collector Voltage	3 kVdc Max.
Cathode Current	40 mA
Focus Electrode Voltage	0 Vdc
Frequency Range	7125 - 8500 Mc
VSWR (Input) 7125 to 8500 Mc	2:1 Max.
VSWR (Output) 7125 to 8500 Mc	2:1 Max.
Small Signal Gain	25 - 30 db
Gain (Saturation)	20 - 25 db
Input Power At Saturation	80 mW
Amplitude Response (20 Mc Bandwidth)	$\pm$ 0.5 db
Power Output	12.6 W Nominal

MECHANICAL

Length	12 1/4 Inches
Diameter	5 1/4 Inches
Net Weight	15 Pounds
Cooling	Forced Air
Input and Output Coupling	Waveguide UG 52A/U
Base	Intermediate Octal

PIN CONNECTIONS

1	2	3	4	5	6	7	8
Grid (Focus)	Ground	Heater	Getter (keep at ground potential)	NC	Heater	NC	Cathode

The specifications for this tube have not been finalized. The tube is in the development stage and is available for engineering analysis purposes only. This engineering information and/or delivery of sample tubes do not imply availability of tubes with the same electrical and/or mechanical characteristics. Changes in ratings and/or dimensions may be made at our discretion as deemed advisable by manufacturing experience or other considerations. For current information concerning this tube contact the nearest Microwave and Power Tube Regional Sales Representative.

The technical information on this data sheet is of a proprietory nature and is furnished as a customer service for private use only.

QKW746 **OBJECTIVE DATA SHEET**

RAYTHEON *Excellence in Electronics*

GENERAL DESCRIPTION

The QKW746 is a broad band low noise traveling wave tube designed for C.W. operation over the 5900 to 7400 Mc range with a saturated power output of 5 mW. This tube type utilizes a permanent magnet UG 344/U waveguide type flanges. The QKW746 is designed for use in microwave relay links or other applications requiring a broad band amplifier.

GENERAL CHARACTERISTICS

ELECTRICAL

Anode #1	0 - 40 Vdc
Anode #2	50 - 120 Vdc
Anode #3	80 - 205 Vdc
Anode #4 (Shell)	500 - 700 Vdc
Heater Voltage	6.3 V
Cathode Heating Time	1 Minute Minimum
Helix Voltage Range	500 - 700 Vdc
Collector Voltage Range	500 - 700 Vdc
Collector Current	800 uA Max.
Frequency Range	5900 - 7400 Mc
VSWR (Input) 5900 - 7400 Mc	2:1 Max.
VSWR (Output) 5900 - 7400 Mc	2:1 Max.
Small Signal Gain	20 - 25 db
Power Output	6 - 7 mW
Noise Figure	10 db

MECHANICAL

Overall Dimensions	3 1/2 x 12 1/2 Inches
Net Weight	12 Pounds
Cooling	Freely Circulating Air
Output Coupling	Waveguide UG 344/U
Base	Intermediate Octal

PIN CONNECTIONS

1	2	3	4	5	6	7	8
Anode #1	Heater	Anode #2	NC	Anode #4 (chassis)	Anode #3	Heater and Cathode	NC

The specifications for this tube have not been finalized. The tube is in the development stage and is available for engineering analysis purposes only. This engineering information and/or delivery of sample tubes do not imply availability of tubes with the same electrical and/or mechanical characteristics. Changes in ratings and/or dimensions may be made at our discretion as deemed advisable by manufacturing experience or other considerations. For current information concerning this tube contact the nearest Microwave and Power Tube Regional Sales Representative.

The technical information on this data sheet is of a proprietory nature and is furnished as a customer service for private use only.

QKW750A

OBJECTIVE

DATA SHEET

RAYTHEON



GENERAL DESCRIPTION

The QKW750A is a wide band, 60 Kw, (minimum) traveling wave tube designed for pulsed operation over the 2900 to 3100 megacycle range. This tube has a minimum gain of 20 db, and it utilizes a solenoid for the focusing magnetic field. This is a high duty cycle version of the QKW750 which was originally developed under BuShips Contract No. NObsr-72820.

The QKW750A is designed for use as a driver for the QKS622 Amplitron, and it is ideal for frequency diversity type radar applications.

GENERAL CHARACTERISTICS

Typical Electrical Data

Heater Voltage	8 Volts
Heater Current	8.0 Amperes
Cathode Heating Time	5 Minutes
Frequency Range	2900 - 3100 Mc
Peak Power	60 Kilowatts (Min.)
Average Power Output	900 Watts (Min.)
Magnetic Field	700 Gauss
Pulse Width	30 usec
Duty Cycle	.015
Pulse Voltage	34.5 Kilovolts
Peak Current	12 Amperes
Perveance	2.0 uperv.
Load Voltage Standing Wave Ratio	1.5 Max.

Mechanical Data

Overall Dimensions	4" x 26" (See Drawing)
Net Weight	16 Pounds (Approx.)
Cooling	Liquid
Output Coupling	UG 46/U
Mounting Position	Any

8/61

The specifications for this tube have not been finalized. The tube is in the development stage and is available for engineering analysis purposes only. This engineering information and/or delivery of sample tubes do not imply availability of tubes with the same electrical and/or mechanical characteristics. Changes in ratings and/or dimensions may be made at our discretion as deemed advisable by manufacturing experience or other considerations. For current information concerning this tube contact the nearest Microwave and Power Tube Regional Sales Representative.

RAYTHEON

objective data sheet.

NOTES
1. PART TO MATE WITH A UG46/U COUPLING FLANGE.
2. PART TO MATE WITH A TYPE "N" PLUG.
3. PART TO MATE WITH MS24385-4 OR EQUIVALENT.
4. R.F. INPUT.
5. R.F. OUTPUT.

OUTLINE DRAWING
ELECTRON TUBE
QKW750A

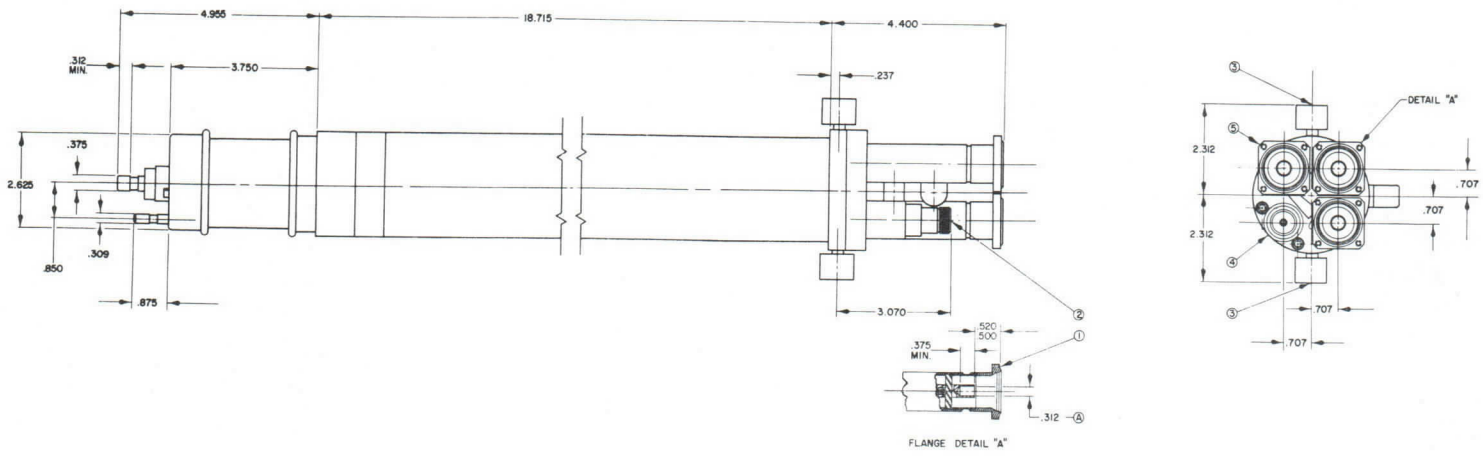

FLANGE DETAIL "A"

NOTES
1. CANNON ELECTRICAL CONNECTOR "AN 3102 A-10SL-4P.
2. THESE DIMENSIONS APPLY TO THE AXIS OF DIAMETER "W".
3. THIS SURFACE TO BE PERPENDICULAR TO AXIS OF REFERENCE PLANE "A" WITHIN 2°.
4. 1/4-18 N.P.T.

INSTALLATION DETAIL
QKW750A

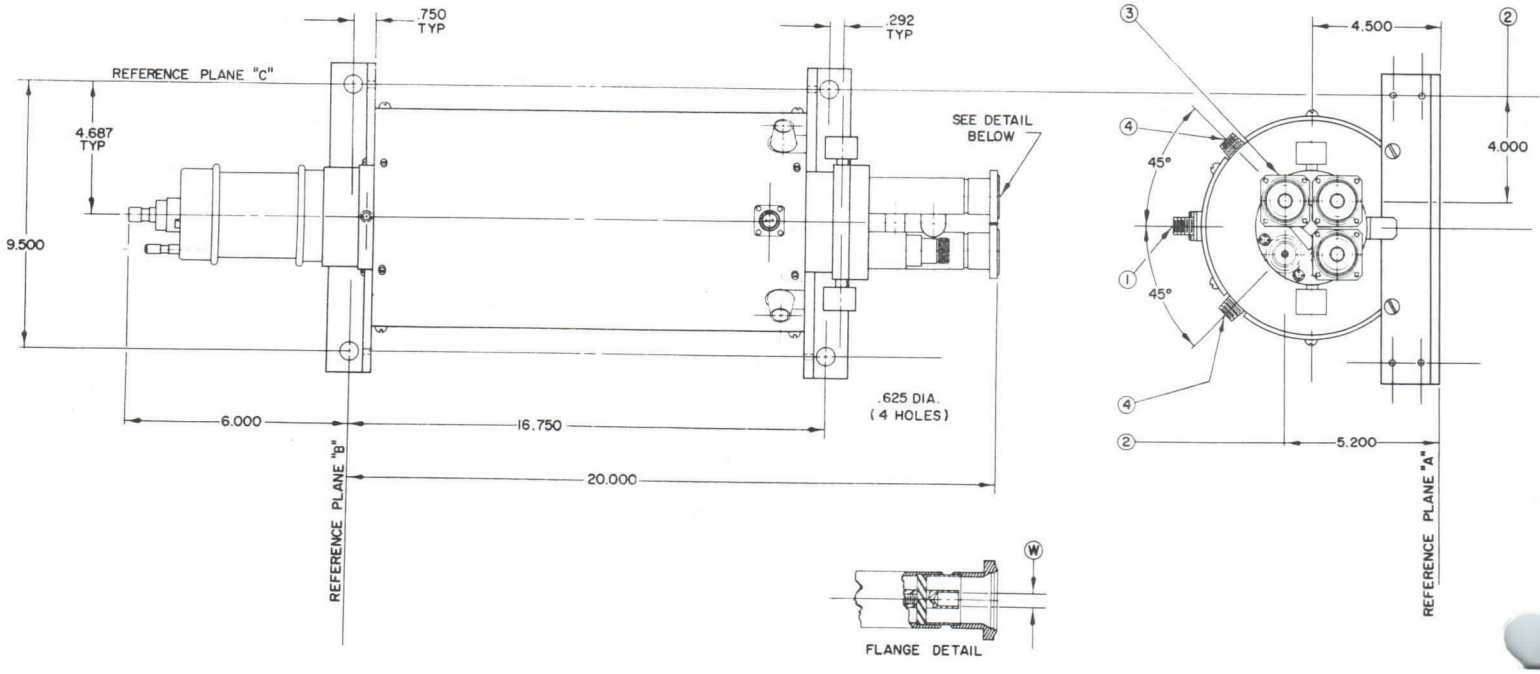

FLANGE DETAIL

The technical information on this data sheet is of a proprietory nature and is furnished as a customer service for private use only.

QKW825 **PRELIMINARY**

DATA SHEET

RAYTHEON *Excellence in Electronics*

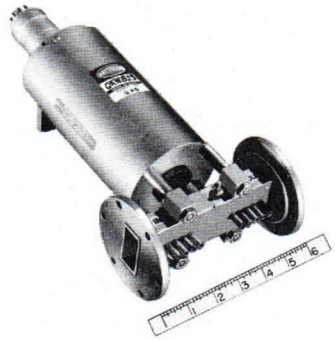

QKW825

GENERAL DESCRIPTION

The QKW825 is a broad band power amplifier traveling wave tube designed for C.W. or pulsed operation over the 5900 to 7400 Mc range with a minimum saturated power output of 3 watts. This tube type utilizes permanent magnet focusing. The input and output coupling are provided with UG 344/U waveguide type flanges. The QKW825 is designed for use in microwave relay links or other applications requiring a broad band amplifier.

GENERAL CHARACTERISTICS

ELECTRICAL

Heater Voltage	6.3 V
Heater Current	1.0 A
Cathode Heating Time	1 Minute Minimum
Helix Voltage	1400 Vdc
Anode and Collector Voltage	1500 Vdc
Collector Current	40 mA Maximum
Focus Electrode Voltage	
Positive Value	0 Vdc
Negative Value	-300 Vdc
Frequency Range	5900-7400 Mc
*VSWR (Input) 5900-7400 Mc	2:1 Maximum
*VSWR (Output) 5900-7400 Mc	2:1 Maximum
Small Signal Gain	32-35 db
Small Signal Gain Variation (50 Mc band)	.1 db Max.
Gain (Saturation)	25-27 db
Input Power At Saturation	10 mW
Power Output (Saturated)	3 W Minimum

(*) VSWR of input and output can be reduced to less than 1.2 over any 50 Mc Channel by adjusting tuning screws of input and output waveguides sections.

MECHANICAL

Overall Dimensions	3 1/2 x 11 1/2 inches
Net Weight	12 Pounds Approximate
Cooling	Forced Air 10 cfm
Output Coupling	Waveguide UG 344/U
Base	Intermediate Octal

The specifications for this tube have not been finalized. The tube is being manufactured in limited quantities and is available for engineering analysis purposes only. This engineering information and/or delivery of sample tubes do not imply availability of tubes with the same electrical and/or mechanical characteristics. Changes in ratings and/ or dimensions may be made at our discretion as deemed advisable by manufacturing experience or other considerations. For current information concerning this tube contact the nearest Microwave and Power Tube Regional Sales Representative.

The tabulated data and accompaning graphs are representative of only a small sample and are presented as general information for the circuit designer. They should not be interpreted as completely defining the expected spread of the tube's characteristics. Detailed information necessary for specific applications may be obtained by contacting the Applications Engineering Department, Microwave and Power Tube Division, Raytheon Company, Waltham, Massachusetts.

OUTPUT VSWR VERSUS FREQUENCY

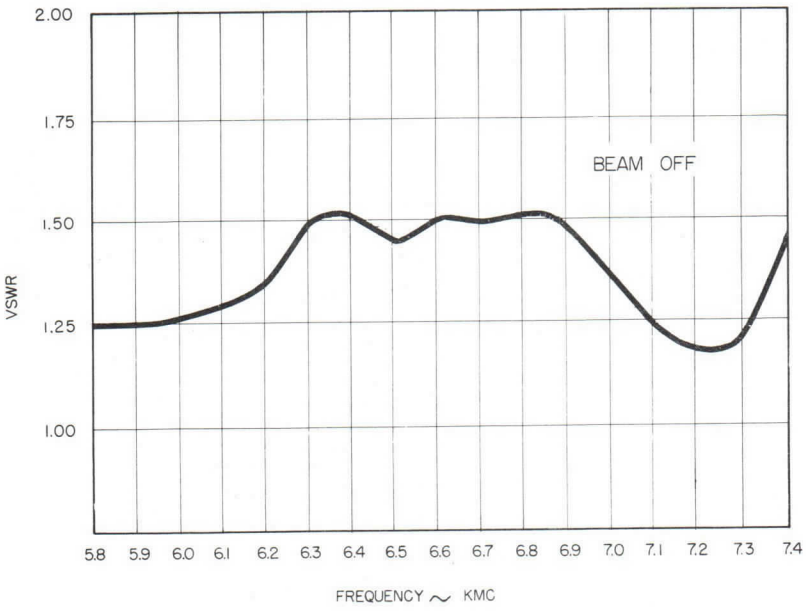

GAIN AND POWER OUTPUT VS. INPUT POWER

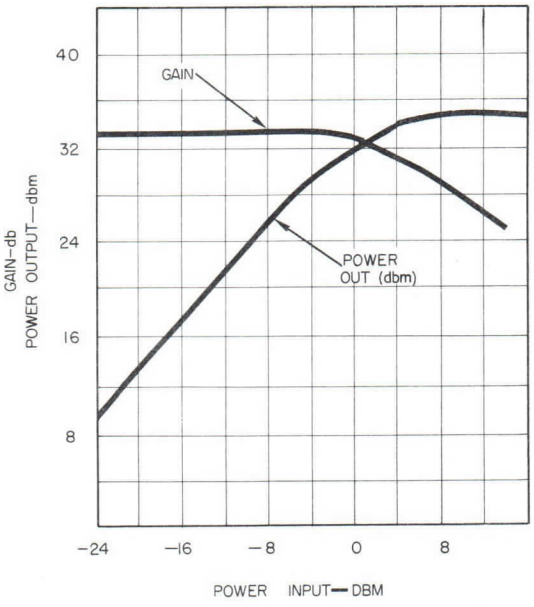

PIN CONNECTIONS

1	2	3	4	5	6	7	8
Nc	Heater	Nc	Control Grid	Nc	Anode	Heater	Cathode

Helix Connection ..... Connection on Waveguide (See Outline Dwg.)

preliminary data sheet

RAYTHEON

Excellence in Electronics

NOTES

1. REFERENCE PLANE "A" IS DEFINED AS A PLANE PASSING ALONG THE FACE OF THE INPUT FLANGE AS SHOWN.
2. REFERENCE PLANE "B" IS DEFINED AS A PLANE PERPENDICULAR TO PLANE "A" AND PASSING THRU THE CENTERS OF HOLES "X" AND "Y" AT PLANE "A".
3. REFERENCE PLANE "C" IS DEFINED AS A PLANE MUTUALLY PERPENDICULAR TO PLANES "A" AND "B" AND PASSING THRU THE CENTER OF HOLE "X" AT PLANE "A".
4. HELIX CURRENT CONNECTOR.
5. JEDEC B8-21 BASE.
6. LOCATION OF KEY.
7. CAUTION - LOOSENING OF ANY SCREWS DAMAGES TUBE.
8. FLANGE - WAVEGUIDE MS 3049 (UG-144/U) TO MATE WITH CHOKE - FLANGE MS 7548 (UG-145A/U).
9. PROTECTIVE COVER - FOR SHIPPING PURPOSES ONLY.

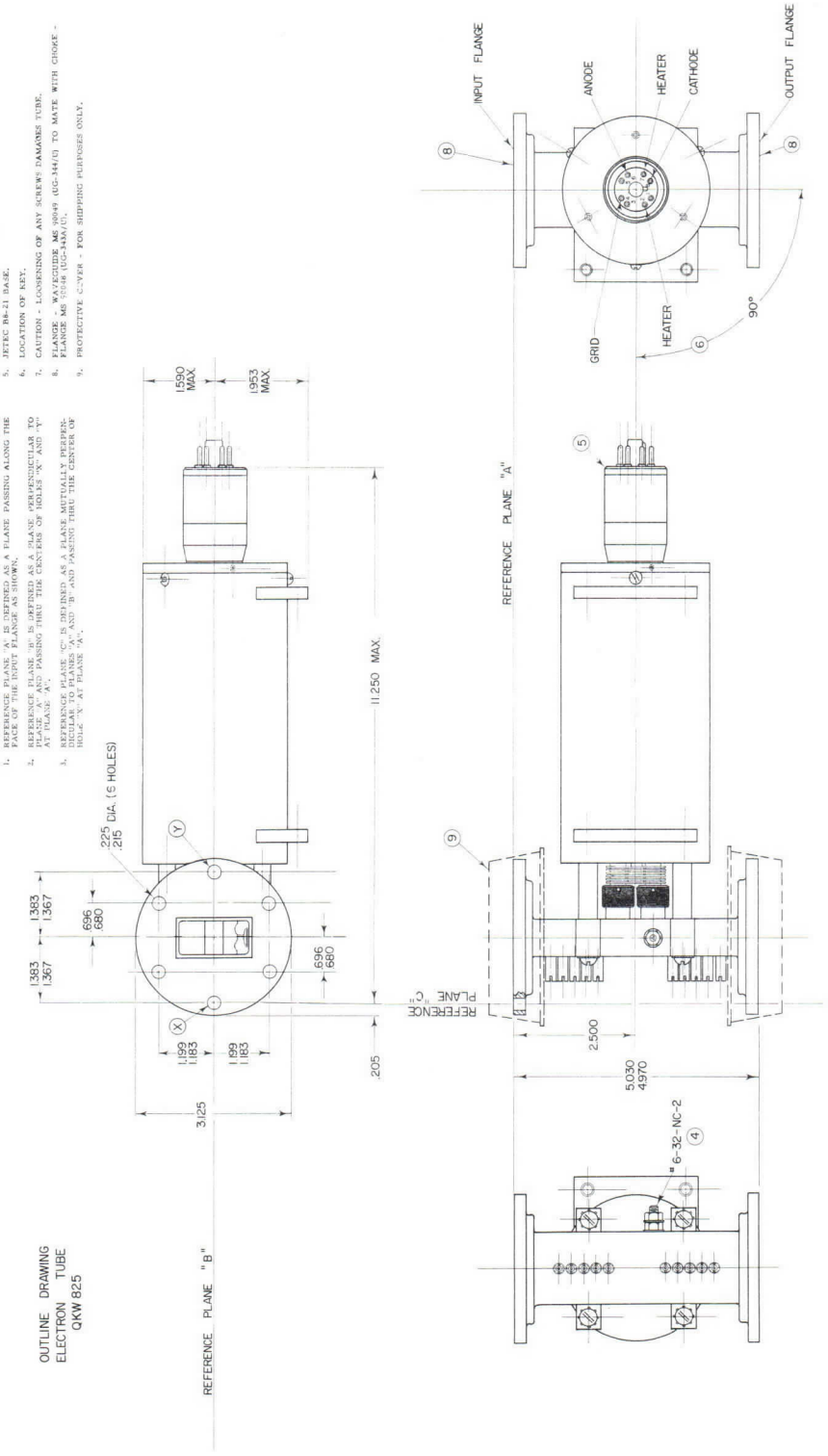

OUTLINE DRAWING
ELECTRON TUBE
QKW 825

The technical information on this data sheet is of a proprietory nature and is furnished as a customer service for private use only.

QKW928

OBJECTIVE

DATA SHEET

RAYTHEON



The QKW928 is a broadband power amplifier traveling wave tube designed for CW operation over the 5925 to 7125 Mc. range with a minimum saturated power output of 10 watts. This tube type utilizes periodic permanent magnet focusing. The input and output coupling are provided with UG344/U waveguide type flanges. The QKW928 is designed for use in microwave relay links or other applications requiring a broad band amplifier.

GENERAL CHARACTERISTICS

ELECTRICAL

Heater Voltage	6.3 V
Heater Current	1.3 A
Cathode Heating Time	1 Minute (minimum)
Helix Voltage	2600 Vdc
Collector Voltage	2600 Vdc (Note 1.)
Collector Current	40 mA
Anode Voltage	2650 Vdc
Frequency Range	5925 to 7125 Mc (Note 2.)
Small Signal Gain	35 - 38 db
Gain (Saturation)	30 - 32 db
Power Output (Saturated)	10 W (minimum)
Life (Warranteed)	7500 Hours

VSWR of input and output can be reduced to less than 1.1 over any 50 Mc Channel by adjusting tuning screws of input and output waveguide sections.

MECHANICAL

Overall Dimensions	10 1/2" long x 1" dia. + waveguide coupling
Net Weight	Four (4) Pounds (maximum)
Cooling	Convection
Output Coupling	Waveguide UG344/U (Note 2.)
Base	Intermediate Octal

Note 1.
For increased efficiency, the tube may be run with the collector depressed to 1400 V, without significant loss of power output.

Note 2.
The tube can be supplied with co-ax fittings to cover the frequency range of 4.0 to 8.0 Gc.

5/61

RAYTHEON COMPANY | MICROWAVE AND POWER TUBE DIVISION | WALTHAM 54, MASS.

The specifications for this tube have not been finalized. The tube is in the development stage and is available for engineering analysis purposes only. This engineering information and/or delivery of sample tubes do not imply availability of tubes with the same electrical and/or mechanical characteristics. Changes in ratings and/or dimensions may be made at our discretion as deemed advisable by manufacturing experience or other considerations. For current information concerning this tube contact the nearest Microwave and Power Tube Regional Sales Representative.

The technical information on this data sheet is of a proprietory nature and is furnished as a customer service for private use only.

QKW998

OBJECTIVE

DATA SHEET

RAYTHEON



The QKW998 is a broadband medium power amplifier traveling wave tube designed for CW operation over the 5925 to 7125 Mc. range with a minimum saturated power output of 3 watts. This tube type utilizes periodic permanent magnet focusing. The input and output coupling are provided with UG 344/U waveguide flanges. The QKW998 is designed for use in microwave relay links or other applications requiring a broadband high gain amplifier.

GENERAL CHARACTERISTICS

ELECTRICAL

Heater Voltage	6.3 V
Heater Current	1.3 A
Cathode Heating Time	1 Minute (min.)
Helix Voltage	1500 V
Collector Voltage	1500 V (Note 1)
Collector Current	30 mA
Anode Voltage	1550 Vdc
Frequency Range	5925 to 7125 Mc (Note 2)
Small Signal Gain	35 - 38 db
Gain (Saturation)	30 - 32 db
Power Output (Saturated)	3 W (min.)
Life (Warranteed)	7500 Hours

VSWR of input and output can be reduced to less than 1.1 over any 50 Mc. channel by adjusting tuning screws of input and output waveguide sections.

MECHANICAL

Overall Dimensions	8 1/2" long x 1" diameter + waveguide coupling
Net Weight	Three (3) Pounds (max.)
Cooling	Convection
Output Coupling	Waveguide UG344/U (Note 2)
Base	Intermediate Octal

Note 1: For increased efficiency, the tube may be run with the collector depressed to 1000 V, without significant loss of power output.

Note 2: The tube can be supplied with coax fittings to cover the frequency range of 4.0 to 8.0 Gc.

9/61

The specifications for this tube have not been finalized. The tube is in the development stage and is available for engineering analysis purposes only. This engineering information and/or delivery of sample tubes do not imply availability of tubes with the same electrical and/or mechanical characteristics. Changes in ratings and/or dimensions may be made at our discretion as deemed advisable by manufacturing experience or other considerations. For current information concerning this tube contact the nearest Microwave and Power Tube Regional Sales Representative.

The technical information on this data sheet is of a proprietory nature and is furnished as a customer service for private use only.

QKW1013 **OBJECTIVE DATA SHEET**

RAYTHEON



The QKW 1013, designed specifically for phased array radar use, offers excellent phase performance and reproducibility of characteristics from tube to tube. It employs a modulating anode and isolated collector to provide greater system flexibility.

Detailed information necessary for specific applications may be obtained by contacting the Product Programs Department, Microwave and Power Tube Division, Raytheon Company, Burlington, Massachusetts.

GENERAL CHARACTERISTICS

ELECTRICAL (Typical Operation)

Peak Power Output		5 kw (min.)
Bandwidth		1200 - 1400 Mc
Duty Cycle		.08
Pulse Width		750 us
Efficiency		20% (min.)
Gain		50 db
DC Cathode Voltage		10 - 12 kv
Peak Beam Current		2 amps (nominal)
Modulating Anode (with respect to cathode)	Bias	0
	Pulse	10 - 12 kv
Heater Power		75 watts

MECHANICAL

Connectors - Input	TNC
Connectors - Output	7/8" coax (UG 46/U)
Cooling	Conduction
Weight	18 lbs
Magnetic Field	Lattice Structure or Solenoid
Dimensions	3" dia. x 40" long

2/62

The specifications for this tube have not been finalized. The tube is in the development stage and is available for engineering analysis purposes only. This engineering information and/or delivery of sample tubes do not imply availability of tubes with the same electrical and/or mechanical characteristics. Changes in ratings and/or dimensions may be made at our discretion as deemed advisable by manufacturing experience or other considerations. For current information concerning this tube contact the nearest Microwave and Power Tube Regional Sales Representative.

The technical information on this data sheet is of a proprietory nature and is furnished as a customer service for private use only.

8128 **OBJECTIVE DATA SHEET**

RAYTHEON



The 8128 is a wide band, 60 kw, (minimum) traveling wave tube designed for pulsed operation over the 2900 to 3100 megacycle range. This tube has a minimum gain of 20 db, and it utilizes a solenoid for the focusing magnetic field. This is a high duty cycle version of the QKW750 which was originally developed under BuShips Contract No. NObsr-72820

The 8128 is designed for use as a driver for the 8129 Amplitron, and it is ideal for frequency diversity type radar applications.

GENERAL CHARACTERISTICS

Typical Electrical Data

Heater Voltage	8 Volts
Heater Current	8.0 Amperes
Cathode Heating Time	5 Minutes
Frequency Range	2900 - 3100 Mc
Peak Power	60 kilowatts (min.)
Average Power Output	1260 Watts (min.)
Magnetic Field	700 Gauss
Pulse Width	30 usec
Duty Cycle	.021
Pulse Voltage	34.5 kilovolts
Peak Current	12 amperes
Perveance	1.9 uperv.
Load VSWR	1.5 Max.

Mechanical Data

Overall Dimensions	See Outline Drawing
Net Weight	20 Pounds (approx.)
Cooling	Liquid
Output Coupling	UG 54 A/U
Mounting Position	Any
Solenoid	Raytheon SWS 100
Termination	Raytheon Le SH 1

12/61

The specifications for this tube have not been finalized. The tube is in the development stage and is available for engineering analysis purposes only. This engineering information and/or delivery of sample tubes do not imply availability of tubes with the same electrical and/or mechanical characteristics. Changes in ratings and/or dimensions may be made at our discretion as deemed advisable by manufacturing experience or other considerations. For current information concerning this tube contact the nearest Microwave and Power Tube Regional Sales Representative.

ELECTRON TUBE OUTLINE DRAWING 8128

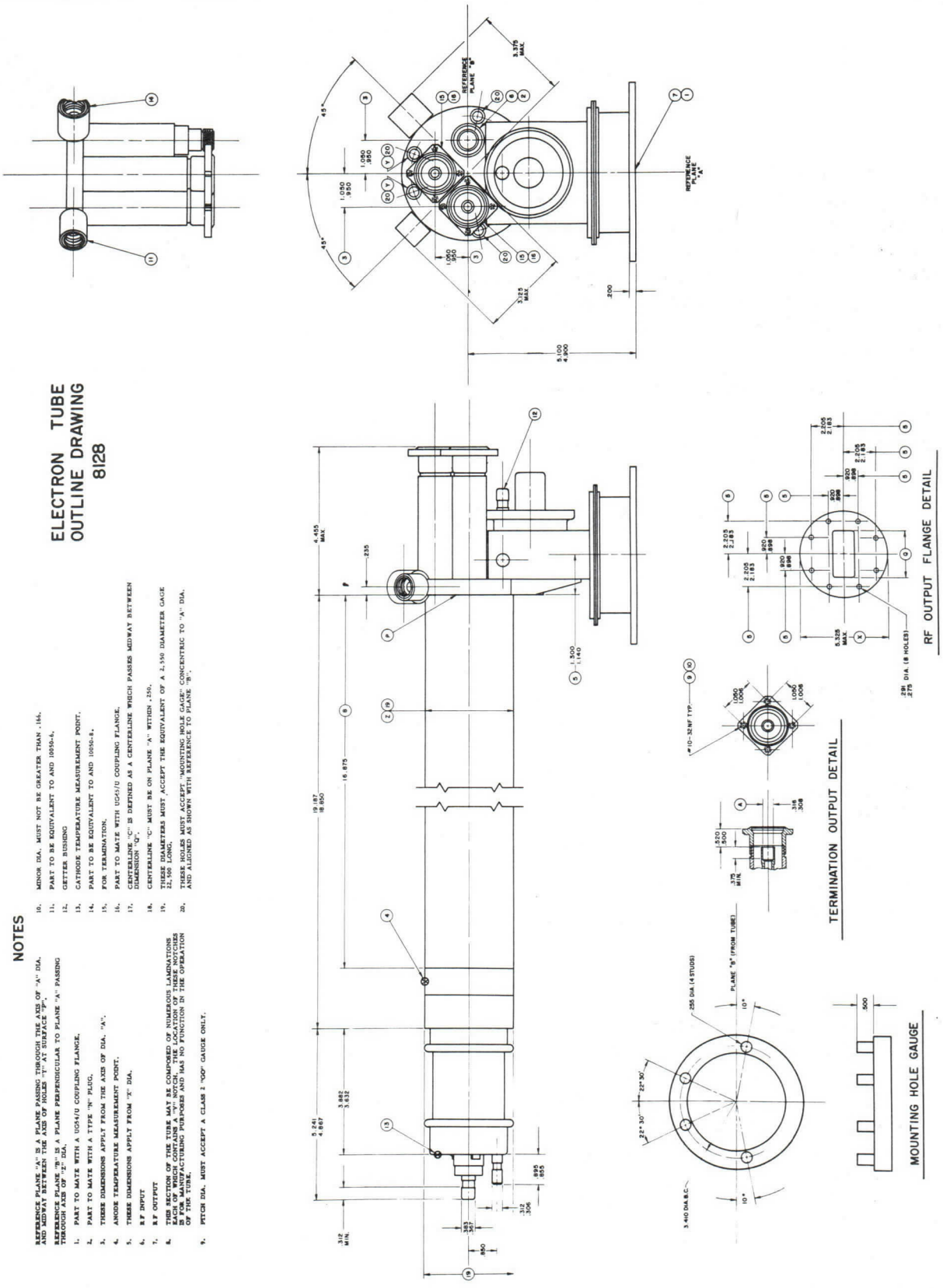

NOTES

REFERENCE PLANE "A" IS A PLANE PASSING THROUGH THE AXIS OF "A" DIA. AND NORMAL TO THE AXIS OF THE ELECTRON BEAM.

REFERENCE PLANE "B" IS A PLANE PERPENDICULAR TO PLANE "A" PASSING THROUGH AXIS OF "Z" DIA.

1. PART TO MATE WITH A UG41/U COUPLING FLANGE.
2. PART TO MATE WITH A TYPE "N" PLUG.
3. THESE DIMENSIONS APPLY FROM THE AXIS OF DIA. "A".
4. ANODE TEMPERATURE MEASUREMENT POINT.
5. THESE DIMENSIONS APPLY FROM "Z" DIA.
6. R.F. INPUT
7. R.F. OUTPUT
8. THIS SECTION OF THE TUBE MAY BE COMPOSED OF NUMEROUS LAMINATIONS EXCEPT FOR THE LOCATIONS OF THESE SURFACES WHICH ARE SPECIFIED IS FOR MANUFACTURING PURPOSES AND HAS NO FUNCTION IN THE OPERATION OF THE TUBE.
9. PITCH DIA. MUST ACCEPT A CLASS 2 "GO" GAUGE ONLY.
10. MINOR DIA. MUST NOT BE GREATER THAN .164.
11. PART TO BE EQUIVALENT TO AND 10050-4.
12. GETTER BUSHING
13. CATHODE TEMPERATURE MEASUREMENT POINT.
14. PART TO BE EQUIVALENT TO AND 10050-4.
15. FOR TERMINATION.
16. PART TO MATE WITH UG51/U COUPLING FLANGE.
17. CENTERLINE "C" IS DEFINED AS A CENTERLINE WHICH PASSES MIDWAY BETWEEN DIMENSION "Q".
18. CENTERLINE "C" MUST BE ON PLANE "A" WITHIN .250.
19. THESE DIAMETERS MUST ACCEPT THE EQUIVALENT OF A 2.550 DIAMETER GAGE 22.500 LONG.
20. THESE HOLES MUST ACCEPT "MOUNTING HOLE GAGE" CONCENTRIC TO "A" DIA. AND ALIGNED AS SHOWN WITH REFERENCE TO PLANE "B".

RAYTHEON®

Excellence in Electronics

THE DATA IN THIS SECTION FORMS A PART OF THE RAYTHEON TECHNICAL DATA BOOK FOR

ELECTRON TUBES — MICROWAVE

SPECIAL PRODUCTS

For replacement data sheets or for additional copies of this book, contact

TECHNICAL INFORMATION SERVICE
RAYTHEON COMPANY
138 River Street,
Waltham 54, Massachusetts

RAYTHEON

DATA SERVICE

ELECTRON TUBES
MICROWAVE

CONTENTS

SPECIAL PRODUCTS

TYPE	PAGE	DATE
Coaxial Calorimetric Waterload	1-2	10-62
Waveguide Calorimetric Waterload	1-2	10-62
5 KW, Dummy Load	1-2	8-62
Missing Pulse Detector & Simulator	1-2	8-62
Stable RF Source	1	3-62

MICROWAVE TEST INSTRUMENTATION

technical data

COAXIAL CALORIMETRIC WATERLOAD

DATE REISSUED 10/62 NO. C-100

Raytheon calorimetric waterloads are designed for use with thermopiles or differential thermometers to measure average power from a microwave source, in compliance with MIL-E-1 requirements. They come equipped with an RF pickup probe for monitoring spectrum or frequency, air pressure fittings and gauge (where required), and customer specified coupling.

Calibration charts of frequency versus VSWR will be supplied upon request.

Typical VSWR will be less than the maximum values listed, and can be further reduced for specific applications.

Detailed information necessary for specific applications may be obtained by contacting the Product Programs Department, Microwave and Power Tube Division, Raytheon Company, Spencer Laboratory, Burlington, Massachusetts, or your local Raytheon Field Sales Representative.



ELECTRICAL

Waterload Series	Frequency Range Gcs	Max. VSWR	Ave. Power Kilowatts	Peak Power Megawatts
		7/8 Coaxial — 46.4 Ohms		
J 2000 A	1.0 - 2.0	1.15	1.0	.5
J 2000 B	2.0 - 4.0	1.10	1.0	.5
J 2000 C	4.0 - 4.0	1.05	1.0	.5
		1 5/8 Coaxial — 53.6 Ohms		
K 2000 A	1.2 - 1.4	1.10	4.0	3.0
K 2000 B	2.7 - 3.5	1.10	4.0	3.0
		3 1/8 Coaxial — 50 Ohms (Pressurized)		
L 2000	.4 - .75	1.15	7.0	4.0

RAYTHEON

RAYTHEON COMPANY

MICROWAVE AND POWER TUBE DIVISION
SPENCER LABORATORY - BURLINGTON, MASSACHUSETTS

MICROWAVE TEST INSTRUMENTATION

technical data

COAXIAL CALORIMETRIC WATERLOAD

MECHANICAL

Waterload Series	*RF Coupling	Water Connection	Approx. Flow At 10 PSI Drop	Length (1)
		7/8 Coaxial — 46.4 Ohms		
J 2000 A	UG45/U	1/4" I.D. Tubing	.35 GPM	52"
J 2000 B	UG45/U	1/4" I.D. Tubing	.35	12 1/2"
J 2000 C	UG45/U	1/4" I.D. Tubing	.35	9 1/2"
		1 5/8 Coaxial — 53.6 Ohms (Pressurized)		
K 2000 A	UG49/U	1/4" I.D. Tubing	.7 GPM	24"
K 2000 B	UG49/U	1/4" I.D. Tubing	.7	
		3 1/8 Coaxial — 50 Ohms Pressurized		
L 2000	EIA Flange	3/8" I.D. Tubing	2.0 GPM	120"

*Coupling to mate Raytheon Power Tube on Request

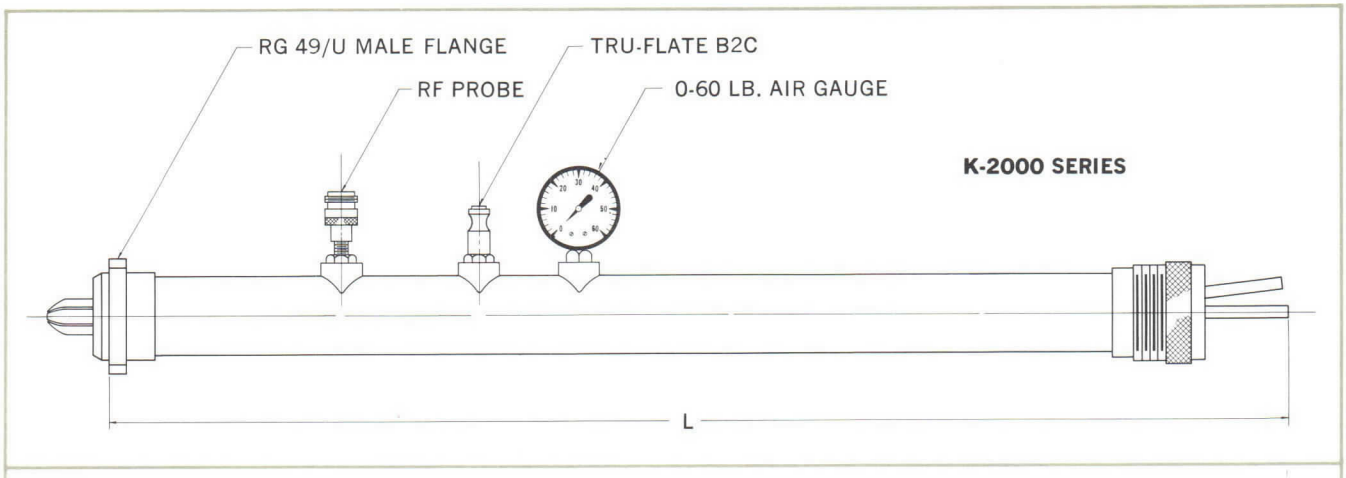

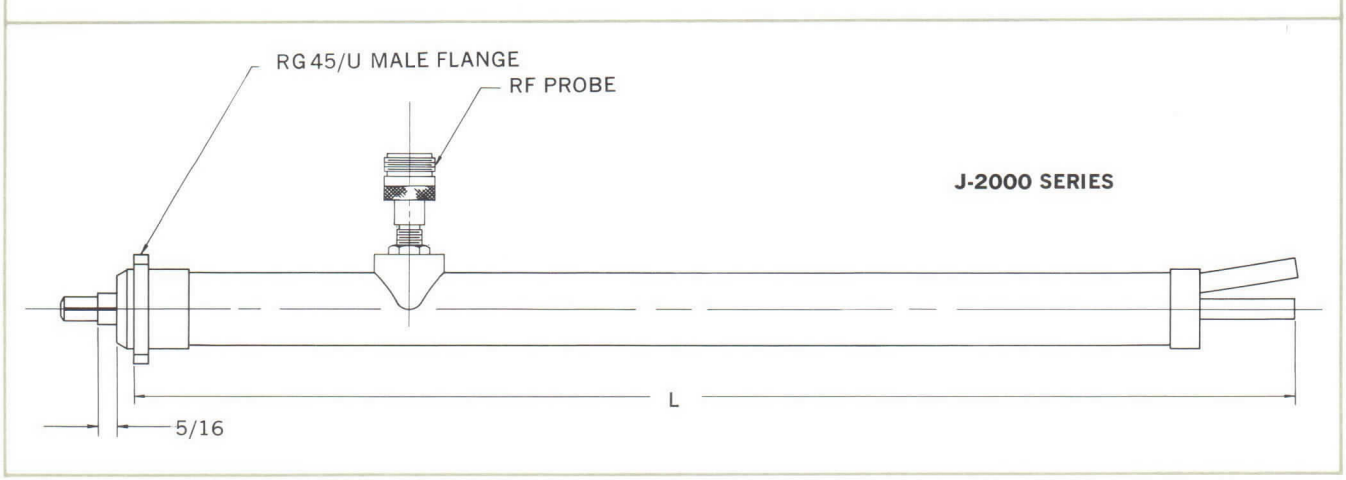

Printed in U.S.A.

MICROWAVE TEST INSTRUMENTATION

technical data

WAVEGUIDE CALORIMETRIC WATERLOAD

DATE REISSUED 10/62 NO. W-100

Raytheon calorimetric waterloads are designed for use with thermopiles or differential thermometers to measure average power from a microwave source, in compliance with MIL-E-1 requirements. They come equipped with an RF pickup probe for monitoring spectrum or frequency, air pressure fittings and gauge (where required), and customer specified coupling.

Calibration charts of frequency versus VSWR will be supplied upon request.

Typical VSWR will be less than the maximum values listed, and can be further reduced for specific applications.

Detailed information necessary for specific applications may be obtained by contacting the Product Programs Department, Microwave and Power Tube Division, Raytheon Company, Spencer Laboratory, Burlington, Massachusetts, or your local Raytheon Field Sales Representative.



ELECTRICAL

Waterload Series	Frequency Range Gcs	Max. VSWR	Ave. Power Kilowatts	*Peak Power Megawatts
B 2000	15.0 - 17.0	1.10	.5	.100
C 2000	8.0 - 11.0	1.10	1.0	.756
D 2000	8.5 - 9.6	1.10	1.5	1.0
E 2000	5.8 - 8.2	1.10	3.0	1.5
F 2000	5.0 - 6.0	1.10	3.0	2.0
G 2000	2.7 - 3.5	1.10	10.0	10.0
G 2000 R	2.7 - 3.5	1.10	15.0	15.0
**H 2000	2.4 - 2.5	1.10	10.0	2.0
H 2000 R	1.8 - 2.7	1.10	15.0	2.0
M 2000	1.2 - 1.4	1.10	20.0	15.0

*Pk. Power at specified pressure

**Unpressurized

RAYTHEON COMPANY

MICROWAVE AND POWER TUBE DIVISION
SPENCER LABORATORY - BURLINGTON, MASSACHUSETTS

WAVEGUIDE CALORIMETRIC WATERLOAD

MECHANICAL

Waterload Series	Waveguide	*RF Coupling	Water Connector	Max. Air Pressure	**Approx. Flow At 10 PSI Drop	Length (1)
B 2000	RG91/U	UG541/U	¼" I.D. Tubing	40 PSI	.2 GPM	14⅝"
C 2000	RG52/U	UG40A/U	¼" I.D. Tubing	40 PSI	.2 GPM	14⅝"
D 2000	RG51/U	UG52A/U	¼" I.D. Tubing	40 PSI	.2 GPM	14⅝"
E 2000	RG50/U	UG343A/U	¼" I.D. Tubing	35 PSI	.5 GPM	14⅝"
F 2000	RG49/U	UG148B/U	¼" I.D. Tubing	35 PSI	.5	14⅝"
G 2000	RG48/U	UG54A/U	⅜" I.D. Tubing	35 PSI	3.0	32"
G 2000 R	RG48/U	UG54A/U	⅜" I.D. Tubing	40 PSI	4.7	23"
H 2000	RG104/U	UG435A/U	⅜" I.D. Tubing	—	2.3	40"
H 2000 R	RG104/U	UG435A/U	⅜" I.D. Tubing	—	4.0	40"
M 2000	RG69/U	UG417A/U	⅜" I.D. Tubing	25 PSI	4.7	52"

*Cover flange supplied on request

**Max. water pressure 60 PSI

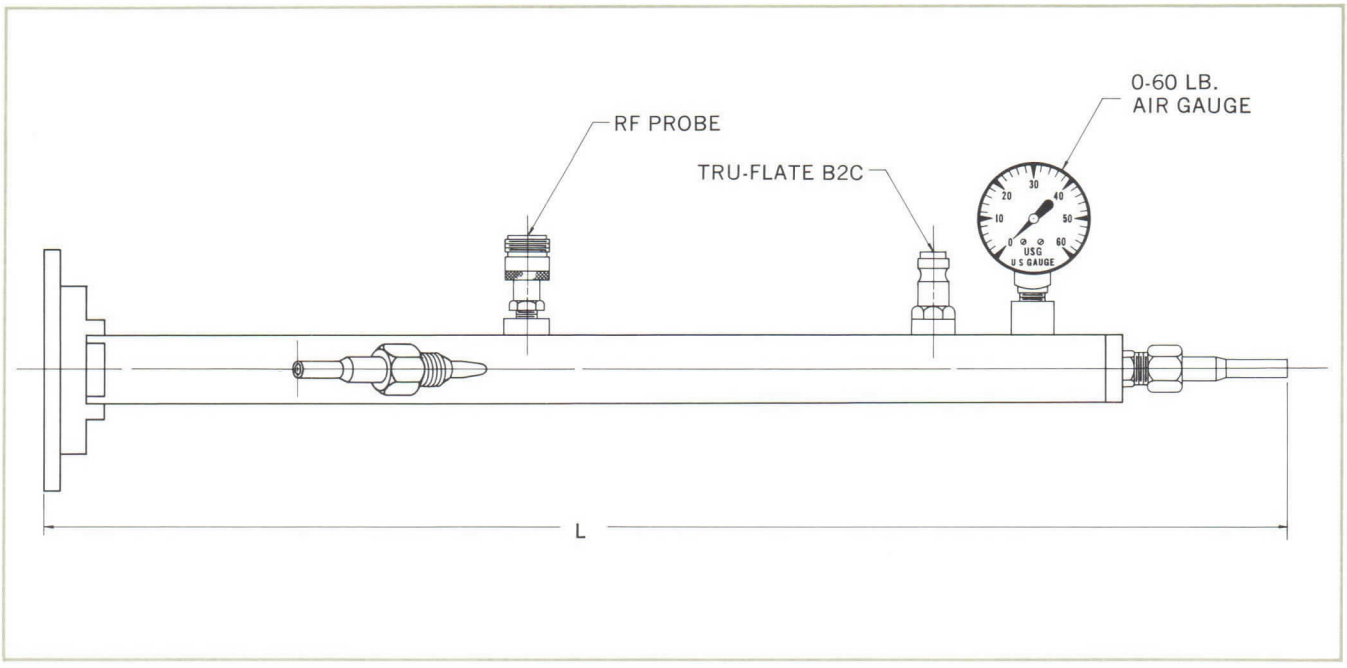

Printed in U.S.A.

MICROWAVE TEST INSTRUMENTATION

technical data

5 KW DUMMY RF LOAD

DATE ISSUED 8/62 NO. TZH-100

GENERAL DESCRIPTION

The Raytheon 5 KW RF Dummy Load is a power absorbing termination built for use in transmitter test and maintenance or for standby use. It is a 600 ohm balanced load for use with a 600 ohm source and equipped with adapters and fittings for use as a 70 ohm unbalanced load.

The revolutionary design insures a high degree of reliability, while its operation displays state-of-the-art electrical characteristics. The resistors used in the load were designed at Raytheon to provide minimum inherent reactance as well as maximum power dissipation capability.

The specified VSWR is 1.15 to 1 at the 600 ohm terminals. Typical test results show a much lower ratio as seen on the accompanying VSWR vs. frequency plot of an actual load. Since forced air cooling keeps the surface temperature of the dissipating elements below 200°C at stabilization, there is no change in VSWR over the temperature range of the load.

All components are completely interchangeable from load to load. As a consequence, field maintenance may be performed by non-technical personnel with the use of simple hand tools.

The entire unit is designed to meet the applicable military specifications for ground test equipment. Raytheon performs a 100% test on each load, employing the most reliable test instrumentation available, and copies of the recorded test results are available to the purchaser.

Double shielding and separate grounding of the outer cabinet minimize unwanted radiation into the atmosphere. Also, a complete system of visual, audible and interlock safety devices provides protection for operating and maintenance personnel as well as for the equipment itself.

For further information, contact the Product Programs Department, Raytheon Company, Spencer Laboratory, Burlington, Massachusetts or your nearest Raytheon Company sales representative.

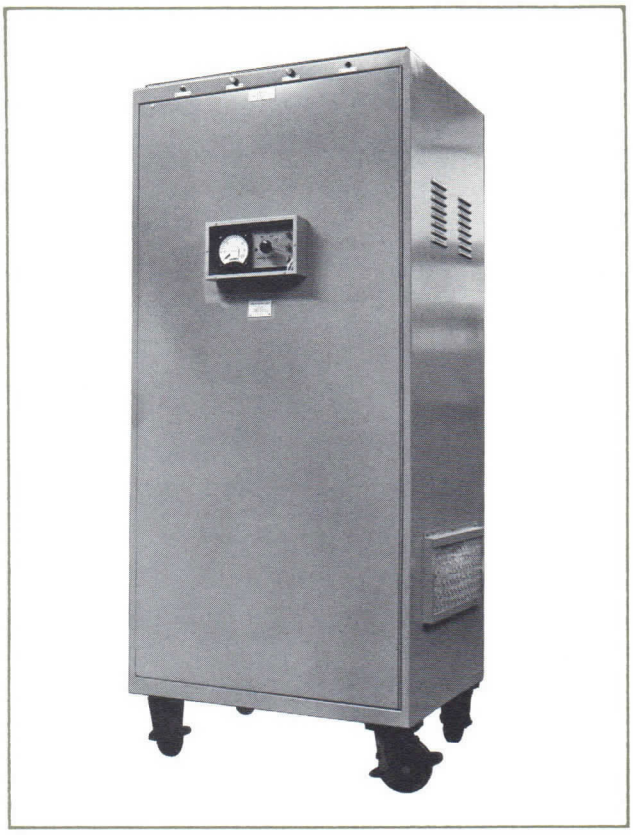

ELECTRICAL SPECIFICATIONS

Frequency Range	2 to 30 Mc
* Dissipation Rating	5 KW average, 10 KW peak
* Terminal Impedance	600 ohms balanced ± 5% 70 ohms unbalanced
Standing Wave Ratio	1.15 to 1 max at 600 ohm terminals 1.3 to 1 max at 70 ohm terminals
RF Input Terminals	Two feed-through bushings spaced 12″ apart on top for 600 ohm connection. One UG989/AU on rear for 70 ohm connection.
Inputs for Cooling and Safety Circuits	115 or 220 volts AC at 2 amps
Power Meter Accuracy	± 10%

* Variations in impedance and power dissipation capability will be quoted upon request.

MECHANICAL SPECIFICATIONS

Width	39 inches
Depth	34 inches
Overall Height	90 inches
Weight	460 lbs. (approx.)
Cooling	Forced Air
* Position	Fixed or portable

* The unit is mounted on four wheels, two of which are fixed and two swivel with positive locking mechanism.

RAYTHEON COMPANY

MICROWAVE AND POWER TUBE DIVISION

SPENCER LABORATORY - BURLINGTON, MASSACHUSETTS

5 KW DUMMY RF LOAD

VSWR vs. FREQUENCY FOR AN ACTUAL LOAD
SERIAL #1105 — 70 ohm

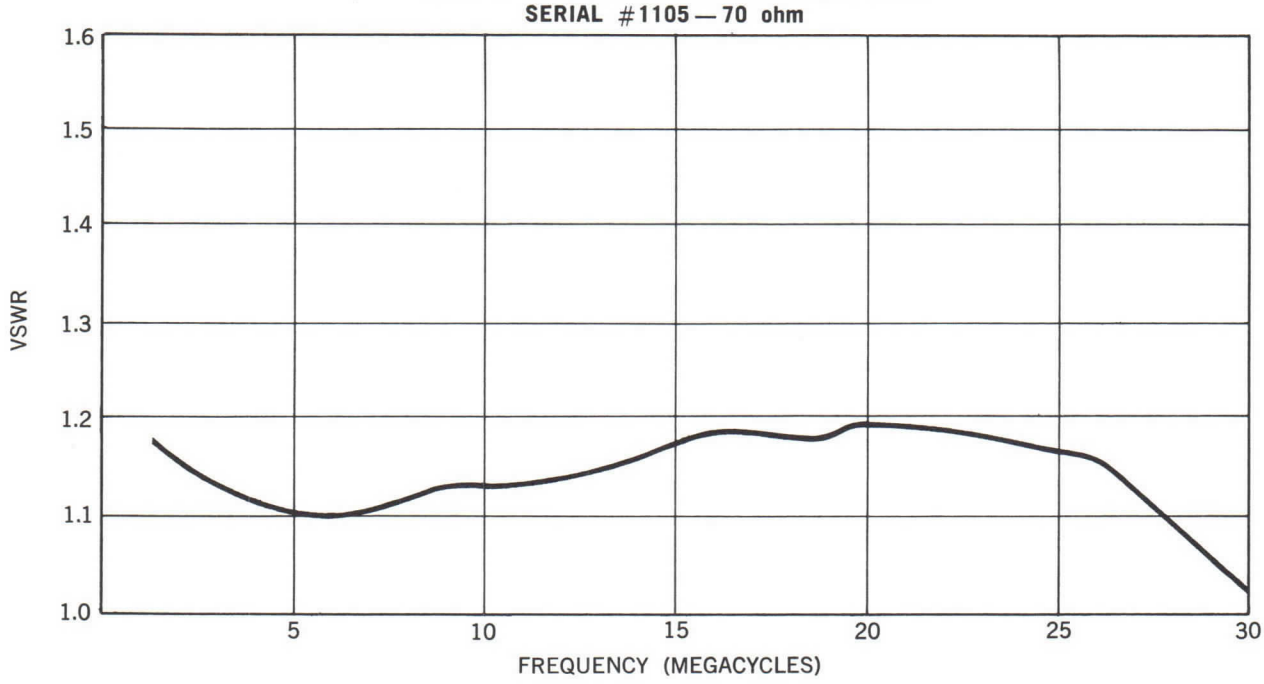

VSWR vs. FREQUENCY FOR AN ACTUAL LOAD
SERIAL #1105 — 600 ohm

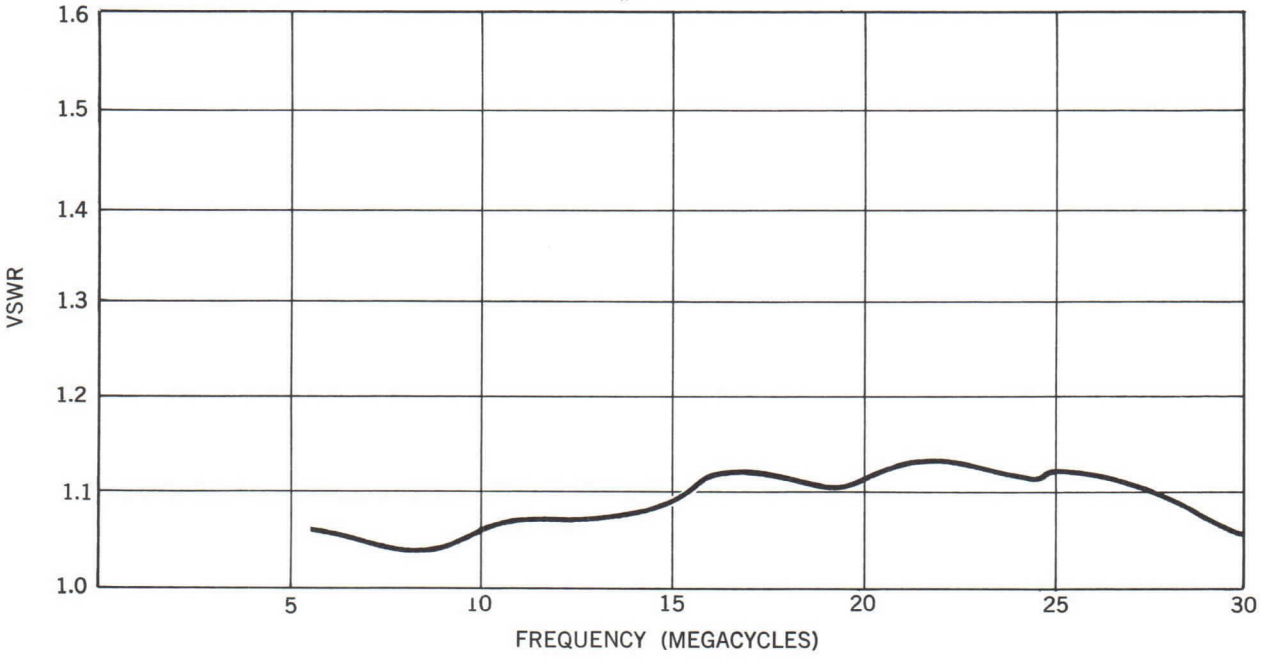

MICROWAVE TEST INSTRUMENTATION

technical data

MISSING PULSE DETECTOR

DATE REISSUED 8/62 NO. TPZ-100

GENERAL DESCRIPTION

The Raytheon Missing Pulse Detectors are comparitors which measure the energy stability of various types of pulse sources. To accomplish this, two functions are performed.

1: The energy content of a particular pulse is compared on a preset percentage basis to that of the preceding or normal pulses. In the absence of preceding pulses, as in the case of starting stability, the reference is to a preset DC level.

2: The number of output pulses of satisfactory energy level is compared, by an anti-coincidence gate, with the number of originating or "trigger" pulses. For each trigger pulse of acceptable energy content there is an output pulse from the gate.

Output pulses from the gate signify the number of "missing" pulses, the quantity of which are determined by application to a decimal counter or to an events per unit time meter. Dynamic range of these instruments is 10 db.

Further information for specific applications may be obtained by contacting the Products Program Department, Microwave and Power Tube Division, Raytheon Company, Spencer Laboratory, Burlington, Massachusetts, or your local Raytheon Field Sales Representative.



MISSING PULSE DETECTOR



MISSING PULSE SIMULATOR

ELECTRICAL

Model Number	TPZ100	TPZ102	TPZ103
RF Input Pulse Length	0.1 to 6 microsec.	1.0 to 60 microsec	0.1 to 6 microsec
Repetition Rate	200 to 12,500 pps	200-1300 pps	50 KC
RF and Video Input Impedance	100 ohms	100 ohms	100 ohms
Negative Reference Pulse Input			
Pulse Length	0.1 to 10 microsec	1 to 40 microsec	0.1 to 10 microsec
Pulse Amplitude	−15 to −30 V	−15 to −30 V	−15 to −30 V
Output Pulse to Counter	+10 V	+10 V	+10 V

MECHANICAL

Length	21¾"
Width	15¼"
Height	10½"
Panel	19" x 8¾"

A visual read-out decade counter is used in the detector counter combination.

RAYTHEON COMPANY

MICROWAVE AND POWER TUBE DIVISION
SPENCER LABORATORY - BURLINGTON, MASSACHUSETTS

MICROWAVE TEST INSTRUMENTATION

technical data

MISSING PULSE SIMULATOR

DATE REISSUED 8/62 NO. TPZ-101

The Raytheon Missing Pulse Simulator is designed primarily to calibrate the Missing Pulse Detector by generating pulses that switch, in a fixed pattern, between two different levels.

The unit generates pulses in bursts of forty, twenty of which are at a fixed level and from two to eighteen variable. It also generates positive and negative pulses for checking the associated counting equipment.

The simulator can be set up to count at any one of three different frequencies, 200 pps, 1200 pps and 12.5 Kc. Switch positions are available for adding two additional frequencies within the same range.

Provision has been made for externally synchronizing the simulator to either positive pulses or to a sine wave from 300 cps to 60 Kc. It may also be switched to free run at 10 Kc.

This instrument may be set to run continuously or to a predetermined number of pulses.

Input: 115 volts, 2 amps, single phase, 60 cps.

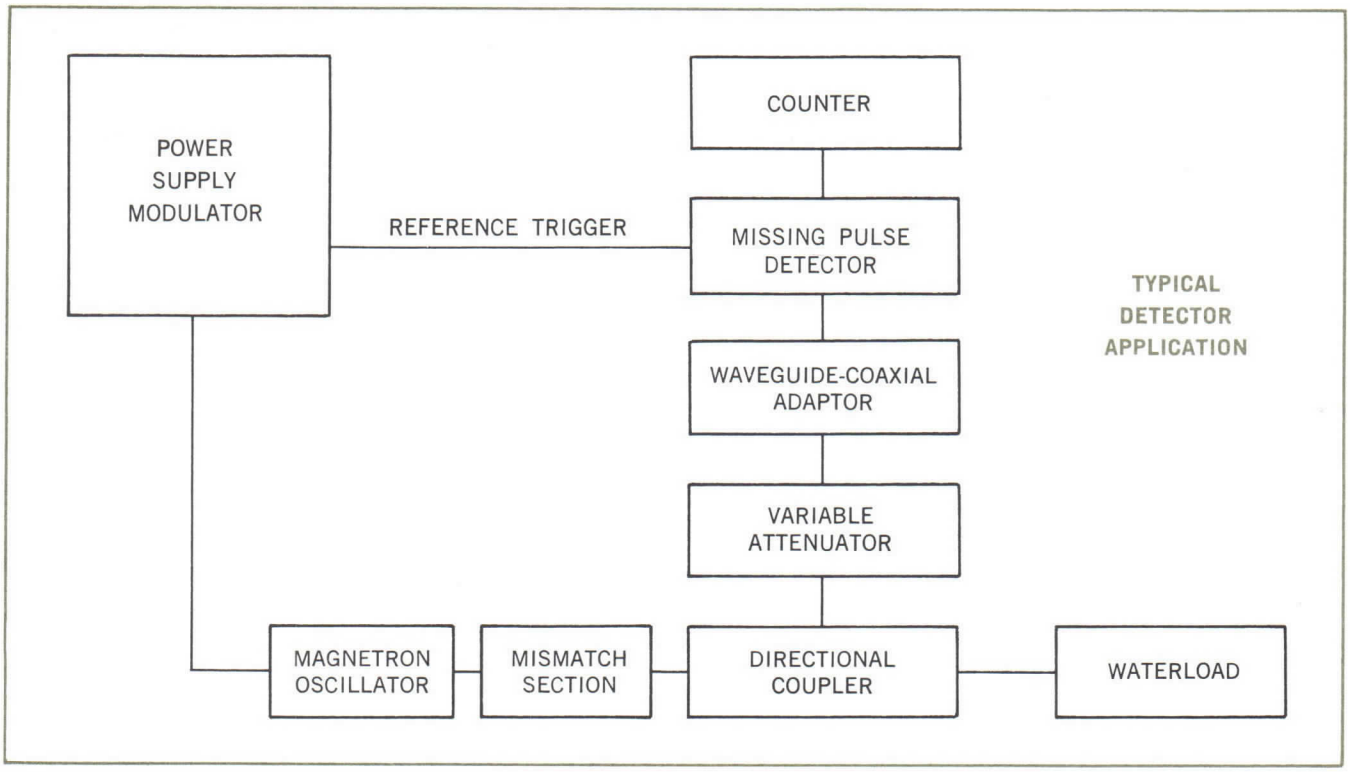

TYPICAL DETECTOR APPLICATION

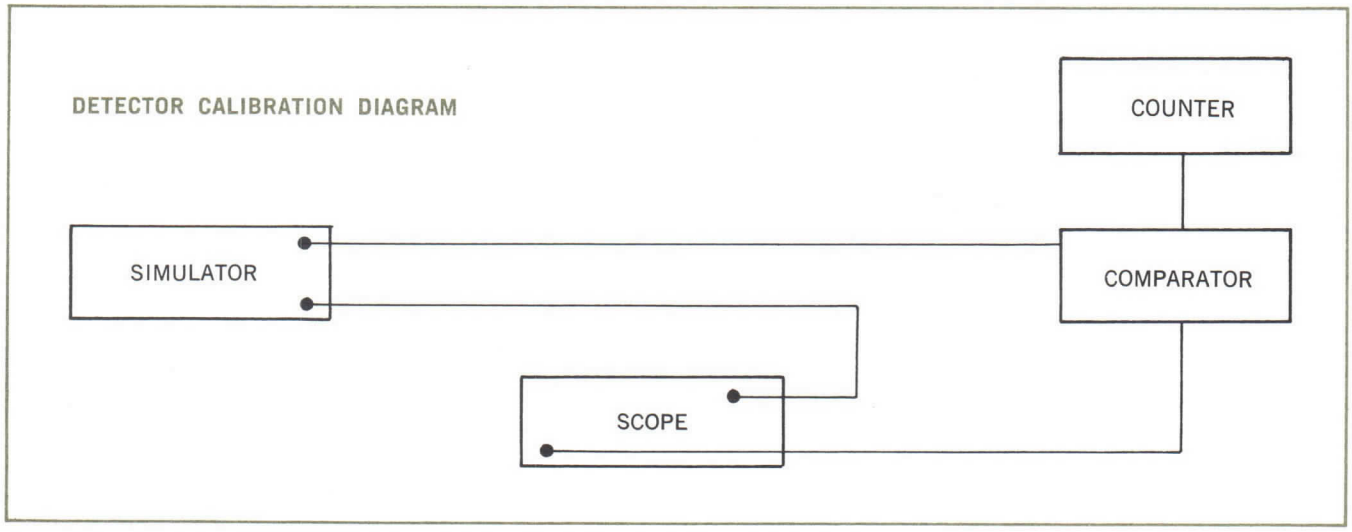

DETECTOR CALIBRATION DIAGRAM

MICROWAVE TEST INSTRUMENTATION

technical data

STABLE RF SOURCE

DATE ISSUED 3/62

NO. EZK-100

The Raytheon Stable RF Source is designed for use in a variety of laboratory applications, such as checking characteristics of microwave components and plumbing, providing an ultra-stable RF source for microwave spectrometers, etc. It may also be used as a pump source for a parametric amplifier or as a signal source for a harmonic generator.

This equipment is available in special packaging to custom specifications for use as a system component.

Special features include ease of adjustment and operation, compact package, solid-state construction (local oscillator excepted), and temperature corrected reference cavity. Because of the solid-state feature the problem of cooling becomes greatly simplified.

Included in the Raytheon Stable RF Source is a ferrite isolator, resulting in frequency stability that is relatively insensitive to load change.



Further information may be obtained by contacting the Product Programs Department, Microwave and Power Tube Division, Raytheon Company, Spencer Laboratory, Burlington, Massachusetts.

ELECTRICAL

Input Voltage	117 Volts, AC ± 10% 60 cycle
Input Current	1.2 amps
Power Output	70 mw (nominal)
* Frequency	23-24..5 kMc
Long Term Stability	1 part in 10^6 over a one hour period
Short Term Stability	1 part in 10^7
Isolation from Load	28 db
Output Flange	UG 595/U

MECHANICAL

Width	21 5/8"
Depth	14 3/4"
Height	9 9/16"

* Fixed frequency in the range shown (limited tuning can be provided).
Other frequencies available upon request.

RAYTHEON

RAYTHEON COMPANY

MICROWAVE AND POWER TUBE DIVISION
SPENCER LABORATORY - BURLINGTON, MASSACHUSETTS

Printed in U.S.A.