Electronic TUBES

QUICK SELECTION CHART

INDUSTRIAL TYPES

You will find the concise technical information and prices on these pages handy in quickly selecting the proper tube for your application.

The various types of tubes are shown in tabular form by class of tube and conveniently arranged in order by key ratings and characteristics.

Description and rating publication numbers for each type of tube are listed to provide you a ready reference to these data sheets included in other sections of the manual.

Prices effective Oct. 1, 1950

IGNITRONS—high-peak-current, pool-cathode tubes

Welding Control Types*	Suggested User's Price§	MAXIMUM RATINGS				Type of Cooling	Shipping Weight in Lb	Description and Rating
		Kva Demand	Corresponding Average Anode Current, Amps.	Maximum Average Anode Current, Amps.	Corresponding Kva Demand			
GL-5550/GL-415	$50.00	300	12.1	22.4	100	Water	5	ETI-114B
GL-5822**	143.00	424	20	70	188	Water	17	ETI-309
GL-5551/FG-271	80.50	600	30.2	56.0	200	Water	12	ETI-113
GL-5552/FG-235-A	121.00	1200	75.6	140	400	Water	17	ETI-109A
GL-5553/FG-258-A	265.00	2400	192.0	355	800	Water	41	ETI-111B

* Ratings are for voltages of 600 volts rms and below. Ignitor requirements for all welding-control types are 200 volts and 30 amperes.
** For Frequency Changer welding control.

Power Rectifier Types†	Suggested User's Price§	D-c Volts	MAXIMUM CURRENT			Type of Cooling	Shipping Weight in Lb	Description and Rating
			Peak Amp	Average Amp	Average Amp 1 Minute			
GL-5779	$72.00	125	30	10	.....	Air	6	ETI-301
GL-5554/FG-259-B	190.00	300	900	150	200	Water	22	ETI-112
		600	600	112.5	150			
GL-5555/FG-238-B	370.00	300	1800	300	400	Water	35	ETI-110A
		600	1200	225	300			
GL-5630	930.00	6000	200	50	50	Water	44	ETI-294
GL-506	3000.00	6000	900	150	300	Water	170	ETI-293A

† Typical ignitor requirements for power-rectifier ignitrons are 75–125 volts, 15–20 amperes. Maximum requirements are 150 volts, 40 amperes.

THYRATRONS—grid-controlled gaseous-discharge rectifier tubes

Type No.	Suggested User's Price§	No. of Electrodes	CATHODE		ANODE			Starting Grid Voltage	Temp Range Condensed Mercury C	Shipping Weight in Lb	Description and Rating
			Volts	Amp	Peak Inv. Volts	Peak Amp	Avg Amp				
GL-5662	$2.40	3	6.3	0.15	200	Fuse tube	.....	.....	−55—+90*	3	ETI-300
GL-5663	1.90	4	6.3	0.15	500	0.060	0.020	Neg	−55—+90	3	ETI-284
GL-884	1.85	3	6.3	0.6	350	0.300	0.075	Neg		3	ETI-136
GL-885	2.00	3	2.5	1.4	350	0.300	0.075	Neg		3	ETI-137
GL-2D21	2.00	4	6.3	0.6	1300	0.500	0.100	.....	−55—+90*	3	ETI-279
GL-2050	1.85	4	6.3	0.6	1300	0.500	0.100	Neg		3	ETI-138B
FG-178-A	24.00	3	2.5	2.25	500	0.500	0.125	Neg	−20—+50*	2	ETI-131
GL-502-A	1.85	4	6.3	0.6	1300	1.0	0.100	Neg	−50—+90♦	3	ETI-134C
FG-81-A	16.00	3	2.5	5.0	500	2.0	0.5	Neg	−20—+50*	2	ETI-124B
FG-98-A	24.00	4	2.5	5.0	500	2.0	0.5	Neg	−20—+50*	4	ETI-127B
FG-97	22.00	4	2.5	5.0	1000	2.0	0.5	Var	40—80	4	ETI-126C
GL-5557/FG-17	7.75	3	2.5	5.0	5000	2.0	0.5	Neg	40—80	3	ETI-118C
GL-627	17.25	3	2.5	6.0	2500	2.5	0.64	Neg	25—70	1	ETI-253
GL-3C23	12.50	3	2.5	7.0	1250	6.0	1.5	Neg	−40—+80	3	ETI-117A
GL-393-A	13.25	3	2.5	7.0	1250	6.0	1.5	Neg	−40—+80	3	ETI-132
GL-678	40.00	3	5.0	7.5	15000	6.0	1.6	Neg	25—50	3	ETI-255A
FG-154	42.00	4	5.0	7.0	500	10.0	2.5	Neg	−20—+50*	7	ETI-129
FG-27-A	23.00	3	5.0	4.5	1000	10.0	2.5	Neg	40—80	3	ETI-119C
GL-5720/FG-33	21.00	3	5.0	4.5	1000	15.0	2.5	Pos	35—80	7	ETI-120A
GL-5559/FG-57	19.50	3	5.0	4.5	1000	15.0	2.5	Neg	40—80	7	ETI-122C
GL-5728/FG-67	23.00	3	5.0	4.5	1000	15.0	2.5	Var	40—80	3	ETI-123B
GL-5560/FG-95	25.00	4	5.0	4.5	1000	15.0	2.5	Var	40—80	7	ETI-125C
			†5.5	5.0	1000	40.0	0.5	Var	40—80		
GL-672-A	26.50	4	5.0	5.0	2500	40.0	3.2	Neg	40—80	1¾	ETI-254A
GL-5632	12.15	3	2.5	9.0	1250	30.0	2.5	Neg	−55—+70	2	ETI-292
GL-5544	27.00	3	2.5	12.0	1500	40.0	3.2	Neg	−55—+70*	2	ETI-282
GL-5545	35.00	3	2.5	21.0	1500	80.0	6.4	Neg	−55—+70*	3	ETI-275B
FG-105	48.00	4	5.0	10.0	2500	40.0	6.4	Var	40—80	7	ETI-128B
			‡5.5	11.0	750	77.0	2.5	Var	30—95		
			‡5.0	10.0	10000	16.0	4.0	Var	25—50		
FG-172	65.00	4	5.0	10.0	2000	40.0	6.4	Var	40—80	7	ETI-130A
			‡5.5	11.0	750	77.0	2.5	Var	30—95		
GL-5830/FG-41	182.00	3	5.0	20.0	10000	75.0	12.5	Neg	40—65	8	ETI-121B
GL-414	120.00	4	5.0	20.0	2000	100.0	12.5	Neg	40—80	9	ETI-133C

* These tubes are inert-gas-filled, and the temperature ratings are expressed in terms of the ambient temperature range over which the tubes will operate.
† These ratings apply only when the tube is used for ignitor firing.
‡ These ratings apply only when the tube is used in thyratron welding-control service.
♦ Ambient temperature

Supersedes ETI-104H dated 10-49

KENOTRONS—high-vacuum rectifier tubes

Type No.	Suggested User's Price§	No. of Electrodes	CATHODE		PLATE		Shipping Weight in Lb	Description and Rating
			Volts	Amp	Peak Volts	Peak Amp		
FP-400	$24.00	2	4.0	2.25	100	0.025	3	ETI-143
GL-2B23	21.00	2	6.3	0.3	150	0.030	3	ETI-286
GL-5741/FP-85-A	75.00	2	10.0	5.0	20000	0.100	3	ETI-142
GL-3B24	11.75	2	2.5 5.0	3 3	20000 20000	0.150 0.300	3	ETI-280
GL-8020	22.00	2	5.0 5.8Δ	6.0 6.0	40000 12500Δ	0.750 2.00Δ	8	ETI-145
GL-411	225.00	2	10	14.5	100000	0.3	9	ETI-144A
GL-5625/KC-4	225.00	2	20	24.5	150000	1.00	9	ETI-141B

Δ Surge-limiting diode operation.

PHANOTRONS—gaseous-discharge rectifier tubes

Type No.	Suggested User's Price§	No. of Electrodes	CATHODE		ANODE			Temp Range Condensed Mercury C	Shipping Weight in Lb	Description and Rating
			Volts	Amp	Peak Volts	Peak Amp	Avg Amp			
GL-866-A	$ 1.95	2	2.5	5	10000	1	0.25	25—60	3	ETI-153A
FG-190	29.00	3	2.5	12	175	5	1.25	−20—+50*	3	ETI-150
GL-872-A	8.20	2	5.0	7.5	10000	5	1.25	20—60	8	ETI-155B
GL-8008	8.20	2	5.0	7.5	10000	5	1.25	20—60	8	ETI-256A
GL-575-A	21.00	2	5.0	10	15000	6	1.5	20—50	3	ETI-244C
GL-673	21.00	2	5.0	10	15000	6	1.5	20—60	3	ETI-243B
GL-5558/FG-32	14.00	2	5.0	4.5	5000	15	2.5	30—60	3	ETI-147B
GL-869-B	132.00	2	5.0	19	20000 15000‡	10 15‡	2.5 5.0‡	30—40	7	ETI-154B
FG-280	56.00	2	5.0	10	2000	40	6.4	40—80	3	ETI-151B
GL-5561/FG-104	38.00	2	5.0	10	3000	40	6.4	40—80	3	ETI-148B
GL-857-B	209.00	2	5.0	30	22000	20 40‡	5.0 10.0‡	30—40	10	ETI-152
FG-166	150.00	2	2.5	100	1500	75	20	20—60	6	ETI-149A

‡ Quadrature operation.

PLIOTRONS—grid-controlled high-vacuum tubes

Control Types	Suggested User's Price§	No. of Electrodes	CATHODE		PLATE		Max Dis Watts	Mu	Shipping Weight in Lb	Description and Rating
			Volts	Amp	Max Volts	Max Amp				
GL-5691	$ 7.75	6	6.3	0.6	275	0.010	1.0	80	3	ETI-297
GL-5692	7.75	6	6.3	0.6	275	0.015	1.75	22	3	ETI-298
GL-5693	6.40	5	6.3	0.3	300	0.010	2.0	....	3	ETI-299
GL-5743/PJ-21	12.50	3	4.5	1.1	350	0.019	7.5	3	3	ETI-159A
GL-5742/PJ-7	13.00	3	4.5	1.1	350	0.040	10	30	3	ETI-157A
GL-5556/PJ-8	12.00	3	4.5	1.1	350	0.040	10	8.5	3	ETI-158
Spec. Purpose										
GL-5740/FP-54	65.00	4	2.5	0.09	6	0.00015	Low-grid-current measurement tube		7	ETI-160A
GL-5674	77.00	6	3.8	0.09	10	0.0001	Low-grid-current measurement tube		7	ETI-284
GL-5739/FP-62	44.00	3	4.5	1.48	112.5	0.010	For gas-pressure measurements		9	ETI-161A

Therapy Types							Max Input Watts	Max Dis Watts	Mu	Shipping Weight in Lb	Description and Rating
FP-285	20.00	3	10	3.25	1350	0.200	270	100	12	6	ETI-164
FP-265	36.00	3	10	5.20	1500	0.200	350	160	75	6	ETI-163
Power Triodes	for high-frequency heating						Max Dis Watts	Mu	Type of Cooling	Shipping Weight in Lb	Description and Rating
GL-5610	1.98	3	6.3	0.15	300	0.017	3	14		2	ETI-291
GL-807	2.50	5	6.3	0.9	600	0.10	25	8		3	ETI-165
GL-810	14.50	3	10	4.5	2000	0.25	125	36		8	ETI-166A
GL-592	33.00	3	10	5.0	3500	0.25	200	24	Air	8	ETI-245B
GL-833-A	49.50	3	10	10.0	4000	0.50	400	35		9	ETI-167A
GL-1000-T	125.00	3	7.5	17.0	7500	0.75	1000	35	Air		ETI-314
GL-851	300.00	3	11	15.5	2500	1.00	750	20.5		8	ETI-168
GL-8002	132.00	3	16	38.0	3500	1.00	1200	2.15	Water	5	ETI-175B
GL-8002-R	160.00	3	16	38.0	3500	1.00	1200	21.5	Air		ETI-250A
GL-5549	275.00	3	12.6	57.0	8500	1.25	4000	23	Air	26	ETI-283
GL-473	144.00	3	6.0	60.0	5000	1.40	2500	22	Air	7	ETI-281
GL-889-A	210.50	3	11	120.0	8500	2.00	5000	21	Water	8	ETI-171
GL-889R-A	285.00	3	11	120.0	8500	2.00	5000	21	Air	52	ETI-249
GL-891	223.00	3	22	60.0	12000	2.00	6000	8	Water	10	ETI-172A
GL-891-R	362.00	3	22	60.0	10000	2.00	4000	8	Air		ETI-246A
GL-207	242.00	3	22	51.0	15000	2.00	10000	20	Water	10	ETI-162A
GL-892	223.00	3	22	60.0	15000	2.00	10000	50	Water	10	ETI-173A
GL-892-R	362.00	3	22	60.0	12500	2.00	4000	50	Air		ETI-247A
GL-893-A	630.00	3	20	183.0	20000	4.00	20000	34.5	Water	25	ETI-174A
GL-893A-R	1150.00	3	20	183.0	20000	4.00	20000	34.5	Air	290	ETI-248
GL-880	483.00	3	12.6	320.0	15000	4.50	20000	20	Water	21	ETI-170B
GL-895	866.00	3	19	138.0	17000	9.00	40000	37	Water	85	ETI-251B
GL-895-R	1180.00	3	19	138.0	17000	9.00	20000	37		455	ETI-252B
GL-862-A	1150.00	3	33	207.0	20000	10.00	100000	45	Water	90	ETI-169

GLOW TUBES—cold-cathode tubes for use as voltage regulators

Type No.	Suggested User's Price§	Starting Supply Voltage, D-c Min	Operating Voltage Maintained, D-c Approx	OPERATING CURRENT, MILLIAMPERES		Shipping Weight in Lb	Description and Rating
				Min	Max		
GL-OA3	$1.35	105	75	5	40	3	ETI-176A
GL-OB3	1.20	125	90	10	30	3	ETI-176A
GL-874	3.10	125	90	10	50	3	ETI-176A
GL-OC3	1.35	133	105	5	40	3	ETI-176A
GL-OB2	3.55	133	108	5	30	3	ETI-306
GL-OD3	1.30	185	150	5	40	3	ETI-176A
GL-OA2	3.20	185	150	5	30	3	ETI-305

PHOTOTUBES—light-sensitive tubes

Type No.	Suggested User's Price§	Gas or Vacuum	Spectral Response RMA Standard	Anode Volts	Sensitivity in Microamperes per Lumen	Window Dimensions in Inches	Max Amb Temp. C	Shipping Weight in Lb	Description and Rating
GL-1P21	$50.00	Vacuum	S4	1250		$\frac{5}{16}$x$1\frac{5}{16}$	75	3	ETI-315
GL-1P29/FJ-401	2.95	Gas	S3	100		$\frac{11}{16}$x$1\frac{5}{8}$	100	3	ETI-178A
GL-1P37	2.85	Gas	S4	100	120	$\frac{5}{8}$x$1\frac{1}{4}$	75	3	ETI-289
GL-1P39	1.75	Vacuum	S4	250	45	$\frac{5}{8}$x$1\frac{3}{16}$	75	3	ETI-295
GL-1P40	1.85	Gas	S1	90	135	$\frac{5}{8}$x$1\frac{3}{16}$	100	3	ETI-290
PJ-22	2.50	Vacuum	S1	500	20	$\frac{11}{16}$x$1\frac{5}{8}$	100	3	ETI-179
FJ-405(Use GL-935)									
GL-441	4.50	Vacuum	S4	250	45	$\frac{11}{16}$x$1\frac{5}{8}$	50	3	ETI-181
GL-868/PJ-23	2.50	Gas	S1	100	50	$\frac{11}{16}$x$1\frac{5}{8}$	100	3	ETI-182A
GL-917	3.50	Vacuum	S1	500	20	$\frac{11}{16}$x$1\frac{5}{8}$	100	3	ETI-183
GL-918	3.10	Gas	S1	100	110	$\frac{11}{16}$x$1\frac{5}{8}$	100	3	ETI-184
GL-919	3.50	Vacuum	S1	500	20	$\frac{11}{16}$x$1\frac{5}{8}$	100	3	ETI-185
GL-920	4.15	Gas	S1	100	75	$\frac{1}{4}$x1 (each unit	100	3	ETI-186
GL-921	2.05	Gas	S1	90	135	$\frac{5}{8}$x$\frac{7}{8}$	100	3	ETI-187
GL-922	1.95	Vacuum	S1	500	20	$\frac{5}{8}$x$\frac{7}{8}$	100	3	ETI-188
GL-923	2.05	Gas	S1	90	135	$\frac{11}{16}$x$\frac{7}{8}$	100	3	ETI-189
GL-927	2.50	Gas	S1	90	125	$\frac{7}{16}$x$\frac{7}{8}$	100	3	ETI-190
GL-929	1.50	Vacuum	S4	250	45	$\frac{11}{16}$x$\frac{7}{8}$	50	3	ETI-191
GL-930	1.65	Gas	S1	90	135	$\frac{11}{16}$x$\frac{7}{8}$	100	3	ETI-192
GL-931-A	9.75	Vacuum	S4	1250	2.0 amperes	$\frac{11}{32}$x1	50	3	ETI-193A
GL-935	7.80	Vacuum	S5	250	30	$\frac{11}{16}$x$1\frac{3}{8}$	75	3	ETI-270
GL-5581	2.25	Gas	S4	100	135	$\frac{5}{8}$x$1\frac{3}{16}$	75	3	ETI-295

BALLAST TUBES—resistor-type tubes used to maintain a constant average current

Type No.	Suggested User's Price§	VOLTS		AMPERES		Shipping Weight in Lb	Description and Rating
		Min	Max	Min	Max		
GL-5620/FB-50	$13.00	5	8	0.225	0.275	3	ETI-194A
GL-5622/B25	11.00	7	16	1.07	1.16	3	ETI-194A
GL-5623/B47	12.00	8	18	2.05	2.35	3	ETI-194A
GL-5624/B-46	12.00	8	18	2.70	3.25	3	ETI-194A
GL-5621/B-6	12.00	15	21	0.95	1.01	3	ETI-194A

VACUUM GAGES—to measure gas pressure

Type No.	Suggested User's Price§	Volts	Range in Microns	Shipping Weight in Lb	Description and Rating
GL-5628/FA-13	$23.50	6	0–600	3	ETI-195A
GL-5629/FA-14	19.00	6	◉	3	ETI-195A

◉Used with GL-5628/FA-13 to compensate for temperature and voltage changes.

VACUUM SWITCHES—single-pole, double-throw

Type No.	Suggested User's Price§	Max Hold-off Voltage, Peak	Max Interrupting Rating, Amperes	Shipping Weight in Lb	Description and Rating
GL-5627/FA-6	$24.00	700	10	3	ETI-197A
GL-5626/FA-15	20.00	3000	10	3	ETI-198A
GL-1S21	15.50	7500	15	3	ETI-287

VACUUM CAPACITORS

Type No.	Suggested User's Price§	Peak Voltage, Volts, A-c D-c or R-f	Capacitance, ±5% Micromicro-farads	Ambient Temperature		Net Weight in Oz Approx	Shipping Weight in Lb Approx	Description and Rating
				Min.	Max			
GL-1L21	$12.50	7500	12	−40	+65	4	1	ETI-262
GL-1L22	26.00	16000	25	−40	+65	6	1	ETI-263
GL-1L23	26.00	16000	50	−40	+65	6	1	ETI-264
GL-1L24	49.50	16000	100	−40	+65	8	1	ETI-265
GL-1L25	14.00	16000	12	−40	+65	6	1	ETI-266
GL-1L31	14.00	16000	6	−40	+65	6	1	ETI-307
GL-1L32	12.50	7500	6	−40	+65	4	1	ETI-308
GL-1L33	30.00	7500	100	−40	+65	6	1	ETI-267
GL-1L36	12.50	7500	25	−40	+65	4	1	ETI-268
GL-1L38	22.00	7500	50	−40	+65	4	1	ETI-269

§ As prices shown on these pages are only corrected when regular supplements are issued, they should not be used for quotation without further check.

Prices and other data subject to change without notice

Tube Divisions, Electronics Department

GENERAL ELECTRIC

Schenectady, N. Y.

10-50 (11M)

GE Electronic TUBES

FOR RADIO APPLICATIONS*

SUGGESTED USER'S PRICES AND CONCISE TECHNICAL DATA

HIGH-VACUUM TYPES

Type No.	Suggested User's Price♦	No. of Electrodes	CATHODE		PLATE				MAX. FREQ. MC.		Mu	Gm	Bulletin No.
			Volts	Amp	Max Volts	Max Amp	Max Input, Watts	Max Dissipation, Watts	@ Max Plate Input	@50% Max Plate Input			
GL-2C40	$29.00	3	6.3	0.75	500	0.025	4.0	6.5	3370	.....	36	4850	ETX-123
GL-2C43	29.00	3	6.3	0.90	500	0.040	16.7	6.7	3370	.....	48	8000	ETX-124
GL-2E24	5.10	5	6.3	0.65	600	0.085	40	13.5	125	175 @ 68%	7.5	3200	ETX-223
GL-2E26	3.85	5	6.3	0.80	500	0.075	30	10	125	.....	6.5	3500	ETX-224
					600	**0.075**	**40**	**13.5**					
GL-2E30	2.45	5	6.0	0.65	250	0.060	15	10	165				ETX-229A
GL-4D21/ 4-125A	27.50	4	5.0	6.5	3000	0.225	500	125	120	250 @ 56%	6.2	2450	ETX-225
GL-5C24	40.00	3	10.0	5.2	1750	0.107	250	160	....	.....	8	5500	ETX-217
GL-35T	9.50	3	5.0	4.0	2000	0.150	300	50	100	.....	39	2800	ETX-216
GL-100TH	16.50	3	5.0	6.3	3000	0.225	675	100	....	.....	40	5500	ETX-222
GL-146	24.00	3	10	3.25	1500	0.200	300	125	15	60	75	....	ETX-127
GL-152	27.00	3	10	3.25	1500	0.200	300	125	15	60	25	....	ETX-128
GL-159	145.00	3	10	9.60	2000	0.400	800	250	15	35	20	....	ETX-129
GL-169	120.00	3	10	9.60	2000	0.400	800	250	15	35	85	....	ETX-130
GL-203-A	13.75	3	10	3.25	1250	0.175	220	100	15	80	25	....	ETX-131
GL-204-A	115.00	3	11	3.85	2500	0.275	690	250	3	30	23	....	ETX-132
GL-211	13.75	3	10	3.25	1250	0.175	220	100	15	80	12	....	ETX-134A
GL-242-C	13.75	3	10	3.25	1250	0.150	188	100	6	30	12.5	....	ETX-136A
GL-800	11.50	3	7.5	3.25	1250	0.080	100	35	60	180 @ 55%	15	....	ETX-142
GL-801-A	4.30	3	7.5	1.25	600	0.070	42	20	60	120	8	....	ETX-143
GL-802	4.75	5	6.3*	0.90	500	0.060	25	10	30	100 @ 55%	...	2250	ETX-144
					600	**0.060**	**33**	**13**					
GL-803	24.25	5	10	5.00	2000	0.175	350	125	20	70	...	4000	ETX-145
GL-805	13.50	3	10	3.25	1500	0.210	315	125	30	80	...	....	ETX-146
GL-806	34.25	3	5	10.0	3000	0.200	600	150	30	100	12.6	....	ETX-147
					3300	**0.300**	**1000**	**225**					
GL-809	4.00	3	6.3	2.50	750	0.100	75	25	60	120	50	....	ETX-149
					1000	**0.100**	**100**	**30**					
GL-811-A	4.05	3	6.3	4.00	1250	0.175	175	45	30	100	160	....	ETX-151A
					1500	**0.175**	**260**	**65**					
GL-812-A	4.05	3	6.3	4.00	1250	0.175	175	45	30	100 @ 55%	29	....	ETX-152A
					1500	**0.175**	**260**	**65**					
GL-813	16.00	5	10.0	5.00	2000	0.180	360	100	30	120 @ 50%	8.5	3750	ETX-153C
					2250	**0.225**	**500**	**125**					
GL-814	14.25	5	10.0	3.25	1250	0.150	180	50	30	75 @ 64%	...	3300	ETX-154
					1500	**0.150**	**225**	**65**					
GL-815	6.90	5	*6.3†	1.6†	400	0.150	60	20	125	200 @ 70%	6.5	4000	ETX-155
					500	**0.150**	**75**	**25**					
GL-826	12.50	3	7.5	4.0	1000	0.125	125	60	250	300 @ 80%	31	....	ETX-157A
GL-828	13.75	5	10.0	3.25	1250	0.160	200	70	30	75 @ 65%	...	2700	ETX-158
					1500	**0.180**	**270**	**80**					
GL-829-B	16.25	* 5 †	6.3†	2.25†	750	0.240	120	40	200	250 @ 89%	9	8500	ETX-159
GL-830-B	11.50	3	10.0	2.0	1000	0.150	150	60	15	60 @ 54%	25	....	ETX-160
GL-832-A	12.90	5	*6.3†	1.6†	750	0.090	36	15	200	250 @ 89%	7	3500	ETX-161
GL-835	19.50	3	10.0	3.25	1250	0.175	220	100	20	100	12	3600	ETX-163
GL-837	5.80	5	12.6*	0.70	500	0.080	32	12	20	60 @ 62%	...	3400	ETX-165
GL-838	13.75	3	10.0	3.25	1250	0.175	220	100	30	120	...	....	ETX-166
GL-842	4.05	3	7.5	1.25	425	0.028	....	12	....	.....	3	1250	ETX-167
GL-843	2.60	3	2.5*	2.50	450	0.040	....	15	6	30 @ 80%	7.7	....	ETX-168
GL-845	13.75	3	10.0	3.25	1250	0.175	....	75	....	.....	5	....	ETX-169
GL-849	138.00	3	11.0	5.00	2500	0.350	875	400	3	30	19	....	ETX-170
GL-1613	2.65	5	6.3*	0.70	350	0.050	17.5	10	45	90 @ 85%	...	2500	ETX-191
GL-1614	2.05	5	6.3*	0.90	375	0.110	35	21	80	120 @ 75%	...	6050	ETX-192A
GL-1619	2.50	4	2.5	2.0	400	0.075	30	15	45	90 @ 77%	...	4500	ETX-194A
GL-1623	4.05	3	6.3	2.5	750	0.100	75	25	60	115	20	....	ETX-195A
GL-1624	4.00	5	2.5	2.0	600	0.090	54	25	60	125 @ 55%	...	4000	ETX-196

* Types shown are not included elsewhere in the Industrial Tube Manual.

♦ As prices shown on these pages are only corrected when regular supplements are issued, they should not be used for quotation without further check.

Prices and other data subject to change without notice

Prices effective Oct. 1, 1950

Supersedes ETI-105F dated 2-48

HIGH-VACUUM TYPES (Cont'd)

Type No.	Sug-gested User's Price	No. of Elec-trodes	CATHODE		PLATE				MAX. FREQ. MC.		Mu	Gm	Bulletin No.
			Volts	Amp	Max Volts	Max Amp	Max Input Watts	Max Dissi-pation, Watts	@ Max Plate Input	@50% Max Plate Input			
GL-1625	$2.65	5	12.6*	0.450	600	0.100	60	25	60	125 @ 55%	8	6000	ETX-197
					750	**0.100**	**75**	**30**					
GL-5654	6.00	5	6.3*	0.175	180	0.007	—	1.7	—	—	—	5000	ETX-241
GL-5670	7.50	6	6.3*	0.350	300	0.018	—	1.5	—	—	35	5500	ETX-233
GL-5686	7.00	5	6.3*	0.350	250	0.040	—	2.7	—	—	—	—	ETX-244
GL-5725	6.00	5	6.3*	0.175	180	0.0052	—	1.7	—	—	—	—	ETX-258
GL-5726	4.50	4	6.3*	0.300	330	0.054	—	—	—	—	—	—	ETX-257
GL-5749	4.50	5	6.3*	0.300	300	0.011	—	3.0	—	—	—	—	ETX-261
GL-5750	4.50	6	6.3*	0.300	300	0.0026	—	1.0	—	—	—	—	ETX-262
GL-5751	5.65	6	6.3*	0.350	330	0.001†	—	1.1	—	—	70	1200	ETX-245
			12.6*	0.175									
GL-5814	6.00	6	6.3*	0.350	330	0.010	—	3.03†	—	—	17	2200	ETX-246
			12.6*	0.175									
GL-5824	3.35	5	25.0*	0.300	200	0.069	—	12.5	—	—	—	5000	ETX-240
GL-8000	14.50	3	10.0	4.500	2500	0.300	750	175	30	100	16.5	....	ETX-215
GL-8005	7.40	3	10.0	3.250	1250	0.200	240	75	60	100 @ 60%	20	....	ETX-210
					1500	**0.200**	**300**	**85**					
GL-8012-A	15.50	3	6.3	2.000	1000	0.080	50	40	500	600 @ 63%ϕ	18	....	ETX-204
GL-8025-A	10.00	3	6.3	1.920	1000	0.080	50	30	500	600 @ 70%	18	....	ETX-214
					1000	**0.080**	**75**	**40**					

HIGH-VACUUM, FORCED-AIR-COOLED TYPES

Type No.	Suggested User's Price	No. of Elec-trodes	CATHODE		PLATE				MAX. FREQ. MC.		Mu	Bulletin No.
			Volts	Amp	Max Volts	Max Amp	Max Plate Input, Watts	Max Dissi-pation, Watts	@ Max Plate Input	@50% Max Plate Input		
GL-2C39	$41.50	3	6.3*	1.1	350	0.045	15.8	4.8	500	.....	100	ETX-122
GL-3C22	80.00	3	6.3*	2.0	1000	0.150	150	125	1000	.....	40	ETX-126
GL-4X150A	48.00	4	6.0*	2.6	1250	0.250	....	150	500	.....	5	ETX-237
GL-4-250A/5D22	37.50	4	5	14.5	4000	0.350	....	250	75	120@62%	5.1	ETX-236
GL-5D24	37.50	4	5.0	14.1	3500	0.350	600	200	85	.....	6.4	ETX-226
					4000	**0.350**	**1000**	**250**				
GL-7C29	115.00	3	10.5	28.0	3000	0.400	1200	500	110	.....	29	ETX-218
GL-7D21	285.00	4	6.3	30.0	4000	1.0	3000	1200	110	.....		ETX-219A
GL-9C22	1225.00	3	19.5	415	17000	8.0	100000	20000	5	25@70%	41	ETX-212
GL-1000T	125.00	3	7.5	17.0	7500	0.750	4000	1000	50	.....	..	ETX-243
GL-5513	275.00	3	6.3	32.0	4000	1.0	3600	1200	220	.....	87	ETX-220A
GL-5518	495.00	3	6.3	250.0	7500	2.0	12000	4000	110	.....	22	ETX-221A
GL-5588	110.00	3	6.3	2.5	1000	0.300	250	200	1200	.....	..	ETX-239
GL-5648	41.50	3	6.3	1.1	1000	1.00	50	15	2500	...	100	ETX-231

HIGH-VACUUM, WATER-COOLED TYPES

GL-8D21	$1300.00	6	3.2	125	6000	2.0	10000	6000	300	.....	5	ETX-242
GL-9C21	866.00	3	19.5	415	17000	9.0	150000	40000	15	25@70%	40	ETX-211A
GL-9C24	550.00	3	6.3	240	6500	2.0	12000	5000	220	.....	21	ETX-213
GL-858	500.00	3	22	52.0	20000	2.00	40000	20000	1.5	40	42	ETX-173A
GL-898-A**	1150.00	3	16.5††	70.0††	20000	10.00	200000	100000	1.6	.....	45	ETX-190
GL-8009	816.00	3	12.6	320	10500	6.00	60000	20000	25	100	20	ETX-203

GASKETS FOR WATER-COOLED TYPES

Cat. No.	Suggested User's Price	Used on Tube Type	Cat. No.	Suggested User's Price	Used on Tube Type
5182028P1	$1.18	GL-862-A, GL-880, GL-898-A	5182028P8	$ .42	GL-889-A
5182028P2	.96	GL-858, GL-893-A	5182028P10	.20	GL-8002
5182028P3	.20	GL-207, GL-891, GL-892	5182028P11	1.18	GL-8009

Figures in bold type are ICAS ratings.

* Heater-type cathode.

** Credit for return, prepaid, to Schenectady—carton $5.00, tube $10.00.

† Parallel operation.

†† Single- or three-phase filament. Voltage is per strand, current is per strand.

ϕ Maximum permissible percentage of only maximum plate voltage, the minimum plate input may be 100 per cent of its rated value.

MERCURY-VAPOR RECTIFIERS

Type No.	Suggested User's Price	No. of Electrodes	CATHODE		Max Peak Inverse Volts	Avg. Plate Amp	Bulletin No.
			Volts	Amp			
GL-266-B	$209.00	2	5	30	22000	5.0 10.0¶	ETX-137
GL-816	1.65	2	2.5	2.0	7500	0.125	ETX-156
GL-870-A	1300.00	2	5	65.0	16000	75.0	ETX-177

HIGH-VACUUM RECTIFIERS

Type No.	Suggested User's Price	No. of Electrodes	CATHODE		PLATE			Voltage Drop Volts	Average Dissipation Watts				Bulletin No.
			Volts	Amp	Max Inv. Volts	Max Amp	Average Amp						
GL-2B22	$21.00	2	6.3	0.75	100	0.7	.....	0.020	.....	....	....	....	ETX-232
GL-217-C	21.50	2	10	2.35	7500	0.600	.....	210	.....	....	....	....	ETX-135
GL-836	9.00	2	2.5*	5.0	5000	1.0	0.25	45	.....	....	....	....	ETX-164
GL-1616	8.65	2	2.5	5.0	5500	0.800	0.13	75	.....	....	....	....	ETX-193
GL-1641	2.75	3	5.0	3.0	2120	0.250	.....	61	.....	....	....	....	ETX-199
GL-8013-A	10.30	2	2.5	5.0	40000	0.150	0.020	.....	.....	....	....	....	ETX-205

* Heater-type cathode.
¶ Quadrature operation.

PHASITRON

Type No.	Suggested User's Price	No. of Electrodes	CATHODE		Anode Volts	Deflector Volts	RF Output, Volts	Frequency for Max Rating, Kc	Bulletin No.
			Volts	Amp					
GL-2H21	$90.00	10	6.3	0.30	300	100	4	500	ETX-125
GL-5593	77.00	10	6.3	0.30	300	100	4	250	ETX-230

TELEVISION CAMERA TUBES

IMAGE ORTHICONS Type	Suggested User's Price	CATHODE		Anode Voltage	Photocathode Voltage	Image Size Inches	Bulletin No.
		Voltage	Current Amp				
GL-5820	$1200.00	6.3	0.6	1500	−550	1.6 Diagonal	ETX-259
GL-5826	1300.00	6.3	0.6	1500	−550	1.6 Diagonal	ETX-260

TR, A-TR, AND PRE-TR TUBES—GAS SWITCHING TUBES FOR AUTOMATIC SWITCHING SERVICE IN PULSED MICROWAVE CIRCUITS

TR Type No.	Suggested User's Price	Frequency Range Megacycles	Max. Transmitter Power—Average Watts	Spike Leakage Energy per Pulse—Ergs	Flat Leakage Power Milliwatts	Bulletin No.
GL-1B63-A	$87.00	8940–9575	250	0.1	30	ETX-256
A-TR Type No.		**Frequency Range Megacycles**	**Equivalent Conductance**	**Minimum Firing Power**	**Loaded Q**	
GL-1B35	$18.00	9000–9600	0.04	5	4	ETX-251
GL-1B37	21.00	8500–9000	0.04	5	4	ETX-252
GL-1B44	71.00	2680–2830	0.03	20	4	ETX-254
GL-1B56	71.00	2783–2922	0.03	20	4	ETX-255
PRE-TR Type No.						
GL-1B38	$50.00	2700–2910	1000	Max. Leakage Energy = 1.3×10^{-4} Joules		ETX-253

CATHODE-RAY TUBES—FOR MEASUREMENT USE

Type No.	Suggested User's Price	Screen Diam, Minimum, Inches	HEATER		Screen Fluorescence	Focusing and Deflection	High-voltage Electrode, Max Volts	Bulletin No.
			Volts	Amp				
2BP1	$9.60	1¾	6.3	0.6	Green	Electrostatic	2500	ETI-310
3KP1	14.50	2¾	6.3	0.6	Green	Electrostatic	2500	ETI-311
3MP1	14.75	2¾	6.3	0.6	Green	Electrostatic	2500	ETI-313
5UP1	17.75	4½	6.3	0.6	Green	Electrostatic	2500	ETI-312

Tube Divisions, Electronics Department

GENERAL ELECTRIC

Schenectady, N. Y.

10-50 (11M)

INTERCHANGEABILITY LIST

Transmitting Tubes

This listing includes those types for which the General Electric Company has either a direct replacement or a similar type comparable in capabilities and application.

Type No.	Class	Manufacturer	Direct G-E Replacement Type	G-E Similar Type
TGRA	R	IH	**GL-575-A**	
TGRB	R	IH	**GL-872-A**	
TVTB	TR	IH	**GL-833-A**	
TVTC	TR	IH	**GL-889-A**	
GL-1L21	TR	GE	**GL-1L21**	
GL-1L24	TR	GE	**GL-1L24**	
GL-1L25	TR	GE	**GL-1L25**	
GL-1L31	TR	GE	**GL-1L31**	
GL-1L32	TR	GE	**GL-1L32**	
GL-1L33	TR	GE	**GL-1L33**	
GL-1L36	TR	GE	**GL-1L36**	
GL-1L38	TR	GE	**GL-1L38**	
GL-1Q26-A	TR	GE	**GL-1Q26-A**	
GL-2B22	TR	GE	**GL-2B22**	
2C38	TR	EM		GL-2C39-B
2C39	TR	EM	**GL-2C39-B**	
ML-2C39	TR	ML	**GL-2C39-B**	
2C39-A	TR	A, EM, RCA	**GL-2C39-B**	
ML-2C39-A	TR	ML	**GL-2C39-B**	
2C39-B	TR	GE, EM	**GL-2C39-B**	
2C40	TR	RCA	**GL-2C40-A**	
GL-2C40-A	TR	GE	**GL-2C40-A**	
GL-2C42	TR	GE	**GL-2C42**	
2C43	TR	GE, RCA	**GL-2C43**	
GL-2C46	TR	GE	**GL-2C46**	
GL-2H21	TR	GE	**GL-2H21**	
2E24	TR	GE, HY, RCA, RK, S	**GL-2E24**	
2E25	TR	HY		GL-2E24
2E26	TR	GE, HY, RCA, RK, S	**GL-2E26**	
2E30	TR	GE, HY	**GL-2E30**	
3-25A3	TR	EM		GL-809
3-50A4	TR	EM		GL-811-A
3-75A3	TR	EM		GL-8005
3-100A	TR	EM		GL-810
3-450A4	TR	EM		GL-833-A
3-1000A2	TR	EM		GL-8000
3-1000A4	TR	EM		GL-810
3B27	R	EE		GL-836
DR-3B27	R	GES		GL-836
3B28	R	CH, RCA, UE		GL-866-A
AX-3B28	R	A	**GL-866-A**	
3B28/6277	R	T	**GL-866-A**	
3C21	TR	A		GL-838
3X100A11	TR	EM	**GL-2C39-B**	
3X2500A3	TR	GE, EM	**GL-3X2500A3**	
4-125A	TR	EM	**GL-4D21/4-125A**	
4-125A/4D21	TR	RCA	**GL-4D21/4-125A**	
AX-4-125A/6155	TR	A		GL-4D21/4-125A
4-250A	TR	RCA	**GL-4-250A/5D22**	
GL-4-250A/5D22	TR	GE	**GL-4-250A/5D22**	

MANUFACTURER'S IDENTIFICATION

A—AMPEREX ELECTRONIC CORPORATION
CE—CONTINENTAL ELECTRIC COMPANY (CETRON)
CH—CHATHAM ELECTRONICS
EE—ELECTRONIC ENTERPRISES, INCORPORATED
EL—ELECTRONS, INCORPORATED
EM—EITEL-MCCULLOUGH, INCORPORATED (EIMAC)
F—FEDERAL TELEPHONE AND RADIO COMPANY
GE—GENERAL ELECTRIC COMPANY
GES—GENERAL ELECTRONICS, INCORPORATED
HK—HEINTZ AND KAUFMAN, LIMITED
HY—CBS HYTRON
IH—INDUCTION HEATING CORPORATION
ML—MACHLETT LABORATORIES, INCORPORATED
NU—NATIONAL UNION ELECTRIC CORPORATION
RCA—RADIO CORPORATION OF AMERICA
RK—RAYTHEON MANUFACTURING COMPANY
S—SYLVANIA ELECTRIC PRODUCTS, INCORPORATED
T—TAYLOR TUBES, INCORPORATED
TS—TUNG-SOL ELECTRIC, INCORPORATED
UE—UNITED ELECTRONICS COMPANY
WE—WESTERN ELECTRIC
WL—WESTINGHOUSE ELECTRIC CORPORATION
WT—WELTRONIC COMPANY

TUBE CLASSIFICATION

K—KLYSTRON
M—MAGNETRON
R—RECTIFIER
TR—TRANSMITTING

GENERAL ELECTRIC

Supersedes ET-T1218 dated 10-55

WL-4-250A/5D22—211H

INTERCHANGEABILITY LIST

Type No.	Class	Manufacturer	Direct G-E Replacement Type	G-E Similar Type
WL-4-250A/5D22	TR	WL	**GL-4-250A/5D22**	
AX-4-250A/6156	TR	A		GL-4-250-A/5D22
4-1000A	TR	GE, RCA, EM	**GL-4-1000A**	
4C22	TR	A		GL-8005
4D21	TR	RK	**GL-4D21/4-125A**	
GL-4D21/4-125A	TR	GE	**GL-4D21/4-125A**	
WL-4D21/4-125A	TR	WL	**GL-4D21/4-125A**	
4D23	TR	RK		GL-4D21/4-125A
4X150A	TR	GE, A, EM, RCA, WL	**GL-4X150A**	
4X150G	TR	EM		GL-4X-150A
GL-5C24	TR	GE	**GL-5C24**	
5D22	TR	UE	**GL-4-250A/5D22**	
WL-5D22	TR	WL	**GL-4-250A/5D22**	
5D24	TR	F		GL-4-250-A/5D22
7C24	TR	RCA	**GL-5762**	
ML-7C24	TR	ML	**GL-5762**	
F-7C25	TR	F		GL-5762
F-7C27	TR	F		GL-5762
GL-7C29	TR	GE	**GL-7C29**	
F-7C30	TR	F		GL-5762
GL-7D21	TR	GE	**GL-7D21**	
RK-12	TR	RK		GL-809
HV-18	TR	UE		GL-810
FV-20	TR	UE		GL-8000
TV-20	TR	T		GL-810
TZ-20	TR	T		GL-809
RK-21	R	RK		GL-836
RX-21A	R	EM		GL-872-A
WE-X-22	R	UE		GL-1616
KU-23	TR	NU		GL-810
RK-23	TR	RK		GL-802
RK-23A	TR	RK		GL-802
HY-25	TR	HY		GL-809
RK-25	TR	RK	**GL-802**	
RK-25B	TR	RK	**GL-802**	
25T	TR	EM		GL-809
RK-28	TR	RK	**GL-803**	
RK-28-A	TR	RK	**GL-803**	
HY-30Z	TR	HY		GL-809
NU-30Z	TR	NU		GL-809
35T	TR	EM		GL-811-A
RK-38	TR	RK		GL-810
RK-39	TR	RK	**GL-807**	
HY-40	TR	HY		GL-812-A
T-40	TR	T		GL-812-A
TZ-40	TR	T		GL-811-A
HY-40Z	TR	HY		GL-811-A
RK-41	TR	RK		GL-807
RK-44	TR	RK	**GL-837**	
RK-45	TR	RK		GL-837
RK-47	TR	RK	**GL-814**	
RK-48A	TR	RK		GL-813
50T	TR	T		GL-8000
HY-51B	TR	HY		GL-8005
51T	TR	T		GL-8005
HY-51Z	TR	HY		GL-838
RK-52	TR	RK		GL-811-A
T-55	TR	NU, T, UE		GL-8005
HY-57	TR	HY		GL-812-A
RK-57	TR	RK	**GL-805**	
RK-58	TR	RK	**GL-838**	
HF-60	TR	A	**GL-8005**	
HY-60	TR	HY		GL-807
T-60	TR	T		GL-8005
HY-61/807	TR	HY	**GL-807**	
RK-64	TR	RK		GL-807
HY-69	TR	HY		GL-1624
V-70D	TR	NU, UE		GL-8005
75TH	TR	EM		GL-8005
HF-100	TR	A		GL-8005
UE-100	TR	UE		GL-810
100R	R	EM	**GL-8020**	
100TH	TR	GE, EM, NU	**GL-100TH**	
100TL	TR	EM		GL-8000
111H	TR	A		GL-812-A
HF-120	TR	A		GL-8005
ZB-120	TR	A		GL-838
HF-125	TR	A		GL-8005
T-125	TR	T		GL-810
F-127-A	TR	F		GL-810
WT-T127*†	TR	WT	See **WT-210-0086**	
F-128-A	TR	F		GL-851
F-129-B	TR	F		GL-889-A
HF-140	TR	A		GL-8005
TW-150	TR	T		GL-807, GL-810
ML-199	R	ML		GL-5973
HF-200	TR	A, ML		GL-8000
HF-201	TR	A		GL-8000
HF-201A	TR	A		GL-810
203-A	TR	A, NU, RCA, T, UE		GL-8005
WL-203-A	TR	WL		GL-8005
203-Z	TR	T		GL-838
207	TR	GE, A, F, RCA	**GL-207**	
ML-207	TR	ML	**GL-207**	
UE-207	TR	UE	**GL-207**	
WL-207	TR	WL	**GL-207**	
WT-210-0008†	R	WT	**GL-866-A**	
WT-210-0027†	R	WT	**GL-872-A**	
WT-210-0086†	TR	WT	**GL-833-A**	
211	TR	A, NU, RCA, T		GL-8005
UE-211	TR	UE		GL-8005
WL-211	TR	WL		GL-8005
211B	TR	A		GL-8005
211D	TR	A, WE		GL-8005
211H	TR	A		GL-8005

* Old part number. Refer to Weltronic's new part number for GE equivalent.
† These are tube socket markings on equipment bearing the Weltronic trademark.

INTERCHANGEABILITY LIST

Type No.	Class	Manufacturer	Direct G-E Replacement Type	G-E Similar Type
CE-220	R	CE		GL-8020
HF-220R	TR	A		GL-893A-R
Z-225/866A	R	NU, UE		GL-866-A
233	TR	A		GL-880
241B	TR	WE		GL-833-A
242A	TR	WE		GL-8005
242B	TR	WE		GL-8005
242C	TR	GE, A, UE, WE	**GL-242-C**	
ML-242-C	TR	ML	**GL-242-C**	
249A	R	WE		GL-866-A
249B	R	T, WE		GL-866-A
WE-249C	R	WE		GL-866-A
HF-250	TR	A		GL-8000
250TH	TR	EM		GL-810
DR-250TH	TR	GES		GL-810
251A	TR	A, WE		GL-851
HF-251A	TR	A		GL-851
HK-254	TR	HK		GL-810
255A	R	WE		GL-869-B
255B	R	WE		GL-869-B
HF-255B	R	A		GL-869-B
258B	R	A, T, UE		GL-866-A
WT-262*†	R	WT	**See WT-210-0008**	
FP-265	TR	GE	**FP-265**	
F-266-A	R	F	**GL-266-B**	
266B	R	WE		GL-857-B
F-266B	R	F		GL-857-B
HF-266-B	R	A	**GL-266-B**	
266C	R	WE		GL-857-B
267B	R	WE		GL-872-A
F-267B	R	F		GL-872-A
HF-267B	R	A		GL-872-A
268A	TR	WE		GL-801-A
279A	TR	WE		GL-851
HF-279A	TR	A		GL-851
T-282A	TR	T		GL-8000
284A	TR	WE		GL-845
284B	TR	WE		GL-845
284D	TR	UE, WE		GL-845
295A	TR	WE		GL-8005
298A	TR	WE		GL-862-A
ML-298-A	TR	ML		GL-862-A
298B	TR	WE		GL-862-A
T-303C	TR	T		GL-8000
UE-303U	TR	UE		GL-8000
307A	TR	WE		GL-807
F-307A	TR	F	**GL-207**	
310	TR	UE		GL-801-A
310B	TR	WE		GL-1620
UE-311	TR	UE		GL-8005
UE-311CH	TR	UE		GL-8000
312A	TR	WE		GL-828
315A	R	A, WE		GL-673
F-315A	R	F		GL-673
ML-315A	R	ML		GL-673
319A	R	WE		GL-872-A
F-319A	R	F		GL-872-A
ML-319A	R	ML		GL-872-A
321A	R	WE		GL-673
HF-321A	R	A		GL-673
ML-321A	R	ML		GL-673
322A	TR	WE	**GL-803**	
327A	TR	WE		GL-810
327B	TR	WE		GL-810
331A	TR	WE	**GL-805**	
332A	TR	WE		GL-803
QK-338	M	RK	**GL-6410**	
339A	TR	WE		GL-807
UE-342B	TR	UE		GL-8005
342-C	TR	UE	**GL-242-C**	
348A	TR	WE		GL-1620
350A	TR	WE	**GL-807**	
350B	TR	WE		GL-807
F-353A	R	F	**GL-872-A**	
HK-354F	TR	HK		GL-8005
356A	TR	WE		GL-807
357A	TR	WE		GL-833-A
357B	TR	ML		GL-833-A
F-357-B	R	F	**GL-857-B**	
366A	R	WE	**GL-866-A**	
F-367-A	R	F		GL-673
371-B	R	EE, UE		GL-8020
F-375A	R	F	**GL-575-A**	
ML-381	TR	ML	**GL-2C39-B**	
384D	TR	WE		GL-845
UE-384D	TR	UE		GL-845
WL-450	TR	WL		GL-833-A
450TH	TR	EM		GL-833-A
F-450TH	TR	F		GL-833-A
UE-468	TR	UE		GL-810, GL-8000
WL-468	TR	WL		GL-810
WL-471	TR	WL		GL-8005, GL-8003
WL-473	TR	WL		GL-5762
WL-481	R	WL		GL-8013-A
559	TR	RCA		GL-2B22
575-A	R	GE, A, EE, NU, RCA	**GL-575-A**	
DR-575-A	R	GES	**GL-575-A**	
F-575-A	R	F	**GL-575-A**	
ML-575-A	R	ML	**GL-575-A**	
WL-575-A	R	WL	**GL-575-A**	
UE-578	R	UE		GL-8020
WL-578	R	WL		GL-8020
GL-592	TR	GE	**GL-592**	
592/3-200A3	TR	EL, EM	**GL-592**	
673	R	GE, A, F, RCA	**GL-673**	
ML-673	R	ML	**GL-673**	
T-756	TR	T		GL-809
801	TR	RCA	**GL-801-A**	
801A	TR	GE, A, NU, RCA	**GL-801-A**	
DR-801-A	TR	GES	**GL-801-A**	

* Old part number. Refer to Weltronic's new part number for G-E equivalent.
† These are tube socket markings on equipment bearing the Weltronic trademark.

INTERCHANGEABILITY LIST

Type No.	Class	Manufacturer	Direct G-E Replacement Type	G-E Similar Type
WL-801-A	TR	WL	**GL-801-A**	
HY-801-A	TR	HY	**GL-801-A**	
801-A/801	TR	HY, S	**GL-801-A**	
802	TR	GE, A, NU, RCA	**GL-802**	
WL-802	TR	WL	**GL-802**	
803	TR	GE, A, NU, RCA	**GL-803**	
DR-803	TR	GES	**GL-803**	
T-803	TR	T	**GL-803**	
WL-803	TR	WL	**GL-803**	
805	TR	GE, A, NU, RCA	**GL-805**	
DR-805	TR	GES	**GL-805**	
ML-805	TR	ML	**GL-805**	
T-805	TR	T	**GL-805**	
UE-805	TR	UE	**GL-805**	
WL-805	TR	WL	**GL-805**	
807	TR	GE, A, HY, NU, RK, RCA, S, TS	**GL-807**	
DR-807	TR	GES	**GL-807**	
WL-807	TR	WL	**GL-807**	
809	TR	GE, NU, RCA, S	**GL-809**	
DR-809	TR	GES	**GL-809**	
WL-809	TR	WL	**GL-809**	
810	TR	GE, A, NU, RCA, S	**GL-810**	
DR-810	TR	GES	**GL-810**	
ML-810	TR	ML	**GL-810**	
T810	TR	T	**GL-810**	
UE-810	TR	UE	**GL-810**	
WL-810	TR	WL	**GL-810**	
811	TR	A, NU, RCA, S	**GL-811-A**	
DR-811	TR	GES	**GL-811-A**	
NU-811	TR	NU	**GL-811-A**	
WL-811	TR	WL	**GL-811-A**	
811-A	TR	GE, RCA, RK, S	**GL-811-A**	
WL-811-A	TR	WL	**GL-811-A**	
812	TR	A, NU, RCA, S	**GL-812-A**	
DR-812	TR	GES	**GL-812-A**	
NU-812	TR	NU	**GL-812-A**	
WL-812	TR	WL	**GL-812-A**	
812-A	TR	GE, S, RCA, RK	**GL-812-A**	
WL-812-A	TR	WL	**GL-812-A**	
UE-812-H	TR	UE		GL-8005
813	TR	GE, A, NU, RCA, S	**GL-813**	
DR-813	TR	GES	**GL-813**	
ML-813	TR	ML	**GL-813**	
RK-813	TR	RK	**GL-813**	
T-813	TR	T	**GL-813**	
UE-813	TR	UE	**GL-813**	
WL-813	TR	WL	**GL-813**	
814	TR	GE, NU, RCA	**GL-814**	
T-814	TR	T	**GL-814**	
WL-814	TR	WL	**GL-814**	
RK-814/RK47	TR	RK	**GL-814**	
815	TR	GE, NU, S, RCA	**GL-815**	
WL-815	TR	WL	**GL-815**	
816	R	GE, A, HY, NU, RCA, RK, S	**GL-816**	
DR-816	R	GES	**GL-816**	
WL-816	R	WL	**GL-816**	
828	TR	GE, A, NU, RCA	**GL-828**	
ML-828	TR	ML	**GL-828**	
WL-828	TR	WL	**GL-828**	
829	TR	RCA	**GL-829-B**	
829-A	TR	RCA	**GL-829-B**	
829-B	TR	GE, A, NU, RCA, S, T	**GL-829-B**	
ML-829-B	TR	ML	**GL-829-B**	
RK-829-B	TR	RK	**GL-829-B**	
WL-829B	TR	WL	**GL-829-B**	
832	TR	RCA	**GL-832-A**	
832-A	TR	GE, A, NU, RCA, S, T	**GL-832-A**	
DR-832-A	TR	GES	**GL-832-A**	
ML-832-A	TR	ML	**GL-832-A**	
RK-832-A	TR	RK	**GL-832-A**	
WL-832-A	TR	WL	**GL-832-A**	
833	TR	RCA	**GL-833-A**	
833-A	TR	GE, A, RCA	**GL-833-A**	
DR-833-A	TR	GES	**GL-833-A**	
ML-833-A	TR	ML	**GL-833-A**	
UE-833-A	TR	UE	**GL-833-A**	
WL-833-A	TR	WL	**GL-833-A**	
836	R	A, NU, RCA	**GL-836**	
DR-836	R	GES	**GL-836**	
EE-836	R	EE	**GL-836**	
WL-836	R	WL	**GL-836**	
837	TR	GE, A, HY, NU, RCA, S	**GL-837**	
DR-837	TR	GES	**GL-837**	
WL-837	TR	WL	**GL-837**	
RK-837	TR	RK	**GL-837**	
838	TR	GE, A, NU, RCA	**GL-838**	
DR-838	TR	GES	**GL-838**	
T-838	TR	T	**GL-838**	
UE-838	TR	UE	**GL-838**	
WL-838	TR	WL	**GL-838**	
845	TR	GE, A, NU, RCA	**GL-845**	
T-845	TR	T	**GL-845**	
UE-845	TR	UE	**GL-845**	
WL-845	TR	WL	**GL-845**	
849A	TR	A		GL-833-A
849H	TR	A		GL-833-A
851	TR	GE, A, RCA	**GL-851**	
DR-851	TR	GES	**GL-851**	
UE-851	TR	UE	**GL-851**	
WL-851	TR	WL	**GL-851**	
HK-854H	TR	HK		GL-833-A
857	R	RCA	**GL-857-B**	
857-B	R	GE, A, RCA	**GL-857-B**	
DR-857-B	R	GES	**GL-857-B**	
F-857-B	R	F	**GL-857-B**	
ML-857-B	R	ML	**GL-857-B**	
WL-857-B	R	WL	**GL-857-B**	
859	TR	A		GL-893-A
862	TR	RCA	**GL-862-A**	
862-A	TR	GE, RCA	**GL-862-A**	

INTERCHANGEABILITY LIST

Type No.	Class	Manufacturer	Direct G-E Replacement Type	G-E Similar Type
F-862-A	TR	F	**GL-862-A**	
WL-862-A	TR	WL	**GL-862-A**	
866	R	A, RCA	**GL-866-A**	
866-A	R	GE, CE, CH, EM, NU, RCA, S	**GL-866-A**	
DR-866-A	R	GES	**GL-866-A**	
EE-866-A	R	EE	**GL-866-A**	
HF-866-A	R	A	**GL-866-A**	
ML-866-A	R	ML	**GL-866-A**	
RK-866-A	R	RK	**GL-866-A**	
T-866-A	R	T	**GL-866-A**	
UE-866-A	R	UE	**GL-866-A**	
WL-866-A	R	WL	**GL-866-A**	
866-A/866	R	RCA	**GL-866-A**	
866-AX	R	A		GL-866-A
866-JR	R	NU, T		GL-866-A
869-A	R	RCA	**GL-869-B**	
869-B	R	GE, A, RCA	**GL-869-B**	
DR-869-B	R	GES	**GL-869-B**	
F-869-B	R	F	**GL-869-B**	
ML-869-B	R	ML	**GL-869-B**	
WL-869-B	R	WL	**GL-869-B**	
870	R	RCA	**GL-870-A**	
GL-870-A	R	GE	**GL-870-A**	
872	R	RCA	**GL-872-A**	
872-A	R	GE, CE, EM, NU, RCA, S, T	**GL-872-A**	
DR-872-A	R	GES	**GL-872-A**	
EE-872-A	R	EE	**GL-872-A**	
F-872-A	R	F	**GL-872-A**	
RK-872-A	R	RK	**GL-872-A**	
UE-872-A	R	UE	**GL-872-A**	
872-A/872	R	RCA	**GL-872-A**	
ML-872-A/872	R	ML	**GL-872-A**	
WL-872-A/872	R	WL	**GL-872-A**	
872-AX	R	A	**GL-872-A**	
T-875-A	R	T	**GL-575-A**	
880	TR	GE, A, RCA	**GL-880**	
ML-880	TR	ML	**GL-880**	
UE-880	TR	UE	**GL-880**	
WL-880	TR	WL	**GL-880**	
889	TR	RCA	**GL-889-A**	
889-A	TR	GE, A, RCA	**GL-889-A**	
F-889-A	TR	F	**GL-889-A**	
ML-889-A	TR	ML	**GL-889-A**	
UE-889-A	TR	UE	**GL-889-A**	
WL-889-A	TR	WL	**GL-889-A**	
889R	TR	RCA	**GL-889R-A**	
889R-A	TR	GE, A, RCA	**GL-889R-A**	
F-889R-A	TR	F	**GL-889R-A**	
ML-889R-A	TR	ML	**GL-889R-A**	
UE-889R-A	TR	UE	**GL-889R-A**	
WL-889R-A	TR	WL	**GL-889R-A**	
893-A-R	TR	GE, A, RCA	**GL-893A-R**	
F-893A-R	TR	F	**GL-893A-R**	
ML-893A-R	TR	ML	**GL-893A-R**	
WL-893A-R	TR	WL	**GL-893A-R**	
898-A	TR	GE, A, RCA	**GL-898-A**	
F-898-A	TR	F	**GL-898-A**	
UE-905	TR	UE	**GL-805**	
UE-938	TR	UE	**GL-838**	
UE-945	TR	UE	**GL-845**	
951	TR	UE	**GL-851**	
UE-966	R	UE	**GL-866-A**	
UE-966-A	R	UE	**GL-866-A**	
UE-972	R	UE	**GL-872-A**	
UE-972-A	R	UE	**GL-872-A**	
975-A	R	NU	**GL-575-A**	
UE-975-A	R	UE		GL-575-A
1000T	TR	GE, EM	**GL-1000T**	
WL-1000T	TR	WL	**GL-1000T**	
1603	TR	TS		GL-1620
1612	TR	GE, RCA	**GL-1612**	
1613	TR	GE, RCA	**GL-1613**	
1614	TR	GE, RCA	**GL-1614**	
1616	R	GE, A, HY, NU, RCA, S	**GL-1616**	
DR-1616	R	GES	**GL-1616**	
1619	TR	GE, NU, RCA	**GL-1619**	
1620	TR	GE, NU, RCA	**GL-1620**	
1621	TR	GE, NU, RCA	**GL-1621**	
1624	TR	GE, NU, RCA	**GL-1624**	
1625	TR	GE, A, HY, NU, RCA, S, TS	**GL-1625**	
DR-1625	TR	GES	**GL-1625**	
RK-1625	TR	RK	**GL-1625**	
GL-5513	TR	GE	**GL-5513**	
5514	TR	HY		GL-811-A
5516	TR	GE, HY	**GL-5516**	
GL-5518	TR	GE	**GL-5518**	
ML-5530	TR	ML		GL-5762
5588	TR	GE, RCA	**GL-5588**	
ML-5588	TR	ML	**GL-5588**	
GL-5593	TR	GE	**GL-5593**	
5604	TR	F		GL-889R-A
5618	TR	RCA		GL-2E30
5658	TR	A, F		GL-880
ML-5658	TR	ML		GL-880
5666	TR	A, F		GL-889-A
ML-5666	TR	ML		GL-889-A
5667	TR	A		GL-889R-A
F-5667	TR	F		GL-889R-A
ML-5667	TR	ML		GL-889R-A
EE-5695	R	EE		GL-816
GL-5736	TR	GE	**GL-5736**	
WL-5736	TR	WL	**GL-5736**	
ML-5736	TR	ML	**GL-5736**	
5762	TR	GE, RCA	**GL-5762**	
5762/7C24	TR	RCA	**GL-5762**	
5763	TR	GE, HY, RCA, S	**GL-5763**	
5812	TR	HY		GL-5763
5868/AX9902	TR	A		GL-833-A
5894	TR	GE, A, RCA	**GL-5894**	
ML-5894	TR	ML	**GL-5894**	

5917—AX-9903

INTERCHANGEABILITY LIST

Type No.	Class	Manufacturer	Direct G-E Replacement Type	G-E Similar Type	Type No.	Class	Manufacturer	Direct G-E Replacement Type	G-E Similar Type
5917	TR	F		GL-5762	GL-6620	TR	GE	**GL-6620**	
5933	TR	S		GL-807	GL-6621	TR	GE	**GL-6621**	
5933-WA	TR	S		GL-807	GL-6625	K	GE	**GL-6625**	
GL-5973	R	GE	**GL-5973**		GL-6897	TR	GE	**GL-6897**	
GL-6019	TR	GE	**GL-6019**		7034/4X150A	TR	RCA	**GL-4X150A**	
GL-6039	TR	GE	**GL-6039**						
GL-6046	TR	GE	**GL-6046**		8000	TR	GE, RCA, T	**GL-8000**	
6146	TR	GE, RCA, S	**GL-6146**		ML-8000	TR	ML	**GL-8000**	
6155	TR	A		GL-4D21/ 4-125A	WL-8000	TR	WL	**GL-8000**	
					8002	TR	GE, A	**GL-8002**	
6156	TR	A		GL-4-250-A/5D22	8002-R	TR	GE, A	**GL-8002-R**	
6181	TR	GE, RCA	**GL-6181**		8005	TR	GE, A, NU, RCA	**GL-8005**	
GL-6182	TR	GE	**GL-6182**		ML-8005	TR	ML	**GL-8005**	
GL-6237	K	GE	**GL-6237**		WL-8005	TR	WL	**GL-8005**	
GL-6238	K	GE	**GL-6238**		8008	R	GE, A, CH, RCA, T	**GL-8008**	
GL-6239	K	GE	**GL-6239**		DR-8008	R	GES	**GL-8008**	
GL-6240	K	GE	**GL-6240**						
GL-6241	K	GE	**GL-6241**		EE-8008	R	EE	**GL-8008**	
GL-6242	K	GE	**GL-6242**		ML-8008	R	ML	**GL-8008**	
GL-6251	TR	GE	**GL-6251**		UE-8008	R	UE	**GL-8008**	
ML-6258	TR	ML		GL-5518	WL-8008	R	WL	**GL-8008**	
					8013	R	A	**GL-8013-A**	
6277/3B28A	R	T	**GL-866-A**						
GL-6283	TR	GE	**GL-6283**						
GL-6299	TR	GE	**GL-6299**		8013-A	TR	GE, RCA	**GL-8013-A**	
GL-6301	TR	GE	**GL-6301**		8020	R	GE, A, NU, RCA	**GL-8020**	
6335	TR	ML		GL-6251	DR-8020	R	GES	**GL-8020**	
					EE-8020	R	EE	**GL-8020**	
6410	M	GE, RK	**GL-6410**		WL-8020	R	WL	**GL-8020**	
6410/QK-338	M	RK	**GL-6410**						
GL-6442	TR	GE	**GL-6442**						
GL-6452	TR	GE	**GL-6452**		8020/100R	R	EM	**GL-8020**	
GL-6619	TR	GE	**GL-6619**		AX-9903	TR	A	**GL-5894**	

MANUFACTURER'S IDENTIFICATION

A—AMPEREX ELECTRONIC CORPORATION
CE—CONTINENTAL ELECTRIC COMPANY (CETRON)
CH—CHATHAM ELECTRONICS
EE—ELECTRONIC ENTERPRISES, INCORPORATED
EL—ELECTRONS, INCORPORATED
EM—EITEL-McCULLOUGH, INCORPORATED (EIMAC)
F—FEDERAL TELEPHONE AND RADIO COMPANY
GE—GENERAL ELECTRIC COMPANY
GES—GENERAL ELECTRONICS, INCORPORATED
HK—HEINTZ AND KAUFMAN, LIMITED
HY—CBS HYTRON
IH—INDUCTION HEATING CORPORATION
ML—MACHLETT LABORATORIES, INCORPORATED
NU—NATIONAL UNION ELECTRIC CORPORATION
RCA—RADIO CORPORATION OF AMERICA
RK—RAYTHEON MANUFACTURING COMPANY
S—SYLVANIA ELECTRIC PRODUCTS, INCORPORATED
T—TAYLOR TUBES, INCORPORATED
TS—TUNG-SOL ELECTRIC, INCORPORATED
UE—UNITED ELECTRONICS COMPANY
WE—WESTERN ELECTRIC
WL—WESTINGHOUSE ELECTRIC CORPORATION
WT—WELTRONIC COMPANY

TUBE CLASSIFICATION

K—KLYSTRON
M—MAGNETRON
R—RECTIFIER
TR—TRANSMITTING

This information has been carefully compiled from tube data available at the date of publication and is believed to be accurate. No responsibility, however, is assumed for errors caused by inaccuracies in tube data.

ELECTRONIC COMPONENTS DIVISION

GENERAL ELECTRIC

Schenectady 5, N. Y.

PRINTED IN U.S.A.

INTERCHANGEABILITY LIST

Power Tubes for Communications and Industry

Since the majority of manufacturers now use the industry-wide designation systems established by the Radio-Electronic-Television Manufacturers Association, tubes which bear the same type number are usually directly interchangeable regardless of the letter prefix. Such types do not appear on this listing. This list includes only those types of other manufacturers for which the General Electric Company has a direct replacement and for which the type designations differ.

Type No.	Class	Manufacturer	Equivalent G-E Type No.
CE-1(A-D)	Phototube	Continental Electric	GL-868/PJ-23, GL-918
2AP1	Cathode-Ray	RCA	2AP1-A
2AP1	Cathode-Ray	Sylvania	2AP1-A
2C39	Triode	Eitel-McCullough	GL-2C39-B
ML-2C39	Triode	Machlett Laboratories	GL-2C39-B
2J42	Magnetron	Sylvania	GL-6527
2X2/879	Vac Rectifier	RCA	2X2-A
EL-C3J	Thyratron	Electrons, Inc.	GL-5632/C3J
3-100A4/100TH	Triode	Eitel-McCullough	GL-100TH
3-200A3/592	Triode	Eitel-McCullough	GL-592
3AP1	Cathode-Ray	DuMont	3AP1-A
3AP1	Cathode-Ray	Sylvania	3AP1-A
3B28/6277	Vac Rectifier	Taylor	GL-866-A
3BP1	Cathode-Ray	DuMont	3BP1-A
3BP1	Cathode-Ray	Sylvania	3BP1-A
3BP1	Cathode-Ray	RCA	3BP1-A
4-125-A	Tetrode	Eitel-McCullough	GL-4D21/4-125A
4-125-A	Tetrode	RCA	GL-4D21/4-125A
4-125-A	Tetrode	Machlett Laboratories	GL-4D21/4-125A
4-125-A/4D21	Tetrode	RCA	GL-4D21/4-125A
ML-4-250-A	Tetrode	Machlett Laboratories	GL-4-250-A/5D22
5BP1	Cathode-Ray	DuMont	5BP1-A
5BP1	Cathode-Ray	RCA	5BP1-A
5CP1	Cathode-Ray	DuMont	5CP1-A
5CP1	Cathode-Ray	RCA	5CP1-A
5CP7	Cathode-Ray	RCA	5CP7-A
5D22	Tetrode	United Electronics	GL-4-250-A/5D22
5FP4-A	Cathode-Ray	RCA	5QP4
EL-C6J	Thyratron	Electrons, Inc.	GL-5545, GL-5C21/C6J
WT-6*†	Tetrode	Weltronic	See WT210-0007
7BP7	Cathode-Ray	DuMont	7BP7-A
7BP7	Cathode-Ray	RCA	7BP7-A
12DP7	Cathode-Ray	RCA	12DP7-A
WL-17	Thyratron	Westinghouse	GL-5557/FG-17
CE-20	Phototube	Continental Electric	GL-927

* Old part number. Refer to Weltronic's new part number for G-E equivalent.

† These are tube socket markings on equipment bearing the Weltronic trademark.

Progress Is Our Most Important Product

GENERAL ELECTRIC

TUBE DEPARTMENT Schenectady 5, N. Y.

Supersedes ETX-207 dated 5-46

INTERCHANGEABILITY LIST (CONT'D)

Type No.	Class	Manufacturer	Equivalent G-E Type No.
CE-21	Phototube	Continental Electric	GL-920
RK-25	Pentode	Raytheon	GL-802
RK-25-B	Pentode	Raytheon	GL-802
RK-28-A	Pentode	Raytheon	GL-803
CE-31V	Phototube	Continental Electric	GL-919
WL-32	Gas Rectifier	Westinghouse	GL-5558/FG-32
WL-33	Thyratron	Westinghouse	GL-5720/FG-33
WL-41	Thyratron	Westinghouse	GL-5830/FG-41
RK-44	Pentode	Raytheon	GL-837
RK-47	Beam Tube	Raytheon	GL-814
R-51-A	Phototube	Rauland	GL-927
RK-57	Triode	Raytheon	GL-805
WL-57	Thyratron	Westinghouse	GL-5559/FG-57
RK-58	Triode	Raytheon	GL-838
R-59-A	Phototube	Rauland	GL-868/PJ-23
HF-60	Triode	Amperex	GL-8005
RK-60-A	Phototube	Raytheon	GL-920
ML-100	Vac Rectifier	Machlett Laboratories	GL-5625/KC-4
WT-T100*†	Twin Diode	Weltronic	See WT210-0040
ML-100/5575	Vac Rectifier	Machlett Laboratories	GL-5625/KC-4‡
WT-T102*†	Vac Rectifier	Weltronic	See WT210-0042
WL-104	Gas Rectifier	Westinghouse	GL-5561/FG-104
WT-T104*†	Thyratron	Weltronic	See WT210-0044
VR-105	Glow Tube	General Electronics	0C3
WT-T105*†	Triode	Weltronic	See WT210-0045
WT-T106*†	Thyratron	Weltronic	See WT210-0043 or WT210-0106
WT-T110*†	Thyratron	Weltronic	See WT210-0054
WT-T111*†	Thyratron	Weltronic	See WT210-0056
WT-T112*†	Thyratron	Weltronic	See WT210-0057
WT-T114*†	Gas Rectifier	Weltronic	See WT210-0060
WT-T115*†	Rectifier-Beam Power Amplifier	Weltronic	See WT210-0061
WT-T117*†	Thyratron	Weltronic	See WT210-0062 or WT210-0069
WT-T118*†	Thyratron	Weltronic	See WT210-0074
WT-T119*†	Thyratron	Weltronic	See WT210-0078
WT-T122*†	Pentode	Weltronic	See WT210-0081
WT-T123*†	Beam Power Amplifier	Weltronic	See WT210-0032
WT-T124*†	Diode Triode	Weltronic	See WT210-0033
WT-T125*†	Twin Triode	Weltronic	See WT210-0034
WT-T126*†	Beam Power Amplifier	Weltronic	See WT210-0035
WT-T127*†	Triode	Weltronic	See WT210-0036
WT-T128*†	Triode-Hexode	Weltronic	See WT210-0037
WT-T130*†	Pentode	Weltronic	See WT210-0039
WT-T131*†	Pentode	Weltronic	See WT210-0090
WT-T132*†	Gas Triode	Weltronic	See WT210-0091
WT-T133*†	Thyratron	Weltronic	See WT210-0067
WT-T135*†	Vac Rectifier	Weltronic	See WT210-0048
WT-T136*†	Cathode-Ray	Weltronic	See WT210-0052
WT-T137*†	Cathode-Ray	Weltronic	See WT210-0053
WT-T139*†	Thyratron	Weltronic	See WT210-0063
WT-T149*†	Thyratron	Weltronic	FG-172
VR-150	Glow Tube	General Electronics	0D3
WT-210-0001†	Thyratron	Weltronic	GL-2D21
WT210-0003†	Thyratron	Weltronic	GL-884
WT210-0004†	Thyratron	Weltronic	GL-2050
WT210-0006†	Twin Diode	Weltronic	6H6

* Old part number. Refer to Weltronic's new part number for G-E equivalent.
† These are tube socket markings on equipment bearing the Weltronic trademark.
‡ At rated current of 1.0 ampere, the GL-5625/KC-4 has a voltage drop of 4000 volts; whereas ML-100/5575 has a voltage drop of 800 volts at 1.0 ampere.

INTERCHANGEABILITY LIST (CONT'D)

Type No.	Class	Manufacturer	Equivalent G-E Type No.
WT210-0007†	Tetrode	Weltronic	6L6
WT210-0008†	Gas Rectifier	Weltronic	GL-866-A
WT210-0011†	Glow Tube	Weltronic	0C3
WT210-0012†	Vac Rectifier	Weltronic	80
WT210-0013†	Vac Rectifier	Weltronic	5Z3
WT210-0015†	Thyratron	Weltronic	GL-5557/FG-17
WT210-0016†	Glow Tube	Weltronic	0B3
WT210-0018†	Glow Tube	Weltronic	0D3
WT210-0019†	Rectifier	Weltronic	83
WT210-0021†	Twin Diode	Weltronic	6X5-GT
WT210-0025†	Vac Rectifier	Weltronic	117Z6-GT
WT210-0028†	Pentode	Weltronic	3Q5-GT
WT210-0029†	Triode	Weltronic	6C5
WT210-0037†	Rectifier-Beam Power Amplifier	Weltronic	117L7/M7-GT
WT210-0038†	Thyratron	Weltronic	FG-172
WT210-0040†	Twin Diode	Weltronic	6X4
WT210-0042†	Vac Rectifier	Weltronic	5Y3-GT
WT210-0043†	Thyratron	Weltronic	GL-5632/C3J
WT210-0044†	Thyratron	Weltronic	GL-575-A
WT210-0045†	Triode	Weltronic	GL-892
WT210-0048†	Vac Rectifier	Weltronic	5U4-G
WT210-0052†	Cathode-Ray	Weltronic	2AP1-A
WT210-0053†	Cathode-Ray	Weltronic	3AP1-A
WT210-0054†	Thyratron	Weltronic	GL-5830/FG-41
WT210-0056†	Thyratron	Weltronic	GL-5559/FG-57
WT210-0057†	Thyratron	Weltronic	GL-5560/FG-95
WT210-0060†	Glow Tube	Weltronic	0Z4
WT210-0061†	Rectifier-Beam Power Amplifier	Weltronic	117N7-GT
WT210-0062†	Thyratron	Weltronic	GL-5557/FG-17
WT210-0063†	Thyratron	Weltronic	GL-5545
WT210-0067†	Thyratron	Weltronic	GL-393-A
WT210-0069†	Thyratron	Weltronic	GL-5557/FG-17
WT210-0070†	Ignitron	Weltronic	GL-5550/GL-415
WT210-0071†	Ignitron	Weltronic	GL-5551-A
WT210-0072†	Ignitron	Weltronic	GL-5552-A
WT210-0073†	Ignitron	Weltronic	GL-5553-B
WT210-0074†	Thyratron	Weltronic	FG-105
WT210-0077†	Thyratron	Weltronic	GL-5727
WT210-0078†	Thyratron	Weltronic	FG-172
WT210-0079†	Thyratron	Weltronic	FG-105
WT210-0081†	Pentode	Weltronic	6SJ7
WT210-0082†	Beam Power Amplifier	Weltronic	6V6
WT210-0083†	Diode Triode	Weltronic	7K7
WT210-0084†	Twin Triode	Weltronic	6N7
WT210-0085†	Beam Power Amplifier	Weltronic	50B5
WT210-0086†	Triode	Weltronic	GL-833-A
WT210-0087†	Triode-Hexode	Weltronic	6K8
WT210-0089†	Pentode	Weltronic	6G6-G
WT210-0090†	Pentode	Weltronic	6C6
WT210-0091†	Gas Triode	Weltronic	0A4-G
WT210-0094†	Triode	Weltronic	6SN7-GT
WT210-0106†	Thyratron	Weltronic	GL-5632/C3J
WT210-0108†	Twin Triode	Weltronic	6AS7-G
WT210-0116†	Thyratron	Weltronic	GL-5560/FG-95
WT210-0148†	Rectifier	Weltronic	6AX5-GT

† These are tube socket markings on equipment bearing the Weltronic trademark.

INTERCHANGEABILITY LIST (CONT'D)

Type No.	Class	Manufacturer	Equivalent G-E Type No.
Z-225/866-A	Gas Rectifier	National Union	GL-866-A
Z-225/866-A	Gas Rectifier	United Electronics	GL-866-A
WT-245*†	Thyratron	Weltronic	See WT210-0003
WT-246*†	Thyratron	Weltronic	See WT210-0004
HF-251-A	Triode	Amperex	GL-851
WT-261*†	Twin Diode	Weltronic	See WT210-0006
WT-262*†	Gas Rectifier	Weltronic	See WT210-0008
F-266-A	Gas Rectifier	Federal Telephone and Radio	GL-266-B
HF-266-B	Gas Rectifier	Amperex	GL-266-B
WT-269*†	Glow Tube	Weltronic	See WT210-0011
WT-270*†	Vac Rectifier	Weltronic	See WT210-0012
WT-270X*†	Vac Rectifier	Weltronic	See WT210-0013
WT-272*†	Thyratron	Weltronic	See WT210-0015
WT-274*†	Glow Tube	Weltronic	See WT210-0016
274-B	Vac Rectifier	Western Electric	5R4-GY
WT-294*†	Glow Tube	Weltronic	See WT210-0018
WT-301*†	Mercury-Vapor Rectifier	Weltronic	See WT210-0019
CE-306	Thyratron	Continental Electric	GL-5545
F-307-A	Triode	Federal Telephone and Radio	GL-207
WT-308*†	Twin Diode	Weltronic	See WT210-0021
319-A	Gas Rectifier	Western Electric	GL-872-A
322-A	Pentode	Western Electric	GL-803
331-A	Triode	Western Electric	GL-805
342-B	Triode	United Electronics	GL-242-C
342-C	Triode	United Electronics	GL-242-C
F-353-A	Gas Rectifier	Federal Telephone and Radio	GL-872-A
F-357-A	Gas Rectifier	Federal Telephone and Radio	GL-857-B
366-A	Gas Rectifier	Western Electric	GL-866-A
F-369-B	Gas Rectifier	Federal Telephone and Radio	GL-869-B
WT-377*†	Vac Rectifier	Weltronic	See WT210-0025
WT-389*†	Pentode	Weltronic	See WT210-0028
WT-390*†	Triode	Weltronic	See WT210-0029
403-A	Pentode	Western Electric	6AK5
WT-T439*†	Thyratron	Weltronic	See WT210-0038
592/3-200A3	Triode	Eitel-McCullough	GL-592
WT-606*†	Thyratron	Weltronic	See WT210-0001
WL-616	Vac Rectifier	Westinghouse	GL-5625/KC-4
KU-627	Thyratron	Westinghouse	GL-627
WL-631	Thyratron	Westinghouse	GL-5559/FG-57
WL-632-B	Thyratron	Westinghouse	GL-5560/FG-95§
WL-651/656	Ignitron	Westinghouse	GL-5552-A
WL-652/657	Ignitron	Westinghouse	GL-5551-A
WL-653-B	Ignitron	Westinghouse	GL-5555/FG-238-B
WL-655/658	Ignitron	Westinghouse	GL-5553-B
WL-672	Thyratron	Westinghouse	GL-672-A
ML-673-A	Gas Rectifier	Machlett Laboratories	GL-673
WL-679	Ignitron	Westinghouse	GL-5554/FG-259-B
WL-681/686	Ignitron	Westinghouse	GL-5550/GL-415
WL-688	Ignitron	Westinghouse	GL-5564/GL-507
WL-689	Ignitron	Westinghouse	GL-6228/506
WT-699*†	Rectifier—Beam Power Amplifier	Weltronic	See WT210-0037
NL-710	Thyratron	National Electronics	GL-5632/C3J
NL-710/6011	Thyratron	National Electronics	GL-6011
NL-715/5557	Thyratron	National Electronics	GL-5557/FG-17
WL-735	Phototube	Westinghouse	GL-868/PJ-23

* Old part number. Refer to Weltronic's new part number for G-E equivalent.

† There are tube socket markings on equipment bearing the Weltronic trademark.

§ ¾ inch shorter than WL-632-B.

INTERCHANGEABILITY LIST (CONT'D)

Type No.	Class	Manufacturer	Equivalent G-E Type No.
WL-741	Phototube	Westinghouse	GL-923
801	Triode	RCA	GL-801-A
811	Triode	RCA	GL-811-A
811	Triode	Sylvania	GL-811-A
NU-811	Triode	National Union	GL-811-A
WL-811	Triode	Westinghouse	GL-811-A
812	Triode	Sylvania	GL-812-A
NU-812	Triode	National Union	GL-812-A
829	Beam Tube	RCA	GL-829-B
829-A	Beam Tube	RCA	GL-829-B
832	Beam Tube	RCA	GL-832-A
833	Triode	RCA	GL-833-A
862	Triode	RCA	GL-862-A
F-862	Triode	Federal Telephone and Radio	GL-862-A
866	Gas Rectifier	Amperex	GL-866-A
866	Gas Rectifier	Hytron	GL-866-A
866	Gas Rectifier	Taylor	GL-866-A
866AX	Gas Rectifier	Amperex	GL-866-A
866JR	Mercury-Vapor Rectifier	Taylor	GL-816
DR-866	Gas Rectifier	General Electronics	GL-866-A
HF-866-A	Gas Rectifier	Amperex	GL-866-A
870	Gas Rectifier	RCA	GL-870-A
872	Gas Rectifier	RCA	GL-872-A
872AX	Gas Rectifier	Amperex	GL-872-A
889	Triode	RCA	GL-889-A
889-R	Triode	RCA	GL-889R-A
893	Triode	RCA	GL-893-A
F-898	Triode	Federal Telephone and Radio	GL-898-A
905	Triode	United Electronics	GL-805
906P1	Cathode-Ray	RCA	3AP1-A
931	Phototube	RCA	GL-931-A
938	Triode	United Electronics	GL-838
942	Triode	United Electronics	GL-842
945	Triode	United Electronics	GL-845
951	Triode	United Electronics	GL-851
966	Gas Rectifier	United Electronics	GL-866-A
966-A	Gas Rectifier	United Electronics	GL-866-A
967	Thyratron	United Electronics	GL-5557/FG-17
967/5557	Thyratron	United Electronics	GL-5557/FG-17
NU-967	Thyratron	National Union	GL-5557/FG-17
972	Gas Rectifier	United Electronics	GL-872-A
972-A	Gas Rectifier	United Electronics	GL-872-A
975-A	Gas Rectifier	United Electronics	GL-575-A
NU-975-A	Gas Rectifier	National Union	GL-575-A
991	Glow Tube	RCA	NE-48π
NL-1052	Ingitron	National Electronics	GL-5552-A
1701	Thyratron	Amperex	GL-5557/FG-17
VC-1754	Thyratron	Kuthe Laboratories	GL-5948
1802P1	Cathode-Ray	RCA	5BP1-A
1850	Iconoscope	RCA	GL-1850-A
1904	Thyratron	RCA	GL-5728/FG-67
WL-5550/681	Ignitron	Westinghouse	GL-5550/GL-415
WL-5551/652	Ignitron	Westinghouse	GL-5551-A
WL-5552/651	Ignitron	Westinghouse	GL-5552-A
WL-5553/655	Ignitron	Westinghouse	GL-5553-B

π For complete data on NE-48, contact Lamp Department, Nela Park, Cleveland, Ohio.

INTERCHANGEABILITY LIST (CONT'D)

Type No.	Class	Manufacturer	Equivalent G-E Type No.
WL-5554/679	Ignitron	Westinghouse	GL-5554/FG-259-B
WL-5555/653-B	Ignitron	Westinghouse	GL-5555/FG-233-B
5557/TT-17	Thyratron	Taylor	GL-5557/FG-17
ML-5575/100	Vac Rectifier	Machlett Laboratories	GL-5625/KC-4▲
ML-5606	Triode	Machlett Laboratories	GL-892
ML-5658	Triode	Machlett Laboratories	GL-880
ML-5667	Triode	Machlett Laboratories	GL-889R-A
ML-5669	Triode	Machlett Laboratories	GL-892-R
WL-5685	Thyratron	Westinghouse	GL-5545
EL-5685(C6J/A)	Thyratron	Electrons, Inc.	GL-5545
CK-5814	Twin Triode	Raytheon	5814-A
5897	Triode	Sylvania	5718
5898	Triode	Sylvania	5719
5900	Pentode	Sylvania	5899
5901	Pentode	Sylvania	5840
5915	Heptode	RCA	5915-A
5931/5U4-WG	Twin Diode	Sylvania	5U4-GA
5948/1754	Thyratron	Chatham Electronics	GL-5948
6155	Tetrode	Amperex	GL-4D21/4-125A
6156	Tetrode	Amperex	GL-4-250-A/5D22
WL-6228/689	Ignitron	Westinghouse	GL-6228/506
6277/3B28A	Gas Rectifier	Taylor	GL-866-A
6288	Mercury-Vapor Rectifier	Taylor	GL-816
6445	Triode	Amperex	GL-892-R
8013	Vac Rectifier	Amperex	GL-8013-A
8016	Diode	RCA	1B3-GT
8020/100R	Vac Rectifier	Eitel-McCullough	GL-8020

▲At rated current of 1.0 ampere, the GL-5625/KC-4 has a voltage drop of 4000 volts; whereas ML-5575/100 has a voltage drop of 800 volts at 1.0 ampere.

TUBE DEPARTMENT
GENERAL ELECTRIC
Schenectady 5, N. Y.

PRINTED IN U.S.A.

INTERCHANGEABILITY LIST

Industrial Tubes

This listing includes those types for which the General Electric Company has either a direct replacement or a similar type comparable in capabilities and application.

TGRA—WL-17

Type No.	Class	Manufacturer	Direct G-E Replacement Type	G-E Similar Type
TGRA	R	IH	**GL-575-A**	
TGRB	R	IH	**GL-872-A**	
CE-1 (A-D)	P	CE	**GL-868**	
EL-C1B	T	EL		GL-3C23
EL-C1B/A	T	EL		GL-3C23
EL-C1J/A	T	EL		GL-3C23
EL-C1K	T	EL	**GL-6014/C1K**	
GL-1L21	VC	GE	**GL-1L21**	
GL-1L24	VC	GE	**GL-1L24**	
GL-1L25	VC	GE	**GL-1L25**	
GL-1L31	VC	GE	**GL-1L31**	
GL-1L32	VC	GE	**GL-1L32**	
GL-1L33	VC	GE	**GL-1L33**	
GL-1L36	VC	GE	**GL-1L36**	
GL-1L38	VC	GE	**GL-1L38**	
1P21	P	GE, RCA	**GL-1P21**	
1P32	P	CE	**GL-927**	
1P39	P	GE, RCA, S	**GL-1P39**	
1P40	P	GE, RCA	**GL-1P40**	
2-1500	R	EM		GL-8020
CE-2 (A-D)	P	CE		GL-930, GL-1P40
2B4	T	D	**885**	
GL-2B23	R	GE	**GL-2B23**	
2D21	T	GE, A, CH, NU, RCA	**2D21**	
WL-2D21	T	WL	**2D21**	
EL-C3J	T	EL	**GL-5632/C3J**	
C3J/5632	T	RCA	**GL-5632/C3J**	
EL-C3J/A	T	EL		GL-5632/C3J
3B24	R	GE, RK	**GL-3B24**	
3B28	R	CH, RCA, UE		GL-866-A
AX-3B28	R	A	**GL-866-A**	
3B28/6277	R	T	**GL-866-A**	
3C23	T	GE, RCA, UE	**GL-3C23**	
NL-3C23	T	NL	**GL-3C23**	
WL-3C23	T	WL	**GL-3C23**	
CE-4	P	CE		GL-923
4B32	R	GE, CH	**GL-4B32**	
CE-5 (A-D)	P	CE		GL-927
GL-5C21/C6J	T	GE	**GL-5C21/C6J**	
EL-C6J	T	EL	**GL-6807***	
C6J/5C21	T	RCA	**GL-5C21/C6J**	
EL-C6J/A	T	EL	**GL-6807***	
C6J-A/5685	T	RCA	**GL-6807**	
EL-C6J/F	T	EL	**GL-6860/C6J/F**	
EL-C6J/K	T	EL	**GL-6807†**	
EL-C6J/KF	T	EL	**GL-6808†**	
EL-C6J/KL	T	EL	**GL-6809†**	
EL-C6J/L	T	EL	**GL-6809**	
EL-C6L	T	EL	**GL-5528/C6L**	
EL-6B	R	EL		GL-5561
6Q5-G	T	D	**884**	
CE-13	P	CE		GL-868
NL-14	T	NL		GL-5557
EL-C16J	T	EL	**GL-5665/C16J**	
C16J/5665	T	RCA	**GL-5665/C16J**	
17	T	CH	**GL-5557**	
DR-17	T	GES		GL-5557
FG-17	T	A, NU	**GL-5557**	
TT-17	T	T		GL-5557
WL-17	T	WL	**GL-5557**	

* Minor dimensional and grid voltage differences exist which will not affect interchangeability in the majority of circuits.
† Minor dimensional differences which will not affect interchangeability in the majority of circuits.

MANUFACTURER'S IDENTIFICATION

A—AMPEREX ELECTRONIC CORPORATION
CE—CONTINENTAL ELECTRIC COMPANY (CETRON)
CH—CHATHAM ELECTRONICS
D—ALLEN B. DuMONT LABORATORIES, INCORPORATED
EE—ELECTRONIC ENTERPRISES, INCORPORATED
EL—ELECTRONS, INCORPORATED
EM—EITEL-McCULLOUGH, INCORPORATED (EIMAC)
F—FEDERAL TELEPHONE AND RADIO COMPANY
GE—GENERAL ELECTRIC COMPANY
GES—GENERAL ELECTRONICS, INCORPORATED
IH—INDUCTION HEATING CORPORATION
KU—KUTHE LABORATORIES
ML—MACHLETT LABORATORIES, INCORPORATED
NL—NATIONAL ELECTRONICS, INCORPORATED
NU—NATIONAL UNION ELECTRIC CORPORATION
R—THE RAULAND CORPORATION
RCA—RADIO CORPORATION OF AMERICA
RK—RAYTHEON MANUFACTURING COMPANY
S—SYLVANIA ELECTRIC PRODUCTS, INCORPORATED
T—TAYLOR TUBES, INCORPORATED
UE—UNITED ELECTRONICS COMPANY
WE—WESTERN ELECTRIC
WL—WESTINGHOUSE ELECTRIC CORPORATION
WT—WELTRONIC COMPANY

TUBE CLASSIFICATION

B—BALLAST
I—IGNITRON
P—PHOTOTUBE
R—RECTIFIER
RVG—RESISTANCE VACUUM GAGE
T—THYRATRON
VC—VACUUM CAPACITOR
VS—VACUUM SWITCH

GENERAL ELECTRIC

Supersedes ET-T1218 dated 10-55

CE-20—ML-315A

INTERCHANGEABILITY LIST

Type No.	Class	Manufacturer	Direct G-E Replacement Type	G-E Similar Type
CE-20	P	CE	**GL-927**	
CE-21 (A-D)	P	CE	**GL-920**	
RX-21A	R	EM		GL-872-A
CE-23 (A-D)	P	CE	**GL-923**	
CE-25 (A-D)	P	CE	**GL-927**	
CE-29 (A-D)	P	CE	**GL-929**	
CE-30 (A-D)	P	CE	**GL-930**	
CE-31V	P	CE		GL-919
FG-32	R	CE	**GL-5558**	
WL-32	R	WL	**GL-5558**	
WL-33	T	WL	**GL-5720**	
CE-36 (A-D)	P	CE		GL-927
CE-41	P	CE	**GL-921**	
WL-41	T	WL	**GL-5830**	
CE-42	P	CE	**GL-922**	
R-51A	P	R	**GL-927**	
53AWB	P	RK		GL-927
WL-57	T	WL	**GL-5559**	
R-58A	P	R		GL-927
CE-59	P	CE	**GL-5581**	
R-59A	P	R	**GL-868**	
SK-60	P	WL		GL-868
R-60A	P	RK	**GL-920**	
R-61-A	P	R	**GL-930**	
SK-63	P	WL		GL-918
R-71A	P	R		GL-930, GL-1P40
FG-81-A	T	GE	**FG-81-A**	
WL-81A	T	WL	**FG-81-A**	
FG-97	T	GE	**FG-97**	
FG-98-A	T	GE, T	**FG-98-A**	
ML-100/*5575*	R	ML	**GL-5625**‡	
100R	R	EM	**GL-8020**	
WL-104	R	WL	**GL-5561**	
WT-T104§ ¶	T	WT	See WT210-0044	
105	T	GE, RCA	**FG-105**	
WL-105	T	WL	**FG-105**	
AX-105/FG-105	T	A	**FG-105**	
WT-T106§ ¶	T	WT	See WT210-0043 or WT210-0106	
WT-T110§ ¶	T	WT	See WT210-0054	
WT-T111§ ¶	T	WT	See WT210-0056	
WT-T112§ ¶	T	WT	See WT210-0057	
WT-T117§ ¶	T	WT	See WT210-0062 or WT210-0069	
WT-T118§ ¶	T	WT	See WT210-0074	
WT-T119§ ¶	T	WT	See WT210-0078	
WT-T133§ ¶	T	WT	See WT210-0067	
WT-T139§ ¶	T	WT	See WT210-0063	
WT-T149 ¶	T	WT	**FG-172**	
FG-154	T	GE	**FG-154**	
172	T	RCA	**FG-172**	
FG-172	T	GE	**FG-172**	
WL-172	T	WL	**FG-172**	
ML-199	R	ML		GL-5973
WT210-0001 ¶	T	WT	**2D21**	
WT210-0003 ¶	T	WT	**884**	
WT210-0004 ¶	T	WT	**2050**	
WT210-0008 ¶	R	WT	**GL-866-A**	
WT210-0015 ¶	T	WT	**GL-5557**	
WT210-0017 ¶	T	WT	**GL-6856/740**	
WT210-0027 ¶	R	WT	**GL-872-A**	
WT210-0038 ¶	T	WT	**FG-172**	
WT210-0043 ¶	T	WT	**GL-5632/C3J**	
WT210-0044 ¶	R	WT	**GL-575-A**	
WT210-0054 ¶	T	WT	**GL-5830**	
WT210-0056 ¶	T	WT	**GL-5559**	
WT210-0057 ¶	T	WT	**GL-5560**	
WT210-0062 ¶	T	WT	**GL-5557**	
WT210-0063 ¶	T	WT	**GL-6807**	
WT210-0067 ¶	T	WT	**GL-393-A**	
WT210-0069 ¶	T	WT	**GL-5557**	
WT210-0070 ¶	I	WT	**GL-5550**	
WT210-0071 ¶	I	WT	**GL-5551-A**	
WT210-0072 ¶	I	WT	**GL-5552-A**	
WT210-0073 ¶	I	WT	**GL-5553-B**	
WT210-0074 ¶	T	WT	**FG-105**	
WT210-0077 ¶	T	WT	***5727***	
WT210-0078 ¶	T	WT	**FG-172**	
WT210-0079 ¶	T	WT	**FG-105**	
WT210-0106 ¶	T	WT	**GL-5632/C3J**	
WT210-0116 ¶	T	WT	**GL-5560**	
WT210-0149 ¶	I	WT	**GL-5551-A**	
CE-220	R	CE		GL-8020
Z-225/866A	R	NU, UE		GL-866-A
CE-232	R	CE	**GL-5558**	
WT-245§ ¶	T	WT	See WT210-0003	
WT-246§ ¶	T	WT	See WT210-0004	
249A	R	WE		GL-866-A
249B	R	T, WE		GL-866-A
WE-249C	R	WE		GL-866-A
255-A	R	WE		GL-869-B
255B	R	WE		GL-869-B
HF-255B	R	A		GL-869-B
258B	R	A, T, UE		GL-866-A
WT262§ ¶	R	WT	See WT210-0008	
266B	R	WE		GL-857-B
F-266B	R	F		GL-857-B
266C	R	WE		GL-857-B
267B	R	WE		GL-872-A
F-267B	R	F		GL-872-A
HF-267B	R	A		GL-872-A
WT-272§ ¶	T	WT	See WT210-0015	
FG-280	R	GE	**FG-280**	
287A	T	WE		GL-5557
CE-302	T	CE		GL-3C23
CE-305	T	CE		GL-3C23
CE-309	T	CE	**GL-5557**	
CE-311	T	CE	**GL-3C23**	
315A	R	A, WE		GL-673
F-315A	R	F		GL-673
ML-315A	R	ML		GL-673

‡ At rated current of 1.0 ampere, the GL-5625 has a voltage drop of 4000 volts; whereas the ML-100/*5575* has a voltage drop of 800 volts at 1.0 ampere.
§ Old part number. Refer to Weltronic's new part number for G-E equivalent.
¶ These are tube socket markings on equipment bearing the Weltronic trade mark.

INTERCHANGEABILITY LIST

Type No.	Class	Manufacturer	Direct G-E Replacement Type	G-E Similar Type
319A	R	WE		GL-872-A
F-319A	R	F		GL-872-A
ML-319A	R	ML		GL-872-A
321A	R	WE		GL-673
HF-321A	R	A		GL-673
ML-321A	R	ML		GL-673
323B	T	CH		GL-3C23
NL-323B	T	NL		GL-3C23
UE-323B	T	UE		GL-3C23
F-353A	R	F	**GL-872-A**	
F-357-B	R	F	**GL-857-B**	
366A	R	WE	**GL-866-A**	
F-367-A	R	F		GL-673
371-B	R	EE, UE		GL-8020
F-375A	R		**GL-575-A**	
393A	T	WE		GL-3C23
CE-393A	T	CE		GL-3C23
NL-393A	T	NL	**GL-393-A**	
UE-393A	T	UE		GL-3C23
394A	T	CH		GL-627
FP-400	R	GE	**FP-400**	
GL-411	R	GE	**GL-411**	
GL-414	T	GE	**GL-414**	
WL-414	T	WL	**GL-414**	
WT-T439§ ¶	T	WT	See WT210-0038	
GL-441	P	GE	**GL-441**	
502-A	T	GE, RCA	**502-A**	
WL-502A	T	WL	**502-A**	
575-A	R	GE, A, EE, NU, RCA	**GL-575-A**	
DR-575-A	R	GES	**GL-575-A**	
F-575-A	R	F	**GL-575-A**	
ML-575-A	R	ML	**GL-575-A**	
WL-575-A	R	WL	**GL-575-A**	
UE-578	R	UE		GL-8020
WL-578	R	WL		GL-8020
WT-606§ ¶	T	WT	See WT210-0001	
NL-615	R	NL		GL-5558
NL-618	R	NL		GL-5561
627	T	GE, RCA	**GL-627**	
KU-627	T	WL	**GL-627**	
KU-628	T	WL		GL-5559
WL-630	T	WL	**2050**	
WL-630A	T	WL	**2050**	
WL-631	T	WL	**GL-5559**	
WL-632B	T	WL	**GL-5560**‖	
KU-634	T	WL		GL-5561
635P	R	NL	**GL-6930/635-P**	
WL-651/656	I	WL	**GL-5552-A**	
WL-652/657	I	WL	**GL-5551-A**	
WL-653B	I	WL	**GL-5555**	
WL-655/658	I	WL	**GL-5553-B**	
672	T	RCA	**GL-672-A**	
WL-672	T	WL	**GL-672-A**	
672-A	T	GE, RCA	**GL-672-A**	
WL-672-A	T	WL	**GL-672-A**	
673	R	GE, A, F, RCA	**GL-673**	
ML-673	R	ML	**GL-673**	
676	T	RCA		GL-5632/C3J
KU-676	T	WL		GL-5632/C3J
678	T	GE, A, RCA	**GL-678**	
WL-678	T	WL	**GL-678**	
WL-679	I	WL	**GL-5554**	
WL-681/686	I	WL	**GL-5550**	
WL-688	I	WL	**GL-5564**	
WL-689	I	WL	**GL-6228**	
NL-710	T	NL	**GL-6011/710**	
NL-710/6011	T	NL	**GL-6011/710**	
NL-714	T	NL		GL-5557
NL-715/5557	T	NL	**GL-5557**	
NL-716	T	NL	**GL-6855/716**	
ML-728	T	ML	**GL-5557**	
WL-735	P	WL	**GL-868**	
WL-739	P	WL		GL-927
NL-740	T	NL	**GL-6856/740**	
NL-740-P	T	NL	**GL-6857/740-P**	
WL-741	P	WL		GL-923
NL-760	T	NL	**GL-6807**	
NL-760-L	T	NL	**GL-6809**	
NL-760-P	T	NL	**GL-6808**	
857	R	RCA	**GL-857-B**	
857-B	R	GE, A, RCA	**GL-857-B**	
DR-857-B	R	GES	**GL-857-B**	
F-857-B	R	F	**GL-857-B**	
ML-857-B	R	ML	**GL-857-B**	
WL-857-B	R	WL	**GL-857-B**	
866	R	A, RCA	**GL-866-A**	
866-A	R	GE, CE, CH, EM, NU, RCA, S	**GL-866-A**	
DR-866-A	R	GES	**GL-866-A**	
EE-866-A	R	EE	**GL-866-A**	
HF-866-A	R	A	**GL-866-A**	
ML-866-A	R	ML	**GL-866-A**	
RK-866-A	R	RK	**GL-866-A**	
T-866-A	R	T	**GL-866-A**	
UE-866-A	R	UE	**GL-866-A**	
WL-866-A	R	WL	**GL-866-A**	
866-A/866	R	RCA	**GL-866-A**	
866-AX	R	A		GL-866-A
866-JR	R	NU, T		GL-866-A
868	P	GE, RCA	**GL-868**	
WL-868	P	WL	**GL-868**	
GL-868/PJ-23	P	GE	**GL-868**	
869-A	R	RCA	**GL-869-B**	
869-B	R	GE, A, RCA	**GL-869-B**	
DR-869-B	R	GES	**GL-869-B**	
F-869-B	R	F	**GL-869-B**	
ML-869-B	R	ML	**GL-869-B**	
WL-869-B	R	WL	**GL-869-B**	
872	R	RCA	**GL-872-A**	
872-A	R	GE, CE, EM, NU, RCA, S, T	**GL-872-A**	

§ Old part number. Refer to Weltronic's new part number for G-E equivalent.
¶ These are tube socket markings on equipment bearing the Weltronic trade mark.
‖ 3/8 inch shorter, 11/16 inch greater in diameter; control-grid cap extends from side of bulb instead of from base.

DR-872-A—NL-5559/FG-57

INTERCHANGEABILITY LIST

Type No.	Class	Manufacturer	Direct G-E Replacement Type	G-E Similar Type
DR-872-A	R	GES	GL-872-A	
EE-872-A	R	EE	GL-872-A	
F-872-A	R	F	GL-872-A	
RK-872-A	R	RK	GL-872-A	
UE-872-A	R	UE	GL-872-A	
872-A/872	R	RCA	GL-872-A	
ML-872-A/872	R	ML	GL-872-A	
WL-872-A/872	R	WL	GL-872-A	
872-AX	R	A	GL-872-A	
EE-873	T	EE		GL-678
T-875-A	R	T	GL-575-A	
884	T	GE, A, CH, NU, RCA, S	884	
DR-884	T	GES	884	
RX-884	T	RK	884	
WL-884	T	WL	884	
885	T	GE, A, CH, NU, RCA, S	885	
RX-885	T	RK	885	
WL-885	T	WL	885	
918	P	GE, RCA	GL-918	
WL-918	P	WL	GL-918	
919	P	GE, RCA	GL-919	
WL-919	P	WL	GL-919	
920	P	GE, RCA	GL-920	
WL-920	P	WL	GL-920	
921	P	GE, RCA	GL-921	
WL-921	P	WL	GL-921	
922	P	GE, RCA, S	GL-922	
WL-922	P	WL	GL-922	
923	P	GE, RCA	GL-923	
WL-923	P	WL	GL-923	
927	P	GE, RCA	GL-927	
WL-927	P	WL	GL-927	
929	P	GE, RCA, S	GL-929	
WL-929	P	WL	GL-929	
930	P	GE, RCA, S	GL-930	
WL-930	P	WL	GL-930	
931-A	P	GE, RCA, S	GL-931-A	
WL-931A	P	WL	GL-931-A	
UE-966	R	UE	GL-866-A	
UE-966-A	R	UE	GL-866-A	
967	T	NU	GL-5557	
NU-967	T	NU	GL-5557	
UE-967	T	UE	GL-5557	
UE-972	R	UE	GL-872-A	
UE-972-A	R	UE	GL-872-A	
UE-973	T	UE		GL-5559
975-A	R	NU	GL-575-A	
UE-975-A	R	UE		GL-575-A
NL-1001	I	NL		GL-5550
NL-1005	I	NL		GL-5551-A
NL-1051	I	NL	GL-5551-A	
NL-1052	I	NL	GL-5552-A	
NL-1053	I	NL	GL-5553-B	
1701	T	A	GL-5557	
1754	T	KU	GL-5948	
1904	T	RCA	GL-5728	
2050	T	GE, A, CH, HY, NU, RCA, S	2050	
WL-2050	T	WL	2050	
RK-2050	T	RK	2050	
2051	T	A, CH, NU, RCA	2050	
RK-2051	T	RK	2050	
5544	T	GE, A	GL-5544	
GL-5545	T	GE	GL-6807	
5550	I	GE, NL, RCA	GL-5550	
AX-5550	I	A	GL-5550	
GL-5550/GL-415	I	GE	GL-5550	
WL-5550/681/686	I	WL	GL-5550	
5551	I	NL, RCA	GL-5551-A	
AX-5551/652	I	A	GL-5551-A	
WL-5551/652	I	WL	GL-5551-A	
5551-A	I	GE, A	GL-5551-A	
WL-5551-A	I	WL	GL-5551-A	
5552	I	NL, RCA	GL-5552-A	
NL-5552	I	NL	GL-5552-A	
AX-5552/651	I	A	GL-5552-A	
WL-5552/651	I	WL	GL-5552-A	
5552-A	I	GE, A, NL, RCA	GL-5552-A	
WL-5552-A	I	WL	GL-5552-A	
5553	I	RCA	GL-5553-B	
AX-5553/655	I	A	GL-5553-B	
WL-5553/655	I	WL	GL-5553-B	
5553-A	I	RCA	GL-5553-B	
5553-B	I	GE, A, NL, RCA	GL-5553-B	
WL-5553-B	I	WL	GL-5553-B	
5554	I	GE, RCA	GL-5554	
AX-5554/679	I	A	GL-5554	
WL-5554/679	I	WL	GL-5554	
GL-5554/FG-259-B	I	GE	GL-5554	
5555	I	GE, RCA	GL-5555	
AX-5555/653-B	I	A	GL-5555	
WL-5555/653B	I	WL	GL-5555	
GL-5555/FG-238-B	I	GE	GL-5555	
5556	R	GE, RCA	GL-5556	
GL-5556/PJ-8	R	GE	GL-5556	
5557	T	GE, RCA	GL-5557	
WL-5557/17	T	WL	GL-5557	
AX-5557/FG-17/1701	T	A	GL-5557	
GL-5557/FG-17	T	GE	GL-5557	
5558	R	GE, RCA	GL-5558	
WL-5558/32	R	WL	GL-5558	
GL-5558/FG-32	R	GE	GL-5558	
5559	T	GE, RCA	GL-5559	
AX-5559	T	A	GL-5559	
GL-5559/FG-57	T	GE	GL-5559	
NL-5559/FG-57	T	NL	GL-5559	

INTERCHANGEABILITY LIST

Type No.	Class	Manufacturer	Direct G-E Replacement Type	G-E Similar Type
WL-5559/57	T	WL	**GL-5559**	
5560	T	GE, RCA	**GL-5560**	
GL-5560/FG-95	T	GE	**GL-5560**	
NL-5560/FG-95	T	NL	**GL-5560**	
5561	R	RCA	**GL-5561**	
GL-5561	R	GE	**GL-5561**	
GL-5561/FG-104	R	GE	**GL-5561**	
WL-5561/104	R	WL	**GL-5561**	
F-5563	T	F		GL-678
5563-A	T	RCA		GL-678
GL-5564	I	GE	**GL-5564**	
GL-5564/GL507	I	GE	**GL-5564**	
ML-5575/100	R	ML	**GL-5625**ϕ	
5581	P	GE, RCA	**GL-5581**	
WL-5581	P	WL	**GL-5581**	
GL-5620	B	GE	**GL-5620**	
GL-5620/FB-50	B	GE	**GL-5620**	
GL-5621	B	GE	**GL-5621**	
GL-5621/B-6	B	GE	**GL-5621**	
GL-5623	B	GE	**GL-5623**	
GL-5623/B-47	B	GE	**GL-5623**	
GL-5624	B	GE	**GL-5624**	
GL-5624/B-46	B	GE	**GL-5624**	
GL-5625	R	GE	**GL-5625**	
GL-5625/KC-4	R	GE	**GL-5625**	
GL-5626	VS	GE	**GL-5626**	
GL-5626/FA-15	VS	GE	**GL-5626**	
GL-5627	VS	GE	**GL-5627**	
GL-5627/FA-6	VS	GE	**GL-5627**	
GL-5628	RVG	GE	**GL-5628**	
GL-5628/FA-13	RVG	GE	**GL-5628**	
GL-5629	RVG	GE	**GL-5629**	
GL-5629/FA-14	RVG	GE	**GL-5629**	
GL-5630	I	GE	**GL-5630**	
5632	T	EL	**GL-5632/C3J**	
GL-5632/C3J	T	GE	**GL-6011/710**	
5662	T	GE	**5662**	
5663	T	GE	**5663**	
5664	T	EL		GL-3C23
WL-5664	T	WL		GL-3C23
5665	T	EL	**GL-5665/C16J**	
GL-5665/C16J	T	GE	**GL-5665/C16J**	
GL-5674	R	GE	**GL-5674**	
5683	T	EL		GL-3C23
5685/C6J	T	EL		GL-6860/C6J/F
AX-5685/C6J	T	A		GL-6860/C6J/F
WL-5685/C6J/A	T	WL		GL-6807
5696	T	GE, RCA	**5696**	
GL-5720	T	GE	**GL-5720**	
GL-5720/FG-33	T	GE	**GL-5720**	
NL-5720/FG-33	T	NL	**GL-5720**	
5727	T	GE	**5727**	
5727/2D21-W	T	GE	**5727**	
5728	T	GE, RCA	**GL-5728**	
GL-5728/FG-67	T	GE	**GL-5728**	
GL-5740/FP-54	R	GE	**GL-5740**	
GL-5779	I	GE	**GL-5779**	
GL-5788	I	GE	**GL-5788**	
5822	I	A, RCA	**GL-5822-A**	
NL-5822	I	NL	**GL-5822-A**	
5822-A	I	GE, A, RCA	**GL-5822-A**	
NL-5822-A	I	NL	**GL-5822-A**	
GL-5830	T	GE	**GL-5830**	
GL-5830/FG-41	T	GE	**GL-5830**	
GL-5855	T	GE	**GL-5855**	
5948	T	GE, CH, KU	**GL-5948**	
5948/1754	T	CH, KU	**GL-5948**	
GL-5973	R	GE	**GL-5973**	
GL-6011/710	T	GE	**GL-6011/710**	
WL-6011/710	T	WL	**GL-6011/710**	
6014	T	EL	**GL-6014/C1K**	
GL-6014/C1K	T	GE	**GL-6014/C1K**	
GL-6228	I	GE	**GL-6228**	
GL-6228/506	I	GE	**GL-6228**	
6228/689	I	WL	**GL-6228**	
6277/3B28A	R	T	**GL-866-A**	
GL-6346	I	GE	**GL-6346**	
GL-6347	I	GE	**GL-6347**	
GL-6348	I	GE	**GL-6348**	
GL-6504	I	GE	**GL-6504**	
GL-6509	I	GE	**GL-6509**	
GL-6511	I	GE	**GL-6511**	
GL-6512	I	GE	**GL-6512**	
GL-6513	I	GE	**GL-6513**	
GL-6514	I	GE	**GL-6514**	
GL-6515	I	GE	**GL-6515**	
GL-6807	T	GE	**GL-6807**	
GL-6808	T	GE	**GL-6808**	
GL-6809	T	GE	**GL-6809**	
GL-6855/716	T	GE	**GL-6855/716**	
GL-6856/740	T	GE	**GL-6856/740**	
GL-6857/740-P	T	GE	**GL-6857/740-P**	
GL-6858/760	T	GE	**GL-6858/760**	
GL-6859/760-P	T	GE	**GL-6859/760-P**	
GL-6860/C6J/F	T	GE	**GL-6860/C6J/F**	
GL-6878	I	GE	**GL-6878**	
GL-6930/635-P	R	GE	**GL-6930/635-P**	
8008	R	GE, A, CH, RCA, T	**GL-8008**	
DR-8008	R	GES	**GL-8008**	
EE-8008	R	EE	**GL-8008**	
ML-8008	R	ML	**GL-8008**	
UE-8008	R	UE	**GL-8008**	
WL-8008	R	WL	**GL-8008**	
8020	R	GE, A, NU, RCA	**GL-8020**	
DR-8020	R	GES	**GL-8020**	
EE-8020	R	EE	**GL-8020**	
WL-8020	R	WL	**GL-8020**	
8020/100R	R	EM	**GL-8020**	

ϕ At rated current of 1.0 ampere, the GL-5625 has a voltage drop of 4000 volts; whereas the ML-5575/100 has a voltage drop of 800 volts at 1.0 ampere.

This information has been carefully compiled from tube data available at the date of publication and is believed to be accurate. No responsibility, however, is assumed for errors caused by inaccuracies in tube data.

ELECTRONIC COMPONENTS DIVISION

GENERAL ELECTRIC

Schenectady 5, N. Y.

PRINTED IN U.S.A.

INTERCHANGEABILITY LIST

Transmitting Tubes

This listing includes those types for which the General Electric Company has either a direct replacement or a similar type comparable in capabilities and application.

Type No.	Class	Manufacturer	Direct G-E Replacement Type	G-E Similar Type
TGRA	R	IH	**GL-575-A**	
TGRB	R	IH	**GL-872-A**	
TVTB	TR	IH	**GL-833-A**	
TVTC	TR	IH	**GL-889-A**	
GL-1L21	TR	GE	**GL-1L21**	
GL-1L24	TR	GE	**GL-1L24**	
GL-1L25	TR	GE	**GL-1L25**	
GL-1L31	TR	GE	**GL-1L31**	
GL-1L32	TR	GE	**GL-1L32**	
GL-1L33	TR	GE	**GL-1L33**	
GL-1L36	TR	GE	**GL-1L36**	
GL-1L38	TR	GE	**GL-1L38**	
GL-1Q26-A	TR	GE	**GL-1Q26-A**	
GL-2B22	TR	GE	**GL-2B22**	
2C38	TR	EM		GL-2C39-B
2C39	TR	EM	**GL-2C39-B**	
ML-2C39	TR	ML	**GL-2C39-B**	
2C39-A	TR	A, EM, RCA	**GL-2C39-B**	
ML-2C39-A	TR	ML	**GL-2C39-B**	
2C39-B	TR	GE, EM	**GL-2C39-B**	
2C40	TR	RCA	**GL-2C40-A**	
GL-2C40-A	TR	GE	**GL-2C40-A**	
GL-2C42	TR	GE	**GL-2C42**	
2C43	TR	GE, RCA	**GL-2C43**	
GL-2C46	TR	GE	**GL-2C46**	
GL-2H21	TR	GE	**GL-2H21**	
2E24	TR	GE, HY, RCA, RK, S	**GL-2E24**	
2E25	TR	HY		GL-2E24
2E26	TR	GE, HY, RCA, RK, S	**GL-2E26**	
2E30	TR	GE, HY	**GL-2E30**	
3-25A3	TR	EM		GL-809
3-50A4	TR	EM		GL-811-A
3-75A3	TR	EM		GL-8005
3-100A	TR	EM		GL-810
3-450A4	TR	EM		GL-833-A
3-1000A2	TR	EM		GL-8000
3-1000A4	TR	EM		GL-810
3B27	R	EE		GL-836
DR-3B27	R	GES		GL-836
3B28	R	CH, RCA, UE		GL-866-A
AX-3B28	R	A	**GL-866-A**	
3B28/6277	R	T	**GL-866-A**	
3C21	TR	A		GL-838
3X100A11	TR	EM	**GL-2C39-B**	
3X2500A3	TR	GE, EM	**GL-3X2500A3**	
4-125A	TR	EM	**GL-4D21/4-125A**	
4-125A/4D21	TR	RCA	**GL-4D21/4-125A**	
AX-4-125A/6155	TR	A		GL-4D21/4-125A
4-250A	TR	RCA	**GL-4-250A/5D22**	
GL-4-250A/5D22	TR	GE	**GL-4-250A/5D22**	

MANUFACTURER'S IDENTIFICATION

A—AMPEREX ELECTRONIC CORPORATION
CE—CONTINENTAL ELECTRIC COMPANY (CETRON)
CH—CHATHAM ELECTRONICS
EE—ELECTRONIC ENTERPRISES, INCORPORATED
EL—ELECTRONS, INCORPORATED
EM—EITEL-MCCULLOUGH, INCORPORATED (EIMAC)
F—FEDERAL TELEPHONE AND RADIO COMPANY
GE—GENERAL ELECTRIC COMPANY
GES—GENERAL ELECTRONICS, INCORPORATED
HK—HEINTZ AND KAUFMAN, LIMITED
HY—CBS HYTRON
IH—INDUCTION HEATING CORPORATION
ML—MACHLETT LABORATORIES, INCORPORATED
NU—NATIONAL UNION ELECTRIC CORPORATION
RCA—RADIO CORPORATION OF AMERICA
RK—RAYTHEON MANUFACTURING COMPANY
S—SYLVANIA ELECTRIC PRODUCTS, INCORPORATED
T—TAYLOR TUBES, INCORPORATED
TS—TUNG-SOL ELECTRIC, INCORPORATED
UE—UNITED ELECTRONICS COMPANY
WE—WESTERN ELECTRIC
WL—WESTINGHOUSE ELECTRIC CORPORATION
WT—WELTRONIC COMPANY

TUBE CLASSIFICATION

K—KLYSTRON
M—MAGNETRON
R—RECTIFIER
TR—TRANSMITTING

GENERAL ELECTRIC

Supersedes ET-T1218 dated 10-55

continued overleaf

INTERCHANGEABILITY LIST

Type No.	Class	Manufacturer	Direct G-E Replacement Type	G-E Similar Type
WL-4-250A/5D22	TR	WL	**GL-4-250A/5D22**	
AX-4-250A/6156	TR	A		GL-4-250-A/5D22
4-1000A	TR	GE, RCA, EM	**GL-4-1000A**	
4C22	TR	A		GL-8005
4D21	TR	RK	**GL-4D21/4-125A**	
GL-4D21/4-125A	TR	GE	**GL-4D21/4-125A**	
WL-4D21/4-125A	TR	WL	**GL-4D21/4-125A**	
4D23	TR	RK		GL-4D21/4-125A
4X150A	TR	GE, A, EM, RCA, WL	**GL-4X150A**	
4X150G	TR	EM		GL-4X-150A
GL-5C24	TR	GE	**GL-5C24**	
5D22	TR	UE	**GL-4-250A/5D22**	
WL-5D22	TR	WL	**GL-4-250A/5D22**	
5D24	TR	F		GL-4-250-A/5D22
7C24	TR	RCA	**GL-5762**	
ML-7C24	TR	ML	**GL-5762**	
F-7C25	TR	F		GL-5762
F-7C27	TR	F		GL-5762
GL-7C29	TR	GE	**GL-7C29**	
F-7C30	TR	F		GL-5762
GL-7D21	TR	GE	**GL-7D21**	
RK-12	TR	RK		GL-809
HV-18	TR	UE		GL-810
FV-20	TR	UE		GL-8000
TV-20	TR	T		GL-810
TZ-20	TR	T		GL-809
RK-21	R	RK		GL-836
RX-21A	R	EM		GL-872-A
WE-X-22	R	UE		GL-1616
KU-23	TR	NU		GL-810
RK-23	TR	RK		GL-802
RK-23A	TR	RK		GL-802
HY-25	TR	HY		GL-809
RK-25	TR	RK	**GL-802**	
RK-25B	TR	RK	**GL-802**	
25T	TR	EM		GL-809
RK-28	TR	RK	**GL-803**	
RK-28-A	TR	RK	**GL-803**	
HY-30Z	TR	HY		GL-809
NU-30Z	TR	NU		GL-809
35T	TR	EM		GL-811-A
RK-38	TR	RK		GL-810
RK-39	TR	RK	**GL-807**	
HY-40	TR	HY		GL-812-A
T-40	TR	T		GL-812-A
TZ-40	TR	T		GL-811-A
HY-40Z	TR	HY		GL-811-A
RK-41	TR	RK		GL-807
RK-44	TR	RK	**GL-837**	
RK-45	TR	RK		GL-837
RK-47	TR	RK	**GL-814**	
RK-48A	TR	RK		GL-813
50T	TR	T		GL-8000
HY-51B	TR	HY		GL-8005
51T	TR	T		GL-8005
HY-51Z	TR	HY		GL-838
RK-52	TR	RK		GL-811-A
T-55	TR	NU, T, UE		GL-8005
HY-57	TR	HY		GL-812-A
RK-57	TR	RK	**GL-805**	
RK-58	TR	RK	**GL-838**	
HF-60	TR	A	**GL-8005**	
HY-60	TR	HY		GL-807
T-60	TR	T		GL-8005
HY-61/807	TR	HY	**GL-807**	
RK-64	TR	RK		GL-807
HY-69	TR	HY		GL-1624
V-70D	TR	NU, UE		GL-8005
75TH	TR	EM		GL-8005
HF-100	TR	A		GL-8005
UE-100	TR	UE		GL-810
100R	R	EM	**GL-8020**	
100TH	TR	GE, EM, NU	**GL-100TH**	
100TL	TR	EM		GL-8000
111H	TR	A		GL-812-A
HF-120	TR	A		GL-8005
ZB-120	TR	A		GL-838
HF-125	TR	A		GL-8005
T-125	TR	T		GL-810
F-127-A	TR	F		GL-810
WT-T127*†	TR	WT	**See WT-210-0086**	
F-128-A	TR	F		GL-851
F-129-B	TR	F		GL-889-A
HF-140	TR	A		GL-8005
TW-150	TR	T		GL-807, GL-810
ML-199	R	ML		GL-5973
HF-200	TR	A, ML		GL-8000
HF-201	TR	A		GL-8000
HF-201A	TR	A		GL-810
203-A	TR	A, NU, RCA, T, UE		GL-8005
WL-203-A	TR	WL		GL-8005
203-Z	TR	T		GL-838
207	TR	GE, A, F, RCA	**GL-207**	
ML-207	TR	ML	**GL-207**	
UE-207	TR	UE	**GL-207**	
WL-207	TR	WL	**GL-207**	
WT-210-0008†	R	WT	**GL-866-A**	
WT-210-0027†	R	WT	**GL-872-A**	
WT-210-0086†	TR	WT	**GL-833-A**	
211	TR	A, NU, RCA, T		GL-8005
UE-211	TR	UE		GL-8005
WL-211	TR	WL		GL-8005
211B	TR	A		GL-8005
211D	TR	A, WE		GL-8005
211H	TR	A		GL-8005

* Old part number. Refer to Weltronic's new part number for GE equivalent.
† These are tube socket markings on equipment bearing the Weltronic trademark.

Transmitting tubes

INTERCHANGEABILITY LIST

Type No.	Class	Manufacturer	Direct G-E Replacement Type	G-E Similar Type
CE-220	R	CE		GL-8020
HF-220R	TR	A		GL-893A-R
Z-225/866A	R	NU, UE		GL-866-A
233	TR	A		GL-880
241B	TR	WE		GL-833-A
242A	TR	WE		GL-8005
242B	TR	WE		GL-8005
242C	TR	GE, A, UE, WE	**GL-242-C**	
ML-242-C	TR	ML	**GL-242-C**	
249A	R	WE		GL-866-A
249B	R	T, WE		GL-866-A
WE-249C	R	WE		GL-866-A
HF-250	TR	A		GL-8000
250TH	TR	EM		GL-810
DR-250TH	TR	GES		GL-810
251A	TR	A, WE		GL-851
HF-251A	TR	A		GL-851
HK-254	TR	HK		GL-810
255A	R	WE		GL-869-B
255B	R	WE		GL-869-B
HF-255B	R	A		GL-869-B
258B	R	A, T, UE		GL-866-A
WT-262*†	R	WT	**See WT-210-0008**	
FP-265	TR	GE	**FP-265**	
F-266-A	R	F	**GL-266-B**	
266B	R	WE		GL-857-B
F-266B	R	F		GL-857-B
HF-266-B	R	A	**GL-266-B**	
266C	R	WE		GL-857-B
267B	R	WE		GL-872-A
F-267B	R	F		GL-872-A
HF-267B	R	A		GL-872-A
268A	TR	WE		GL-801-A
279A	TR	WE		GL-851
HF-279A	TR	A		GL-851
T-282A	TR	T		GL-8000
284A	TR	WE		GL-845
284B	TR	WE		GL-845
284D	TR	UE, WE		GL-845
295A	TR	WE		GL-8005
298A	TR	WE		GL-862-A
ML-298-A	TR	ML		GL-862-A
298B	TR	WE		GL-862-A
T-303C	TR	T		GL-8000
UE-303U	TR	UE		GL-8000
307A	TR	WE		GL-807
F-307A	TR	F	**GL-207**	
310	TR	UE		GL-801-A
310B	TR	WE		GL-1620
UE-311	TR	UE		GL-8005
UE-311CH	TR	UE		GL-8000
312A	TR	WE		GL-828
315A	R	A, WE		GL-673
F-315A	R	F		GL-673
ML-315A	R	ML		GL-673
319A	R	WE		GL-872-A
F-319A	R	F		GL-872-A
ML-319A	R	ML		GL-872-A
321A	R	WE		GL-673
HF-321A	R	A		GL-673
ML-321A	R	ML		GL-673
322A	TR	WE	**GL-803**	
327A	TR	WE		GL-810
327B	TR	WE		GL-810
331A	TR	WE	**GL-805**	
332A	TR	WE		GL-803
QK-338	M	RK	**GL-6410**	
339A	TR	WE		GL-807
UE-342B	TR	UE		GL-8005
342-C	TR	UE	**GL-242-C**	
348A	TR	WE		GL-1620
350A	TR	WE	**GL-807**	
350B	TR	WE		GL-807
F-353A omit	R	F	**GL-872-A**	
HK-354F	TR	HK		GL-8005
356A	TR	WE		GL-807
357A	TR	WE		GL-833-A
357B	TR	ML		GL-833-A
F-357-B omit	R	F	**GL-857-B**	
366A	R	WE	**GL-866-A**	
F-367-A	R	F		GL-673
371-B	R	EE, UE		GL-8020
F-375A	R	F	**GL-575-A**	
ML-381	TR	ML	**GL-2C39-B**	
384D	TR	WE		GL-845
UE-384D	TR	UE		GL-845
WL-450	TR	WL		GL-833-A
450TH	TR	EM		GL-833-A
F-450TH	TR	F		GL-833-A
UE-468	TR	UE		GL-810, GL-8000
WL-468	TR	WL		GL-810
WL-471	TR	WL		GL-8005, GL-8003
WL-473	TR	WL		GL-5762
WL-481	R	WL		GL-8013-A
559	TR	RCA		GL-2B22
575-A	R	GE, A, EE, NU, RCA	**GL-575-A**	
DR-575-A	R	GES	**GL-575-A**	
F-575-A	R	F	**GL-575-A**	
ML-575-A	R	ML	**GL-575-A**	
WL-575-A	R	WL	**GL-575-A**	
UE-578	R	UE		GL-8020
WL-578	R	WL		GL-8020
GL-592	TR	GE	**GL-592**	
592/3-200A3	TR	EL, EM	**GL-592**	
673	R	GE, A, F, RCA	**GL-673**	
ML-673	R	ML	**GL-673**	
T-756	TR	T		GL-809
801	TR	RCA	**GL-801-A**	
801A	TR	GE, A, NU, RCA	**GL-801-A**	
DR-801-A	TR	GES	**GL-801-A**	

* Old part number. Refer to Weltronic's new part number for G-E equivalent.
† These are tube socket markings on equipment bearing the Weltronic trademark.

INTERCHANGEABILITY LIST

Type No.	Class	Manufacturer	Direct G-E Replacement Type	G-E Similar Type
WL-801-A	TR	WL	GL-801-A	
HY-801-A	TR	HY	GL-801-A	
801-A/801	TR	HY, S	GL-801-A	
802	TR	GE, A, NU, RCA	GL-802	
WL-802	TR	WL	GL-802	
803	TR	GE, A, NU, RCA	GL-803	
DR-803	TR	GES	GL-803	
T-803	TR	T	GL-803	
WL-803	TR	WL	GL-803	
805	TR	GE, A, NU, RCA	GL-805	
DR-805	TR	GES	GL-805	
ML-805	TR	ML	GL-805	
T-805	TR	T	GL-805	
UE-805	TR	UE	GL-805	
WL-805	TR	WL	GL-805	
807	TR	GE, A, HY, NU, RK, RCA, S, TS	GL-807	
DR-807	TR	GES	GL-807	
WL-807	TR	WL	GL-807	
809	TR	GE, NU, RCA, S	GL-809	
DR-809	TR	GES	GL-809	
WL-809	TR	WL	GL-809	
810	TR	GE, A, NU, RCA, S	GL-810	
DR-810	TR	GES	GL-810	
ML-810	TR	ML	GL-810	
T810	TR	T	GL-810	
UE-810	TR	UE	GL-810	
WL-810	TR	WL	GL-810	
811	TR	A, NU, RCA, S	GL-811-A	
DR-811	TR	GES	GL-811-A	
NU-811	TR	NU	GL-811-A	
WL-811	TR	WL	GL-811-A	
811-A	TR	GE, RCA, RK, S	GL-811-A	
WL-811-A	TR	WL	GL-811-A	
812	TR	A, NU, RCA, S	GL-812-A	
DR-812	TR	GES	GL-812-A	
NU-812	TR	NU	GL-812-A	
WL-812	TR	WL	GL-812-A	
812-A	TR	GE, S, RCA, RK	GL-812-A	
WL-812-A	TR	WL	GL-812-A	
UE-812-H	TR	UE		GL-8005
813	TR	GE, A, NU, RCA, S	GL-813	
DR-813	TR	GES	GL-813	
ML-813	TR	ML	GL-813	
RK-813	TR	RK	GL-813	
T-813	TR	T	GL-813	
UE-813	TR	UE	GL-813	
WL-813	TR	WL	GL-813	
814	TR	GE, NU, RCA	GL-814	
T-814	TR	T	GL-814	
WL-814	TR	WL	GL-814	
RK-814/RK47	TR	RK	GL-814	
815	TR	GE, NU, S, RCA	GL-815	
WL-815	TR	WL	GL-815	
816	R	GE, A, HY, NU, RCA, RK, S	GL-816	
DR-816	R	GES	GL-816	
WL-816	R	WL	GL-816	
828	TR	GE, A, NU, RCA	GL-828	
ML-828	TR	ML	GL-828	
WL-828	TR	WL	GL-828	
829	TR	RCA	GL-829-B	
829-A	TR	RCA	GL-829-B	
829-B	TR	GE, A, NU, RCA, S, T	GL-829-B	
ML-829-B	TR	ML	GL-829-B	
RK-829-B	TR	RK	GL-829-B	
WL-829B	TR	WL	GL-829-B	
832	TR	RCA	GL-832-A	
832-A	TR	GE, A, NU, RCA, S, T	GL-832-A	
DR-832-A	TR	GES	GL-832-A	
ML-832-A	TR	ML	GL-832-A	
RK-832-A	TR	RK	GL-832-A	
WL-832-A	TR	WL	GL-832-A	
833	TR	RCA	GL-833-A	
833-A	TR	GE, A, RCA	GL-833-A	
DR-833-A	TR	GES	GL-833-A	
ML-833-A	TR	ML	GL-833-A	
UE-833-A	TR	UE	GL-833-A	
WL-833-A	TR	WL	GL-833-A	
836	R	A, NU, RCA	GL-836	
DR-836	R	GES	GL-836	
EE-836	R	EE	GL-836	
WL-836	R	WL	GL-836	
837	TR	GE, A, HY, NU, RCA, S	GL-837	
DR-837	TR	GES	GL-837	
WL-837	TR	WL	GL-837	
RK-837	TR	RK	GL-837	
838	TR	GE, A, NU, RCA	GL-838	
DR-838	TR	GES	GL-838	
T-838	TR	T	GL-838	
UE-838	TR	UE	GL-838	
WL-838	TR	WL	GL-838	
845	TR	GE, A, NU, RCA	GL-845	
T-845	TR	T	GL-845	
UE-845	TR	UE	GL-845	
WL-845	TR	WL	GL-845	
849A	TR	A		GL-833-A
849H	TR	A		GL-833-A
851	TR	GE, A, RCA	GL-851	
DR-851	TR	GES	GL-851	
UE-851	TR	UE	GL-851	
WL-851	TR	WL	GL-851	
HK-854H	TR	HK		GL-833-A
857	R	RCA	GL-857-B	
857-B	R	GE, A, RCA	GL-857-B	
DR-857-B	R	GES	GL-857-B	
F-857-B	R	F	GL-857-B	
ML-857-B	R	ML	GL-857-B	
WL-857-B	R	WL	GL-857-B	
859	TR	A		GL-893-A
862	TR	RCA	GL-862-A	
862-A	TR	GE, RCA	GL-862-A	

Transmitting Types

INTERCHANGEABILITY LIST

Type No.	Class	Manufacturer	Direct G-E Replacement Type	G-E Similar Type
F-862-A	TR	F	**GL-862-A**	
WL-862-A	TR	WL	**GL-862-A**	
866	R	A, RCA	**GL-866-A**	
866-A	R	GE, CE, CH, EM, NU, RCA, S	**GL-866-A**	
DR-866-A	R	GES	**GL-866-A**	
EE-866-A	R	EE	**GL-866-A**	
HF-866-A	R	A	**GL-866-A**	
ML-866-A	R	ML	**GL-866-A**	
RK-866-A	R	RK	**GL-866-A**	
T-866-A	R	T	**GL-866-A**	
UE-866-A	R	UE	**GL-866-A**	
WL-866-A	R	WL	**GL-866-A**	
866-A/866	R	RCA	**GL-866-A**	
866-AX	R	A		GL-866-A
866-JR	R	NU, T		GL-866-A
869-A	R	RCA	**GL-869-B**	
869-B	R	GE, A, RCA	**GL-869-B**	
DR-869-B	R	GES	**GL-869-B**	
F-869-B	R	F	**GL-869-B**	
ML-869-B	R	ML	**GL-869-B**	
WL-869-B	R	WL	**GL-869-B**	
870	R	RCA	**GL-870-A**	
GL-870-A	R	GE	**GL-870-A**	
872	R	RCA	**GL-872-A**	
872-A	R	GE, CE, EM, NU, RCA, S, T	**GL-872-A**	
DR-872-A	R	GES	**GL-872-A**	
EE-872-A	R	EE	**GL-872-A**	
F-872-A	R	F	**GL-872-A**	
RK-872-A	R	RK	**GL-872-A**	
UE-872-A	R	UE	**GL-872-A**	
872-A/872	R	RCA	**GL-872-A**	
ML-872-A/872	R	ML	**GL-872-A**	
WL-872-A/872	R	WL	**GL-872-A**	
872-AX	R	A	**GL-872-A**	
T-875-A	R	T	**GL-575-A**	
880	TR	GE, A, RCA	**GL-880**	
ML-880	TR	ML	**GL-880**	
UE-880	TR	UE	**GL-880**	
WL-880	TR	WL	**GL-880**	
889	TR	RCA	**GL-889-A**	
889-A	TR	GE, A, RCA	**GL-889-A**	
F-889-A	TR	F	**GL-889-A**	
ML-889-A	TR	ML	**GL-889-A**	
UE-889-A	TR	UE	**GL-889-A**	
WL-889-A	TR	WL	**GL-889-A**	
889R	TR	RCA	**GL-889R-A**	
889R-A	TR	GE, A, RCA	**GL-889R-A**	
F-889R-A	TR	F	**GL-889R-A**	
ML-889R-A	TR	ML	**GL-889R-A**	
UE-889R-A	TR	UE	**GL-889R-A**	
WL-889R-A	TR	WL	**GL-889R-A**	
893-A-R	TR	GE, A, RCA	**GL-893A-R**	
F-893A-R	TR	F	**GL-893A-R**	
ML-893A-R	TR	ML	**GL-893A-R**	
WL-893A-R	TR	WL	**GL-893A-R**	

Type No.	Class	Manufacturer	Direct G-E Replacement Type	G-E Similar Type
898-A	TR	GE, A, RCA	**GL-898-A**	
F-898-A	TR	F	**GL-898-A**	
UE-905	TR	UE	**GL-805**	
UE-938	TR	UE	**GL-838**	
UE-945	TR	UE	**GL-845**	
951	TR	UE	**GL-851**	
UE-966	R	UE	**GL-866-A**	
UE-966-A	R	UE	**GL-866-A**	
UE-972	R	UE	**GL-872-A**	
UE-972-A	R	UE	**GL-872-A**	
975-A	R	NU	**GL-575-A**	
UE-975-A	R	UE		GL-575-A
1000T	TR	GE, EM	**GL-1000T**	
WL-1000T	TR	WL	**GL-1000T**	
1603	TR	TS		GL-1620
1612	TR	GE, RCA	**GL-1612**	
1613	TR	GE, RCA	**GL-1613**	
1614	TR	GE, RCA	**GL-1614**	
1616	R	GE, A, HY, NU, RCA, S	**GL-1616**	
DR-1616	R	GES	**GL-1616**	
1619	TR	GE, NU, RCA	**GL-1619**	
1620	TR	GE, NU, RCA	**GL-1620**	
1621	TR	GE, NU, RCA	**GL-1621**	
1624	TR	GE, NU, RCA	**GL-1624**	
1625	TR	GE, A, HY, NU, RCA, S, TS	**GL-1625**	
DR-1625	TR	GES	**GL-1625**	
RK-1625	TR	RK	**GL-1625**	
GL-5513	TR	GE	**GL-5513**	
5514	TR	HY		GL-811-A
5516	TR	GE, HY	**GL-5516**	
GL-5518	TR	GE	**GL-5518**	
ML-5530	TR	ML		GL-5762
5588	TR	GE, RCA	**GL-5588**	
ML-5588	TR	ML	**GL-5588**	
GL-5593	TR	GE	**GL-5593**	
5604	TR	F		GL-889R-A
5618	TR	RCA		GL-2E30
5658	TR	A, F		GL-880
ML-5658	TR	ML		GL-880
5666	TR	A, F		GL-889-A
ML-5666	TR	ML		GL-889-A
5667	TR	A		GL-889R-A
F-5667	TR	F		GL-889R-A
ML-5667	TR	ML		GL-889R-A
EE-5695	R	EE		GL-816
GL-5736	TR	GE	**GL-5736**	
WL-5736	TR	WL	**GL-5736**	
ML-5736	TR	ML	**GL-5736**	
5762	TR	GE, RCA	**GL-5762**	
5762/7C24	TR	RCA	**GL-5762**	
5763	TR	GE, HY, RCA, S	**GL-5763**	
5812	TR	HY		GL-5763
5868/AX9902	TR	A		GL-833-A
5894	TR	GE, A, RCA	**GL-5894**	
ML-5894	TR	ML	**GL-5894**	

Transmitting

5917—AX-9903

INTERCHANGEABILITY LIST

Type No.	Class	Manufacturer	Direct G-E Replacement Type	G-E Similar Type	Type No.	Class	Manufacturer	Direct G-E Replacement Type	G-E Similar Type
5917	TR	F		GL-5762	GL-6620	TR	GE	**GL-6620**	
5933	TR	S		GL-807	GL-6621	TR	GE	**GL-6621**	
5933-WA	TR	S		GL-807	GL-6625	K	GE	**GL-6625**	
GL-5973	R	GE	**GL-5973**		GL-6897	TR	GE	**GL-6897**	
GL-6019	TR	GE	**GL-6019**		7034/4X150A	TR	RCA	**GL-4X150A**	
GL-6039	TR	GE	**GL-6039**						
GL-6046	TR	GE	**GL-6046**		8000	TR	GE, RCA, T	**GL-8000**	
6146	TR	GE, RCA, S	**GL-6146**		ML-8000	TR	ML	**GL-8000**	
6155	TR	A		GL-4D21/ 4-125A	WL-8000	TR	WL	**GL-8000**	
					8002	TR	GE, A	**GL-8002**	
6156	TR	A		GL-4-250-A/5D22	8002-R	TR	GE, A	**GL-8002-R**	
6181	TR	GE, RCA	**GL-6181**		8005	TR	GE, A, NU, RCA	**GL-8005**	
GL-6182	TR	GE	**GL-6182**		ML-8005	TR	ML	**GL-8005**	
GL-6237	K	GE	**GL-6237**		WL-8005	TR	WL	**GL-8005**	
GL-6238	K	GE	**GL-6238**		8008	R	GE, A, CH, RCA, T	**GL-8008**	
GL-6239	K	GE	**GL-6239**		DR-8008	R	GES	**GL-8008**	
GL-6240	K	GE	**GL-6240**						
GL-6241	K	GE	**GL-6241**		EE-8008	R	EE	**GL-8008**	
GL-6242	K	GE	**GL-6242**		ML-8008	R	ML	**GL-8008**	
GL-6251	TR	GE	**GL-6251**		UE-8008	R	UE	**GL-8008**	
ML-6258	TR	ML		GL-5518	WL-8008	R	WL	**GL-8008**	
					8013	R	A	**GL-8013-A**	
6277/3B28A	R	T	**GL-866-A**						
GL-6283	TR	GE	**GL-6283**						
GL-6299	TR	GE	**GL-6299**		8013-A	TR	GE, RCA	**GL-8013-A**	
GL-6301	TR	GE	**GL-6301**		8020	R	GE, A, NU, RCA	**GL-8020**	
6335	TR	ML		GL-6251	DR-8020	R	GES	**GL-8020**	
					EE-8020	R	EE	**GL-8020**	
6410	M	GE, RK	**GL-6410**		WL-8020	R	WL	**GL-8020**	
6410/QK-338	M	RK	**GL-6410**						
GL-6442	TR	GE	**GL-6442**						
GL-6452	TR	GE	**GL-6452**		8020/100R	R	EM	**GL-8020**	
GL-6619	TR	GE	**GL-6619**		AX-9903	TR	A	**GL-5894**	

MANUFACTURER'S IDENTIFICATION

A—AMPEREX ELECTRONIC CORPORATION
CE—CONTINENTAL ELECTRIC COMPANY (CETRON)
CH—CHATHAM ELECTRONICS
EE—ELECTRONIC ENTERPRISES, INCORPORATED
EL—ELECTRONS, INCORPORATED
EM—EITEL-McCULLOUGH, INCORPORATED (EIMAC)
F—FEDERAL TELEPHONE AND RADIO COMPANY
GE—GENERAL ELECTRIC COMPANY
GES—GENERAL ELECTRONICS, INCORPORATED
HK—HEINTZ AND KAUFMAN, LIMITED
HY—CBS HYTRON
IH—INDUCTION HEATING CORPORATION
ML—MACHLETT LABORATORIES, INCORPORATED
NU—NATIONAL UNION ELECTRIC CORPORATION
RCA—RADIO CORPORATION OF AMERICA
RK—RAYTHEON MANUFACTURING COMPANY
S—SYLVANIA ELECTRIC PRODUCTS, INCORPORATED
T—TAYLOR TUBES, INCORPORATED
TS—TUNG-SOL ELECTRIC, INCORPORATED
UE—UNITED ELECTRONICS COMPANY
WE—WESTERN ELECTRIC
WL—WESTINGHOUSE ELECTRIC CORPORATION
WT—WELTRONIC COMPANY

TUBE CLASSIFICATION

K—KLYSTRON
M—MAGNETRON
R—RECTIFIER
TR—TRANSMITTING

This information has been carefully compiled from tube data available at the date of publication and is believed to be accurate. No responsibility, however, is assumed for errors caused by inaccuracies in tube data.

ELECTRONIC COMPONENTS DIVISION

GENERAL ELECTRIC

Schenectady 5, N. Y.

PRINTED IN U.S.A.

not up to date

INTERCHANGEABILITY LIST

Industrial Tubes

This listing includes those types for which the General Electric Company has either a direct replacement or a similar type comparable in capabilities and application.

TGRA—WL-17

Type No.	Class	Manufacturer	Direct G-E Replacement Type	G-E Similar Type	Type No.	Class	Manufacturer	Direct G-E Replacement Type	G-E Similar Type
TGRA	R	IH	**GL-575-A**		AX-3B28	R	A	**GL-866-A**	
TGRB	R	IH	**GL-872-A**		3B28/6277	R	T	**GL-866-A**	
CE-1 (A-D)	P	CE	**GL-868**		3C23	T	GE, RCA, UE	**GL-3C23**	
EL-C1B	T	EL		GL-3C23	NL-3C23	T	NL	**GL-3C23**	
EL-C1B/A	T	EL		GL-3C23	WL-3C23	T	WL	**GL-3C23**	
EL-C1J/A	T	EL		GL-3C23					
EL-C1K	T	EL	**GL-6014/C1K**		CE-4	P	CE		GL-923
GL-1L21	VC	GE	**GL-1L21**		4B32	R	GE, CH	**GL-4B32**	
GL-1L24	VC	GE	**GL-1L24**		CE-5 (A-D)	P	CE		GL-927
GL-1L25	VC	GE	**GL-1L25**		GL-5C21/C6J	T	GE	**GL-5C21/C6J**	
					EL-C6J	T	EL	**GL-6807***	
GL-1L31	VC	GE	**GL-1L31**						
GL-1L32	VC	GE	**GL-1L32**		C6J/5C21	T	RCA	**GL-5C21/C6J**	
GL-1L33	VC	GE	**GL-1L33**		EL-C6J/A	T	EL	**GL-6807***	
GL-1L36	VC	GE	**GL-1L36**		C6J-A/5685	T	RCA	**GL-6807**	
GL-1L38	VC	GE	**GL-1L38**		EL-C6J/F	T	EL	**GL-6860/ C6J/F**	
1P21	P	GE, RCA	**GL-1P21**		EL-C6J/K	T	EL	**GL-6807†**	
1P32	P	CE	**GL-927**						
1P39	P	GE, RCA, S	**GL-1P39**		EL-C6J/KF	T	EL	**GL-6808†**	
1P40	P	GE, RCA	**GL-1P40**		EL-C6J/KL	T	EL	**GL-6809†**	
2-1500	R	EM		GL-8020	EL-C6J/L	T	EL	**GL-6809**	
					EL-C6L	T	EL	**GL-5528/C6L**	
CE-2 (A-D)	P	CE		GL-930, GL-1P40	EL-6B	R	EL		GL-5561
2B4	T	D	**885**		6Q5-G	T	D	**884**	
GL-2B23	R	GE	**GL-2B23**		CE-13	P	CE		GL-868
2D21	T	GE, A, CH, NU, RCA	**2D21**		NL-14	T	NL		GL-5557
WL-2D21	T	WL	**2D21**		EL-C16J	T	EL	**GL-5665/C16J**	
					C16J/5665	T	RCA	**GL-5665/C16J**	
EL-C3J	T	EL	**GL-5632/C3J**						
C3J/5632	T	RCA	**GL-5632/C3J**		17	T	CH	**GL-5557**	
EL-C3J/A	T	EL		GL-5632/ C3J	DR-17	T	GES		GL-5557
					FG-17	T	A, NU	**GL-5557**	
3B24	R	GE, RK	**GL-3B24**		TT-17	T	T		GL-5557
3B28	R	CH, RCA, UE		GL-866-A	WL-17	T	WL	**GL-5557**	

* Minor dimensional and grid voltage differences exist which will not affect interchangeability in the majority of circuits.
† Minor dimensional differences which will not affect interchangeability in the majority of circuits.

MANUFACTURER'S IDENTIFICATION

A—AMPEREX ELECTRONIC CORPORATION
CE—CONTINENTAL ELECTRIC COMPANY (CETRON)
CH—CHATHAM ELECTRONICS
D—ALLEN B. DuMONT LABORATORIES, INCORPORATED
EE—ELECTRONIC ENTERPRISES, INCORPORATED
EL—ELECTRONS, INCORPORATED
EM—EITEL-McCULLOUGH, INCORPORATED (EIMAC)
F—FEDERAL TELEPHONE AND RADIO COMPANY
GE—GENERAL ELECTRIC COMPANY
GES—GENERAL ELECTRONICS, INCORPORATED
IH—INDUCTION HEATING CORPORATION
KU—KUTHE LABORATORIES
ML—MACHLETT LABORATORIES, INCORPORATED
NL—NATIONAL ELECTRONICS, INCORPORATED
NU—NATIONAL UNION ELECTRIC CORPORATION
R—THE RAULAND CORPORATION
RCA—RADIO CORPORATION OF AMERICA
RK—RAYTHEON MANUFACTURING COMPANY
S—SYLVANIA ELECTRIC PRODUCTS, INCORPORATED
T—TAYLOR TUBES, INCORPORATED
UE—UNITED ELECTRONICS COMPANY
WE—WESTERN ELECTRIC
WL—WESTINGHOUSE ELECTRIC CORPORATION
WT—WELTRONIC COMPANY

TUBE CLASSIFICATION

B—BALLAST
I—IGNITRON
P—PHOTOTUBE
R—RECTIFIER
RVG—RESISTANCE VACUUM GAGE
T—THYRATRON
VC—VACUUM CAPACITOR
VS—VACUUM SWITCH

GENERAL ELECTRIC

Supersedes ET-T1218 dated 10-55

CE-20—ML-315A

INTERCHANGEABILITY LIST

Type No.	Class	Manufacturer	Direct G-E Replacement Type	G-E Similar Type
CE-20	P	CE	**GL-927**	
CE-21 (A-D)	P	CE	**GL-920**	
RX-21A	R	EM		GL-872-A
CE-23 (A-D)	P	CE	**GL-923**	
CE-25 (A-D)	P	CE	**GL-927**	
CE-29 (A-D)	P	CE	**GL-929**	
CE-30 (A-D)	P	CE	**GL-930**	
CE-31V	P	CE		GL-919
FG-32	R	CE	**GL-5558**	
WL-32	R	WL	**GL-5558**	
WL-33	T	WL	**GL-5720**	
CE-36 (A-D)	P	CE		GL-927
CE-41	P	CE	**GL-921**	
WL-41	T	WL	**GL-5830**	
CE-42	P	CE	**GL-922**	
R-51A	P	R	**GL-927**	
53AWB	P	RK		GL-927
WL-57	T	WL	**GL-5559**	
R-58A	P	R		GL-927
CE-59	P	CE	**GL-5581**	
R-59A	P	R	**GL-868**	
SK-60	P	WL		GL-868
R-60A	P	RK	**GL-920**	
R-61-A	P	R	**GL-930**	
SK-63	P	WL		GL-918
R-71A	P	R		GL-930, GL-1P40
FG-81-A	T	GE	**FG-81-A**	
WL-81A	T	WL	**FG-81-A**	
FG-97	T	GE	**FG-97**	
FG-98-A	T	GE, T	**FG-98-A**	
ML-100/5575	R	ML	**GL-5625**‡	
100R	R	EM	**GL-8020**	
WL-104	R	WL	**GL-5561**	
WT-T104§ ¶	T	WT	See WT210-0044	
105	T	GE, RCA	**FG-105**	
WL-105	T	WL	**FG-105**	
AX-105/FG-105	T	A	**FG-105**	
WT-T106§ ¶	T	WT	See WT210-0043 or WT210-0106	
WT-T110§ ¶	T	WT	See WT210-0054	
WT-T111§ ¶	T	WT	See WT210-0056	
WT-T112§ ¶	T	WT	See WT210-0057	
WT-T117§ ¶	T	WT	See WT210-0062 or WT210-0069	
WT-T118§ ¶	T	WT	See WT210-0074	
WT-T119§ ¶	T	WT	See WT210-0078	
WT-T133§ ¶	T	WT	See WT210-0067	
WT-T139§ ¶	T	WT	See WT210-0063	
WT-T149 ¶	T	WT	**FG-172**	
FG-154	T	GE	**FG-154**	
172	T	RCA	**FG-172**	
FG-172	T	GE	**FG-172**	
WL-172	T	WL	**FG-172**	
ML-199	R	ML		GL-5973
WT210-0001 ¶	T	WT	**2D21**	
WT210-0003 ¶	T	WT	**884**	
WT210-0004 ¶	T	WT	**2050**	
WT210-0008 ¶	R	WT	**GL-866-A**	
WT210-0015 ¶	T	WT	**GL-5557**	
WT210-0017 ¶	T	WT	**GL-6856/740**	
WT210-0027 ¶	R	WT	**GL-872-A**	
WT210-0038 ¶	T	WT	**FG-172**	
WT210-0043 ¶	T	WT	**GL-5632/C3J**	
WT210-0044 ¶	R	WT	**GL-575-A**	
WT210-0054 ¶	T	WT	**GL-5830**	
WT210-0056 ¶	T	WT	**GL-5559**	
WT210-0057 ¶	T	WT	**GL-5560**	
WT210-0062 ¶	T	WT	**GL-5557**	
WT210-0063 ¶	T	WT	**GL-6807**	
WT210-0067 ¶	T	WT	**GL-393-A**	
WT210-0069 ¶	T	WT	**GL-5557**	
WT210-0070 ¶	I	WT	**GL-5550**	
WT210-0071 ¶	I	WT	**GL-5551-A**	
WT210-0072 ¶	I	WT	**GL-5552-A**	
WT210-0073 ¶	I	WT	**GL-5553-B**	
WT210-0074 ¶	T	WT	**FG-105**	
WT210-0077 ¶	T	WT	**5727**	
WT210-0078 ¶	T	WT	**FG-172**	
WT210-0079 ¶	T	WT	**FG-105**	
WT210-0106 ¶	T	WT	**GL-5632/C3J**	
WT210-0116 ¶	T	WT	**GL-5560**	
WT210-0149 ¶	I	WT	**GL-5551-A**	
CE-220	R	CE		GL-8020
Z-225/866A	R	NU, UE		GL-866-A
CE-232	R	CE	**GL-5558**	
WT-245§ ¶	T	WT	See WT210-0003	
WT-246§ ¶	T	WT	See WT210-0004	
249A	R	WE		GL-866-A
249B	R	T, WE		GL-866-A
WE-249C	R	WE		GL-866-A
255-A	R	WE		GL-869-B
255B	R	WE		GL-869-B
HF-255B	R	A		GL-869-B
258B	R	A, T, UE		GL-866-A
WT262§ ¶	R	WT	See WT210-0008	
266B	R	WE		GL-857-B
F-266B	R	F		GL-857-B
266C	R	WE		GL-857-B
267B	R	WE		GL-872-A
F-267B	R	F		GL-872-A
HF-267B	R	A		GL-872-A
WT-272§ ¶	T	WT	See WT210-0015	
FG-280	R	GE	**FG-280**	
287A	T	WE		GL-5557
CE-302	T	CE		GL-3C23
CE-305	T	CE		GL-3C23
CE-309	T	CE	**GL-5557**	
CE-311	T	CE	**GL-3C23**	
315A	R	A, WE		GL-673
F-315A	R	F		GL-673
ML-315A	R	ML		GL-673

‡ At rated current of 1.0 ampere, the GL-5625 has a voltage drop of 4000 volts; whereas the ML-100/5575 has a voltage drop of 800 volts at 1.0 ampere.
§ Old part number. Refer to Weltronic's new part number for G-E equivalent.
¶ These are tube socket markings on equipment bearing the Weltronic trade mark.

Industrial types

INTERCHANGEABILITY LIST

Type No.	Class	Manufacturer	Direct G-E Replacement Type	G-E Similar Type
319A	R	WE		GL-872-A
F-319A	R	F		GL-872-A
ML-319A	R	ML		GL-872-A
321A	R	WE		GL-673
HF-321A	R	A		GL-673
ML-321A	R	ML		GL-673
323B	T	CH		GL-3C23
NL-323B	T	NL		GL-3C23
UE-323B	T	UE		GL-3C23
F-353A	R	F	**GL-872-A**	
F-357-B	R	F	**GL-857-B**	
366A	R	WE	**GL-866-A**	
F-367-A	R	F		GL-673
371-B	R	EE, UE		GL-8020
F-375A	R		**GL-575-A**	
393A	T	WE		GL-3C23
CE-393A	T	CE		GL-3C23
NL-393A	T	NL	**GL-393-A**	
UE-393A	T	UE		GL-3C23
394A	T	CH		GL-627
FP-400	R	GE	**FP-400**	
GL-411	R	GE	**GL-411**	
GL-414	T	GE	**GL-414**	
WL-414	T	WL	**GL-414**	
WT-T439§ ¶	T	WT	See WT210-0038	
GL-441	P	GE	**GL-441**	
502-A	T	GE, RCA	**502-A**	
WL-502A	T	WL	**502-A**	
575-A	R	GE, A, EE, NU, RCA	**GL-575-A**	
DR-575-A	R	GES	**GL-575-A**	
F-575-A	R	F	**GL-575-A**	
ML-575-A	R	ML	**GL-575-A**	
WL-575-A	R	WL	**GL-575-A**	
UE-578	R	UE		GL-8020
WL-578	R	WL		GL-8020
WT-606§ ¶	T	WT	See WT210-0001	
NL-615	R	NL		GL-5558
NL-618	R	NL		GL-5561
627	T	GE, RCA	**GL-627**	
KU-627	T	WL	**GL-627**	
KU-628	T	WL		GL-5559
WL-630	T	WL	**2050**	
WL-630A	T	WL	**2050**	
WL-631	T	WL	**GL-5559**	
WL-632B	T	WL	**GL-5560**‖	
KU-634	T	WL		GL-5561
635P	R	NL	**GL-6930/635-P**	
WL-651/656	I	WL	**GL-5552-A**	
WL-652/657	I	WL	**GL-5551-A**	
WL-653B	I	WL	**GL-5555**	
WL-655/658	I	WL	**GL-5553-B**	
672	T	RCA	**GL-672-A**	
WL-672	T	WL	**GL-672-A**	
672-A	T	GE, RCA	**GL-672-A**	
WL-672-A	T	WL	**GL-672-A**	
673	R	GE, A, F, RCA	**GL-673**	
ML-673	R	ML	**GL-673**	
676	T	RCA		GL-5632/ C3J
KU-676	T	WL		GL-5632/ C3J
678	T	GE, A, RCA	**GL-678**	
WL-678	T	WL	**GL-678**	
WL-679	I	WL	**GL-5554**	
WL-681/686	I	WL	**GL-5550**	
WL-688	I	WL	**GL-5564**	
WL-689	I	WL	**GL-6228**	
NL-710	T	NL	**GL-6011/710**	
NL-710/6011	T	NL	**GL-6011/710**	
NL-714	T	NL		GL-5557
NL-715/5557	T	NL	**GL-5557**	
NL-716	T	NL	**GL-6855/716**	
ML-728	T	ML	**GL-5557**	
WL-735	P	WL	**GL-868**	
WL-739	P	WL		GL-927
NL-740	T	NL	**GL-6856/740**	
NL-740-P	T	NL	**GL-6857/740-P**	
WL-741	P	WL		GL-923
NL-760	T	NL	**GL-6807**	
NL-760-L	T	NL	**GL-6809**	
NL-760-P	T	NL	**GL-6808**	
857	R	RCA	**GL-857-B**	
857-B	R	GE, A, RCA	**GL-857-B**	
DR-857-B	R	GES	**GL-857-B**	
F-857-B	R	F	**GL-857-B**	
ML-857-B	R	ML	**GL-857-B**	
WL-857-B	R	WL	**GL-857-B**	
866	R	A, RCA	**GL-866-A**	
866-A	R	GE, CE, CH, EM, NU, RCA, S	**GL-866-A**	
DR-866-A	R	GES	**GL-866-A**	
EE-866-A	R	EE	**GL-866-A**	
HF-866-A	R	A	**GL-866-A**	
ML-866-A	R	ML	**GL-866-A**	
RK-866-A	R	RK	**GL-866-A**	
T-866-A	R	T	**GL-866-A**	
UE-866-A	R	UE	**GL-866-A**	
WL-866-A	R	WL	**GL-866-A**	
866-A/866	R	RCA	**GL-866-A**	
866-AX	R	A		GL-866-A
866-JR	R	NU, T		GL-866-A
868	P	GE, RCA	**GL-868**	
WL-868	P	WL	**GL-868**	
GL-868/PJ-23	P	GE	**GL-868**	
869-A	R	RCA	**GL-869-B**	
869-B	R	GE, A, RCA	**GL-869-B**	
DR-869-B	R	GES	**GL-869-B**	
F-869-B	R	F	**GL-869-B**	
ML-869-B	R	ML	**GL-869-B**	
WL-869-B	R	WL	**GL-869-B**	
872	R	RCA	**GL-872-A**	
872-A	R	GE, CE, EM, NU, RCA, S, T	**GL-872-A**	

§ Old part number. Refer to Weltronic's new part number for G-E equivalent.
¶ These are tube socket markings on equipment bearing the Weltronic trade mark.
‖ 3/8 inch shorter, 1/16 inch greater in diameter; control-grid cap extends from side of bulb instead of from base.

DR-872-A—NL-5559/FG-57

INTERCHANGEABILITY LIST

Type No.	Class	Manufacturer	Direct G-E Replacement Type	G-E Similar Type
DR-872-A	R	GES	GL-872-A	
EE-872-A	R	EE	GL-872-A	
F-872-A	R	F	GL-872-A	
RK-872-A	R	RK	GL-872-A	
UE-872-A	R	UE	GL-872-A	
872-A/872	R	RCA	GL-872-A	
ML-872-A/872	R	ML	GL-872-A	
WL-872-A/872	R	WL	GL-872-A	
872-AX	R	A	GL-872-A	
EE-873	T	EE		GL-678
T-875-A	R	T	GL-575-A	
884	T	GE, A, CH, NU, RCA, S	884	
DR-884	T	GES	884	
RX-884	T	RK	884	
WL-884	T	WL	884	
885	T	GE, A, CH, NU, RCA, S	885	
RX-885	T	RK	885	
WL-885	T	WL	885	
918	P	GE, RCA	GL-918	
WL-918	P	WL	GL-918	
919	P	GE, RCA	GL-919	
WL-919	P	WL	GL-919	
920	P	GE, RCA	GL-920	
WL-920	P	WL	GL-920	
921	P	GE, RCA	GL-921	
WL-921	P	WL	GL-921	
922	P	GE, RCA, S	GL-922	
WL-922	P	WL	GL-922	
923	P	GE, RCA	GL-923	
WL-923	P	WL	GL-923	
927	P	GE, RCA	GL-927	
WL-927	P	WL	GL-927	
929	P	GE, RCA, S	GL-929	
WL-929	P	WL	GL-929	
930	P	GE, RCA, S	GL-930	
WL-930	P	WL	GL-930	
931-A	P	GE, RCA, S	GL-931-A	
WL-931A	P	WL	GL-931-A	
UE-966	R	UE	GL-866-A	
UE-966-A	R	UE	GL-866-A	
967	T	NU	GL-5557	
NU-967	T	NU	GL-5557	
UE-967	T	UE	GL-5557	
UE-972	R	UE	GL-872-A	
UE-972-A	R	UE	GL-872-A	
UE-973	T	UE		GL-5559
975-A	R	NU	GL-575-A	
UE-975-A	R	UE		GL-575-A
NL-1001	I	NL		GL-5550
NL-1005	I	NL		GL-5551-A
NL-1051	I	NL	GL-5551-A	
NL-1052	I	NL	GL-5552-A	
NL-1053	I	NL	GL-5553-B	
1701	T	A	GL-5557	
1754	T	KU	GL-5948	
1904	T	RCA	GL-5728	
2050	T	GE, A, CH, HY, NU, RCA, S	2050	
WL-2050	T	WL	2050	
RK-2050	T	RK	2050	
2051	T	A, CH, NU, RCA	2050	
RK-2051	T	RK	2050	
5544	T	GE, A	GL-5544	
GL-5545	T	GE	GL-6807	
5550	I	GE, NL, RCA	GL-5550	
AX-5550	I	A	GL-5550	
GL-5550/GL-415	I	GE	GL-5550	
WL-5550/681/686	I	WL	GL-5550	
5551	I	NL, RCA	GL-5551-A	
AX-5551/652	I	A	GL-5551-A	
WL-5551/652	I	WL	GL-5551-A	
5551-A	I	GE, A	GL-5551-A	
WL-5551-A	I	WL	GL-5551-A	
5552	I	NL, RCA	GL-5552-A	
NL-5552	I	NL	GL-5552-A	
AX-5552/651	I	A	GL-5552-A	
WL-5552/651	I	WL	GL-5552-A	
5552-A	I	GE, A, NL, RCA	GL-5552-A	
WL-5552-A	I	WL	GL-5552-A	
5553	I	RCA	GL-5553-B	
AX-5553/655	I	A	GL-5553-B	
WL-5553/655	I	WL	GL-5553-B	
5553-A	I	RCA	GL-5553-B	
5553-B	I	GE, A, NL, RCA	GL-5553-B	
WL-5553-B	I	WL	GL-5553-B	
5554	I	GE, RCA	GL-5554	
AX-5554/679	I	A	GL-5554	
WL-5554/679	I	WL	GL-5554	
GL-5554/FG-259-B	I	GE	GL-5554	
5555	I	GE, RCA	GL-5555	
AX-5555/653-B	I	A	GL-5555	
WL-5555/653B	I	WL	GL-5555	
GL-5555/FG-238-B	I	GE	GL-5555	
5556	R	GE, RCA	GL-5556	
GL-5556/PJ-8	R	GE	GL-5556	
5557	T	GE, RCA	GL-5557	
WL-5557/17	T	WL	GL-5557	
AX-5557/FG-17/1701	T	A	GL-5557	
GL-5557/FG-17	T	GE	GL-5557	
5558	R	GE, RCA	GL-5558	
WL-5558/32	R	WL	GL-5558	
GL-5558/FG-32	R	GE	GL-5558	
5559	T	GE, RCA	GL-5559	
AX-5559	T	A	GL-5559	
GL-5559/FG-57	T	GE	GL-5559	
NL-5559/FG-57	T	NL	GL-5559	

Industrial types

INTERCHANGEABILITY LIST

Type No.	Class	Manufacturer	Direct G-E Replacement Type	G-E Similar Type
WL-5559/57	T	WL	**GL-5559**	
5560	T	GE, RCA	**GL-5560**	
GL-5560/FG-95	T	GE	**GL-5560**	
NL-5560/FG-95	T	NL	**GL-5560**	
5561	R	RCA	**GL-5561**	
GL-5561	R	GE	**GL-5561**	
GL-5561/FG-104	R	GE	**GL-5561**	
WL-5561/104	R	WL	**GL-5561**	
F-5563	T	F		GL-678
5563-A	T	RCA		GL-678
GL-5564	I	GE	**GL-5564**	
GL-5564/GL507	I	GE	**GL-5564**	
ML-5575/100	R	ML	**GL-5625**ϕ	
5581	P	GE, RCA	**GL-5581**	
WL-5581	P	WL	**GL-5581**	
GL-5620	B	GE	**GL-5620**	
GL-5620/FB-50	B	GE	**GL-5620**	
GL-5621	B	GE	**GL-5621**	
GL-5621/B-6	B	GE	**GL-5621**	
GL-5623	B	GE	**GL-5623**	
GL-5623/B-47	B	GE	**GL-5623**	
GL-5624	B	GE	**GL-5624**	
GL-5624/B-46	B	GE	**GL-5624**	
GL-5625	R	GE	**GL-5625**	
GL-5625/KC-4	R	GE	**GL-5625**	
GL-5626	VS	GE	**GL-5626**	
GL-5626/FA-15	VS	GE	**GL-5626**	
GL-5627	VS	GE	**GL-5627**	
GL-5627/FA-6	VS	GE	**GL-5627**	
GL-5628	RVG	GE	**GL-5628**	
GL-5628/FA-13	RVG	GE	**GL-5628**	
GL-5629	RVG	GE	**GL-5629**	
GL-5629/FA-14	RVG	GE	**GL-5629**	
GL-5630	I	GE	**GL-5630**	
5632	T	EL	**GL-5632/C3J**	
GL-5632/C3J	T	GE	**GL-6011/710**	
5662	T	GE	**5662**	
5663	T	GE	**5663**	
5664	T	EL		GL-3C23
WL-5664	T	WL		GL-3C23
5665	T	EL	**GL-5665/C16J**	
GL-5665/C16J	T	GE	**GL-5665/C16J**	
GL-5674	R	GE	**GL-5674**	
5683	T	EL		GL-3C23
5685/C6J	T	EL		GL-6860/C6J/F
AX-5685/C6J	T	A		GL-6860/C6J/F
WL-5685/C6J/A	T	WL		GL-6807
5696	T	GE, RCA	**5696**	
GL-5720	T	GE	**GL-5720**	
GL-5720/FG-33	T	GE	**GL-5720**	
NL-5720/FG-33	T	NL	**GL-5720**	
5727	T	GE	**5727**	
5727/2D21-W	T	GE	**5727**	
5728	T	GE, RCA	**GL-5728**	
GL-5728/FG-67	T	GE	**GL-5728**	
GL-5740/FP-54	R	GE	**GL-5740**	
GL-5779	I	GE	**GL-5779**	
GL-5788	I	GE	**GL-5788**	
5822	I	A, RCA	**GL-5822-A**	
NL-5822	I	NL	**GL-5822-A**	
5822-A	I	GE, A, RCA	**GL-5822-A**	
NL-5822-A	I	NL	**GL-5822-A**	
GL-5830	T	GE	**GL-5830**	
GL-5830/FG-41	T	GE	**GL-5830**	
GL-5855	T	GE	**GL-5855**	
5948	T	GE, CH, KU	**GL-5948**	
5948/1754	T	CH, KU	**GL-5948**	
GL-5973	R	GE	**GL-5973**	
GL-6011/710	T	GE	**GL-6011/710**	
WL-6011/710	T	WL	**GL-6011/710**	
6014	T	EL	**GL-6014/C1K**	
GL-6014/C1K	T	GE	**GL-6014/C1K**	
GL-6228	I	GE	**GL-6228**	
GL-6228/506	I	GE	**GL-6228**	
6228/689	I	WL	**GL-6228**	
6277/3B28A	R	T	**GL-866-A**	
GL-6346	I	GE	**GL-6346**	
GL-6347	I	GE	**GL-6347**	
GL-6348	I	GE	**GL-6348**	
GL-6504	I	GE	**GL-6504**	
GL-6509	I	GE	**GL-6509**	
GL-6511	I	GE	**GL-6511**	
GL-6512	I	GE	**GL-6512**	
GL-6513	I	GE	**GL-6513**	
GL-6514	I	GE	**GL-6514**	
GL-6515	I	GE	**GL-6515**	
GL-6807	T	GE	**GL-6807**	
GL-6808	T	GE	**GL-6808**	
GL-6809	T	GE	**GL-6809**	
GL-6855/716	T	GE	**GL-6855/716**	
GL-6856/740	T	GE	**GL-6856/740**	
GL-6857/740-P	T	GE	**GL-6857/740-P**	
GL-6858/760	T	GE	**GL-6858/760**	
GL-6859/760-P	T	GE	**GL-6859/760-P**	
GL-6860/C6J/F	T	GE	**GL-6860/C6J/F**	
GL-6878	I	GE	**GL-6878**	
GL-6930/635-P	R	GE	**GL-6930/635-P**	
8008	R	GE, A, CH, RCA, T	**GL-8008**	
DR-8008	R	GES	**GL-8008**	
EE-8008	R	EE	**GL-8008**	
ML-8008	R	ML	**GL-8008**	
UE-8008	R	UE	**GL-8008**	
WL-8008	R	WL	**GL-8008**	
8020	R	GE, A, NU, RCA	**GL-8020**	
DR-8020	R	GES	**GL-8020**	
EE-8020	R	EE	**GL-8020**	
WL-8020	R	WL	**GL-8020**	
8020/100R	R	EM	**GL-8020**	

ϕ At rated current of 1.0 ampere, the GL-5625 has a voltage drop of 4000 volts; whereas the ML-5575/100 has a voltage drop of 800 volts at 1.0 ampere.

This information has been carefully compiled from tube data available at the date of publication and is believed to be accurate. No responsibility, however, is assumed for errors caused by inaccuracies in tube data.

ELECTRONIC COMPONENTS DIVISION

GENERAL ELECTRIC

Schenectady 5, N. Y.

PRINTED IN U.S.A.

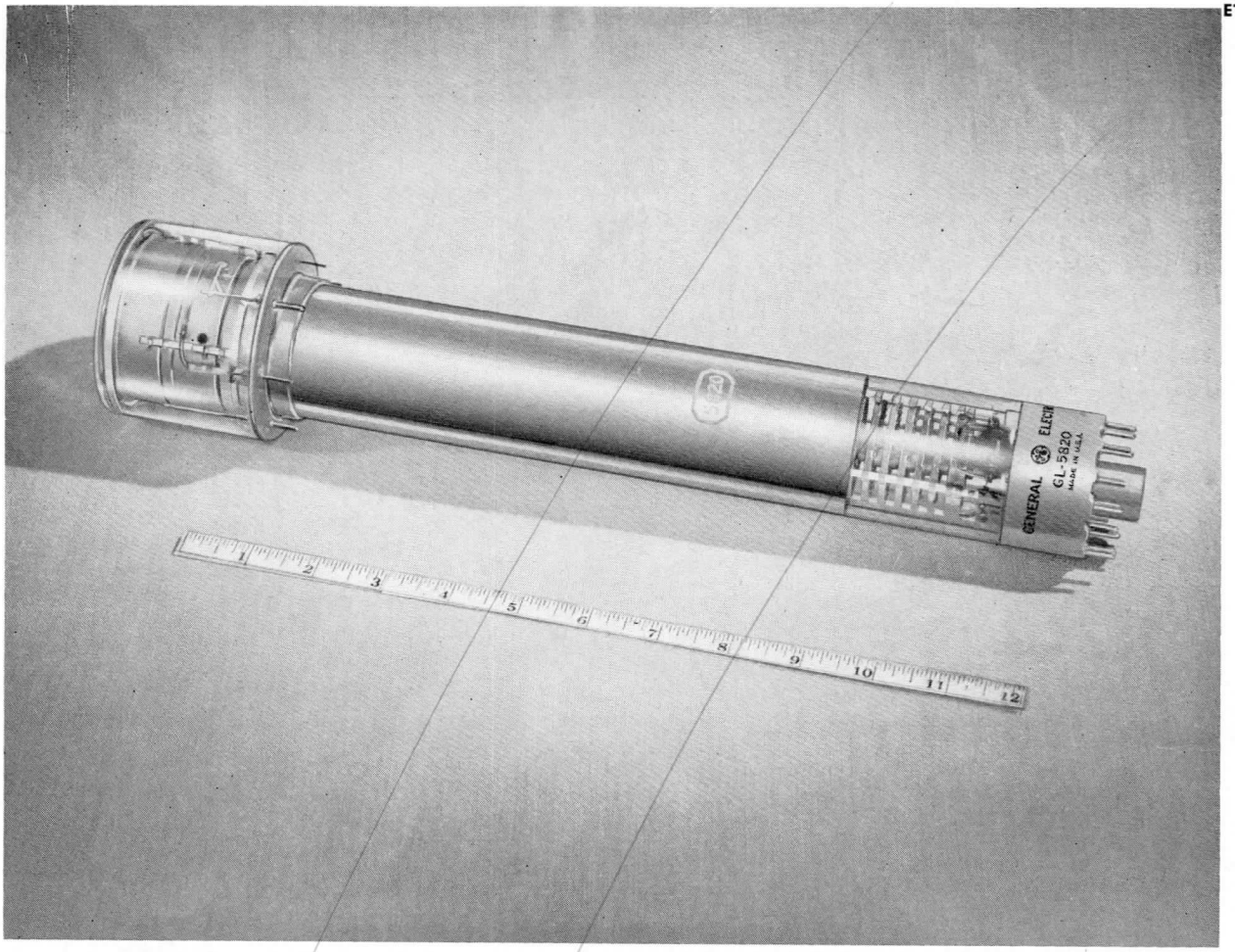

IMAGE ORTHICON

The GL-5820 is a television camera tube for outdoor and studio pickup use in which exceptionally high sensitivity is combined with a spectral response approaching that of the eye. It is very stable in performance at all incident light levels on the object ranging from bright sunlight to a deep shadow (several thousand foot-candles to one foot-candle or less). Commercially acceptable pictures can be obtained at incident light levels greater than about 10 foot-candles.

The GL-5820 has a photocathode characterized by a spectral response with high blue and high green sensitivity, very good yellow sensitivity, and good red sensitivity. It has practically no infrared sensitivity. This particular characteristic of the response permits portrayal of colors in nearly their true tonal gradation since it prevents any color-masking by infrared.

TECHNICAL INFORMATION

GENERAL

Electrical

Cathode—Unipotential		
Heater Voltage, AC or DC	6.3 ± 10%	Volts
Heater Current	0.6	Amperes
Photocathode—Semi-transparent		
Response—See spectral sensitivity curve on page 3 for details.		
Rectangular Image, 4 by 3 aspect ratio		
⊕Useful Size, maximum diagonal	1.8	Inches
Orientation—Proper orientation is obtained when the vertical scan is essentially parallel to the plane passing through the center of the faceplate and pin No. 7 of the shoulder base.		
Focusing Method—Magnetic		
Deflecting Method—Magnetic		
Direct Interelectrode Capacitance		
Anode to All Other Electrodes	12	μμf

GENERAL ELECTRIC

TECHNICAL INFORMATION (CONT'D)

Mechanical

Over-all Length	15.20″ ±0.25″	Inches
Greatest Diameter of Bulb	3.00″ ±0.06″	Inches
Minimum Deflecting Coil Inside Diameter	2⅜	Inches
Deflecting Coil Length	5	Inches
Focusing Coil Length	10	Inches
Alignment Coil Length	15/16	Inches
Photocathode Distance Inside End of Focusing Coil	½	Inches
Weight, approximate	1.4	Pounds

Operating Position—Any, except with diheptal base up and the tube axis at an angle of less than 20 degrees from vertical.

MAXIMUM RATINGS AND TYPICAL OPERATING CONDITIONS

Maximum Ratings, Absolute Values

Photocathode Voltage	−550 Max	Volts
Photocathode Illumination	50 Max	Foot-Candles
Anode Supply Voltage*	1350 Max	Volts
Grid-No. 1 Voltage		
Negative Bias Value	125 Max	Volts
Positive Bias Value	0 Max	Volts
Grid-No. 2 and Dynode-No. 1 Voltage	350 Max	Volts
Grid-No. 3 Voltage	400 Max	Volts
Grid-No. 4 Voltage	300 Max	Volts
Grid-No. 5 Voltage	150 Max	Volts
Grid-No. 6 Voltage	−550 Max	Volts
Voltage Per Multiplier Stage	350 Max	Volts
Target Voltage		
Positive Value	10 Max	Volts
Negative Value	10 Max	Volts
Peak Heater-Cathode Voltage		
Heater Negative with Respect to Cathode	125 Max	Volts
Heater Positive with Respect to Cathode	10 Max	Volts
Operating Temperature of Any Part of Bulb	50 Max	C
Operating Temperature of Bulb at Large End of Tube, target section	35 Min	C
Temperature Difference		
Between Target Section and Any Part of Bulb Hotter Than Target Section	5 Max	C

Typical Operation

Photocathode Voltage, image focus	−400 to −540	Volts
Grid-No. 1 Voltage for Picture Cut-off, beam	−45 to −115	Volts
Grid-No. 2 and Dynode-No. 1 Voltage	300	Volts
Grid-No. 3 Voltage†, multiplier focus	225 to 330	Volts
Grid-No. 4 Voltage, beam focus	140 to 180	Volts
Grid-No. 5 Voltage, decelerator	0 to 125	Volts
Grid-No. 6 Voltage, accelerator		
75 Percent of Photocathode Voltage, approximate	−300 to −405	Volts
Dynode-No. 2 Voltage	600	Volts
Dynode-No. 3 Voltage	800	Volts
Dynode-No. 4 Voltage	1000	Volts
Dynode-No. 5 Voltage	1200	Volts
Anode Voltage	1250	Volts
DC Anode Current	30	Microamperes
⊕Signal Output Current, peak to peak	3 to 24	Microamperes
Target Voltage‡		
□Target Cutoff Voltage‡	−3 to +1	Volts
Target Temperature Range	35 to 45	C
Ratio of Peak-to-Peak Highlight Video Signal		
Current to RMS Noise Current, approximate	35	
Minimum Peak-to-Peak Blanking Voltage	5	Volts
Field Strength at Center of Focusing Coil§	75	Gausses
Field Strength of Alignment Coil, approximate	0 to 3	Gausses

* Ratio of dynode voltages is shown under Typical Operation.
† Adjust to give the most uniformly shaded picture near maximum signal.
‡ Adjustable from −3 to +5 volts with blanking voltage off. Normal setting of target voltage is +2 volts from target cutoff.
§ Direction of current should be such that a north-seeking pole is attracted to the image end of the focusing coil, with the indicator located outside of and at the image end of the focusing coil.
⊕Denotes a change.
□Denotes an addition.

SPECTRAL SENSITIVITY CHARACTERISTIC

FOR EQUAL VALUES OF RADIANT FLUX AT ALL WAVELENGTHS
DASHED CURVE SHOWS SPECTRAL CHARACTERISTIC OF AVERAGE HUMAN EYE

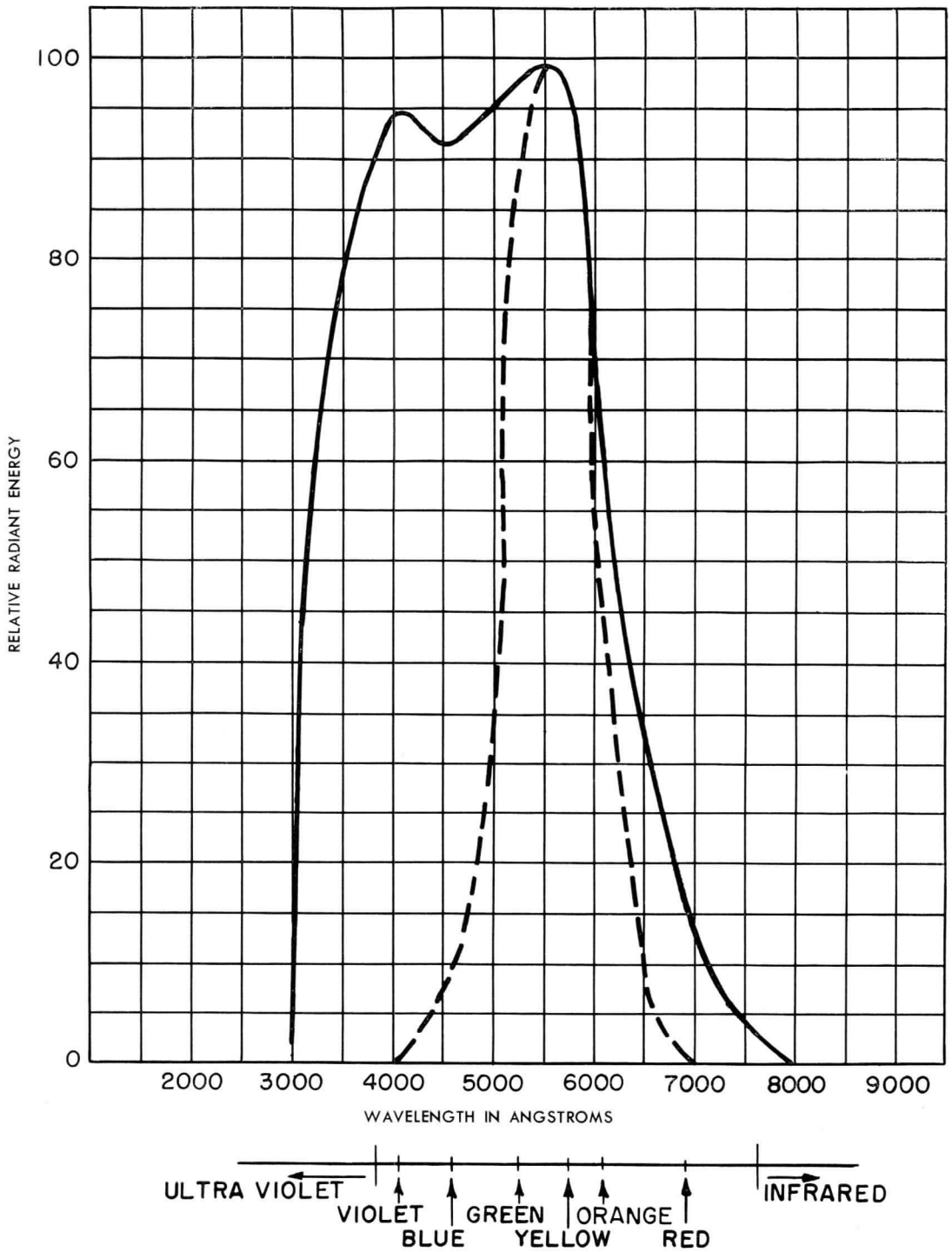

TYPICAL SIGNAL OUTPUT

SCENE: BLACK AND WHITE BALANCED
TUNGSTEN, DAYLIGHT, OR WHITE FLUORESCENT LIGHT

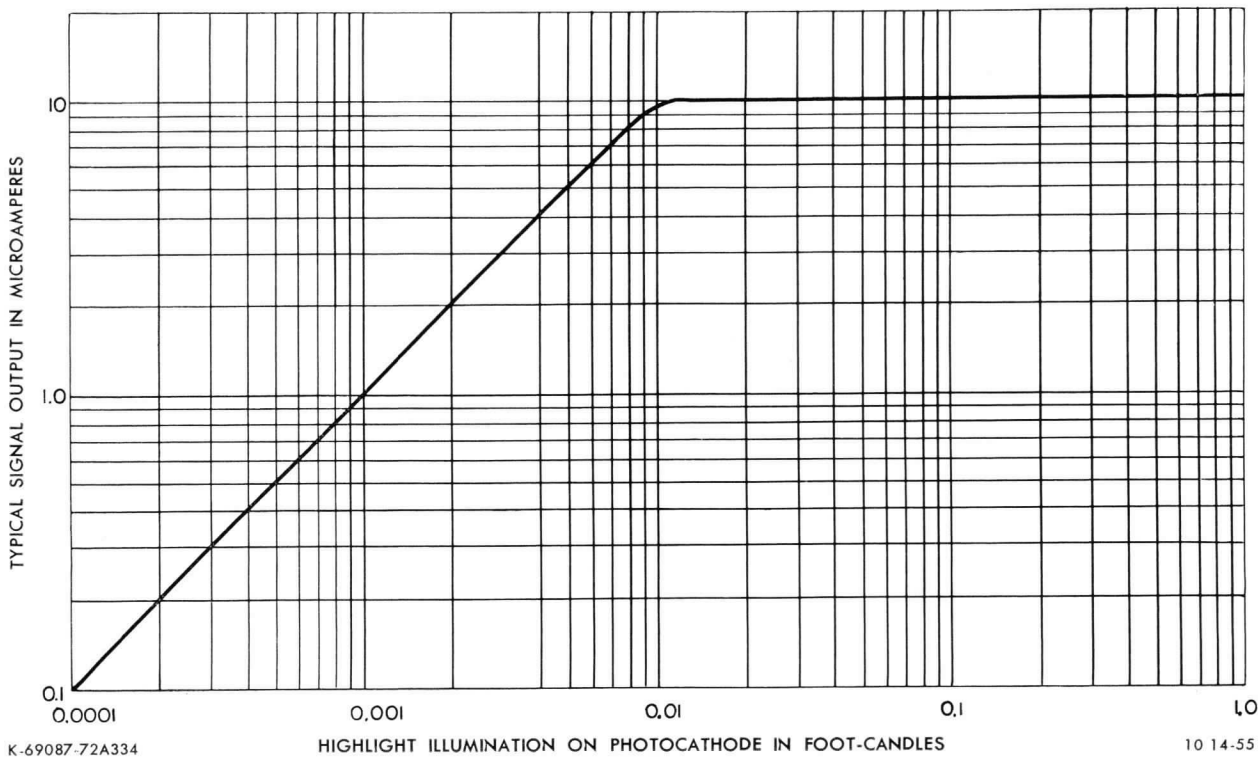

K-69087-72A334

10 14-55

TEMPERATURE EFFECT ON AMPLITUDE RESPONSE

TELEVISION LINE NUMBER = 300

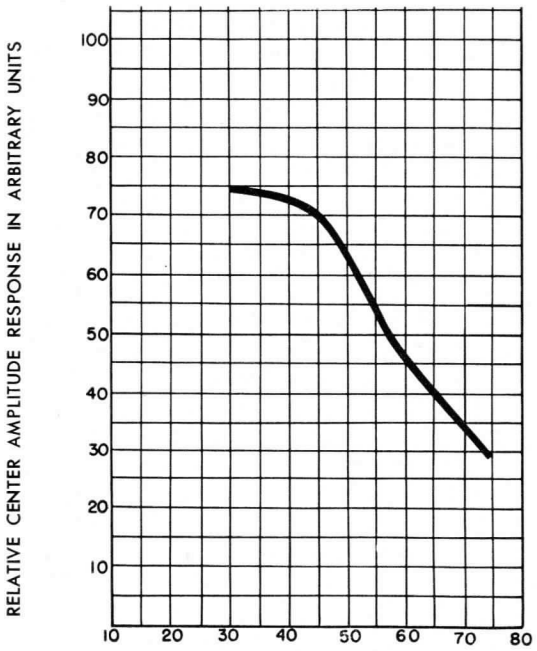

AMPLITUDE RESPONSE CHARACTERISTICS

TEST PATTERN: SQUARE WAVE

OPERATING TEMPERATURE OF BULB ADJACENT TO TARGET = 35 C

RESPONSE MEASURED IN SYSTEM HAVING 10 MC BANDWIDTH

CURVE	HIGHLIGHTS IN RELATION TO LIGHT TRANSFER CHARACTERISTIC
A	AT KNEE
B	ONE LENS STOP ABOVE KNEE

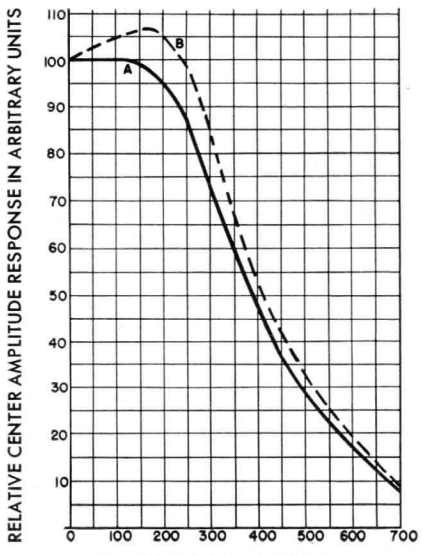

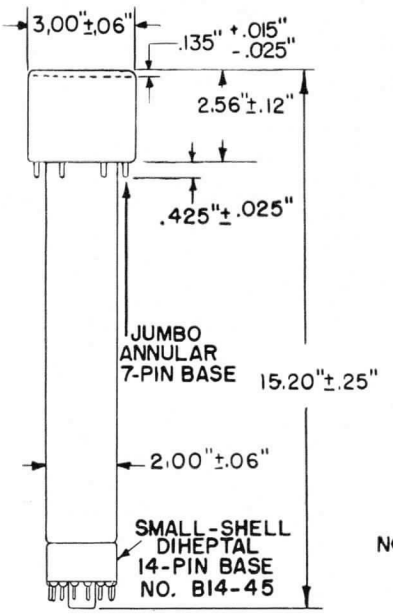

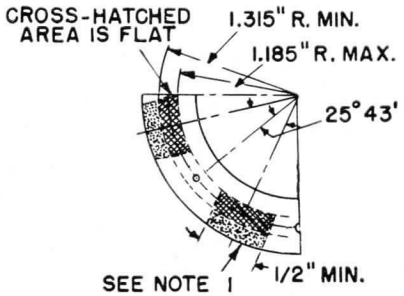

DETAIL OF BOTTOM VIEW OF JUMBO ANNULAR BASE

NOTE 1: DOTTED AREA IS FLAT OR EXTENDS TOWARD DIHEPTAL-BASE END OF TUBE BY 0.060" MAX.

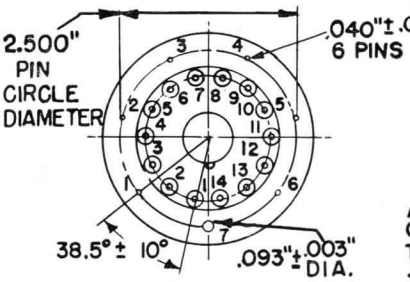

ENLARGED BOTTOM VIEW

ANNULAR BASE GAGE

ANGULAR VARIATIONS BETWEEN PINS AS WELL AS ECCENTRICITY OF NECK CYLINDER WITH RESPECT TO PHOTOCATHODE CYLINDER ARE HELD TO TOLERANCES SUCH THAT PINS AND NECK CYLINDER WILL FIT FLAT-PLATE GAGE WITH:

a. SIX HOLES HAVING DIAMETER OF 0.065"± 0.001" AND ONE HOLE HAVING DIA. OF 0.150"±0.001". ALL HOLES HAVE DEPTH OF 0.265"±0.001". THE SIX 0.065" HOLES ARE ENLARGED BY 45° TAPER TO DEPTH OF 0.047". ALL HOLES ARE SPACED AT ANGLES OF 51°26' ±5' ON CIRCLE DIAMETER OF 2.500"± 0.001"

b. SEVEN STOPS HAVING HEIGHT OF 0.187"± 0.001", CENTERED BETWEEN PIN HOLES, TO BEAR AGAINST FLAT AREAS OF BASE.

c. RIM EXTENDING OUT A MINIMUM OF 0.125" FROM 2.812" DIAMETER AND HAVING HEIGHT OF 0.126"± 0.001".

d. NECK-CYLINDER CLEARANCE HOLE HAVING DIAMETER OF 2.200"± 0.001."

DIRECTION OF LIGHT: PERPENDICULAR TO LARGE END OF TUBE

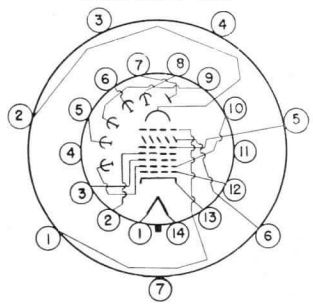

WHITE INDEX LINE ON FACE

SMALL-SHELL DIHEPTAL 14-PIN BASE

PIN 1: HEATER	PIN 6: DYNODE NO. 4	PIN 11: INTERNAL CONNECTION-DO NOT USE
PIN 2: GRID NO. 4	PIN 7: ANODE	PIN 12: GRID NO. 1
PIN 3: GRID NO. 3	PIN 8: DYNODE NO. 5	PIN 13: CATHODE
PIN 4: INTERNAL CONNECTION-DO NOT USE	PIN 9: DYNODE NO. 3	PIN 14: HEATER
PIN 5: DYNODE NO. 2	PIN 10: DYNODE NO. 1, GRID NO. 2	

KEYED JUMBO ANNULAR 7-PIN BASE

PIN 1: GRID NO. 6	PIN 5: GRID NO. 5
PIN 2: PHOTOCATHODE	
PIN 3: INTERNAL CONNECTION-DO NOT USE	PIN 6: TARGET
PIN 4: INTERNAL CONNECTION-DO NOT USE	PIN 7: INTERNAL CONNECTION-DO NOT USE

N-15118AZ—Outline Revised

4-23-58

ELECTRONIC COMPONENTS DIVISION

GENERAL ELECTRIC

Schenectady 5, N. Y.

PRINTED IN U.S.A.

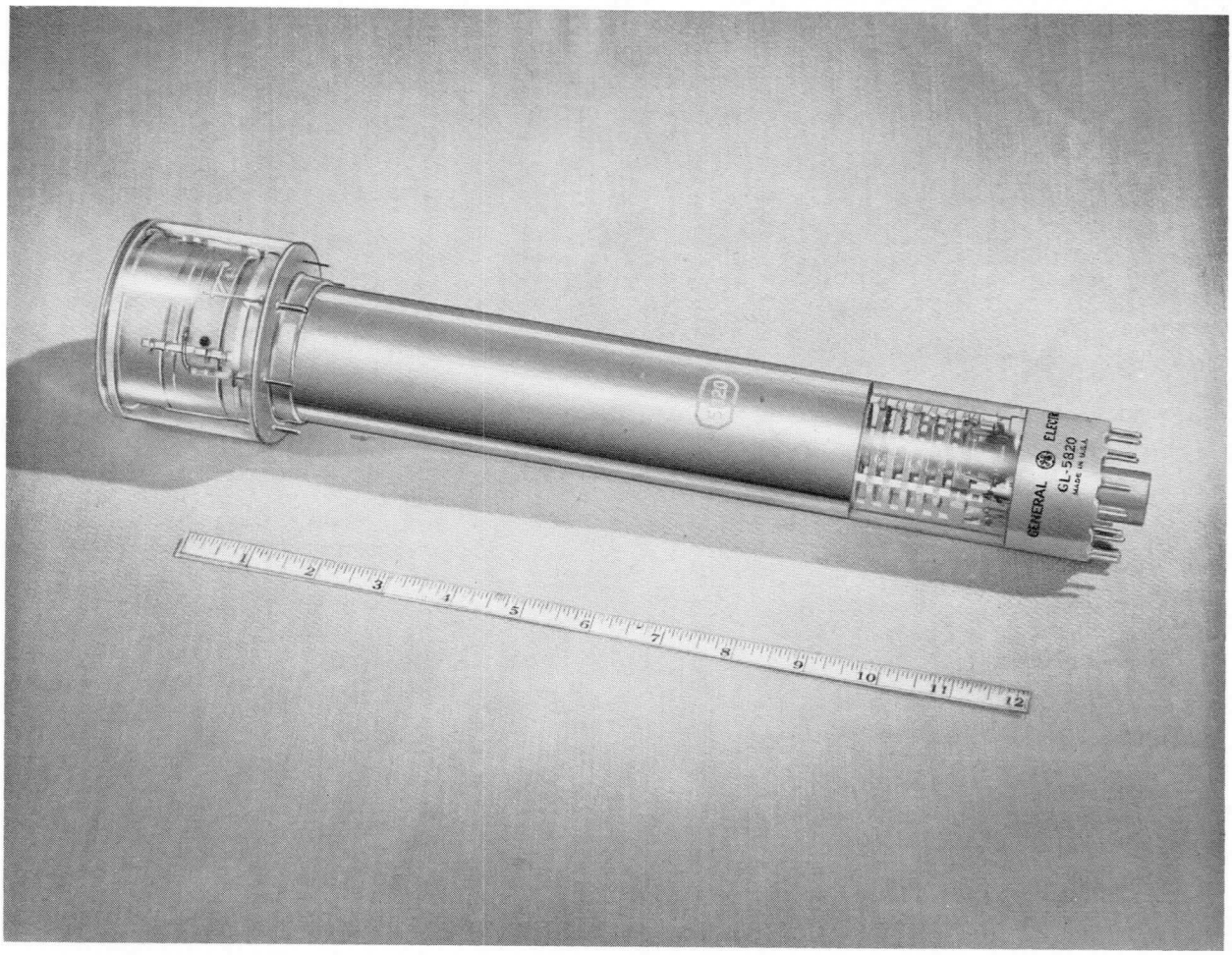

IMAGE ORTHICON

The GL-5820 is a television camera tube for outdoor and studio pickup use in which exceptionally high sensitivity is combined with a spectral response approaching that of the eye. It is very stable in performance at all incident light levels on the object ranging from bright sunlight to a deep shadow (several thousand foot-candles to one foot-candle or less). Commercially acceptable pictures can be obtained at incident light levels greater than about 10 foot-candles.

The GL-5820 has a photocathode characterized by a spectral response with high blue and high green sensitivity, very good yellow sensitivity, and good red sensitivity. It has practically no infrared sensitivity. This particular characteristic of the response permits portrayal of colors in nearly their true tonal gradation since it prevents any color-masking by infrared.

TECHNICAL INFORMATION

GENERAL

Electrical

Cathode—Unipotential		
Heater Voltage, AC or DC	6.3 ± 10%	Volts
Heater Current	0.6	Amperes
Photocathode—Semi-transparent		
Response—See curve K-69087-72A333 on page 3 for details.		
Rectangular Image, 4 by 3 aspect ratio		
Useful Size, maximum diagonal	1.6	Inches
Focusing Method—Magnetic		
Deflecting Method—Magnetic		
Direct Interelectrode Capacitance		
Anode to All Other Electrodes	12	μμf

GENERAL ELECTRIC

Supersedes ETX-259 dated 6-50

TECHNICAL INFORMATION (CONT'D)

Mechanical

Over-all Length	$15\frac{3}{16} \pm \frac{1}{4}$	Inches
Greatest Diameter of Bulb	$3 \pm \frac{1}{16}$	Inches
Minimum Deflecting Coil Inside Diameter	$2\frac{3}{8}$	Inches
Deflecting Coil Length	5	Inches
Focusing Coil Length	10	Inches
Alignment Coil Length	$\frac{15}{16}$	Inches
Photocathode Distance Inside End of Focusing Coil	$\frac{1}{2}$	Inches
Weight, approximate	1.4	Pounds

MAXIMUM RATINGS AND TYPICAL OPERATING CONDITIONS

Maximum Ratings, Absolute Values

Photocathode Voltage	−550 Max	Volts
Photocathode Illumination	50 Max	Foot-Candles
Anode Supply Voltage*	1350 Max	Volts
Grid-No. 1 Voltage		
Negative Bias Value	125 Max	Volts
Positive Bias Value	0 Max	Volts
Grid-No. 2 and Dynode-No. 1 Voltage	350 Max	Volts
Grid-No. 3 Voltage	400 Max	Volts
Grid-No. 4 Voltage	300 Max	Volts
Grid-No. 5 Voltage	150 Max	Volts
Voltage Per Multiplier Stage	350 Max	Volts
Target Voltage		
Positive Value	10 Max	Volts
Negative Value	10 Max	Volts
Peak Heater-Cathode Voltage		
Heater Negative with Respect to Cathode	125 Max	Volts
Heater Positive with Respect to Cathode	10 Max	Volts
Operating Temperature of Any Part of Bulb	50 Max	C
Operating Temperature of Bulb at Large End of Tube (Target Section)	35 Min	C
Temperature Difference		
Between Target Section and Any Part of Bulb Hotter Than Target Section	5 Max	C

Typical Operation

Photocathode Voltage (Image Focus)	−300 to −500	Volts
Grid-No. 1 Voltage for Picture Cut-off	−45 to −115	Volts
Grid-No. 2 and Dynode-No. 1 Voltage	300	Volts
Grid-No. 3 Voltage†	225 to 330	Volts
Grid-No. 4 Voltage (Beam Focus)	160 to 220	Volts
Grid-No. 5 Voltage (Decelerator)	0 to 125	Volts
Grid-No. 6 Voltage (Accelerator)		
75% of Photocathode Voltage	−225 to −375	Volts
Dynode-No. 2 Voltage	600	Volts
Dynode-No. 3 Voltage	800	Volts
Dynode-No. 4 Voltage	1000	Volts
Dynode-No. 5 Voltage	1200	Volts
Anode Voltage	1250	Volts
DC Anode Current	30	Microamperes
Target Voltage‡	0 to 3	Volts
Target Temperature Range	35 to 45	C
Ratio of Peak-to-Peak Highlight Video Signal		
Current to RMS Noise Current, approximate	35	
Minimum Peak-to-Peak Blanking Voltage	5	Volts
Field Strength at Center of Focusing Coil§	75	Gausses
Field Strength of Alignment Coil, approximate	0 to 3	Gausses

* Ratio of dynode voltages is shown under Typical Operation.
† Adjust to give the most uniformly shaded picture near maximum signal.
‡ Adjustable from −3 to +5 volts with blanking voltage off.
§ Direction of current should be such that a north-seeking pole is attracted to the image end of the focusing coil, with the indicator located outside of and at the image end of the focusing coil.

TYPICAL SIGNAL OUTPUT

SCENE: BLACK AND WHITE BALANCED
TUNGSTEN, DAYLIGHT, OR WHITE FLUORESCENT LIGHT

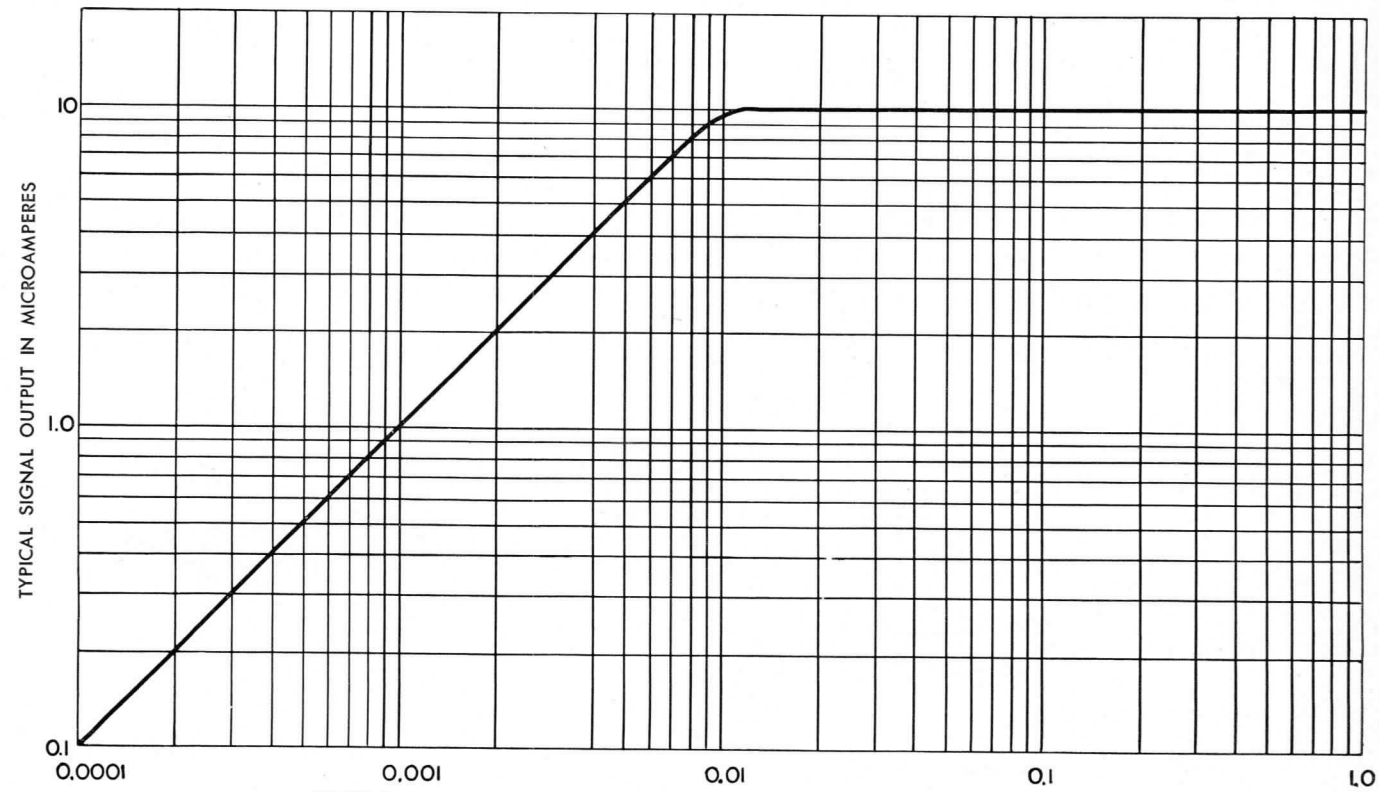

K-69037-72A334

10-14-55

SPECTRAL SENSITIVITY CHARACTERISTIC

FOR EQUAL VALUES OF RADIANT FLUX AT ALL WAVELENGTHS
(DASHED CURVE SHOWS) SPECTRAL CHARACTERISTIC OF AVERAGE HUMAN EYE

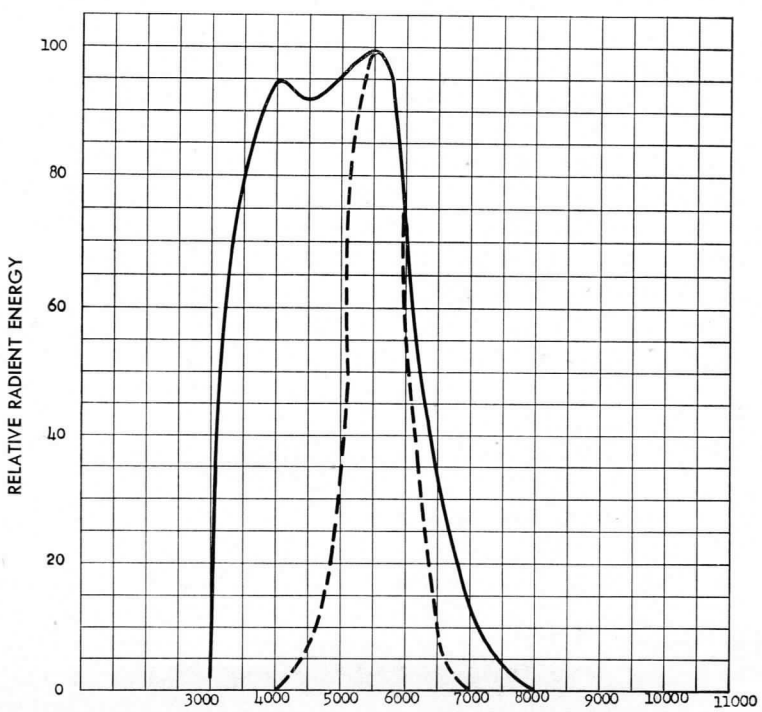

K-69087-72A333

11-17-55

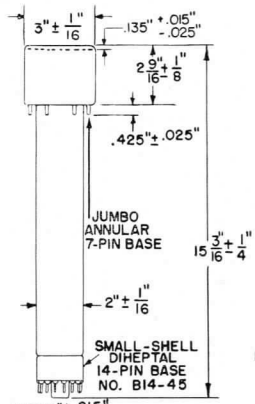

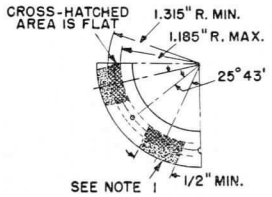

DETAIL OF BOTTOM VIEW OF JUMBO ANNULAR BASE

NOTE 1: DOTTED AREA IS FLAT OR EXTENDS TOWARD DIHEPTAL-BASE END OF TUBE BY 0.060" MAX.

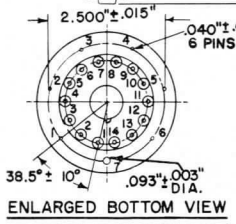

ENLARGED BOTTOM VIEW

ANNULAR BASE GAGE

ANGULAR VARIATIONS BETWEEN PINS AS WELL AS ECCENTRICITY OF NECK CYLINDER WITH RESPECT TO PHOTOCATHODE CYLINDER ARE HELD TO TOLERANCES SUCH THAT PINS AND NECK CYLINDER WILL FIT FLAT-PLATE GAGE WITH:

a. SIX HOLES HAVING DIAMETER OF 0.065" ± 0.001" AND ONE HOLE HAVING DIA. OF 0.150" ± 0.001". ALL HOLES HAVE DEPTH OF 0.265" ± 0.001". THE SIX 0.065" HOLES ARE ENLARGED BY 45° TAPER TO DEPTH OF 0.047". ALL HOLES ARE SPACED AT ANGLES OF 51° 26' ± 5' ON CIRCLE DIAMETER OF 2.500" ± 0.015".

b. SIX STOPS HAVING HEIGHT OF 0.187" ± 0.00 , CENTERED BETWEEN PIN HOLES, TO BEAR AGAINST FLAT AREAS OF BASE.

c. RIM EXTENDING OUT A MINIMUM OF 1/8" FROM 2-13/16" DIAMETER AND HAVING HEIGHT OF 0.126" ± 0.001".

d. NECK-CYLINDER CLEARANCE HOLE HAVING DIAMETER OF 2.200" ± 0.001".

DIRECTION OF LIGHT: PERPENDICULAR TO LARGE END OF TUBE

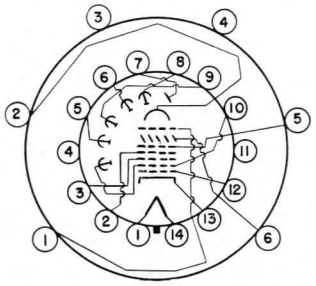

WHITE INDEX LINE ON FACE

BASING DIAGRAM

SMALL-SHELL DIHEPTAL 14-PIN BASE

PIN 1: **HEATER**
PIN 2: GRID NO. 4
PIN 3: GRID NO. 3
PIN 4: INTERNAL CONNECTION - DO NOT USE
PIN 5: DYNODE NO. 2
PIN 6: DYNODE NO. 4
PIN 7: ANODE
PIN 8: DYNODE NO. 5
PIN 9: DYNODE NO. 3
PIN 10: DYNODE NO. 1, GRID NO. 2
PIN 11: INTERNAL CONNECTION - DO NOT USE
PIN 12: GRID NO. 1
PIN 13: CATHODE
PIN 14: HEATER

KEYED JUMBO ANNULAR 7-PIN BASE

PIN 1: GRID NO. 6
PIN 2: PHOTOCATHODE
PIN 3: INTERNAL CONNECTION - DO NOT USE
PIN 4: INTERNAL CONNECTION - DO NOT USE
PIN 5: GRID NO. 5
PIN 6: TARGET
PIN 7: INTERNAL CONNECTION - DO NOT USE

TUBE DEPARTMENT
GENERAL ELECTRIC
Schenectady 5, N. Y.

PRINTED IN U.S.A.

TEMPERATURE EFFECT ON AMPLITUDE RESPONSE

TELEVISION LINE NUMBER = 300

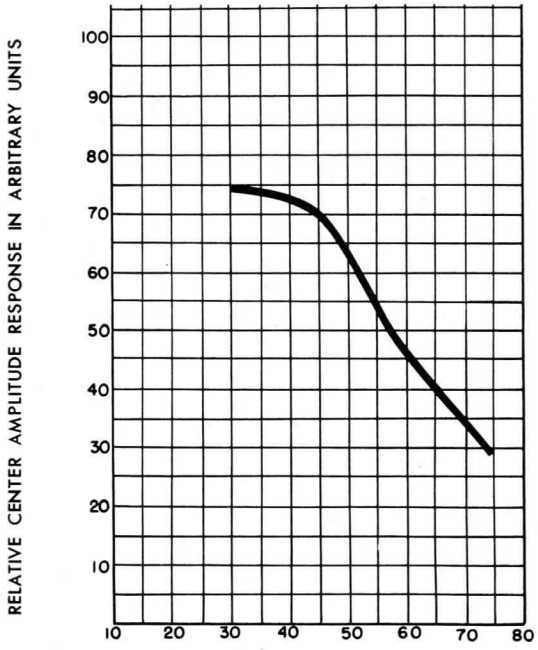

AMPLITUDE RESPONSE CHARACTERISTICS

TEST PATTERN: SQUARE WAVE

OPERATING TEMPERATURE OF BULB ADJACENT TO TARGET = 35 C
RESPONSE MEASURED IN SYSTEM HAVING 10 MC BANDWIDTH

CURVE	HIGHLIGHTS IN RELATION TO LIGHT TRANSFER CHARACTERISTIC
A	AT KNEE
B	ONE LENS STOP ABOVE KNEE

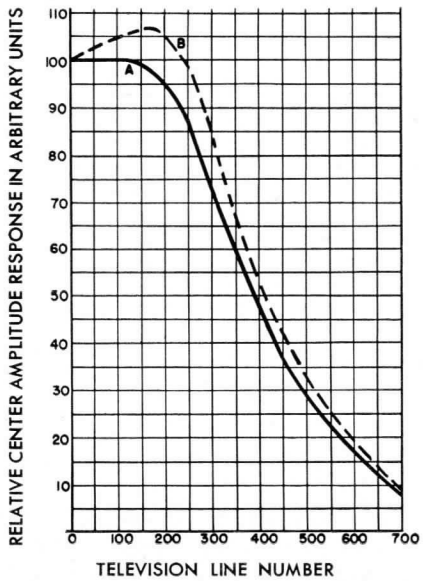

¶Supersedes pages 5 and 6 dated 12-56.

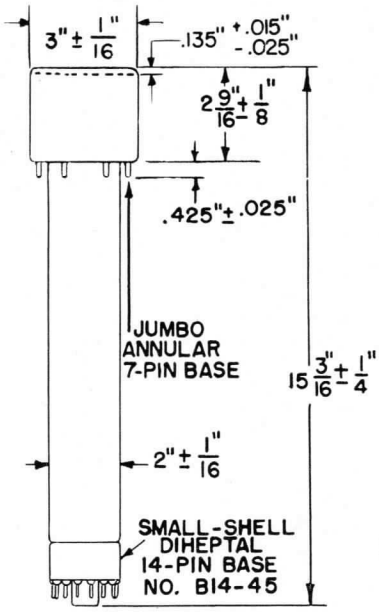

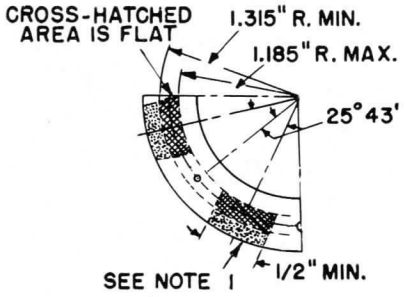

DETAIL OF BOTTOM VIEW OF JUMBO ANNULAR BASE

NOTE 1: DOTTED AREA IS FLAT OR EXTENDS TOWARD DIHEPTAL-BASE END OF TUBE BY 0.060" MAX.

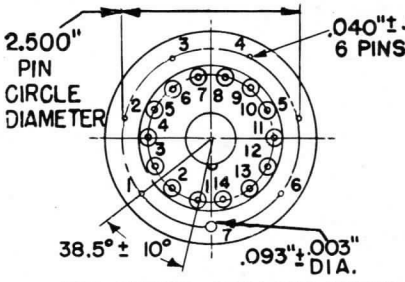

ENLARGED BOTTOM VIEW

ANNULAR BASE GAGE

ANGULAR VARIATIONS BETWEEN PINS AS WELL AS ECCENTRICITY OF NECK CYLINDER WITH RESPECT TO PHOTOCATHODE CYLINDER ARE HELD TO TOLERANCES SUCH THAT PINS AND NECK CYLINDER WILL FIT FLAT-PLATE GAGE WITH:

a. SIX HOLES HAVING DIAMETER OF 0.065" ± 0.001" AND ONE HOLE HAVING DIA. OF 0.150" ± 0.001". ALL HOLES HAVE DEPTH OF 0.265" ± 0.001". THE SIX 0.065" HOLES ARE ENLARGED BY 45° TAPER TO DEPTH OF 0.047." ALL HOLES ARE SPACED AT ANGLES OF 51°26' ± 5' ON CIRCLE DIAMETER OF 2.500" ± 0.001"

b. SIX STOPS HAVING HEIGHT OF 0.187" ± 0.001", CENTERED BETWEEN PIN HOLES, TO BEAR AGAINST FLAT AREAS OF BASE.

c. RIM EXTENDING OUT A MINIMUM OF 1/8" FROM 2-13/16" DIAMETER AND HAVING HEIGHT OF 0.126" ± 0.001".

d. NECK-CYLINDER CLEARANCE HOLE HAVING DIAMETER OF 2.200" ± 0.001".

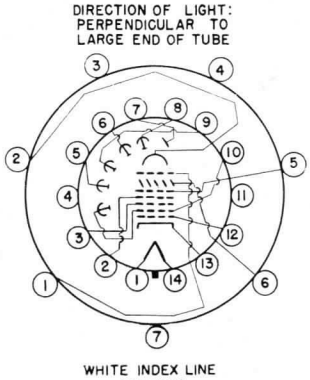

SMALL-SHELL DIHEPTAL 14-PIN BASE

PIN 1: HEATER
PIN 2: GRID NO. 4
PIN 3: GRID NO. 3
PIN 4: INTERNAL CONNECTION - DO NOT USE
PIN 5: DYNODE NO. 2
PIN 6: DYNODE NO. 4
PIN 7: ANODE
PIN 8: DYNODE NO. 5
PIN 9: DYNODE NO. 3
PIN 10: DYNODE NO. 1, GRID NO. 2
PIN 11: INTERNAL CONNECTION - DO NOT USE
PIN 12: GRID NO. 1
PIN 13: CATHODE
PIN 14: HEATER

KEYED JUMBO ANNULAR 7-PIN BASE

PIN 1: GRID NO. 6
PIN 2: PHOTOCATHODE
PIN 3: INTERNAL CONNECTION - DO NOT USE
PIN 4: INTERNAL CONNECTION - DO NOT USE
PIN 5: GRID NO. 5
PIN 6: TARGET
PIN 7: INTERNAL CONNECTION - DO NOT USE

N-15118AZ—Outline Revised

8-22-57

ELECTRONIC COMPONENTS DIVISION

GENERAL ELECTRIC

Schenectady 5, N. Y.

PRINTED IN U.S.A.

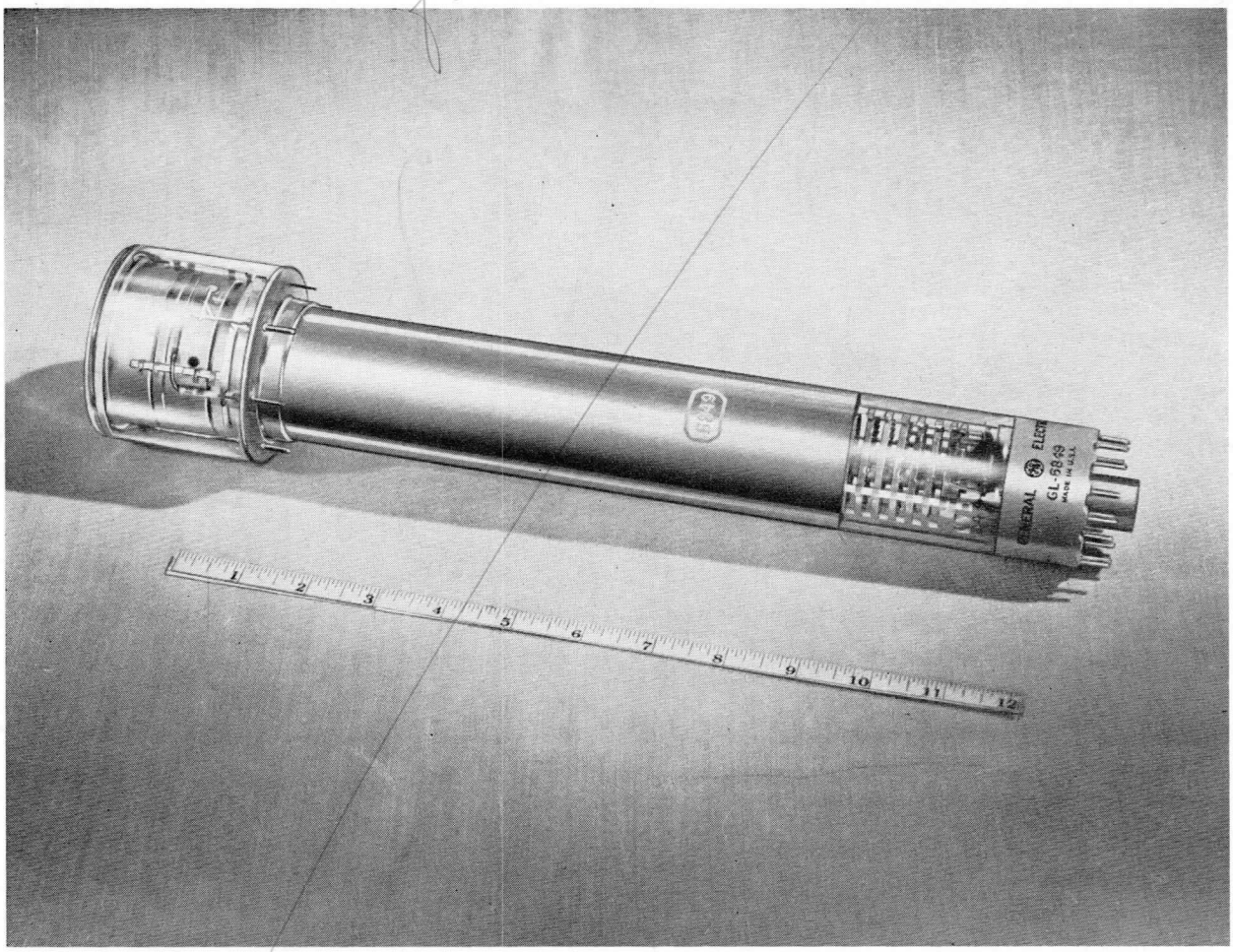

IMAGE ORTHICON

MAGNETIC FOCUS **MAGNETIC DEFLECTION**

LOW-LIGHT-LEVEL PICKUP

The GL-6849 is a television camera tube for extremely low-light-level pickup use. Typical applications are observation of fluoroscopic screens, scenes illuminated by starlight and direct images of stars.

Extremely wide target-to-mesh spacing reduces smearing or lag of moving images at low light levels by better beam modulation. This results in an increase in signal-to-noise ratio at low illumination levels. Wide spacing eliminates microphonics originating in the target-mesh assembly.

The GL-6849 photocathode is characterized by a spectral response with high blue and high green sensitivity, very good yellow sensitivity and good red sensitivity. It has practically no infra-red sensitivity. This characteristic of the response permits portrayal of colors in nearly their true tonal gradation since it prevents any color-masking by infra-red.

TECHNICAL INFORMATION

GENERAL

Electrical

Cathode—Unipotential		
Heater Voltage, AC or DC	$6.3 \pm 10\%$	Volts
Heater Current	0.6	Amperes
Photocathode—Semi-transparent		
Response—See spectral sensitivity curve on page 3 for details.		
Rectangular Image, 4 by 3 aspect ratio		
Useful Size, maximum diagonal	1.8	Inches
Orientation—Proper orientation is obtained when the vertical scan is essentially parallel to the plane passing through the center of the faceplate and pin No. 7 of the shoulder base.		
Focusing Method—Magnetic		
Deflecting Method—Magnetic		
Direct Interelectrode Capacitance		
Anode to All Other Electrodes	12	$\mu\mu$f

TECHNICAL INFORMATION (CONT'D)

Mechanical

Over-all Length	15.20″ ± 0.25″	Inches
Greatest Diameter of Bulb	3.00″ ± 0.06″	Inches
Minimum Deflecting Coil Inside Diameter	2⅜	Inches
Deflecting Coil Length	5	Inches
Focusing Coil Length	10	Inches
Alignment Coil Length	15/16	Inches
Photocathode Distance Inside End of Focusing Coil	½	Inches
Weight, approximate	1.4	Pounds

Operating Position—Any, except with diheptal base up and the tube axis at an angle of less than 20 degrees from vertical.

MAXIMUM RATINGS AND TYPICAL OPERATING CONDITIONS

Maximum Ratings, Absolute Values

Photocathode Voltage	−550 Max	Volts
Photocathode Illumination	50 Max	Foot-Candles
Anode Supply Voltage*	1350 Max	Volts
Grid-No. 1 Voltage		
Negative Bias Value	125 Max	Volts
Positive Bias Value	0 Max	Volts
Grid-No. 2 and Dynode-No. 1 Voltage	350 Max	Volts
Grid-No. 3 Voltage	400 Max	Volts
Grid-No. 4 Voltage	300 Max	Volts
Grid-No. 5 Voltage	150 Max	Volts
Grid-No. 6 Voltage	−550 Max	Volts
Voltage Per Multiplier Stage	350 Max	Volts
Target Voltage		
Positive Value	10 Max	Volts
Negative Value	10 Max	Volts
Peak Heater-Cathode Voltage		
Heater Negative with Respect to Cathode	125 Max	Volts
Heater Positive with Respect to Cathode	10 Max	Volts
Operating Temperature of Any Part of Bulb	50 Max	C
Operating Temperature of Bulb at Large End of Tube, target section	35 Min	C
Temperature Difference		
Between Target Section and Any Part of Bulb Hotter Than Target Section	5 Max	C

Typical Operation

Photocathode Voltage, image focus	−400 to −540	Volts
Grid-No. 1 Voltage for Picture Cut-off, beam	−45 to −115	Volts
Grid-No. 2 and Dynode-No. 1 Voltage	300	Volts
Grid-No. 3 Voltage†, multiplier focus	225 to 330	Volts
Grid-No. 4 Voltage, beam focus	140 to 180	Volts
Grid-No. 5 Voltage, decelerator	0 to 125	Volts
Grid-No. 6 Voltage, accelerator		
75 Percent of Photocathode Voltage, approximate	−300 to −405	Volts
Dynode-No. 2 Voltage	600	Volts
Dynode-No. 3 Voltage	800	Volts
Dynode-No. 4 Voltage	1000	Volts
Dynode-No. 5 Voltage	1200	Volts
Anode Voltage	1250	Volts
DC Anode Current	3	Microamperes
Signal Output Current, peak to peak	0.01 to 5	Microamperes
Target Voltage‡		
Target Cutoff Voltage‡	−3 to +1	Volts
Blanking Voltage, peak to peak	5 to 20	Volts
Target Temperature Range	35 to 45	C
Ratio of Peak-to-Peak Highlight Video Signal		
Current to RMS Noise Current, approximate	35	
Minimum Peak-to-Peak Blanking Voltage	5	Volts
Field Strength at Center of Focusing Coil§	75	Gausses
Field Strength of Alignment Coil, approximate	0 to 3	Gausses

* Ratio of dynode voltages is shown under Typical Operation.
† Adjust to give the most uniformly shaded picture near maximum signal.
‡ Adjustable from −3 to +5 volts with blanking voltage off. Normal setting of target voltage is +2 volts from target cutoff.
§ Direction of current should be such that a north-seeking pole is attracted to the image end of the focusing coil, with the indicator located outside of and at the image end of the focusing coil.
⊕Denotes a change.
□Denotes an addition.

SPECTRAL SENSITIVITY CHARACTERISTIC

FOR EQUAL VALUES OF RADIANT FLUX AT ALL WAVELENGTHS

DASHED CURVE SHOWS SPECTRAL CHARACTERISTIC OF AVERAGE HUMAN EYE

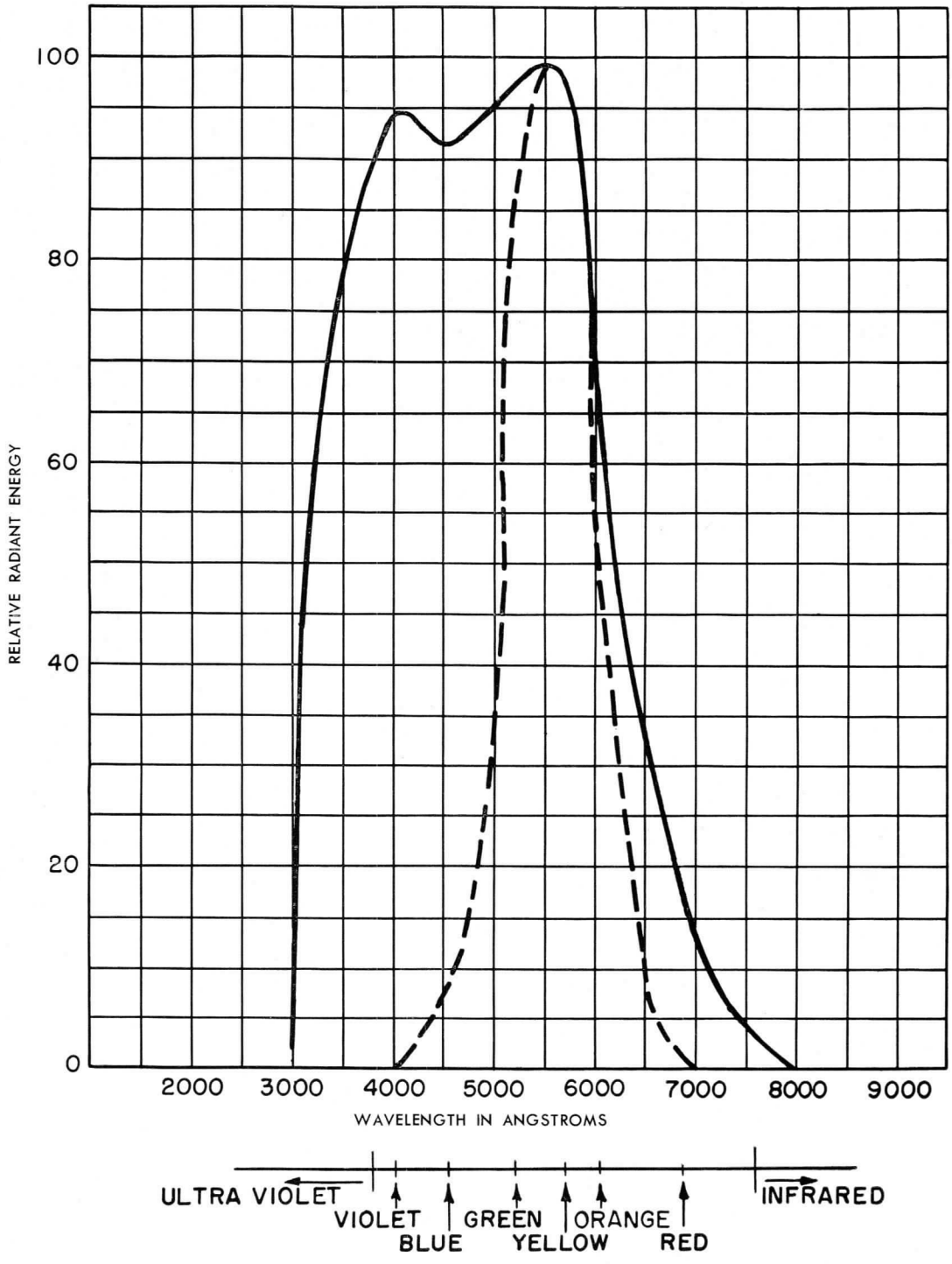

TYPICAL SIGNAL OUTPUT

SCENE: BLACK AND WHITE BALANCED
TUNGSTEN, DAYLIGHT, OR WHITE FLUORESCENT LIGHT

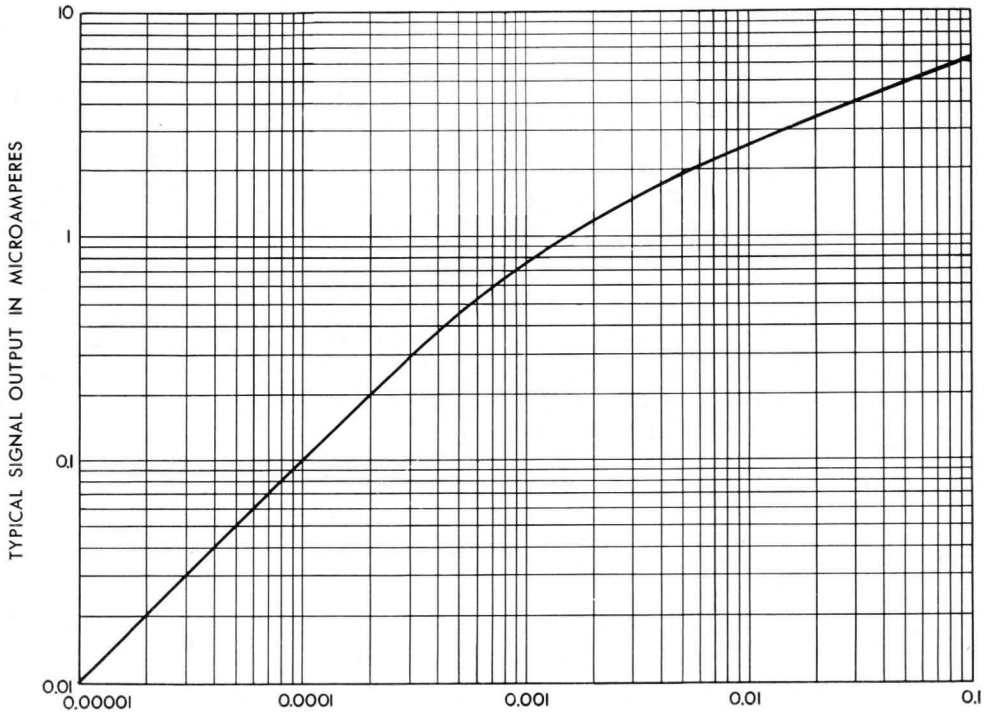

K-69087-262A12

4-3-57

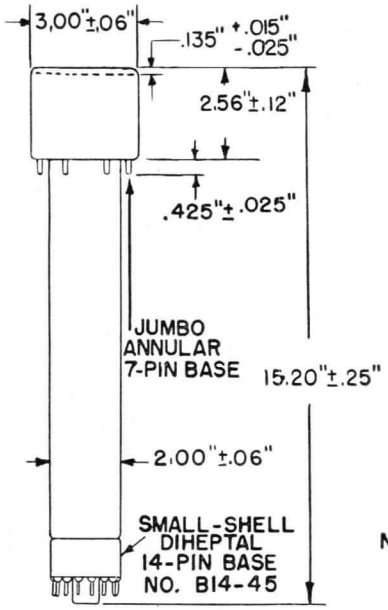

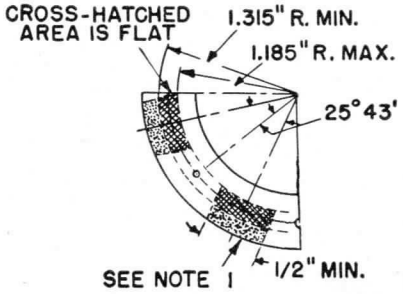

DETAIL OF BOTTOM VIEW OF JUMBO ANNULAR BASE

NOTE 1: DOTTED AREA IS FLAT OR EXTENDS TOWARD DIHEPTAL-BASE END OF TUBE BY 0.060" MAX.

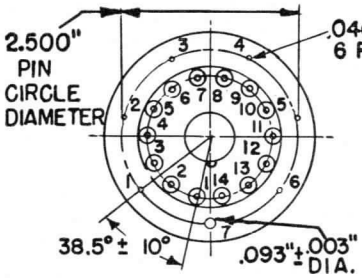

ENLARGED BOTTOM VIEW

ANNULAR BASE GAGE

ANGULAR VARIATIONS BETWEEN PINS AS WELL AS ECCENTRICITY OF NECK CYLINDER WITH RESPECT TO PHOTOCATHODE CYLINDER ARE HELD TO TOLERANCES SUCH THAT PINS AND NECK CYLINDER WILL FIT FLAT-PLATE GAGE WITH:

a. SIX HOLES HAVING DIAMETER OF 0.065"± 0.001" AND ONE HOLE HAVING DIA. OF 0.150"±0.001". ALL HOLES HAVE DEPTH OF 0.265"±0.001". THE SIX 0.065" HOLES ARE ENLARGED BY 45° TAPER TO DEPTH OF 0.047." ALL HOLES ARE SPACED AT ANGLES OF 51°26' ±5' ON CIRCLE DIAMETER OF 2.500"± 0.001"

b. SEVEN STOPS HAVING HEIGHT OF 0.187"± 0.001", CENTERED BETWEEN PIN HOLES, TO BEAR AGAINST FLAT AREAS OF BASE.

c. RIM EXTENDING OUT A MINIMUM OF 0.125" FROM 2.812" DIAMETER AND HAVING HEIGHT OF 0.126"± 0.001".

d. NECK-CYLINDER CLEARANCE HOLE HAVING DIAMETER OF 2.200"± 0.001."

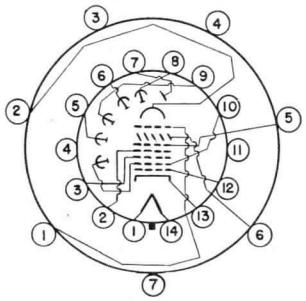

BASING DIAGRAM

SMALL-SHELL DIHEPTAL 14-PIN BASE

PIN 1: HEATER
PIN 2: GRID NO.4
PIN 3: GRID NO.3
PIN 4: INTERNAL CONNECTION-DO NOT USE
PIN 5: DYNODE NO. 2
PIN 6: DYNODE NO.4
PIN 7: ANODE
PIN 8: DYNODE NO. 5
PIN 9: DYNODE NO. 3
PIN 10: DYNODE NO.1, GRID NO. 2
PIN 11: INTERNAL CONNECTION-DO NOT USE
PIN 12: GRID NO.1
PIN 13: CATHODE
PIN 14: HEATER

KEYED JUMBO ANNULAR 7-PIN BASE

PIN 1: GRID NO.6
PIN 2: PHOTOCATHODE
PIN 3: INTERNAL CONNECTION-DO NOT USE
PIN 4: INTERNAL CONNECTION-DO NOT USE
PIN 5: GRID NO.5
PIN 6: TARGET
PIN 7: INTERNAL CONNECTION-DO NOT USE

ELECTRONIC COMPONENTS DIVISION

GENERAL ELECTRIC

Schenectady 5, N. Y.

PRINTED IN U.S.A.

GL-7293
IMAGE ORTHICON

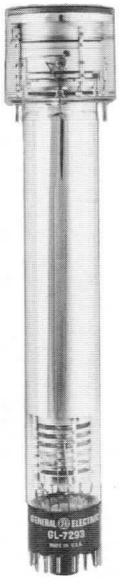

FIELD-MESH **MAGNETIC FOCUS AND DEFLECTION**

The GL-7293 is a television camera tube for both outdoor and studio pickup service.

The tube features a field mesh in the scanning section which minimizes landing and shading errors, prevents geometric distortion, provides sharp transition from black to white without spurious effect, and improves corner resolution.

A suppressor grid assures excellent signal-to-noise ratio by preventing field-mesh secondary electrons from entering the electron multiplier and reducing beam modulation.

A photocathode with a spectral response close to that of the eye permits portrayal of scenes in nearly their true tonal graduation.

In operation alignment is performed with the lens open on a chart or scene since dynode apertures are not visible with the lens capped.

The GL-7293 is interchangeable with the 5820. The field-mesh feature, however, results in improved performance.

Electrical

Cathode—Unipotential		
Heater Voltage, AC or DC	6.3 ±10%	Volts
Heater Current	0.6	Amperes
Photocathode—Semi-transparent		
Response—S-10		
Rectangular Image, 4 by 3 aspect ratio		
Useful Size, maximum diagonal	1.8	Inches
Orientation—Proper orientation is obtained when the vertical scan is essentially parallel to the plane passing through the center of the faceplate and pin No. 7 of the shoulder base.		
Focusing Method—Magnetic		
Deflecting Method—Magnetic		
Direct Interelectrode Capacitance		
Anode to all other Electrodes	12	μμf

Mechanical

Over-all Length	15.20 ±0.25	Inches
Greatest Diameter of Bulb	3.00 ±0.06	Inches
Minimum Deflecting-Coil Inside Diameter	2⅜	Inches
Deflecting-Coil Length	5	Inches
Focusing-Coil Length	10	Inches
Alignment-Coil Length	15/16	Inches
Photocathode Distance Inside End of Focusing Coil	½	Inche
Weight, approximate	1.4	Pounds

Operating Position—Any, except with diheptal base up and the tube axis at an angle of less than 20 degrees from vertical.

MAXIMUM RATINGS—ABSOLUTE VALUES

Photocathode Voltage	−550 Max	Volts
Photocathode Illumination	50 Max	Foot-Candles
Anode Supply Voltage*	1350 Max	Volts
Grid-No. 1 Voltage		
Negative-Bias Value	125 Max	Volts
Positive-Bias Value	0 Max	Volts
Grid-No. 2 and Dynode-No. 1 Voltage	350 Max	Volts
Grid-No. 3 Voltage	400 Max	Volts
Grid-No. 4 Voltage	300 Max	Volts
Grid-No. 5 Voltage	150 Max	Volts
Grid-No. 6 Voltage	−550 Max	Volts
Voltage Per Multiplier Stage	350 Max	Volts
Target Voltage		
Positive Value	10 Max	Volts
Negative Value	10 Max	Volts
Peak Heater-Cathode Voltage		
Heater Negative with Respect to Cathode	125 Max	Volts
Heater Positive with Respect to Cathode	10 Max	Volts
Operating Temperature of Any Part of Bulb	50 Max	C
Operating Temperature of Bulb at Large End of Tube, target section	35 Min	C
Temperature Difference Between Target Section and Any Part of Bulb Hotter than Target Section	5 Max	C

TYPICAL OPERATION

Photocathode Voltage, image focus	−400 to −540	Volts
Grid-No. 1 Voltage for Picture Cutoff, beam	−45 to −115	Volts
Grid-No. 2 and Dynode-No. 1 Voltage	300	Volts
Grid-No. 3 Voltage†, multiplier focus	225 to 330	Volts
Grid-No. 4 Voltage, beam focus	140 to 180	Volts
Grid-No. 5 Voltage, decelerator	0 to 125	Volts
Grid-No. 6 Voltage, accelerator— 75 Percent of Photocathode Voltage, approximate	−300 to −405	Volts
Dynode-No. 2 Voltage	600	Volts
Dynode-No. 3 Voltage	800	Volts
Dynode-No. 4 Voltage	1000	Volts
Dynode-No. 5 Voltage	1200	Volts
Anode Voltage	1250	Volts
DC Anode Current	30	Microamperes
Signal Output Current, peak-to-peak	3 to 24	Microamperes
Target Voltage‡		
Target Cutoff Voltage‡	−3 to +1	Volts
Target Temperature Range	35 to 45	C
Ratio of Peak-to-Peak Highlight Video Signal Current to RMS Noise Current, approximate	35	
Minimum Peak-to-Peak Blanking Voltage	5	Volts
Field Strength at Center of Focusing Coil§	75	Gausses
Field Strength of Alignment Coil△, approximate	0 to 3	Gausses

* Ratio of dynode voltages is shown under Typical Operation.
† Adjust to give maximum signal.
‡ Adjustable from −3 to +5 volts with blanking voltage off. Normal setting of target voltage is +2 volts from target cutoff.
§ Direction of current should be such that a north-seeking pole is attracted to the image end of the focusing coil, with the indicator located outside of and at the image end of the focusing coil.
△ Adjusted to produce flattest field with maximum response. Alignment is correct when the center of the picture merely goes through focus and does not rotate when beam focus (Grid-No. 4) is varied.

SPECTRAL-SENSITIVITY CHARACTERISTIC—S10 RESPONSE
For Equal Values of Radiant Flux at All Wavelengths

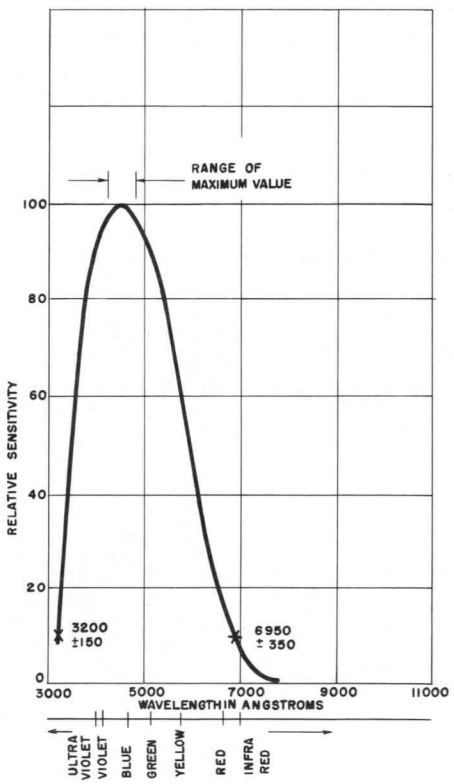

"X"- POINTS REPRESENT 10 PERCENT OF MAXIMUM RESPONSE.

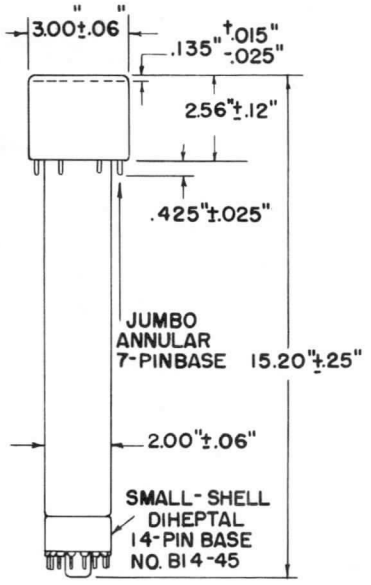

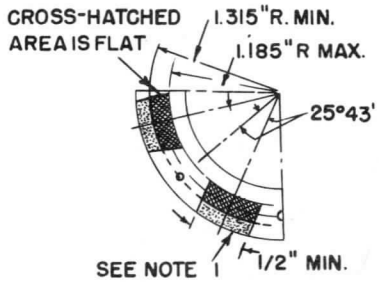

DETAIL OF BOTTOM VIEW OF JUMBO ANNULAR BASE

NOTE 1: DOTTED AREA IS FLAT OR EXTENDS TOWARD DIHEPTAL-BASE END OF TUBE BY 0.060" MAX.

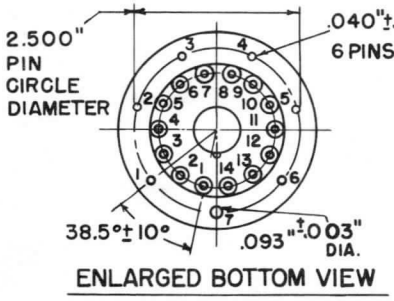

ENLARGED BOTTOM VIEW

ANNULAR BASE GAGE

ANGULAR VARIATIONS BETWEEN PINS AS WELL AS ECCENTRICITY OF NECK CYLINDER WITH RESPECT TO PHOTOCATHODE CYLINDER ARE HELD TO TOLERANCES SUCH THAT PINS AND NECK CYLINDER WILL FIT FLAT-PLATE GAGE WITH:

a. SIX HOLES HAVING DIAMETER OF 0.065"± .0.001" AND ONE HOLE HAVING DIA. OF 0.150±0.001". ALL HOLES HAVE DEPTH OF 0.265"±0.001". THE SIX 0.065" HOLES ARE ENLARGED BY 45° TAPER TO DEPTH OF 0.047." ALL HOLES ARE SPACED AT ANGLES OF 51°26'±5' ON CIRCLE DIAMETER OF 2.500"± 0.001"

b. SEVEN STOPS HAVING HEIGHT OF 0.187"± 0.001", CENTERED BETWEEN PIN HOLES, TO BEAR AGAINST FLAT AREAS OF BASE.

c. RIM EXTENDING OUT OF A MINIMUM OF 0.125" FROM 2.812" DIAMETER AND HAVING HEIGHT OF 0.126 "±0.001".

d. NECK-CYLINDER CLEARANCE HOLE HAVING DIAMETER OF 2.200"± 0.001"

DIRECTION OF LIGHT: PERPENDICULAR TO LARGE END OF TUBE

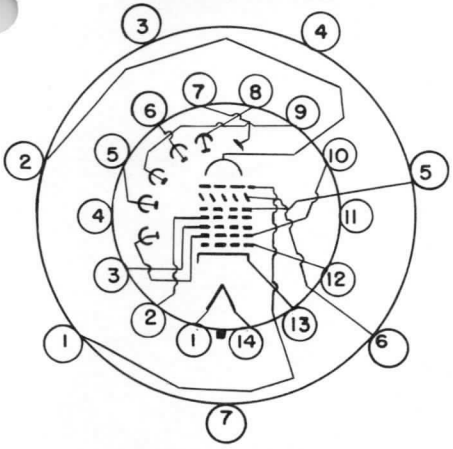

WHITE INDEX LINE ON FACE

BASING DIAGRAM

SMALL-SHELL DIHEPTAL 14-PIN BASE

PIN 1: HEATER
PIN 2: GRID NO. 4
PIN 3: GRID NO. 3
PIN 4: INTERNAL CONNECTION-DO NOT USE
PIN 5: DYNODE NO. 2
PIN 6: DYNODE NO. 4
PIN 7: ANODE
PIN 8: DYNODE NO. 5
PIN 9: DYNODE NO. 3
PIN 10: DYNODE NO. 1, GRID NO. 2
PIN 11: INTERNAL CONNECTION DO NOT USE
PIN 12: GRID NO. 1
PIN 13: CATHODE
PIN 14: HEATER

KEYED JUMBO ANNULAR 7-PIN BASE

PIN 1: GRID NO. 6
PIN 2: PHOTOCATHODE
PIN 3: INTERNAL CONNECTION-DO NOT USE
PIN 4: INTERNAL CONNECTION DO NOT USE
PIN 5: GRID NO. 5
PIN 6: TARGET
PIN 7: INTERNAL CONNECTION DO NOT USE

ELECTRONIC COMPONENTS DIVISION

GENERAL ELECTRIC

Schenectady 5, N. Y.

GL-7409, GL-7538

IMAGE ORTHICONS

FOCUS-MAGNETIC **DEFLECTION-MAGNETIC**

These low-light-level image orthicons are designed to meet a wide variety of requirements for industrial, military, and scientific applications. They provide an effective low-light-level sensitivity of 4×10^{-7} foot-candles photocathode illumination for resolution of 100 television lines per target-inch. The GL-7538 is designed for normal environmental operation. The 7409 is a ruggedized version especially designed to operate under severe shock and vibration conditions.

Both tubes feature a high-gain, thin-film magnesium-oxide target with a sensitivity ten to twenty times that of glass targets. The extreme thinness and the anisotropic property of this semiconductor target virtually eliminates lateral leakage and increases the resolution 25 to 50 percent over that of standard glass targets. Since operation of the target depends on electron conduction, which is not a depletion process, rather than on ion conduction, permanent stickiness and burn-in are virtually eliminated. Low gamma permits a very wide operating range.

These and other features of these image orthicons assure long life and reliable operation of the 7538 in such applications as surveillance, satellite tracking, and detection. The 7409 is particularly useful in tank fire control, drone guidance, missile-borne systems, and ground vehicle systems operating over rough terrain.

Electrical

Cathode—Unipotential		
Heater		
Voltage, AC or DC	6.3 ± 10%	Volts
Current	0.6	Amperes
Photocathode—Semi-Transparent		
Spectral Response—S-10		
Rectangular Image, 4 by 3 aspect ratio		
Useful Size, maximum diagonal	1.8	Inches
Orientation—Proper orientation is obtained when the vertical scan is essentially parallel to the plane passing through the center of the faceplate and pin No. 7 of the shoulder base.		
Focusing Method—Magnetic		
Deflection Method—Magnetic		
Direct Interelectrode Capacitance		
Anode to all other Electrodes	12	$\mu\mu$f

Mechanical

Over-all Length	15.20 ± 0.25	Inches
Greatest Bulb Diameter	3.00 ± 0.06	Inches
Deflecting Coil		
Length	5	Inches
Minimum Inside Diameter	$2\frac{3}{8}$	Inches
Focusing-Coil Length	10	Inches
Alignment-Coil Length	$\frac{15}{16}$	Inches
Photocathode Distance Inside End of Focusing Coil	$\frac{1}{2}$	Inches
Weight, approximate		
GL-7409	1.4	Pounds
GL-7538	0.8	Pounds
Operating Position—Any, except with diheptal base up and tube axis at an angle of less than 20 degrees from vertical.		

Thermal

Operating Temperature at any Part of Bulb, maximum	70	C
Operating Temperature of Bulb at Large End of Tube, Target Section, minimum	0	C
Temperature Difference Between Target Section and any Part of Bulb Hotter than Target Section	7.5	C

MAXIMUM RATINGS—ABSOLUTE VALUES

Photocathode		
Voltage	−600	Volts
Illumination	50	Foot-candles
Anode Supply Voltage*	1850	Volts
Grid-No. 1 Voltage		
Negative Bias Value	135	Volts
Positive Bias Value	0	Volts
Grid-No. 2 and Dynode-No. 1 Voltage	380	Volts
Grid-No. 3 Voltage	400	Volts
Grid-No. 4 Voltage	300	Volts
Grid-No. 5 Voltage	150	Volts
Grid-No. 6 Voltage	−600	Volts
Dynode-No. 2 to Dynode-No. 1 Voltage	350	Volts
Dynode-No. 3 to Dynode-No. 2 Voltage	350	Volts
Dynode-No. 4 to Dynode-No. 3 Voltage	680	Volts
Dynode-No. 5 to Dynode-No. 4 Voltage	350	Volts
Anode to Dynode-No. 5 Voltage	100	Volts
Voltage per Multiplier Stage	400	Volts
Target Voltage		
Above Target Cutoff, positive direction	10	Volts
Negative	10	Volts
Peak Heater-Cathode Voltage		
Heater Negative with Respect to Cathode	125	Volts
Heater Positive with Respect to Cathode	10	Volts

* Ratio of dynode voltages appears under Typical Operation.

TYPICAL OPERATION—AVERAGE VALUES

	Normal Performance†	Maximum Sensitivity Performance‡	
Photocathode Voltage, image focus	−400 to −540	−400 to −550	Volts
Grid-No. 1 Voltage for Picture Cutoff, Beam	−45 to −115	−45 to −115	Volts
Photocathode Illumination—See Page 5			
Scene Illumination—See Page 5			
Grid-No. 2 and Dynode-No. 1 Voltage	300	370	Volts
Grid-No. 3 Voltage, multiplier focus§	225–330	225–380	Volts
Grid-No. 4 Voltage, beam focus	140–180	140–250	Volts
Grid-No. 5 Voltage, decelerator	0–125	0–125	Volts
Grid-No. 6 Voltage, accelerator—75 percent of photocathode voltage, approximate	−300 to −405	−300 to −465‖	Volts
Dynode-No. 2 Voltage	600	770	Volts
Dynode-No. 3 Voltage	910	1080	Volts
Dynode-No. 4 Voltage	1200	1360	Volts
Dynode-No. 5 Voltage	1490	1610	Volts
Anode Voltage	1550	1700	Volts
DC Anode Current, maximum	30	30	Microamperes
Signal Output Current, peak-to-peak—See Light-Transfer Characteristic			
Target Cutoff Voltage¶	−3 to +1	−3 to +1	Volts
Target Temperature Range	15–55	15–55	C
Peak-to-Peak Blanking Voltage	5–20	5–20	Volts
Field Strength at Center of Focusing Coil**	75	75	Gausses
Field Strength of Alignment Coil, approximate#	0–3	0–3	Gausses

† Although these tubes will operate in standard equipment, modification to permit operation at these values will improve effective sensitivity for most applications.

‡ These values will permit the best low-light-level-sensitivity capability of the tube to be realized and will assure the maximum useful multiplier gain required in extreme low-light-level applications. The resolution sensitivity information in this data sheet was derived with these higher multiplier voltages.

§ Adjust to give the most uniformly shaded picture near maximum signal.

‖ 75 to 85 percent of photocathode voltage.

¶ The target supply voltage should be adjustable from −3 to +5 volts with blanking voltage off. Maximum target voltage is +10 volts above target cutoff. Recommended target voltage is +2 volts above cutoff. Slight readjustment, usually only a small fraction of a volt, may be necessary to minimize microphonics.

**Direction of current should be such that a north-seeking pole is attracted to the image end of the focusing coil, with the indicator located outside of and at the image end of the focusing coil.

Adjust to produce flattest field with maximum response. Alignment is correct when the center of the picture merely goes through focus and does not rotate when beam focus (Grid No. 4) is varied. For most commercial focus coils a 75-gauss field results from a focus-coil current of 75 milliamperes.

GL-7409

ENVIRONMENTAL

Shock: Per specification MIL-E-5272C (ASG) Paragraph 4.15.5 except:

A 12 impact shocks of 30g

B The shock shall be applied in the following directions:
1—Vertically perpendicular to longitudinal axis, 3 shocks in each direction.
2—Parallel to the minor horizontal axis, 3 shocks in each direction.

C The shock pulse width is defined by the use of a 0.2 to 250-cycle-per-second filter.

Vibration: (10g) Per MIL-E-5272C (ASG) Paragraph 4.7.12 Procedure XII except at operating temperature only. Center horizontal resolution at 3 x 10^{-5} maximum foot-candles, photocathode illumination will be at least 350 lines (EIA) with 5g applied acceleration in the frequency range from 50 to 500 cycles per second and a double amplitude of 0.036 inch from 5 to 50 cycles per second. Picture resolution of 350 TV lines (EIA) is defined as readable through any interference that may occur.

Humidity: Per MIL-E-5272C (ASG) Paragraph 4.4.1 Procedure 1. Following this test, the interelectrode insulation of the end pins 5, 6, 7, 8, 9, and 10 each with respect to all other end base pins grounded and with 350 volts (minimum) applied is greater than 500 ohms.

Acceleration: (70g) Constant acceleration when applied perpendicular to the longitudinal axis of the tube for 10 minutes.

OPERATING NOTES

Some magnesium-oxide targets may be damaged permanently if directly and intermittently exposed, while in operation, to extremely bright sources which cause high photoelectron densities to occur at the target. Such sources include the sun, photoflash lamps, and exploding wire flashes. Damage, if it does occur, takes the form of black image spots burned in the target by the intense light.

In most cases an 80-megohm, ¼-watt resistor in series with the photocathode in the camera will protect the tube. This resistor will not interfere with normal operation of these or other image orthicons which may be used in the modified camera.

If these or similar bright sources are to be observed continuously, appropriate exposure control of photocathode illumination can be supplied by neutral-density filters.

SPECIFIC PARAMETERS ON RECORDED DATA

All curves except spectral-sensitivity characteristics were recorded under the following conditions:

Camera Chain: General Electric TE-5 (modified)
Amplifier bandwidth—total 20 mc, flat to 6 mc

Resolution Chart: National Bureau of Standards Lens Test Chart, 100% contrast transparency.

Window Chart: 100% contrast, 1% area window for signal-noise and transfer characteristic data.

Light Source: 2870^0 Kelvin—tungsten

Light Level: Aperture and neutral density controlled (within specially constructed low-light-level box) to provide range from 10^{-8} to 10^{-2} foot-candles illumination on photocathode. For corresponding scene brightness in foot-lamberts when using Leitz f/1.5 lens (85 mm), multiply photocathode illumination in foot-candles by 12.

Operating Temperature for Image End: 25 to 30 C.

Target Raster: Target diameter is 1.40 inches. For corners of scanning raster just touching target edge raster dimensions are:

Aspect Ratio	Horizontal	Vertical
1 x 1 (square)	0.99″	0.99″
4 x 3 (standard)	1.12″	0.84″

Horizontal TV lines = 1.12 x TV lines per target inch

Vertical TV lines (EIA) = 0.84 x TV lines per target inch

Resolution sensitivity data is recorded in TV lines per target inch

Therefore, 700 TV lines per target inch = 784 horizontal lines
= 588 vertical lines (EIA)

LIGHT TRANSFER CHARACTERISTICS

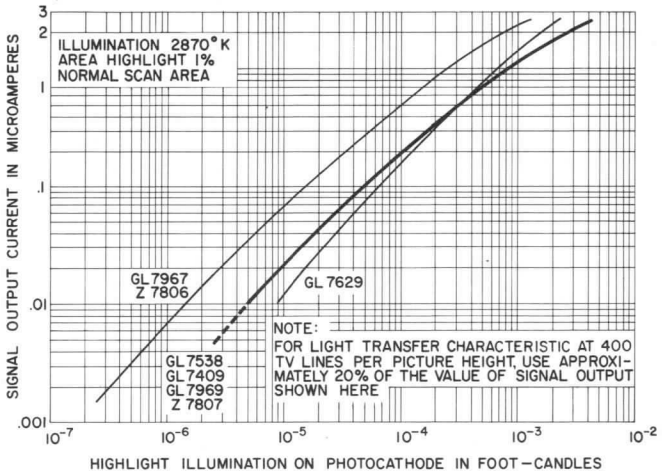

TYPICAL SIGNAL: NOISE CHARACTERISTICS VS. BANDWIDTH AND ILLUMINATION

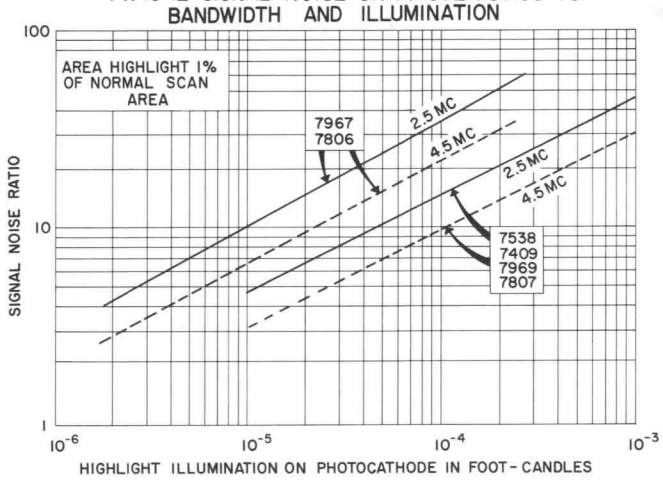

INTEGRATION EFFECT ON RESOLUTION SENSITIVITY

TYPES 7538 7409 7969 7807

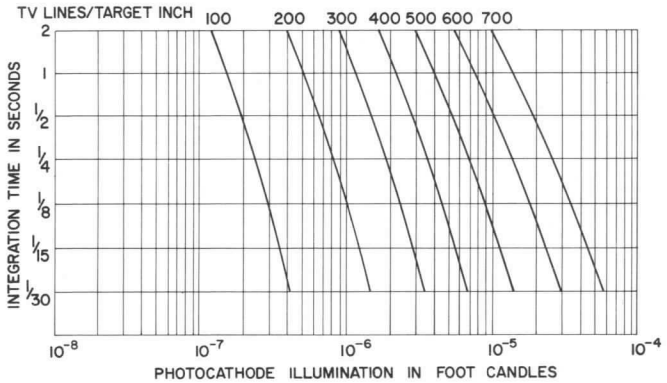

EFFECT OF CONTRAST RATIO ON RESOLUTION SENSITIVITY

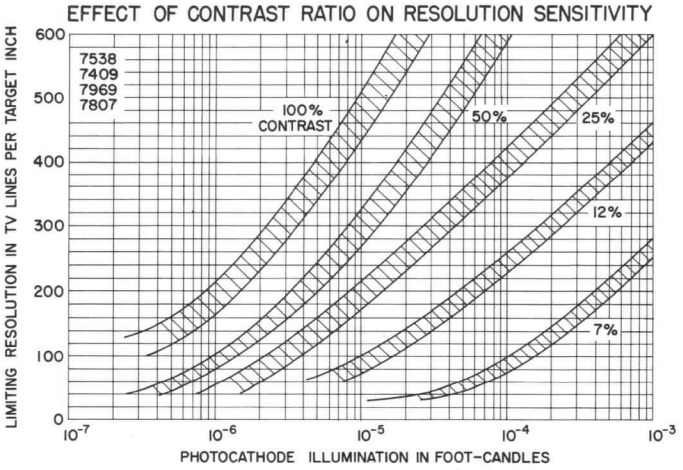

PHOTOCATHODE SPECTRAL RESPONSE CHARACTERISTICS

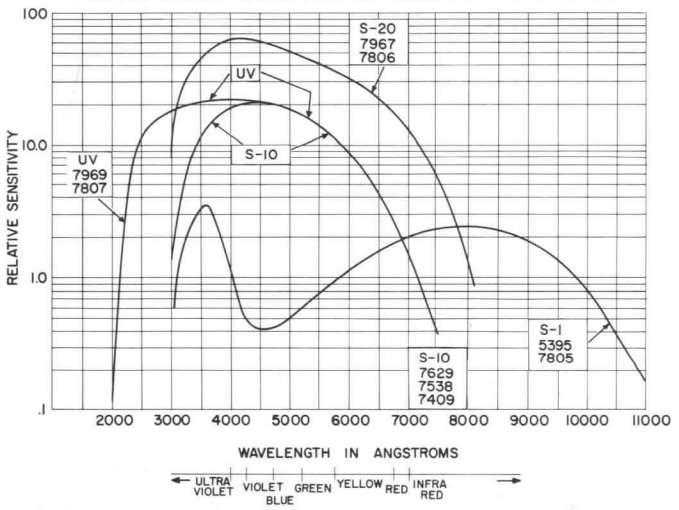

SCENE ILLUMINATION VS TYPICAL RESOLUTION SENSITIVITY BY TYPE*

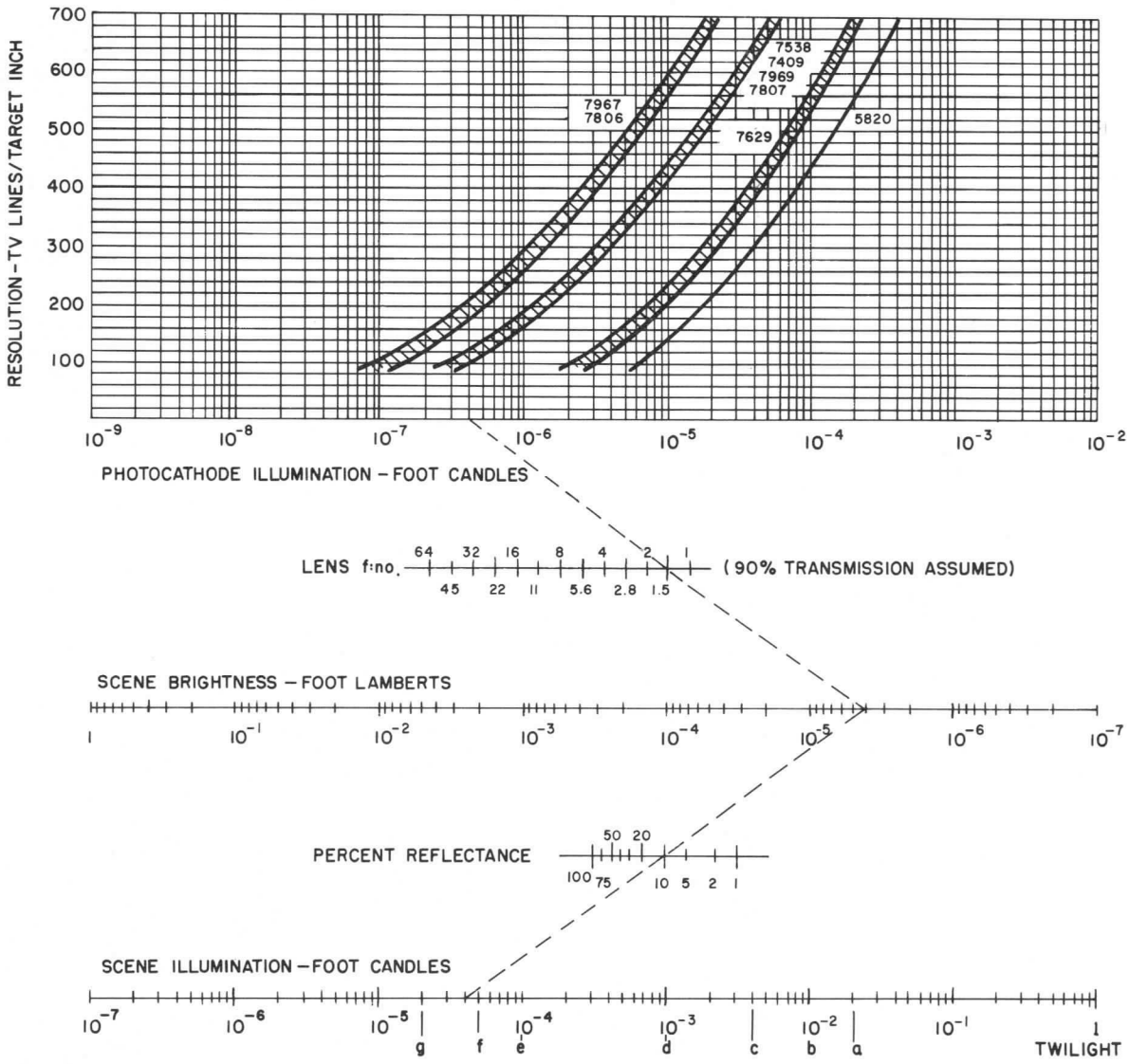

Code	Ambient Condition	Scene Illumination
a	Full moon–clear	2×10^{-2} ft-c
b	Half moon	1×10^{-2} ft-c
c	Full moon–moderately cloudy	4×10^{-3} ft-c
d	Quarter moon–clear	1×10^{-3} ft-c
e	No moon–clear	1×10^{-4} ft-c
f	No moon–moderately cloudy	5×10^{-5} ft-c
g	No moon–heavy cloud	2×10^{-5} ft-c

NEUTRAL DENSITY FILTERS FOR EXPOSURE CONTROL

TYPE AND DENSITY	PERCENT TRANSMITTANCE	NUMBER OF STOPS
ND .30	50.0	1
ND .60	25.0	2
ND .90	13.0	3
ND 1.00	10.0	3.3
ND 2.00	1.0	6.6
ND 3.00	0.10	10.0
ND 4.00	0.010	13.2

*This chart reprinted by permission of B. A. Bang.

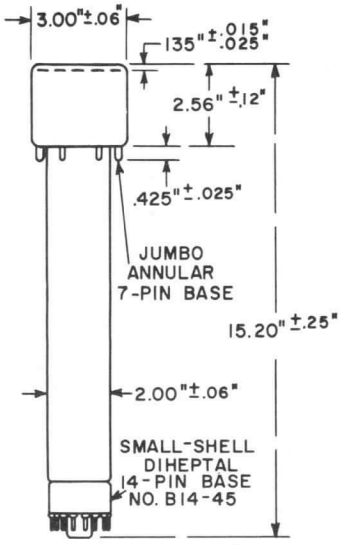

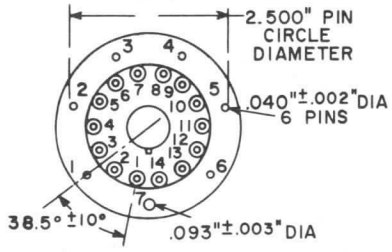

ENLARGED BOTTOM VIEW

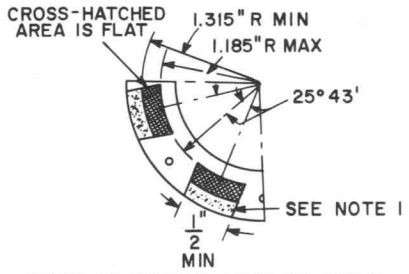

DETAIL OF BOTTOM VIEW OF JUMBO ANNULAR BASE

NOTE 1: DOTTED AREA IS FLAT OR EXTENDS TOWARD DIHEPTAL-BASE END OF TUBE BY 0.060" MAX.

ANNULAR BASE GAGE

ANGULAR VARIATIONS BETWEEN PINS AS WELL AS ECCENTRICITY OF NECK CYLINDER WITH RESPECT TO PHOTOCATHODE CYLINDER ARE HELD TO TOLERANCES SUCH THAT PINS AND NECK CYLINDER WILL FIT FLAT-PLATE GAGE WITH:

a. SIX HOLES HAVING DIAMETER OF 0.065" $^{\pm .0001}$" AND ONE HOLE HAVING DIA OF 0.150" ±0.001". ALL HOLES HAVE DEPTH OF 0.265" ±0.001". THE SIX 0.065" HOLES ARE ENLARGED BY 45° TAPER TO DEPTH OF 0.047". ALL HOLES ARE SPACED AT ANGLES OF 51° 26' ±5' ON CIRCLE DIAMETER OF 2.500" ±0.001".

b. SEVEN STOPS HAVING HEIGHT OF 0.187" ±0.001", CENTERED BETWEEN PIN HOLES, TO BEAR AGAINST FLAT AREAS OF BASE.

c. RIM EXTENDING OUT OF A MINIMUM OF 0.125" FROM 2.812" DIAMETER AND HAVING HEIGHT OF 0.126" ±0.001".

d. NECK-CYLINDER CLEARANCE HOLE HAVING DIAMETER OF 2.200" ±0.001".

DIRECTION OF LIGHT: PERPENDICULAR TO LARGE END OF TUBE

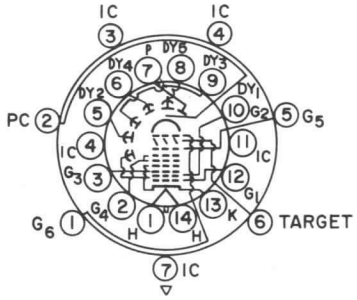

WHITE INDEX LINE ON FACE

BOTTOM VIEW

BASING DIAGRAM

SMALL-SHELL DIHEPTAL 14-PIN BASE

PIN 1: HEATER
PIN 2: GRID NO. 4 & FIELD MESH
PIN 3: GRID NO. 3
PIN 4: INTERNAL CONNECTION-DO NOT USE
PIN 5: DYNODE NO. 2
PIN 6: DYNODE NO. 4
PIN 7: ANODE
PIN 8: DYNODE NO. 5
PIN 9: DYNODE NO. 3
PIN 10: DYNODE NO. 1, GRID NO. 2
PIN 11: INTERNAL CONNECTION-DO NOT USE
PIN 12: GRID NO. 1
PIN 13: CATHODE AND SUPPRESSOR GRID
PIN 14: HEATER

KEYED JUMBO ANNULAR 7-PIN BASE

PIN 1: GRID NO. 6
PIN 2: PHOTOCATHODE
PIN 3: INTERNAL CONNECTION-DO NOT USE
PIN 4: INTERNAL CONNECTION-DO NOT USE
PIN 5: GRID NO. 5
PIN 6: TARGET
PIN 7: INTERNAL CONNECTION-DO NOT USE

GENERAL ELECTRIC

POWER TUBE DEPARTMENT

Pickup Tube Operation

Syracuse, New York

PRINTED IN U.S.A.

GL-7409

IMAGE ORTHICON

FOCUS—MAGNETIC DEFLECTION—MAGNETIC

ENVIRONMENTALIZED



The GL-7409 is an environmentalized image orthicon designed to meet industrial and military applications where adverse environment precludes the use of standard tubes. It has an S-10 photosurface. Because of the low gamma, the tube has a very wide operating range at low light levels.

This tube features a high-gain, thin-film, magnesium-oxide target with a sensitivity ten to twenty times that of glass-target tubes such as the 5820. This target has several advantages. Its extreme thinness and anisotropic property virtually eliminate sideways leakage, which increases the resolution 25 to 50 percent over that of the standard target. It adapts the tube for service where the signal is stored for long periods before being read off, which permits additional sensitivity by use of low frame rates or by beam pulsing. It completely eliminates both stickiness and permanent burn-in since operation depends on electron conduction, which is not a depletion process, rather than on ion conduction. The curve shown on page 3 compares the resolution sensitivity of the 7409 with that of a 5820 with equivalent photocathode.

The target characteristics also assure a higher amplitude response than that of the 5820. Another advantage of the GL-7409 is a considerable reduction in the redistribution of target secondary electrons. This reduces image-edging effect, particularly at black-to-white transitions.

Electrical

Cathode—Unipotential

Heater Voltage, AC or DC	6.3 ±10%	Volts
Heater Current	0.6	Ampere

Photocathode—Semi-transparent
Response—S-10
Rectangular Image, 4 x 3 aspect ratio
Useful Size, maximum diagonal 1.8 Inches
Orientation—Proper orientation is obtained when the vertical scan is essentially parallel to the plane passing through the center of the faceplate and pin-No. 7 of the shoulder base.

Focusing Method—Magnetic

Deflecting Method—Magnetic

Direct Interelectrode Capacitance
Anode to all other Electrodes 12 μμf

Mechanical

Over all Length	15.20 ±0.25	Inches
Greatest Diameter of Bulb	3.00 ±0.06	Inches
Minimum Deflecting Coil Inside Diameter	2⅜	Inches
Deflecting Coil Length	5	Inches
Focusing Coil Length	10	Inches
Alignment Coil Length	⅛	Inch
Photocathode Distance Inside End of Focusing Coil	½	Inch
Weight, approximate	1.4	Pounds

Operating Position—Any, except with diheptal base up and the tube axis at an angle of less than 20 degrees from vertical.

Thermal

Operating Temperature of Any Part of Bulb	70	Max C
Operating Temperature of Bulb at Large End of Tube, Target Section	15	Min C
Temperature Difference Between Target Section and Any Part of Bulb Hotter than Target Section	7.5	Max C

MAXIMUM RATINGS—ABSOLUTE VALUES

Photocathode Voltage	−550	Volts
Photocathode Illumination	50	Foot-Candles
Anode Supply Voltage	1850	Volts
Grid-No. 1 Voltage		
Negative Bias Value	125	Volts
Positive Bias Value	0	Volts
Grid-No.2 and Dynode-No. 1 Voltage	350	Volts
Grid-No. 3 Voltage	400	Volts
Grid-No. 4 Voltage	300	Volts
Grid-No. 5 Voltage	150	Volts
Grid-No. 6 Voltage	−550	Volts
Dynode-No. 2 to Dynode-No. 1 Voltage	350	Volts
Dynode-No. 3 to Dynode-No. 2 Voltage	350	Volts
Dynode-No. 4 to Dynode-No. 3 Voltage	680	Volts
Dynode-No. 5 to Dynode-No. 4 Voltage	350	Volts
Anode to Dynode-No. 5 Voltage	100	Volts
Target Voltage		
Positive Voltage	6	Volts
Negative Voltage	10	Volts
Peak Heater-Cathode Voltage		
Heater Negative with Respect to Cathode	125	Volts
Heater Positive with Respect to Cathode	10	Volts
Shock (Note 1)	100	G's
Vibration (Note 2)	10	G's
Humidity (Note 3)		
Acceleration (Note 4)	70	G's

GENERAL ELECTRIC

TYPICAL OPERATION

Photocathode Voltage, image focus	−400 to −540		Volts
Grid-No. 1 Voltage for Picture Cut-off, beam	−45 to −115		Volts
Grid-No. 2 and Dynode-No. 1 Voltage		300	Volts
Grid-No. 3 Voltage*, multiplier focus	225 to	330	Volts
Grid-No. 4 Voltage, beam focus	140 to	180	Volts
Grid-No. 5 Voltage, decelerator	0 to	125	Volts
Grid-No. 6 Voltage, accelerator 75 Percent of Photocathode Voltage, approximate	−300 to −405		Volts
Dynode-No. 2 Voltage		600	Volts
Dynode-No. 3 Voltage		910	Volts
Dynode-No. 4 Voltage		1200	Volts
Dynode-No. 5 Voltage		1490	Volts
Anode Voltage		1550	Volts
DC Anode Current		3	Microamperes
Target Voltage, without blanking voltage	0 to	2.0	Volts
Peak-to-Peak Blanking Voltage	5 to	20	Volts
Target Temperature Range	15 to	55	C
Field Strength at Center of Focusing Coil†		75	Gausses
Field Strength of Alignment Coil, approximate	0 to	3	Gausses

* Adjust to give the most uniformly shaded picture near maximum signal.

† Direction of current should be such that a north-seeking pole is attracted to the image end of the focusing coil, with the indicator located outside of and at the image end of the focusing coil.

Note 1: **Per specification MIL-E-5272C (ASG) Paragraph 4.15.5 with the following differences:**

A) 12 impact shocks of 30 G.

B) The shock shall be applied in the following directions:

1.) Vertically perpendicular to longitudinal axis, 3 shocks in each direction.

2.) Parallel to the minor horizontal axis, 3 shocks in each direction.

C) The shock pulse width is defined by the use of a 0.2 to 250-cycle-per-second filter.

Note 2: **Under the conditions specified in MIL-E-5272C (ASG) Paragraph 4.7.12 Procedure XII except at operating temperature only. Center horizontal resolution at 3 x 10^{-5} maximum foot-candles, photocathode illumination will be at least 350 lines with 5 G applied acceleration in the frequency range from 50 to 500 cycles per second and a double amplitude of 0.036 inch from 5 to 50 cycles per second.**

Note 3: **Under the conditions specified in MIL-E-5272C (ASG) Paragraph 4.4.1 Procedure I. Following this test, the interelectrode insulation of the end pins 5, 6, 7, 8, 9 and 10 each with respect to all other end base pins grounded and with 350 volts (minimum) applied is greater than 500 ohms.**

Note 4: **Constant acceleration when applied perpendicular to the longitudinal axis of the tube for 10 minutes.**

OPERATING NOTES

Normally a new tube will exhibit some slight after-image, characterized by a rapid and complete decay, which will gradually diminish with life. This can be minimized by use of an orbiter or by eliminating forced-air cooling for short periods of time.

Although a warm-up time of one hour is desirable, the tube can be used immediately after alignment as it cannot be damaged permanently by target burn-in.

Some tubes may exhibit microphonic bars if used immediately while relatively cool. These will disappear as the tube warms up and can be minimized during this period by slight readjustments in target voltage.

The target used in this tube greatly reduces the probability of permanent burn-in damage should a stationary highlight be imaged on the target for an extended period. However, imaging directly on the sun or other extremely bright sources should be avoided.

SPECTRAL-SENSITIVITY CHARACTERISTIC—S10 RESPONSE
For Equal Values of Radiant Flux at All Wavelengths

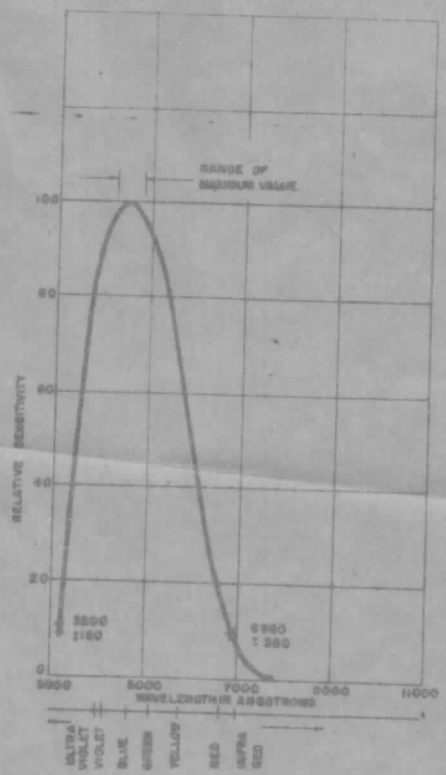

K-69087-72A923

4-26-60

TYPICAL RESOLUTION—SENSITIVITY CHARACTERISTICS SHOWING EFFECTS OF IMAGE INTEGRATION

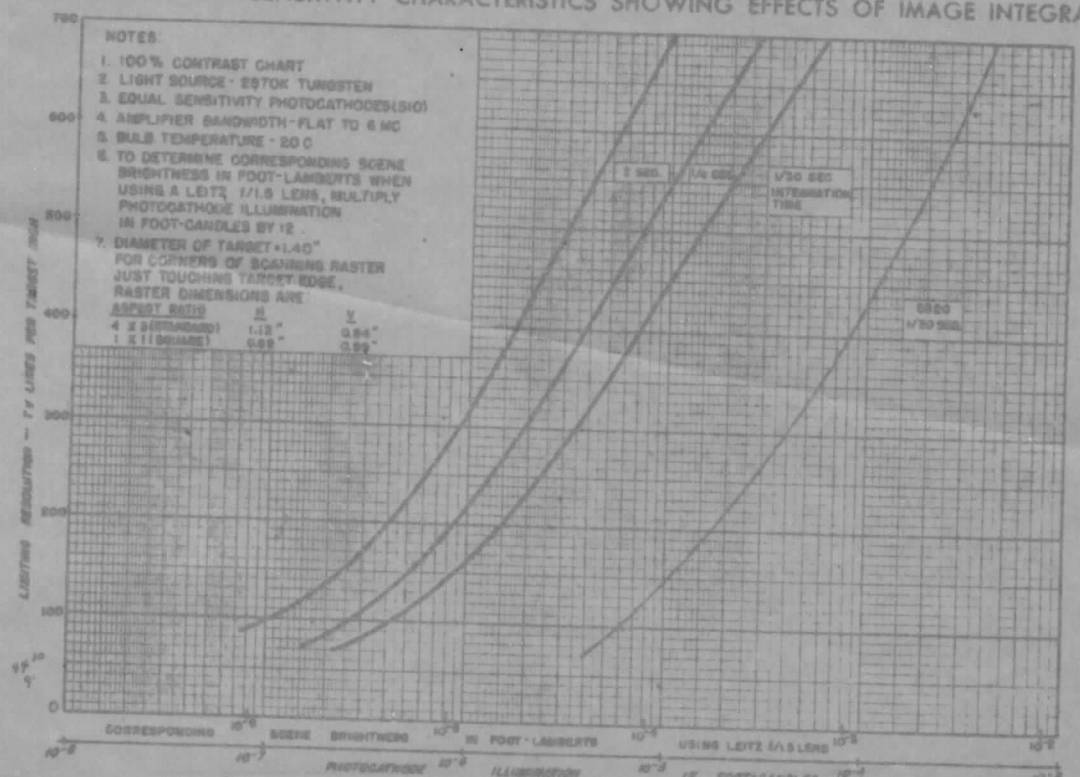

K-69087-72A972

8-60

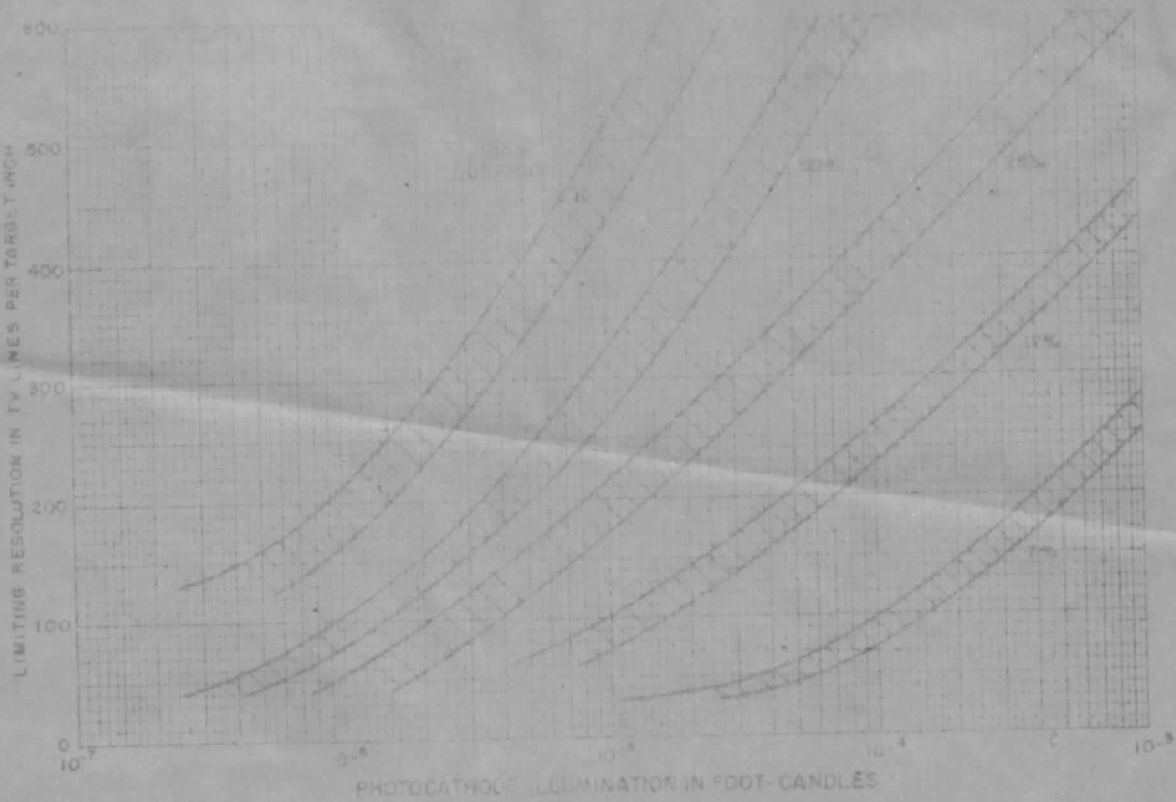

K-69082-72613

4-61

TRANSFER CHARACTERISTIC

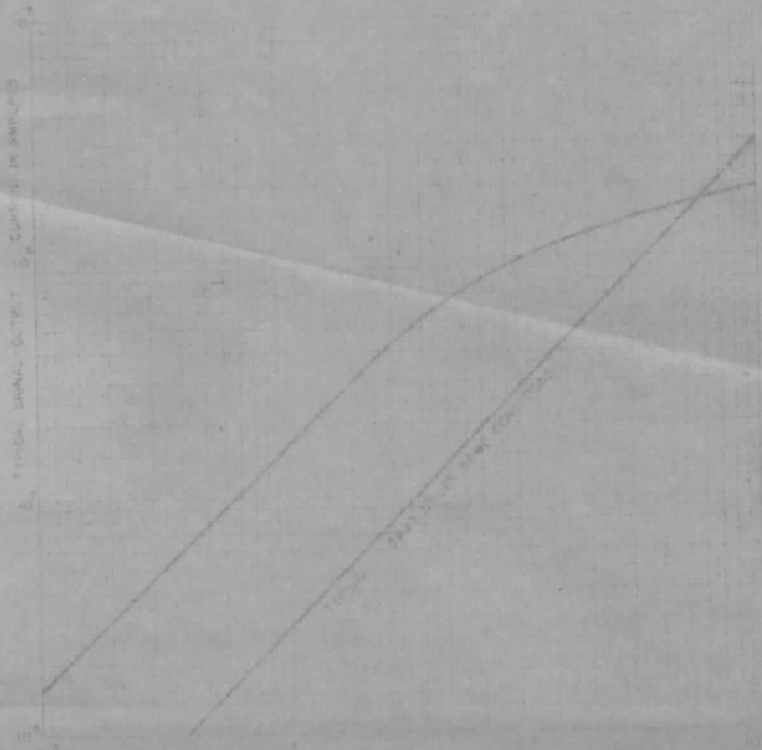

4-61

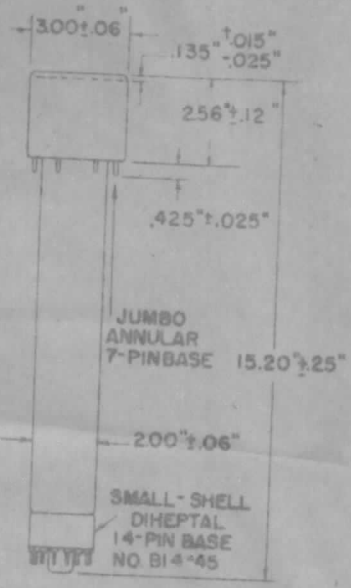

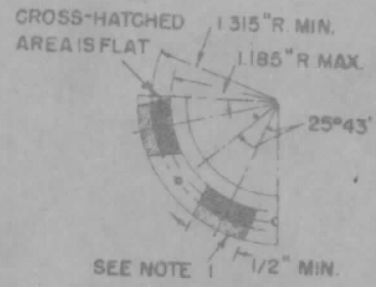

DETAIL OF BOTTOM VIEW OF JUMBO ANNULAR BASE

NOTE1: DOTTED AREA IS FLAT OR EXTENDS TOWARD DIHEPTAL-BASE END OF TUBE BY 0.060" MAX.

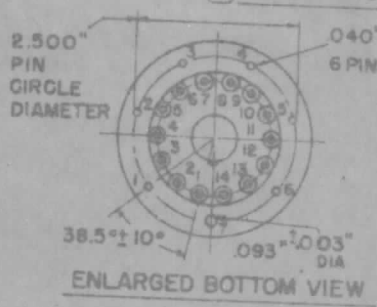

ENLARGED BOTTOM VIEW

ANNULAR BASE GAGE

ANGULAR VARIATIONS BETWEEN PINS AS WELL AS ECCENTRICITY OF NECK CYLINDER WITH RESPECT TO PHOTOCATHODE CYLINDER ARE HELD TO TOLERANCES SUCH THAT PINS AND NECK CYLINDER WILL FIT FLAT-PLATE GAGE WITH:

a. SIX HOLES HAVING DIAMETER OF 0.065"±.0.001" AND ONE HOLE HAVING DIA. OF 0.150±0.001. ALL HOLES HAVE DEPTH OF 0.265"±0.001". THE SIX 0.065" HOLES ARE ENLARGED BY 45° TAPER TO DEPTH OF 0.047". ALL HOLES ARE SPACED AT ANGLES OF 51°26'±5' ON CIRCLE DIAMETER OF 2.500"±0.001"

b. SEVEN STOPS HAVING HEIGHT OF 0.187"±0.001", CENTERED BETWEEN PIN HOLES, TO BEAR AGAINST FLAT AREAS OF BASE.

c. RIM EXTENDING OUT OF A MINIMUM OF 0.125" FROM 2.812" DIAMETER AND HAVING HEIGHT OF 0.126"±0.001".

d. NECK-CYLINDER CLEARANCE HOLE HAVING DIAMETER OF 2.200"±0.001".

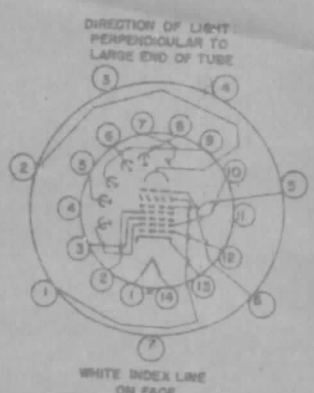

BASING DIAGRAM

SMALL-SHELL DIHEPTAL 14-PIN BASE

PIN 1 HEATER
PIN 2 GRID NO. 4
PIN 3 GRID NO. 3
PIN 4 INTERNAL CONNECTION-DO NOT USE
PIN 5 DYNODE NO. 2
PIN 6 DYNODE NO. 4
PIN 7 ANODE
PIN 8 DYNODE NO. 5
PIN 9 DYNODE NO. 3
PIN 10 DYNODE NO. 1, GRID NO. 2
PIN 11 INTERNAL CONNECTION DO NOT USE
PIN 12 GRID NO. 1
PIN 13 CATHODE
PIN 14 HEATER

KEYED JUMBO ANNULAR 7-PIN BASE

PIN 1 GRID NO. 6
PIN 2 PHOTOCATHODE
PIN 3 INTERNAL CONNECTION-DO NOT USE
PIN 4 INTERNAL CONNECTION DO NOT USE
PIN 5 GRID NO. 5
PIN 6 TARGET
PIN 7 INTERNAL CONNECTION DO NOT USE

GL-7629

IMAGE ORTHICON

FOCUS-MAGNETIC **DEFLECTION-MAGNETIC**

The GL-7629 is a low-light-level image orthicon designed to meet a variety of applications in the industrial, military, and scientific fields. It provides an effective low-light-level sensitivity of 3 x 10^{-6} foot-candles photocathode illumination for resolution of 100 television lines per target inch, or higher where extended integration is not a requirement.

The tube features a high-gain, thin-film magnesium-oxide target with a sensitivity ten to twenty times that of glass targets. The extreme thinness and the anisotropic property of this semiconductor target virtually eliminates lateral leakage and increases the resolution 25 to 50 percent over that of standard glass targets. Since operation of the target depends on electron conduction, which is not a depletion process, rather than on ion conduction, permanent stickiness and burn-in are virtually eliminated. Low gamma provides a very wide operating range.

These and other features of the 7629 assure long life and reliable operation in such applications as low-light-level color and monochrome telecasting and closed-circuit service. The tube is also well adapted to x-ray intensifier use since it permits better detectability of lower contrasts and detail than is possible with image orthicons employing glass targets.

Electrical

Cathode—Unipotential		
Heater		
Voltage, AC or DC	6.3 ± 10%	Volts
Current	0.6	Amperes
Photocathode—Semi-Transparent		
Spectral Response—S-10		
Rectangular Image, 4 by 3 aspect ratio		
Useful Size, maximum diagonal	1.8	Inches
Orientation—Proper orientation is obtained when the vertical scan is essentially parallel to the plane passing through the center of the faceplate and pin No. 7 of the shoulder base.		
Focusing Method—Magnetic		
Deflection Method—Magnetic		
Direct Interelectrode Capacitance		
Anode to all other Electrodes	12	μμf

Mechanical

Over-all Length	15.20 ± 0.25	Inches
Greatest Bulb Diameter	3.00 ± 0.06	Inches
Deflecting Coil		
Length	5	Inches
Minimum Inside Diameter	2 3/8	Inches
Focusing-Coil Length	10	Inches
Alignment-Coil Length	15/16	Inches
Photocathode Distance Inside End of Focusing Coil	1/2	Inches
Weight, approximate	14	Ounces
Operating Position—Any, except with diheptal base up and tube axis at an angle of less than 20 degrees from vertical.		

Thermal

Operating Temperature at any Part of Bulb, maximum	70	C
Operating Temperature of Bulb at Large End of Tube, Target Section, minimum	0	C
Temperature Difference Between Target Section and any Part of Bulb Hotter than Target Section	7.5	C

MAXIMUM RATINGS—ABSOLUTE VALUES

Photocathode		
Voltage	−600	Volts
Illumination	50	Foot-candles
Anode Supply Voltage*	1850	Volts
Grid-No. 1 Voltage		
Negative Bias Value	135	Volts
Positive Bias Value	0	Volts
Grid-No. 2 and Dynode-No. 1 Voltage	380	Volts
Grid-No. 3 Voltage	400	Volts
Grid-No. 4 Voltage	300	Volts
Grid-No. 5 Voltage	150	Volts
Grid-No. 6 Voltage	−600	Volts
Dynode-No. 2 to Dynode-No. 1 Voltage	350	Volts
Dynode-No. 3 to Dynode-No. 2 Voltage	350	Volts
Dynode-No. 4 to Dynode-No. 3 Voltage	680	Volts
Dynode-No. 5 to Dynode-No. 4 Voltage	350	Volts
Anode to Dynode-No. 5 Voltage	100	Volts
Voltage per Multiplier Stage	400	Volts
Target Voltage		
Above Target Cutoff, positive direction	10	Volts
Negative	10	Volts
Peak Heater-Cathode Voltage		
Heater Negative with Respect to Cathode	125	Volts
Heater Positive with Respect to Cathode	10	Volts

* Ratio of dynode voltages appears under Typical Operation.

GENERAL ELECTRIC

TYPICAL OPERATION—AVERAGE VALUES

	Normal Performance†	Maximum Sensitivity Performance‡	
Photocathode Voltage, image focus	−400 to −540	−400 to −550	Volts
Grid-No. 1 Voltage for Picture Cutoff, Beam	−45 to −115	−45 to −115	Volts
Photocathode Illumination—See Page 5			
Scene Illumination—See Page 5			
Grid-No. 2 and Dynode-No. 1 Voltage	300	370	Volts
Grid-No. 3 Voltage, multiplier focus§	225–330	225–380	Volts
Grid-No. 4 Voltage, beam focus	140–180	140–250	Volts
Grid-No. 5 Voltage, decelerator	0–125	0–125	Volts
Grid-No. 6 Voltage, accelerator—75 percent of photocathode voltage, approximate	−300 to −405	−300 to −465‖	Volts
Dynode-No. 2 Voltage	600	770	Volts
Dynode-No. 3 Voltage	910	1080	Volts
Dynode-No. 4 Voltage	1200	1360	Volts
Dynode-No. 5 Voltage	1490	1610	Volts
Anode Voltage	1550	1700	Volts
DC Anode Current, maximum	30	30	Microamperes
Signal Output Current, peak-to-peak—See Light-Transfer Characteristic			
Target Cutoff Voltage¶	−3 to +1	−3 to +1	Volts
Target Temperature Range	15–55	15–55	C
Peak-to-Peak Blanking Voltage	5–20	5–20	Volts
Field Strength at Center of Focusing Coil**	75	75	Gausses
Field Strength of Alignment Coil, approximate#	0–3	0–3	Gausses

† Although these tubes will operate in standard equipment, modification to permit operation at these values will improve effective sensitivity for most applications.

‡ These values will permit the best low-light-level-sensitivity capability of the tube to be realized and will assure the maximum useful multiplier gain required in extreme low-light-level applications. The resolution sensitivity information in this data sheet was derived with these higher multiplier voltages.

§ Adjust to give the most uniformly shaded picture near maximum signal.

‖ 75 to 85 percent of photocathode voltage.

¶ The target supply voltage should be adjustable from −3 to +5 volts with blanking voltage off. Maximum target voltage is +10 volts above target cutoff. Recommended target voltage is +2 volts above cutoff. Slight readjustment, usually only a small fraction of a volt, may be necessary to minimize microphonics.

**Direction of current should be such that a north-seeking pole is attracted to the image end of the focusing coil, with the indicator located outside of and at the image end of the focusing coil.

Adjust to produce flattest field with maximum response. Alignment is correct when the center of the picture merely goes through focus and does not rotate when beam focus (Grid No. 4) is varied. For most commercial focus coils a 75-gauss field results from a focus-coil current of 75 milliamperes.

OPERATING NOTES

Some magnesium-oxide targets may be damaged permanently if directly and intermittently exposed, while in operation, to extremely bright sources which cause high photoelectron densities to occur at the target. Such sources include the sun, photoflash lamps, and exploding wire flashes. Damage, if it does occur, takes the form of black image spots burned in the target by the intense light.

In most cases an 80-megohm, ¼-watt resistor in series with the photocathode in the camera will protect the tube. This resistor will not interfere with normal operation of these or other image orthicons which may be used in the modified camera.

If these or similar bright sources are to be observed continuously, appropriate exposure control of photocathode illumination can be supplied by neutral-density filters.

SPECIFIC PARAMETERS ON RECORDED DATA

All curves except spectral-sensitivity characteristics were recorded under the following conditions:

Camera Chain: General Electric TE-5 (modified)
Amplifier bandwidth—total 20 mc, flat to 6 mc

Resolution Chart: National Bureau of Standards Lens Test Chart, 100% contrast transparency.

Window Chart: 100% contrast, 1% area window for signal-noise and transfer characteristic data.

Light Source: 2870^0 Kelvin—tungsten

Light Level: Aperture and neutral density controlled (within specially constructed low-light-level box) to provide range from 10^{-8} to 10^{-2} foot-candles illumination on photocathode. For corresponding scene brightness in foot-lamberts when using Leitz f/1.5 lens (85 mm), multiply photocathode illumination in foot-candles by 12.

Operating Temperature for Image End: 25 to 30 C.

Target Raster: Target diameter is 1.40 inches. For corners of scanning raster just touching target edge raster dimensions are:

Aspect Ratio	Horizontal	Vertical
1 x 1 (square)	0.99″	0.99″
4 x 3 (standard)	1.12″	0.84″

Horizontal TV lines = 1.12 x TV lines per target inch

Vertical TV lines (EIA) = 0.84 x TV lines per target inch

Resolution sensitivity data is recorded in TV lines per target inch

Therefore, 700 TV lines per target inch = 784 horizontal lines
= 588 vertical lines (EIA)

LIGHT TRANSFER CHARACTERISTICS

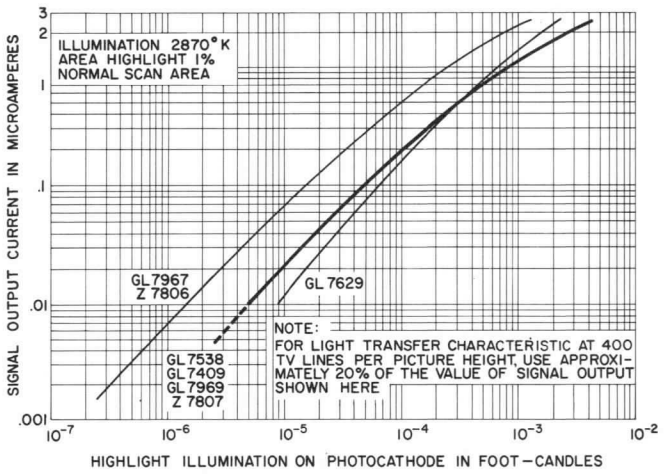

PHOTOCATHODE SPECTRAL RESPONSE CHARACTERISTICS

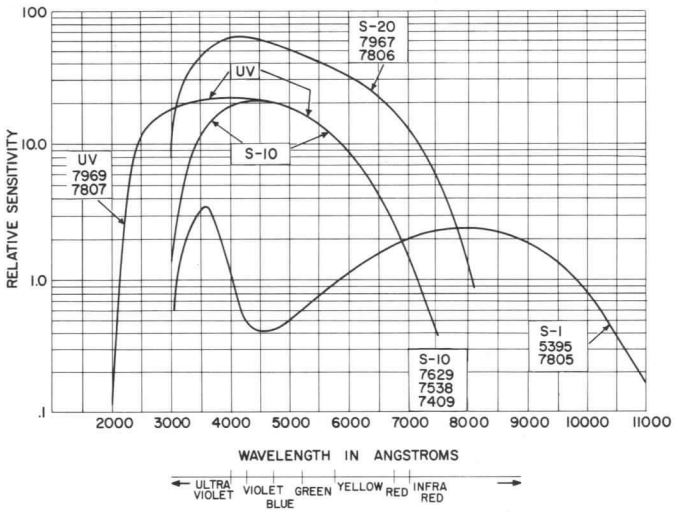

SCENE ILLUMINATION VS TYPICAL RESOLUTION SENSITIVITY BY TYPE*

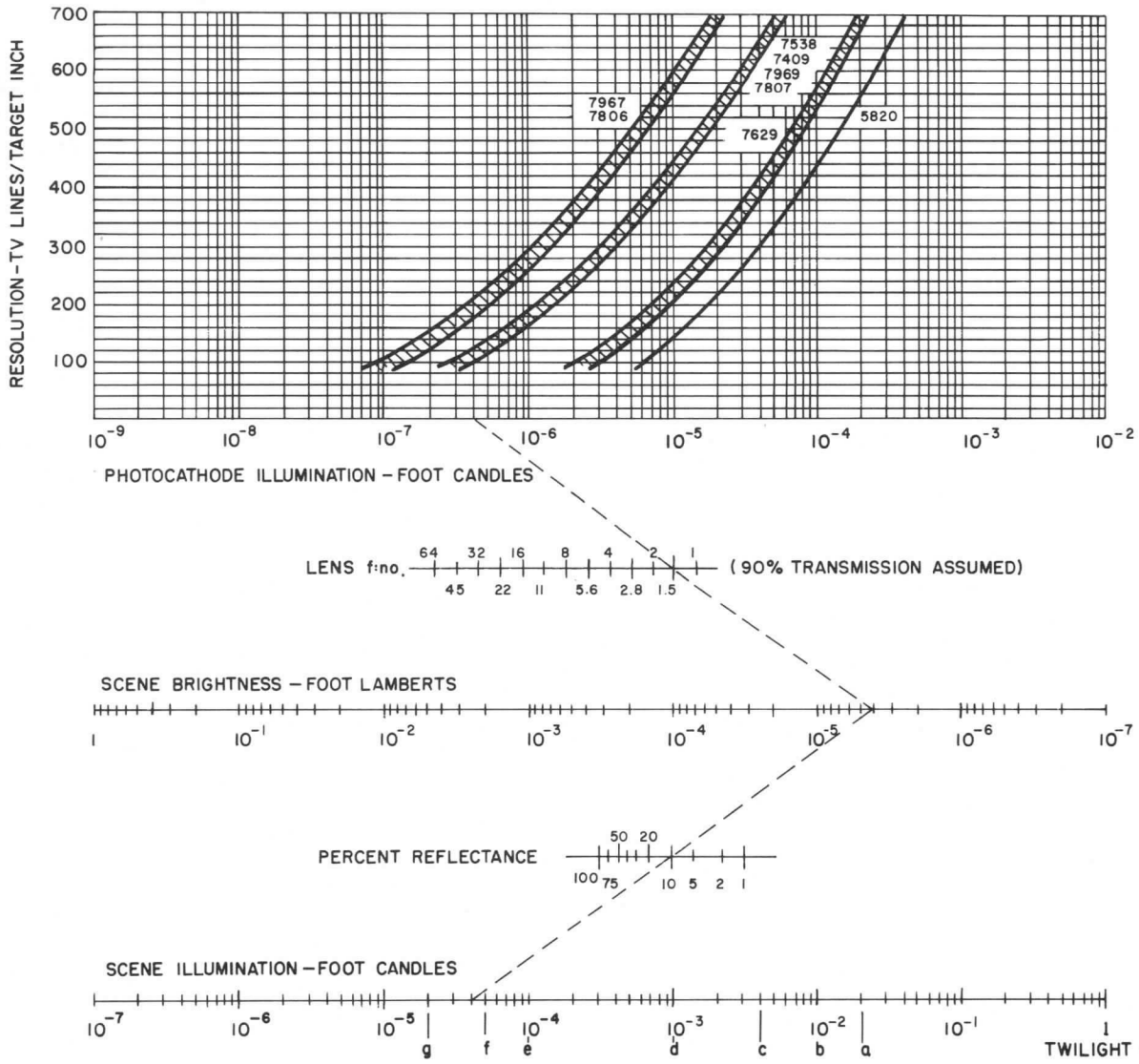

Code	Ambient Condition	Scene Illumination
a	Full moon–clear	2×10^{-2} ft-c
b	Half moon	1×10^{-2} ft-c
c	Full moon–moderately cloudy	4×10^{-3} ft-c
d	Quarter moon–clear	1×10^{-3} ft-c
e	No moon–clear	1×10^{-4} ft-c
f	No moon–moderately cloudy	5×10^{-5} ft-c
g	No moon–heavy cloud	2×10^{-5} ft-c

NEUTRAL DENSITY FILTERS FOR EXPOSURE CONTROL

TYPE AND DENSITY	PERCENT TRANSMITTANCE	NUMBER OF STOPS
ND .30	50.0	1
ND .60	25.0	2
ND .90	13.0	3
ND 1.00	10.0	3.3
ND 2.00	1.0	6.6
ND 3.00	0.10	10.0
ND 4.00	0.010	13.2

*This chart reprinted by permission of B. A. Bang.

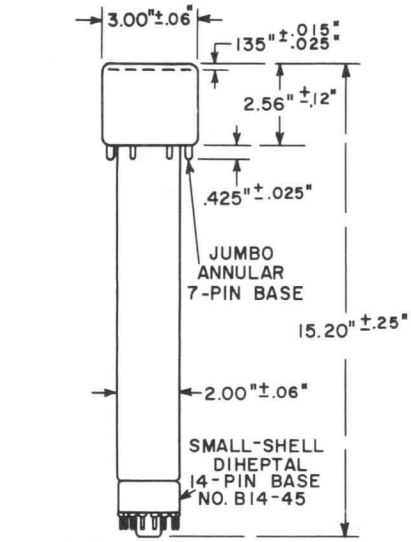

ENLARGED BOTTOM VIEW

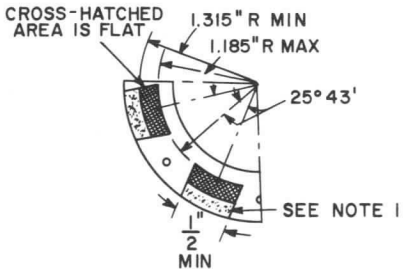

DETAIL OF BOTTOM VIEW OF JUMBO ANNULAR BASE

NOTE 1: DOTTED AREA IS FLAT OR EXTENDS TOWARD DIHEPTAL-BASE END OF TUBE BY 0.060" MAX.

ANNULAR BASE GAGE

ANGULAR VARIATIONS BETWEEN PINS AS WELL AS ECCENTRICITY OF NECK CYLINDER WITH RESPECT TO PHOTOCATHODE CYLINDER ARE HELD TO TOLERANCES SUCH THAT PINS AND NECK CYLINDER WILL FIT FLAT-PLATE GAGE WITH:

a. SIX HOLES HAVING DIAMETER OF 0.065" $^{\pm .0001}$" AND ONE HOLE HAVING DIA OF 0.150" ±0.001". ALL HOLES HAVE DEPTH OF 0.265" ±0.001". THE SIX 0.065" HOLES ARE ENLARGED BY 45° TAPER TO DEPTH OF 0.047". ALL HOLES ARE SPACED AT ANGLES OF 51° 26' ±5' ON CIRCLE DIAMETER OF 2.500" ± 0.001".

b. SEVEN STOPS HAVING HEIGHT OF 0.187" ± 0.001", CENTERED BETWEEN PIN HOLES, TO BEAR AGAINST FLAT AREAS OF BASE.

c. RIM EXTENDING OUT OF A MINIMUM OF 0.125" FROM 2.812" DIAMETER AND HAVING HEIGHT OF 0.126" ± 0.001".

d. NECK-CYLINDER CLEARANCE HOLE HAVING DIAMETER OF 2.200" ± 0.001".

DIRECTION OF LIGHT: PERPENDICULAR TO LARGE END OF TUBE

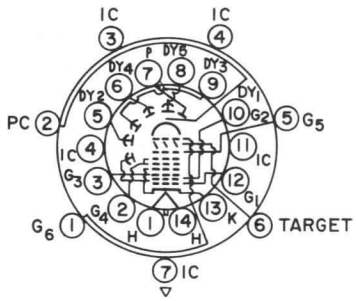

WHITE INDEX LINE ON FACE

BOTTOM VIEW

BASING DIAGRAM

SMALL-SHELL DIHEPTAL 14-PIN BASE

PIN 1: HEATER
PIN 2: GRID NO. 4 & FIELD MESH
PIN 3: GRID NO. 3
PIN 4: INTERNAL CONNECTION-DO NOT USE
PIN 5: DYNODE NO. 2
PIN 6: DYNODE NO. 4
PIN 7: ANODE
PIN 8: DYNODE NO. 5
PIN 9: DYNODE NO. 3
PIN 10: DYNODE NO. 1, GRID NO. 2
PIN 11: INTERNAL CONNECTION-DO NOT USE
PIN 12: GRID NO. 1
PIN 13: CATHODE AND SUPPRESSOR GRID
PIN 14: HEATER

KEYED JUMBO ANNULAR 7-PIN BASE

PIN 1: GRID NO. 6
PIN 2: PHOTOCATHODE
PIN 3: INTERNAL CONNECTION-DO NOT USE
PIN 4: INTERNAL CONNECTION-DO NOT USE
PIN 5: GRID NO. 5
PIN 6: TARGET
PIN 7: INTERNAL CONNECTION-DO NOT USE

GENERAL ELECTRIC

POWER TUBE DEPARTMENT

Pickup Tube Operation

Syracuse, New York

PRINTED IN U.S.A.

Z-7806, GL-7967

IMAGE ORTHICONS

FOCUS-MAGNETIC **DEFLECTION-MAGNETIC**

These low-light-level image orthicons are designed to meet a wide variety of requirements for industrial, military, and scientific applications. They provide an effective low-light-level sensitivity down to 1.5 x 10^{-7} foot-candles photocathode illumination for resolution of 100 television lines per target inch. The GL-7967 is designed for normal environmental operation. The Z-7806 is a ruggedized version designed to operate under severe shock and vibration conditions.

Both tubes feature a high-gain, thin-film magnesium-oxide target with a sensitivity ten to twenty times that of glass targets. The extreme thinness and the anisotropic property of this semiconductor target virtually eliminates lateral leakage and increases the resolution 25 to 50 percent over that of standard glass targets. Since operation of the target depends on electron conduction, which is not a depletion process, rather than on ion conduction, permanent stickiness and burn-in are virtually eliminated. Low gamma permits a very wide operating range.

These and other features of these image orthicons assure long life and reliable operation in such applications as underwater observation, missile detection and tracking, and astronomical study of stars to the twentieth magnitude. The tubes are also suitable for service in scintillation experiments with the use of an image intensifier.

Electrical

Cathode—Unipotential		
Heater		
Voltage, AC or DC	6.3 ± 10%	Volts
Current	0.6	Amperes
Photocathode—Semi-Transparent		
Spectral Response—S-20		
Rectangular Image, 4 by 3 aspect ratio		
Useful Size, maximum diagonal	1.8	Inches
Orientation—Proper orientation is obtained when the vertical scan is essentially parallel to the plane passing through the center of the faceplate and pin No. 7 of the shoulder base.		
Focusing Method—Magnetic		
Deflection Method—Magnetic		
Direct Interelectrode Capacitance		
Anode to all other Electrodes	12	$\mu\mu$f

Mechanical

Over-all Length	15.20 ± 0.25	Inches
Greatest Bulb Diameter	3.00 ± 0.06	Inches
Deflecting Coil		
Length	5	Inches
Minimum Inside Diameter	$2\frac{3}{8}$	Inches
Focusing-Coil Length	10	Inches
Alignment-Coil Length	$\frac{15}{16}$	Inches
Photocathode Distance Inside		
End of Focusing Coil	$\frac{1}{2}$	Inches
Weight, approximate		
Z-7806	1.4	Pounds
GL-7967	0.8	Pounds
Operating Position—Any, except with diheptal base up and tube axis at an angle of less than 20 degrees from vertical.		

Thermal

Operating Temperature at any Part of Bulb, maximum	70	C
Operating Temperature of Bulb at Large End of Tube, Target Section, minimum	0	C
Temperature Difference Between Target Section and any Part of Bulb Hotter than Target Section	7.5	C

MAXIMUM RATINGS—ABSOLUTE VALUES

Photocathode		
Voltage	−600	Volts
Illumination	50	Foot-candles
Anode Supply Voltage*	1850	Volts
Grid-No. 1 Voltage		
Negative Bias Value	135	Volts
Positive Bias Value	0	Volts
Grid-No. 2 and Dynode-No. 1 Voltage	380	Volts
Grid-No. 3 Voltage	400	Volts
Grid-No. 4 Voltage	300	Volts
Grid-No. 5 Voltage	150	Volts
Grid-No. 6 Voltage	−600	Volts
Dynode-No. 2 to Dynode-No. 1 Voltage	350	Volts
Dynode-No. 3 to Dynode-No. 2 Voltage	350	Volts
Dynode-No. 4 to Dynode-No. 3 Voltage	680	Volts
Dynode-No. 5 to Dynode-No. 4 Voltage	350	Volts
Anode to Dynode-No. 5 Voltage	100	Volts
Voltage per Multiplier Stage	400	Volts
Target Voltage		
Above Target Cutoff, positive direction	10	Volts
Negative	10	Volts
Peak Heater-Cathode Voltage		
Heater Negative with Respect to Cathode	125	Volts
Heater Positive with Respect to Cathode	10	Volts

* Ratio of dynode voltages appears under Typical Operation.

TYPICAL OPERATION—AVERAGE VALUES

	Normal Performance†	Maximum Sensitivity Performance‡	
Photocathode Voltage, image focus	−400 to −540	−400 to −550	Volts
Grid-No. 1 Voltage for Picture Cutoff, Beam	−45 to −115	−45 to −115	Volts
Photocathode Illumination—See Page 5			
Scene Illumination—See Page 5			
Grid-No. 2 and Dynode-No. 1 Voltage	300	370	Volts
Grid-No. 3 Voltage, multiplier focus§	225–330	225–380	Volts
Grid-No. 4 Voltage, beam focus	140–180	140–250	Volts
Grid-No. 5 Voltage, decelerator	0–125	0–125	Volts
Grid-No. 6 Voltage, accelerator—75 percent of photocathode voltage, approximate	−300 to −405	−300 to −465‖	Volts
Dynode-No. 2 Voltage	600	770	Volts
Dynode-No. 3 Voltage	910	1080	Volts
Dynode-No. 4 Voltage	1200	1360	Volts
Dynode-No. 5 Voltage	1490	1610	Volts
Anode Voltage	1550	1700	Volts
DC Anode Current, maximum	30	30	Microamperes
Signal Output Current, peak-to-peak—See Light-Transfer Characteristic			
Target Cutoff Voltage¶	−3 to +1	−3 to +1	Volts
Target Temperature Range	15–55	15–55	C
Peak-to-Peak Blanking Voltage	5–20	5–20	Volts
Field Strength at Center of Focusing Coil**	75	75	Gausses
Field Strength of Alignment Coil, approximate#	0–3	0–3	Gausses

† Although these tubes will operate in standard equipment, modification to permit operation at these values will improve effective sensitivity for most applications.

‡ These values will permit the best low-light-level-sensitivity capability of the tube to be realized and will assure the maximum useful multiplier gain required in extreme low-light-level applications. The resolution sensitivity information in this data sheet was derived with these higher multiplier voltages.

§ Adjust to give the most uniformly shaded picture near maximum signal.

‖ 75 to 85 percent of photocathode voltage.

¶ The target supply voltage should be adjustable from −3 to +5 volts with blanking voltage off. Maximum target voltage is +10 volts above target cutoff. Recommended target voltage is +2 volts above cutoff. Slight readjustment, usually only a small fraction of a volt, may be necessary to minimize microphonics.

**Direction of current should be such that a north-seeking pole is attracted to the image end of the focusing coil, with the indicator located outside of and at the image end of the focusing coil.

Adjust to produce flattest field with maximum response. Alignment is correct when the center of the picture merely goes through focus and does not rotate when beam focus (Grid No. 4) is varied. For most commercial focus coils a 75-gauss field results from a focus-coil current of 75 milliamperes.

Z-7806

ENVIRONMENTAL

Shock: Per specification MIL-E-5272C (ASG) Paragraph 4.15.5 except:

A 12 impact shocks of 30g

B The shock shall be applied in the following directions:
1—Vertically perpendicular to longitudinal axis, 3 shocks in each direction.
2—Parallel to the minor horizontal axis, 3 shocks in each direction.

C The shock pulse width is defined by the use of a 0.2 to 250-cycle-per-second filter.

Vibration: (10g) Per MIL-E-5272C (ASG) Paragraph 4.7.12 Procedure XII except at operating temperature only. Center horizontal resolution at 3 x 10^{-5} maximum foot-candles, photocathode illumination will be at least 350 lines (EIA) with 5g applied acceleration in the frequency range from 50 to 500 cycles per second and a double amplitude of 0.036 inch from 5 to 50 cycles per second. Picture resolution of 350 TV lines (EIA) is defined as readable through any interference that may occur.

Humidity: Per MIL-E-5272C (ASG) Paragraph 4.4.1 Procedure 1. Following this test, the interelectrode insulation of the end pins 5, 6, 7, 8, 9, and 10 each with respect to all other end base pins grounded and with 350 volts (minimum) applied is greater than 500 ohms.

Acceleration: (70g) Constant acceleration when applied perpendicular to the longitudinal axis of the tube for 10 minutes.

OPERATING NOTES

Some magnesium-oxide targets may be damaged permanently if directly and intermittently exposed, while in operation, to extremely bright sources which cause high photoelectron densities to occur at the target. Such sources include the sun, photoflash lamps, and exploding wire flashes. Damage, if it does occur, takes the form of black image spots burned in the target by the intense light.

In most cases an 80-megohm, ¼-watt resistor in series with the photocathode in the camera will protect the tube. This resistor will not interfere with normal operation of these or other image orthicons which may be used in the modified camera.

If these or similar bright sources are to be observed continuously, appropriate exposure control of photocathode illumination can be supplied by neutral-density filters.

SPECIFIC PARAMETERS ON RECORDED DATA

All curves except spectral-sensitivity characteristics were recorded under the following conditions:

Camera Chain: General Electric TE-5 (modified)
Amplifier bandwidth—total 20 mc, flat to 6 mc

Resolution Chart: National Bureau of Standards Lens Test Chart, 100% contrast transparency.

Window Chart: 100% contrast, 1% area window for signal-noise and transfer characteristic data.

Light Source: 2870^0 Kelvin—tungsten

Light Level: Aperture and neutral density controlled (within specially constructed low-light-level box) to provide range from 10^{-8} to 10^{-2} foot-candles illumination on photocathode. For corresponding scene brightness in foot-lamberts when using Leitz f/1.5 lens (85 mm), multiply photocathode illumination in foot-candles by 12.

Operating Temperature for Image End: 25 to 30 C.

Target Raster: Target diameter is 1.40 inches. For corners of scanning raster just touching target edge raster dimensions are:

Aspect Ratio	Horizontal	Vertical
1 x 1 (square)	0.99″	0.99″
4 x 3 (standard)	1.12″	0.84″

Horizontal TV lines = 1.12 x TV lines per target inch

Vertical TV lines (EIA) = 0.84 x TV lines per target inch

Resolution sensitivity data is recorded in TV lines per target inch

Therefore, 700 TV lines per target inch = 784 horizontal lines
= 588 vertical lines (EIA)

LIGHT TRANSFER CHARACTERISTICS

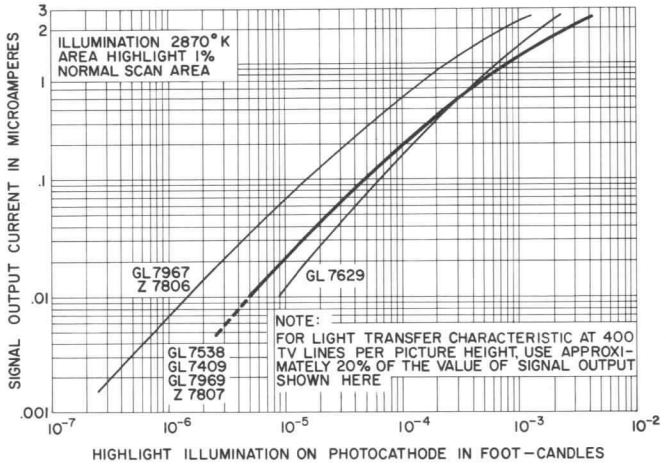

TYPICAL SIGNAL: NOISE CHARACTERISTICS VS. BANDWIDTH AND ILLUMINATION

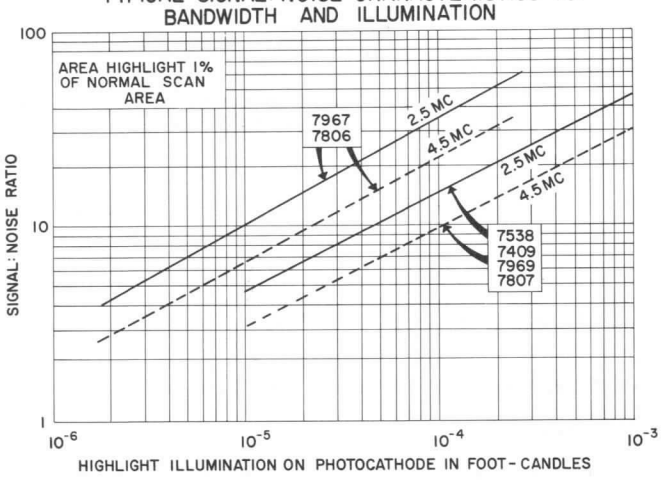

INTEGRATION EFFECT ON RESOLUTION SENSITIVITY

TYPES 7967 7806

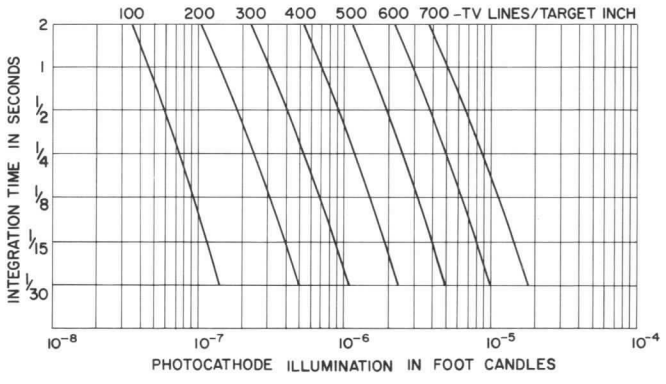

PHOTOCATHODE SPECTRAL RESPONSE CHARACTERISTICS

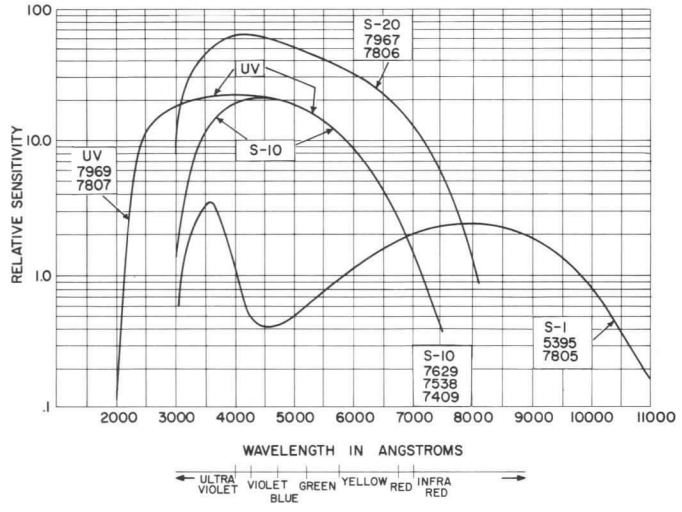

SCENE ILLUMINATION VS TYPICAL RESOLUTION SENSITIVITY BY TYPE*

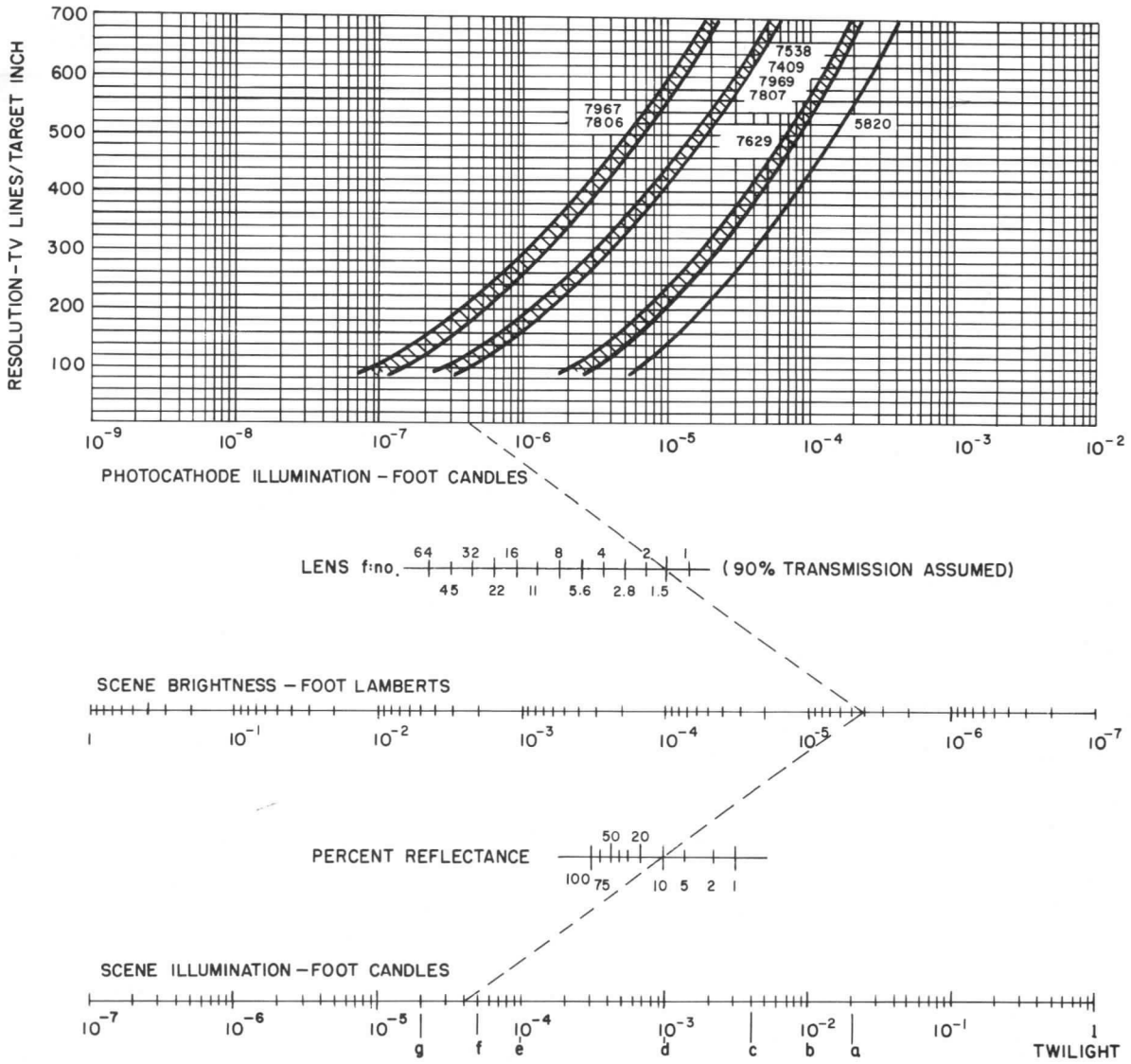

Code	Ambient Condition	Scene Illumination
a	Full moon–clear	2×10^{-2} ft-c
b	Half moon	1×10^{-2} ft-c
c	Full moon–moderately cloudy	4×10^{-3} ft-c
d	Quarter moon–clear	1×10^{-3} ft-c
e	No moon–clear	1×10^{-4} ft-c
f	No moon–moderately cloudy	5×10^{-5} ft-c
g	No moon–heavy cloud	2×10^{-5} ft-c

NEUTRAL DENSITY FILTERS FOR EXPOSURE CONTROL

TYPE AND DENSITY	PERCENT TRANSMITTANCE	NUMBER OF STOPS
ND .30	50.0	1
ND .60	25.0	2
ND .90	13.0	3
ND 1.00	10.0	3.3
ND 2.00	1.0	6.6
ND 3.00	0.10	10.0
ND 4.00	0.010	13.2

*This chart reprinted by permission of B. A. Bang.

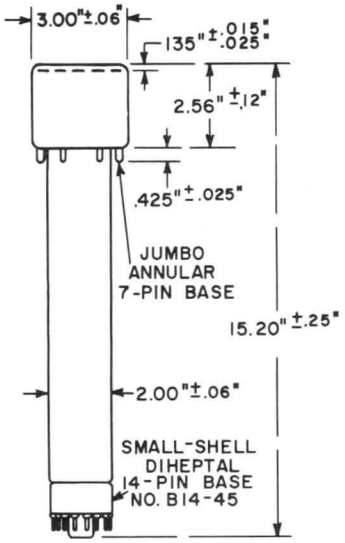

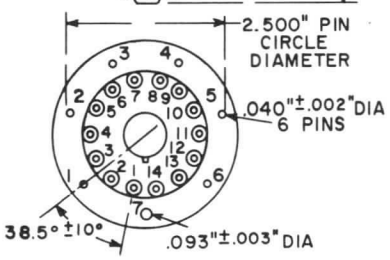

ENLARGED BOTTOM VIEW

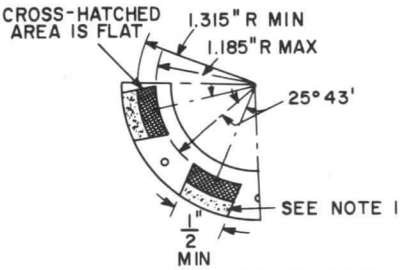

DETAIL OF BOTTOM VIEW OF JUMBO ANNULAR BASE

NOTE 1: DOTTED AREA IS FLAT OR EXTENDS TOWARD DIHEPTAL-BASE END OF TUBE BY 0.060" MAX.

ANNULAR BASE GAGE

ANGULAR VARIATIONS BETWEEN PINS AS WELL AS ECCENTRICITY OF NECK CYLINDER WITH RESPECT TO PHOTOCATHODE CYLINDER ARE HELD TO TOLERANCES SUCH THAT PINS AND NECK CYLINDER WILL FIT FLAT-PLATE GAGE WITH:

a. SIX HOLES HAVING DIAMETER OF 0.065"±.0.001" AND ONE HOLE HAVING DIA OF 0.150"±0.001". ALL HOLES HAVE DEPTH OF 0.265"±0.001". THE SIX 0.065" HOLES ARE ENLARGED BY 45° TAPER TO DEPTH OF 0.047". ALL HOLES ARE SPACED AT ANGLES OF 51° 26'±5' ON CIRCLE DIAMETER OF 2.500"±0.001".

b. SEVEN STOPS HAVING HEIGHT OF 0.187"±0.001", CENTERED BETWEEN PIN HOLES, TO BEAR AGAINST FLAT AREAS OF BASE.

c. RIM EXTENDING OUT OF A MINIMUM OF 0.125" FROM 2.812" DIAMETER AND HAVING HEIGHT OF 0.126"±0.001".

d. NECK-CYLINDER CLEARANCE HOLE HAVING DIAMETER OF 2.200"±0.001".

DIRECTION OF LIGHT: PERPENDICULAR TO LARGE END OF TUBE

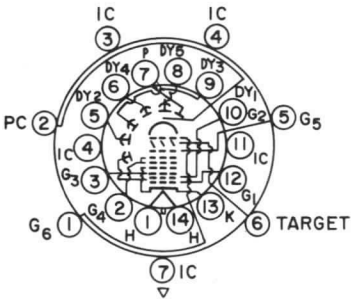

WHITE INDEX LINE ON FACE

BOTTOM VIEW

BASING DIAGRAM

SMALL-SHELL DIHEPTAL 14-PIN BASE

PIN 1: HEATER
PIN 2: GRID NO.4 & FIELD MESH
PIN 3: GRID NO. 3
PIN 4: INTERNAL CONNECTION-DO NOT USE
PIN 5: DYNODE NO. 2
PIN 6: DYNODE NO. 4
PIN 7: ANODE
PIN 8: DYNODE NO.5
PIN 9: DYNODE NO.3
PIN 10: DYNODE NO. 1, GRID NO. 2
PIN 11: INTERNAL CONNECTION-DO NOT USE
PIN 12: GRID NO. 1
PIN 13: CATHODE AND SUPPRESSOR GRID
PIN 14: HEATER

KEYED JUMBO ANNULAR 7-PIN BASE

PIN 1: GRID NO. 6
PIN 2: PHOTOCATHODE
PIN 3: INTERNAL CONNECTION-DO NOT USE
PIN 4: INTERNAL CONNECTION-DO NOT USE
PIN 5: GRID NO. 5
PIN 6: TARGET
PIN 7: INTERNAL CONNECTION-DO NOT USE

GENERAL ELECTRIC

POWER TUBE DEPARTMENT

Pickup Tube Operation

Syracuse, New York

PRINTED IN U.S.A.

GL-7967

IMAGE ORTHICON

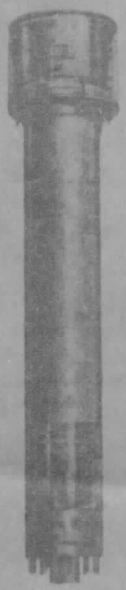

FOCUS—MAGNETIC **DEFLECTION—MAGNETIC**

The GL-7967 is an image orthicon with an S-20 photosurface. This photosurface has a sensitivity two to three times that of the S-10 with an improved red response and lower thermionic noise. Because of the low gamma, the tube has a very wide operating range at low light levels.

This tube features a high-gain, thin-film, magnesium-oxide target with a sensitivity twenty to fifty times that of glass-target tubes such as the 5820. This target has several advantages. Its extreme thinness and anisotropic property virtually eliminate sideways leakage, which increases the resolution 25 to 50 percent over that of the standard target. It adapts the tube for service where the signal is stored for long periods before being read off, which permits additional sensitivity by use of low frame rates or by beam pulsing. It completely eliminates both stickiness and burn-in since operation depends on electron conduction, which is not a depletion process, rather than on ion conduction. The curve shown on page 3 compares the resolution sensitivity of the 7967 with that of a 5820 with equivalent photocathode.

The target characteristics also assure a higher amplitude response than that of the 5820. Another advantage of the GL-7967 is a considerable reduction in the redistribution of target secondary electrons. This reduces image-edging effect, particularly at black-to-white transitions.

Electrical

Cathode—Unipotential		
Heater Voltage, AC or DC	6.3 ±10%	Volts
Heater Current	0.6	Ampere
Photocathode—Semi-transparent		
Response—S-20		
Rectangular Image, 4 x 3 aspect ratio		
Useful Size, maximum diagonal	1.8	Inches
Orientation—Proper orientation is obtained when the vertical scan is essentially parallel to the plane passing through the center of the faceplate and pin No. 7 of the shoulder base.		
Focusing Method—Magnetic		
Deflecting Method—Magnetic		
Direct Interelectrode Capacitance		
Anode to all other Electrodes	12	μμf

Mechanical

Over-all Length	15.20 ±0.25	Inches
Greatest Diameter of Bulb	3.00 ±0.06	Inches
Minimum Deflecting-Coil Inside Diameter	2 3/8	Inches
Deflecting-Coil Length	5	Inches
Focusing-Coil Length	10	Inches
Alignment-Coil Length	1 1/8	Inch
Photocathode Distance Inside End of Focusing Coil	1/2	Inch
Weight, approximate	1.4	Pounds

Operating Position—Any, except with diheptal base up and the tube axis at an angle of less than 20 degrees from vertical.

Thermal

Operating Temperature of Any Part of Bulb	50	Max C
Operating Temperature of Bulb at Large End of Tube, Target Section	15	Min C
Temperature Difference Between Target Section and Any Part of Bulb Hotter than Target Section	5	Max C

MAXIMUM RATINGS—ABSOLUTE VALUES

Photocathode Voltage	−550	Volts
Photocathode Illumination	50	Foot-Candles
Anode Supply Voltage*	1350	Volts
Grid-No. 1 Voltage		
Negative Bias Value	125	Volts
Positive Bias Value	0	Volts
Grid-No. 2 and Dynode-No. 1 Voltage	350	Volts
Grid-No. 3 Voltage	400	Volts
Grid-No. 4 Voltage	300	Volts
Grid-No. 5 Voltage	150	Volts
Grid-No. 6 Voltage	−550	Volts
Voltage per Multiplier Stage	350	Volts
Target Voltage		
Positive Voltage	2	Volts
Negative Voltage	10	Volts
Peak Heater Cathode Voltage		
Heater Negative with Respect to Cathode	125	Volts
Heater Positive with Respect to Cathode	10	Volts

TYPICAL OPERATION

Photocathode Voltage, image focus	−400 to −540		Volts
Grid-No. 1 Voltage for Picture Cut-off, beam	45 to −115		Volts
Grid-No. 2 and Dynode-No. 1 Voltage		300	Volts
Grid-No. 3 Voltage†, multiplier focus	225 to	330	Volts
Grid-No. 4 Voltage, beam focus	140 to	180	Volts
Grid-No. 5 Voltage, decelerator	0 to	125	Volts
Grid-No. 6 Voltage, accelerator 75 Percent of Photocathode Voltage, approximate	−300 to −405		Volts
Dynode-No. 2 Voltage		600	Volts
Dynode-No. 3 Voltage		800	Volts
Dynode-No. 4 Voltage		1000	Volts
Dynode-No. 5 Voltage		1200	Volts
Anode Voltage		1250	Volts
DC Anode Current		3	Microamperes
Target Voltage, without blanking voltage	0 to	2.0	Volts
Peak-to-Peak Blanking Voltage	5 to	20	Volts
Target Temperature Range	15 to	55	C
Field Strength at Center of Focusing Coil‡		75	Gausses
Field Strength of Alignment Coil, approximate	0 to	3	Gausses

* Ratio of dynode voltages is shown under Typical Operation.

† Adjust to give the most uniformly shaded picture near maximum signal.

‡ Direction of current should be such that a north-seeking pole is attracted to the image end of the focusing coil, with the indicator located outside of and at the image end of the focusing coil.

OPERATING NOTES

Normally a new tube will exhibit some slight after-image, characterized by a rapid and complete decay, which will gradually diminish with life. This can be minimized by use of an arbiter or by eliminating forced-air cooling for short periods of time.

Although a warm-up time of one hour is desirable, the tube can be used immediately after alignment as it cannot be damaged permanently by target burn-in.

Some tubes may exhibit microphonic bars if used immediately while relatively cool. These will disappear as the tube runs up and can be minimized during this period by slight readjustments in target voltage.

The target used in this tube greatly reduces the probability of permanent burn-in damage should a stationary highlight be imaged on the target for an extended period. However, imaging directly on the sun or other extremely bright sources should be avoided.

SPECTRAL-SENSITIVITY CHARACTERISTIC—S20 RESPONSE

For Equal Values of Radiant Flux at All Wavelengths

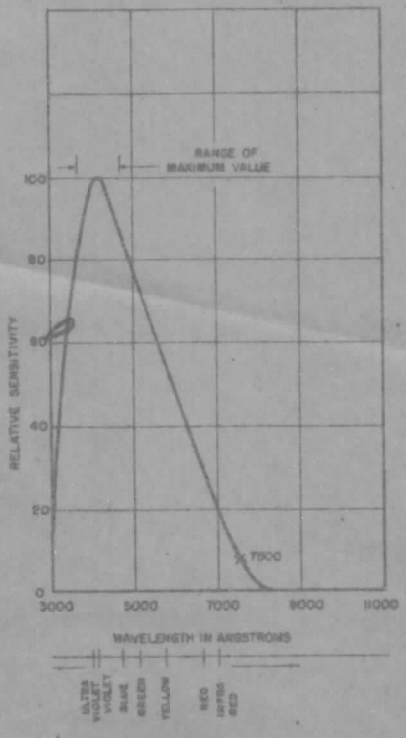

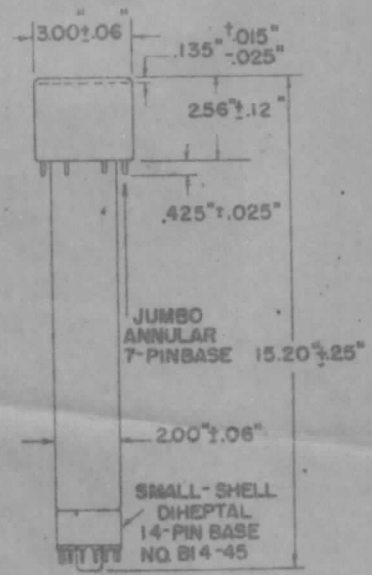

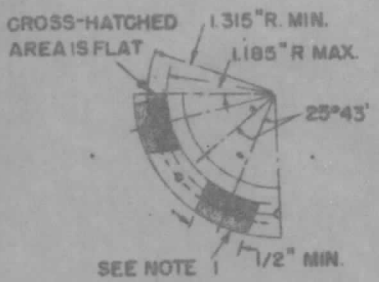

DETAIL OF BOTTOM VIEW OF JUMBO ANNULAR BASE

NOTE 1: DOTTED AREA IS FLAT OR EXTENDS TOWARD DIHEPTAL-BASE END OF TUBE BY 0.060" MAX.

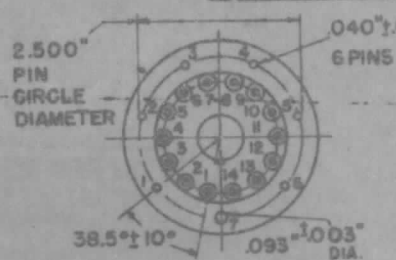

ENLARGED BOTTOM VIEW

ANNULAR BASE GAGE

ANGULAR VARIATIONS BETWEEN PINS AS WELL AS ECCENTRICITY OF NECK CYLINDER WITH RESPECT TO PHOTOCATHODE CYLINDER ARE HELD TO TOLERANCES SUCH THAT PINS AND NECK CYLINDER WILL FIT FLAT-PLATE GAGE WITH:

a. SIX HOLES HAVING DIAMETER OF 0.065"±.0.001" AND ONE HOLE HAVING DIA. OF 0.150±0.001". ALL HOLES HAVE DEPTH OF 0.265"±0.001". THE SIX 0.065" HOLES ARE ENLARGED BY 45° TAPER TO DEPTH OF 0.047". ALL HOLES ARE SPACED AT ANGLES OF 51°26'±5' ON CIRCLE DIAMETER OF 2.500"±0.001"

b. SEVEN STOPS HAVING HEIGHT OF 0.187"±0.001", CENTERED BETWEEN PIN HOLES, TO BEAR AGAINST FLAT AREAS OF BASE.

c. RIM EXTENDING OUT OF A MINIMUM OF 0.125" FROM 2.812" DIAMETER AND HAVING HEIGHT OF 0.126"±0.001".

d. NECK-CYLINDER CLEARANCE HOLE HAVING DIAMETER OF 2.200"±0.001".

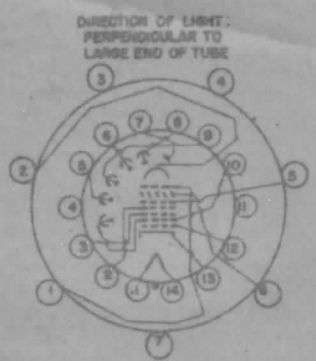

BASING DIAGRAM

SMALL-SHELL DIHEPTAL 14-PIN BASE

PIN 1: HEATER
PIN 2: GRID NO. 4
PIN 3: GRID NO. 3
PIN 4: INTERNAL CONNECTION-DO NOT USE
PIN 5: DYNODE NO. 2
PIN 6: DYNODE NO. 4
PIN 7: ANODE
PIN 8: DYNODE NO. 5
PIN 9: DYNODE NO. 3
PIN 10: DYNODE NO. 1, GRID NO. 2
PIN 11: INTERNAL CONNECTION DO NOT USE
PIN 12: GRID NO. 1
PIN 13: CATHODE
PIN 14: HEATER

KEYED JUMBO ANNULAR 7-PIN BASE

PIN 1: GRID NO. 6
PIN 2: PHOTOCATHODE
PIN 3: INTERNAL CONNECTION-DO NOT USE
PIN 4: INTERNAL CONNECTION DO NOT USE
PIN 5: GRID NO. 5
PIN 6: TARGET
PIN 7: INTERNAL CONNECTION DO NOT USE

Z-7807, GL-7969

IMAGE ORTHICONS

FOCUS-MAGNETIC **DEFLECTION-MAGNETIC**

These low-light-level image orthicons are designed to meet a wide variety of requirements for industrial, military, and scientific applications. They provide an effective low-light-level sensitivity of 4 x 10^{-7} foot-candles photocathode illumination for resolution of 100 television lines per target-inch. The GL-7969 is designed for normal environmental operation. The Z-7807 is a ruggedized version especially designed to operate under severe shock and vibration conditions.

Both tubes feature a high-gain, thin-film magnesium-oxide target with a sensitivity ten to twenty times that of glass targets. The extreme thinness and the anisotropic property of this semiconductor target virtually eliminates lateral leakage and increases the resolution 25 to 50 percent over that of standard glass targets. Since operation of the target depends on electron conduction, which is not a depletion process, rather than on ion conduction, permanent stickiness and burn-in are virtually eliminated. Low gamma permits a very wide operating range.

These and other features of these image orthicons assure long life and reliable operation in such applications as medical biological studies, spectrographic detectors, underwater observation, and missile detection.

Electrical

Cathode—Unipotential		
Heater		
Voltage, AC or DC	6.3 ± 10%	Volts
Current	0.6	Amperes
Photocathode—Semi-Transparent		
Spectral Response—UV		
Rectangular Image, 4 by 3 aspect ratio		
Useful Size, maximum diagonal	1.8	Inches
Orientation—Proper orientation is obtained when the vertical scan is essentially parallel to the plane passing through the center of the faceplate and pin No. 7 of the shoulder base.		
Focusing Method—Magnetic		
Deflection Method—Magnetic		
Direct Interelectrode Capacitance		
Anode to all other Electrodes	12	μμf

Mechanical

Over-all Length	15.20 ± 0.25	Inches
Greatest Bulb Diameter	3.00 ± 0.06	Inches
Deflecting Coil		
Length	5	Inches
Minimum Inside Diameter	2 3/8	Inches
Focusing-Coil Length	10	Inches
Alignment-Coil Length	15/16	Inches
Photocathode Distance Inside End of Focusing Coil	1/2	Inches
Weight, approximate		
Z-7807	1.4	Pounds
GL-7969	0.8	Pounds
Operating Position—Any, except with diheptal base up and tube axis at an angle of less than 20 degrees from vertical.		

Thermal

Operating Temperature at any Part of Bulb, maximum	70	C
Operating Temperature of Bulb at Large End of Tube, Target Section, minimum	0	C
Temperature Difference Between Target Section and any Part of Bulb Hotter than Target Section	7.5	C

MAXIMUM RATINGS—ABSOLUTE VALUES

Photocathode		
Voltage	−600	Volts
Illumination	50	Foot-candles
Anode Supply Voltage*	1850	Volts
Grid-No. 1 Voltage		
Negative Bias Value	135	Volts
Positive Bias Value	0	Volts
Grid-No. 2 and Dynode-No. 1 Voltage	380	Volts
Grid-No. 3 Voltage	400	Volts
Grid-No. 4 Voltage	300	Volts
Grid-No. 5 Voltage	150	Volts
Grid-No. 6 Voltage	−600	Volts
Dynode-No. 2 to Dynode-No. 1 Voltage	350	Volts
Dynode-No. 3 to Dynode-No. 2 Voltage	350	Volts
Dynode-No. 4 to Dynode-No. 3 Voltage	680	Volts
Dynode-No. 5 to Dynode-No. 4 Voltage	350	Volts
Anode to Dynode-No. 5 Voltage	100	Volts
Voltage per Multiplier Stage	400	Volts
Target Voltage		
Above Target Cutoff, positive direction	10	Volts
Negative	10	Volts
Peak Heater-Cathode Voltage		
Heater Negative with Respect to Cathode	125	Volts
Heater Positive with Respect to Cathode	10	Volts

* Ratio of dynode voltages appears under Typical Operation.

GENERAL ELECTRIC

TYPICAL OPERATION—AVERAGE VALUES

	Normal Performance†	Maximum Sensitivity Performance‡	
Photocathode Voltage, image focus	−400 to −540	−400 to −550	Volts
Grid-No. 1 Voltage for Picture Cutoff, Beam	−45 to −115	−45 to −115	Volts
Photocathode Illumination—See Page 5			
Scene Illumination—See Page 5			
Grid-No. 2 and Dynode-No. 1 Voltage	300	370	Volts
Grid-No. 3 Voltage, multiplier focus§	225–330	225–380	Volts
Grid-No. 4 Voltage, beam focus	140–180	140–250	Volts
Grid-No. 5 Voltage, decelerator	0–125	0–125	Volts
Grid-No. 6 Voltage, accelerator—75 percent of photocathode voltage, approximate	−300 to −405	−300 to −465‖	Volts
Dynode-No. 2 Voltage	600	770	Volts
Dynode-No. 3 Voltage	910	1080	Volts
Dynode-No. 4 Voltage	1200	1360	Volts
Dynode-No. 5 Voltage	1490	1610	Volts
Anode Voltage	1550	1700	Volts
DC Anode Current, maximum	30	30	Microamperes
Signal Output Current, peak-to-peak—See Light-Transfer Characteristic			
Target Cutoff Voltage¶	−3 to +1	−3 to +1	Volts
Target Temperature Range	15–55	15–55	C
Peak-to-Peak Blanking Voltage	5–20	5–20	Volts
Field Strength at Center of Focusing Coil**	75	75	Gausses
Field Strength of Alignment Coil, approximate#	0–3	0–3	Gausses

† Although these tubes will operate in standard equipment, modification to permit operation at these values will improve effective sensitivity for most applications.

‡ These values will permit the best low-light-level-sensitivity capability of the tube to be realized and will assure the maximum useful multiplier gain required in extreme low-light-level applications. The resolution sensitivity information in this data sheet was derived with these higher multiplier voltages.

§ Adjust to give the most uniformly shaded picture near maximum signal.

‖ 75 to 85 percent of photocathode voltage.

¶ The target supply voltage should be adjustable from −3 to +5 volts with blanking voltage off. Maximum target voltage is +10 volts above target cutoff. Recommended target voltage is +2 volts above cutoff. Slight readjustment, usually only a small fraction of a volt, may be necessary to minimize microphonics.

**Direction of current should be such that a north-seeking pole is attracted to the image end of the focusing coil, with the indicator located outside of and at the image end of the focusing coil.

Adjust to produce flattest field with maximum response. Alignment is correct when the center of the picture merely goes through focus and does not rotate when beam focus (Grid No. 4) is varied. For most commercial focus coils a 75-gauss field results from a focus-coil current of 75 milliamperes.

Z-7807

ENVIRONMENTAL

Shock: Per specification MIL-E-5272C (ASG) Paragraph 4.15.5 except:

A 12 impact shocks of 30g

B The shock shall be applied in the following directions:
1—Vertically perpendicular to longitudinal axis, 3 shocks in each direction.
2—Parallel to the minor horizontal axis, 3 shocks in each direction.

C The shock pulse width is defined by the use of a 0.2 to 250-cycle-per-second filter.

Vibration: (10g) Per MIL-E-5272C (ASG) Paragraph 4.7.12 Procedure XII except at operating temperature only. Center horizontal resolution at 3 x 10^{-5} maximum foot-candles, photocathode illumination will be at least 350 lines (EIA) with 5g applied acceleration in the frequency range from 50 to 500 cycles per second and a double amplitude of 0.036 inch from 5 to 50 cycles per second. Picture resolution of 350 TV lines (EIA) is defined as readable through any interference that may occur.

Humidity: Per MIL-E-5272C (ASG) Paragraph 4.4.1 Procedure 1. Following this test, the interelectrode insulation of the end pins 5, 6, 7, 8, 9, and 10 each with respect to all other end base pins grounded and with 350 volts (minimum) applied is greater than 500 ohms.

Acceleration: (70g) Constant acceleration when applied perpendicular to the longitudinal axis of the tube for 10 minutes.

OPERATING NOTES

Some magnesium-oxide targets may be damaged permanently if directly and intermittently exposed, while in operation, to extremely bright sources which cause high photoelectron densities to occur at the target. Such sources include the sun, photoflash lamps, and exploding wire flashes. Damage, if it does occur, takes the form of black image spots burned in the target by the intense light.

In most cases an 80-megohm, ¼-watt resistor in series with the photocathode in the camera will protect the tube. This resistor will not interfere with normal operation of these or other image orthicons which may be used in the modified camera.

If these or similar bright sources are to be observed continuously, appropriate exposure control of photocathode illumination can be supplied by neutral-density filters.

SPECIFIC PARAMETERS ON RECORDED DATA

All curves except spectral-sensitivity characteristics were recorded under the following conditions:

Camera Chain: General Electric TE-5 (modified)
Amplifier bandwidth—total 20 mc, flat to 6 mc

Resolution Chart: National Bureau of Standards Lens Test Chart, 100% contrast transparency.

Window Chart: 100% contrast, 1% area window for signal-noise and transfer characteristic data.

Light Source: 2870^0 Kelvin—tungsten

Light Level: Aperture and neutral density controlled (within specially constructed low-light-level box) to provide range from 10^{-8} to 10^{-2} foot-candles illumination on photocathode. For corresponding scene brightness in foot-lamberts when using Leitz f/1.5 lens (85 mm), multiply photocathode illumination in foot-candles by 12.

Operating Temperature for Image End: 25 to 30 C.

Target Raster: Target diameter is 1.40 inches. For corners of scanning raster just touching target edge raster dimensions are:

Aspect Ratio	Horizontal	Vertical
1 x 1 (square)	0.99″	0.99″
4 x 3 (standard)	1.12″	0.84″

Horizontal TV lines = 1.12 x TV lines per target inch

Vertical TV lines (EIA) = 0.84 x TV lines per target inch

Resolution sensitivity data is recorded in TV lines per target inch

Therefore, 700 TV lines per target inch = 784 horizontal lines
= 588 vertical lines (EIA)

Z-7807
GL-7969

ET-T1690
Page 4
5-63

LIGHT TRANSFER CHARACTERISTICS

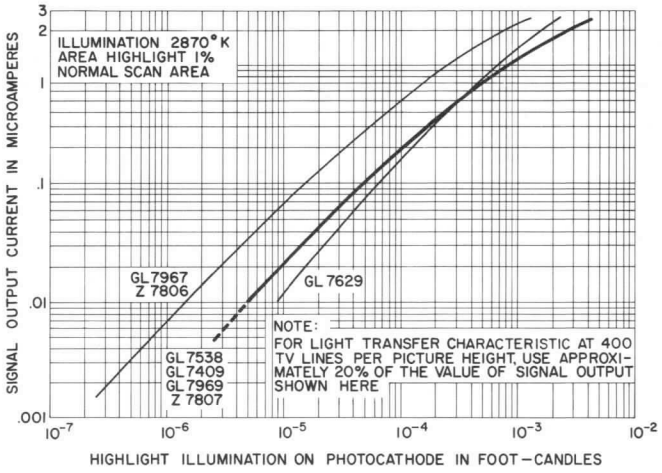

TYPICAL SIGNAL: NOISE CHARACTERISTICS VS. BANDWIDTH AND ILLUMINATION

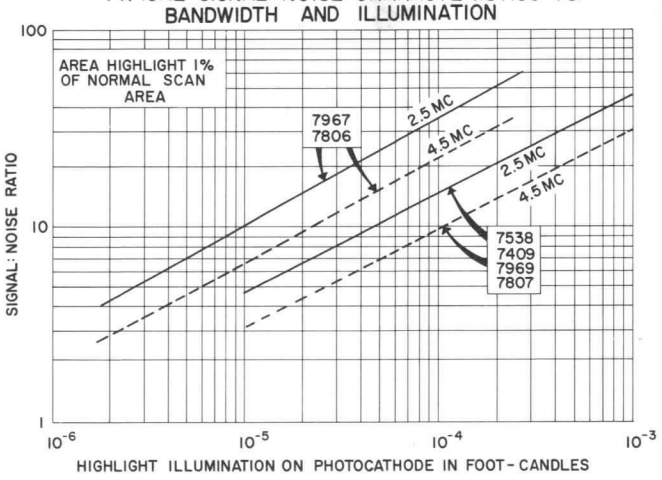

INTEGRATION EFFECT ON RESOLUTION SENSITIVITY

TYPES 7538 7409 7969 7807

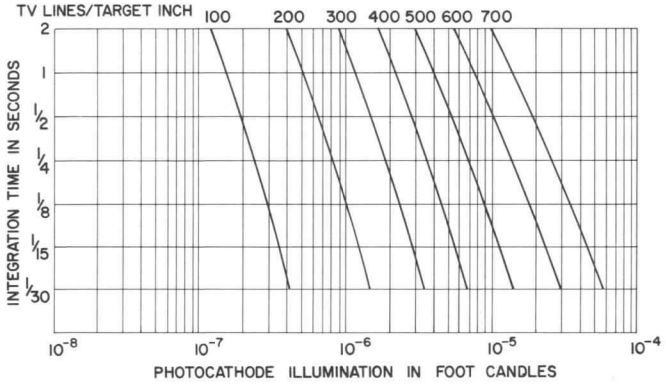

EFFECT OF CONTRAST RATIO ON RESOLUTION SENSITIVITY

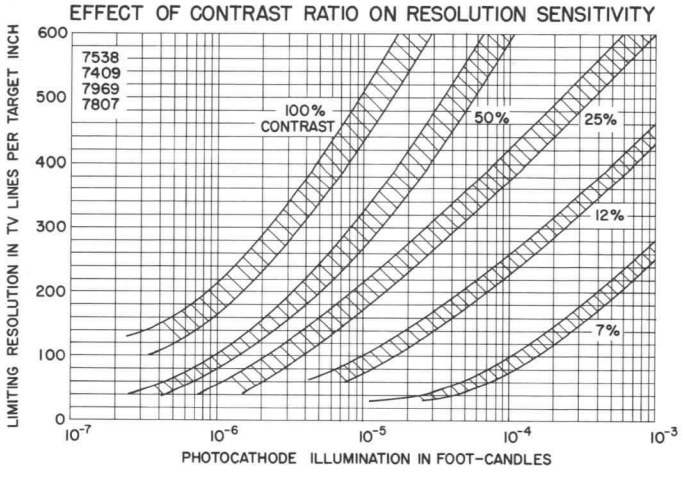

PHOTOCATHODE SPECTRAL RESPONSE CHARACTERISTICS

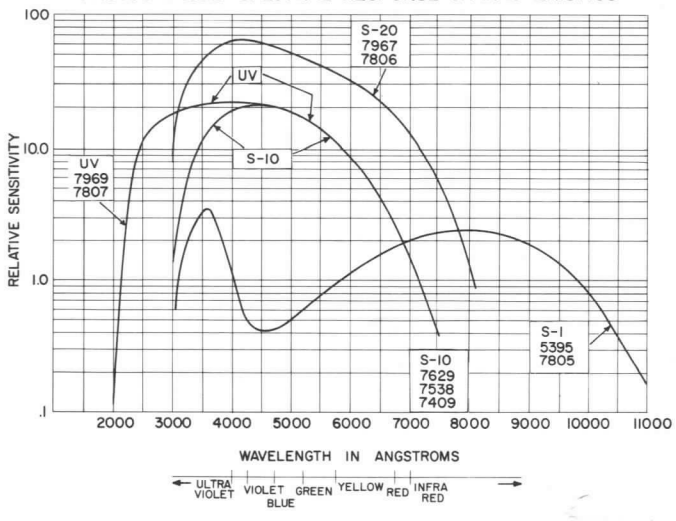

SCENE ILLUMINATION VS TYPICAL RESOLUTION SENSITIVITY BY TYPE*

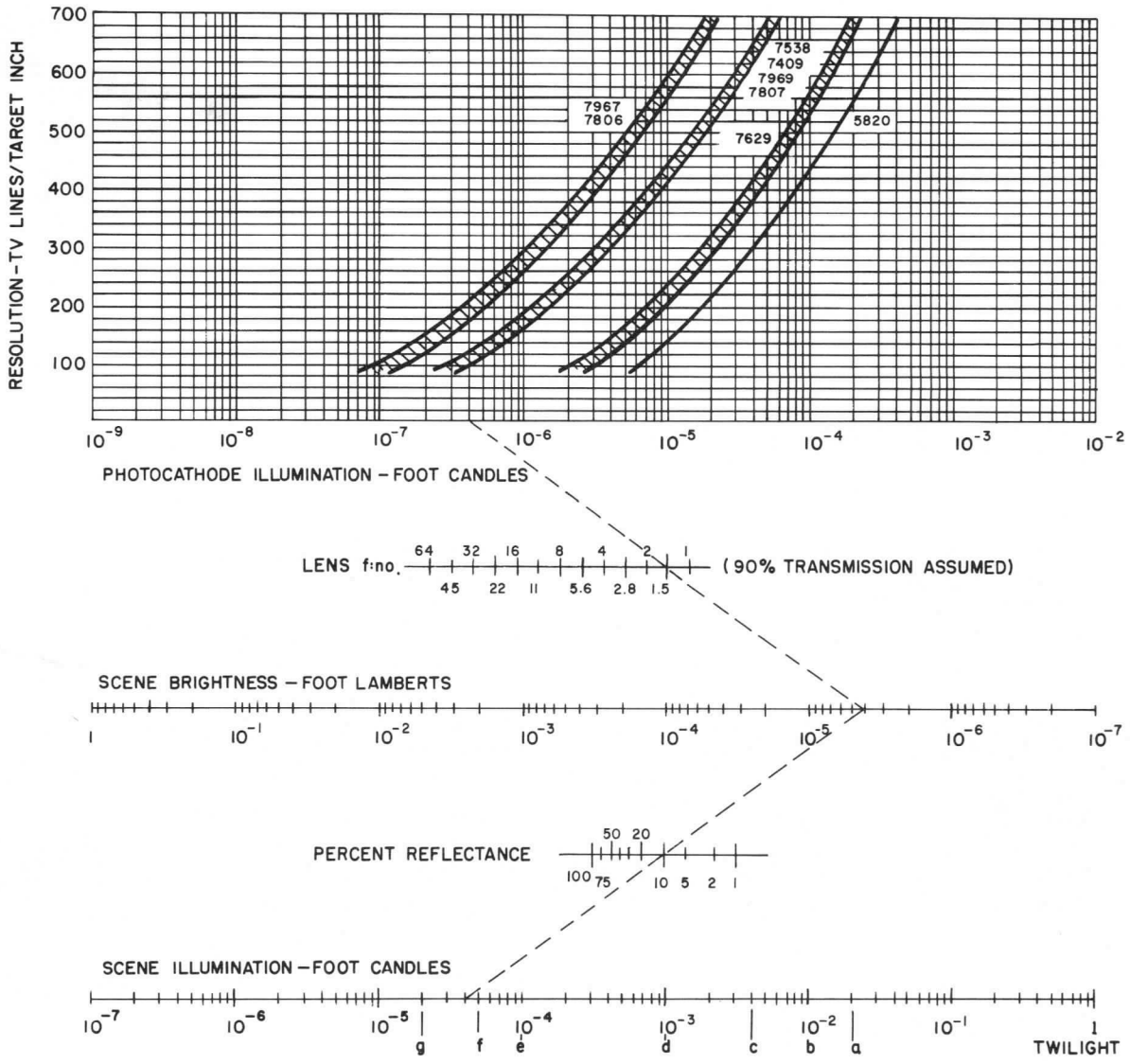

Code	Ambient Condition	Scene Illumination
a	Full moon–clear	2×10^{-2} ft-c
b	Half moon	1×10^{-2} ft-c
c	Full moon–moderately cloudy	4×10^{-3} ft-c
d	Quarter moon–clear	1×10^{-3} ft-c
e	No moon–clear	1×10^{-4} ft-c
f	No moon–moderately cloudy	5×10^{-5} ft-c
g	No moon–heavy cloud	2×10^{-5} ft-c

NEUTRAL DENSITY FILTERS FOR EXPOSURE CONTROL

TYPE AND DENSITY	PERCENT TRANSMITTANCE	NUMBER OF STOPS
ND .30	50.0	1
ND .60	25.0	2
ND .90	13.0	3
ND 1.00	10.0	3.3
ND 2.00	1.0	6.6
ND 3.00	0.10	10.0
ND 4.00	0.010	13.2

*This chart reprinted by permission of B. A. Bang.

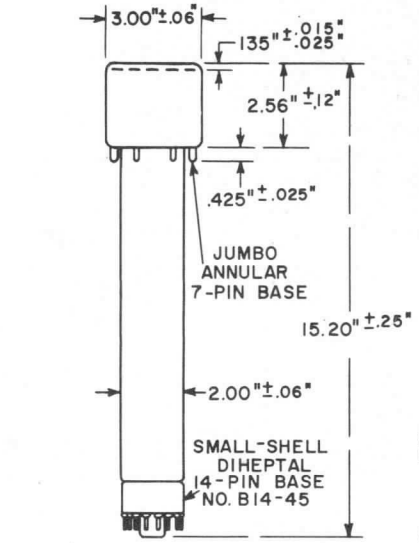

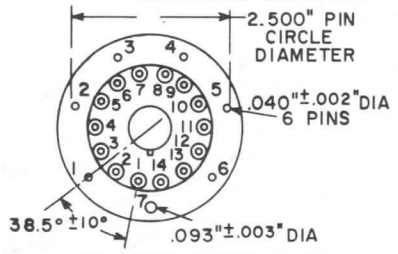

ENLARGED BOTTOM VIEW

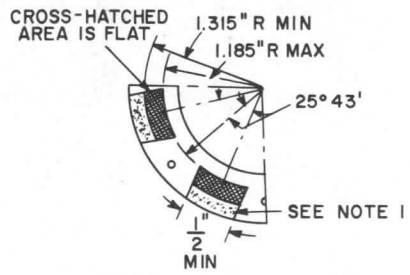

DETAIL OF BOTTOM VIEW OF JUMBO ANNULAR BASE

NOTE 1: DOTTED AREA IS FLAT OR EXTENDS TOWARD DIHEPTAL-BASE END OF TUBE BY 0.060" MAX.

ANNULAR BASE GAGE

ANGULAR VARIATIONS BETWEEN PINS AS WELL AS ECCENTRICITY OF NECK CYLINDER WITH RESPECT TO PHOTOCATHODE CYLINDER ARE HELD TO TOLERANCES SUCH THAT PINS AND NECK CYLINDER WILL FIT FLAT-PLATE GAGE WITH:

a. SIX HOLES HAVING DIAMETER OF 0.065"$^{\pm .0.001}$" AND ONE HOLE HAVING DIA OF 0.150"±0.001". ALL HOLES HAVE DEPTH OF 0.265"±0.001". THE SIX 0.065" HOLES ARE ENLARGED BY 45° TAPER TO DEPTH OF 0.047". ALL HOLES ARE SPACED AT ANGLES OF 51° 26'±5' ON CIRCLE DIAMETER OF 2.500"±0.001".

b. SEVEN STOPS HAVING HEIGHT OF 0.187"±0.001", CENTERED BETWEEN PIN HOLES, TO BEAR AGAINST FLAT AREAS OF BASE.

c. RIM EXTENDING OUT OF A MINIMUM OF 0.125" FROM 2.812" DIAMETER AND HAVING HEIGHT OF 0.126"±0.001".

d. NECK-CYLINDER CLEARANCE HOLE HAVING DIAMETER OF 2.200"±0.001".

DIRECTION OF LIGHT: PERPENDICULAR TO LARGE END OF TUBE

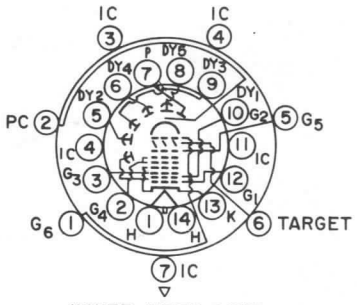

WHITE INDEX LINE ON FACE

BOTTOM VIEW

BASING DIAGRAM

SMALL-SHELL DIHEPTAL 14-PIN BASE

PIN 1: HEATER
PIN 2: GRID NO.4 & FIELD MESH
PIN 3: GRID NO. 3
PIN 4: INTERNAL CONNECTION-DO NOT USE
PIN 5: DYNODE NO. 2
PIN 6: DYNODE NO. 4
PIN 7: ANODE
PIN 8: DYNODE NO.5
PIN 9: DYNODE NO.3
PIN 10: DYNODE NO. 1, GRID NO. 2
PIN 11: INTERNAL CONNECTION-DO NOT USE
PIN 12: GRID NO. 1
PIN 13: CATHODE AND SUPPRESSOR GRID
PIN 14: HEATER

KEYED JUMBO ANNULAR 7-PIN BASE

PIN 1: GRID NO. 6
PIN 2: PHOTOCATHODE
PIN 3: INTERNAL CONNECTION-DO NOT USE
PIN 4: INTERNAL CONNECTION-DO NOT USE
PIN 5: GRID NO. 5
PIN 6: TARGET
PIN 7: INTERNAL CONNECTION-DO NOT USE

GENERAL ELECTRIC
POWER TUBE DEPARTMENT
Pickup Tube Operation
Syracuse, New York
PRINTED IN U.S.A.

GL-7969

IMAGE ORTHICON



FOCUS—MAGNETIC **DEFLECTION—MAGNETIC**

The GL-7969 is an image orthicon with an ultraviolet sensitive photosurface. Because of the low gamma, the tube has a very wide operating range at low light levels.

This tube features high gain, thin film magnesium oxide target with a storage factor of twenty times that of image orthicon target tubes such as the 5820. This target has several advantages. Its extreme thinness and unusual properties virtually eliminate sideways leakage which increases the resolution 25 to 50 percent over that of the standard target. It also has the ability to store charges for long periods of time. This storage ability is utilized for long persistence scanning modes, which provide additional sensitivity by use of low frame rates. It completely eliminates both sticking and burn-in since the target depends on electron conduction rather than a depletion process. The unique target construction compares the resolution capability of the 7969 with that of image orthicons with thin film photocathodes.

The target characteristics also assure a higher target-to-signal ratio than that of other image orthicons. Another advantage of the GL-7969 is a considerable reduction in the amplitude of target secondary emission ripple. This reduces image lag, which is caused by the darker areas of black-to-white transitions.

Electrical

Cathode—Unipotential	
Heater Voltage—AC or DC	6.3 ± 10% Volts
Heater Current	1.6 Amperes
Photocathode—Semitransparent	
Response—Ultraviolet sensitive	
Rectangular Image Displayed on Useful Scan	0.5 Inches
Orientation—Image orientation is obtained when the vertical axis is located in the plane passing through the center of the faceplate and the No. 1 pin shoulder boss	
Focusing Method—Magnetic	
Deflecting Method—Magnetic	
Direct Interelectrode Capacitance	
Anode to all other Electrodes	12 μμf

Mechanical

Overall Length	17.29 ± 0.25 Inches
Greatest Diameter of Bulb	3.60 ± 0.06 Inches
Mounting Position—Any Inside Diameter	2.4 Inches
Deflecting Coil Length	5 Inches
Focusing Coil Length	10 Inches
Alignment Coil Length	2 Inches
Photocathode Distance Inside End of Focusing Coil	1.4 Inches
Weight (approximate)	1.4 Pounds
Operating Position—Any except with Electrical Line up and Deflection at an angle of less than 20 degrees from vertical	

Thermal

Operating Temperature of Any Part of Bulb	50 Max C
Operating Temperature of Bulb at Large End of Tube Target Section	15 Max C
Temperature Difference Between Target Section and Any Part of Bell	5 Max C

MAXIMUM RATINGS—ABSOLUTE VALUES

Photocathode Voltage	550 Volts
Photocathode Illumination	30 Foot-Candles
Anode Supply Voltage*	6 Volts
Grid No. 1 Voltage	
Negative Bias Value	12 Volts
Positive Bias Value	3 Volts
Grid No. 2 and Dynode No. 1 Voltage	330 Volts
Grid No. 4 Voltage	300 Volts
Grid No. 5 Voltage	300 Volts
Grid No. 3 Voltage	150 Volts
Grid No. 6 Voltage	450 Volts
Voltage per Multiplier Stage	450 Volts

Target Amplifier	
Positive Voltage	2 Volts
Negative Voltage	10 Volts
Cathode Heater Cathode Voltage	
Heater Negative with Respect to Cathode	125 Volts
Heater Positive with Respect to Cathode	10 Volts

GENERAL ELECTRIC

TYPICAL OPERATION

Cathode Voltage (Image Cut-off)	100 to 200	Volts
Grid No. 1 Voltage for Picture Cut-off, beam	45 to 175	Volts
Grid No. 2 and Diode No. 1 Voltage	300	Volts
Grid No. 3 Voltage[1], multiplier beam	225 to 350	Volts
Grid No. 4 Voltage, beam focus	140 to 180	Volts
Grid No. 5 Voltage, decelerator	0 to 12	Volts
Grid No. 6 Voltage, accelerator		
[2] Percent of Photocathode Voltage, approximate	3 to 10	Volts
Diode No. 2 Voltage	650	Volts
Diode No. 3 Voltage	800	Volts
Diode No. 4 Voltage	1000	Volts
Diode No. 5 Voltage	1200	Volts
Anode Voltage	1250	Volts
DC Anode Current	3	Microamperes
Target Voltage without Blanking Voltage	0 to 2.0	Volts
Peak to Peak Blanking Voltage	5 to 20	Volts
Target Temperature Range	15 to 55	C
Field Strength at Center of Focusing Coil	5	Gausses
Field Strength of Alignment Coil, approximate	0 to 3	Gausses

[1] Ratio of dynode voltages is shown under Typical Operation.

[2] Adjust to give the most uniformly shaded picture near the minimum signal.

[3] Direction of current shall be such that a north seeking pole is attracted to the image end of the focusing coil, with the indicator located outside of and at the image end of the focusing coil.

OPERATING NOTES

Normally a new tube will exhibit some slight after-image characterized by a rapid switching decay which will gradually diminish with life. This can be minimized by the use of an erasing or illuminating focused spot covering for short periods of time.

Although a warm-up time of one hour is desirable, the tube can be used immediately after alignment as it cannot be damaged permanently by target burn.

Some tubes may exhibit spurious patterns when used immediately while relatively cool. These will disappear as the tube warms up and can be minimized during this period by slight readjustment of target voltage.

The target used in this tube greatly reduces the probability of permanent burn-in damage should a stationary highlight be imaged on the target for an extended period. However, imaging directly on the sun or other extremely bright sources should be avoided.

SPECTRAL SENSITIVITY CHARACTERISTIC

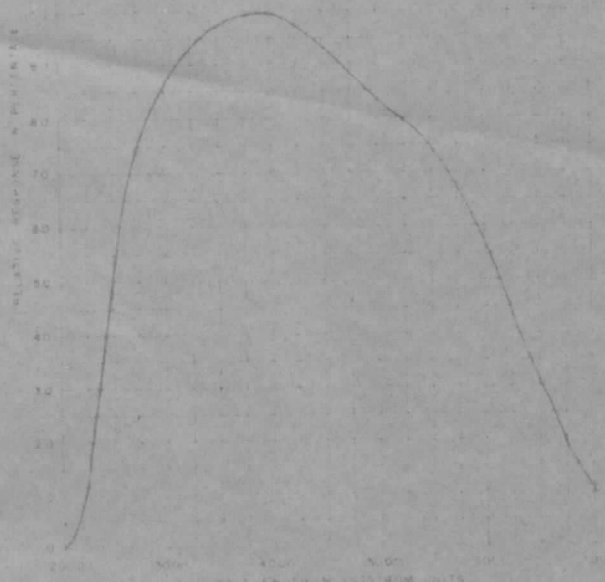

K-6W87-7212

TYPICAL RESOLUTION—SENSITIVITY CHARACTERISTICS SHOWING EFFECTS OF IMAGE INTEGRATION

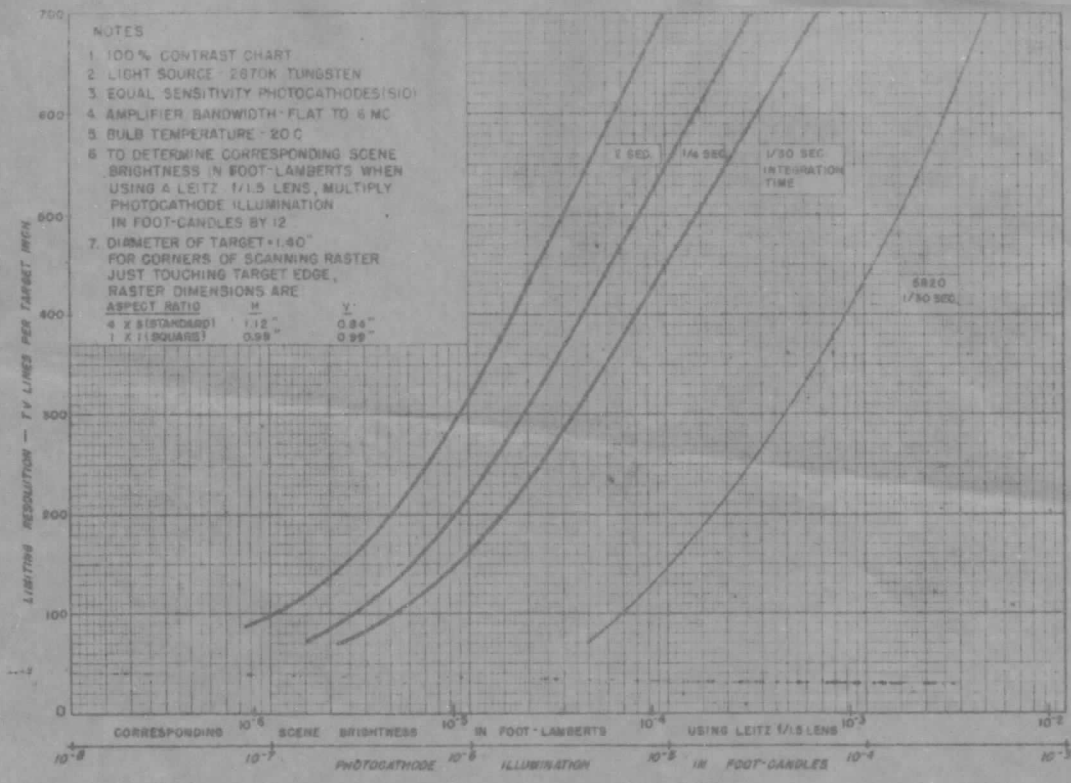

K-69087-72A977

8-60

EFFECT OF CONTRAST RATIO ON RESOLUTION SENSITIVITY

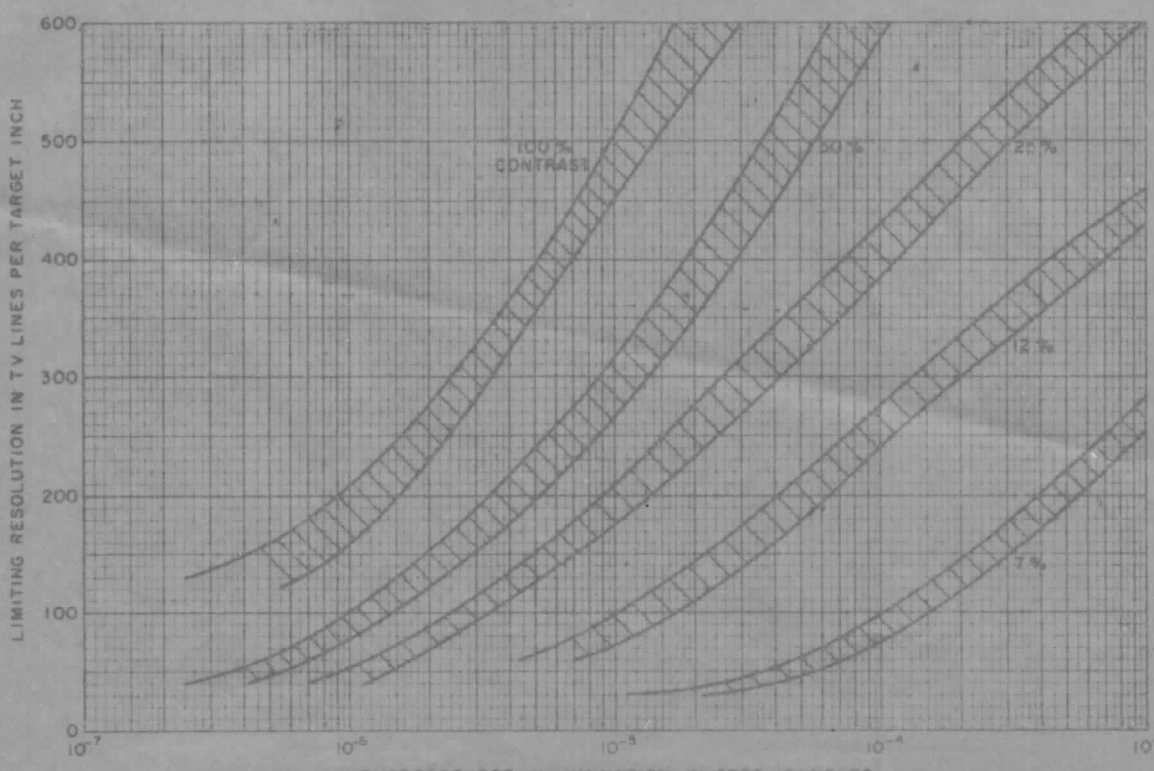

K-69087-72813

3-61

TRANSFER CHARACTERISTIC

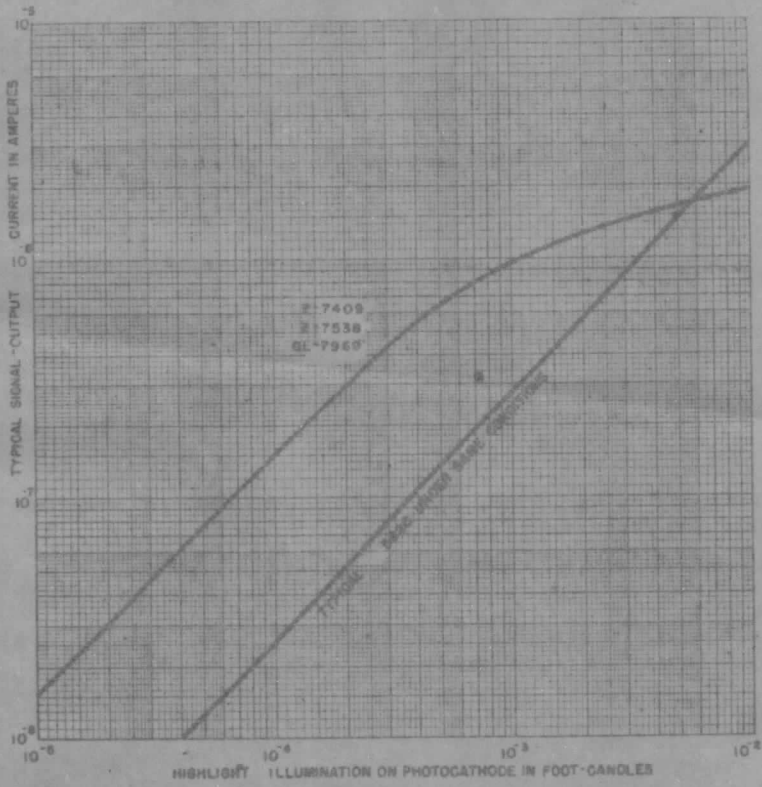

K-69087-72A913

3-61

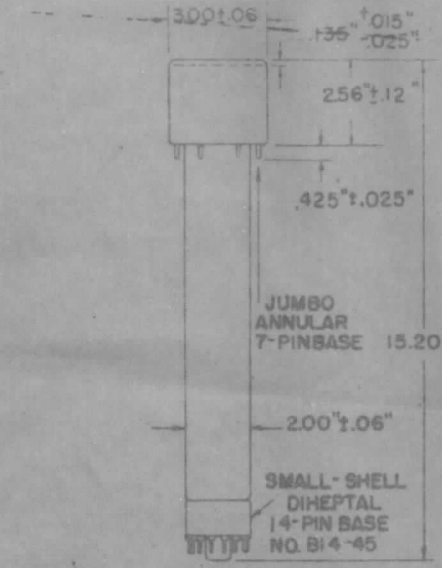

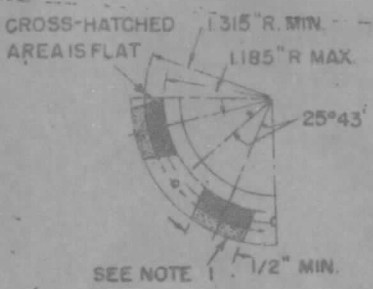

DETAIL OF BOTTOM VIEW OF JUMBO ANNULAR BASE

NOTE 1: DOTTED AREA IS FLAT OR EXTENDS TOWARD DIHEPTAL-BASE END OF TUBE BY 0.060" MAX.

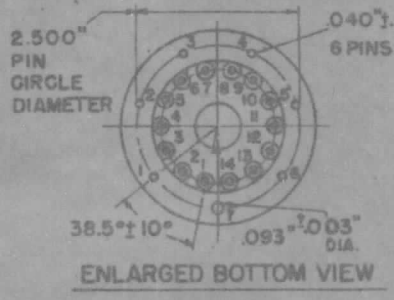

ENLARGED BOTTOM VIEW

ANNULAR BASE GAGE

ANGULAR VARIATIONS BETWEEN PINS AS WELL AS ECCENTRICITY OF NECK CYLINDER WITH RESPECT TO PHOTOCATHODE CYLINDER ARE HELD TO TOLERANCES SUCH THAT PINS AND NECK CYLINDER WILL FIT FLAT-PLATE GAGE WITH:

a. SIX HOLES HAVING DIAMETER OF 0.065"±.0.001" AND ONE HOLE HAVING DIA. OF 0.150±0.001". ALL HOLES HAVE DEPTH OF 0.265"±0.001". THE SIX 0.065" HOLES ARE ENLARGED BY 45° TAPER TO DEPTH OF 0.047". ALL HOLES ARE SPACED AT ANGLES OF 51°26'±5' ON CIRCLE DIAMETER OF 2.500"±0.001"

b. SEVEN STOPS HAVING HEIGHT OF 0.187"±0.001", CENTERED BETWEEN PIN HOLES, TO BEAR AGAINST FLAT AREAS OF BASE.

c. RIM EXTENDING OUT OF A MINIMUM OF 0.125" FROM 2.812" DIAMETER AND HAVING HEIGHT OF 0.126"±0.001".

d. NECK-CYLINDER CLEARANCE HOLE HAVING DIAMETER OF 2.200"±0.001".

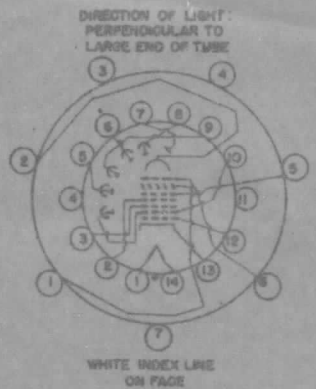

BASING DIAGRAM

SMALL-SHELL DIHEPTAL 14-PIN BASE

PIN 1: HEATER	PIN 6: DYNODE NO. 4	PIN 11: INTERNAL CONNECTION DO NOT USE
PIN 2: GRID NO. 4	PIN 7: ANODE	PIN 12: GRID NO. 1
PIN 3: GRID NO. 3	PIN 8: DYNODE NO. 5	PIN 13: CATHODE
PIN 4: INTERNAL CONNECTION-DO NOT USE	PIN 9: DYNODE NO. 3	PIN 14: HEATER
PIN 5: DYNODE NO. 2.	PIN 10: DYNODE NO. 1, GRID NO. 2	

KEYED JUMBO ANNULAR 7-PIN BASE

PIN 1: GRID NO. 6	PIN 5: GRID NO. 5
PIN 2: PHOTOCATHODE	
PIN 3: INTERNAL CONNECTION-DO NOT USE	PIN 6: TARGET
PIN 4: INTERNAL CONNECTION DO NOT USE	PIN 7: INTERNAL CONNECTION DO NOT USE

GENERAL ELECTRIC
POWER TUBE DEPARTMENT
Schenectady 5, N. Y.

OBJECTIVE
TECHNICAL INFORMATION

These ratings represent the design objective for this tube.

DEVELOPMENTAL TYPE

Z-5395
OTI-10
Page 1
9-30-59

This technical information is considered to be proprietary and is furnished as a service to customers for their private use only.

IMAGE ORTHICON

Focus – Magnetic Deflection – Magnetic

The Z-5395 is an image orthicon with a wide-spaced high-gain thin film target and an S-1 photosurface. The good sensitivity of the S-1 photosurface to radiation in the red and near infra red regions makes the tube suitable for detection and televising of scenes which are illuminated with or consist of infra red sources.

By appropriate choice of infra red filtered light sources for illumination, scenes which appear to be in total visual darkness can easily be televised. In addition, useful pictures of objects at elevated temperatures which are not visibly hot can be obtained.

The very low sideways leakage characteristics of the thin film target adapts the tube to applications where the signal is stored for a very long period before being read out. This permits the attainment of additional sensitivity by the use of low frame rates or beam pulsing.

Additional advantages due to the unique construction of the Z-5395 target are high amplitude response, reduction in redistribution of target secondary electrons, and minimized possibility of permanent burn-in damage from stationary image highlights.

Future design objectives for the tube are primarily in the areas of increased ruggedness, minimization of microphonics, increased red sensitivity, and improved temperature, sensitivity and stability relationships.

GENERAL

Electrical

Cathode - Unipotential		
Heater Voltage, AC or DC	6.3 ± 10%	Volts
Heater Current	0.6	Amperes
Photocathode - Semi-Transparent		
Rectangular Image, 4 by 3 Aspect Ratio		
Useful Size, Maximum Diagonal	1.8	Inches
Orientation - Proper orientation is obtained when the vertical scan is essentially parallel to the plane passing through the center of the face-plate and pin- No. 7 of the shoulder base.		
Focusing Method - Magnetic		
Deflecting Method - Magnetic		
Direct Interelectrode Capacitance		
Anode to all Other Electrodes	12	μμf

Mechanical

Over-all Length	15.20 ± 0.25	Inches
Greatest Diameter of Bulb	3.00 ± 0.06	Inches
Minimum Deflecting Coil Inside Diameter	2 3/8	Inches
Deflecting Coil Length	5	Inches
Focusing Coil Length	10	Inches
Alignment Coil Length	15/16	Inches
Photocathode Distance Inside End of Focusing Coil	1/2	Inches
Weight, approximate	1.4	Pounds

Operating Position - Any. Except with diheptal base up and the tube axis at an angle of less than 20 degrees from vertical.

The specifications of this tube type are subject to change. This tube is now under development and is made available for experimental purposes only. Delivery of tubes with the listed characteristics and data do not imply continued availability of tubes with the same characteristics or dimensions. For the most recent information and during the stages of the development please consult your local Power Tube Department Regional Sales Office.

MAXIMUM RATINGS AND TYPICAL OPERATING CONDITIONS

Maximum Ratings, Absolute Values		
Photocathode Voltage	-550	Max Volts
Photocathode Current #, maximum	10	Microamperes
Photocathode Illumination	20	Max Foot-Candles
Anode Supply Voltage*	1350	Max Volts
Grid-No. 1 Voltage		
Negative Bias Value	125	Max Volts
Positive Bias Value	0	Max Volts
Grid-No. 2 and Dynode-No. 1 Voltage	350	Max Volts
Grid-No. 3 Voltage	400	Max Volts
Grid-No. 4 Voltage	300	Max Volts
Grid-No. 5 Voltage	150	Max Volts
Grid-No. 6 Voltage	-550	Max Volts
Voltage per Multiplier Stage	350	Max Volts
Target Voltage		
Positive Voltage	2	Max Volts
Negative Voltage	10	Max Volts
Peak Heater Cathode Voltage		
Heater Negative with Respect to Cathode	125	Max Volts
Heater Positive with Respect to Cathode	10	Max Volts
Operating Temperature of Any Part of Bulb §	50	Max C
Operating Temperature of Bulb at Large End of Tube, target section	35	Min C
Temperature Difference Between Target Section and Any Part of Bulb Hotter than Target Section	5	Max C
Typical Operation		
Photocathode Voltage, image focus	-400 - -500	Volts
Grid-No. 1 Voltage for Picture Cut-off, beam	45 - -115	Volts
Grid-No. 2 and Dynode-No. 1 Voltage	300	Volts
Grid-No. 3 Voltage, multiplier focus +	225 - 330	Volts
Grid-No. 4 Voltage, beam focus	140 - 180	Volts
Grid-No. 5 Voltage, decelerator	0 - 125	Volts
Grid-No. 6 Voltage, accelerator		
75 Percent of Photocathode Voltage, approximate	-300 - -405	Volts
Dynode-No. 2 Voltage	600	Volts
Dynode-No. 3 Voltage	800	Volts
Dynode-No. 4 Voltage	1000	Volts
Dynode-No. 5 Voltage	1200	Volts
Anode Voltage	1250	Volts
DC Anode Current	3	Microamperes
Target Voltage, without blanking voltage	0 - 2.0	Volts
Peak to Peak Blanking Voltage	5 - 20	Volts
Target Temperature Range	15 - 55	C
Field Strength at Center of Focusing ‡	75	Gausses
Field Strength of Alignment Coil, approximate	0 - 3	Gausses

Characteristic Values	Minimum	Bogey	Maximum	
Sensitivity				
Photocathode, luminous with 2870 K tungsten light source	8	12	. . .	Microamperes
Photocathode ¶, percentage of infra red response with stock thickness, Corning #2540 and 2870 K tungsten light source	2.5	5.0	. . .	Percent

* Ratio of dynode voltages is shown under Typical Operation.

\+ Adjust to give the most uniformly shaded picture near maximum signal.

‡ Direction of current should be such that a north-seeking pole is attracted to the image end of the focusing coil, with the indicator located outside of and at the image end of the focusing coil.

§ The maximum temperature rating should not be exceeded since too high a bulb temperature may cause the more volatile components of the photocathode and dynode surfaces to redistribute with consequent decrease in life and sensitivity of the tube. The use of a fan on the tube is recommended.

¶ A small temporary loss of infra red sensitivity may occur after long periods of operation. This sensitivity should recover almost completely during idle periods.

For most stable operation, the use of the average photocathode current below the maximum rated value of 10 microamperes is recommended. Maximum life and most stable sensitivity characteristics will be obtained by using the lowest values of average photocathode current which are consistent with good picture quality.

SPECTRAL SENSITIVITY CHARACTERISTIC
S-1 PHOTOSURFACE
For Equal Values of Radiant Flux at All Wavelengths

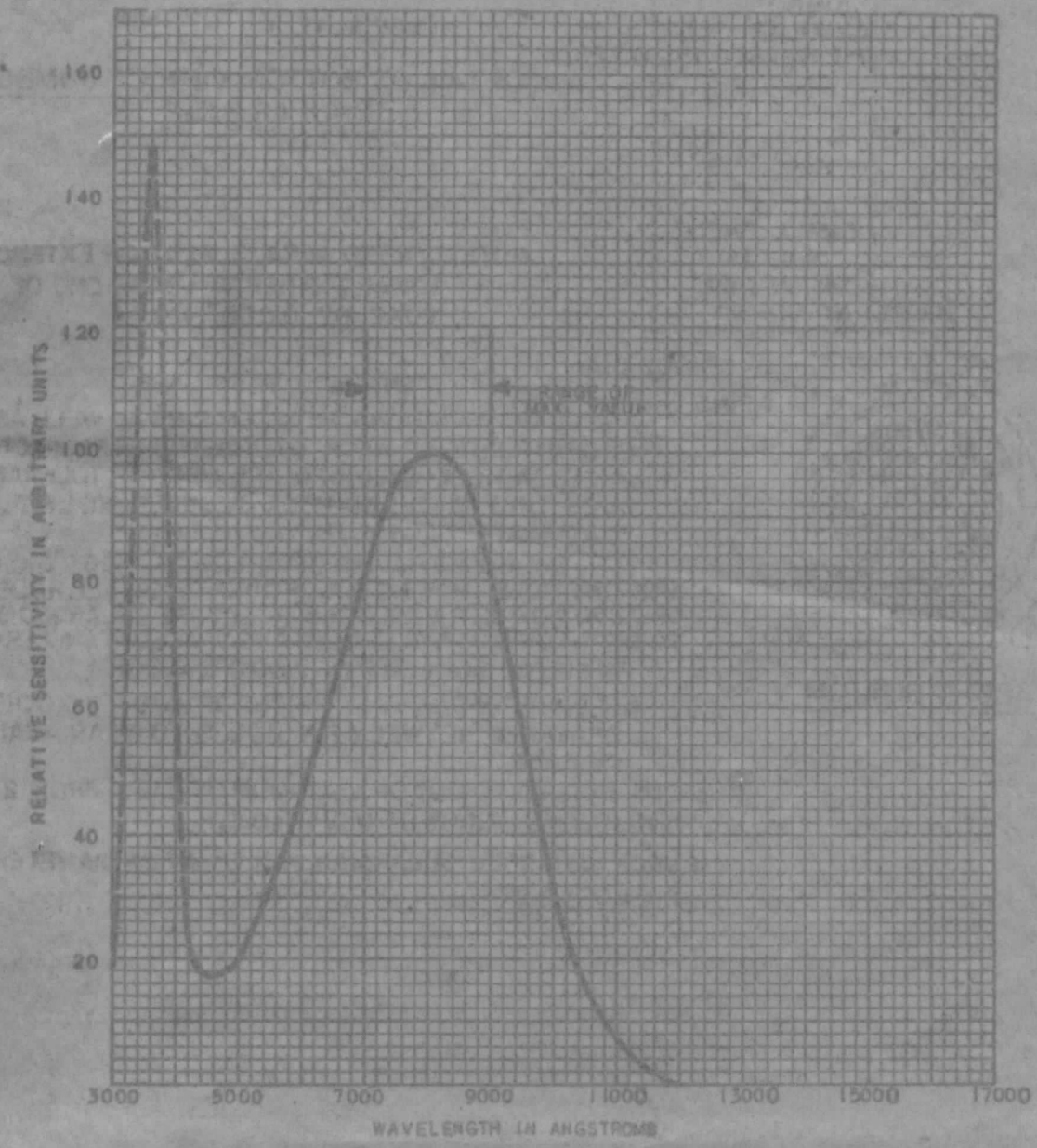

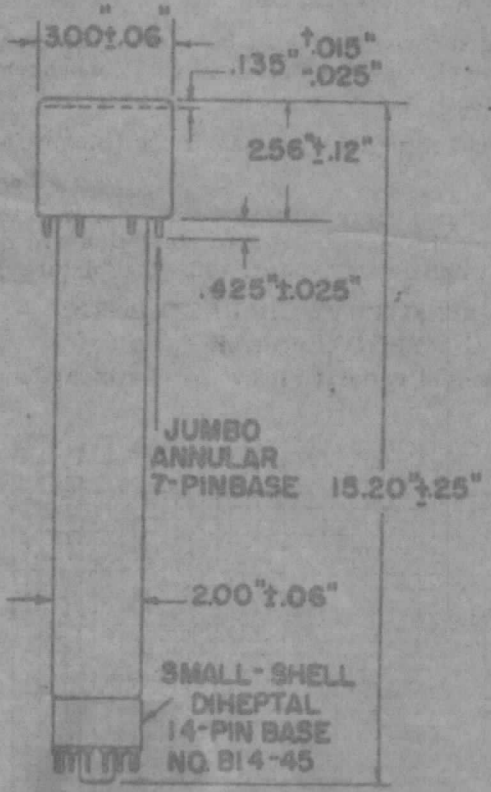

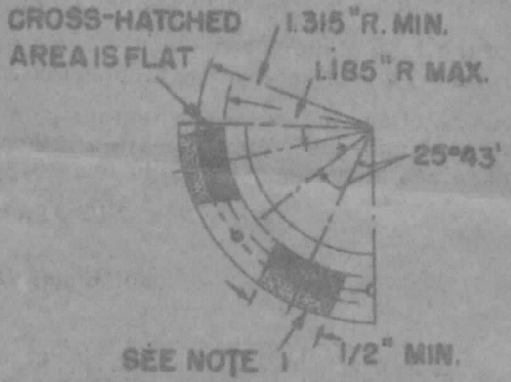

DETAIL OF BOTTOM VIEW OF JUMBO ANNULAR BASE

NOTE1: DOTTED AREA IS FLAT OR EXTENDS TOWARD DIHEPTAL-BASE END OF TUBE BY 0.060" MAX.

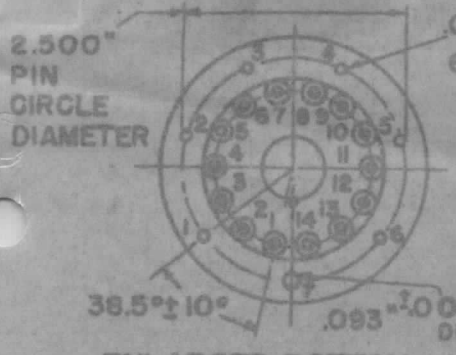

ENLARGED BOTTOM VIEW

ANNULAR BASE GAGE

ANGULAR VARIATIONS BETWEEN PINS AS WELL AS ECCENTRICITY OF NECK CYLINDER WITH RESPECT TO PHOTOCATHODE CYLINDER ARE HELD TO TOLERANCES SUCH THAT PINS AND NECK CYLINDER WILL FIT FLAT-PLATE GAGE WITH:

a. SIX HOLES HAVING DIAMETER OF 0.065"± .0.001" AND ONE HOLE HAVING DIA. OF 0.150±0.001". ALL HOLES HAVE DEPTH OF 0.265"±0.001". THE SIX 0.065" HOLES ARE ENLARGED BY 45° TAPER TO DEPTH OF 0.047". ALL HOLES ARE SPACED AT ANGLES OF 51°26'±5' ON CIRCLE DIAMETER OF 2.500"±0.001"

b. SEVEN STOPS HAVING HEIGHT OF 0.187"±0.001", CENTERED BETWEEN PIN HOLES, TO BEAR AGAINST FLAT AREAS OF BASE.

c. RIM EXTENDING OUT OF A MINIMUM OF 0.125" FROM 2.812" DIAMETER AND HAVING HEIGHT OF 0.126"±0.001".

d. NECK-CYLINDER CLEARANCE HOLE HAVING DIAMETER OF 2.200"±0.001".

DIRECTION OF LIGHT:
PERPENDICULAR TO
LARGE END OF TUBE.

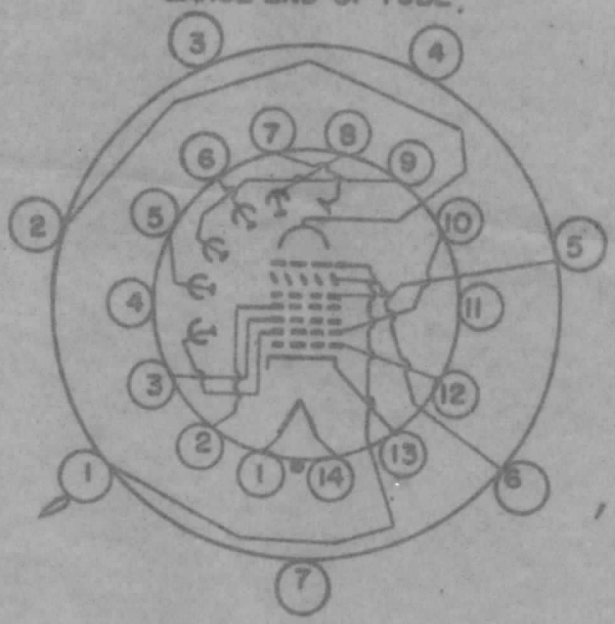

WHITE INDEX LINE
ON FACE

BASING DIAGRAM

SMALL-SHELL DIHEPTAL 14-PIN BASE

PIN 1: HEATER
PIN 2: GRID NO. 4
PIN 3: GRID NO. 3
PIN 4: INTERNAL CONNECTION-DO NOT USE
PIN 5: DYNODE NO. 2
PIN 6: DYNODE NO. 4
PIN 7: ANODE
PIN 8: DYNODE NO. 5
PIN 9: DYNODE NO. 3
PIN 10: DYNODE NO. 1, GRID NO. 2
PIN 11: INTERNAL CONNECTION DO NOT USE
PIN 12: GRID NO. 1
PIN 13: CATHODE
PIN 14: HEATER

KEYED JUMBO ANNULAR 7-PIN BASE

PIN 1: GRID NO. 6
PIN 2: PHOTOCATHODE
PIN 3: INTERNAL CONNECTION-DO NOT USE
PIN 4: INTERNAL CONNECTION DO NOT USE
PIN 5: GRID NO. 5
PIN 6: TARGET
PIN 7: INTERNAL CONNECTION DO NOT USE

SERIES 730B

SPARK GAPS

MINIATURE PROTECTIVE DEVICES
STAINLESS-STEEL OR TUNGSTEN ELECTRODES
4 JOULES 25 JOULES
250 TO 6000 VOLTS

The 730B series of gas-filled over-voltage breakdown gaps are designed to protect costly electronic equipment from abnormal high-voltage conditions. The gaps are of a rugged glass-and-metal construction and are hermetically sealed against humidity, atmospheric conditions, and foreign particles. They are constructed with stainless-steel electrodes for normal application and tungsten electrodes for heavy-duty applications.

The stainless-steel gaps are capable of dissipating 4 joules and the tungsten gaps 25 joules. The gap acts as an open-circuit switch until the rated voltage is exceeded, when the gap breaks down, providing an energy-diverting path removing voltage from the critical equipment. The arc in the gap is broken in an arc-suppressing gas when the fault has cleared and current through the gap approaches zero.

The 730B series gaps find application where transient-voltage protection is required for the electrical safety of units such as costly capacitors, transformers, tubes or other electrical or electronic equipment.

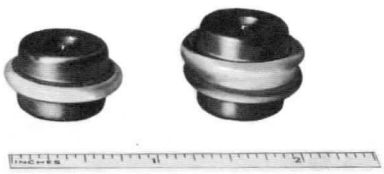

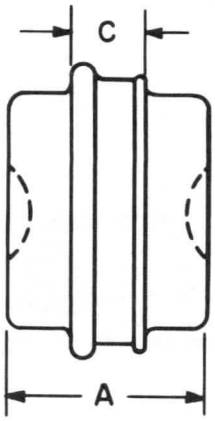

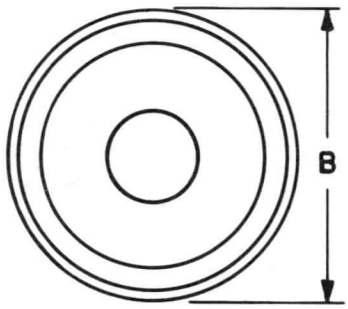

Rating: 60-cycle peak breakdown voltage from 250 to 6000 volts—to customer specification.

Underwriters' and CSA Listings: Suitability of application applies.

STAINLESS-STEEL ELECTRODE

Catalog No.	Voltage	Dimensions in Inches		
		A (Maximum)	B (Maximum)	C (Approximate)
95X713	250 −600	0.515	57/64	1/8
95X712	325 ±175	0.515	57/64	1/8
95X932	450 ±100	0.515	57/64	1/8
95X612	500 ±100	0.515	57/64	1/8
503X42	600 ±100	0.515	57/64	1/8
503X43	700 ±100	0.515	57/64	1/8
95X446	1200 ±120	0.515	57/64	1/8
503X93	1500 ±150	0.515	57/64	1/8
503X73	1960 ±460	0.620	1	1/4
95X606	2200 ±220	0.620	1	1/4
95X711	2500 ±500	0.650	1	1/4
504X66	2600 ±400	0.650	1	1/4
95X714	3000 +500 −100	0.650	1	1/4
503X47	3250 ±165	0.687	1	1/4
504X67	3400 ±200	0.650	1	1/4
503X48	4000 ±400	0.687	1	1/4
AG4300-01	4300 ±430	0.687	1	1/4
503X49	4500 ±450	0.687	1	1/4
503X50	5000 ±500	0.687	1	1/4
95X981	6000 ±1200	0.687	1	1/4

TUNGSTEN ELECTRODE

Catalog No.	Voltage	Dimensions in Inches		
		A (Maximum)	B (Maximum)	C (Approximate)
503X66	500 ±100	0.515	57/64	1/8
AG600-02	600 ± 60	0.515	57/64	1/8
AG700-02	700 ±100	0.515	57/64	1/8
AG750-02	750 ± 75	0.515	57/64	1/8
503X64	1200 ±120	0.515	57/64	1/8
503X86	1300 ±100	0.515	57/64	1/8
504X2	1400 ±100	0.515	57/64	1/8
AG1500-02	1500 ±150	0.520	57/64	1/8
503X65	2200 ±220	0.620	1	1/4
AG2278-02	2278 ±228	0.620	1	1/4
505X48	2450 ±245	0.620	1	1/4
AG3000-02	3000 +500 −100	0.650	1	1/4
AG4000-02	4000 ±400	0.687	1	1/4
AG4300-02	4300 ±430	0.687	1	1/4
AG6000-02	6000 ±1200	0.687	1	1/4

GENERAL ELECTRIC

TUBE DEPARTMENT

GENERAL ELECTRIC

Schenectady, New York 12305

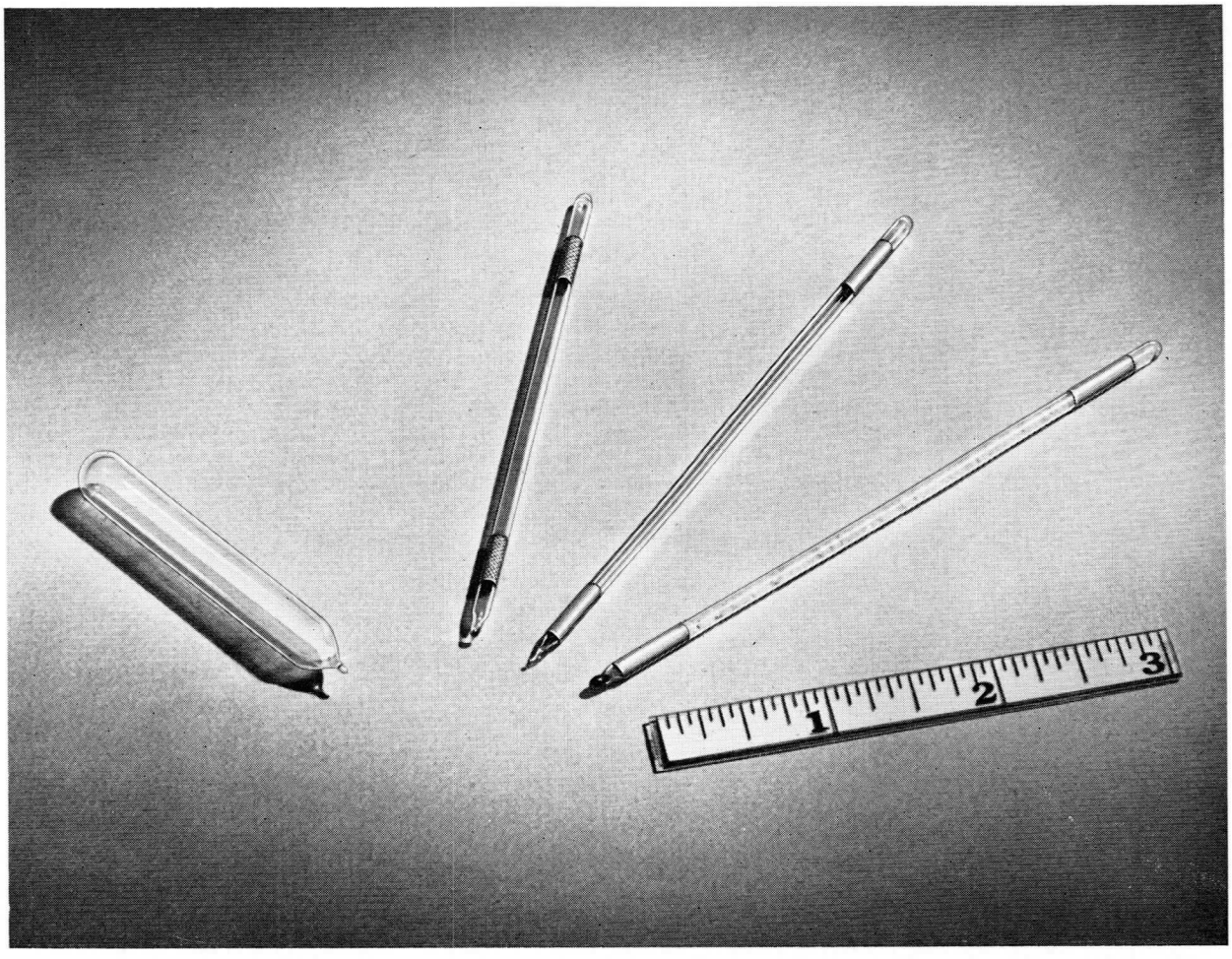

GAS-DISCHARGE DEVICE

These gas-discharge devices are for use in polarization or branching-type duplexers in radar systems. In such service they perform the same function as A-TR and Pre-TR tubes and can be used to replace these switching tubes where higher power levels are required. In operation the gas-filled envelope ionizes to form a highly conductive gas column when high radio-frequency power is applied during the transmission period, and deionizes when the power is removed.

APPLICATION

GL-6619—Groups of ten to twenty in polarization twist duplexers, 2700 to 2900 megacycles.
GL-6620—Groups of two in branching-type duplexers, 3400 to 3600 megacycles.
GL-6621—Groups of ten to twenty in polarization twist duplexers, 2700 to 2900 megacycles.

TECHNICAL INFORMATION

GENERAL

Tube Type Number	GL-6619	GL-6620	GL-6621	
Electrical				
Firing Power	250	250	250	Min Kilowatts
	Tube axis 85 degrees from direction of electric field vector.			
Recovery Time (single tube)	25 Peak power = 50 kw; pulse repetition rate = 1000 pps; pulse duration = 1.0 μ sec; magnetron frequency = 2800 ±20 mc; probing signal frequency = 2900 ±30 mc.	40 Peak power = 50 kw; pulse repetition rate = 1000 pps; pulse duration = 1.0 μ sec; magnetron frequency = 3500 ±20 mc; probing signal frequency = 3570 ±30 mc.	50 Peak power = 50 kw; pulse repetition rate = 1000 pps; pulse duration = 1.0 μ sec; magnetron frequency = 2800 ±20 mc; probing signal frequency = 2900 ±30 mc.	Max Microseconds
	Tube axis is parallel to incident electric field vector.			
Mechanical				
Mounting Position	Any	Any	Any	
Ambient Temperature Range (non-operating)	−40 to +100	−40 to +100	−40 to +100	C
Net weight, approximate	3	3	2	Ounces
Maximum Ratings				
Transmitter Peak Power	2.5	2	5	Megawatts
Frequency Range	2700 to 2900	3400 to 3600	2700 to 2900	Megacycles per Second

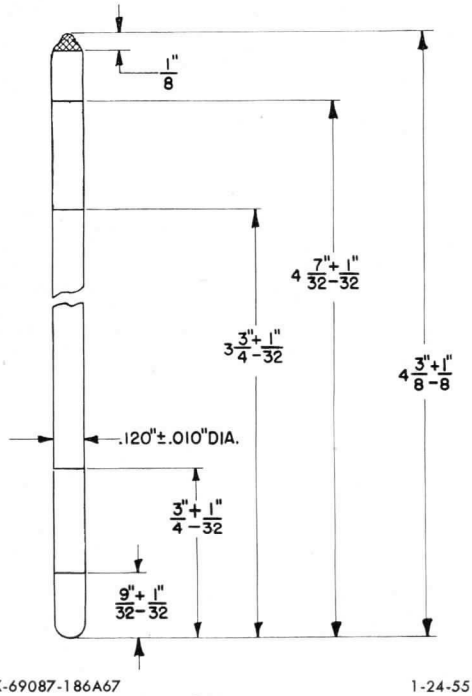

K-69087-186A67 1-24-55

OUTLINE
GL-6619, GL-6621

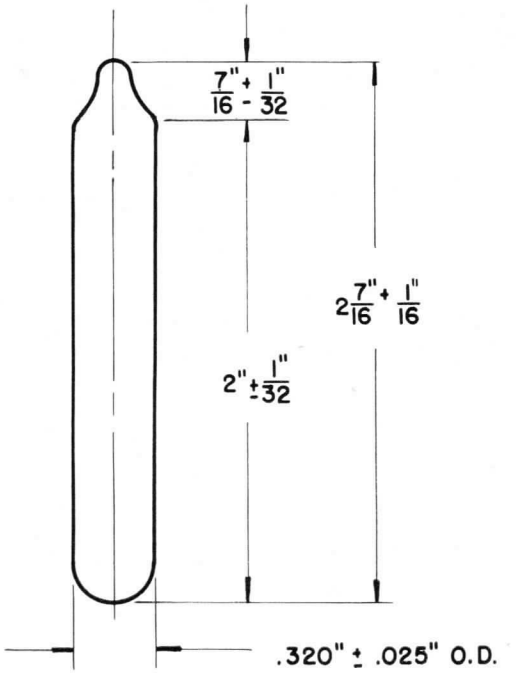

K-69087-186A78 1-24-55

OUTLINE
GL-6620

TUBE DEPARTMENT
GENERAL ELECTRIC
Schenectady 5, N. Y.

PRINTED IN U.S.A.

GL-7964

TRIGGERED SPARK GAP



MINIATURE SWITCHING DEVICE **3 KILOVOLTS**

18 JOULES

The GL-7964 is a small, cold cathode, gaseous, triggered spark gap capable of switching 18 joules of energy at high voltages. Since the device does not require external energy to initiate the discharge its use permits both equipment cost reduction and savings in space through component elimination.

Mechanical features include rugged metal-ceramic construction, ability to withstand high shock and vibration conditions, and reliable operation over temperatures ranging from as low as −80 to as high as +200 F.

The GL-7964 is especially designed to deliver short rapid pulses of current with minimum delay and jitter in applications where high hold-off voltages and low leakage currents exist.

Applications include switching single stored electrical energy systems into low impedance loads, or energy storage capacitors into resistive or inductive loads.

Electrical

Heater Voltage	None Required

Mechanical

Mounting Position—Any

Net Weight	0.3 Ounces

Thermal

Ambient Temperature Range	−80 to +200 F

MAXIMUM RATINGS

Interelectrode Leakage Resistance	10,000	Megohms
Main Gap		
Operating Voltage	2.0 to 2.6	Kilovolts
Hold-off Voltage		
Indefinite	3	Kilovolts
10 Minutes	3.6	Kilovolts
Peak Current		
Ringing*, maximum	1500	Amperes
Unidirectional Pulse, maximum	4000	Amperes
Pulse Duration, maximum	10	Microseconds
Dissipation, approximate	60	Volts
Delay Time† @ V_{APP} 2600 volts	1.5	Microseconds
Jitter‡	0.5	Microseconds

Trigger		
Firing Voltage, minimum§	5000	Volts
Peak Firing Current, maximum	5	Amperes
Firing Pulse Duration, maximum**	10	Microseconds

* 1500 amperes for the first half cycle of a 10–12 kc ringing frequency, circuit should be sufficiently damped to pass only 5–6 cycles.

† Main gap delay time is defined as the interval of time between application of ½ maximum trigger voltage and initiation of ½ maximum current conduction.

‡ Main gap jitter is defined as the variation in main-gap delay time.

§ Breakdown to occur on leading edge of pulse having a rise time of 0.5 microseconds where rise time is defined as the interval of time between 10 percent and 90 percent of the trigger voltage pulse.

**Measured at a point between 10 to 90 percent of initial rise to a point 90 percent of current maximum on trailing edge of pulse.

GENERAL ELECTRIC

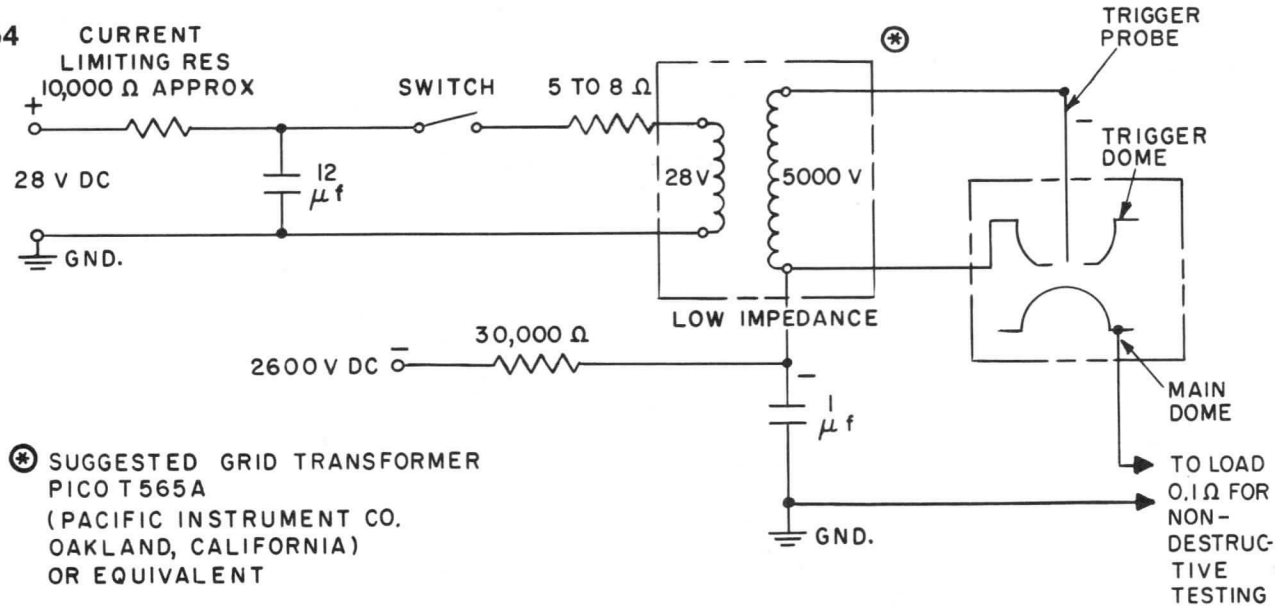

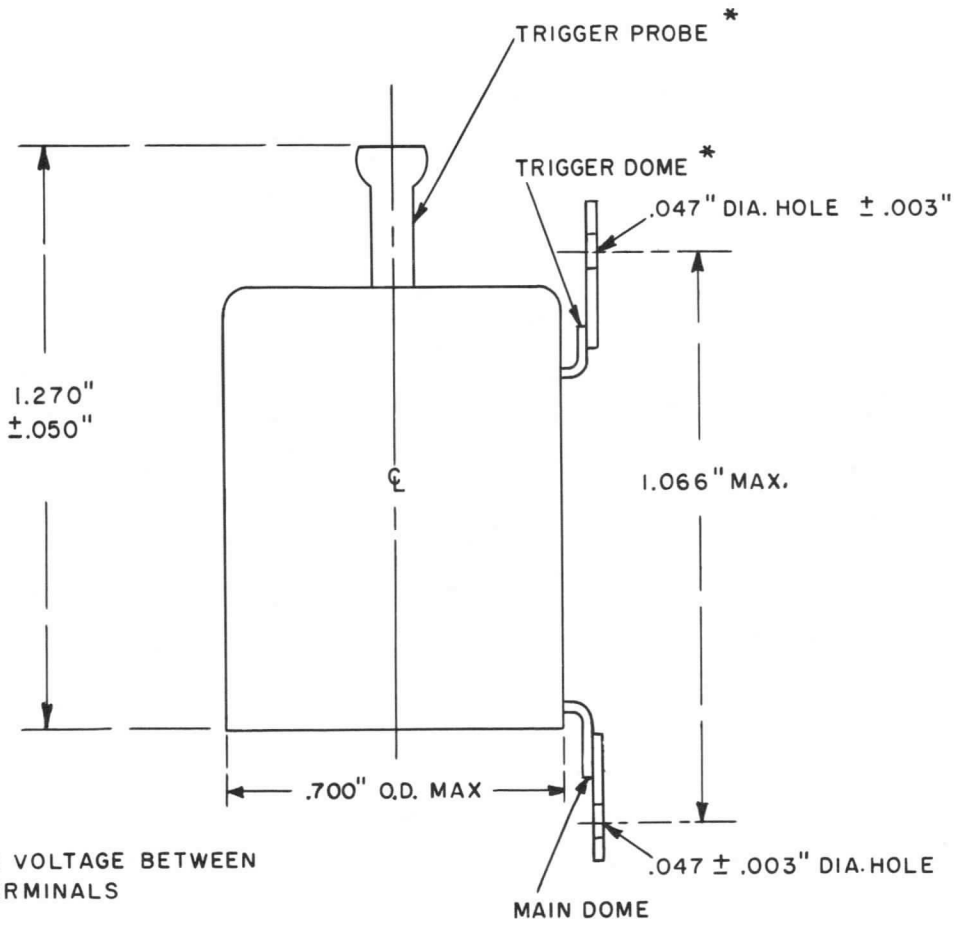

* APPLY TRIGGER VOLTAGE BETWEEN THESE TWO TERMINALS

K-69087-280A72

2-61

GENERAL ELECTRIC

POWER TUBE DEPARTMENT
Schenectady 5, N. Y.

PRINTED IN U.S.A.



VACUUM CAPACITORS

GL-1L21, GL-1L22, GL-1L23, GL-1L24, GL-1L25, GL-1L31, GL-1L32, GL-1L33, GL-1L36, and GL-1L38

These capacitors are designed for circuits where the peak voltages range up to 7500 and to 16,000 volts. They are useful as plate-tank and by-pass capacitors in radio-frequency oscillators or amplifiers and as neutralizing capacitors in radio-frequency amplifiers in conjunction with small, low-capacitance padding capacitors. In communication applications, vacuum capacitors are extensively used as antenna-coupling capacitors, especially in aviation radio installations where constant internal voltage breakdown is an essential requirement.

The small size and compact construction of these capacitors permit circuits to be designed more compactly and with shorter leads than with air capacitors. They are comparatively loss-free, since there are no losses in the vacuum dielectric and because the total capacitance is lumped into a size about one cubic inch. Other advantages include the elimination, because of the vacuum construction, of the adverse effects of dust and other foreign matter, and constant internal voltage breakdown which is independent of altitude, temperature, and humidity.

GENERAL ELECTRIC

Supersedes ETI-262–269, -307–308 and ETX-113–120, -227, -228

Electronic TUBE

TECHNICAL INFORMATION

Type No.	Capacitance ±5 Per Cent	Voltage Maximum Peak	Ambient Temperature		Weight	
			Minimum	Maximum	Net Ounces	Shipping Pounds
GL-1L32	6 uuf	7500 Volts	−40	+65 C	4	1
GL-1L31	6 uuf	16000 Volts	−40	+65 C	6	1
GL-1L21	12 uuf	7500 Volts	−40	+65 C	4	1
GL-1L25	12 uuf	16000 Volts	−40	+65 C	6	1
GL-1L36	25 uuf	7500 Volts	−40	+65 C	4	1
GL-1L22	25 uuf	16000 Volts	−40	+65 C	6	1
GL-1L38	50 uuf	7500 Volts	−40	+65 C	4	1
GL-1L23	50 uuf	16000 Volts	−40	+65 C	6	1
GL-1L33	100 uuf	7500 Volts	−40	+65 C	6	1
GL-1L24	100 uuf	16000 Volts	−40	+65 C	8	1

The curves on page 4 for the 7500-volt types and on page 5 for the 16,000-volt types show the maximum allowable peak r-f voltage and maximum RMS current when the capacitors are operated at various frequencies. An additional d-c voltage is permissible so long as the total voltage (d-c plus r-f) does not exceed the maximum allowable peak voltage indicated by the dotted line on the curve.

These curves apply when the capacitors are operated at an ambient temperature of 50 C and for normal operating conditions with natural air cooling.

The correction curve on page 3 indicates the percentage increase or decrease in r-f voltage and current when the capacitors are operated at ambient temperature above or below 50 C. (Note that the allowable peak voltage, r-f plus d-c, at any ambient temperature should not exceed the maximum as indicated by the dotted line of the curves on pages 4 and 5.)

The manner in which these curves are used can be demonstrated by taking the 1L21 as an example. Assume that the 1L21 is to be used at a frequency of 30 megacycles and at an ambient temperature of 40 C. The correction curve indicates a correction factor of 118 percent at this temperature; the curves on page 4 indicate a maximum r-f voltage of 4600 volts peak and a maximum current of 10 amperes at the frequency chosen. The correction factor of 118 percent applied to these voltage and current values indicates an allowable maximum peak r-f voltage of 5428 volts and a maximum current of 11.8 amperes.

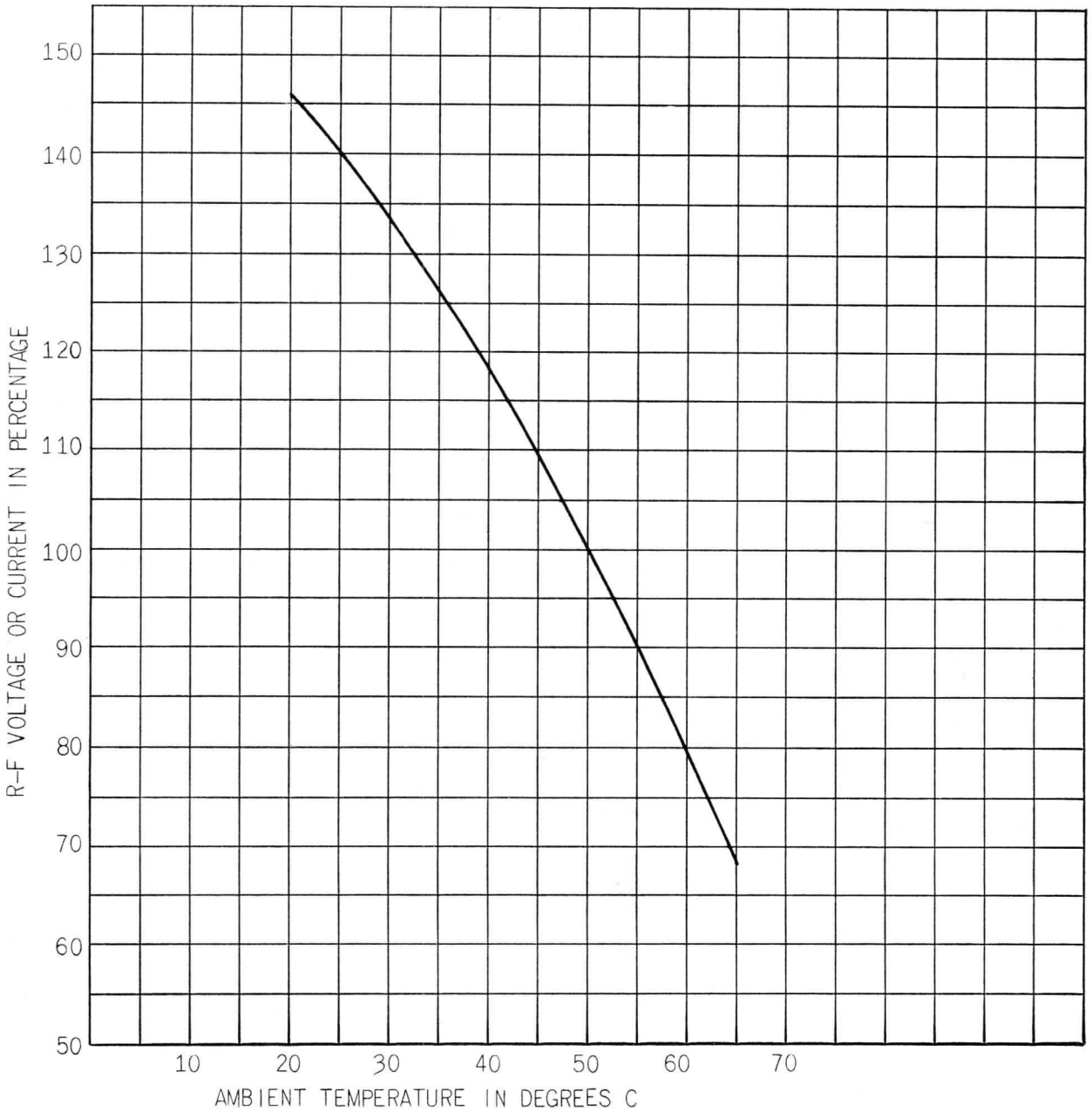

VACUUM CAPACITORS
CORRECTION CURVE—PERCENTAGE VOLTAGE OR CURRENT VS AMBIENT TEMPERATURE

K-69087-72A7

4-5-46

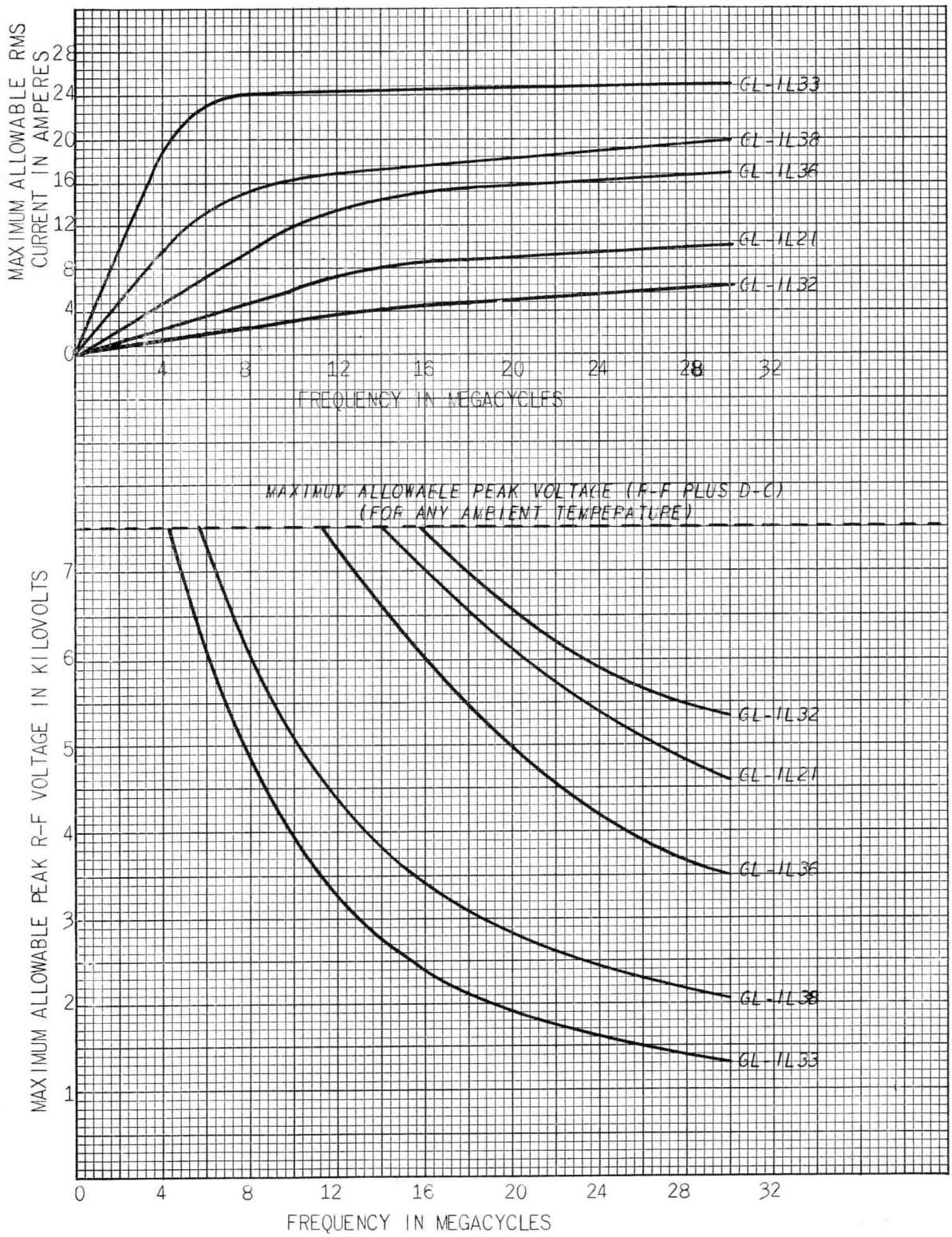

GL-1L21, -32, -33, -36, -38
VOLTAGE AND CURRENT VS FREQUENCY
(FOR OPERATION AT 50 C AMBIENT TEMPERATURE)

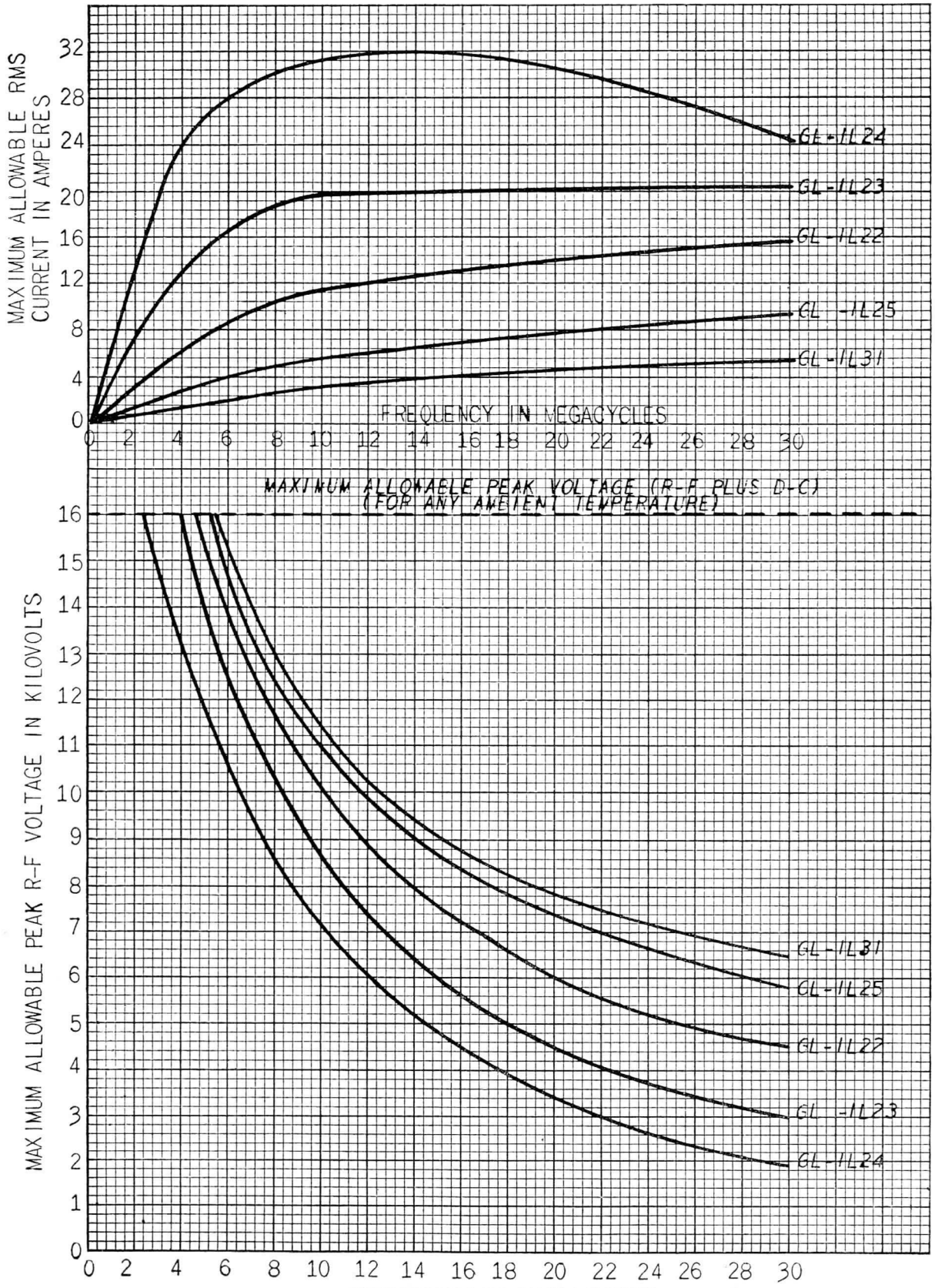

FREQUENCY IN MEGACYCLES
GL-1L22, -23, -24, -25, -31
VOLTAGE AND CURRENT VS FREQUENCY
(FOR OPERATION AT 50 C AMBIENT TEMPERATURE)

K-69087-72A6

4-5-46

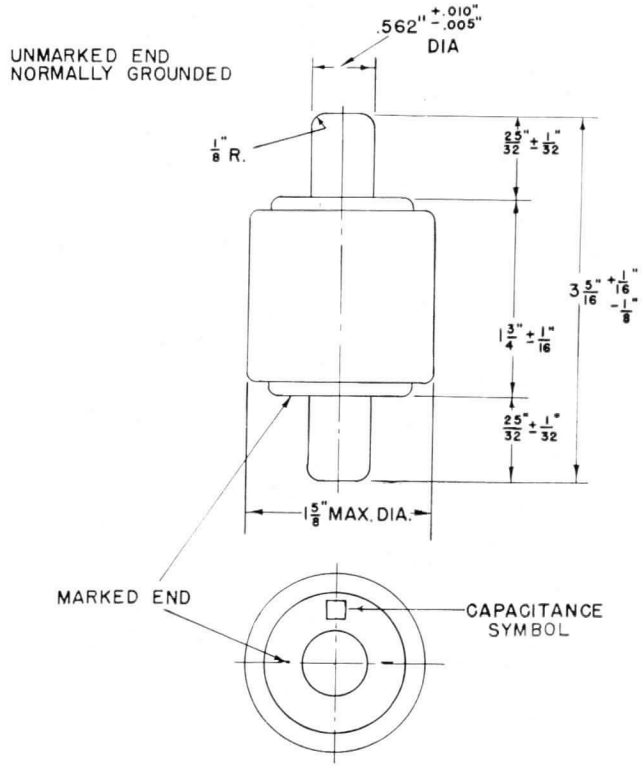

OUTLINE
GL-1L21, 1L32, 1L36, 1L38

K5964469 10-29-45

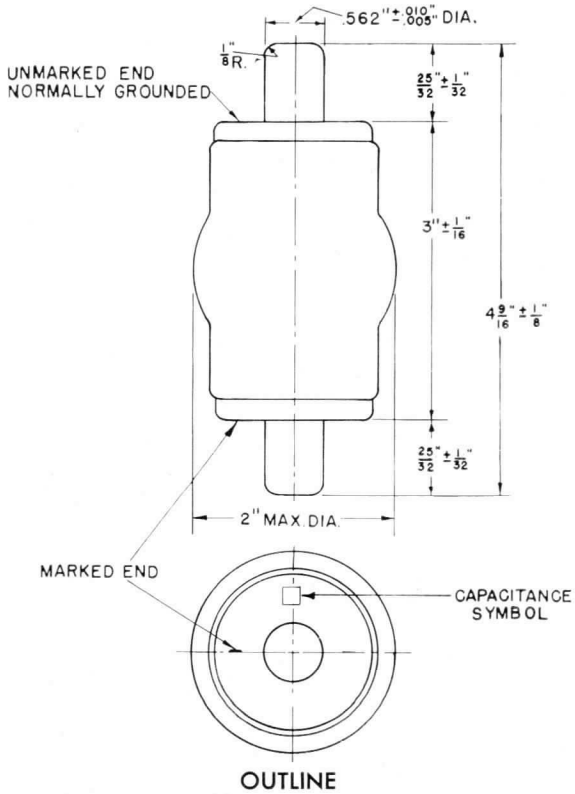

OUTLINE
GL-1L22, 1L23, 1L25, 1L31

K8639363 10-29-45

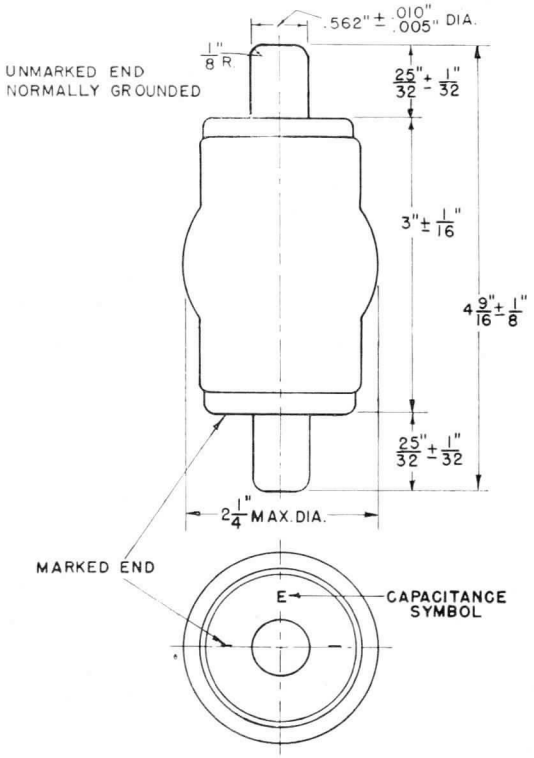

OUTLINE
GL-1L24

K-9033852 10-29-45

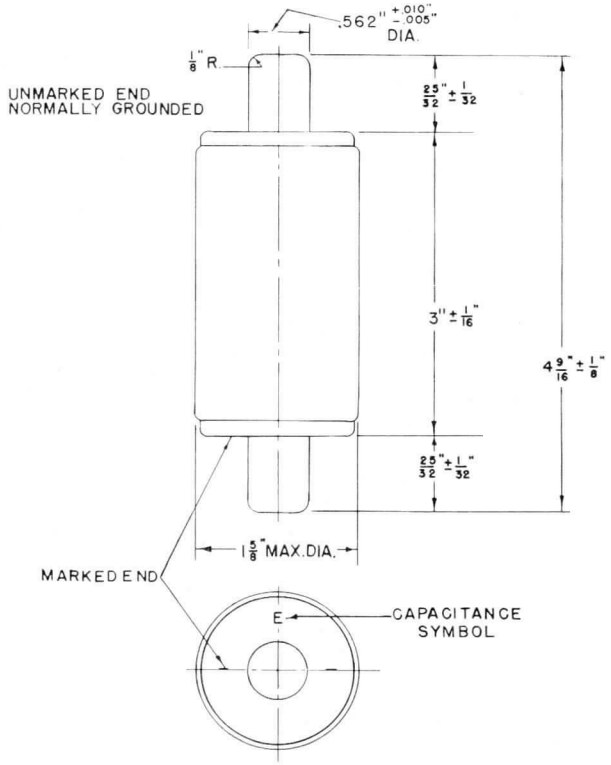

OUTLINE
GL-1L33

K-5964459 10-29-45

TUBE DEPARTMENT

GENERAL ELECTRIC

Schenectady 5, N. Y.

9-53 (20M)

PRINTED IN U.S.A.

GENERAL ELECTRIC

PHASITRON

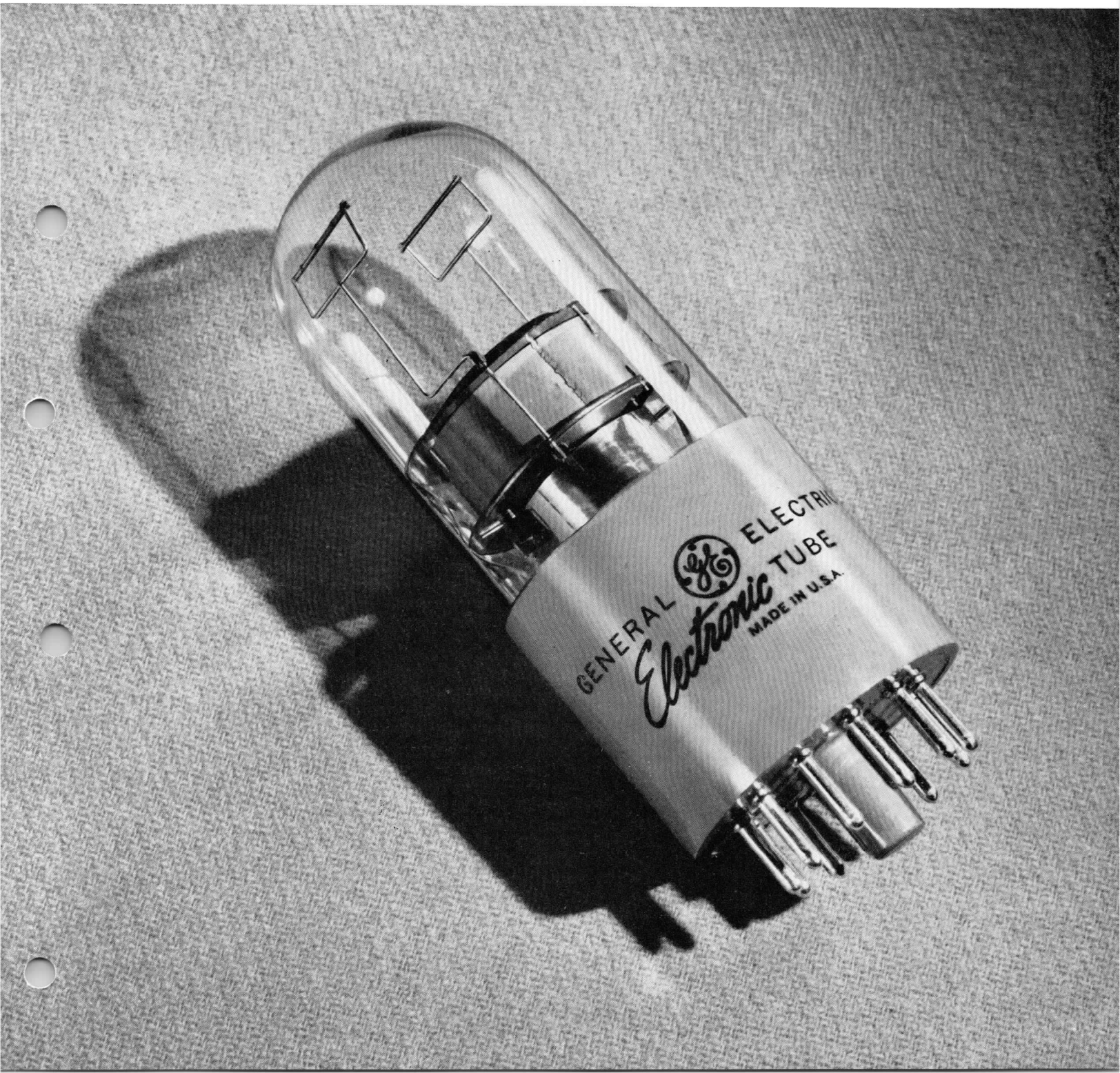

DESCRIPTION

The GL-2H21 is a phase-modulator tube for use in FM transmitters. It is intended for operation up to 500 kilocycles.

As a modulator tube, the GL-2H21 makes possible the introduction of comparatively wide-phase excursions at audio-frequency rates in a crystal-controlled, radio-frequency carrier. The modulating circuit audio response is such that the tube has a wide-swing, frequency-modulated output. The outstanding features which this tube contributes to FM transmission are:

1. Direct crystal control using a single crystal.
2. Modulation independent of frequency control.
3. Low distortion.
4. Low noise level.
5. Simplicity of circuit and circuit alignment.

APPLICATION AND OPERATION

The basic circuit in which the GL-2H21 is used is shown in Fig. 1. The functions of the circuit are:

1. To supply 3-phase, crystal-controlled voltages to the deflection electrodes of the tube.
2. To supply a magnetic field in the direction of the axis of the tube, which varies with time at the audio-frequency rate.
3. To extract the frequency-modulated signal which requires only amplification and frequency multiplication from this stage on.

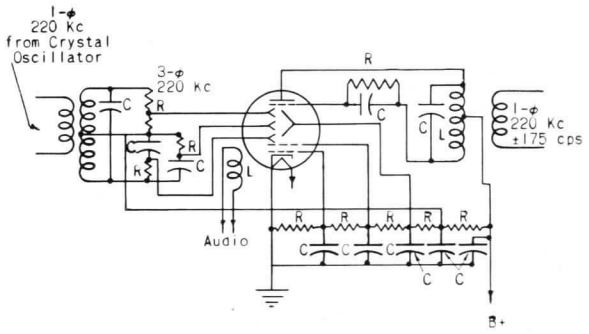

Fig. 1—Basic GL-2H21 Phasitron Modulator Circuit

K-9033986 12-3-45

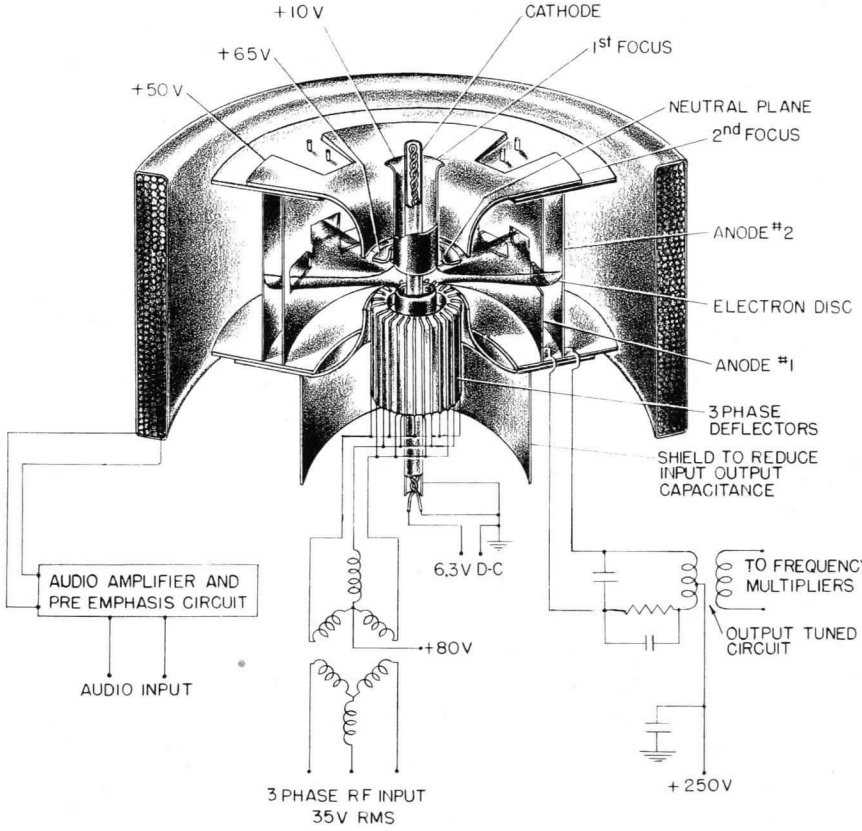

Fig. 2—Cut-away View of GL-2H21 with Companion Circuit Connections

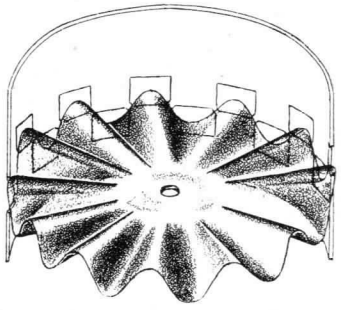

Fig. 3—Perspective View of the Undulate Disk

APPLICATION AND OPERATION (CONT'D)

The tube, when receiving a 220-kilocycle, radio-frequency signal, will deliver to subsequent stages at low distortion a frequency-modulated signal having a frequency deviation of 175 cycles per second from 220 kilocycles. Frequency multiplication of 432 yields an output frequency of 95 megacycles with a frequency deviation of 75 kilocycles. The maximum audio-frequency power required to perform this modulation is approximately 50 milliwatts.

The operation of the tube can best be studied by reference to its construction. Fig. 2, page 2, cut-away view, shows the entire cut-away structure of the tube and a companion circuit. the active portions of which are radially disposed with respect to the cathode. These wires are labeled A, B and C in Fig. 4. All of the A wires are connected together, all of the B wires are connected together, and all of the C wires are connected together. These three combinations of A, B, and C wires are brought out to the base of the tube and constitute the three deflectors; No. 1, 2, and 3, shown on the basing diagram (see ETX-125). The neutral plane is connected to a pin on the base of the tube and constitutes the deflector No. 4, on the basing diagram shown on ETX-125. Fig. 4 shows a developed view of this grid structure and the neutral plane.

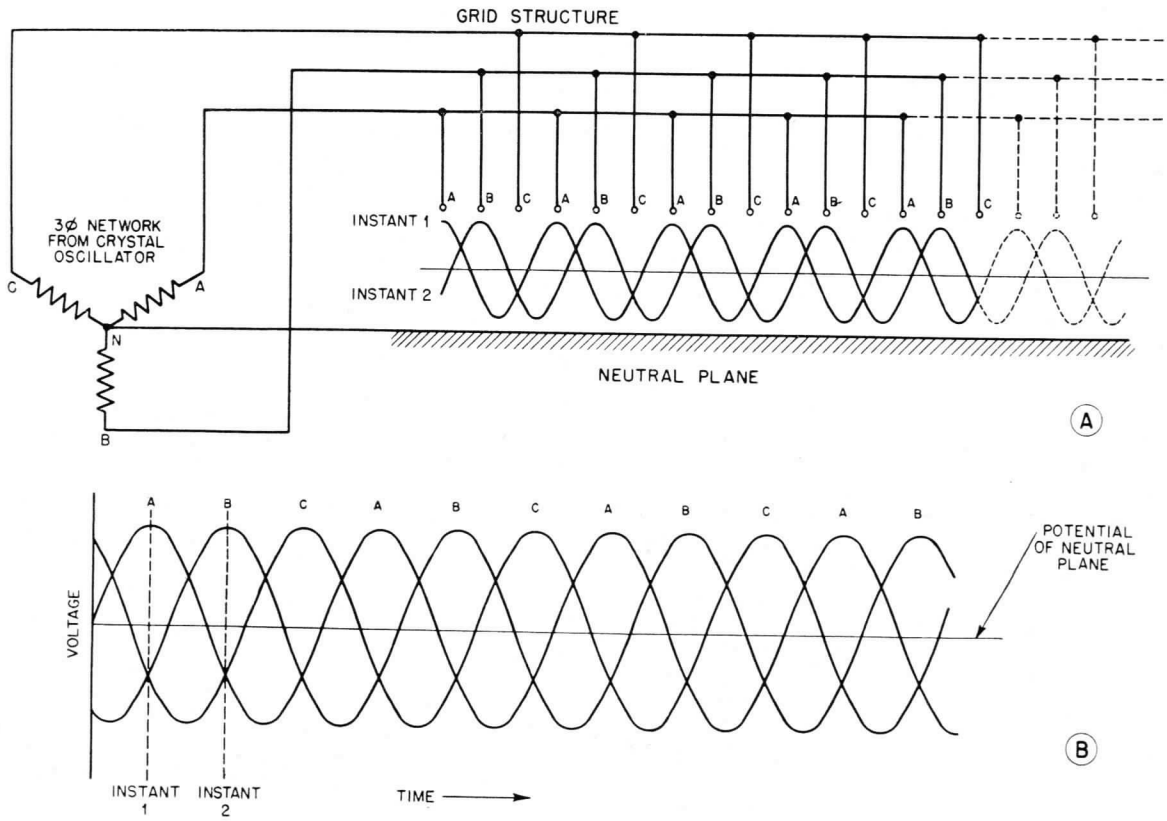

3 PHASE VOLTAGE APPLIED TO DEFLECTOR GRID

Fig. 4—View of Grid Structure and Neutral Plane

Fig. 3 shows a perspective view of the electron disk.

Anodes No. 1 and No. 2 are at positive d-c potential and draw electrons from the cathode. The two focus electrodes form the electron stream into a tapered thin-edge disk. This disk with the cathode as its axis lies between the neutral plane and the deflector structure and extends out to anode No. 1.

The deflectors consist of 36 separate wires,

Three-phase, crystal-controlled radio frequency is applied to the deflectors. Phases A, B, and C are each connected to the similarly marked deflector wires; and the neutral of the 3-phase-Y system is by-passed to ground. The deflecting action of these 3-phase voltages on the disk of electrons passing between the neutral plane and the deflector grids can now be seen; at instant 1 the grid wires A are positive with respect to the neutral plane while grid wires B

APPLICATION AND OPERATION (CONT'D)

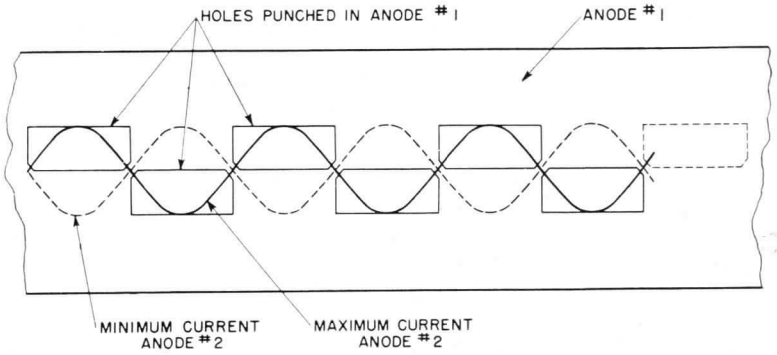

Fig. 5—Developed View of Portion of Anode No. 1 Showing Current Variation

and C are negative. This results in deflection of the electron disk as shown at instant 1, in Fig. 4. At instant 2, 1/3 of a cycle later, deflector wire B is positive and A and C are negative. The undulate disk would then appear to have moved the space of one grid wire during the time interval between instant 1 and instant 2. It can be seen that with the 3-phase voltages applied the undulate electron disk appears to rotate at a rate determined by the applied frequency and the number of deflector wires.

Anode No. 1 has twelve holes punched above the plane of the electron disk and twelve punched below. The rotating edge of the electron disk, therefore, impinges on this series of holes. At an instant when the disk edge is lined up as shown by the solid line of Fig. 5, page 4, most of the electrons pass on through the holes to anode No. 2. One-half cycle later the edge of the disk has moved on to the position shown by the dotted line of Fig. 5. At this instant few, if any, electrons get through to anode No. 2. Thus, the current flowing to anode No. 2 varies sinusoidally at the crystal frequency. Also, it can be seen that any variation in the angular velocity of rotation of the electron disk will result in phase and frequency variation in this output current.

A magnetic coil or solenoid is so placed around the tube that the magnetic field resulting from a current flowing in this coil is perpendicular to the plane of the electron disk. The electrons traveling radially out from the cathode toward the anodes through this field experience a force which is mutually perpendicular to their direction of motion and the direction of the magnetic field. Thus, an angular displacement is introduced in the rotation of the electron disk causing a phase shift in the output current.

Audio-frequency current flowing in this coil causes audio-frequency angular displacements to qualify the rotation of the electron disk and develops a phase-modulated radio-frequency voltage whose average frequency is that of the crystal. It can be seen that if a d-c voltage is applied to the coil the magnetic field causes a fixed angular displacement in the rotation of the electron disk which continues to rotate at the same rate, and causes no change in output frequency. Therefore, we have direct crystal-controlled phase modulation.

Phase modulation when performed at a sinusoidal rate is always accompanied by frequency modulation which bears the folllowing relationship to the phase displacement:

$$f_d = \phi\, f_a$$

Where: f_d = Maximum Frequency Deviation in Cyclces

and: ϕ = Maximum Phase Displacement in Radians

f_a = Audio Modulating Frequency.

From this equation it can be seen that, in order to hold the maximum frequency deviation constant, the maximum phase displacement must vary inversely as the modulating audio frequency. This can be accomplished if the audio-frequency current in the modulating coil is inversely proportional to the frequency. If the impedance of the coil is purely inductive reactance, the current in the coil will meet the required conditions when a constant audio-frequency voltage is applied—this voltage being independent of frequency. Thus, a driving tube which supplies a constant audio-frequency voltage to the coil will produce frequency modulation directly.

Electronics Department
GENERAL ELECTRIC
Schenectady, N. Y.

5-46 (7M)
Filing No. 8850

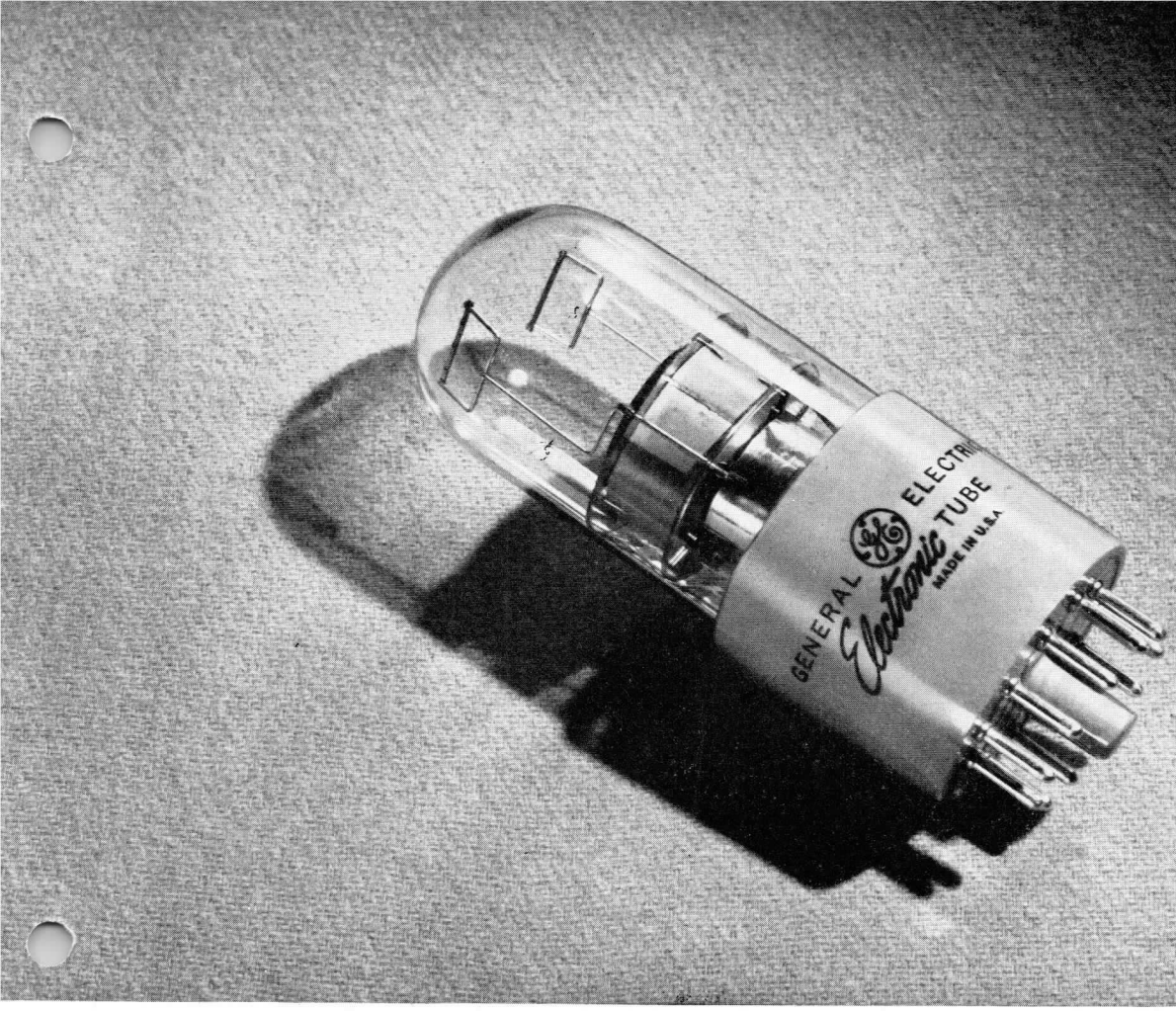

PHASITRON

DESCRIPTION

The GL-2H21 is a phase-modulator tube for use in FM transmitters. It is intended for operation up to 500 kilocycles. As a modulator tube, the GL-2H21 makes possible the introduction of comparatively wide-phase excursions at audio-frequency rates in a crystal-controlled, radio-frequency carrier. The modulating circuit audio response is such that the tube has a wide-swing, frequency-modulated output.

TECHNICAL INFORMATION

These data are for reference only. For design information refer to specifications.

GENERAL CHARACTERISTICS

Number of electrodes	10	
Electrical		
Cathode—indirectly heated		
Heater voltage	6.3	volts
Heater current	0.3	ampere
Direct interelectrode capacitance, approx		
Deflectors to plate 1	0.08	micromicrofarad
Plate 1 to plate 2	4.0	micromicrofarad
Frequency for maximum ratings	500	kilocycles
Mechanical		
Net weight, approx	3	ounces
Shipping weight, approx	1	pound
Mounting position	Any	

GE Electronic TUBE

GENERAL ELECTRIC

TECHNICAL INFORMATION (CONT'D)

MAXIMUM RATINGS

Plate No. 1 voltage	300	volts
Plate No. 2 voltage	300	volts
Deflectors No. 1, 2 and 3 voltage	100	volts
Deflector No. 4 voltage	100	volts
Grid No. 1 voltage	25	volts
Grid No. 2 voltage	150	volts
Cathode current	6	milliamperes

CHARACTERISTICS AND TYPICAL OPERATION

Phase modulator*

Plate No. 1 voltage	200	volts
Plate No. 2 voltage	250	volts
Deflectors No. 1, 2 and 3 voltage	85	volts
Deflector No. 4 voltage	60	volts
Grid No. 1 voltage	10	volts
Grid No. 2 voltage	25	volts
Cathode current	4	milliamperes
Radio-frequency driving voltage, phase to neutral	35	volts rms
Audio-modulating power for ±180* phase shift, approximate	50	milliwatts
Radio-frequency output voltage	4	volts rms
Distortion at ±180* phase shift	1.4	per cent

*Refer to ETX-109, application data for circuit.

GL-2H21
MODULATION CHARACTERISTIC

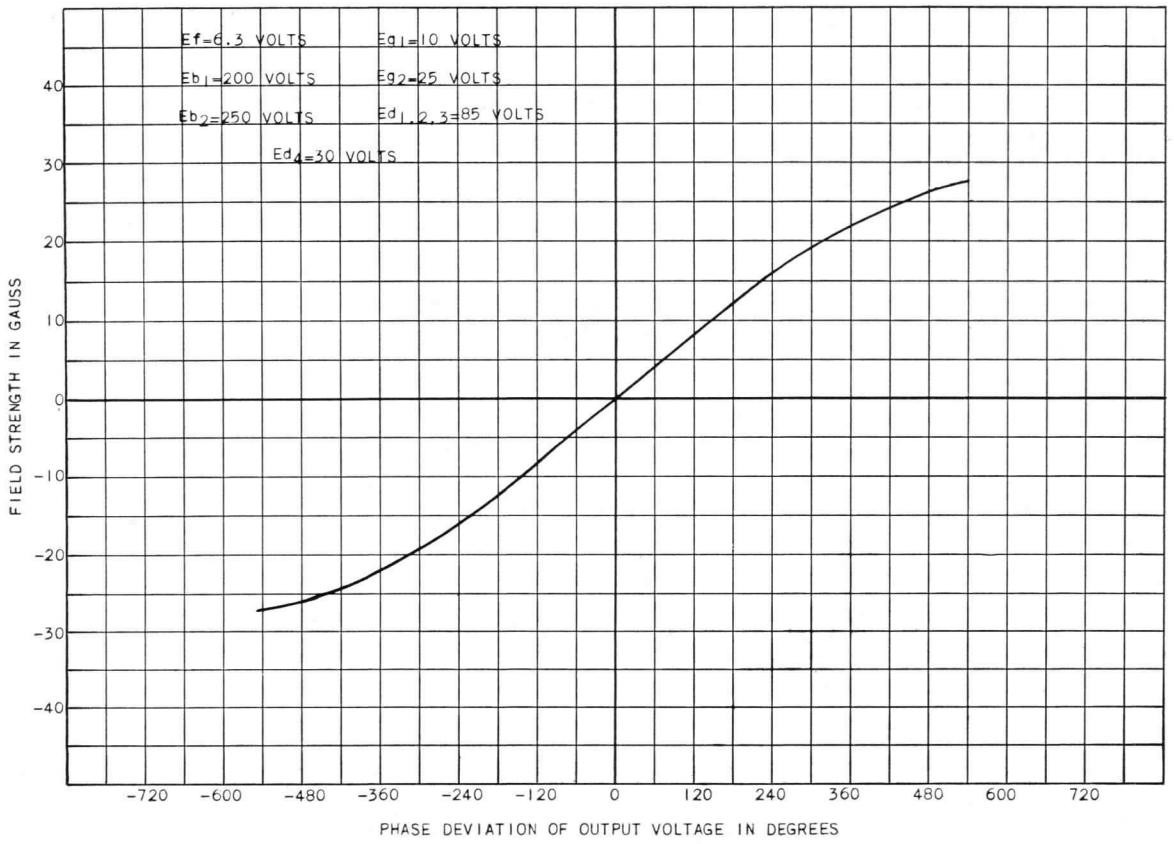

K-9186053

11-9-45

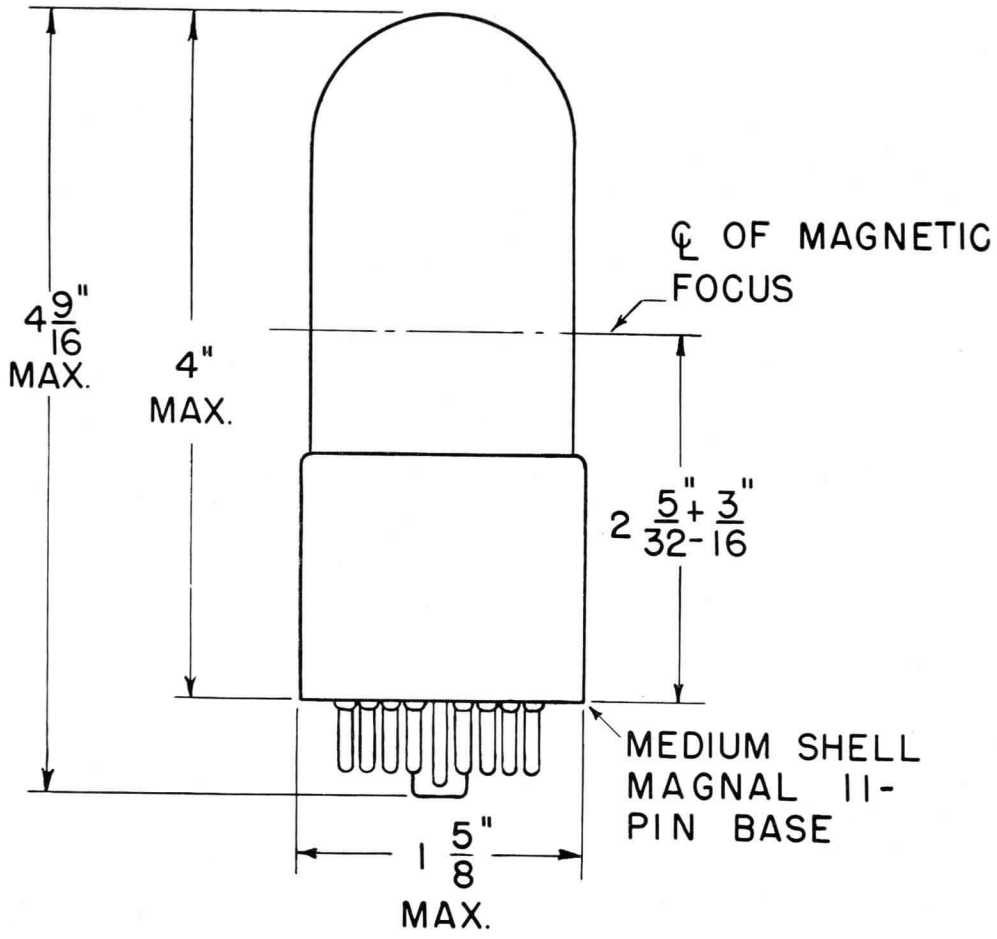

GL-2H21 OUTLINE

N-51066AZ 11-1-45

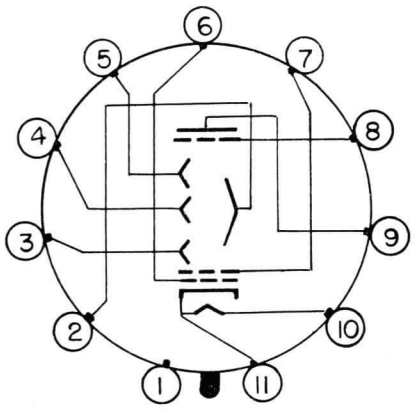

KEY

N-15066AZ-1 11-1-45

TERMINAL CONNECTIONS			
PIN	CONNECTION	PIN	CONNECTION
1	INTERNAL CONNECTION	6	GRID NO. 1
		7	GRID NO. 2
2	DEFLECTOR NO. 4	8	PLATE NO. 1
3	DEFLECTOR NO. 1	9	PLATE NO. 2
4	DEFLECTOR NO. 2	10	HEATER
5	DEFLECTOR NO. 3	11	HEATER AND CATHODE

Electronics Department
GENERAL ELECTRIC
Schenectady, N. Y.

5-46 (7M)
Filing No. 8850



PHASITRON

DESCRIPTION

The 5593 is a phase-modulator tube for use in frequency-modulated transmitters. It is intended for operation up to 250 kilocycles with any degree of subsequent frequency multiplication.

As a modulator tube the 5593 enables the introduction of comparatively wide-phase excursions at audio-frequency rates in a crystal-controlled, radio-frequency carrier. The modulating circuit audio response is such that the tube has a wide-swing frequency-modulated output. Phase modulation is converted to frequency modulation directly at the tube through the self-inductance of the external audio-modulating coil.

With a suitable three-phase supply circuit the only circuit voltage requiring adjustment is that which varies the Phasitron first focus voltage for maximum radio-frequency output. Low-frequency audio feedback is used with this type of operation. The constants of such a circuit are approximately 18 decibels audio feedback through a resistance-capacitance network of 2500 microseconds time constant. This may conveniently be obtained by one stage of radio-frequency amplification of voltage extracted from some point in the radio-frequency chain followed by a standard discriminator.

TECHNICAL INFORMATION

These data are for reference only. For design information refer to specifications.

GENERAL CHARACTERISTICS

Number of electrodes	10	
Electrical		
Cathode—indirectly heated		
Heater voltage	6.3	volts
Heater current	0.3	ampere

GE Electronic TUBE

GENERAL ELECTRIC

TECHNICAL INFORMATION (CONT'D)

Direct interelectrode capacitance, approx		
Deflectors to plate 1	0.05	micromicrofarad
Plate 1 to plate 2	5.5	micromicrofarad
Frequency for maximum ratings	250	kilocycles
Mechanical		
Net weight, approx	3	ounces
Shipping weight, approx	1	pound
Mounting position		Any

MAXIMUM RATINGS

Plate No. 1 voltage	250	volts
Plate No. 2 voltage*	300	volts
Deflectors No. 1, 2 and 3 voltage	100	volts
Deflector No. 4 voltage	100	volts
Grid No. 1 voltage	25	volts
Grid No. 2 voltage	50	volts
Cathode current	12	milliamperes

* There must be a differential of at least 50 volts d-c between the two anodes, with plate number 2 at the higher potential .

CHARACTERISTICS AND TYPICAL OPERATION

Phase Modulator		
Operating frequency	230	kilocycles
Plate No. 1 voltage	200	volts d-c
Plate No. 2 voltage	250	volts d-c
Plates No. 1 and No. 2 current	3	milliamperes
Deflectors Nos. 1, 2, 3, and 4 current	50	microamperes
Deflector No. 4 voltage	30	volts d-c
Deflectors Nos. 1, 2, and 3 voltage	60	volts d-c
Grid No. 1 voltage**	15	volts d-c
Grid No. 1 current	6	milliamperes
Grid No. 2 voltage	50	volts d-c
Grid No. 2 current	20	microamperes
Radio-frequency driving voltage: phase-to-neutral	35	volts RMS
Audio-modulating power for ±180-degree phase shift, approximate	50	milliwatts
Radio-frequency output voltage	4	volts RMS
Distortion at ±199-degree phase shift #	1	per cent

** Adjusted for maximum phasitron output.
\# Distortion at output of typical frequency-modulated transmitter, frequency at resonance approximately 99 megacycles

GL-5593
MODULATION CHARACTERISTIC

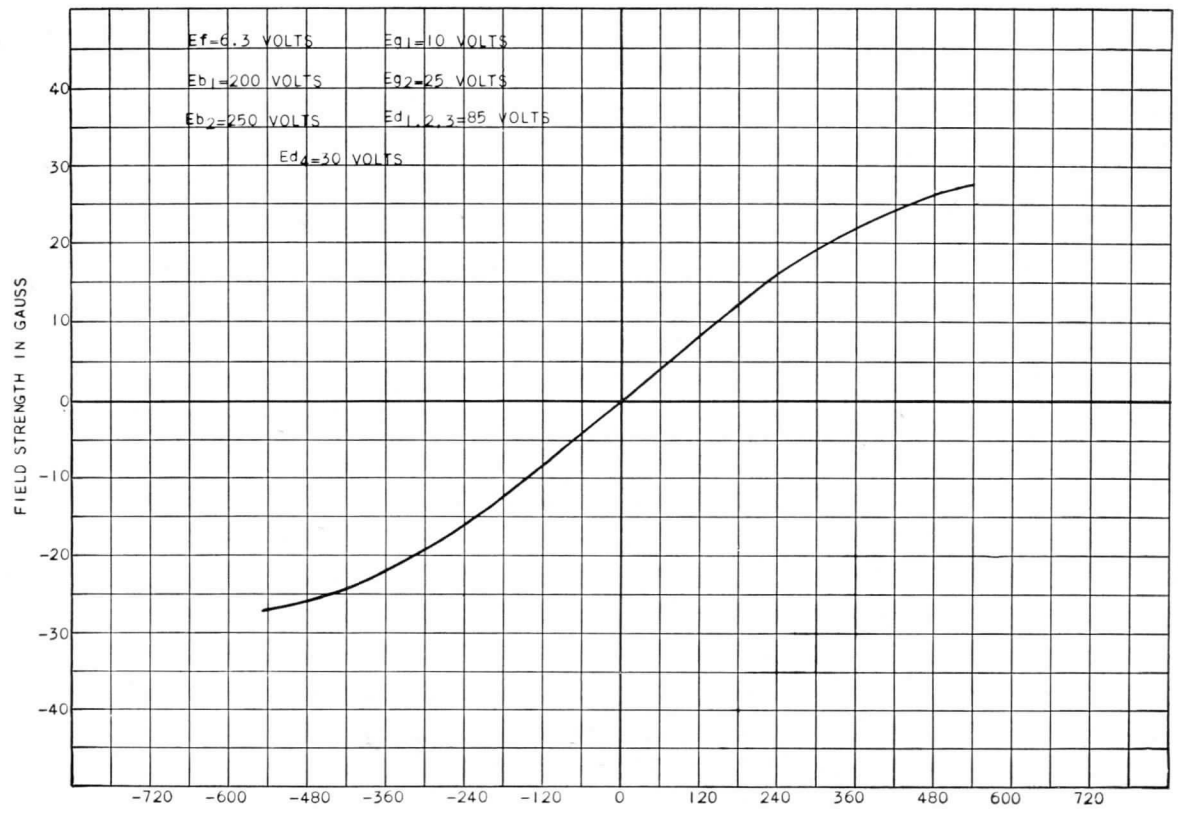

K-69087-72A111

5-13-47

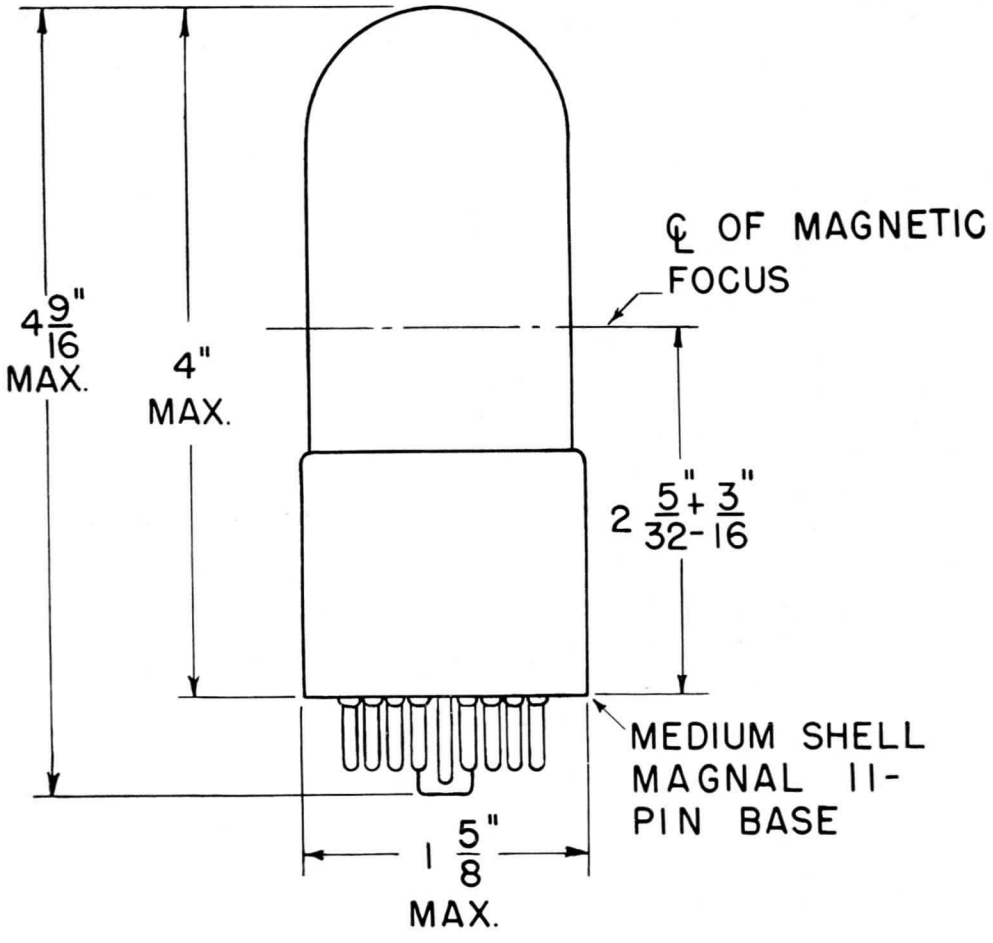

GL-5593 OUTLINE

N-51066AZ 11-1-45

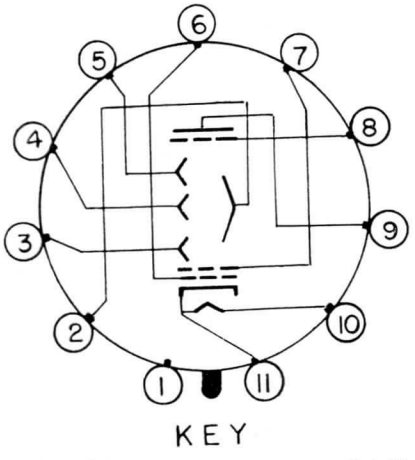

KEY

N-15066AZ-1 11-1-45

TERMINAL CONNECTIONS			
PIN	CONNECTION	PIN	CONNECTION
1	INTERNAL CONNECTION	6	GRID NO. 1
		7	GRID NO. 2
2	DEFLECTOR NO. 4	8	PLATE NO. 1
3	DEFLECTOR NO. 1	9	PLATE NO. 2
4	DEFLECTOR NO. 2	10	HEATER
5	DEFLECTOR NO. 3	11	HEATER AND CATHODE

Electronics Department

GENERAL ELECTRIC

Schenectady, N. Y.

7-48 (8M)
Filing No. 8850

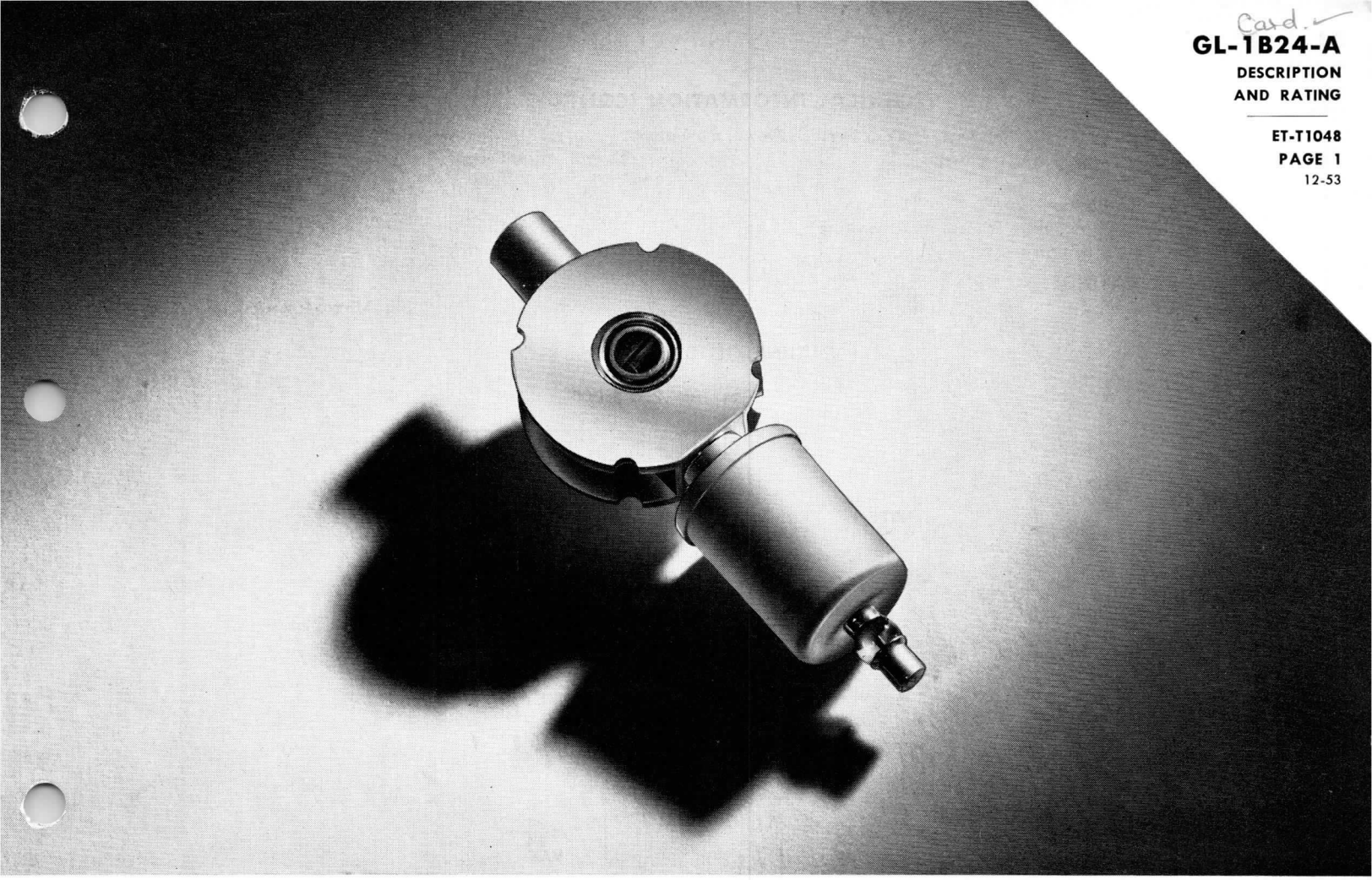

TR TUBE

INTEGRAL CAVITY TUNABLE **8490 TO 9600 MEGACYCLES**

The GL-1B24-A is a gas switching tube of the integral cavity tunable type for use in simple duplexers in pulsed microwave circuits where a fixed electrical position for the short circuit in the tube is unnecessary. The tube operates to decouple the receiver effectively from a common transmitting and receiving antenna during a transmission period. The tuning range is from less than 8490 to more than 9600 megacycles.

TECHNICAL INFORMATION

GENERAL

Electrical

Operational Band	8490 to 9600	Megacycles
Loaded Q, maximum	350	
Ignitor Starting Voltage, maximum	−1000	Volts
Ignitor Voltage Drop, Ignitor Current = 100 Microamperes		
Minimum	325	Volts
Maximum	450	Volts
Leakage Power	30	Milliwatts
peak power = 10 kw, pulse repetition rate = 1000 pps, pulse duration = 0.5 usec, ignitor current = 100 ua, frequency = 9375 mc, maximum		
Ignitor Interaction, Ignitor Current = 100 Microamperes, maximum	0.2	Decibel
Insertion Loss at 9375 Megacycles		
Maximum	1.50	Decibels
Minimum	0.85	Decibel

GE Electronic TUBE

GENERAL ELECTRIC

TECHNICAL INFORMATION (CONT'D)

Recovery Time at 10 Kilowatts Peak, 3 Decibels Down, maximum	4	Microseconds
Ignitor Ignition Time, maximum	5	Seconds

Mechanical

Mounting Position—Any		
Ambient Temperature Range, non-operating	−40 to +100	C
Net Weight, approximate	¼	Pounds

MAXIMUM RATINGS

Ignitor Current	200	Microamperes

OUTLINE GL-1B24-A

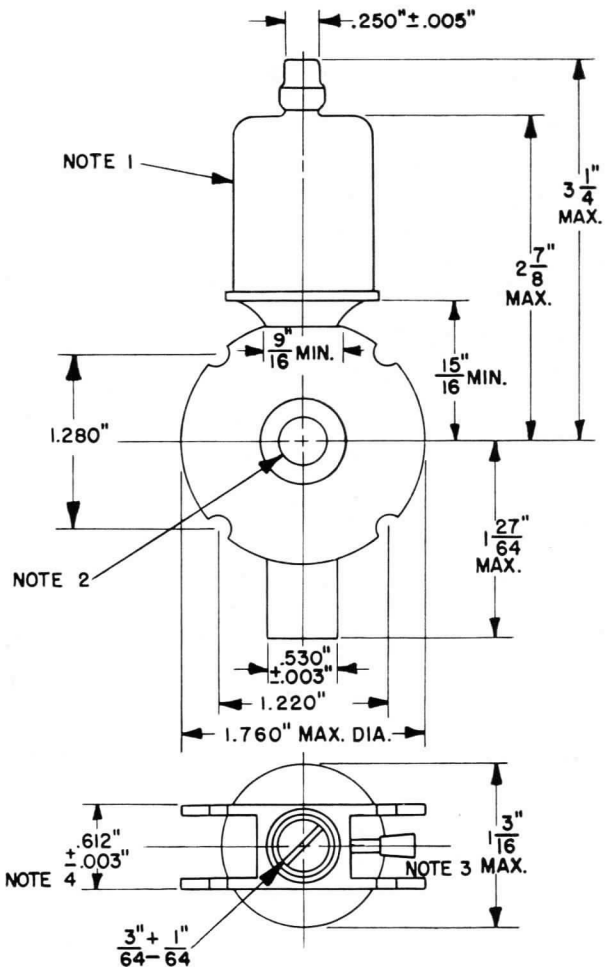

NOTES:

1. MAXIMUM PROJECTION OF RESERVOIR LIES WITHIN A CYLINDER OF $1\frac{1}{4}$" DIA. WITH AXIS CO-LINEAR WITH TUBE AXIS.
2. NO PART OF IRIS ASSEMBLY SHALL EXTEND BEYOND THE BODY SURFACE.
3. EXHAUST TABULATION NOT TO EXTEND BEYOND PERIPHERY.
4. APPLIES FOR AREA BETWEEN PERIPHERY OF THIS SECTION OF TUBE AND CONCENTRIC CIRCLE OF $\frac{5}{16}$" RADIUS.

N-24537AZ 10-15-52

TUBE DEPARTMENT

GENERAL ELECTRIC

Schenectady 5, N. Y.

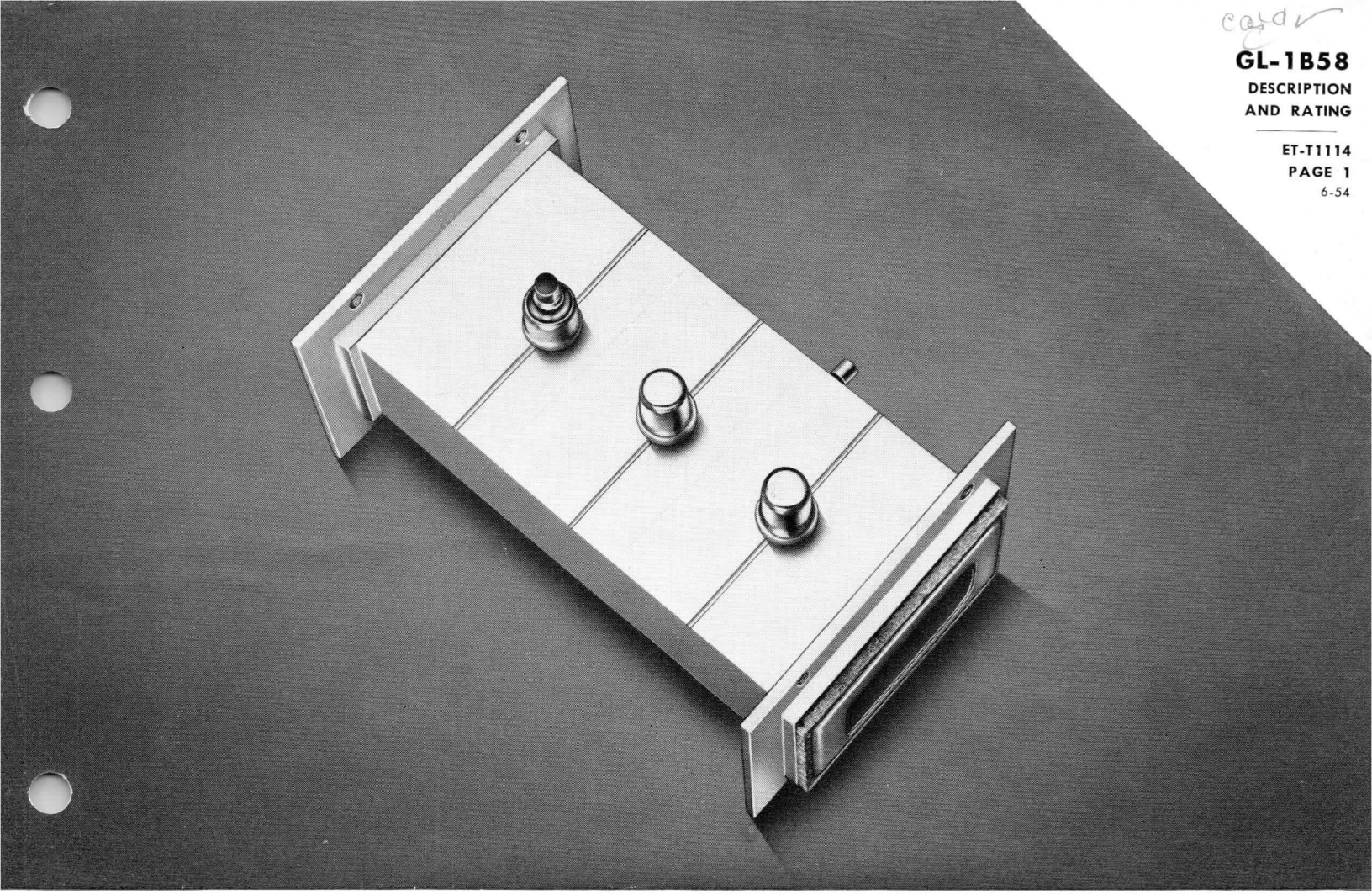

TR TUBE

INTEGRAL CAVITY
FIXED

BROADBAND
2659 TO 2969 MEGACYCLES

The GL-1B58 is a gas switching tube of the integral-cavity type for use in pulsed microwave circuits. In such service the tube operates to decouple the receiver effectively from a common transmitting and receiving antenna during a period of transmission. The operational band is from 2659 to 2969 megacycles.

TECHNICAL INFORMATION

GENERAL

Electrical

Operational Band at Voltage Standing Wave Ratio = 1.65 Maximum	2659 to 2969	Megacycles
Open-Circuit Ignitor Supply Voltage		
Minimum	−500	Volts
Maximum	−700	Volts
Ignitor Voltage Drop, ignitor current = 200 microamperes		
Minimum	250	Volts
Maximum	400	Volts
Spike Leakage Energy, peak power = 200 kw, pulse repetition rate = 1000 pps, pulse duration = 1 μsec, ignitor current = 100 μa, frequency = 2802 mc	0.3 Max	Ergs

GE Electronic TUBE

GENERAL ELECTRIC

TECHNICAL INFORMATION (CONT'D)

Flat Leakage Energy, peak power = 200 kw, pulse repetition rate = 1000 pps, pulse duration = 1 μsec, ignitor current = 100 μa, frequency = 2802 mc	0.4 Max	Ergs
Ignitor Interaction, ignitor current = 200 microamperes	0.3 Max	Decibels
Insertion Loss at 2802 Megacycles, ignitor current = 0	0.5 Max	Decibels
Recovery Time at 750 Kilowatts Peak, 3 decibels down	15 Max	Microseconds
Ignitor Time	5 Max	Seconds

Mechanical

Number of Ignitors	1	
Mounting Position—Any		
Ambient Temperature Range, non-operating	−40 to +100	C
Net Weight, approximate	2¼	Pounds

MAXIMUM RATINGS

Ignitor Current	200	Microamperes

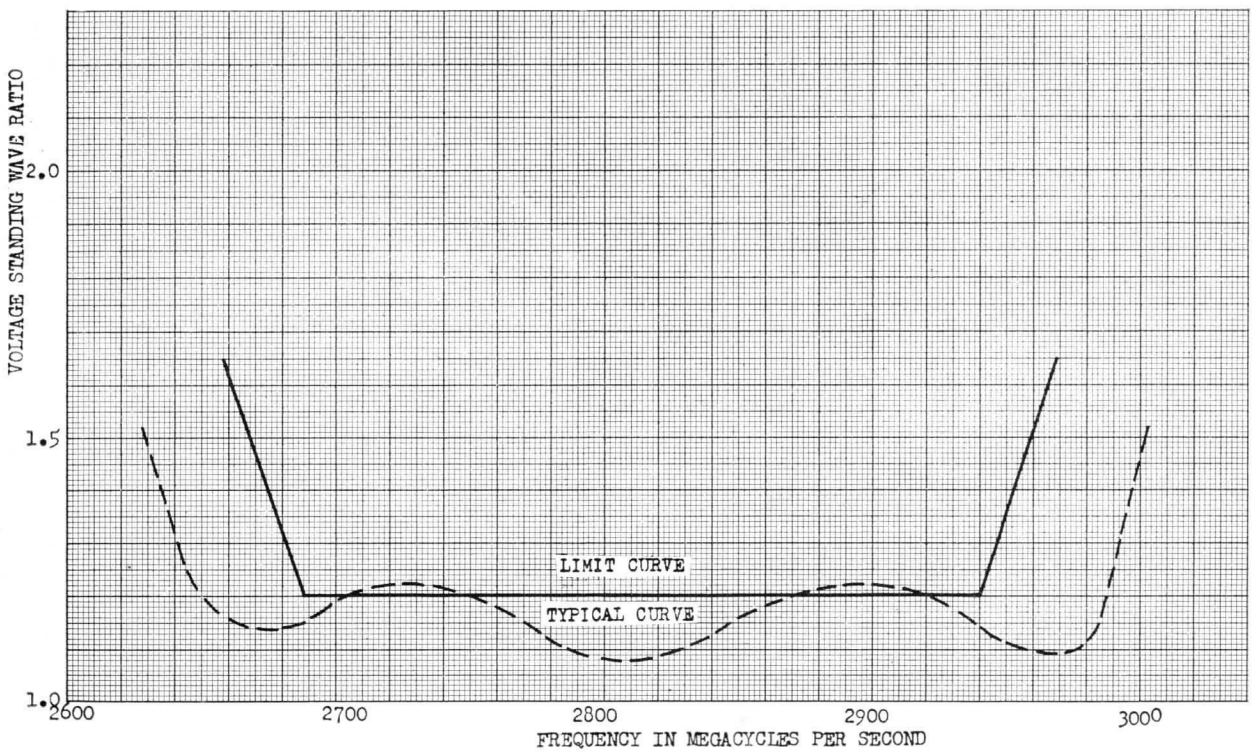

FREQUENCY-RESPONSE CURVE

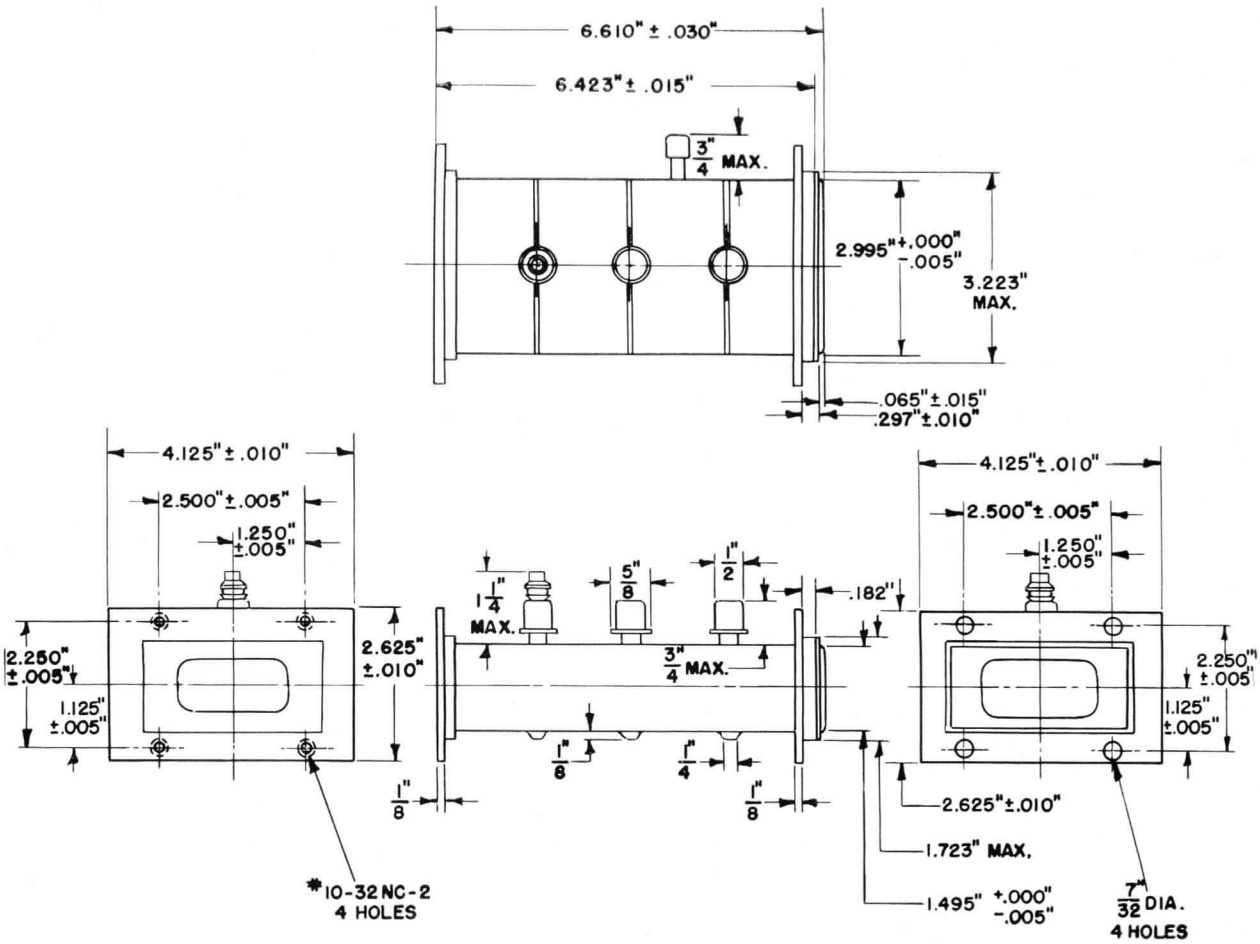

4-HOLE FLANGE

K-69087-72A648

4-23-54

TUBE DEPARTMENT

GENERAL ELECTRIC

Schenectady 5, N. Y.

6-54 (10M)

PRINTED IN U.S.A.

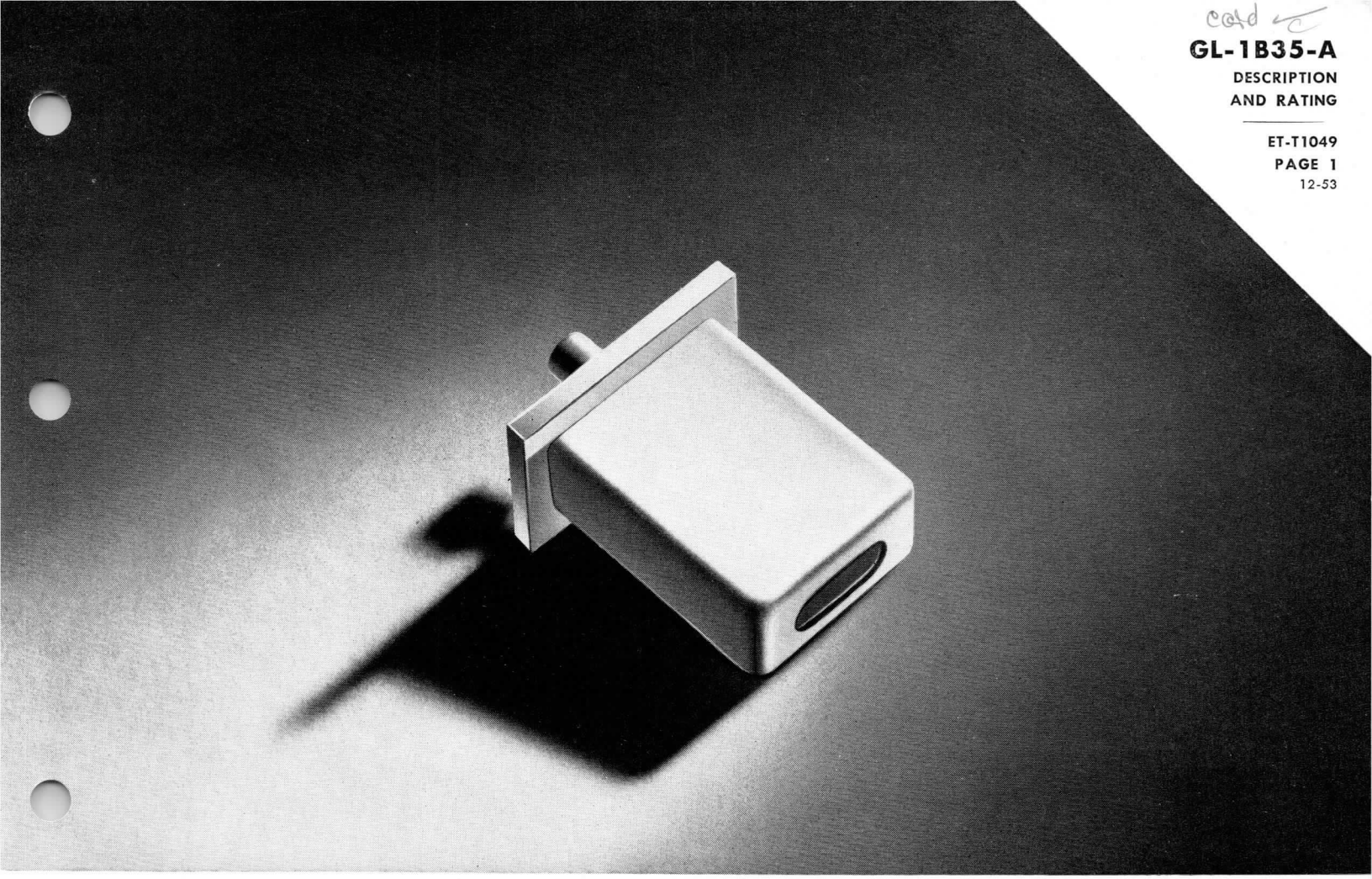

A-TR TUBE

INTEGRAL CAVITY
BROADBAND

9000 TO 9600 MEGACYCLES
250 KILOWATTS

The GL-1B35-A is a gas switching tube for use in pulsed microwave circuits. In such circuits it acts effectively to decouple the transmitter from a common transmitting and receiving antenna during a non-transmitting period. The operational band is from 9000 to 9600 megacycles.

TECHNICAL INFORMATION

GENERAL

Electrical

Center Frequency	9300	Megacycles
Operational Band at Voltage Standing Wave Ratio 5 Minimum	9000 to 9600	Megacycles
Loaded Q, maximum	6.5	
Transmitter Peak Power, minimum	5	Kilowatts
Center Frequency Normalized Conductance, maximum	0.1	
Center Frequency Normalized Susceptance	±0.06	
Arc Power Loss, peak power = 4 kw, pulse repetition rate = 1000 pps, pulse width = 0.5 usec, frequency = 9025 mc, maximum	0.8	Decibels
High Level Voltage Standing Wave Ratio, maximum	1.10	
Recovery Time, peak power = 50 kw, pulse repetitcn rate = 1000 pps, pulse width 1.0 usec, frequency = 9300 mc	8	Microseconds
Initial Firing Time at 4 kw Peak Line Power, maximum	10	Seconds

GE Electronic TUBE

GENERAL ELECTRIC

TECHNICAL INFORMATION (CONT'D)

Mechanical

Mounting Position—Any
Ambient Temperature Range, non-operating ..... −40 to +100 C
Net Weight, approximate ..... 1/8 Pound

MAXIMUM RATINGS

Transmitter Peak Power at 0.001 Duty Cycle ..... 250 Kilowatts

OUTLINE
GL-1B35-A

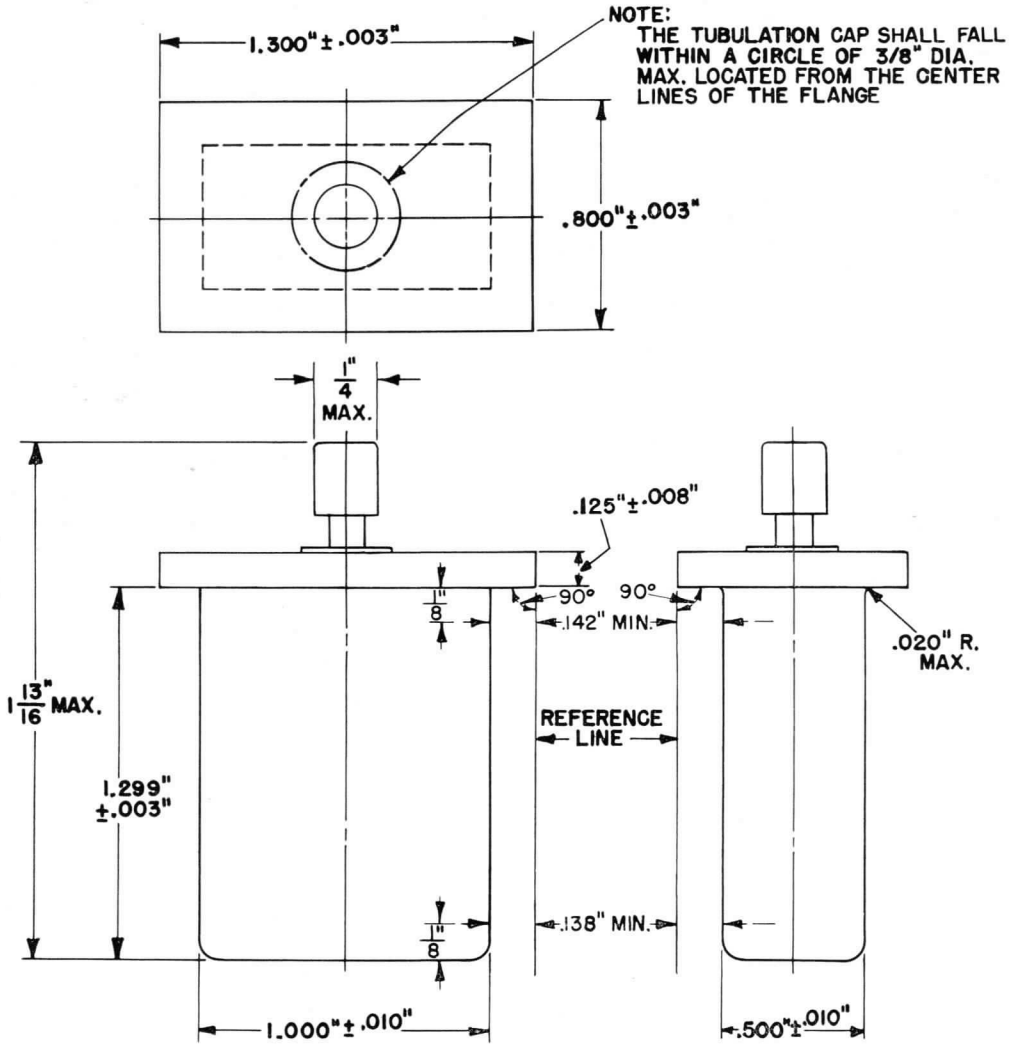

CENTER LINES OF WINDOW SHALL COINCIDE WITH CORRESPONDING CENTER LINES OF THE BOX WITHIN .015". THIS MEASUREMENT SHALL BE MADE IN THE PLANE OF THE WINDOW.

N-24501AZ 6-10-52

TUBE DEPARTMENT

GENERAL ELECTRIC

Schenectady 5, N. Y.

PRINTED IN U.S.A.

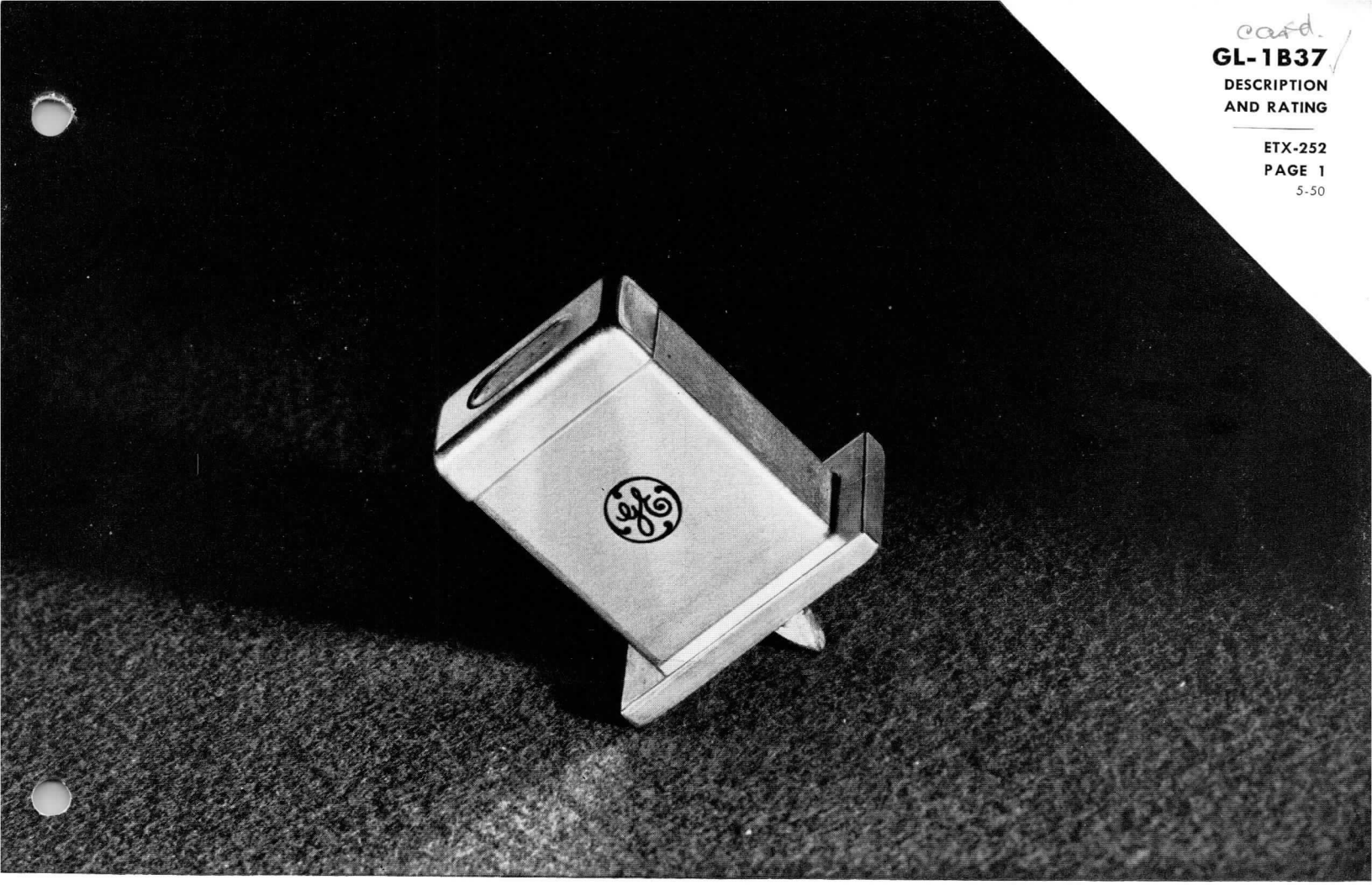

ANTI-TR TUBE

DESCRIPTION

The GL-1B37 is a gas switching tube for use in pulsed microwave circuits. In such circuits it acts effectively to decouple the transmitter from a common transmitting and receiving antenna during a non-transmitting period. The operational band is from 8500 to 9000 megacycles.

TECHNICAL INFORMATION

These data are for reference only. For design information refer to specifications.

GENERAL CHARACTERISTICS

Electrical

Center frequency	8750	megacycles
Operational band at voltage standing Wave ratio 5 minimum	8500 to 9000	megacycles
Loaded Q, maximum	6.5	
Transmitter peak power, minimum	5	kilowatts
Center frequency normalized conductance, maximum	0.1	
Center frequency normalized susceptance	±0.06	
Arc power loss, peak power = 4 kw, pulse repetition rate = 1000 pps, pulse width = lusec, frequency = 8500 mc, maximum	0.8	decibels
High level voltage standing wave ratio, maximum	1.10	

GE Electronic TUBE

GENERAL ELECTRIC

TECHNICAL INFORMATION (CONT'D)

Mechanical

Mounting position—any
Ambient temperature range, nonoperating . . . . . −40 to +100 C
Net weight, approximate . . . . . 1/8 pound

MAXIMUM RATINGS

Transmitter peak power . . . . . 250 kilowatts

OUTLINE
GL-1B37

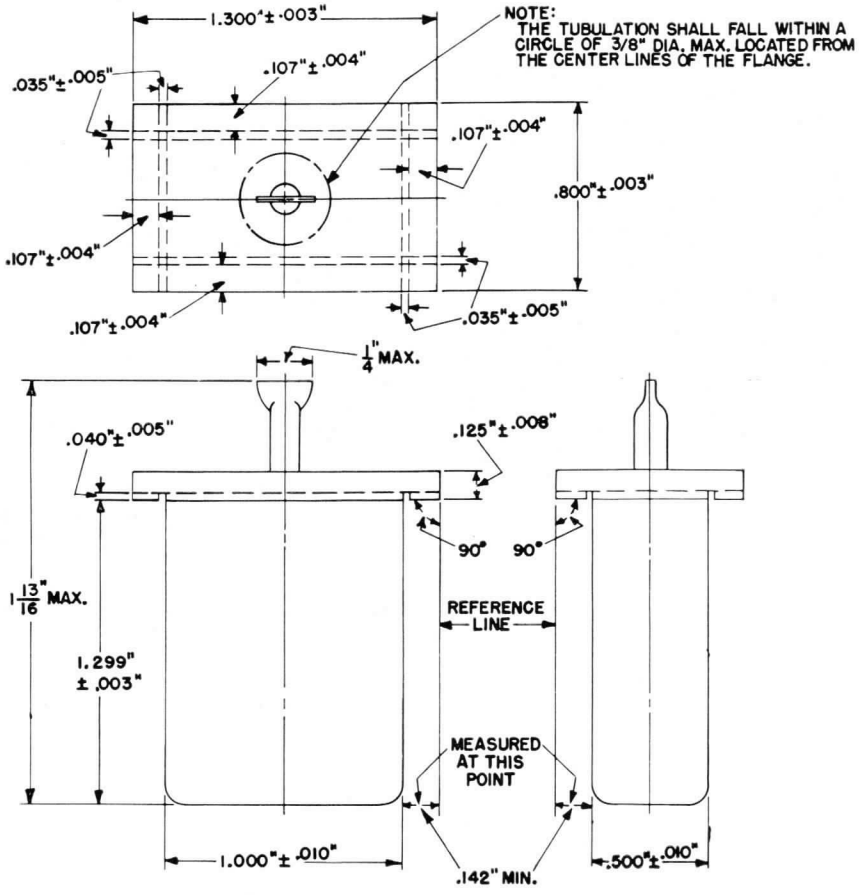

CENTER LINES OF WINDOW SHALL COINCIDE WITH CORRESPONDING CENTER LINES OF THE BOX WITHIN .015". THIS MEASUREMENT SHALL BE MADE IN THE PLANE OF THE WINDOW.

N-24503AZ 4-28-50

Tube Divisions, Electronics Department

GENERAL ELECTRIC

Schenectady, N. Y.

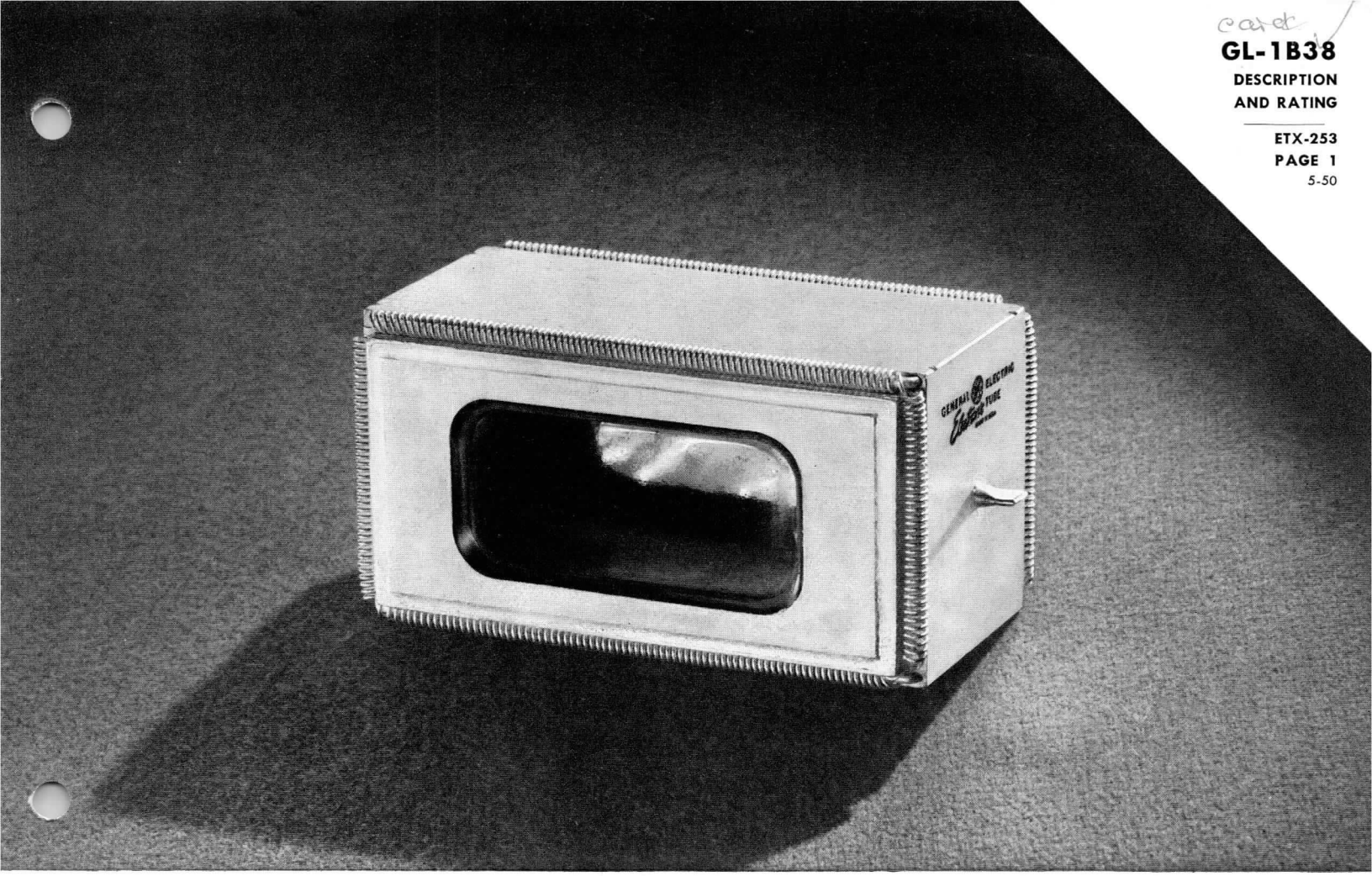

PRE-TR TUBE

DESCRIPTION

The GL-1B38 is a gas switching tube for use in pulsed microwave circuits. Used in conjunction with a narrow-band TR tube it suppresses leakage energy at the harmonic frequencies. The operational band is from 2700 to 2910 megacycles.

TECHNICAL INFORMATION

These data are for reference only. For design information refer to specifications.

GENERAL CHARACTERISTICS

Electrical

Center frequency	2800	megacycles
Operational band at voltage standing Wave ratio 1.2 maximum	2700 to 2910	megacycles
Voltage standing wave ratio, frequency = 2800 mc, maximum	1.07	
Leakage energy	1.3×10^{-4}	joules

Mechanical

Mounting position	any	
Ambient temperature range	−40 to +100	C
Net weight, approximate	1	pound

MAXIMUM RATINGS

Transmitter peak power	1000	kilowatts

Electronic TUBE

GENERAL ELECTRIC

OUTLINE
GL-1B38

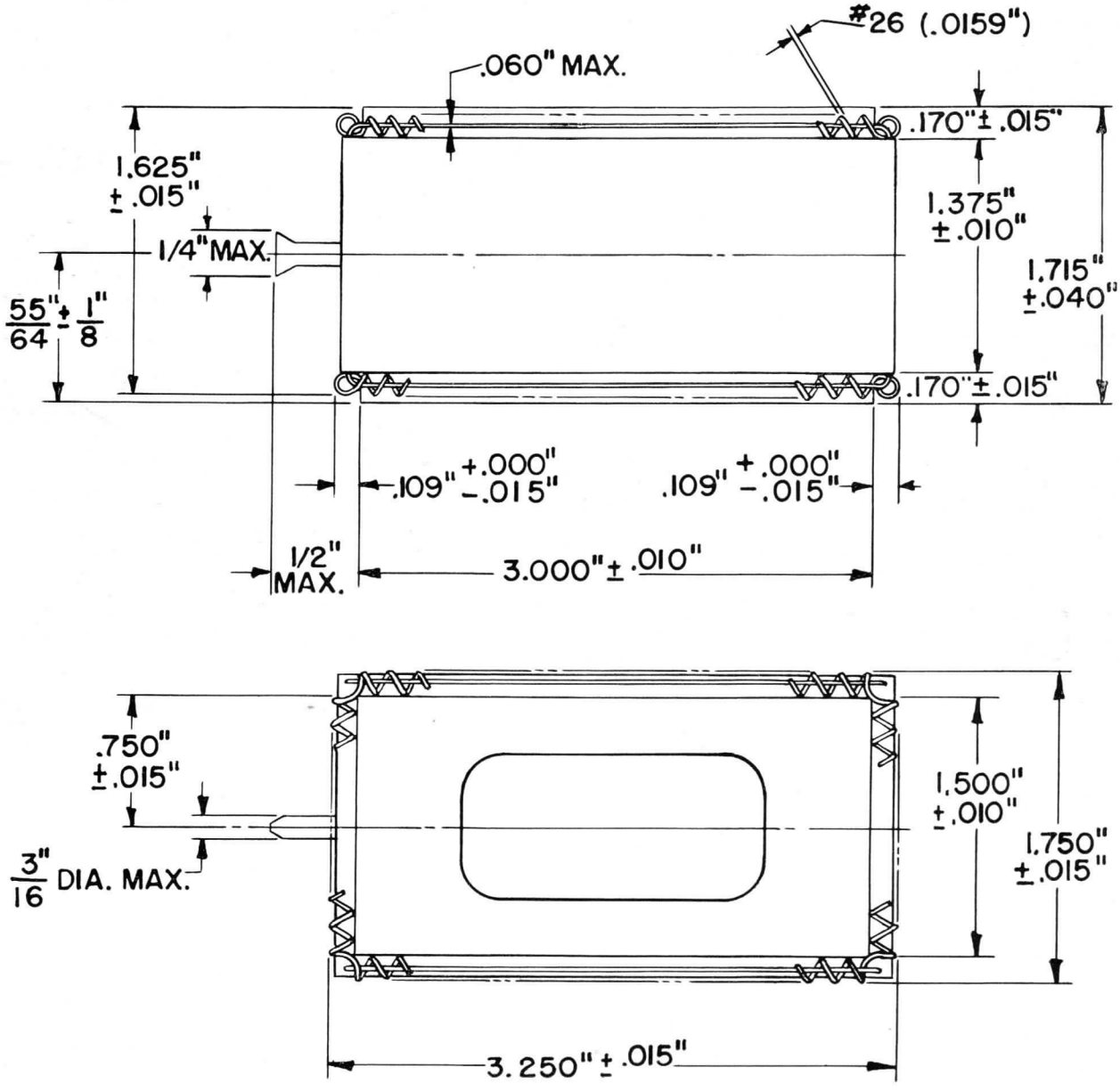

N-24500AZ

5-27-48

Tube Divisions, Electronics Department

GENERAL ELECTRIC

Schenectady, N. Y.

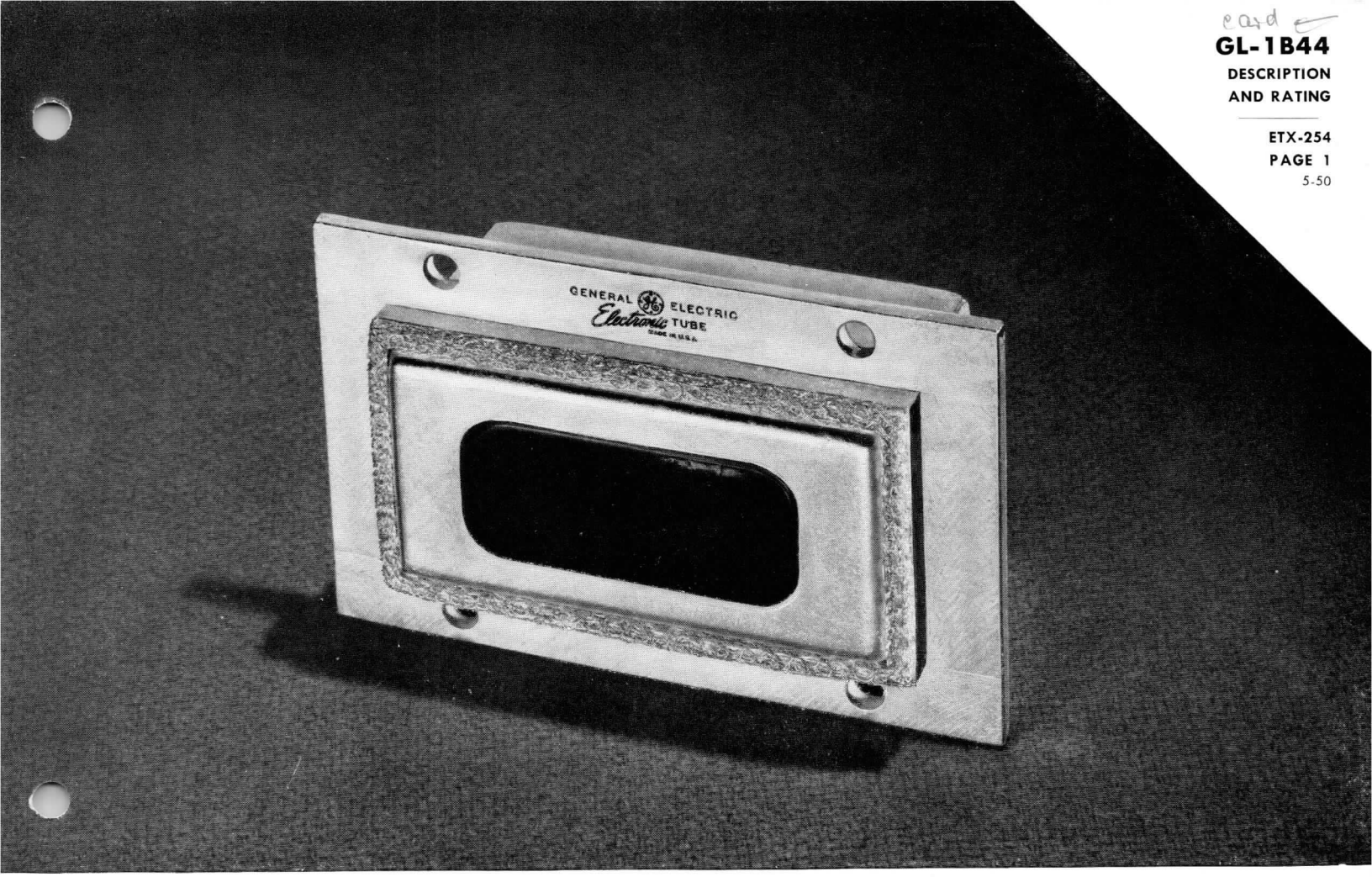

ANTI-TR TUBE

DESCRIPTION

The GL-1B44 is a gas switching tube for use in pulsed microwave circuits. In such circuits it acts effectively to decouple the transmitter from a common transmitting and receiving antenna during a non-transmitting period. The operational band is from 2680 to 2820 megacycles.

TECHNICAL INFORMATION

These data are for reference only. For design information refer to specifications.

GENERAL CHARACTERISTICS

Electrical

Center frequency	2750	megacycles
Operational band at voltage standing wave ratio 9 minimum	2680 to 2820	megacycles
Loaded Q, maximum	5.5	
Transmitter peak power, minimum	20	kilowatts
Center frequency normalized conductance, maximum	0.05	
Center frequency normalized susceptance	±0.05	
Arc power loss, peak power = 50 kw, pulse repetition rate = 1000 pps, pulse width = 1usec, frequency = 2750 mc, maximum	0.4	decibels
High level voltage standing wave ratio, maximum	1.15	

GE Electronic TUBE

GENERAL ELECTRIC

TECHNICAL INFORMATION (CONT'D)

Mechanical

Mounting position—any

Ambient temperature range, non-operating	−40 to +100	C
Net weight, approximate	¾	pound

MAXIMUM RATINGS

Transmitter peak power	1000	kilowatts

OUTLINE
GL-1B44

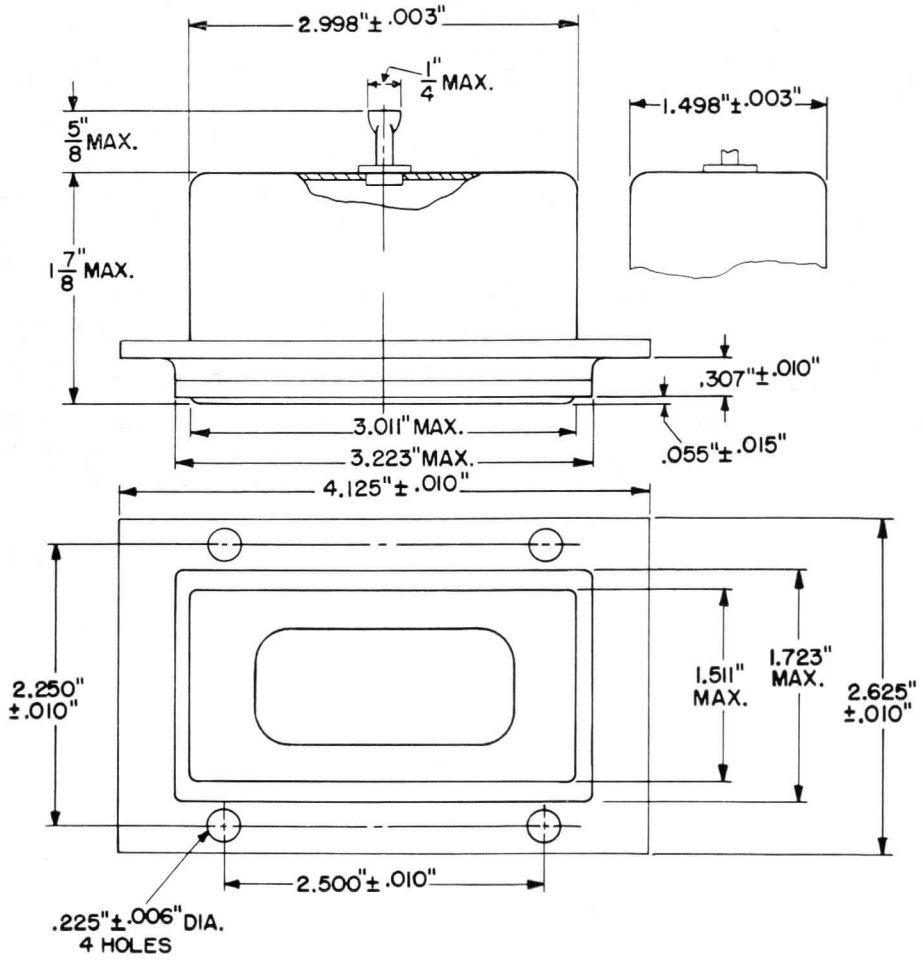

N-24504AZ

5-9-50

Tube Divisions, Electronics Department

GENERAL ELECTRIC

Schenectady, N. Y.

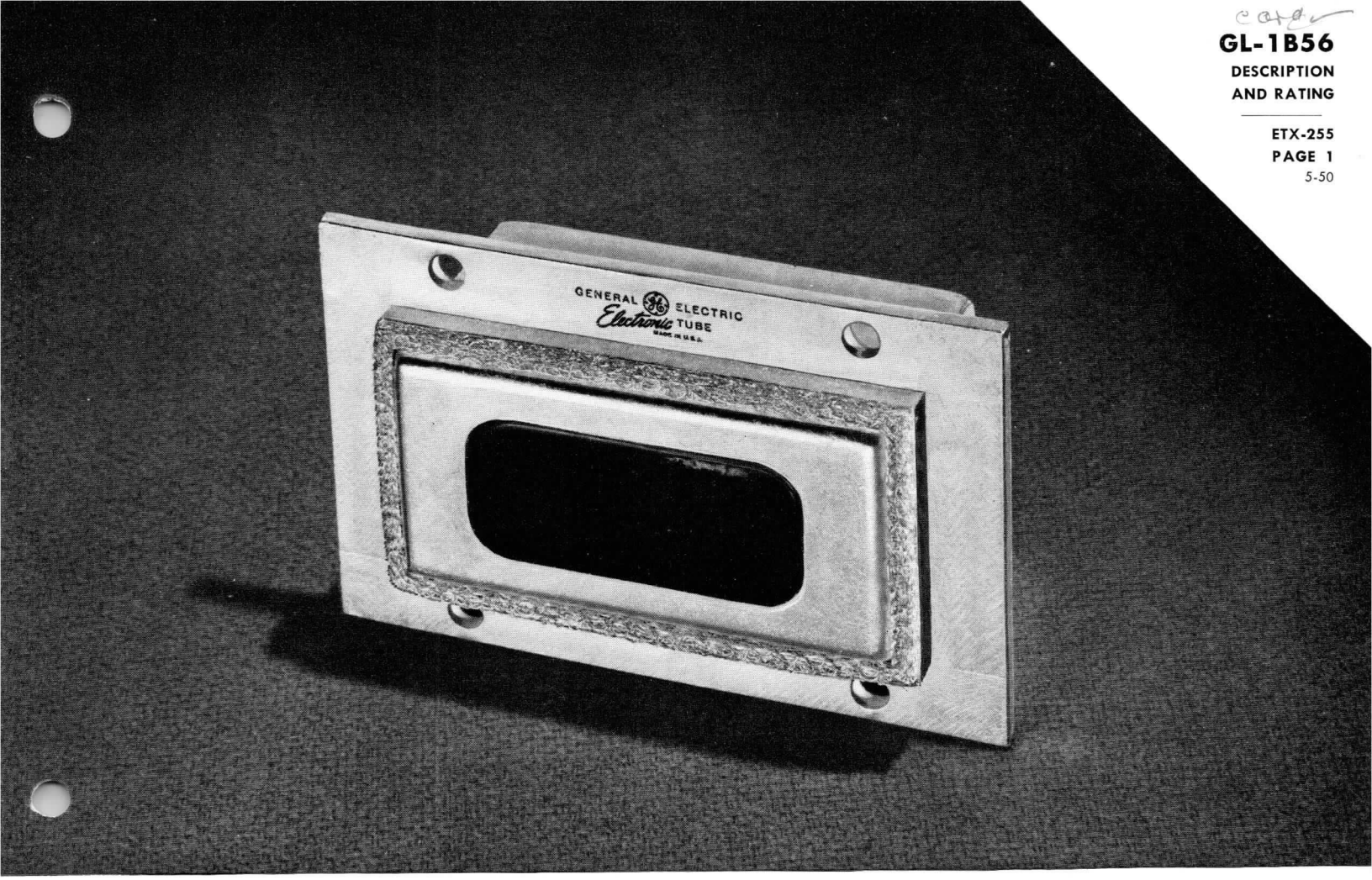

ANTI-TR TUBE

DESCRIPTION

The GL-1B56 is a gas switching tube for use in pulsed microwave circuits. In such circuits it acts effectively to decouple the transmitter from a common transmitting and receiving antenna during a non-transmitting period. The operational band is from 2775 to 2925 megacycles.

TECHNICAL INFORMATION

These data are for reference only. For design information refer to specifications.

GENERAL CHARACTERISTICS

Electrical

Center frequency	2850	megacycles
Operational band at voltage standing Wave ratio 9 minimum	2775 to 2925	megacycles
Loaded Q, maximum	5.5	
Transmitter peak power, minimum	20	kilowatts
Center frequency normalized conductance, maximum	0.05	
Center frequency normalized susceptance	±0.05	
Arc power loss, peak power = 50 kw, pulse repetition rate = 1000 pps, pulse width = 1usec, frequency = 2850 mc, maximum	0.4	decibels
High level voltage standing wave ratio, maximum	1.15	

GE Electronic TUBE

GENERAL ELECTRIC

TECHNICAL INFORMATION (CONT'D)

Mechanical

Mounting position—Any		
Ambient temperature range, non-operating	−40 to +100	C
Net weight, approximate	¾	pound

MAXIMUM RATINGS

Transmitter peak power	1000	kilowatts

OUTLINE
GL-1B56

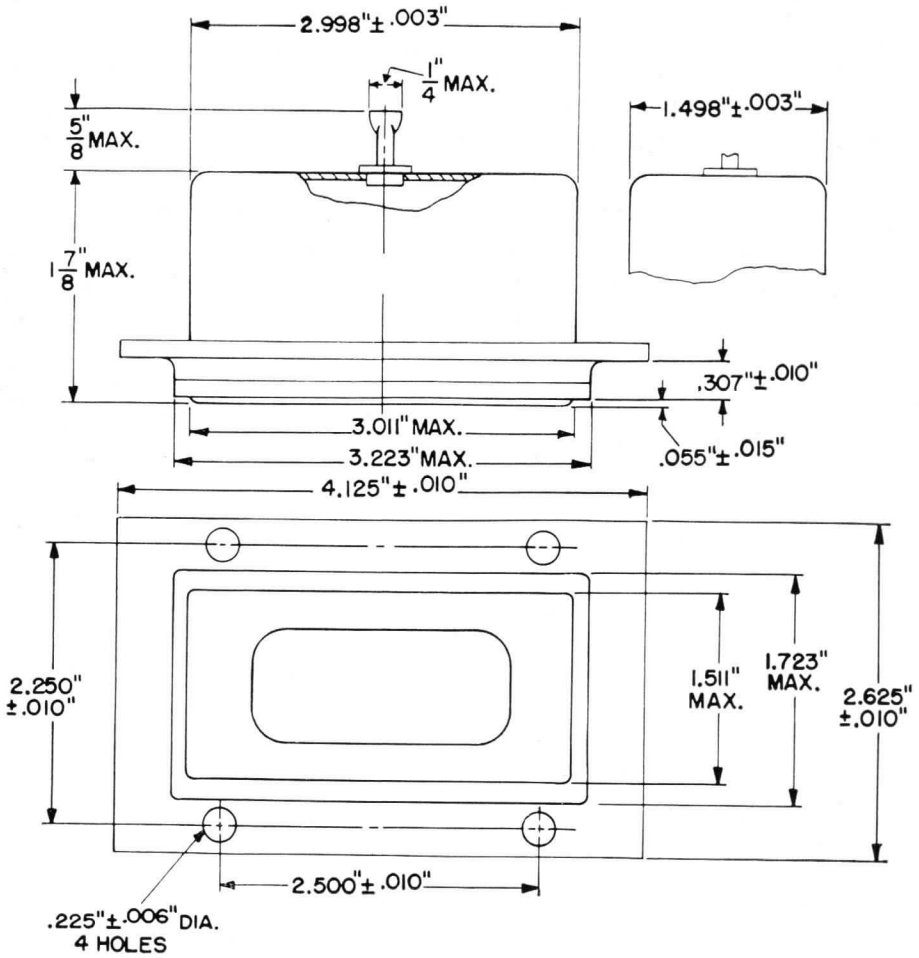

N-24504AZ

5-9-50

Tube Divisions, Electronics Department

GENERAL ELECTRIC

Schenectady, N. Y.

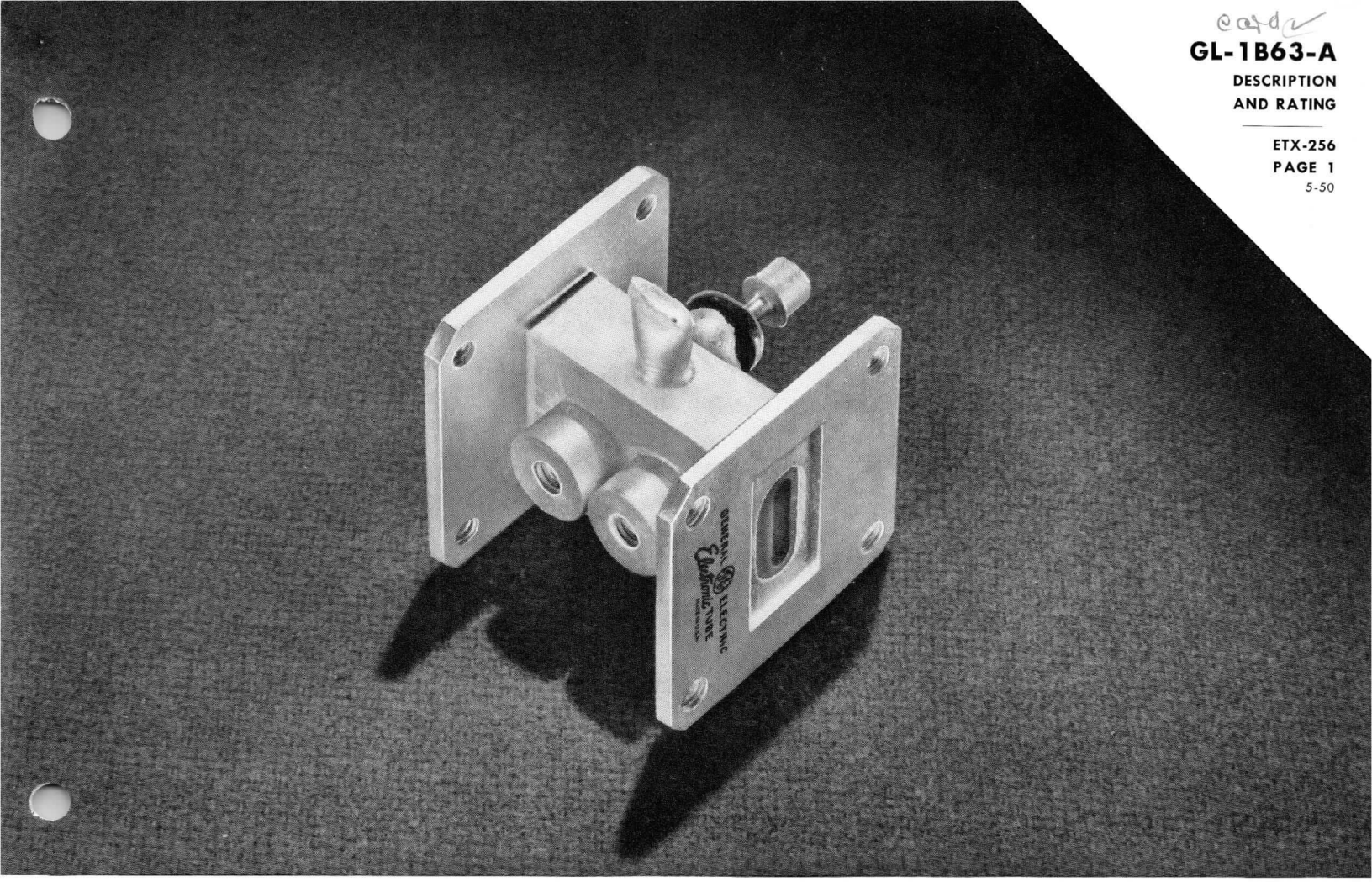

TR TUBE

DESCRIPTION

The GL-1B63-A is a gas switching tube for use in pulsed microwave circuits. It is designed to decouple effectively the receiver from a common transmitting and receiving antenna during a period of transmission. It is an integral-cavity type. The operational band is from 8490 to 9578 megacycles.

TECHNICAL INFORMATION

These data are for reference only. For design information refer to specifications.

GENERAL CHARACTERISTICS

Electrical

Operational band at voltage standing Wave ratio 1.9 maximum	8490 to 9578	megacycles
Igniter starting voltage, maximum	−650	volts
Igniter voltage drop at 100 microamperes Igniter current		
Minimum	190	volts
Maximum	450	volts
Spike leakage energy, peak power = 40 kw, pulse repetition rate = 1000 pps, pulse duration = 1usec, igniter current = 100 ua, frequency = 9000 mc, maximum	0.1	watts per second per pulse

GE Electronic TUBE

GENERAL ELECTRIC

TECHNICAL INFORMATION (CONT'D)

Flat Leakage Power, peak power = 40 kw, pulse repetition rate = 1000 pps, pulse duration = lusec, igniter current = 100 ua, frequency = 9000 mc, maximum	40	milliwatts
Insertion loss at 9000 megacycles and igniter current = 100 ua, maximum	0.9	decibels
Recovery time at 40 kilowatts peak, 3 decibels down, maximum	4	microseconds
High level loss, peak power = 4 kw, pulse repetition rate = 1000 pps, pulse width = lusec, frequency = 9000 mc, maximum	0.8	decibels
Transmitter peak power, minimum	4	kilowatts

Mechanical

Mounting position—any
Number of igniters—1

Ambient temperature range, non-operating	−40 to +100	C
Net weight, approximate	¼	pound

MAXIMUM RATINGS

Transmitter peak power	250	kilowatts
Igniter current	200	microamperes

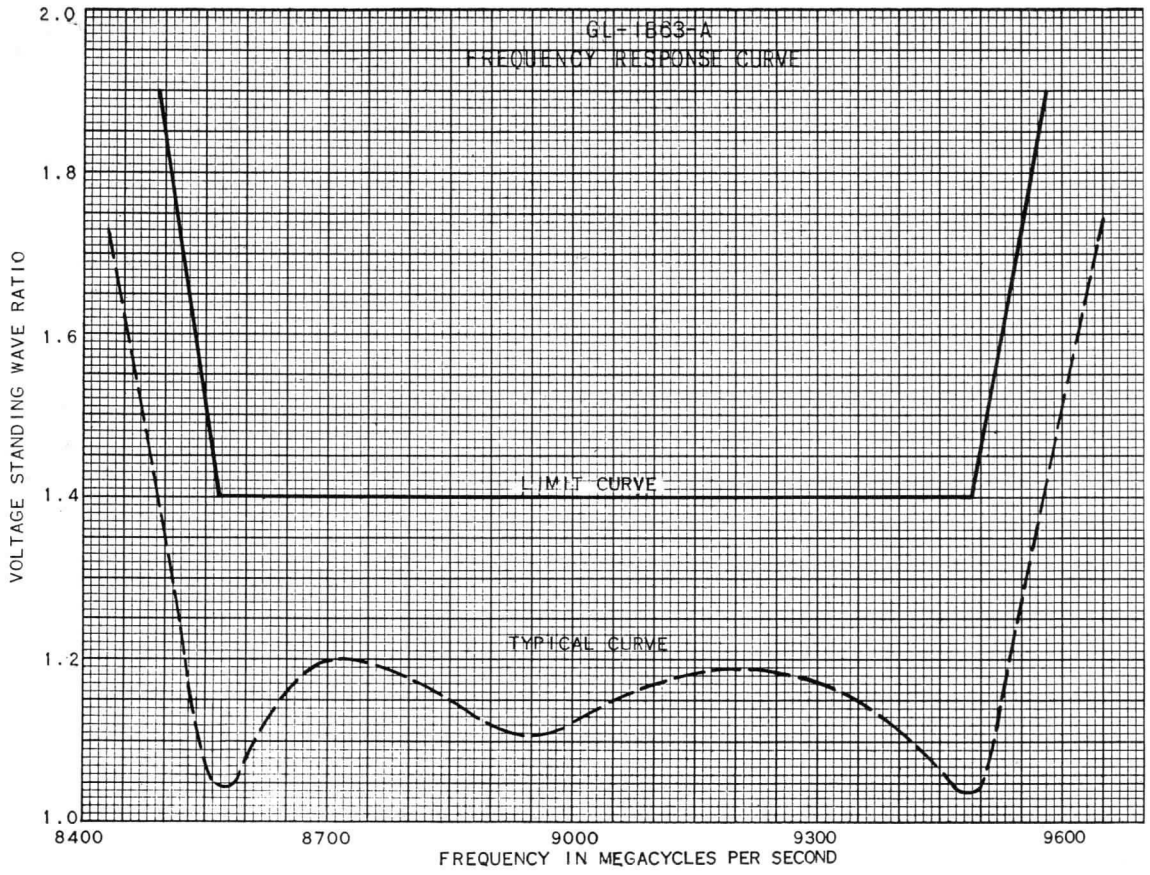

OUTLINE
GL-1B63-A

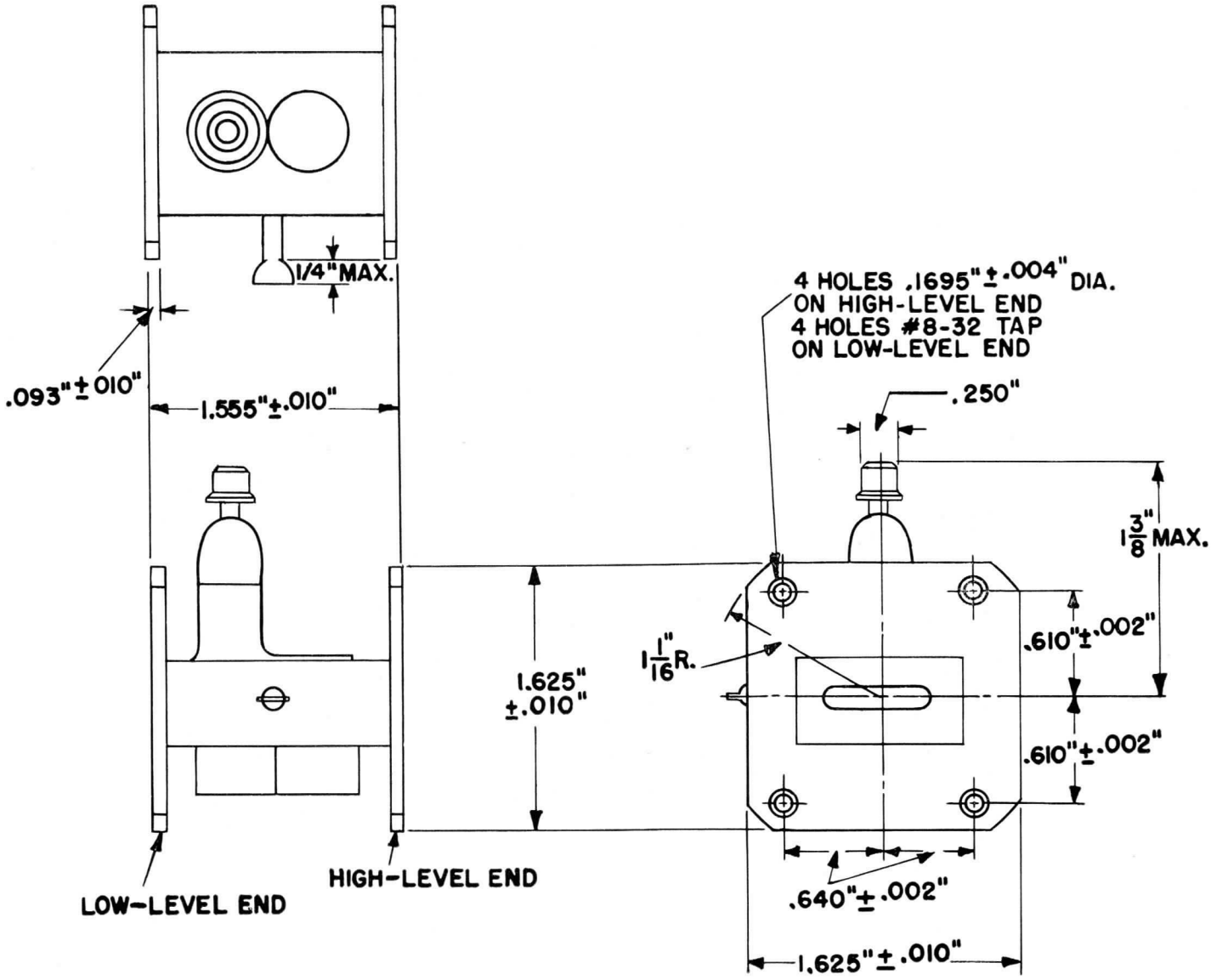

Tube Divisions, Electronics Department

GENERAL ELECTRIC

Schenectady, N. Y.

5-50 (10M)
Filing No. 8850

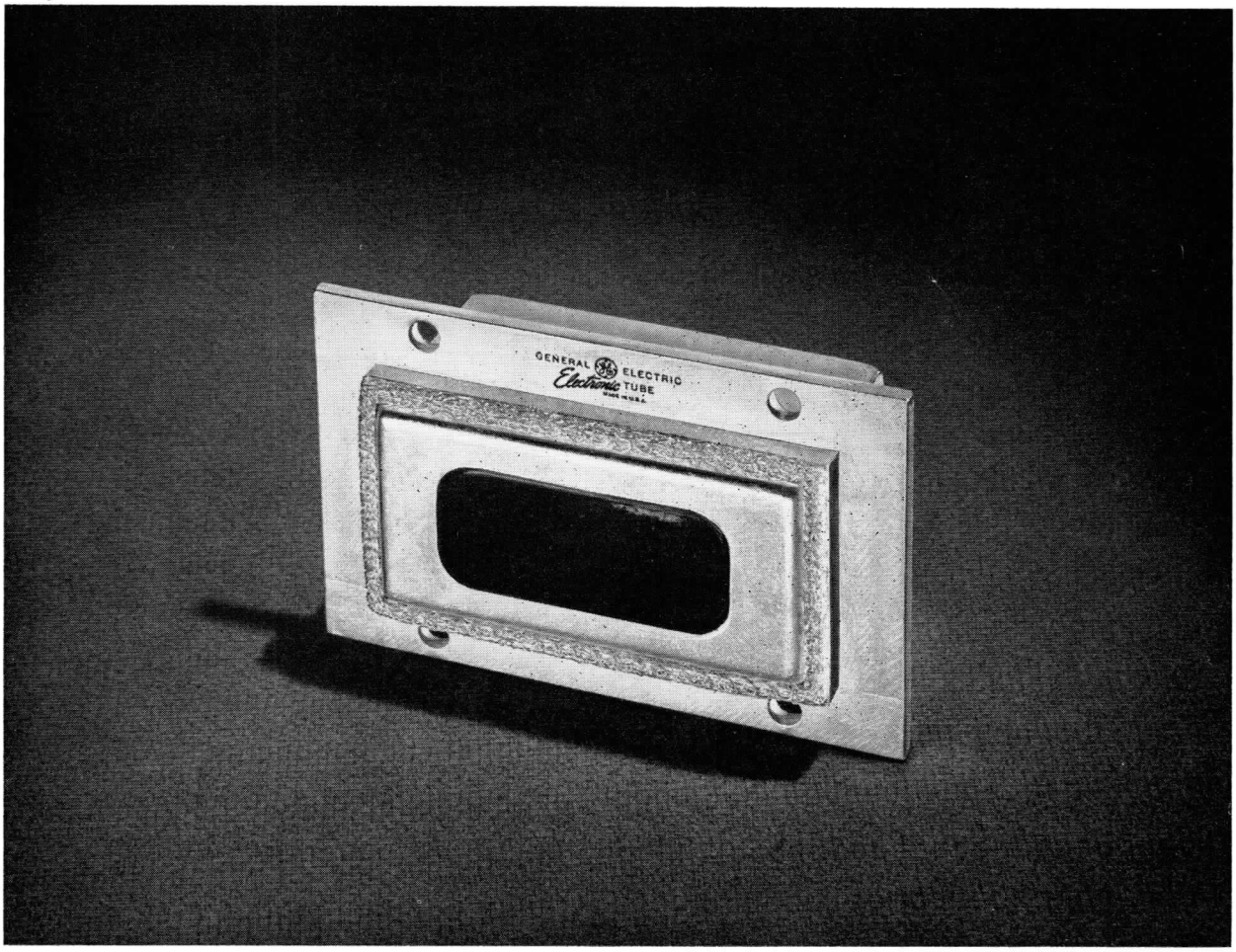

A-TR TUBE

BROADBAND **FIXED**

3130 TO 3270 MEGACYCLES

The GL-5921 is a gas switching tube for use in pulsed microwave circuits. In such circuits it acts effectively to decouple the transmitter from a common transmitting and receiving antenna during a non-transmitting period. The operational band is from 3130 to 3270 megacycles per second.

TECHNICAL INFORMATION

GENERAL

Electrical

Center Frequency	3200	Megacycles
Operational Band at Voltage Standing Wave Ratio = 5, minimum	3130 to 3270	Megacycles
Loaded Q, maximum	5.5	
Transmitter Peak Power, minimum	20	Kilowatts
Center Frequency Normalized Conductance, maximum	0.05	
Center Frequency Normalized Susceptance	±0.05	
Arc Power Loss, peak power = 20 kw, pulse repetition rate = 1000 pps, pulse width = 1 μ sec, frequency = 3300 mc, maximum	0.8	Decibels
High Level Voltage Standard Wave Ratio, maximum	1.15	

GENERAL ELECTRIC

TECHNICAL INFORMATION (CONT'D)

Mechanical

Mounting Position—Any
Ambient Temperature Range, non-operating . . . . . −40 to +100 C
Net Weight, approximate . . . . . ¾ Pounds

MAXIMUM RATINGS

Transmitter Peak Power . . . . . 1000 Kilowatts

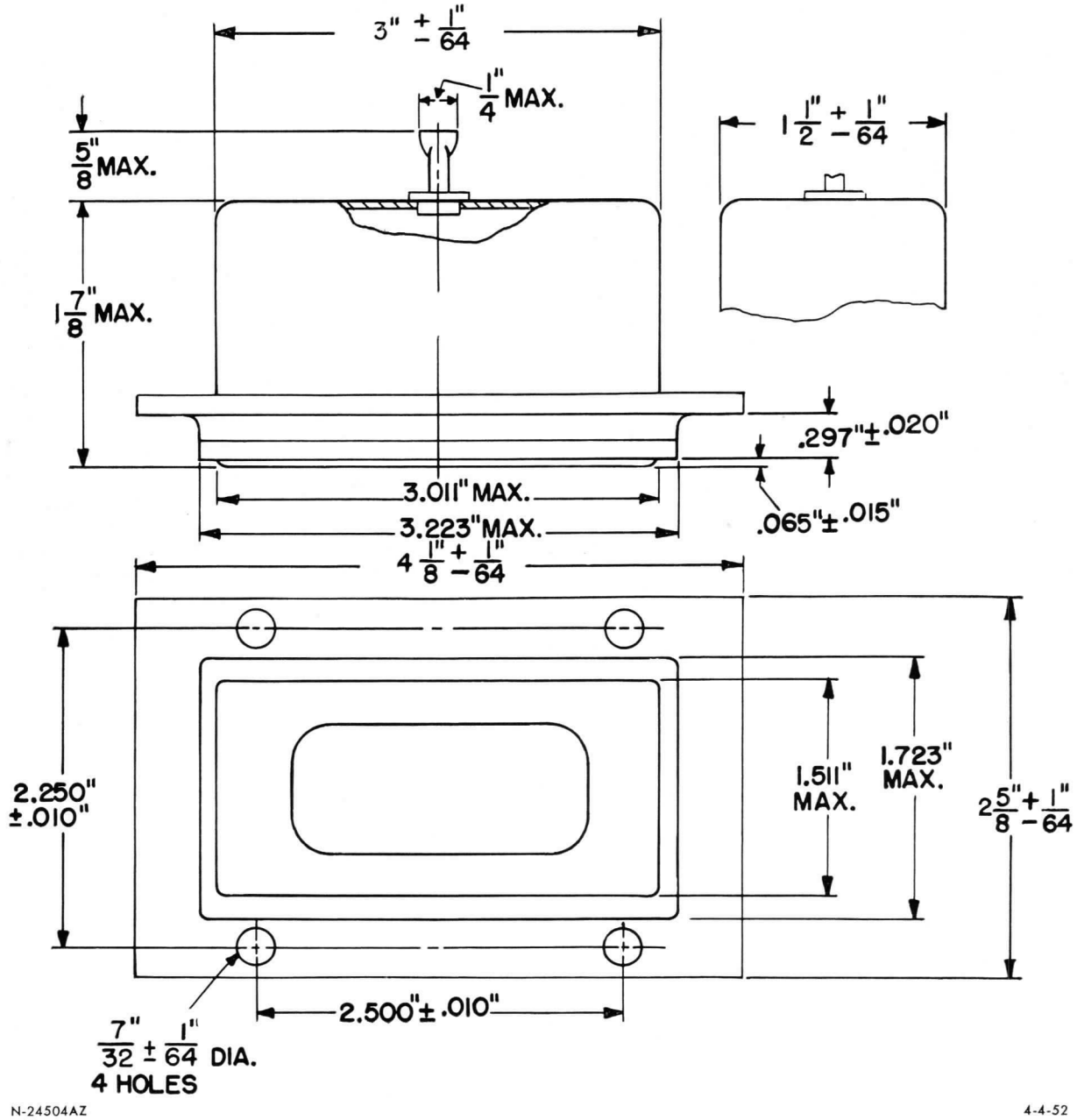

N-24504AZ

4-4-52

TUBE DEPARTMENT

GENERAL ELECTRIC

Schenectady 5, N. Y.

PRINTED IN U.S.A.

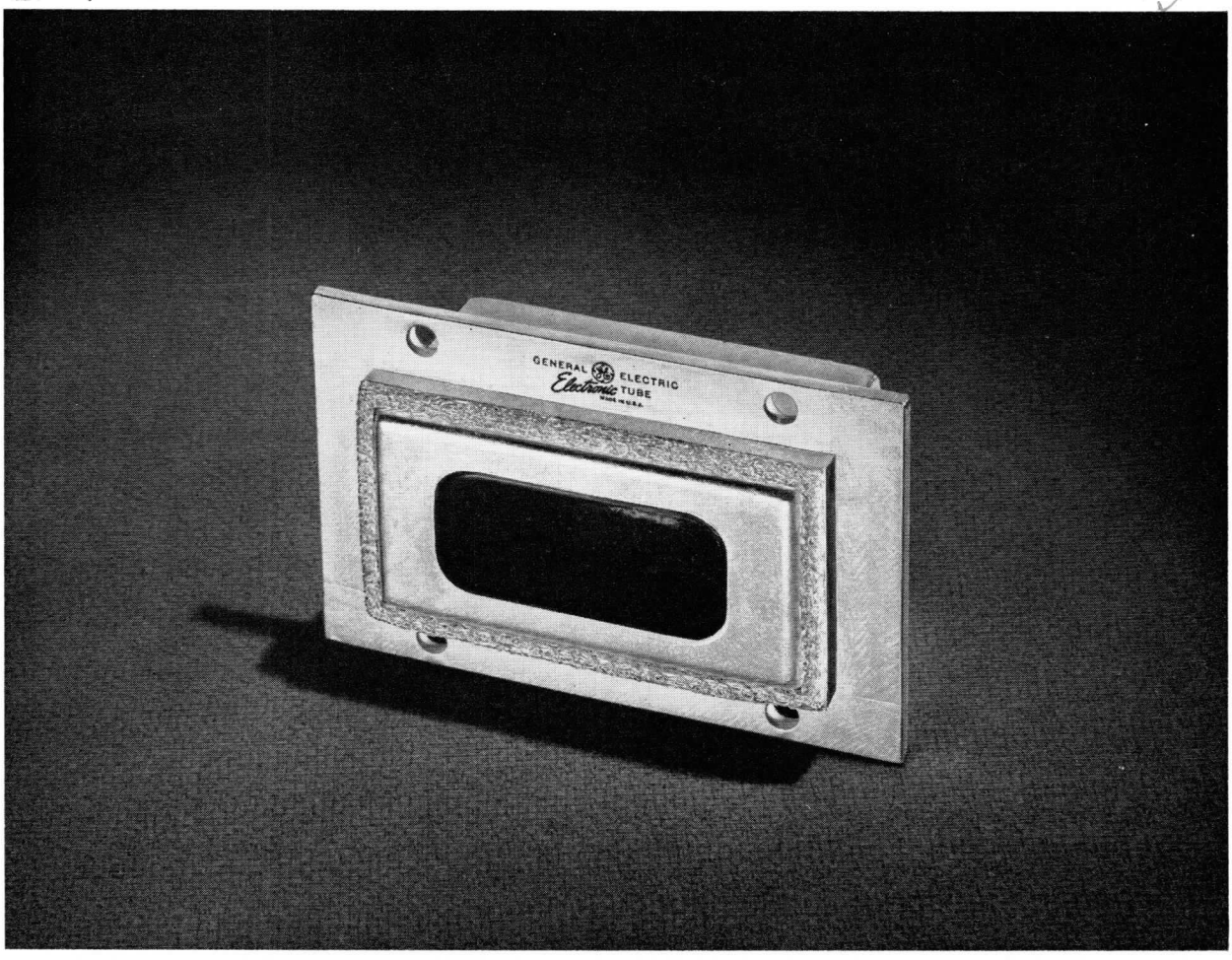

A-TR TUBE

BROADBAND **FIXED**

3325 TO 3475 MEGACYCLES

The GL-5922 is a gas switching tube for use in pulsed microwave circuits. In such circuits it acts effectively to decouple the transmitter from a common transmitting and receiving antenna during a non-transmitting period. The operational band is from 3325 to 3475 megacycles per second.

TECHNICAL INFORMATION

GENERAL

Electrical

Center Frequency	3400	Megacycles
Operational Band at Voltage Standing Wave Ratio = 5, minimum	3325 to 3475	Megacycles
Loaded Q, maximum	5.5	
Transmitter Peak Power, minimum	20	Kilowatts
Center Frequency Normalized Conductance, maximum	0.05	
Center Frequency Normalized Susceptance	±0.05	
Arc Power Loss, peak power = 20 kw, pulse repetition rate = 1000 pps, pulse width = 1 μ sec, frequency = 3300 mc, maximum	0.8	Decibels
High Level Voltage Standing Wave Ratio, maximum	1.15	

TECHNICAL INFORMATION (CONT'D)

Mechanical

Mounting Position—Any
Ambient Temperature Range, non-operating . . . . . −40 to +100 C
Net Weight, approximate . . . . . ¾ Pounds

MAXIMUM RATINGS

Transmitter Peak Power . . . . . 1000 Kilowatts

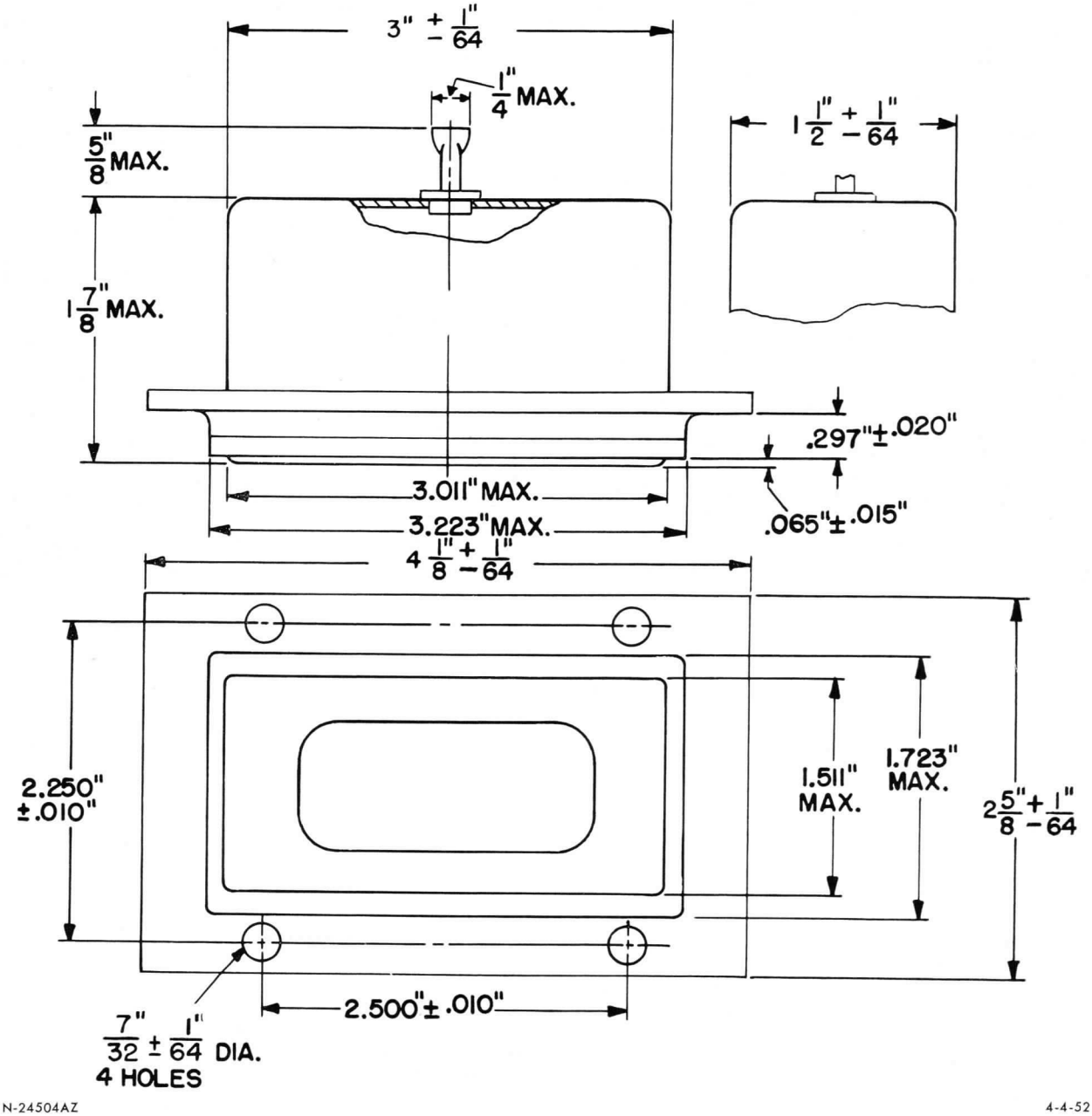

N-24504AZ

4-4-52

TUBE DEPARTMENT

GENERAL ELECTRIC

Schenectady 5, N. Y.

PRINTED IN U.S.A.

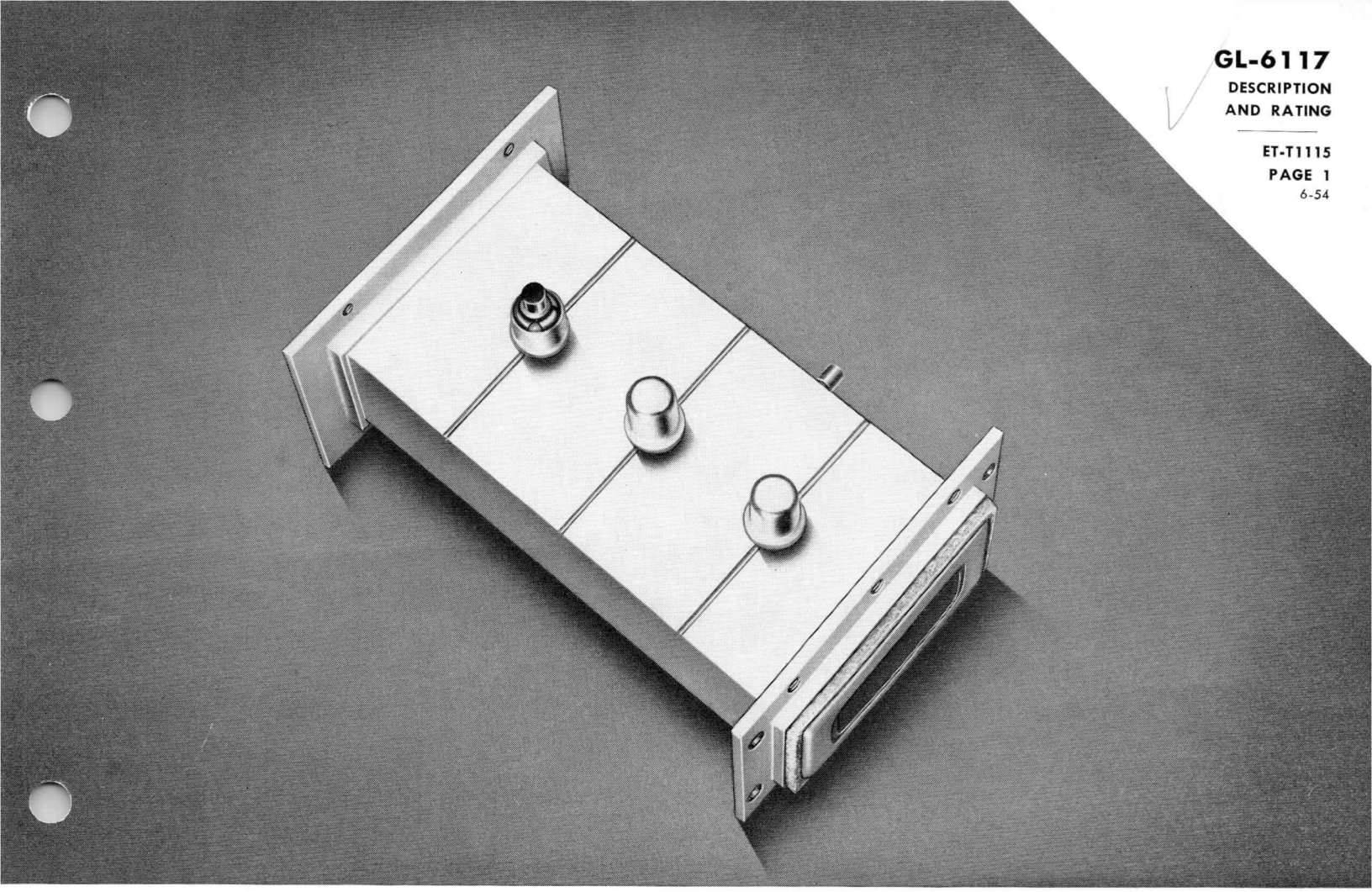

TR TUBE

INTEGRAL CAVITY
FIXED

BROADBAND
2659 TO 2969 MEGACYCLES

The GL-6117 is a gas switching tube of the integral-cavity type for use in pressurized pulsed microwave circuits. In such service the tube operates to decouple the receiver effectively from a common transmitting and receiving antenna during a period of transmission. The operational band is from 2659 to 2969 megacycles.

TECHNICAL INFORMATION

GENERAL

Electrical

Operational Band at Voltage Standing Wave Ratio = 1.65 Maximum	2659 to 2969	Megacycles
Open-Circuit Ignitor Supply Voltage		
Minimum	−500	Volts
Maximum	−700	Volts
Ignitor Voltage Drop, ignitor current = 200 microamperes		
Minimum	250	Volts
Maximum	400	Volts
Spike Leakage Energy, peak power = 200 kw, pulse repetition rate = 1000 pps, pulse duration = 1 μsec, ignitor current = 100 μa, frequency = 2802 mc	0.3 Max	Ergs

GENERAL ELECTRIC

Electronic TUBE

TECHNICAL INFORMATION (CONT'D)

Flat Leakage Energy, peak power = 200 kw, pulse repetition rate = 1000 pps, pulse duration = 1 μsec, ignitor current = 100 μa, frequency = 2802 mc	0.4 Max	Ergs
Ignitor Interaction, ignitor current = 200 microamperes	0.3 Max	Decibels
Insertion Loss at 2802 Megacycles, ignitor current = 0	0.5 Max	Decibels
Recovery Time at 750 Kilowatts Peak, 3 decibels down	15 Max	Microseconds
Ignitor Time	5 Max	Seconds

Mechanical

Number of Ignitors	1	
Mounting Position—Any		
Ambient Temperature Range, non-operating	−40 to +100	C
Net Weight, approximate	2¼	Pounds

MAXIMUM RATINGS

Ignitor Current	200	Microamperes

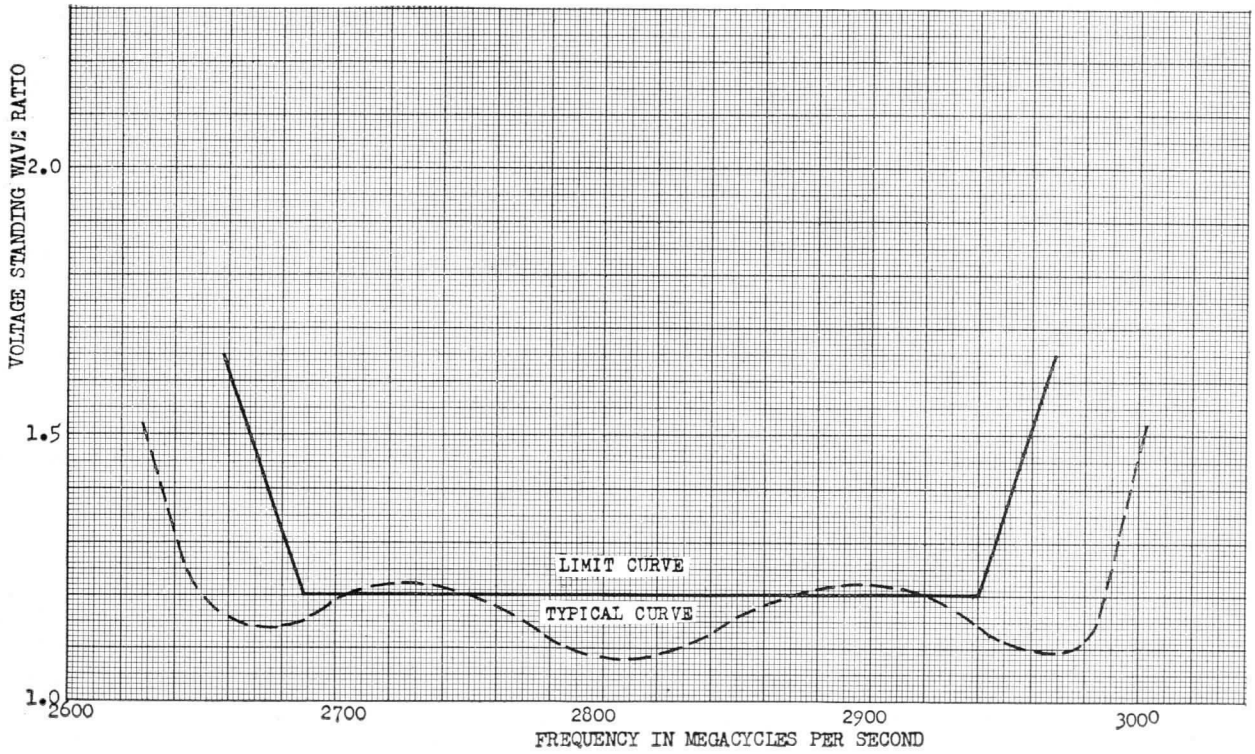

FREQUENCY-RESPONSE CURVE

K-69087-72A649

4-23-54

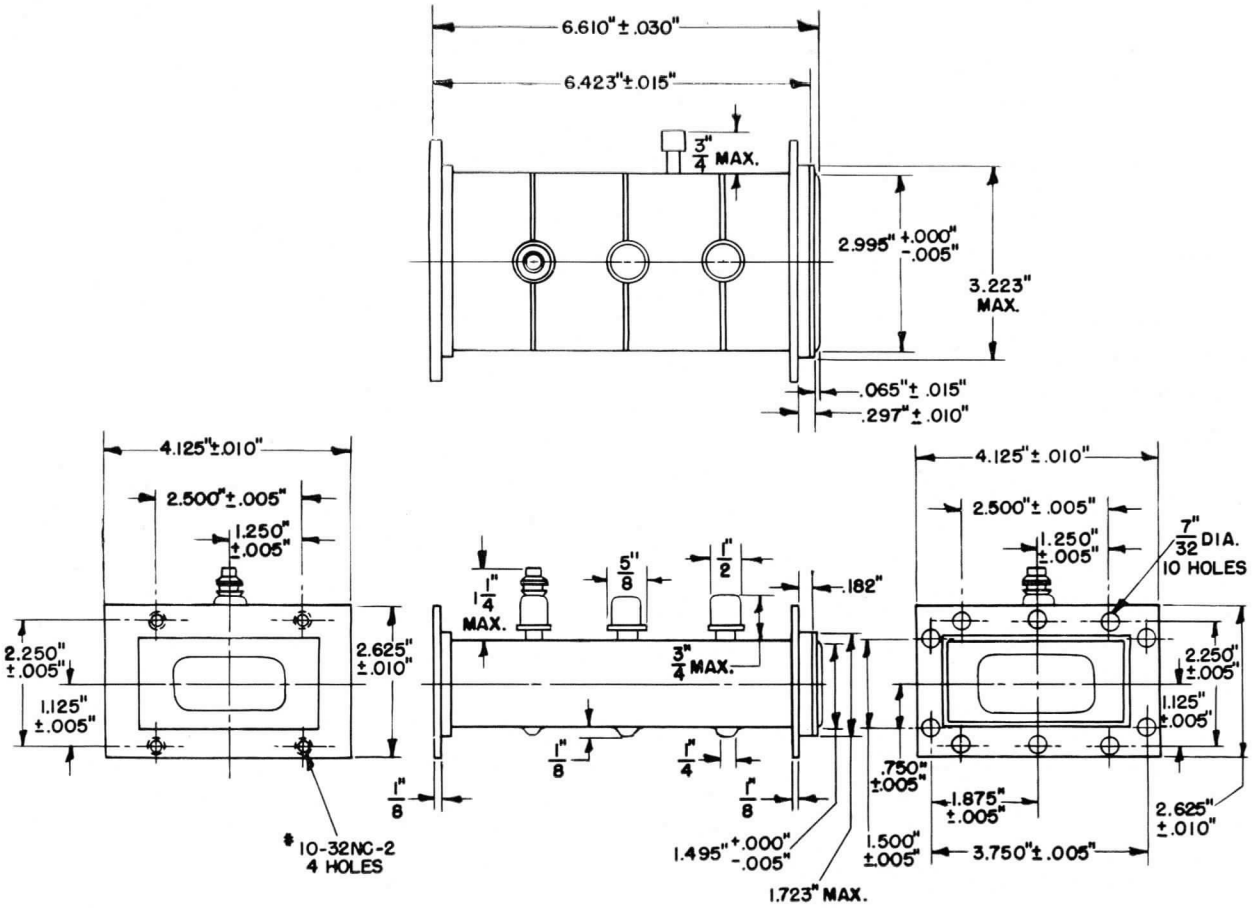

10-HOLE FLANGE

K-69087-72A647

4-23-54

TUBE DEPARTMENT
GENERAL ELECTRIC
Schenectady 5, N. Y.

6-54 (10M)

PRINTED IN U.S.A.

GL-874 SEE SUPPLEMENT NO. 20
DELETED DATED JUNE 1954

GENERAL ELECTRIC

GLOW TUBES

Supersedes ETI-176 dated 4-45

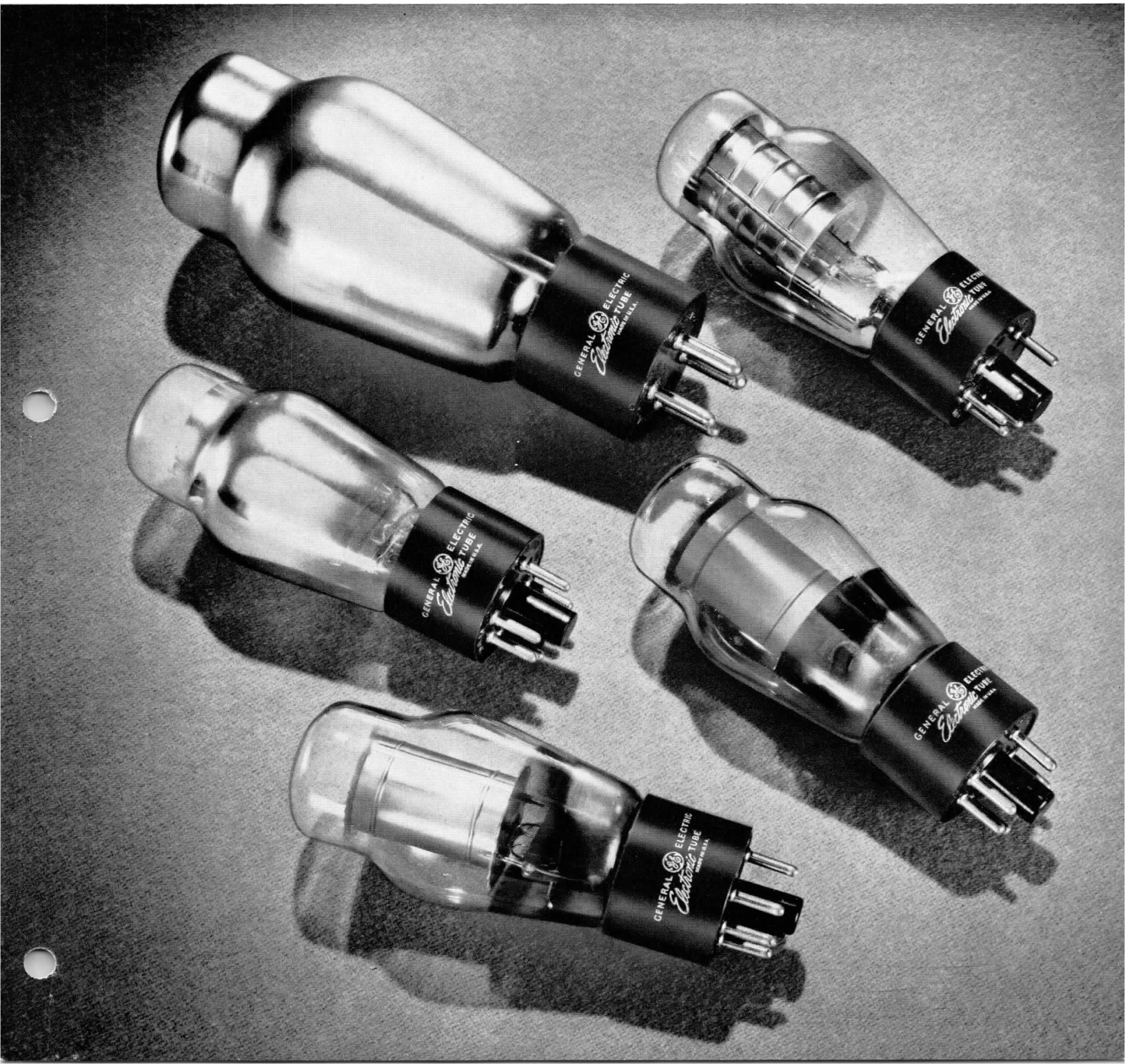

DESCRIPTION

A glow tube is a cold-cathode, gas-discharge tube in which no means is provided for controlling the unidirectional current flow. (NEMA definition). This type of tube is also known as a voltage-regulator tube, a name which describes its principal application.

Fundamentally, a glow tube consists of two electrodes, an anode and a cold cathode, in a partial atmosphere of inert gas or vapor. The emission is obtained from the cold cathode by virtue of a potential gradient at the cathode surface. This gradient literally pulls electrons out of the cathode. For this reason cathodes are sometimes coated with some material which has a low work function so that electrons are given off with comparative ease.

GENERAL OPERATION

Two types of discharge are possible in a glow tube. A glow discharge, which is a uniform glow covering all or part of the cathode surface, will occur when the current carried by the tube is low. Under these conditions the tube drop is essentially independent of the current. This is the condition under which glow tubes normally operate. The exact voltage drop across the tube depends upon the electrode spacing and the type and amount of gas used.

If the current through the tube is increased beyond a certain point the tube will go into a so-called arc discharge. Under these conditions a cathode spot rather than a uniform cathode glow appears on the cathode and the tube drop decreases to a rather low value (10-20 volts). Although some glow tubes are designed to operate as arc-discharge tubes, the majority of glow tubes must not be operated so that an arc discharge takes place, as the life of the tube will be materially shortened.

TECHNICAL INFORMATION

These data are for reference only. For design information refer to specifications.

GENERAL CHARACTERISTICS

Tube Type Number	GL-OA3, GL-OB3 GL-OC3, GL-OD3	GL-874
Type of voltage-regulator tube	Glow discharge	Glow discharge
Cathode	Cold type	Cold type
Maximum over-all length	4⅛ inches	5⅜ inches
Maximum seated height	3⁹⁄₁₆ inches	4¾ inches
Maximum diameter	1⁹⁄₁₆ inches	2¹⁄₁₆ inches
Base	Small shell octal 6-pin	Medium 4-pin bayonet
Net weight, approx.	2 ounces	2 ounces
Shipping weight, approx.	3 pounds	3 pounds

MAXIMUM RATINGS

TUBE TYPE NUMBER	GL-OA3			GL-OB3			GL-OC3			GL-OD3			GL-874			
	Min	Bogey	Max	Min	Bogey	Max	Min	Bogey	Max	Min	Bogey	Max	Min	Bogey	Max	
Electrical Data																
D-c anode-supply voltage*	105	—	—	130	—	—	133	—		185	—	—	130	—	—	volts
D-c operating voltage	—	—	—	—	—	—	—	—	—	—	—	—	—	90	—	volts
Anode voltage drop	68	75	85	77	90	104	103	108	116	142	153	165	—	—	—	volts
Anode breakdown voltage	—	100	105	—	105	130	—	115	133	—	160	185	—	115	130	volts
Regulation	—	5	6.5	—	5	9	—	2	4	—	4	5.5	—	7	—	volts
Mechanical Data																
Mounting position																any
Net weight, maximum		1.3			1.3			1.3			1.3			1.3		ounces
Maximum Ratings, Absolute Values																
Maximum average starting current		100			100			100			100			—		milliamperes
Maximum averaging time		10			10			10			10			—		seconds
D-c Cathode Current																
Maximum		40			30			40			40			50		milliamperes
Minimum		5			5			5			5			10		milliamperes
Maximum frequency		0†			0			0			0			—		
Ambient temperature limits	−55 to +90			−55 to +90			−55 to +90			−55 to +90			−55 to +90			C

* To assure starting throughout tube life not less than the specified supply voltage should be provided.
† C operation only.

DEFINITIONS OF RATINGS

D-c Anode Supply Voltage, Minimum

This is the minimum value of voltage that the voltage supply must be capable of applying to the glow tube.

D-c Operating Current

These values of maximum and minimum current indicate the range over which the glow tube will operate satisfactorily. Operation below the minimum current will cause erratic regulation and operation above maximum current will result in short life and erratic regulation.

Regulation

The regulation voltage is the maximum variation in voltage drop across the glow tube. It is calculated as the difference between the voltage drop obtained at the maximum current and the voltage drop obtained at the minimum current.

Ambient Temperature Range

This temperature range indicates the maximum and minimum temperatures at which satisfactory operation may be obtained.

◆OUTLINE
GL-OA3, OB3, OC3, OD3

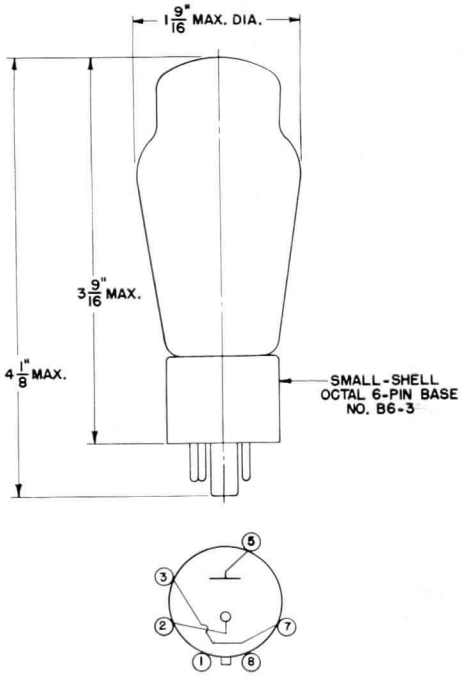

K-8065597
◆Revised

11-22-50

◆OUTLINE
GL-874 GLOW TUBE

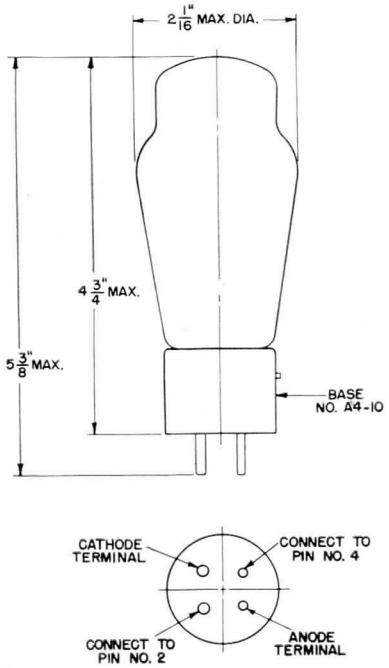

K-8065596
◆Revised

11-22-50

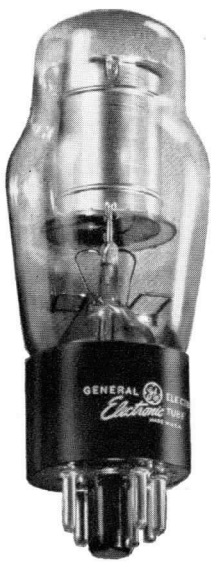



APPLICATION CIRCUITS

The most common use of the glow tube is as a voltage regulating device.

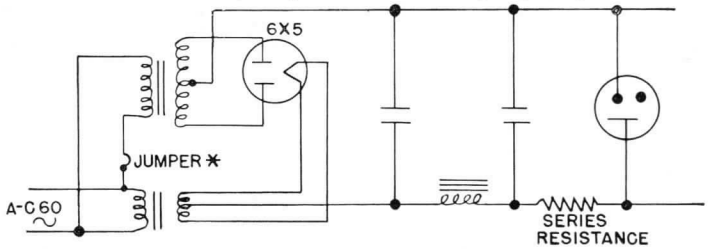

K-8639684 Fig. 1—Voltage-Regulated Power Supply Circuit 9-25-44

*Most glow tubes are provided with a jumper wire connected internally. This is usually employed as a switch, and is wired in series with the primary of the transformer supplying power to the glow tube. When the tube is removed from the socket the power supply circuit is automatically shut off.

Fig. 1 above illustrates a voltage-regulated power supply circuit incorporating a glow tube as a voltage stabilizer.

Such a circuit is an inexpensive means of providing a regulated voltage within the capabilities of a tube for such applications. The series resistance must be of a value that will limit the current through the glow tube to the maximum rated current. It is also desirable to furnish a high enough voltage from the d-c supply so that the current through the glow tube does not drop below the minimum rating.

Glow tubes may be used in series to provide higher regulated voltages than are available from one tube. These tubes need not be the same type, the only requirement being that the current must be limited so that it falls within the operating range of the combination. For example, if a GL-OA3 and a GL-OB3 are used in series, the current must be limited to 30 milliamperes maximum. Operation of glow tubes in parallel is not recommended.

A second application of the glow tube is the relaxation oscillator illustrated in Fig. 2.

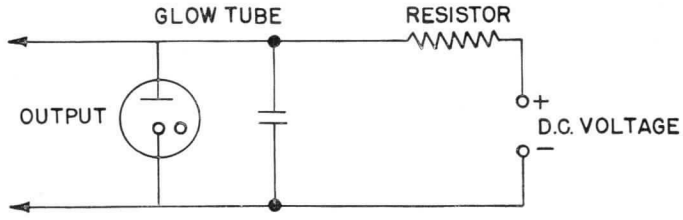

K-8639685 Fig. 2—Relaxation Oscillator Circuit 9-25-44

In this type of circuit, a current charges a capacitor. In parallel with the capacitor is a glow tube, which will break down when the voltage on the capacitor reaches the voltage breakdown point of the glow tube. The frequency of this action may be varied by changing the capacitance or type of glow tube.

#Circuits shown in ETI-176 are examples of possible tube applications and the description and illustration of them does not convey to the purchaser of tubes any license under patent rights of General Electric Company.

INSTALLATION AND OPERATION

Sufficient resistance must always be used in series with each of these tubes to limit the current through the tube to the maximum rated value under continuous (steady state) operating conditions. During the interval of 5 to 10 seconds which may be required for the regulated tubes in associated equipment to warm up and draw plate current, a maximum current of 100 milliamperes is permissible provided each such starting period is followed by a steady-state operating period of at least several minutes. Unless this precaution is observed, tube performance will be impaired.

In voltage-regulator tubes of the glow-discharge type, regulation is somewhat dependent on past operating conditions. For example, the regulation value of a tube operated for a protracted period at 5 milliamperes and then changed to 35 millliamperes may be somewhat different from the value that will be obtained after a long period of operation at 35 milliamperes. Likewise, the regulation value may change somewhat after a long idle period.

Tube Divisions, Electronics Department

GENERAL ELECTRIC

Schenectady, N. Y.

12-50 (11M)

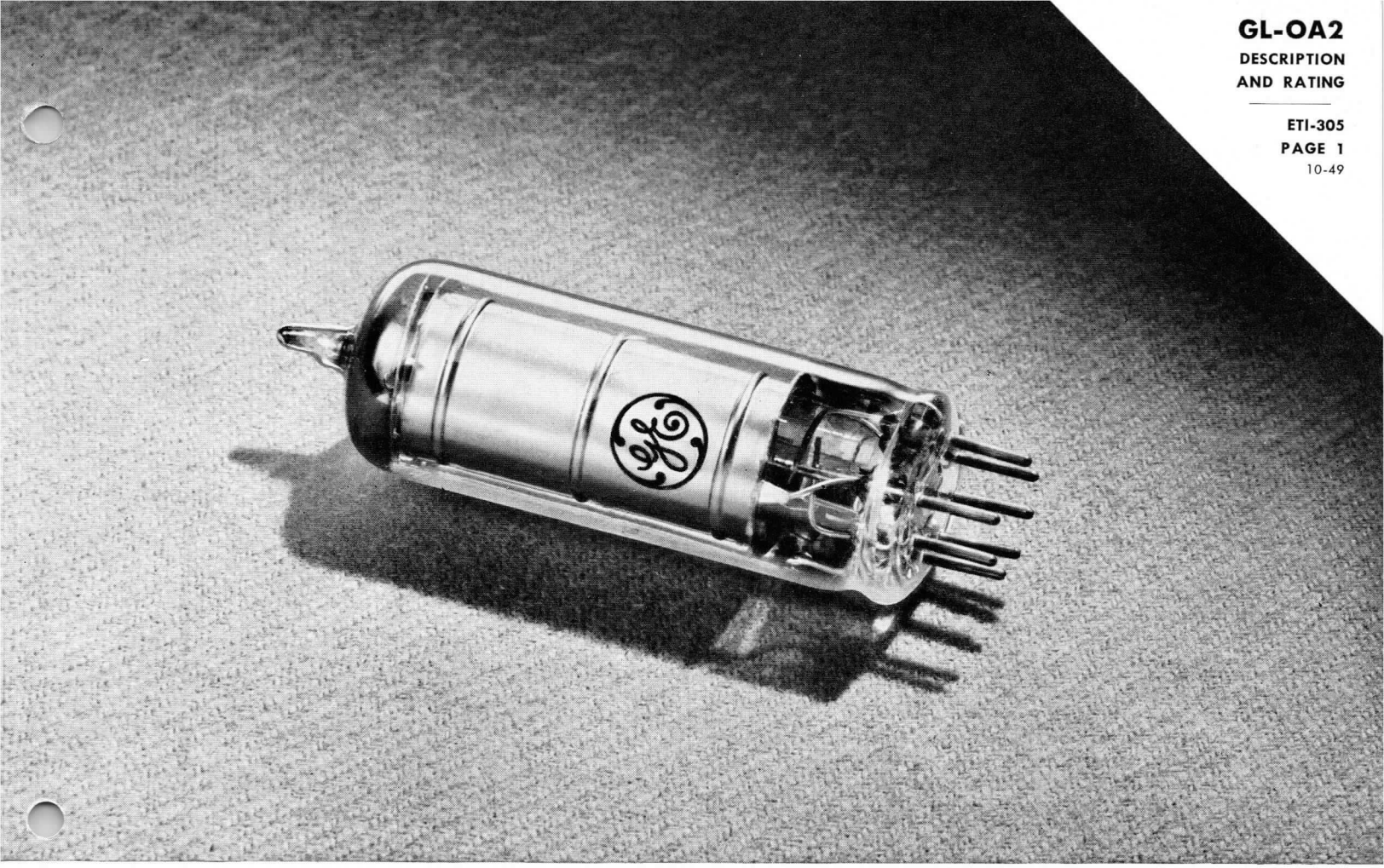

GLOW TUBE

DESCRIPTION

The GL-OA2 is a miniature two-electrode inert-gas-filled cold-cathode tube for use as a voltage regulator.

TECHNICAL INFORMATION

These data are for reference only. For design information refer to specifications.

GENERAL

Electrical Data	Minimum	Bogey	Maximum	
D-c Anode-supply Voltage*	185	....	....	volts
Anode voltage drop	140	151	168	volts
Anode breakdown voltage	....	156	185	volts
Shunt capacitor	....	....	0.1	microfarad
Regulation	....	2	6	volts

Mechanical Data

Mounting position—any
Net weight, maximum . . . . . 0.3 Ounce

*To assure starting throughout tube life not less than the specified supply voltage should be provided.

Electronic TUBE

GENERAL ELECTRIC

TECHNICAL INFORMATION (CONT'D)

MAXIMUM RATINGS, Absolute Values

Maximum average starting current	75	milliamperes
Maximum averaging time	10	seconds
D-c cathode current		
Maximum	30	milliamperes
Minimum	5	milliamperes
Maximum frequency	0	cycles per second
Ambient temperature limits	−55 to +90	C

APPLICATION NOTES

The base of the GL-OA2 fits the miniature 7-pin socket which may be mounted to hold the tube in any position. No connection should be made to pins 3 and 6 which extend into the interior of the tube since any potentials applied to these pins may cause erratic tube performance. The three pin terminals for the cathode and the two for the anode offer the designer several different possibilities for connection so as to provide protection for the associated components in case the regulator tube is removed from its socket.

Sufficient resistance must always be used in series with the GL-OA2 to limit the current through the tube. The value for the series resistor is dependent on the maximum anode-supply voltage and the ratio of the current through the load to the operating current of the GL-OA2, and should be chosen to limit the operating current through the tube to 30 milliamperes at all times after the starting period.

The maximum load current that can be regulated is determined by the minimum and maximum values of the supply voltage. The value of series resistor for the maximum supply voltage should be calculated as indicated above. The user should then determine whether this value will permit adequate starting voltage when the supply voltage falls to its minimum value. If adequate starting voltage is not obtained, a new load current of lower value must be used and the calculations repeated. It will be apparent from such calculations that the higher the minimum supply voltage and the smaller the difference between its minimum and maximum values, the higher will be the load current that can be regulated.

In order to handle more load current, two or more GL-OA2's may be operated in parallel, but such parallel operation requires that a resistor be used in series with each regulator tube in order to equalize division of the current between the paralleled tubes. Approximately a 100-ohm resistor for each tube should be used. The disadvantage of this method is that the use of resistors impairs the regulation which can be obtained.

When equipment utilizing the GL-OA2 is turned on, a starting current in excess of the average operating current is permissible as indicated under Maximum Ratings. When the tube is subjected to such high starting currents, the regulated voltage may require up to 20 minutes to drop to its normal operating value. This performance is characteristic of voltage-regulator tubes of the glow-discharge type. Similarly, the regulation voltage is affected by changes in current within the operating current range. For example, the regulation value of a tube operated for a protracted period at 5 milliamperes and then changed to 25 milliamperes, may be somewhat different from the value that will be obtained after a long period of operation at 25 milliamperes. Likewise, the regulation value may change somewhat after a long idle period.

If the associated circuit has a capacitor in shunt with the GL-OA2, the capacitor should be limited in value to 0.1 microfarad. A larger value may cause the regulator tube to oscillate and thus give unstable regulation performance.

TYPICAL CIRCUITS FOR GLOW TUBE GL-OA2

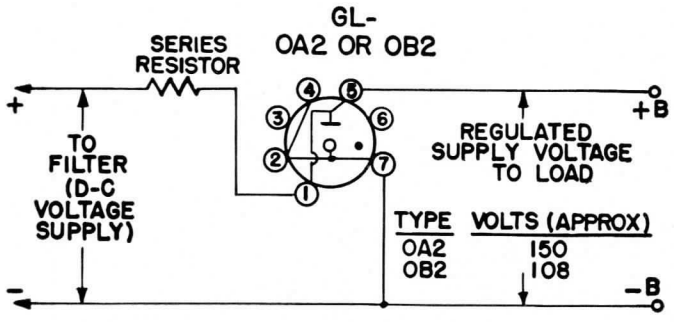

CIRCUIT TO PROVIDE REGULATED SUPPLY VOLTAGE OF APPROXIMATELY 150 OR 108 VOLTS TO LOAD. REMOVAL OF TUBE FROM SOCKET REMOVES VOLTAGE FROM LOAD.

K-69087-72A280 4-6-49

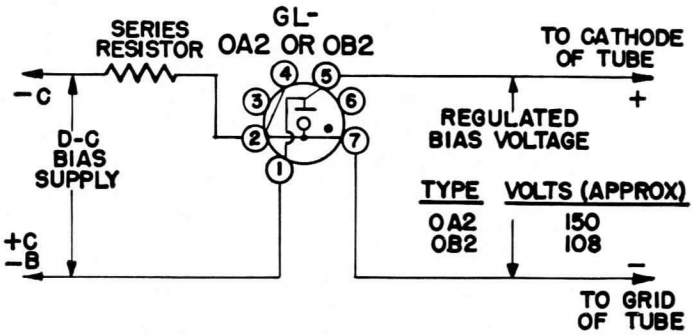

CIRCUIT FOR BIAS-SUPPLY REGULATION. REMOVAL OF TUBE FROM SOCKET OPENS B-SUPPLY CIRCUIT OF REGULATED TUBES.

K-69087-72A282 4-6-49

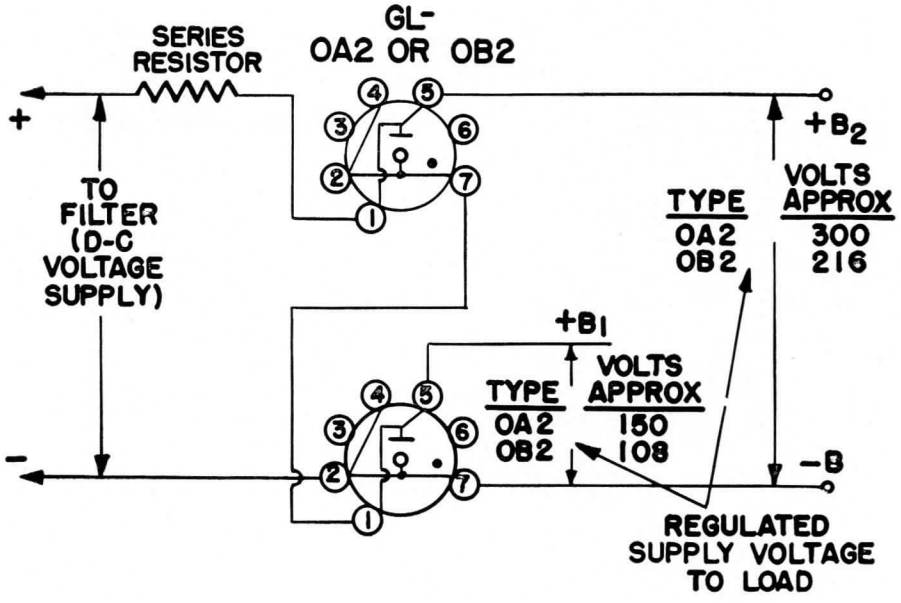

CIRCUIT USING TWO OA2'S OR TWO OB2'S TO PROVIDE REGULATED SUPPLY VOLTAGES OF APPROXIMATELY 300 OR 216 VOLTS AND 150 OR 108 VOLTS TO LOAD. SOCKET CONNECTIONS ARE SO MADE THAT VOLTAGE ON LOAD IS REMOVED WHEN EITHER TUBE IS TAKEN FROM ITS SOCKET.

K-69087-72A281 4-6-49

OUTLINE
GLOW TUBE GL-OA2

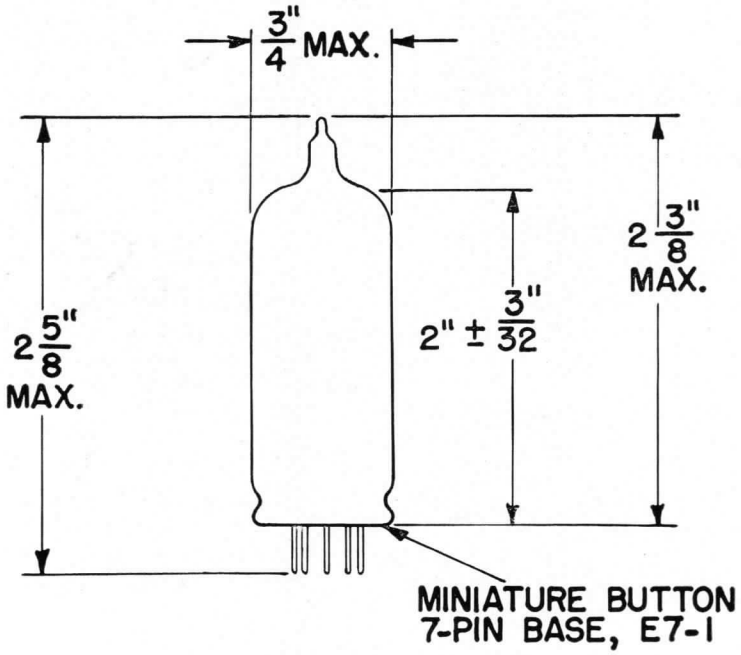

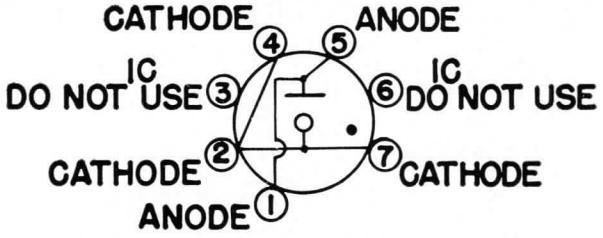

BASING DIAGRAM

N15146AZ 4-6-49

Tube Divisions, Electronics Department

GENERAL ELECTRIC

Schenectady, N. Y.

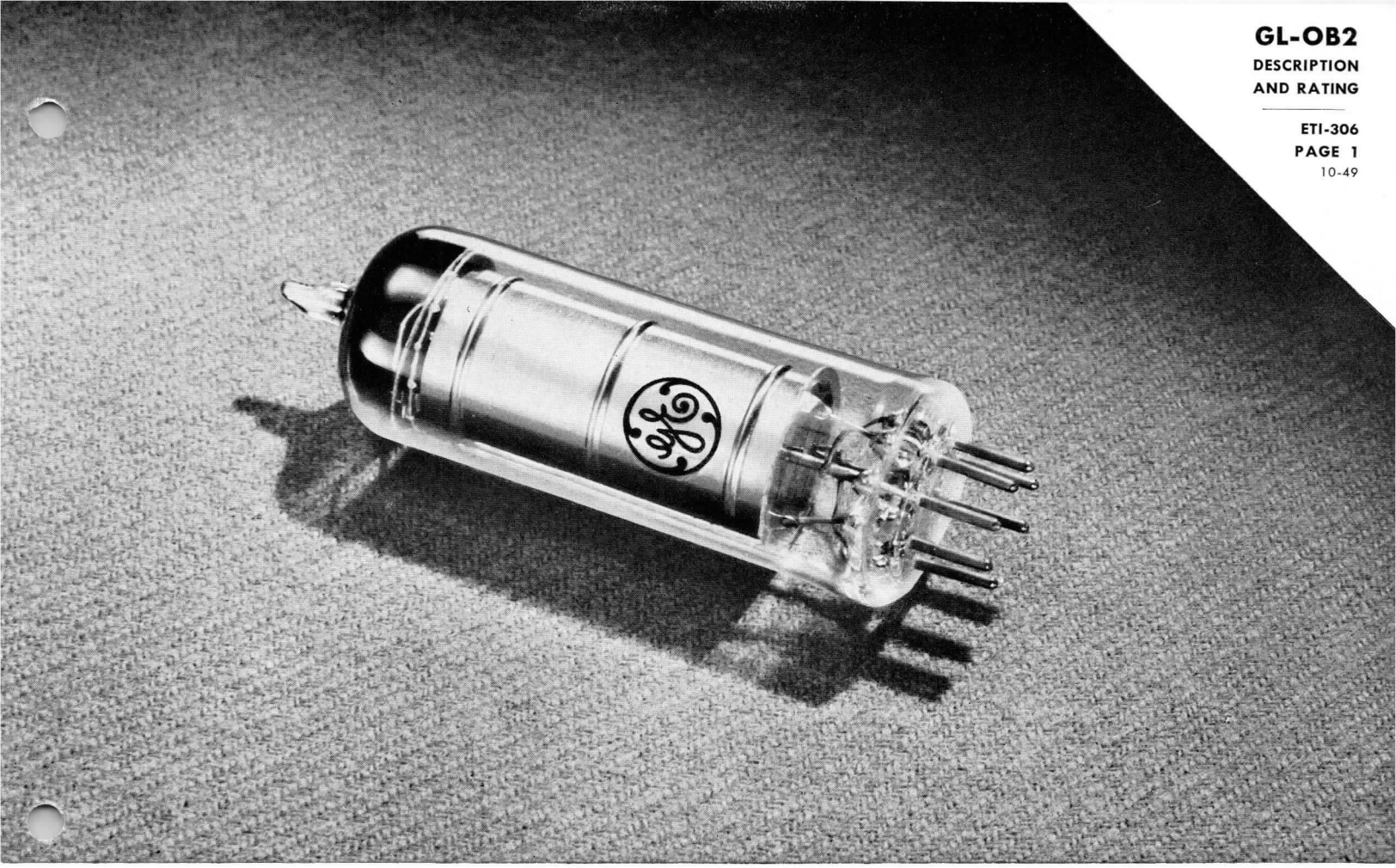

GLOW TUBE

DESCRIPTION

The GL-OB2 is a miniature two-electrode inert-gas-filled cold-cathode tube for use as a voltage regulator.

TECHNICAL INFORMATION

These data are for reference only. For design information refer to specifications.

GENERAL

Electrical Data	Minimum	Bogey	Maximum	
D-c anode-supply voltage*	133	....	....	volts
Anode voltage drop	101	108	114	volts
Anode breakdown voltage	....	115	133	volts
Shunt capacitor	....	....	0.1	microfarad
Regulation	....	1	4	volts
Mechanical Data				
Mounting position—any				
Net weight, maximum			0.3	ounce

*To assure starting throughout tube life not less than the specified supply voltage should be provided.

Electronic TUBE

GENERAL ELECTRIC

TECHNICAL INFORMATION (CONT'D)

MAXIMUM RATINGS, ABSOLUTE VALUES

Maximum average starting current	75	milliamperes
Maximum averaging time	10	seconds
D-c cathode current		
Maximum	30	milliamperes
Minimum	5	milliamperes
Maximum frequency	0	cycles per second
Ambient temperature limits	−55 to +90	C

APPLICATION NOTES

The base of the GL-OB2 fits the miniature 7-pin socket which may be mounted to hold the tube in any position. No connection should be made to pins 3 and 6 which extend into the interior of the tube since any potentials applied to these pins may cause erratic tube performance. The three pin terminals for the cathode and the two for the anode offer the designer several different possibilities for connection so as to provide protection for the associated components in case the regulator tube is removed from its socket.

Sufficient resistance must always be used in series with the GL-OB2 to limit the current through the tube. The value for the series resistor is dependent on the maximum anode-supply voltage and the ratio of the current through the load to the operating current of the GL-OB2, and should be chosen to limit the operating current through the tube to 30 milliamperes at all times after the starting period.

The maximum load current that can be regulated is determined by the minimum and maximum values of the supply voltage. The value of series resistor for the maximum supply voltage should be calculated as indicated above. The user should then determine whether this value will permit adequate starting voltage when the supply voltage falls to its minimum value. If adequate starting voltage is not obtained, a new load current of lower value must be used and the calculations repeated. It will be apparent from such calculations that the higher the minimum supply voltage and the smaller the difference between its minimum and maximum values, the higher will be the load current that can be regulated.

In order to handle more load current, two or more GL-OB2's may be operated in parallel, but such parallel operation requires that a resistor be used in series with each regulator tube in order to equalize division of the current between the paralleled tubes. Approximately a 100-ohm resistor for each tube should be used. The disadvantage of this method is that the use of resistors impairs the regulation which can be obtained.

When equipment utilizing the GL-OB2 is turned on, a starting current in excess of the average operating current is permissible as indicated under Maximum Ratings. When the tube is subjected to such high starting currents, the regulated voltage may require up to 20 minutes to drop to its normal operating value. This performance is characteristic of voltage-regulator tubes of the glow-discharge type. Similarly, the regulation voltage is affected by changes in current within the operating current range. For example, the regulation value of a tube operated for a protracted period at 5 milliamperes and then changes to 25 milliamperes, may be somewhat different from the value that will be obtained after a long period of operation at 25 milliamperes. Likewise, the regulation value may change somewhat after a long idle period.

If the associated circuit has a capacitor in shunt with the GL-OB2, the capacitor should be limited in value to 0.1 microfarad. A larger value may cause the regulator tube to oscillate and thus give unstable regulation performance.

TYPICAL CIRCUITS FOR GLOW TUBE GL-OB2

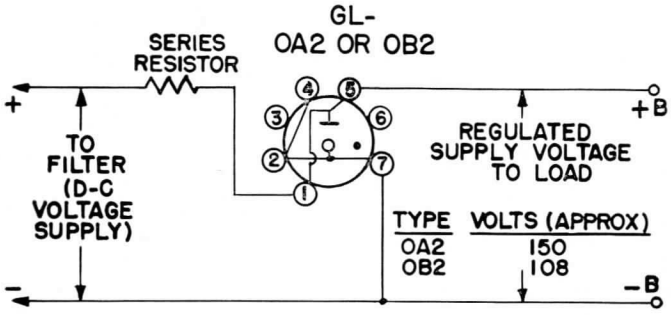

CIRCUIT TO PROVIDE REGULATED SUPPLY VOLTAGE OF APPROXIMATELY 150 OR 108 VOLTS TO LOAD. REMOVAL OF TUBE FROM SOCKET REMOVES VOLTAGE FROM LOAD.

K-69087-72A280 4-6-49

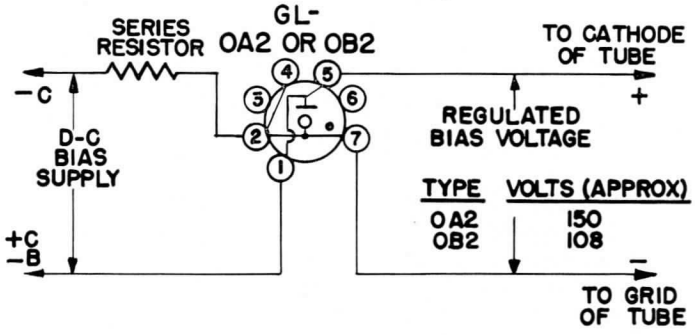

CIRCUIT FOR BIAS-SUPPLY REGULATION. REMOVAL OF TUBE FROM SOCKET OPENS B-SUPPLY CIRCUIT OF REGULATED TUBES.

K-69087-72A282 4-6-49

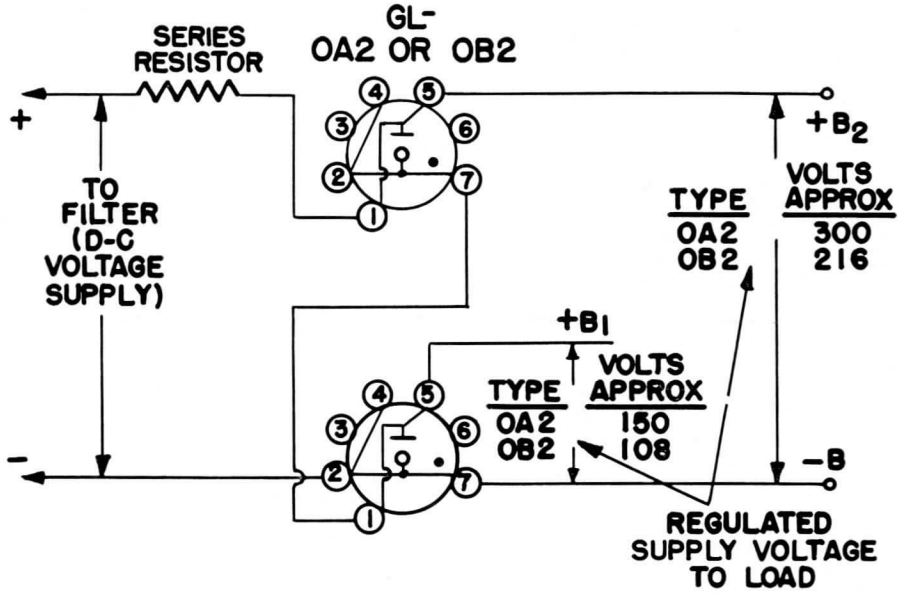

CIRCUIT USING TWO OA2'S OR TWO OB2'S TO PROVIDE REGULATED SUPPLY VOLTAGES OF APPROXIMATELY 300 OR 216 VOLTS AND 150 OR 108 VOLTS TO LOAD. SOCKET CONNECTIONS ARE SO MADE THAT VOLTAGE ON LOAD IS REMOVED WHEN EITHER TUBE IS TAKEN FROM ITS SOCKET.

K-69087-72A281 4-6-49

OUTLINE
GLOW TUBE GL-OB2

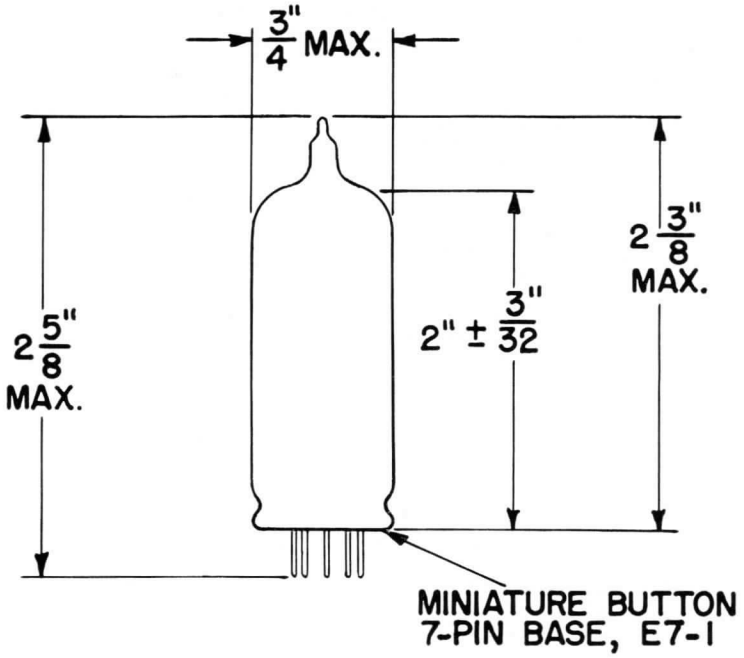

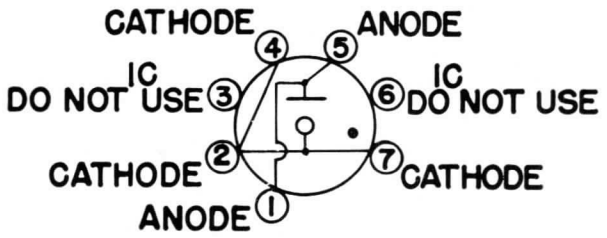

BASING DIAGRAM

N-15146AZ 4-6-49

Tube Divisions, Electronics Department

GENERAL ELECTRIC

Schenectady, N. Y.

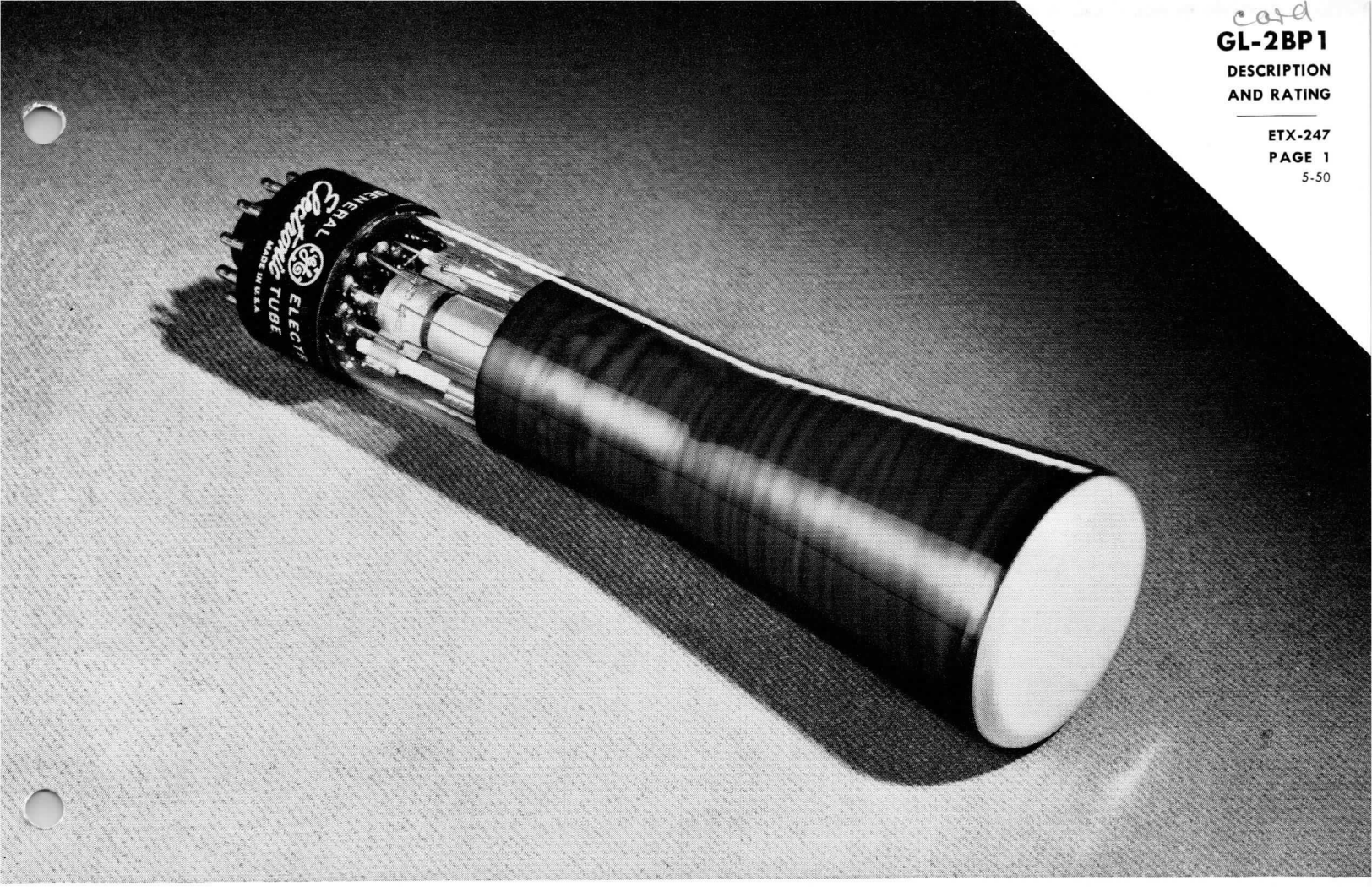

CATHODE-RAY TUBE

DESCRIPTION

The GL-2BP1 is a small cathode-ray tube with a small, brilliant, focused spot and high deflection sensitivity. The two-inch, medium-persistence, green-fluorescence screen provides high contrast. The tube is designed for use as an indicator and is also recommended for use in general oscillographic applications where compactness is an essential consideration.

With separate base-pin connections provided for each of the four deflecting electrodes, the 2BP1 is intended primarily for use in balanced electrostatic-deflection circuits and gives best definition when so used. However, it is also well suited for use with unbalanced deflection because of design features which minimize the spot and pattern distortion characteristic of such operation.

The spot in this tube can be focused sharply on the screen, both at the center and at the edges, and remains sharp when beam current is varied over a wide range. This feature results from the electron gun used in the 2BP1 in which the Grid No. 2 operates at voltage high enough to keep the beam current from being affected by changes in the anode-No. 1 voltage. Another feature, the very small current taken by Anode No. 1, permits the use of a low-current voltage-divider system and hence the use of a small filter capacitor.

Electronic
TUBE

GENERAL ELECTRIC

TECHNICAL INFORMATION

These data are for reference only. For design information refer to specifications.

GENERAL

Electrical Data

Heater voltage (A-C or D-C)	6.3 ±10%	volts
Heater current	0.6	ampere
Focusing method—Electrostatic		
Deflecting method—Electrostatic		
Phosphor—P1		
Fluorescence—Green		
Persistence—Medium		
Direct interelectrode capacitances, approximate		
Grid No. 1 to all other electrodes	8	uuf
D1 to D2	2	uuf
D3 to D4	2	uuf
D1 to all other electrodes	11	uuf
D2 to all other electrodes	8	uuf
D3 to all other electrodes	7	uuf
D4 to all other electrodes	8	uuf

Mechanical Data

Mounting position—Any		
Over-all length	$7\frac{5}{8} \pm \frac{3}{16}$	inches
Greatest diameter of bulb	$2\frac{1}{16}$	inches
Minimum useful screen diameter	$1\frac{3}{4}$	inches
Base No. B12-43, small-shell duodecal 12-pin		

MAXIMUM RATINGS Design Center Values

Anode No. 2 voltage*	2500	max volts
Anode No. 1 voltage	1000	max volts
Grid No. 2 voltage	2500	max volts
Grid No. 1 voltage		
Negative-bias value	200	max volts
Positive-bias value	0	max volts
Positive-peak value	2	max volts
Peak heater-cathode voltage		
Heater negative with respect to cathode	125	max volts
Heater positive with respect to cathode	125	max volts
Peak voltage between anode—No. 2 and any deflection electrode	500	max volts

EQUIPMENT DESIGN RANGES

For any anode No. 2 voltage (E_{b2}) between 500** and 2500 volts		
Anode No. 1 voltage	15% to 28% of E_{b2}	volts
Grid No. 1 voltage for visual cutoff, maximum	6.75% of E_{b2}	volts
Anode No. 1 current for any operating condition	−15 to +10	microamperes
Deflection factors		
D1 and D2	115 to 155 volts D-C per inch per kilovolt of E_{b2}	
D3 and D4	74 to 100 volts D-C per inch per kilovolt of E_{b2}	

EXAMPLES OF USE OF DESIGN RANGES

For anode No. 2 voltage of	1000	2000	volts
Anode No. 1 voltage	150 to 280	300 to 560	volts
Grid No. 1 voltage for visual cutoff	−67.5	−135	volts
Deflection factors			
D1 and D2	115 to 155	230 to 310	volts D-C per inch
D3 and D4	74 to 100	148 to 200	volts D-C per inch

MAXIMUM CIRCUIT VALUES

Grid No. 1—Circuit resistance	1.5	max megohms
Resistance in any deflecting-electrode circuit†	5.0	max megohms

*Anode No. 2 and Grid No. 2 which are connected together within the tube are referred to herein as Anode No. 2.

**Brilliance and definition decrease with decreasing Anode No. 2 voltage. A value as low as 500 volts is recommended only for low-velocity deflection and low room-light levels.

†It is recommended that the deflecting-electrode-circuit resistance be approximately equal.

GL-2BP1
AVERAGE CHARACTERISTIC
ANODE NO. 1 VOLTAGE ADJUSTED FOR FOCUS
ANODE NO. 2 VOLTAGE = 1000
E_f = 6.3 VOLTS

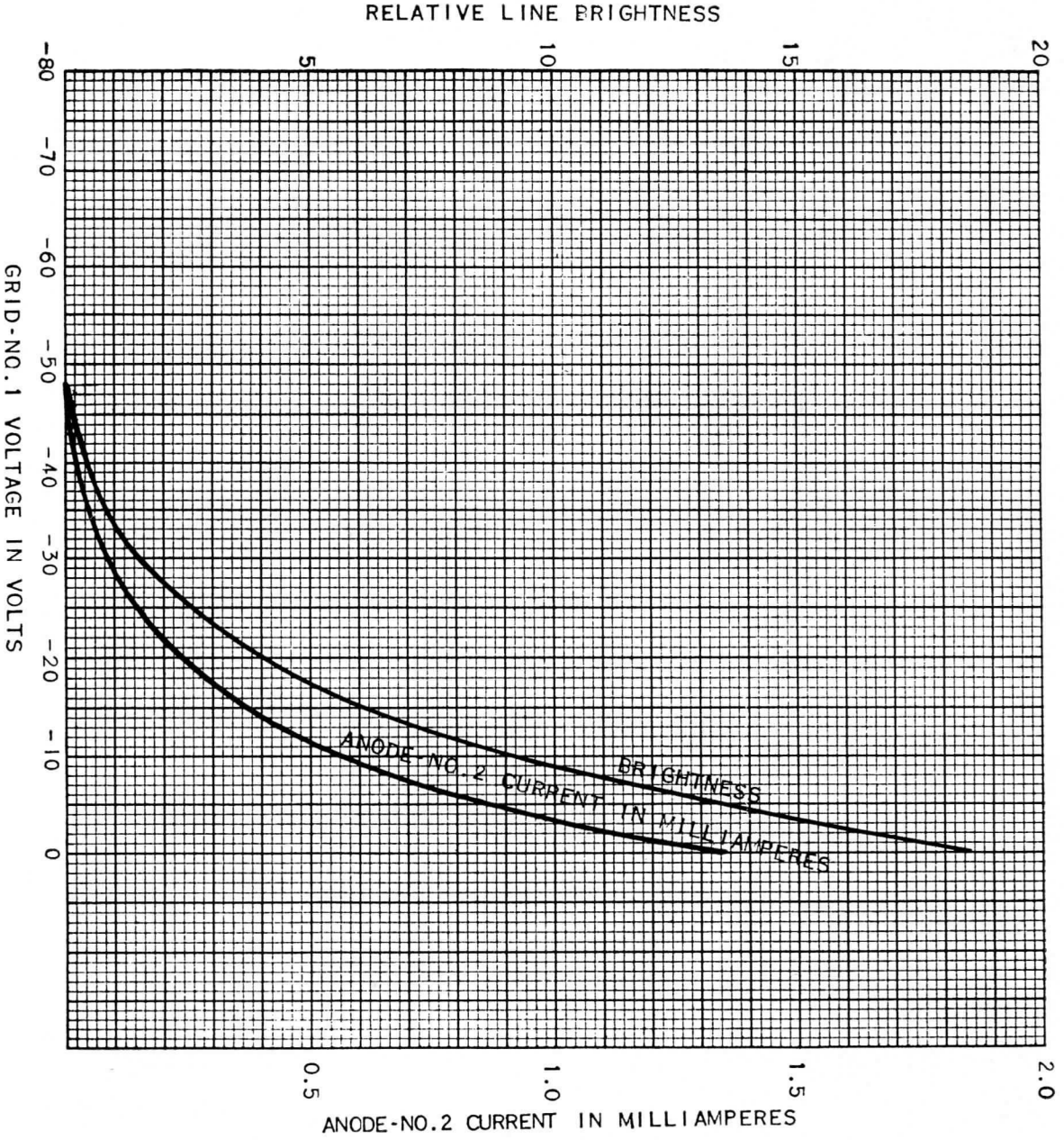

K-69087-72A322

12-9-49

GL-2BP1
CHARACTERISTICS
ANODE NO. 1 VOLTAGE ADJUSTED FOR FOCUS
$E_f = 6.3$ VOLTS

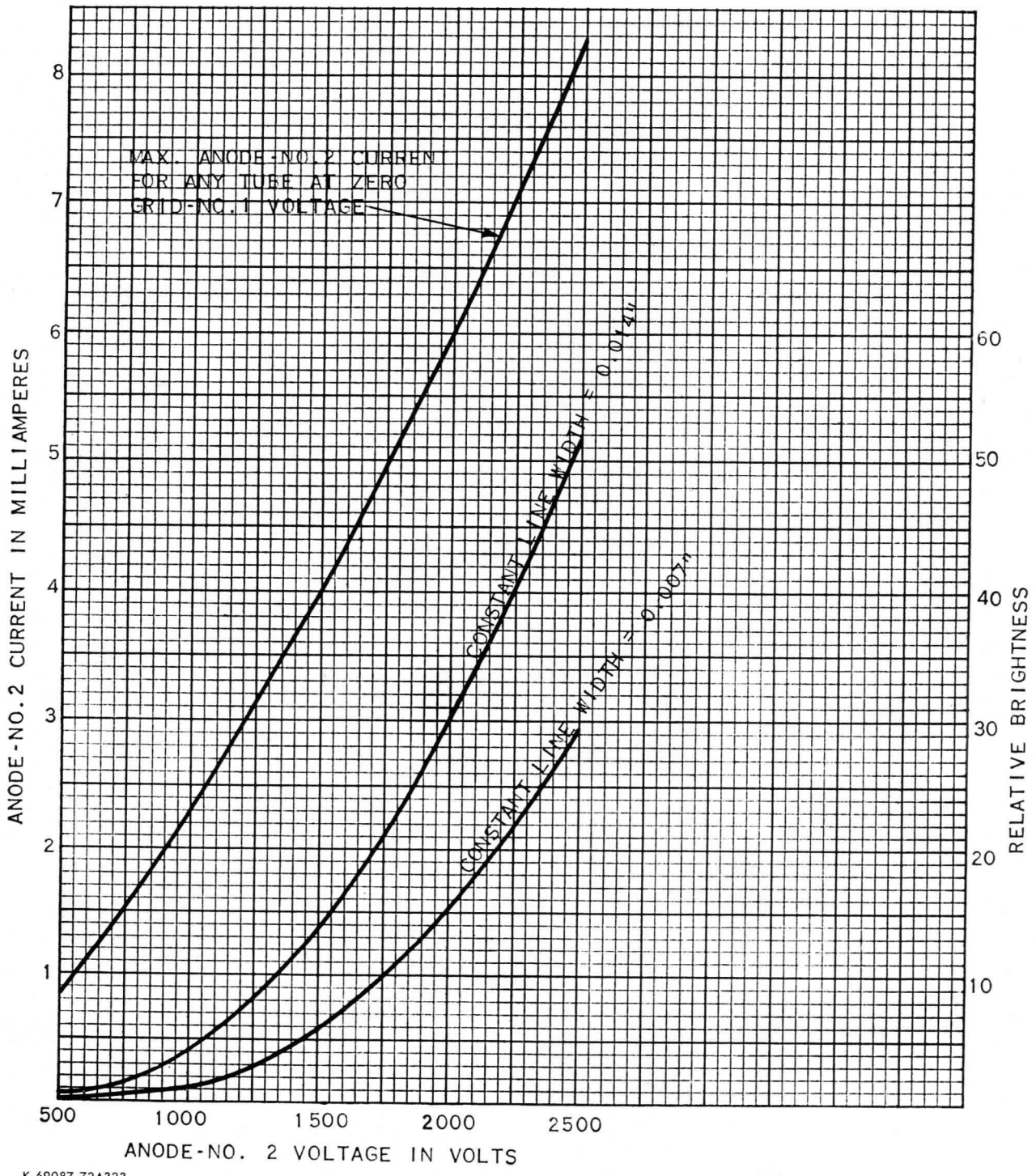

K-69087-72A323

12-9-49

PERSISTENCE CHARACTERISTIC
P1 PHOSPHOR

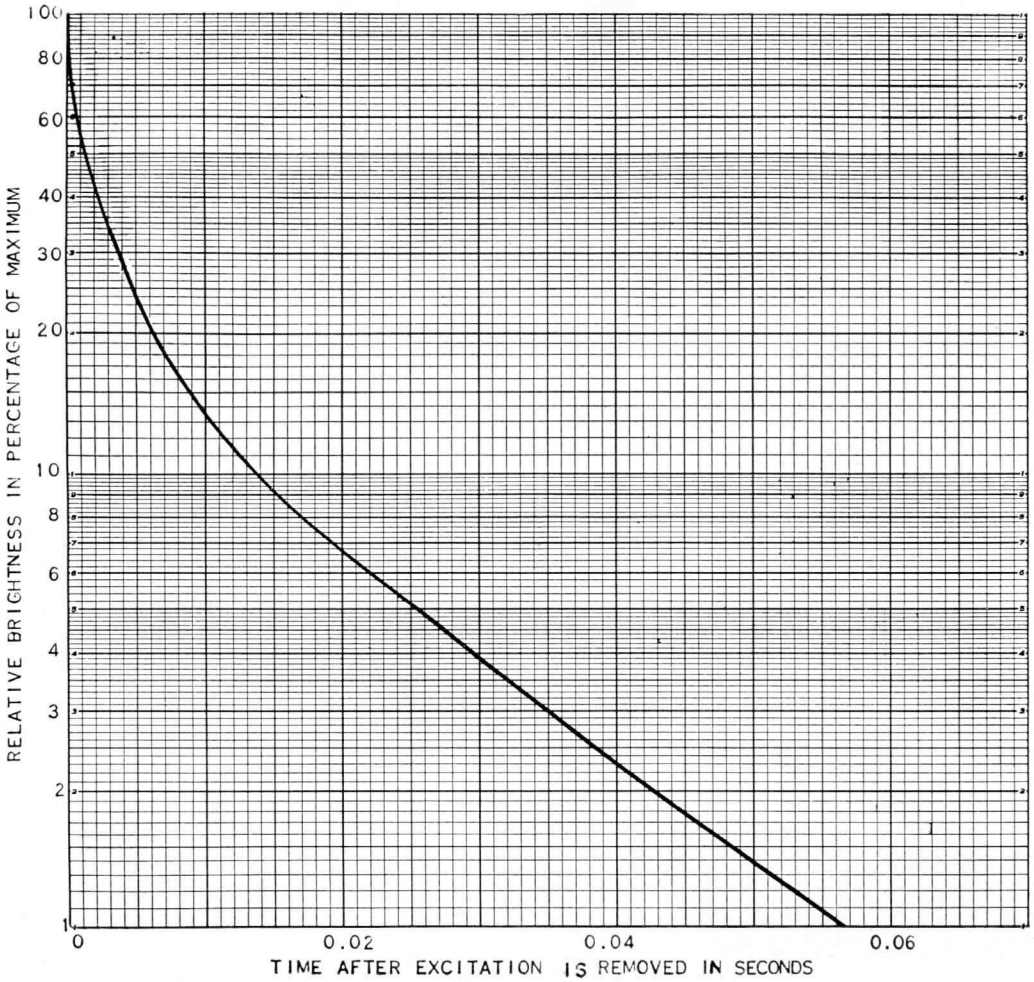

K-69087-72A326

12-13-49

SPECTRAL-ENERGY EMISSION CHARACTERISTIC
P1 PHOSPHOR

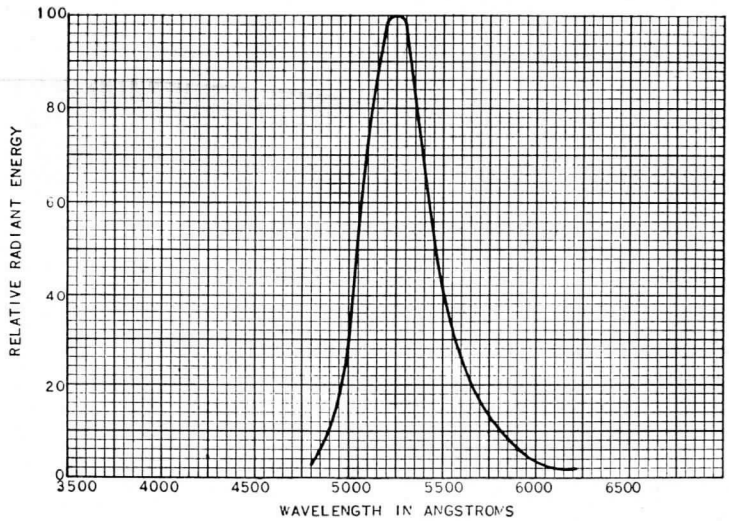

K-69087-72A327

12-13-49

OUTLINE
CATHODE-RAY TUBE GL-2BP1

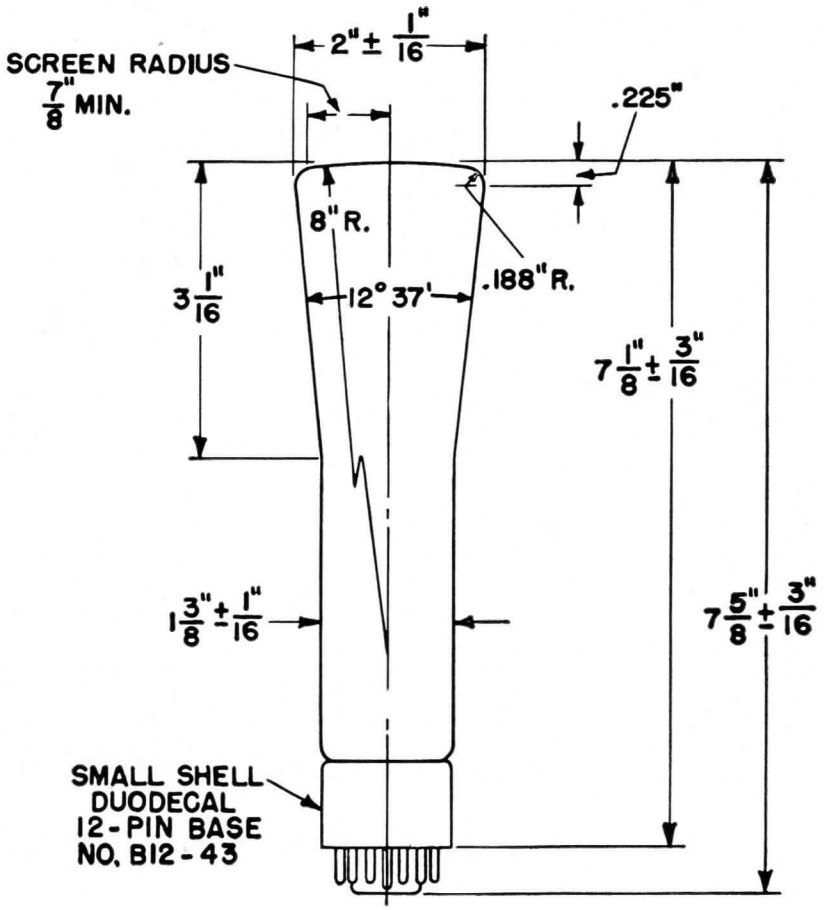

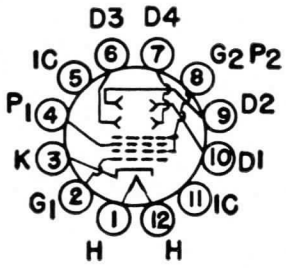

BASING DIAGRAM

℄ OF BULB WILL NOT DEVIATE MORE THAN 2° IN ANY DIRECTION FROM THE PERPENDICULAR ERECTED AT THE CENTER OF BOTTOM OF THE BASE.

THE PLANE THROUGH THE TUBE AXIS AND PIN NO. 4 MAY VARY FROM THE TRACE PRODUCED BY D1 AND D2 BY AN ANGULAR TOLERANCE (MEASURED ABOUT THE TUBE AXIS) OF 10°. ANGLE BETWEEN D1 - D2 TRACE AND D3 - D4 TRACE IS 90° ± 3°.

D1 AND D2 ARE NEARER THE SCREEN; D3 AND D4 ARE NEARER THE BASE. WITH D1 POSITIVE WITH RESPECT TO D2, THE SPOT WILL BE DEFLECTED TOWARD PIN NO. 4; LIKEWISE, WITH D3 POSITIVE WITH RESPECT TO D4, THE SPOT WILL BE DEFLECTED TOWARD PIN NO. 1.

N-15160AZ

12-9-49

Tube Divisions, Electronics Department

GENERAL ELECTRIC

Schenectady, N. Y.

5-50 (10M)
Filing No. 8850

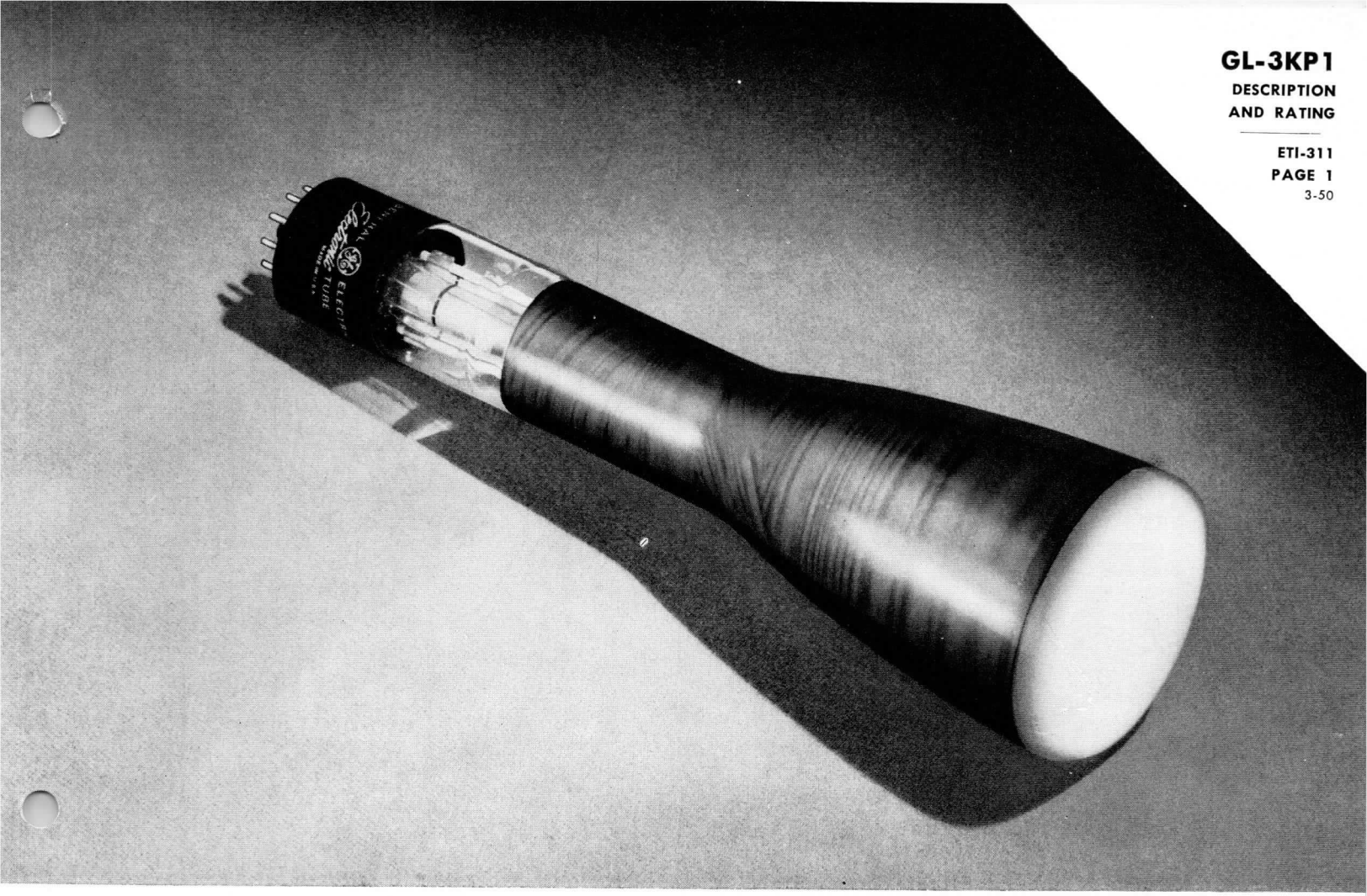

CATHODE-RAY TUBE

DESCRIPTION

The GL-3KP1 is an electrostatic-focus-and-deflection cathode-ray tube for oscilloscope applications. A medium-persistence green-fluorescence screen provides high contrast. The tube has a small brilliant focused spot and high deflection sensitivity.

The anode No. 1 takes negligible current. Changes in the voltage of this anode will not affect the beam current because of the high voltage at which anode No. 2 operates. These features allow the spot to be focused sharply on the screen and to remain sharp even when the beam current is varied over a wide range. The small anode No. 1 current permits the use of a low-current voltage-divider system and hence a small filter capacitor.

With separate base-pin connections for each of the four deflecting electrodes, the GL-3KP1 is intended primarily for use in balanced electrostatic-deflection circuits and gives best definition when so used. The tube, however, can be used with unbalanced deflection because the design features minimize spot and pattern distortion usually characteristic of such operation.

GE Electronic TUBE

GENERAL ELECTRIC

TECHNICAL INFORMATION

These data are for reference only. For design information refer to specifications.

GENERAL

Electrical Data

Heater voltage	6.3	volts
Heater current	0.6	ampere
Focusing method		electrostatic
Deflecting method		electrostatic
Phosphor—P1		
Fluorescence		green
Persistence		medium
Direct interelectrode capacitances, approximate		
Grid No. 1 to all other electrodes	8	uuf
D1 to D2	2.5	uuf
D3 to D4	2.5	uuf
D1 to all other electrodes	11	uuf
D2 to all other electrodes	8	uuf
D3 to all other electrodes	7.0	uuf
D4 to all other electrodes	8	uuf

Mechanical Data

Mounting position		any
Over-all length	$11\frac{1}{2} \pm \frac{1}{4}$	inches
Greatest diameter of blub	$3 \pm \frac{1}{16}$	inches
Minimum useful screen diameter	$2\frac{3}{4}$	inches
Base		medium shell magnal 11-pin
Basing		11M

MAXIMUM RATINGS Design Center Values

Anode No. 2 voltage*	2500 max	volts d-c
Anode No. 1 voltage	1000 max	volts d-c
Grid No. 1 voltage		
Negative—bias value	200 max	volts d-c
Positive—bias value	0 max	volts d-c
Positive peak value	2 max	volts d-c
Peak heater—cathode voltage		
Heater negative with respect to cathode	125 max	volts d-c
Heater positive with respect to cathode	125 max	volts d-c
Peak voltage between anode No. 2 and any deflecting electrode	500 max	volts

EQUIPMENT DESIGN RANGES

For any anode No. 2 voltage between recommended minimum** and 2500 volts		
Anode No. 1 voltage	16 to 30% of Eb_2	volts
Grid No. 1 voltage for visual cutoff, maximum	4.5% of Eb_2	volts
Anode No. 1 current	−15 to +10	microamperes
Deflection factors		
D1 and D2	50 to 68	volts d-c per inch per kv of Eb_2
D3 and D4	38 to 52	volts d-c per inch per kv of Eb_2
Spot position***		

Examples of Use for Design Ranges

For anode No. 2 voltage of	1000	2000	
Anode No. 1 voltage	160-300	320-600	
Grid No. 1 voltage for visual cutoff	−45	−90	volts
Deflection factors			
D1 and D2	50 to 68	100 to 136	volts d-c per inch
D3 and D4	38 to 52	76 to 104	volts d-c per inch

MAXIMUM CIRCUIT VALUES

Grid No. 1 circuit resistance	1.5 max	megohms
Resistance in any deflecting—electrode circuit†	5.0 max	megohms

*Anode No. 2 and grid No. 2 which are connected together within the tube are referred to herein as anode No. 2. The product of anode No. 2 voltage and average anode No. 2 current should be limited to 6 watts.

**Brilliance and definition decrease with decreasing anode No. 2 voltage. Recommended minimum is 1000 volts in general service, but a value as low as 500 volts may be used under conditions of low-velocity deflection and low ambient-light conditions.

***The center of the undeflected, focused spot will fall within a circle having 7.5-mm radius concentric with the center of the tube face.

†It is recommended that the deflecting-electrode-circuit resistances be approximately equal.

GL-3KP1
CHARACTERISTICS
$E_f = 6.3$ VOLTS
ANODE NO. 1 VOLTAGE ADJUSTED FOR FOCUS

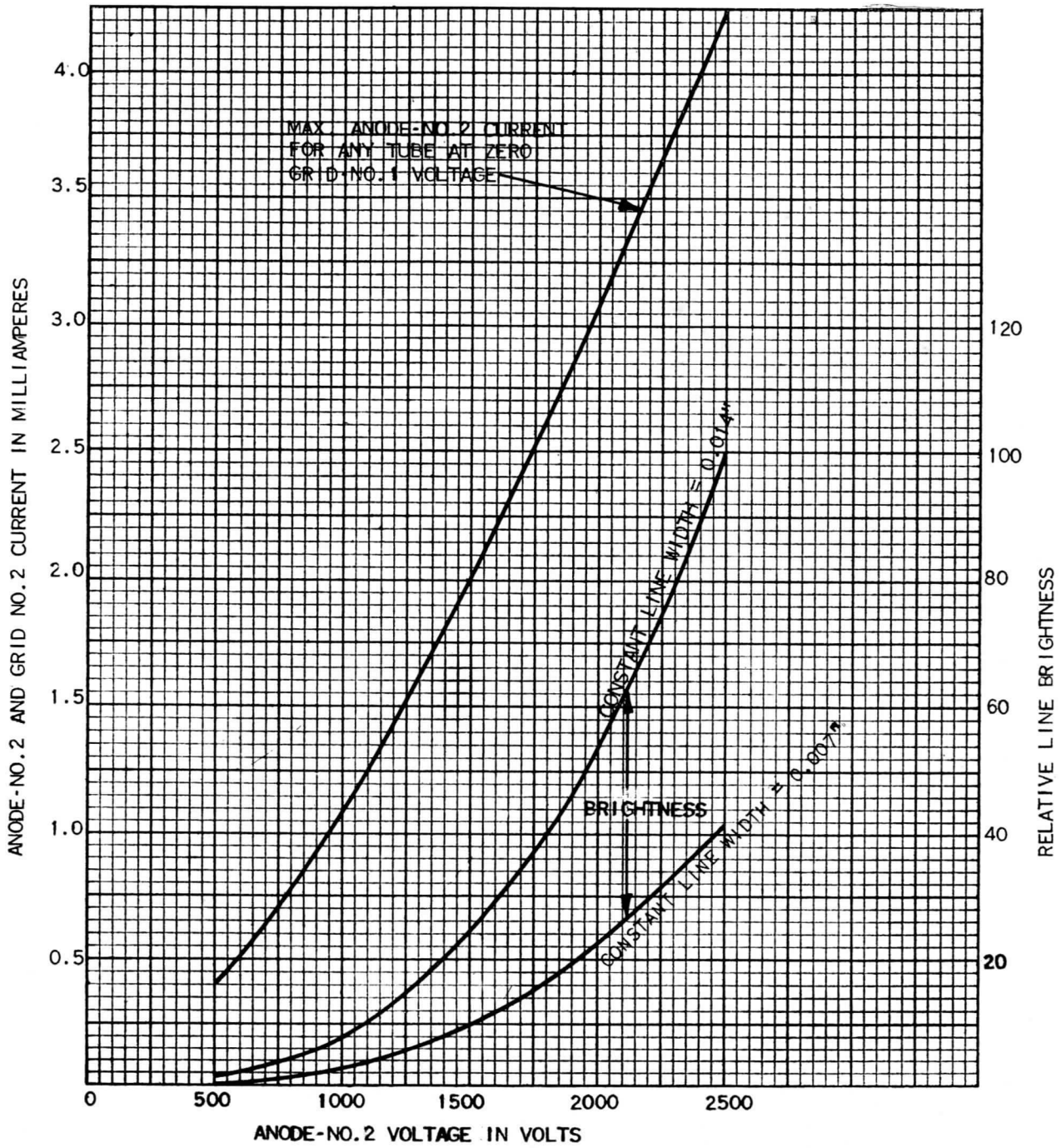

K-69087-72A270

3-17-49

GL-3KP1
AVERAGE CHARACTERISTICS
$E_f = 6.3$ VOLTS
ANODE NO. 1 VOLTAGE ADJUSTED TO FOCUS

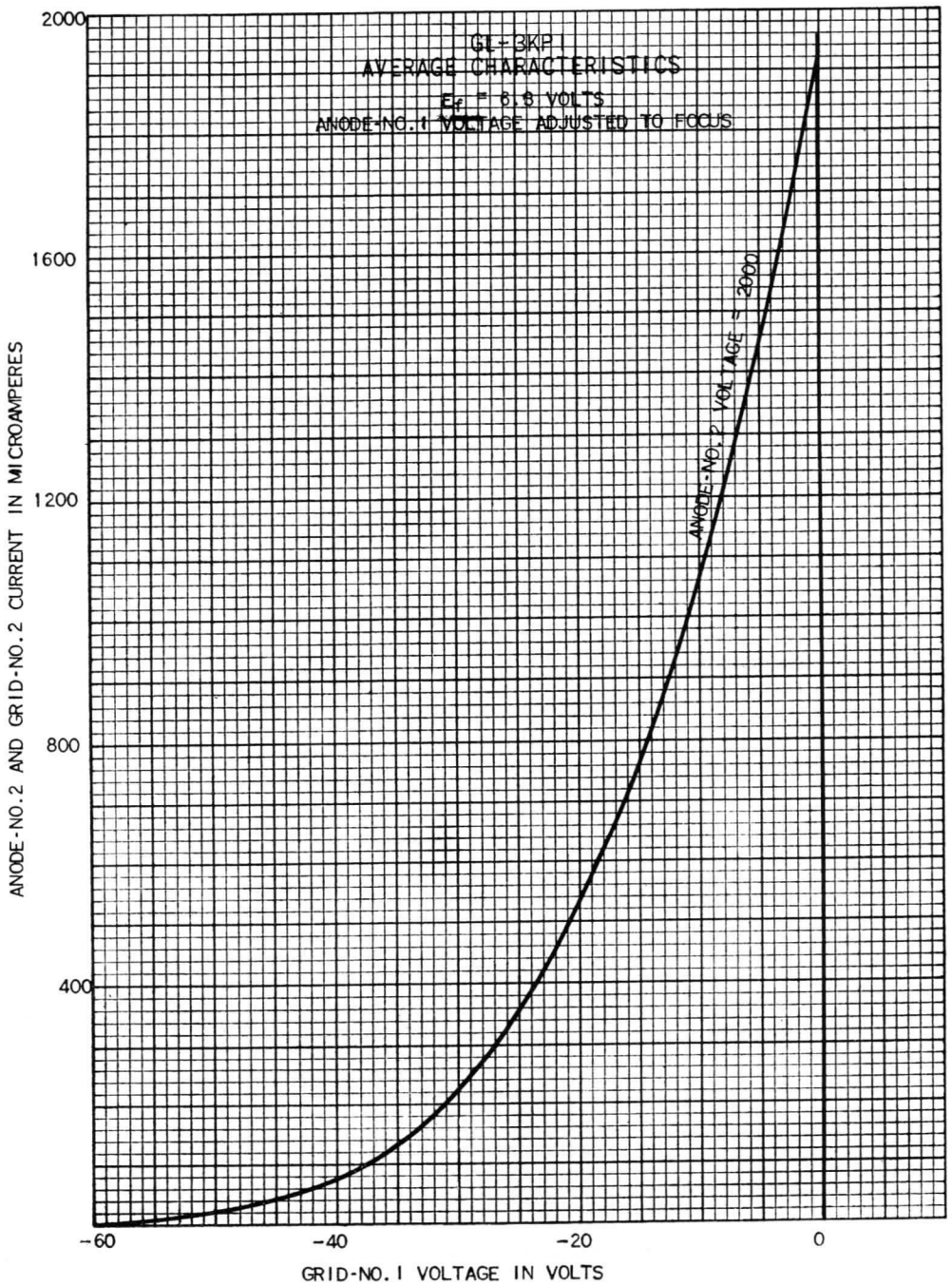

K-69087-72A271

3-17-49

PERSISTENCE CHARACTERISTIC
P1 PHOSPHOR

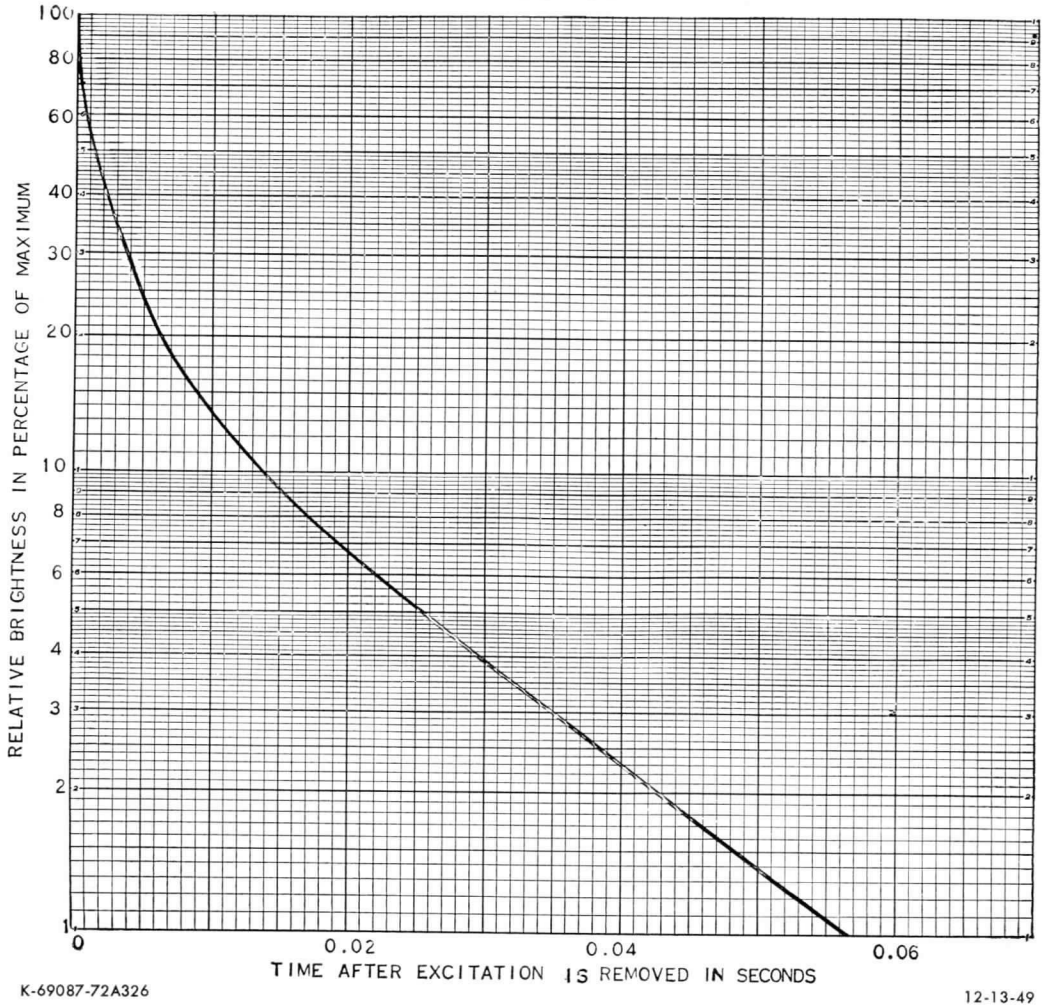

K-69087-72A326

12-13-49

SPECTRAL-ENERGY EMISSION CHARACTERISTIC
P1 PHOSPHOR

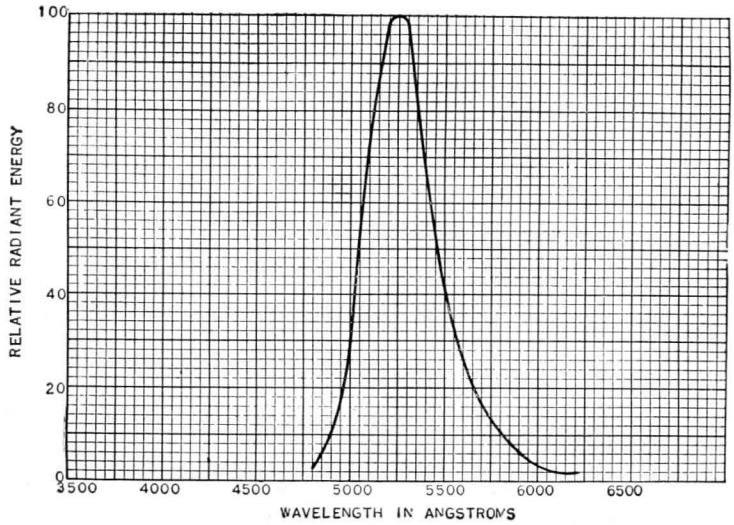

K-69087-72A327

12-13-49

OUTLINE
CATHODE-RAY TUBE GL-3KP1

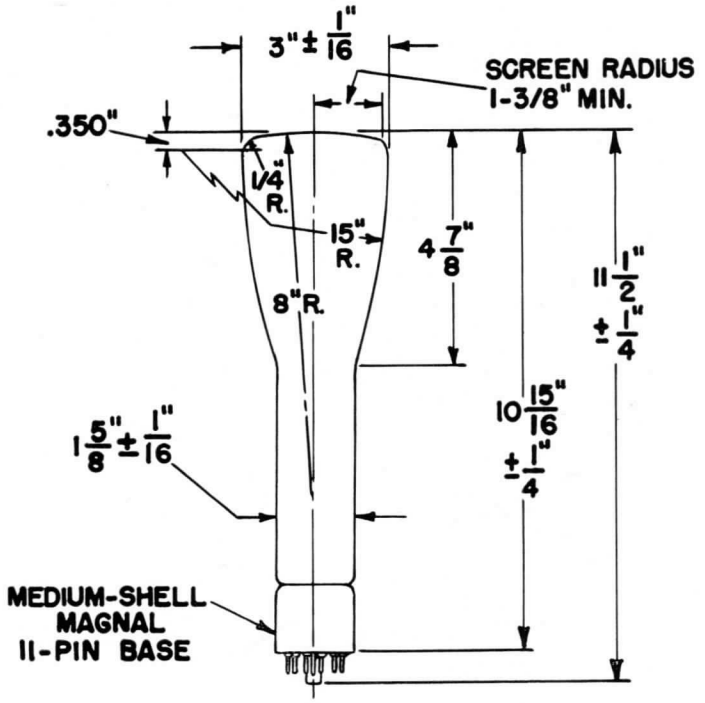

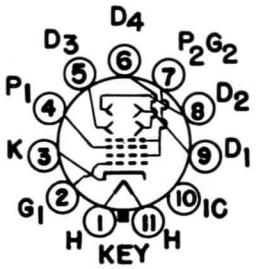

BASING DIAGRAM

CENTER LINE OF BULB WILL NOT DEVIATE MORE THAN 2 DEGREES IN ANY DIRECTION FROM PERPENDICULAR ERECTED AT CENTER OF BOTTOM OF BASE.

N-15145AZ 3-17-49

Tube Divisions, Electronics Department

GENERAL ELECTRIC

Schenectady, N. Y.



CATHODE-RAY TUBE

DESCRIPTION

The GL-3MP1 is an electrostatic focus and deflection type of cathode-ray tube intended for oscillograph use. The short length of this three-inch diameter tube adapts it for use in small portable equipment.

TECHNICAL INFORMATION

These data are for reference only. For design information refer to specifications.

GENERAL

Electrical Data

Heater voltage	6.3	volts
Heater current	0.6 ±10%	amperes
Focusing method—Electrostatic		
Deflecting method—Electrostatic		
Phosphor—P1		
Fluorescence—Green		
Persistence—Medium		
Direct interelectrode capacitances, approximate		
Cathode to all other electrodes	2.2	uuf
Grid No. 1 to all other electrodes	10.3	uuf
D1 to D2	1.3	uuf
D3 to D4	1.2	uuf
D1 to all other electrodes except D2	4.4	uuf

Electronic TUBE

GENERAL ELECTRIC

TECHNICAL INFORMATION (CONT'D)

D2 to all other electrodes except D1	5.6	uuf
D3 to all other electrodes except D4	5.0	uuf
D4 to all other electrodes except D3	4.5	uuf

Mechanical Data

Over-all length	$8 \pm \frac{1}{4}$	inches
Greatest diameter of bulb	$3 \pm \frac{1}{16}$	inches
Minimum useful screen diameter	$2\frac{3}{4}$	inches
Base, small-shell duodecal—12 pin		
Basing, 12F		
Base alignment		
D1-D2 trace aligns with pin No. 4 and tube axis	±10	degrees
Positive voltage on D1 deflects beam approx toward pin No. 4		
Positive voltage on D3 defects beam approx toward pin No. 1		

MAXIMUM RATINGS Design Center Values

Anode No. 1 voltage	1000 max	volts d-c
Anode No. 2 voltage	2500 max	volts d-c
Grid No. 1 voltage		
Negative-bias value	200 max	volts d-c
Positive-bias value	2 max	volts d-c
Peak heater cathode voltage*		
Heater negative with respect to cathode		
During equipment warm-up period not exceeding 15 seconds	410 max	volts d-c
After equipment warm-up period not exceeding 15 seconds	140 max	volts d-c
Heater positive with respect to cathode	140 max	volts d-c
Peak voltage between anode No. 2 and any deflection electrode	500 max	volts

EQUIPMENT DESIGN RANGES

Anode No. 1 voltage	20% to 35% of E_{b2}	volts
Grid No. 1 voltage for visual cutoff spot	0% to 6.3% of E_{b2}	volts
Anode No. 1 current for any operating condition	−15 to +10	microamperes
Deflection factors		
D1 and D2	115 to 145	volts d-c per inch per kv of E_{b2}
D3 and D4	110 to 140	volts d-c per inch per kv of E_{b2}

EXAMPLES OF USE OF DESIGN RANGES

For anode No. 2 voltage of	1000	2000	volts
Anode No. 1 voltage	200 to 350	400 to 700	volts
Grid No. 1 voltage for visual cutoff	0 to 63	0 to 126	volts
Deflection factors			
D1 and D2	115 to 145	230 to 290	volts d-c per inch
D3 and D4	110 to 140	220 to 280	volts d-c per inch

MAXIMUM CIRCUIT VALUES

Grid No. 1 circuit resistance	†1.5 max	megohms
Resistance in any deflecting—electrode circuit	5.0 max	megohms

*Cathode should be returned to one side or to the mid-tap of the heater transformer winding.
†It is recommended that the deflecting-electrode-circuit resistance be approximately equal.

PERSISTENCE CHARACTERISTIC
P1 PHOSPHOR

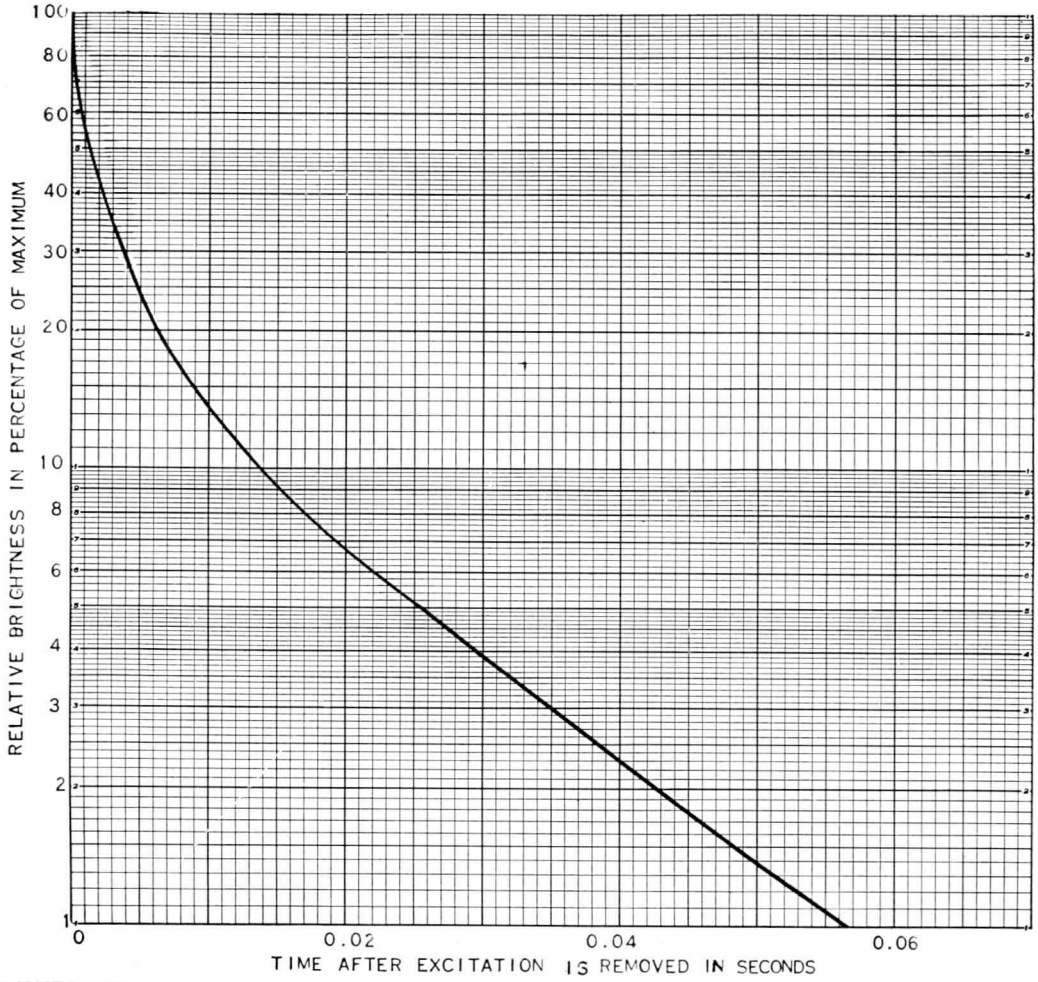

K-69087-72A326

12-13-49

SPECTRAL-ENERGY EMISSION CHARACTERISTIC
P1 PHOSPHOR

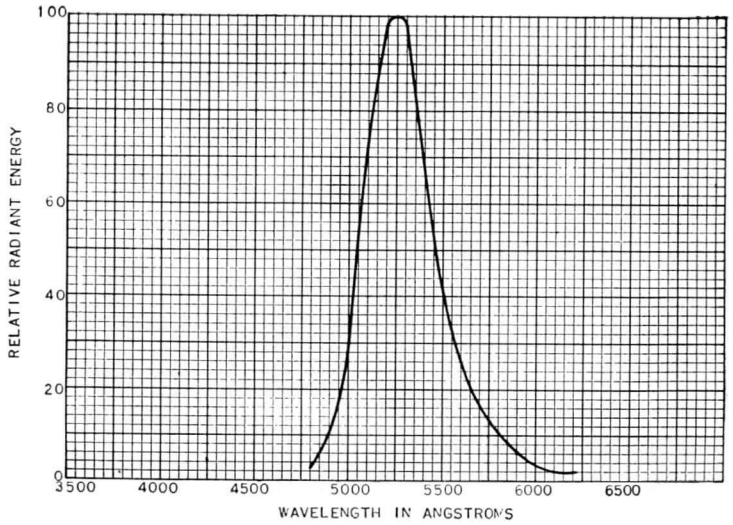

K-69087-72A327

12-13-49

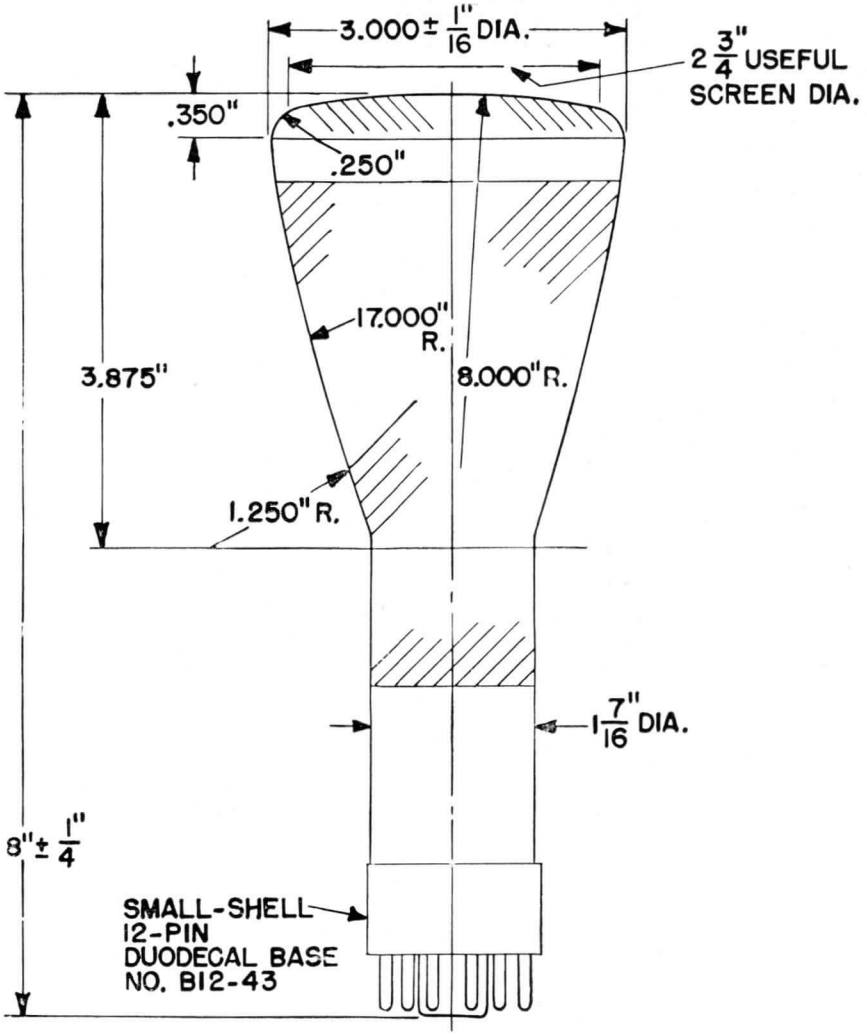

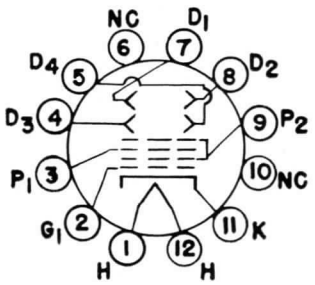

N-15084AZ

1-23-47

Tube Divisions, Electronics Department

GENERAL ELECTRIC

Schenectady, N. Y.



CATHODE-RAY TUBE

DESCRIPTION

The 5QP4 is a magnetic-focus and magnetic-deflection direct-view cathode-ray tube for industrial applications. A feature of this tube is a reflective metal-backed screen which reduces undesirable screen charging and increases high-light brightness.

TECHNICAL INFORMATION

GENERAL

Electrical

Heater voltage	6.3 volts
Heater current	0.6 ± 10% ampere
Focusing method—magnetic	
Deflecting method—magnetic	
Deflecting angle, approximate	53 degrees
Phosphor—P4, sulfide type	
Fluorescence—white	
Persistence—short	
Faceplate—clear	
Direct interelectrode capacitances, approximate	
Cathode to all other electrodes	5 uuf
Grid-No. 1 to all other electrodes	6 uuf

GE Electronic TUBE

GENERAL ELECTRIC

TECHNICAL INFORMATION (CONT'D)

Mechanical

Over-all length	$11\frac{1}{8} \pm \frac{3}{8}$ inches
Greatest diameter of bulb	$4\frac{15}{16} \pm \frac{3}{32}$ inches
Minimum useful screen diameter	$4\frac{1}{4}$ inches

Anode contact—recessed small-ball cap, J1-22
Base—Long medium-shell octal 8-pin, B8-65
Basing—5AN
Base pin connections

Pin 1—no connection	Pin 5—grid-No. 1
Pin 2—heater	Pin 6—no connection
Pin 3—grid-No. 2	Pin 7—cathode
Pin 4—no connection	Pin 8—heater

Anode contact alignment
Anode contact aligns with pin-No. 5 ± 5 degrees

Net weight, approximate	1.5 pounds

MAXIMUM RATINGS, Design Center Values

Anode voltage	12,000 max	volts d-c
Grid-No. 2 voltage	410 max	volts d-c
Grid-No. 1 voltage		
Negative-bias value	125 max	volts d-c
Positive-bias value*	0 max	volts d-c
Positive-peak value	2 max	volts
Peak heater-cathode voltage†		
Heater negative with respect to cathode		
During warm-up period not to exceed 15 seconds	410 max	volts d-c
After equipment warm-up period	125 max	volts d-c
Heater positive with respect to cathode	125 max	volts d-c

JETEC COMPARATIVE CONDITIONS

Anode voltage	12,000	volts
Grid-No. 2 voltage	300	volts
Grid-No. 1 voltage‡	−28 to −72	volts
Focusing-coil current, approximate§	150	milliamperes

RECOMMENDED OPERATING CONDITIONS

Anode voltage◈ (average brightness—20 foot-lamberts)	10000	volts
Grid-No. 2 voltage	300	volts
Grid-No. 1 voltage‡	−28 to −72	volts
Focusing-coil current (RTMA Coil No. 106 at $2\frac{3}{4}$ inches), approximate	137	milliamperes

MAXIMUM CIRCUIT VALUES

Grid-No. 1 circuit resistance	1.5 max	megohms

*At or near this rating, the effective resistance of the anode supply should be adequate to limit the anode input power to 6 watts.

†Cathode should be returned to one side or to the midtap of the heater transformer winding.

‡For visual extinction of undeflected focused spot.

§For RTMA focusing coil No. 106 or equivalent, with the combined grid-No. 1 bias voltage and video-signal voltage adjusted to produce a high-light brightness of 20 foot-lamberts on a $2\frac{7}{8}$- by $3\frac{7}{8}$-inch picture area and with the distance from the reference line to center of air gap equal to $2\frac{3}{4}$ inches.

◈Brilliance and definition decrease with decreasing anode voltage. In general the anode voltage should not be less than 5000 volts.

OUTLINE

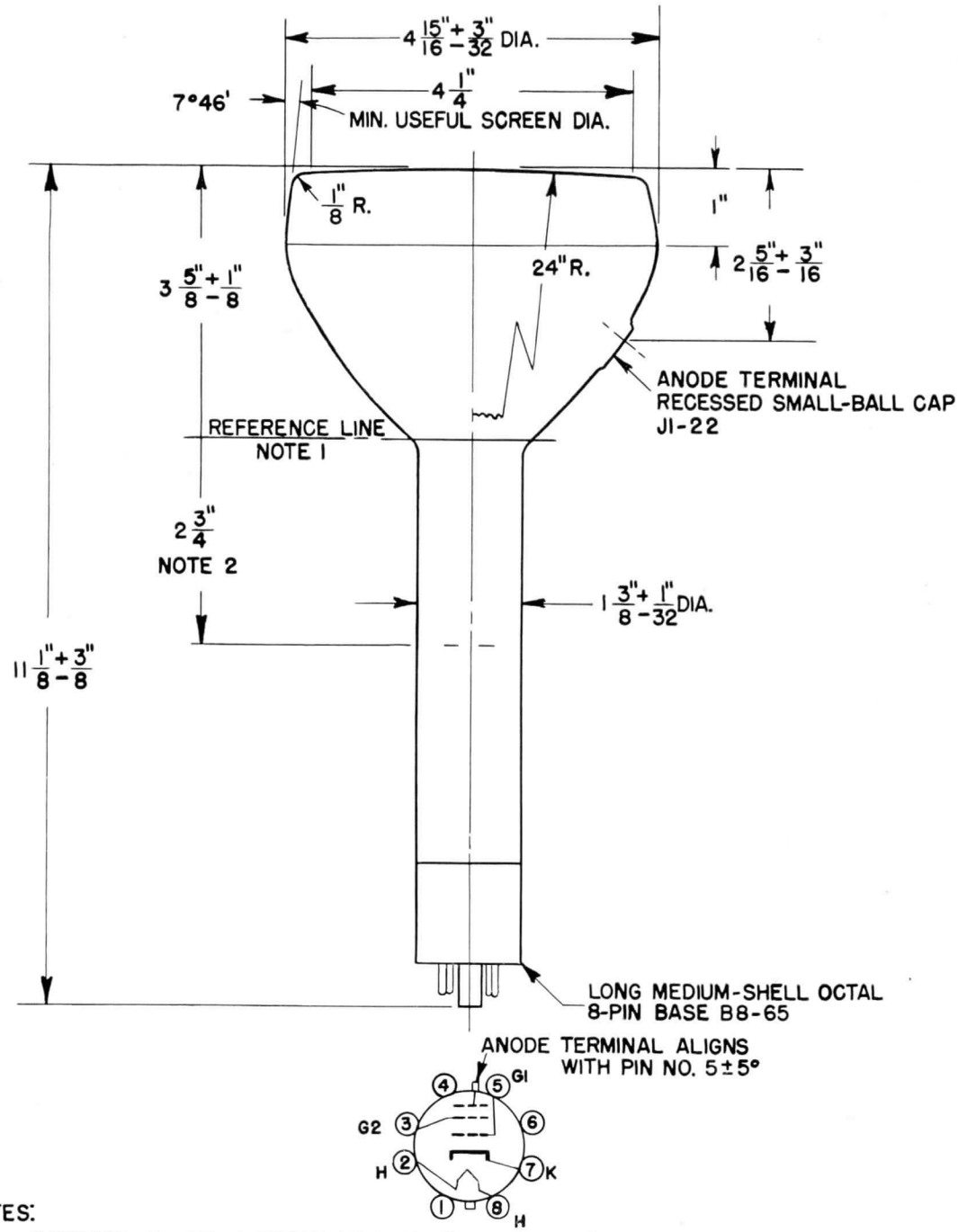

NOTES:

1. REFERENCE LINE IS DETERMINED BY THE PLANE OF THE UPPER EDGE OF GAGE 1.430" +.003" −.000" ID AND 2" LONG WHEN THE GAGE IS RESTING ON THE BULB.
2. RECOMMENDED POSITION FOR CENTER OF FOCUSING FIELD.

N15197AZ

1-22-52

Tube Department

GENERAL ELECTRIC

Schenectady, N. Y.

7-52 (11M)



CATHODE-RAY TUBE

DESCRIPTION

The GL-7UP7 is a magnetic-focus and magnetic-deflection direct-view cathode-ray tube for oscillograph applications. A feature of this tube is a reflective metal-backed screen which reduces undesirable screen charging and prevents ion-spot blemishes. The anode terminal used, a small-cavity cap, eliminates corona discharge at high altitudes and increases the strength of the mechanical link between the anode button and the lead.

TECHNICAL INFORMATION

GENERAL

Electrical

Heater voltage	6.3	volts
Heater current	0.6 ± 10%	ampere
Focusing method—magnetic		
Deflecting method—magnetic		
Deflecting angle, approximate	53	degrees
Phosphor—P7		
Fluorescence—blue		
Phosphorescence—greenish yellow		
Persistence—long		
Faceplate—clear		
Direct interelectrode capacitances, approximate		
Cathode to all other electrodes	5	uuf
Grid-No. 1 to all other electrodes	8.5	uuf

GE Electronic TUBE

GENERAL ELECTRIC

TECHNICAL INFORMATION (CONT'D)

Mechanical

Over-all length	$13\frac{1}{4} \pm \frac{3}{8}$ inches
Greatest diameter of bulb	$7 \pm \frac{1}{8}$ inches
Minimum useful screen diameter	6 inches

Anode contact—recessed small-cavity cap, J1-21
Base—Long medium-shell octal 8-pin, B8-65 or
Long medium-shell octal 5-pin, B5-80
Base pin connections

Pin 1—NC	Pin 4—NC	Pin 7—cathode
Pin 2—heater	Pin 5—grid-No. 1	Pin 8—heater
Pin 3—grid-No. 2	Pin 6—NC	

Anode contact alignment
Anode contact aligns with pin-No. 5 ± 10 degrees

MAXIMUM RATINGS, Design Center Values

Anode voltage*	10,000 max	volts d-c
Grid-No. 2 voltage	700 max	volts d-c
Grid-No. 1 voltage		
Negative-bias value	125 max	volts d-c
Positive-bias value	0 max	volt d-c
Positive-peak value	2 max	volts
Peak heater-cathode voltage†		
Heater negative with respect to cathode		
During warm-up period not to exceed 15 seconds	410 max	volts d-c
After equipment warm-up period	180 max	volts d-c
Heater positive with respect to cathode	180 max	volts d-c

RECOMMENDED OPERATING CONDITIONS

Anode-No. 2 voltage	7000	volts
Grid-No. 2 voltage	250	volts
Grid-No. 1 voltage‡	−25 to −70	volts
Focusing-coil current, approximate§	117	milliamperes

MAXIMUM CIRCUIT VALUES

Grid-No. 1 circuit resistance	1.5 max	megohms

*Anode and grid-No. 3 which are connected together within the tube, are referred to herein as anode.
†Cathode should be returned to one side or to the midtap of the heater transformer winding.
‡For visual extinction of undeflected focused spot.
§For RTMA focus coil No. 106 or equivalent with the combined grid-No. 1 bias voltage and video-signal voltage adjusted to produce a beam current of 200 microamperes and with the distance from the reference line to the center of the air gap equal to $2\frac{3}{4}$ inches.

OUTLINE

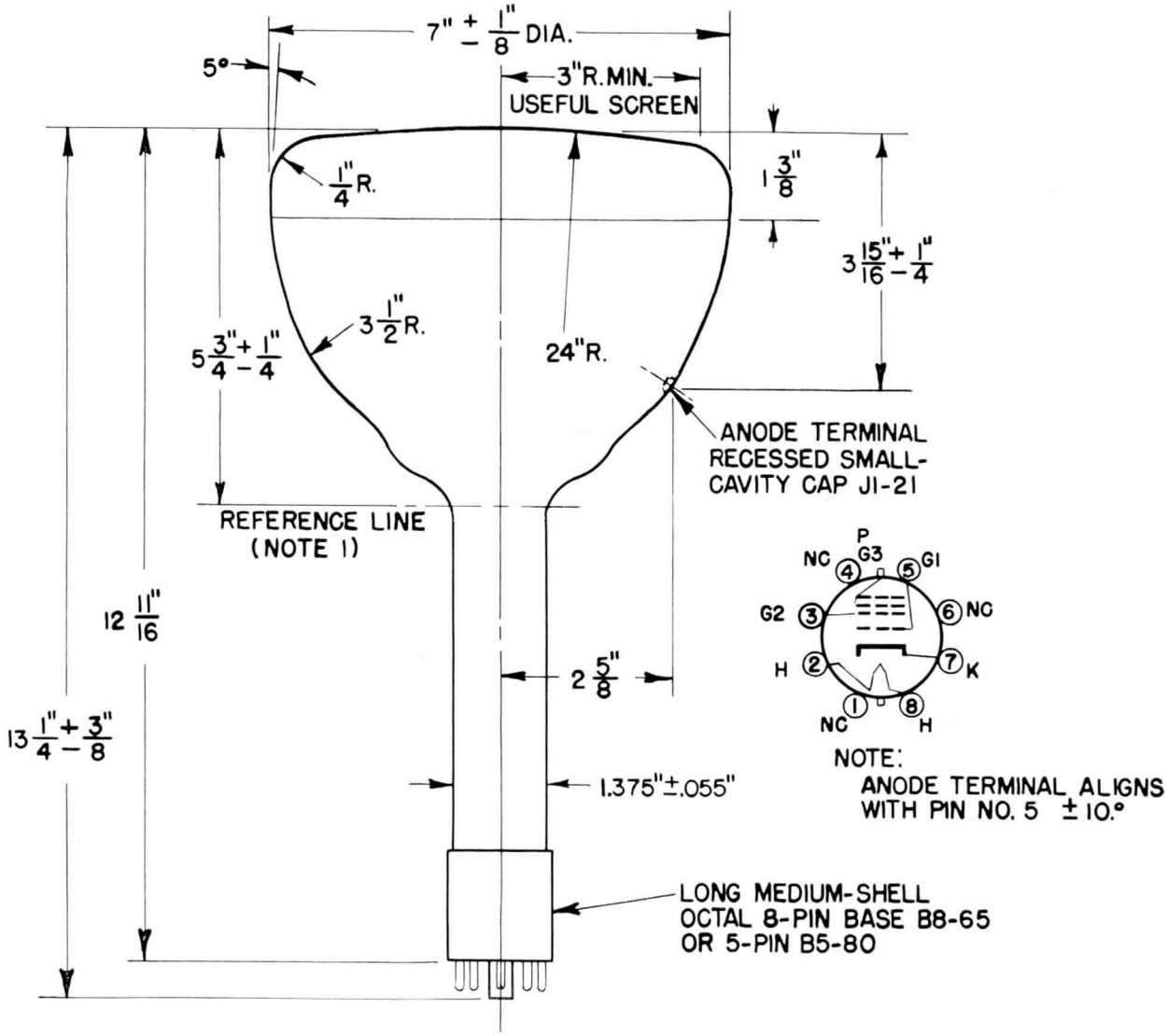

NOTE:

1. REFERENCE LINE IS DETERMINED BY POSITION WHERE 1.430" $^{+.003"}_{-.000"}$ ID 2-INCH LONG GAGE WILL REST ON BULB CONE.

K-69087-72A494

1-22-52

Tube Department

GENERAL ELECTRIC

Schenectady, N. Y.

7-52 (11M)

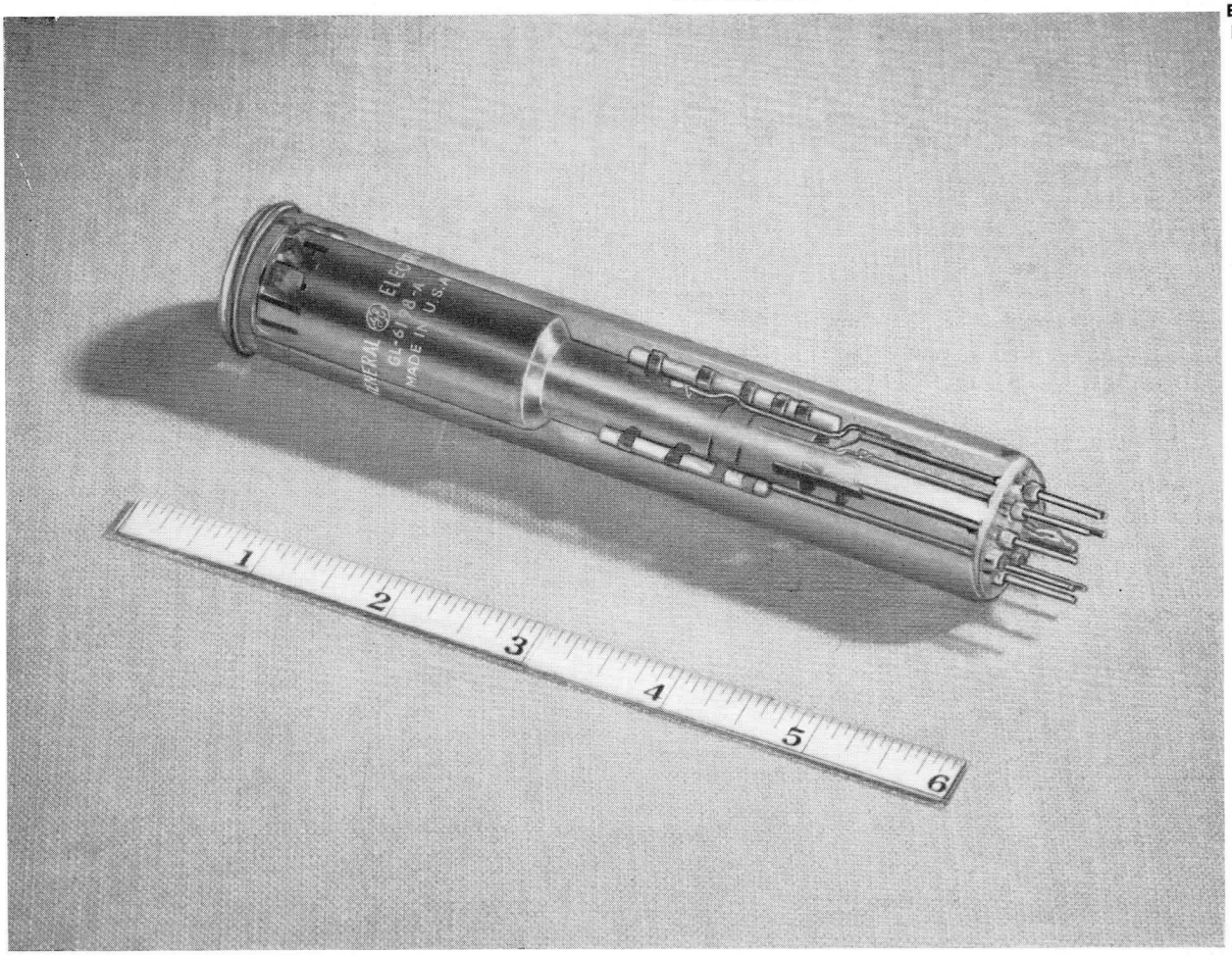

TELEVISION CAMERA TUBE—VIDICON

FOCUS—MAGNETIC
DEFLECTION—MAGNETIC
HIGH SENSITIVITY
LINE RESOLUTION—600

The GL-6198-A is designed for service in closed-circuit television applications. Small in size it has a resolution capability of about 600 lines and a spectral response approaching that of the eye.

Because of its sensitivity, an incident illumination on the scene of only 100 to 200 foot-candles is sufficient for satisfactory operation.

A notable advantage in the design of this tube is the complete absence of any side-tip structure. In addition to the resulting extra mechancial strength of the bulb, this tipless structure permits the use of a longer deflection yoke with the consequent advantages of reduced deflection distortion and improved center-to-edge focus of the beam.

The small size of the GL-6198-A adapts it for use in compact lightweight cameras and combines with its simplicity to facilitate camera and associated equipment design.

The GL-6198-A is an improved version of the 6198 and is unilaterally interchangeable with it.

TECHNICAL INFORMATION

GENERAL

Electrical

Cathode—Unipotential		
Heater Voltage, AC or DC	6.3 ± 10%	Volts
Heater Current	0.6	Amperes
Focusing Method—Magnetic		
Deflection Method—Magnetic		
Direct Interelectrode Capacitance		
Signal Electrode to All Other Electrodes	4.5	μμf

▲*Supersedes pages 1 and 2 dated 3-58*

TECHNICAL INFORMATION (CONT'D)

GENERAL (CONT'D)

Photoconductive Layer
Maximum Useful Diagonal of Rectangular
Image, 4 by 3 aspect ratio ..... 0.62 Inches

Orientation of Quality Rectangle—Horizontal Scan Essentially Parallel to the Straight Sides of the Masked Portions of the Faceplate. The Mask is for Orientation Only and Does Not Define the Proper Scanned Area of the Photoconductive Layer.

Mechanical

Over-all Length	$6\frac{1}{4} \pm \frac{1}{4}$	Inches
Greatest Diameter	1.125 ± 0.010	Inches
Base—Small-button Ditetrar 8-Pin, E8-11		
Mounting Position—Any		
Weight, approximate	2.0	Ounces

MAXIMUM RATINGS AND TYPICAL OPERATING CONDITIONS

Maximum Ratings, Absolute Values

Signal-Electrode Voltage	100 Max	Volts
Grid-No. 3 and 4 Voltage	350 Max	Volts
Grid-No. 2 Voltage	350 Max	Volts
Grid-No. 1 Voltage		
Negative Bias Value	125 Max	Volts
Positive Bias Value	0 Max	Volts
Peak Heater-Cathode Voltage		
Heater Negative with Respect to Cathode	125 Max	Volts
Heater Positive with Respect to Cathode	10 Max	Volts
⊕Faceplate Temperature	70 Max	C
Faceplate Illumination	1000 Max	Foot-Candles

Typical Operation

For Scanned Area of ½" by ⅜"

Faceplate Illumination		
Highlight	10 to 20	Foot-Candles
Signal-Electrode Voltage	10 to 70	Volts
Grid-No. 4 (Decelerator) and No. 3 (Beam Focus) Voltage	250 to 300†	Volts
Grid-No. 2 (Accelerator) Voltage	300	Volts
Grid-No. 1 Voltage, for picture cutoff, without blanking voltage	−45 to −100	Volts
Highlight Signal-Output Current‡	0.1 to 0.2	Microamperes
Dark Current, maximum	0.02	Microamperes
Uniform 2870 K Tungsten Illumination on Tube Face to Produce Signal-Output Current of 0.1 to 0.2 Microamperes	3 to 10	Foot-Candles
Average "Gamma" of Transfer Characteristic for Signal-Output Current between 0.02 and 0.2 Microampere	0.65	
Minimum Peak-to-Peak Blanking Voltage		
When Applied to Grid-No. 1	40	Volts
When Applied to Cathode	10	Volts
Field Strength at Center of Focusing Coil	40	Gausses
Field Strength of Adjustable Alignment Coil	0 to 4	Gausses
Visual Equivalent Signal-to-Noise Ratio, approximate§	300:1	

† Definition, focus uniformity, and picture quality decrease with decreasing grid-No.3 and grid-No. 4 voltage. In general, grid-No. 3 and grid-No. 4 should not be operated below 250 volts.

‡ The component of signal-electrode current after subtracting dark-current component.

§ Measured with a high-gain, low-noise, cascode-type amplifier having bandwidth of 5 megacycles and is determined primarily by the signal output level of the vidicon and the noise generated in the input amplifier. Because the noise in such a system is predominantly of the high-frequency type, the visual equivalent signal-to-noise ratio is taken as the ratio of the highlight video-signal current to rms noise current, multiplied by a factor of 3.

⊕Denotes a change.

TYPICAL SIGNAL OUTPUT

ILLUMINATION: UNIFORM OVER PHOTOCONDUCTIVE LAYER
SCANNED AREA OF PHOTOCONDUCTIVE LAYER—½" X ⅜"

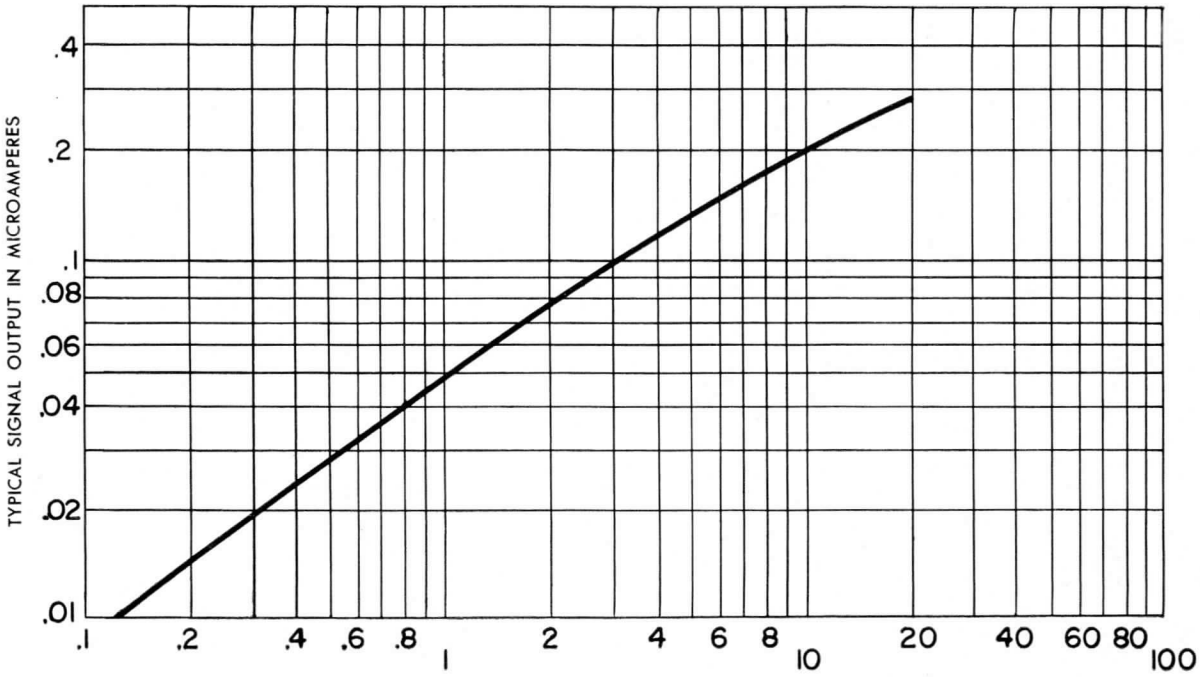

K-69087-72A736

1-6-58

TYPICAL CHARACTERISTIC

CONSTANT ILLUMINATION

SCANNED AREA OF PHOTOCONDUCTIVE LAYER—½" X ⅜"

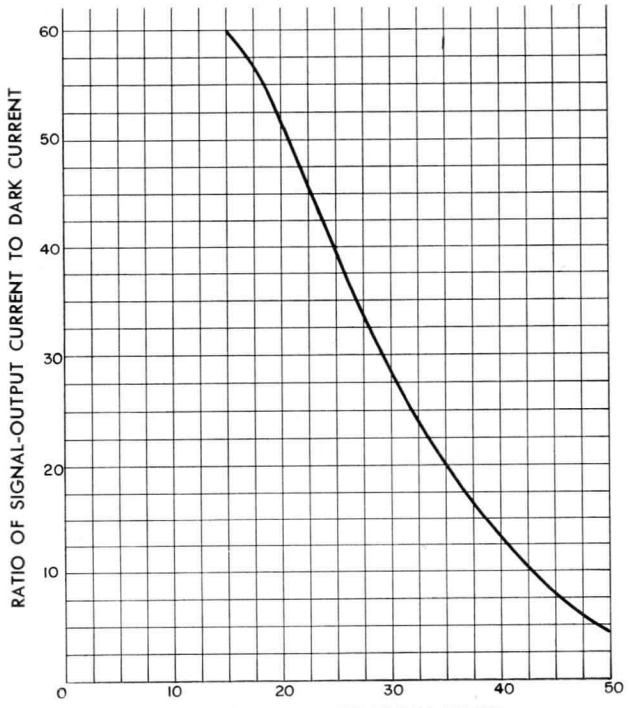

K-69087-72A738

1-6-58

SPECTRAL SENSITIVITY CHARACTERISTIC

CURVE A: FOR EQUAL VALUES OF SIGNAL-OUTPUT CURRENT AT ALL WAVELENGTHS.
SIGNAL-OUTPUT MICROAMPERES FROM SCANNED AREA OF ½″ × ⅜″ = 0.02.

CURVE B: SPECTRAL CHARACTERISTIC OF AVERAGE HUMAN EYE.

CURVE C: FOR EQUAL VALUES OF SIGNAL-OUTPUT CURRENT WITH RADIANT FLUX FROM TUNGSTEN SOURCE AT 2870 K.

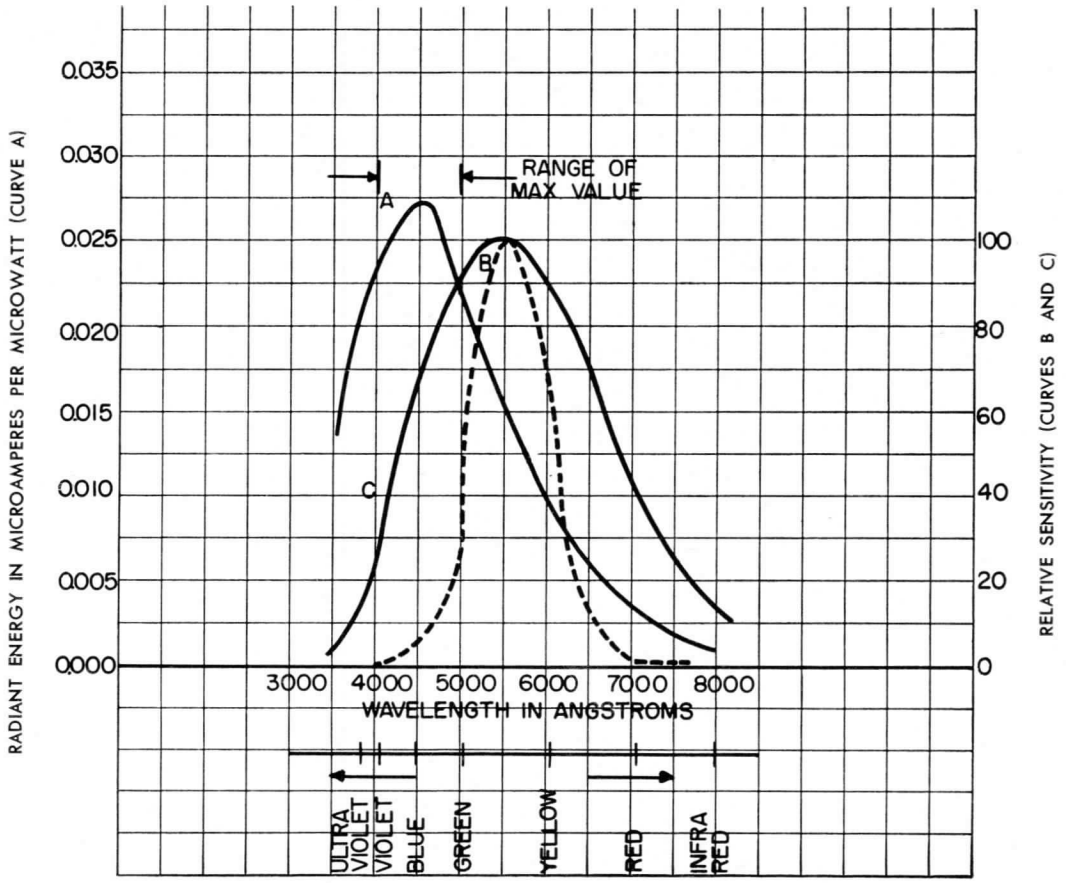

K-69087-72A737

1-6-58

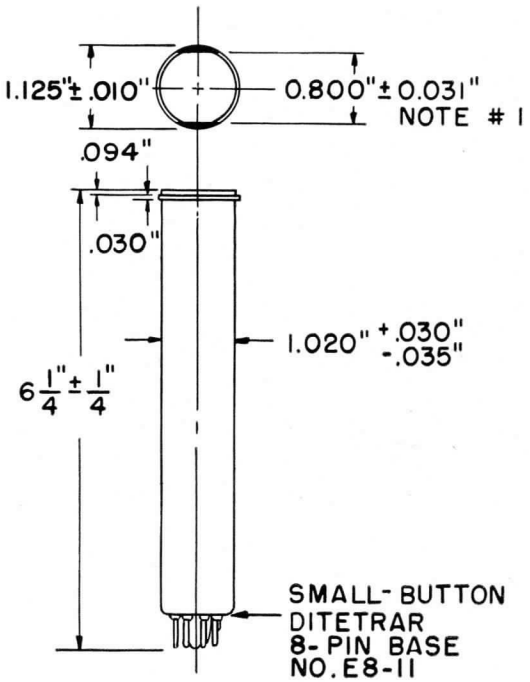

BASING DIAGRAM
8HM

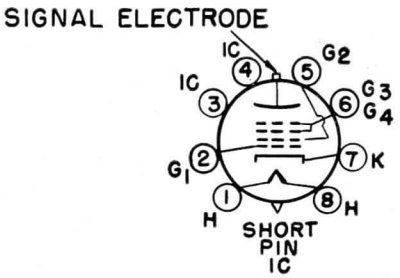

BOTTOM
VIEW

NOTE 1 : STRAIGHT SIDES OF MASKED PORTIONS ARE PARALLEL TO THE PLANE PASSING THROUGH TUBE AXIS AND SHORT INDEX PIN.

K-69087-72A786

4-18-57

ELECTRONIC COMPONENTS DIVISION

GENERAL ELECTRIC

Schenectady 5, N. Y.

PRINTED IN U.S.A.

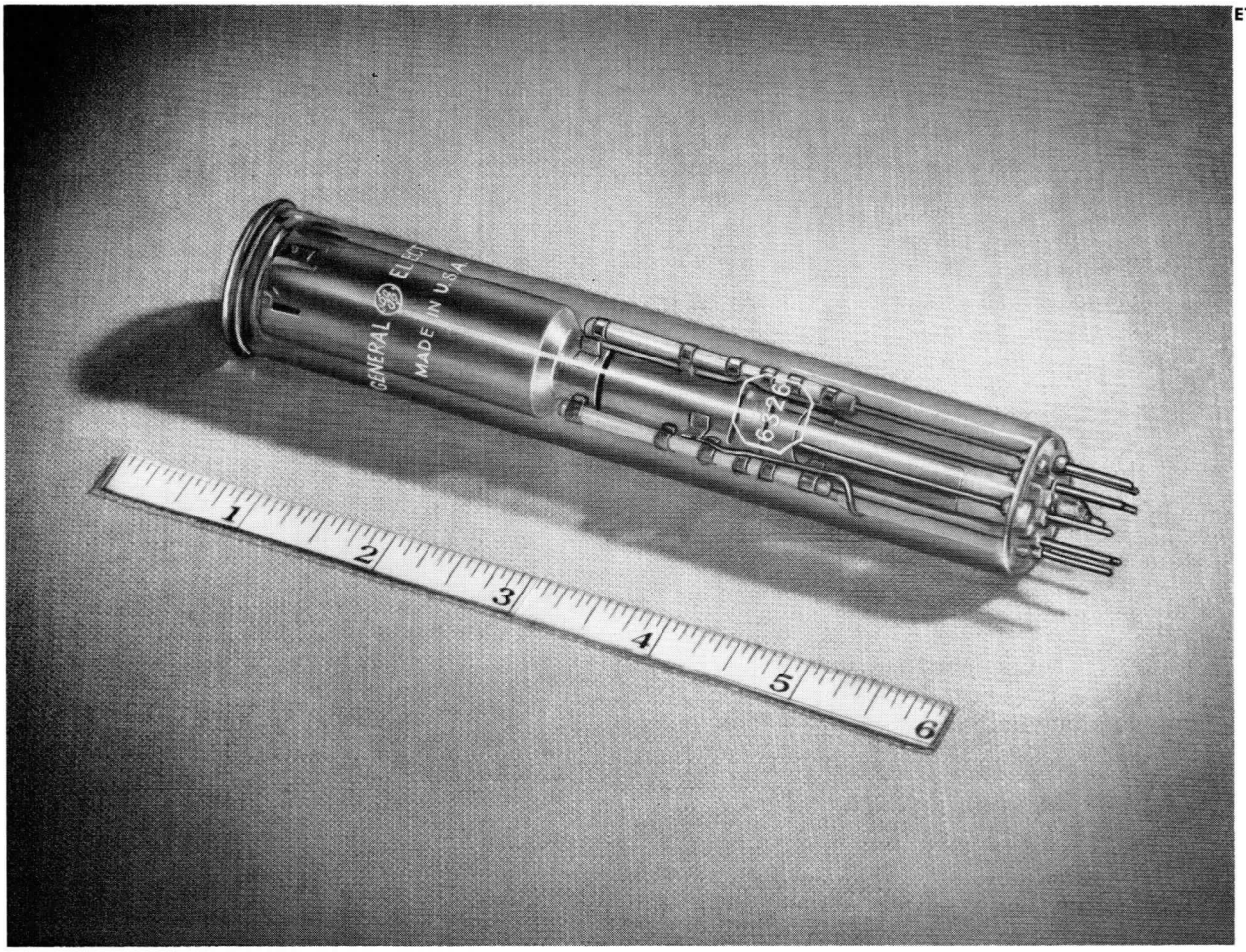

TELEVISION CAMERA TUBE–VIDICON

FOCUS—MAGNETIC **DEFLECTION—MAGNETIC**

FOR FILM PICKUP

The GL-6326 is designed for service in cameras that televise motion-picture film, transparencies, and opaques. Small in size it has a resolution capability of about 600 lines and a spectral response approaching that of the eye.

Because of its sensitivity an average highlight illumination of only 100 to 300 foot-candles on the tube face is sufficient for satisfactory televising of motion-picture film. A constant illumination of 10 foot-candles is sufficient in the case of transparencies and opaques.

Design and construction features assure excellent results with any television film projector. A particular advantage is elimination of the necessity for synchronizing the projector with the field rate of the television synchronizing generator when the light application time is greater than 30 percent of that for a single television field.

The small size of the GL-6326 adapts it for use in lightweight compact cameras and combines with its simplicity to facilitate camera and associated equipment design.

GENERAL ELECTRIC

Supersedes ET-T1248 dated 12-55

TECHNICAL INFORMATION

GENERAL

Electrical

Cathode—Unipotential		
Heater Voltage, AC or DC	6.3 ± 10%	Volts
Heater Current	0.6	Amperes
Focusing Method—Magnetic		
Deflecting Method—Magnetic		
Direct Interelectrode Capacitance*		
Signal Electrode to All Other Electrodes	4.5	μμf
Spectral Response—See spectral sensitivity curve on page five for details.		
Photoconductive Layer		
Maximum Useful Diagonal of Rectangular Image, 4 by 3 aspect ratio	0.62	Inches
Orientation of Quality Rectangle—Horizontal Scan Essentially Parallel to Plane Through Tube Axis and Short Index Pin.		

Mechanical

Over-all Length	6¼ ± ¼	Inches
Greatest Diameter, excluding side tip	1.125 ± 0.010	Inches
Maximum Radius, including side tip	0.805	Inches
Base—Small-button Ditetrar 8-Pin, E8-11		
Mounting Position—Approximately Horizontal or Face Plate Up		
Weight, approximate	2	Ounces

MAXIMUM RATINGS AND TYPICAL OPERATING CONDITIONS

Maximum Ratings, Absolute Values

Signal-Electrode Voltage	125 Max	Volts
Grid-No. 4 and 5 Voltage	350 Max	Volts
Grid-No. 3 Voltage	350 Max	Volts
Grid-No. 2 Voltage	350 Max	Volts
Grid-No. 1 Voltage		
Negative Bias Value	125 Max	Volts
Positive Bias Value	0 Max	Volts
Peak Heater-Cathode Voltage		
Heater Negative with Respect to Cathode	125 Max	Volts
Heater Positive with Respect to Cathode	10 Max	Volts
Faceplate Illumination	1000 Max	Foot-Candles
Faceplate Temperature	60 Max	C

Typical Operation *For Scanned Area of ½" by ⅜"*	**Static Focusing Grid-No. 3 Connected to Grid-No. 4 and 5**	**Dynamic Focusing Grid-No. 3 Used Separately as Dynamic Focusing Electrode**	
Faceplate Illumination			
Highlight Average, over frame time			
For Pickup from Film	100 to 300	100 to 300	Foot-Candles
Constant			
For Pickup from Transparencies or Opaques	10	10	Foot-Candles
Grid-No. 5 (Decelerator) and 4 (Beam Focus Electrode) Voltage	200 to 300	200 to 300	Volts
Grid-No. 3 (Beam Focus Electrode) Voltage†	200 to 300	—	Volts
Grid-No 3 (Dynamic Focus Electrode) Voltage‡			
DC Value	——	200 to 300	Volts
Peak-to-Peak Value, approximate	——	60	Volts
Grid-No. 2 (Accelerator) Voltage	300	300	Volts
Grid-No. 1 Voltage, for picture cutoff	−55 to −110	−55 to −110	Volts
Signal-Electrode Voltage			
For Pickup from Film	10 to 30	10 to 30	Volts
For Pickup from Transparencies or Opaques	30 to 60	30 to 60	Volts

TECHNICAL INFORMATION (CONT'D)

Typical Operation (Cont'd) *For Scanned Area of ½" by ⅜"*	Static Focusing Grid-No. 3 Connected to Grid-No. 4 and 5	Dynamic Focusing Grid-No. 3 Used Separately as Dynamic Focusing Electrode	
Highlight Signal-Electrode Current	0.3 to 0.4	0.3 to 0.4	Microamperes
Average Signal-Output Current§	0.1 to 0.2	0.1 to 0.2	Microamperes
Maximum Dark Current			
For Pickup from Film	0.004	0.004	Microamperes
For Pickup from Transparencies or Opaques	0.02	0.02	Microamperes
Average Gamma of Transfer Characteristic, signal-output current between 0.02 and 0.2 microamperes	0.65	0.65	
Minimum Peak-to-Peak Blanking Voltage			
When Applied to Grid-No. 1	40	40	Volts
When Applied to Cathode	10	10	Volts
Field Strength, adjustable alignment coil	0 to 4	0 to 4	Gausses

* This capacitance which effectively is the output impedance of GL-6326, is increased by about 3$\mu\mu$f when the tube is mounted in the deflecting-yoke and focusing-coil assembly. The resistive component of the output impedance is in the order of 100 megohms.

† Beam focus is obtained by combined effect of grids No. 4 and No. 3 voltage which should be adjustable over indicated range and focusing coil with 40 milliamperes passing through it.

‡ Static beam focus is obtained by combined effect of grid-No. 4 voltage which should be adjustable over indicated range, and focusing coil with 40 milliamperes passing through it. Dynamic beam focus to give improved edge focus is supplementary to static beam focus and is accomplished by adjusting the d-c grid-No. 3 voltage to the same value as that of grid-No. 4 and by applying to grid-No. 3 an a-c voltage having parabolic waveform. Parabolic voltage is minimum at center of scan.

§ The component of signal-electrode current after subtracting dark-current component.

TYPICAL SIGNAL OUTPUT

ILLUMINATION: UNIFORM OVER PHOTOCONDUCTIVE LAYER
SCANNED AREA OF PHOTOCONDUCTIVE LAYER—½" X ⅜"

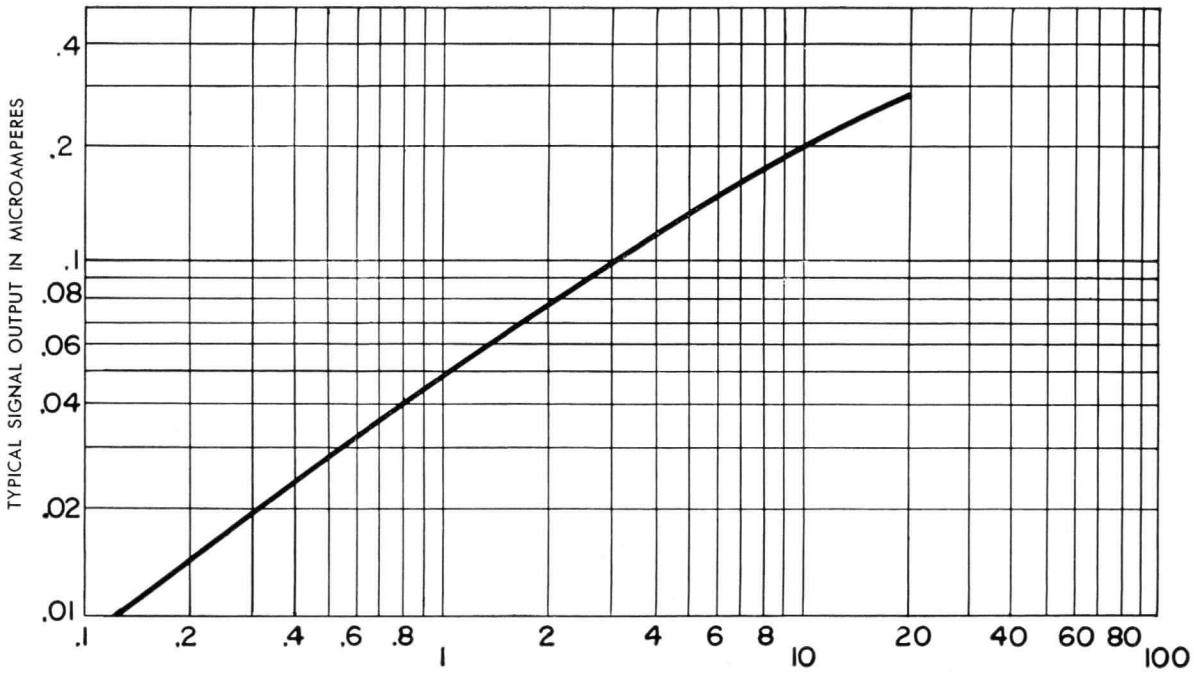

K-69087-72A736

12-6-55

TYPICAL CHARACTERISTIC

CONSTANT ILLUMINATION
SCANNED AREA OF PHOTOCONDUCTIVE LAYER—½" X ⅜"

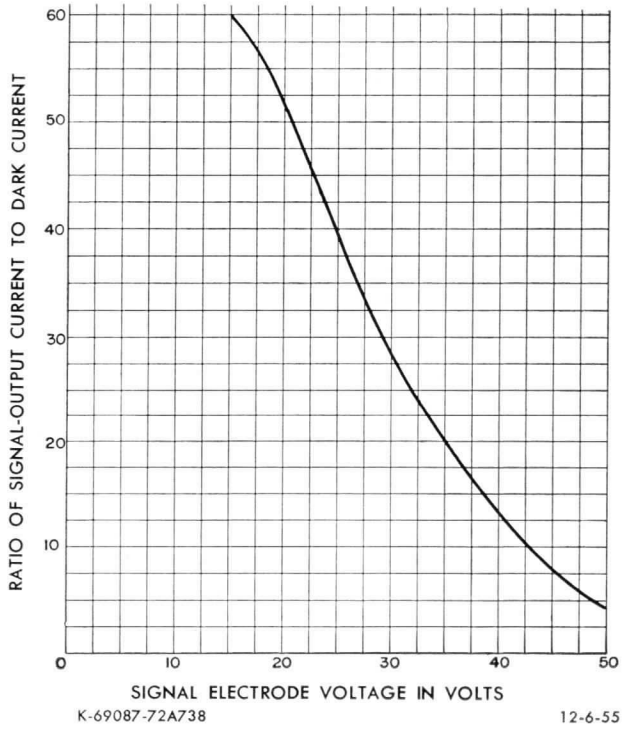

K-69087-72A738

12-6-55

SPECTRAL SENSITIVITY CHARACTERISTIC

CURVE A: FOR EQUAL VALUES OF SIGNAL-OUTPUT CURRENT AT ALL WAVELENGTHS.
SIGNAL-OUTPUT MICROAMPERES FROM SCANNED AREA OF ½″ × ⅜″ = 0.02.

CURVE B: SPECTRAL CHARACTERISTIC OF AVERAGE HUMAN EYE.

CURVE C: FOR EQUAL VALUES OF SIGNAL-OUTPUT CURRENT WITH RADIANT FLUX FROM TUNGSTEN SOURCE AT 2870 K.

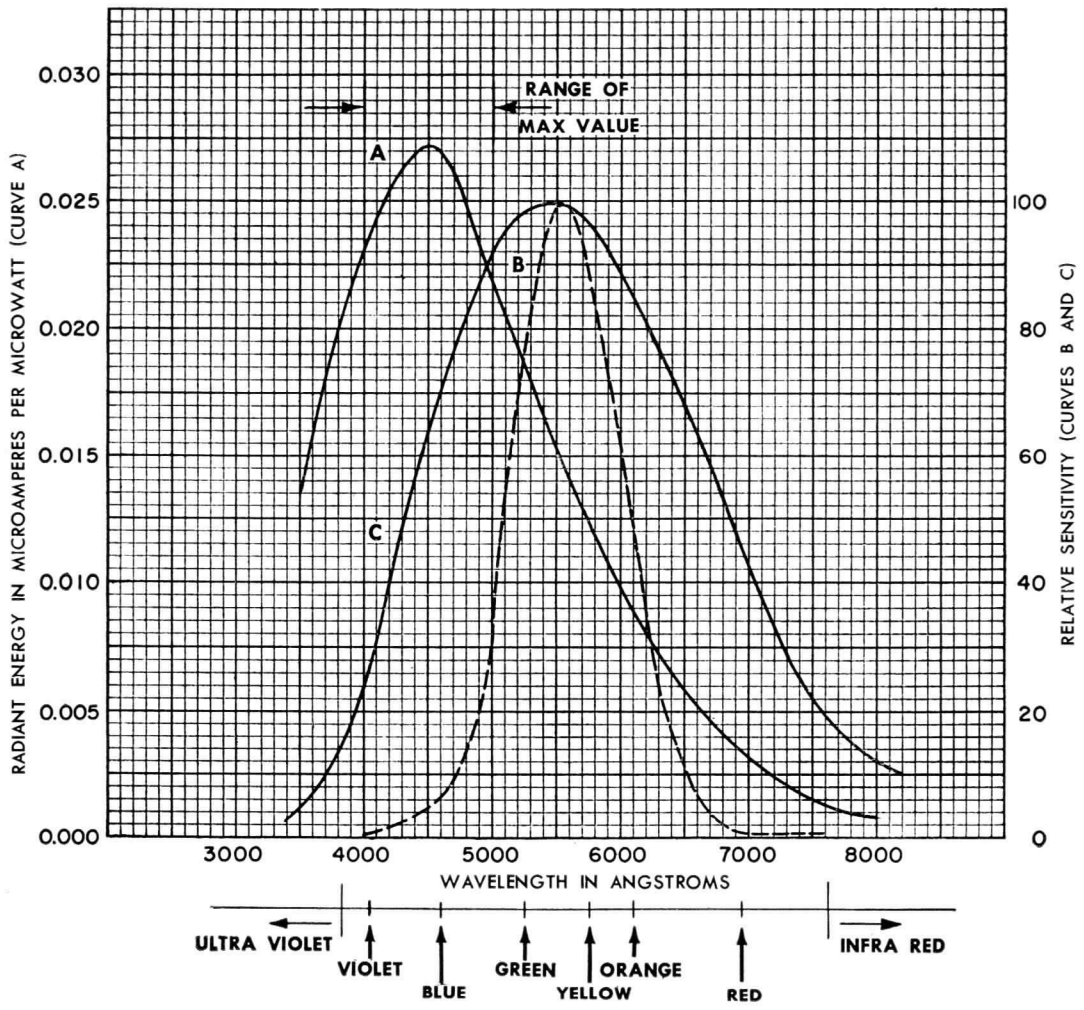

1-30-56

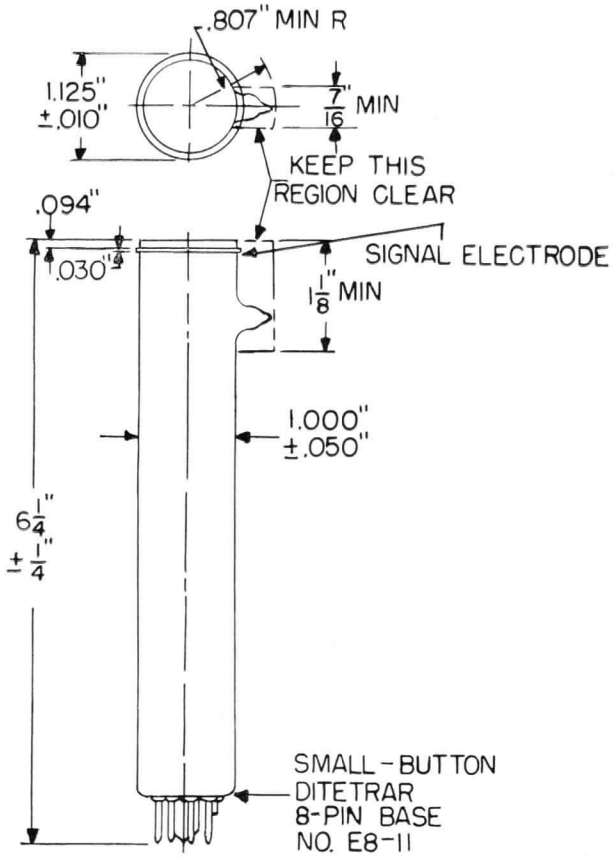

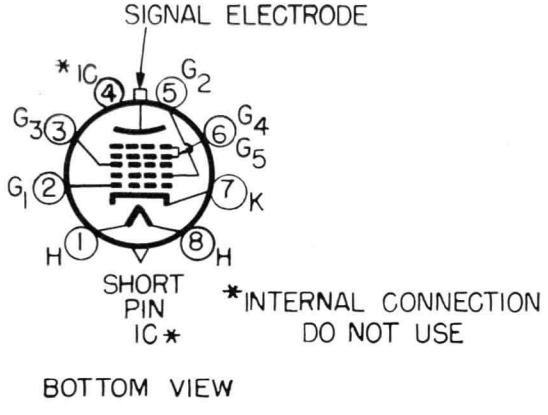

BOTTOM VIEW

K-69087-72A739 12-6-55

TUBE DEPARTMENT

GENERAL ELECTRIC

Schenectady 5, N. Y.

PRINTED IN U.S.A.

GL-7038, GL-7325

VIDICONS

The GL-7038 vidicon is designed for televising live scenes and also film pick-up applications. It utilizes a uniform photoconductive surface which assures uniform dark current across the scanned area. The GL-7038 will replace the 6198 and the 6198-A vidicons.

The GL-7325 is a high-sensitivity vidicon primarily designed for televising live scenes. The high sensitivity is the result of a photoconductive surface which also provides low lag characteristics at low light levels.

Except as indicated below the ratings of these two types are identical.

General

Focusing Method—Magnetic
Deflection Method—Magnetic
Maximum Useful Diagonal of Rectangular Image (4 x 3 Aspect Ratio) . . . . . 0.625 Inch
Image Orientation—Horizontal Scan Should Be Parallel to Plane Passing Through Axis of Tube and Index Pin

Electrical

Heater		
Voltage, AC or DC	6.3	Volts ±10%
Current		
GL-7038, GL-7325	0.60	Amperes ±10%
Direct Interelectrode Capacitance		
Signal Electrode to All Other Electrodes	4.0	μμf
Spectral Response (See Fig. 2)	S-18	

Mechanical

Operating Position—Any
Dimensions—See Fig. 5

MAXIMUM RATINGS

Anode Voltage	350	Volts
Grid-No. 2 Voltage	750	Volts
Grid-No. 1 Voltage		
Negative Bias	125	Volts
Positive Bias	0	Volts
Peak Heater-Cathode Voltage		
Filament Negative with Respect to Cathode	125	Volts
Filament Positive with Respect to Cathode	10	Volts
Faceplate		
Illumination	500	Foot-Candles
Temperature	70	C

TYPICAL OPERATION

Scanned Area	½ x ⅜	Inches
Faceplate Temperature	30–35	C
Signal Electrode Voltage	10–60	Volts
Grid-No. 4 (Mesh) and Grid-No. 3 (Focus) Voltage	250–300	Volts
Grid-No. 2 (Accelerator) Voltage	300	Volts
Grid-No. 1 Voltage (Cutoff)	−40 to −100	Volts
Signal Output Current		
GL-7038—See Fig. 3		
GL-7325—See Fig. 4		
Average "Gamma" of Transfer Characteristic for Signal Output Current Between 0.05–0.25 μa, maximum	0.55	
Minimum Peak-to-Peak Blanking Voltage		
When Applied to Grid-No. 1	40	Volts
When Applied to Cathode	10	Volts
Field Strength at Center of Focusing Device	40	Gausses
Field Strength of Adjustable Alignment Coil	0–4	Gausses
Lag Percentage of Initial Signal After Light Interrupted for 1/20 Second. (At 0.02 μa Maximum Dark Current and 0.22 μa Maximum Signal Current)	20–30	Percent
Resolution (Minimum Values)		
Center	600	Lines
Corner	400	Lines

GENERAL ELECTRIC

Supersedes ET-T1684 dated 3-63

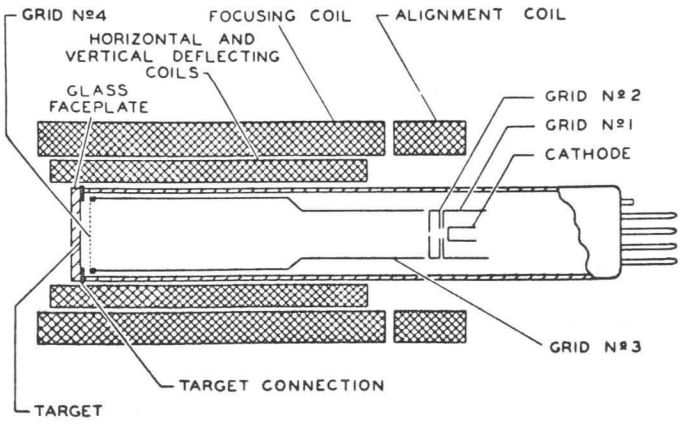

Fig. 1. Schematic Arrangement of Types GL-7038, GL-7325

SPECTRAL SENSITIVITY CHARACTERISTIC

CURVE A: FOR EQUAL VALUES OF SIGNAL-OUTPUT CURRENT AT ALL WAVELENGTHS. SIGNAL-OUTPUT MICROAMPERES FROM SCANNED AREA OF ½" × ⅜" = 0.02.

CURVE B: SPECTRAL CHARACTERISTIC OF AVERAGE HUMAN EYE.

CURVE C: FOR EQUAL VALUES OF SIGNAL-OUTPUT CURRENT WITH RADIANT FLUX FROM TUNGSTEN SOURCE AT 2870 K.

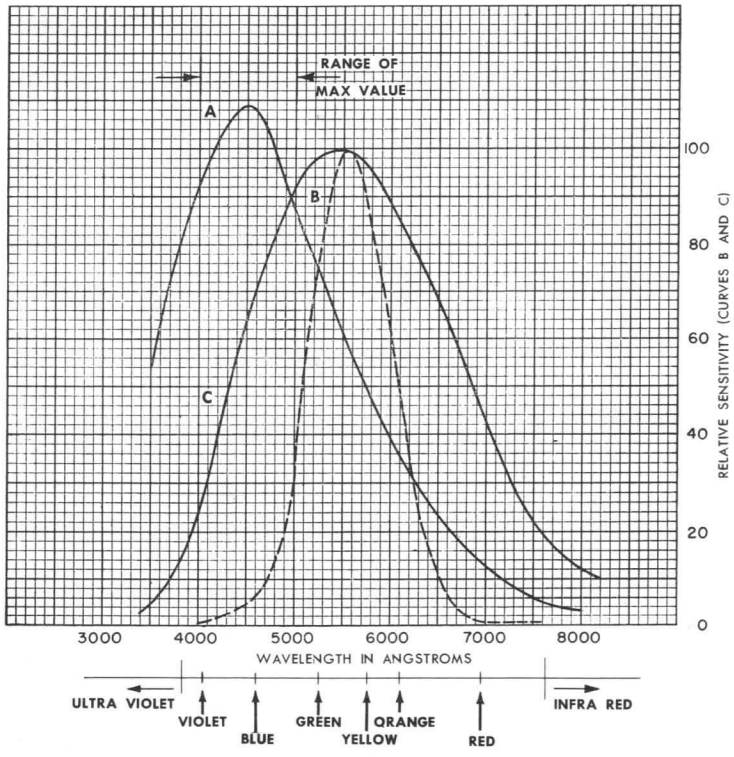

Fig. 2

TYPICAL LIGHT TRANSFER CHARACTERISTICS

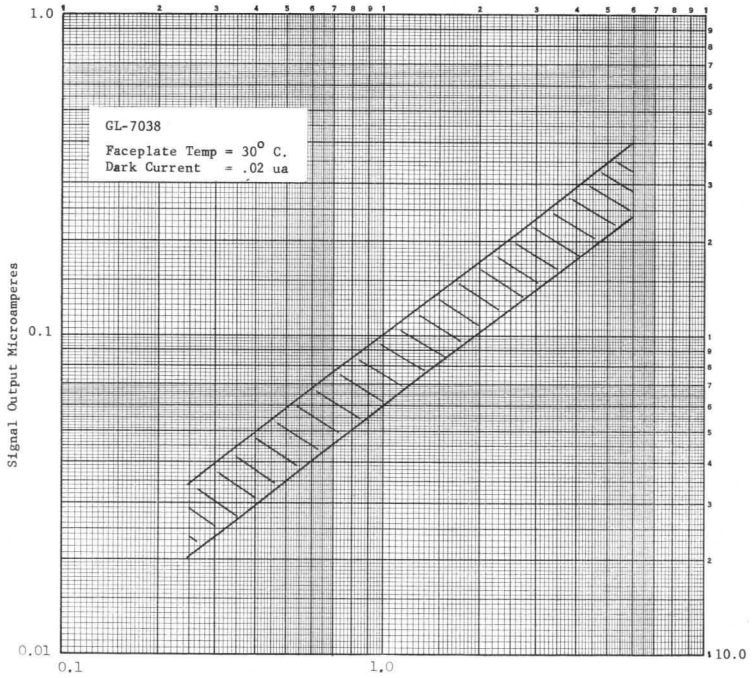

2870°K Tungsten Illumination on Tube Face - Foot-Candles

Fig. 3

TYPICAL LIGHT TRANSFER CHARACTERISTICS

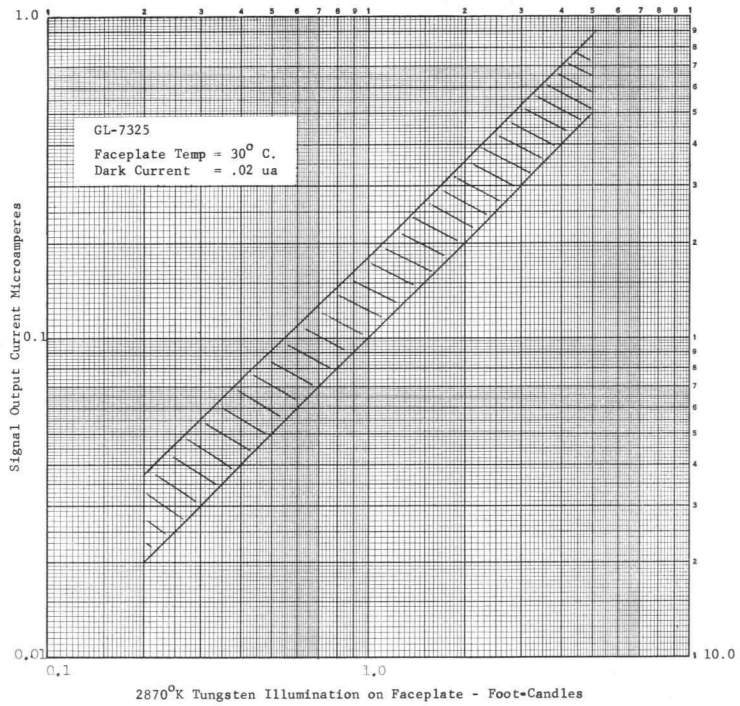

Fig. 4

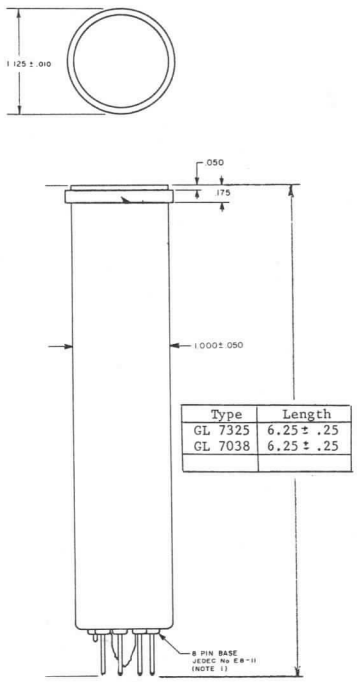

Type	Length
GL 7325	6.25 ± .25
GL 7038	6.25 ± .25

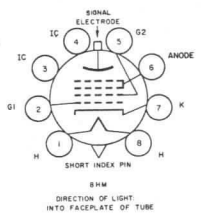

PIN 1: HEATER
PIN 2: GRID No. 1
PIN 3: INTERNAL CONNECTION--DO NOT USE
PIN 4: INTERNAL CONNECTION--DO NOT USE
PIN 5: GRID No. 2
PIN 6: ANODE
PIN 7: CATHODE
PIN 8: HEATER
FLANGE: SIGNAL ELECTRODE
SHORT INDEX PIN: INTERNAL CONNECTION--DO NOT USE

NOTES

1. Base-pin positions fit 0.25 inch thick, 10-hole flat-plate gage with holes located as follows: 9 holes, 0.0550 (±0.0005) inch diameter equally spaced, 0.2052 (±0.0005) inch apart on a circle, 0.6000 (±0.0005) inch diameter, plus a center hole, 0.300 (±0.001) in. diameter, concentric with 9-hole circle.

2. All dimensions are shown in inches.

Fig. 5

GENERAL ELECTRIC

POWER TUBE DEPARTMENT

Pickup Tube Operation

Syracuse, New York

PRINTED IN U.S.A.

IGNITRONS

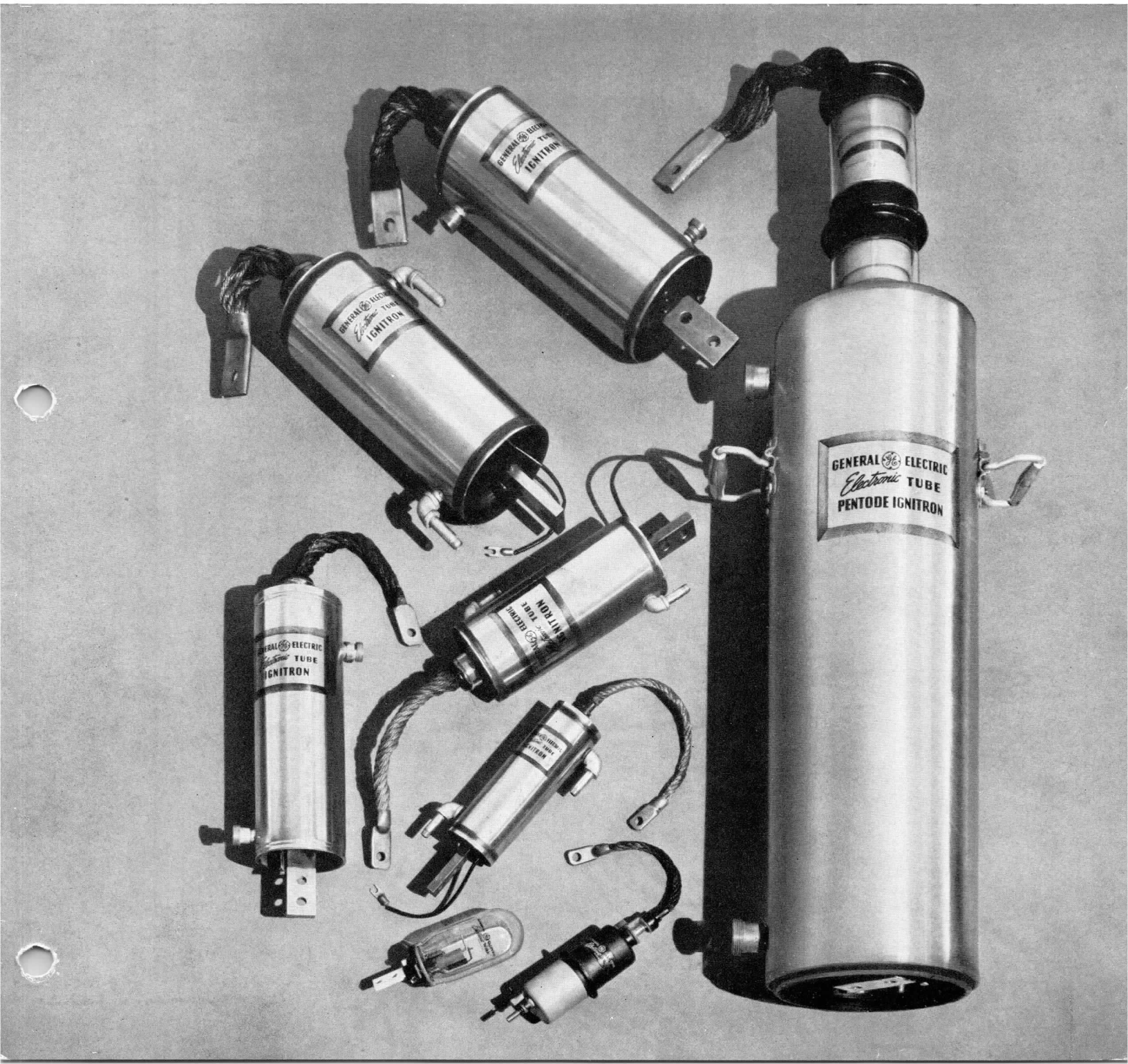
GENERAL ELECTRIC
Electronic TUBE
PENTODE IGNITRON
GENERAL ELECTRIC
Electronic TUBE
IGNITRON

DESCRIPTION

Ignitrons are gas-discharge, pool-type cathode tubes in which the arc is started for each conducting cycle by means of a starting or ignition electrode. The tubes are of the half-wave type in which current is carried through the tube during only the positive part of the cycle. During the remainder or non-conducting part the residual ionization reaches very low values in comparison with the ionization present in the multi-anode type of pool tube where it is proportional to the load current carried. As a result of the so-called dark, negative half-cycle, the shielding required in half-wave tubes is greatly reduced from that in the multi-anode tube. Reduction of shielding in turn lowers the arc voltages so that tubes of this type may be efficiently applied in the lower voltage (125 to 250 volt) fields. Mercury-pool cathodes are capable of supplying emission currents of many thousands of amperes. By phase control of the point in the cycle at which the ignitor is fired, the output voltage or current may be reduced from the maximum to provide voltage or current control. The ignitron, therefore, possesses many of the control characteristics of the thyratron, and in addition has emission capacity for carrying very high currents. In general, the tubes are water-cooled, but in the smaller sizes may be air-cooled. Exceptions are the GL-415 ignitron for welder control use in which temperature control is provided by clamping the cathode portion of the tube in an air or water-cooled metal clamp, and the GL-427 ignitron which is a small glass tube designed specifically for ignitor demonstration purposes.

GENERAL CLASS OF OPERATION AND APPLICATION

There are three main fields of applications for which ignitrons are particularly suited—resistance welding, power rectification, and power conversion or transmission.

1. In welding control applications ignitron tubes are used to control the primary current supplied to resistance welding transformers. They are used in voltage supply circuits of 220, 440, 550, 1100, and 2300 volts rms. The control is the most exact that has been developed. The tubes operate as contactors and through suitable thyratrons and other electronic control, may be arranged to provide one, two, or a dozen cycles of current. Off periods may likewise be controlled with the same exactness in line welding operations. Given weld settings may be repeated indefinitely without change in the number of cycles. As a result, very great uniformity in the welds is obtained, and losses from poor welds are reduced almost to the vanishing point.

2. In the power rectification field ignitrons are available in sizes which permit d-c outputs of 40 to 1000 kilowatts to be obtained in single units depending on the operating voltage. Usual d-c voltage levels are 125, 250, 600, and 900 volts. Such rectifiers are used to provide d-c power for machine shops, elevators, mines, electrolytic reduction plants, arc welding, and similar types of service. Suitable voltage regulating equipment may be provided to give practically constant output voltage from zero to full load. Variable voltage output and control (similar to the Thy-mo-trol) will provide speed control for d-c motors.

3. The third class of application is high-voltage d-c power transmission, or conversion of power at one frequency to power at another. In such applications the tubes are primarily for power conversion and are grouped to form units of 2000 to 20,000 kilowatt capacity. Higher capacity may, of course, be obtained by additional units. These electronic power converters provide a non-synchronous tie between two power systems and are able to transmit a constant amount of power independent of the usual variations in either the supply or receiving system frequencies and voltages.

PRINCIPLES AND FUNDAMENTALS OF OPERATION

The ignitor is a small rod of highly refractory material about the shape and size of the pointed end of an ordinary lead pencil. This point dips into a mercury pool and by passing a current of 10 to 30 amperes through the ignitor, a cathode spot is established at the junction between the ignitor and mercury pool. The mechanism is one in which the passage of current establishes sufficient voltage gradient at the mercury pool to draw electrons from the pool and start the cathode spot. Ionization from this initial spot spreads throughout the volume of the tube and if the main anode is positive, electrons begin to flow to it. Passage of the electrons in turn ionizes the gas and establishes the conditions for the low arc drop that is characteristic of gas-filled tubes. As the current increases above 20 amperes, the cathode spot divides and sub-divides until a sufficient number of spots exist to supply the anode current. These spots move rapidly and indiscriminately over the surface of the pool, tending in general to occupy a circle of given diameter for a given current, centered around the ignitor. The cathode spots in effect remain anchored around the ignitor, and the usual insulated pools used in the multi-anode tubes to prevent the arc from wandering onto the walls of the tube, are not required. At the end of conduction when the current begins to decrease, the number of spots decrease and finally at zero current die out altogether. Ionization rapidly decays at this point to values which permit

the application of the inverse voltage for which the tubes are designed without the occurrence of arc backs (that is, current conduction in the reverse direction with the anode acting as cathode). Mercury which is evaporated by the action of the cathode spot is condensed on the water-cooled walls of the tube. From this point it rolls back into the mercury pool to maintain the required ignitor immersion. Approximately $\frac{3}{4}$ grams of mercury are evaporated for each 100 ampere-seconds a tube conducts current. The pressure (see Fig. 1) due to this mercury must be controlled and the water cooling serves in this function as well as to remove the arc losses. The arc drop is relatively low, approximately 12 to 18 volts, and the over-all efficiency even at low output voltages is, therefore, very high.

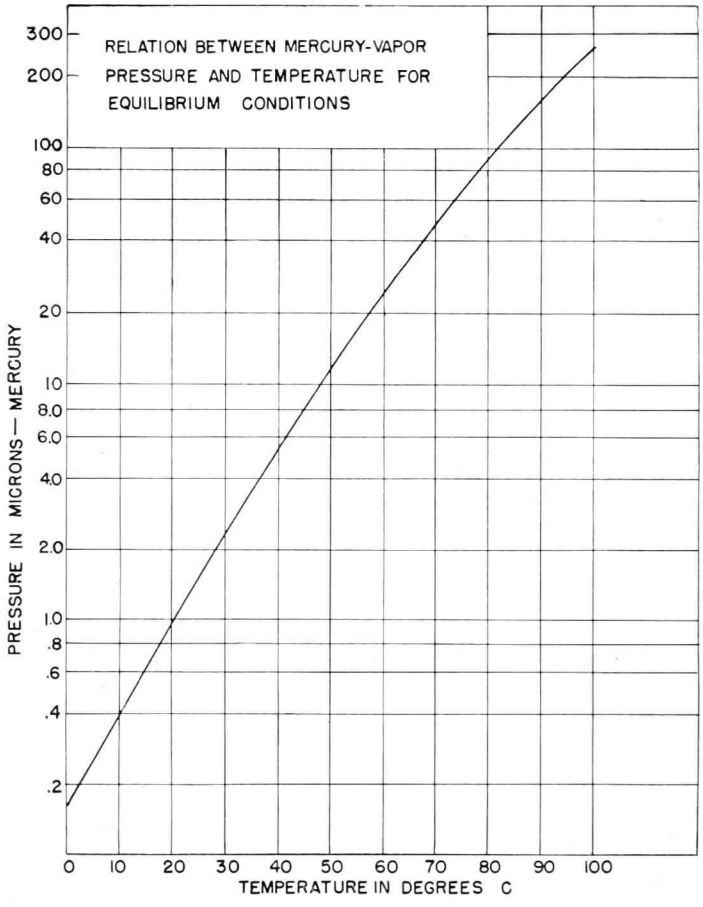

K-9033553

12-6-44

Fig. 1

DESIGN AND CONSTRUCTION

General Electric ignitrons have a number of design and construction features (see Fig. 19, page 11) which provide reliable operation and long trouble-free service. The tube jackets and water-cooling sections are constructed of stainless steel which minimizes corrosive effects as well as provides a vacuum-tight enclosing envelope. The insulating bushings which separate the anode from the main body of the tube, as well as the ignitor seals and leads, are constructed of fernico and a high-resistance borosilicate glass. Fernico is an iron-nickel-cobalt alloy which was developed in the General Electric Research Laboratories. It has the unique characteristic of having an inflection point in its temperature elongation characteristic at the same temperature as that of certain hard glasses. The expansion of the fernico and the proper glass match very closely over the entire temperature range encountered in manufacture and use. Such seals are strain-free under usual operating conditions and form one of the strongest glass-to-metal combinations developed. The ignitor is one of the most essential parts in the tube and its manufacture requires very close control to insure uniformity of characteristics and life. Every operation in the manufacture of these ignitors is carefully controlled through inspection and testing. All of the welds in the General Electric ignitrons are made by means of ignitron controlled resistance welding machines. These welds are unusually strong and vacuum tight.

RATINGS

The ratings of ignitron tubes, in common with other electronic tubes, are defined in terms of the maximum instantaneous voltage and current conditions under which the tube may operate. Other factors are the water temperature which controls vapor pressure; and the capacity of the tube to dissipate losses, which is described in terms of the average anode current. One of the larger rectifier ignitrons, the FG-238-B for example, has an average anode current rating of 200 amperes and an arc drop of approximately 17 volts, so that the water cooling is required to dissipate approximately 3.5 kilowatts. The electrodes of ignitron tubes in common with other electronic tubes have much smaller mass than rotating machinery or other heavy electrical apparatus. The time required for welder tubes to reach equilibrium temperature is only a few seconds and is shorter than the time constant of most other electrical apparatus. The limiting factor encountered in this service is the high-current short-time peaks which rapidly increase the vapor pressure to values which may cause loss of control or arc back. The same factors govern rectifier tubes, but since the usual load is of a continuous nature with relatively low ratios between maximum and average currents, the time constant is of the order of minutes. The instantaneous capacity in either case is very high and meets the usual welder requirements, or those of rectifiers to clear fuses or breakers in case of short circuit. Minimum and maximum outlet water temperatures are other ratings. The graph in Fig. 1 shows the relation between mercury-vapor pressure and temperature for equilibrium conditions.

Roughly, mercury-vapor pressure doubles for each 10-degree increase in temperature, so that at higher temperatures the limiting pressures may be approached rapidly. The ignitor will fire even in a pool of frozen mercury. The lower limit is usually dictated by the point of freezing water and by a vapor pressure so low that there are insufficient ions to carry the required current. Arc constriction or starvation under these conditions is very unlikely to occur in the welder tubes which are of relatively open construction. Neither does it occur in the rectifier ignitrons, which are more completely shielded, within the temperature limits given as part of the technical data. In tubes with grids, such as the pentode ignitron, the effect becomes more pronounced and minimum temperatures are correspondingly higher.

Ignitor

The ignitor rating is described in terms of *maximum instantaneous potential and current required for ignition* as well as *maximum allowable forward and inverse voltages*. The ignitor, when not operating and cold, may have a resistance of 20 to 100 ohms. Under operating conditions, this resistance decreases to about 2 to 10 ohms. The ignitor behaves as though it were a constant resistance over any one cycle, but due to wave motion in the mercury pool, resistance on successive cycles may vary widely. Ignition currents likewise vary widely from cycle to cycle, and normally require much less current than the values stated. Ignitors will not stand reverse current as this may cause a cathode spot on the ignitor itself and the resulting heat and burning tends to destroy the point. Some rectifying device such as a thyratron, or a dry-plate rectifier, must be connected in series with the ignitor.

Welder Ignitrons

The capacity of these tubes is described in terms of *maximum kva demand* for each type, for voltages from 220 to 600 rms and frequencies of 25 to 60 cycles. For higher voltages, tubes of the rectifier type are used and corresponding ratings applied. Each tube has a *maximum average anode current* rating which represents its heat dissipating ability and which may be read on an ordinary d-c ammeter. These two ratings, in conjunction with the supply voltage and the *maximum time of averaging the anode current* completely describe the necessary conditions for welder service. For example, assume a power demand of 500 kva and a supply voltage of 250 volts (rms).

The line current demand is:

$$I_{line} = \frac{500{,}000}{250} = 2000 \text{ amperes (rms)} \quad (1)$$

$$\text{or} = \sqrt{2} \times 2000 = 2800 \text{ amperes (max)} \quad (2)$$

Then, the demand average current per tube over any conducting cycle is:

$$I_{D.avg/tube} = \frac{I_{max}}{\pi} = \frac{2800}{3.14} = 891 \text{ amperes} \quad (3)$$

The demand kva is within the rating of the FG-271 and at this value of kva, the tube has an average anode current rating of 33 amperes, and at 250 volts a maximum time of averaging the anode current of 18 seconds as shown in the Technical Information. The maximum tube capacity, therefore, in ampere-seconds is:

$$\text{Tube } I_{avg.} \times t_{max.\ avg.} = 33 \times 18 = 594 \text{ ampere-seconds}$$

The length of time the tube can conduct the demand current in any 18-second period must be within the tube ampere-second capacity. The permissible length of conduction, or weld, may, therefore, be represented by t in the expression:

$$I_{Demand\ avg./tube} \times t = 594 \text{ ampere-seconds}$$

$$t_{max} = \frac{594}{891} = .67 \text{ seconds} \quad (4)$$

or since we are usually interested in cycles, the corresponding number for a 60-cycle supply is,

$$n = t \times 60 = 40 \text{ cycles} \quad (4a)$$

A single weld using the 40 cycles is permissible or any number of welds using fewer cycles (2, 3, 4, etc.) may be made providing the total conduction does not exceed the maximum during any 18-second averaging time.

The duty in percent is the ratio of the on to total cycles in the averaging period.

$$\text{Duty} = \frac{\text{No. of conducting cycles}}{\text{No. of cycles in averaging time}} \times 100 \quad (5)$$

which for the above case is:

$$= \frac{n}{t_{\text{max. avg.}} \times 60} \times 100 = \frac{40}{18 \times 60} \times 100 \quad (5a)$$

$$= 3.7\%$$

The *maximum surge current* represents a measure of the circuit stiffness in case of fault conditions. It is the maximum current that the tube may be expected to carry under fault conditions without immediate damage. Repeated operations under such conditions may, of course, shorten the tube life.

Phased-back operation ratings are determined by the conditions at full advance (no phase retard). That is, phase-back operation produces a greater stress on the tubes. Therefore, the permissible current is reduced from full-on in proportion to the angle of retard.

Rectifier Ignitrons

Rectifier ignitron tube ratings also are given in terms of the usual circuit requirements. Most industrial rectifiers have current ratings of 100 per cent continuous, 125 per cent for two hours, and 200 per cent for one minute. The *maximum average anode current* is described in these terms. The *maximum instantaneous current* represents the maximum cycle-by-cycle duty for which the tube is designed to operate. Two levels of inverse voltage are given with different current ratings corresponding to output voltages of 300 and 600 volts d-c. The *surge current* represents the maximum forward current which the tube should carry under fault conditions. Its duration should not exceed the time given. These last two factors define the transformer and supply system impedance and the minimum operating speed of the circuit breakers. The value of the surge current is such that rectifiers having overall regulation of 6 to 7 per cent can be obtained with practicable designs of transformers. Higher regulation tends to reduce the duty on the tube by reducing the possible short-circuit current. In terms of d-c output, the current is simply the average current per tube times the number of tubes employed, provided the tubes are used in the usual circuits and that the peak anode current is not exceeded.

CLASSES OF TUBES

There are three classes of ignitron tubes especially designed for each type of service:

1. Welder Ignitrons

These tubes are of relatively open construction with little shielding and are designed specifically to carry the high currents encountered in resistance welding. They also may be used as rectifiers in certain welding equipment where the output voltage is usually less than 150 volts d-c. These tubes have the lowest arc drop voltage of any of the ignitrons.

2. Rectifier Ignitrons

These tubes are more highly shielded to withstand the voltage and current conditions encountered each cycle during the commutation period at the end of conduction. The arc drop is approximately 2 volts higher than that of corresponding sizes of welder ignitrons. While used primarily for rectifier service, they are also applied in 2400-volt welding control applications where the higher voltage requires a more shielded tube.

3. Grid-Pool Tubes

This type of tube, such as the pentode ignitron, is primarily for high-voltage rectification or inversion in power or frequency-conversion work. Grids are added to the usual ignitron structure to provide additional control and deionization when the tube is used in inverter service. Its application requires considerable detailed coordination between the circuit and tubes, and it is recommended that applications for this type of tube be referred to the Electronics Department, Tube Division, Schenectady 5, N. Y.

APPLICATION CIRCUITS#

Ignitrons for resistance welding control are used in spot, pulsation, seam, and flash welding machines. Fig. 2 shows a typical circuit with two tubes in a back-to-back connection.

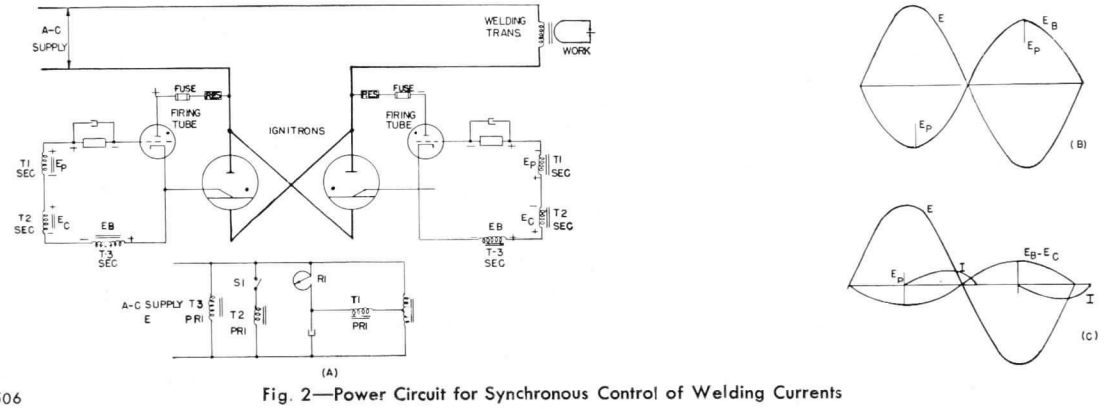

M-5375506

Fig. 2—Power Circuit for Synchronous Control of Welding Currents

11-29-44

APPLICATION CIRCUITS (CONT'D)#

One older method (for illustration) of controlling the number of on and off cycles in line welding consisted of a moving tape or chain with insulated sections which supplied off-on bias to the grids of the thyratrons. The length of the conducting sections was such that at synchronous speed, the on-time corresponded to the number of cycles desired; say, 3, 5, etc. The non-conducting sections were of length to give off periods of say 4, 6, etc. It is present practice to use electronic control with thyratron tubes and capcitor-resistance combinations to give the proper time constant for controlling the on-off period. These electronic controls are comparatively complex and requests should be sent to the General Electric Company for a detailed description. Speed of control, cycle-by-cycle response, small space requirements, lack of noise, and flexibility of application all contribute to the success of welding ignitron control.

Ignitron contactors which operate in the same manner but which do not have the precise control of the number of cycles are also in wide use. In effect, the ignitron units simply replace ordinary contactors with the advantage of noise reduction and decreased maintenance. Fig. 3 shows the typical connections for this type of service.

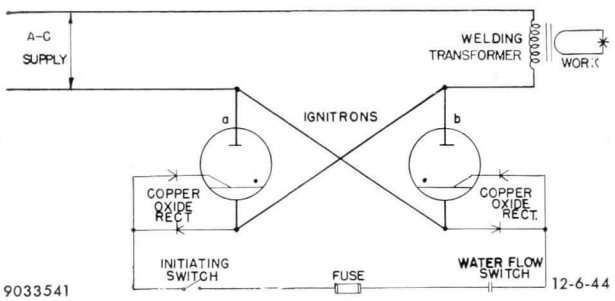

Fig. 3—Electronic Welding Contactor Circuit with Manual Non-Synchronous Control

Such contactors are found in welding service where precise control is not required, and in applications where frequent opening and closing of the circuit is required such as in temperature-regulated furnaces. Phase control which permits a gradual change of the output voltage may be obtained by a modification of the control circuit and the addition of phase shifting networks and thyratrons. Another application for this type of equipment is the interruption of the power supply for radio transmitters. In case of arc over in the transmission line or coils, or flashing in the vacuum tubes, it is desirable to remove the plate power supply as rapidly as possible to prevent possible gassing or burning of the transmitting tube. These contactors, when placed in each line of the primary of the rectifier, may be controlled completely to interrupt the flow of power in one to two cycles, in case of a fault. This compares with 6 to 8 cycles for most mechanical breakers. Regular circuit breakers are still required for overall fault protection.

Typical rectifier applications include the d-c supply for lighting and power loads in buildings, elevators, d-c motor supply in machine shops, printing presses, power for the electrolytic separation of hydrogen, oxygen, chlorates, aluminum and magnesium, plating and mining. Mining rectifiers, may be designed with very low head room (42 inches) so that the unit may be placed in the actual mine itself near the working source. As the mine is worked, the ignitron rectifier may be conveniently moved to provide full voltage at the location where the mining is centered. One particular advantage of rectifier equipment in mine service is that the rectifier does not have the problem of pull-out torque encountered in synchronous machines. Most mine

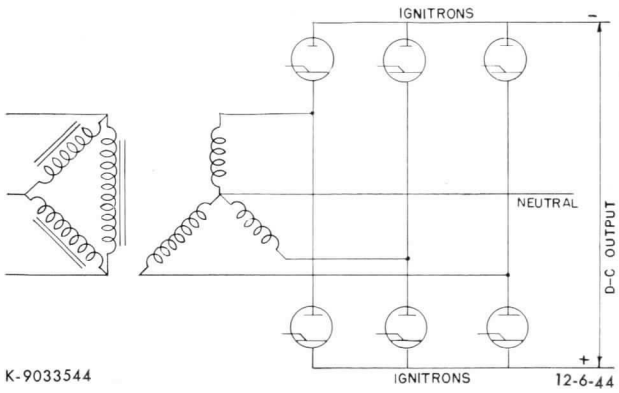

Fig. 4—Three-Phase, Double-Way Rectifier Circuit for Three-Wire Service

load stations are at a considerable distance from the power source and as a result, reactance in the supply lines is usually high. This decreases the overload that can be carried without exceeding the torque limit. Three-wire rectifiers are possible (see Fig. 4) where 125/250 volt supplies are needed. Such units have also been used for d-c arc welding power supplies.

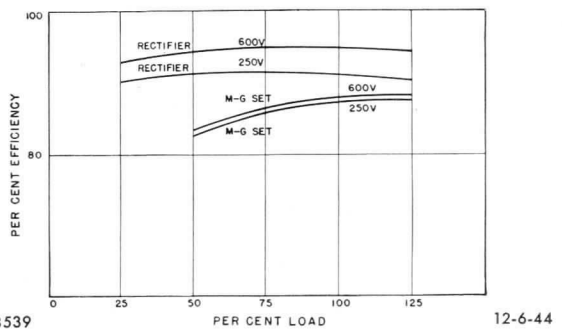

Fig. 5—Overall Efficiency of 300KW, 250-and 600-Volt Ignitron Rectifier in Comparison with Motor-Generator Sets of Same Ratings

 # Circuits shown in ETT-108 are examples of possible tube applications and the description and illustration of them does not convey to the purchaser of tubes any license under patent rights of General Electric Company.

Ignitron rectifiers have all the advantages of quiet operation, small space requirements, no special foundation requirements, ease of control, and low maintenance that are common to electronic tubes. The principal advantage from the user standpoint, however, is efficiency. Fig. 5 (see bottom of page 6) shows efficiency of the 300 kilowatt, 250 volt ignitron rectifier in comparison with other forms of conversion equipment.

In terms of losses for this size rectifier, there is a constant kilowatt difference of approximately 10 kilowatts in favor of the ignitron rectifier over the usual load range. Therefore, if the rectifier is operated continuously during the year, there is a net power saving of approximately 10 kw × 8760 hours × .01 = $876 at a power rate of one cent per kilowatt hour. Such savings are more than adequate to pay for the probable tube replacement cost.

SELECTION OF TUBES

Selection of ignitron tubes for welder service depends primarily on the kilovolt-ampere demand and the duty. The maximum kilovolt-ampere demand in terms of volts and amperes in the welding transformer primary can be obtained from the manufacturer. Where such data are not available, a clamp-on ammeter with a pointer stop or maximum swing indicator may be placed around one of the primary leads and the secondary of the welder shorted through well clamped copper bars or strips. The welder is then energized for periods long enough to allow equilibrium readings to be obtained on the meter. With synchronous ignitron control, 3 or more cycles will give accurate readings. With non-synchronous control, longer periods may be necessary to eliminate the probable starting transient. This constitutes the maximum current demand providing the maximum tap settings have been used. The tube selected should have sufficient capacity to conduct the maximum current demand within the tube rating. The permissible duty is then determined by the average current capacity of the tube and if this capacity is below that required, a larger size of tube must be selected. For example, suppose that a welder having a 1000-ampere rms current demand and a 20 per cent duty is required, and that the supply voltage is 500. Demand rms current for this voltage in terms of percentage duty has been plotted for convenience on curves included with the Technical Information. Reference will show that the FG-235-A tube has sufficient capacity and is the tube required. If the duty were less than 7 per cent two FG-271 tubes could be used.

Selection of the size and number of tubes for rectifier service to supply a given d-c output is relatively simple. Assuming that the usual overload ratings apply, the average current per tube is the d-c load current divided by the number of phases (see Useful Factors pages 9 and 10). Fig. 6 shows combinations for rectifiers of 40 to 1000 kilowatts at d-c outputs of 125 to 900 volts.

These values correspond to standard units which

KILOWATT RATINGS AT 125V D-C	300V D-C	600V D-C	900V D-C	IGNITRONS NO.	TYPE	TRANSFORMER SECTION CONNECTIONS	PHASE OPERATION INPUT	OUTPUT	PRINCIPLE RIPPLE COMPONENT IN OUTPUT VOLTAGE FREQUENCY	MAGNITUDE
40	75	100	100	3	FG-259-B	Y, ZIG-ZAG	3	3	3X INPUT	0.25E D-C
50	100	150	150	6	FG-259-B	DOUBLE Y	3	6	6X INPUT	0.057E D-C
75	150	200	200	6	FG-259-B	DOUBLE Y	3	6	6X INPUT	0.057E D-C
100	200	300	300	6	FG-238-B	DOUBLE Y	3	6	6X INPUT	0.057E D-C
150	300	400	400	6	FG-233-B	DOUBLE Y	3	6	6X INPUT	0.057E D-C
—	—	500	500	6	FG-233-B	DOUBLE Y	3	6	6X INPUT	0.057E D-C
200	400	750	750	12	FG-238-B	QUADRUPLE Y	3	6 or 12	6 or 12X INPUT	0.057E D-C or 0.014E D-C
300	500	1000	1000	12	FG-238-B	QUADRUPLE Y	3	6 or 12	6 or 12X INPUT	0.057E D-C or 0.014E D-C

Fig. 6—Ratings of Standard Sizes of General Electric Sealed Ignitron Rectifiers for Industrial Service

CIRCUITS FOR RECTIFIER TUBES (Figs. 7 through 16)

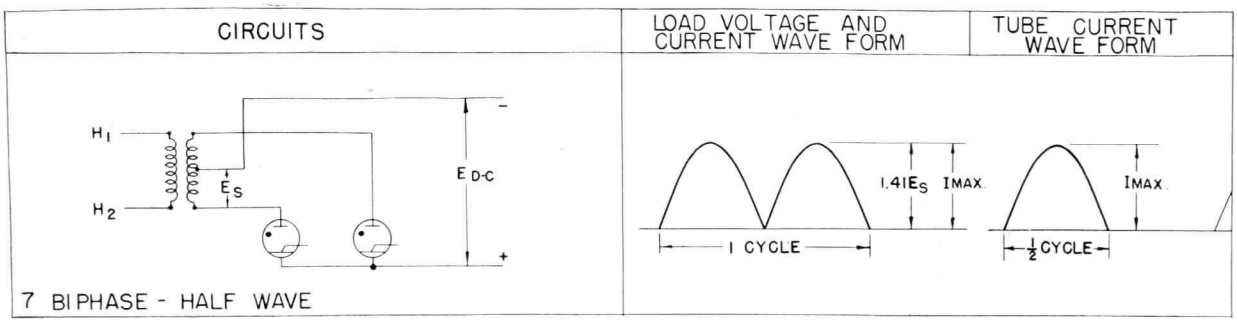

the General Electric Company supplies as unit substations. They require only electrical and water connections to function as a direct-current power substation. Various combinations of tubes may be used such as shown in Figs. 7 through 16, but in general the 3-phase double-Y half-wave, and the 3 phase, half-wave circuits are widely used. These circuits give a 6-phase and 3-phase output ripple which is so low that it causes little effect on units using direct-current power.

CIRCUITS FOR RECTIFIER TUBES (CONT'D)

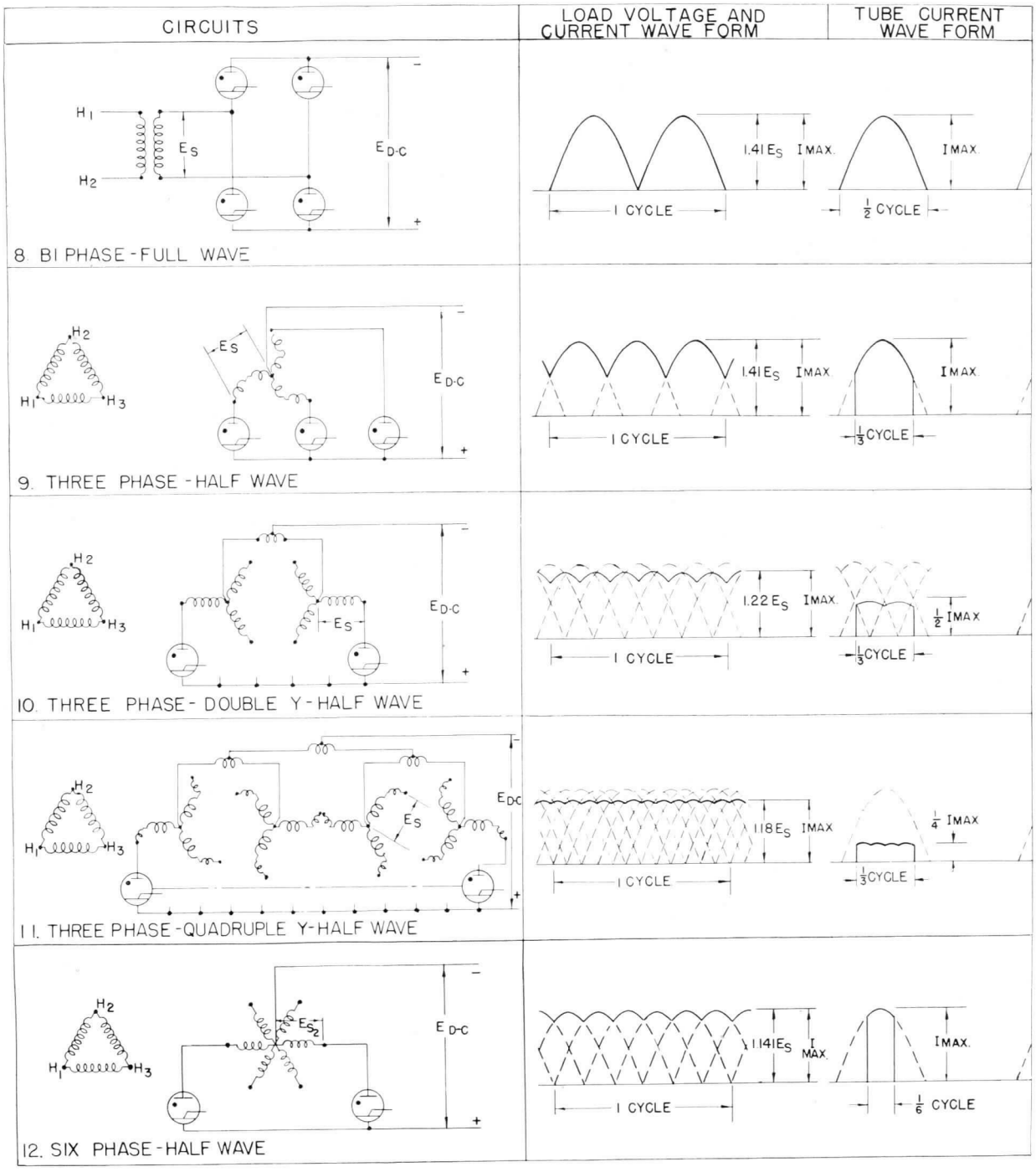

Notes for Figs. 7 through 16:

The theoretical wave forms are for a resistance load neglecting voltage reduction due to tube arc drop and current overlap at commutation.
Es = Secondary voltage, RMS value.

CIRCUITS	LOAD VOLTAGE AND CURRENT WAVE FORM	TUBE CURRENT WAVE FORM
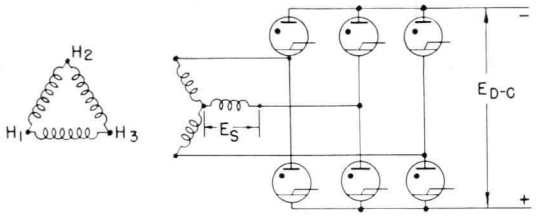 13. THREE PHASE-FULL WAVE	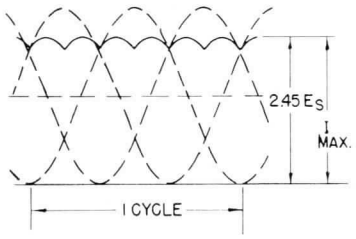	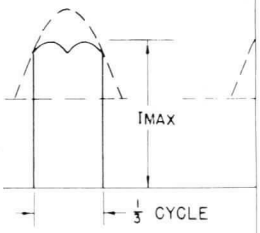
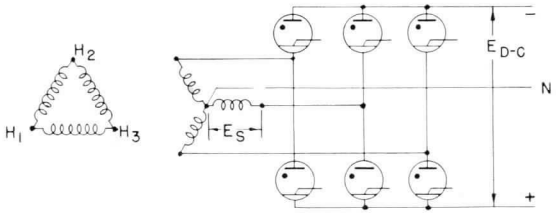 14. THREE PHASE - FULL WAVE - THREE WIRE	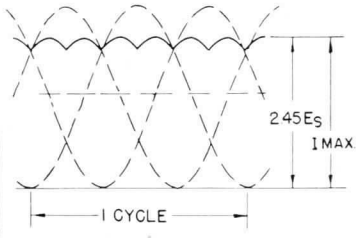	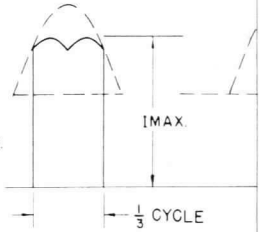
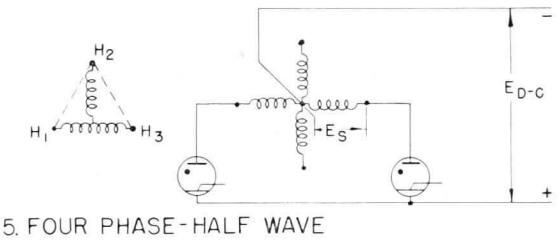 15. FOUR PHASE - HALF WAVE	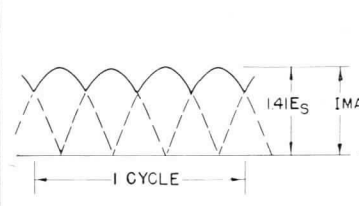	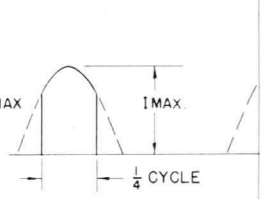
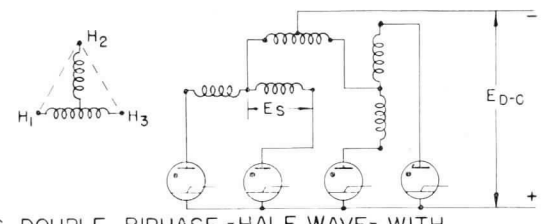 16. DOUBLE BIPHASE - HALF WAVE - WITH INTERPHASE TRANSFORMER	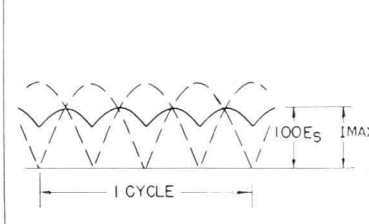	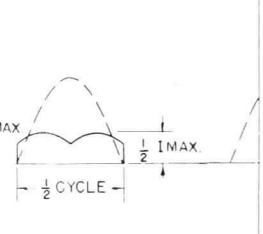

USEFUL FACTORS

FIG. NO.	AVERAGE TUBE CURRENT / LOAD CURRENT	$E_{D\text{-}C}$ (AVERAGE OUTPUT VOLTAGE)	PEAK INVERSE VOLTAGE
7	.500	0.900 Es 0.636 $E_{M\ D\text{-}C}$	2.282 Es 3.141 $E_{D\text{-}C}$
8	.500	0.900 Es 0.636 $E_{M\ D\text{-}C}$	1.414 Es 1.570 $E_{D\text{-}C}$
9	.333	1.170 Es 0.827 $E_{M\ D\text{-}C}$	2.450 Es 2.090 $E_{D\text{-}C}$
10	.167	1.170 Es 0.955 $E_{M\ D\text{-}C}$	2.450 Es 2.090 $E_{D\text{-}C}$
11	.0833	1.170 Es 0.955 $E_{M\ D\text{-}C}$	2.450 Es 2.090 $E_{D\text{-}C}$
12	.167	1.350 Es 0.955 $E_{M\ D\text{-}C}$	2.280 Es 1.690 $E_{D\text{-}C}$

Note: $E_{M\ D\text{-}C}$ = *Maximum of D-C voltage.*

USEFUL FACTORS (CONT'D)

FIG. NO.	AVERAGE TUBE CURRENT / LOAD CURRENT	$E_{D\text{-}C}$ (AVERAGE OUTPUT VOLTAGE)	PEAK INVERSE VOLTAGE
13	.333	2.340 E_S 0.955 $E_{M\ D\text{-}C}$	2.450 E_S 1.045 $E_{D\text{-}C}$
14	.333	2.340 E_S 0.955 $E_{M\ D\text{-}C}$	2.450 E_S 1.045 $E_{D\text{-}C}$
15	.250	1.273 E_S 0.900 $E_{M\ D\text{-}C}$	2.280 E_S 1.790 $E_{D\text{-}C}$
16	.250	0.900 E_S 0.900 $E_{M\ D\text{-}C}$	2.280 E_S 2.530 $E_{D\text{-}C}$

DESIGN OF CIRCUITS

Mechanical

Tube supports should be of sufficient size to carry the tube weight and should be designed to provide sufficient electrical contact. Ignitrons are mechanically very strong and will withstand moderate shock. In general, however, excess vibration should be avoided. An adequate water supply of reasonably clean water should be available. Waters that are suitable for drinking are in general suitable for cooling tubes. In fact, such water is not contaminated in the passage through the ignitron water jacket and may be used for plant purposes. Water containing considerable acid or foreign matter which might clog the water jackets should be avoided. Stainless steel is immune to the effects of most corrosive waters, but is subject to attack by waters containing chlorides. If the chloride ion concentration exceeds 20 parts per million the water should be considered as suspicious and an analysis made to determine its corrosiveness. An excellent reference on the subject of water supplies is the United States Department of Interior, Geological Water Supply Paper 658. In general, local experience is one of the best guides as to the corrosiveness of water. Where highly corrosive waters are encountered, such as in mines, a heat exchanger may be employed of either the water-to-water or the water-to-air type. In such installations, corrosion may be minimized by the addition of 0.1 to 0.2 per cent by weight of sodium or potassium dichromate to the circulating water-cooling system. In general, tubes are connected in series when connected directly to water supplies, and in parallel when connected to heat exchanger units. The minimum water supply temperature must be such that the outlet temperature of the hottest rectifier does not exceed the values given under Technical Information for the voltage at which the unit is operated. The relation between water flow, temperature rise, and watts dissipated is as follows:

$$\text{Kilowatts} = 263.5 \times \text{gpm} \times \triangle C$$

Electrical

Electronic tubes of the ignitron type are power devices in exactly the same sense that transformers and rotating equipment are power devices and as a result adequate circuit breaker protection must be provided. In the case of the welder, the welding transformer acts in effect as a current limiting inductance. However, back-up or line protection in the form of fuses, contactors or breakers should be provided to remove the unit from the line in case there is a fault in the primary of the transformer.

In the case of rectifiers, similar switch gear must be provided for the primary and, in addition d-c breakers are usually required in the output. The d-c breaker is required when several units are connected in parallel to form a common bus bar. In this case, arc back in one tube will permit direct current to be fed through the tube and transformer from the remaining units. These breakers may also be adjusted to limit the permissible overloads as is the case with any conversion apparatus. The primary breaker must be capable of interrupting the maximum kilovolt-ampere of the supply system in case there is a short circuit directly across the primary terminals of the power transformer. Fig. 17 shows the schematic layout of a unit substation including circuit breaker equipment.

Special switch gear for these requirements have been developed by the General Electric Company and reference should be made through the nearest General Electric office or the General Electric Company, Schenectady, New York.

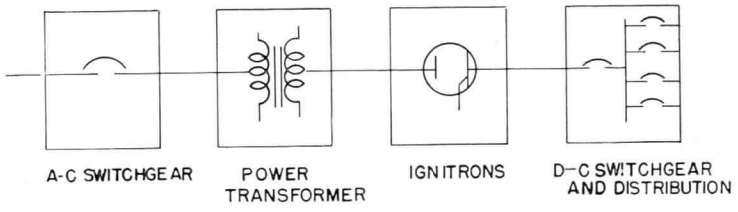

K-9033540

Fig. 17—Line Diagram Showing Component Parts of Ignitron Rectifiers

12-6-44

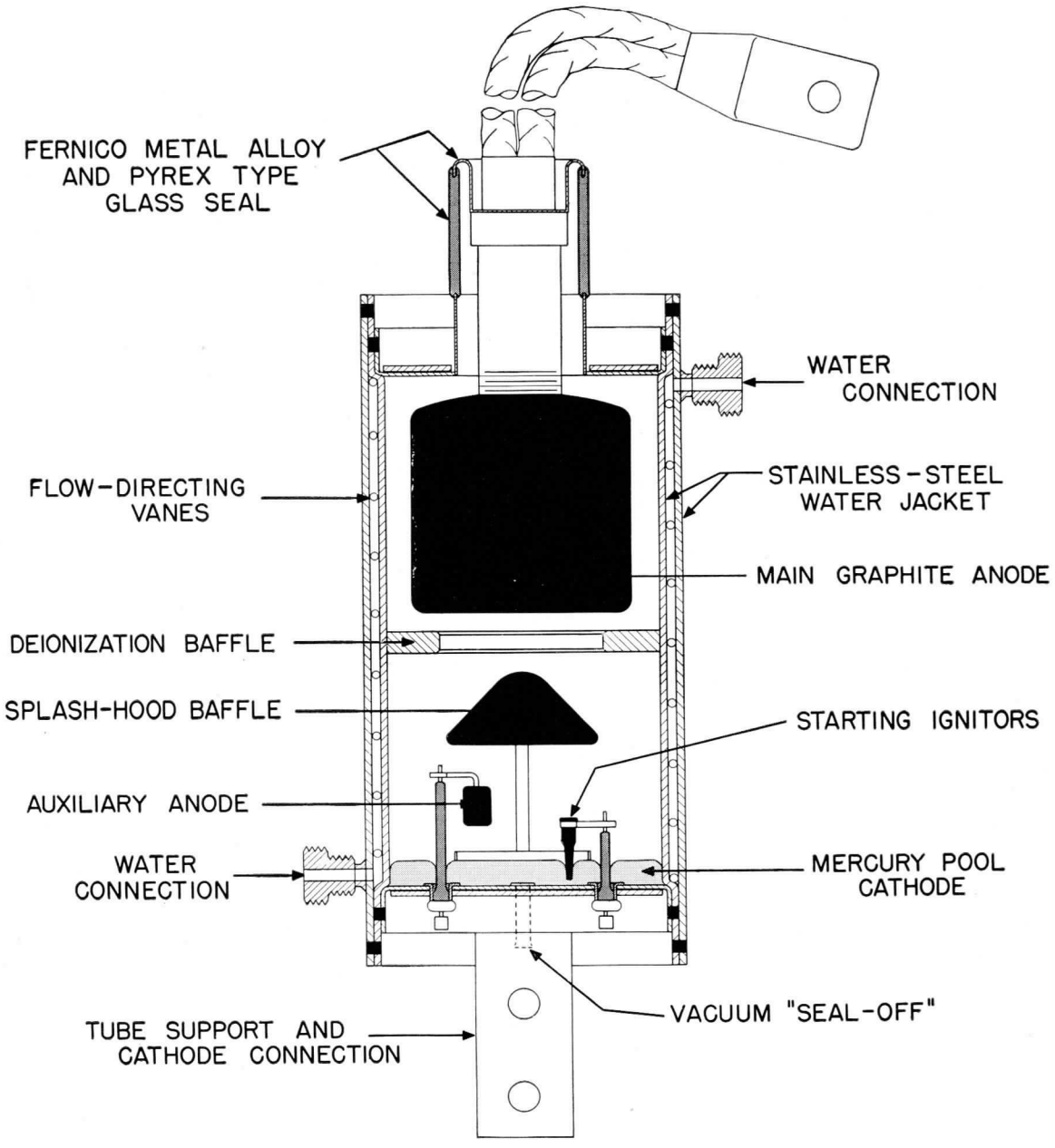

Fig. 19—Cross-Sectional View of the Sealed Ignitron for Power-Rectifier Service

IGNITOR EXCITATION CIRCUITS

Ignition power is usually provided by (1) diverting a part of the load current through the ignitor or (2) by a separate-excitation system which is independent of load current.

The self or anode firing system (see Fig. 18) uses a thyratron to determine the instant of firing and to prevent reverse current from flowing through the ignitor.

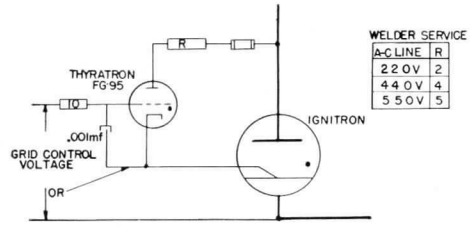

K-9033542 12-6-44

Fig. 18—Self or Anode Excitation in which a Part of the Load Current is Diverted through the Ignitor

A series resistor is used to reduce the duty on the thyratron by limiting the current which passes through the thyratron during the time between ignition and pickup of the main anode, or when misfiring occurs. The recommended value of this resistance depends upon the anode volage for which the set is designed to operate. It is usually 4 ohms for 600 volts and less, and approximately 50 ohms for 2300 volts. It is the simpler and more direct system and is used in the majority of welder applications. In rectifier work the loads, even on large capacity sets, frequently reach such low values that the available current is below the required ignition current. As a result, there tends to be some flickering of the output voltage which may be objectionable if lamps are a part of the connected load. Consequently, most rectifiers are equipped with a separate excitation system which fires the ignitor each cycle and is independent of the load. There is a small auxiliary anode near the cathode pool of each rectifier ignitron (see the cross sectional view, Fig. 19, page 11) which provides for cathode spot excitation current in case the main anode current falls below the stable value which is about 3 amperes.

Fig. 20A shows one form of separate-excitation system in which a capacitor is discharged through a phanotron during one part of the cycle and discharged through a thyratron into the ignitor at the instant it is desired to carry current. The circuit is relatively simple and direct. Complete details showing the charging period, ignitor current wave shape, and output characteristics are shown in Fig. 20B.

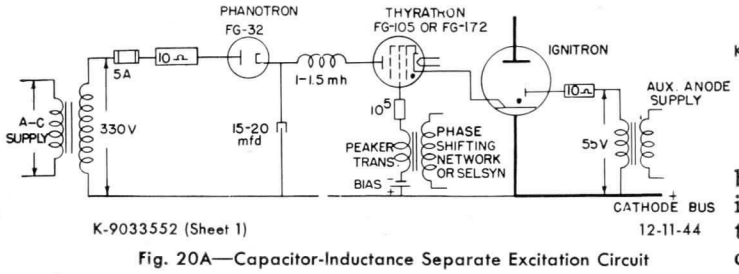

K-9033552 (Sheet 1) 12-11-44

Fig. 20A—Capacitor-Inductance Separate Excitation Circuit

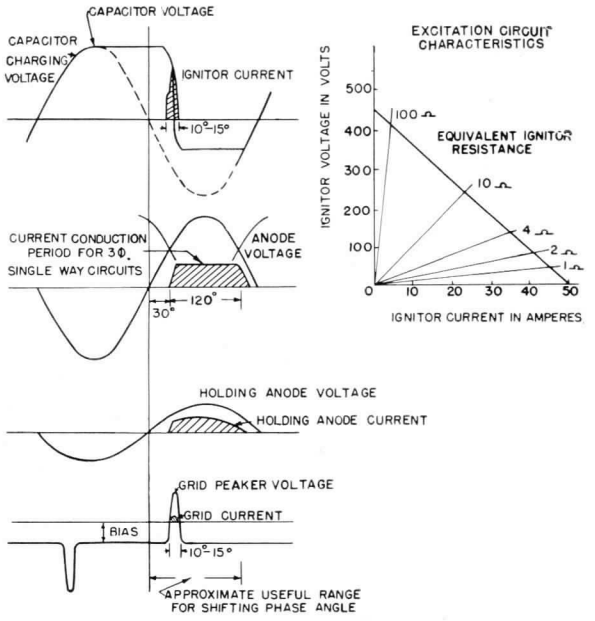

K-9033552 (Sheet 2) 12-11-44

Fig. 20B—Voltage, Current and Phase Relationships for Three-Phase Single Rectifier Circuit

In another form of separate-excitation equipment magnetic circuits in conjunction with saturating reactors have been arranged to produce the required ignitor peak current. Fig. 21 shows the connections in this system. Special reactors are required both for the saturating reactor which determines the wave shape and for the saturable reactor which determines the phase position.

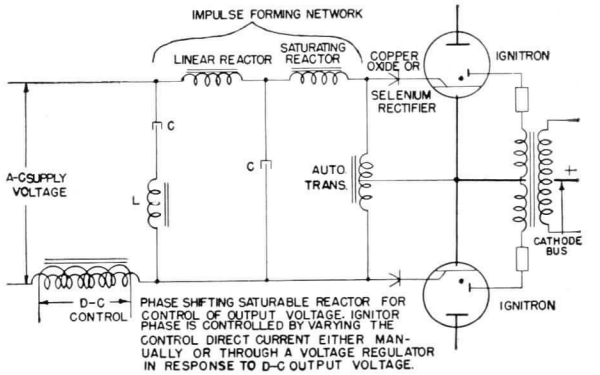

K-9033546 12-6-44

Fig. 21—Magnetic Separate Excitation Circuit for Firing Diametrically Opposite Tubes

Circuit constants for welder applications have been described previously and are essential to the ignitron tube in so far as the demands do not exceed the tube ratings. The ignitrons in the back-to-back connection operate simply as a switch.

RECTIFIER CONSIDERATIONS

In the case of the rectifier, various circuit relations in terms of d-c output, voltage and current wave shapes are given in Figs. 7 through 16. The constants give the theoretical output voltage at no-load conditions. Actually all rectifiers have a certain amount of regulation usually of the order of 6 to 7 per cent depending on the reactance in the power transformer and a-c supply system. Voltage regulation in the rectifier is due to the increase in tube drop with increasing current, the IR drop in the transformer and the voltage loss due to commutation. During the commutation period, current is transferred from one winding to another and for a short time both windings conduct giving an output voltage which is the average of the two phase voltages rather than the higher. This effect is shown in Fig. 22.

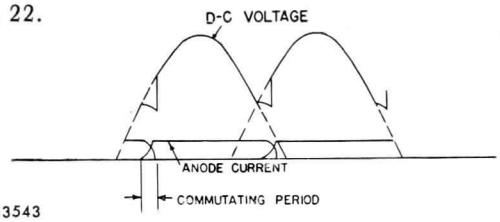

Fig. 22—Wave Diagram Showing Voltage Loss Due to Commutation

The average voltage loss due to commutation is:

$$E_x = pfLI \text{ volts (d-c)} \qquad (1)$$

where

p — Number of phases in each simple rectifier. Circuits shown in Figs. 7, 8, 9, 14 and 16 are simple single-way (current conducted in only one direction in transformer winding connected to tube) rectifiers having 2, 2, 3, 4, and 6 phases respectively.

Rectifiers formed of simple units such as Figs. 10 and 15 have "p" factors corresponding to the simple rectifier, i.e. p = 3 and p = 2.

f = Frequency in cycles per second.

L = Commutating inductance in henrys. It is determined from the transformer secondary reactance ($X_L = 2\pi fL$) of any two successively conducting phases in a simple rectifier, and is most easily determined by short circuiting the primary and determining the voltage to force rated secondary current through any two successively conducting phases. Then, the impedance,

$$Z = \frac{E}{I} \text{ ohms}$$

and if the resistance is known, X_L may be determined from

$$Z = \sqrt{R^2 + X_L^2}$$

I = Current at the start of commutation. This is equal (essentially) to the direct current in the case of simple rectifiers, or to the proportion carried if there are several simple rectifiers in the unit.

The theoretical average or d-c output voltage of a rectifier is:

$$E_{do} = P/\pi\sqrt{2}\, E_s \,(\sin \pi/P)$$

where E_s = the rms value of the transformer secondary line to neutral voltage

For the normal delta double — Y circuit where P = 3;

$$E_{do} = 3/\pi\sqrt{2}\, E_s \,(\sin \pi/3)$$

$$= \frac{3\sqrt{3}}{\sqrt{2\pi}} E_s = 1.17E_s$$

If it is desired to find the secondary voltage required to supply a given output, the theoretical d-c voltage is first determined by adding the resistance, commutation and tube losses to the full load output voltage.

For example, assume a 300-kilowatt, 3-phase double-Y, 275-volt rectifier. Then,

D-c voltage at full load	= 275 v
IR voltage loss in transformer Y at $545A_{mp}$	= 4.5 v
Commutation voltage loss at $545A_{mp}$	= 10.5 v
Tube arc drop	= 15.8 v
Summation: E_{do}	= 305.8 v

and or

$$305.8 = 1.17\,E$$

$$E_s = \frac{305.8}{1.17} = 261 \text{ v (rms)}$$

The regulation is due to the

IR loss in transformer	= 4.5 v
Commutation loss	= 10.5 v
Change in tube drop (0 to $545A_{mp}$)	= 2.4 v
Total loss in voltage	= 17.4 v

and the percentage regulation:

$$\text{Reg} = \frac{(\text{no load voltage} - \text{full load voltage})}{\text{full load voltage}} \times 100$$

$$= \frac{\text{loss in voltage}}{\text{full load voltage}} \times 100 = \frac{17.4}{275} = 6.25\%$$

Circuits other than those shown for rectifier or welder service may be desirable for a particular use. In general, the tube requirements for such circuits and service may be determined by writing to the Electronics Department, Tube Division, Schenectady 5, New York.

MAINTENANCE AND OPERATION

There is very little maintenance in the usual sense of the word that is required for ignitron tubes. The tube should be clean and accumulations of waste should not be allowed to collect around the anode insulation bushing. (Caution: All power should, of course, be removed prior to any cleaning operation.) In case water jackets become clogged with silt, they can, of course, be cleaned out with the usual cleaning solutions. Operational failures of ignitron tubes which are due to the tubes themselves are usually the result of air leakage, gas, or ignitor failure. Gas and air leakage most frequently result in arc back and thus is usually accompanied by severe flashing or showers of red-hot sparks in the anode seal. Such failures can be indicated in general from a visual inspection of the equipment while it is operating. Spare tubes may be checked for vacuum by means of a spark coil of the make and break type. Ignitor failure where the tip has been burned off results in misfire. This fault can be detected by connecting an ohmmeter between the ignitor lead and cathode terminal and slightly tipping the tube to lower the mercury level on the ignitor. The normal tube may be tipped approximately 20 degrees from vertical before the ignitor-mercury contact breaks. Ignitor wetting sometimes occurs in tubes which have carried excessive current. In this case, the cathode spots form on the side walls of the tube and vaporize metal into the mercury pool to cause wetting. This metal in turn is re-evaporated by the arc around the ignitor and since the arc starts each cycle at the ignitor, it tends to become coated with a layer of vaporized metal. This in turn is usually without an oxide for protection, and amalgamation with the mercury takes place. A simple check for this type of failure is again to connect the ignitor and cathode terminals to a resistance analyzer. As the tube is tipped slightly to withdraw the ignitor from the mercury, there should be a gradual increase in the ignitor resistance. If the ignitor is wet, the resistance will remain constant and then suddenly jump to a new and higher value. Operation at too-high water temperatures usually results in arc back in the case of the rectifier tubes, and extra conduction cycles in the case of the welder tube.

Ignitron tubes, in common with most other electronic devices, operate under the instantaneous conditions which occur cycle by cycle. In general, the ignitron tube forms the closing switch in the circuit whether it is a welder or rectifier. Most faults, therefore, appear when this switch is closed, and trouble in other parts of the equipment may frequently be considered as tube trouble. The simplest initial check is to replace the tube which seems in trouble with a spare tube. If additional work is required, a cathode-ray oscilloscope will be found almost invaluable. These units permit a visual observation of the voltage wave shapes across the tube and across component parts of the circuit. A knowledge of these wave shapes under normal conditions and a comparison under fault conditions usually gives a direct solution to the trouble. The General Electric Company is preparing a cathode-ray oscilloscope particularly suited for industrial electronic use. Information on this may be obtained by writing to the Electronics Department, Specialty Division, Syracuse, New York. In addition to a cathode-ray oscilloscope one of the small volt-ohm analyzers is useful in checking circuit constants.

Electronics Department
GENERAL ELECTRIC
Schenectady, N. Y.

RECOMMENDED TYPES AND SELECTION CHART

Ignitrons—Resistance-Welding-Control Service

Size	Type	Maximum Dimensions in Inches		Description	Minimum Ignitor Firing Requirements			Water Flow Normal Gal/min	Water Temp °C		Supply Volts RMS	Maximum Demand KVA	Corresponding Average Anode Current Amp	Maximum Average Anode Current Amp	Corresponding Demand KVA	Maximum Fault Current (Peak Amp)		Maximum Averaging Time (Sec)		Warranty
		Length	Diameter		Pk. Volts	Pk. Amp	Starting Time (μs)		Inlet Min	Outlet Max						@250 V	@600 V	@250 V	@600 V	
A	GL-5550	9 1/16	2 9/64	Two tubes in inverse-parallel control 300 kva at 250–600 volts; 25–60 cycles; ratings per tube.	200	30	100	([1])	10	75	250–600	150	4.86	9.0	50	1680	700	27.8	11.6	H-12
								([1]A)	10	50	250–600	300	12.1	22.4	100	3360	1400	22	9.2	
B	GL-5551-A	13	2 3/4	Replaces GL-5551/FG-271. Provides more effective control of water temperature and flow. Two tubes in inverse-parallel; ratings per tube.	200	30	100	1.0	0	40	250–600	600	30.2	56.0	200	6720	2800	18	7.5	H-12
B	GL-7669	8 11/16	2 3/4	Coaxial version of GL-5551-A. Ratings are similar.																
C	GL-5552-A	14	4 1/4	Replaces GL-5552/FG-235-A. Provides more effective control of water temperature and flow. Two tubes in inverse-parallel; ratings per tube.	200	30	100	1.5	0	40	250–600	1200	75.6	140	400	13,450	5600	14	5.8	H-12
C	GL-7671	9 1/2	4 1/4	Coaxial version of GL-5552-A. Ratings are similar.																
J-C([2])	GL-7681	17 1/2	4 1/4	Two tubes in inverse-parallel control 1800 kva at 250–600 volts; 25–60 cycles; ratings per tube.	200	30	100	2.0	6	45	250–600	1800	113.5	210	600	20,040	8400	9.5	7.1	H-12
D	GL-5553-B	19 1/2	5 5/8	Replaces GL-5553-A. Provides more effective control of water temperature and flow. Two tubes in inverse-parallel; ratings per tube.	200	30	100	3.0	0	40	250–600	2400	192	355	800	27,000	11,200	11.0	4.6	H-12
D	GL-7673	12 13/16	5 5/8	Coaxial version of GL-5553-B. Ratings are similar.																
E	GL-7151	19 3/4	9 1/8	Two tubes in inverse-parallel control 4800 kva at 250–600 volts; ratings per tube.	200	30	100	10	0	40	250–600	4800([3])	486	900	1600	54,000	22,400	8.9	3.8	H-12
—	GL-5554	17	4	Two tubes in inverse-parallel control 1200 kva at 2400 volts; 25–60 cycles; ratings per tube.	450	45	100	1.5	6	30	2400	1200	75	113	600	3000@2400 V		1.50@2400 V		H-24
—	GL-5555	17 15/16	5 1/2	Two tubes in inverse-parallel control 2400 kva at 2400 volts; 25–60 cycles; ratings per tube.	150	40	100	3	6	30	2400	2400	135	207	1105	6000@2400 V		1.66@2400 V		H-24
—	GL-5564	31 1/4	9	Two tubes in inverse-parallel control 3600 kva at 600 volts and 4800 kva at 2400 volts; 25–60 cycles; ratings per tube.	450	45	100	6	0	45	600	3600	530	850	1600	34,000@600V		3.4@600 V		H-24
											2400	4800	270	414	2210	12,000@2400V		1.66@2400 V		
—	GL-6512	Integral thermostat control arrangement version of GL-5554. Same ratings apply.																		H-24
—	GL-6513	Integral thermostat control arrangement version of GL-5555. Same ratings apply.																		H-24
—	GL-6515	Integral thermostat control arrangement version of GL-5564. Same ratings apply.																		H-24

([1])—Air-cooled ratings.
([1]A)—Water-cooled ratings.
([2])—J-C indicates Jumbo C type.
([3])—Maximum demand current below 500 volts should not exceed 9600 amperes RMS.

Frequency range for all ratings is 25–60 cycles per second.
Types GL-5551-A through GL-7151 equipped with mounting pad for demountable thermostat (see Ignitron Accessories Section).
Types GL-5551-A through GL-7673 available with plastic coating.

RECOMMENDED TYPES AND SELECTION CHART

Ignitrons—Frequency-Changer Welding-Control Service

Size	Type	Maximum Dimensions in Inches		Description	Minimum Ignitor Firing Requirements			Water Flow Normal Gal per Min	Water Temp (°C)		Peak Inverse Voltage Volts	Max Peak Anode Current Amp	Corresponding Average Anode Current Amp	Max Average Anode Current Amp	Corresponding Peak Anode Current Amp	Max Fault[1] Peak Current Amp	Warranty
		Length	Diameter		Pk. Volts	Pk. Amp	Starting Time (μs)		Inlet Min	Outlet Max							
B	GL-5551-A	13	2¾	For intermittent-duty power-rectifier service. Contains mounting pad for detachable thermostat to control water flow and temperature.	200	30	100	1.0	0	40	1200	600	5	22.5	135	7500	H-12
B	GL-7669	8 11/16	2¾	Similar to GL-5551-A. Features coaxial cathode connection. Same ratings apply.							1500	480	4	18	108	6000	
C	GL-5822-A	14	4¼	For intermittent-duty power-rectifier service. Contains pad for detachable thermostat to control water flow and temperature.	200	30	100	1.5	10	35	1200	1500	20	70	420	18,750	H-12
C	GL-7672	10⅛	4¼	Similar to GL-5822-A. Features coaxial cathode connection. Same ratings apply.							1500	1200	16	56	336	15,000	
J-C	GL-7681	17½	4¼	For intermittent-duty power-rectifier service. Contains pad for detachable thermostat to control water flow and temperature.	200	30	100	2.0	6	45	1200	2250	30	105	630	28,000	H-12
											1500	1800	24	84	502	22,500	
D	GL-5553-B	19½	5⅜	For intermittent-duty power-rectifier service. Contains pad for detachable thermostat to control water flow and temperature.	200	30	100	3.0	0	40	1200	3000	40	140	840	37,500	H-12
D	GL-7673	12 13/16	5⅜	Similar to GL-5553-B. Features coaxial cathode connection. Same ratings apply.							1500	2400	32	112	672	30,000	

(1)—Maximum duration of fault current for all tubes is 0.15 second.

Frequency range for all ratings is 25–60 cycles per second. All above types available with plastic coating.

Ignitrons—Pulse-Welding-Control Service

Size	Type	Maximum Dimensions in Inches		Description	Minimum Ignitor Firing Requirements			Water Flow Gal/min	Water Temp °C		Peak Inverse Voltage Volts	Initial Peak Inverse Volts	Peak Anode Current Amp	Average Anode Current Amp	Averaging Time Sec.	Anode Current Repetition Rate (pps)	Anode Current Pulse Width (μs)	Warranty
		Length	Diameter		Pk. Volts	Pk. Amp	Starting Time (μs)		Inlet Min	Outlet Max								
B	GL-7670	8 11/16	2¾	Coaxial type. Two tubes in inverse-parallel control 2000 peak amperes at 2500 volts peak at 60 cycles in pulse-welder service.	200	30	100	1.0	10	35	2500	1250	2000	10	2	60	1000	H-12

Ignitrons—Capacitor-Discharge Service

Type	Maximum Dimensions in Inches		Description	Ignitor Firing Requirements						Cooling Requirements		Peak Anode Voltage—Volts		Peak Anode Current		Discharge Rate ppm	Ionization Time μs	Warranty
	Length	Diameter		Forward Open Circuit Volts		Min Inverse Volts	Ignitor Short Circuit Amp		Length Firing Pulse (μs)		Cathode Temp °C	Anode Insulation Temp °C	Forward Volts	Inverse Volts	120 μs Pulse Amp	20 μs Pulse Amp			
				Min	Max		Min	Max	Min	Max									
GL-7171	8¾	2 5/32	For capacitor-discharge and DC short-circuiting switch service.	1500	3000	5	200	250	5	10	35	55	10,000	10,000	29,000	33,750	1	0.5	K-1000
GL-7703	7⅝	2¼	For capacitor-discharge and DC short-circuiting switch service.	1500	3000	5	200	250	5	10	35	70	20,000	20,000	60,000	100,000	2	0.5	K-1000

RECOMMENDED TYPES AND SELECTION CHART

Ignitrons—Power-Rectifier Service

Average Current Amperes	Type	Maximum Dimensions in Inches		Description	Minimum Ignitor Firing Requirements			Water Flow Gal/min	Water Temp °C		Peak Anode Voltage in Volts		Anode Current in Amperes					Warranty
		Length	Diameter		Pk. Volts	Peak Amp	Firing Time (μs)		Inlet Min	Outlet Max	Forward	Inverse	Peak	Average	2-hour(1)	1-minute(2)	Fault(3)	
100	GL-5554	17	4 1/8	For continuous-duty power rectifier service at 100 amperes at 900 volts peak forward and inverse. Has auxiliary anode and two ignitors.	450	45	100	1.5	6	60	900	900	900	100	150	200	6000	G-12
100	GL-6512			Same as GL-5554. Contains integral thermostat control arrangement. Same ratings apply.						45	2100	2100	600	75	112.5	150	4500	
200	GL-5555	17 15/16	5 3/4	For continuous-duty power rectifier service at 200 amperes at 900 volts peak forward and inverse. Has auxiliary anode and two ignitors.	150	40	100	3	6	60	900	900	1800	200	300	400	12,000	G-12
200	GL-6513			Same as GL-5555. Contains integral thermostat control arrangement. Same ratings apply.						45	2100	2100	1200	150	225	300	9000	
200	GL-5788	19 1/4	5 3/4	Similar to GL-5555. Features reliable operation at higher water temperatures and phase-retard operation; has larger diameter ignitor terminals.	450	45	150	3	6	60	900	900	1800	200	300	400	12,000	G-12
200	GL-6514			Same as GL-5788. Contains integral thermostat control arrangement. Same ratings apply.						55	2100	2100	1200	150	225	300	9000	
400	GL-5564	31 1/4	9 1/8	For continuous-duty power rectifier service at 400 amperes at 900 volts peak forward and inverse. Has auxiliary anode and two ignitors.	450	45	100	6	0	60	900	900	3600	400	600	800	25,000	G-12
400	GL-6515			Same as GL-5564. Contains integral thermostat control arrangement. Same ratings apply.						50	2100	2100	2400	300	450	600	19,000	
400	GL-7736	25 15/16	9 1/8	Similar to GL-5564. Features reliable operation at high voltage and with phase-retard operation. Tap water cooling not recommended.	450	45	100	6	35	60	900	2100	3600	400	600	800	15,000	G-12
										50	900	2100	2400	300	450	600	15,000	

(1)—Two-hour rating averaged over any two-minute interval.
(2)—One-minute rating averaged over any one-minute interval.
(3)—Maximum duration of fault current for all tubes is 0.15 second.

Frequency range for all ratings is 25-60 cycles per second.

(OVER)

Ignitrons—Power-Rectifier Service (Cont'd)

Average Current Amperes	Type	Maximum Dimensions in Inches		Description	Minimum Ignitor Firing Requirements			Water Flow Gal/min	Water Temp °C		Peak Anode Voltage in Volts		Anode Current in Amperes					Warranty
		Length	Diameter		Pk. Volts	Peak Amp	Firing Time (μs)		Inlet Min	Outlet Max	Forward	Inverse	Peak	Average	2-hour[1]	1-minute[2]	Fault[3]	
350	GL-6504	27 1/4	12	Double-grid type with three ignitors for locomotive rectifier service. Twelve tubes will supply DC power for 4000 HP locomotive.	450	45	150	10	30	55	100	4000	2000	350	440	....	30,000	G-12
200	GL-6509	17 15/16	5 3/4	Similar to GL-5555. For auxiliary power in rectifier locomotives. Has three ignitors.	450	45	100	3	30	60	900	900	1800	200	300	400	12,000	G-12
										45	2100	2100	1200	150	225	300	9000	
275	GL-6958	27 3/8	12	Double-grid type for industrial power rectifier and inverter service. Especially suited for phase retard operation. Features coaxial cathode connection to reduce magnetic field effects.	450	45	150	10	30	55	4000	4000	2000	275	350	570	30,000	G-12
275	GL-7042			Same as GL-6958. Contains integral thermostat control arrangement. Same ratings apply.														
675	GL-6878	30 1/2	13 1/8	Double-grid type for locomotive rectifier service. Features coaxial cathode connection to reduce magnetic field effects.	450	45	....	10	30	55	100	4000	2500	675	....	....	40,000	G-12
50	GL-5630	22 3/16	5 3/4	For high voltage power-rectifier and inverter service. Also used as capacitor discharge or DC short-circuiting switch.	450	42	100	3	35	45	20,000	20,000	200	50	50	50	2000	G-12
150	GL-6228	42	9	For high voltage power-rectifier and inverter service. Also used in capacitor discharge and DC short-circuiting switch service.	450	45	....	5	35	45	20,000	20,000	900	150	200	300	6000	G-12
10	GL-5779	8 1/4	2 1/2	Small glass air-cooled type for demonstrating the operating principals of ignitors and ignitrons.	150	40	100	....	....	....	350	350	30	10	....	....	300	G-12

(1)—Two-hour rating averaged over any two-minute interval.
(2)—One-minute rating averaged over any one-minute interval.
(3)—Maximum duration of fault current for all tubes is 0.15 second.

Frequency range for all ratings is 25-60 cycles per second.

IGNITRONS

Service Notes

The anode of an ignitron operates at red heat under normal loads. To prevent overheating of the inner-envelope walls at shutdown periods, cooling-water flow should be continued after anode power is removed. In the case of temperature-controlled tubes, where the water flow is maintained by the temperature-control switch, proper water flow will be assured provided the control-switch power supply is not removed simultaneously with the anode supply.

The following table indicates the minimum time during which water flow should continue after removal of anode power:

Ignitron Type	After Removal of Anode Voltage Continue Water Flow for	Temperature-Controlled Ignitron Type	After Removal of Anode Voltage Maintain Power on Control Switch for
GL-5552-A	15 Minutes	GL-6346	15 Minutes
GL-5553-B	30 Minutes	GL-6347	15 Minutes
GL-5554	15 Minutes	GL-6348	30 Minutes
GL-5555	30 Minutes	GL-6512	15 Minutes
GL-5564	1 Hour	GL-6513	30 Minutes
GL-5630	30 Minutes	GL-6514	30 Minutes
GL-5822-A	15 Minutes	GL-6515	1 Hour
GL-6228	1 Hour		
GL-6509	30 Minutes		
GL-6878	1 Hour		

ELECTRONIC COMPONENTS DIVISION
GENERAL ELECTRIC
Schenectady 5, N. Y.

PRINTED IN U.S.A.

IGNITRON ACCESSORIES

THERMOSTATIC SWITCHES

Ignitrons GL-5551-A, GL-5552-A, GL-5553-B, and GL-5822-A are provided with brackets for demountable thermostats to control the tube temperature and the cooling-water flow. The Description and Rating sheets for these types carry a reference to the General Electric catalog numbers of these control thermostats which are illustrated below. They are available in either flying-lead or terminal-block versions.

Kit includes thermostat and spring-loaded fastener in a captive assembly for connection to mounting pad located on ignitron water jacket. Single-pole contacts perform control functions as shown.

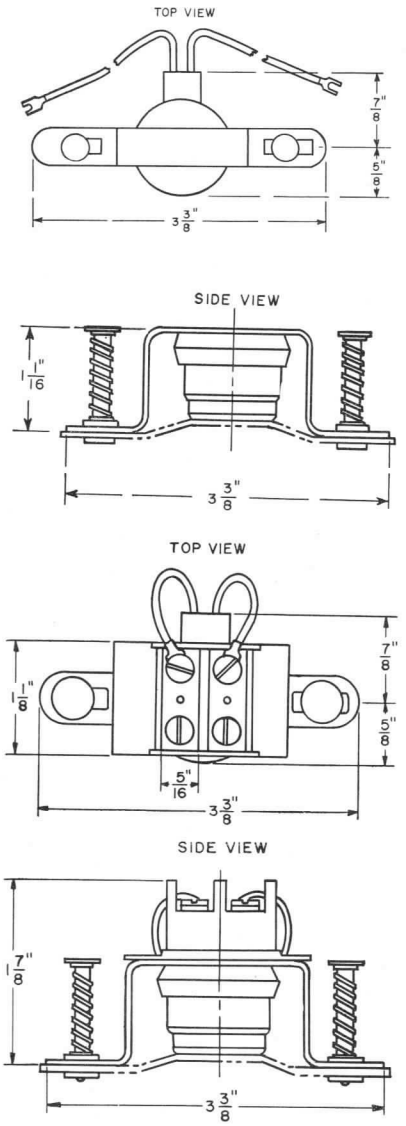

FLYING LEAD TYPE

(36-inch leads with spade terminals)

G-E Cat. No. N15272AA
Water-Control—Contacts normally open
Temperature
Open ..... 86 F
Closed ..... 96 F

G-E Cat. No. N15273AA
Over-Temperature Control—Contacts normally closed
Temperature
Open ..... 125 F
Closed ..... 105 F

TERMINAL-BLOCK TYPE

G-E Cat. No. N15286AA
Water-Control—Contacts normally open
Temperature
Open ..... 86 F
Closed ..... 96 F

G-E Cat. No. N15287AA
Over-Temperature Control—Contacts normally closed
Temperature
Open ..... 125 F
Closed ..... 105 F

Contact Ratings

Voltage	125	250	440	600	Volts AC
Current	3	1.5	0.75	0.50	Amperes AC

The voltage between the switch contacts and the tube envelope should not exceed 600 volts a-c.

ORDERING INSTRUCTIONS—Order by catalog number from regular tube supply source.

GENERAL ELECTRIC

Supersedes ET-T1379 dated 12-56

SOLENOID VALVES

The following solenoid valves are recommended for supplying the cooling water required by the ignitrons listed on page 1.

½-inch Pipe Size—Cat. No. 8210A2
Automatic Switch Company
391 Lakeside Avenue
Orange, New Jersey
Specify coil voltage when ordering this valve.

½-inch Pipe Size—Type A or B. Alike except Type B has manual controls.
J. D. Gould Company
730 East Washington Street
Indianapolis 2, Indiana
Specify coil voltage when ordering this valve.

⅜-inch Pipe Size—Type K-25EW
General Controls Company
31 Thomson Avenue
Long Island City 1, New York
Specify coil voltage when ordering this valve.

⅜-inch Pipe Size—Hays Electroflow
Cat. No. 2100-1011; 115 v, 60CPS
Cat. No. 2100-1111; 230 v, 60CPS
Cat. No. 2100-1211; 440 v, 60CPS
Hays Manufacturing Company
Erie, Pennsylvania

⅜-inch Pipe Size—Type M2-200
Skinner Electric Valve Division
Skinner Chuck Company
New Britain, Connecticut
Specify coil voltage when ordering this valve.

To insure reliable valve operation a 40 by 36 mesh screen strainer should be installed ahead of the valve in the water-supply line.

ORDERING INSTRUCTIONS—Order by catalog or type number from the manufacturers listed.

IGNITOR TERMINAL CONNECTING LEADS

Insulated leads for connecting to 0.250-inch diameter ignitor terminals:
Cat. No. N22006LC— 7¾ inches long
Cat. No. N22007LC—13½ inches long

ORDERING INSTRUCTIONS—Order by catalog number from regular tube supply source.

COOLING CLAMPS

A removable clamp, listed below, is required to accomplish cathode connection and liquid cooling of the GL-5550, GL-7171 and GL-7703 ignitrons. The water circulates through this clamp, which surrounds the tube.

Cat. No. L6922259-G5, right-hand position.

ORDERING INSTRUCTIONS—Order by catalog number from District Industrial Sales Operation office.

CONVERSION KITS FOR TYPES GL-5788 AND GL-6514

These tubes will replace the GL-5555/FG-238-B in any equipment with the use of a conversion kit. The kit contains two water-connection adapters, a large ignitor clip, and one water-flow-constricting washer. The washer is required to increase the water pressure drop across the GL-5788 or GL-6514 when one of these tubes is used in the same unit with a GL-5555/FG-238-B in a parallel-flow, cooling-water system. It is not required when all GL-5555/FG-238-B's are replaced.

Conversion Kit—Cat. No. N15269MA, one per tube required.

ORDERING INSTRUCTIONS—Order by catalog number from regular tube supply source.

QUICK-CHANGE WATER CONNECTORS

Ignitron installation time is reduced through the use of slotted anode and cathode terminals, provided as a regular feature on all standard G-E welding ignitrons, and the use of the quick-change brass water hose connectors shown in table below.

Fitting No.	Description	Use with G-E Ignitron Type
B1H11 B1K11	Socket Plug	GL-5551-A GL-5552-A GL-5822-A GL-7669 GL-7670 GL-7671
B2H16 B2K16	Socket Plug	GL-5553-B GL-7673 GL-7681

ORDERING INSTRUCTIONS—Order by catalog number from regular tube supply source.

GENERAL ELECTRIC
POWER TUBE DEPARTMENT
Schenectady 5, N. Y.

PRINTED IN U.S.A.

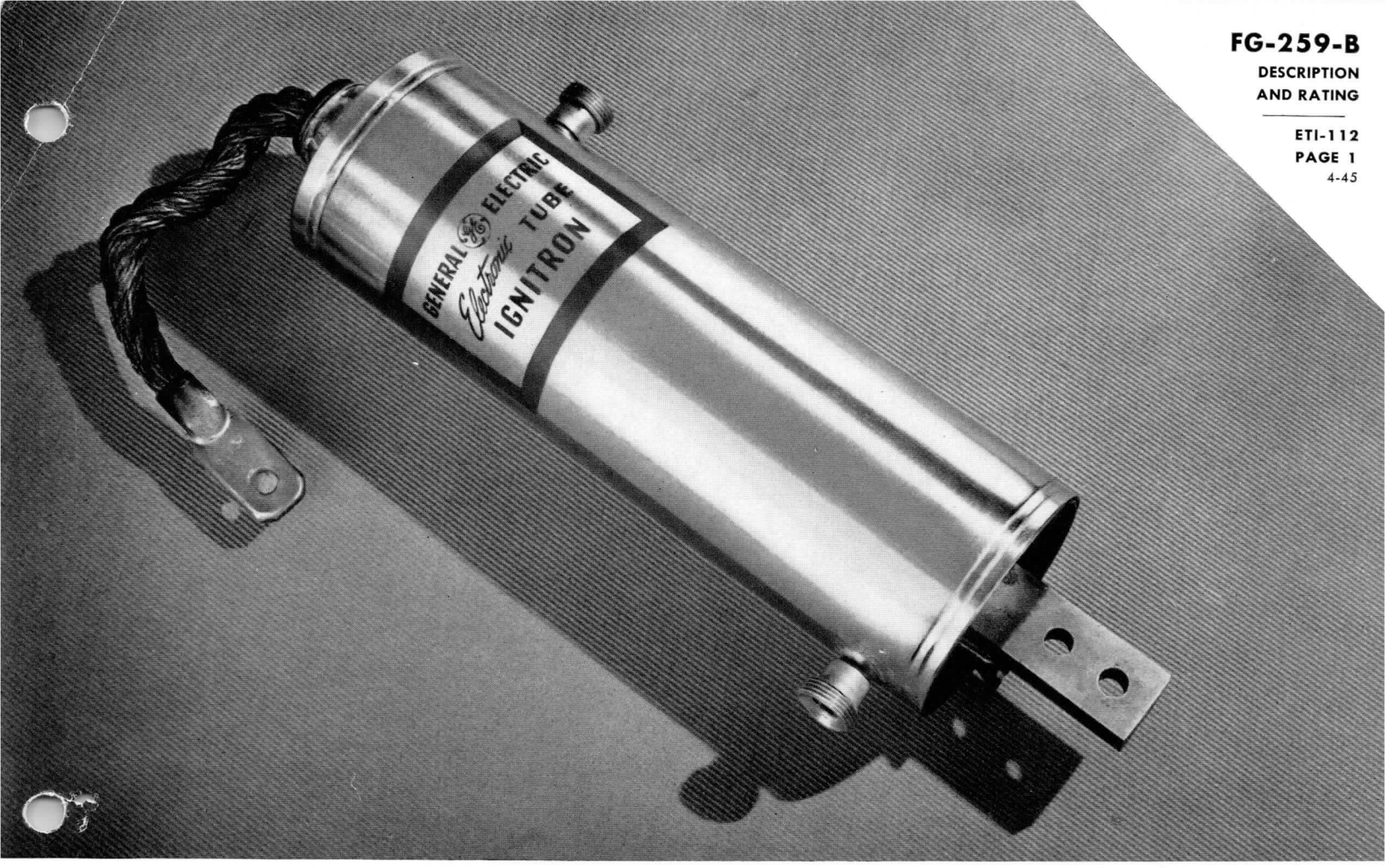

IGNITRON

SPECIAL DESIGN FEATURES

1. Stainless-steel, seam-welded construction
2. Uniform water cooling
3. Strong, compact design
4. Easy to install
5. Copper terminals
6. Flexible anode lead
7. Mercury-pool cathode allows extremely high instantaneous currents to be passed through the tube without damage.

DESCRIPTION

This steel-jacketed ignitron is designed, as is the FG-238-B, for rectifier service in the 125-, 250-, 600-, and 900-volt d-c power fields. The FG-259-B is used for rectifiers rated up to 200 kilowatts depending on the number of ignitrons used, the output voltage, and the circuit.

The FG-259-B is also rated for 2400-volt resistance-welder-control service and has a capacity of 1200 kilovolt-amperes in this service. The FG-259-B has a continuous average current rating of 100 amperes per tube for use in rectifiers rated up to 200 kilowatts.

Arc losses are low. Phase control of the ignitron impulses permits voltage control of the rectified output. Excitation of the small auxiliary anode stabilizes the cathode spot for very small anode currents. Two ignitors, only one of which is used at a time, assure long life.

TECHNICAL INFORMATION

These data are for reference only. For design information refer to specifications.

GENERAL CHARACTERISTICS

Electrical

Voltage drop		
At 100 amperes instantaneous anode current	12.6	volts
At 300 amperes instantaneous anode current	14.4	volts
At 600 amperes instantaneous anode current	17.3	volts

Mechanical

Cathode		pool type
Number of ignitors	2	
Number of main anodes	1	
Number of auxiliary anodes	1	
Type of cooling		water
Typical flow	1.5 to 3	gallons per minute
Pressure drop at above flow	2 to 5	pounds per square inch
Temperature rise with lower rate of flow		
150 amperes per anode	6	centigrade
Net weight, approx.	13.5	pounds
Shipping weight, approx	22	pounds

MAXIMUM RATINGS

Rectifier Service—For Power Supply-Frequency 25 to 60 Cycles, Phase Retard = 0

Maximum inverse and forward anode voltage	900	volts	2100	volts
Maximum anode current				
Instantaneous	900	amperes	600	amperes
Average continuous current	100	amperes	75	amperes
2-hour-average current over any 2-minute period	150	amperes	112.5	amperes
1-minute-average current over any 1-minute period	200	amperes	150	amperes
Surge current, maximum duration 0.15 second	6000	amperes	4500	amperes
Maximum outlet water temperature	60	centigrade	45	centigrade
Minimum inlet water temperature	6	centigrade	6	centigrade
Minimum water flow				
At continuous average anode current	1.5	gallons per minute	1.5	gallons per minute
At no load*	0.5	gallon per minute	0.5	gallon per minute

**For systems in which the flow of water is controlled by the load.*

Welder-Control Service—Ratings are for 2400 Volts Rms, Frequency 25 to 60 Cycles

Maximum demand	1200	kva
Corresponding average anode current	75	amperes
Maximum average anode current	113	amperes
Corresponding demand	600	kva
Maximum time of averaging anode current at 2400 volts, rms	1.50	seconds
Minimum water flow	1.5	gallons per minute
Maximum outlet water temperature	30	centigrade
Maximum surge current	3000	amperes
Maximum duration of surge current	0.15	second

Ignition Requirements (Ratings are the same for both Welder and Rectifier Service)

Ignitor voltage		
Maximum instantaneous allowed, ignitor positive—same as anode voltage		
Maximum instantaneous allowed, ignitor negative	5	volts
Ignitor current		
Maximum instantaneous allowed	100	amperes
Maximum average allowed	2.0	amperes
Time of averaging current	10	seconds
Maximum ignition time	100	microseconds

TECHNICAL INFORMATION (CONT'D)

Anode firing (See elementary circuit K-9033528)

Maximum instantaneous ignitor potential required	150 volts
Maximum instantaneous ignitor current required	40 amperes
Typical resistance added to ignitor circuit for anode firing	
At anode voltage of 600 volts or less	4 ohms
At anode voltage of 601 volts to 1000 volts	10 ohms
At anode voltage of 1001 volts to 1500 volts	20 ohms
At anode voltage of 1501 volts to 2000 volts	35 ohms
At anode voltage of 2001 volts to 2400 volts	50 ohms
Separate excitation (See elementary circuit K-9033525)	
Minimum volt-ampere requirements for separate excitation	
Firing systems are shown on K-9033529	

Auxiliary Anode Requirements (Ratings are the same for both Welder and Rectifier Service)

Maximum average current	5 amperes
Maximum inverse voltage	
With main anode conducting	25 volts
With main anode not conducting	150 volts

FG-259-B
MINIMUM VOLT-AMPERE REQUIREMENTS FOR SEPARATE-EXCITATION FIRING SYSTEMS

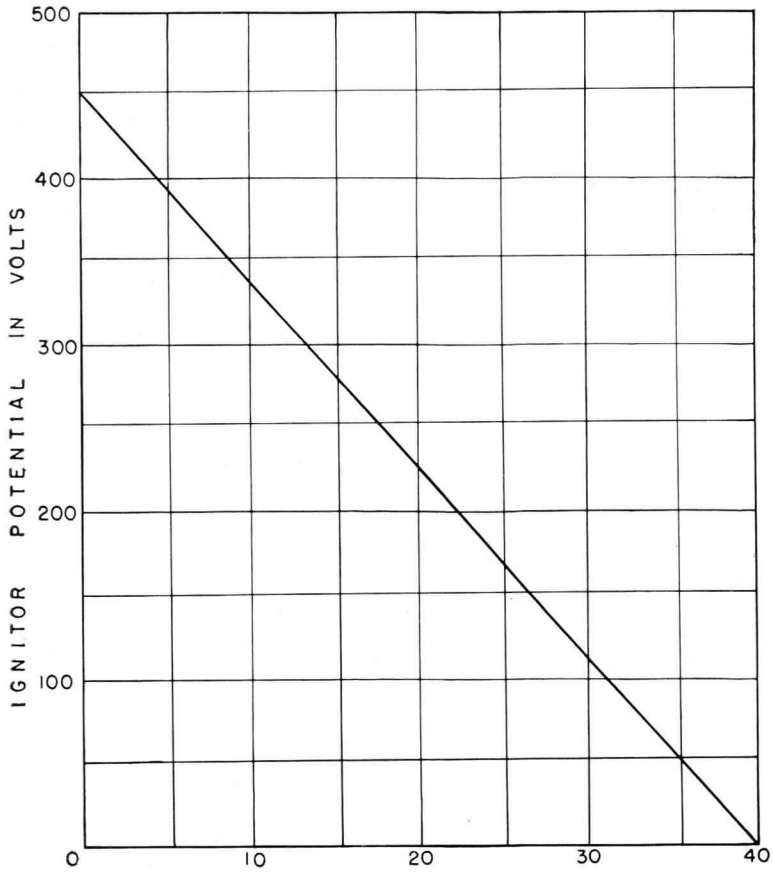

K-9033529 FIG. 2 11-15-44

FG-259-B
ELEMENTARY CIRCUIT FOR CAPACITOR FIRING

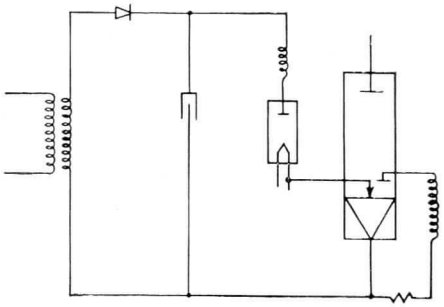

FIG. 1

K-9033525 11-15-44

FG-259-B
ELEMENTARY CIRCUIT FOR ANODE FIRING

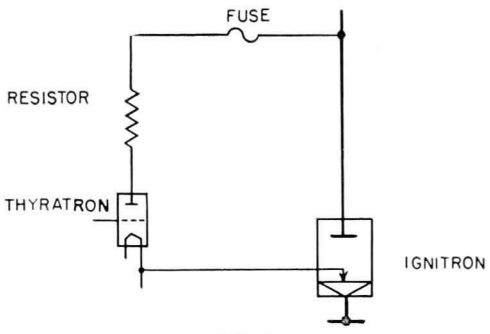

FIG. 3

K-9033528 12-16-44

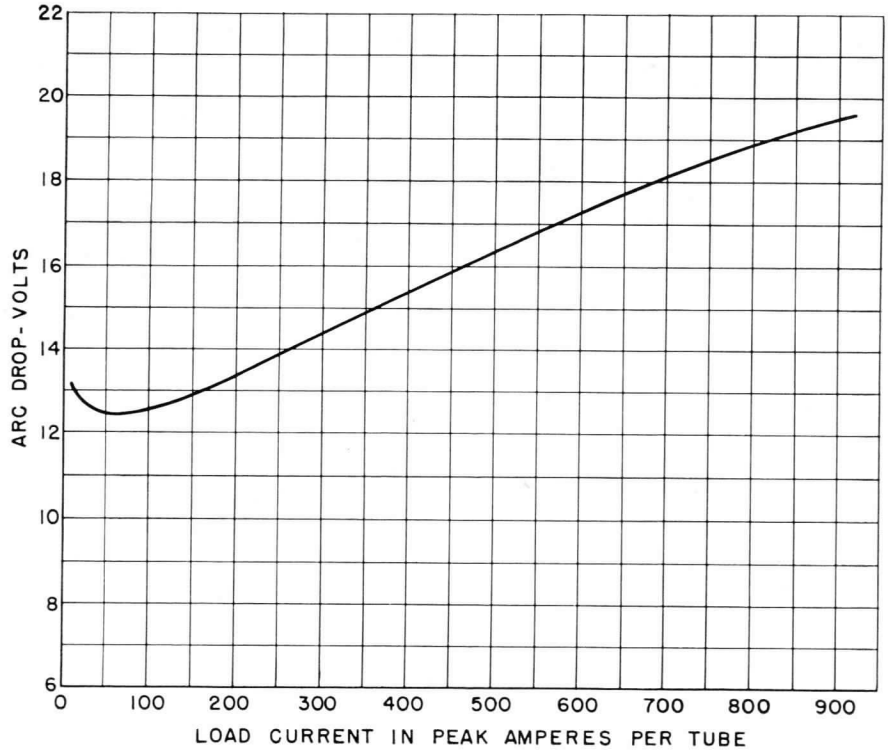

FG-259-B ARC DROP, OUTLET WATER
TEMPERATURE—40 TO 60 C, WATER FLOW—1.5 GPM

K-6917493 7-1-44

FIG. 4

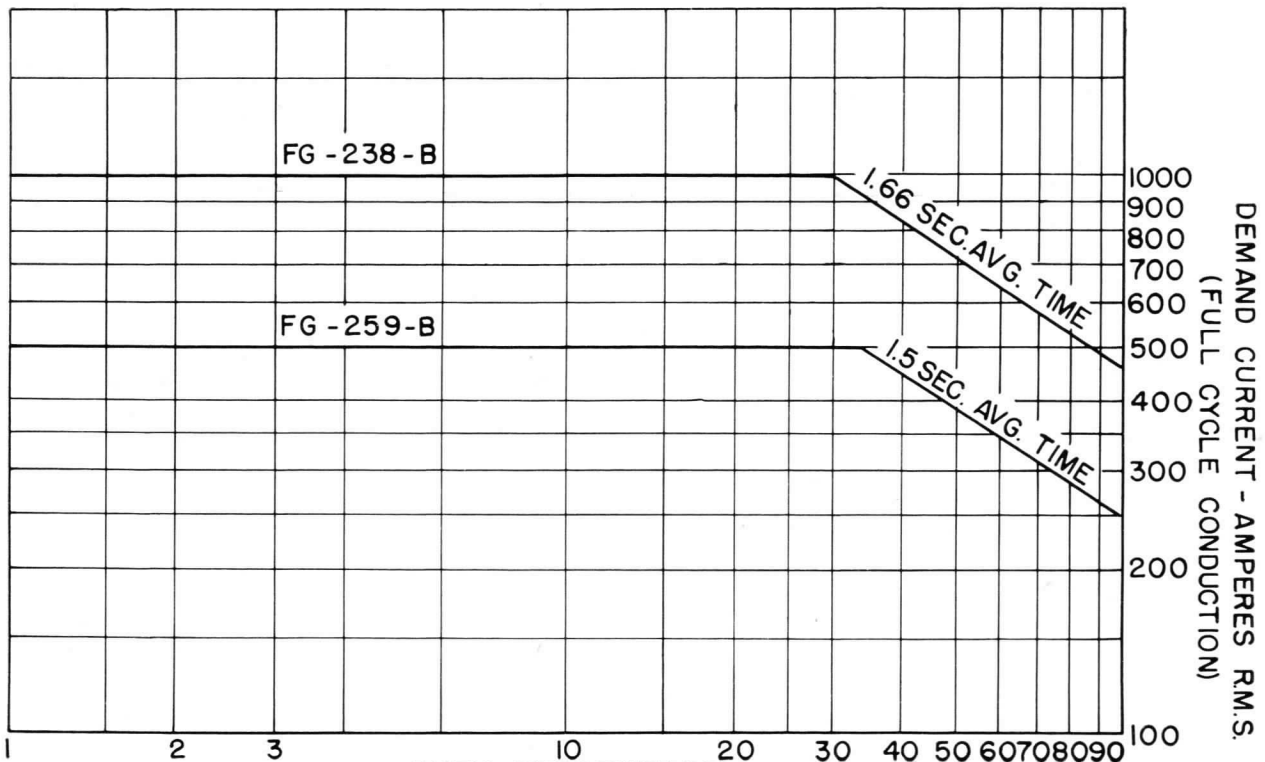

FG-259-B IGNITRON; DEMAND CURRENT VS PERCENTAGE DUTY AT 2400 VOLTS RMS, MAX OUTLET WATER TEMP 30 C, MIN WATER RATE 1.5 GAL/MIN, WELDER CONTROL SERVICE

K-8074661 9-26-44

FIG. 5

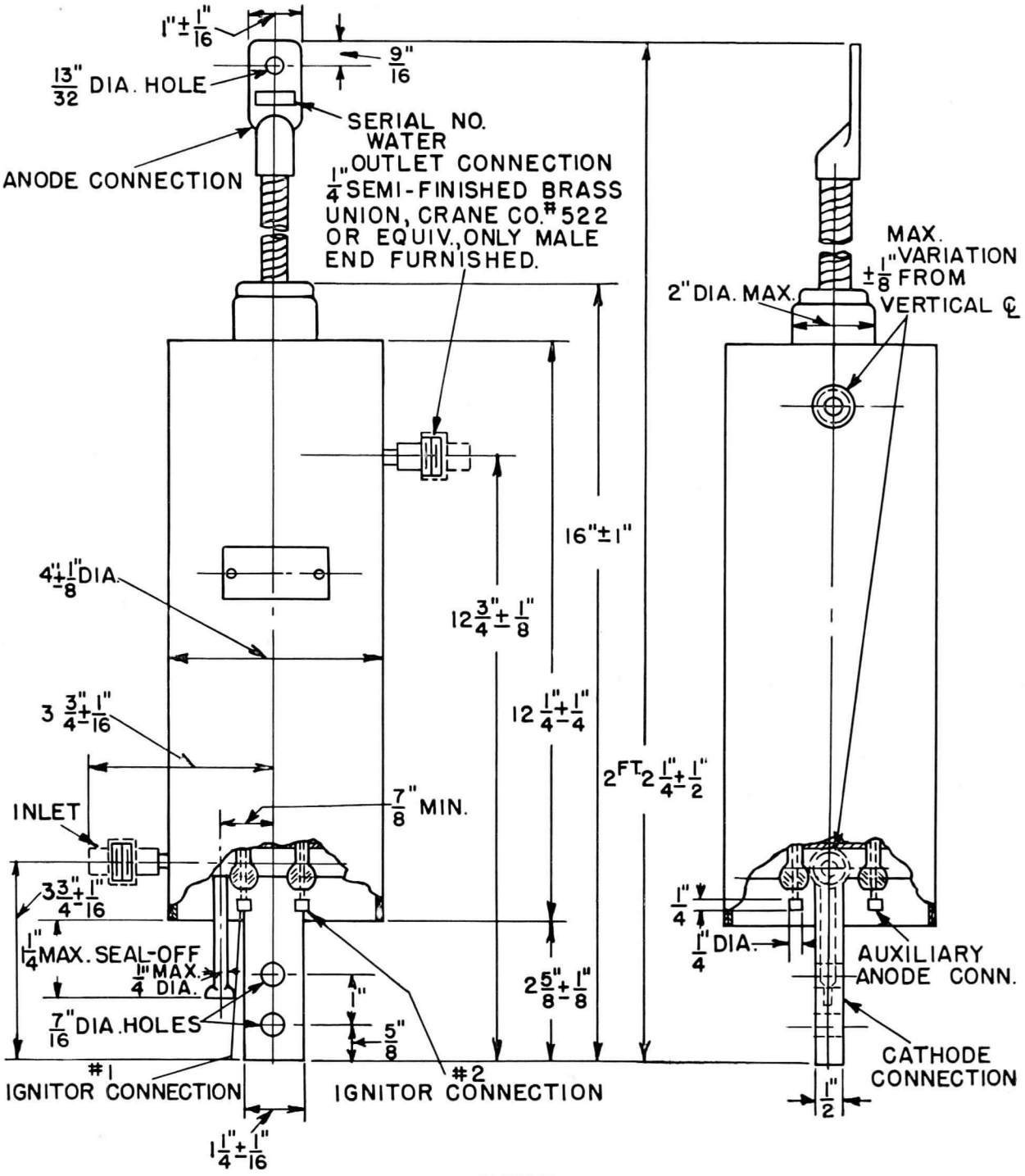

OUTLINE
FG-259-B IGNITRON

K-5344767

8-10-44

Electronics Department
GENERAL ELECTRIC
Schenectady, N. Y.

10-47 (8M)
Filing No. 8850

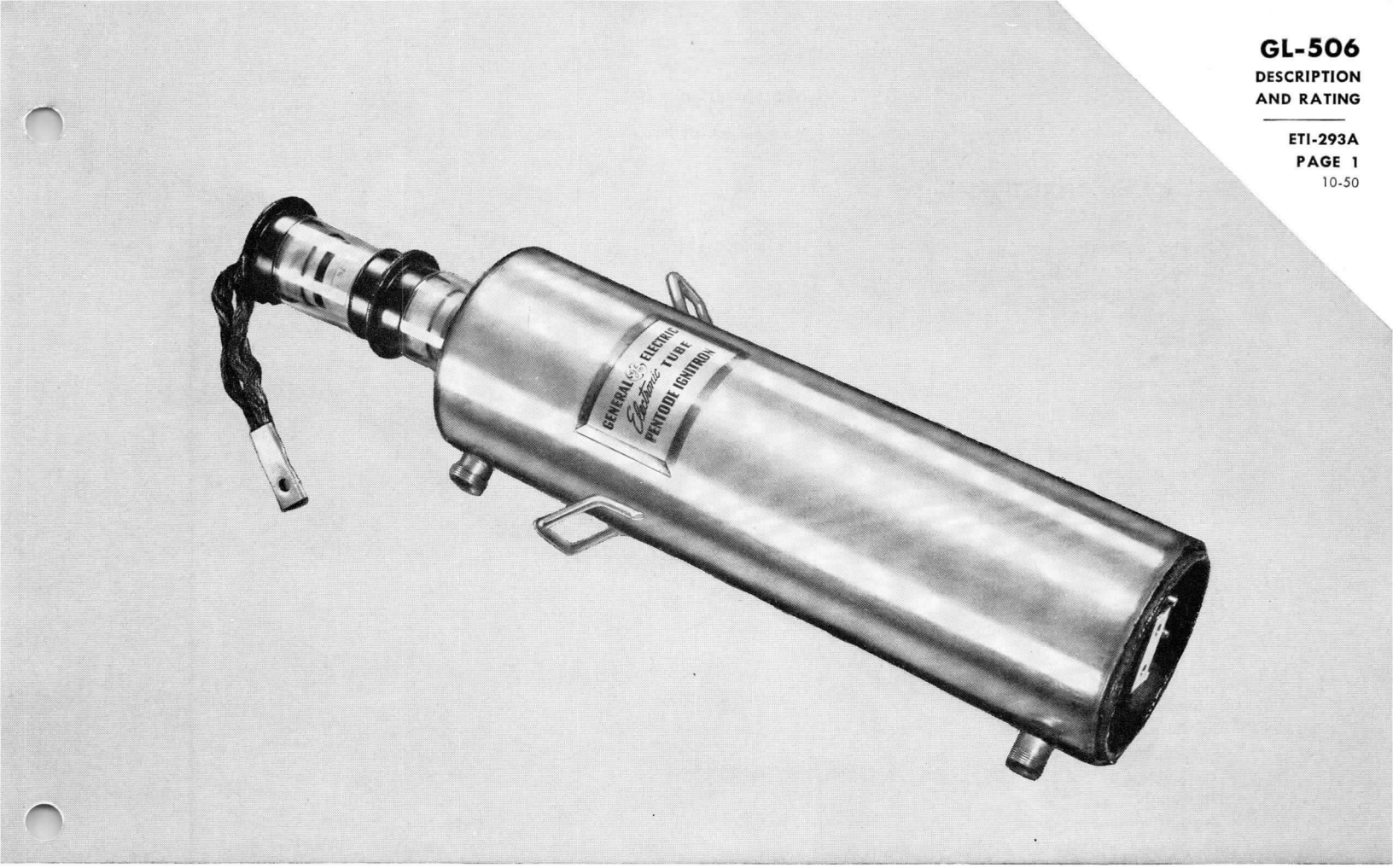

PENTODE–IGNITRON

SPECIAL DESIGN FEATURES

1. Stainless-steel, seam-welded construction
2. Uniform water cooling
3. Strong, compact design
4. Easy to install
5. Copper terminals
6. Flexible anode lead
7. Mercury-pool cathode allows extremely high instantaneous currents to be passed through the tube without damage.

DESCRIPTION

The GL-506 is a sealed, stainless-steel-jacketed, water-cooled, mercury-pool tube designed primarily for use in electronic frequency changers. In this service 6 tubes will rectify or invert up to 7500 kilowatts at 17,500 volts.

GENERAL ELECTRIC

Supersedes ETI-293 dated 12-48

Electronic TUBE

TECHNICAL INFORMATION

These data are for reference only. For design information refer to specifications.

GENERAL CHARACTERISTICS

Electrical

Cathode excitation—cyclic		
Cathode spot starting—ignitor		
Number of electrodes		
Main anodes	1	
Main cathodes	1	
Auxiliary anodes	2	
Ignitors	3	
Control grids	2	
Auxiliary grids	1	
Arc drop at 450 peak amperes (See arc-drop curve for details)	23 ± 2	volts
Cathode excitation requirements		
Ignitor voltage required to fire	450	volts
Ignitor current required to fire (See curve for details)	45	amperes
Grid requirements		
Positive current to establish conduction	1.00	ampere
Minimum voltage to establish conduction	+100	volts
Minimum voltage to prevent conduction (See curves for grid characteristics)	−50	volts

Mechanical

Envelope material—metal		
Over-all length	57 ± 2	inches
Over-all width	12½ ± 1	inch
Net weight	100 ± 5	pounds
Type of cooling—water		
Characteristics for water cooling		
Water temperature rise, maximum	4	C
Pressure drop at 5 gallons per minute, maximum	4	pounds per square inch

Thermal

Water cooling		
Maximum outlet water temperature	45	C
Minimum inlet water temperature	35	C
Minimum water flow at continuous rated average current	5	gallons per minute
Minimum water flow at no load	5	gallons per minute

MAXIMUM RATINGS

AS POWER RECTIFIER TUBE

Maximum peak anode voltage		
Inverse	20,000	volts
Forward	20,000	volts
Maximum anode current		
Peak	900	amperes
Average		
Continuous	150	amperes
2 hours	200	amperes
1 minute	300	amperes
Surge	5000	amperes
Maximum duration of surge current	0.15	seconds
Frequency range*	25–60	cycles per second

IGNITOR

Maximum voltage		
Positive	1000	volts
Negative	5	volts
Maximum current		
Peak	100	amperes
RMS	17.5	amperes
Average	2.5	amperes
Maximum averaging time	10	seconds
Starting time at required voltage or current	100	microseconds

TECHNICAL INFORMATION (CONT'D)

AUXILIARY-ANODE

Maximum current		
Peak	20	amperes
Average	5	amperes
Maximum averaging time	1	second
RMS	10	amperes
Maximum peak forward voltage	200	volts
Maximum peak inverse voltage		
Main anode conducting	25	volts
Main anode not conducting	150	volts

GRID

Maximum peak forward voltage	500	volts
Maximum peak inverse voltage	200	volts
Maximum grid-current		
Peak positive	5	amperes
Peak negative	0.1	ampere
Average	1.0	ampere
RMS	2.0	amperes

* Ratings are for zero phase-control angle

◆GL-506
ARC DROP CHARACTERISTIC
FOR COOLING WATER TEMPERATURES
OF
30–60 C

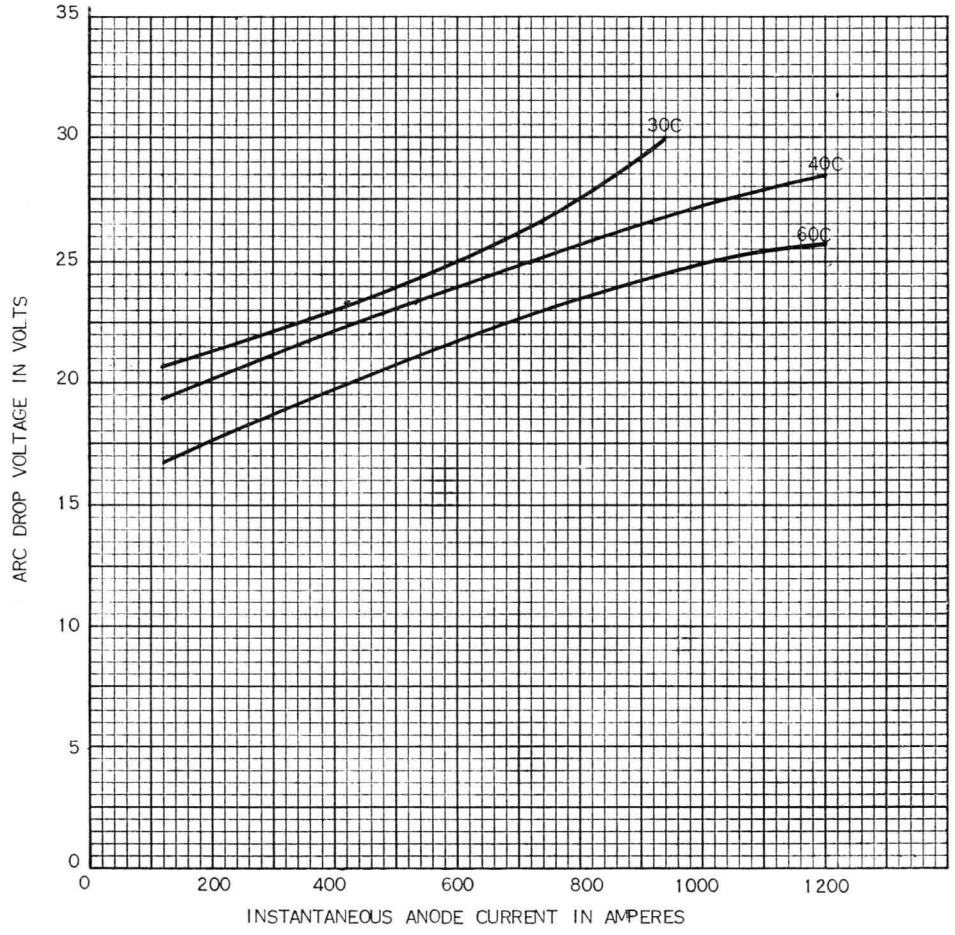

K-69087-72A196
◆ Revised drawing

5-2-49

IGNITOR VOLT-AMPERE REQUIREMENTS
SEALED-IGNITRON RECTIFIERS

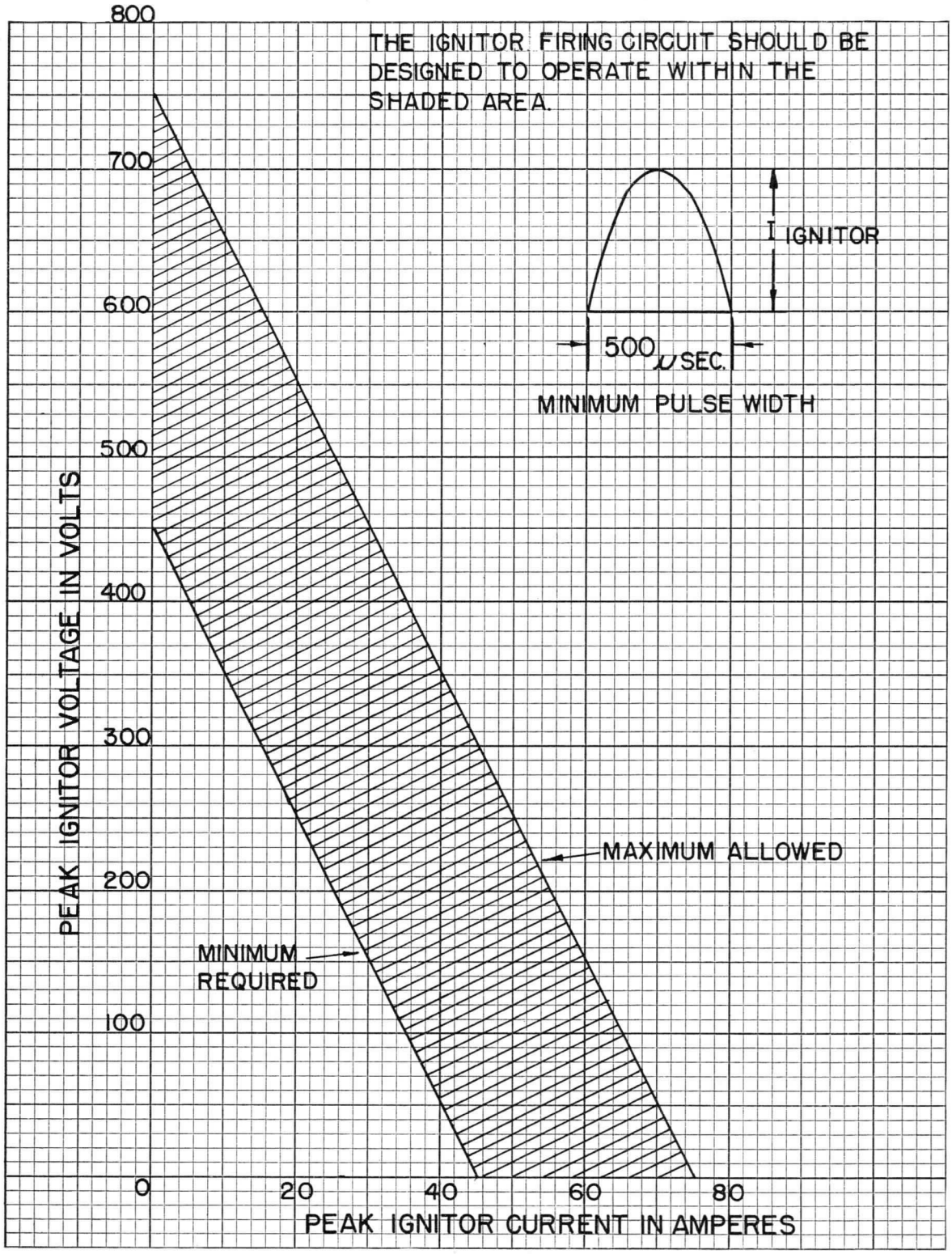

K-9033883

6-14-45

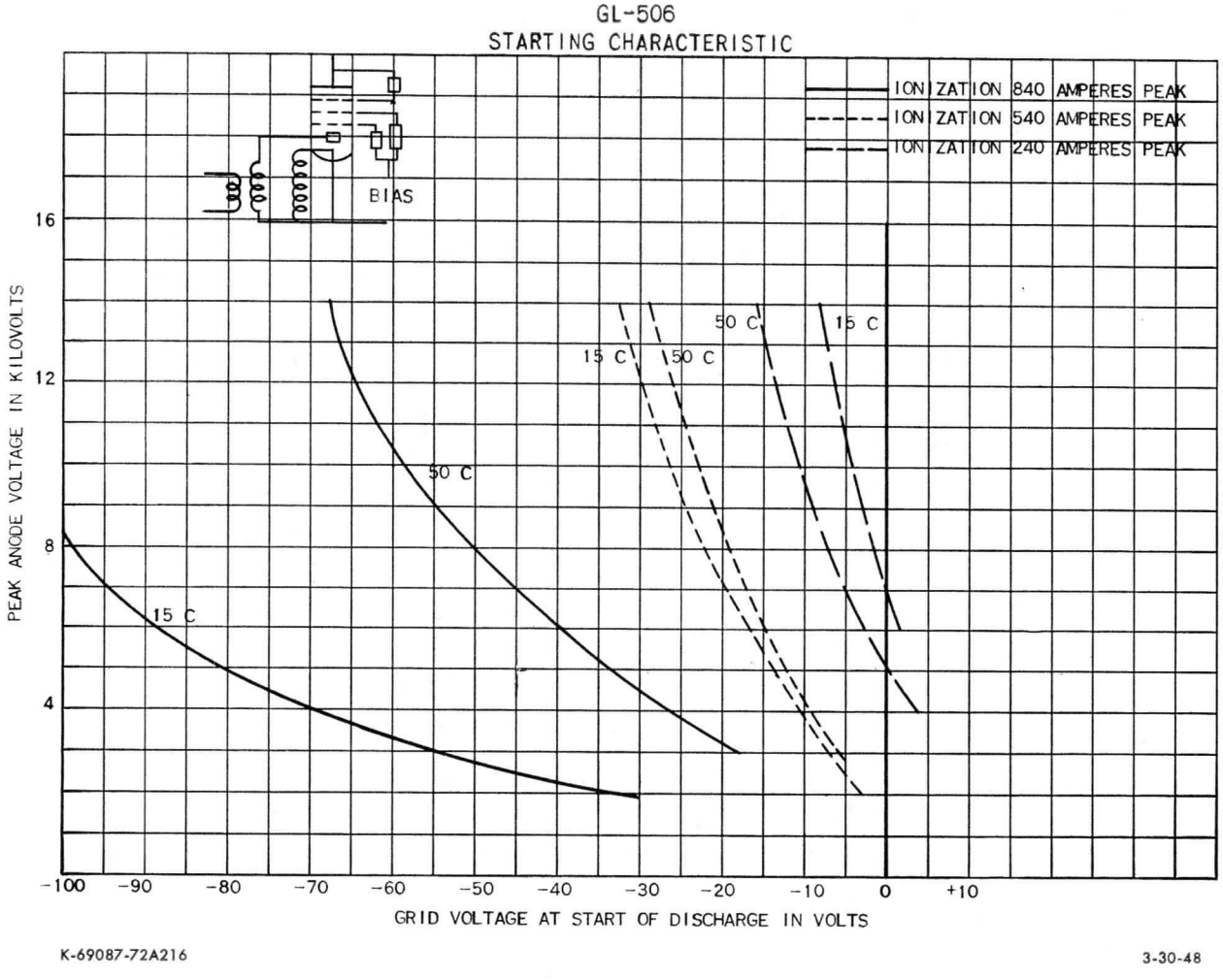

K-69087-72A216

3-30-48

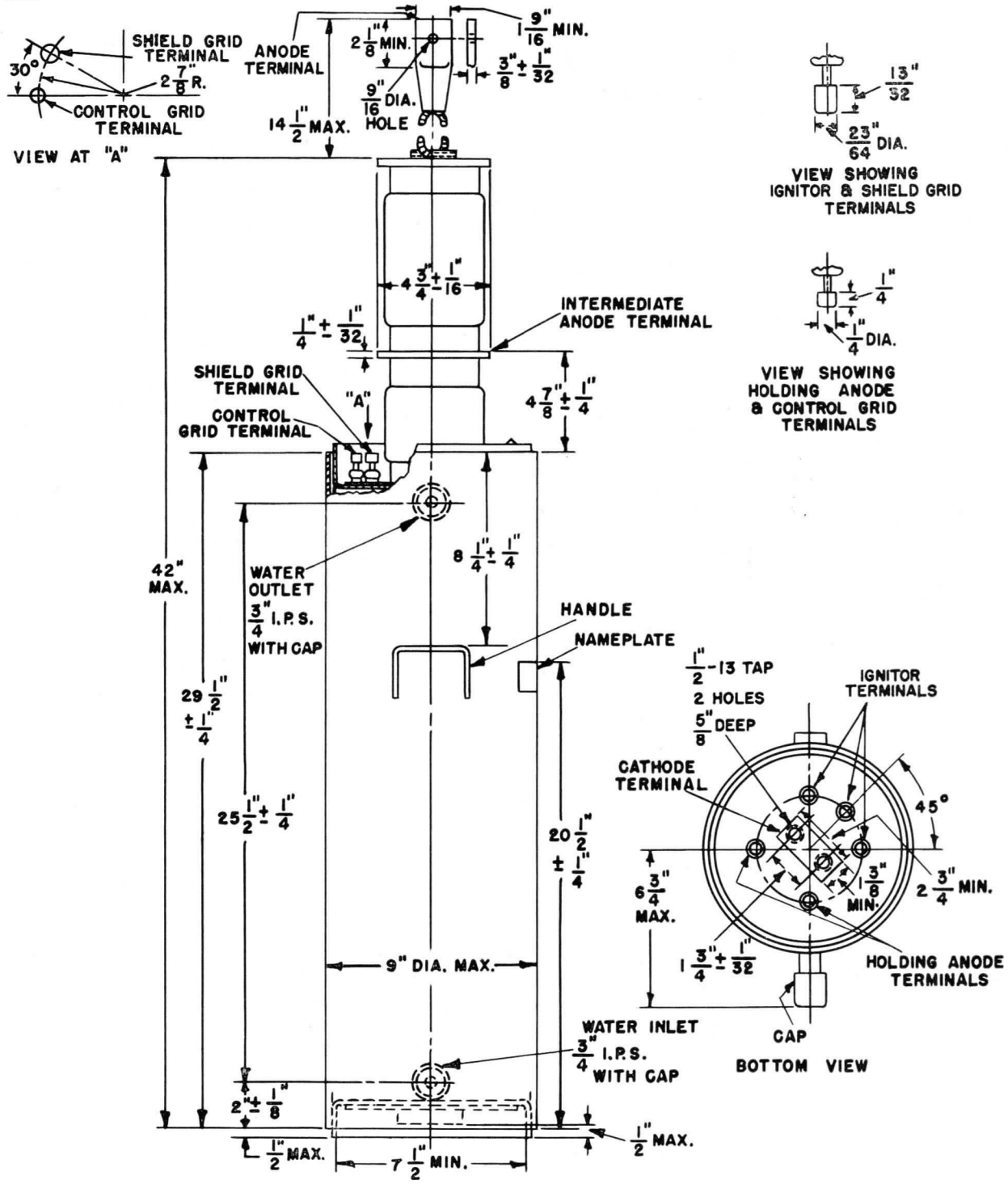

OUTLINE
GL-506 IGNITRON

N-22002AZ

9-29-47

Tube Divisions, Electronics Department

GENERAL ELECTRIC

Schenectady, N. Y.



IGNITRON

RECTIFIER SERVICE—40 AMPERES **TEMPERATURE CONTROLLED**
RESISTANCE-WELDING-CONTROL SERVICE—56 AMPERES

The GL-6346 ignitron is a sealed, stainless-steel-jacketed, water-cooled, mercury-pool tube especially suited to resistance-welding-control service. In this service two tubes in the inverse-parallel connection will control 600 kilovolt-amperes at voltages of 250 to 600 volts over the frequency range of 25 to 60 cycles. The ability of this tube to carry very high peak currents for short periods makes it especially suited to such service.

Ease of installation, economical use of space, and reliability of operation are assured by design and construction features inherent in the steel-jacketed construction.

This tube is identical in ratings and characteristics to the GL-5551/FG-271. Mechanically, it has the additional feature of an integral temperature-control device with protective features. The control includes a switch which operates a solenoid valve in the water-supply line to the tube in response to increasing and decreasing tube temperature thus maintaining the amount of cooling water to the minimum required by the operating conditions. An over-temperature switch is included to remove power from the ignitron when its temperature exceeds a safe value. In applications where the cooling water flows through two tubes in series, this tube can be used with the GL-5551/FG-271 since the GL-6346, in the position nearer the water drain where it receives the warmer water, can control the flow to both under normal conditions.

This new construction prevents excessive condensation over the external parts of the tube under conditions of high humidity. Another advantage is the appreciable saving in maintenance costs over tubes of the old design since this control feature, in addition to greatly reducing the amount of water required, eliminates the necessity for such safety devices as water-flow relays, water over-temperature relays, and water-pressure interlocks required with the older design tubes. The GL-6346 ignitron is equivalent to a 300-ampere magnetic contactor.

TECHNICAL INFORMATION

GENERAL

Electrical

Cathode Excitation—Cyclic		
Cathode Spot Starting—Ignitor		
Number of Electrodes		
Main Anodes	1	
Main Cathodes	1	
Ignitors	1	
Arc Drop at 3400 Peak Amperes	26	Volts
Arc Drop at 176 Peak Amperes	13	Volts
Cathode Excitation Requirements		
Ignitor Voltage Required to Fire	200	Volts
Ignitor Current Required to Fire	30	Amperes
Starting Time at Required Voltage or Current	100	Microseconds

Mechanical

Envelope Material—Stainless Steel		
Net Weight	3.6	Pounds

Thermal

Type of Cooling—Water		
Inlet Water Temperature, minimum	10	C
⊕Inlet Water Temperature, maximum	40	C
Water Flow, minimum, solenoid water valve open	1.0	Gallons per Minute
Characteristics for Water Cooling at Rated Minimum Flow		
Water Temperature Rise, maximum	4	C
Pressure Drop at 1 Gallon per Minute, maximum	1.8	Pounds per Square Inch

MAXIMUM RATINGS AND TYPICAL OPERATION

Power-Rectifier Service, Intermittent Duty

Ratings are for Zero Phase-Control Angle—See Curve for Details

Maximum Peak Anode Voltage				
Inverse	500	1200	1500	Volts
Forward	500	1200	1500	Volts
Maximum Anode Current				
Peak	700	600	480	Amperes
Corresponding Average	.....	5	4	Amperes
Average	40	22.5	18	Amperes
Corresponding Peak	.....	135	108	Amperes
Maximum Averaging Time	6	10	10	Seconds
Ratio of Average to Peak Current, maximum				
Averaging Time 0.2 Second	.....	0.166	0.166	
Ratio of Fault to Maximum Peak Current	12.5	12.5	12.5	
Maximum Duration of Fault Current	0.15	0.15	0.15	Seconds
Frequency Range	50–60	50–60	50–60	Cycles per Second

Resistance-Welding-Control Service*

Two Tubes in Inverse Parallel, Ratings per Tube

Voltage Range	250 to 600	Volts RMS
Maximum Demand	600	Kilovolt-Amperes
Average Current at Maximum Demand	30.2	Amperes
Maximum Average Current	56.0	Amperes
Demand at Maximum Average Current	200	Kilovolt-Amperes
Maximum Averaging Time at 250 Volts RMS	18	Seconds
Maximum Averaging Time at 600 Volts RMS	7.5	Seconds
Maximum Peak Fault Current at 250 Volts	6720	Amperes
Maximum Peak Fault Current at 600 Volts	2800	Amperes

TECHNICAL INFORMATION (CONT'D)

MAXIMUM RATINGS AND TYPICAL OPERATION (Cont'd)

Ignitor

Maximum Voltage		
Positive—Anode Voltage		
Negative	5	Volts
Maximum Current		
Peak	100	Amperes
Root Mean Square	10	Amperes
Average	1	Amperes
Maximum Averaging Time	5	Seconds

Temperature-Control-Switch Ratings†

Maximum Voltage	575	Volts
Maximum Current		
□Over-Temperature Switch	6	Amperes
□Water-Control Switch	1.5	Amperes
Maximum Peak Potential of Tube Water Cylinder		
Above Ground	1500	Volts
Switch-Contact Arrangement		
Over-Temperature Switch—Normally Closed		
(Contacts Open on Temperature Rise)		
Water-Control Switch—Normally Open		
(Contacts Close on Temperature Rise)		

⊕Denotes a change.

* RMS demand voltage, current, and kilovolt-ampere demand are all on the basis of full-cycle conduction (no phase delay) regardless of whether or not phase control is used. For voltages below the minimum, the minimum-voltage current rating applies. With the use of log-log paper straight-line interpolation between tabulated points may be used for other detailed ratings of: Demand kva vs average anode current, and maximum averaging time vs anode voltage.

† Suitable fuses should be provided in the switch circuits to prevent a power arc should a ground occur in the switch or wiring.

□Denotes an addition.

CURVES K-69087-72A217, K-69087-72A218, AND K-69087-72A219
DO NOT APPLY FOR INTERMITTENT-RECTIFIER SERVICE

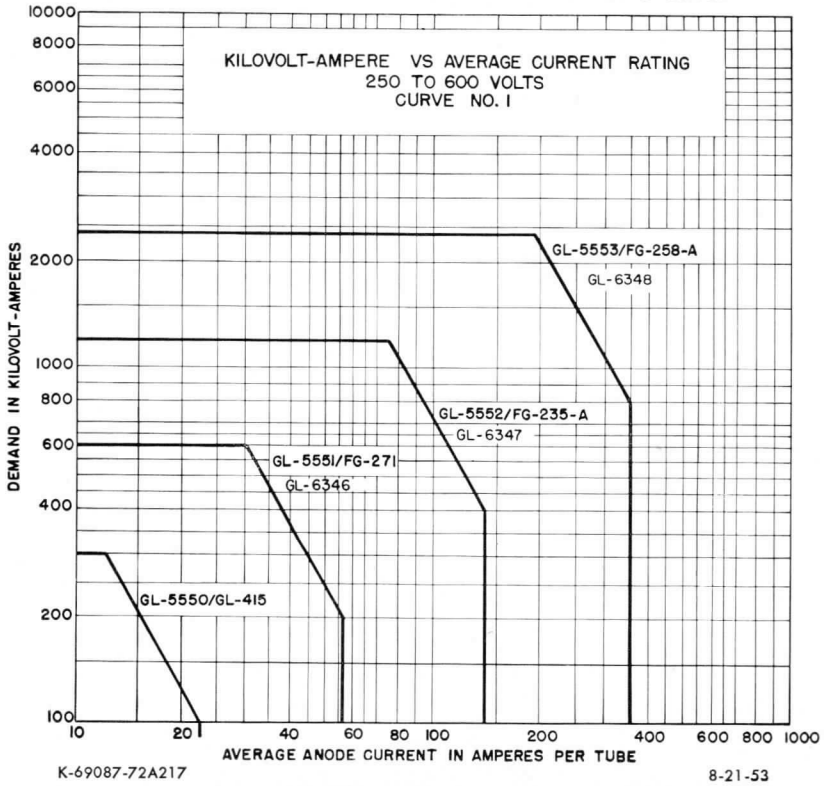

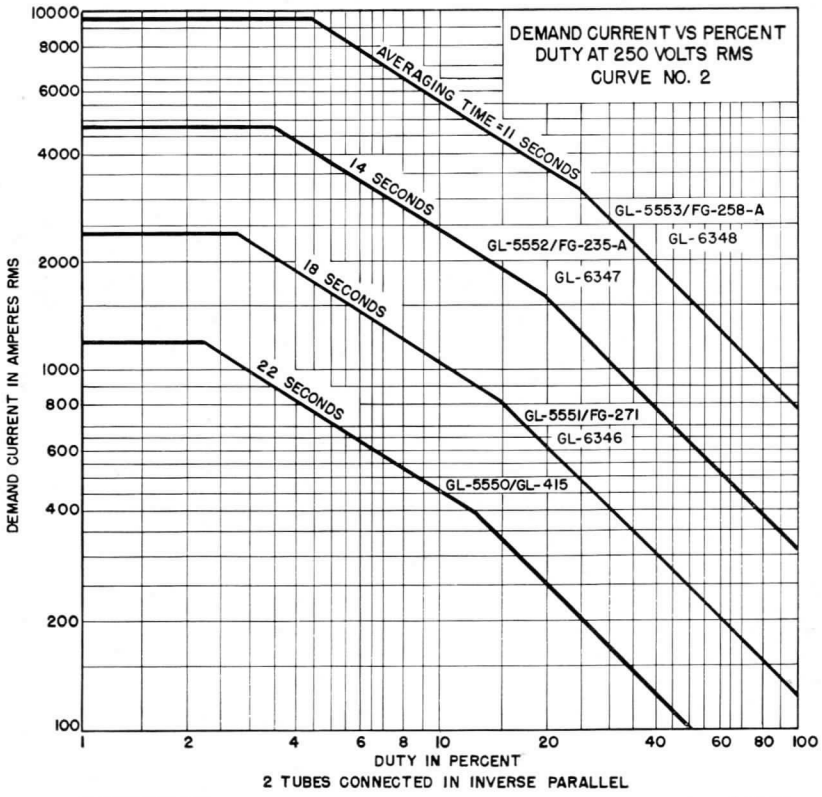

K-69087-72A218 8-21-53

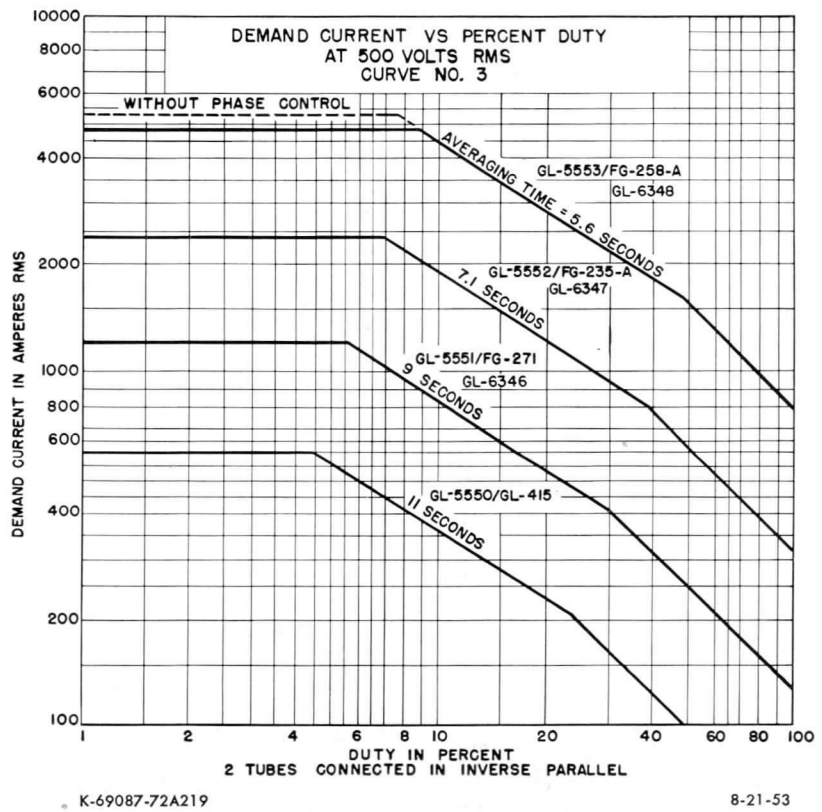

K-69087-72A219 8-21-53

POWER RECTIFIER RATING—INTERMITTENT DUTY

MAXIMUM AVERAGING TIME = 10 SECONDS

$\frac{1 \text{ AVERAGE}}{1 \text{ PEAK}}$ MAXIMUM AVERAGING TIME 0.2 SECOND = 0.166 MAXIMUM

$\frac{1 \text{ FAULT}}{1 \text{ PEAK MAX}}$ MAXIMUM DURATION OF FAULT CURRENT 0.15 SECOND = 12.5 MAXIMUM

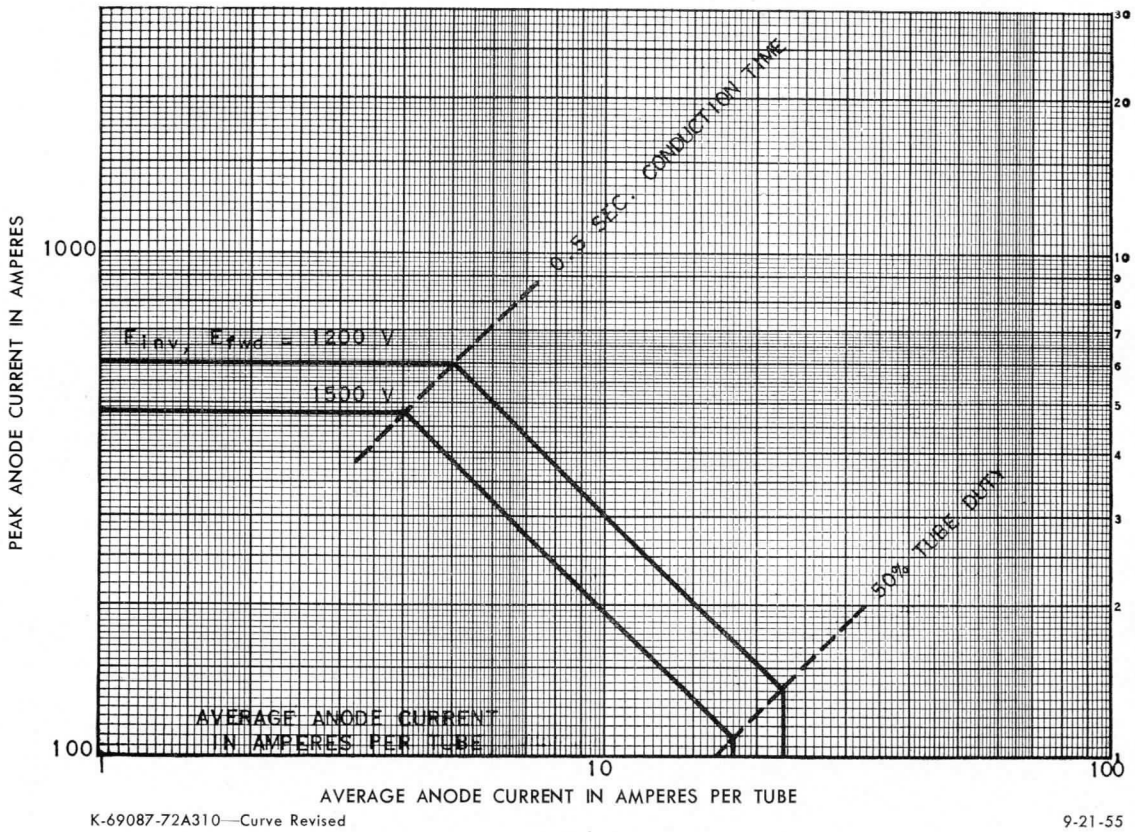

K-69087-72A310—Curve Revised

9-21-55

‡ *Supersedes pages 4 and 5 dated 9-53.*

PHASE CONTROL

THREE-PHASE SINGLE-WAY
DOUBLE-WAY CIRCUITS

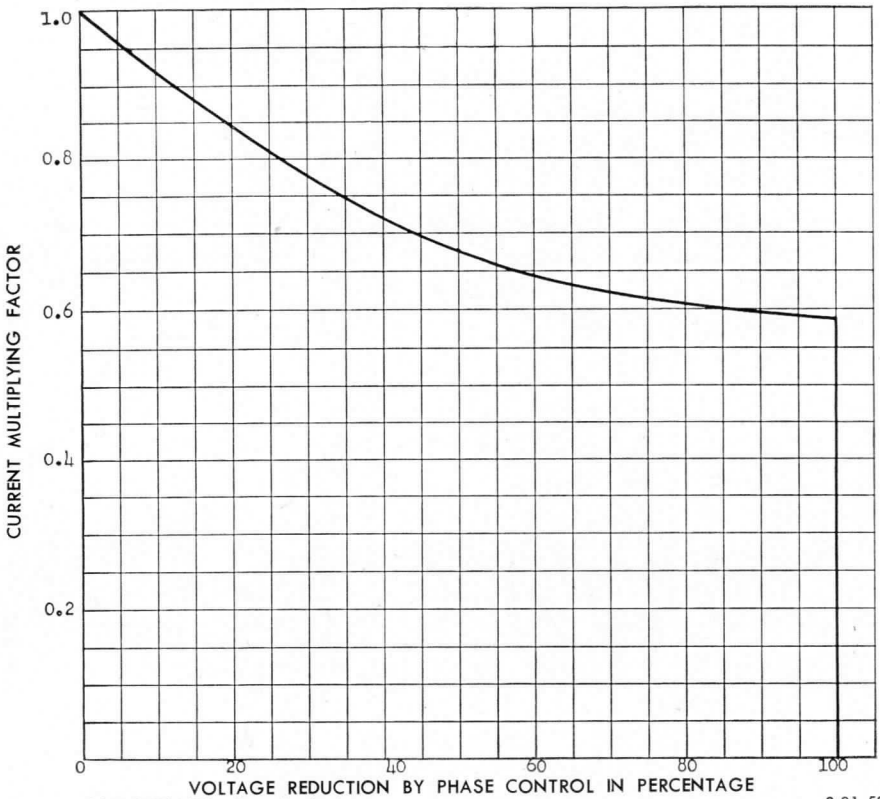

K-69087-72A513—Curve Revised

8-21-53

IGNITOR VOLT-AMPERE REQUIREMENTS—SEALED-IGNITRON RECTIFIER

THE IGNITOR FIRING CIRCUIT SHOULD BE DESIGNED TO OPERATE WITHIN THE SHADED AREA

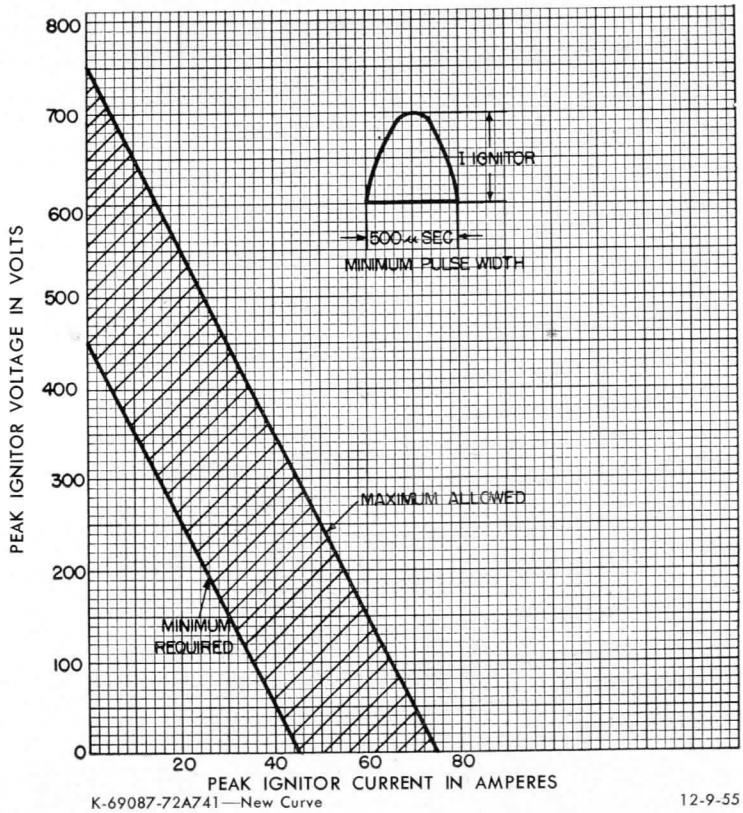

K-69087-72A741—New Curve

12-9-55



IGNITRON

RECTIFIER SERVICE—100 AMPERES TEMPERATURE CONTROLLED
RESISTANCE-WELDING-CONTROL SERVICE—140 AMPERES

The GL-6347 ignitron is a sealed, stainless-steel-jacketed, water-cooled, mercury-pool tube especially suited to resistance-welding-control service. In this service two tubes in the inverse-parallel connection will control 1200 kilovolt-amperes at voltages of 250 to 600 volts over the frequency range of 25 to 60 cycles. The ability of this tube to carry very high peak currents for short periods makes it especially suited to such service.

Ease of installation, economical use of space, and reliability of operation are assured by design and construction features inherent in the steel-jacketed construction.

This tube is identical in ratings and characteristics to the GL-5552/FG-235-A. Mechanically, it has the additional feature of an integral temperature-control device with protective features. The control includes a switch which operates a solenoid valve in the water-supply line to the tube in response to increasing and decreasing tube temperature, thus maintaining the amount of cooling water to the minimum required by the operating conditions. An over-temperature switch is included to remove power from the ignitron when its temperature exceeds a safe value. In applications where the cooling water flows through two tubes in series, this tube can be used with the GL-5552/FG-235-A since the GL-6347, in the position nearer the water drain where it receives the warmer water, can control the flow to both under normal conditions.

This new construction prevents excessive condensation over the external parts of the tube under conditions of high humidity. Another advantage is the appreciable saving in maintenance costs over tubes of the old design since this control feature, in addition to greatly reducing the amount of water required, eliminates the necessity for such safety devices as water-flow relays, water over-temperature relays, and water-pressure interlocks required with the older design tubes. The GL-6347 ignitron is equivalent to a 600-ampere magnetic contactor.

TECHNICAL INFORMATION

GENERAL

Electrical

Cathode Excitation—Cyclic		
Cathode Spot Starting—Ignitor		
Number of Electrodes		
Main Anodes	1	
Main Cathodes	1	
Ignitors	1	
Arc Drop at 6800 Peak Amperes	28	Volts
Arc Drop at 440 Peak Amperes	14	Volts
Cathode Excitation Requirements		
Ignitor Voltage Required to Fire	200	Volts
Ignitor Current Required to Fire	30	Amperes
Starting Time at Required Voltage or Current	100	Microseconds

Mechanical

Envelope Material—Stainless Steel		
Net Weight	8	Pounds

Thermal

Type of Cooling—Water		
Inlet Water Temperature, minimum	10	C
⊕Inlet Water Temperature, maximum	40	C
Water Flow, minimum, solenoid water valve open	1.5	Gallons per Minute
Characteristics for Water Cooling at Rated Minimum Flow		
Water Temperature Rise, maximum	6	C
Pressure Drop at 1.5 Gallons per Minute, maximum	4.5	Pounds per Square Inch

MAXIMUM RATINGS AND TYPICAL OPERATION

Power-Rectifier Service, Intermittent Duty

Ratings are for Zero Phase-Control Angle—See Curve for Details.

Maximum Peak Anode Voltage		
Inverse	500	Volts
Forward	500	Volts
Maximum Anode Current		
Peak	1600	Amperes
Average	100	Amperes
Maximum Averaging Time	6	Seconds
Fault	6000	Amperes
Maximum Duration of Fault Current	0.15	Seconds
Frequency Range	25–60	Cycles per Second

Resistance-Welding-Control Service*

Two Tubes in Inverse Parallel, Ratings per Tube

Voltage Range	250 to 600	Volts RMS
Maximum Demand	1200	Kilovolt-Amperes
Average Current at Maximum Demand	75.6	Amperes
Maximum Average Current	140	Amperes
Demand at Maximum Average Current	400	Kilovolt-Amperes
Maximum Averaging Time at 600 Volts RMS	5.8	Seconds
Maximum Averaging Time at 250 Volts RMS	14.0	Seconds
Maximum Peak Fault Current at 250 Volts	13,450	Amperes
Maximum Peak Fault Current at 600 Volts	5600	Amperes

TECHNICAL INFORMATION (CONT'D)

MAXIMUM RATING AND TYPICAL OPERATION (Cont'd)

Ignitor

Maximum Voltage		
Positive—Anode Voltage		
Negative	5	Volts
Maximum Current		
Peak	100	Amperes
Root Mean Square	10	Amperes
Average	1	Amperes
Maximum Averaging Time	5	Seconds

Temperature-Control-Switch Ratings†

Maximum Voltage	575	Volts
Maximum Current		
□Over-Temperature Switch	6	Amperes
□Water-Control Switch	1.5	Amperes
Maximum Peak Potential of Tube Water Cylinder		
Above Ground	1500	Volts
Switch-Contact Arrangement		
Over-Temperature Switch—Normally Closed		
(Contacts Open on Temperature Rise)		
Water-Control Switch—Normally Open		
(Contacts Close on Temperature Rise)		

⊕Denotes a change.

* RMS demand voltage, current, and kilovolt-ampere demand are all on the basis of full-cycle conduction (no phase delay) regardless of whether or not phase control is used. For voltages below the minimum, the minimum-voltage current rating applies. With the use of log-log paper straight-line interpolation between tabulated points may be used for other detailed ratings of: Demand kva vs average anode current, and maximum averaging time vs anode voltage.

† Suitable fuses should be provided in the switch circuits to prevent a power arc should a ground occur in the switch or wiring.

□Denotes an addition.

CURVES K-69087-72A217, K-69087-72A218, AND K-69087-72A219
DO NOT APPLY FOR INTERMITTENT-RECTIFIER SERVICE

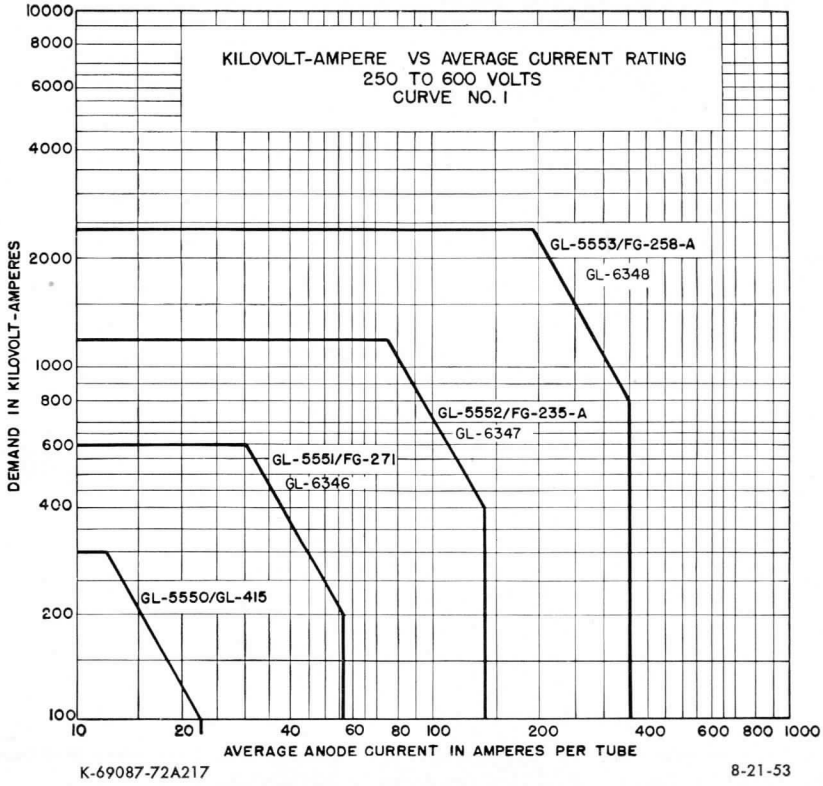

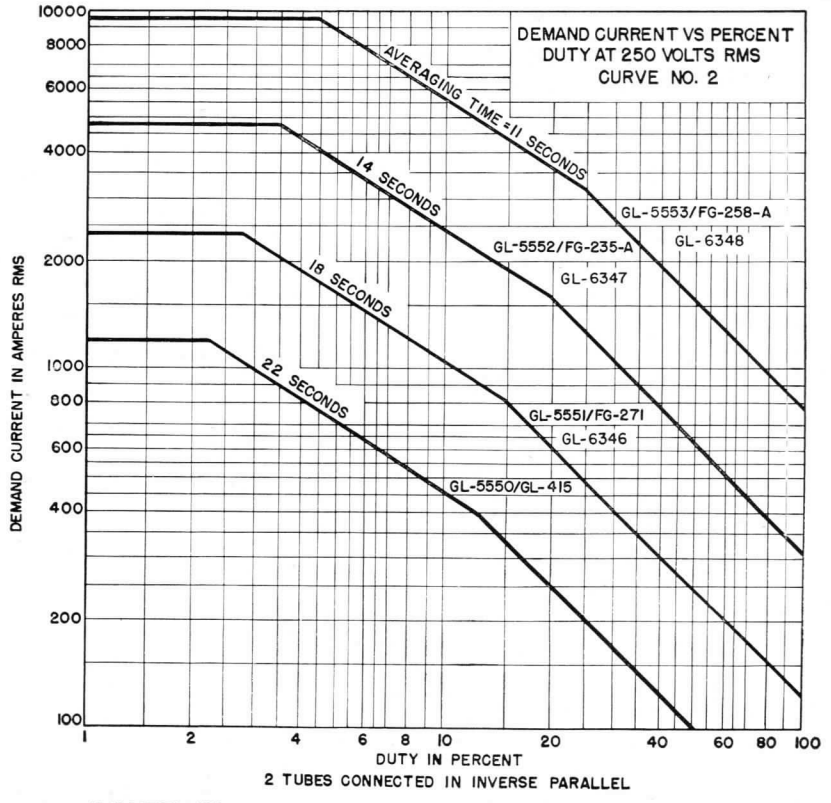

K-69087-72A218

8-21-53

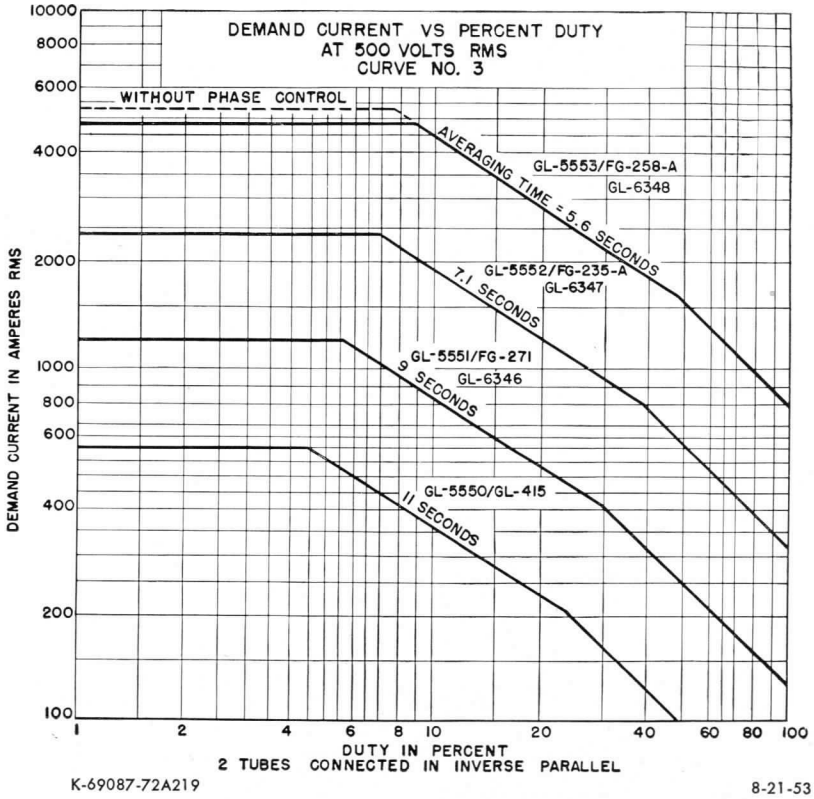

K-69087-72A219

8-21-53

PHASE CONTROL
THREE-PHASE SINGLE-WAY
DOUBLE-WAY CIRCUITS

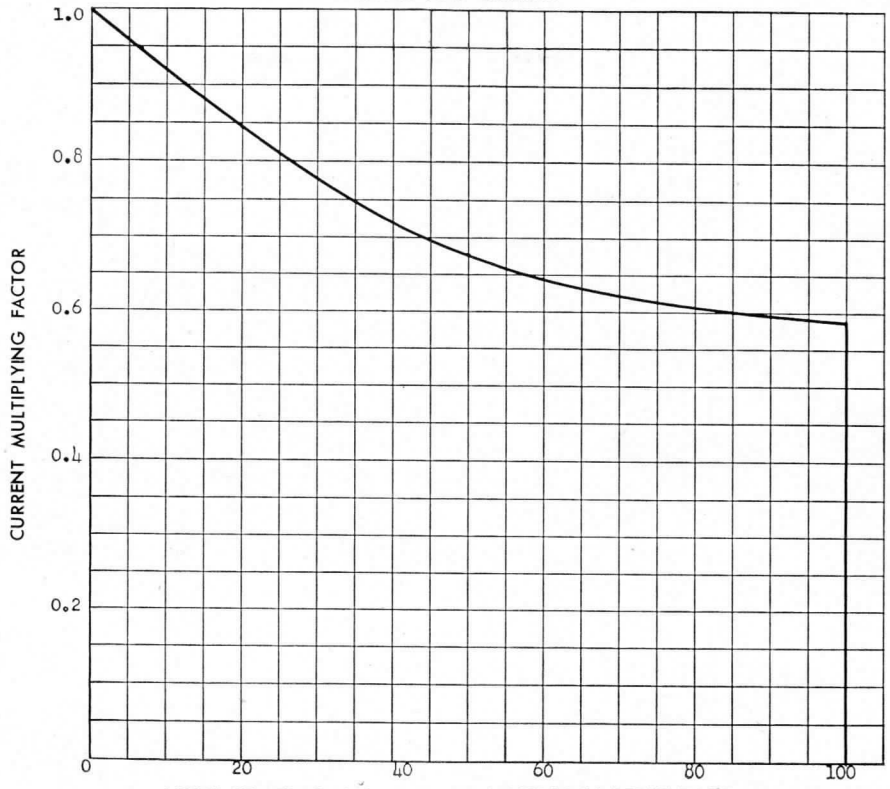

K-69037-72A513—Curve Revised

8-21-53

IGNITOR VOLT-AMPERE REQUIREMENTS—SEALED-IGNITRON RECTIFIER
THE IGNITOR FIRING CIRCUIT SHOULD BE DESIGNED TO OPERATE WITHIN THE SHADED AREA

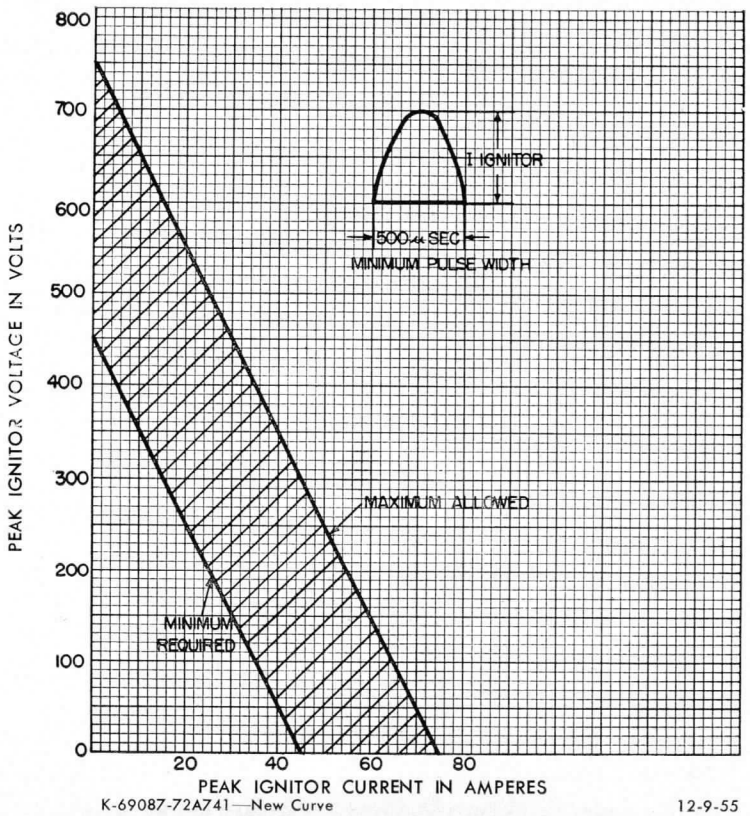

K-69087-72A741—New Curve

12-9-55

§ *Supersedes page 5 dated 9-53.*

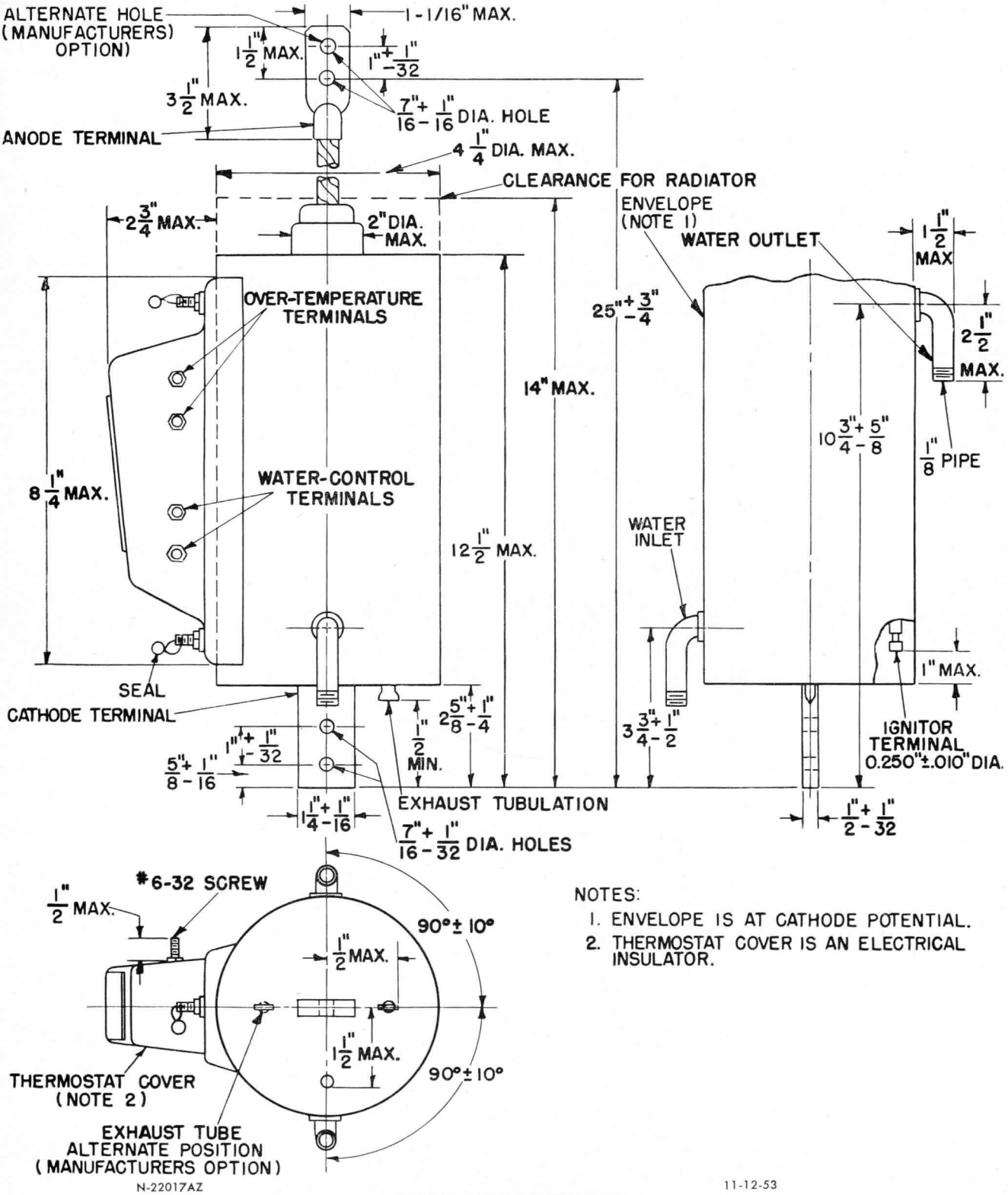

N-22017AZ

NOTES:

1. ENVELOPE IS AT CATHODE POTENTIAL.
2. THERMOSTAT COVER IS AN ELECTRICAL INSULATOR.

11-12-53

TUBE DEPARTMENT

GENERAL ELECTRIC

Schenectady 5, N. Y.

PRINTED IN U.S.A.



IGNITRON

RECTIFIER SERVICE—190 AMPERES **TEMPERATURE CONTROLLED**
RESISTANCE-WELDING-CONTROL SERVICE—355 AMPERES

The GL-6348 ignitron is a sealed, stainless-steel-jacketed, water-cooled, mercury-pool tube designed primarily for resistance-welding-control service. In this service, two tubes in the inverse-parallel connection will control 2400 kilovolt-amperes at voltages of 250 to 600 volts over the frequency range of 25 to 60 cycles. The ability of this tube to carry very high peak currents for short periods makes it especially suited to such service.

Ease of installation, economical use of space, and reliability of operation are assured by design and construction features inherent in the steel-jacketed construction.

This tube is identical in ratings and characteristics to the GL-5553-A. Mechanically, it has the additional feature of an integral temperature-control device with protective features. The control includes a switch which operates a solenoid valve in the water-supply line to the tube in response to increasing and decreasing tube temperature, thus maintaining the amount of cooling water to the minimum required by the operating conditions. An over-temperature switch is included to remove power from the ignitron when its temperature exceeds a safe value. In applications where the cooling water flows through two tubes in series, this tube can be used with the GL-5553-A since the GL-6348, in the position nearer the water drain where it receives the warmer water, can control the flow to both under normal conditions.

This new construction prevents excessive condensation over the external parts of the tube under conditions of high humidity. Another advantage is the appreciable saving in maintenance costs over tubes of the old design since this control feature, in addition to greatly reducing the amount of water required, eliminates the necessity for such safety devices as water-flow relays, water over-temperature relays, and water-pressure interlocks required with the older design tubes. The GL-6348 ignitron is equivalent to a 1200-ampere magnetic contactor.

TECHNICAL INFORMATION

GENERAL

Electrical

Cathode Excitation—Cyclic		
Cathode Spot Starting—Ignitor		
Number of Electrodes		
Main Anodes	1	
Main Cathodes	1	
Ignitors	1	
Arc Drop at 13,600 Peak Amperes	36	Volts
Arc Drop at 1115 Peak Amperes	17	Volts
Cathode Excitation Requirements		
Ignitor Voltage Required to Fire	200	Volts
Ignitor Current Required to Fire	30	Amperes
Starting Time at Required Voltage or Current	100	Microseconds

Mechanical

Envelope Material—Stainless Steel		
Net Weight	21	Pounds

Thermal

Type of Cooling—Water		
Inlet Water Temperature, minimum	10	C
⊕Inlet Water Temperature, maximum	40	C
Water Flow, minimum, solenoid water valve open	3.0	Gallons per Minute
Characteristics for Water Cooling at Rated Minimum Flow		
Water Temperature Rise, maximum	9	C
Pressure Drop at 3 Gallons per Minute, maximum	5.1	Pounds per Square Inch

MAXIMUM RATINGS AND TYPICAL OPERATION

Power-Rectifier Service, Intermittent Duty

Ratings are for Zero Phase-Control Angle—See Curve for Details.

Maximum Peak Anode Voltage				
Inverse	600	1200	1500	Volts
Forward	600	1200	1500	Volts
Maximum Anode Current				
Peak	4000	3000	2400	Amperes
Corresponding Average	54	40	32	Amperes
Average	190	140	112	Amperes
Corresponding Peak	1140	840	672	Amperes
Maximum Averaging Time	6.23	6.25	6.25	Seconds
Ratio of Average to Peak Current, maximum				
Averaging Time 0.2 Second	0.166	0.166	0.166	
Ratio of Fault to Maximum Peak Current	12.5	12.5	12.5	
Maximum Duration of Fault Current	0.15	0.15	0.15	Seconds
Frequency Range	50–60	50–60	50–60	Cycles per Second

Resistance-Welding-Control Service*

Two Tubes in Inverse Parallel, Ratings per Tube

Voltage Range	250 to 600	Volts RMS
Maximum Demand	2400	Kilovolt-Amperes
Average Current at Maximum Demand	192	Amperes
Maximum Average Current	355	Amperes
Demand at Maximum Average Current	800	Kilovolt-Amperes
Maximum Averaging Time at 250 Volts RMS	11.0	Seconds
Maximum Averaging Time at 600 Volts RMS	4.6	Seconds
Maximum Peak Fault Current at 250 Volts	27,000	Amperes
Maximum Peak Fault Current at 600 Volts	11,200	Amperes

TECHNICAL INFORMATION (CONT'D)

MAXIMUM RATINGS AND TYPICAL OPERATION (Cont'd)

Ignitor

Maximum Voltage		
Positive—Anode Voltage		
Negative	5	Volts
Maximum Current		
Peak	100	Amperes
Root Mean Square	10	Amperes
Average	1	Amperes
Maximum Averaging Time	5	Seconds

Temperature-Control-Switch Ratings†

Maximum Voltage	575	Volts
Maximum Current		
□Over-Temperature Switch	6	Amperes
□Water-Control Switch	1.5	Amperes
Maximum Peak Potential of Tube Water Cylinder		
Above Ground	1500	Volts
Switch-Contact Arrangement		
Over-Temperature Switch—Normally Closed		
(Contacts Open on Temperature Rise)		
Water-Control Switch—Normally Open		
(Contacts Close on Temperature Rise)		

⊕Denotes a change.

* RMS demand voltage, current, and kilovolt-ampere demand are all on the basis of full-cycle conduction (no phase delay) regardless of whether or not phase control is used. For voltages below the minimum, the minimum-voltage current rating applies. With the use of log-log paper straight-line interpolation between tabulated points may be used for other detailed ratings of: Demand kva vs average anode current, and maximum averaging time vs anode voltage.

† Suitable fuses should be provided in the switch circuits to prevent a power arc should a ground occur in the switch or wiring.

□Denotes an addition.

CURVES K-69087-72A217, K-69087-72A218, AND K-69087-72A219
DO NOT APPLY FOR INTERMITTENT-RECTIFIER SERVICE

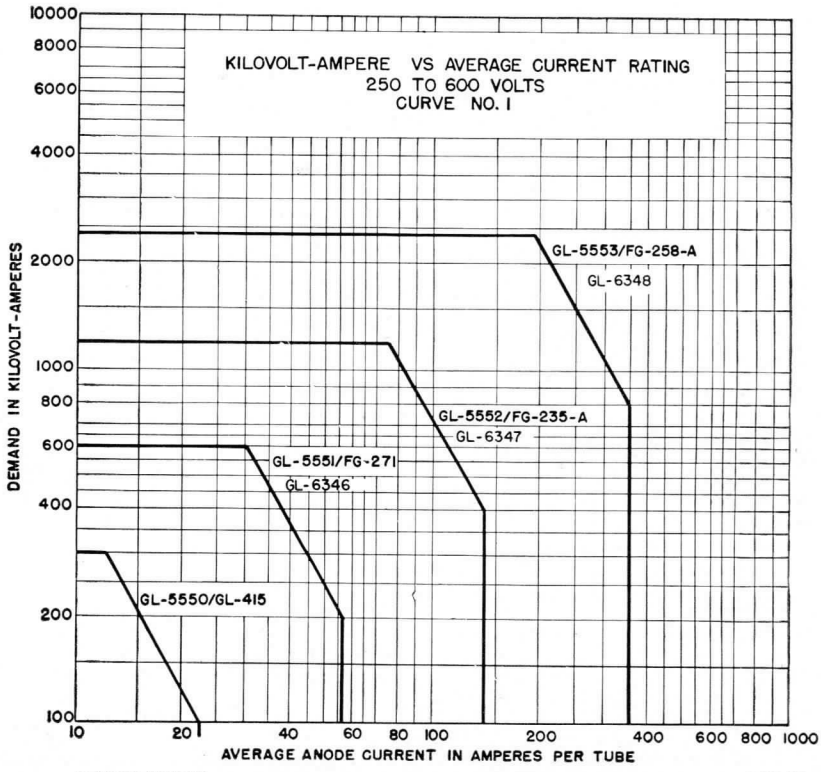

K-69087-72A217 8-21-53

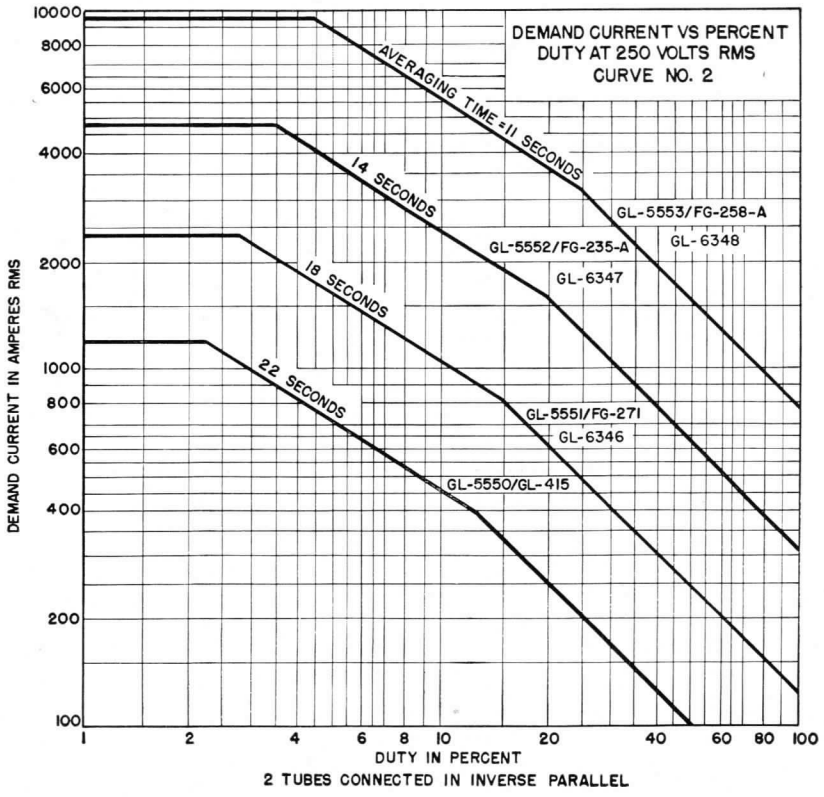

K-69087-72A218 8-21-53

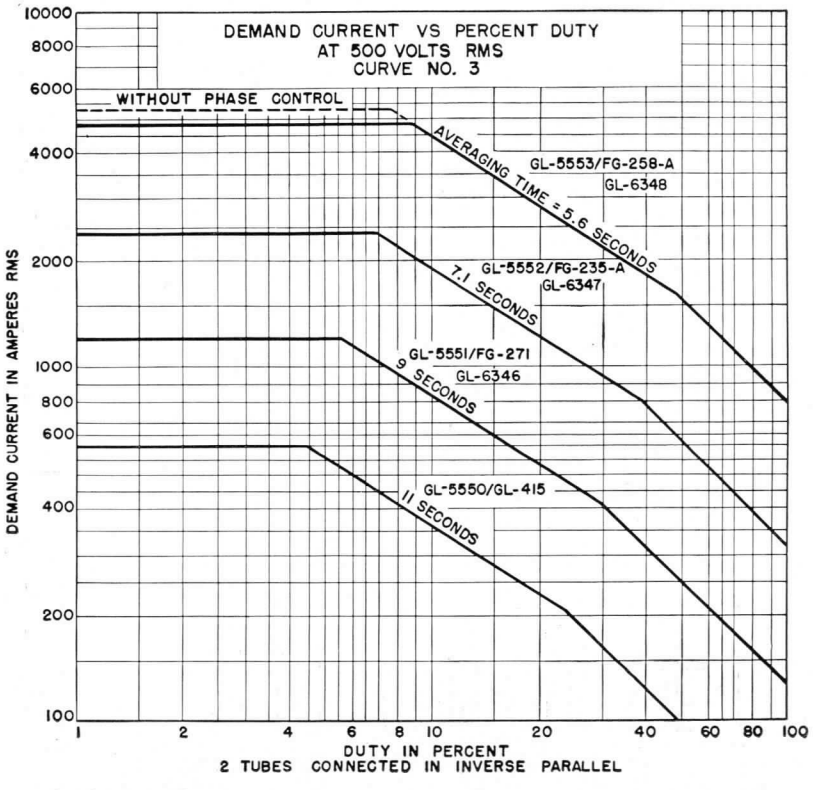

K-69087-72A219 8-21-53

PHASE CONTROL
THREE-PHASE SINGLE-WAY
DOUBLE-WAY CIRCUITS

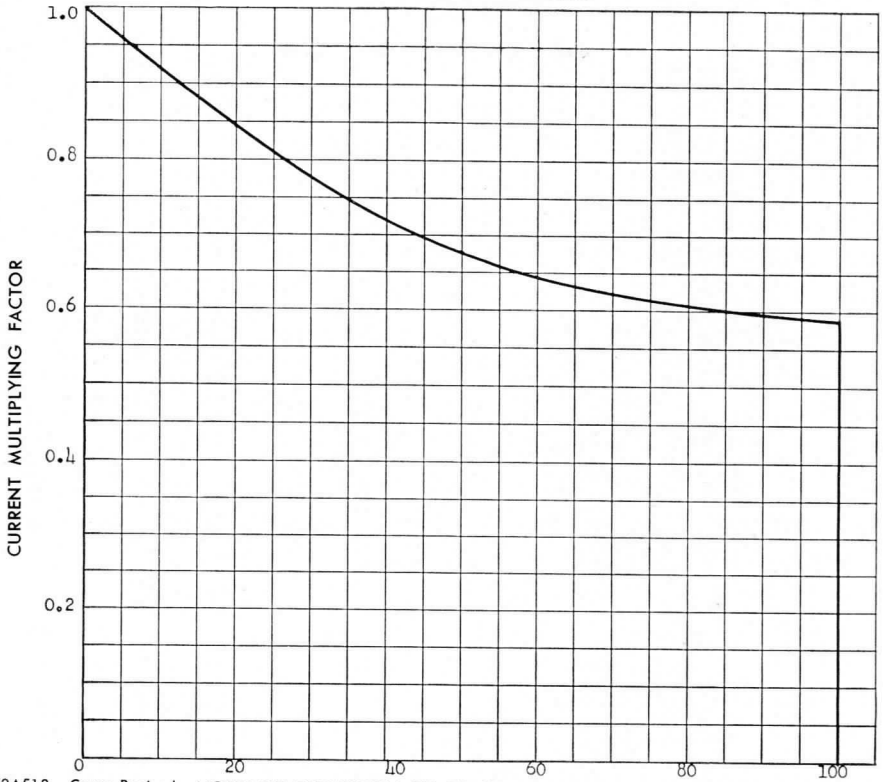

K-69087-72A513—Curve Revised 8-21-53

POWER-RECTIFIER RATING—INTERMITTENT DUTY

MAXIMUM AVERAGING TIME = 6.25 SECONDS

$\frac{1\ \text{AVERAGE}}{1\ \text{PEAK}}$ MAXIMUM AVERAGING TIME 0.2 SECOND = 0.166 MAXIMUM

$\frac{1\ \text{FAULT}}{1\ \text{PEAK MAX}}$ MAXIMUM DURATION OF FAULT CURRENT 0.15 SECOND = 12.5 MAXIMUM

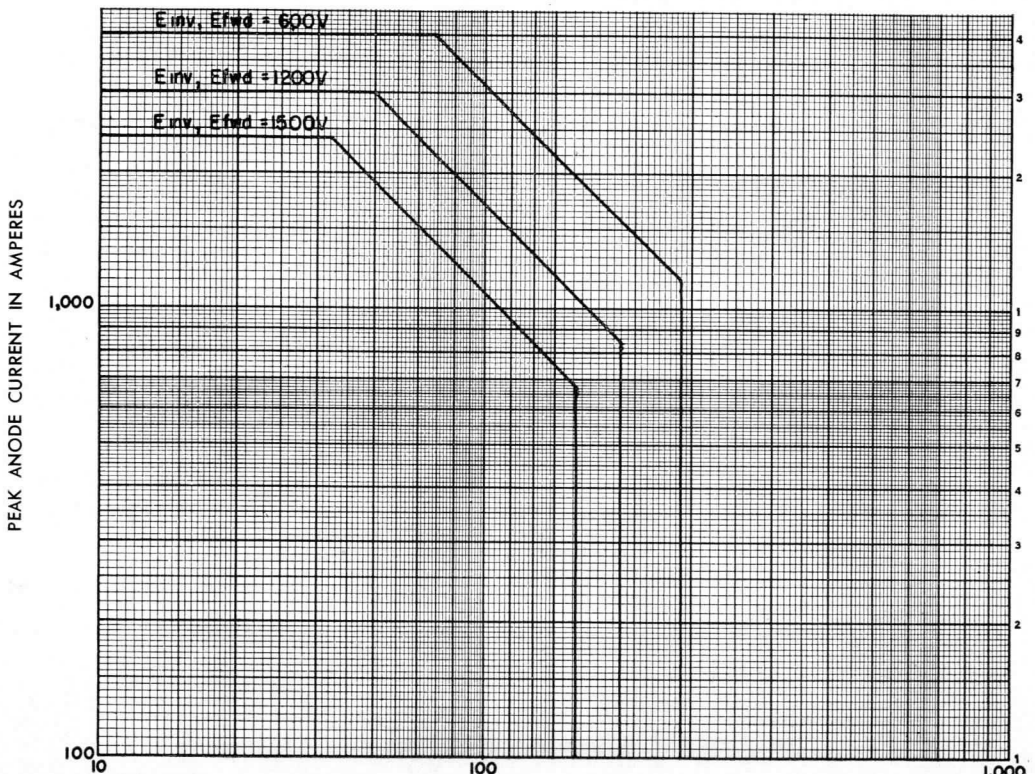

K-69087-72A630 9-21-56

‡ *Supersedes pages 5 and 6 dated 9-53.*

IGNITOR VOLT-AMPERE REQUIREMENTS—SEALED-IGNITRON RECTIFIER

THE IGNITOR FIRING CIRCUIT SHOULD BE DESIGNED TO OPERATE WITHIN THE SHADED AREA

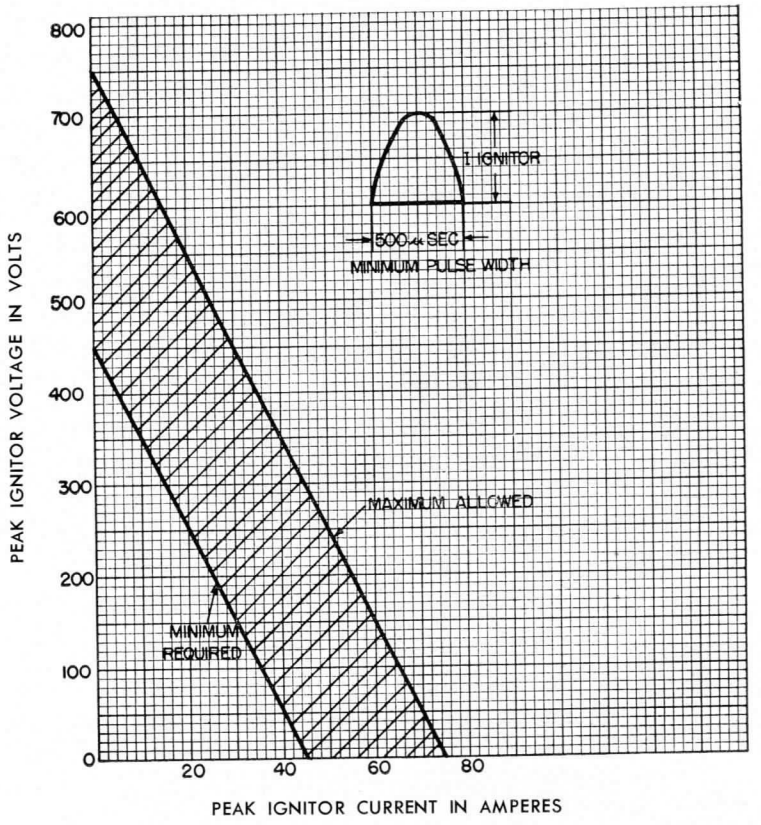

K-69087-72A741—New Curve

12-9-55



IGNITRON

TEMPERATURE CONTROLLED FREQUENCY-CHANGER WELDING SERVICE
POWER-RECTIFIER SERVICE

The GL-6511 ignitron is a sealed, stainless-steel jacketed, water-cooled mercury-pool tube for control of frequency-changer resistance welders. This method of resistance welding converts three-phase 60-cycle power to single-phase power at four to twelve cycles per second. A particular advantage of this method is the appreciable reduction of kilovolt-ampere demand from that required in single-phase welding, with consequent saving in the amount of power required. In addition, the three-phase circuit balances the power load and makes possible improved results in welding aluminum, magnesium, and their alloys.

This tube is identical in ratings and characteristics to the GL-5822-A. Mechanically, it has the additional feature of an integral thermostatic arrangement with protective features. The arrangement includes a switch which controls a solenoid valve in the water-supply line to the tube in response to increasing and decreasing tube temperature, thus maintaining the amount of cooling water to the minimum required by the operating conditions. It also includes an over-temperature switch which may be used to remove power from the ignitron when its temperature exceeds a safe value.

This new construction prevents excessive condensation over the external parts of the tube under conditions of high humidity. Another advantage is the appreciable saving in maintenance costs over tubes of the old design since this control feature, in addition to greatly reducing the amount of water required, eliminates the necessity for such safety devices as water-flow relays, water over-temperature relays, and water-pressure interlocks required with the older design tubes. In applications where the cooling water flows through three tubes in series, this tube can be used with two GL-5822-A's since the GL-6511, in the position nearer the water drain where it receives the warmer water, can control the flow to all tubes under normal conditions.

TECHNICAL INFORMATION

GENERAL

Electrical

Cathode Excitation—Cyclic
Cathode Spot Starting—Ignitor
Number of Electrodes

Main Anodes	1	
Main Cathodes	1	
Ignitors	1	
Arc Drop at 1500 Peak Amperes	25	Volts

Mechanical

Envelope Material—Stainless Steel

Net Weight, approximate	8.4	Pounds

Thermal

Type of Cooling—Water

Inlet Water Temperature, minimum	10	C
Inlet Water Temperature, maximum	30	C
Water Flow, minimum‡		
At Continuous Rated Average Current	1.5	Gallons per Minute

Characteristics for Water Cooling at Rated Minimum Flow

Water Temperature Rise, maximum	6	C
Pressure Drop at 1.5 Gallons per Minute, maximum	5	Pounds per Square Inch
□Working Water Pressure—Non-shock	100	Pounds per Square Inch

MAXIMUM RATINGS AND TYPICAL OPERATION

Frequency-Changer Resistance Welding Service or Power-Rectifier Service—Intermittent Duty

Ratings are for Zero-phase Control Angle—See curve K-69087-72A316 on page four for details.

Maximum Peak Anode Voltage			
Inverse	1200	1500	Volts
Forward	1200	1500	Volts
Maximum Anode Current*			
Peak	1500	1200	Amperes
Corresponding Average	20	16	Amperes
Average	70	56	Amperes
Corresponding Peak	420	336	Amperes
Maximum Averaging Time	6.25	6.25	Seconds
Ratio of Average to Peak Current	0.166	0.166	
Maximum Averaging Time	0.2	0.2	Seconds
Ratio of Fault to Peak Current	12.5	12.5	
Maximum Duration of Fault Current	0.15	0.15	Seconds
Frequency Range	50–60	50–60	Cycles per Second

□Ignitor Characteristics

Anode Firing

Maximum Inverse Voltage	5	Volts
Maximum Positive Voltage—Anode Voltage		
Ignitor Voltage Required to Fire	200	Volts
Ignitor Current Required to Fire	30	Amperes
Starting Time at Required Voltage or Current	100	Microseconds

Separate Excitation

Maximum Inverse Voltage	5	Volts
Recommended Pulse Length	500	Microseconds
Minimum Pulse Length, for average anode currents greater than 20 amperes	150	Microseconds
Maximum Pulse Length	4000	Microseconds

Volt-Ampere Characteristics—See Curve K-69087-72A741 on page three for details.

Temperature-Control-Switch Ratings†

Maximum Voltage	575	Volts
Maximum Current		
Over-Temperature Switch	6	Amperes
Water-Control Switch	1.5	Amperes

TECHNICAL INFORMATION (CONT'D)

Temperature-Control-Switch Ratings† (Cont'd)

Maximum Peak Potential of Tube Water Cylinder
Above Switch Circuit ..... 1500 Volts

Switch-Contact Arrangement
Over-Temperature-Switch—Normally Closed
(Contacts Open on Temperature Rise)
Water-Control Switch—Normally Open
(Contacts Close on Temperature Rise)

* Straight line interpolation on log-log paper is allowed between corresponding points.

† Suitable fuses should be provided in the switch circuits to prevent a power arc, should a ground occur in the switch or wiring.

‡ Water flow should be continued for fifteen minutes after removal of anode power.

□Denotes an addition.

IGNITOR VOLT-AMPERE REQUIREMENTS FOR SEPARATE EXCITATION SEALED-IGNITRON RECTIFIERS

THE IGNITOR FIRING CIRCUIT SHOULD BE DESIGNED TO OPERATE WITHIN THE SHADED AREA

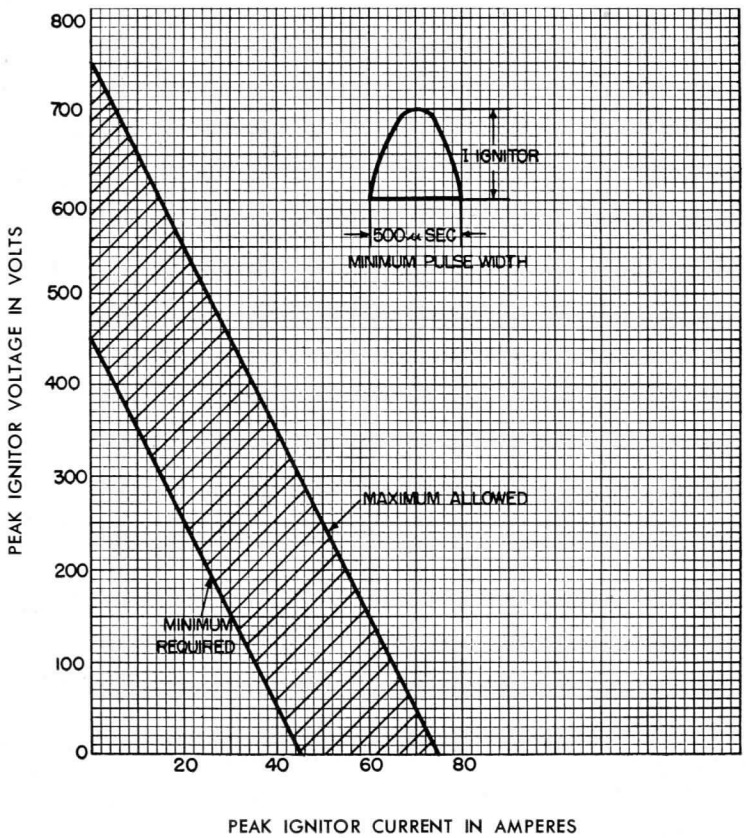

K-69087-72A741 12-9-55

ELEMENTARY CIRCUIT FOR CAPACITOR FIRING

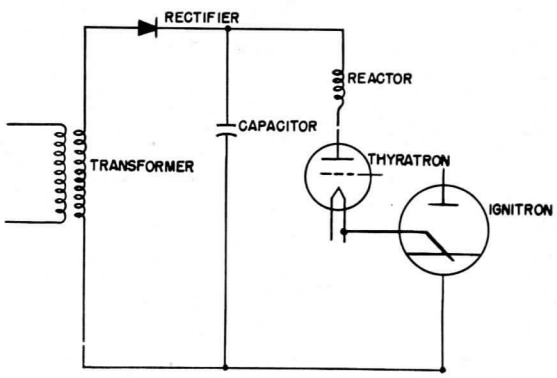

K-9033525 5-25-54

SELF OR ANODE EXCITATION IN WHICH A PART OF THE LOAD CURRENT IS DIVERTED THROUGH THE IGNITOR

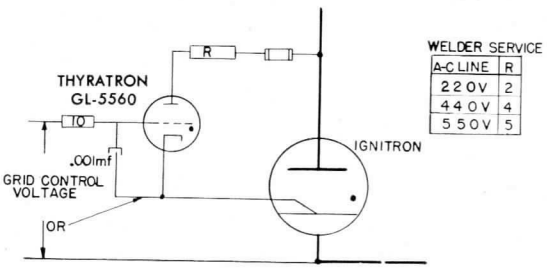

K-9033542 12-6-44

FREQUENCY-CHANGER RESISTANCE WELDING SERVICE
OR
POWER RECTIFIER RATING—INTERMITTENT SERVICE

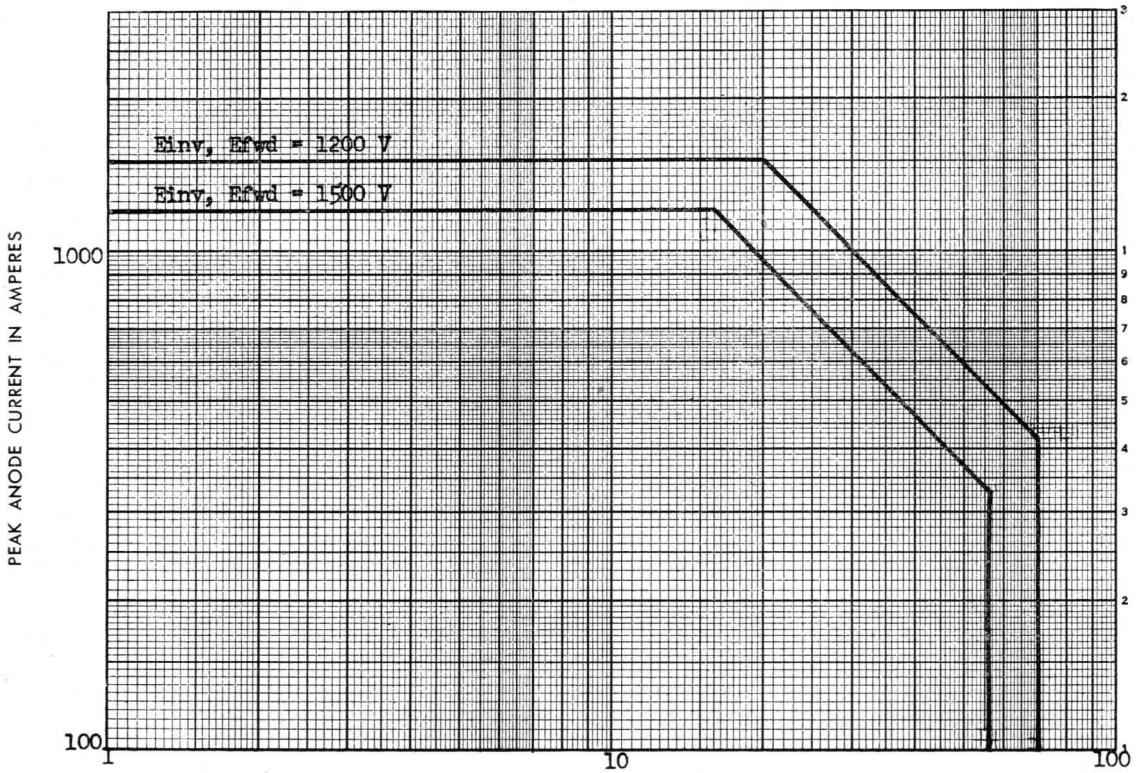

K-69087-72A316

11-3-54

MAXIMUM AVERAGING TIME = 6.25 SECONDS

$\frac{\text{I AVERAGE}}{\text{I PEAK}}$ MAXIMUM AVERAGING TIME 0.2 SECOND = 0.166 MAXIMUM

$\frac{\text{I FAULT}}{\text{I PEAK MAX.}}$ MAXIMUM DURATION OF FAULT CURRENT 0.15 SECOND = 12.5 MAXIMUM

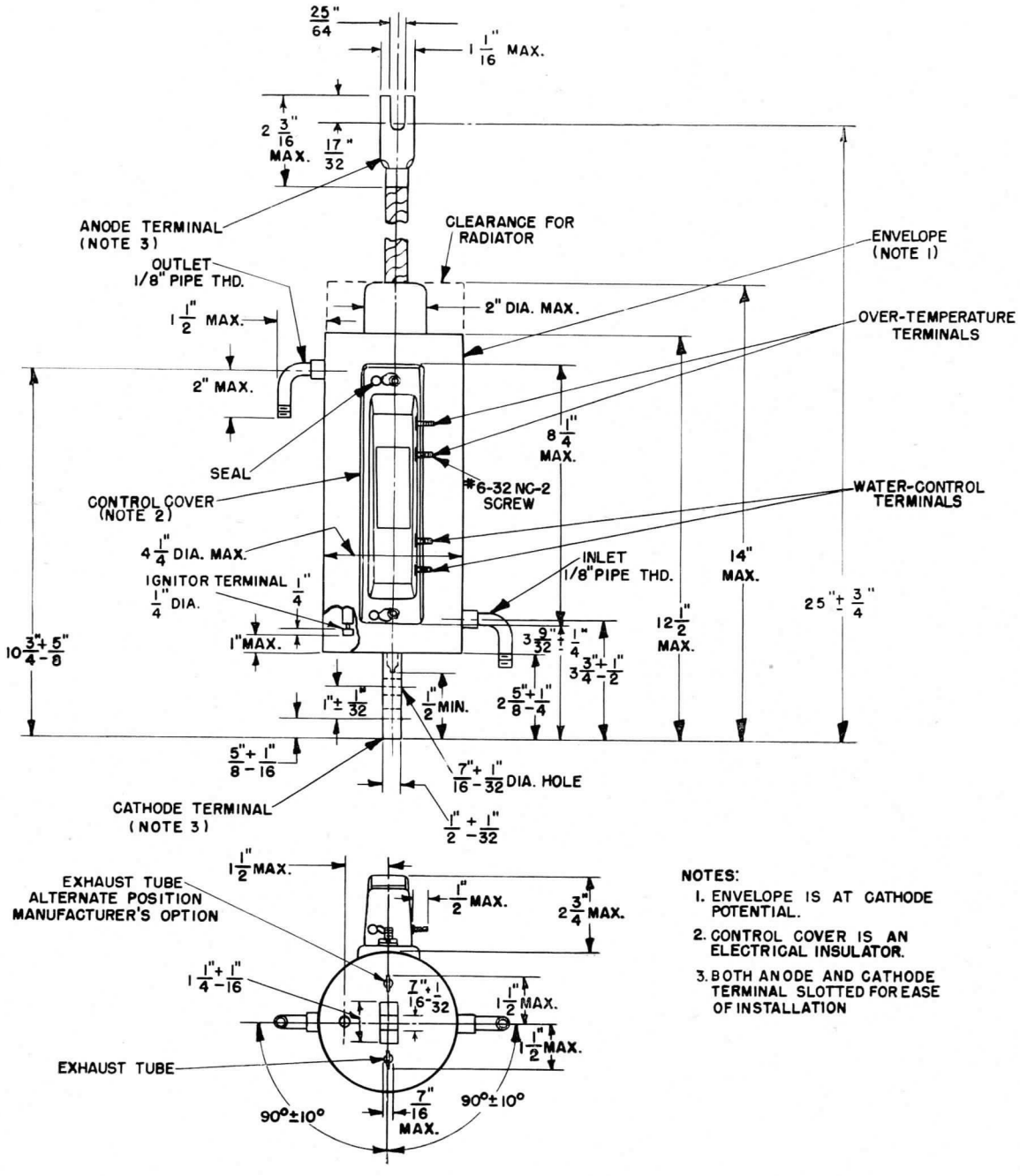

NOTES:

1. ENVELOPE IS AT CATHODE POTENTIAL.
2. CONTROL COVER IS AN ELECTRICAL INSULATOR.
3. BOTH ANODE AND CATHODE TERMINAL SLOTTED FOR EASE OF INSTALLATION

K-69087-72A674—Outline revised.

12-20-57

ELECTRONIC COMPONENTS DIVISION

GENERAL ELECTRIC

Schenectady 5, N. Y.

PRINTED IN U.S.A.

GENERAL ELECTRIC

TUBE DEPARTMENT

Schenectady 5, N. Y.

OBJECTIVE
TECHNICAL INFORMATION

These ratings represent the design objective for this product. Refer to the Preliminary Technical Information sheet for ratings currently achieved in the progression towards design objectives. If PTI sheets do not exist, consult your local Tube Department Regional Sales Office.

DEVELOPMENTAL TYPE

This technical information is proprietary and is furnished only as a service to customers

IGNITRON

ZG-7207

The ZG-7207 is a stainless-steel-water-jacketed ignitron for use as a switch in capacitor-discharge circuits, or for DC short-circuiting-switch (crowbar) protective service.

GENERAL

Electrical	
Cathode Excitation	Cyclic
Cathode Spot Starting	Ignitor
Number of Electrodes	
Main Anode	1
Main Cathode	1
Ignitors	3
Mechanical	
Envelope	Stainless Steel
Mounting Position	Axis Vertical-Anode Terminal Up
Net Weight	20 Pounds
Length (excluding flexible anode cable)	18 3/4 Inches
Diameter (excluding water nipples)	5 1/2 Inches
Thermal	
Type of Cooling – Water	
Inlet Water Temperature, minimum	6 C
Inlet Water Temperature, maximum	30 C
Nominal Water Flow	1.5 Gallons Per Minute

MAXIMUM RATINGS (Not simultaneous conditions)

Peak Anode Voltage	25,000 Volts
Peak Anode Current	300,000 Amperes
Length of Conduction	10 Milliseconds
Repetition Rate	500 Per Minute
Maximum Coulombs per Discharge	200 Amp-Sec.
Maximum Coulombs per Minute	200 Amp-Sec/Min.
Maximum Voltage Reversal	10 Percent

IGNITOR-CIRCUIT RATINGS

	Minimum	Maximum
Ignitor Voltage		
Forward Open-Circuit (ignitor +)	1500	3000 Volts
Inverse (ignitor -)	-	5 Volts
Ignitor Short-Circuit Current	100	250 Amperes
Length of Firing Pulse, 1/2 sine wave	5	10 Microseconds

7 May 1965

The specifications of this type are subject to change. This device is now under development and is made available for experimental purposes only. For the most recent information concerning the status of this development, please consult your local Tube Department Regional Sales Office, or current Preliminary Technical Information for the same catalog number.

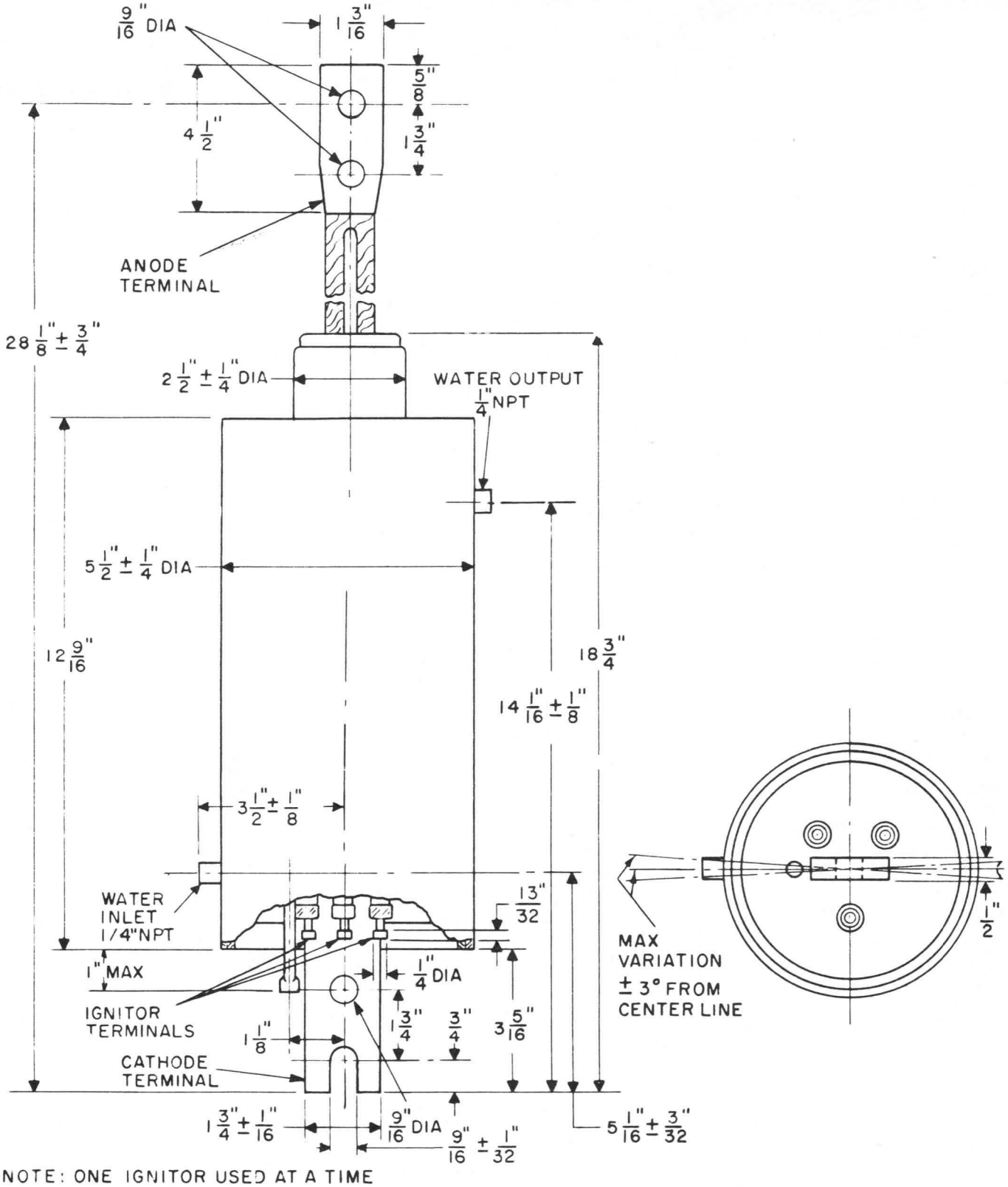

NOTE: ONE IGNITOR USED AT A TIME

69087-72B63

GENERAL ELECTRIC
TUBE DEPARTMENT
Schenectady 5, N. Y.

OBJECTIVE
TECHNICAL INFORMATION

These ratings represent the design objective for this product. Refer to the Preliminary Technical Information sheet for ratings currently achieved in the progression towards design objectives. If PTI sheets do not exist, consult your local Tube Department Regional Sales Office.

DEVELOPMENTAL TYPE

This technical information is proprietary and is furnished only as a service to customers

IGNITRON
ZG-7248

The ZG-7248 ignitron is designed primarily for DC short-circuiting-switch (crowbar) protective service. Features of the tube include a holding anode which provides a means for keeping the tube ionized should voltage reversals occur during the discharge.

GENERAL

Electrical	
Cathode Excitation	Cyclic
Cathode Spot Starting	Ignitor
Number of Electrodes	
Main Anode	1
Auxiliary Anode	1
Ignitors	1
Main Cathode	1
Approximate Inductance	30 Nanohenrys
Mechanical	
Envelope	Stainless Steel
Mounting Position	Axis Vertical-Anode Terminal Up
Net Weight	2 Pounds
Diameter	2 1/8 Inches
Height	7 1/2 Inches
Thermal	
Type of Cooling – Clamp around lower half of cylinder which also serves as cathode connection*	
Clamp Temperature	10-30 C
Cathode Temperature, Max.	35 C
Anode Insulating-Compound Temperature and anode-Lead Temperature, maximum	70 C*

MAXIMUM RATINGS

Peak Anode Voltage	50,000 Volts
Peak Anode Current	25,000 Amperes
Length of Conduction	20 Milliseconds
Repetition Rate	6 Per Hour*
Voltage Reversal	50 Percent

IGNITOR-CIRCUIT RATINGS

	Minimum	Maximum
Ignitor Voltage		
Forward Open Circuit (ignitor +)	1500	3000 Volts
Inverse (ignitor -)	-	5 Volts
Ignitor Short-Circuit Current	100	250 Amperes
Length of Firing Pulse, sine wave	5	10 Microseconds

HOLDING-ANODE CIRCUIT RATINGS†

Holding-Anode Voltage (Positive d-c)	80	150 Volts
Holding-Anode Current	5	10 Amperes

The specifications of this type are subject to change. This device is now under development and is made available for experimental purposes only. For the most recent information concerning the status of this development, please consult your local Tube Department Regional Sales Office, or current Preliminary Technical Information for the same catalog number.

* The temperature of the anode end of the tube must be kept higher than that of the cathode end to prevent mercury condensation on the anode and anode seal. Before operation the top of the tube must be heated sufficiently to vaporize all mercury from the anode area. The repetition rate may be increased by a factor of ten by water cooling the clamp around the lower half of the cylinder.

† It is anticipated that a holding-anode rectifier will be provided to supply the required power and that its supply will drop to zero at the end of the crowbar operation so the ignitron will regain control. An alternate method is to discharge a large capacitor into the holding anode with a time constant longer than the crowbar time.

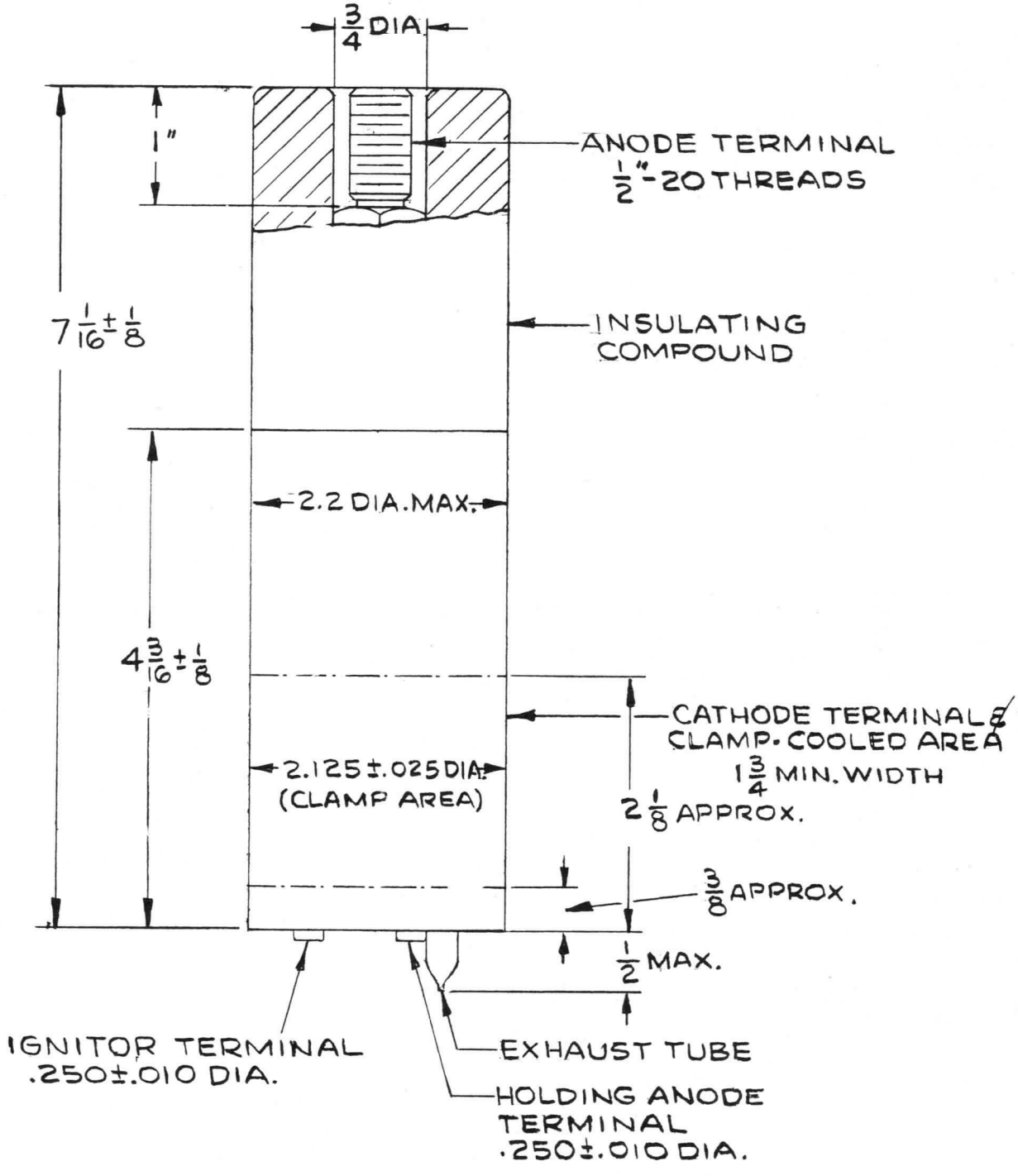

GL-7672

IGNITRON
Coaxial

FREQUENCY-CHANGER WELDER SERVICE—1500 AMPERES PEAK

ADAPTED TO WATER-FLOW CONTROL

ADAPTED TO TEMPERATURE CONTROL



The GL-7672 is a sealed, stainless-steel-jacketed, water-cooled ignitron for use in frequency-changer welder service. In such use two tubes in inverse-parallel connection will control 1500 amperes peak at voltages up to 1200 volts peak at a frequency of 60 cycles. The tube is also useful in other high-peak-current applications such as capacitor-discharge circuits.

The 7672 features a new coaxial construction in which current flows through the tube from anode to cathode, then up the tube wall to a coaxial cathode terminal at the top. This coaxial current flow provides a magnetic shield to eliminate the arc deflection which the high peak currents of this tube might cause in standard design ignitrons.

A slotted mounting plate permits convenient mounting of a thermostat to provide control of the water flow or over-temperature protection.

Electrical

Cathode Excitation—Cyclic
Cathode Spot Starting—Ignitor
Number of Electrodes
- Main Anodes 1
- Main Cathodes 1
- Ignitors 1

Arc Drop at 1500 Amperes Peak . . . . . 25 Volts

Mechanical

Envelope Material—Stainless Steel
Over-all Length . . . . . 14¼ Inches
Over-all Width . . . . . 4⅝ Inches
Net Weight . . . . . 8.25 Pounds

Thermal

Type of Cooling—Water
- Inlet Water Temperature, minimum . . . . . 10 C
- Inlet Water Temperature, maximum . . . . . 30 C
- Outlet Water Temperature, maximum . . . . . 35 C
- Water Flow, minimum, solenoid water-valve open
  - At Continuous Rated Average Current . . . . . 1.5 Gallons per Minute
  - At No Load . . . . . 0.5 Gallons per Minute
- Characteristics for Water Cooling at Rated Minimum Flow
  - Water Temperature Rise, maximum . . . . . 6 C
  - Pressure Drop at 1.5 Gallons per Minute . . . . . 5 Pounds per Square Inch

MAXIMUM RATINGS—FREQUENCY-CHANGER WELDER SERVICE

Ratings are for zero-phase-control angle (See curve K69087-72A316 on Page 3 for details).

Peak Anode Voltage			
Forward	1200	1500	Volts
Inverse	1200	1500	Volts
Peak Anode Current*	1500	1200	Amperes
Corresponding Average	20	16	Amperes
Average Anode Current	70	56	Amperes
Corresponding Peak	420	336	Amperes
Maximum Averaging Time	6.25	6.25	Seconds
Ratio of Average to Peak Current	0.166	0.166	
Maximum Averaging Time	0.2	0.2	Seconds
Ratio of Fault to Maximum Peak Current	12.5	12.5	
Maximum Duration of Fault Current	0.15	0.15	Seconds
Frequency Range	50–60	50–60	Cycles per Second

Cathode Excitation Requirements

Ignitor Voltage Required to Fire . . . . . 200 Volts
Ignitor Current Required to Fire . . . . . 30 Amperes
Starting time at Required Voltage or Current . . . . . 100 Microseconds

Ignitor
- Maximum Voltage
  - Positive—Anode Voltage
  - Negative . . . . . 5 Volts
- Maximum Current
  - Peak . . . . . 100 Amperes
  - Root Mean Square . . . . . 10 Amperes
  - Average . . . . . 1 Ampere
  - Maximum Averaging Time . . . . . 5 Seconds

* Straight line interpolation on log-log paper is allowed between corresponding points.

GENERAL ELECTRIC

Supersedes ET-T1643 dated 4-61

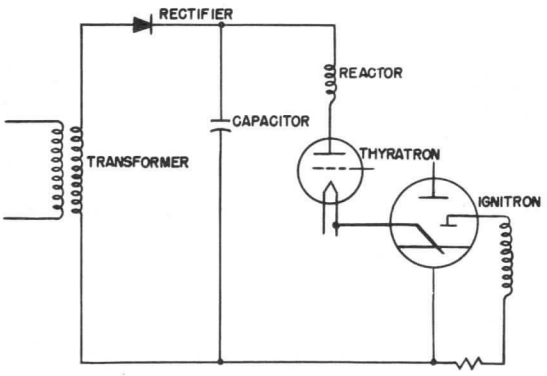

ELEMENTARY CIRCUIT FOR CAPACITOR FIRING

K-9033525 5-54

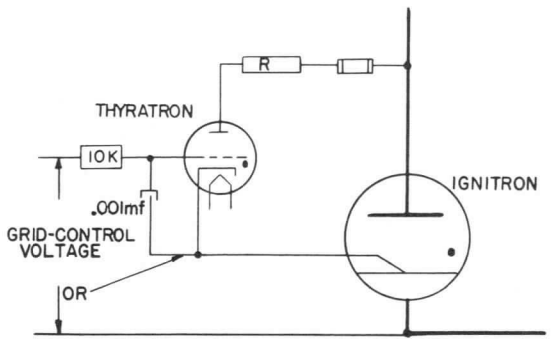

SELF OR ANODE EXCITATION IN WHICH A PART OF THE LOAD CURRENT IS DIVERTED THROUGH THE IGNITOR

K-9033542 9-60

FREQUENCY-CHANGER RESISTANCE-WELDING SERVICE

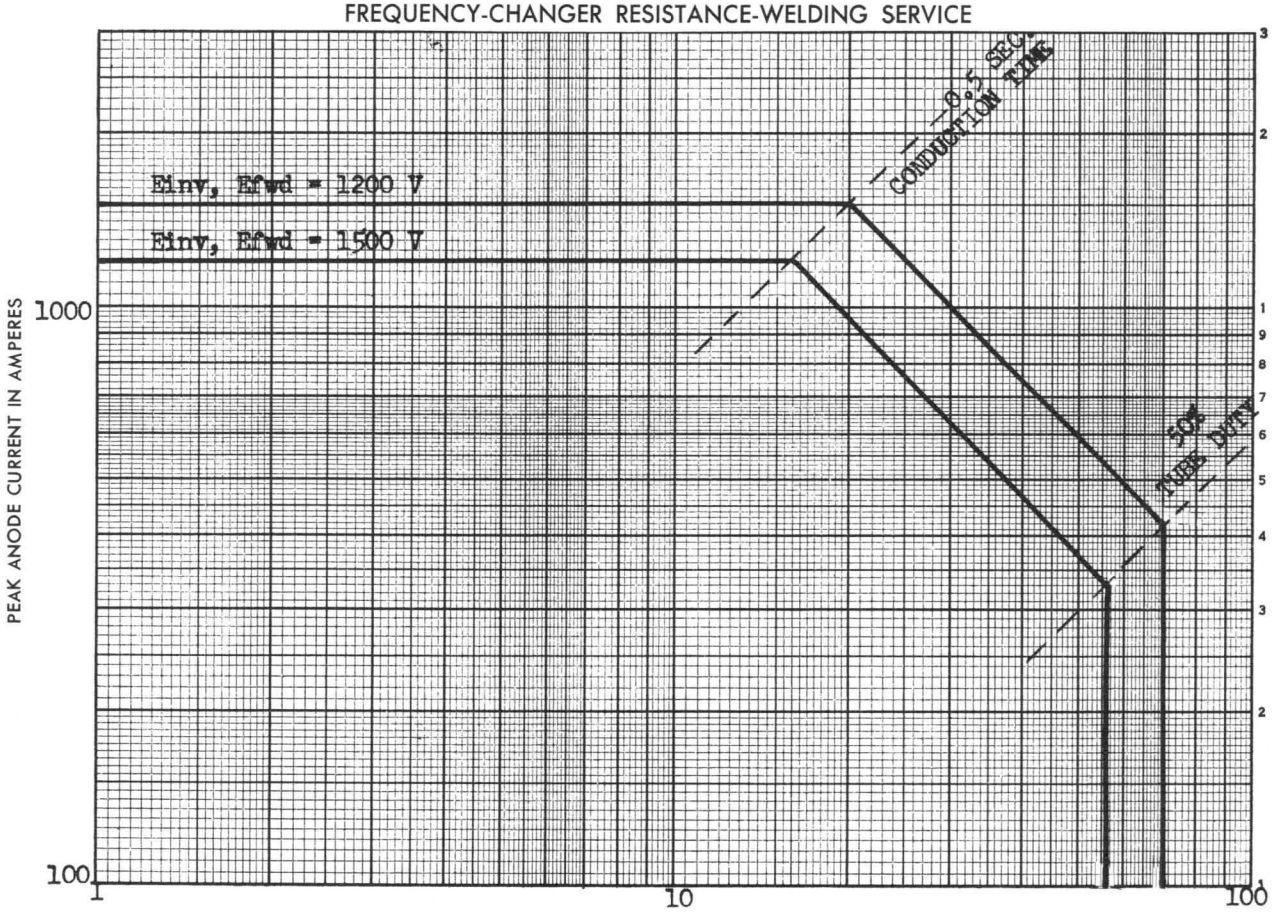

K-69087-72A316 3-63

MAXIMUM AVERAGING TIME=6.25 SECONDS

$\frac{\text{AVERAGE CURRENT}}{\text{PEAK CURRENT}}$ MAXIMUM AVERAGING TIME 0.2 SECOND=0.166 MAXIMUM

$\frac{\text{FAULT CURRENT}}{\text{PEAK CURRENT}}$ MAXIMUM DURATION OF FAULT CURRENT 0.15 SECOND=12.5 MAXIMUM

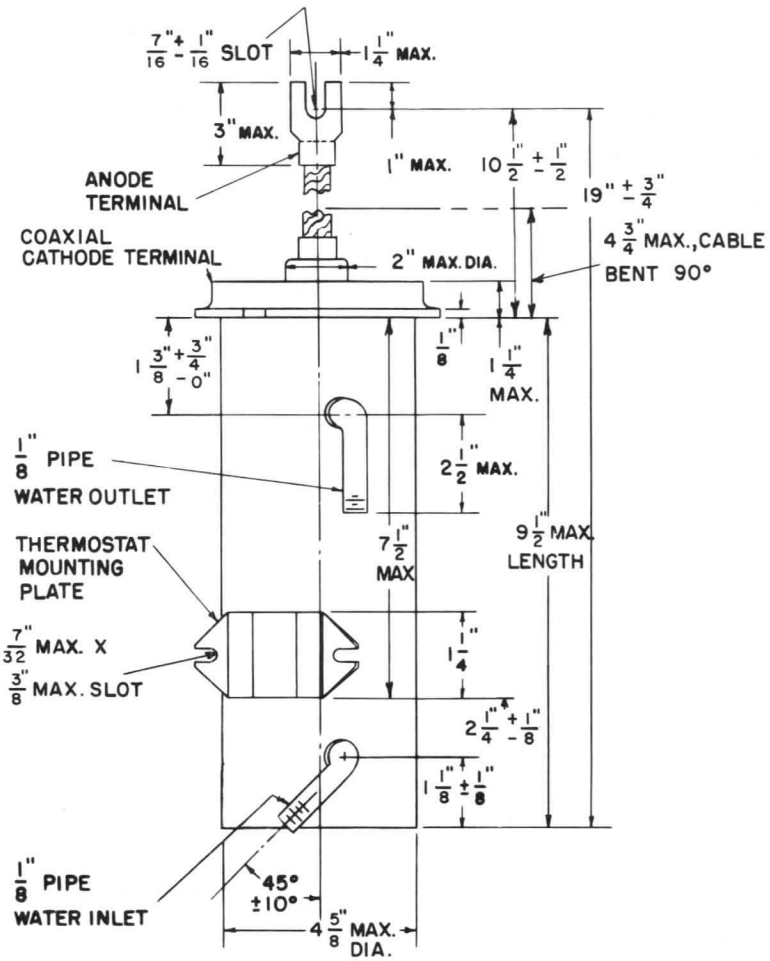

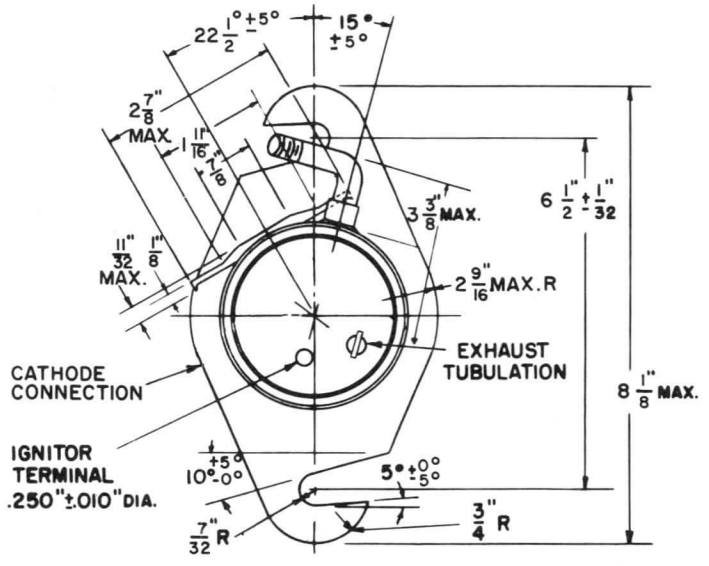

Control thermostats, with mounting brackets, are available through regular tube supply channels under the following catalog numbers:

AC Control Service
- Flying-Lead Type
  - Water-Control Thermostat—N15272AA
  - Over-Temperature Thermostat—N15273AA
- Terminal-Block Type
  - Water-Control Thermostat—N15286AA
  - Over-Temperature Thermostat—N15287AA

See Ignitron Accessories publication in front of Ignitron section for details.

GENERAL ELECTRIC

POWER TUBE DEPARTMENT
Schenectady 5, N. Y.

PRINTED IN U.S.A.

GL-7673



IGNITRON
Coaxial
RECTIFIER SERVICE—190 AMPERES
AC CONTROL SERVICE—355 AMPERES
ADAPTED TO WATER-FLOW CONTROL
ADAPTED TO TEMPERATURE CONTROL

The GL-7673 is a sealed, stainless-steel-jacketed, water-cooled ignitron for a-c control service. In such application two tubes in inverse-parallel connection will control 2400 kilovolt-amperes at voltages of 250 to 600 over a frequency range of 25 to 60 cycles.

The 7673 features a new coaxial construction in which current flows through the tube from anode to cathode, then up the tube wall to a coaxial cathode terminal at the top. This coaxial current flow provides a magnetic shield to eliminate the arc deflection which the high peak currents of this tube might cause in standard design ignitrons.

A slotted mounting plate permits convenient mounting of a thermostat to provide control of the water flow or over-temperature protection.

Advantages of the control feature include reduction of condensation on the tube walls during hot weather, protection against overloads, elimination of water supply as a limiting factor in equipment location, and appreciable savings in water consumption.

Electrical

Cathode Excitation—Cyclic	
Cathode Spot Starting—Ignitor	
Number of Electrodes	
Main Anodes	1
Main Cathodes	1
Ignitors	1
Arc Drop at 13,600 Amperes Peak	36 Volts
Arc Drop at 1115 Amperes Peak	17 Volts

Mechanical

Envelope Material—Stainless Steel	
Over-all Length	$12\frac{13}{16}$ Inches
Over-all Width	$5\frac{5}{8}$ Inches
Net Weight	21 Pounds

Thermal

Type of Cooling—Water	
Inlet Water Temperature, minimum	0 C
Inlet Water Temperature, maximum	30 C
Outlet Water Temperature, maximum	40 C
Water Flow, minimum, solenoid water valve open	3.0 Gallons per Minute
Characteristics for Water Cooling at Rated Minimum Flow	
Water Temperature Rise, maximum	9 C
Pressure Drop at 3 Gallons per Minute, maximum	5.1 Pounds per Square Inch

MAXIMUM RATINGS

Power-Rectifier Service, Intermittent Duty

Ratings are for Zero-Phase-Control Angle
(See Curves K-69087-72A513 and K-69087-72A630 on Page 2 for Details)
Ratings Apply Only at Inlet Water Temperatures Up to 40 C

Maximum Peak Anode Voltage				
Inverse	600	1200	1500	Volts
Forward	600	1200	1500	Volts
Maximum Anode Current				
Peak	4000	3000	2400	Amperes
Corresponding Average	54	40	32	Amperes
Average	190	140	112	Amperes
Corresponding Peak	1140	840	672	Amperes
Maximum Averaging Time	6.23	6.25	6.25	Seconds
Ratio of Average to Peak Current, maximum Averaging Time 0.2 Second	0.166	0.166	0.166	
Ratio of Fault to Maximum Peak Current	12.5	12.5	12.5	
Maximum Duration of Fault Current	0.15	0.15	0.15	Seconds
Frequency Range	50–60	50–60	50–60	Cycles per Second

AC Control Service*

Two Tubes in Inverse Parallel, Ratings per Tube
(See Curves K-69087-72A723 and K-69087-72A724 on Page 3 for Details)

Voltage	250 to 600	Volts RMS
Maximum Demand	2400	Kilovolt-Amperes
Average Current at Maximum Demand	192	Amperes
Maximum Average Current	355	Amperes
Demand at Maximum Average Current	800	Kilovolt-Amperes
Maximum Averaging Time at 250 Volts RMS	11.0	Seconds
Maximum Averaging Time at 600 Volts RMS	4.6	Seconds
Maximum Peak Fault-Current at 250 Volts	27,000	Amperes
Maximum Peak Fault Current at 600 Volts	11,200	Amperes
Frequency Range	25–60	Cycles per Second

Cathode Excitation Requirements

Ignitor Voltage Required to Fire	200	Volts
Ignitor Current Required to Fire	30	Amperes
Starting Time at Required Voltage or Current	100	Microseconds
Ignitor		
Maximum Voltage		
Positive—Anode Voltage		
Negative	5	Volts
Maximum Current		
Peak	100	Amperes
Root Mean Square	10	Amperes
Average	1	Ampere
Maximum Averaging Time	5	Seconds

* RMS demand voltage, current, and kilovolt-ampere demand are all on the basis of full-cycle conduction (no phase delay) regardless of whether or not phase control is used. For voltages below the minimum, the minimum-voltage current rating applies. With the use of log-log paper straight-line interpolation between tabulated points may be used for other detailed ratings of: Demand kva vs average anode current, and maximum averaging time vs anode voltage.

GENERAL ELECTRIC

Supersedes ET-T1649 dated 4-63

PHASE CONTROL
THREE-PHASE SINGLE-WAY
DOUBLE-WAY CIRCUITS

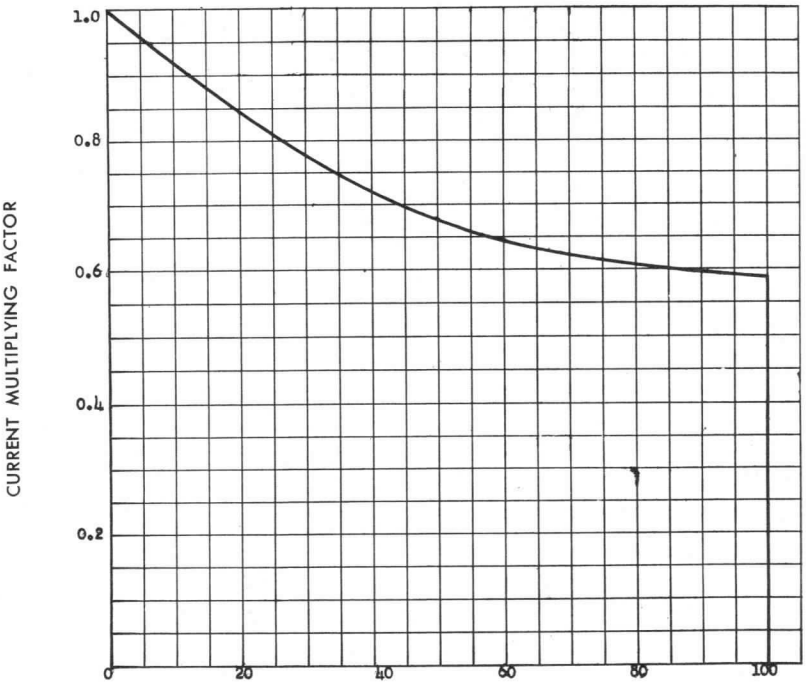

K-69087-72A513

VOLTAGE REDUCTION BY PHASE CONTROL IN PERCENTAGE

8-21-53

POWER-RECTIFIER RATING—INTERMITTENT DUTY

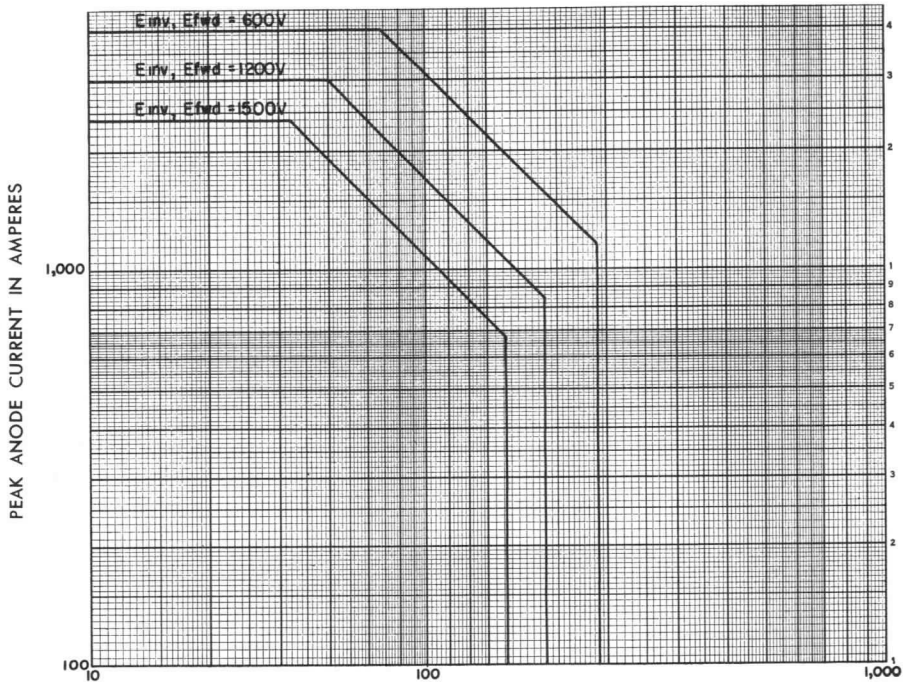

K-69087-72A630

AVERAGE ANODE CURRENT IN AMPERES PER TUBE

9-21-55

MAXIMUM AVERAGING TIME = 6.25 SECONDS

$\frac{I\ AVERAGE}{I\ PEAK}$ MAXIMUM AVERAGING TIME 0.2 SECONDS = 0.166 MAXIMUM

$\frac{I\ FAULT}{I\ PEAK\ MAX.}$ MAXIMUM DURATION OF FAULT CURRENT 0.15 SECONDS = 12.5 MAXIMUM

DEMAND CURRENT VS PERCENTAGE DUTY AT 220 TO 250 VOLTS RMS

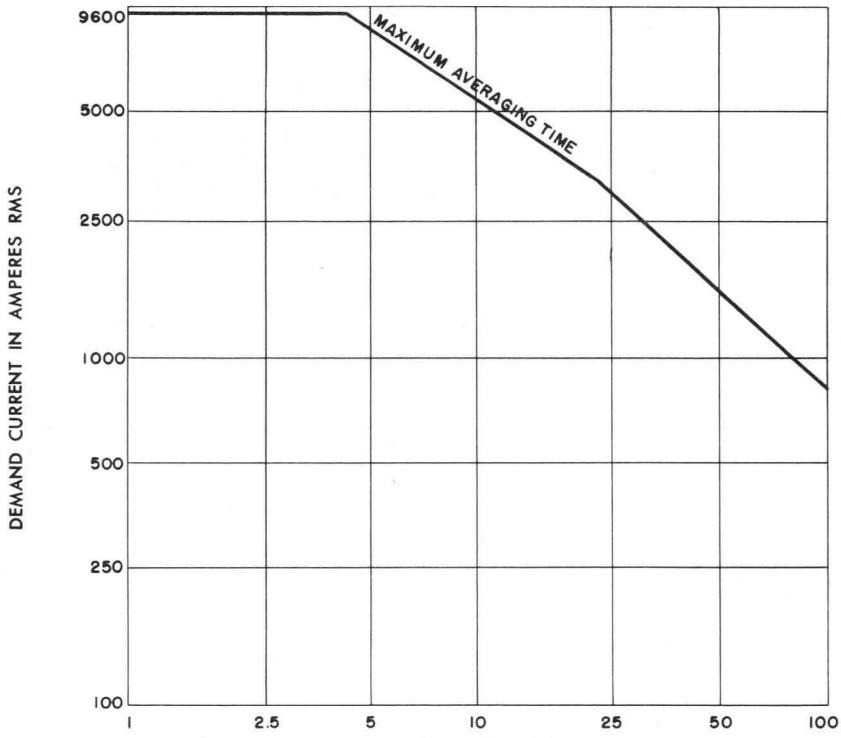

Maximum Averaging Time:

At 220 Volts = 12.5 Seconds
At 250 Volts = 11.0 Seconds

K-69087-72A723

4-61

DEMAND CURRENT VS PERCENTAGE DUTY AT 440 TO 600 VOLTS RMS

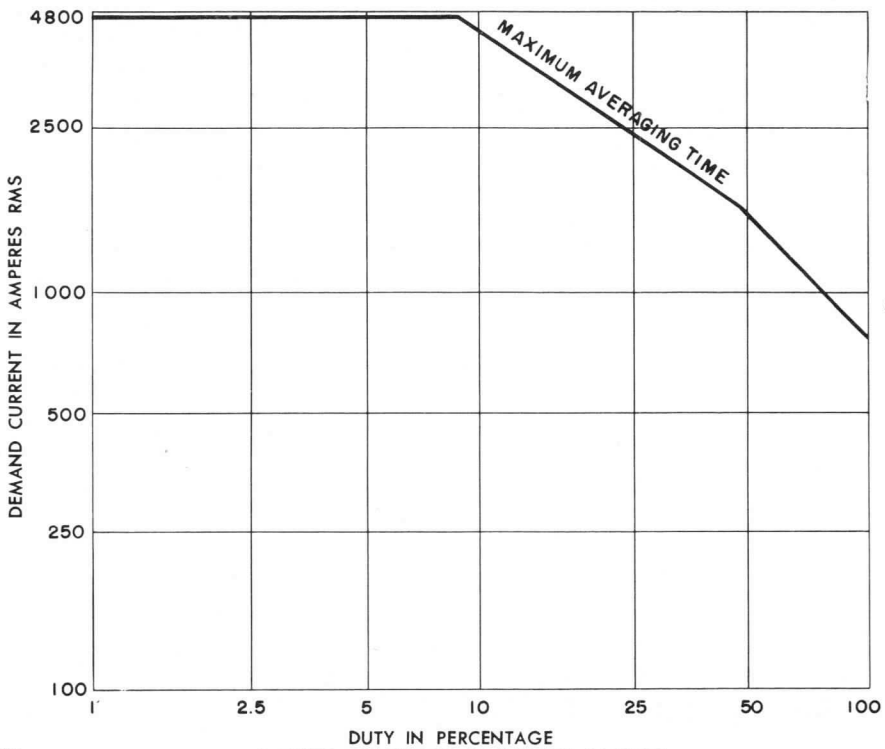

Maximum Averaging Time:

At 440 Volts = 6.4 Seconds
At 500 Volts = 5.6 Seconds
At 600 Volts = 4.6 Seconds

K-69087-72A724

4-61

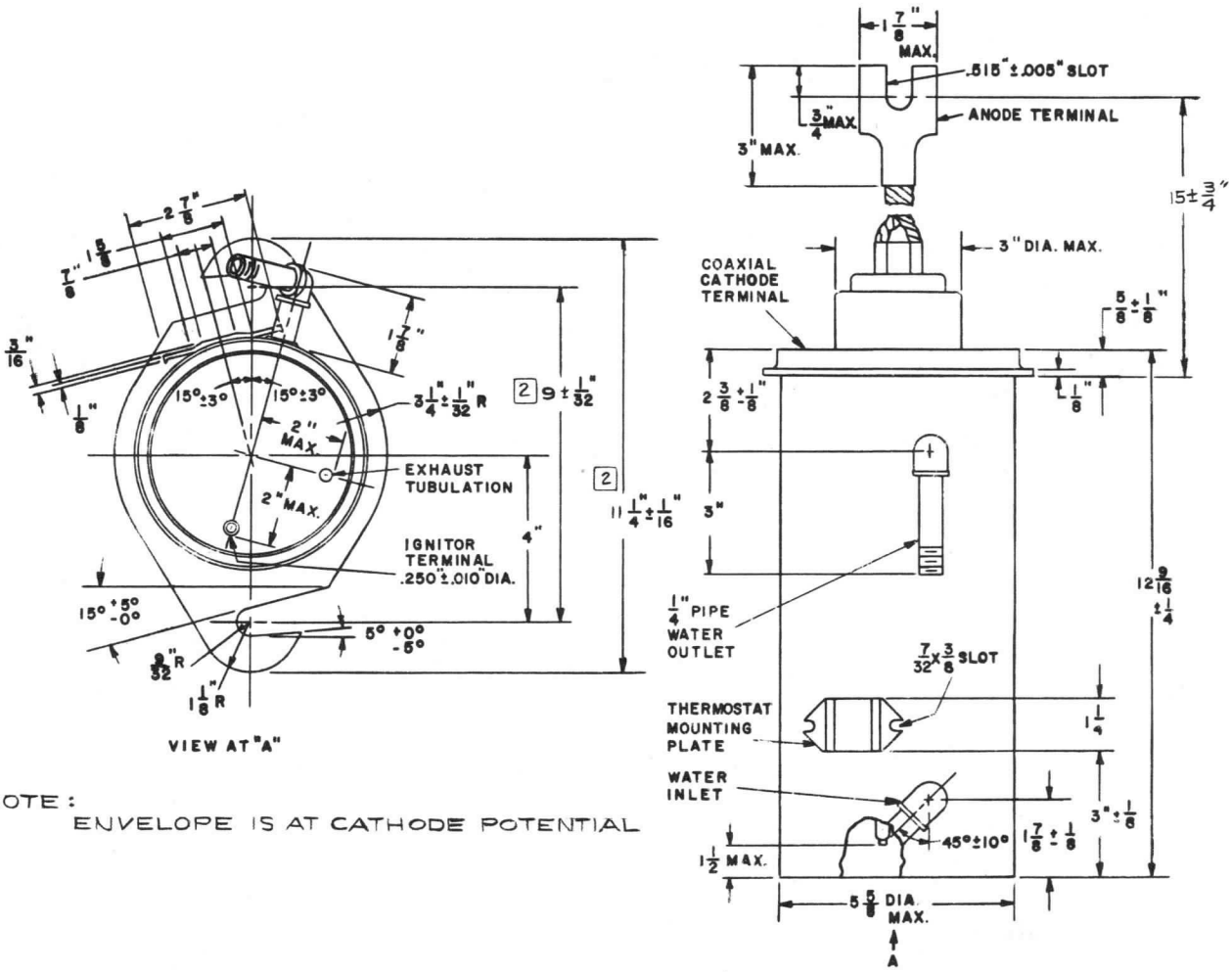

NOTE:
ENVELOPE IS AT CATHODE POTENTIAL

Control thermostats, with mounting brackets, are available through regular tube supply channels under the following catalog numbers:

AC Control Service
- Flying-Lead Type
  - Water-Control Thermostat—N15272AA
  - Over-Temperature Thermostat—N15273AA
- Terminal-Block Type
  - Water-Control Thermostat—N15286AA
  - Over-Temperature Thermostat—N15287AA

See Ignitron Accessories publication in front of Ignitron section for details.

GENERAL ELECTRIC
TUBE DEPARTMENT
Schenectady, N. Y. 12025

THYRATRONS

Recommended Types and Selection Chart

Peak Cathode Current in Amperes*			Max Peak Inverse Voltage	Control Characteristics†			Cathode		Max Temperature Range	Tube Type
Average	Peak	Fault		At 100 Volts	Intermediate Voltage	At 1000 Volts	Volts	Amperes		
0.5	2.0	40	5000	−1.0	.....	−7.0	2.5	5.0	+40 to +80	GL-5557
1.0	1000	....	25,000	....	.....	....	6.3	30.0	−50 to +75	GL-5948‡
1.5	6.0	120	1250	−2.5	.....	−5.0	2.5	7.0	−40 to +80	GL-3C23
		55	1250	−2.5	.....	−5.5	2.5	7.0	−40 to +80	GL-393-A
2.5	15	200	1000	−1.6	.....	−6.5	5.0	4.5	+40 to +80	GL-5559
				+1.0	.....	−9.0	5.0	4.5	+40 to +80	GL-5560
	30	250	1500	−1.0	.....	−5.0	2.5	9.0	−40 to +80	GL-6011/710
3.2	40	560	1500	0	.....	−8.0	2.5	12.0	−55 to +70	GL-5544§
6.4	77	400	2000	+2.0	.....	−9.0	5.0	10.0	+30 to +95	FG-172
			10,000	+1.0	.....	−9.0	5.0	10.0	+25 to +95	FG-105
	80	1120	1500	0	.....	−6.0	2.5	21.0	−55 to +70	GL-6807§‖ GL-6808‖ GL-6809‖
12.5	75	1500	10,000	....	+1.0@1000V −6.0@8000V	....	5.0	20.0	+40 to +65	GL-5830
	100	1500	3000	....	0@200V	−10.0	5.0	19.0	+40 to +80	GL-414
18.0	160	2000	1500	....	0@300V	−3.0	2.5	34.0	−55 to +70	GL-5855§

* *Values listed are maximum values and do not apply for all types of application. Refer to data sheet for detailed information.*
† *Grid characteristic ratings are bogey values. The screen-grid voltage is zero for four-element tubes.*
‡ *Designed for pulse switching applications.*
§ *Designed for a high commutation factor.*
‖ *Tubes identical except for bases.*

ELECTRONIC COMPONENTS DIVISION
GENERAL ELECTRIC
Schenectady 5, N. Y.

PRINTED IN U.S.A.

GENERAL ELECTRIC

THYRATRONS

Supersedes ETI-116A

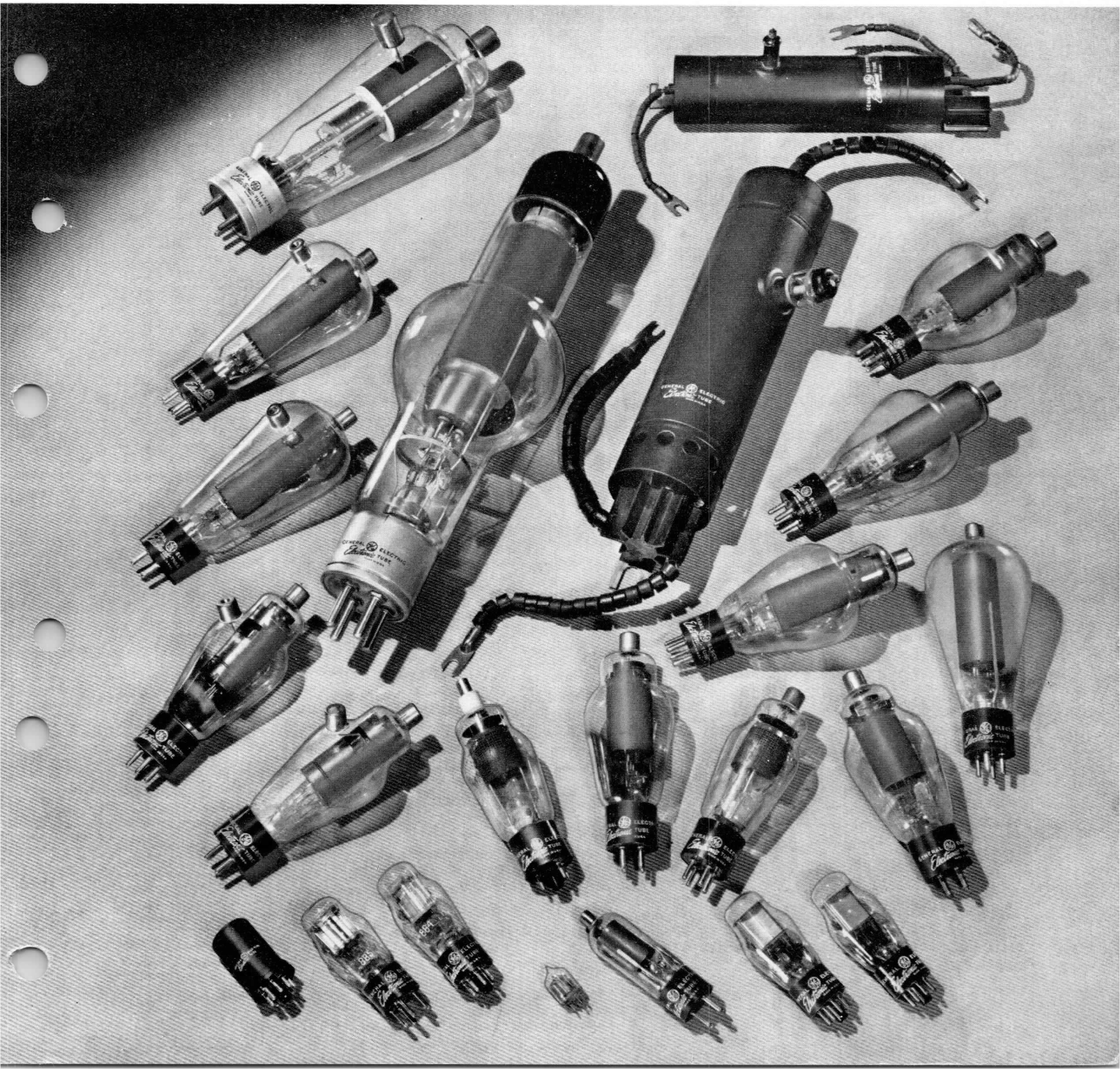

DESCRIPTION

A thyratron is a thermionic gas tube in which one or more electrodes initiate the current flow.

The gas used may be one of the inert gases such as argon, xenon, or helium, or the vapor pressure of a few drops of mercury. The presence of this gas neutralizes by ionization, the electron space-charge around the cathode created by the electrons emitted from it. This space-charge, which is negative in effect and tends to drive the electrons back into the cathode, is one of the limitations on the amount of current a high-vacuum electronic tube can carry. Another limitation of high-vacuum tubes is the ability of the cathode to emit the electrons which comprise the unidirectional current flow. This factor however, can be controlled by design of an electron-emitting source satisfactory for the size of the tube required.

The absence of space charge and its accompanying losses in the thyratron allows larger electrode spacing and smaller-size electrodes for a given current-carrying capacity than is possible with high-vacuum tubes. The elimination of space-charge also permits the use of an electron-emitting cathode of higher efficiency and much larger current-carrying capabilities than otherwise could be used. A gas-filled tube, therefore, can carry much higher current than a high-vacuum tube of corresponding dimensions. The vapor pressure, however, is sufficiently low so that the anode can withstand, when negative, the voltage for which the tube is designed.

The construction of the thyratron is similar to that of the phanotron. In the thyratron, however, the addition of an electrode called a grid increases greatly the usefulness of the tube. Inasmuch as the action of the grid is quite different from that of the grid in the high-vacuum three-electrode tube, it is necessary to describe its action in detail.

The grid, as employed in the thyratron, controls only the starting of the discharge. After starting, under usual operating conditions, it neither modulates, limits, nor extinguishes the arc. Herein lies the fundamental difference between the thyratron as ordinarily used, and the high-vacuum tube. In a gas tube, the positive ions neutralize the space-charge with the result that a prohibitively high current would have to be supplied to the grid before it could gain control with anode current flowing. In order to enable the grid to act with practical amounts of current, the anode voltage must be reduced substantially to zero or made negative for a period long enough for the gas or vapor to become deionized. Once this deionization takes place the grid can resume control. In a high-vacuum tube, since this ionization is not present, the grid can control the flow of current. Any change in the grid voltage of a high-vacuum tube will cause a corresponding change in the current. If an alternating voltage is applied to the anode of the thyratron, the grid has an opportunity to regain control once each cycle and can delay the starting of the arc for as long a period during the subsequent positive half-cycle as the grid voltage is sufficiently negative. This means that the grid can control the average current flowing through the tube and that this averaging can be made as fine-grained as desired by increasing the frequency of interruption.

If the grid as well as the anode is supplied with alternating current, the phase relation between the grid and anode determines the amount of average current passing through the tube. Fig. 1 shows the wave forms occuring with a shift in phase between the grid and anode. Example A shows the wave forms with the tube in an almost nonconductive condition, while E illustrates rectification throughout the entire half wave. The other diagrams show several intermediate stages of grid control.

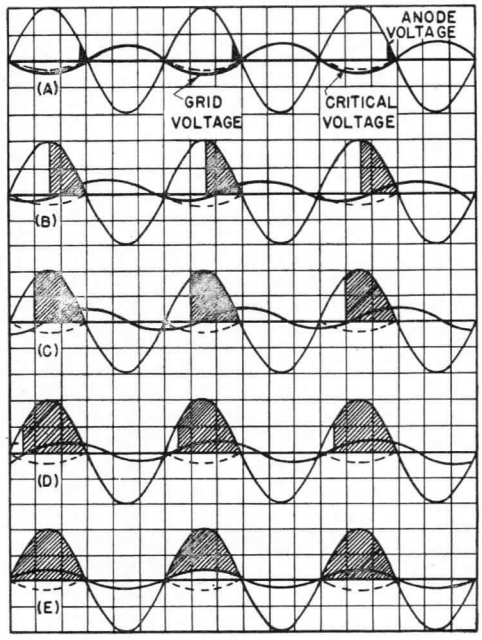

K-9033592 1-10-45

Fig. 1—Control of Thyratron Anode Current by Variations in the Grid Voltage

The voltage conditions for starting the current depend largely upon the structural design of the tube. A tube may be designed so that within the normal anode voltage limits the current always starts at a negative grid voltage, always at a positive grid voltage, or at a negative voltage for high anode voltages and a postive voltage for low anode voltages.

Negative-control tubes require relatively little grid power and are therefore suitable for use with high-impedance circuits.

Positive-control tubes are useful in applications where it is desired that no current flow in the absence of grid excitation.

The intermediate type of tube is often used in inverter circuits and is usually designed to ensure as rapid deionization as possible, as the time allowed for deionization in certain circuits is sometimes very short.

DEFINITIONS OF RATINGS

The ratings of gas-discharge tubes are given in terms of fundamental conditions on the tube itself rather than in terms of any circuit constants. Values for a particular tube are given on the individual tube descriptive sheets, (i.e., in terms of actual anode voltage and current, grid voltage and current, etc.).

The **Maximum Peak Inverse Voltage** is a rating which is common to both thyratrons and phanotrons. It is the highest instantaneous voltage that the tube will safely withstand in the direction opposite to that in which it is designed to pass current and depends upon operation within the specified temperature range and within the surge current rating. It should be emphasized that the maximum rating of the tube refers to the actual inverse voltage and not to the calculated values. A cathode-ray oscilloscope or a spark gap connected across the tube is useful in determining the actual peak inverse voltage.

The **Maximum Peak Forward Voltage** is a rating which applies only to thyratrons. It is the maximum instantaneous voltage that can be held back by the action of a suitable grid voltage and for mercury-vapor tubes depends particularly upon operation within the maximum temperature specified.

The **Maximum Instantaneous Anode Current** is the highest instantaneous current that a tube can safely conduct under normal operating conditions in the direction of normal current flow.

The **Maximum Surge Current** rating is a measure of the ability of a tube to withstand extremely high transient currents; it is also a measure of the stiffness of the anode circuit in which the tube will operate satisfactorily at rated temperature and with maximum peak inverse voltage applied.

The **Maximum Average Anode Current** is a rating based on tube heating. It is the highest average current which can be carried continuously through the tube.

The grid current ratings are given in terms of the **Maximum Instantaneous Grid Current** and the **Maximum Average Grid Current;** the integration period is the same as that for the anode current.

In addition to the above ratings, there are a number of other tube characteristics. The **Voltage Drop** from anode to cathode is a characteristic which becomes important when the anode supply voltage is low, as it then becomes a large part of the working voltage. The typical voltage drop which may be encountered is included in the tube ratings, and the maximum is given in the Specifications. This includes the effect of temperature change during tube life and variation between individual tubes.

The **Control Characteristic** shows the relation between grid and anode voltage for the starting of a discharge, and gives the range of variations between tubes held at a condensed-mercury temperature of 40 C. In the case of gas tubes, temperature is not an important factor, The control characteristic is affected somewhat by the temperature, and this information is also available in the form of characteristic curves.

The **Ionization Time** may be defined as the time required for conduction to occur when the tube is operated with ample anode voltage and with the grid or grids at a potential substantially more positive than required for discharge.

The **Deionization Time** is the time required under normal conditions to bring about the deionization necessary to regain control. The time given is based on a condition of full maximum average anode current and condensed-mercury temperature of 40 C.

Condensed-Mercury Temperature is the temperature which controls the mercury-vapor pressure and hence many of the tube characteristics. This is measured on the bulb just above the base, the point where the mercury vapor is condensing within the tube. Satisfactory tube operation depends upon operating within the specified temperature limits. When the tube is being heated it must be remembered that the heating time specified on the Description and Rating sheets refers only to the cathode. Additional heating must be allowed to bring the condensed-mercury temperature within limits.

CLASSES OF TUBES

Thyratrons are built in both glass and metal envelopes. The higher voltage tubes utilize glass construction for ease of insulation. Tubes built for control of large amounts of power at lower voltages (as for motor control and welding applications) are of metal construction to withstand handling and shock, and are adapted for panel-mounting, whereas smaller tubes are generally socket-mounted and may even have all electrodes connected at one end for ease of installation and conservation of space

Mercury tubes are available where temperature can easily be controlled. Tubes with inert-gas filling are available for those applications where a wide range of ambient temperatures will be encountered. Where inert gas is used the tube characteristics vary only with pressure of the gas and are essentially independent of normal temperature changes.

APPLICATION CIRCUITS#

The versatility of these gas-filled tubes gives them a wide field of application. One of their applications is the control of the speed of d-c motors. One of the first motor speed-control applications was completed in 1929. Other trials followed and there is now a large demand for Thy-Mo-Trol (GE's trademark for motor control using electronic tubes) drives, by which d-c motors are operated from

#Circuits shown in ETI-116A are examples of possible tube applications and the description and illustration of them does not convey to the purchaser of tubes any license under patent rights of General Electric Company.

APPLICATION CIRCUITS (CONT'D)

constant potential a-c systems. These can provide speed control over ranges even larger than one hundred to one, operating at constant torque below basic speed by means of armature control and at constant horsepower above basic speed by means of field control. A circuit for such an application is shown in Fig. 2 below.

Some of the uses to which such a circuit may be applied include the maintenance of the correct tension during the reeling of the wire output of wire-drawing machines, the correlation of the speeds of various sections of rubber process conveyors to maintain a given loop of rubber sheet between the conveyor sections. It may be used to vary over wide ranges the speed of d-c motors driving frequency changers which supply power to highspeed textile motors, and to maintain the speed of the motors within narrow limits at any given setting, in spite of wide load changes. Used in these and similar applications, the thyratron provides an efficient, dependable aid to modern industry.

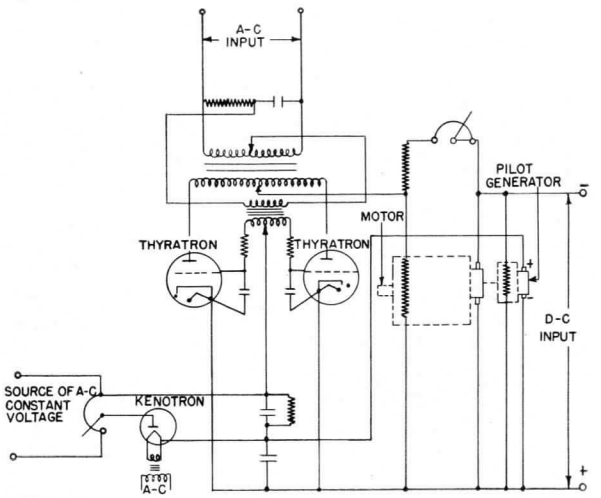

K-9033570 12-31-45

Fig. 2—Electron Tube Motor Control Circuit

Another application is the thyratron motor-control circuit illustrated in Fig. 3 below. This is another circuit arrangement which can be used to operate a motor at constant speed in spite of wide load changes. The error signal may be obtained from a tachometer and standard source of voltage.

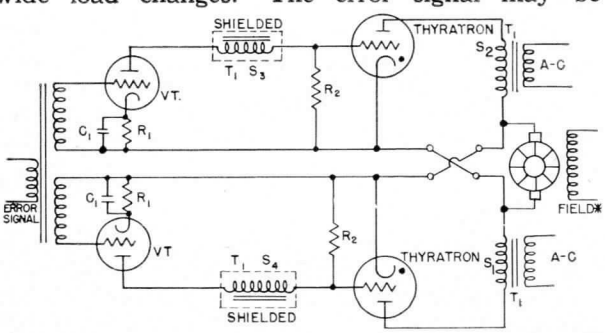

K-9033517 12-31-45

Fig 3—Motor Control Circuit (*The Field of the D-c Motor is Supplied from a Separate D-c Source)

The use of gas-filled tubes for the control of power flow to resistance welders has revolutionized the fabrication of high-production units by accurate timing and uniform heating; the welding of high-strength aluminum alloys has been made practical by the use of thyratron control. Welders so controlled vary in size from 3 to 5 kilovolt-amperes to as high as 2000 kilovolt-amperes. A typical welder-control circuit is shown in Fig. 4 below.

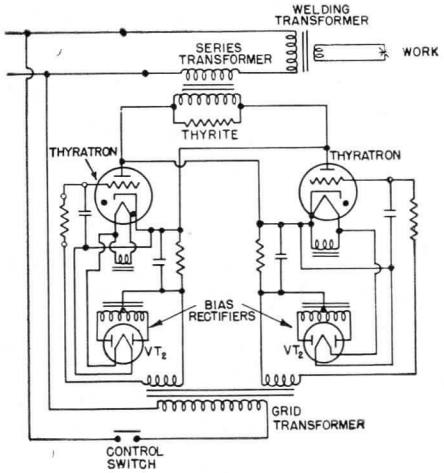

K-9033516 11-2-44

Fig. 4—Thyratron Welder-Control Circuit

One of the first large industrial applications of the thyratron tube was the light-draining control board of the Chicago Civic Opera. This was followed by that of the Radio City Music Hall where 313 lighting circuits were controlled electronically. Many subsequent applications have proved the greater smoothness, efficiency, and flexibility of tube control, particularly with large numbers of circuits, than can be obtained with the conventional resistor board. A circuit for illumination control is illustrated in Fig. 5. The same basic scheme, using a saturable reactor may be applied to electric furnaces where thyratron rectifiers provide precision temperature control.

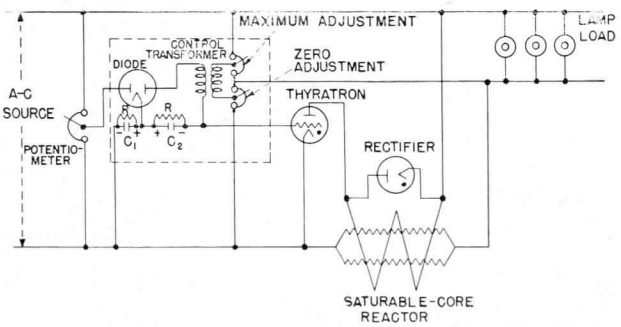

K-9033503 12-31-45

Fig. 5—Feed-back Circuit Used in Illumination Control

Fig. 5—Henney, Electron Tubes in Industry, P-250; McGraw-Hill Book Co., Inc., 1937

Potentiometers are provided to adjust circuits properly when the intensity control is set at maximum and at zero. These adjustments are made easily at the time of installation and are fixed thereafter.

The feed-back circuit compares the voltage on the lamps with the voltage from the intensity control and acts on the grid of the controlled rectifier to hold the lamp voltage constant for any one setting of the intensity control.

Gas-filled tubes may be used in inverter circuits for the conversion of d-c to a-c power, using the deionization time of the tube for commutation. Three typical inverter circuits are shown in Figs. 6, 7, and 8.

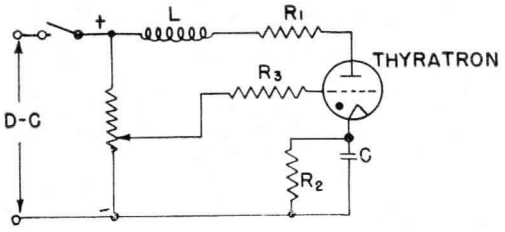

K-9033511 10-14-44

Fig. 6—Fundamental Single-Tube Inverter Circuit

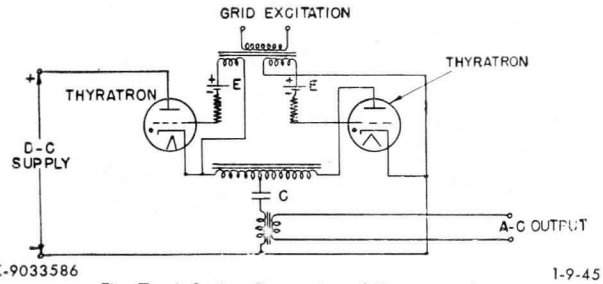

K-9033586 1-9-45

Fig. 7—A Series Connection of Thyratrons for Inverter Operation

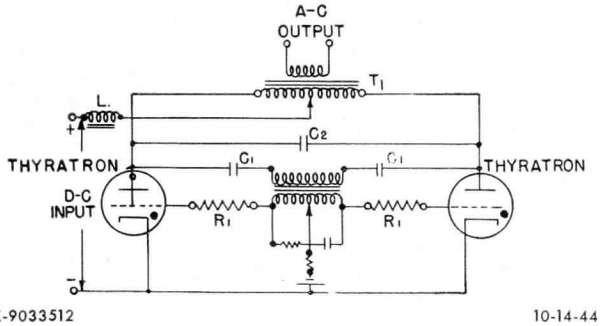

K-9033512 10-14-44

Fig. 8—Self-excited Parallel-type Inverter Circuit

The time-delay circuit shown in Fig. 9 may be used for timing purposes in switching sequences for delayed applications of power, for printing presses, and for welding.

Fig. 6—Henney, Electron Tubes in Industry, P-232; McGraw-Hill Book Co., Inc., 1937.

Figs. 7, 8, 10 and 12—Hull, A. W., General Electric Review, Vol. 32, No. 7; July 1929.

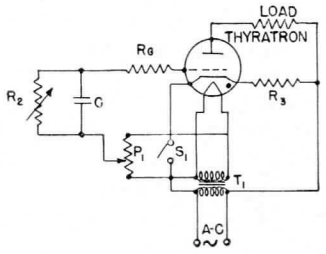

K-9033510 10-14-44

Fig. 9—Time-Delay Circuit

Another use of the thyratron is in temperature-control applications. A circuit for high-temperature control is shown in Fig. 10 below.

This circuit is generally applicable at temperatures for which a resistance thermometer may be used to form one arm of the a-c Wheatstone bridge. Variation of resistance of any arm of the bridge controls the normal temperature which is obtained. The thyratron is used to control the operation of current contactors when the heater current is extremely high.

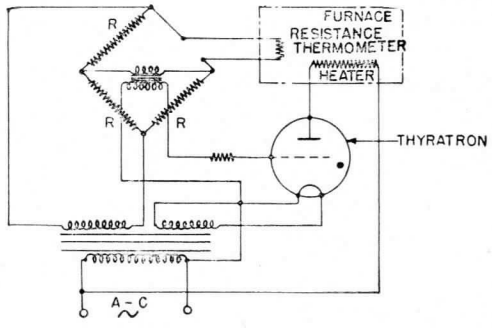

K-9033563 1-1-45

Fig. 10—High-temperature Control Circuit

The thyratron may be utilized in relaxation-oscillator circuits to provide a linear time base for cathode-ray oscilloscopes. A relaxation-oscillator circuit is shown in Fig. 11 below in which R_1 and C_1 determine the frequency of operation.

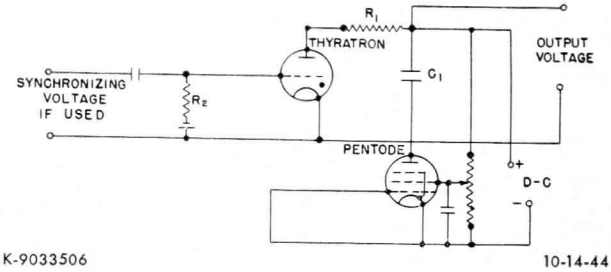

K-9033506 10-14-44

Fig. 11—Relaxation Oscillator Circuit, for Time Base

Figs. 9 and 11—Maddock, A. J., Journal of Scientific Instruments, March 1943.

APPLICATION CIRCUITS (CONT'D)

Thyratrons used with phototubes in circuits, such as that shown in Fig. 12 provide a fast, trouble-free, automatic means for counting articles or persons, or for operating doors. It is useful in many switching operations. The turning on of lights, when daylight falls below a certain level of intensity is an example.

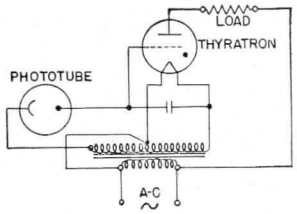

K-9033509 10-14-44

Fig. 12—Photoelectric Relay with a Thyratron (On-off Control Circuit)

Thyratrons are used to control the duration and amount of current passing for welding, X-ray work, or spectographic analysis using spark electrodes. A circuit for such applications is shown in Fig. 13.

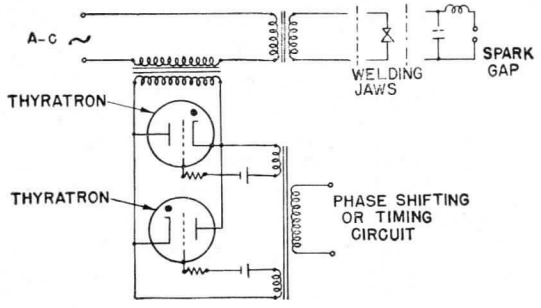

K-9033524 1-1-45

Fig. 13—Impedance Control of Alternating Current

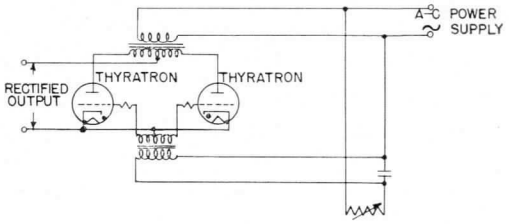

K-9033502 7-9-46

Fig. 14—Variable Resistance Method of Control Producing Variation in Phase Between Resistance and Capacity Voltages

Since thyratrons are essentially rectifiers, one of their main uses is in rectifier circuits providing controlled d-c from an a-c source. Two circuits that may be used for power supply applications are shown in Figs. 14 and 15. Fig. 14 shows an arrangement designed to supply d-c power from an a-c source while Fig. 15 shows a means of supplying a load with variable a-c power from an a-c source.

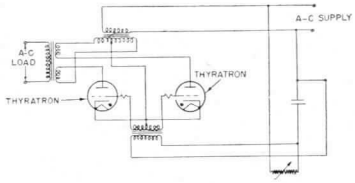

K-9033565 7-9-46

Fig. 15—Power Supply Circuit Using Thyratrons (Supplying Variable A-c Power from an A-c Source)

In general, applications of these tubes can be used to provide faster operation, reduced maintenance and more precise control than can be accomplished by other methods. The automatic operation, amplification of power, quiet operation, flexibility, and saving of space, are additional features valuable for many industrial applications.

CIRCUIT DESIGN

Tubes are selected for these applications by consideration of the ratings, including peak and average currents to be conducted, and peak inverse and forward voltages to be applied.

If very high-impedance grid-supply voltage is to be used, a tube of shielded-grid construction should be chosen so that the grid current will be small and cause negligible drop in the supply. Ambient temperatures should be considered and mercury tubes used only where the condensed mercury can be held at temperatures above + 40 C.

CIRCUITS

The circuits illustrated are examples of types that may be used in some of the applications discussed in this article. It is impossible to illustrate in any discussion reasonably brief even a fraction of the circuits in which these tubes may be used for specific applications. Those illustrated show a few of the basic circuits for some of the major applications. Many of the others are modifications or combinations of these for the particular requirements of the task the tubes may be called upon to perform.

When a tube has been chosen for the application, the Specifications should be consulted to determine the limits of operation. The remainder of the circuit constants, voltages, and currents may then be checked to assure satisfactory operation of all tubes within the specified limits.

Fig. 13—Griffith, R. C., General Electric Review, Vol. 33, No. 9 Sept. 1930.

Fig. 14—Henney, Electron Tubes in Industry, P-198; McGraw-Hill Book Co., Inc., 1937

INSTALLATION

Mechanical

Thyratrons should be mounted in sockets or supports of good quality with connections of sufficient current-carrying capacity. A shock-absorbing mounting must be used if the tube is to be subjected to excessive vibration or sudden shock.

Electrical

The cathode should be operated preferably from an a-c source. If alternating current is not available, a d-c source may be used.

The cathode must assume operating temperature before electron current is drawn. The delay may be accomplished either by manual or automatic control of the anode or grid circuit. The time required for the cathode to come up to normal operating temperature is included under Technical Information. In the case of mercury-filled tubes, it is also necessary to bring the condensed-mercury temperature to the minimum operating value.

Care should be taken in the design of circuits to avoid having a capacitor and thyratron connected in such a way that the capacitor is allowed to discharge through the thyratron without sufficient series impedance to limit the peak current to the rated (or below) peak current of the thyratron. There is sometimes a tendency to permit charged capacitors to discharge directly through thyratrons on the basis that the peak current, if it is in excess of the rating, occurs for such a short length of time that it cannot damage the tube. Experience has shown, however, that cathodes will have short life under the above conditions because of sputtering and that peak current should not be exceeded regardless of the short time of the discharge.

Thermal

When a mercury-vapor thyratron tube is first placed in operation, it is necessary to distribute the mercury properly before anode voltage is applied. This is usually accomplished by applying filament voltage to distill the mercury into the cooling chamber of the tube. The location of the cooling chamber is indicated on the outline drawing by the words "controlling mercury temperature."

The design of equipment should allow the tube to operate within the condensed-mercury temperature limits over the range of ambient temperatures to be encountered.

OPERATION

Four of the fundamental limits on the operation of thyratron tubes are the maximum peak inverse anode voltage, maximum peak forward anode voltage, maximum instantaneous anode current, and the maximum average anode current. These ratings were previously defined under "Definitions of Ratings."

Cathode Circuit

The cathode voltage should not deviate from the rated value by more than five per cent and the cathode should be allowed to attain operating temperature before any other potential is applied. Filament voltage should be set so that voltage fluctuations give an average value equal to the rated filament voltage. Too low filament voltage may result in very short life or perhaps immediate failure due to loss of emission. Too high voltage will shorten the life of the cathode somewhat.

Anode Circuit

Maximum Peak Inverse Voltage—The relations between the peak inverse voltage, the direct voltage, and the rms value of alternating voltage depend largely upon the individual characteristics of the rectifier circuit and the power supply. The presence of line surges, keying surges, or any other transient or wave-form distortion may raise the actual peak voltage to a value which is higher than that calculated from the sine-wave voltages in the transformer.

Maximum Instantaneous Anode Current—The ability of a given tube to conduct this instantaneous current without excessive voltage drop will depend upon cathode heating and the condition of the emitting surface.

Maximum Surge Current—The rating is intended to form a basis for set design in limiting the abnormal currents that occur during short-circuit conditions. It does not mean that the tube can be subjected to repeated short circuits without the probability of a corresponding reduction in life and the possibility of a failure.

Maximum Average Anode Current—In the case of a rapidly repeating duty cycle, this current may be measured on a d-c meter. Otherwise, it is necessary to calculate the average current over a period not to exceed a definite interval of time which is specified for each design of tube. For example, in a two-tube, 60-cycle rectifier feeding into an inductive load (so that the tube conducts approximately half the time with a square wave) a tube with a maximum instantaneous anode current of 15 amperes, a maximum average current of 2.5 amperes, and an integration period of 15 seconds, can carry a series of 15-ampere, 180-degree blocks of current (half the time) for 5 seconds out of each 15 seconds, or a series of 7.5-ampere, 180-degree blocks of current (half the time) for 10 seconds out of each 15 seconds.

Ionization Time—This time varies with the wave form and amplitude of the impressed grid voltage.

When the tube is operated under normal conditions, this time will not exceed the value given.

Deionization Time—This time is dependent on temperature, grid voltage, anode voltage, and instantaneous anode current. The value under normal conditions is included under Technical Information.

The ionization and deionization times place a limitation on the maximum frequency at which the tubes can operate for any set of conditions.

The Voltage Drop—Where uninterrupted service is desired, the tube voltage drop should be checked at regular intervals by means of a cathode-ray oscilloscope or other suitable means. This drop is one criterion of tube condition, and its rapid rise from one test to the next will anticipate failure.

Grid Circuit

Approximate Control Characteristic—Since the control characteristic varies with individual tubes, only average curves can be given. In the case of mercury-vapor tubes, variation is also experienced as a function of temperature. For these reasons, and because of variable grid currents, it is always advisable in practice to supply the grid with several times the voltage apparently necessary.

Whenever possible, a phase shift or some other method of control which does not give an objectionable error due to these changes in characteristic should be used. This method permits fixing the time of starting of anode current anywhere in the positive half cycle of anode voltage. The average value of anode current is thereby completely controlled for variations from zero to maximum.

For a strictly on-and-off control, the magnitude method is satisfactory provided ample voltages are used on the grids. With the phase-shift method, more uniform control is obtainable since an excess of these voltages may be used at all times. This method eliminates the effects of grid currents, variation in grid supply voltages and variation in starting characteristic.

Note: The ratings and characteristics of a particular tube are given under Technical Information on the Description and Rating sheet for that tube.

ELECTRONIC COMPONENTS DIVISION
GENERAL ELECTRIC
Schenectady 5, N. Y.

PRINTED IN U.S.A.

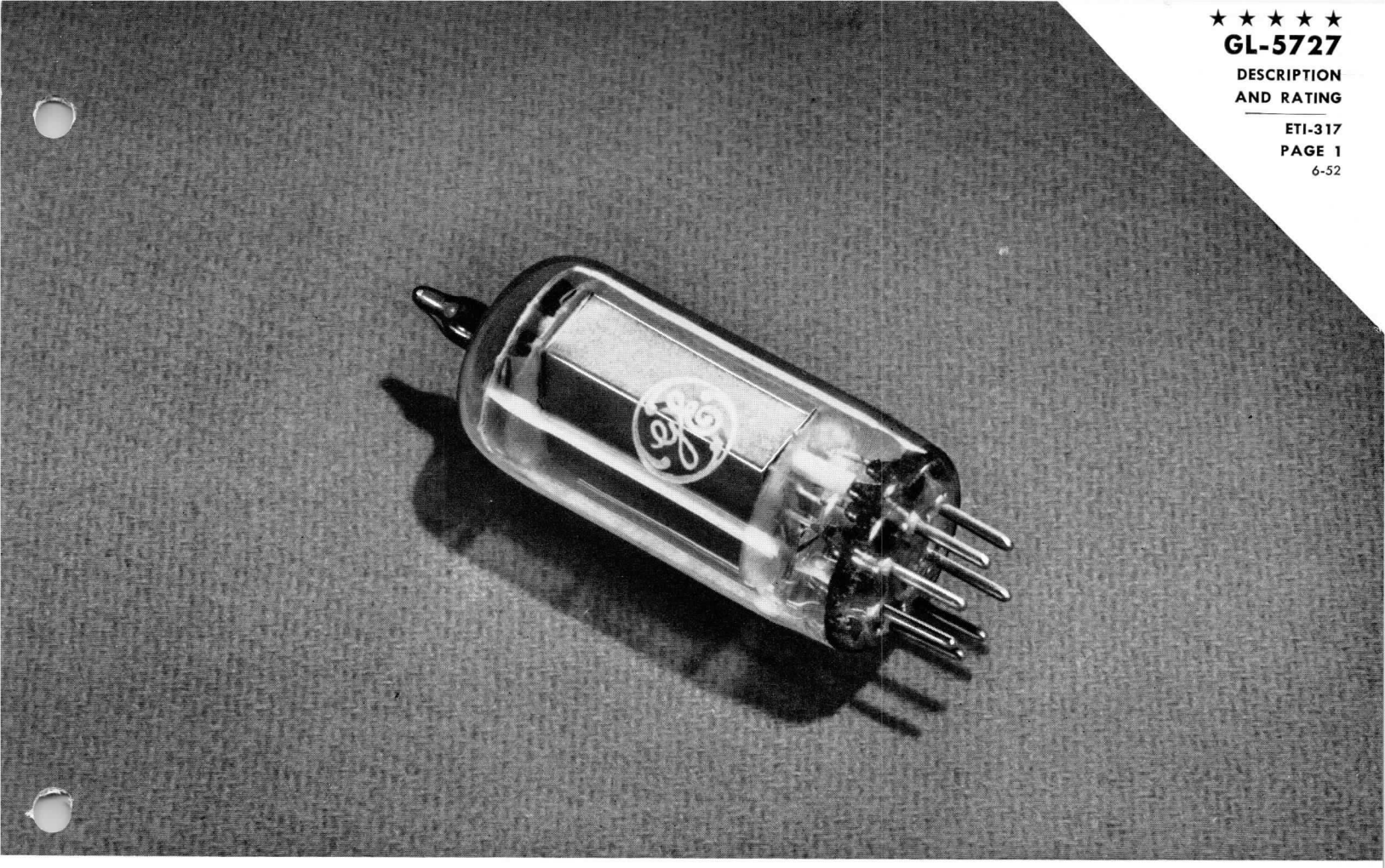

THYRATRON

DESCRIPTION

The GL-5727 is a miniature, four-electrode, inert-gas-filled thyratron with negative control characteristics which is suitable for use in relay and grid-controlled-rectifier applications. Operating characteristics of the tube include a high-control ratio essentially independent of temperature over a wide range, low grid-anode capacitance, and very low grid current. The GL-5727 is specially designed to assure dependable life and reliable service under the exacting conditions encountered in mobile and aircraft applications. Features include a high degree of mechanical strength and a heater-cathode construction designed to withstand many-thousand cycles of intermittent operation.

TECHNICAL INFORMATION

GENERAL

Electrical Data	Minimum	Bogey	Maximum	
Heater Voltage	5.7	6.3	6.9	Volts
Heater Current, E_f = 6.3 volts		0.60	0.66	Ampere
Cathode Heating Time	10			Seconds
Anode-to-Control-Grid Capacitance		0.026		uuf
Control-Grid to Cathode and Shield-Grid Capacitance		2.4		uuf
Deionization Time, approximate				
E_{bb} = 125 volts d-c, I_b = 0.1 ampere d-c				
E_{c1} = −100 volts d-c		35		Microseconds
E_{c1} = −11 volts d-c		75		Microseconds
Ionization Time, approximate		0.5		Microseconds
Anode Voltage Drop		8		Volts
Critical Grid Current, E_{bb} = 460 volts rms			0.5	Microampere

GE Electronic TUBE

GENERAL ELECTRIC

TECHNICAL INFORMATION (CONT'D)

Mechanical Data

Type of Cooling—Air
Mounting Position—Any

Net Weight, maximum	0.3	Ounce

MAXIMUM RATINGS, Absolute Values

GRID-CONTROLLED RECTIFIER SERVICE

Maximum Peak Anode Voltage		
Inverse	1300	Volts
Forward	650	Volts
Maximum Cathode Current		
Peak	0.5	Ampere
Average	0.1	Ampere
Maximum Averaging Time	30	Seconds
Fault, Maximum Duration 0.1 Second	10	Amperes
Maximum Negative Control-Grid Voltage		
Before Conduction	−100	Volts
During Conduction	−10	Volts
Maximum Positive Control-Grid Current		
Average, Averaging Time, One Cycle	10	Milliamperes
Maximum Negative Shield-Grid Voltage		
Before Conduction	−100	Volts
During Conduction	−10	Volts
Maximum Positive Shield-Grid Current		
Average, Averaging Time, One Cycle	10	Milliamperes
Maximum Heater-Cathode Voltage		
Heater Negative	−100	Volts
Heater Positive	+25	Volts
Maximum Control-Grid Circuit Resistance	0.1	Megohm
Ambient Temperature Limits	−75 to +90	C

PULSE-MODULATOR SERVICE

Maximum Peak Anode Voltage		
Inverse	100	Volts
Forward†	500	Volts
Maximum Cathode Current		
Peak	10	Amperes
Average	0.01	Ampere
Maximum Negative Control-Grid Voltage		
Before Conduction	−100	Volts
During Conduction	−10	Volts
Maximum Positive Control-Grid Current		
Peak	20	Milliamperes
Maximum Negative Shield-Grid Voltage		
Before Conduction	−50	Volts
During Conduction	−10	Volts
Maximum Positive Shield-Grid Current		
Peak	20	Milliamperes
Maximum Pulse Duration	5	Microseconds
Maximum Pulse Recurrence Rate	500	Pulses per Second
Maximum Duty Cycle	0.001	
Maximum Rate of Change of Cathode Current	100	Amperes per Microsecond
Maximum Heater-Cathode Voltage	0	Volt
Maximum Shield-Grid Circuit Resistance	25000	Ohms
Minimum Shield-Grid Circuit Resistance	2000	Ohms
Maximum Control-Grid Circuit Resistance	0.5	Megohm
Ambient Temperature Limits	−75 to +90	C
Maximum Impact Acceleration in Any Direction	750	G

† After the completion of a pulse, a 20-microsecond delay is required before a positive voltage of more than 10 volts is applied to the tube.

AVERAGE GRID CHARACTERISTICS DURING ANODE CONDUCTION
$E_f = 6.3$ VOLTS
SHIELD-GRID VOLTS = 0

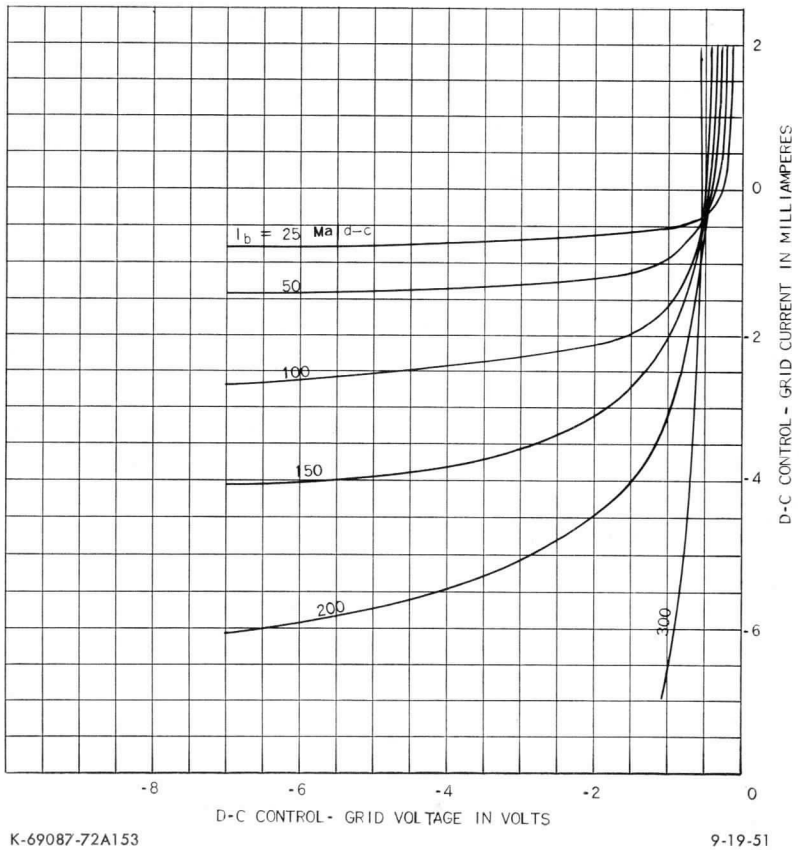

K-69087-72A153 9-19-51

AVERAGE CONTROL CHARACTERISTICS
$E_f = 6.3$ VOLTS
GRID RESISTOR = 0.1 MEGOHM

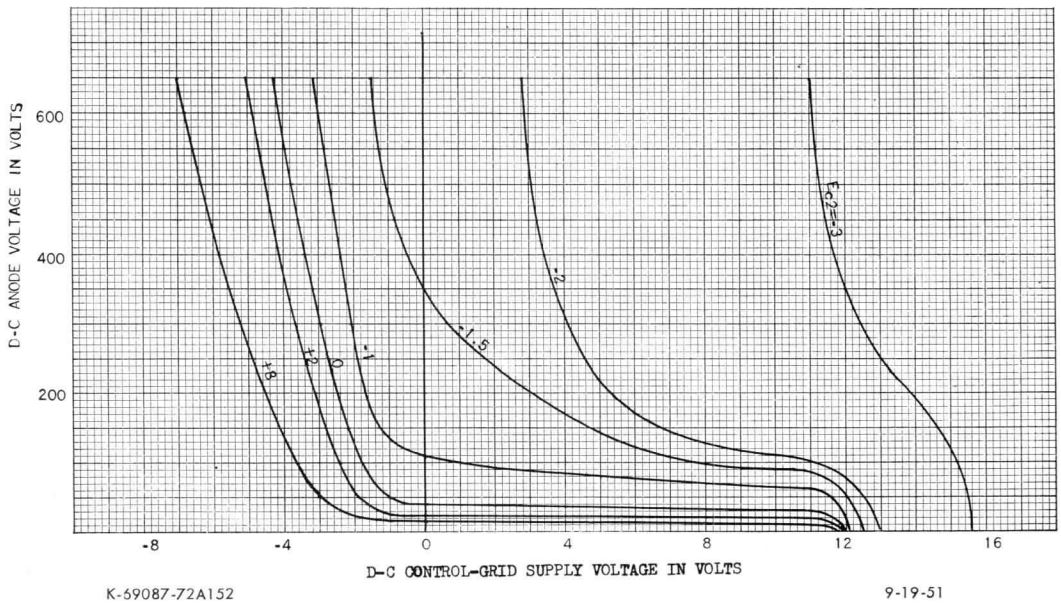

K-69087-72A152 9-19-51

AVERAGE GRID CHARACTERISTICS
BEFORE ANODE CONDUCTION

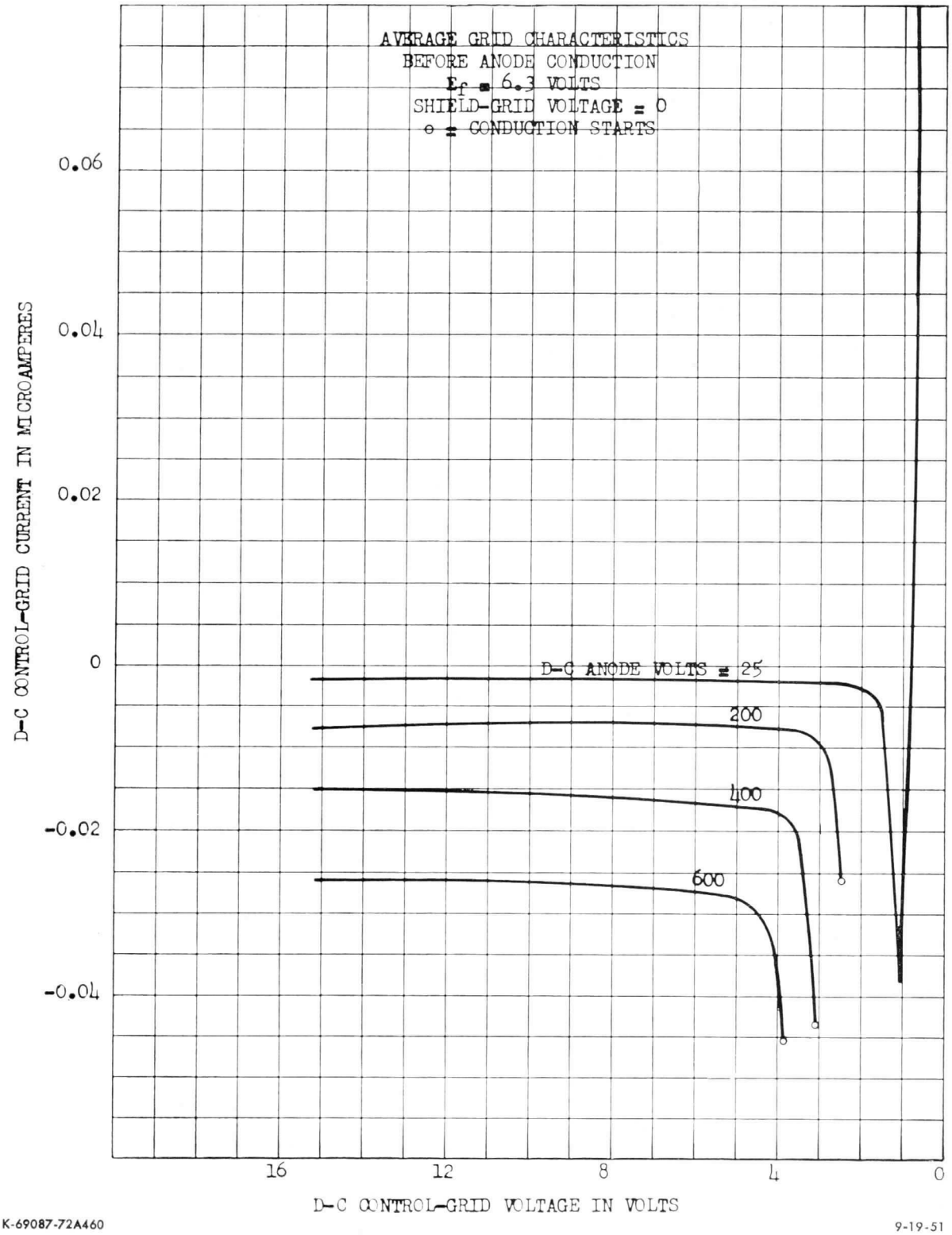

K-69087-72A460

9-19-51

OPERATIONAL RANGE OF CRITICAL GRID VOLTAGE

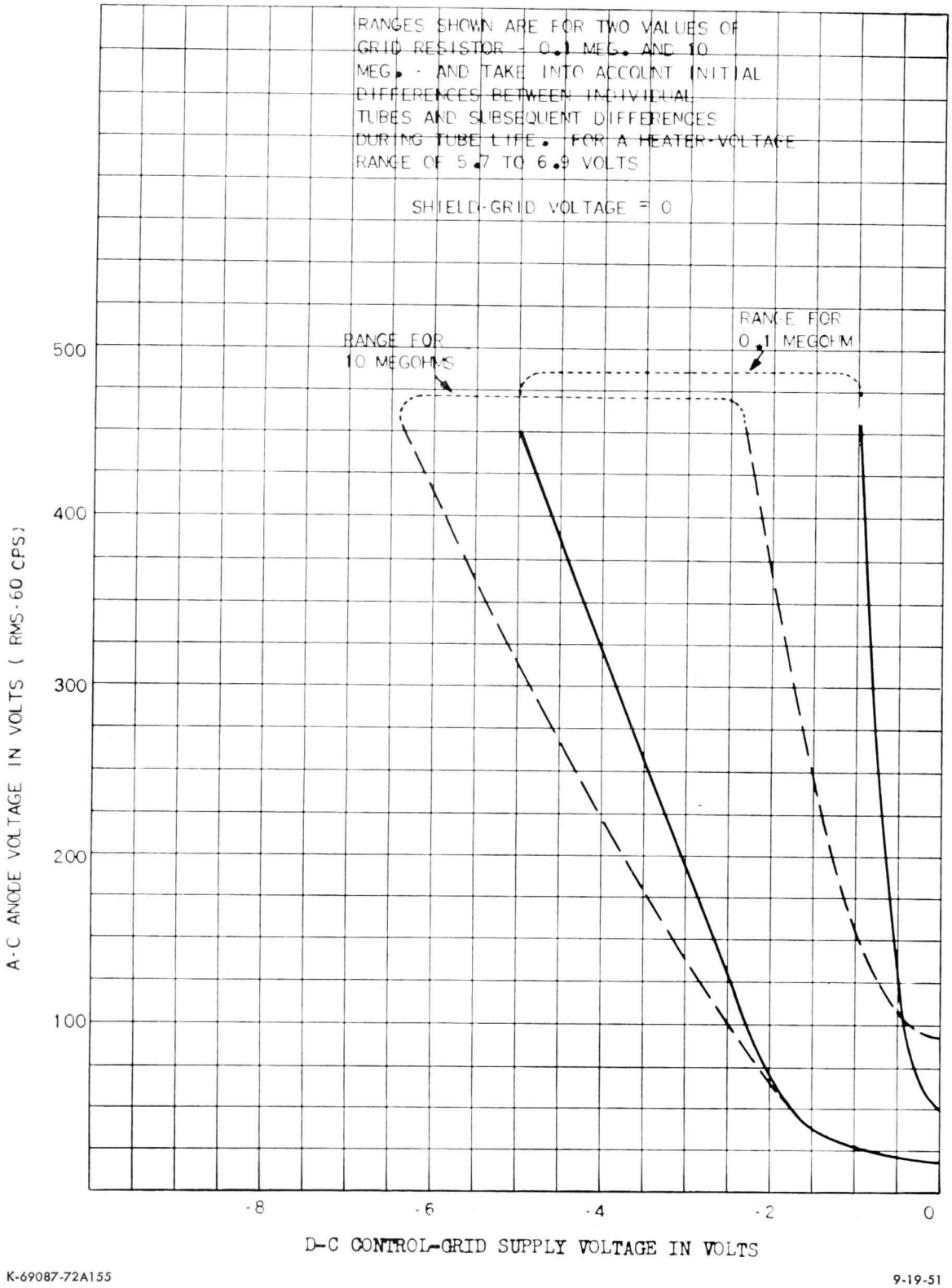

K-69087-72A155

9-19-51

OUTLINE

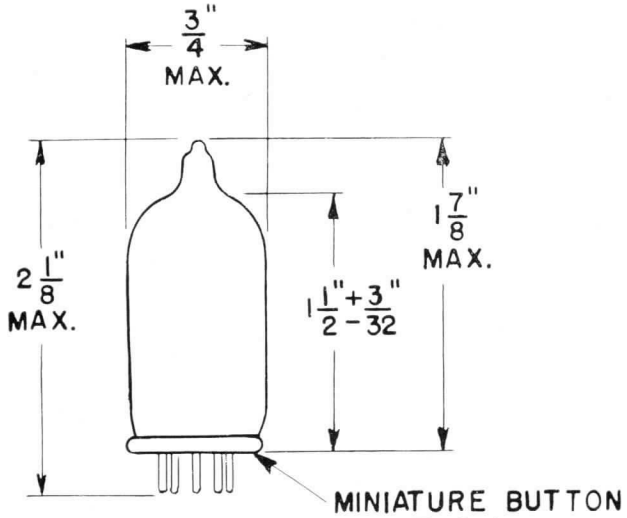

BASING DIAGRAM

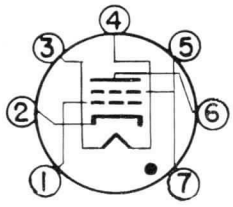

7BN

PIN 1: GRID NO.1
PIN 2: CATHODE
PIN 3: HEATER
PIN 4: HEATER
PIN 5: GRID NO.2
PIN 6: ANODE
PIN 7: GRID NO.2

K-69087-72A481 8-22-51

Tube Department

GENERAL ELECTRIC

Schenectady, N. Y.



HYDROGEN THYRATRON

PULSING SERVICE
INTEGRAL GAS RESERVOIR

POSITIVE CONTROL
TRIODE TYPE

The GL-5948 is a hydrogen thyratron for pulsing applications which require a tube that will give dependable operation under the stringent operating conditions encountered in radar modulator and other pulsing service.

The ability of this tube to carry high peak currents and to withstand voltages as high as 25,000 volts combine with the short deionization time to assure satisfactory tube performance in the class of service for which this thyratron is designed. The tube is also suitable for operation without negative bias; a feature which adapts it for use in service requiring zero-bias operation with positive triggering pulses. Another advantage which ensures freedom from failure due to gas cleanup is the use of a hydrogen reservoir within the tube to supply gas to compensate for what is consumed during operation. This reservoir also enables the user to adjust the pressure within the tube to the most suitable value for the service desired.

The tube ratings make it especially suitable for pulsing magnetron and other oscillators with power inputs up to 12.5 megawatts.

TECHNICAL INFORMATION

GENERAL

Electrical	Minimum	Bogey	Maximum	
Cathode—Indirectly Heated				
The Cathode is tied to the Heater Midpoint				
Heater Voltage	6	6.3	6.6	Volts
Heater Current, $E_f = 6.3$ Volts	27	30	33	Amperes
Cathode and Reservoir Heating Time	15	...	...	Minutes
Reservoir Heater Voltage*	2.5	4.5	5.5	Volts
Reservoir Heater Current, $E_f = 4.5$ Volts	3	4.5	6	Amperes
Direct Interelectrode Capacitance				
Grid to Anode	..	45	...	uuf
Grid to Cathode	..	50	...	uuf
Anode Current Time Jitter	..	0.01	0.02	Microseconds
Deionization Time, approximate	..	50	...	Microseconds
Ionization Time, approximate†	..	...	1	Microsecond
Anode Voltage Drop	..	400	...	Volts
Grid Drive‡				
Pulse Duration			10	Microseconds

Mechanical		
Type of Cooling—Convection		
Cooling of Anode Lead by Forced Convection Permissible, but there shall be no Air Blast Directly on Bulb.		
Mounting Position—Vertical, Base Down		
Net Weight, approximate	4¾	Pounds

MAXIMUM RATINGS, Absolute Values

Maximum Peak Anode Voltage		
Inverse §	25,000	Volts
Forward ¶, minimum supply voltage = 5,000 volts d-c	25,000	Volts
Maximum Cathode Current		
Peak	1,000	Amperes
Average	1.0	Amperes
Maximum Averaging Time	1	Cycles
Operation Factor △	9.0×10^9	
Maximum Negative Control-Grid Voltage		
Before Conduction	650	Volts
Maximum Rate of Rise of Anode Current	5,000	Amperes per Microsecond
Ambient Temperature Limits	−50 to +75	C

* The optimum reservoir voltage for operation at maximum tube voltage, maximum peak and average tube currents, and at a repetition corresponding to the rated operation factor is inscribed on the base of the tube and must be held within ±5 percent. Applications involving operation at other conditions will necessitate the redetermination of the optimum reservoir voltage.

† The time interval between the point on the rising portion of the grid pulse which is 26 percent of the peak unloaded pulse amplitude, and the start of the anode current pulse.

‡ Driver pulse measured at tube socket with thyratron grid disconnected: amplitude = 700 volts minimum, 2,000 volts maximum, above 0; time of rise = 0.35 microseconds maximum, measured from 26 percent to 70 percent of peak value; grid pulse duration = 2 microseconds minimum, measured between 70 percent of peak on rising side to 70 percent of peak on falling side; impedance of drive circuit = 50 to 200 ohms.

§ The minimum inverse anode voltage permissible is 5 percent of the peak forward voltage, and the maximum is 5,000 volts during the first 25 microseconds following the anode pulse exclusive of a spike of 0.05 microseconds duration.

¶ Instantaneous starting is not recommended. However, in cases where it is necessary to apply anode voltage instantaneously the maximum permissible forward starting voltage is 18,000 volts peak. The power-supply filter should be designed to limit the rate of application of this voltage to 450,000 volts per second.

△ The peak forward anode voltage x pulse repetition rate x peak anode current.

□ Denotes an addition.

□X-RAY WARNING NOTICE

If the GL-5948 is operated at anode voltages in excess of 16 kilovolts, x-ray radiation shielding may be necessary to protect the user against possible danger of personal injury from prolonged exposure at close range. For further information consult the following references or other standard texts on the subject:

(a) *X-Ray Protection Design,* Handbook No. 50. National Bureau of Standards, Washington, D. C.
(b) *X-Ray Protection,* Handbook No. 60. National Bureau of Standards, Washington, D. C.

The above references are available from the Superintendent of Documents, Government Printing Office, Washington 25, D. C.

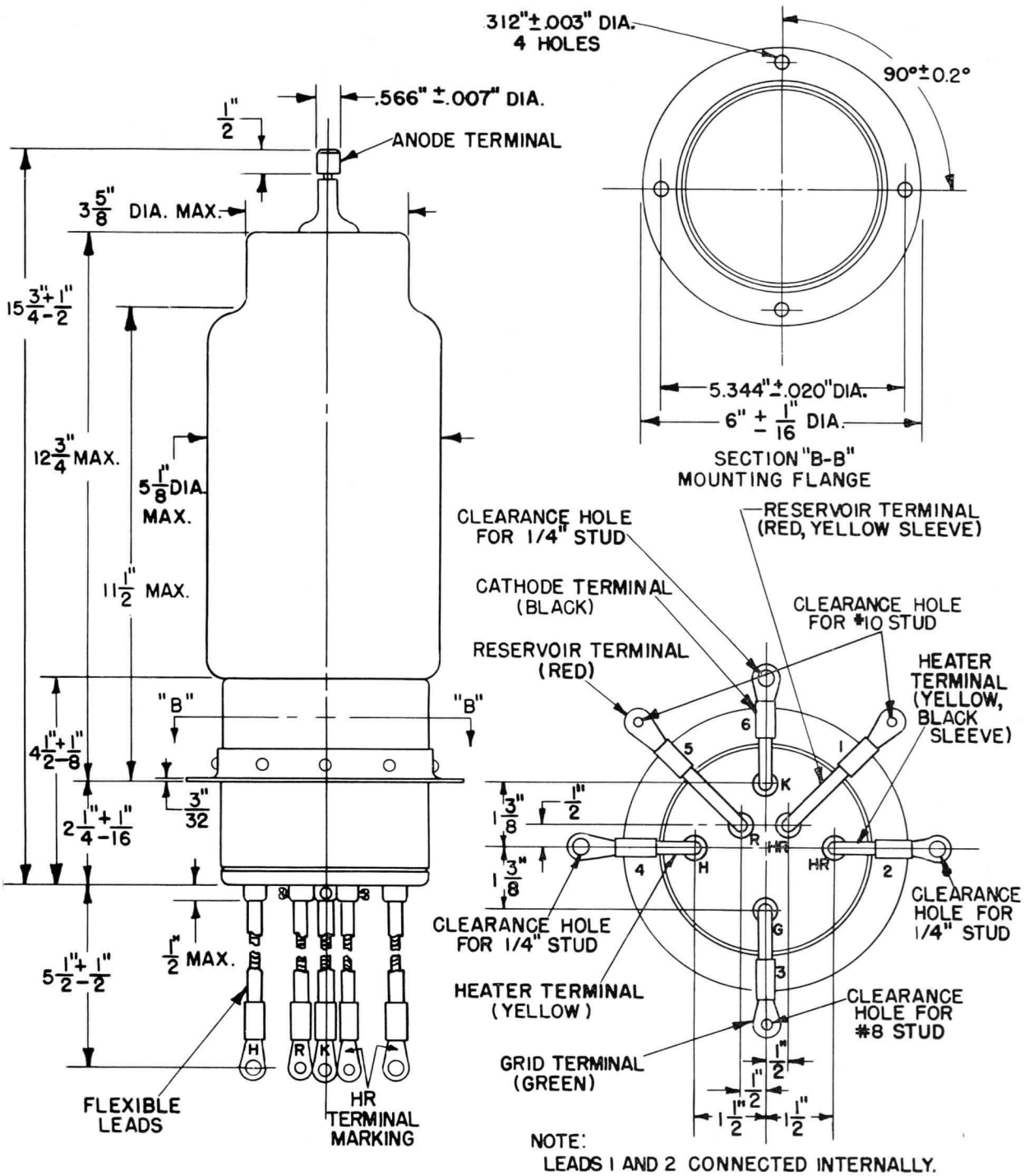

N-21556AZ

4-28-54

TUBE DEPARTMENT

GENERAL ELECTRIC

Schenectady 5, N. Y.

6-54 (10M)

PRINTED IN U.S.A.

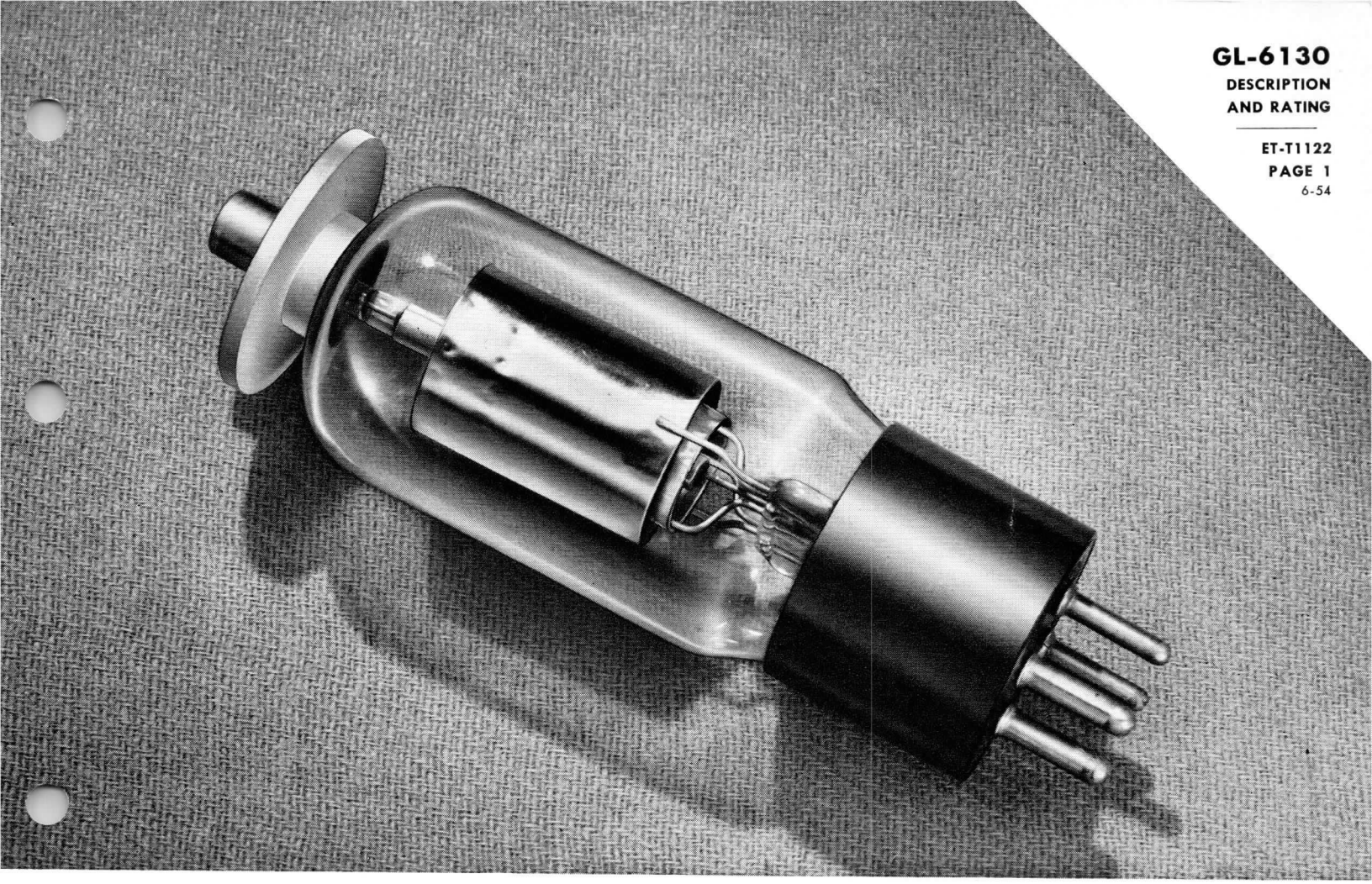

HYDROGEN THYRATRON

PULSING SERVICE
HIGH-ALTITUDE OPERATION

POSITIVE CONTROL
TRIODE TYPE

The GL-6130 is a hydrogen thyratron especially designed for pulsing applications which require a tube that will give dependable operation at high altitudes under stringent operating conditions of high repetition rates and high peak currents. Satisfactory tube operation under such severe conditions of operation is possible because design and construction features of this tube give it the advantage of very short deionization time, low voltage drop, high peak-anode-current capability, ability to operate over the wide ambient-temperature range of −50 to +90 C, and ability to operate efficiently at altitudes to as high as 50,000 feet. Another advantage is the suitability of the tube for operation without negative bias; a feature which adapts it for use in service requiring zero-bias operation with positive triggering pulses.

The tube ratings make it especially suitable for pulsing magnetron and other oscillators having power inputs up to 50 kilowatts.

Electronic TUBE

GENERAL ELECTRIC

TECHNICAL INFORMATION

GENERAL

Electrical	Minimum	Bogey	Maximum	
Cathode—Indirectly Heated				
Heater Voltage	5.7	6.3	6.6	Volts
Heater Current, E_f = 6.3 volts	2	2.3	2.5	Amperes
Heating Time	2	...	...	Minutes
Direct Interelectrode Capacitances				
Grid to Anode	..	4	...	uuf
Grid to Cathode	..	8	...	uuf
Anode Current Time Jitter	..	0.04	0.06	Microseconds
Deionization Time, approximate	..	25	...	Microseconds
Ionization Time, approximate*	..	0.6	...	Microseconds
Anode Voltage Drop	..	150	...	Volts
Grid Drive†				
Pulse Duration			6	Microseconds

Mechanical		
Type of Cooling—Convection		
Mounting Position—Any‡		
Net Weight, approximate	3	Ounces
Maximum Altitude	50,000	Feet

MAXIMUM RATINGS, Absolute Values

Maximum Peak Anode Voltage		
Inverse §	3000	Volts
Forward π, minimum supply voltage = 800 volts d-c	3000	Volts
Maximum Cathode Current		
Peak	35	Amperes
Average	0.045	Amperes
Maximum Averaging Time	1	Cycles
Operation Factor △	0.3×10^9	
Maximum Negative Control-Grid Voltage		
Before Conduction	200	Volts
Maximum Rate of Rise of Anode Current	750	Amperes per Microsecond
Ambient Temperature Limits	−50 to +90	C

* The time interval between the point on the rising portion of the grid pulse which is 26 percent of the peak unloaded pulse amplitude, and the start of the anode current pulse.

† Driver pulse measured at tube socket with thyratron grid disconnected: amplitude = 175 volts minimum, time of rise = 0.5 microsecond maximum, grid pulse duration = 2 microseconds minimum, impedance of drive circuit = 1500 ohms maximum.

‡ Clamping is permissible by the base and/or bulb only in the area up to 2 inches above the top of the base.

§ The minimum inverse anode voltage permissible is 5 percent of the peak forward voltage and the maximum is 1500 volts during the first 25 microseconds following the anode pulse.

π In applications where the anode voltage is applied instantaneously, the power-supply filter should be designed to limit the rate of application of this voltage to 75,000 volts per second.

△The peak forward anode voltage x pulse repetition rate (pps) x peak anode current.

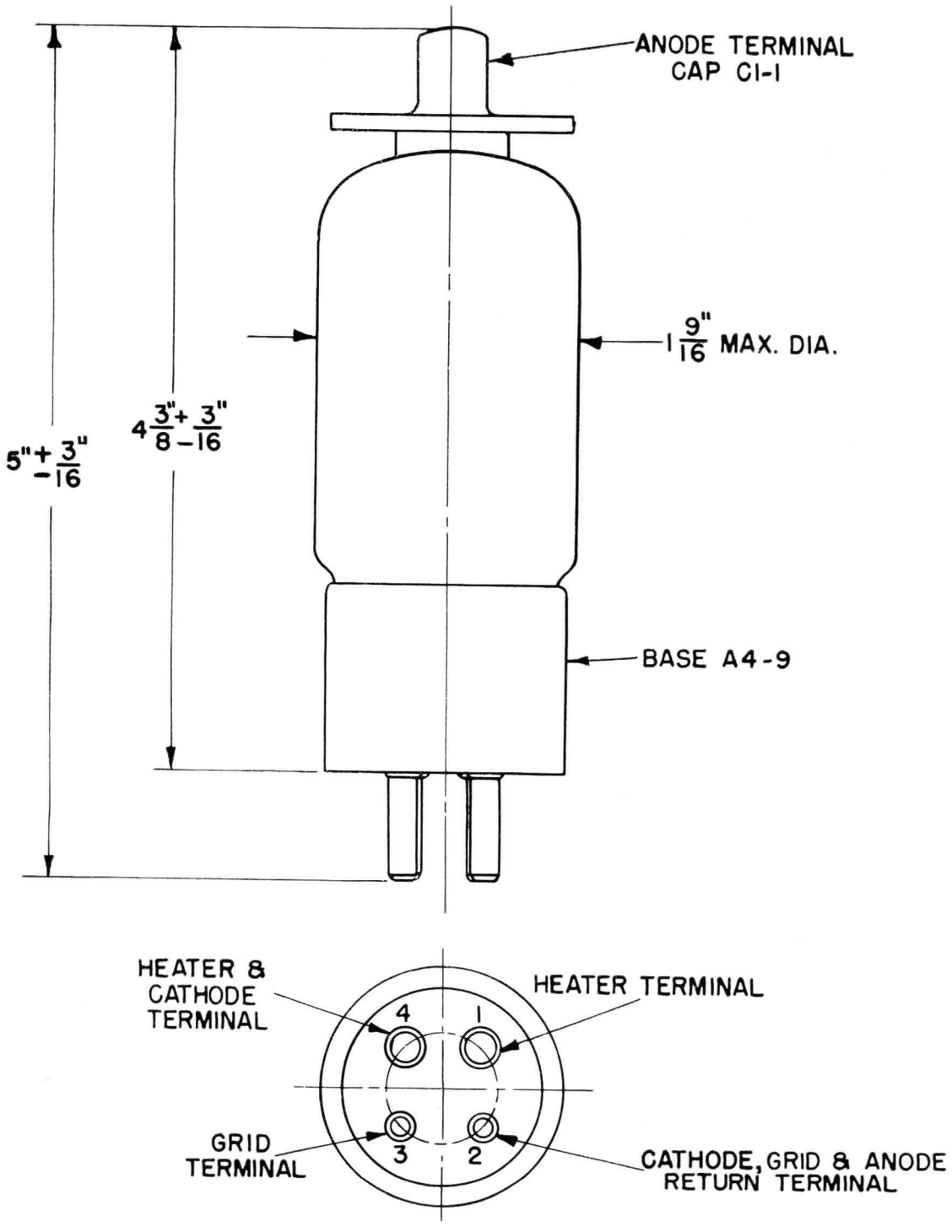

N21557AZ

12-12-52

TUBE DEPARTMENT

GENERAL ELECTRIC

Schenectady 5, N. Y.

6-54 (10M)

PRINTED IN U.S.A.

ELECTRONIC INNOVATIONS IN ACTION

TUBES

OBJECTIVE
TECHNICAL INFORMATION

These ratings represent the design objective for this product. Refer to the Preliminary Technical Information sheet for ratings currently achieved in the progression towards design objectives. If PTI sheets do not exist, consult your local Tube Department Regional Sales Office.

DEVELOPMENTAL TYPE

ZR-7518
OTI-112C
Page 1
12-68

This technical information is proprietary and is furnished only as a service to customers

ZR-7518

TRIGGERED VACUUM GAP

150 Kilovolts
100,000 Amperes
75,000 Joules

Fires at 1000 Volts
Ceramic Envelope

The ZR-7518 is a cold-cathode, vacuum, triggered spark gap capable of switching 75,000 joules at high voltage. Unique design combines the desirable features of vacuum and gas devices. These include extremely wide voltage range, ease of triggering, high voltage capability, rapid recovery time, stability of characteristics and reliability.

Although capable of withstanding a hold-off voltage of 180 kilovolts indefinitely, the ZR-7518 will fire reliably at voltages as low as 2000 volts. It will reliably switch non-repetitive high current pulses with minimum delay and jitter in high-voltage circuits. Applications include "crowbars"* and switching energy-storage capacitors into resistive loads.

The ZR-7518 is designed for immersion in insulating oil or in electronegative gas at atmospheric pressure.

ELECTRICAL

Heater Voltage	None Required

MECHANICAL

Mounting Position – Any	
Net Weight, approximate	4 lbs.

MAXIMUM RATINGS

Interelectrode Leakage Resistance	10,000	Megohms
Main Gap		
Operating Voltage**	2000V to 150	Kilovolts
Hold-Off Voltage**, Indefinite Time, minimum	180	Kilovolts
Peak Current		
Unidirectional Pulse, maximum	100,000	Amperes
Charge Conducted Through Gap per Operation†, maximum	1.0	Coulombs
Discharge Rate, maximum	2	Per Minute
Delay Time ‡, V app. = 150 KV, maximum	0.1	Microseconds
Jitter ‡, V app. = 150 KV, maximum	0.1	Microseconds
Trigger Gap		
Typical Trigger Firing Circuit:		
Peak Voltage ¶, typical	5	Kilovolts
Short-Circuit Current ◇, typical	150	Amperes

*In a "crowbar" application the gap acts as a short-circuiting switch to protect vulnerable high-voltage equipment by removing the direct-current supply voltage within tenths of a microsecond after initiation of the trigger-pulse. Unless the fault is self-clearing, the circuit must subsequently be opened in the usual manner.

**Immersed in insulating oil or electronegative gas at atmospheric pressure.

† This rating refers to the charge originating from the capacitor bank. For further information concerning "follow-thru" current from the power supply in a given application consult the Microwave Tube Business Section.

‡ From trigger-gap breakdown to main-gap breakdown.

¶ The voltage rise time should be as fast as is consistent with the firing speed and accuracy required. The trigger will fire typically at 1 to 3 kilovolts on the leading edge of the pulse but may fire at lower trigger voltages. Only pulse voltage shall be applied to the trigger.

◇ Delay time and jitter may be decreased and gap life increased by increasing trigger short-circuit current. Currents up to 200 amperes may be used. The pulse width should preferably not exceed 2 microseconds.

The specifications of this type are subject to change. This device is now under development and is made available for experimental purposes only. For the most recent information concerning the status of this development, please consult your local Tube Department Regional Sales Office, or current Preliminary Technical Information for the same catalog number.

OPERATING NOTES

When discharging or crowbaring energy-storage capacitors, repetitive firing for short periods may be necessary to maintain sufficiently low voltage to protect electrical equipment until circuit is cleared. Restoration of power-supply voltage to maintain service continuity without circuit-breaker action after a self-clearing fault is feasible in a typical circuit by blocking the trigger pulse. This is due to the rapid deionization time and excellent voltage recovery capability of the ZR-7518. For further information consult the General Electric Microwave Tube Business Section, Building 269, Schenectady, New York, FRanklin 4-2211, Extension 5-2507.

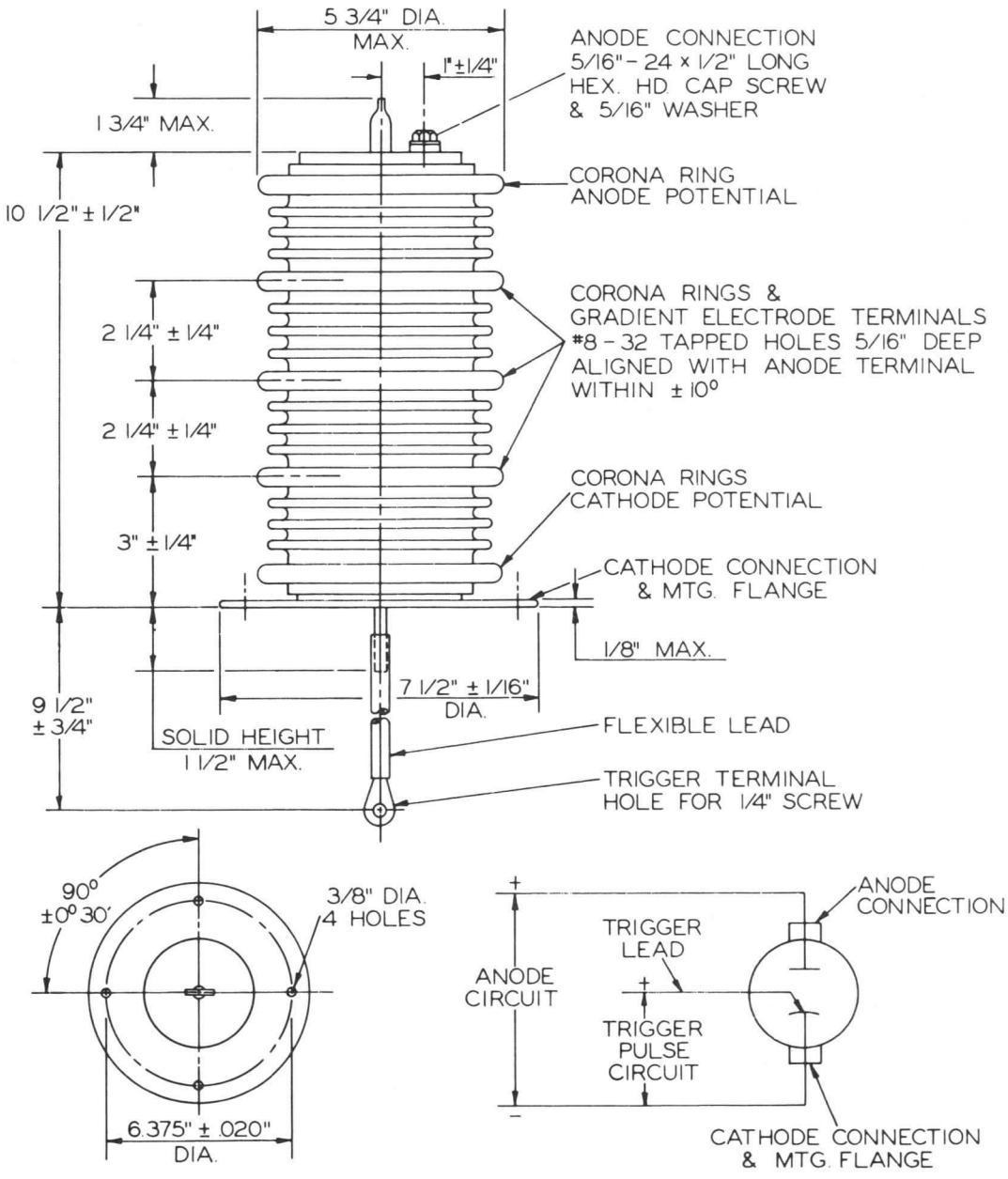

GENERAL ELECTRIC

TUBE DEPARTMENT
Schenectady, N. Y. 12305

ELECTRONIC INNOVATIONS IN ACTION

TUBES

OBJECTIVE
TECHNICAL INFORMATION

These ratings represent the design objective for this product. Refer to the Preliminary Technical Information sheet for ratings currently achieved in the progression towards design objectives. If PTI sheets do not exist, consult your local Tube Department Regional Sales Office.

DEVELOPMENTAL TYPE

ZR-7519
OTI-202B
Page 1
12-68

This technical information is proprietary and is furnished only as a service to customers

ZR-7519

TRIGGERED VACUUM GAP

75 Kilovolts
70,000 Amperes
26,000 Joules

Fires at 500 Volts
Ceramic Envelope

The ZR-7519 is a cold-cathode, vacuum, triggered spark gap capable of switching 26,000 joules at high voltage. Unique design combines the desirable features of vacuum and gas devices. These include extremely wide voltage range, ease of triggering, high voltage capability, rapid recovery time, stability of characteristics and reliability.

Although capable of withstanding a hold-off voltage of 90 kilovolts indefinitely, the ZR-7519 will fire reliably at voltages as low as 1000 volts. It will reliably switch non-repetitive high current pulses with minimum delay and jitter in high-voltage circuits. Applications include "crowbars"* and switching energy-storage capacitors into resistive loads.

The ZR-7519 is designed for immersion in insulating oil or in electronegative gas at atmospheric pressure.

ELECTRICAL

Heater Voltage	None Required

MECHANICAL

Mounting Position	Any
Net Weight, approximate	6 lbs.

MAXIMUM RATINGS

Interelectrode Leakage Resistance	10,000	Megohms
Main Gap		
Operating Voltage	1000V to 75	Kilovolts
Hold-Off voltage, Indefinite Time, minimum.	90	Kilovolts
Peak Current		
Unidirectional Pulse, Maximum	50,000	Amperes
Charge Conducted Through Gap per Operation †, maximum	0.7	Coulombs
Discharge Rate, maximum	2	Per Minute
Delay Time‡, V app. = 150 KV, maximum	0.5	Microseconds
Jitter‡, V = 75 KV, maximum	0.1	Microseconds
Trigger Gap		
Typical Trigger Firing Circuit:		
Peak Voltage¶, typical	5	Kilovolts
Short-Circuit Current◇, typical	75	Amperes
Pulse Width, typical	2.0	Microseconds

*In a "crowbar" application the gap acts as a short-circuiting switch to protect vulnerable high-voltage equipment by removing the direct-current supply voltage within tenths of a microsecond after initiation of the trigger-pulse. Unless the fault is self-clearing, the circuit must subsequently be opened in the usual manner.

†This rating refers to the charge originating from the capacitor bank. For further information concerning "follow-thru" current from the power supply in a given application consult the Microwave Tube Business Section.

‡From trigger-gap breakdown to main-gap breakdown.

¶The voltage rise time should be as fast as is consistent with the firing speed and accuracy required. The trigger will fire typically at 1 to 3 kilovolts on the leading edge of the pulse but may fire at lower trigger voltages. Only pulse voltage shall be applied to the trigger.

◇Delay time and jitter may be decreased and gap life increased by increasing trigger short-circuit current. Currents up to 200 amperes may be used.

GENERAL ELECTRIC

The specifications of this type are subject to change. This device is now under development and is made available for experimental purposes only. For the most recent information concerning the status of this development, please consult your local Tube Department Regional Sales Office, or current Preliminary Technical Information for the same catalog number.

OPERATING NOTES

When discharging or crowbaring energy-storage capacitors, repetitive firing for short periods may be necessary to maintain sufficiently low voltage to protect electrical equipment until circuit is cleared. Restoration of power-supply voltage to maintain service continuity without circuit-breaker action after a self-clearing fault is feasible in a typical circuit by blocking the trigger pulse. This is due to the rapid deionization time and excellent voltage recovery capability of the ZR-7519. For further information consult the General Electric Microwave Tube Business Section, Building 269, Schenectady, New York, FRanklin 4-2211, Extension 5-2507.

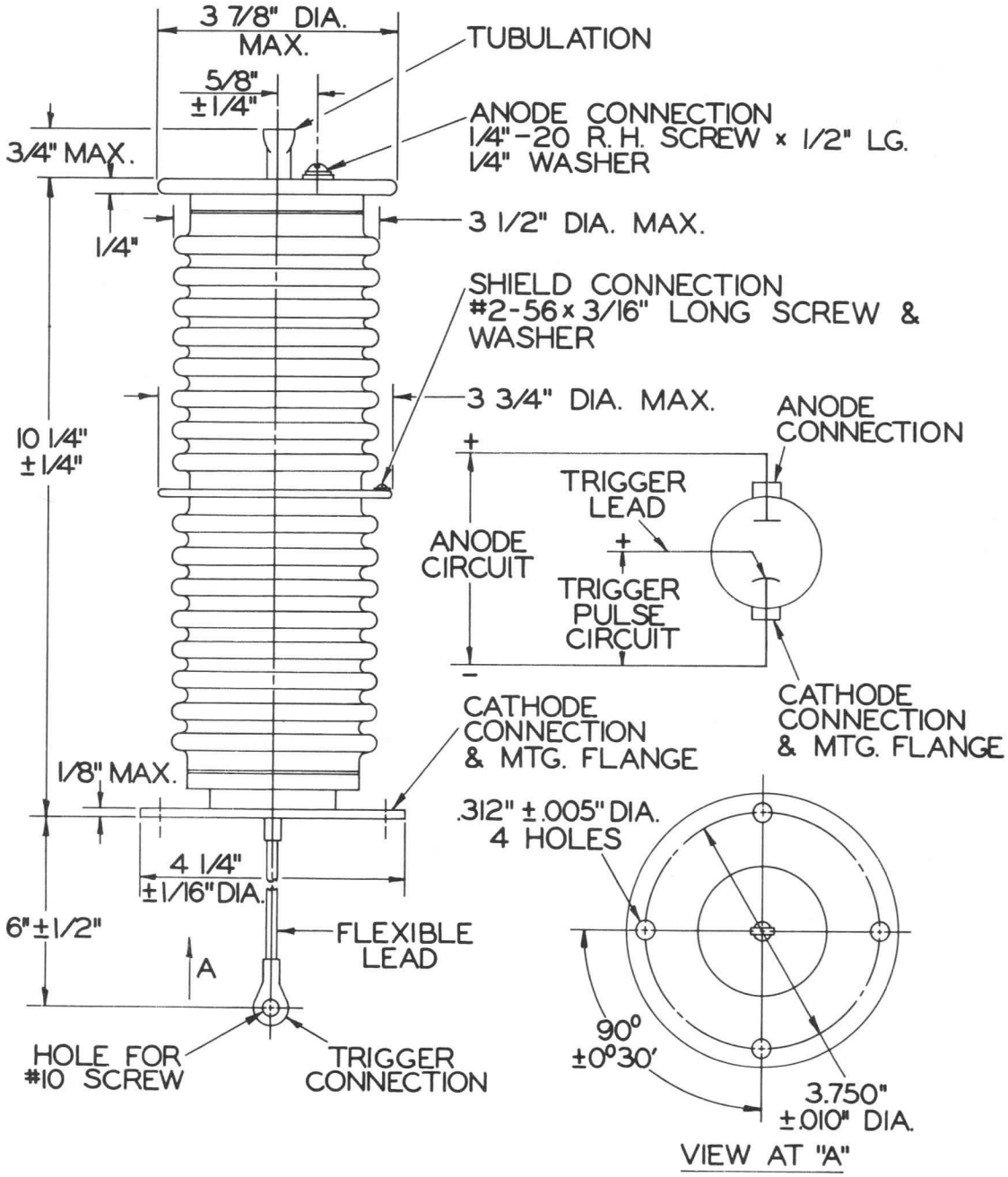

TUBE DEPARTMENT

GENERAL ELECTRIC

Schenectady, N. Y. 12305

ELECTRONIC INNOVATIONS IN ACTION

TUBES

OBJECTIVE
TECHNICAL INFORMATION

These ratings represent the design objective for this product. Refer to the Preliminary Technical Information sheet for ratings currently achieved in the progression towards design objectives. If PTI sheets do not exist, consult your local Tube Department Regional Sales Office.

DEVELOPMENTAL TYPE

ZR-7520
OTI-210A
Page 1
12-68

This technical information is proprietary and is furnished only as a service to customers.

ZR-7520
TRIGGERED VACUUM GAP

20 Kilovolts
100,000 Amperes

Fires at 500 Volts
Ceramic Envelope

The ZR-7520 is a cold-cathode, vacuum, triggered-spark gap capable of switching 5 coulombs at high voltage. Unique design combines the desirable features of vacuum and gas devices. These include extremely wide voltage range, ease of triggering, high-voltage capability, rapid recovery time, stability of characteristics, and reliability.

Although capable of withstanding a hold-off voltage of 25 kilovolts indefinitely, the ZR-7520 will fire reliably at voltages as low as 500 volts. It will reliably switch non-repetitive high-current pulses with minimum delay and jitter in high-voltage circuits. Applications include "crowbars"* and switching stored electrical energy systems into low-impedance loads, or energy-storage capacitors into resistive or inductive loads.

MECHANICAL

Mounting	Any position
Net Weight	6 lbs. Approx.

MAXIMUM RATINGS

Interelectrode Leakage Resistance	10,000	Megohms
Main Gap		
Operating Voltage	500V to 20	Kilovolts
Hold-off Voltage, Indefinite Time, minimum	25	Kilovolts
Peak Current		
Unidirectional Pulse, maximum	100,000	Amperes
Charge Conducted Through Gap per Operation**, maximum	5	Coulombs
Discharge Rate, maximum	2	Per Minute
Delay Time†, V app. = 5KV, maximum	0.5	Microseconds
Interelectrode Leakage Resistance	10,000	Megohms
Trigger Gap		
Typical Trigger Firing Circuit:		
Peak Voltage‡, minimum	5	Kilovolts
Short-Circuit Current, minimum	350	Amperes
Pulse Width, open circuit	3	Microseconds

*In a "crowbar" application, the gap acts as a short-circuiting switch to protect vulnerable high-voltage equipment by diverting the direct-current supply voltage within tenths of a microsecond after initiation of the trigger-pulse. Unless the fault is self-clearing, the circuit must subsequently be opened in the usual manner.

**This rating refers to the charge originating from the capacitor bank including the total charge transfer during ringing. For further information concerning "follow-through" current from the power supply in a given application, consult the General Electric Microwave Tube Business Section.

†From trigger-gap breakdown to main-gap breakdown.

‡The voltage rise time should be as fast as is consistent with the firing speed and accuracy required. The trigger will fire typically at 1 to 3 kilovolts on the leading edge of the pulse but may fire at lower trigger voltages. Only pulse voltage shall be applied to the trigger.

OPERATING NOTES

When discharging or crowbaring energy-storage capacitors, repetitive firing for short periods may be necessary to maintain sufficiently low voltage to protect electrical equipment until the circuit is cleared. Restoration of power-supply voltage to maintain service continuity without circuit-breaker action after a self-clearing fault is feasible in a typical circuit by blocking the trigger pulse. This is due to the rapid deionization time and excellent voltage recovery capability of the ZR-7520. For further information consult the Microwave Tube Business Section, Bldg. 269, Schenectady, New York, FRanklin 4-2211, Extension 5-2507.

The specifications of this type are subject to change. This device is now under development and is made available for experimental purposes only. For the most recent information concerning the status of this development, please consult your local Tube Department Regional Sales Office, or current Preliminary Technical Information for the same catalog number.

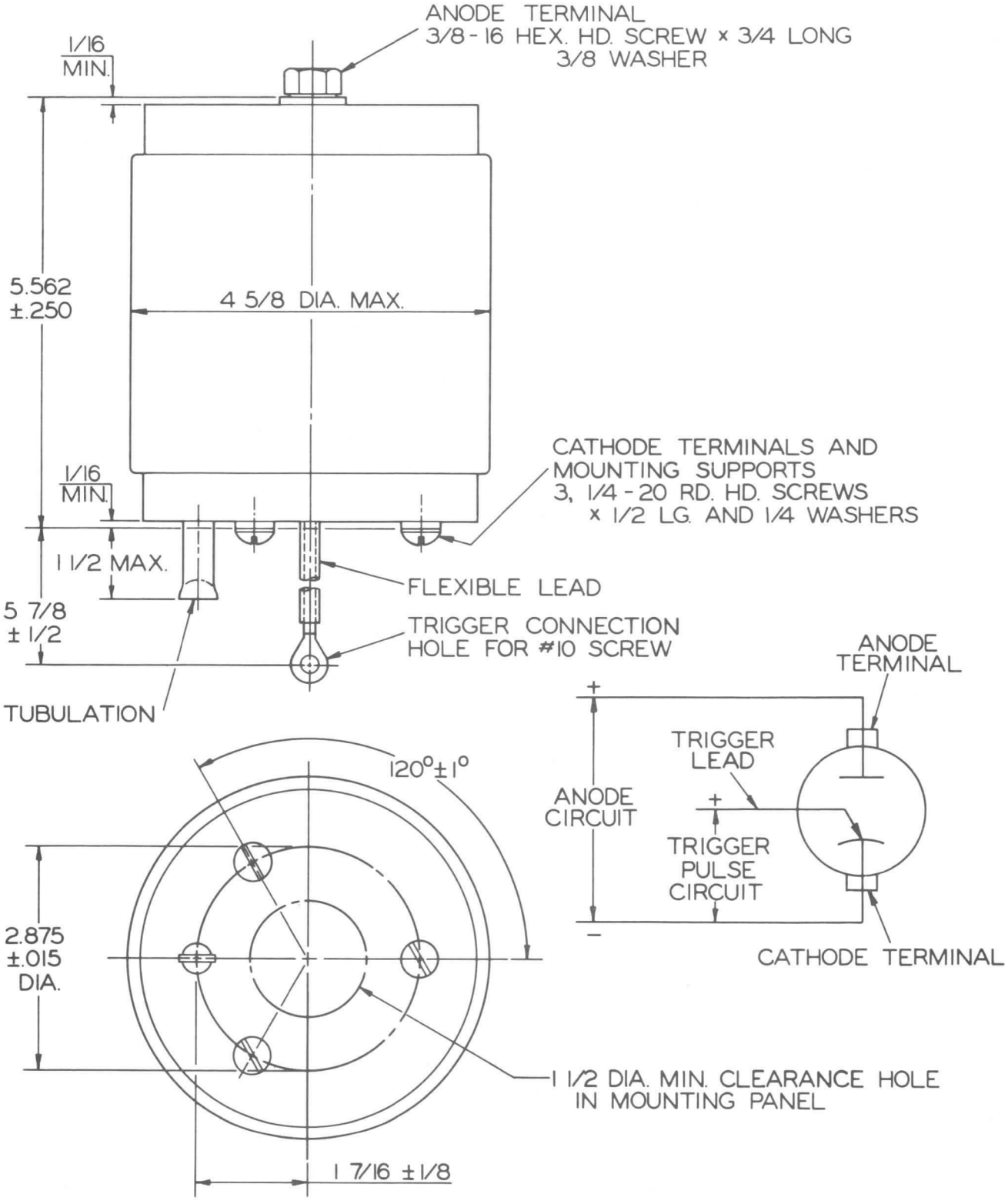

TUBE DEPARTMENT
GENERAL ELECTRIC
Schenectady, N. Y. 12305

ELECTRONIC INNOVATIONS IN ACTION

TUBES

OBJECTIVE
TECHNICAL INFORMATION

These ratings represent the design objective for this product. Refer to the Preliminary Technical Information sheet for ratings currently achieved in the progression towards design objectives. If PTI sheets do not exist, consult your local Tube Department Regional Sales Office.

DEVELOPMENTAL TYPE

ZR-7534
OTI-203A
Page 1
12-68

This technical information is proprietary and is furnished only as a service to customers

ZR-7534

TRIGGERED VACUUM GAP

120 Kilovolts
100,000 Amperes
60,000 Joules

Fires at 2000 Volts
Ceramic Envelope

The ZR-7534 is a cold-cathode, vacuum, triggered spark gap capable of switching 60,000 joules at high voltage. Unique design combines the desirable features of vacuum and gas devices. These include extremely wide voltage range, ease of triggering, high voltage capability, rapid recovery time, stability of characteristics and reliability.

Although capable of withstanding a hold-off voltage of 150 kilovolts indefinitely, the ZR-7534 will fire reliably at voltages as low as 2000 volts. It will reliably switch non-repetitive high current pulses with minimum delay and jitter in high-voltage circuits. Applications include "crowbars"* and switching energy-storage capacitors into resistive loads.

The ZR-7534 is designed for immersion in insulating oil or in electronegative gas at atmospheric pressure.

ELECTRICAL

Heater Voltage	None Required

MECHANICAL

Mounting Position	Any
Net Weight, approximate	11 lbs.

MAXIMUM RATINGS

Interelectrode Leakage Resistance	10,000	Megohms
Main Gap		
Operating Voltage**	2000V to 120	Kilovolts
Hold-Off Voltage**, Indefinite Time, minimum	150	Kilovolts
Peak Current		
Unidirectional Pulse, maximum	100,000	Amperes
Charge Conducted Through Gap per Operation †, maximum	1.0	Coulombs
Discharge Rate, maximum	2	Per Minute
Delay Time ‡, V app. = 120 KV, maximum	0.5	Microseconds
Jitter ‡, V app. = 120 KV, maximum	0.1	Microseconds
Trigger Gap		
Typical Trigger Firing Circuit:		
Peak Voltage ¶, typical	5	Kilovolts
Short-Circuit Current ◇, typical	150	Amperes
Pulse Width, typical	2.0	Microseconds

*In a "crowbar" application the gap acts as a short-circuiting switch to protect vulnerable high-voltage equipment by removing the direct-current supply voltage within tenths of a microsecond after initiation of the trigger-pulse. Unless the fault is self-clearing, the circuit must subsequently be opened in the usual manner.

**Immersed in insulating oil or electronegative gas at atmospheric pressure.

† This rating refers to the charge originating from the capacitor bank. For further information concerning "follow-thru" current from the power supply in a given application consult the Microwave Tube Business Section.

‡ From trigger-gap breakdown to main-gap breakdown.

¶ The voltage rise time should be as fast as is consistent with the firing speed and accuracy required. The trigger will fire typically at 1 to 3 kilovolts on the leading edge of the pulse but may fire at lower trigger voltages. Only pulse voltage shall be applied to the trigger.

◇ Delay time and jitter may be decreased and gap life increased by increasing trigger short-circuit current. Currents up to 200 amperes may be used.

GENERAL ELECTRIC

The specifications of this type are subject to change. This device is now under development and is made available for experimental purposes only. For the most recent information concerning the status of this development, please consult your local Tube Department Regional Sales Office, or current Preliminary Technical Information for the same catalog number.

OPERATING NOTES

When discharging or crowbaring energy-storage capacitors, repetitive firing for short periods may be necessary to maintain sufficiently low voltage to protect electrical equipment until circuit is cleared. Restoration of power-supply voltage to maintain service continuity without circuit-breaker action after a self-clearing fault is feasible in a typical circuit by blocking the trigger pulse. This is due to the rapid deionization time and excellent voltage recovery capability of the ZR-7534. For further information consult the General Electric Microwave Tube Business Section, Building 269, Schenectady, New York, FRanklin 4-2211, Extension 5-2507.

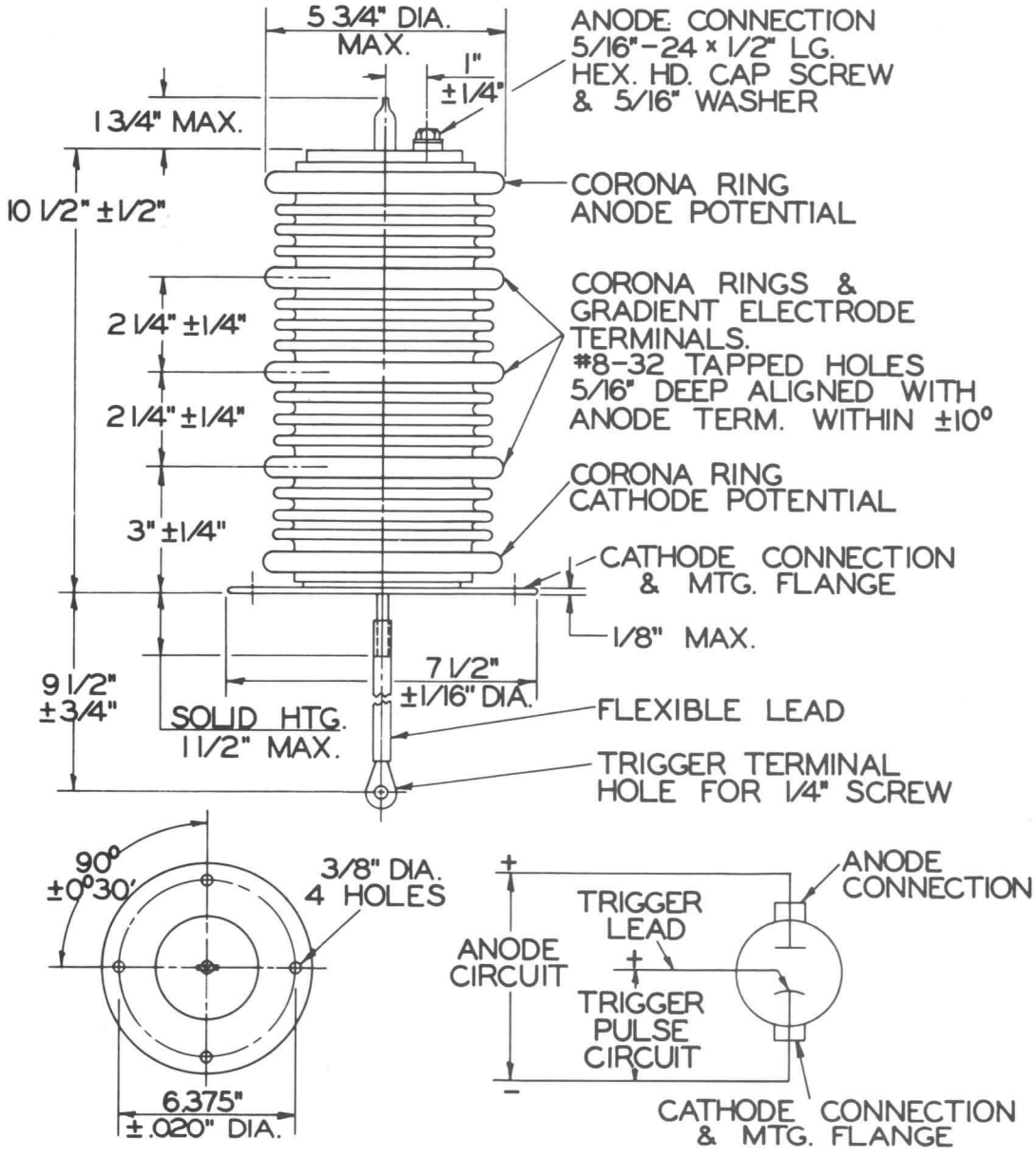

TUBE DEPARTMENT

GENERAL ELECTRIC

Schenectady, N.Y. 12305

ELECTRONIC INNOVATIONS IN ACTION

TUBES

OBJECTIVE
TECHNICAL INFORMATION

These ratings represent the design objective for this product. Refer to the Preliminary Technical Information sheet for ratings currently achieved in the progression towards design objectives. If PTI sheets do not exist, consult your local Tube Department Regional Sales Office.

DEVELOPMENTAL TYPE

ZR-7544
OTI-217
Page 1
12-68

This technical information is proprietary and is furnished only as a service to customers

ZR-7544

TRIGGERED VACUUM GAP

85 Kilovolts
30,000 Amperes

Fires at 1000 Volts
Ceramic Envelope

The ZR-7544 is a cold-cathode, vacuum, triggered spark gap capable of switching at high voltage. Unique design combines the desirable features of vacuum and gas devices. These include extremely wide voltage range, ease of triggering, high voltage capability, rapid recovery time, stability of characteristics and reliability.

Although capable of withstanding a hold-off voltage of 85 kilovolts indefinitely, the ZR-7544 will fire reliably at voltages as low as 1000 volts. It will reliably switch non-repetitive high current pulses with minimum delay and jitter in high-voltage circuits. Applications include "crowbars"* and switching energy-storage capacitors into resistive loads.

The ZR-7544 can be immersed in insulating oil, in electronegative gas at atmospheric pressure, or in air, where the surface stress of 7 KV/inch is acceptable.

ELECTRICAL

Heater Voltage	None Required

MECHANICAL

Mounting Position	Any
Net Weight, approximate	6 lbs.

MAXIMUM RATINGS

Interelectrode Leakage Resistance	10,000	Megohms
Main Gap		
Operating Voltage	1000V to 85	Kilovolts
Peak Current		
Unidirectional Pulse, Maximum	30,000	Amperes
Charge Conducted Through Gap per Operation †, maximum	0.4	Coulombs
Discharge Rate, maximum	2	Per Minute
Delay Time‡, V app. = 150 KV, maximum	0.5	Microseconds
Jitter‡, V = 75 KV, maximum	0.1	Microseconds
Trigger Gap		
Typical Trigger Firing Circuit:		
Peak Voltage¶, typical	5	Kilovolts
Short-Circuit Current◇, typical	75	Amperes
Pulse Width, typical	2.0	Microseconds

*In a "crowbar" application the gap acts as a short-circuiting switch to protect vulnerable high-voltage equipment by removing the direct-current supply voltage within tenths of a microsecond after initiation of the trigger-pulse. Unless the fault is self-clearing, the circuit must subsequently be opened in the usual manner.

† This rating refers to the charge originating from the capacitor bank. For further information concerning "follow-thru" current from the power supply in a given application consult the Microwave Tube Business Section.

‡ From trigger-gap breakdown to main-gap breakdown.

¶ The voltage rise time should be as fast as is consistent with the firing speed and accuracy required. The trigger will fire typically at 1 to 3 kilovolts on the leading edge of the pulse but may fire at lower trigger voltages. Only pulse voltages shall be applied to the trigger. No voltages shall be applied between firings.

◇ Delay time and jitter may be decreased and gap life increased by increasing trigger short-circuit current. Currents up to 200 amperes may be used.

GENERAL ELECTRIC

The specifications of this type are subject to change. This device is now under development and is made available for experimental purposes only. For the most recent information concerning the status of this development, please consult your local Tube Department Regional Sales Office, or current Preliminary Technical Information for the same catalog number.

OPERATING NOTES

When discharging or crowbaring energy-storage capacitors, repetitive firing for short periods may be necessary to maintain sufficiently low voltage to protect electrical equipment until circuit is cleared. Restoration of power-supply voltage to maintain service continuity without circuit-breaker action after a self-clearing fault is feasible in a typical circuit by blocking the trigger pulse. This is due to the rapid deionization time and excellent voltage recovery capability of the ZR-7519. For further information consult the General Electric Microwave Tube Business Section, Building 269, Schenectady, New York, FRanklin 4-2211, Extension 5-2507.

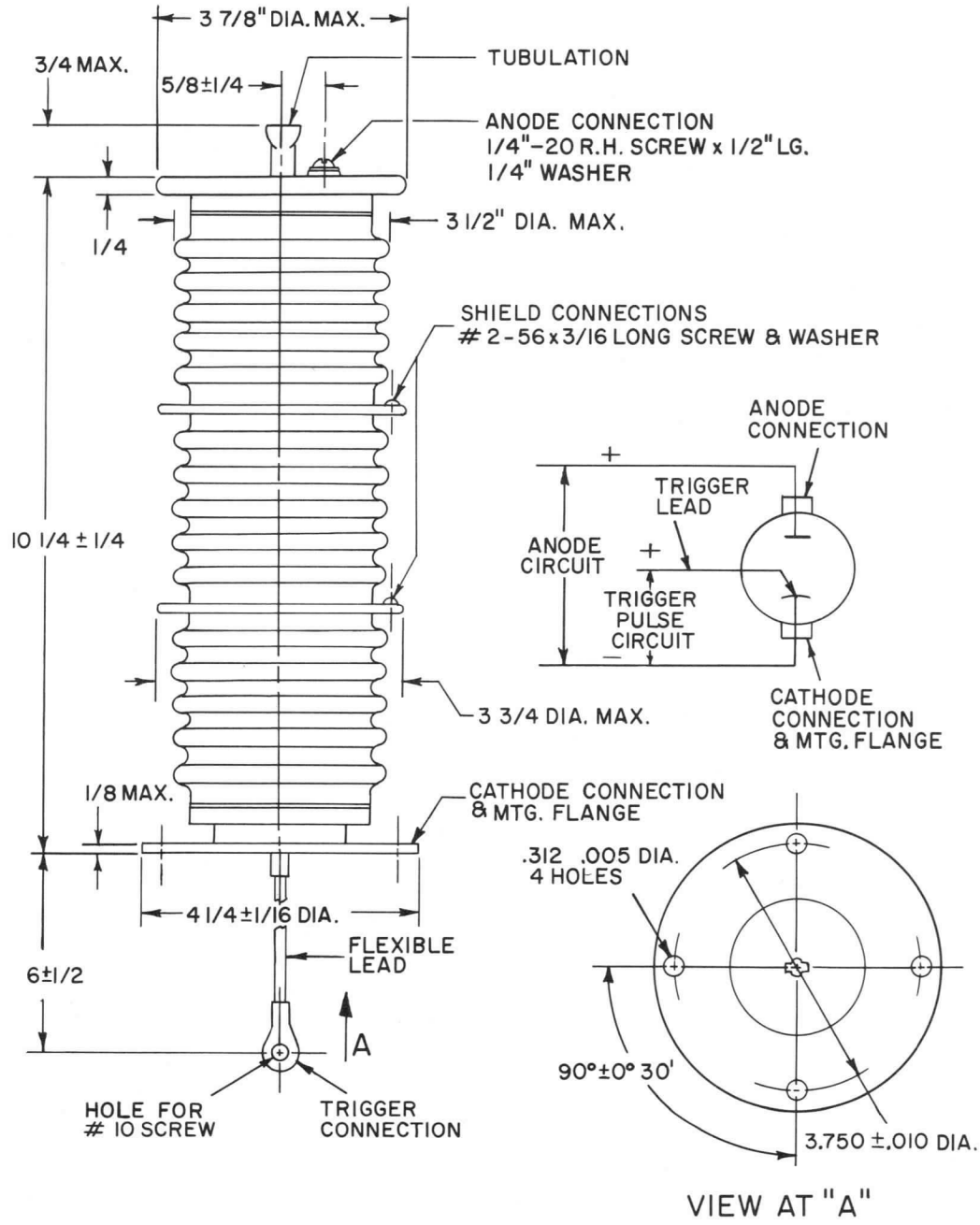

VIEW AT "A"

TUBE DEPARTMENT

GENERAL ELECTRIC

Schenectady, N. Y. 12305

GL-8559

Except for the following ratings the GL-8559 is the same as the GL-7390:

SHOCK

Position	Intensity	Duration
Vertical, Base Down	80 g	11 Milliseconds
Horizontal	60 g	11 Milliseconds per MIL-STD-202B, Method 205B

VIBRATION

Vertical, Base Down	10–55 Cps, 0.060 Inch Total Displacement
Horizontal	10–55 Cps, 0.060 Inch Total Displacement

Per MIL-STD-202B, Method 201A

TUBE DEPARTMENT
GENERAL ELECTRIC
Owensboro, Kentucky

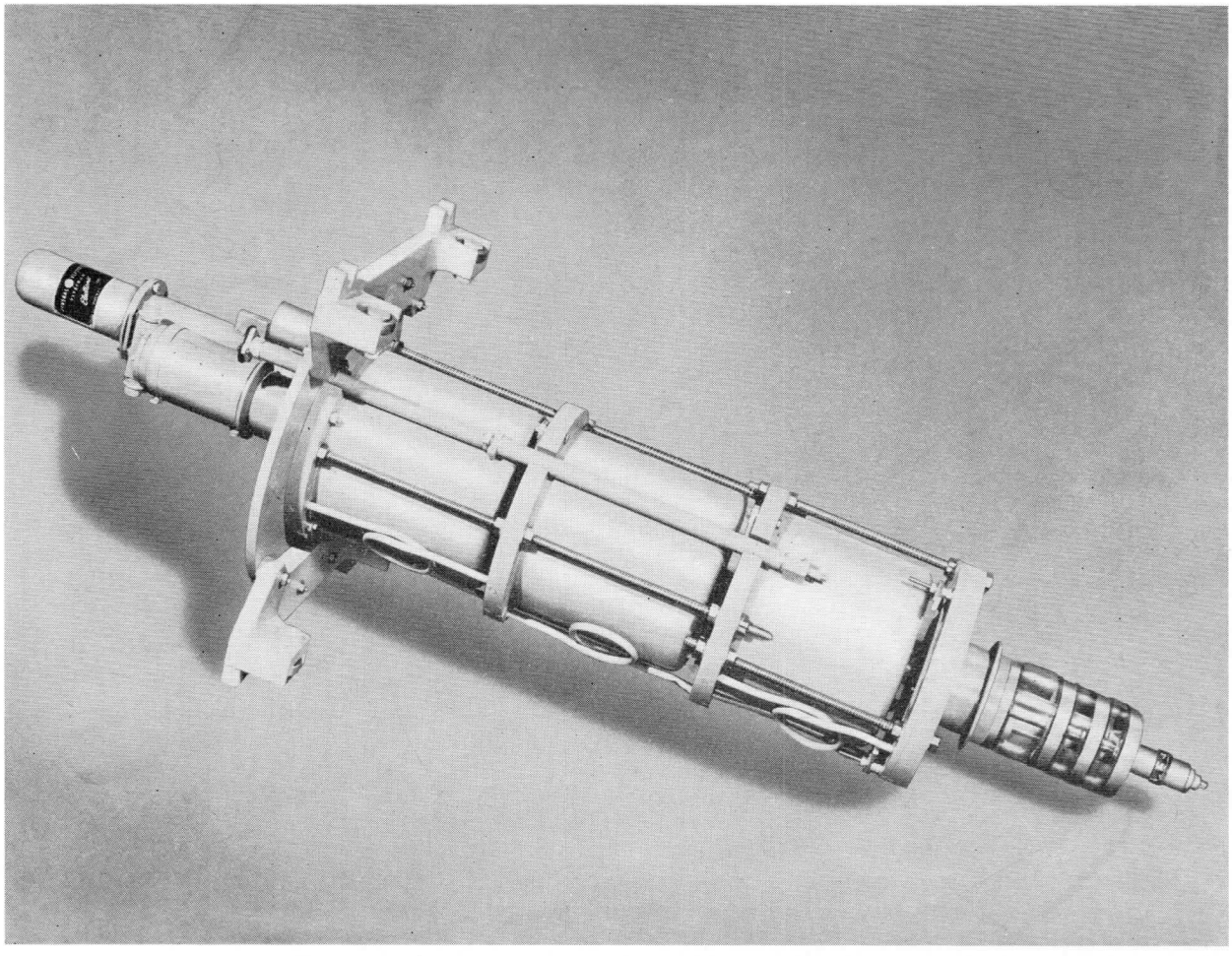

KLYSTRON

12-KILOWATT UHF TELEVISION OUTPUT VISUAL-AMPLIFIER SERVICE BROADBAND OPERATION

WATER- AND FORCED-AIR-COOLED ELECTROMAGNETIC FOCUSING GAIN IN EXCESS OF 200

These tubes are three-resonator tunable klystrons for use as radio-frequency amplifiers. They cover the UHF television band, 470 to 890 megacycles, and each type will provide 12 kilowatts of power output at synchronizing peak level with a minimum power gain of 200 in broadband visual-amplifier service. Broadband operation is obtained by tuning the input and output resonators to the visual carrier frequency and detuning the center resonator above visual carrier by an amount sufficient to give the desired breadth of response.

The tubes have unipotential tantalum disk-type cathodes heated by bombardment, collectors capable of dissipating 51 kilowatts, and require electromagnetic focusing of the electron beam. The cathode seals and the output seals are forced-air cooled; the drift tubes and the collectors are water-cooled. There are two basic resonator diameters for the six types.

Tube Type	Frequency Range Megacycles	Television Channel Coverage
GL-6237	470–530	14–23
GL-6238	530–584	24–32
GL-6239	584–656	33–44
GL-6240	656–722	45–55
GL-6241	722–806	56–69
GL-6242	806–890	70–83

GENERAL ELECTRIC

Supersedes ET-T1116 dated 10-55

TECHNICAL INFORMATION

GENERAL

Electrical	**Bogey**	**Maximum**	
Heater Voltage*	5.5	....	Volts
Heater Starting Voltage	8	....	Volts
Heater Current at 5.5 Volts	35	....	Amperes
Heater Current at 8 Volts	55	....	Amperes
Heater Starting Current	....	100	Amperes
Heater Cold Resistance	0.017	....	Ohms
Cathode Bombarder Voltage	....	3	Kilovolts
Cathode Bombarder Current	....	550	Milliamperes
Cathode Bombarder Input†	....	1500	Watts
Cathode Heating Time‡	3	....	Minutes
Magnetic Field, approximate range§	300 to 500	....	Gausses

Mechanical

Mounting Position—Vertical, Collector End up

Water Flow		
Collector	15 Min	Gallons per Minute
Pressure Drop at Rated Flow, approximate	65	Pounds per Square Inch
Drift Tubes	2 Min	Gallons per Minute
Pressure Drop at Rated Flow, approximate	65	Pounds per Square Inch
Water Pressure	80 Max	Pounds per Square Inch
Outlet Water Temperature	70 Max	C
Air Flow		
Cathode and Heater Seals	300 Min	Cubic Feet per Minute
Output Seals	15 Min	Cubic Feet per Minute
Glass Temperature	150 Max	C
Maximum Over-All Length, approximate	4½ to 5	Feet
Maximum Over-All Diameter	21½	Inches
Net Weight, approximate//	180 to 280	Pounds

MAXIMUM RATINGS AND TYPICAL OPERATING CONDITIONS

RADIO-FREQUENCY AMPLIFIER—BROADBAND TELEVISION SERVICE

Synch-onizing-Level Conditions Per Tube Unless Otherwise Specified

Maximum Ratings, Absolute Values

DC Beam Voltage	18 Max	Kilovolts
DC Beam Currentπ	3 Max	Amperes
Beam Input	51 Max	Kilowatts
Collector Dissipation	51 Max	Kilowatts
Drift Tube Collection Current	250 Max	Milliamperes
Driving Power	150 Max	Watts

Typical Operation—Bandwidth 6 Megacycles

DC Beam Voltage	17.5	Kilovolts
DC Beam Currentπ	2.75	Amperes
Driving Power**		
Synchronizing Level	25	Watts
Pedestal Level	12	Watts
Power Output		
Saturation Level△	15	Kilowatts
Synchronizing Level	12	Kilowatts
Pedestal Level	6.75	Kilowatts

RADIO-FREQUENCY AMPLIFIER—FREQUENCY MODULATION OR TELEVISION SERVICE

Key-Down Conditions per Tube Without Amplitude Modulation

Maximum Ratings, Absolute Values

DC Beam Voltage	18 Max	Kilovolts
DC Beam Currentπ	3 Max	Amperes
Beam Input	51 Max	Kilowatts
Collector Dissipation	51 Max	Kilowatts
Drift Tube Collection Current	250 Max	Milliamperes
Driving Power	150 Max	Watts
Power Output	12 Max	Kilowatts

TECHNICAL INFORMATION (CONT'D)

RADIO-FREQUENCY AMPLIFIER—FREQUENCY MODULATION OR TELEVISION SERVICE (CONT'D)

Key-Down Conditions Per Tube Without Amplitude Modulation

Typical Operation

DC Beam Voltage	17	14	Kilovolts
DC Beam Current π	2.3	1.8	Amperes
Drift Tube Collection Current	150	100	Milliamperes
Driving Power**	10	6	Watts
Power Output	12	7	Kilowatts

* The bogey value is the approximate value of heater voltage required to furnish just sufficient bombarder current which with a bombarder voltage of 2500 volts maintains the main cathode at an operating temperature adequate to furnish a beam current of 3 amperes. To avoid excessively long cathode-heating time the heater voltage may be started at approximately 8 volts and gradually reduced to the normal operating value as the cathode reaches the proper operating temperature. Automatic regulation of the heater supply is required to maintain stable cathode temperature and beam current. Specific recommendations regarding the regulating circuit will be found in the Installation and Operation Instructions.

† If an unfiltered bombarder supply is used, an appropriate correction factor must be determined and applied to d-c meter readings in computing actual power.

‡ Approximate time required to permit normal operation. Beam voltage may be applied earlier.

§ The magnetic field required will vary with the type and the channel to which the tube is tuned. It ranges between 300 and 500 gausses. Three independently regulated electromagnets around the body assembly and one around the cathode structure are required for proper electron-beam focusing. Details regarding the design and positioning of these magnets will be found in the Installation and Operation Instructions.

// **Approximate Weights**

GL-6237	280 Pounds
GL-6238	280 Pounds
GL-6239	280 Pounds
GL-6240	180 Pounds
GL-6241	180 Pounds
GL-6242	180 Pounds

π Includes both collector current and drift-tube collection current.

**Approximate driving power required at the input terminals of the klystron. Additional driving power should be provided to take care of circuit losses and any isolating attenuation used between driver and klystron.

△Saturation power level is the maximum radio-frequency power level which the tube will deliver for a given beam input power. Under operating conditions for a 15-kilowatt saturation level, the power-output versus driving-power characteristic is linear enough to permit application in video television up to a 12-kilowatt synchronizing peak level with a moderate amount of synchronizing peak pre-emphasis in the driver stage.

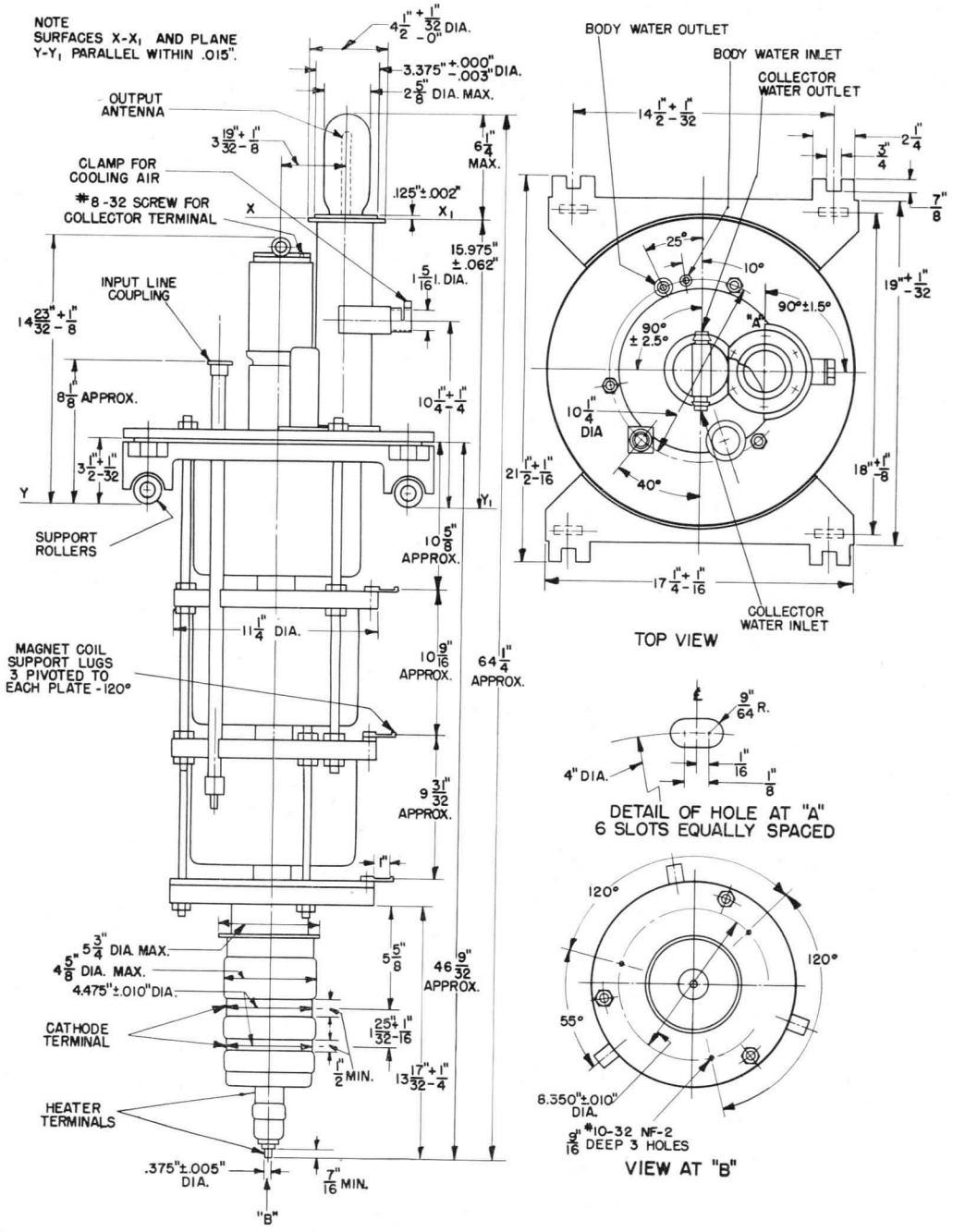

OUTLINE GL-6237

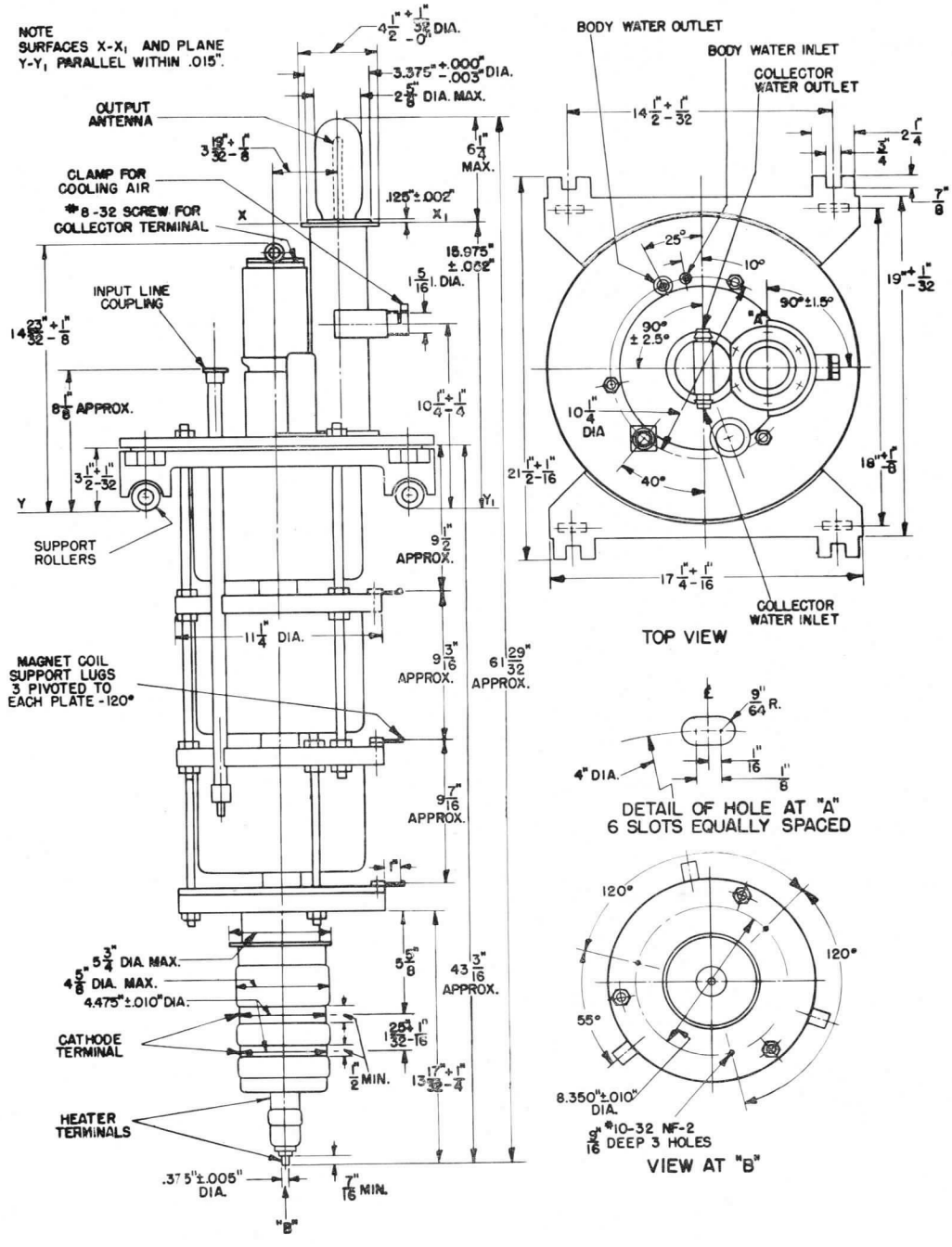

OUTLINE GL-6238

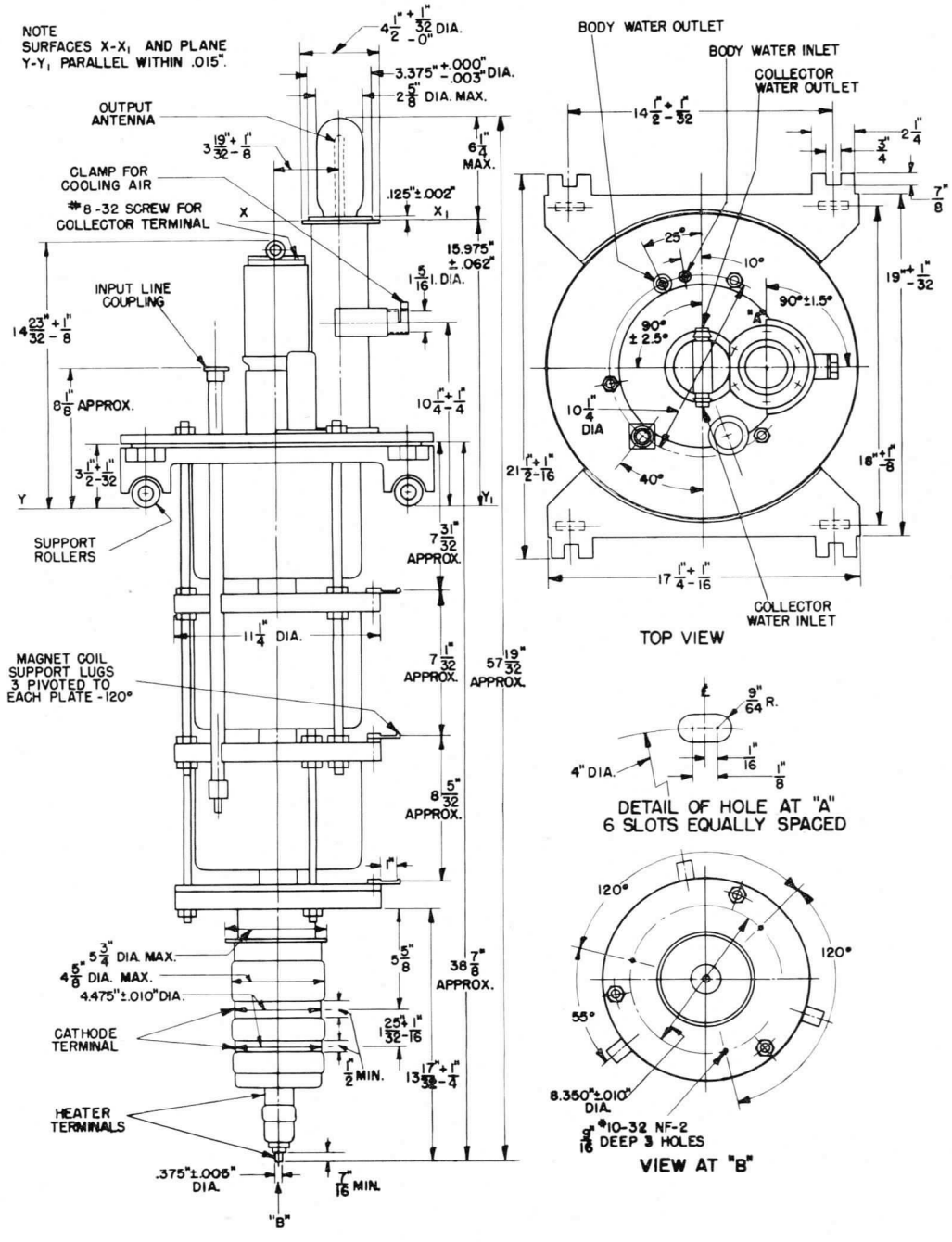

OUTLINE GL-6239

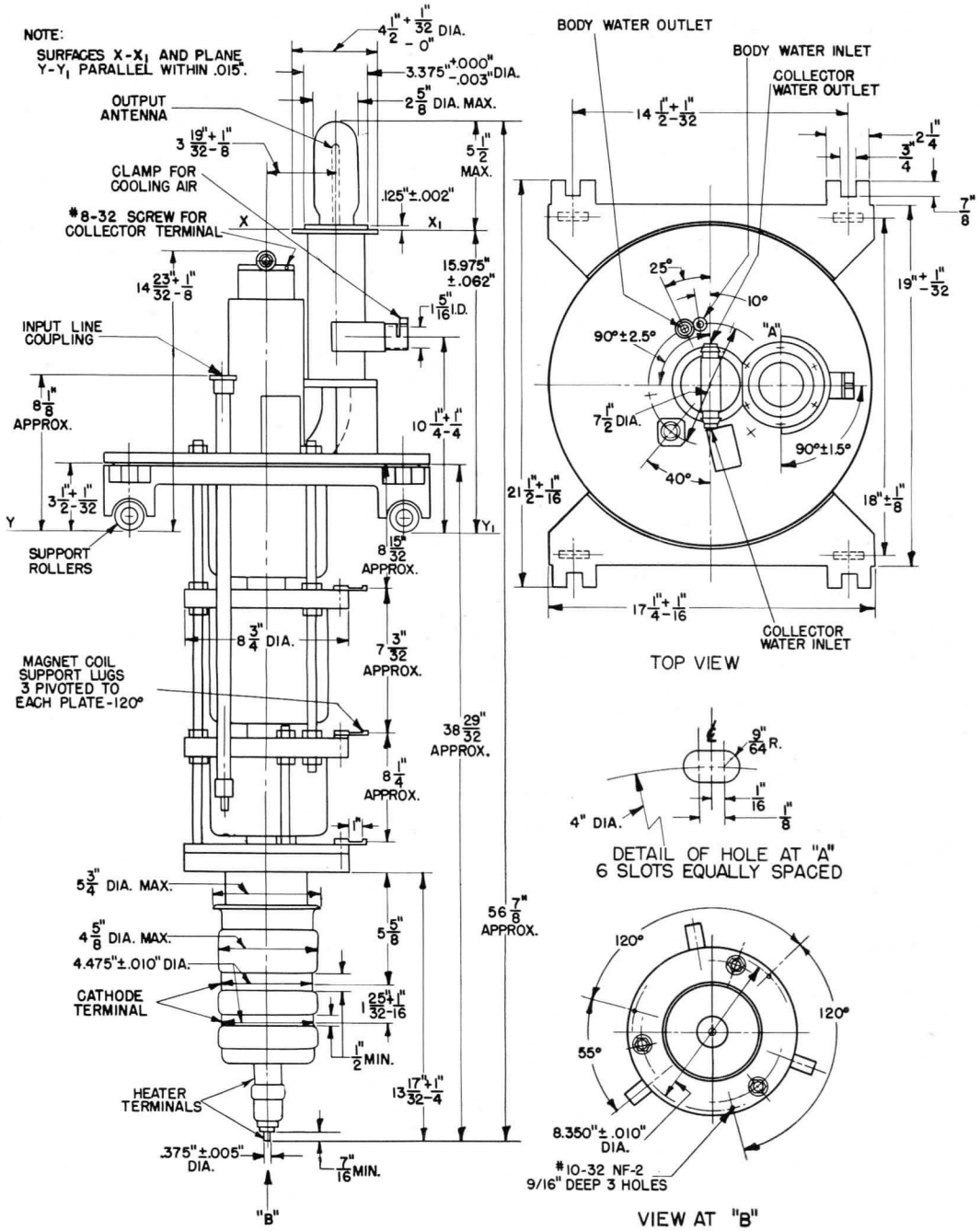

OUTLINE GL-6240

N-20601AZ

3-27-59

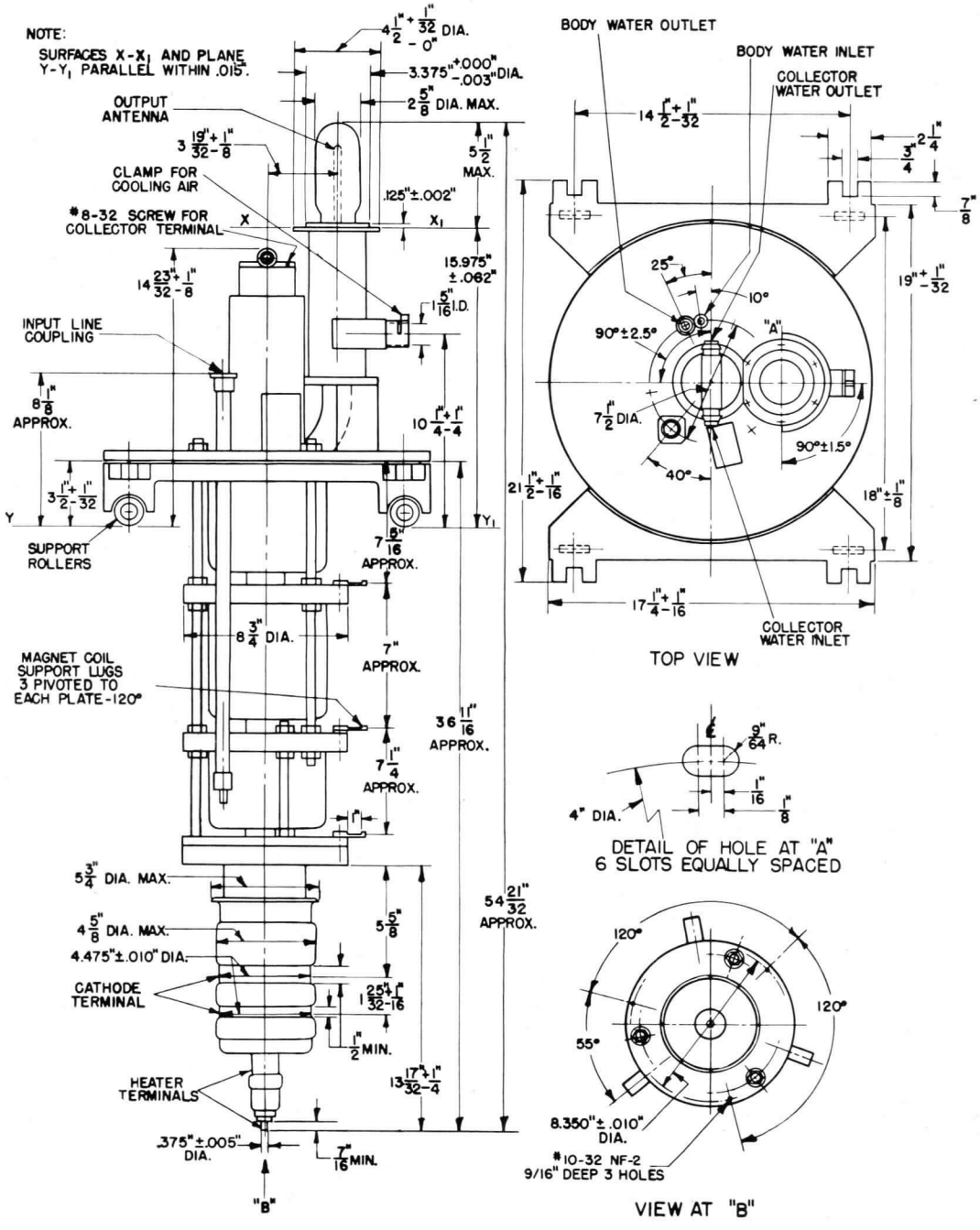

OUTLINE GL-6241

N-20600AZ

3-27-59

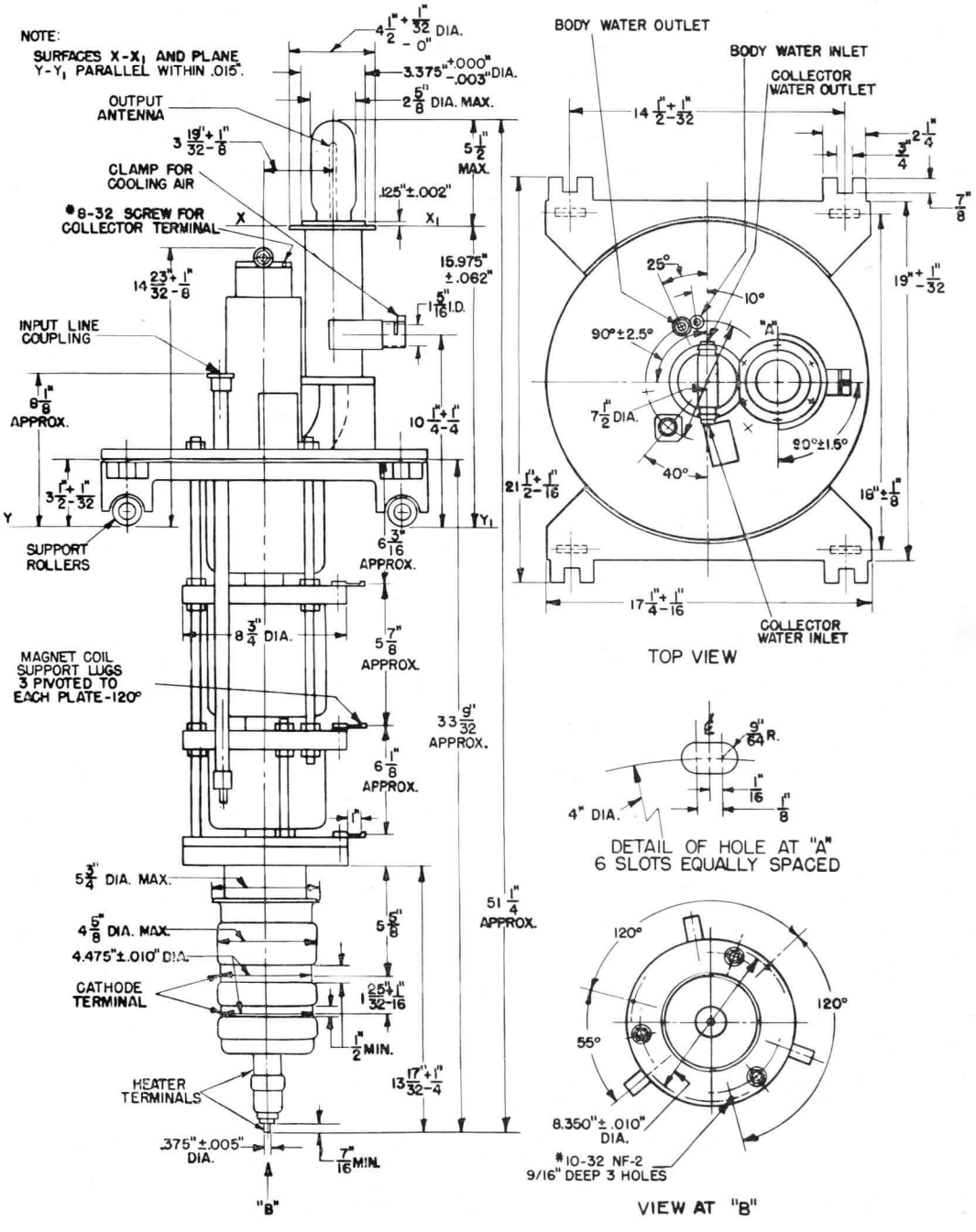

OUTLINE GL-6242

ELECTRONIC COMPONENTS DIVISION

GENERAL ELECTRIC

Schenectady 5, N. Y.

PRINTED IN U.S.A.

GENERAL ELECTRIC
POWER TUBE DEPARTMENT
Schenectady 5, N. Y.

PRELIMINARY
TECHNICAL INFORMATION

These ratings represent those of current samples of this type. Refer to the Objective Technical Information sheet for design-objective ratings.

DEVELOPMENTAL TYPE

This technical information is proprietary and is furnished only as a service to customers.

ZM-6600

X-BAND MULTIPLE-BEAM KLYSTRON 40 KILOWATTS CW

The ZM-6600 is a klystron featuring a multiple-gun assembly in a single compact vacuum envelope. The use of a multiplicity of electron beams provides a power output greatly in excess of that obtainable in the basic single-beam tube. The tube operates at comparatively low voltages, which reduces problems associated with high-voltage power supplies, voltage breakdown and radiation protection.

Other design features include reduced size and weight over conventional klystrons at high-power levels where external paralleling is required.

The multiple-beam klystron is particularly adapted for use in long-range radar and high-power communications systems.

GENERAL

ELECTRICAL

Frequency	8.3 – 8.5	Gigacycles
Tuning Range	80	Megacycles
Cathode – Impregnated Unipotential		
Voltage, maximum	9	Volts
Current, maximum	40	Amperes
Focusing Method – Electromagnet		

MECHANICAL

Connectors – Waveguide		
RF Input and Output – Matches UG-51/U Flange		
Weight		
Tube and Pole-Piece Assembly	100	Pounds
Electromagnet	160	Pounds

THERMAL

Cooling – Water		
Collector		
Inlet Pressure, maximum	100	Pounds per Square Inch
Differential Pressure, maximum (incoming to outgoing)	65	Pounds per Square Inch
Water Flow, minimum	25	Gallons per Minute
Body		
Inlet Pressure, maximum	40	Pounds per Square Inch
Water Flow, minimum	1.5	Gallons per Minute
Cathode		
Pressure, maximum	40	Pounds per Square Inch
Water Flow, minimum	0.1	Gallons per Minute
Magnet		
Pressure, maximum	40	Pounds per Square Inch
Water Flow, minimum	2	Gallons per Minute

The specifications of this type are subject to change. Delivery of samples and the existence of these data do not imply continued availability of types with the same characteristics or dimensions. For the most recent information concerning the status of this device, please consult your local Power Tube Department Regional Sales Office.

MAXIMUM RATINGS

Beam Voltage	13	Kilovolts
Cathode Current	11.8	Amperes
Perveance, total	8.0	Micropervs
Magnet		
Current	12.5	Amperes
Power	3.1	Kilowatts
Load VSWR	1.25	
Output, CW	40	Kilowatts

TYPICAL OPERATING CONDITIONS
(High-Efficiency Tuning)

Gain	45	Decibels
Efficiency	34	Percent
Bandwidth (3 db)	19	Megacycles
Output, CW	40	Kilowatts
Beam Voltage	11.7	Kilovolts
Cathode Current	10	Amperes

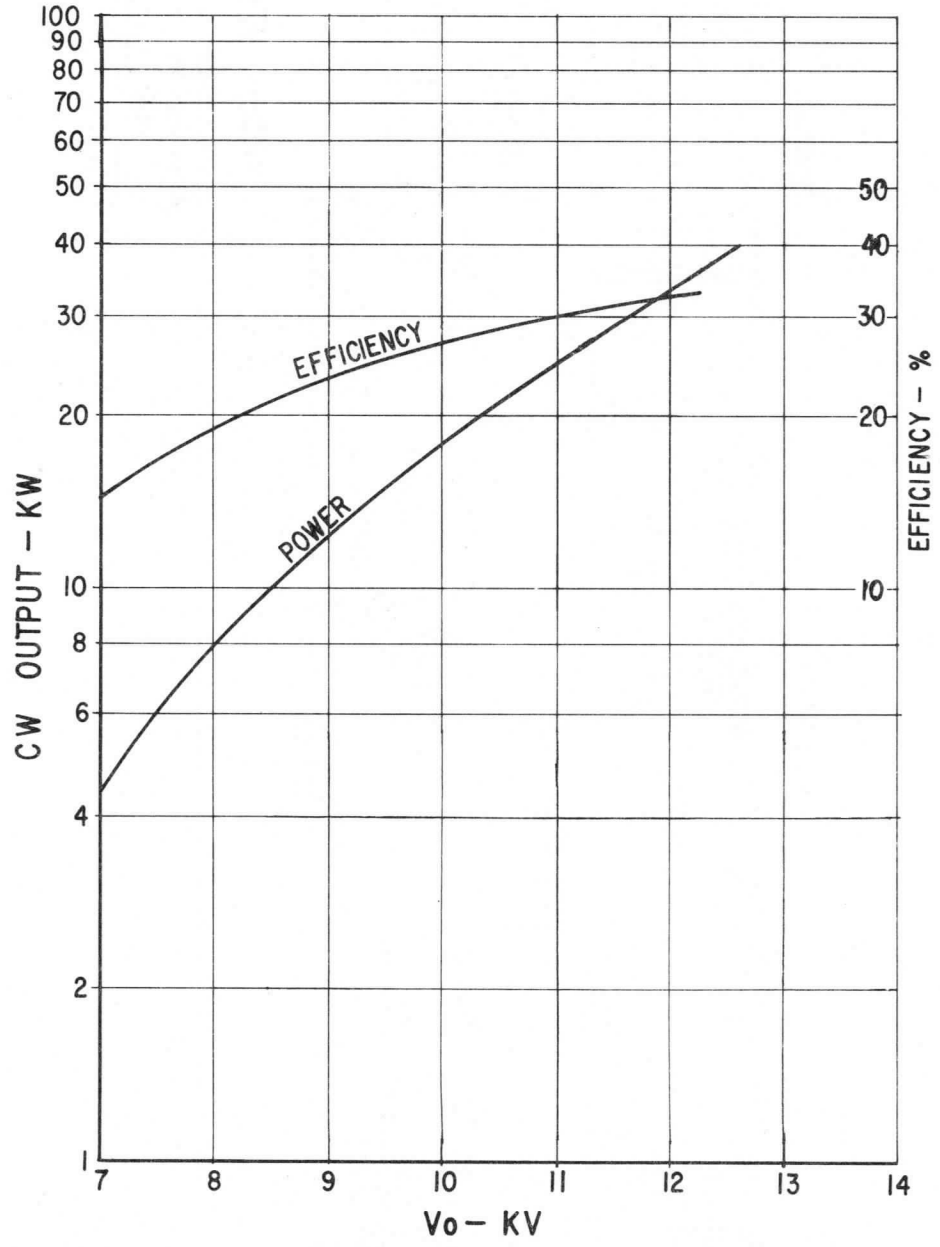

CW Output Power and Corresponding Efficiency for Various Values of Beam Voltage

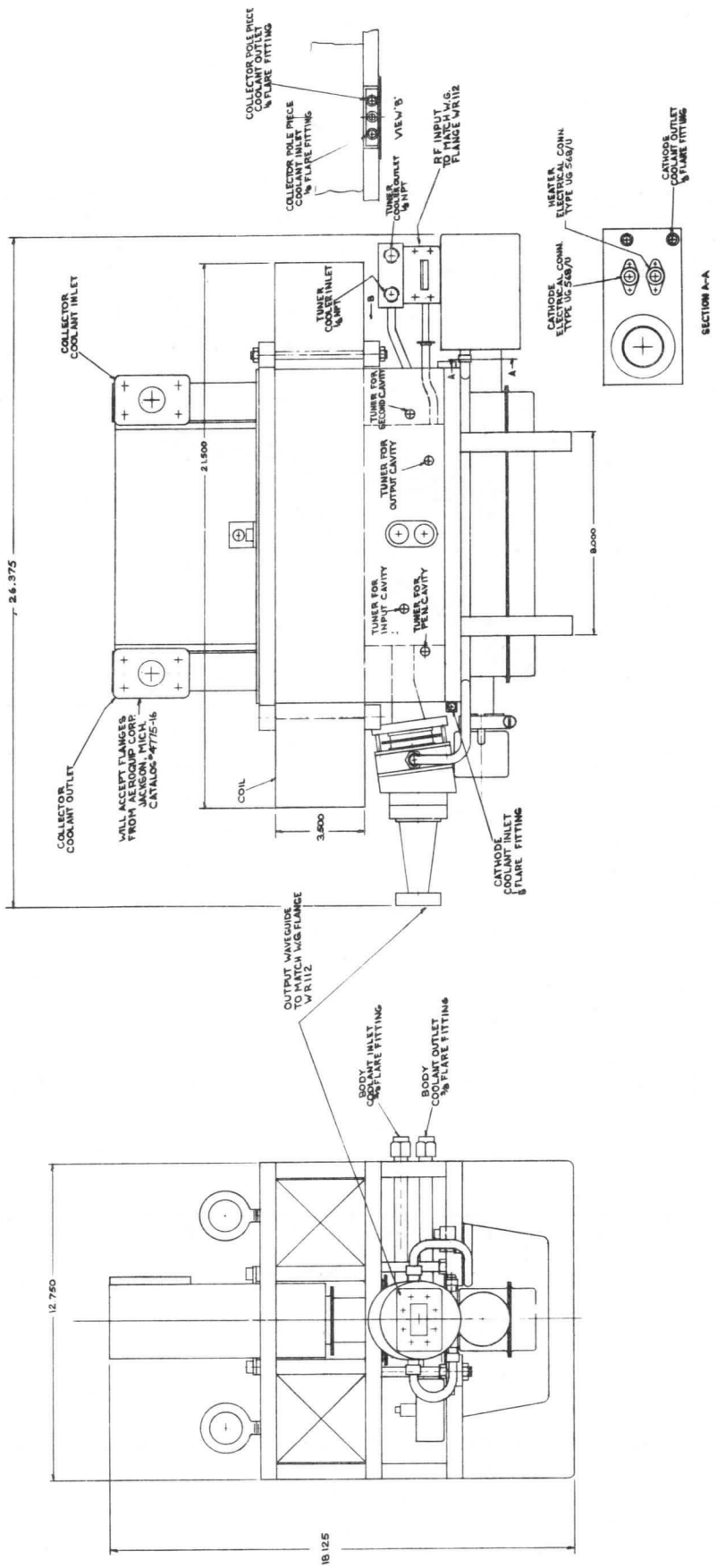
COLLECTOR POLE PIECE COOLANT OUTLET ⅛ FLARE FITTING
COLLECTOR POLE PIECE COOLANT INLET ⅛ FLARE FITTING
TUNER COOLER OUTLET ⅛ NPT
VIEW 'B'
R.F. INPUT TO MATCH W.G. FLANGE WR112
HEATER ELECTRICAL CONN. TYPE UG 568/U
CATHODE ELECTRICAL CONN. TYPE UG 568/U
CATHODE COOLANT OUTLET ⅛ FLARE FITTING
SECTION A-A
COLLECTOR COOLANT INLET
TUNER COOLER INLET ⅛ NPT
TUNER FOR SECOND CAVITY
TUNER FOR OUTPUT CAVITY
TUNER FOR INPUT CAVITY
TUNER FOR PEAK CAVITY
21.500
8.000
26.375
COLLECTOR COOLANT OUTLET
WILL ACCEPT FLANGES FROM AEROQUIP CORP. JACKSON, MICH. CATALOG #4775-16
COIL
3.500
CATHODE COOLANT INLET ⅛ FLARE FITTING
OUTPUT WAVEGUIDE TO MATCH W/G FLANGE W.R.112
BODY COOLANT INLET ⅛ FLARE FITTING
BODY COOLANT OUTLET ⅛ FLARE FITTING
12.750
18.125

GENERAL ELECTRIC
POWER TUBE DEPARTMENT
Schenectady 5, N. Y.

PRELIMINARY
TECHNICAL INFORMATION

These ratings represent those of current samples of this type. Refer to the Objective Technical Information sheet for design-objective ratings.

DEVELOPMENTAL TYPE
ZM-6601
PTI-76B

2-1-63

This technical information is proprietary and is furnished only as a service to customers.

ZM-6601

X-BAND — MULTIPLE-BEAM KLYSTRON — 50 KILOWATTS CW

The ZM-6601 is a klystron featuring a multiple-gun assembly in a single compact vacuum envelope. The use of a multiplicity of electron beams provides a power output greatly in excess of that obtainable in the basic single-beam tube. The tube operates at comparatively low voltages, which reduces problems associated with high-voltage power supplies, voltage breakdown and radiation protection.

Other design features include reduced size and weight over conventional klystrons at high-power levels where external paralleling is required.

The multiple-beam klystron is particularly adapted for use in long-range radar and high-power communications systems.

GENERAL

ELECTRICAL

Frequency	8.3 – 8.5*	Gigacycles
Tuning Range	80	Megacycles
Cathode – Impregnated Unipotential		
Voltage, maximum	9	Volts
Current, maximum	40	Amperes
Focusing Method – Electromagnet		

MECHANICAL

Connectors – Waveguide		
RF Input and Output – Matches UG-51/U Flange		
Weight		
Tube and Pole-Piece Assembly	100	Pounds
Electromagnet	160	Pounds

THERMAL

Cooling – Water		
Collector		
Inlet Pressure, maximum	100	Pounds per Square Inch
Differential Pressure, maximum (incoming to outgoing)	65	Pounds per Square Inch
Water Flow, minimum	25	Gallons per Minute
Body		
Inlet Pressure, maximum	40	Pounds per Square Inch
Water Flow, minimum	1.5	Gallons per Minute
Cathode		
Pressure, maximum	40	Pounds per Square Inch
Water Flow, minimum	0.1	Gallons per Minute
Magnet		
Pressure, maximum	40	Pounds per Square Inch
Water Flow, minimum	2	Gallons per Minute

The specifications of this type are subject to change. Delivery of samples and the existence of these data do not imply continued availability of types with the same characteristics or dimensions. For the most recent information concerning the status of this device, please consult your local Power Tube Department Regional Sales Office.

MAXIMUM RATINGS

Beam Voltage	14.0	Kilovolts
Cathode Current	13.2	Amperes
Perveance, total	8.0	Micropervs
Magnet		
Current	13.0	Amperes
Power	3.4	Kilowatts
Load VSWR	1.25	
Output, CW	50	Kilowatts

TYPICAL OPERATING CONDITIONS
(High-Efficiency Tuning)

Gain	45	Decibels
Efficiency	35	Percent
Bandwidth (3 db)	19	Megacycles
Output, CW	50	Kilowatts
Beam Voltage	12.8	Kilovolts
Cathode Current	11.3	Amperes

* Tubes can be made available over the frequency range 7.1 – 9.0 gigacycles.

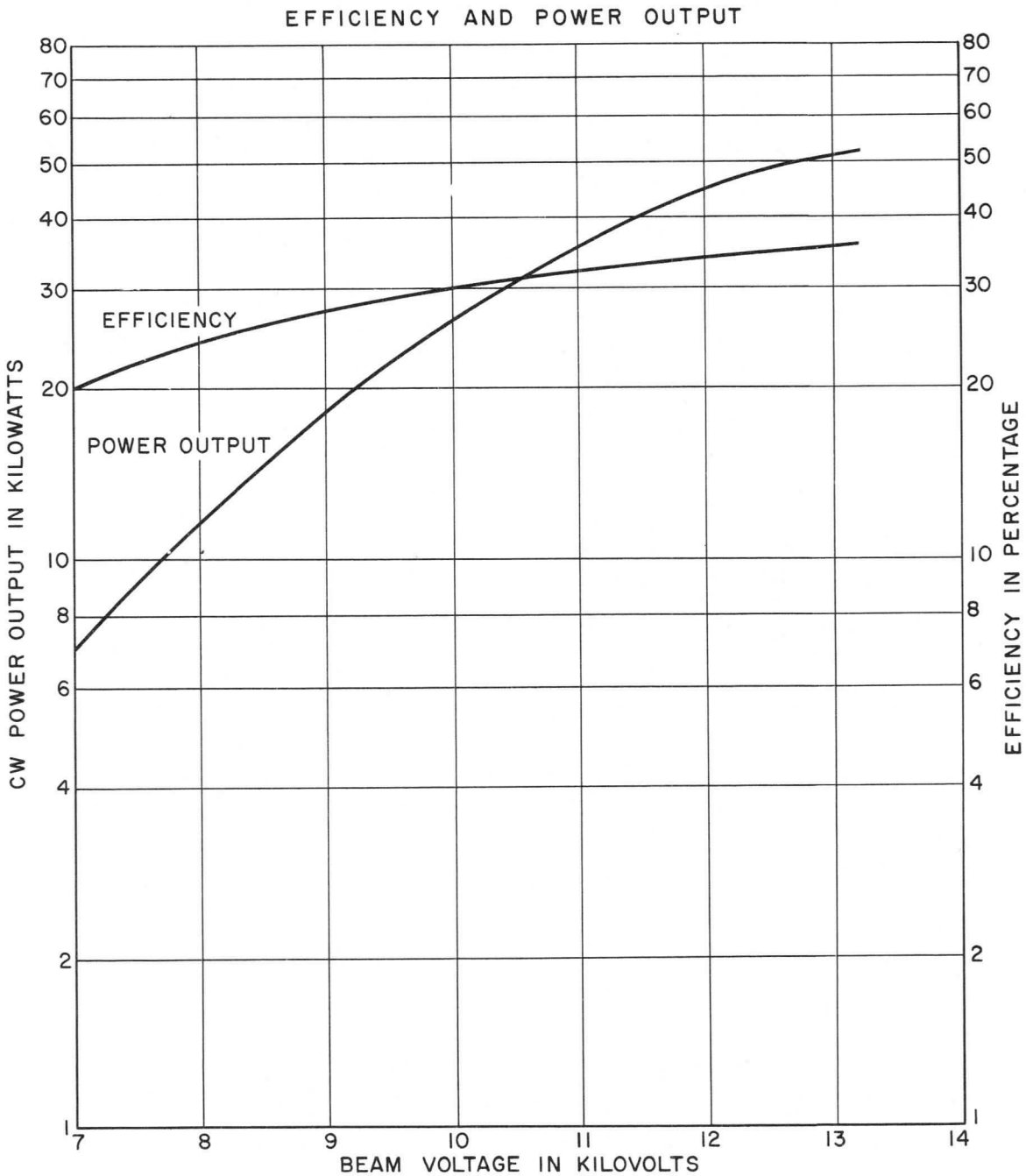
EFFICIENCY AND POWER OUTPUT
EFFICIENCY
POWER OUTPUT
CW POWER OUTPUT IN KILOWATTS
EFFICIENCY IN PERCENTAGE
BEAM VOLTAGE IN KILOVOLTS
80
70
60
50
40
30
20
10
8
6
4
2
1
7
8
9
10
11
12
13
14

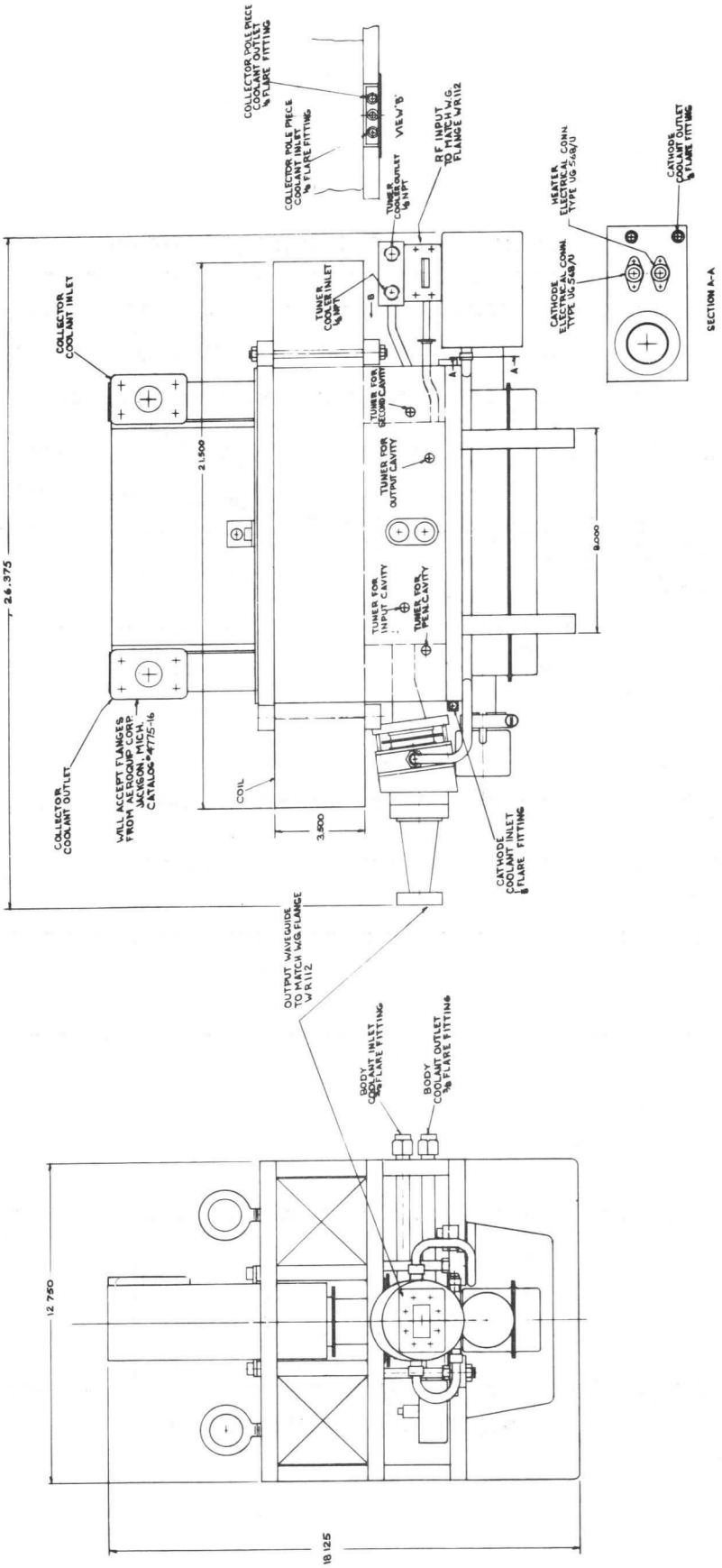
COLLECTOR POLE PIECE COOLANT OUTLET ⅛ FLARE FITTING
COLLECTOR POLE PIECE COOLANT INLET ⅛ FLARE FITTING
VIEW B
TUNER COOLANT OUTLET ⅛ NPT
RF INPUT TO MATCH WG FLANGE WR112
HEATER ELECTRICAL CONN TYPE UG-560/U
CATHODE COOLANT OUTLET ⅛ FLARE FITTING
CATHODE ELECTRICAL CONN TYPE UG-560/U
SECTION A-A
COLLECTOR COOLANT INLET
TUNER COOLER INLET ⅛ NPT
TUNER FOR SECOND CAVITY
TUNER FOR OUTPUT CAVITY
TUNER FOR INPUT CAVITY
TUNER FOR PEN. CAVITY
21.500
26.375
8.000
3.500
COIL
COLLECTOR COOLANT OUTLET
WILL ACCEPT FLANGES FROM AEROQUIP CORP JACKSON, MICH CATALOG #7715-16
CATHODE COOLANT INLET ⅛ FLARE FITTING
OUTPUT WAVEGUIDE TO MATCH WG FLANGE WR 112
BODY COOLANT INLET ⅛ FLARE FITTING
BODY COOLANT OUTLET ⅛ FLARE FITTING
12.750
18.125

GENERAL ELECTRIC
POWER TUBE DEPARTMENT
Schenectady 5, N. Y.

OBJECTIVE
TECHNICAL INFORMATION

These ratings represent the design objective for this product. Refer to the Preliminary Technical Information sheet for ratings currently achieved in the progression towards design objectives. If PTI sheets do not exist, consult your local Power Tube Department Regional Sales Office.

DEVELOPMENTAL TYPE
ZM-6602
OTI-73A
Page 1
11-15-62

This technical information is proprietary and is furnished only as a service to customers.

ZM-6602

X-BAND MULTIPLE-BEAM KLYSTRON 100 KILOWATTS CW

The ZM-6602 is a klystron featuring a multiple-gun assembly in a single compact vacuum envelope. The use of a multiplicity of electron beams provides a power output greatly in excess of that obtainable in the basic single-beam tube. The tube operates at comparatively low voltages, which reduces problems associated with high-voltage power supplies, voltage breakdown and radiation protection.

Other design features include reduced size and weight over conventional klystrons at high-power levels where external paralleling is required.

The multiple-beam klystron is particularly adapted for use in long-range radar and high-power communications systems.

GENERAL

ELECTRICAL

Frequency	7.1 – 9.0	Gigacycles
Tuning Range	80	Megacycles
Cathode – Impregnated Unipotential		
Voltage, maximum	9	Volts
Current, maximum	40	Amperes
Focusing Method – Electromagnet		

MECHANICAL

Mounting Position – Any		
Connectors – Waveguide		
RF Input and Output – Matches UG-51/U Flange		
Weight		
Tube and Pole-piece Assembly	100	Pounds
Electromagnet	160	Pounds

THERMAL

Cooling – Water		
Collector		
Inlet Pressure, maximum	100	Pounds per Square Inch
Differential Pressure, maximum (incoming to outgoing)	65	Pounds per Square Inch
Water Flow, minimum	50	Gallons per Minute
Body		
Inlet Pressure, maximum	40	Pounds per Square Inch
Water Flow, minimum	3.0	Gallons per Minute
Cathode		
Pressure, maximum	40	Pounds per Square Inch
Water Flow, minimum	0.1	Gallons per Minute
Magnet		
Pressure, maximum	40	Pounds per Square Inch
Water Flow, minimum	2	Gallons per Minute

The specifications of this type are subject to change. This device is now under development and is made available for experimental purposes only. For the most recent information concerning the status of this development, please consult your local Power Tube Department Regional Sales Office, or current Preliminary Technical Information for the same catalog number.

MAXIMUM RATINGS

Beam Voltage	17	Kilovolts
Cathode Current	17.5	Amperes
Perveance, total	8.0	Micropervs
Magnet		
Current	14.5	Amperes
Power	4.0	Kilowatts
Load VSWR	1.25	
Output	100	Kilowatts

TYPICAL OPERATING CONDITIONS
(High-Efficiency Tuning)

Gain	45	Decibels
Efficiency	35	Percent
Bandwidth (3 db)	19	Megacycles
Output	100	Kilowatts

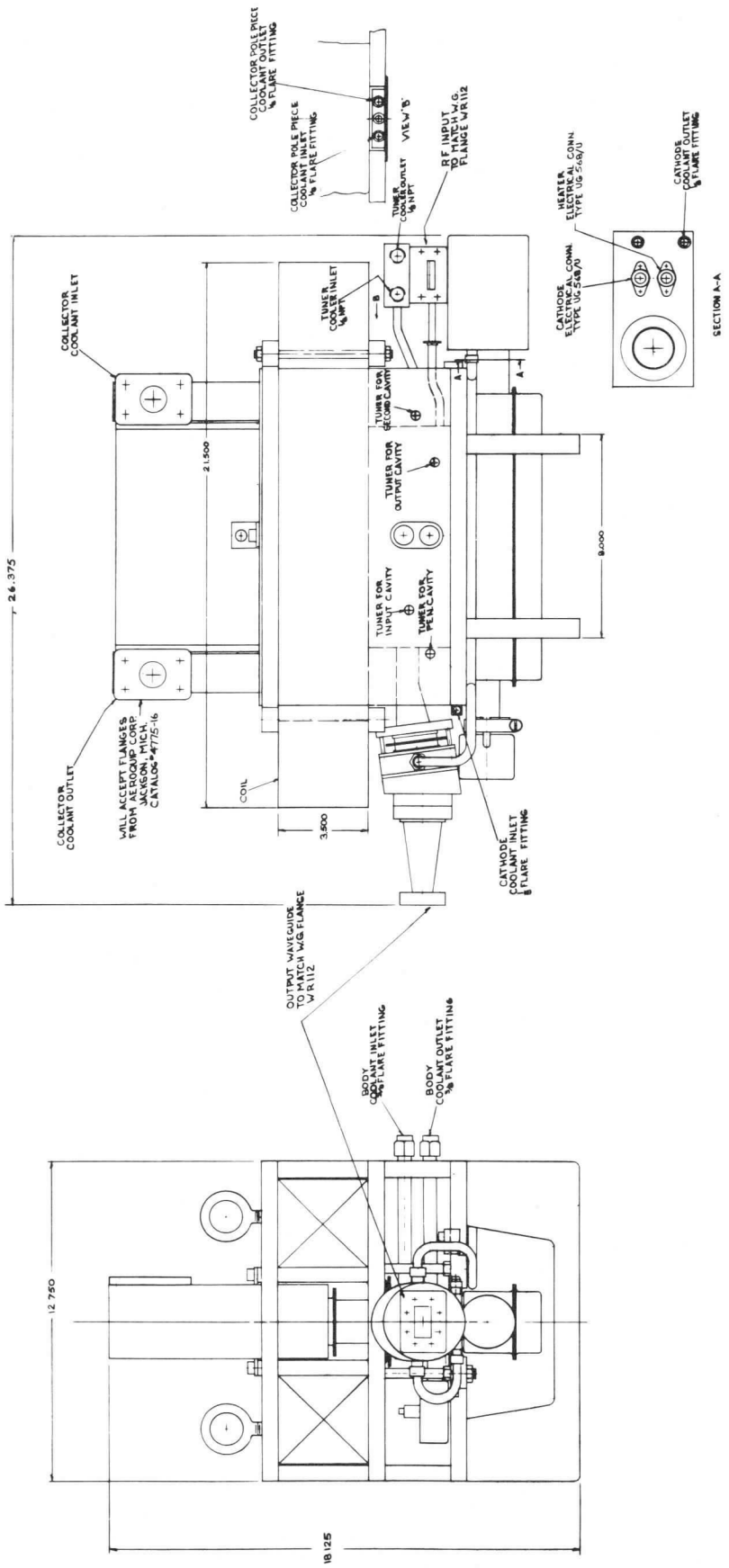
COLLECTOR POLE PIECE COOLANT OUTLET 1/8 FLARE FITTING
COLLECTOR POLE PIECE COOLANT INLET 1/8 FLARE FITTING
VIEW "B"
TUNER COOLER OUTLET 1/8 NPT
RF INPUT TO MATCH W.G. FLANGE WR112
HEATER ELECTRICAL CONN. TYPE UG 568/U
CATHODE COOLANT OUTLET 1/8 FLARE FITTING
CATHODE ELECTRICAL CONN. TYPE UG 568/U
SECTION A-A
COLLECTOR COOLANT INLET
TUNER COOLER INLET 1/8 NPT
TUNER FOR SECOND CAVITY
TUNER FOR OUTPUT CAVITY
TUNER FOR INPUT CAVITY
TUNER FOR PEN. CAVITY
21.500
26.375
8.000
3.500
COIL
COLLECTOR COOLANT OUTLET
WILL ACCEPT FLANGES FROM AEROQUIP CORP. JACKSON, MICH. CATALOG #4775-16
CATHODE COOLANT INLET 1/8 FLARE FITTING
OUTPUT WAVEGUIDE TO MATCH W.G. FLANGE WR112
BODY COOLANT INLET 3/8 FLARE FITTING
BODY COOLANT OUTLET 3/8 FLARE FITTING
12.750
18.125

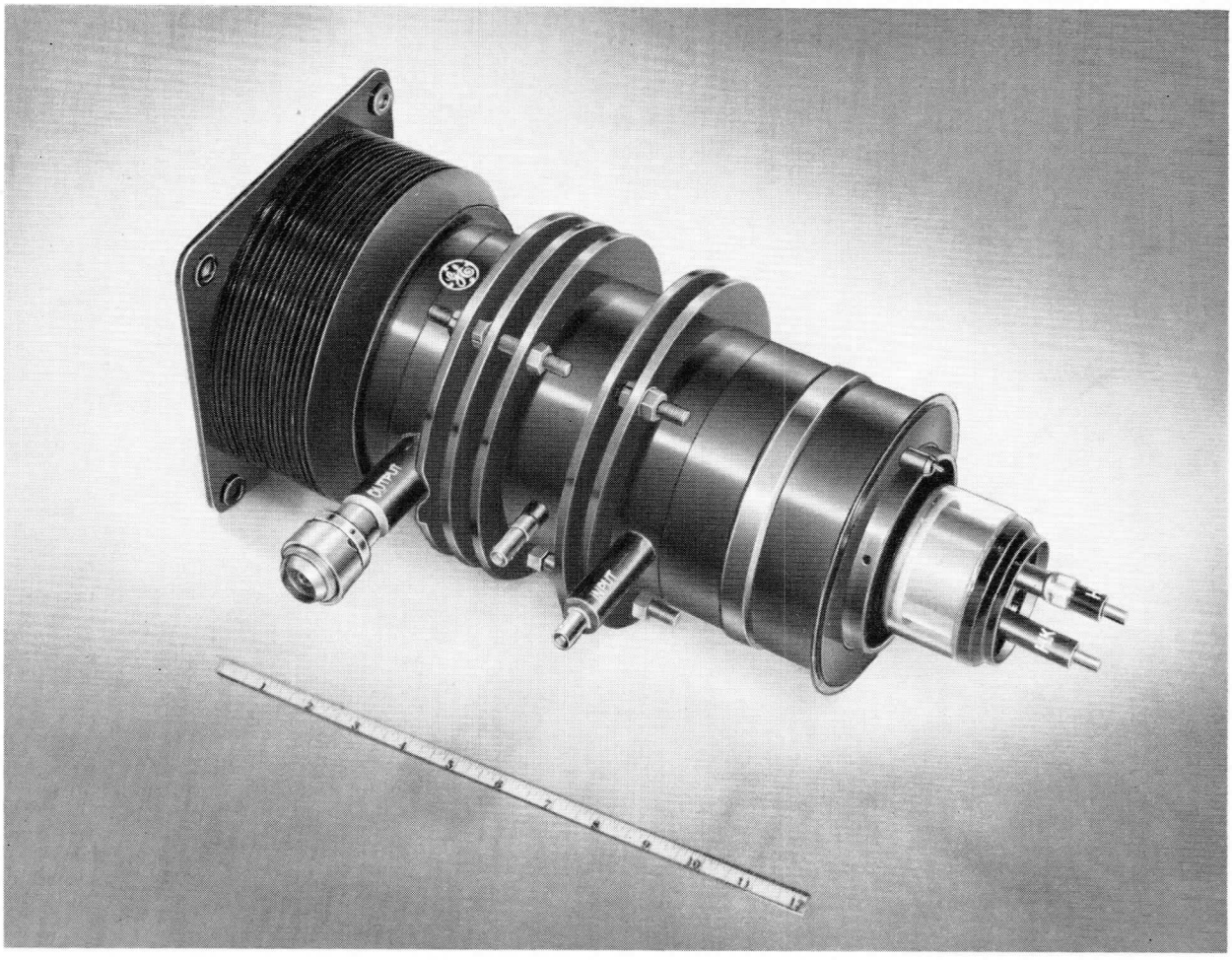

KLYSTRON

960–1215 MEGACYCLES
22 KILOWATTS PEAK OUTPUT

INTEGRAL RESONATORS
ELECTROSTATICALLY FOCUSED

The GL-6625 is a three-resonator tunable amplifier klystron for pulsed operation up to a maximum duty of twelve percent. The tube covers a frequency range of 960 to 1215 megacycles and will provide a peak power output of 22 kilowatts. The unipotential cathode is oxide-coated and indirectly heated. The rf output coupling is for 7/8-inch coaxial 50-ohm line and matches UG-1126/U connectors. The input and center-cavity-monitor fittings are BNC type to accommodate UG-88/U connectors. The tube is forced-air cooled, features mechanically tuned integral resonators, and is electrostatically focused, which eliminates the necessity for external magnets or focus coils.

GENERAL ELECTRIC

2 prints ✓

TECHNICAL INFORMATION

GENERAL

Electrical

	Minimum	Bogey	Maximum	
Heater Voltage	4.5	5.0	5.5	Volts
Heater Current at 5 Volts	35	....	45	Amperes
Heater Starting Current	....	....	70	Amperes
Heater Cold Resistance	....	0.02	....	Ohms
Cathode Heating Time	5.0	....	....	Minutes
Frequency	960	....	1215	Megacycles
Capacitance, cathode gun	....	35	....	$\mu\mu$f

Mechanical

Mounting Position—Any

Net Weight, approximate ..... 30 Pounds

Thermal

Air Flow ..... 220 Min Cubic Feet per Minute

Air flow of at least 220 cubic feet per minute is required for operation at maximum ratings. In any case, sufficient air cooling must be provided and distributed to keep temperatures below the indicated limits.

Operating Temperature

Tube Body ..... 100 Max C

Cooling Fin Assembly ..... 125 Max C

MAXIMUM RATINGS AND TYPICAL OPERATION

RADIO-FREQUENCY PULSE AMPLIFIER

Maximum Ratings, Absolute Values

Peak Beam Voltage	20 Max	Kilovolts
Peak Beam Current	9.35 Max	Amperes
Average Beam Power	2400 Max	Watts
RF Output Power, average	300 Max	Watts
Beam Pulse Width	10 Max	Microseconds
Duty Cycle	12	Percent

For periods of time not to exceed one millisecond, duty cycles up to forty percent may be used.

Typical Operation

Peak Beam Voltage	10	18	Kilovolts
Peak Beam Current	3	6.6	Amperes
Peak RF Input Power	40	100	Watts
Peak RF Output Power	7.5	22	Kilowatts
RF Pulse Width	3.5	3.5	Microseconds
Duty Cycle	6	1	Percent

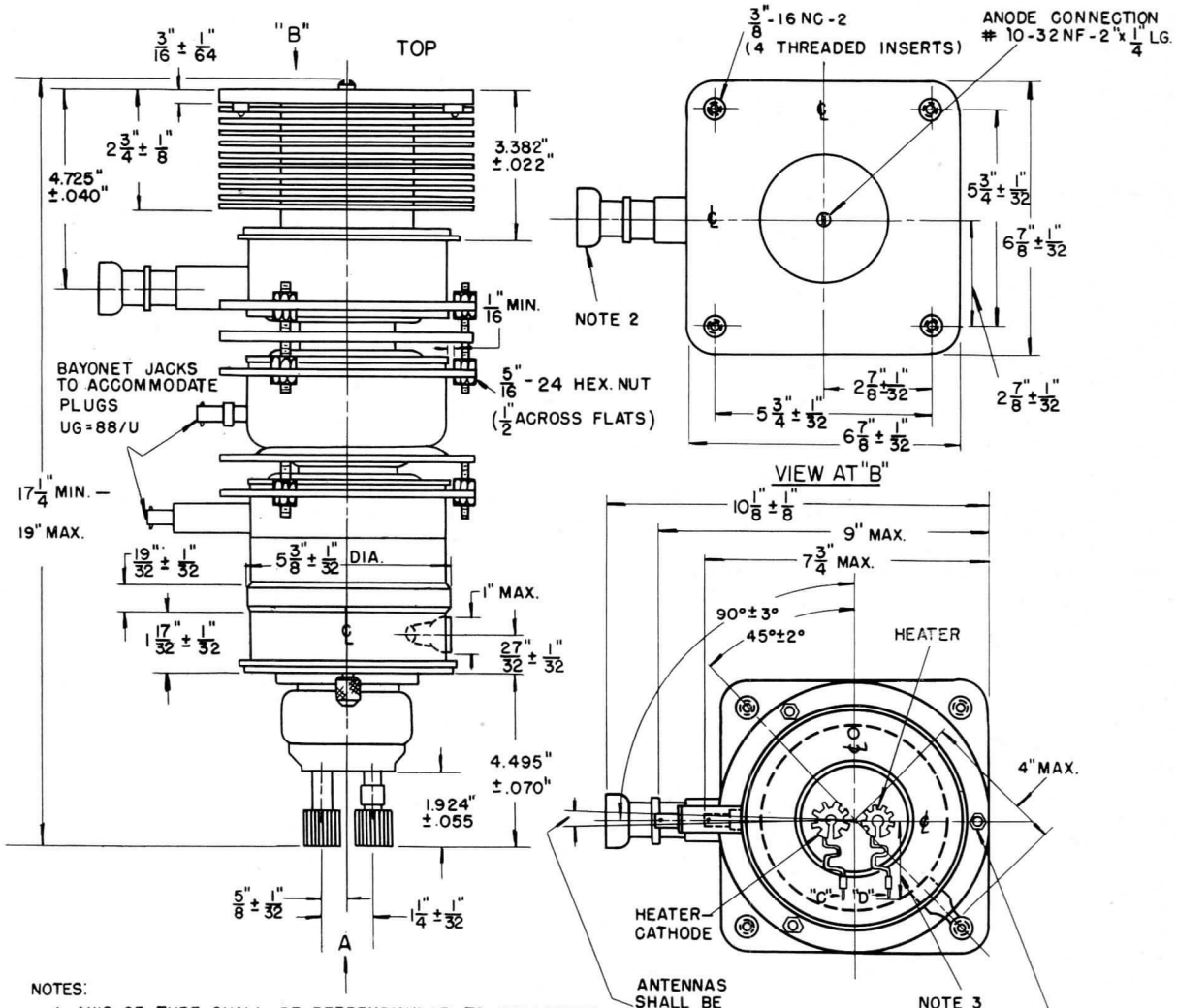

NOTES:

1. AXIS OF TUBE SHALL BE PERPENDICULAR TO COLLECTOR END PLATE WITHIN .015" FOR EVERY INCH. (THIS ASSUMES PARALLEL TUNING).
2. OUTPUT FLANGE SHALL ACCOMODATE FLANGE UG-1126/U.
3. COMPRESSED LENGTH 1 3/4" (MAX.) EXTENDED LENGTH 3 1/2" (MIN.).

TUBE DEPARTMENT

GENERAL ELECTRIC

Schenectady 5, N. Y.

PRINTED IN U.S.A.

MILITARY EQUIPMENT TYPES MANUAL

VOLTAGE-TUNABLE MAGNETRONS

Selection Chart

LOW-POWER VOLTAGE-TUNABLE MAGNETRONS (up to 1 watt)

Tube Type	Frequency Range (Mc)	Minimum Power Output (Watts)	Noise (db/mc)	Power Variation db	Tuning Sensit. mc/v	Wgt. Lbs.	Maximum Voltages (Volts)			Maximum Currents		
							Anode	Inj.	Fil.	Ma Anode	Ma Inj.	A Fil.
ZM-6206	320-525	0.032[b]	-85[e]	5[g]	0.25	2.5	2300	250	4.0	10	1.0	2.1
ZM-6204	510-910	0.032[c]	-85[e]	5[g]	0.44	2.5	2300	250	4.0	20	1.0	2.1
ZM-6085	885-1485	0.036[d]	-86[e]	5[g]	1.00	4.0	1625	250	2.3	20	1.0	2.1
ZM-6051	1000-2000[a]	0.100	-75[f]	6[h]	1.50	3.0	2000	300	2.3	10	1.0	2.5
GL-7680	1000-2300	1.000	-	6	1.20	3.5	2000	500	2.8	20	1.0	3.2
ZM-6086	1420-2607	0.036[d]	-86[e]	5[g]	1.66	4.0	1740	250	2.6	20	0.1	2.1
ZM-6087	2507-4310	0.036[d]	-86[e]	5[g]	2.88	4.0	1700	250	2.6	20	1.0	2.1

a) In some applications, frequency range can be extended to 1000-2500 megacycles.
b) This power level is measured at the output of a 6 db integral attenuator; this VTM is available with 0.125 watt.
c) This power level is measured at the output of a 10 db integral attenuator; this VTM is available with 0.300 watt.
d) This power level is measured at the output of a 13 db integral attenuator; this VTM is available with 0.500 watt.
e) These levels are measured with respect to the carrier level over a band 59-61 megacycles from carrier.
f) These levels are measured with respect to the carrier level over a band 56-64 megacycles from carrier.
g) This power variation is obtained with the VTM operating into a 2 to 1 mismatch.
h) This power variation is obtained with the VTM operating into a matched load.

MILITARY EQUIPMENT TYPES MANUAL

VOLTAGE-TUNABLE MAGNETRONS

Selection Chart

INTERMEDIATE-POWER VOLTAGE-TUNABLE MAGNETRONS (1 to 10 watts)

Tube Type	Frequency Range (Mc)	Minimum Power Output (Watts)	Swept Eff %	Power Variation db	Tuning Sensit. mc/v	Wgt. Lbs.	Maximum Voltages (Volts)			Maximum Currents		
							Anode	Inj.	Fil.	Ma Anode	Ma Inj.	A Fil.
ZM-6104	1760-1940	3.0	30	1[b]	1.75	1.5	1500	500	2.3	20	1.0	2.54
ZM-6032	2175-2425	7.5	40	-3[b]	1.65	1.5	1500	300	2.2	25	0.01	2.4
ZM-6050	2200-3850	2.0	10	6[b]	2.50	3.5	2000	500	2.6	30	1.0	2.0
ZM-6203	2475-2725	1.75	15	4	2.50	3.5	1200	315	2.8	22	1.0	2.1
ZM-6220	2475-2725	1.50	13	3	2.50	3.5	1200	315	2.8	14	1.0	2.1
ZM-6211	2500-3500	10.0	25	3[c]	1.80	1.8	2500	700	2.7	40	1.0	2.20
ZM-6205[a]	2750-3090	1.35	10	1.2[d]	3.35	2.75	1000	205	3.0	12	0.1	2.05
ZM-6103	2875-3125	3.0	15	1[b]	3.00	1.5	1500	500	2.3	30	1.0	2.54
ZM-6212	4200-4400	1.5	7	3[b]	3.30	1.8	1600	350	3.2	25	0.01	2.2

a) All characteristics for this tube type have been obtained with a 3 to 1 mismatch.
b) Readings taken with matched load.
c) Maximum rating into a matched load is 1.5 db.
d) Readings taken over a -55 C to +105 C temperature range.

HIGH-POWER VOLTAGE-TUNABLE MAGNETRONS (over 10 watts)

Tube Type	Frequency Range (Mc)	Minimum Power Output (Watts)	Swept Eff %	Power Variation db[a]	Tuning Sensit. mc/v	Wgt. Lbs.	Maximum Voltages (Volts)			Maximum Currents		
							Anode	Inj.	Fil.	Ma Anode	Ma Inj.	A Fil.
ZM-6061	1220-1385	60	50	2	0.40	7.5	3200	1300	2.5	70	±0.5	5.7
ZM-6046	2600-2900	75	60	0.5	0.80	7.5	3100	1300	2.5	70	±0.5	5.7
ZM-6107	2820-3180	20	45	4	1.50	4.0	2300	660	2.7	30	1.0	2.5
ZM-6047	2900-3200	75	55	0.5	0.80	7.5	3100	1300	2.5	70	±0.5	5.7

a) All readings taken with a matched load.

GENERAL ELECTRIC
POWER TUBE DEPARTMENT
Schenectady 5, N. Y.

OBJECTIVE
TECHNICAL INFORMATION

These ratings represent the design objective for this tube.

DEVELOPMENTAL
TYPE
Z-5266

3-10-59

This technical information is considered to be proprietary and is furnished as a service to customers for their private use only

PACKAGED VOLTAGE-TUNABLE MAGNETRON

The Z-5266 is a packaged voltage-tunable magnetron designed for voltage-tunable operation in 2350 - 3600 megacycle frequency range. A complete r-f power source package requiring only input power connections and an r-f power output connection it has a minimum CW power output of 0.5 milliwatts across the entire frequency range. The tube may be voltage tuned over a portion or all of the frequency range for which it is designed.

GENERAL

Electrical

Cathode - Directly Heated

Filament Voltage *	2.6	Volts
Filament Current *	3.0	Amperes

Mechanical

Mounting Position - Any

Net Weight	3.5	Pounds

Thermal

Type of Cooling - Forced Air	30	Cubic Feet per Minute
Ambient Air Temperature	50	C

MAXIMUM RATINGS AND TYPICAL OPERATING CONDITIONS

Maximum Ratings, Absolute Values

Anode Voltage	2000	Volts
Anode Current	40	Milliamperes
Power Input, with forced-air cooling	60	Watts
Injection Electrode Voltage - See note on page 2		
Filament Current	3.2	Amperes
Voltage Standing Wave Ratio + - Infinity		

Typical Operating Conditions

Operation with 60-cycle Sweep Voltage

Tunable Range ≠	2350 - 3600	Megacycles
Tuning Rate, approximate	2.6	Megacycles per Volt
Filament Voltage *, approximate	2.60	Volts
Filament Current	3.0	Amperes
Anode Voltage at 3 Kilomegacycles	1200	Volts
Anode Current, average	10 - 20	Milliamperes
Voltage Standing Wave Ratio of Load	1.3	
Power Output, minimum	0.5	Milliwatts
AM Noise # - Adjusted for Minimum		
FM Noise # - Adjusted for Minimum		

* Filament current should be adjusted to 3.0 amperes.

\+ This type has approximately 30 decibels integral attenuation in the output circuit to isolate load effects.

≠ Frequency controlled by anode voltage.

\# The AM and FM noise is measured using the tube as the local oscillator of a reciever having a bandwidth of 100 megacycles around the carrier and is adjusted to be at least -55 decibels below one milliwatt.

The specifications of this tube type are subject to change. This tube is now under development and is made available for experimental purposes only. Delivery of tube samples and the existence of these data do not imply continued availability of tubes with the same characteristics or dimensions. For the most recent information concerning the status of this development please consult your local Power Tube Department Regional Sales Office.

NOTE: Si nce a change in anode voltage of one volt produces a frequency change of approximately 2.6 megacycles, it is necessary that the ripple voltage of the anode supply be small enough so as no t to cause an excess o f undesirable frequency modulation.

The injection electrode voltage is obtained through a divider consisting of R_1 and a requi red external resistor o f 480,000 ohms and 2 watts, p recision wound (See d-c connector drawi ng). R_1 and R_2 are an integral part of the voltage-tunable magnetron package.

CAUTION: KEEP FERROUS MATERIALS AND MAGNETS AT LEAST 9 INCHES AWAY FROM PACKAGE

DC CONNECTIONS

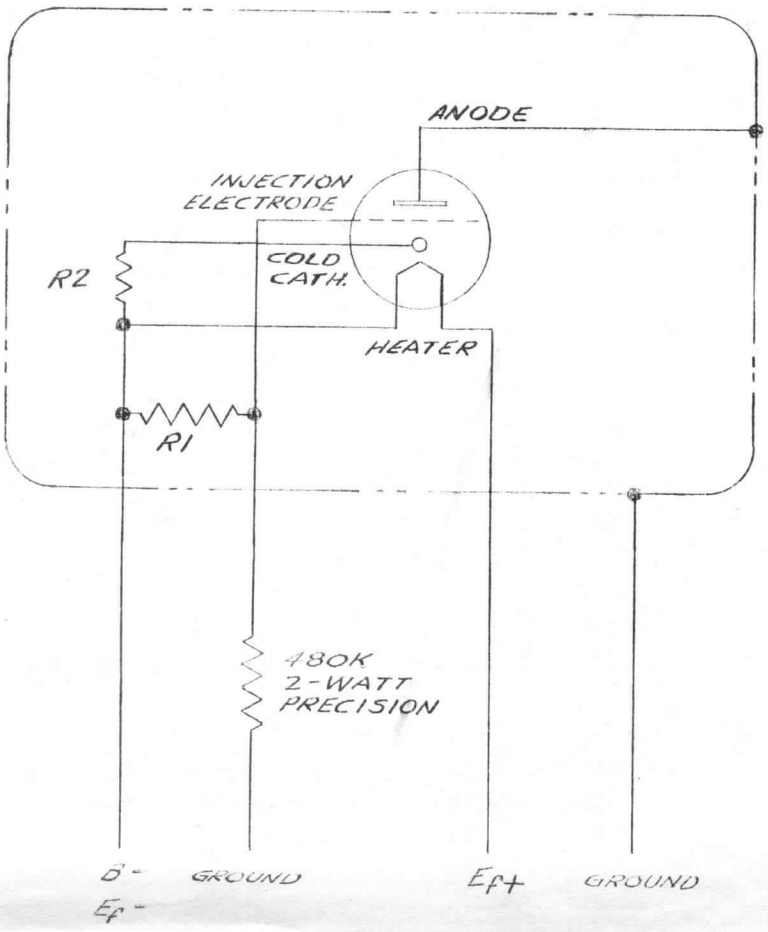

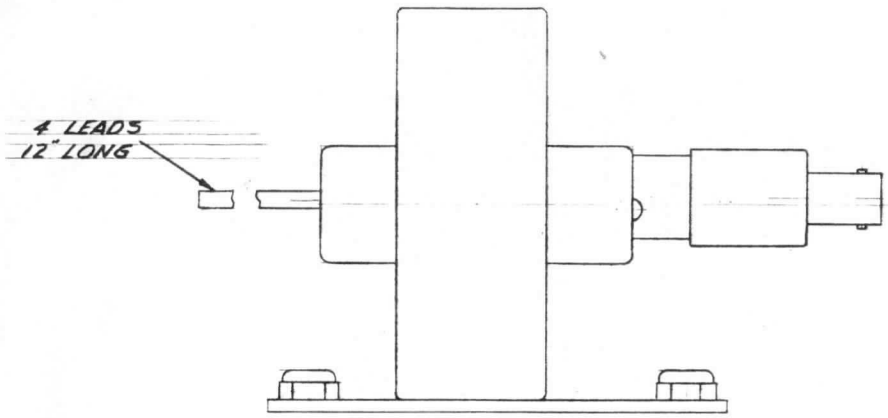

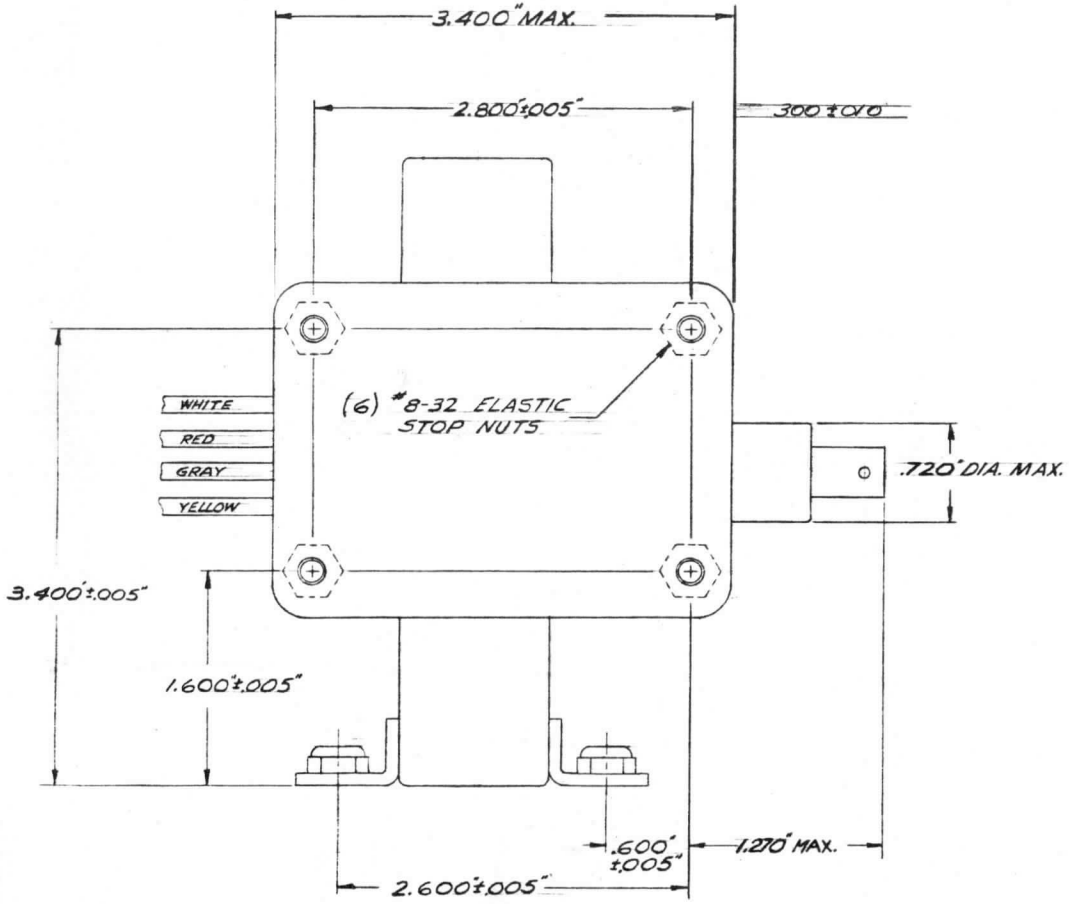

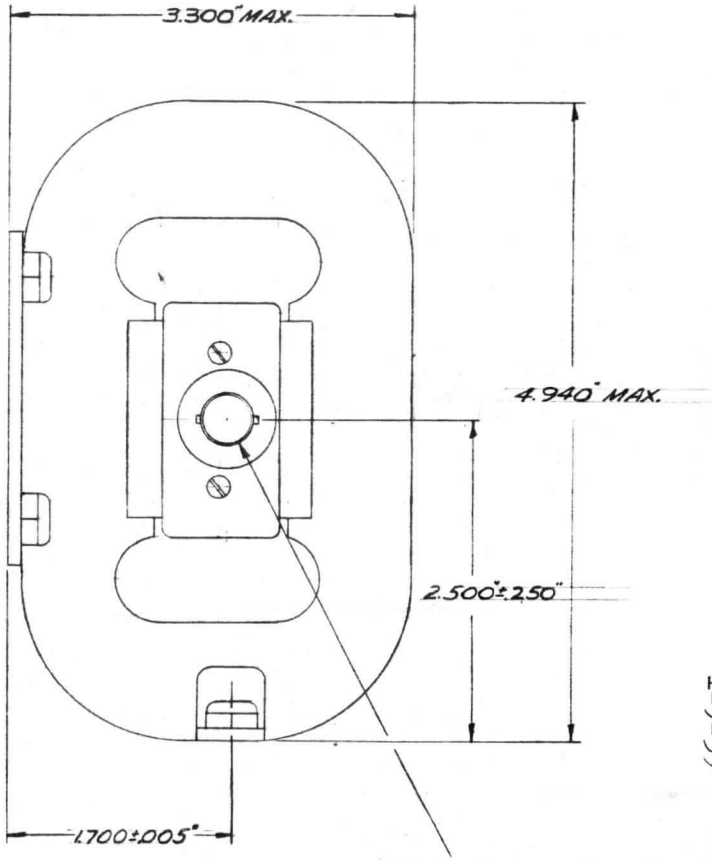

Z-5266
Page 3
1-9-59

GENERAL ELECTRIC
POWER TUBE DEPARTMENT
Schenectady 5, N. Y.

OBJECTIVE
TECHNICAL INFORMATION

These ratings represent the design objective for this tube.

DEVELOPMENTAL TYPE

This technical information is considered to be proprietary and is furnished as a service to customers for their private use only

PACKAGED VOLTAGE-TUNABLE MAGNETRON

The Z-5321 is a packaged voltage-tunable magnetron designed for voltage-tunable operation in the 2900 to 3100 megacycle frequency range. A complete r-f power source package requiring only input power connections and an r-f power output connection. The Z-5321 has a minimum CW power output of 10 watts across the entire frequency range. The tube may be voltage tuned over a portion or all of the frequency range for which it is designed.

GENERAL

Electrical		
Cathode - Directly Heated		
Filament Voltage *	2.6	Volts
Filament Current *	3.0	Amperes
Mechanical		
Mounting Position - Any		
Net Weight	3.1	Pounds
Thermal		
Type of Cooling - Forced Air	30	Cubic Ft.per Minute
Ambient Air Temperature	50	C

MAXIMUM RATINGS AND TYPICAL OPERATING CONDITIONS

Maximum Ratings, Absolute Values		
Anode Voltage	2000	Volts
Anode Current	40	Milliamperes
Power Input, with forced-air cooling	60	Watts
Injection Electrode Voltage - See page 2	500	Volts
Filament Current	3.2	Amperes
Typical Operating Conditions		
Operation with 60-cycle Sweep Voltage		
Tunable Range +	2900 - 3100	Megacycles
Tuning Rate, approximate	2.0	Megacycles per Volt
Filament Voltage *, approximate	2.60	Volts
Filament Current	3.0	Amperes
Anode Voltage at 3.0 Kilomegacycles	1250	Volts
Anode Current, average	16 - 20	Milliamperes
Voltage Standing Wave Ratio of Load	1.3	
Power output, minimum	10	Watts

* Filament current should be adjusted to 3.0 amperes.

\+ Frequency controlled by anode voltage.

CAUTION: KEEP FERROUS MATERIAL AND MAGNETS AT LEAST 9 INCHES AWAY FROM PACKAGE.

The specifications of this tube type are subject to change. This tube is now under development and is made available for experimental purposes only. Delivery of tube samples and the existence of these data do not imply continued availability of tubes with the same characteristics or dimensions. For the most recent information concerning the status of this development please consult your local Power Tube Department Regional Sales Office.

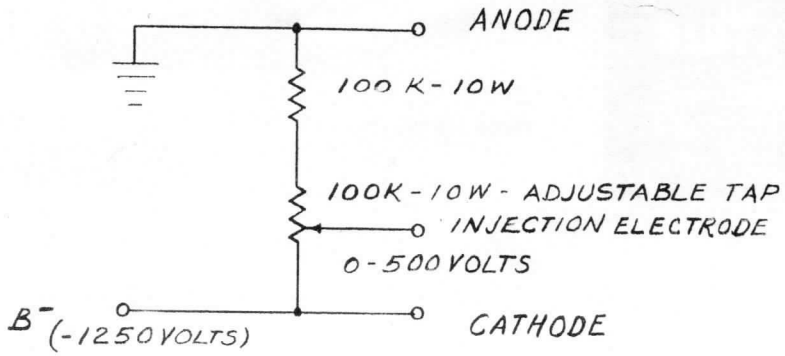

DIVIDER NETWORK FOR INJECTION ELECTRODE SUPPLY

Th e injection electrode voltage m ay be obtai ned through a separate d-c supply (0-500 volts) referenced to the cathode(B^-), or by means of a divider network across the B^- supply with resistance values adjusted to bring the injection electrode voltage within the proper range.

ELECTRODE CONNECTION DIAGRAM

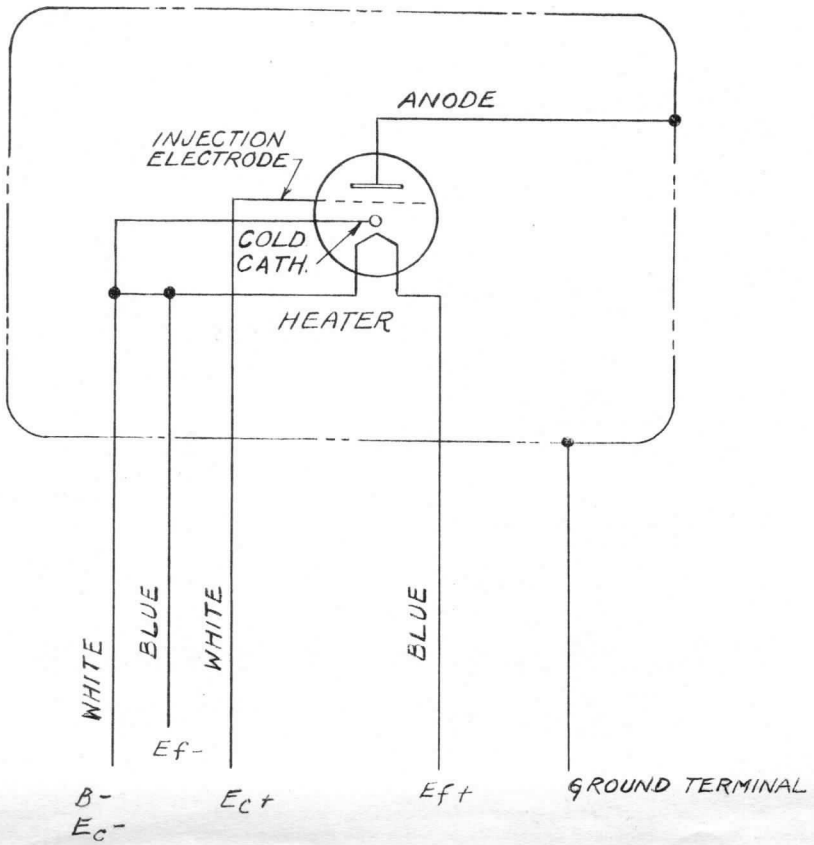

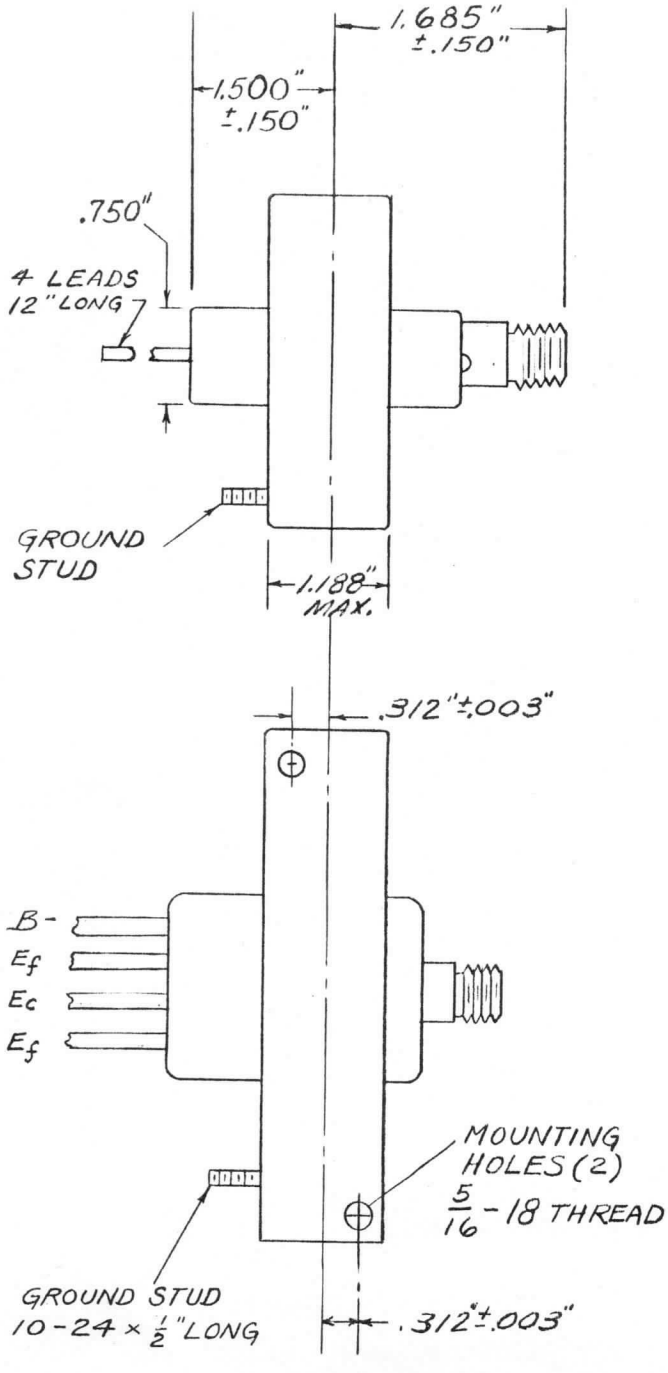

BOTTOM VIEW

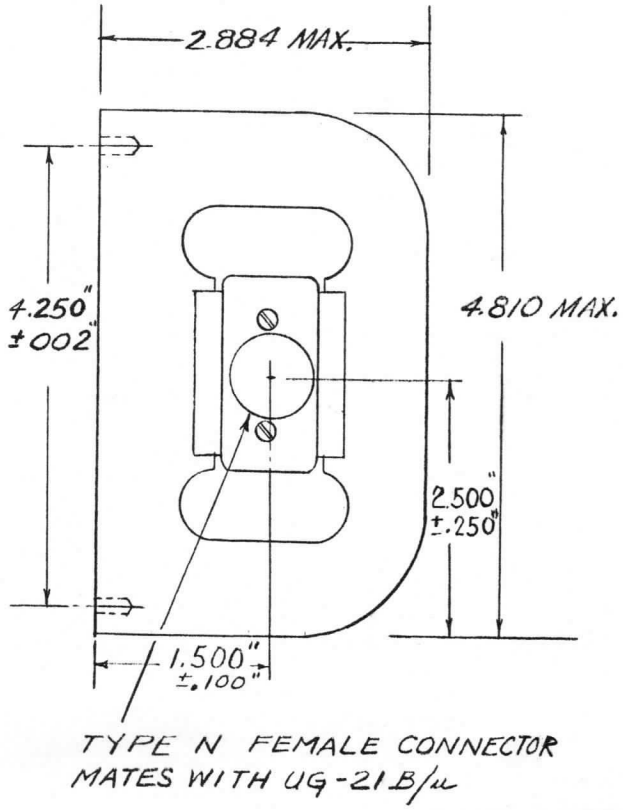

TYPE N FEMALE CONNECTOR
MATES WITH UG-21B/u

GENERAL ELECTRIC
POWER TUBE DEPARTMENT
Schenectady 5, N. Y.

OBJECTIVE
TECHNICAL INFORMATION

These ratings represent the design objective for this tube.

DEVELOPMENTAL TYPE

This technical information is considered to be proprietary and is furnished as a service to customers for their private use only

PACKAGED VOLTAGE-TUNABLE MAGNETRON

The Z-5360 is a packaged-voltage-tunable magnetron designed for voltage-tunable operation in the 2800 to 3500 megacycle frequency range. A complete r-f power source package requiring only input power connections and an r-f power output connection it has a minimum CW power output of 100 milliwatts across the entire frequency range. The tube may be voltage tuned over a portion or all of the frequency range for which it is designed.

GENERAL

Electrical

Cathode - Directly Heated

Filament Voltage *	2.6	Volts
Filament Current *	3.0	Amperes

Mechanical

Mounting Position - Any

Net Weight	3.5	Pounds

Thermal

Type of Cooling - Forced Air	30	Cubic Ft.per Minute
Ambient Air Temperature	50	C

MAXIMUM RATINGS AND TYPICAL OPERATING CONDITIONS

Maximum Ratings, Absolute Values

Anode Voltage	2000	Volts
Anode Current	40	Milliamperes
Power Input, with forced-air cooling	60	Watts
Injection Electrode Voltage - See note on page 2		
Filament Current	3.2	Amperes
Voltage Standing Wave Ratio† - Infinity		

Typical Operating Conditions

Operation with 60-cycle Sweep Voltage

Tunable Range ‡	2800 - 3500	Megacycles
Tuning Rate, approximate	2.6	Megacycles per Volt
Filament Voltage *, approximate	2.60	Volts
Filament Current	3.0	Amperes
Anode Voltage at 3.2 Kilomegacycles	1250	Volts
Voltage Standing Wave Ratio of Load	1.3	
Power Output, minimum	100	Milliwatts
AM Noise § - Adjusted for Minimum		
FM Noise § - Adjusted for Minimum		
Anode Current, average	.10 - 20	Milliamperes

* Filament current should be adjusted to 3.0 amperes.

† This type has approximately 9 decibels integral attenuation in the output circuit to isolate load effects.

The specifications of this tube type are subject to change. This tube is now under development and is made available for experimental purposes only. Delivery of tube samples and the existence of these data do not imply continued availability of tubes with the same characteristics or dimensions. For the most recent information concerning the status of this development please consult your local Power Tube Department Regional Sales Office.

≠Frequency controlled by anode voltage.

§The AM and FM noise is measured using the tube as the local oscillator of a receiver having a bandwidth of 100 megacycles arround the carrier and is adjusted to be at least 55 decibels below the carrier.

NOTE: Since a change in anode voltage of one volt produces a frequency change of approximately 2.6 megacycles, it is necessary that the ripple voltage of the anode supply be small enough so as not to cause an excess of undesirable frequency modulation.

The injection electrode voltage is obtained through a divider co nsisting of R_1 and a required external resistor of 480,000 ohms and 2 watts, precision wound(See d-c connector drawing). R_1 and R_2 are an integral part of the voltage-tunable magnetron package.

CAUTION: KEEP FERROUS MATERIALS AND MAGNETS AT LEAST 9 INCHES AWAY FROM PACKAGE

DC CONNECTIONS

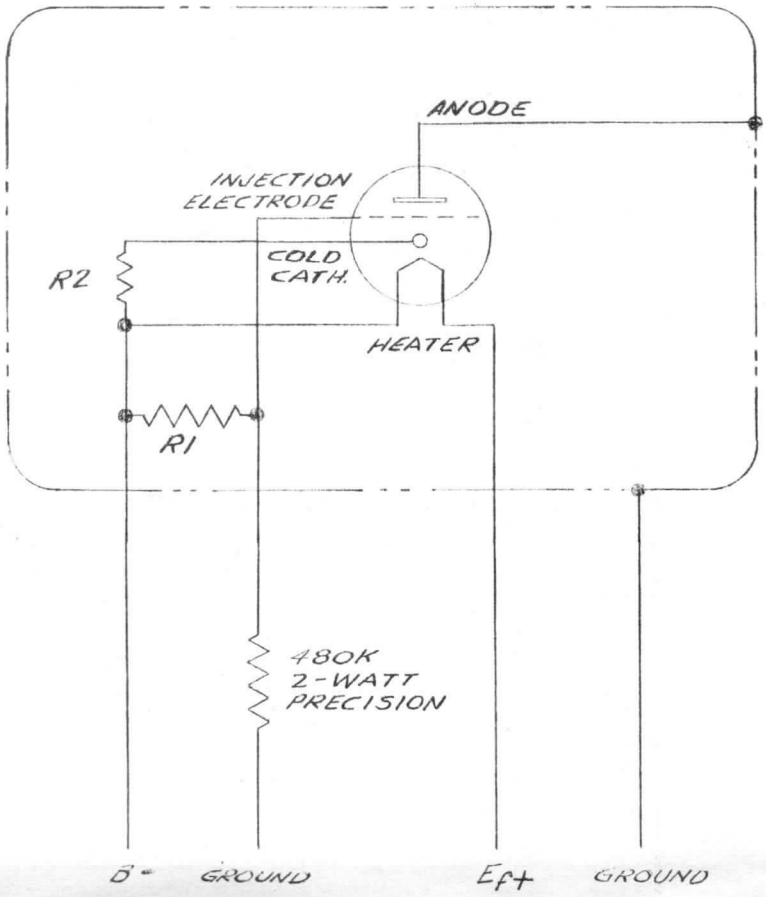

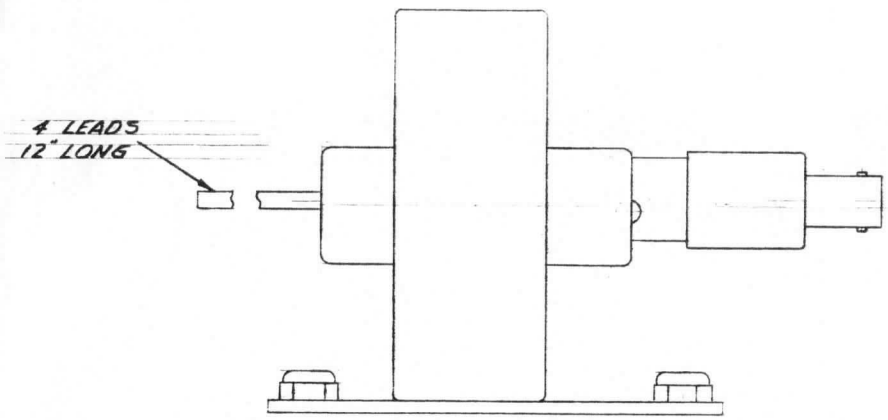

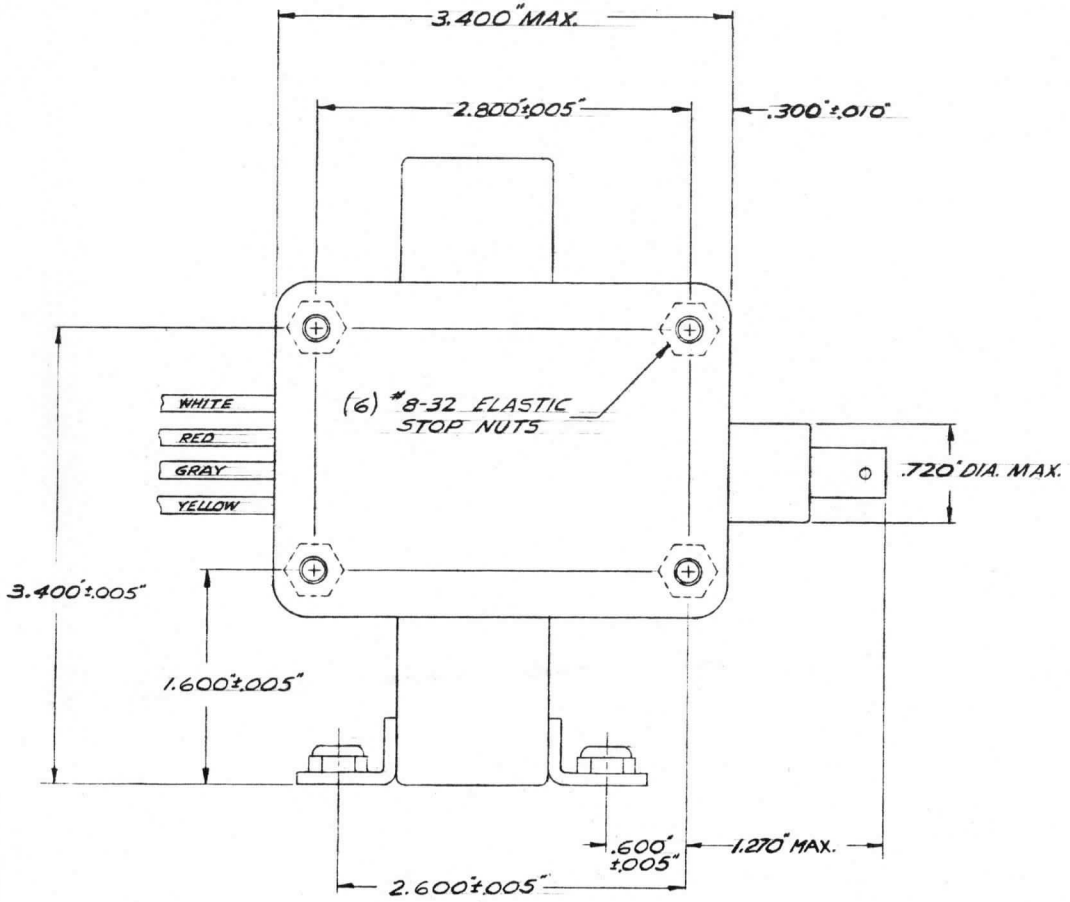

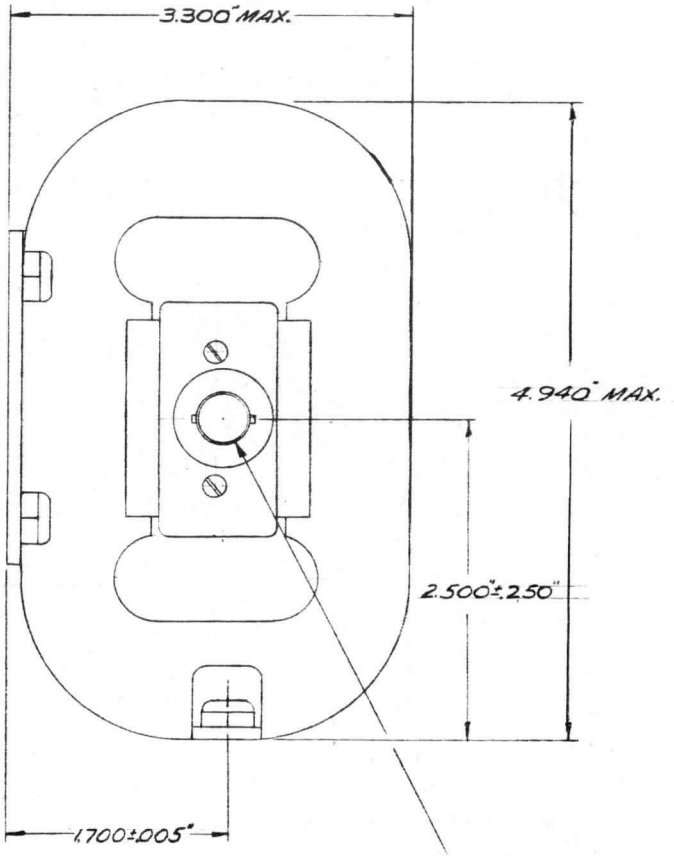

Z-5360
Page 3
12-2-58

GENERAL ELECTRIC
POWER TUBE DEPARTMENT
Schenectady 5, N. Y.

PRELIMINARY
TECHNICAL INFORMATION

These ratings represent those of current samples of this type. Refer to the Objective Technical Information sheet for design-objective ratings.

DEVELOPMENTAL TYPE

This technical information is proprietary and is furnished only as a service to customers.

ZM-6032

PACKAGED VOLTAGE-TUNABLE MAGNETRON

2175-2425 Megacycles — 7.5 Watts CW Output

The ZM-6032 is a voltage-tunable magnetron for operation in missile environment in the 2300-megacycle frequency area. A complete r-f power-source package requiring only input power connections and an r-f power output connection, it has a minimum CW power output of 7.5 watts at 2300 megacycles. The tube may be voltage tuned over a portion or all of the frequency range for which it is designed. The use of specially designed leads to prevent corona discharge at high altitude makes this tube particularly suited for high impedance power supplies.

GENERAL

Electrical		
Cathode – Directly Heated		
Filament Voltage*	2.0	Volts
Filament Current*	2.1	Amperes
Mechanical		
Mounting Position – Any		
Net Weight	1.5	Pounds
Altitude	200,000	Feet
Thermal		
Type of Cooling – Conduction or Convection		
Ambient Air Temperature, maximum		
Operating	120	C
Non-operating	140	C

MAXIMUM RATINGS

Absolute Values		
Filament Current	2.4	Amperes
Anode Voltage	1500	Volts
Anode Current	25	Milliamperes
Power Input	35	Watts
Injection Electrode Voltage	300	Volts
Injection Electrode Current, maximum	10	Microamperes

TYPICAL OPERATING CONDITIONS

Operation with 60-cycle Sweep Voltage		
Tunable Range†	2175-2425	Megacycles
Tuning Sensitivity	1.65 ± 0.2	Megacycles per Volt
Filament Voltage, *, approximate	2.0	Volts
Filament Current	2.1	Amperes
Anode Voltage at 2300 megacycles	1050 ± 5.0	Volts
Anode Current	18	Milliamperes
Injection Electrode Voltage	240	Volts
Voltage Standing Wave Ratio of Load‡		
Efficiency at 2300 Megacycles, minimum	35	Percent
Frequency Change Due to Temperature, -55 to +120 C	8	Megacycles
Power Output, minimum**, at 2300 Megacycles	7.5	Watts
Power Variation, maximum	-3	Decibels

The specifications of this type are subject to change. Delivery of samples and the existence of these data do not imply continued availability of types with the same characteristics or dimensions. For the most recent information concerning the status of this device, please consult your local Power Tube Department Regional Sales Office.

*Filament current should be adjusted to 2.1 amperes.
†Frequency controlled by anode voltage.
‡Best operation is obtained by using a 30-decibel isolator as close as possible to the output.
**Noise level 60 decibels below carrier over 2285-2315 megacycles, 30 megacycles from carrier, using a 2-megacycle strip and a single-ended mixer.

NOTE: Since a change in anode voltage of one volt produces a frequency change of approximately 1.5 megacycles, it is necessary to maintain the ripple voltage of the anode supply small enough not to cause an excess of undesirable frequency modulation.

CAUTION: A clearance of 3 inches between ferromagnetic materials and the tube will prevent any serious change of the operating characteristics.

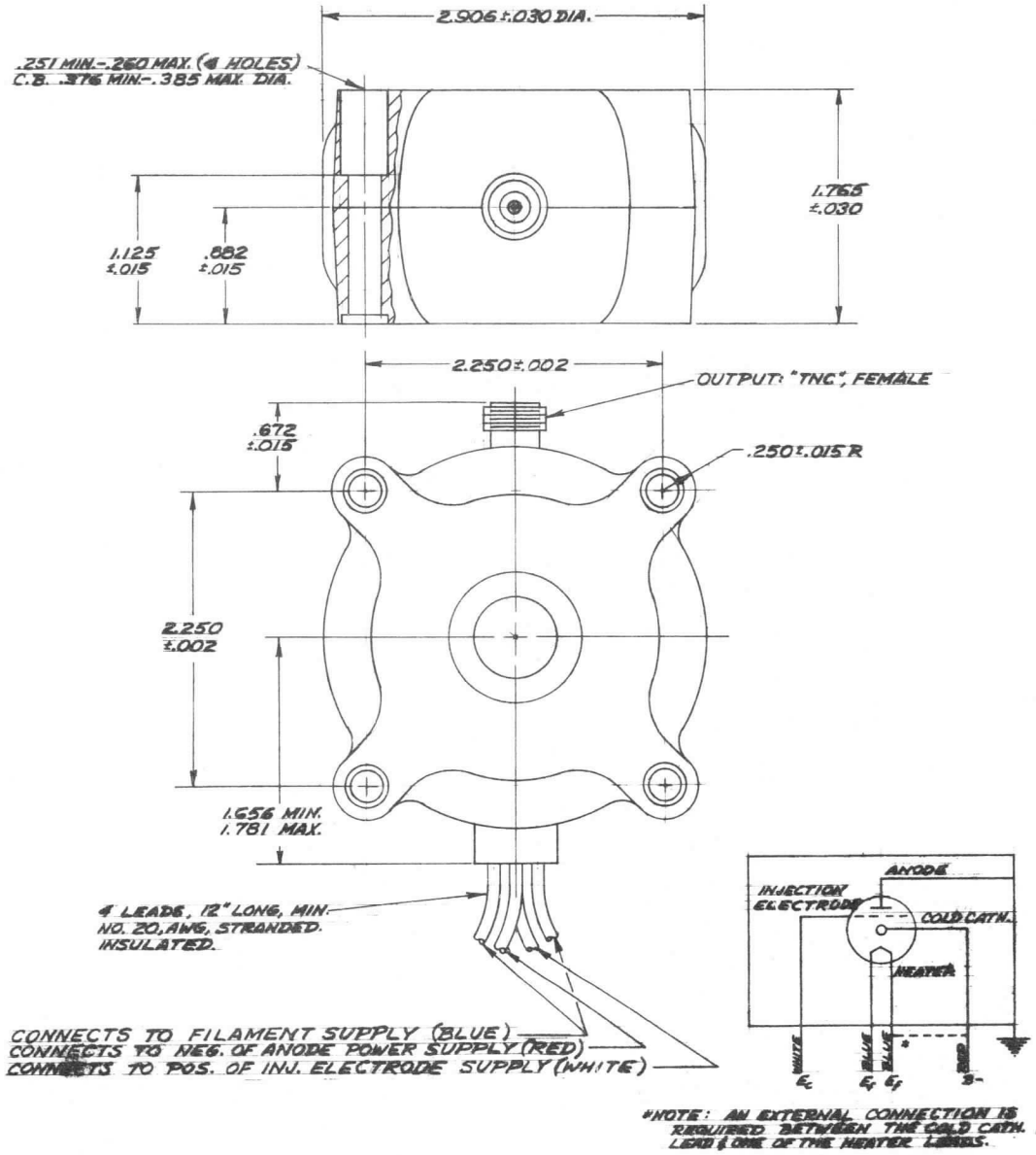

GENERAL ELECTRIC
POWER TUBE DEPARTMENT
Schenectady 5, N. Y.

PRELIMINARY
TECHNICAL INFORMATION

These ratings represent those of current samples of this type. Refer to the Objective Technical Information sheet for design-objective ratings.

DEVELOPMENTAL TYPE

This technical information is proprietary and is furnished only as a service to customers.

ZM-6046

PACKAGED VOLTAGE-TUNABLE MAGNETRON

2600-2900 Megacycles — 90 Watts Average CW Output

Integral Magnet and Isolator

The ZM-6046 is a voltage-tuned magnetron designed for CW/FM transmitting-tube operation at low- or high-modulation frequencies. The tube has a minimum power output of 75 watts at any point in the band. The typical tube averages 90 watts across the band. The high efficiency allows air cooling to be used. The tube is protected against load mismatch by an integral isolator. The voltage-frequency relationship is approximately linear. The anode is integral with the tube body and is normally grounded, anode voltage being applied negatively to the cathode and filament.

GENERAL

Electrical		
Cathode (filament) – Directly Heated		
Warm-up Time, maximum	10	Seconds
Cathode Input Capacitance		
Maximum	40	μμf
Typical	35	μμf
Mechanical		
Mounting Position – Any		
Net Weight	7.5	Pounds
Thermal		
Cooling – Forced Air*		
Air Temperature, maximum	110	C
Body Temperature, maximum†	125	C

MAXIMUM RATINGS AND TYPICAL OPERATING CONDITIONS

Maximum Ratings, Absolute Values		
Filament Voltage	2.5	Volts
Filament Current‡	5.7	Amperes
Anode Voltage	3100	Volts
Sweep Voltage	400	Volts
Anode Current	70	Milliamperes
Power Input	200	Watts
Injection Electrode Voltage	1300	Volts
Voltage Standing Wave Ratio of Load	2.0	
Typical Operating Conditions		
Operation with 60-cycle Sweep Voltage		
Filament Voltage, approximate	2.1	Volts
Filament Current‡	4.4 to 5.6	Amperes
Swept Frequency Range	2600 to 2900	Megacycles
Sweep Voltage, Peak to Peak, typical	350	Volts
Anode Voltage at 2.75 Gigacycles	2800	Volts
Anode Current	55	Milliamperes
Injection Electrode Voltage, positive with respect to cathode	500 to 1300	Volts¶
Injection Electrode Current, may be either polarity but less than	0.5	Milliamperes

The specifications of this type are subject to change. Delivery of samples and the existence of these data do not imply continued availability of types with the same characteristics or dimensions. For the most recent information concerning the status of this device, please consult your local Power Tube Department Regional Sales Office.

MAXIMUM RATINGS AND TYPICAL OPERATING CONDITIONS (Cont'd.)

Typical Operating Conditions (Cont'd.)

Operation with 60-cycle Sweep Voltage

Power Output		
Average, Swept Across Full Band	90	Watts**
Minimum, At Any Point Without Sweep Voltage	75	Watts**
Variation Across Band		
Typical	1.4	Decibels
Maximum	2.0	Decibels
Efficiency, minimum		
At Any Frequency	50	Percent
Swept Across Full Band	60	Percent

ENVIRONMENTAL

Altitude, maximum		
Operating	15,000	Feet
Non-operating	70,000	Feet

* Hold temperature to 125 C or less at point shown on the outline drawing. At the maximum inlet temperature of 110 C, 150 cubic feet per minute is required but this drops rapidly for lower inlet temperatures.

† Measured at point shown on the outline drawing.

‡ Set to value marked on tube within ± 0.1 ampere.

¶ Set to give anode current marked on tube within ± 2 milliamperes.

**Measured with load VSWR$<$1.2; for loads between 1.2 and 2.0 VSWR the power output is diminished by the amount reflected, plus a positive or negative change due to residual pulling. At 2.0 VSWR the theoretical reduction at the worst load phase is down to 85 percent, and the guaranteed performance is not less than 75 percent of rated power.

CAUTION: A CLEARANCE OF SIX INCHES BETWEEN FERROMAGNETIC MATERIALS AND THE TUBE WILL PREVENT ANY SERIOUS CHANGE OF THE OPERATING CHARACTERISTICS.

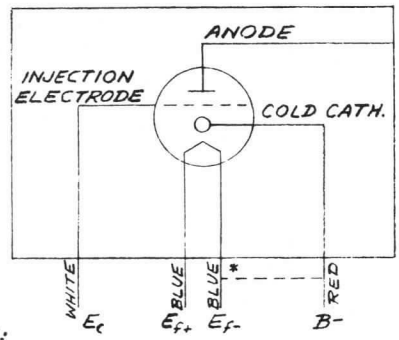

*NOTE:
AN EXTERNAL CONNECTION IS REQUIRED BETWEEN THE COLD CATH. LEAD & ONE OF THE HEATER LEADS

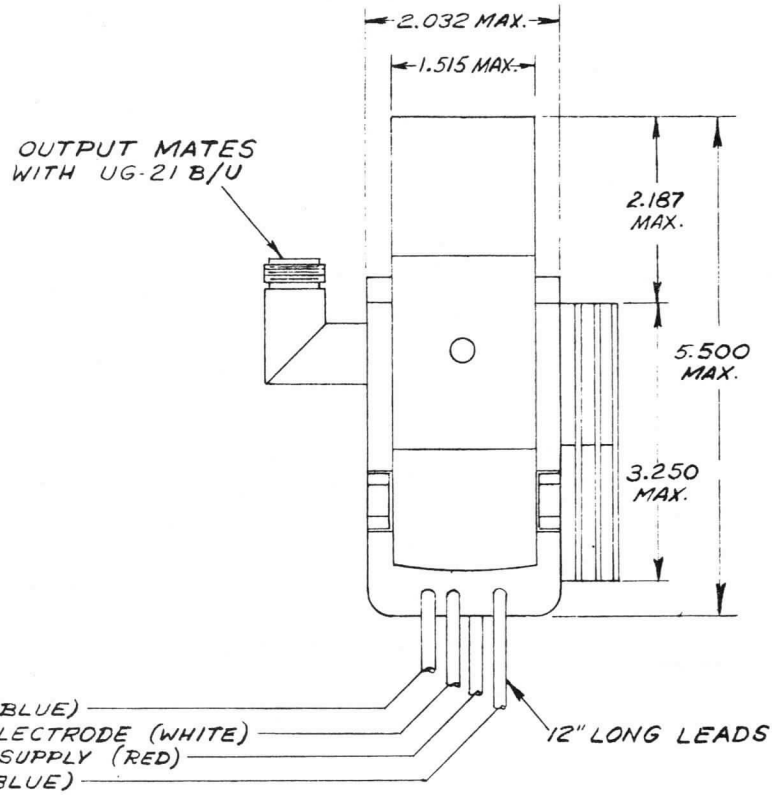

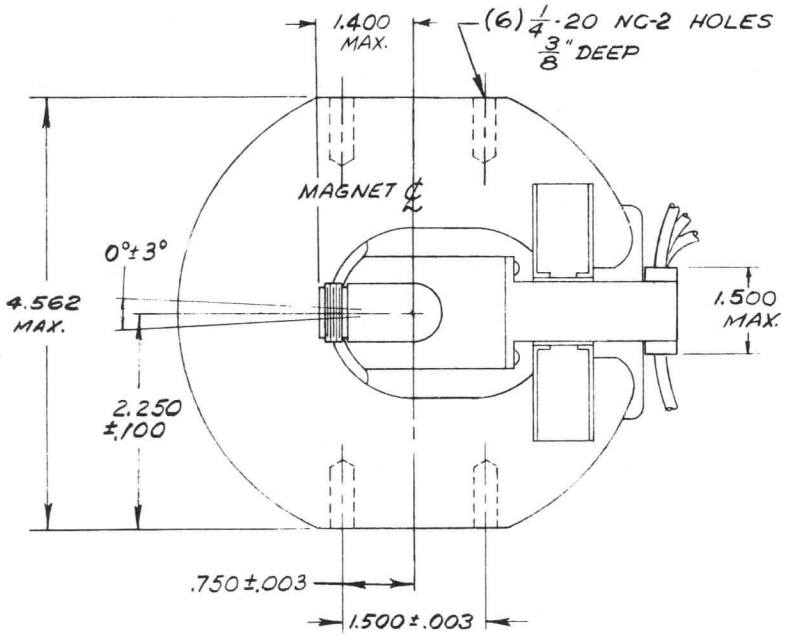

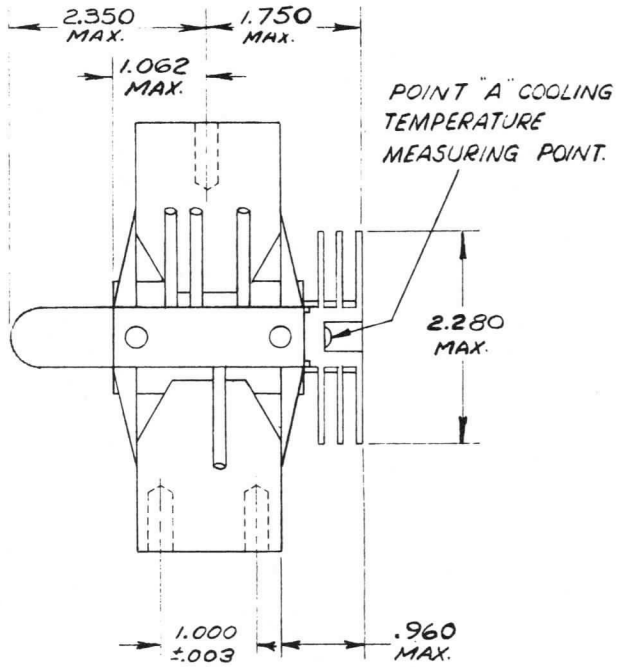

GENERAL ELECTRIC
POWER TUBE DEPARTMENT
Schenectady 5, N. Y.

PRELIMINARY
TECHNICAL INFORMATION

These ratings represent those of current samples of this type. Refer to the Objective Technical Information sheet for design-objective ratings.

DEVELOPMENTAL TYPE

This technical information is proprietary and is furnished only as a service to customers.

ZM-6047

PACKAGED VOLTAGE-TUNABLE MAGNETRON

2900-3200 Megacycles — 90 Watts Average CW Output

Integral Magnet and Isolator

The ZM-6047 is a voltage-tuned magnetron designed for CW/FM transmitting-tube operation at low- or high-modulation frequencies. The tube has a minimum power output of 75 watts at any point in the band. The typical tube averages 90 watts across the band. The high efficiency allows air cooling to be used. The tube is protected against load mismatch by an integral isolator. The voltage-frequency relationship is approximately linear. The anode is integral with the tube body and is normally grounded, anode voltage being applied negatively to the cathode and filament.

GENERAL

Electrical		
Cathode (filament) – Directly Heated		
Warm-up Time, maximum	10	Seconds
Cathode Input Capacitance		
Maximum	40	μμf
Typical	35	μμf
Mechanical		
Mounting Position – Any		
Net Weight	7.5	Pounds
Thermal		
Cooling – Forced Air*		
Air Temperature, maximum	110	C
Body Temperature, maximum †	125	C

MAXIMUM RATINGS AND TYPICAL OPERATING CONDITIONS

Maximum Ratings, Absolute Values		
Filament Voltage	2.5	Volts
Filament Current ‡	5.7	Amperes
Anode Voltage	3100	Volts
Sweep Voltage	400	Volts
Anode Current	70	Milliamperes
Power Input	200	Watts
Injection Electrode Voltage	1300	Volts
Voltage Standing Wave Ratio of Load	2.0	
Typical Operating Conditions		
Operation with 60-cycle Sweep Voltage		
Filament Voltage, approximate	2.1	Volts
Filament Current ‡	4.4 to 5.6	Amperes
Swept Frequency Range	2900 to 3200	Megacycles
Sweep Voltage, Peak to Peak, typical	350	Volts
Anode Voltage at 3.05 Gigacycles	2800	Volts
Anode Current	65	Milliamperes
Injection Electrode Voltage, positive with respect to cathode	500 to 1300	Volts ¶
Injection Electrode Current, may be either polarity but less than	0.5	Milliamperes

The specifications of this type are subject to change. Delivery of samples and the existence of these data do not imply continued availability of types with the same characteristics or dimensions. For the most recent information concerning the status of this device, please consult your local Power Tube Department Regional Sales Office.

MAXIMUM RATINGS AND TYPICAL OPERATING CONDITIONS (Cont'd.)

Typical Operating Conditions (Cont'd.)

Operation with 60-cycle Sweep Voltage

Power Output		
Average, Swept Across Full Band	90	Watts**
Minimum, At Any Point Without Sweep Voltage	75	Watts**
Variation Across Band		
Typical	1.4	Decibels
Maximum	2	Decibels
Efficiency, minimum		
At Any Frequency	45	Percent
Swept Across Full Band	55	Percent

ENVIRONMENTAL

Altitude, maximum		
Operating	15,000	Feet
Non-operating	70,000	Feet

*Hold temperature to 125 C or less at point shown on the outline drawing. At the maximum inlet temperature of 110 C, 150 cubic feet per minute is required but this drops rapidly for lower inlet temperatures.

†Measured at point shown on the outline drawing.

‡Set to value marked on tube within ±0.1 ampere.

¶Set to give anode current marked on tube within ±2 milliamperes.

**Measured with load VSWR < 1.2; for loads between 1.2 and 2.0 VSWR the power output is diminished by the amount reflected, plus a positive or negative change due to residual pulling. At 2.0 VSWR the theoretical reduction at the worst load phase is down to 85 percent, and the guaranteed performance is not less than 75 percent of rated power.

CAUTION: A CLEARANCE OF SIX INCHES BETWEEN FERROMAGNETIC MATERIALS AND THE TUBE WILL PREVENT ANY SERIOUS CHANGE OF THE OPERATING CHARACTERISTICS.

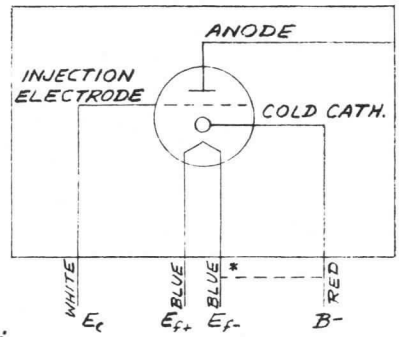

*NOTE:
AN EXTERNAL CONNECTION IS REQUIRED BETWEEN THE COLD CATH. LEAD & ONE OF THE HEATER LEADS

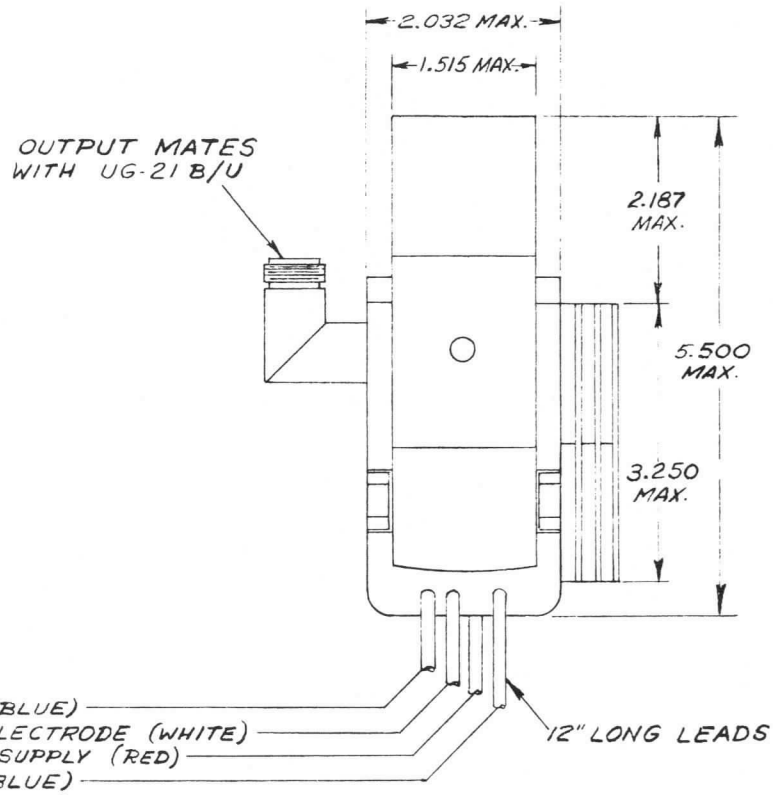

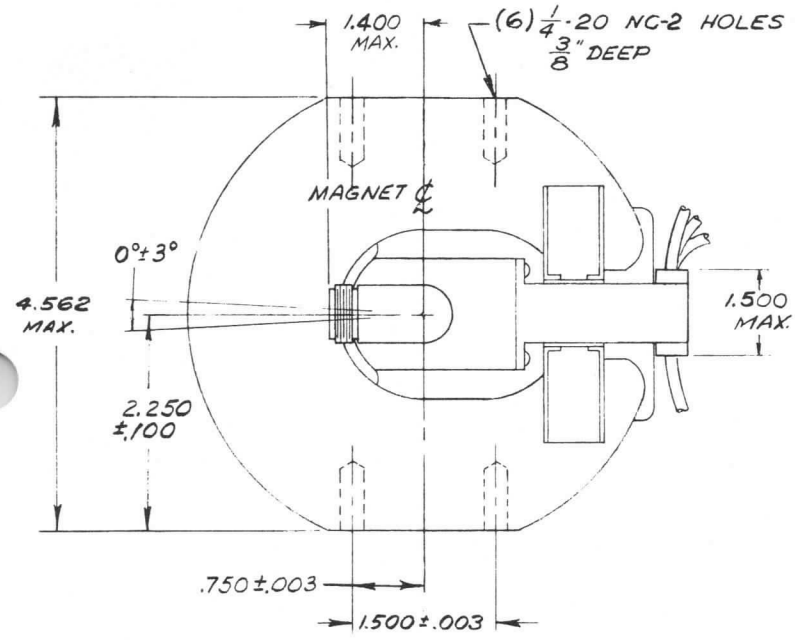

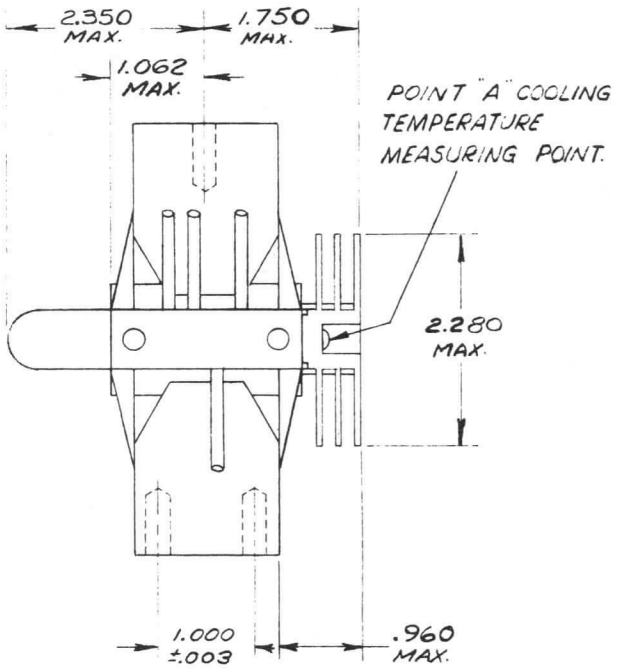

GENERAL ELECTRIC
POWER TUBE DEPARTMENT
Schenectady 5, N. Y.

PRELIMINARY
TECHNICAL INFORMATION

These ratings represent those of current samples of this type. Refer to the Objective Technical Information sheet for design-objective ratings.

DEVELOPMENTAL TYPE

This technical information is proprietary and is furnished only as a service to customers.

ZM-6050

PACKAGED VOLTAGE-TUNABLE MAGNETRON

2200-3850 MEGACYCLES — 2 WATTS CW OUTPUT

The ZM-6050 is a voltage-tunable magnetron for operation in the 2200 to 3850-megacycle frequency range. A complete r-f power source package requiring only input power connections and an r-f power output connection, it has a minimum CW power output of 2 watts across the entire frequency range. The tube may be voltage tuned over a portion or all of the frequency range for which it is designed or operated at a fixed frequency. The voltage frequency relationship is essentially linear.

GENERAL

	Min.	Bogey	Max.	
Electrical				
Cathode – Directly Heated				
Filament Voltage *	2.1	2.35	2.6	Volts
Filament Current *	–	1.9	–	Amperes
Mechanical				
Mounting Position – Any				
Net Weight			3.5	Pounds
Thermal				
Type of Cooling – Conduction or Convection				
Air Flow			5	Cubic Feet per Minute
Ambient Air Temperature			50	C

MAXIMUM RATINGS

Absolute Values

Filament Current	2.0	Amperes
Anode Voltage	2000	Volts
Anode Current	30	Milliamperes
Power Input	45	Watts
Injection Electrode Voltage	500	Volts
Injection Electrode Current	1.0	Milliamperes

TYPICAL OPERATING CONDITIONS

Operation with 60-cycle Sweep Voltage in Wide-band Circuit

Tunable Range ‡	2200-3850	Megacycles
Tuning Sensitivity, Approximate	2.5	Megacycles per Volt
Filament Voltage *, Approximate	2.50	Volts
Filament Current	1.9	Amperes
Anode Voltage at 3 Kilomegacycles	1250	Volts
Anode Current, Average	10-20	Milliamperes
Injection Electrode Voltage (Positive with Respect to Cathode)	130-450	Volts
Injection Electrode Current	0.1	Milliamperes
Voltage Standing Wave Ratio of Load	1.3	
Power Output, Minimum	2.0	Watts
Power Variation Over Band	Less than 4 to 1	

* Filament current should be adjusted to 1.9 amperes.

‡ Frequency controlled by anode voltage.

CAUTION: A clearance of 9 inches between ferromagnetic materials and the tube will prevent any serious change of the operating characteristics.

The specifications of this type are subject to change. Delivery of samples and the existence of these data do not imply continued availability of types with the same characteristics or dimensions. For the most recent information concerning the status of this device, please consult your local Power Tube Department Regional Sales Office.

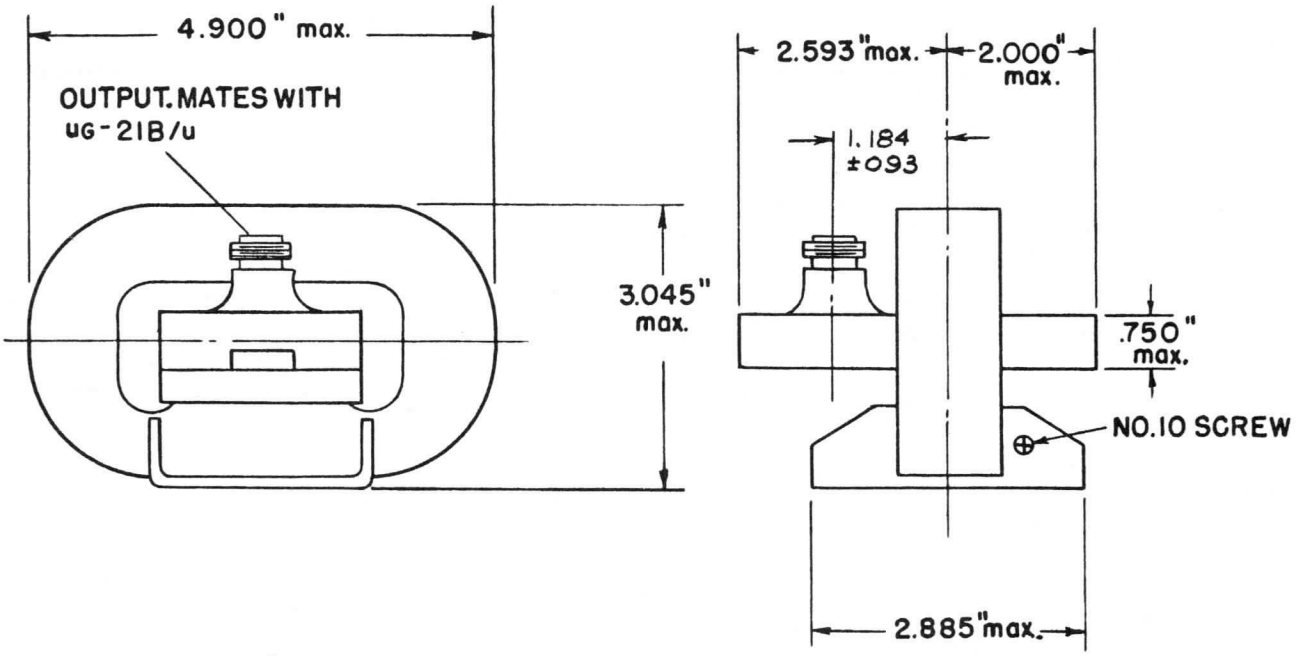
4.900" max.
OUTPUT. MATES WITH
UG-21B/U
3.045"
max.
2.593"max.
2.000"
max.
1.184
±093
.750"
max.
NO.10 SCREW
2.885"max.

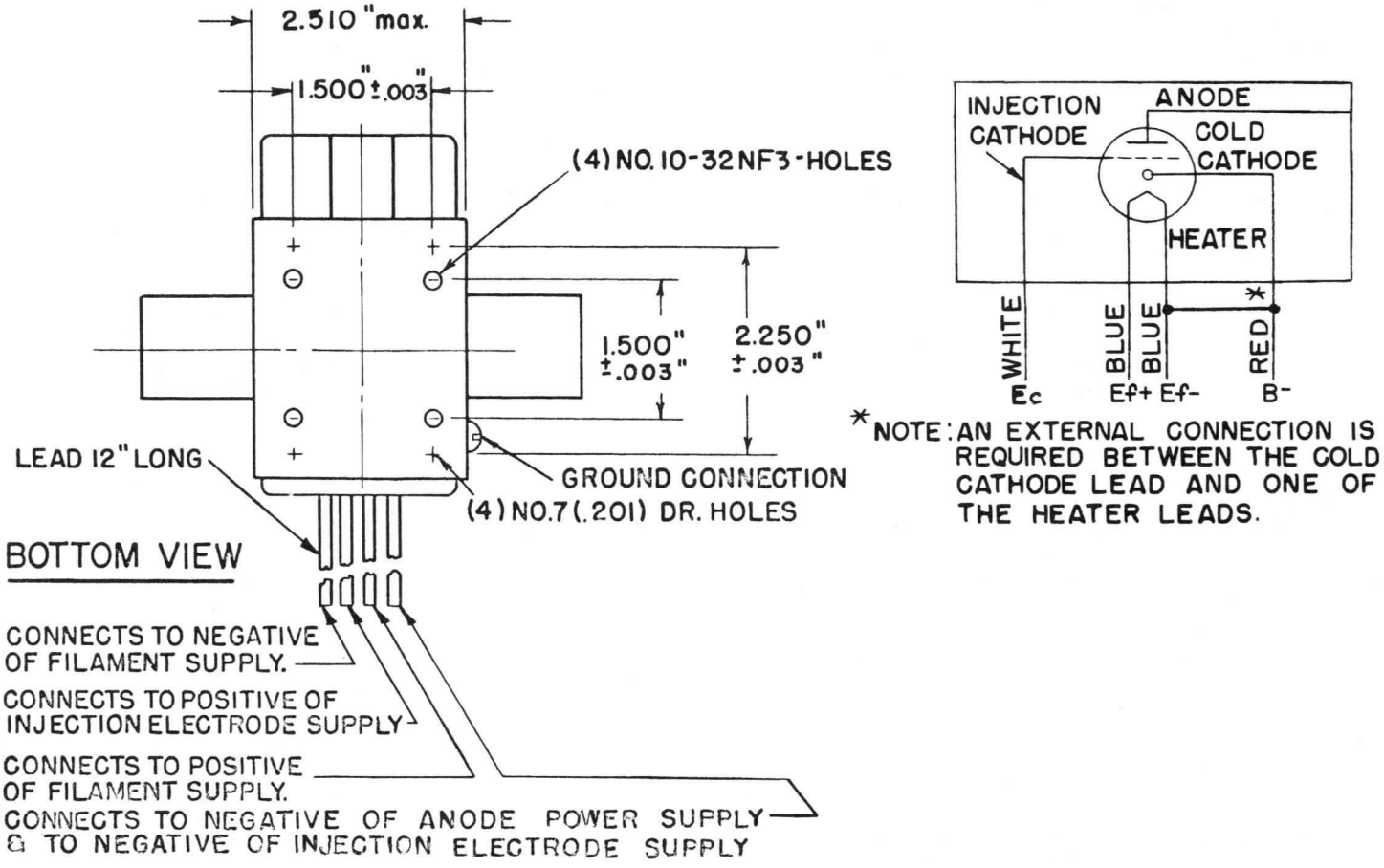
2.510"max.
1.500"±.003"
(4) NO. 10-32 NF3-HOLES
1.500"
±.003"
2.250"
±.003"
LEAD 12" LONG
GROUND CONNECTION
(4) NO.7(.201) DR. HOLES
BOTTOM VIEW
CONNECTS TO NEGATIVE
OF FILAMENT SUPPLY.
CONNECTS TO POSITIVE OF
INJECTION ELECTRODE SUPPLY
CONNECTS TO POSITIVE
OF FILAMENT SUPPLY.
CONNECTS TO NEGATIVE OF ANODE POWER SUPPLY
& TO NEGATIVE OF INJECTION ELECTRODE SUPPLY
INJECTION
CATHODE
ANODE
COLD
CATHODE
HEATER
WHITE
BLUE
BLUE
RED
*
Ec
Ef+ Ef-
B-
*NOTE: AN EXTERNAL CONNECTION IS
REQUIRED BETWEEN THE COLD
CATHODE LEAD AND ONE OF
THE HEATER LEADS.

GENERAL ELECTRIC
POWER TUBE DEPARTMENT
Schenectady 5, N. Y.

PRELIMINARY
TECHNICAL INFORMATION

These ratings represent those of current samples of this type. Refer to the Objective Technical Information sheet for design-objective ratings.

DEVELOPMENTAL TYPE

This technical information is proprietary and is furnished only as a service to customers.

ZM-6051

PACKAGED VOLTAGE-TUNABLE MAGNETRON

1000-2000 Megacycles — 0.1 Watt CW Output

The ZM-6051 is a packaged voltage-tunable magnetron designed for low noise, voltage-tunable operation in the 1000-to-2000-megacycle frequency range. It is a complete r-f power source package requiring only input power connections and an r-f power output connection and has a minimum CW power output of one watt across the entire frequency range. The tube may be voltage-tuned over a portion or all of the frequency range for which it is designed or operated at a fixed frequency. The voltage-frequency relationship is essentially linear.

TECHNICAL INFORMATION

GENERAL

	Minimum	Bogey	Maximum	
Electrical				
Cathode-Directly Heated				
Filament Voltage *	2.1	2.2	2.5	Volts
Filament Current	–	2.0	–	Amperes
Mechanical				
Mounting Position – Any				
Net Weight			3.0	Pounds
Thermal				
Type of Cooling – Forced Air				
Air Flow			5	Cubic Feet per Minute
Ambient Air Temperature Maximum			50	C

MAXIMUM RATINGS AND TYPICAL OPERATING CONDITIONS

Maximum Ratings, Absolute Values		
Anode Voltage	2000	Volts
Anode Current	10	Milliamperes
Power Input	25	Watts
Injection Electrode Voltage	300	Volts
Injection Electrode Current	.01	Milliamperes
Filament Current	2.5	Amperes
Voltage Standing Wave Ratio	1.5	
Typical Operating Conditions		
Operation with 60-cycle Sweep Voltage in Wide-Band Circuit		
Filament Voltage *, approximate	2.2	Volts
Filament Current	2.0	Amperes
Tunable Range †	1000-2000	Megacycles
Tuning Rate, approximate	1.5	Megacycles per Volt
Anode Voltage at 1.6 Kilomegacycles	1100	Volts
Anode Current, average	1.5 to 6	Milliamperes
Injection Electrode Voltage, positive with respect to cathode	125	Volts
Injection Electrode Current	1	Microamperes
Voltage Standing Wave Ratio of Load	1.3	
Power Output, minimum	0.1	Watts
Variation over Band	Less than 4:1	
Noise	-90	Decibels per Megacycle

* Filament current should be adjusted to 2.0 amperes
† Frequency controlled by anode voltage.

CAUTION: A CLEARANCE OF NINE INCHES BETWEEN FERROMAGNETIC MATERIALS AND THE TUBE WILL PREVENT ANY SERIOUS CHANGE OF THE OPERATING CHARACTERISTICS.

The specifications of this type are subject to change. Delivery of samples and the existence of these data do not imply continued availability of types with the same characteristics or dimensions. For the most recent information concerning the status of this device, please consult your local Power Tube Department Regional Sales Office.

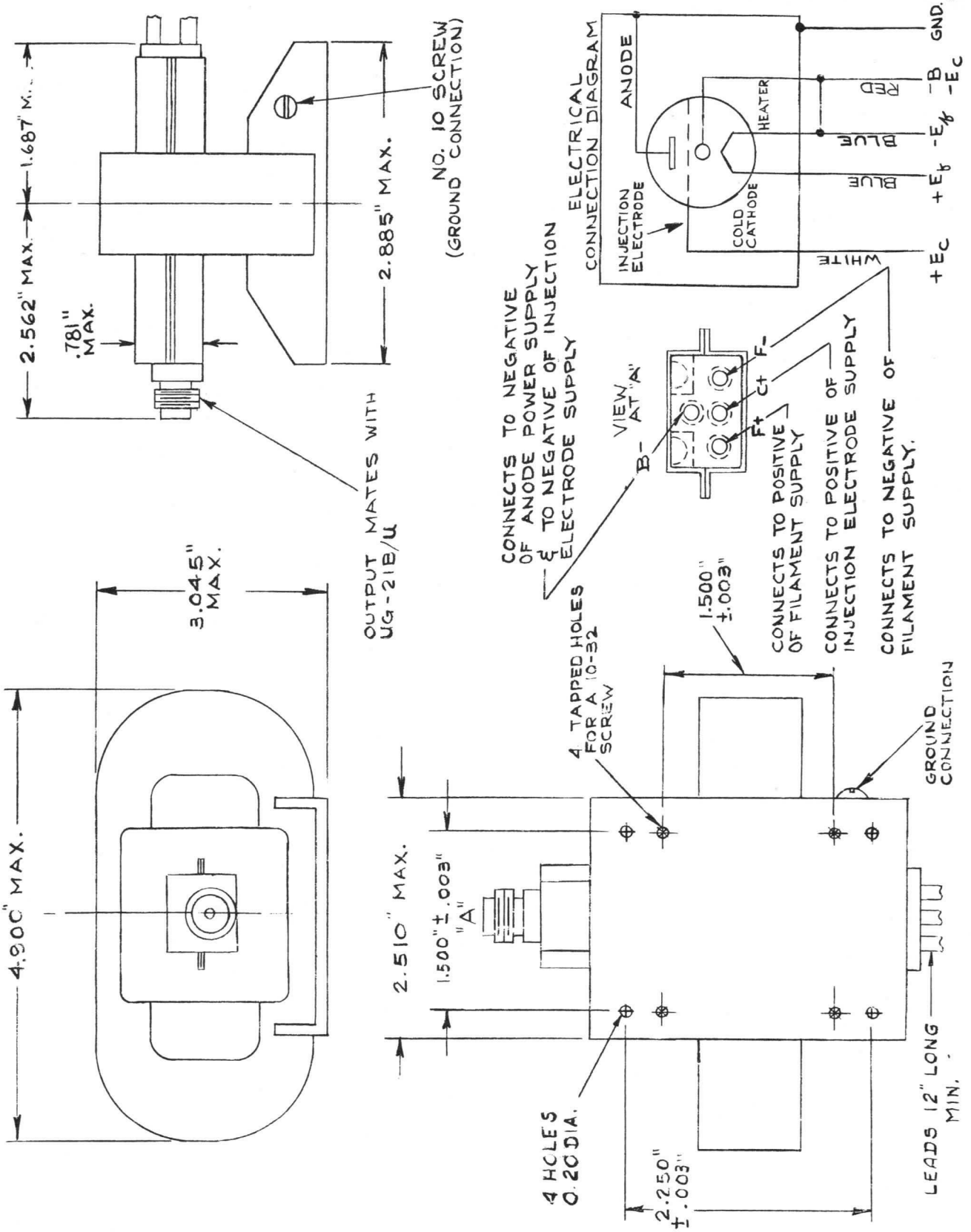
2.562" MAX.
1.687" MAX.
.781" MAX.
2.885" MAX.
NO. 10 SCREW (GROUND CONNECTION)
OUTPUT MATES WITH UG-21B/U
3.045" MAX.
4.900" MAX.
ELECTRICAL CONNECTION DIAGRAM
ANODE
HEATER
COLD CATHODE
INJECTION ELECTRODE
BLUE
BLUE
WHITE
RED
GND.
$-E_c$
$+E_c$
CONNECTS TO NEGATIVE OF ANODE POWER SUPPLY & TO NEGATIVE OF INJECTION ELECTRODE SUPPLY
VIEW AT "A"
B-
F+
C+
F-
CONNECTS TO POSITIVE OF FILAMENT SUPPLY
CONNECTS TO POSITIVE OF INJECTION ELECTRODE SUPPLY
CONNECTS TO NEGATIVE OF FILAMENT SUPPLY.
1.500" ±.003"
4 TAPPED HOLES FOR A 10-32 SCREW
GROUND CONNECTION
2.510" MAX.
1.500" ±.003"
"A"
4 HOLES 0.20 DIA.
2.250" ±.003"
LEADS 12" LONG MIN.
BOTTOM VIEW

GENERAL ELECTRIC
POWER TUBE DEPARTMENT
Schenectady 5, N. Y.

PRELIMINARY
TECHNICAL INFORMATION

These ratings represent those of current samples of this type. Refer to the Objective Technical Information sheet for design-objective ratings.

DEVELOPMENTAL TYPE

This technical information is proprietary and is furnished only as a service to customers.

ZM-6107

PACKAGED VOLTAGE-TUNABLE MAGNETRON

2820-3180 Megacycles — 20 Watts Output

The ZM-6107 is a voltage-tunable magnetron for operation in the 2820-to-3180 megacycle frequency range. A complete r-f power source package requiring only input power connections and an r-f power output connection, it has a minimum CW power output of 20 watts across the frequency range. The tube may be voltage-tuned over a portion or all of the frequency range for which it is designed.

GENERAL

Electrical

Cathode – Directly Heated

Filament Voltage *	2.0	Volts
Filament Current *	2.0	Amperes

Mechanical

Mounting Position – Any

Net Weight	4.0	Pounds

Thermal

Type of Cooling – Conduction or Convection

Ambient Air Temperature, maximum	90	C

MAXIMUM RATINGS AND TYPICAL OPERATING CONDITIONS

Maximum Ratings, Absolute Values

Filament Current	2.5	Amperes
Anode Voltage	2300	Volts
Anode Current	30	Milliamperes
Power Input, with forced-air cooling	68	Watts
Injection Electrode Voltage	660	Volts

Typical Operating Conditions

Operation with 60-cycle Sweep Voltage

Filament Voltage *, approximate	2.5	Volts
Filament Current	2.0	Amperes
Tunable Range †	2820-3180	Megacycles
Tuning Sensitivity, approximate	1.50	Megacycles per Volt
Anode Voltage at 3.0 Gigacycles	2100	Volts
Anode Current, average	20-25	Milliamperes
Voltage Standing Wave Ratio of Load	1.1	
Power Output, minimum	20	Watts
Control Electrode Voltage	600	Volts

* Filament current should be adjusted to 2.0 amperes.
† Frequency controlled by anode voltage.

NOTE: Since a change in anode voltage of one volt produces a frequency change of approximately 1.5 megacycles, it is necessary that the ripple voltage of the anode supply be small enough not to cause an excess of undesirable frequency modulation.

CAUTION: A CLEARANCE OF NINE INCHES BETWEEN FERROMAGNETIC MATERIALS AND THE TUBE WILL PREVENT ANY SERIOUS CHANGE OF THE OPERATING CHARACTERISTICS.

The specifications of this type are subject to change. Delivery of samples and the existence of these data do not imply continued availability of types with the same characteristics or dimensions. For the most recent information concerning the status of this device, please consult your local Power Tube Department Regional Sales Office.

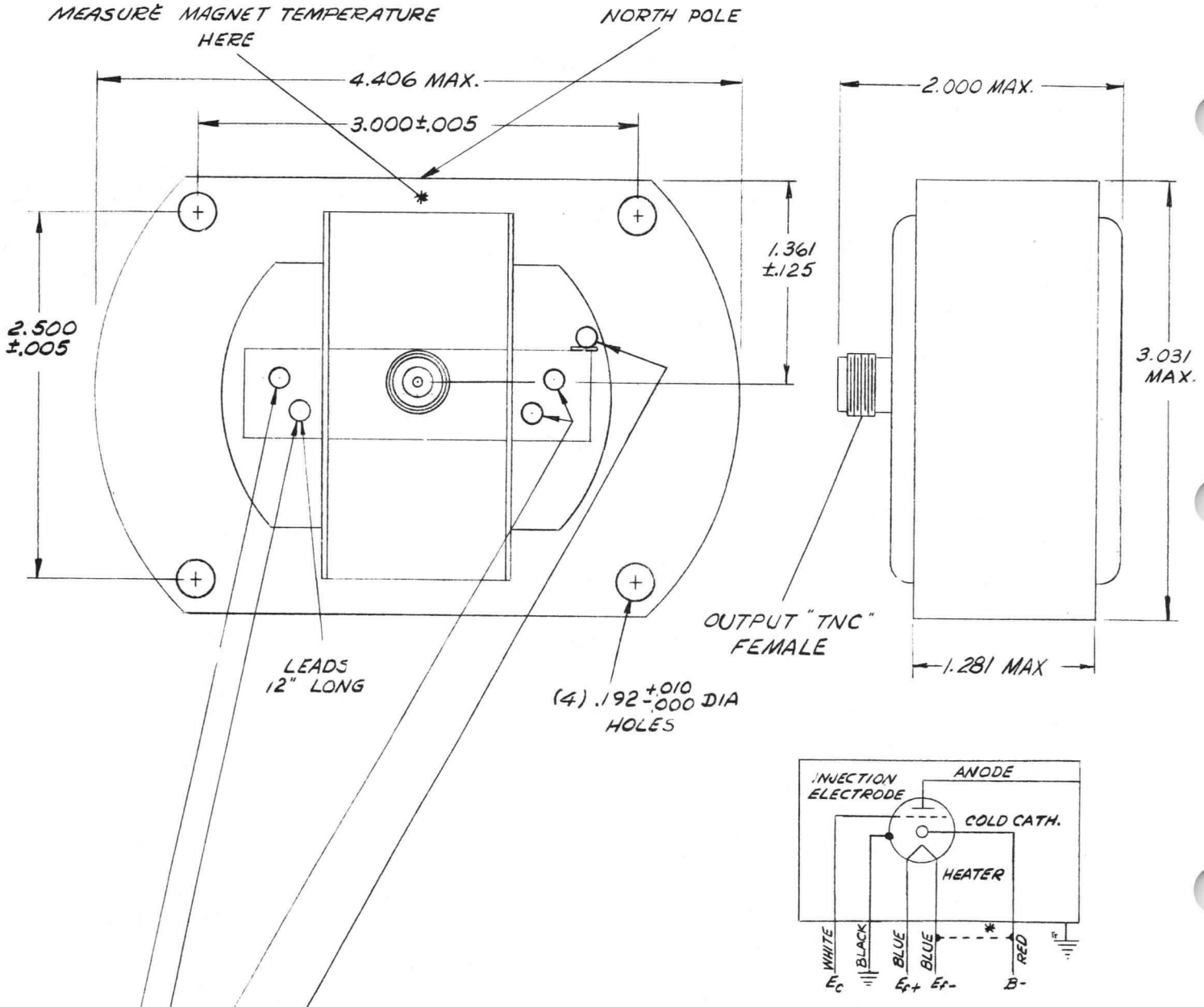
MEASURE MAGNET TEMPERATURE HERE
NORTH POLE
4.406 MAX.
3.000±.005
2.000 MAX.
1.361 ±.125
2.500 ±.005
3.031 MAX.
OUTPUT "TNC" FEMALE
1.281 MAX
LEADS 12" LONG
(4) .192 +.010 -.000 DIA HOLES
INJECTION ELECTRODE
ANODE
COLD CATH.
HEATER
WHITE
BLACK
BLUE
BLUE
RED
Ec
Ef+
Ef-
B-
* NOTE: AN EXTERNAL CONNECTION IS REQUIRED BETWEEN THE COLD CATH. LEAD AND ONE OF THE HEATER LEADS.
CONNECTS TO GROUND. (BLACK)
CONNECTS TO FILAMENT SUPPLY. (BLUE)
CONNECTS TO POSITIVE OF INJECTION ELECTRODE SUPPLY. (WHITE)
CONNECTS TO NEGATIVE OF ANODE POWER SUPPLY. (RED)

GENERAL ELECTRIC
TUBE DEPARTMENT
Schenectady 5, N. Y.

PRELIMINARY
TECHNICAL INFORMATION

These ratings represent those of current samples of this type. Refer to the Objective Technical Information sheet for design-objective ratings.

DEVELOPMENTAL TYPE

This technical information is proprietary and is furnished only as a service to customers.

PACKAGED VOLTAGE-TUNABLE MAGNETRON

510-910 MEGACYCLES — 32-MILLIWATTS OUTPUT

The ZM-6204 voltage-tunable magnetron is a complete r-f power source package requiring only input power connections and an r-f power-output connection. The minimum CW power output across the frequency range is 32 milliwatts. This low-noise tube may be voltage tuned over a portion or all of the 510 to 910 megacycle frequency range.

A built in 10-decibel attenuator makes this tube particularly suitable for use without a circulator or isolator.

The ZM-6204 is environmentalized for airborne applications.

GENERAL

	Min.	Bogey	Max.	
Electrical				
Cathode – Directly Heated				
Filament Voltage*	3.0	3.5	4.0	Volts
Filament Current*	1.9	2.0	2.1	Amperes
Mechanical				
Mounting Position – Any				
Net Weight			2.5	Pounds
Altitude			100,000	Feet
Thermal				
Type of Cooling – Conduction or Convection				
Ambient Air Temperature, operating			85	C

MAXIMUM RATINGS AND TYPICAL OPERATING CONDITIONS

Maximum Ratings, Absolute Values		
Anode Voltage	2500	Volts
Anode Current	20	Milliamperes
Power Input, with Forced Air Cooling	40	Watts
Injection-Electrode Voltage	200	Volts
Injection-Electrode Current	1.0	Milliamperes
Filament Current	2.1	Amperes
Typical Operating Conditions		
Operation with 60-cycle Sweep Voltage		
Filament Voltage*, approximate	3.5	Volts
Filament Current*	2.0	Amperes
Tunable Range#	510-910	Megacycles per Volt
Tuning Sensitivity, average	0.44	Megacycles per Volt
Anode Voltage at 710 Megacycles	1815	Volts
Anode Current, average	10	Milliamperes
Injection-Electrode Voltage, Positive with Respect to Cathode	40-100	Volts
Injection-Electrode Current	0	Microamperes
Voltage Standing Wave Ratio of Load	1.2	
Power Output†, Minimum	32	Milliwatts
Noise‡	-85	Decibels below carrier

The specifications of this type are subject to change. Delivery of samples and the existence of these data do not imply continued availability of types with the same characteristics or dimensions. For the most recent information concerning the status of this device, please consult your local Tube Department Regional Sales Office.

* Filament current should be adjusted to the value specified ±1 percent.

\# Frequency controlled by anode voltage.

† This power level is measured at the output of the 10-decibel integral attenuator. This VTM is also available with a 300-milliwatt output.

‡ This noise level is measured with respect to the carrier level over a band 59 to 61 mc from carrier.

NOTE: Since a change in anode voltage of one volt produces a frequency change of approximately 0.44 megacycles, the anode supply should have sufficiently low ripple and high regulation to prevent an excess of frequency modulation.

CAUTION: A clearance of 6 inches between ferromagnetic materials and the tube will prevent serious change of the operating characteristics.

OUTLINE ZM-6204

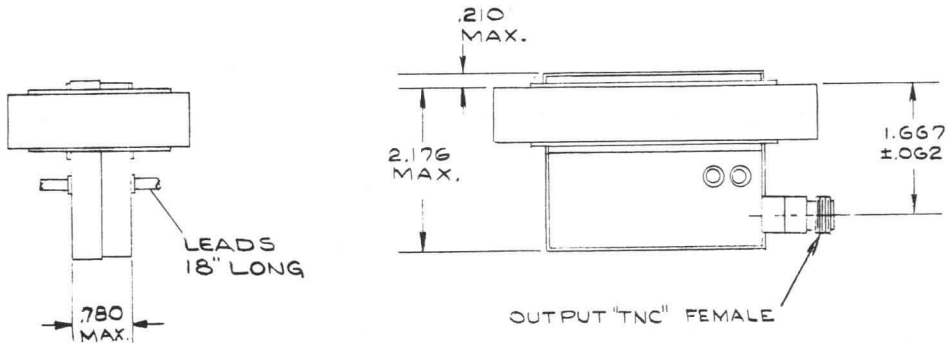

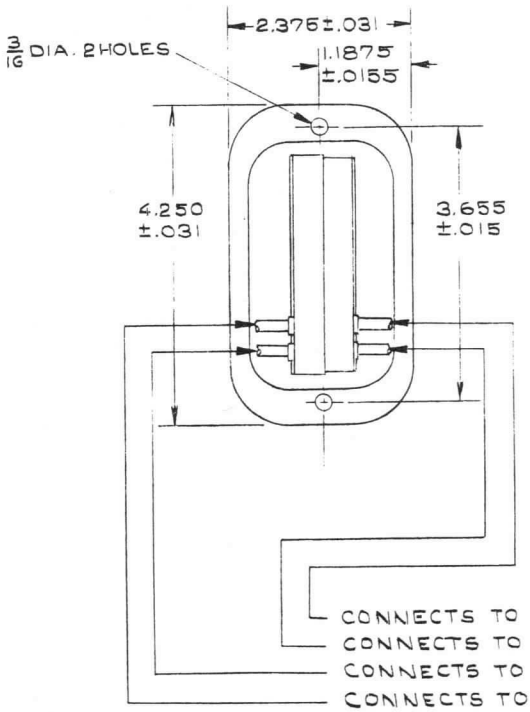

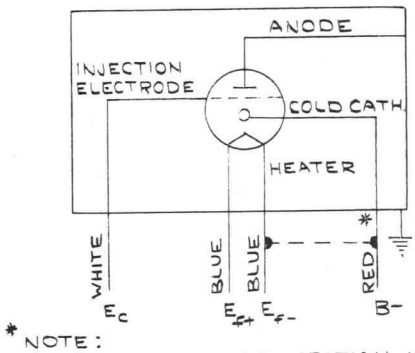

* NOTE:
AN EXTERNAL CONNECTION IS REQUIRED BETWEEN THE COLD CATH. LEAD AND ONE OF THE HEATER LEADS

A-69087-72894

GENERAL ELECTRIC
TUBE DEPARTMENT
Schenectady 5, N. Y.

PRELIMINARY
TECHNICAL INFORMATION

These ratings represent those of current samples of this type. Refer to the Objective Technical Information sheet for design-objective ratings.

DEVELOPMENTAL TYPE

This technical information is proprietary and is furnished only as a service to customers.

PACKAGED VOLTAGE-TUNABLE MAGNETRON

320-525 MEGACYCLES — 32-MILLIWATTS OUTPUT

The ZM-6206 voltage-tunable magnetron is a complete r-f power source package requiring only input power connections and an r-f power-output connection. The minimum CW power output across the frequency range is 32 milliwatts. This low-noise tube may be voltage tuned over a portion or all of the 320 to 525 mc frequency range.

A built-in 6-decibel attenuator makes this tube particularly suitable for use without a circulator or isolator.

The tube is environmentalized for airborne applications.

GENERAL

	Min.	Bogey	Max.	
Electrical				
Cathode – Directly Heated				
Filament Voltage*	3.3	3.7	4.0	Volts
Filament Current*	1.9	2.0	2.1	Amperes
Mechanical				
Mounting Position – Any				
Net Weight			2.5	Pounds
Altitude			100,000	Feet
Thermal				
Type of Cooling – Conduction or Convection				
Ambient Air Temperature, operating			85	C

MAXIMUM RATINGS AND TYPICAL OPERATING CONDITIONS

Maximum Ratings, Absolute Values		
Anode Voltage	2500	Volts
Anode Current	10	Milliamperes
Power Input, with Forced Air Cooling	20	Watts
Injection-Electrode Voltage	200	Volts
Injection-Electrode Current	1.0	Milliamperes
Filament Current	2.1	Amperes
Typical Operating Conditions		
Operation with 60-cycle Sweep Voltage		
Filament Voltage*, approximate	3.7	Volts
Filament Current*	2.0	Amperes
Tunable Range#	320-525	Megacycles per Volt
Tuning Sensitivity, average	0.3	Megacycles per Volt
Anode Voltage at 420 Megacycles	1700	Volts
Anode Current, average	1.5	Milliamperes
Injection-Electrode Voltage, Positive with Respect to Cathode	40-80	Volts
Injection-Electrode Current	0	Microamperes
Voltage Standing Wave Ratio of Load	1.2	
Power Output †, minimum	32	Milliwatts
Noise ‡	-85	Decibels per megacycle

The specifications of this type are subject to change. Delivery of samples and the existence of these data do not imply continued availability of types with the same characteristics or dimensions. For the most recent information concerning the status of this device, please consult your local Tube Department Regional Sales Office.

* Filament current should be adjusted to the value specified ± 1 percent.

Frequency controlled by anode voltage.

† This power level is measured at the output of the 6-decibel integral attenuator. This VTM is also available with a 125-milliwatt output.

‡ This noise level is measured with respect to the carrier level over a noise band 59 to 61 mc from carrier.

NOTE: Since a change in anode voltage of one volt produces a frequency change of approximately 0.3 megacycles, the anode supply should have sufficiently low ripple and high regulation to prevent an excess of frequency modulation.

CAUTION: A clearance of 6 inches between ferromagnetic materials and the tube will prevent serious change of the operating characteristics.

OUTLINE ZM-6206

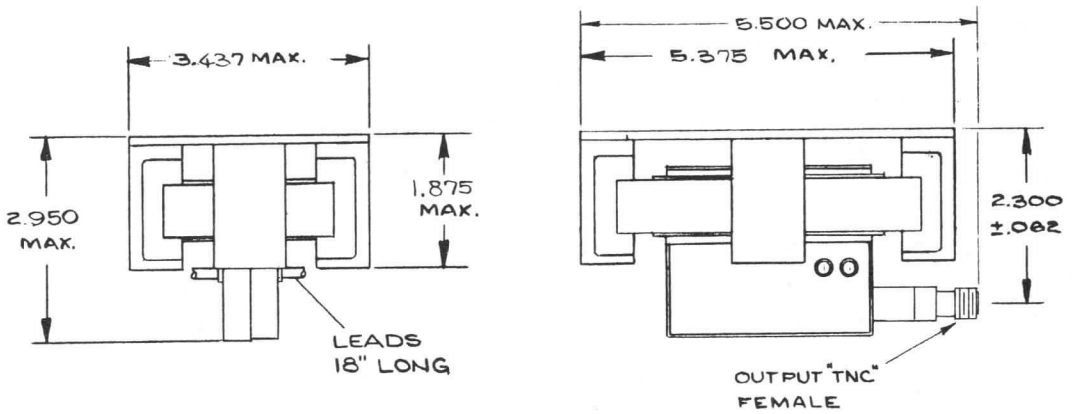

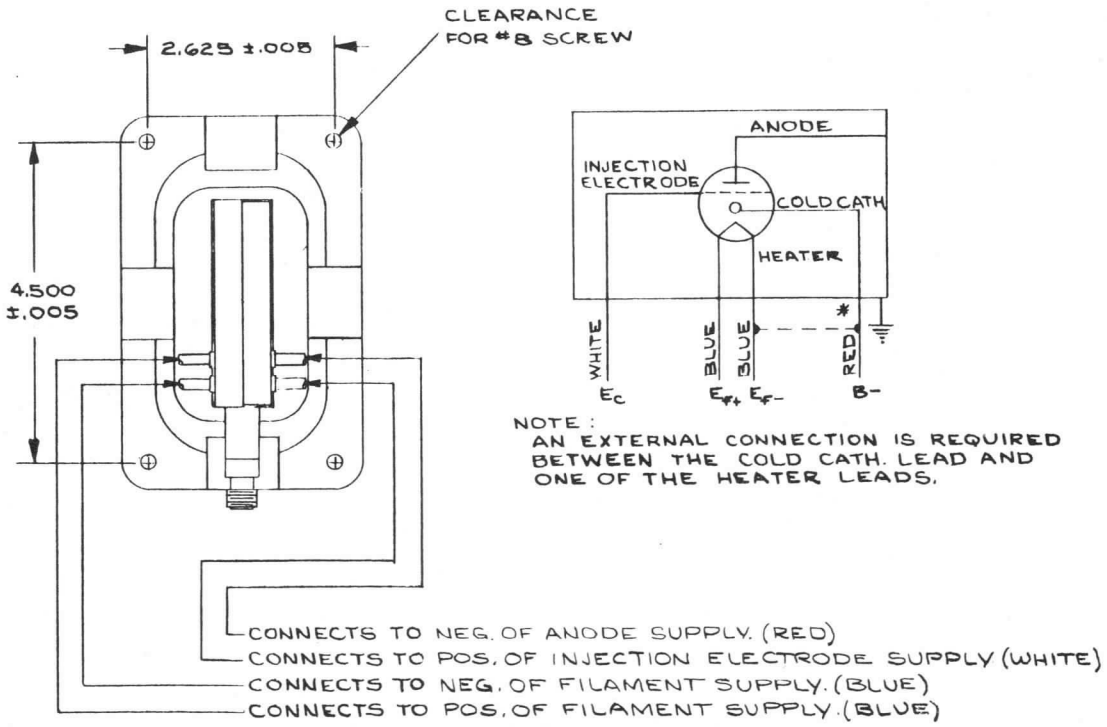

A69087-72B82

GENERAL ELECTRIC
TUBE DEPARTMENT
Schenectady 5, N. Y.

PRELIMINARY
TECHNICAL INFORMATION

These ratings represent those of current samples of this type. Refer to the Objective Technical Information sheet for design-objective ratings.

DEVELOPMENTAL TYPE

This technical information is proprietary and is furnished only as a service to customers.

PACKAGED VOLTAGE-TUNABLE MAGNETRON

2500-3500 MEGACYCLES — 10 WATT OUTPUT

The ZM-6211 is a voltage-tunable magnetron, designed for voltage-tunable operation in the 2500-3500 megacycle frequency range. It is a complete r-f power source package requiring only input power connections and an r-f power output connection and has a minimum CW power output of 10 watts across the entire frequency range. The tube may be voltage tuned over a portion or all of the frequency range for which it is designed.

GENERAL

	Min.	Bogey	Max.	
Electrical				
Cathode – Directly Heated				
Filament Voltage*, approximate	2.2	2.5	2.7	Volts
Filament Current*	--	2.0	--	Amperes
Mechanical				
Mounting Position – Any				
Net Weight			1.8	Pounds
Thermal				
Type of Cooling – Forced Air				
Air Flow			30	Cubic Feet per Minute
Ambient Air Temperature			50	C

MAXIMUM RATINGS AND TYPICAL OPERATING CONDITIONS

Absolute Values		
Anode Voltage	2500	Volts
Anode Current	40	Milliamperes
Power Input, with Forced Air Cooling	75	Watts
Injection Electrode Voltage	700	Volts
Injection Electrode Current	1.0	Milliamperes
Filament Current	2.2	Amperes
Typical Operating Conditions		
Operation with 60-cycle Sweep Voltage in Wide-band Circuit		
Filament Voltage*, approximate	2.50	Volts
Filament Current	2.0	Amperes
Tunable Range #	2500-3500	Megacycles per Volt
Tuning Rate, Approximate	1.8	Megacycles per Volt
Anode Voltage at 3 Kilomegacycles	1850	Volts
Anode Current, Average	20-30	Milliamperes
Injection Electrode Voltage, Positive with Respect to Cathode	300-600	Volts
Injection Electrode Current	0.1	Milliamperes
Voltage Standing Wave Ratio of Load	1.3	
Power Output, Minimum	10.0	Watts

The specifications of this type are subject to change. Delivery of samples and the existence of these data do not imply continued availability of types with the same characteristics or dimensions. For the most recent information concerning the status of this device, please consult your local Tube Department Regional Sales Office.

* Filament current should be adjusted to 2.0 amperes

\# Frequency controlled by anode voltage.

NOTE: Since a change in anode voltage of one volt produces a frequency change of approximately 3.3 megacycles, the anode supply should have sufficiently low ripple and high regulation to prevent an excess of frequency modulation.

CAUTION: A clearance of 9 inches between ferromagnetic materials and the tube will prevent serious change of the operating characteristics.

OUTLINE ZM-6211

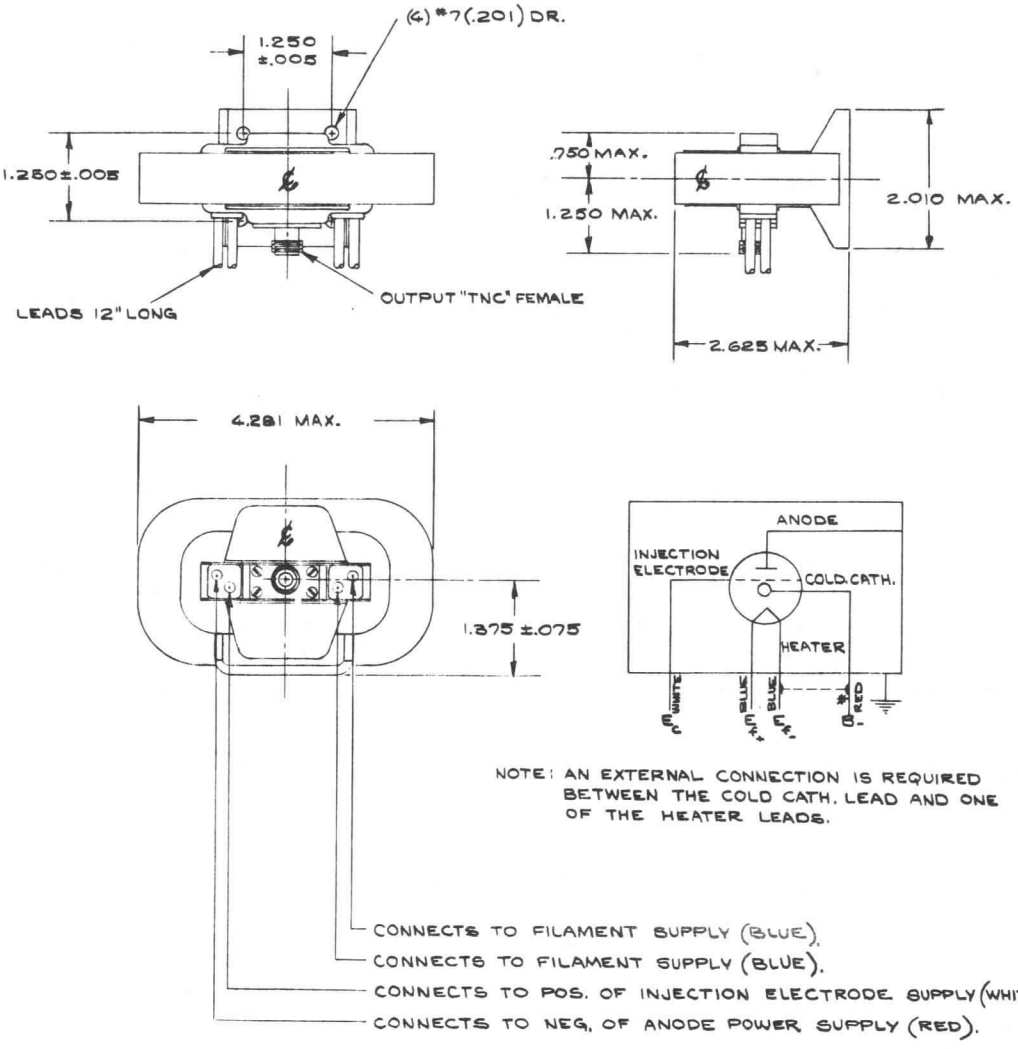

A-69087-72B99

GENERAL ELECTRIC
TUBE DEPARTMENT
Schenectady 5, N. Y.

PRELIMINARY
TECHNICAL INFORMATION

These ratings represent those of current samples of this type. Refer to the Objective Technical Information sheet for design-objective ratings.

DEVELOPMENTAL TYPE

This technical information is proprietary and is furnished only as a service to customers.

PACKAGED VOLTAGE-TUNABLE MAGNETRON

4200-4400 Megacycles — 1.5 Watts Output

The ZM-6212 is a voltage-tunable magnetron for operation in the 4200-4400 megacycle frequency range. A complete r-f power source package requiring only input power connections and an r-f power output connection, it has a minimum CW power output of 1.5 watts across the frequency range. The tube may be voltage-tuned over a portion or all of the frequency range for which it is designed.

GENERAL

Electrical

Cathode – Directly Heated

Filament Voltage *, approximate	3.0	Volts
Filament Current *	2.0	Amperes

Mechanical

Mounting Position – Any

Net Weight	1.8	Pounds

Thermal

Type of Cooling – Forced Air

Air Flow	5	Cubic Feet per Minute
Ambient Air Temperature, maximum	50	C

MAXIMUM RATINGS AND TYPICAL OPERATING CONDITIONS

Maximum Ratings, Absolute Values

Filament Current	2.2	Amperes
Anode Voltage	1600	Volts
Anode Current	25	Milliamperes
Power Input	25	Watts
Injection Electrode Voltage	350	Volts

Typical Operating Conditions

Operation with 60-cycle Sweep Voltage

Filament Voltage *, approximate	3.0	Volts
Filament Current	2.0	Amperes
Tunable Range #	4200-4400	Megacycles
Tuning Sensitivity, approximate	3.3	Megacycles per Volt
Anode Voltage at 4.3 Kilomegacycles	1375	Volts
Anode Current, average	10-20	Milliamperes
Injection Electrode Voltage	250	Volts
Power Output, minimum	1.5	Watts

The specifications of this type are subject to change. Delivery of samples and the existence of these data do not imply continued availability of types with the same characteristics or dimensions. For the most recent information concerning the status of this device, please consult your local Tube Department Regional Sales Office.

* Filament current should be adjusted to 2.0 amperes.

Frequency controlled by anode voltage.

NOTE: Since a change in anode voltage of one volt produces a frequency change of approximately 3.3 megacycles, the anode supply should have sufficiently low ripple and high regulation to prevent an excess of frequency modulation.

CAUTION: A clearance of 3 inches between ferromagnetic materials and the tube will prevent any serious change of the operating characteristics.

OUTLINE ZM-6212

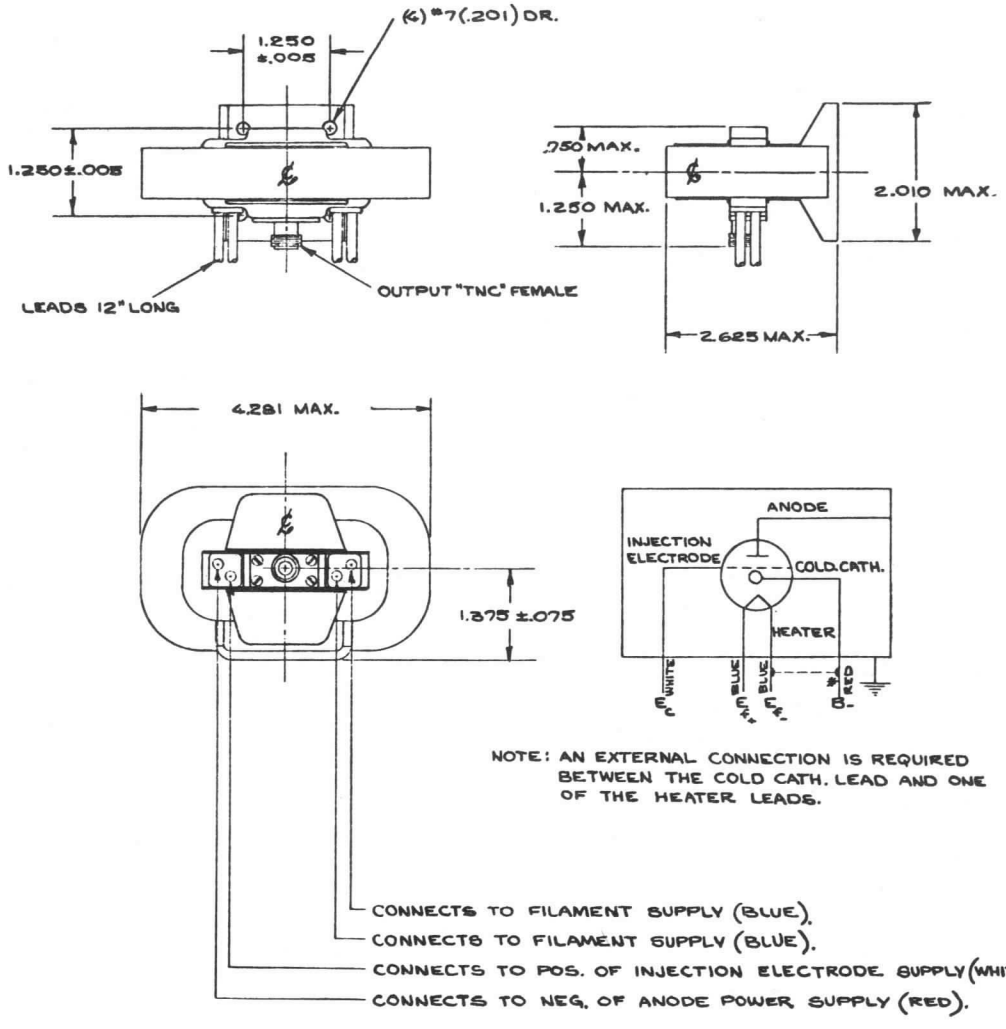

A-69087-72B10C

GENERAL ELECTRIC
TUBE DEPARTMENT
Schenectady 5, N. Y.

PRELIMINARY
TECHNICAL INFORMATION

These ratings represent those of current samples of this type. Refer to the Objective Technical Information sheet for design-objective ratings.

DEVELOPMENTAL TYPE

This technical information is proprietary and is furnished only as a service to customers.

ZM-6223

PACKAGED VOLTAGE-TUNABLE MAGNETRON

2000-4000 Megacycles — 1.25 Watt CW Output

The ZM-6223 is a packaged voltage-tunable magnetron designed for voltage-tunable operation in the 2000-to-4000-megacycle frequency range. It is a complete r-f power source package requiring only input power connections and an r-f power output connection and has a minimum CW power output of 1.25 watts across the entire frequency range. The tube may be voltage-tuned over a portion or all of the frequency range for which it is designed or operated at a fixed frequency. The voltage-frequency relationship is essentially linear.

GENERAL

Electrical	Minimum	Bogey	Maximum	
Cathode -- Directly Heated				
Filament Voltage*	2.2	2.5	2.7	Volts
Filament Current	-	2.0	-	Amperes
Mechanical				
Mounting Position -- Any				
Net Weight, maximum			2.0	Pounds
Thermal				
Type of Cooling -- Forced Air				
Air Flow			5	Cubic Feet per Minute
Ambient Air Temperature, maximum			50	C

Typical Operating Conditions

Operation with 60-cycle Sweep Voltage

Filament Voltage*, approximate	2.50	Volts
Filament Current	2.0	Amperes
Tunable Range †	2000-4000	Megacycles
Tuning Sensitivity, approximate	2.65	Megacycles per Volt
Anode Voltage at 3.0 Gigacycles	1250	Volts
Anode Current, average	10-15	Milliamperes
Injection Electrode Voltage, positive with respect to cathode	130-450	Volts
Injection Electrode Current	0.01	Milliamperes
Voltage Standing Wave Ratio of Load	1.15	
Power Output, minimum	1.25	Watts
Variation over Band	Less than 4:1	

* Filament current should be adjusted to 2.0 amperes.

† Frequency controlled by anode voltage. VTM will stay in oscillation 50 megacycles below low end of the band.

CAUTION: A CLEARANCE OF NINE INCHES BETWEEN FEEEOMAGNETIC MATERIALS AND THE TUBE WILL PREVENT ANY SERIOUS CHANGE OF THE OPERATING CHARACTERISTICS.

The specifications of this type are subject to change. Delivery of samples and the existence of these data do not imply continued availability of types with the same characteristics or dimensions. For the most recent information concerning the status of this device, please consult your local Tube Department Regional Sales Office.

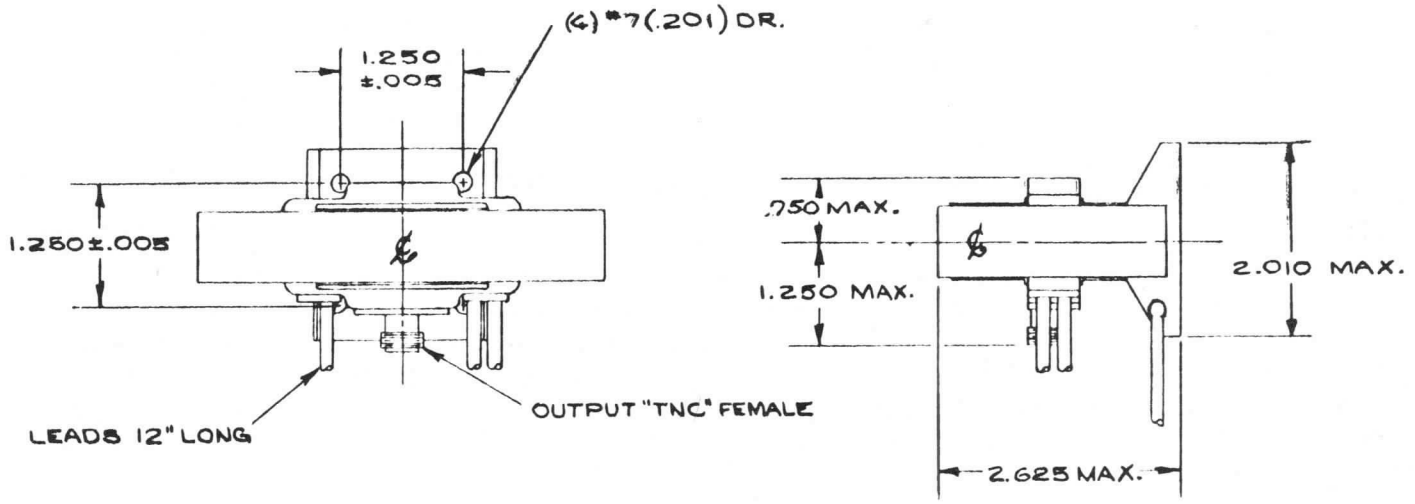

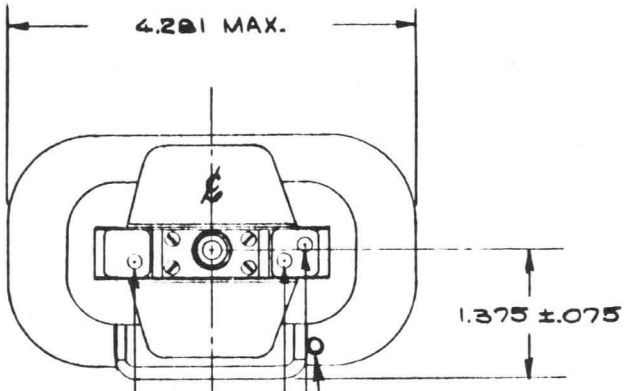

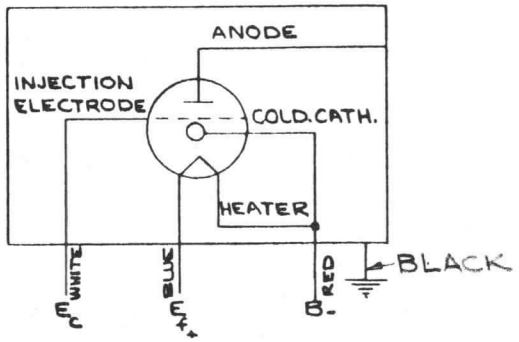

1 GEN.

GROUND (BLACK)

CONNECTS TO FILAMENT SUPPLY (BLUE).

CONNECTS TO POS. OF INJECTION ELECTRODE SUPPLY (WHITE).

CONNECTS TO NEG. OF ANODE POWER SUPPLY (RED).

ELECTRONIC INNOVATIONS IN ACTION

TUBES

OBJECTIVE
TECHNICAL INFORMATION

These ratings represent the design objective for this product. Refer to the Preliminary Technical Information sheet for ratings currently achieved in the progression towards design objectives. If PTI sheets do not exist, consult your local Tube Department Regional Sales Office.

DEVELOPMENTAL TYPE

ZM-6244
OTI-111A
Page 1
9-67

This technical information is proprietary and is furnished only as a service to customers

ZM-6244

PACKAGED VOLTAGE-TUNABLE MAGNETRON

2600-3200 Megacycles — 100 Watts Minimum CW Output

Integral Magnet and Isolator

The ZM-6244 is a magnetically shielded voltage-tunable oscillator which operates at a minimum power output of 100 watts over the 2600 to 3200-megacycle range. It is designed for CW/FM transmitting-tube operation at low- or high-modulation frequencies. The high efficiency allows air cooling to be used and in many applications heat-sink cooling is adequate. The integral isolator protects the tube against load mismatches thus minimizing interface problems between the VTM and its associated equipment.

This shielded tube is unaffected by passive magnetic materials and does not require the special tools, storage and handling necessitated by conventional electron devices employing magnetic fields. It is a complete radio-frequency power source which requires only d-c input power and generates radio-frequency power over its electronically tuned frequency range. This voltage-tuned magnetron may be operated over a portion or all of the frequency range or operated at a fixed frequency. Its frequency versus voltage-tuning characteristic is essentially linear.

GENERAL

Electrical		
Cathode (filament) – Directly Heated		
Warm-up Time, maximum	10	Seconds
Cathode Input Capacitance		
Maximum	35	μμf
Typical	32	μμf
Mechanical		
Mounting Position		Any
Net Weight	5.5	Pounds
Thermal		
Cooling – Forced Air *		
Air Temperature, maximum	110	C
Body Temperature, maximum †	125	C

MAXIMUM RATINGS AND TYPICAL OPERATING CONDITIONS

Maximum Ratings, Absolute Values		
Filament Voltage	2.5	Volts
Filament Current ‡	6.0	Amperes
Anode Voltage	3800	Volts
Sweep Voltage	700	Volts
Anode Current, swept	80	Milliamperes
Power Input	250	Watts
Injection Electrode Voltage	1500	Volts
Voltage Standing Wave Ratio of Load **	2.0	
Typical Operating Conditions		
Operation with 60-cycle Sweep Voltage		
Filament Voltage, approximate	2.3	Volts
Filament Current ‡	5.3	Amperes
Swept Frequency Range	2600 to 3200	Megacycles
Sweep Voltage, Peak to Peak, typical	600	Volts
Anode Voltage at 3.05 Gigacycles	3300	Volts
Anode Current	65	Milliamperes
Injection Electrode Voltage, positive with respect to cathode	700 to 1500	Volts¶
Injection Electrode Current, may be either polarity but less than	0.5	Milliamperes

The specifications of this type are subject to change. Delivery of samples and the existence of these data do not imply continued availability of types with the same characteristics or dimensions. For the most recent information concerning the status of this device, please consult your local Tube Department Regional Sales Office.

MAXIMUM RATINGS AND TYPICAL OPERATING CONDITIONS (Cont'd.)

Typical Operating Conditions (Cont'd.)

Operation with 60-cycle Sweep Voltage (Cont'd.)

Power Output		
Average, Swept Across Full Band	110	Watts ***
Minimum, At Any Point Without Sweep Voltage	100	Watts ***
Variation Across Band		
Typical	1.4	Decibels
Maximum	2.0	Decibels
Efficiency, minimum		
At Any Frequency	50	Percent
Swept Across Full Band	60	Percent

* Hold temperature to 125 C or less at point shown on the outline drawing. At the maximum inlet temperature of 110 C, 100 cubic feet per minute is required but this drops rapidly for lower inlet temperatures.

† Measured at point shown on the outline drawing.

‡ Set to value marked on tube within ± 0.1 ampere.

¶ Set to give anode current marked on tube within ± 2 milliamperes.

** With integral isolator. Without isolator maximum allowable VSWR is 1.2 to 1.

*** Measured with load VSWR < 1.2; for loads between 1.2 and 2.0 VSWR the power output is diminished by the amount reflected, plus a positive or negative change due to residual pulling. At 2.0 VSWR the theoretical reduction at the worst load phase is down to 85 percent, and the guaranteed performance is not less than 75 percent of rated power.

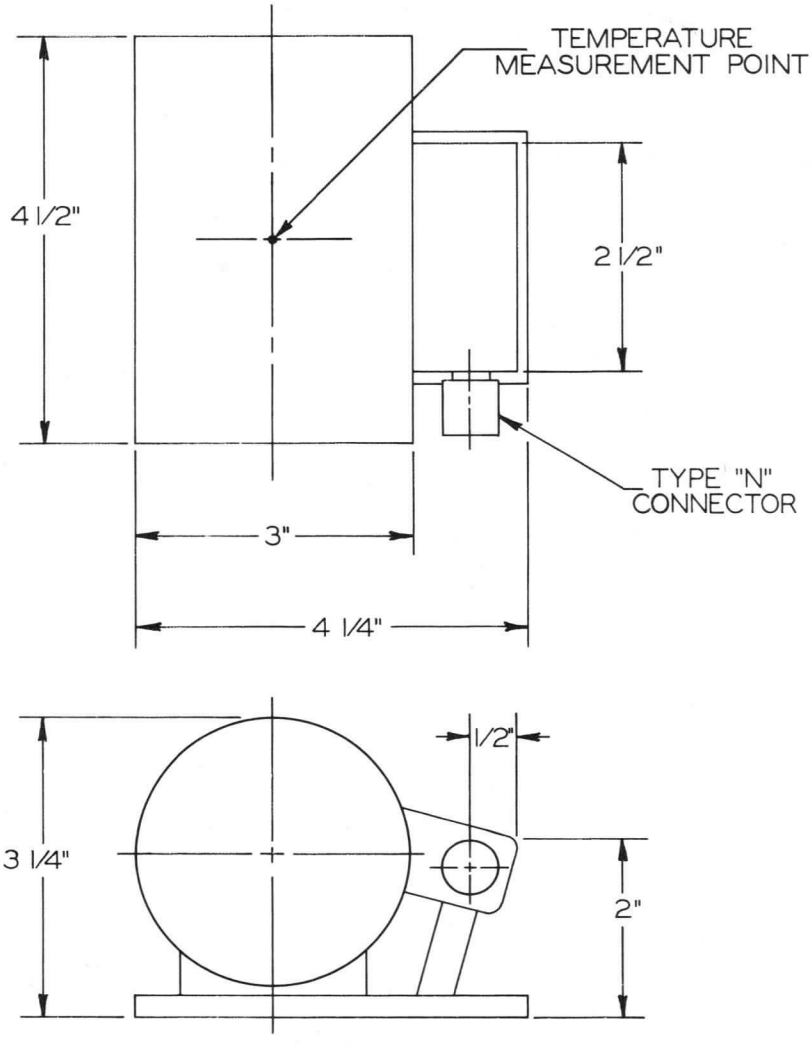

TUBE DEPARTMENT
GENERAL ELECTRIC
Schenectady, N. Y. 12305

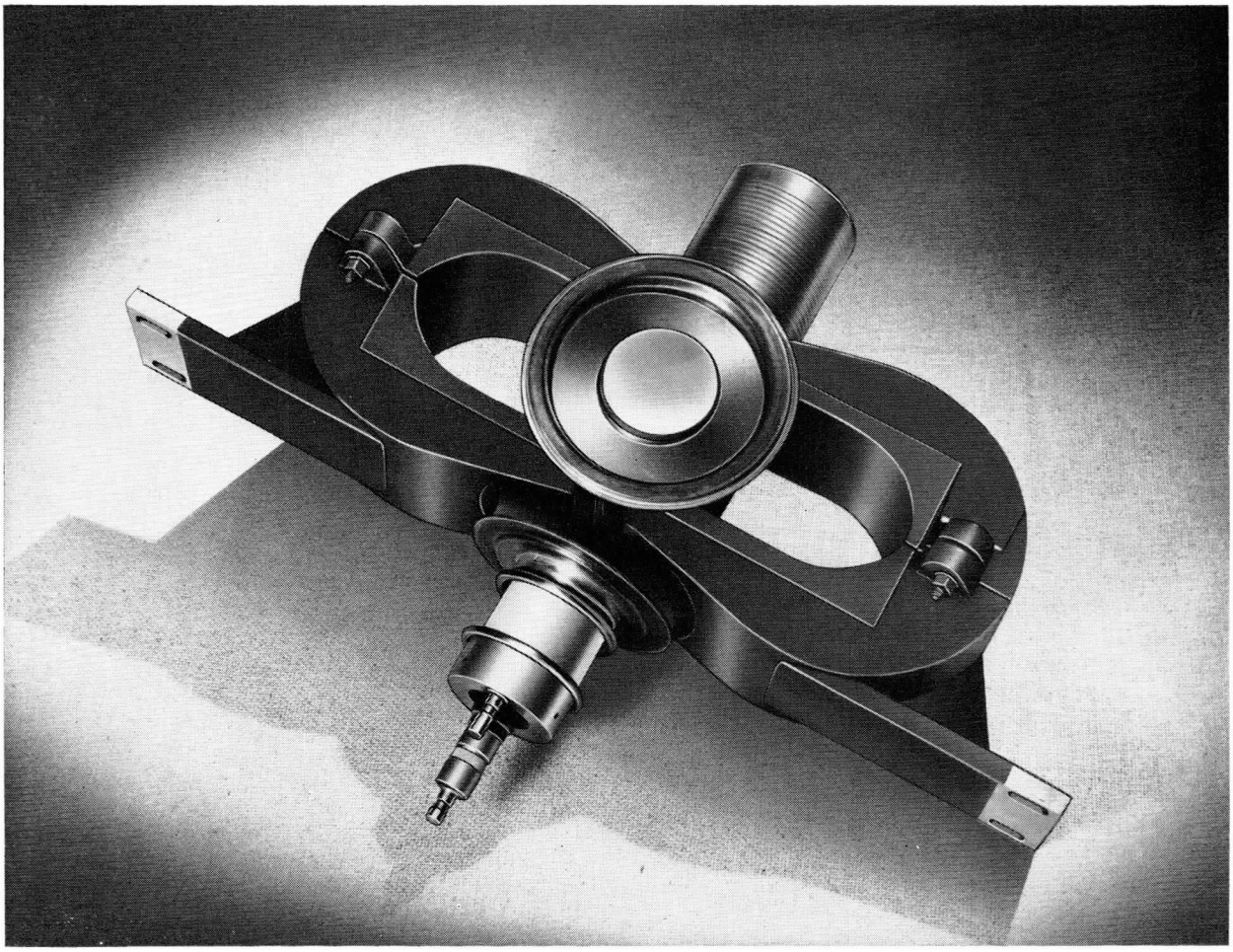

MAGNETRON

2750-2860 MEGACYCLES
4.5 MEGAWATTS PEAK OUTPUT

INTEGRAL MAGNET
WATER COOLED

PULSED

The GL-6410 magnetron is a fixed-frequency pulsed-type oscillator tube.

TECHNICAL INFORMATION

GENERAL

Electrical

Cathode—Coated Unipotential		
Heater Voltage—Pre-Heat	8.3 ± 1	Volts
Heater Current at 8.3 Volts—Pre-Heat	85	Amperes
Heating Time—Pre-Heat, minimum	3	Minutes
Capacitance		
Measured between Anode and Cathode	27	$\mu\mu$f

Mechanical

Mounting Position—Axis of Cathode in a Vertical Position		
Type of Cooling—Water		
Water Flow	2	Gallons per Minute
Pressure Drop, maximum	55	Pounds per Square Inch Absolute
Anode Temperature, maximum (See Outline on page 3 for details)	100	C
Cathode Stem Temperature, maximum (See Outline on page 3 for details)	200	C
Output Coupling—See Outline		
Load Transmission Line—RG-48/U Waveguide		
Net Weight, approximate	58	Pounds

GENERAL ELECTRIC

Supersedes pages 1 and 2 only dated 10-54

TECHNICAL INFORMATION (CONT'D)

MAXIMUM RATINGS AND TYPICAL OPERATING CONDITIONS

Maximum Ratings, Absolute Values

Duty Cycle	0.001	
Heater Voltage	9.3 Max	Volts
Heater Current	88 Max	Amperes
Heater Surge Current	100 Max	Amperes
Peak Anode Voltage	76 Max	Kilovolts
Peak Anode Current	135 Max	Amperes
Average Power Input	7 Max	Kilowatts
Pulse Duration*	2.2 Max	Microseconds
Output Circuit Pressurization	55 Max	Pounds per Square Inch Absolute
Voltage Standing Wave Ratio	1.5/1	

Typical Operation

Duty Cycle	0.00072	
Heater Voltage	8.3 ±12%	Volts
Peak Anode Voltage	71	Kilovolts
Peak Anode Current	130	Amperes
Current Pulse Width	2	Microseconds
Voltage Pulse Time-of-Rise	0.3	Microseconds
Pulling Factor, VSWR 1.5/1, maximum	15	Megacycles
Pushing Factor, maximum	0.025	Megacycles per Ampere
Peak Power Output	4500	Kilowatts

* With the 6410 used as a load on the pulser, the pulser should deliver a pulse with the following characteristic:

Time of Rise of Current Pulse	0.25 Microseconds	Measured between 20 and 85 Percent of the Average Peak Current.
Time of Fall of Current Pulse	0.6 Microseconds	Measured between 0 and 85 Percent of the Average Peak Current.
Time of Rise of Voltage Pulse	0.5 Microseconds	Measured between 20 and 85 Percent of the Average Peak Voltage.
Time of Fall of Voltage Pulse	2.5 Microseconds	Measured between 0 and 85 Percent of the Average Peak Voltage.

The spike or ripple must not exceed ±7 percent of the average peak value of the voltage or current, the inverse voltage must not exceed 20 percent of the forward voltage, and the negative amplitude of a post-voltage pulse oscillation must not exceed 10 percent of the average peak value.

X-RAY WARNING NOTICE

If the GL-6410 is operated at anode voltages in excess of 16 kilovolts, x-ray radiation shielding may be necessary to protect the user against possible danger of personal injury from prolonged exposure at close range. For further information consult the following references or other standard texts on the subject:

(a) *X-Ray Protection Design,* Handbook No. 50. National Bureau of Standards, Washington, D. C.
(b) *X-Ray Rrotecton,* Handbook No. 60. National Bureau of Standards, Washington, D. C.

The above references are available from the Superintendent of Documents, Government Printing Office, Washington 25, D. C.

During operation of the tube the high-voltage bushing must be immersed in a liquid insulating medium. General Electric 10 C insulating oil is recommended as having the proper insulating characteristics.

The tube should be mounted by means of the magnet brackets and in such a manner that these brackets support its entire weight. The equipment flanges mating to the cathode and output flanges must not be used for this purpose. Bellows or some other flexible union are recommended in connecting the cathode flange to the equipment flange.

Clearance of 8 inches minimum must be maintained between the magnets and any ferro-magnetic materials in the equipment except at the bracket ends of the tube where 3 inches minimum clearance is satisfactory. A clearance of 12 inches minimum must be maintained between the permanent magnet of the tube and any other permanent magnet or electromagnet.

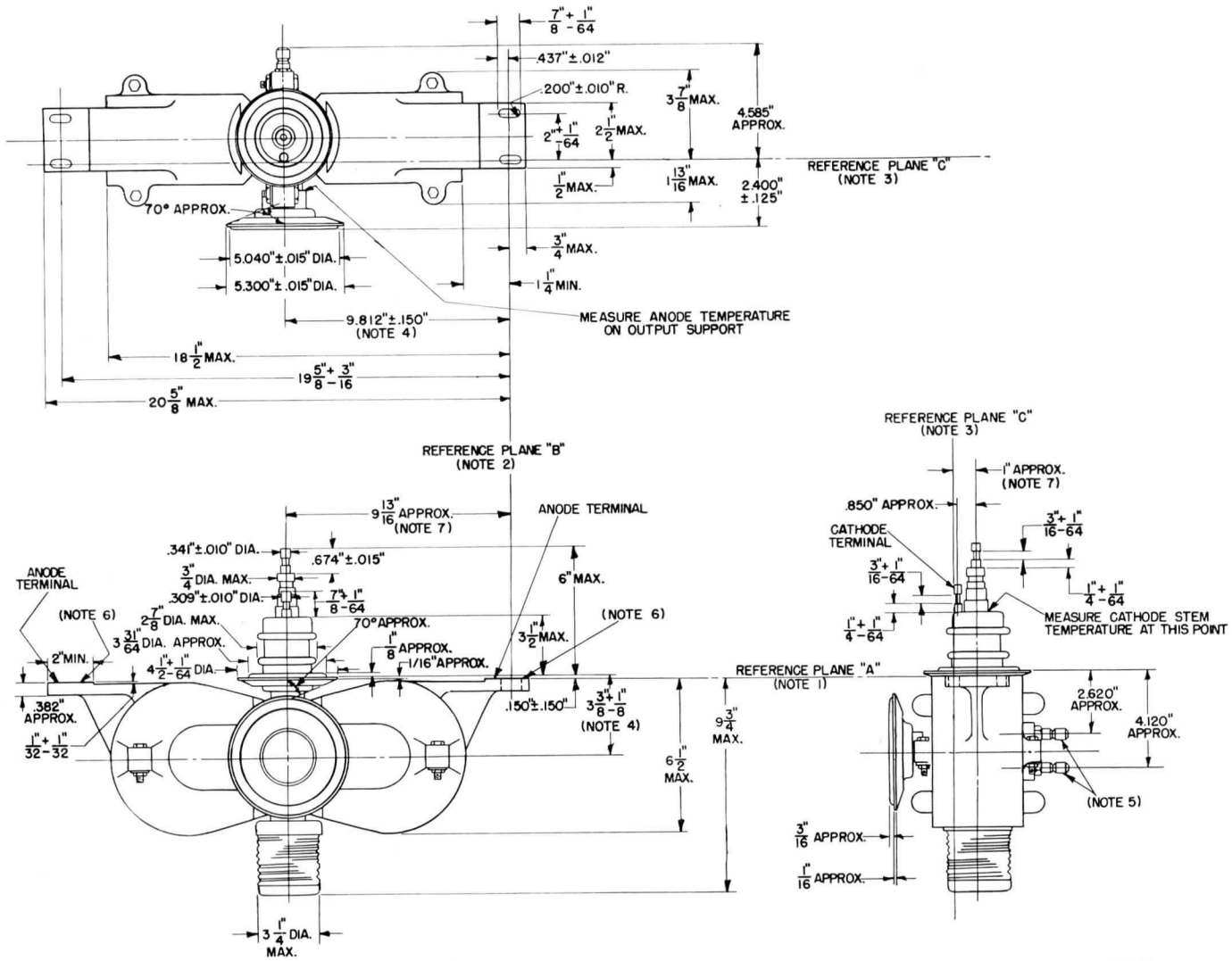

NOTES

1. Reference plane "A" lies on mounting surface of magnets.
2. Reference plane "B" passes through centerline of holes in bracket and is perpendicular to reference plane "A."
3. Reference plane "C" passes through centerline of holes in bracket and is perpendicular to reference plane "A" and "B."
4. Refers to centerline of the waveguide.
5. Hansen B3-T20 coupling plug.
6. These surfaces coplanar within $\frac{1}{32}$ in.
7. Parts of this centerline may vary from true location by $\frac{3}{16}$ in.

TUBE DEPARTMENT

GENERAL ELECTRIC

Schenectady 5, N. Y.

10-54 (10M)

PRINTED IN U.S.A.

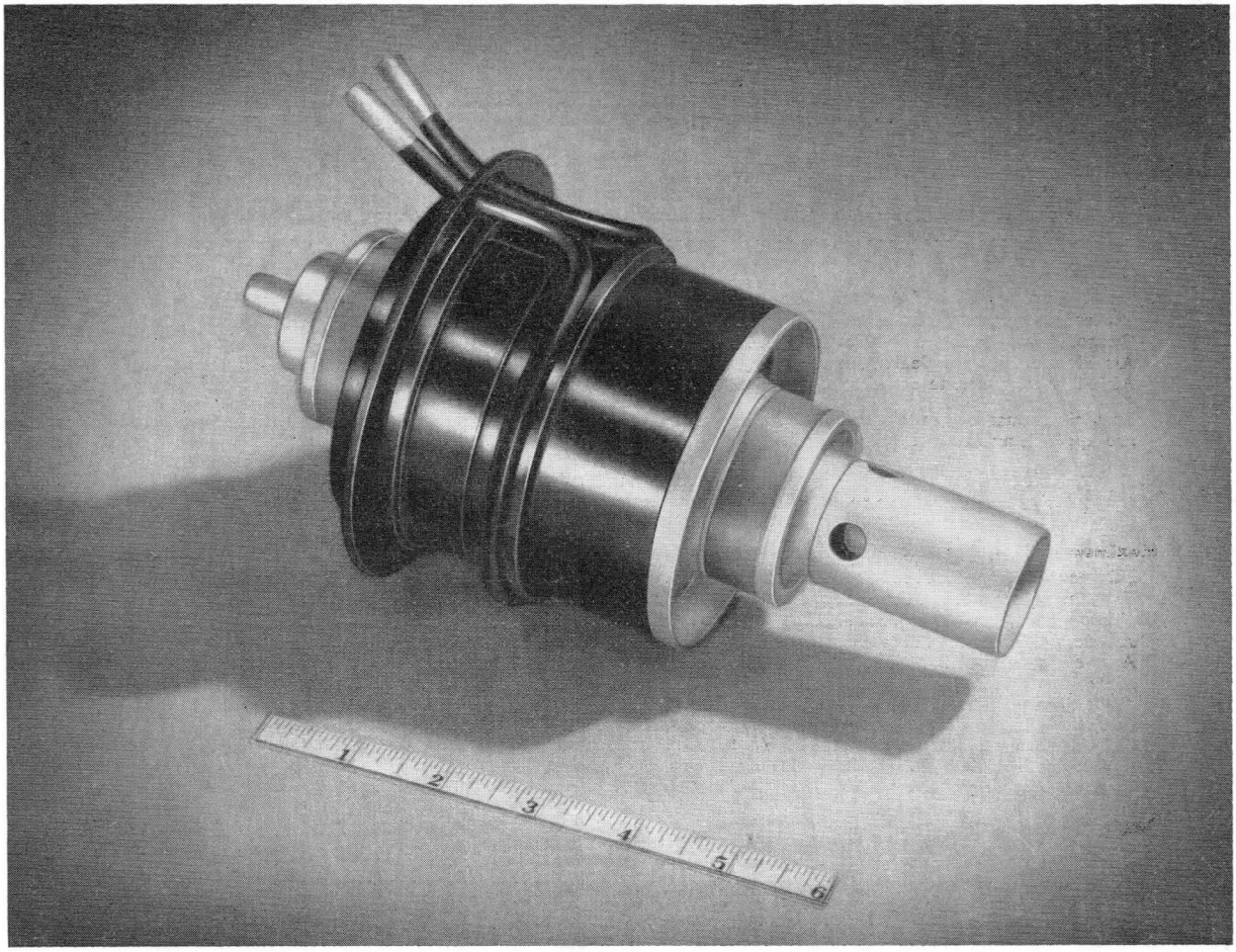

CW MAGNETRON

METAL AND CERAMIC
2.5 KILOWATTS OF CW POWER
FOR DIELECTRIC HEATING
915 MEGACYCLES
TUNGSTEN FILAMENT
HIGH EFFICIENCY

EXTERNAL MAGNET REQUIRED

The GL-6787 is a water and forced-air-cooled CW magnetron for use as a power source in dielectric heating. It can produce 2.5 kilowatts of useful power and operates at a fixed frequency between 890 and 940 megacycles. An electromagnet connected in series with the plate power supply will provide the required external magnetic field.

TECHNICAL INFORMATION

GENERAL

Electrical

Preheat Filament Voltage*	$12^{+0.5}_{-1.2}$	Volts
Preheat Filament Current at 12 Volts	56 ± 5	Amperes
Minimum Preheat Time	20	Seconds
Filament Cold Resistance	0.018	Ohms
Anode-Cathode Capacitance	14	$\mu\mu f$

GENERAL ELECTRIC

TECHNICAL INFORMATION (CONT'D)

Mechanical

Mounting Position—Tube Axis Vertical—Cathode Up or Down
Mounting Support and Tube Connections—See K-69087-72A732 on page six for details.

Net Weight	4.6	Pounds

Thermal

Type of Cooling—Forced Air and Water

Water Flow through Tube, minimum	2	Quarts per Minute
Outgoing Water Temperature	70	Max C
Air Flow on Output Seal	10	Cubic Feet per Minute
Air Flow on Cathode Structure	10	Cubic Feet per Minute

Provision must be made to prevent application of filament or plate power to the tube before water and air cooling are applied, and to remove power in the case of cooling-system failure.

MAXIMUM RATINGS AND TYPICAL OPERATING CONDITIONS

Maximum Ratings, Absolute Values

Filament Voltage*	12.5	Volts
Filament Current	61	Amperes
Filament Surge Current	85	Amperes
Anode Voltage	4100	Volts
Anode Current	1.5	Amperes
Plate Input	6000	Watts
Plate Dissipation	3500	Watts
Outgoing Anode Cooling Water	70	Max C
Cathode Stem Temperature (See Outline K-69087-72A731 on page seven for details)	200	Max C
Voltage Standing Wave Ratio—Presented by the Load	3:1	

Typical Operating Conditions

Filament Voltage*	12.0	Volts
Filament Current	55	Amperes
Frequency	890 to 940	Megacycles
Anode Voltage	3700	Volts
Anode Current	1.10	Amperes
Power Output, minimum	2.5	Kilowatts
Pulling Factor, VSWR 1.5:1	2	Megacycles
Pushing Factor, I_b from 0.3 to 1.0 ampere	2.6	Megacycles per Second per Ampere
Thermal Coefficient of Temperature	−0.07	Megacycles per Second per C

Magnetic Field—See K-69087-71A286 on page five for details.

* While the magnetron is oscillating, a portion of the input plate power (depending on load conditions) will cause the filament to overheat. Maximum life will be obtained by reducing the filament power during oscillation; if the loading changes rapidly, this reduction can best be done by an automatic control, otherwise, a manual correction may be used. The required reduction of power can be ascertained by decreasing the filament voltage until the hot filament resistance during oscillation is the same as that when the magnetron is not oscillating.

TYPICAL PERFORMANCE CHART

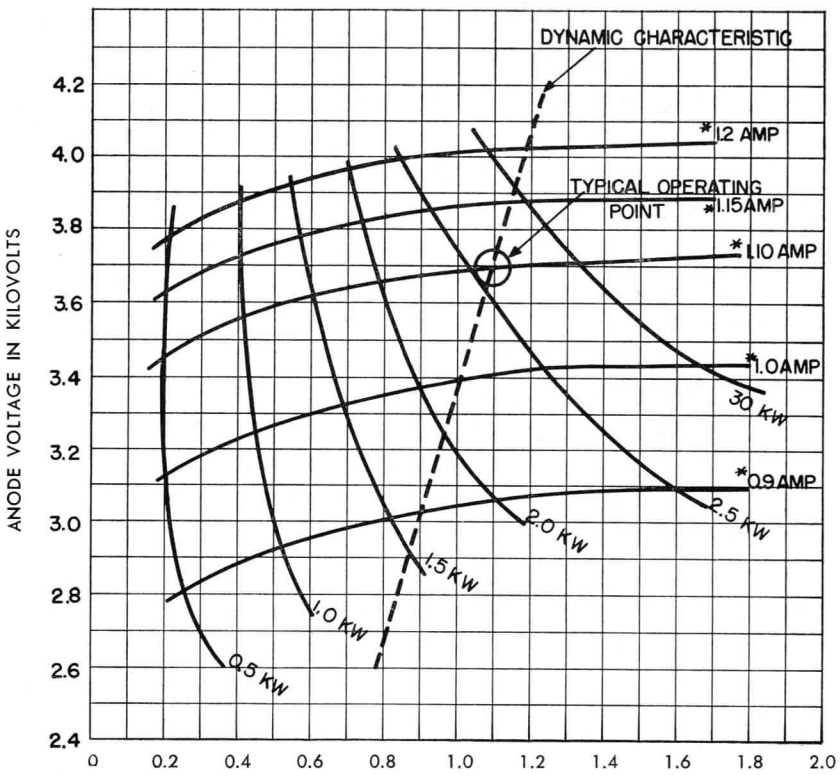

*CURRENT THROUGH ELECTROMAGNET. SEE OUTLINE K-69087-71A286 ON PAGE FIVE.

K-69087-72A734 2-24-56

TYPICAL PUSHING CURVE

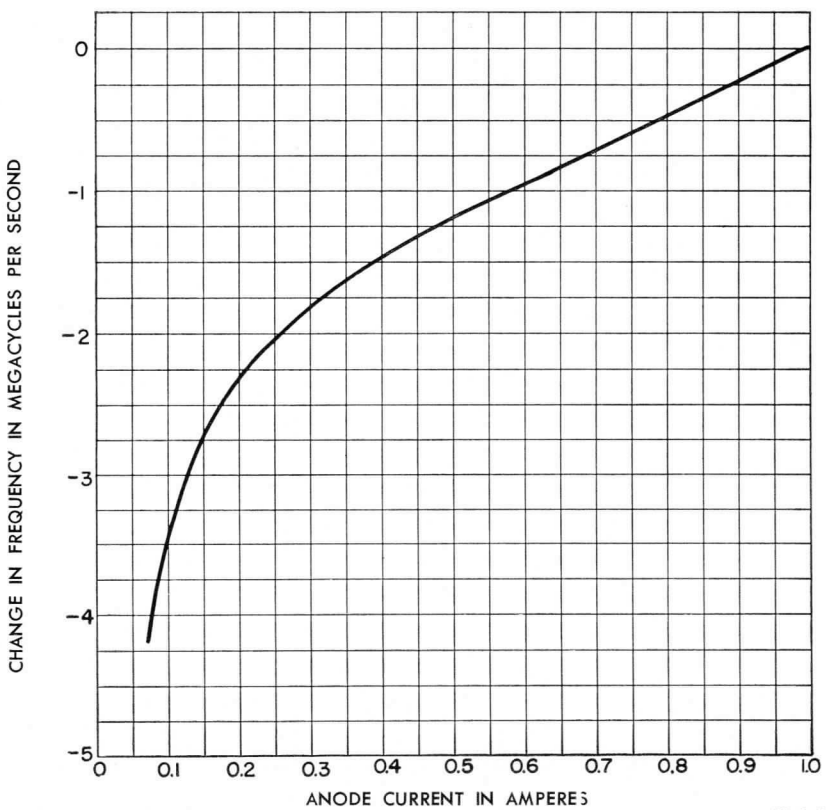

K-69087-72A735 11-9-55

RIEKE DIAGRAM

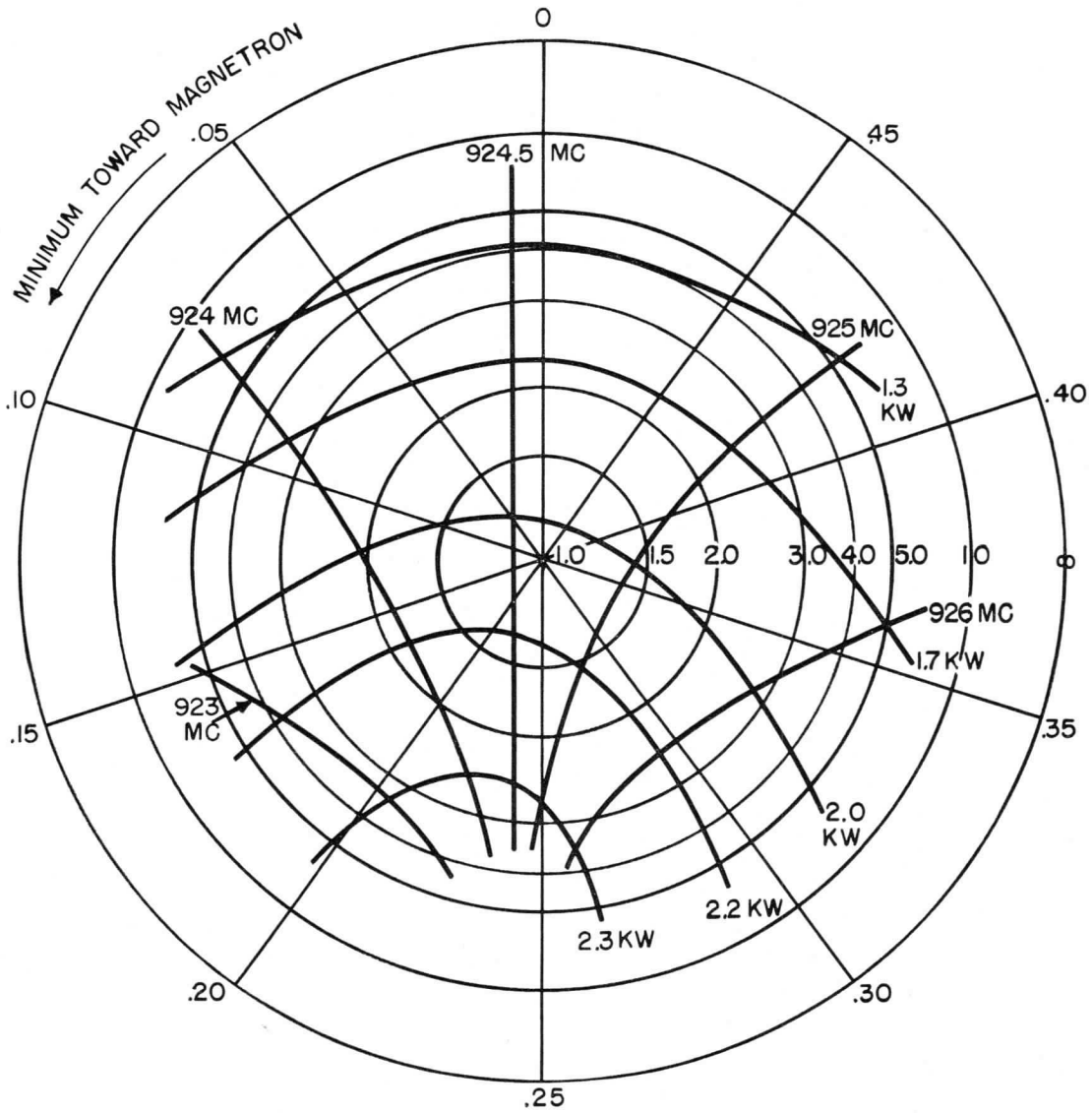

CONSTANT ANODE VOLTAGE = 3.3 KILOVOLTS.
ELECTROMAGNET—SEE OUTLINE K-69087-71A286 ON PAGE FIVE FOR DETAILS.
REFERENCE POINT IS 1⅜" BELOW MOUNTING FLANGE (CENTER OF THE ANODE).
FIELD SHUNT RESISTANCE = 5 KILOHMS.

K-69087-72A733

2-22-56

ELECTROMAGNET FOR GL-6787

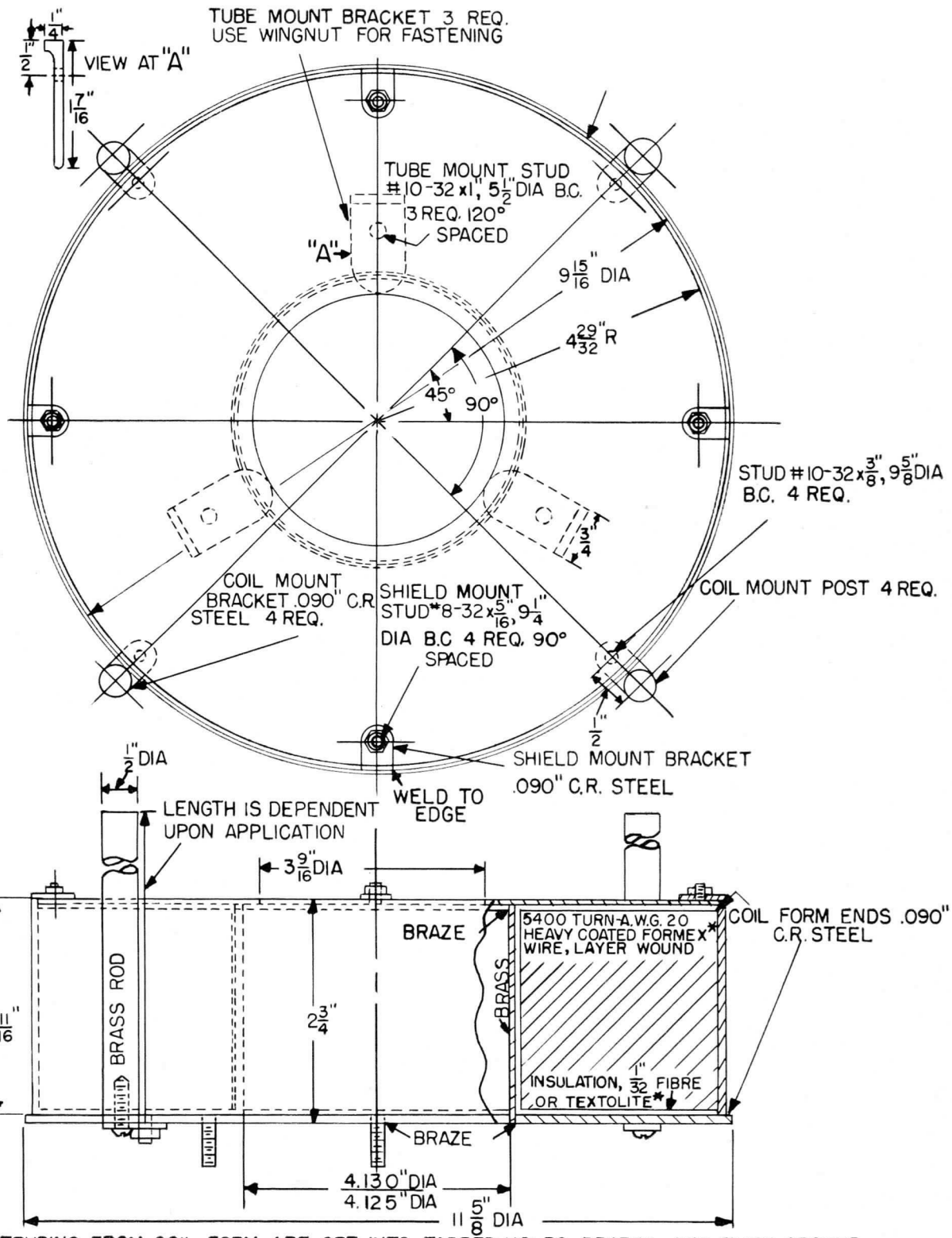

NOTES:

1. ALL STUDS PROTRUDING FROM COIL FORM ARE SET INTO TAPPED HOLES, BRAZED, AND THEN GROUND FLUSH ON INSIDE OF FORM.

*REGISTERED TRADEMARK OF GENERAL ELECTRIC COMPANY.

MOUNTING FOR GL-6787

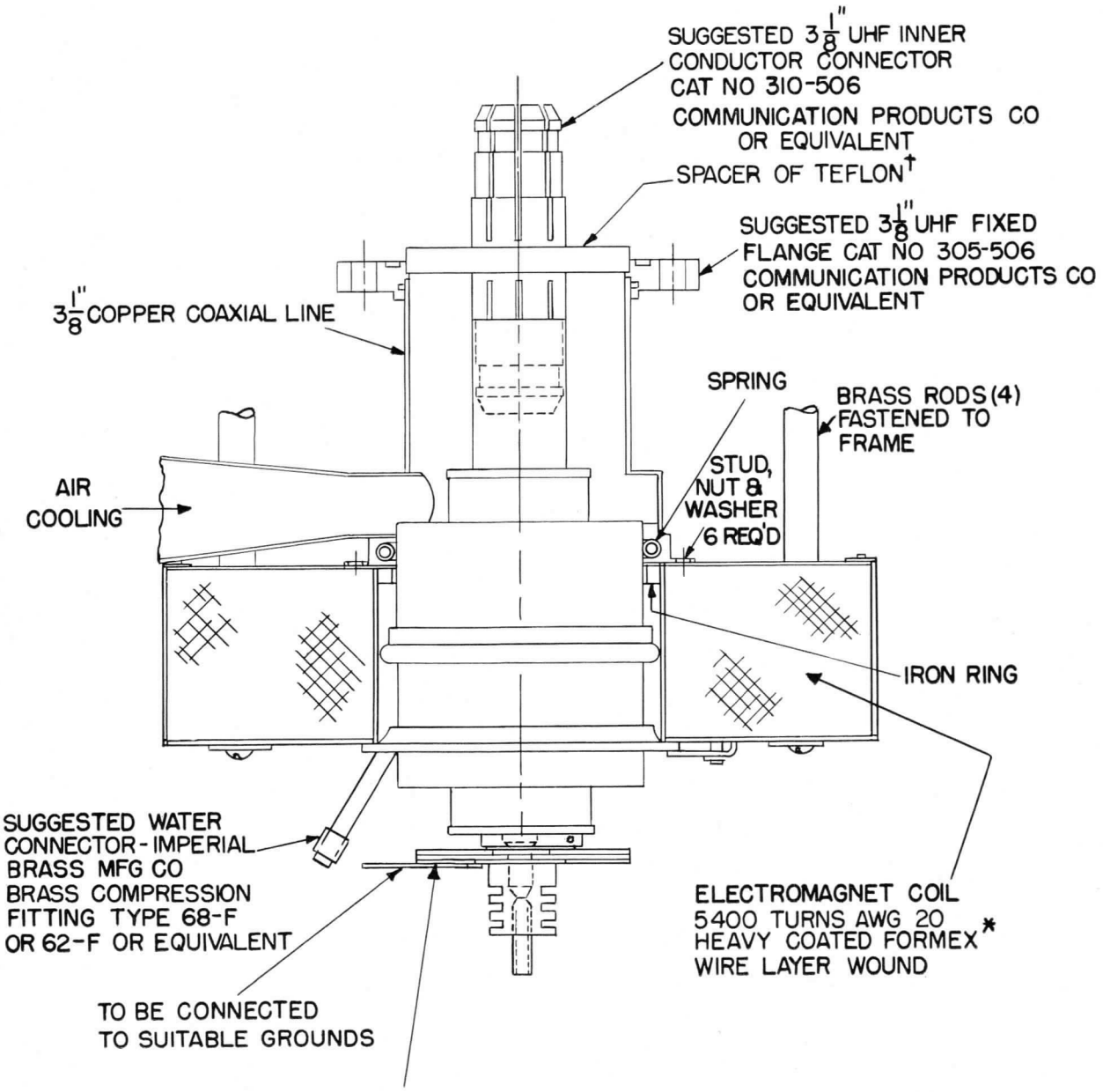

*REGISTERED TRADEMARK OF GENERAL ELECTRIC COMPANY.

†REGISTERED TRADEMARK OF E. I. du PONT de NEMOURS AND COMPANY, INC.

OUTLINE

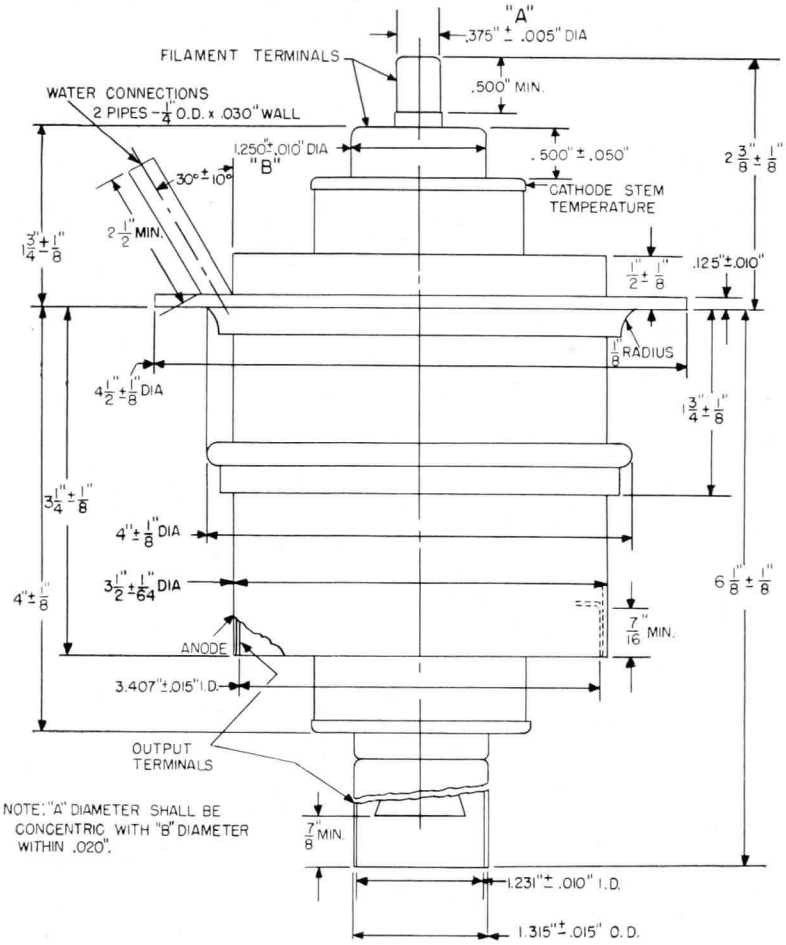

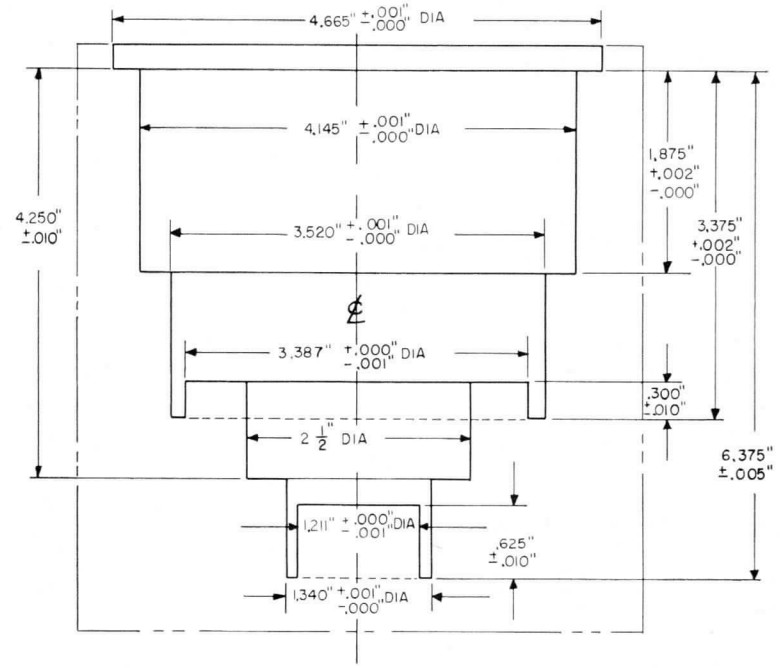

NOTE: THE CONCENTRICITY AND OVALNESS OF THE TUBE SHALL BE DEFINED BY THE ABOVE FIXTURE INTO WHICH THE TUBE SHALL FIT FREELY.

ALL DIAMETERS OF THE ABOVE FIXTURE SHALL BE CONCENTRIC WITH THE 3.515″ +.001″ −.000″ DIAMETER WITHIN .001″.

ELECTRONIC COMPONENTS DIVISION
GENERAL ELECTRIC
Schenectady 5, N. Y.

PRINTED IN U.S.A.

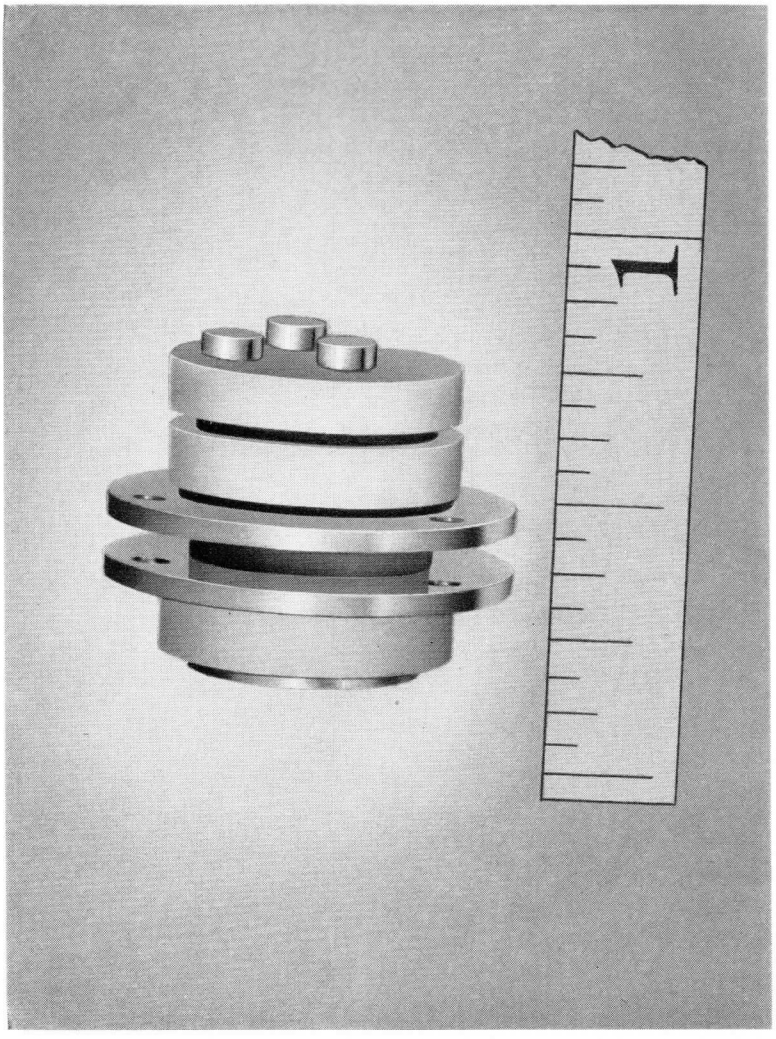

VOLTAGE-TUNABLE MAGNETRON

METAL AND CERAMIC
POWER OUTPUT—10 WATTS

2000-4000 MEGACYCLES
VOLTAGE-TUNED OVER FREQUENCY RANGE

The GL-6917 is a CW interdigital voltage-tunable magnetron for operation in the 2000-to-4000-megacycle range. In a narrow-band circuit, this tube has a power output up to 10 watts. In a circuit covering 2000 to 4000 megacycles, it has a power output up to 1.0 watt.

A novel ceramic-to-metal seal construction results in a tube extremely small in size—less than $\frac{5}{8}$ inch long and less than $\frac{3}{4}$ inch in diameter—and one which is especially designed for operation at microwave frequencies.

The GL-6917, in an external r-f circuit, may be voltage-tuned over a portion or all of the frequency range for which it is designed. The frequency of the generated signal is a linear function of the anode voltage. The r-f power output at any frequency is a function of the impedance of the external r-f circuit.

GENERAL ELECTRIC

GENERAL

Electrical

	Minimum	Bogey	Maximum	
Cathode—Directly Heated				
Filament Voltage*	2.0	2.25	2.5	Volts
Filament Current*	...	3.0	...	Amperes
Direct Interelectrode Capacitances				
Anode to Anode, approximate	...	4.9	...	$\mu\mu$f
Both Anodes to Filament, approximate	...	1.3	...	$\mu\mu$f
Both Anodes to Injection Electrode, approximate	...	2.9	...	$\mu\mu$f
Both Anodes to Cold Cathode, approximate	...	3.3	...	$\mu\mu$f

Mechanical

Mounting Position—Any

Thermal

Type of Cooling—Forced Air

Envelope Temperature, maximum	150	C

MAXIMUM RATINGS AND TYPICAL OPERATING CONDITIONS

Maximum Ratings, Absolute Values

Anode Voltage	2500	Volts
Anode Current	40	Milliamperes
Power Input, with forced-air cooling	60	Watts
Injection Electrode Voltage	500	Volts
Injection Electrode Current	1.0	Milliamperes
Filament Current	3.2	Amperes
Voltage Standing Wave Ratio	1.5	

Typical Operating Conditions

Operation with 60-Cycle Sweep Voltage in a Wide-Band Circuit

Tunable Range†	2000 to 4000	Megacycles
Magnetic Field Strength‡	2500 ± 50	Gausses
Tuning Rate, approximate	3.0	Megacycles per Volt
Filament Voltage, approximate*	2.25	Volts
Filament Current*	3.0	Amperes
Anode Voltage at 3 Kilomegacycles, 2500 gausses	1150	Volts
Anode Current, average	10 to 20	Milliamperes
Injection Electrode Voltage, positive with respect to cathode	300 to 500	Volts
Injection Electrode Current	0.1	Milliamperes
Voltage Standing Wave Ratio	1.3	
Power Output, average	0.5 to 1.0	Watts

* Filament current should be adjusted to 3.0 amperes.

† Frequency controlled by anode voltage.

‡ An "E" shaped, nylon-coated magnet is available from the tube manufacturer. Other magnets can be used, provided they can supply a uniform field of 2500 gausses across an air gap at least $\frac{7}{8}$ inch long and $\frac{17}{32}$ inch in diameter. The tube will operate satisfactorily between 2000 and 3000 gausses with some change of characteristics. In general, increasing the magnetic field will increase the power-output, efficiency, and the anode voltage for constant frequency and decrease the tuning rate.

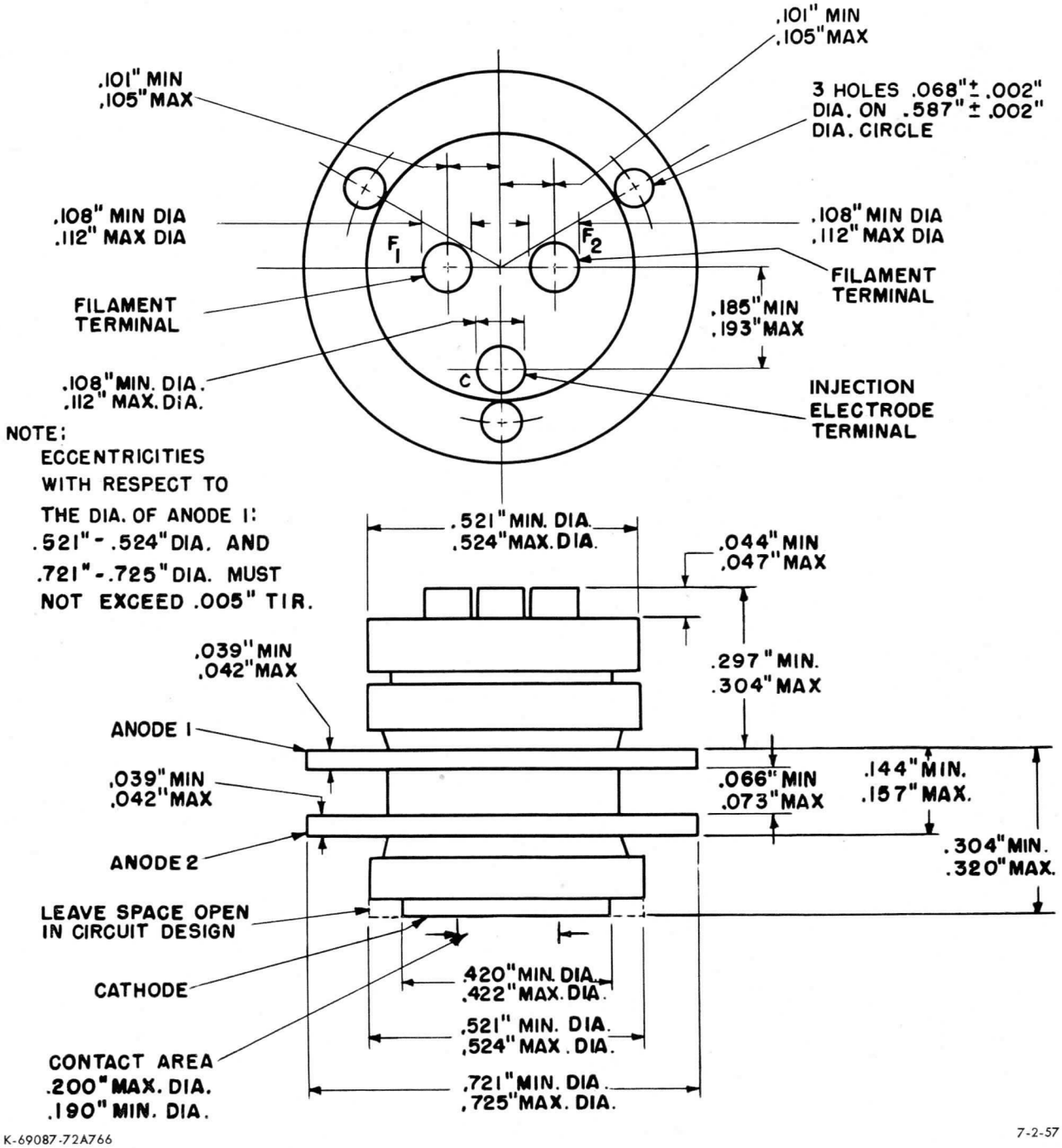

K-69087-72A766

7-2-57

ELECTRONIC COMPONENTS DIVISION

GENERAL ELECTRIC

Schenectady 5, N. Y.

PRINTED IN U.S.A.

GL-7398

PACKAGED VOLTAGE-TUNABLE MAGNETRON

2200-3850 MEGACYCLES **2 WATTS CW OUTPUT**

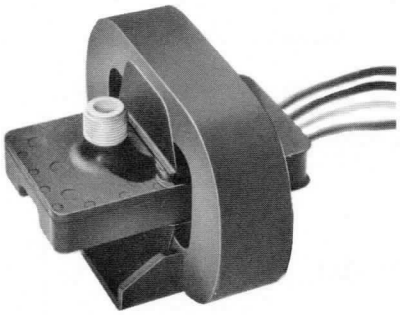

The GL-7398 is a packaged voltage-tunable magnetron designed for voltage-tunable operation in the 2200- to 3850-megacycle frequency range. It is a complete r-f power source package requiring only input power connections and an r-f power output connection and has a minimum CW power output of two watts across the entire frequency range. The tube may be voltage-tuned over a portion or all of the frequency range for which it is designed or operated at a fixed frequency. The voltage-frequency relationship is essentially linear.

Electrical

	Minimum	Bogey	Maximum	
Cathode—Directly Heated				
Filament Voltage*	2.2	2.5	2.7	Volts
Filament Current	—	3.0	—	Amperes

Mechanical

Mounting Position—Any

Net Weight	3.5	Pounds

Thermal

Type of Cooling—Forced Air		
Air Flow	5	Cubic Feet per Minute
Ambient Air Temperature, Maximum	50	C

MAXIMUM RATINGS—ABSOLUTE VALUES

Anode Voltage	2000	Volts	
Anode Current	30	Milliamperes	
Power Input, with forced-air cooling	45	Watts	
Injection Electrode Voltage	700	Volts	
Injection Electrode Current	1.0	Milliamperes	
Filament Current	3.2	Amperes	
Voltage Standing Wave Ratio	1.5		

TYPICAL OPERATION

Operation with 60-cycle Sweep Voltage in Wide-Band Circuit

Filament Voltage*, approximate	2.50	Volts
Filament Current	3.0	Amperes
Tunable Range†	2200—3850	Megacycles
Tuning Rate, approximate	3.0	Megacycles per Volt
Anode Voltage at 3 Kilomegacycles	1250	Volts
Anode Current, average	10 to 20	Milliamperes
Injection Electrode Voltage, positive with respect to cathode	300 to 600	Volts
Injection Electrode Current	0.1	Milliamperes
Voltage Standing Wave Ratio of Load	1.3	
Power Output, minimum	2.0	Watts
Variation over Band	Less than 4:1	

* Filament current should be adjusted to 3.0 amperes.
† Frequency controlled by anode voltage.

CAUTION: A clearance of 9 inches between ferro-magnetic materials and the tube will prevent any serious change of the operating characteristics.

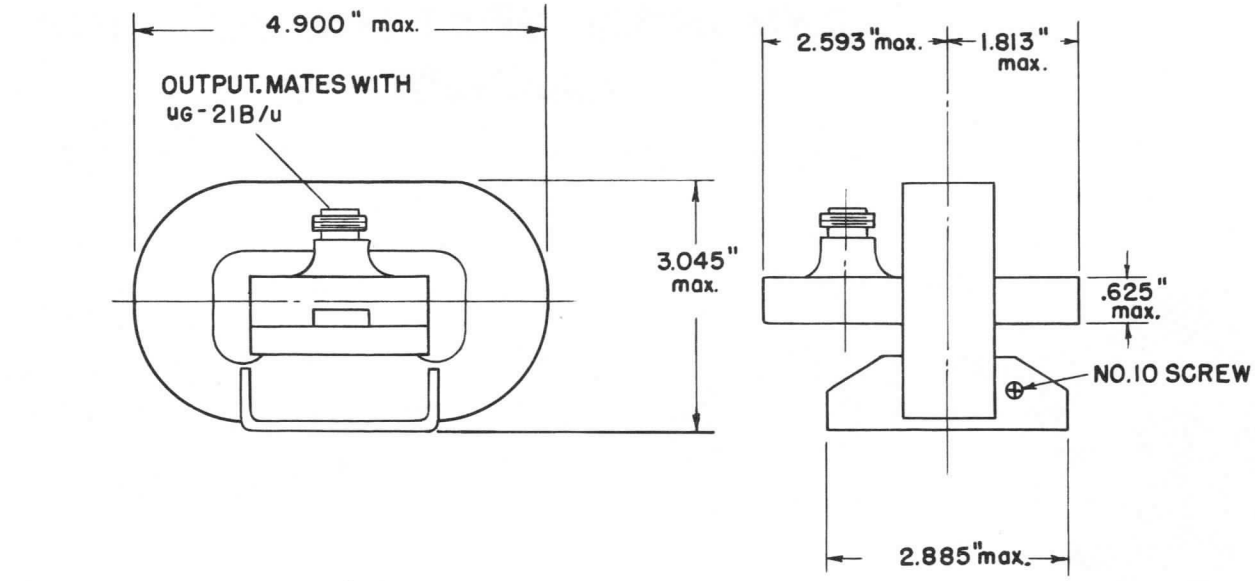

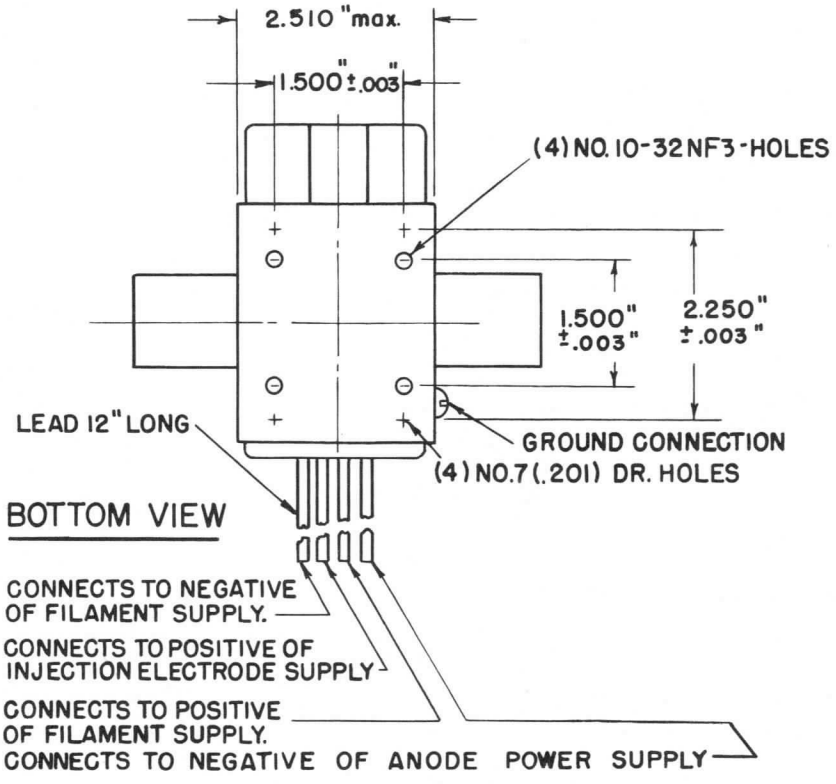

K-69087-72A870

6-8-59

NOTE: One side of filament is connected internally to the negative power supply lead.

ELECTRONIC COMPONENTS DIVISION
GENERAL ELECTRIC
Schenectady 5, N. Y.

PRINTED IN U.S.A.

GL-7398

PACKAGED VOLTAGE-TUNABLE MAGNETRON

2200-3850 MEGACYCLES **2 WATTS CW OUTPUT**

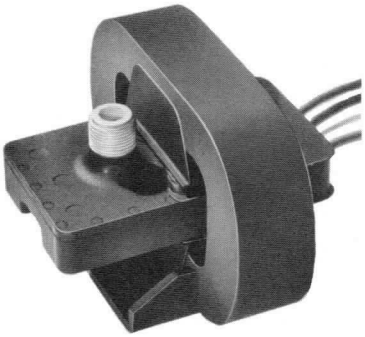

The GL-7398 is a packaged voltage-tunable magnetron designed for voltage-tunable operation in the 2200- to 3850-megacycle frequency range. It is a complete r-f power source package requiring only input power connections and an r-f power output connection and has a minimum CW power output of two watts across the entire frequency range. The tube may be voltage-tuned over a portion or all of the frequency range for which it is designed or operated at a fixed frequency. The voltage-frequency relationship is essentially linear.

Electrical

	Minimum	Bogey	Maximum	
Cathode—Directly Heated				
Filament Voltage*	2.2	2.5	2.7	Volts
Filament Current	—	3.0	—	Amperes

Mechanical

Mounting Position—Any
Net Weight . . . . . 3.5 Pounds

Thermal

MAXIMUM RATINGS—ABSOLUTE VALUES

Anode Voltage	2000 Volts	Injection Electrode Current	1.0 Milliamperes
Anode Current	30 Milliamperes	Filament Current	3.2 Amperes
Power Input, with forced-air cooling	45 Watts	Voltage Standing Wave Ratio	1.5
Injection Electrode Voltage	700 Volts		

TYPICAL OPERATION

Operation with 60-cycle Sweep Voltage in Wide-Band Circuit		Anode Current, average	10 to 20 Milliamperes
Filament Voltage*, approximate	2.50 Volts	Injection Electrode Voltage, positive with respect to cathode	300 to 600 Volts
Filament Current	3.0 Amperes	Injection Electrode Current	0.1 Milliamperes
Tunable Range†	2200—3850 Megacycles	Voltage Standing Wave Ratio of Load	1.3
Tuning Rate, approximate	3.0 Megacycles per Volt	Power Output, minimum	2.0 Watts
Anode Voltage at 3 Kilomegacycles	1250 Volts	Variation over Band	Less than 4:1

* Filament current should be adjusted to 3.0 amperes.
† Frequency controlled by anode voltage.

CAUTION: A clearance of 9 inches between ferro-magnetic materials and the tube will prevent any serious change of the operating characteristics.

GENERAL ELECTRIC

Supersedes ET-T1532A dated 6-60

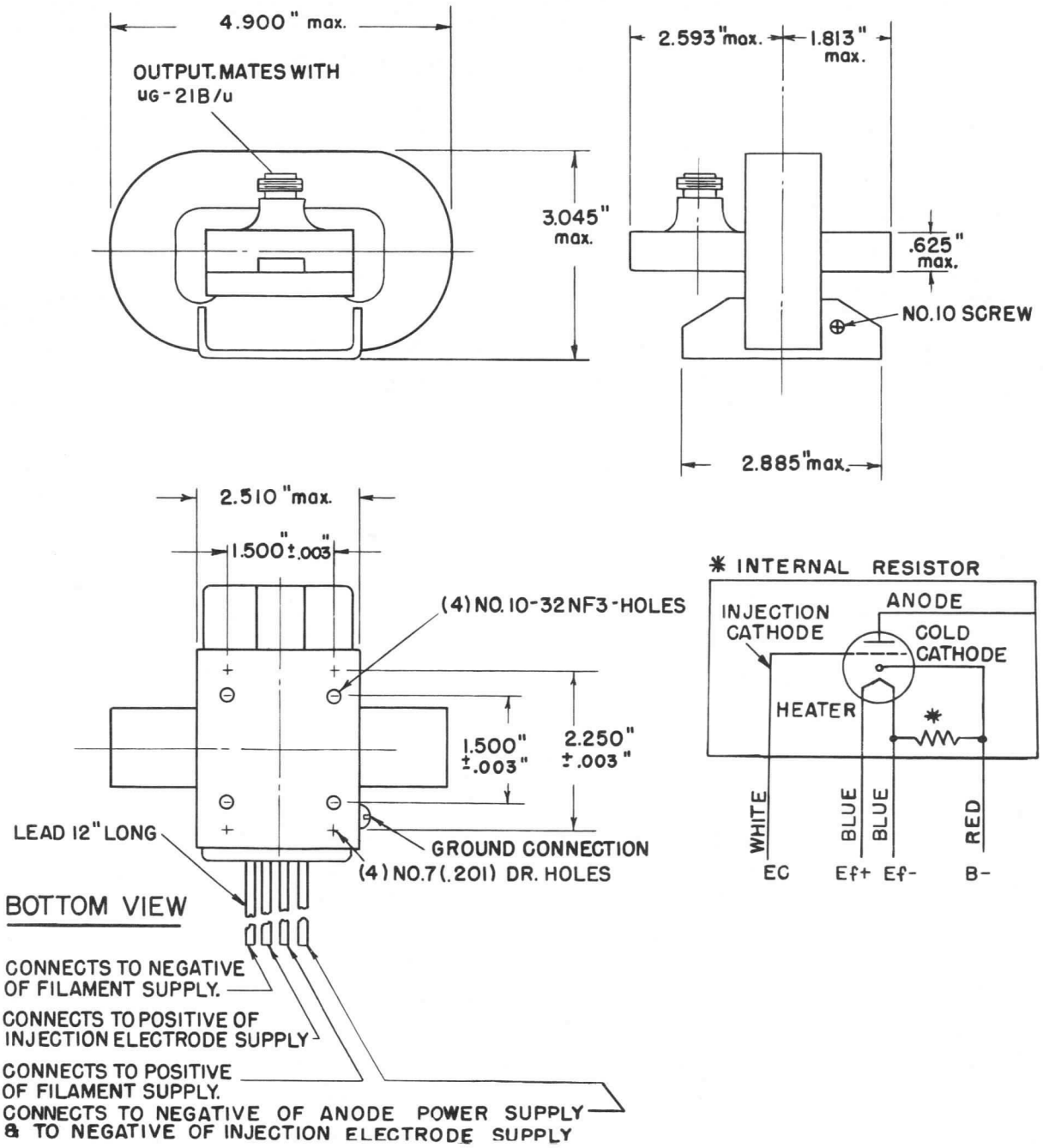

K-69087-72A870

3-61

NOTE: One side of filament is connected internally to the negative power supply lead.

GENERAL ELECTRIC

POWER TUBE DEPARTMENT

Schenectady 5, N. Y.

PRINTED IN U.S.A.

GL-7680

PACKAGED VOLTAGE-TUNABLE MAGNETRON

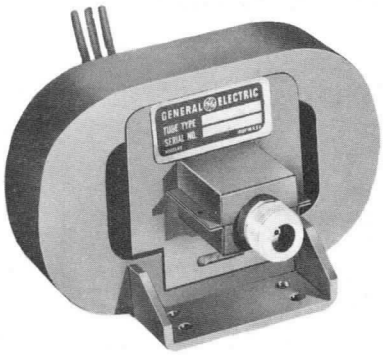

1000–2300 MEGACYCLES **1 WATT CW OUTPUT**

The GL-7680 is a packaged voltage-tunable magnetron for voltage-tunable operation in the 1000-to-2300-megacycle frequency range. It is a complete r-f power source package requiring only input power connections and an r-f power output connection and has a minimum CW power output of one watt across the entire frequency range. The tube may be voltage-tuned over a portion or all of the frequency range for which it is designed or operated at a fixed frequency. The voltage-frequency relationship is essentially linear.

Electrical

	Minimum	Bogey	Maximum	
Cathode—Directly Heated				
Filament Voltage*	2.3	2.6	2.8	Volts
Filament Current	—	3.0	—	Amperes

Mechanical

Mounting Position—Any
Net Weight ..... 3.5 Pounds

Thermal

Type of Cooling—Forced Air
Air Flow ..... 5 Cubic Feet Per Minute
Ambient Air Temperature,
Maximum ..... 50 C

MAXIMUM RATINGS—ABSOLUTE VALUES

Anode Voltage	2000 Volts	Injection Electrode Current	1.0 Milliamperes
Anode Current	20 Milliamperes	Filament Current	3.2 Amperes
Power Input, with forced-air cooling	45 Watts	Voltage Standing Wave Ratio	1.5
Injection Electrode Voltage	500 Volts		

TYPICAL OPERATION

Operation with 60-cycle Sweep Voltage in Wide-Band Circuit

Filament Voltage*, approximate	2.60 Volts	Anode Current, average	5 to 15 Milliamperes
Filament Current	3.0 Amperes	Injection Electrode Voltage, positive with respect to cathode	200 to 400 Volts
Tunable Range†	1000–2300 Megacycles	Injection Electrode Current	0.1 Milliamperes
Tuning Sensitivity, approximate	1.2 Megacycles per Volt	Voltage Standing Wave Ratio of Load	1.3
Anode Voltage at 1.6 Kilomegacycles	1400 Volts	Power Output, minimum	1.0 Watts
		Variation over Band	Less than 4:1

* Filament current should be adjusted to 3.0 amperes.
† Frequency controlled by anode voltage.

CAUTION: A clearance of nine inches between ferromagnetic materials and the tube will prevent any serious change of the operating characteristics.

GENERAL ELECTRIC

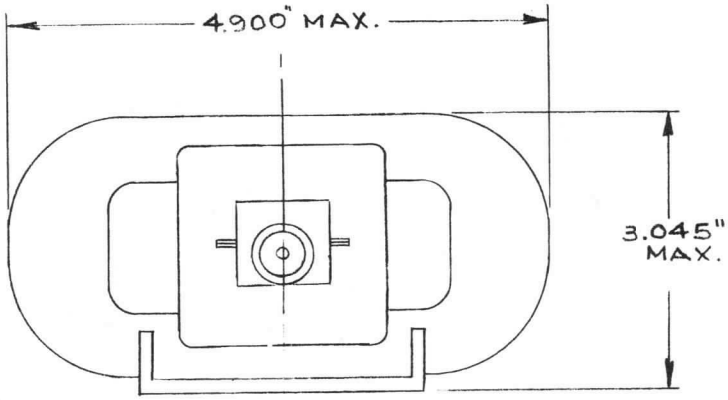

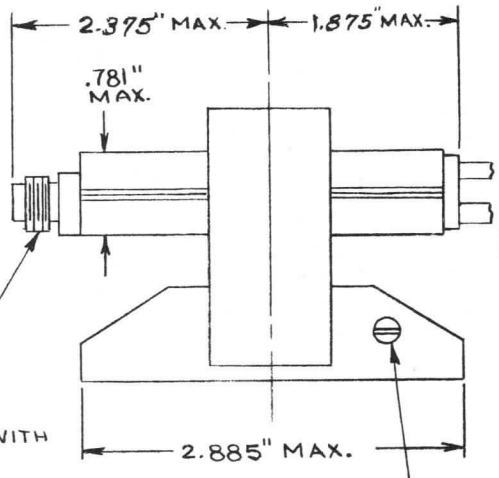

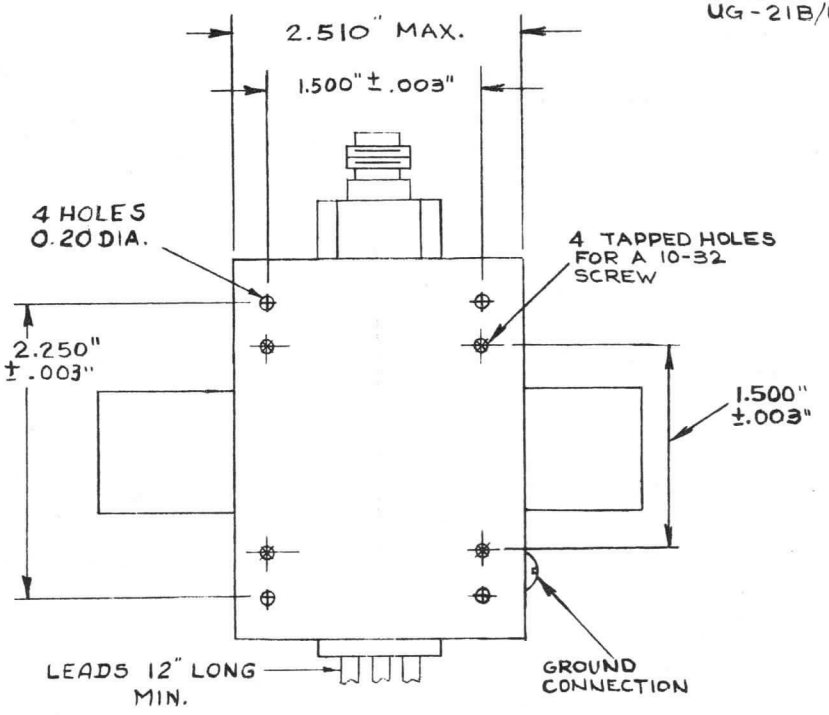

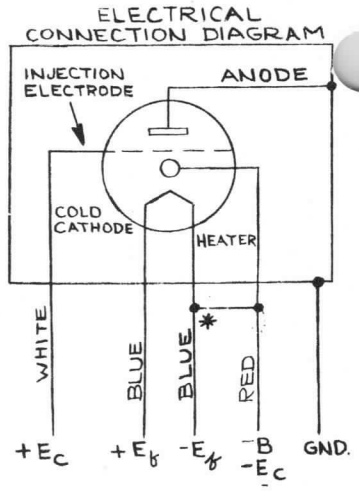

12-62

K69087-72A903

***Note: An external connection is required between the cold cathode lead and one of the heater leads.**

GENERAL ELECTRIC
POWER TUBE DEPARTMENT
Schenectady 5, N. Y.

PRINTED IN U.S.A.

GENERAL ELECTRIC

KENOTRONS

Supersedes ETI-140

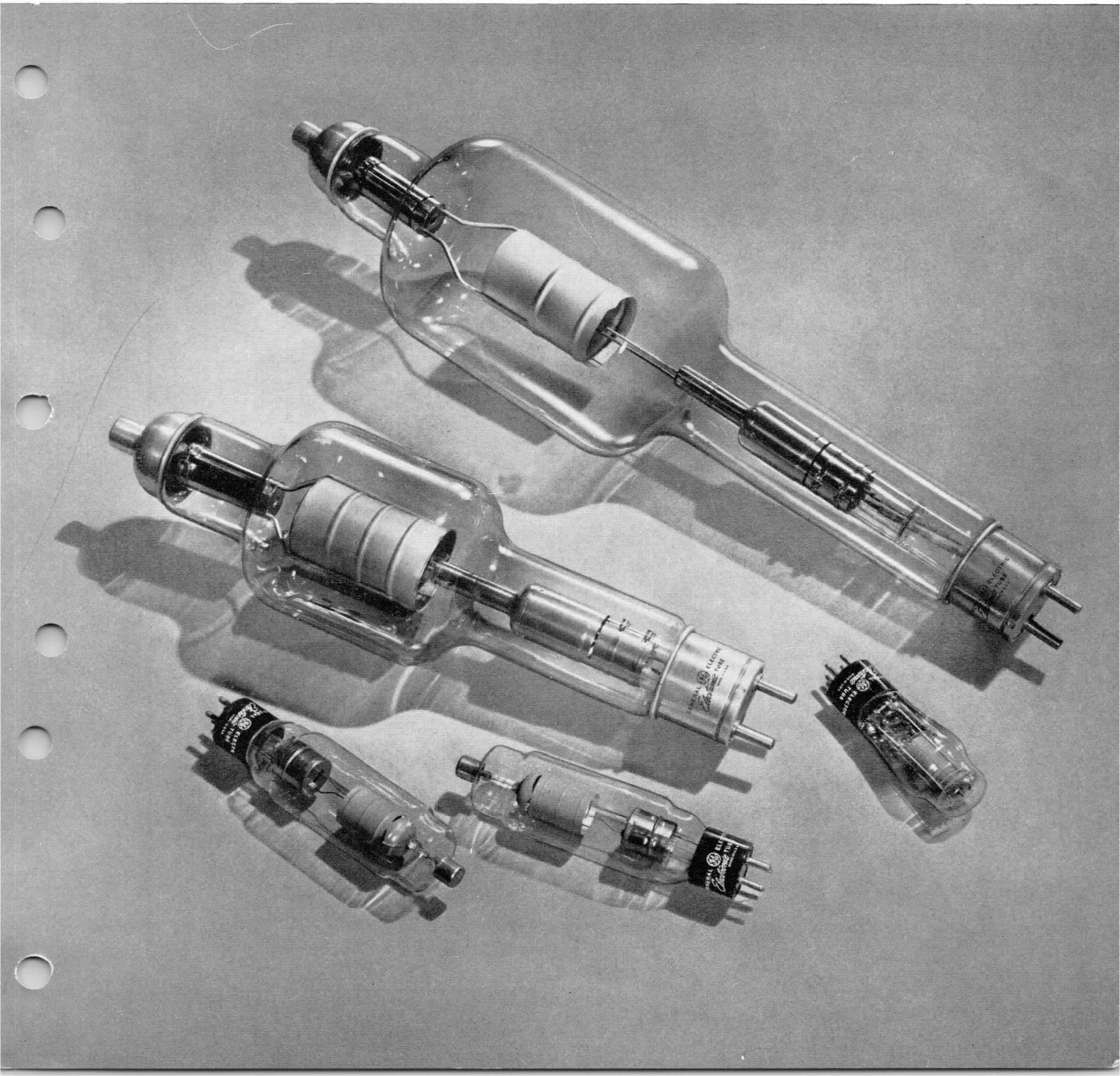

DESCRIPTION

The kenotron is a high-vacuum thermionic tube in which no means is provided for controlling the unidirectional current flow.

The succeeding paragraphs describe the fundamentals of operation, ratings, classes of tubes, applications, maintenance and operation as well as the qualities which render these tubes particularly useful to industry.

FUNDAMENTALS OF THE KENOTRON

A kenotron consists of two electrodes, an anode and a hot cathode, located in spaced relationship within an evacuated container. Due to the elevated temperature of the cathode, negatively charged electrons are emitted from its surface and will flow to the anode (or plate) only when the anode is at a positive potential with respect to the cathode. Since the flow of electrons constitutes an electric current and takes place in one direction only in a kenotron, this tube is particularly useful for application to rectifier circuits. When an alternating voltage is applied to a kenotron and the resulting pulsating unidirectional current is used to charge a capacitor which in turn supplies the load circuit, a nearly uniform supply of direct current is obtained.

Kenotrons have no rotating parts and are therefore quiet in operation. They occupy a relatively small space and are light in weight considering the amount of power which they are rated to handle.

Kenotrons possess advantages over gas or vapor-filled tubes when very high voltages are to be rectified as the high degree of vacuum to which they are exhausted results in practically perfect insulation on the inverse cycle when the anode is negative. Since a kenotron does not depend on an internal vapor pressure for its operation, it is less sensitive to changes in ambient temperatures than gas- or vapor-filled tubes. The use of pure-tungsten or thoriated-tungsten filaments as the source of electrons permits a minimum of delay between the application of filament voltage and plate voltage.

DEFINITIONS OF HIGH-VACUUM TUBE RATINGS

General

When the terms used in the rating of high-vacuum tubes are considered, it is important to realize that the application of the limits and values given for a particular tube depends upon the operating conditions. Any nominal rating can apply only to one set of conditions and not to all the conditions encountered in practice.

The cathode or filament information is given in terms of normal heating voltage. A current figure to indicate transformer rating, is also given. The filament or cathode, except in unusual cases, should always be operated at this rated voltage rather than at rated current and the voltage should be adjusted so that the normal fluctuation in line voltage averages around this point. Normally, when this is done, a plus or minus variation of five per cent heating voltage is allowable.

KENOTRON RATINGS

In addition to filament voltage and filament current ratings, maximum ratings are given for peak inverse voltage, peak anode current and average anode current for rectifier operation.

The maximum peak inverse voltage is the highest instantaneous voltage that a kenotron will safely withstand in the direction opposite to that in which it is designed to pass current.

The maximum peak anode current is the highest instantaneous current which the filament is designed to deliver at full rated filament voltage.

The maximum average anode current is the highest average or d-c value of current which the tube is rated to carry at full rated filament voltage and beyond which the tube may be damaged due to excessive plate dissipation.

Some types of kenotrons are given additional maximum ratings for surge limiting operation which include filament voltage, peak forward anode voltage, average anode dissipation, and a peak anode current minimum. Under this type of operation the tube is used to limit a surge usually of short duration.

The maximum peak forward voltage is the highest instantaneous voltage that a kenotron will safely withstand in the direction in which the tube is designed to carry current.

The maximum average anode dissipation is the highest average wattage which may be expended in the anode under this type of operation.

The peak anode current minimum is intended as a guide to indicate the instantaneous anode current which may be expected under typical operating conditions.

CLASSES OF KENOTRONS

Kenotrons may be divided into two general classes:

1. Radiation - cooled kenotrons (sometimes cooled by immersion in oil) usually of the glass-envelope type.

2. Water-cooled kenotrons with anodes which are cooled externally by water circulation through a water jacket surrounding the anode.

APPLICATION CIRCUITS#

In general kenotrons are useful in any application involving the rectification of alternating current to provide a direct-current supply or for the suppression of intermittent high-voltage surges. The kenotron finds its greatest usefulness where the requirements call for high voltage at low current or where the range of ambient temperature variations is wide.

A typical example is the kenotron used in air filter applications. The kenotrons supply the high voltages necessary to filter the air by electrical precipitation. The air is ionized and the negatively charged dust particles adhere to plates positively charged by the kenotrons.

The kenotron is less efficient at low voltages than gas- or vapor-filled rectifier tubes, but will operate satisfactorily at peak inverse voltages far in excess of those for which gas- and vapor-filled tubes are designed.

When selecting a tube type for a particular application, consideration must be given to the ability of the tube to withstand the open circuit or inverse voltage, as well as to its ability to pass sufficient overload current in the forward direction without overheating. Electrons flow to the plate with very high velocities so that time-lag effects are negligible for rectification voltages, even at the highest power supply frequencies used in practice.

The kenotron rectifier provides a means of obtaining a higher voltage d-c supply than can be conveniently obtained by other methods. The stability of these tubes with regard to power supply frequency and their small size and quietness of operation are added advantages.

A number of rectifier circuits in which kenotron tubes may be used are shown in Figs. 1-10.

#Circuits shown are examples of possible tube applications and the description and illustration of them does not convey to the purchaser of tubes any license under patent rights of General Electric Company.

NO	FIGURE	WAVE FORM
1	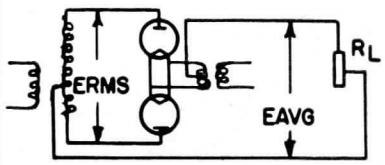 BIPHASE HALF-WAVE TWO ANODES	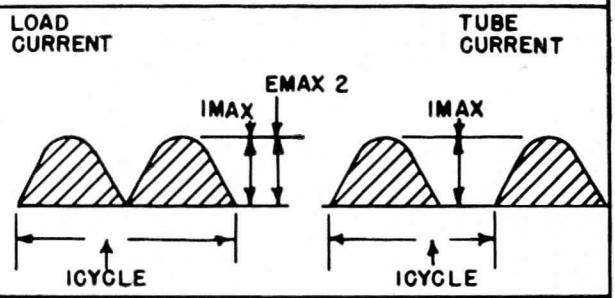
2	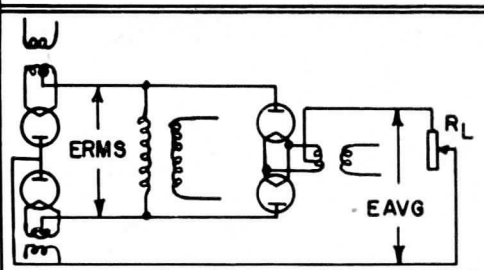 BIPHASE FULL-WAVE FOUR ANODES	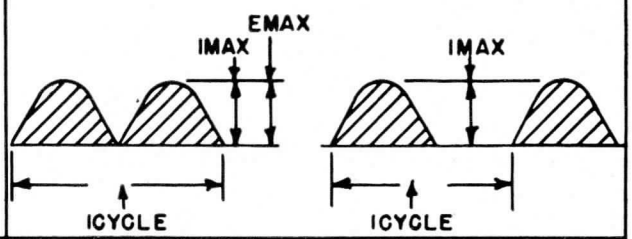
3	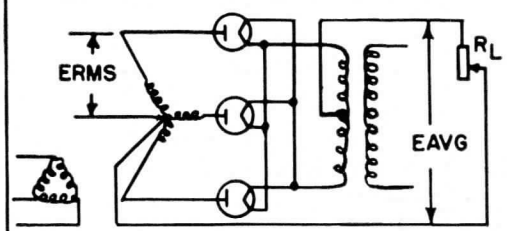 THREE-PHASE HALF-WAVE THREE ANODES	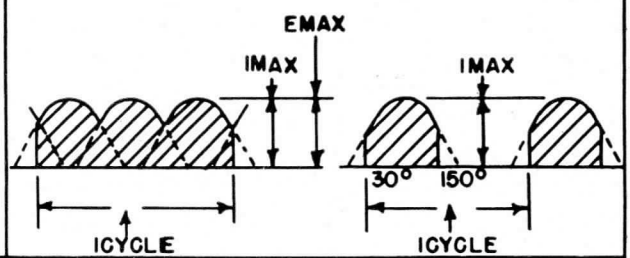
4	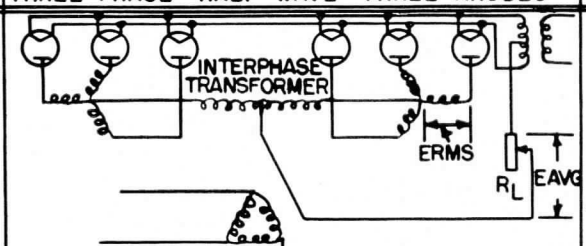 DOUBLE THREE-PHASE HALF-WAVE WITH INTERPHASE TRANSFORMER SIX ANODES	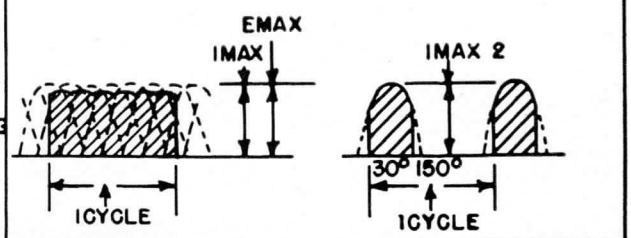

APPLICATION CIRCUITS (CONT'D)

5	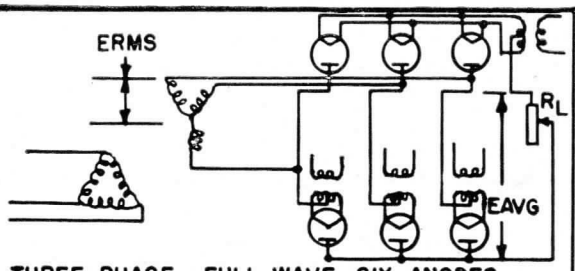 THREE-PHASE FULL-WAVE SIX ANODES	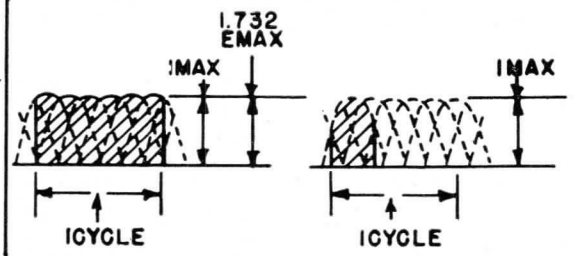
6	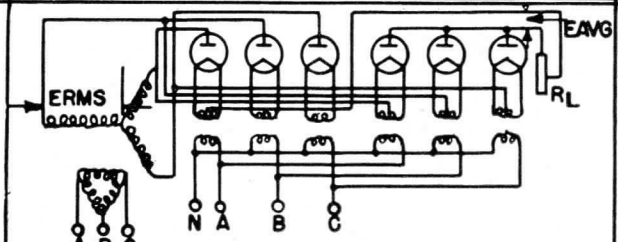 THREE-PHASE FULL-WAVE QUADRATURE EXCITATION, Δ-Y MAIN TRANSFORMER	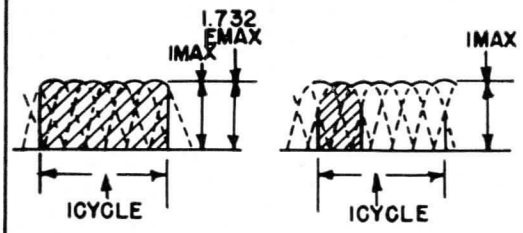
7	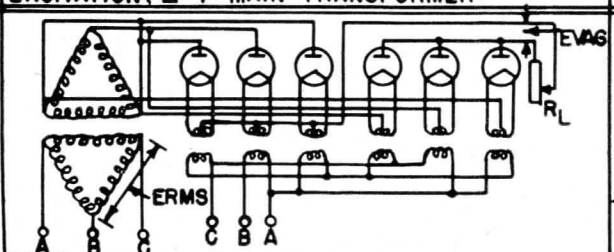 THREE-PHASE FULL-WAVE QUADRATURE EXCITATION Δ-Δ MAIN TRANSFORMER	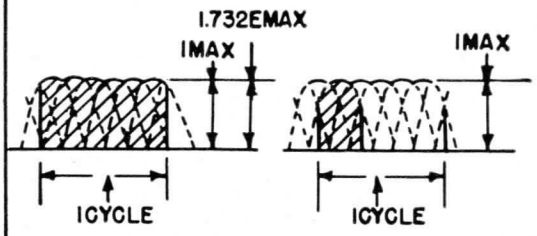
8	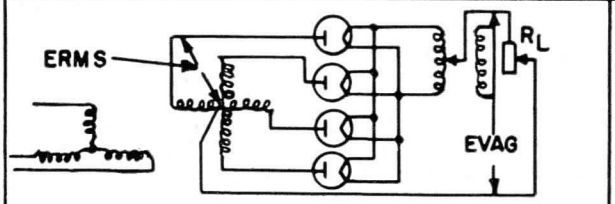 FOUR-PHASE HALF-WAVE FOUR ANODES	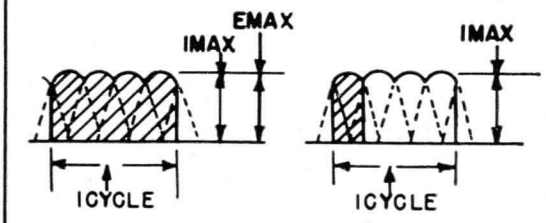
9	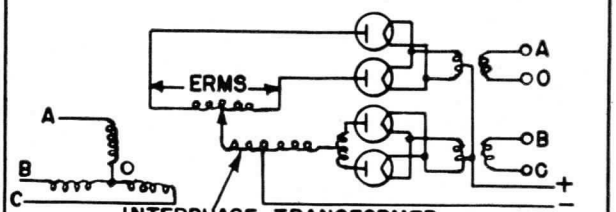 INTERPHASE TRANSFORMER DOUBLE-BIPHASE HALF-WAVE FOUR ANODES WITH QUADRATURE EXCITATION	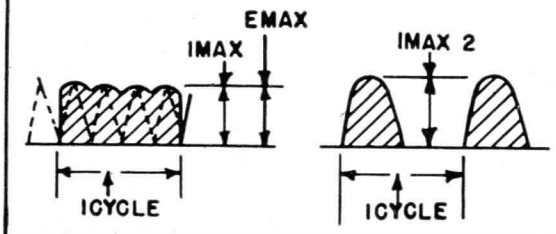
10	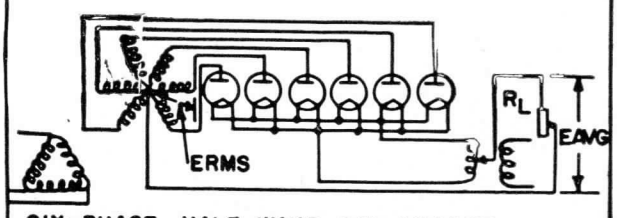 SIX-PHASE HALF-WAVE SIX ANODES	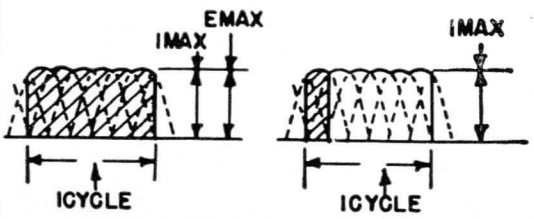

USEFUL RATIOS

FIG. NO.	TUBE I(AVG) / LOAD I(AVG)	E-AVG	E-INVERSE	I-AVG
1	0.500	0.318 E-MAX 0.450 E-RMS	E-MAX 3.140 E-AVG	0.636 I-MAX
2	0.500	0.636 E-MAX 0.900 E-RMS	E-MAX 1.570 E-AVG	0.636 I-MAX
3	0.333	0.827 E-MAX 1.170 E-RMS	$\sqrt{3}$ E-MAX 2.090 E-AVG	0.827 I-MAX
4	0.167	0.827 E-MAX 1.170 E-RMS	$\sqrt{3}$ E-MAX 2.090E-AVG	0.827 I-MAX
5	0.333	1.650 E-MAX 2.340 E-RMS	$\sqrt{3}$ E-MAX 1.050 E-AVG	0.955 I-MAX
6	0.333	1.650 E-MAX 2.340 E-RMS	$\sqrt{3}$ E-MAX 1.050 E-AVG	0.955 I-MAX
7	0.333	0.955 E-MAX 1.340 E-RMS	E-MAX 1.050 E-AVG	0.955 I-MAX
8	0.250	0.900 E-MAX 1.274 E-RMS	2.220 E-AVG	0.900 I-MAX
9	0.250	0.318 E-MAX 0.450 E-RMS	3.140 E-AVG	0.318 I-MAX
10	0.167	0.955 E-MAX 1.350 E-RMS	2.090E-AVG	0.955 I-MAX

APPLICATION CIRCUITS (CONT'D)

When a kenotron is placed in series with an alternating-voltage supply and the resulting pulsating current used to charge a condenser which in turn supplies a load, only one-half of the alternating voltage is used. Such a circuit while satisfactory in some cases is not efficient. In general, multiphase circuits utilizing both half cycles of the alternating voltage (fullwave operation) yield a higher average output voltage and current for a given tube size. The variation in the d-c output voltage known as the ripple is also considerably reduced with multiphase circuits. In some circuits tubes are operated in series to obtain higher average d-c output voltages than could be obtained with a single tube without exceeding the maximum rated peak inverse voltage of the kenotron. In other applications tubes are operated in parallel to provide greater d-c output current without exceeding the current rating of the kenotrons.

The circuits shown in Figs. 1-10 as well as variations of them will be found useful in such applications as air filters, cable testing, smoke precipitaters, radio transmitters, x-ray and other electrophysical and electro-chemical uses requiring high direct voltage at moderate currents.

Fig. 11 shows a circuit for testing high-voltage cable where extremely high voltage direct current is required.

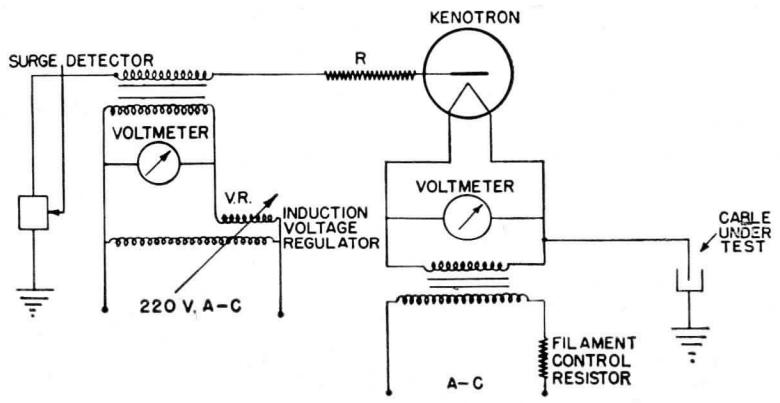

K-9033569 12-30-44

Fig. 11—Circuit for High-Voltage Cable Tester

INSTALLATION

Cooling

Free circulation of cool air around the glass bulb should be maintained. High temperature air from other apparatus should be prevented from circulating around the tubes. If desired the tubes may be immersed in a tank of oil with the transformers.

Electrical

Filament power should be supplied from a filament lighting transformer insulated for the proper voltage, and provided with a secondary midtap for the plate circuit return lead. The filament excitation supply must be provided with suitable resistors or other regulating devices to apply the power to the filament gradually and to adjust it accurately during operation. The filament voltage should be measured directly at the filament terminals.

The installation of all wires and connections should be made so that they do not lie on or close to the glass of the kenotron. An air space of approximately the length of the tube should be maintained between the bulb and any metallic body during operation. Otherwise, corona discharge may develop and result in puncture of the glass bulb.

OPERATION

Kenotrons should be operated within the maximum ratings given in the Technical Information* in order to obtain maximum tube life and performance.

The ratings given in the Technical Information* prescribe two limiting operating conditions. The first, the maximum peak inverse voltage, is a value determined by the insulation between electrodes of the tube. This is the highest voltage that the tube will insulate on the half cycle when no currents are passing through the tube. Line surges, circuit capacitance, wave form distortion and the maximum peak voltage of the applied alternating voltage may cause the inverse voltage to exceed the maximum peak voltage rating.

The second limiting value is the power dissipation of the anode which is determined by the d-c load current almost regardless of the voltage across the load. As the design of the circuit especially the amount of capacitance in the circuit, is a major factor in determining the amount of current available in a given rectifier, oscilloscope measurements of this current should be made if any doubt exists as to the magnitude. If the kenotron is to be operated at full peak current ratings, it will be necessary to maintain exactly the rated filament voltage. If the peak current to be drawn is less than the full rated value, the allowable filament voltage regulation increases as the value of the peak current decreases.

The following tabulation shows the reduction of the maximum peak current with reduced filament voltage:

Filament Voltage % of Rated	Maximum Peak Current % of Rated
100	100
95	65
90	40
85	25
80	10

Excessive anode temperature is an indication of abnormal voltage drop in the tube and is usually caused by low filament temperature. Filament voltage greater than the rated value, while increasing the maximum peak current available, will result in decreased tube life.

Careful handling and conservative operation will be amply repaid by longer and more uniform tube life.

Note: The ratings and characteristics of a particular tube are given under Technical information on the Description and Rating Sheet for that tube.

ELECTRONIC COMPONENTS DIVISION
GENERAL ELECTRIC
Schenectady 5, N. Y.

PRINTED IN U.S.A.

GENERAL ELECTRIC

PHANOTRONS

Supersedes ETI-146 dated 4-45.
Only change on page 6

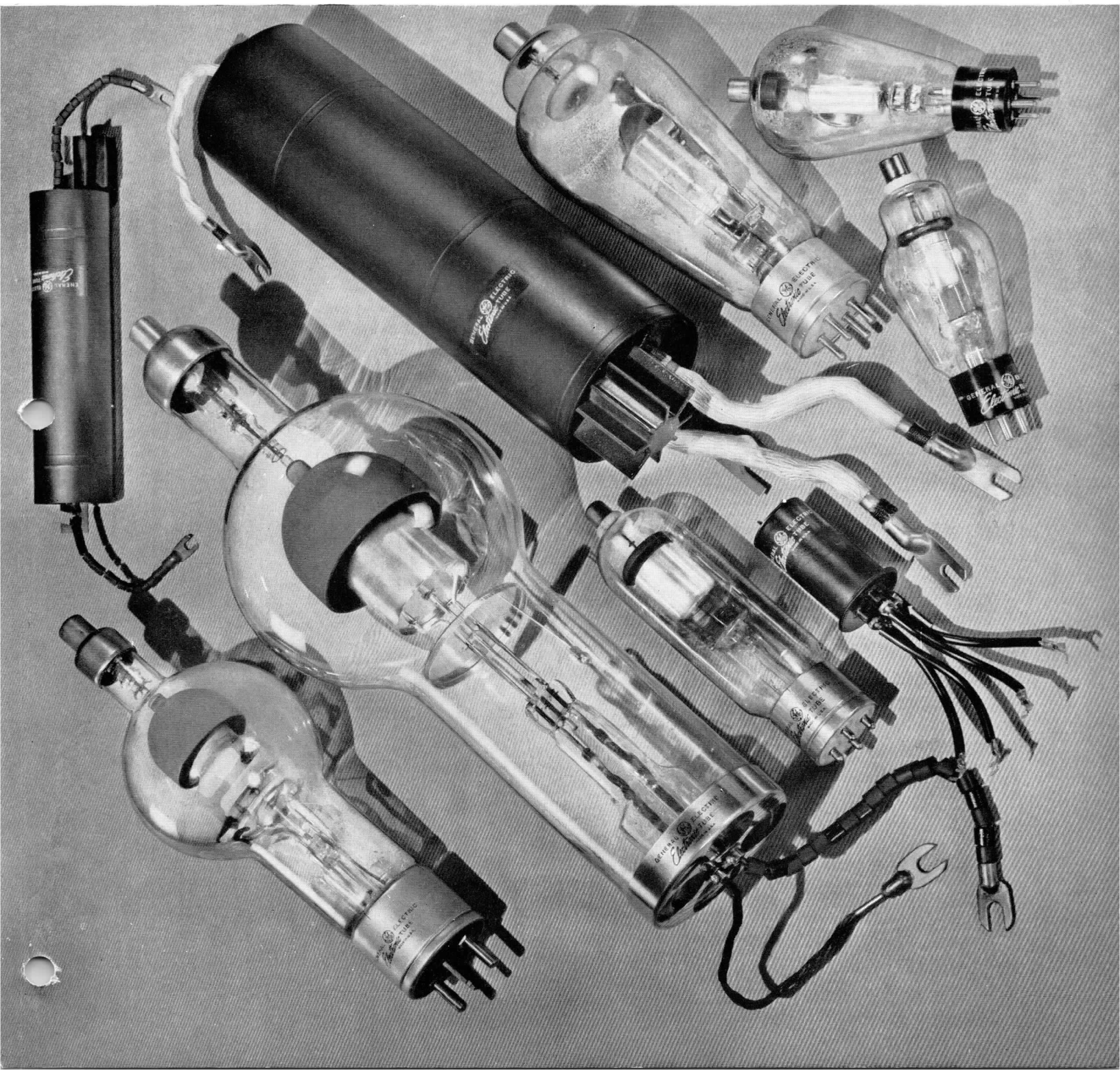

DESCRIPTION

A phanotron is a thermionic gas tube in which no means is provided for controlling the current flow.

The gas used may be one of the inert gases such as argon, xenon, or helium, or the vapor pressure of a few drops of mercury. The presence of this gas neutralizes, by ionization, the electron space-charge around the cathode created by the electrons emitted from it. This space-charge, which is negative in effect and tends to drive the electrons back into the cathode, is one of the limitations on the amount of current a high-vacuum electronic tube can carry. Another limitation is the ability of the cathode to emit the electrons which comprise the unidirectional current flow. This factor, however, can be controlled by design of an electron emitting source satisfactory for the size of tube required.

The absence of space-charge and its accompanying losses in the phanotron allows larger electrode spacing and smaller-size electrodes for a given current-carrying capacity than is possible with high-vacuum tubes. The elimination of space-charge also permits the use of an electron-emitting cathode of higher efficiency and much larger current-carrying capabilities than otherwise could be used. A gas-filled tube therefore, can carry much higher current than a high-vacuum tube of corresponding dimensions. The vapor pressure, however, is sufficiently low so that the anode can withstand, when negative, the voltages for which the tube is designed.

The phanotron in its most usual form of a half-wave rectifier has two electrodes, an anode and a cathode, although an additional anode may be added if a full-wave rectifier is desired. Since the phanotron will conduct in one direction only, it is most generally used in rectifier circuits.

RATINGS

The ratings of gas-discharge tubes are given in terms of fundamental conditions on the tube itself rather than in terms of any circuit constants. Values for a particular tube are given on the individual tube descriptive sheets, (i.e., in terms of actual anode voltage and current.)

The Maximum Peak Inverse Voltage

is a rating which is common to both phanotrons and thyratrons. It is the highest instantaneous voltage that the tube will safely stand in the direction opposite to that in which it is designed to pass current and depends upon operation within the specified temperature range and within the surge current rating. It should be emphasized that the maximum rating of the tube refers to the actual inverse voltage and not to the calculated values. A cathode-ray oscilloscope or spark gap connected across the tube is useful in determining the actual peak inverse voltage.

The Maximum Instantaneous Anode Current

is the highest instantaneous current that a tube can safely conduct under normal operating conditions in the direction of normal current flow.

The ability of a given tube to conduct this instantaneous current without excessive voltage drop will depend upon cathode heating and condition of the emitting surface.

The Maximum Surge Current

rating is a measure of the ability of a tube to withstand extremely high transient currents; it is also a measure of the stiffness of the anode circuit in which the tube will operate satisfactorily at rated temperature and with maximum peak inverse voltage applied. This rating is intended to form a basis for equipment design in limiting the abnormal currents that occur during short-circuit conditions. It does not mean that the tube can be subjected to repeated short circuits without the probability of a reduction in life and the possibility of a failure.

The Maximum Average Anode Current

is a rating based on tube heating. It is the highest average current which can be carried continuously through the tube. In the case of a rapidly repeating duty cycle, this may be measured on a d-c meter. Otherwise, it is necessary to calculate the average current over a period not to exceed a definite interval of time which is specified for each design of tube. For example, in a two-tube, 60-cycle rectifier feeding into an inductive load (so that the tube conducts approximately half of the time with a square wave) a tube with maximum instantaneous anode current of 15 amperes, a maximum average current of 2.5 amperes and an integration period of 15 seconds, can carry a series of 15-ampere, 180-degree blocks of current (half the time) for 5 seconds out of each 15 seconds, or a series of 7.5-ampere, 180-degree blocks of current (half the time) for 10 seconds out of each 15 seconds.

In addition to the above ratings, there are a number of other tube characteristics. The voltage drop from anode to cathode is a characteristic which becomes important when the anode supply voltage is low, as it then becomes a large part of the working voltage. The typical voltage drop which may be encountered is included in the tube ratings, and the maximum in the Specifications. This includes the effect of temperature, change during tube life, and variation between individual tubes.

Condensed-Mercury Temperature

is the temperature which controls the mercury-vapor pressure and hence many of the tube characteristics. This is measured on the bulb just above the base, the point where the mercury vapor is condensing within the tube.

Satisfactory tube operation depends upon operating within the specified temperature limits. When the tube is being heated it must be remembered that the *heating time* specified refers only to the cathode. Sufficient heating must also be allowed to bring the condensed-mercury temperature within limits.

CLASSES OF TUBES

Phanotrons are built in both glass and metal envelopes. The higher voltage tubes use glass construction for ease of insulation. Metal-envelope tubes are adapted for panel mounting whereas the smaller glass tubes are designed for applications where a socket mounting is desirable.

Mercury-vapor phanotrons are available for those applications where the temperature can easily be controlled. Where a wide range of ambient temperature will be encountered, inert-gas-filled tubes should be used.

APPLICATION CIRCUITS#

Phanotrons are designed to cover a very wide range of voltages and currents and as a result are suitable for use as rectifiers in many types of electronic applications. In addition to electronic control applications, phanotrons may be used in circuits where it is desired to supply d-c power for other electronic tubes. Figs. 1 to 10 below illustrate some of the more typical rectifier circuits as well as companion wave forms and useful conversion ratios.

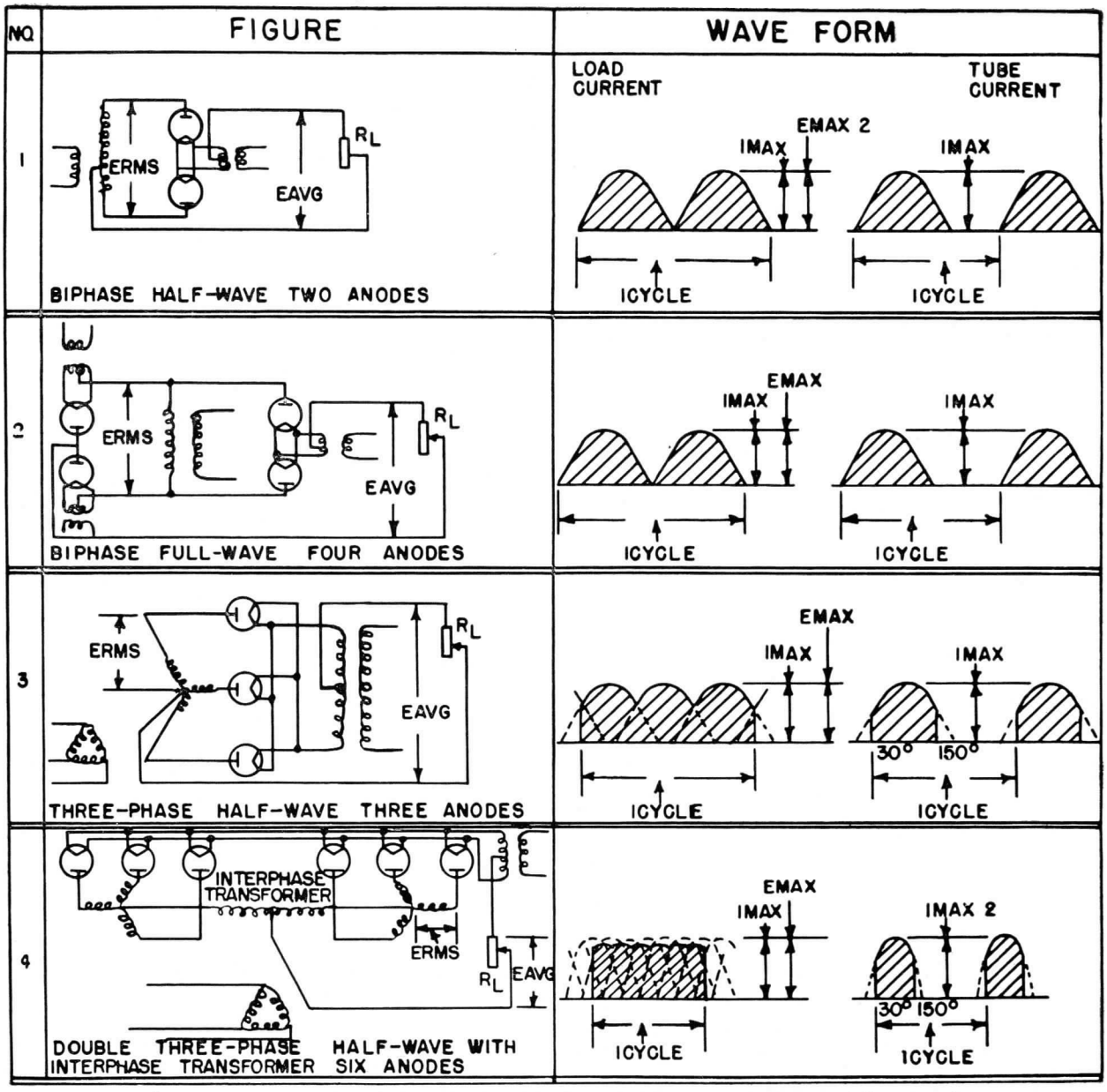

 # Circuits shown in ETI-146 are examples of possible tube applications and the description and illustration of them does not convey to the purchaser of tubes any license under patent rights of General Electric Company.

APPLICATION CIRCUITS (CONT'D)

5

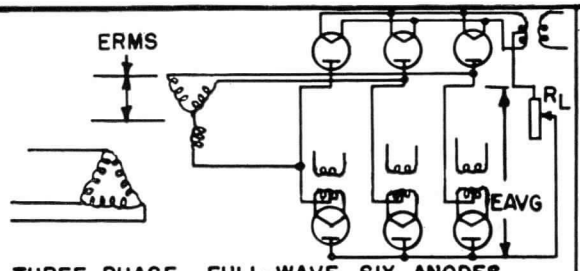

THREE-PHASE FULL-WAVE SIX ANODES

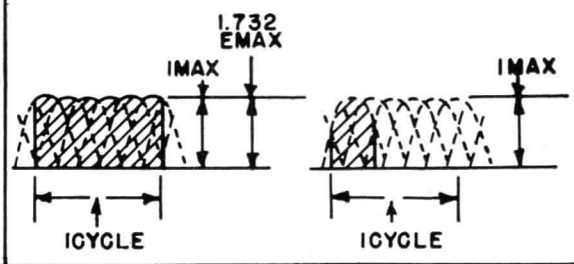

6

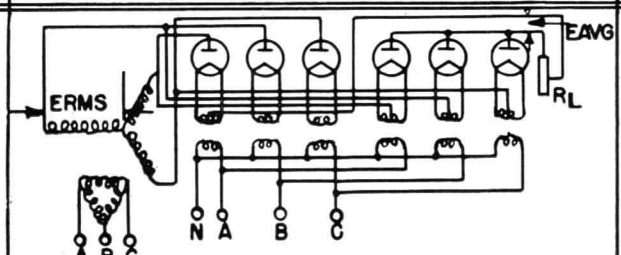

THREE-PHASE FULL-WAVE QUADRATURE EXCITATION, Δ-Y MAIN TRANSFORMER

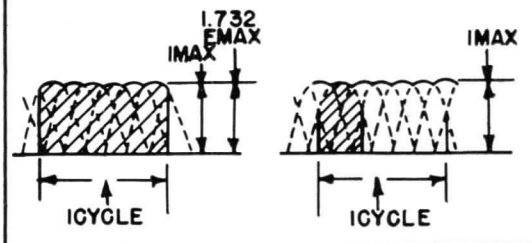

7

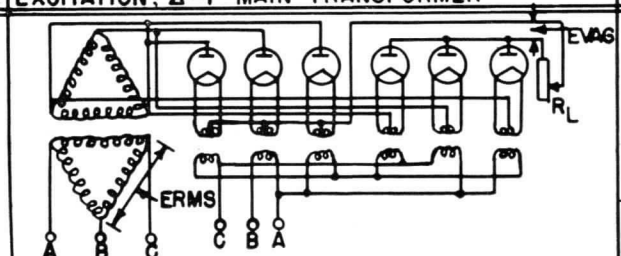

THREE-PHASE FULL-WAVE QUADRATURE EXCITATION Δ-Δ MAIN TRANSFORMER

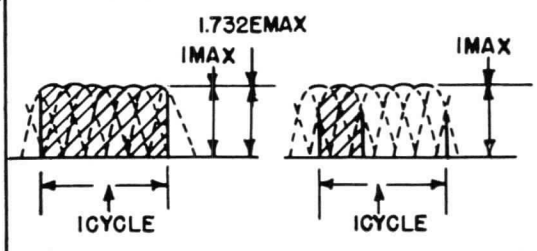

8

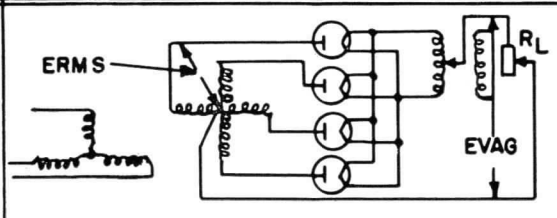

FOUR-PHASE HALF-WAVE FOUR ANODES

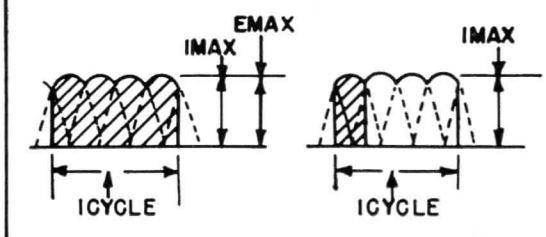

9

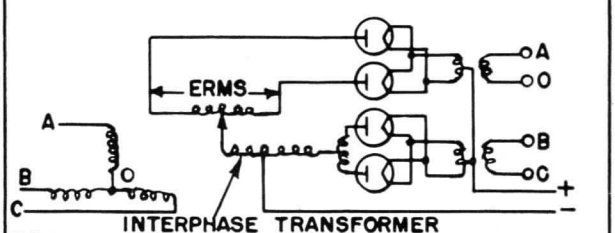

DOUBLE-BIPHASE HALF-WAVE FOUR ANODES WITH QUADRATURE EXCITATION

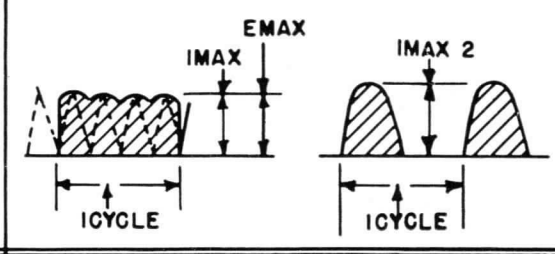

10

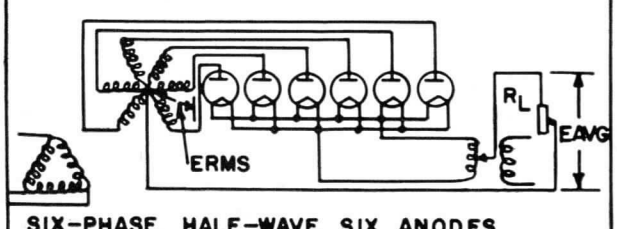

SIX-PHASE HALF-WAVE SIX ANODES

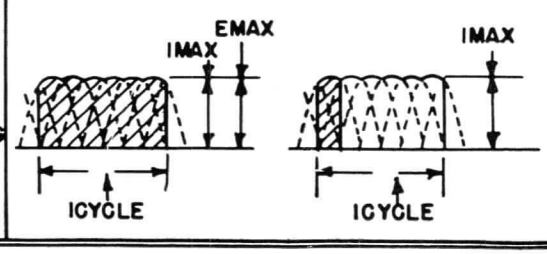

USEFUL RATIOS

FIG. NO.	TUBE I(AVG) / LOAD I(AVG)	E-AVG	E-INVERSE	I-AVG
1	0.500	0.318 E-MAX 0.450 E-RMS	E-MAX 3.140 E-AVG	0.636 I-MAX
2	0.500	0.636 E-MAX 0.900 E-RMS	E-MAX 1.570 E-AVG	0.636 I-MAX
3	0.333	0.827 E-MAX 1.170 E-RMS	$\sqrt{3}$ E-MAX 2.090 E-AVG	0.827 I-MAX
4	0.167	0.827 E-MAX 1.170 E-RMS	$\sqrt{3}$ E-MAX 2.090E-AVG	0.827 I-MAX
5	0.333	1.650 E-MAX 2.340 E-RMS	$\sqrt{3}$ E-MAX 1.050 E-AVG	0.955 I-MAX
6	0.333	1.650 E-MAX 2.340 E-RMS	$\sqrt{3}$ E-MAX 1.050 E-AVG	0.955 I-MAX
7	0.333	0.955 E-MAX 1.340 E-RMS	E-MAX 1.050 E-AVG	0.955 I-MAX
8	0.250	0.900 E-MAX 1.274 E-RMS	2.220 E-AVG	0.900 I-MAX
9	0.250	0.318 E-MAX 0.450 E-RMS	3.140 E-AVG	0.318 I-MAX
10	0.167	0.955 E-MAX 1.350 E-RMS	2.090E-AVG	0.955 I-MAX

APPLICATION CIRCUITS (CONT'D)

Another important application of the phanotron is to supply d-c power for automatic battery charging equipment designed to give voltage regulation over a wide range with a relatively constant current at a set limit. A battery charging circuit is shown in Fig. 11. In circuit design tubes are selected for specific applications by consideration of the ratings, including peak and average currents to be conducted and peak inverse voltages applied. When a tube has been chosen for the application, the Specifications should be consulted to determine the limits of operation.

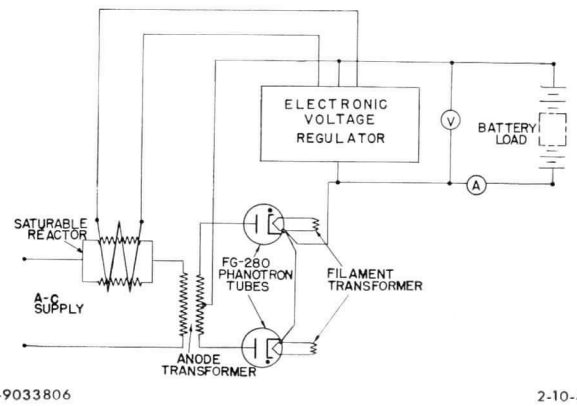

Fig. 11—Circuit for Phanotron Battery Charger

INSTALLATION

Mechanical

Phanotrons should be mounted in sockets or supports of good quality with connections of sufficient current-carrying capacity, and should be operated only in a vertical position. A shock-absorbing mounting must be used if the tube is to be subjected to excessive vibration or shock.

Electrical

The cathode should be operated preferably from an a-c source, and must assume operating temperature before electron current is drawn.

An appreciable glow, when plate voltage is not applied, is an indication that the tube is exposed to radio frequency. Such a condition should be corrected; otherwise the tube life and performance will be adversely affected.

Thermal

When a mercury-vapor phanotron is first placed in operation, it is necessary to distribute the mercury properly before anode voltage is applied. This is usually accomplished by applying filament voltage long enough to distill the mercury into the cooling chamber of the tube. The location of the cooling chamber is indicated on the outline drawing by the words "controlling mercury temperature."

The design of equipment should allow the tube to operate within the condensed-mercury temperature limits over the range of ambient temperatures to be encountered.

When mercury-vapor tubes are subjected to low ambient temperatures or when it is desired to reduce the mercury-heating time some form of heat-conserving enclosure should be used. This may be provided with thermostatically controlled shutters and/or heaters to bring the condensed-mercury temperature within the operating range. Heaters should be located so that the normal condensed-mercury region always remains the coolest portion of the tube enclosure.

OPERATION

Cathode Circuit

The cathode voltage should not deviate from the rated* value by more than five per cent. Filament voltage should be set so that voltage fluctuations give an average value equal to the rated filament voltage. Too low a filament voltage may result in a very short life or perhaps immediate failure due to loss of emission. Too high a voltage will shorten the life of the cathode somewhat. During stand-by periods the filament should be operated at normal voltage.

▲Where quadrature filament excitation is specified, the filament voltage should be 90 ±30 degrees out of phase with the anode voltage.

Anode Circuit

The peak inverse voltage applied to the anode should never exceed the rated* value. In the usual single-phase circuits, the peak inverse voltage, for sine-wave conditions may be taken as the total anode-transformer secondary voltage (rms value) multiplied by 1.4. The relations between the peak inverse voltage, the direct voltage, and the rms value of alternating voltage depend largely upon the individual characteristics of the rectifier circuit and the power supply. Line surges, keying surges or any other transient or wave-form distortion may raise the actual peak voltage to a value higher than that calculated from the sine-wave voltages of the transformer.

▲*Additional information not previously included.*

The instantaneous anode current experienced is affected largely by the characteristics of the output circuit, including a filter if one is used. The instantaneous tube current of full-wave rectifiers using a highly inductive output circuit may approach the d-c reading in the load circuit. If the output circuit is highly capacitive with respect to the tube, the instantaneous current in the tube may be many times the load current. Analysis of the individual circuit is necessary.

The average anode current must not exceed the rated value. With a steady load this may be read directly on a d-c meter. In the case of fluctuating loads, however, the reading should be averaged over a period not exceeding the time shown under *Technical Information.

The duration of the surge current shall not be greater than the time shown on the Technical Information.*

The voltage drop from anode to cathode is so low that it has little effect on the complete circuit except when the anode voltage used is low; hence variations of tube voltage drop with life are not readily apparent. Where uninterrupted service is desired, the tube drop should be checked at regular intervals by means of a cathode-ray oscilloscope or other suitable means. This drop is one criterion of tube condition and a rapid rise from one test to the next may determine failure.

**Note: The Ratings And Characteristics Of A Particular Tube Are Given Under Technical Information On The Description And Rating Sheet For That Tube.*

Tube Divisions, Electronics Department

GENERAL ELECTRIC

Schenectady, N. Y.

3-50 (11M)
Filing No. 8850

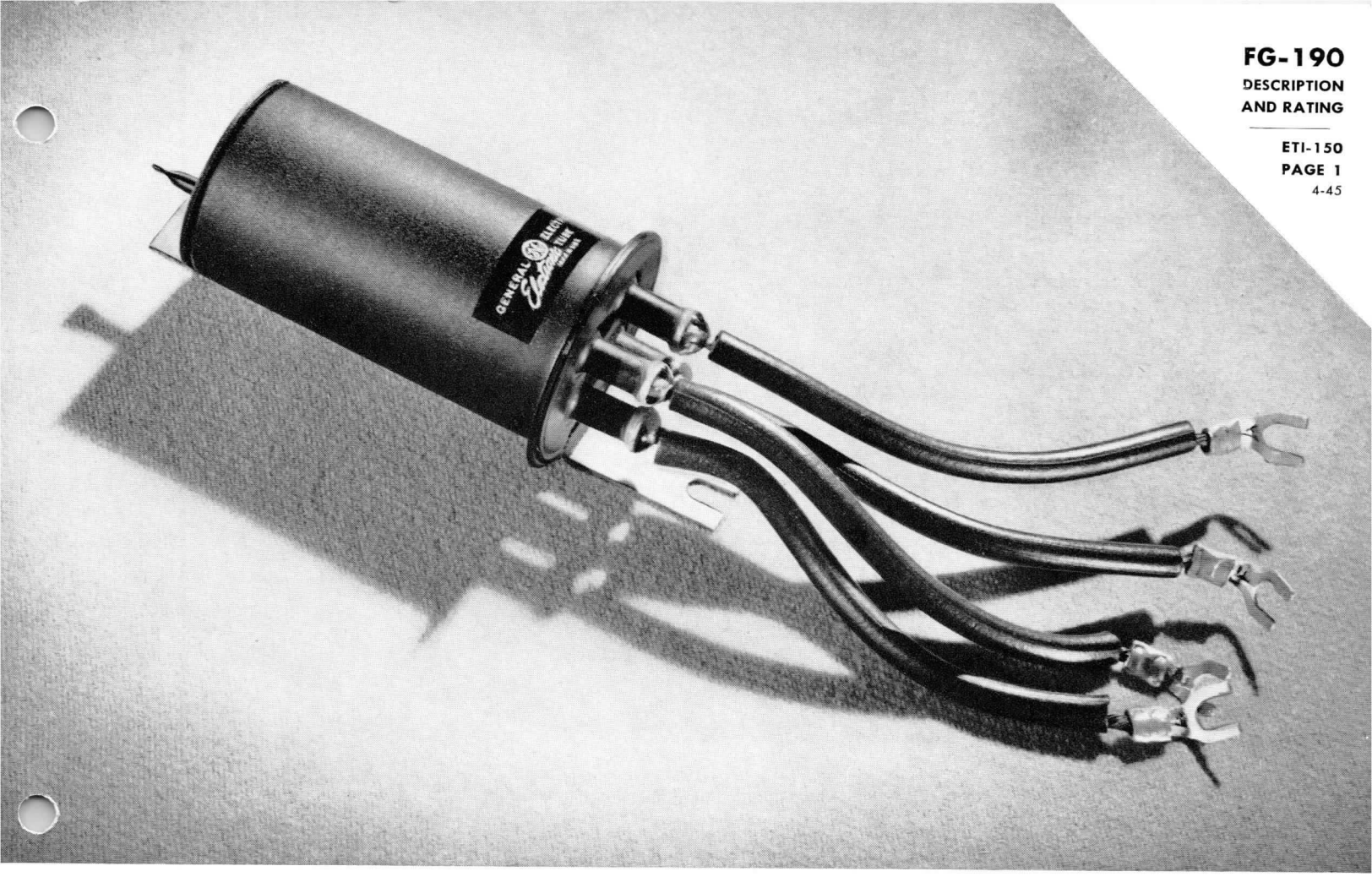

PHANOTRON

DESCRIPTION

The FG-190 is a gas-filled all-metal tube for use as a full-wave rectifier at low voltages. The use of gas imposes a voltage limitation and tubes of this type will not carry as high a voltage as mercury tubes of comparable size. They can, however, be operated in much lower ambient temperatures.

TECHNICAL INFORMATION

These data are for reference only. For design information refer to specifications.

GENERAL CHARACTERISTICS

Number of electrodes	3	
Electrical		
Cathode—Filamentary type		
Heater voltage	2.5	volts
Heater current, approx	12	amperes
Heating time, typical	5	seconds
Voltage drop, typical	8	volts
Pick-up voltage, either anode, typical	14	volts
Mechanical		
Net weight, approx	6	ounces
Shipping weight, approx	4	pounds
Mounting position		vertical, with leads down

GE Electronic TUBE

GENERAL ELECTRIC

TECHNICAL INFORMATION (CONT'D)

MAXIMUM RATINGS

Maximum peak inverse anode voltage	175	volts
Maximum instantaneous anode current		
25 cycles and above	5	amperes
Below 25 cycles	2.50	amperes
Average anode current	1.25	amperes
Surge anode current, for design only	20	amperes
Duration of surge current	0.1	second
Maximum time of averaging current	15	seconds
Ambient temperature limits	−20 to +50	centigrade

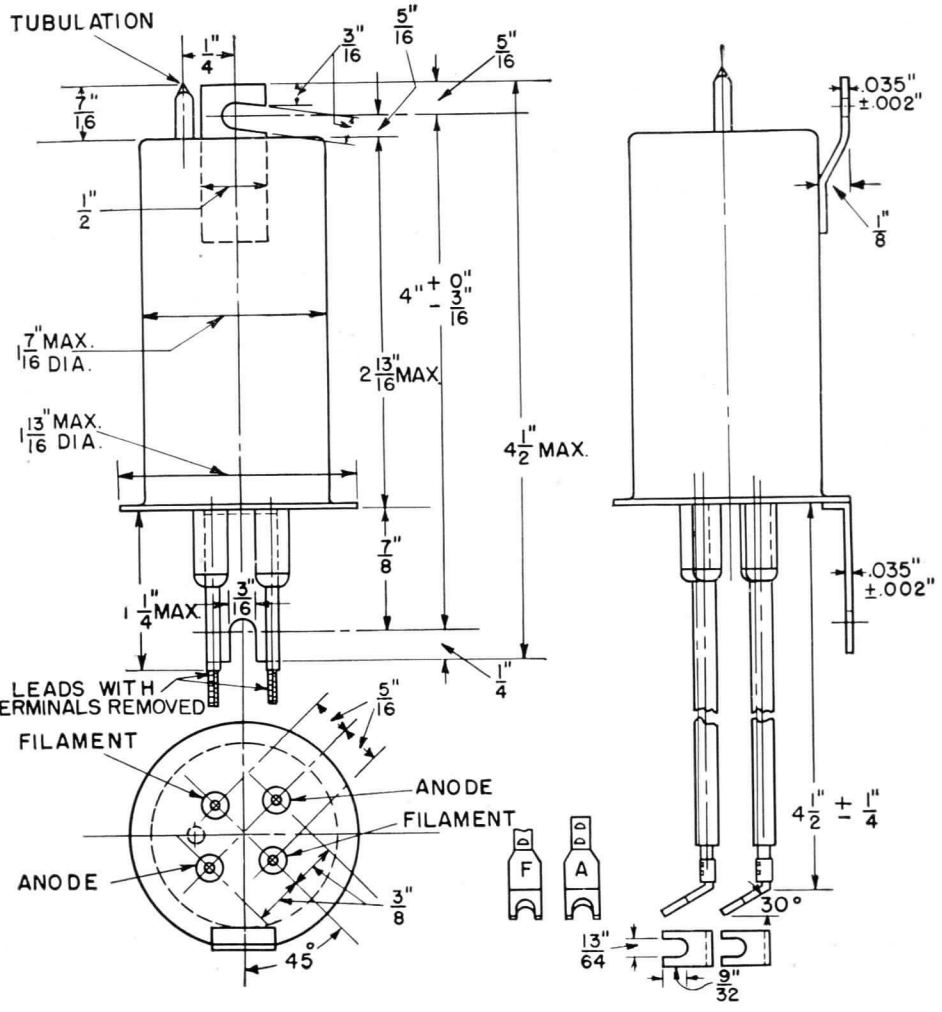

OUTLINE
FG-190 PHANOTRON

K-5300039

7-13-44

Electronics Department

GENERAL ELECTRIC

Schenectady, N. Y.

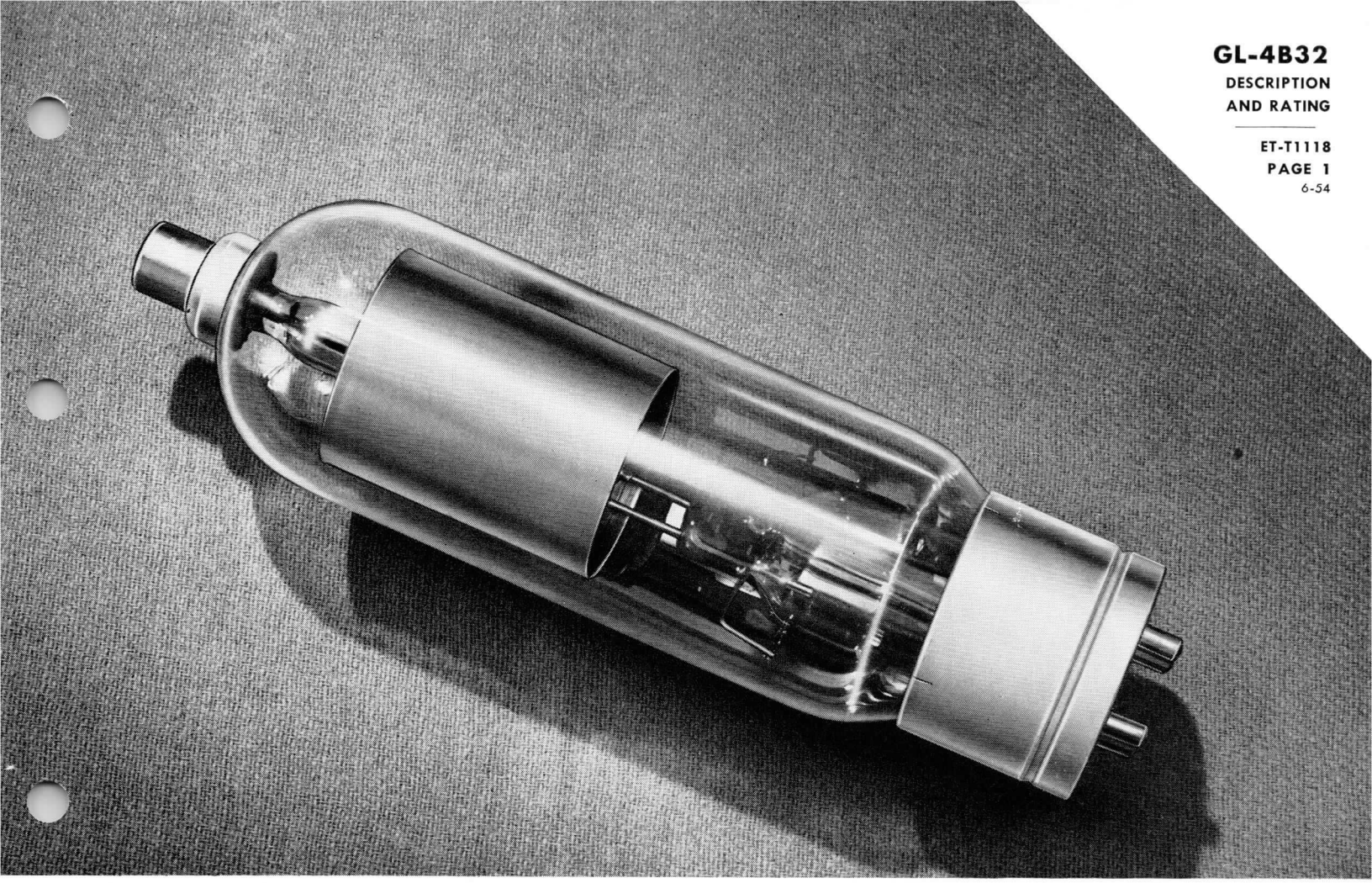

PHANOTRON

The GL-4B32 is an inert-gas-filled, half-wave rectifier for use in high-voltage rectifier circuits.

TECHNICAL INFORMATION

GENERAL

Electrical	Minimum	Bogey	Maximum	
Cathode-Filamentary				
Filament Voltage	4.75	5	5.25	Volts
Filament Current at 5 Volts	..	7.5	8	Amperes
Heating Time	30	..	..	Seconds
Anode Voltage Drop	..	12	..	Volts
Critical Anode Voltage	..	..	50	Volts
Mechanical				
Type of Cooling—Convection				
Mounting Position—Any				
Net Weight, maximum			¾	Pounds

Electronic TUBE

GENERAL ELECTRIC

TECHNICAL INFORMATION (CONT'D)

MAXIMUM RATINGS, Absolute Values

Maximum Peak Inverse Anode Voltage	10,000	Volts
Maximum Cathode Current		
Peak	5	Amperes
Average	1.25	Amperes
Maximum Averaging Time	15	Seconds
Fault	50	Amperes
Maximum Duration	0.2	Seconds
Maximum Frequency	150	Cycles per Second
Ambient Temperature Limits	−55 to +70	C

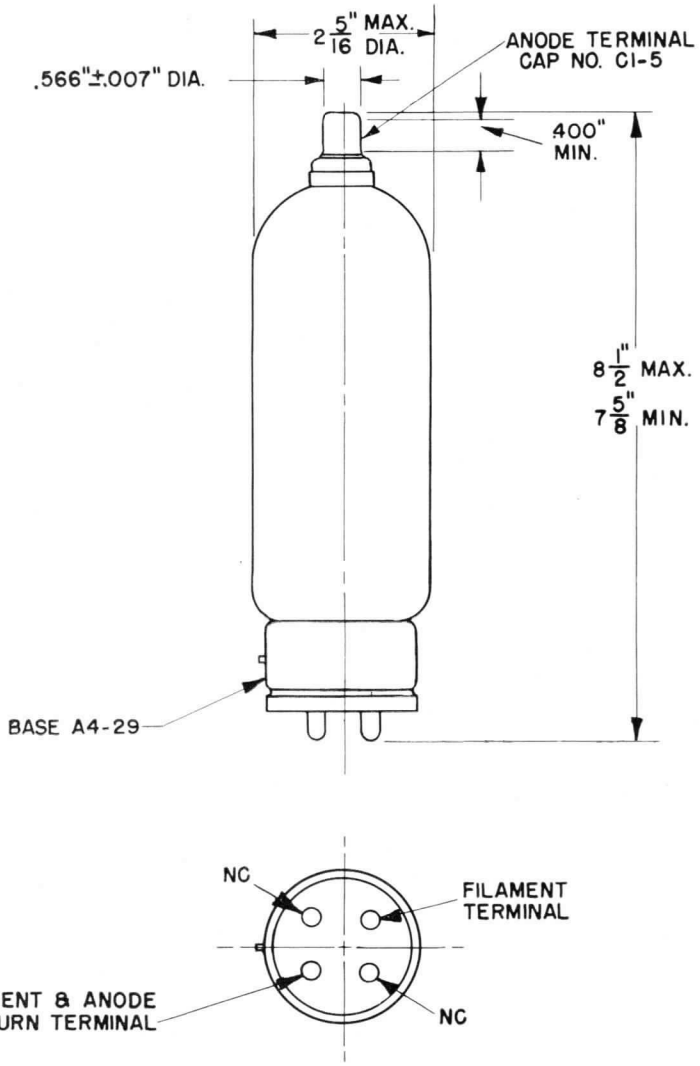

K-69087-72A478 6-9-52

TUBE DEPARTMENT

GENERAL ELECTRIC

Schenectady 5, N. Y.

PRINTED IN U.S.A.

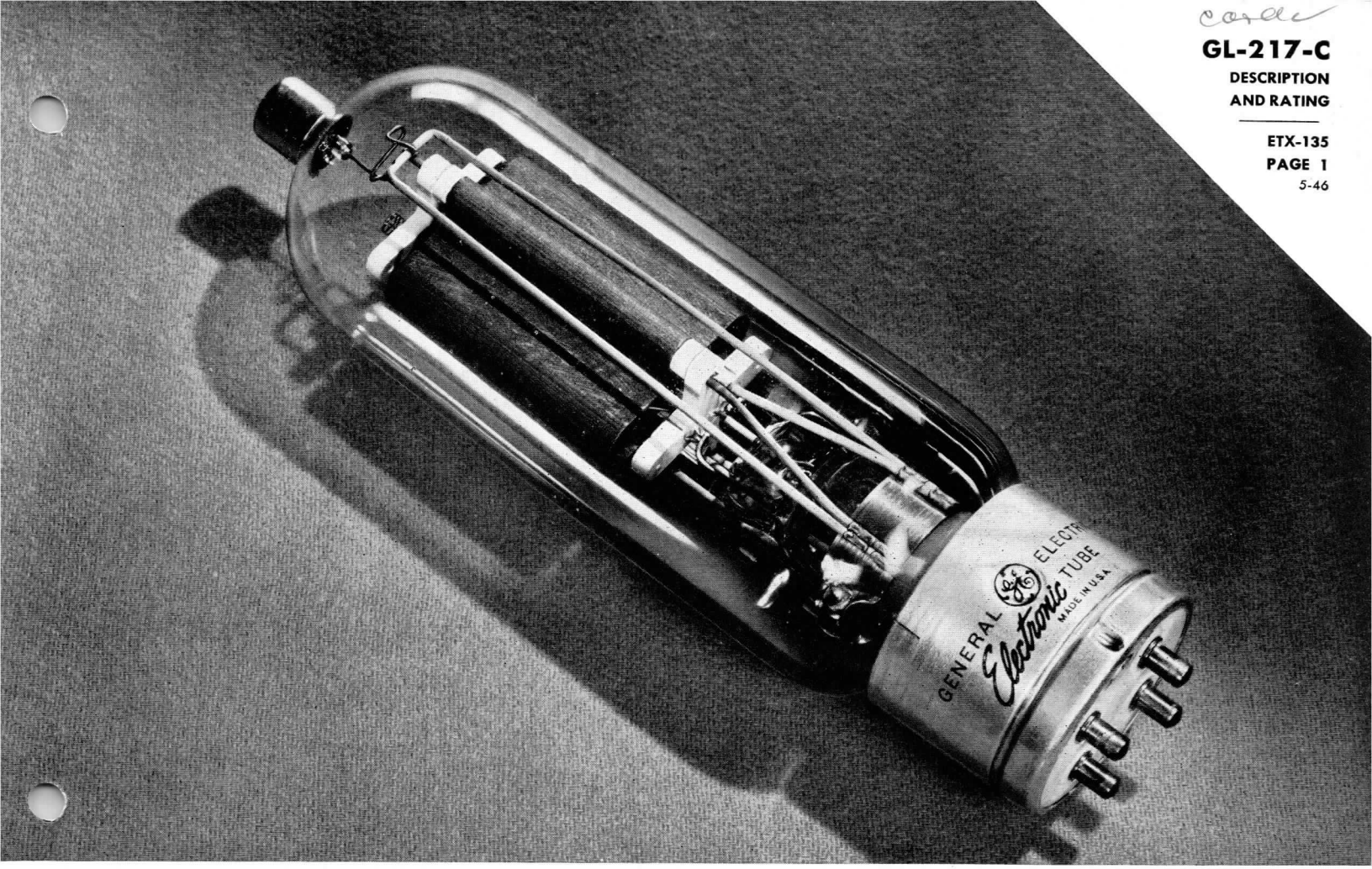

HIGH-VACUUM RECTIFIER

DESCRIPTION

The GL-217-C is a high-vacuum, half-wave rectifier for use in high-voltage d-c power supply circuits operating from an a-c source. This tube may be used at voltages up to 7500 volts peak inverse.

TECHNICAL INFORMATION

These data are for reference only. For design information refer to specifications.

GENERAL CHARACTERISTICS

Number of electrodes	2	
Electrical		
Cathode—Filamentary		
Filament voltage	10	volts
Filament current	3.25	amperes
Mechanical		
Base description		jumbo 4-large pin
Type of cooling		air
Net weight, approx	7	ounces
Shipping weight, approx	3	pounds
Mounting position		vertical, base up or down—horizontal, filament in vertical plane

GE Electronic TUBE

GENERAL ELECTRIC

TECHNICAL INFORMATION (CONT'D)

MAXIMUM RATINGS

Maximum peak inverse voltage	7500	volts
Maximum peak plate current	600	milliamperes
Tube voltage drop, $I_b = 600$	210	volts

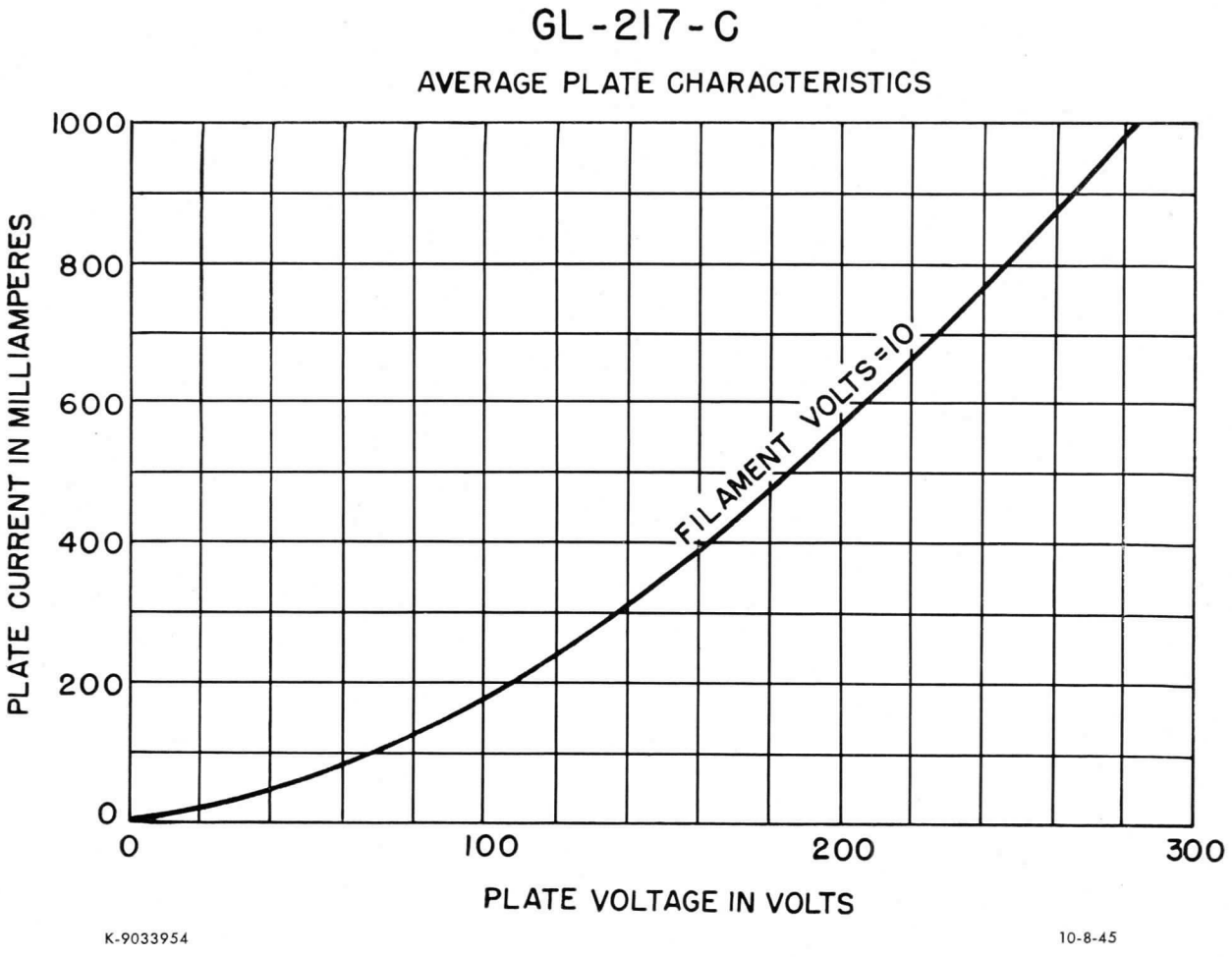

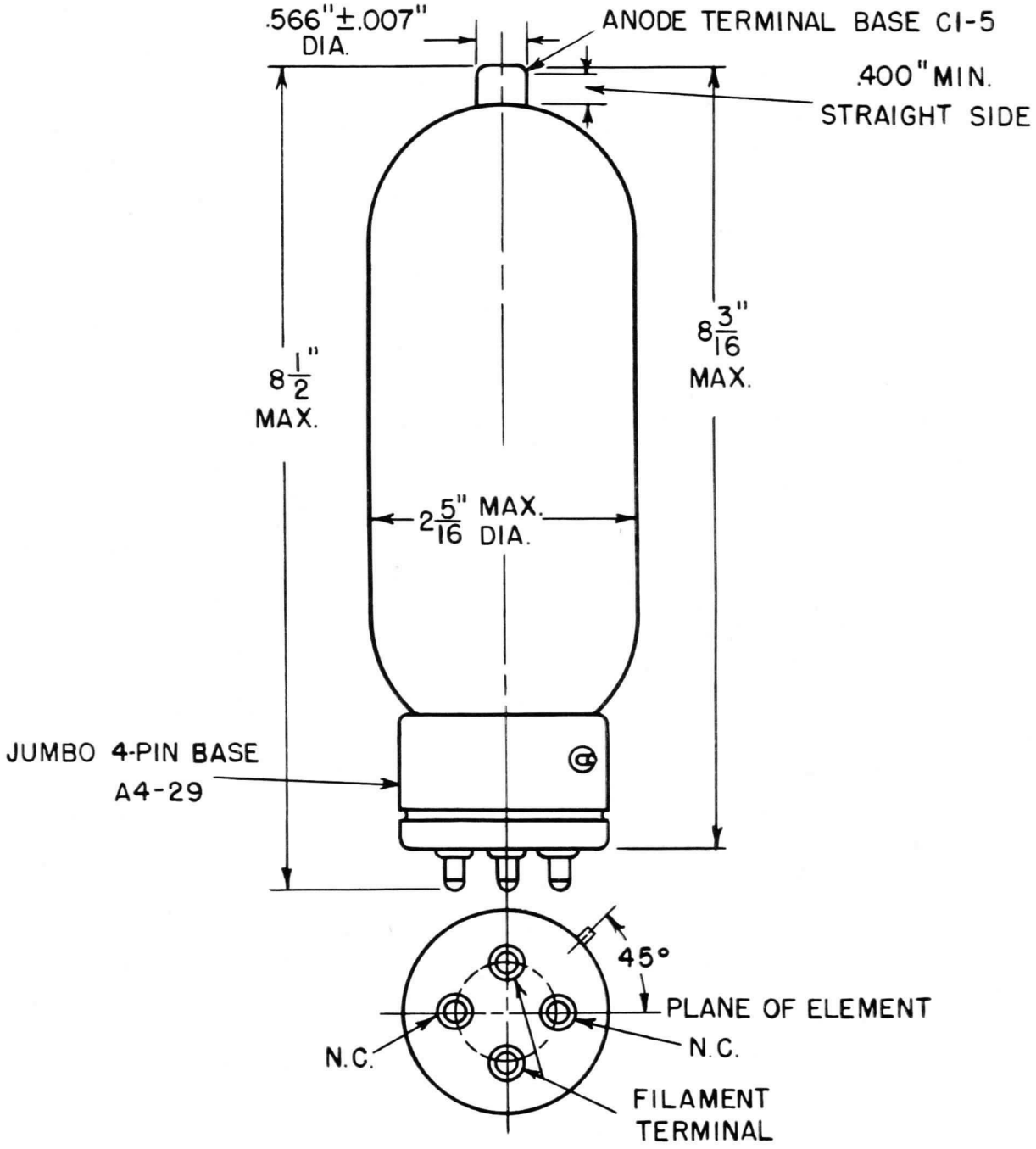

GL-217-C OUTLINE

K-5182050

12-10-45

Electronics Department
GENERAL ELECTRIC
Schenectady, N. Y.

5-46 7M)
Filing No. 8850



MERCURY-VAPOR RECTIFIER

DESCRIPTION

GL-266-B is a half-wave, mercury-vapor rectifier for use in the high-voltage field. The low voltage drop characteristic inherent in mercury-vapor tubes, together with other features of design and construction assure maximum efficiency of operation in many different rectifier applications.

TECHNICAL INFORMATION

These data are for reference only. For design information refer to specifications.

GENERAL CHARACTERISTICS

Number of electrodes	2	
Electrical		
Cathode type—Filamentary		
Voltage	5.0	volts
Current, approximate	30.0	amperes
Heating time, typical	1	minute
Peak voltage drop, typical	15	volts
Mechanical		
Type of cooling	convection or forced-air	
Net weight, approximate	3½	pounds
Shipping weight, approximate	9½	pounds
Mounting position	vertical, leads down	

GENERAL ELECTRIC

Electronic TUBE

TECHNICAL INFORMATION (CONT'D)

MAXIMUM RATINGS

Maximum peak inverse anode voltage, 150 cycles or less	10,000 volts	22,000 volts	
Type of cooling	convection	forced-air	
Corresponding mercury temperature	25–65 centigrade	30–40	centigrade
Maximum anode current			
Instantaneous, 25 cycles and above			
In-phase operation		20	amperes
Quadrature operation		40	amperes
Average			
In-phase operation		5	amperes
Quadrature operation		10	amperes
Surge, for design only		400	amperes
Duration of surge current		0.2	second
Maximum time of averaging current		60	seconds
Recommended temperature, condensed mercury		35 ±5	centigrade

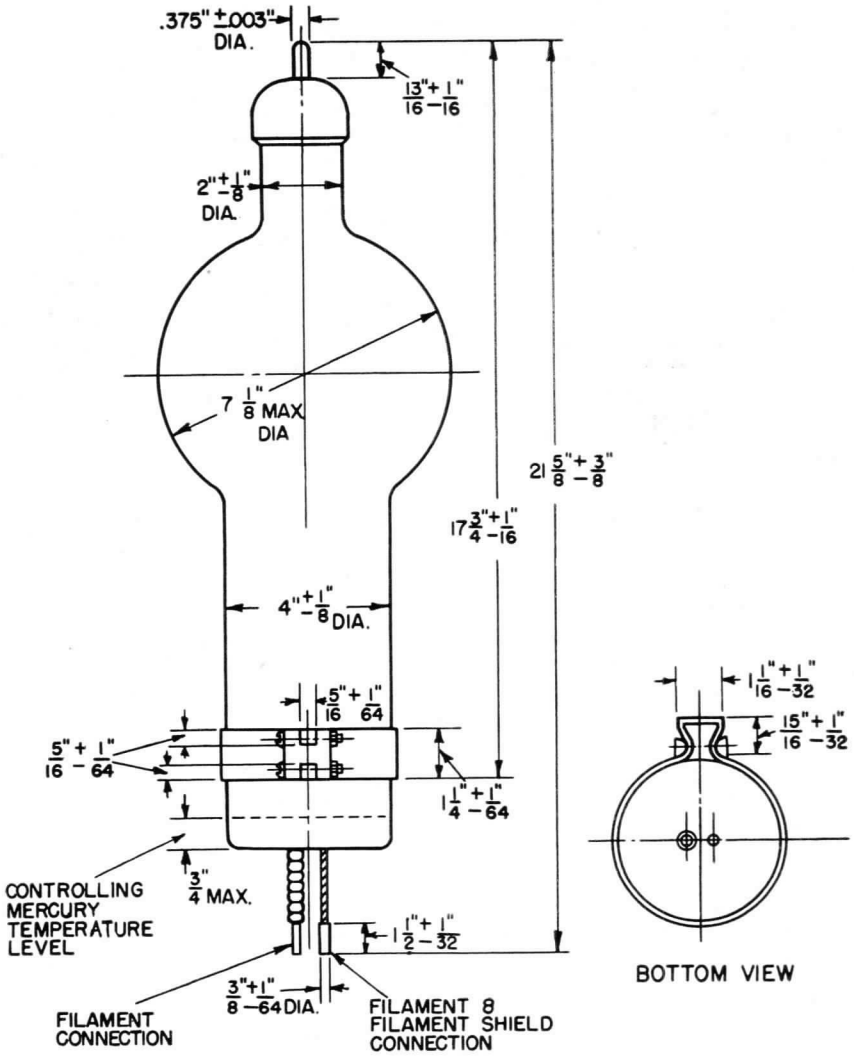

GL-266-B OUTLINE

K-6966962 1-9-46

Electronics Department

GENERAL ELECTRIC

Schenectady, N. Y.

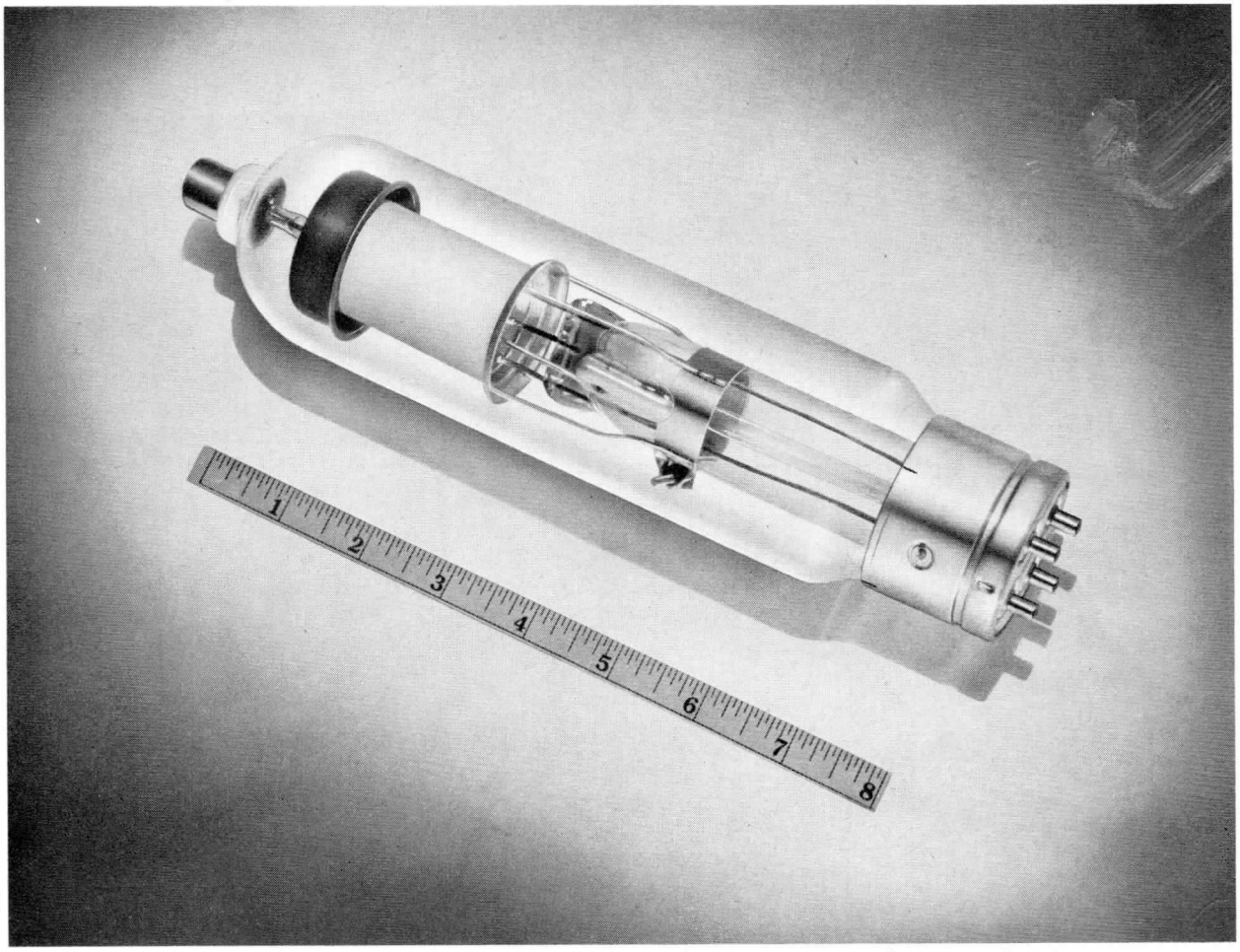

PHANOTRON

HALF-WAVE MERCURY-VAPOR

The GL-575-A is a half-wave, mercury-vapor rectifier tube designed to withstand high peak inverse voltages, and to conduct at relatively low applied voltages.

TECHNICAL INFORMATION

GENERAL

Electrical	Minimum	Bogey	Maximum	
□Cathode—Filamentary				
Filament Voltage	4.75	5.0	5.25	Volts
□ Filament Current at 5.0 Volts	9.0	10.0	11.5	Amperes
Heating Time	30	....	....	Seconds
Anode Voltage Drop, typical	....	10	....	Volts
⊕Critical Anode Voltage	....	....	100	Volts

Mechanical

Type of Cooling—Convection
Equilibrium Condensed-Mercury Temperature Rise Above Ambient
At Full Load, approximate . . . . . 20 C
At No Load, approximate . . . . . 12 C
Mounting Position—Vertical, Base Down
Net Weight, maximum . . . . . 13 Ounces

GENERAL ELECTRIC

TECHNICAL INFORMATION (CONT'D)

MAXIMUM RATINGS, Absolute Values

Maximum Peak Inverse Anode Voltage	10,000	15,000	Volts
Maximum Cathode Current			
□Peak			
Quadrature Operation	10.0	10.0	Amperes
In Phase Operation	7.0	6.0	Amperes
□Average			
Quadrature Operation	2.5	2.5	Amperes
In Phase Operation	1.75	1.5	Amperes
⊕Fault	100	100	Amperes
⊕Maximum Duration	0.1	0.1	Seconds
Maximum Averaging Time	20	20	Seconds
Frequency	150	150	Cycles per Second
Condensed-Mercury Temperature Limits*	+20 to +60	+20 to +50	C

*Maximum temperature ratings for intermediate peak inverse voltages may be determined by linear interpolation. When this is done lower current rating applies.

□Denotes an addition.
⊕Denotes a change.

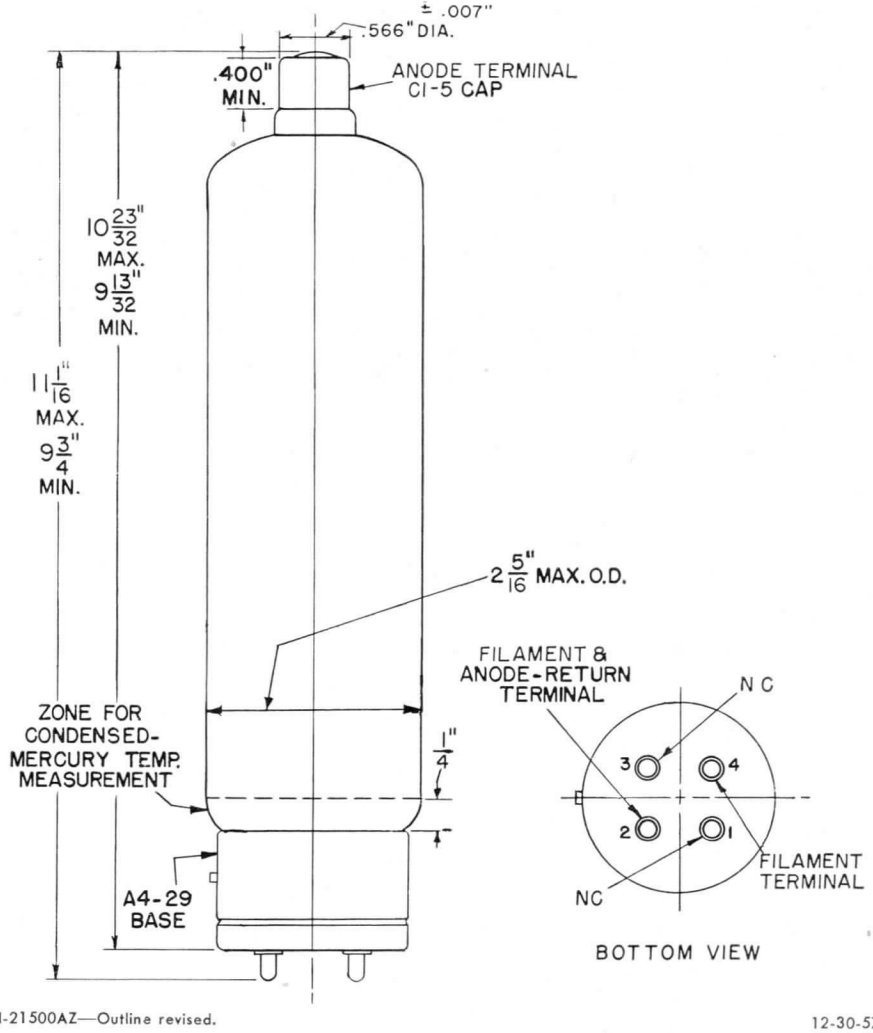

N-21500AZ—Outline revised. 12-30-57

ELECTRONIC COMPONENTS DIVISION

GENERAL ELECTRIC

Schenectady 5, N. Y.

PRINTED IN U.S.A.

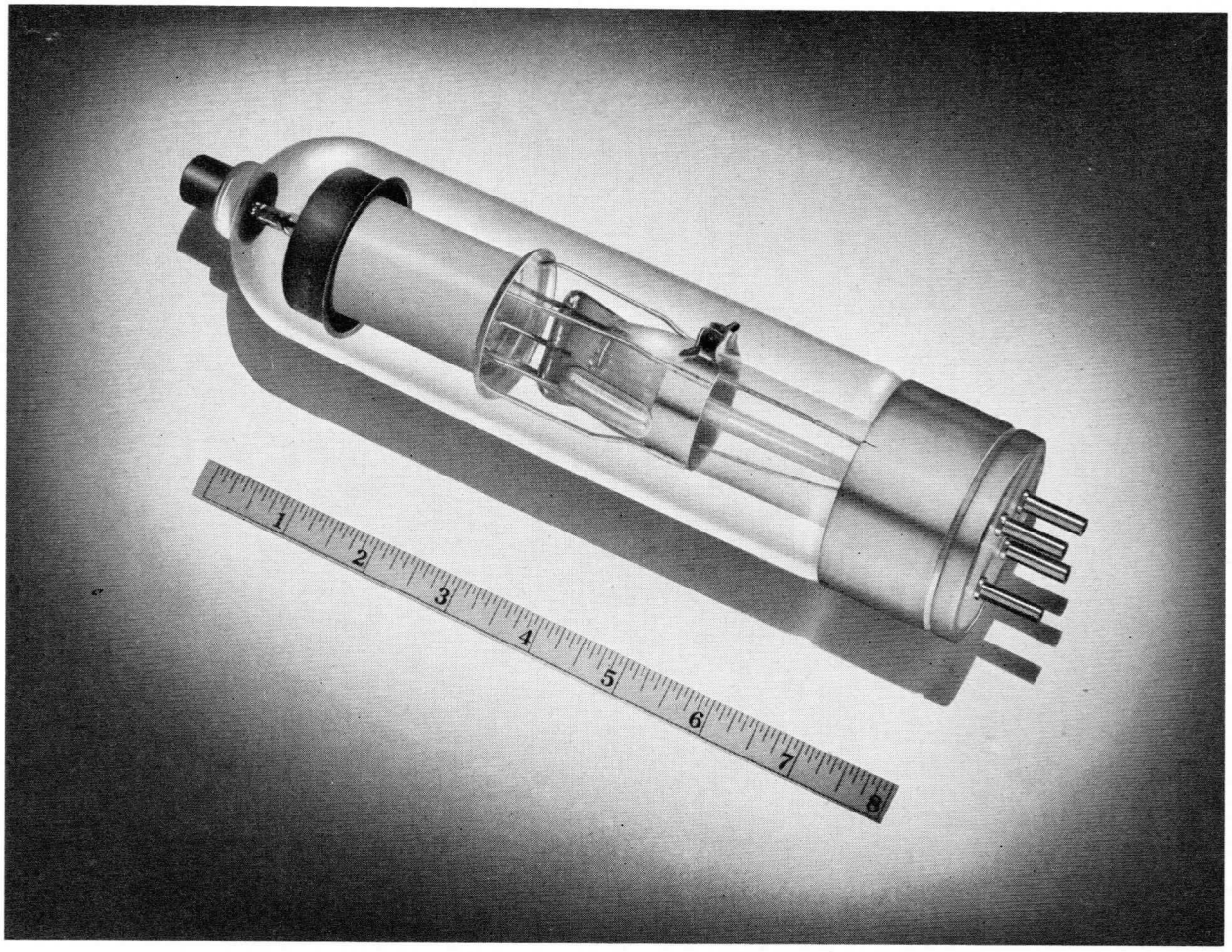

PHANOTRON

HALF-WAVE **MERCURY-VAPOR**

The GL-673 is a half-wave, mercury-vapor rectifier tube designed to withstand high peak inverse voltages, and to conduct at relatively low applied voltages.

TECHNICAL INFORMATION

GENERAL

Electrical	**Minimum**	**Bogey**	**Maximum**	
Cathode—Filamentary				
Filament Voltage	4.75	5.0	5.25	Volts
□Filament Current, at 5.0 Volts	9.0	10.0	11.5	Amperes
Heating Time	30	—	—	Seconds
Anode Voltage Drop, typical	—	10	—	Volts
⊕Critical Anode Voltage	—	—	100	Volts

Mechanical

Type of Cooling—Convection
Equilibrium Condensed-Mercury Temperature Rise over Ambient
At Full Load, approximate ..... 20 C
At No Load, approximate ..... 12 C
Base—Super-Jumbo 4-Pin Bayonet, A4-18.
Cap—Medium Metal, C1-5.
Mounting Position—Vertical, Base Down
⊕Net Weight, approximate ..... 13 Ounces

GENERAL ELECTRIC

TECHNICAL INFORMATION (CONT'D)

MAXIMUM RATINGS, Absolute Values

Maximum Peak Inverse Anode Voltage	10,000	15,000 Volts
Maximum Cathode Current		
□Peak		
Quadrature Operation	10.0	10.0 Amperes
In Phase Operation	7.0	6.0 Amperes
□Average		
Quadrature Operation	2.5	2.5 Amperes
In Phase Operation	1.75	1.5 Amperes
⊕Fault	100	100 Amperes
Maximum Duration	0.1	0.1 Seconds
Maximum Averaging Time	20	20 Seconds
Condensed-Mercury Temperature Limits*	+20 to +60	+20 to +50 C
Maximum Frequency	150	150 Cycles per Second

*Maximum temperature ratings for intermediate peak inverse voltages may be determined by linear interpolation. When this is done lower current rating applies.

□Denotes an addition.
⊕Denotes a change.

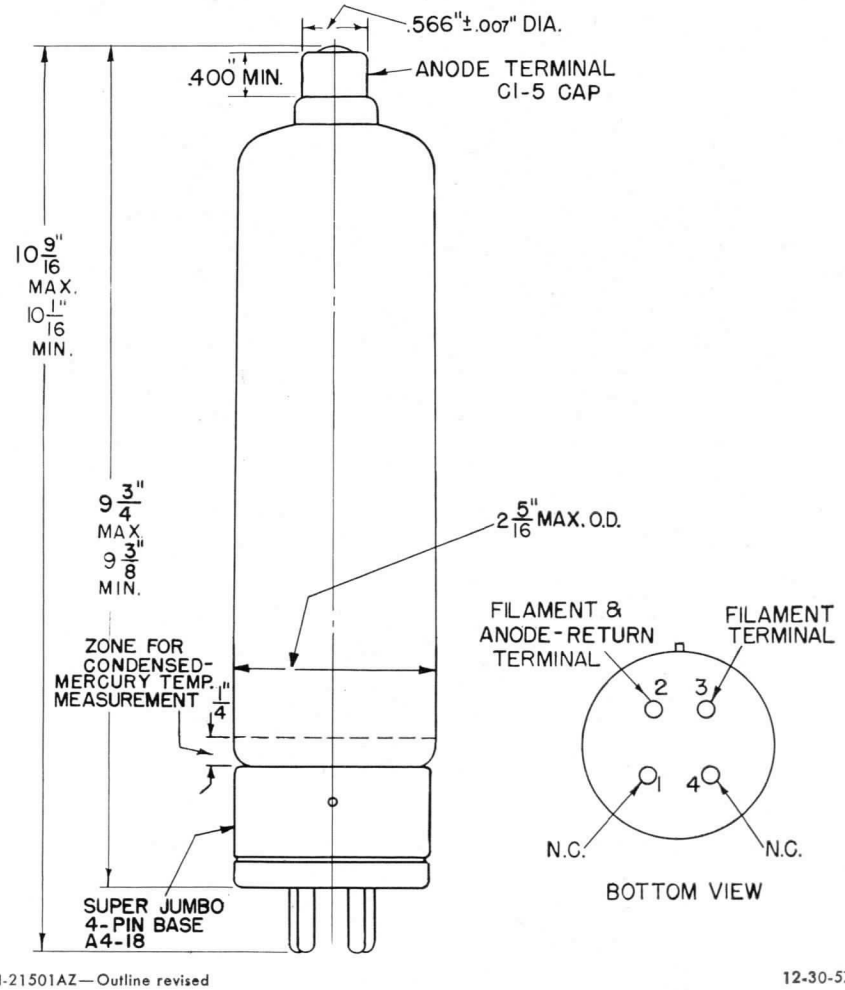

N-21501AZ—Outline revised 12-30-57

ELECTRONIC COMPONENTS DIVISION

GENERAL ELECTRIC

Schenectady 5, N. Y.

PRINTED IN U.S.A.



MERCURY-VAPOR RECTIFIER

DESCRIPTION

The GL-816 half-wave, mercury-vapor rectifier, is used in transmitting equipment where a tube with a lower power rating than the 866-A/866 is required. The maximum peak inverse voltage of 5000 volts and the peak plate current of 0.5 ampere are one-half the 866-A/866 values.

Two 816's operating in a full-wave rectifier circuit are capable of delivering to the input of a choke-input filter a rectified voltage of approximately 1600 volts at 0.25 ampere with good regulation.

TECHNICAL INFORMATION

These data are for reference only. For design information refer to specifications.

GENERAL CHARACTERISTICS

Number of electrodes	2	
Electrical		
Cathode—Filamentary		
Voltage	2.5	volts
Current, approximate	2	amperes
Heating time, typical	10	seconds
Tube voltage drop, approximate	15	volts
Mechanical		
Cap	small, C1-1	
Base	small 4-pin, A4-5	
Net weight, approximate	3	ounces
Shipping weight, approximate	3	pounds
Mounting position	vertical, base down	

GE Electronic TUBE

GENERAL ELECTRIC

TECHNICAL INFORMATION (CONT'D)

MAXIMUM RATINGS

Maximum peak inverse anode voltage		
150 cycles per second or less	5000	volts
Condensed mercury temperature	20–60	centigrade
Maximum anode current		
Instantaneous	0.5	ampere
Average	0.125	ampere

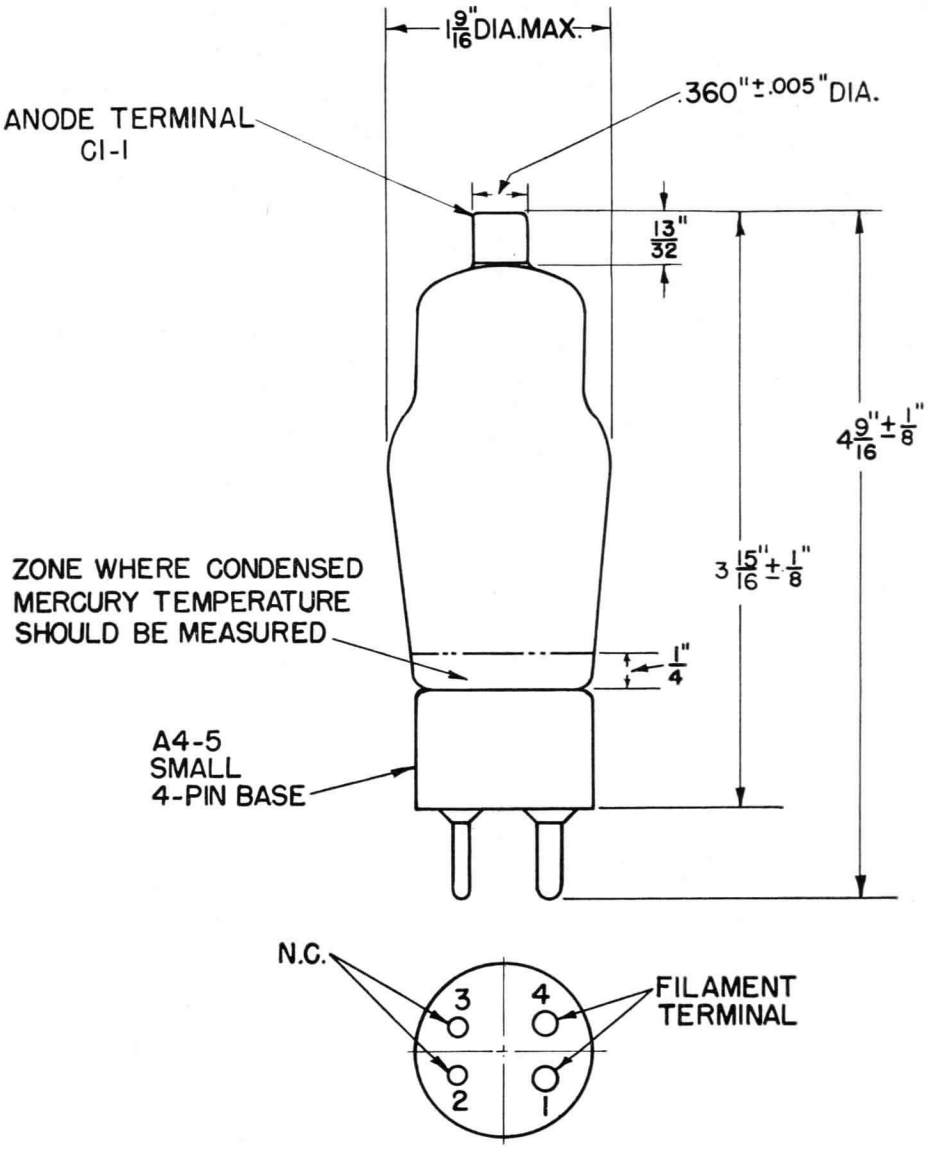

GL-816 OUTLINE

K-9033898 7-26-45

Electronics Department
GENERAL ELECTRIC
Schenectady, N. Y.

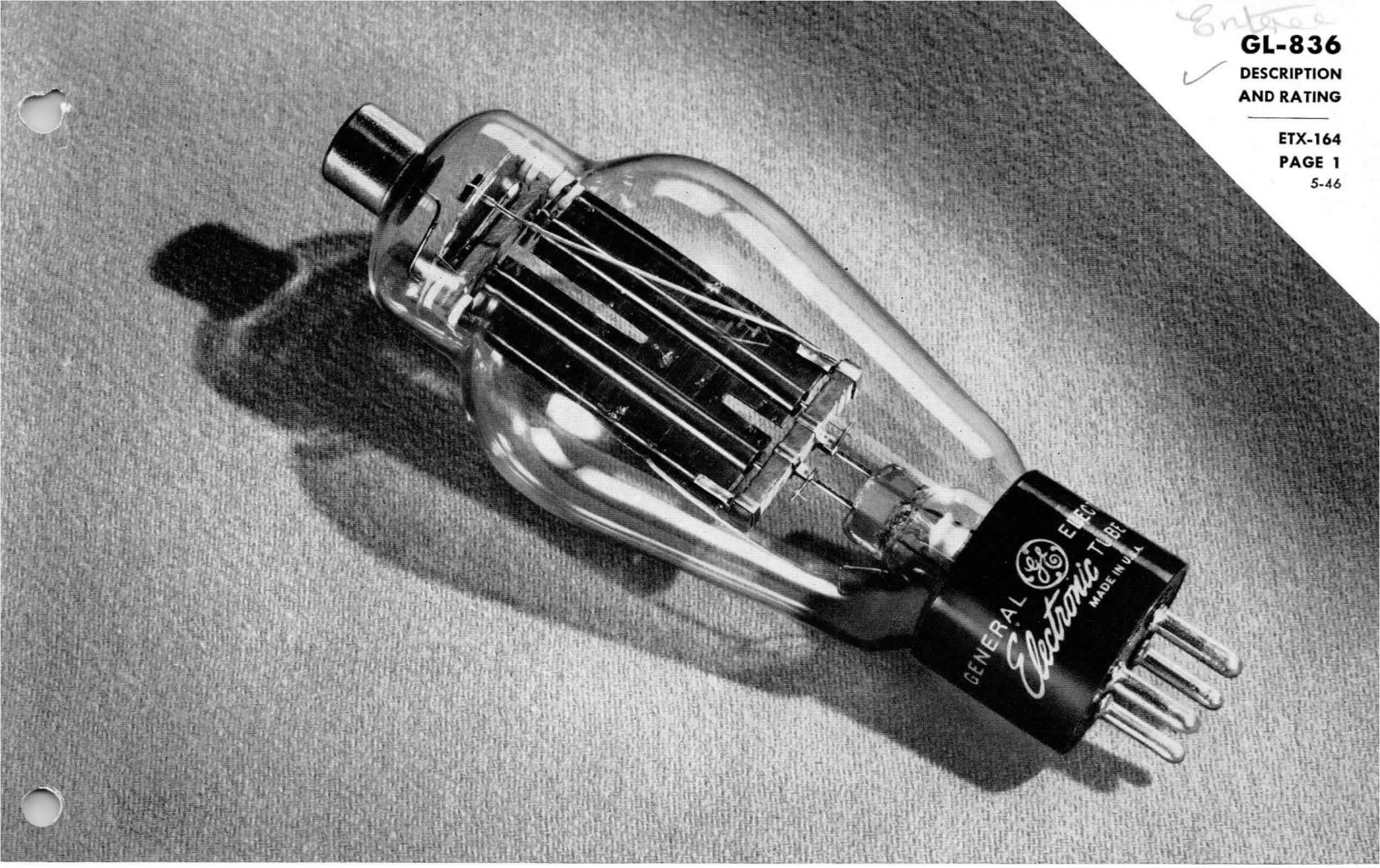

HIGH-VACUUM RECTIFIER

DESCRIPTION

The GL-836 is a half-wave, high-vacuum rectifier with two separate cathodes each of which is connected to its respective heater. The excellent voltage regulation characteristic of this tube is due to the close spacing of the cathode and plate. The double-cathode construction and the close spacing of the electrodes result in a tube with excellent voltage regulation characteristics.

TECHNICAL INFORMATION

These data are for reference only. For design information refer to specifications.

GENERAL CHARACTERISTICS

Number of electrodes	2	
Electrical		
Cathode—Indirectly-heated		
Voltage	2.5	volts
Current	5.0	amperes
Heating time (before applying plate voltage)	40	seconds
Tube voltage drop, approx (see curve), Ib = 250 ma	45	volts

Electronic TUBE

GENERAL ELECTRIC

TECHNICAL INFORMATION (CONT'D)

Mechanical

Type of cooling		convection
Maximum ambient temperature	60	centigrade
Base description		medium 4-pin bayonet
Cap		medium
Maximum over-all dimensions (see outline)		
Length	$6\frac{9}{16}$	inches
Diameter	$2\frac{7}{16}$	inches
Mounting position		any
Net weight, approx		3 ounces

MAXIMUM RATINGS

Rectifier operation		
Peak inverse voltage	5000	volts
Peak plate current	1.0	ampere
Average plate current	0.25	ampere

GL-836

AVERAGE PLATE CHARACTERISTIC

$E_f = 2.5$ VOLTS D-C

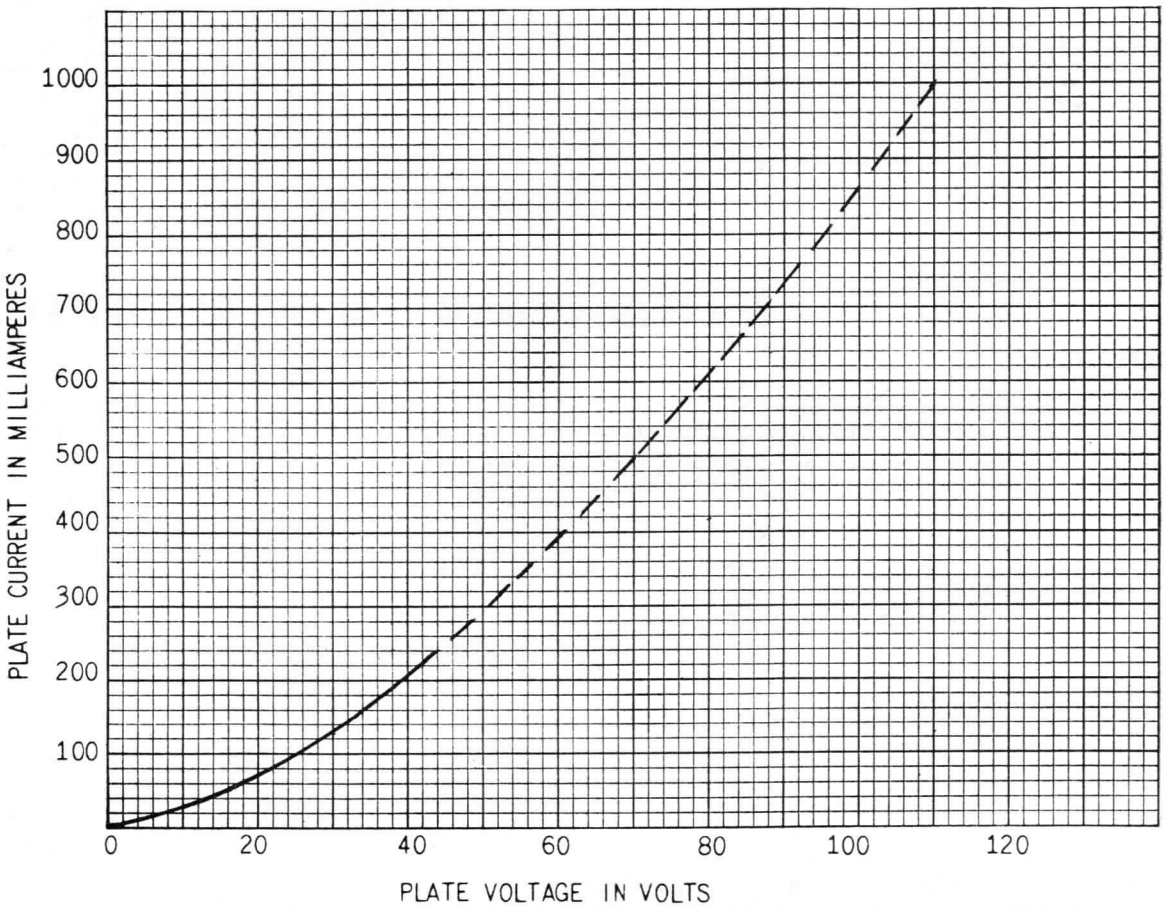

K-6966445

1-9-46

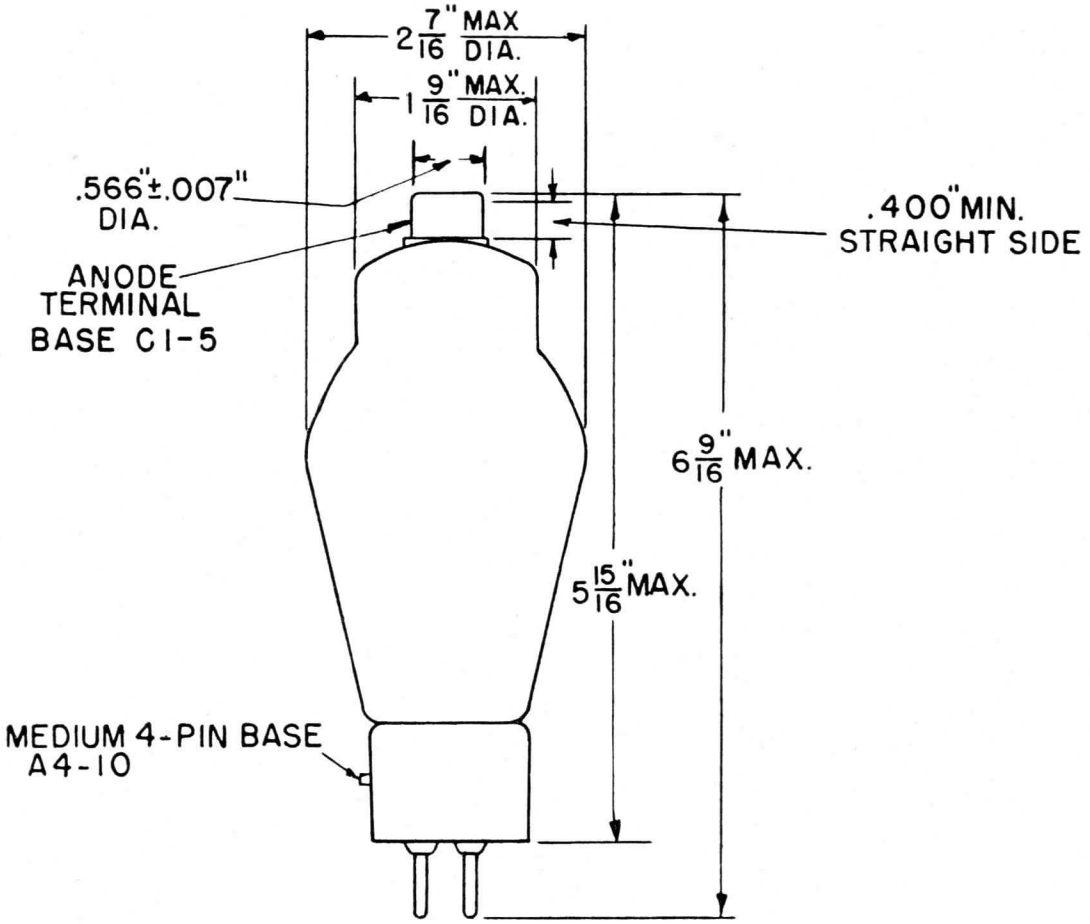

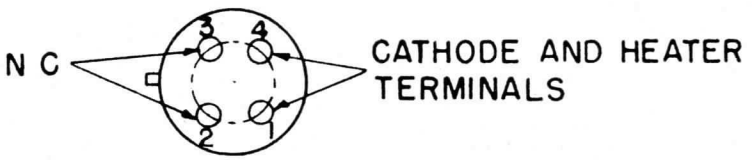

GL-836 OUTLINE

K-6979115

10-29-45

Electronics Department
GENERAL ELECTRIC
Schenectady, N. Y.

5-46 (7M)
Filing No. 8850



MERCURY-VAPOR RECTIFIER

This half-wave, mercury-vapor rectifier is designed to withstand high peak inverse voltages and to conduct at low applied voltages. The construction minimizes the danger of bulb cracks caused by corona discharge. An edgewise-wound ribbon filament provides a large emission reserve and improved life.

Two tubes operating in a full-wave rectifier are capable of delivering to the input of a choke-input filter a rectified voltage of 3180 volts at 0.5 ampere with good regulation.

TECHNICAL INFORMATION

GENERAL

Number of Electrodes 2

Electrical

	Minimum	Bogey	Maximum	
Cathode—Filamentary				
Filament Voltage	2.37	2.5	2.62	Volts
Filament Current, approximate	—	5.0	5.4	Amperes
Heating Time, typical	15	—	—	Seconds
Peak Voltage Drop, typical	—	15	—	Volts

Mechanical

Type of Cooling—Convection

Equilibrium Condensed-Mercury Temperature Rise Over Ambient

No Load, approximate . . . . . 26 C

Full Load, approximate . . . . . 33 C

Net Weight, approximate . . . . . 3 Ounces

Shipping Weight, approximate . . . . . 3 Pounds

Mounting Position—Vertical, Base Down

GENERAL ELECTRIC

Supersedes ETX-175A dated 3-48

TECHNICAL INFORMATION (CONT'D)

MAXIMUM RATINGS

Maximum Peak Inverse Anode Voltage			
⊕150 Cycles Per Second or Less	2500	10,000	Volts
⊕Condensed Mercury Temperature	20–80	20–60	C
1000 Cycles Per Second or Less		5000	Volts
⊕Condensed Mercury Temperature		20–70	C
Maximum Cathode Current			
Instantaneous	2.0	1.0	Amperes
Average	0.5	0.25	Amperes
Fault (maximum duration 0.1 second)	20	20	Amperes
Maximum Averaging Time	30	30	Seconds

⊕*Denotes a change.*

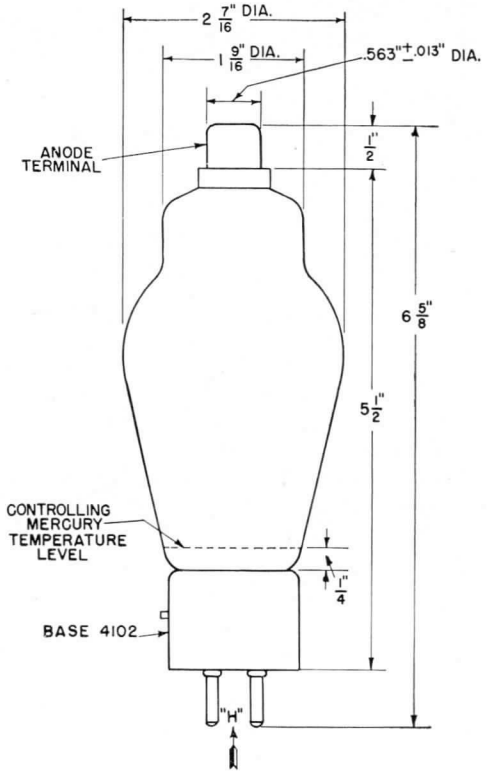

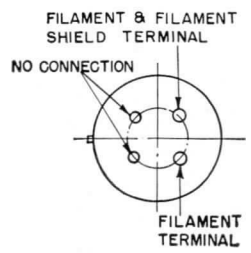

VIEW "H"

K-6966978 9-23-44

TUBE DEPARTMENT

GENERAL ELECTRIC

Schenectady 5, N. Y.

PRINTED IN U.S.A.



PHANOTRON

DESCRIPTION

The GL-872-A is a mercury-vapor, half-wave rectifier for use in high-voltage rectifier circuits.

♦TECHNICAL INFORMATION

These data are for reference only. For design information refer to specifications.

GENERAL

Electrical Data	Minimum	Bogey	Maximum	
Filament voltage	4.75	5.0	5.25	volts
Filament current at 5.0 volts		7.5	8.0	amperes
Cathode heating time required	30			seconds
Anode voltage drop, typical		15		volts
Critical anode voltage			50	volts

Mechanical Data

Type of cooling—Convection

Equilibrium condensed-mercury-temperature rise above ambient

At full load, approximate	20	C
At no load, approximate	14	C

Mounting position—Vertical, base down

Net weight, maximum	7.5	ounces

♦ Technical information completely revised.

GE Electronic TUBE

GENERAL ELECTRIC

Supersedes ETI-155A dated 4-48

TECHNICAL INFORMATION (CONT'D)

MAXIMUM RATINGS, Absolute Values

Maximum peak inverse anode voltage	5000	10,000	volts
Maximum cathode current			
Peak	5.0	5.0	amperes
Average	1.25	1.25	amperes
Surge (maximum duration 0.2 second)	50	50	amperes
Maximum averaging time	15	15	seconds
Maximum frequency	150	150	cycles per second
Condensed-mercury temperature limits	+20 to +70	+20 to +60C	

OUTLINE
▲GL-872-A PHANOTRON

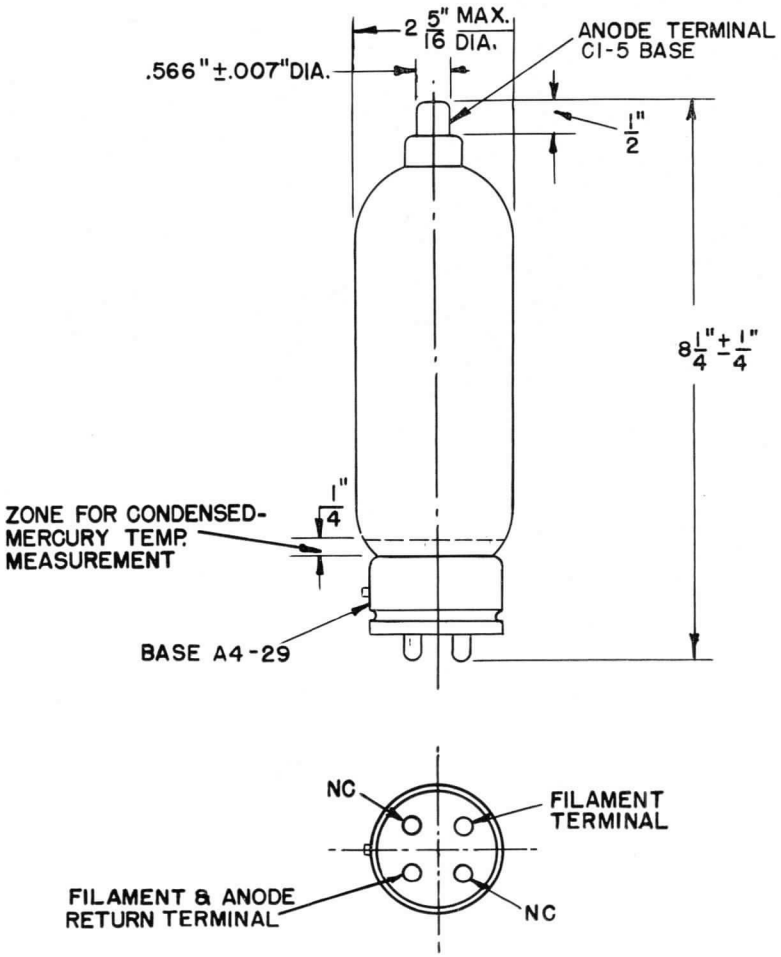

K-8639375
8-2-49
▲Revised drawing.

Tube Divisions, Electronics Department

GENERAL ELECTRIC

Schenectady, N. Y.

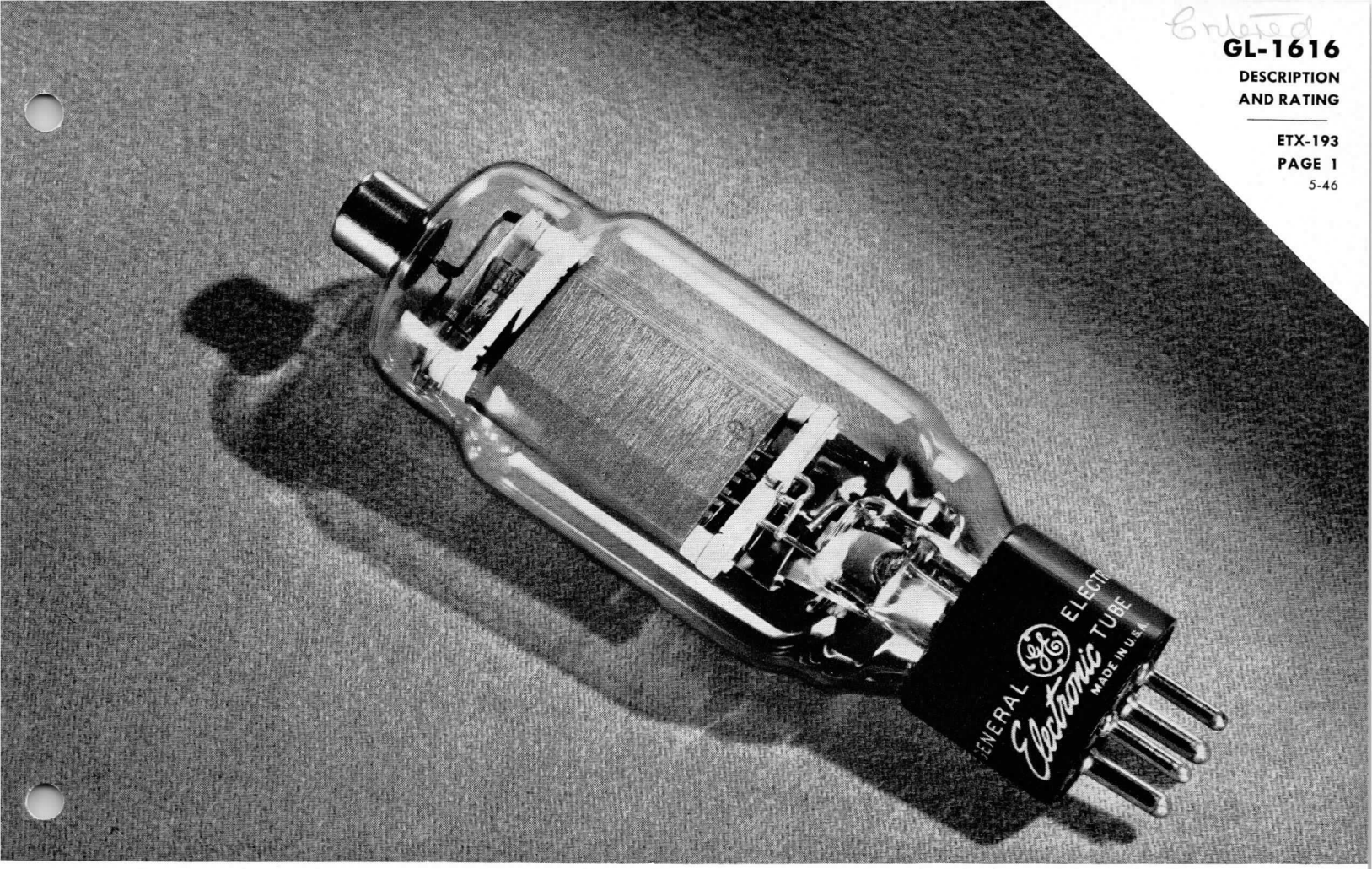

HIGH-VACUUM RECTIFIER

DESCRIPTION

The GL-1616 is a high-vacuum, half-wave rectifier. Since the tube is quick-heating it is particularly useful in high-voltage devices where plate and filament voltages are applied simultaneously under full load conditions. This tube may be used at voltages as high as 5500 volts peak inverse.

TECHNICAL INFORMATION

These data are for reference only. For design information refer to specifications.

GENERAL CHARACTERISTICS

Number of electrodes	2	
Electrical		
Cathode-filamentary		
Filament voltage	2.5	volts
Filament current	5.0	amperes
Tube voltage drop	75	volts
Mechanical		
Base description		medium, 4-pin bayonet
Net weight, approx	3	ounces
Shipping weight, approx	1	pound
Mounting position		Vertical, base down

GE Electronic TUBE

GENERAL ELECTRIC

TECHNICAL INFORMATION (CONT'D)

MAXIMUM RATINGS

Maximum peak inverse voltage	5500	volts
Maximum peak plate current	0.8	ampere
Maximum average plate current	0.13	ampere
Maximum surge plate current	2.5	ampere

GL-1616

AVERAGE PLATE CHARACTERISTICS

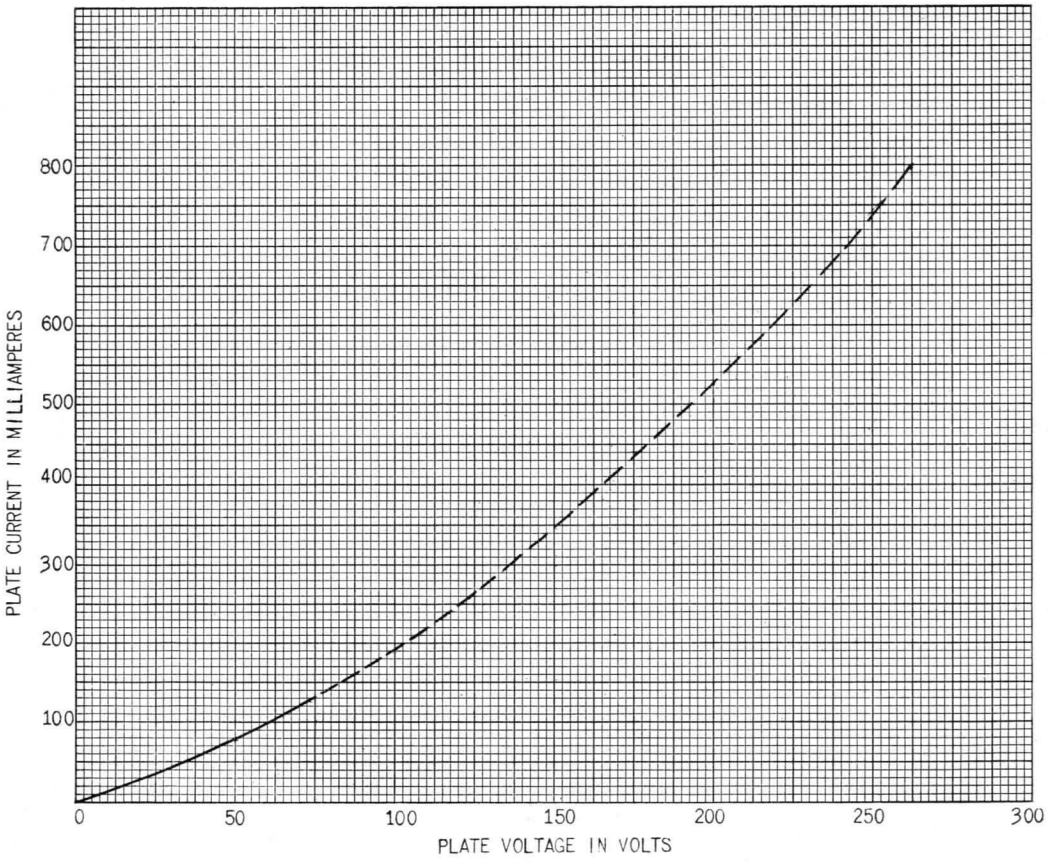

K-6966495

1-9-46

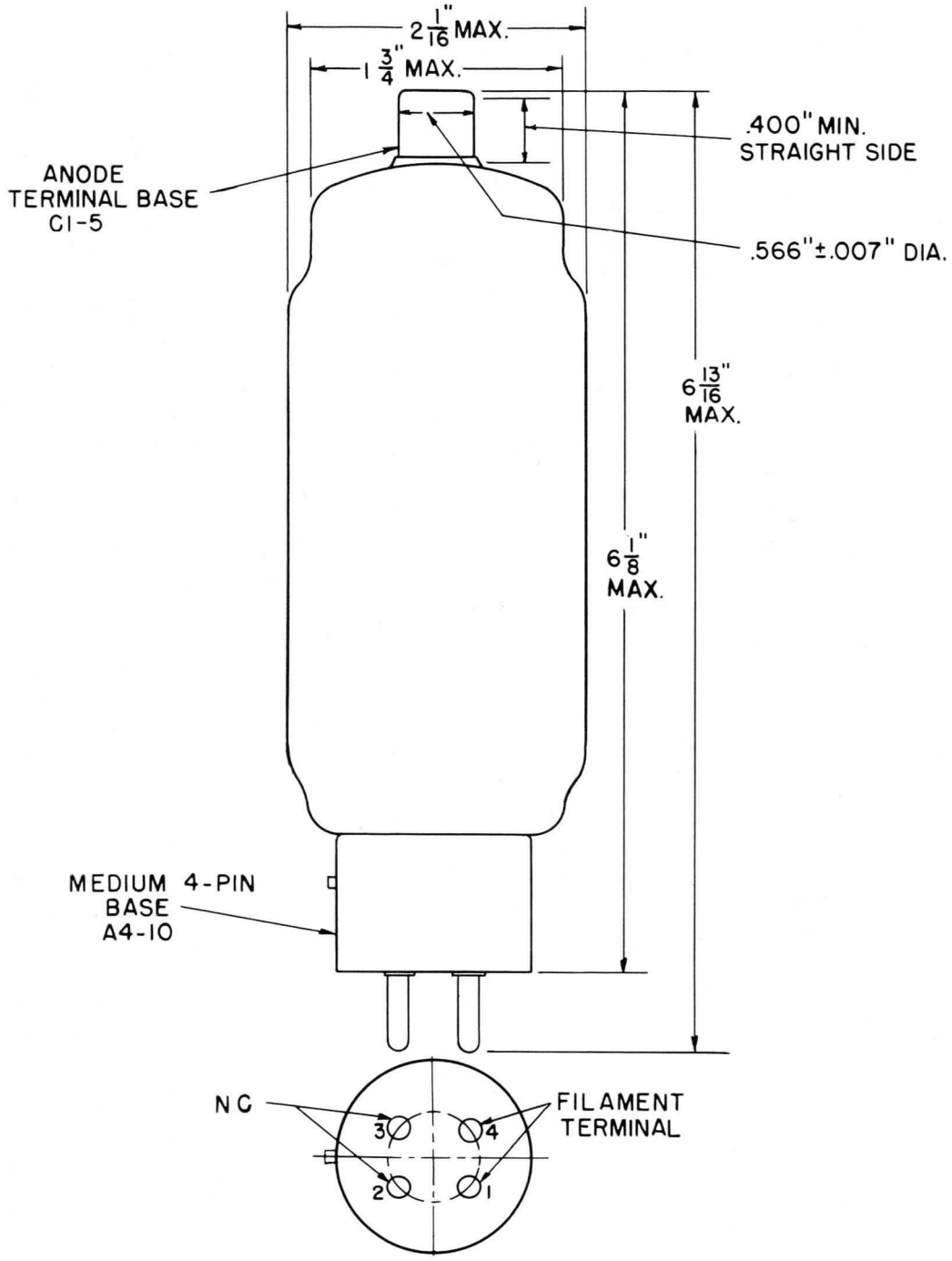

GL-1616 OUTLINE

K-6979172

12-29-45

Electronics Department
GENERAL ELECTRIC
Schenectady, N. Y.

5-46 (7M)
Filing No. 8850

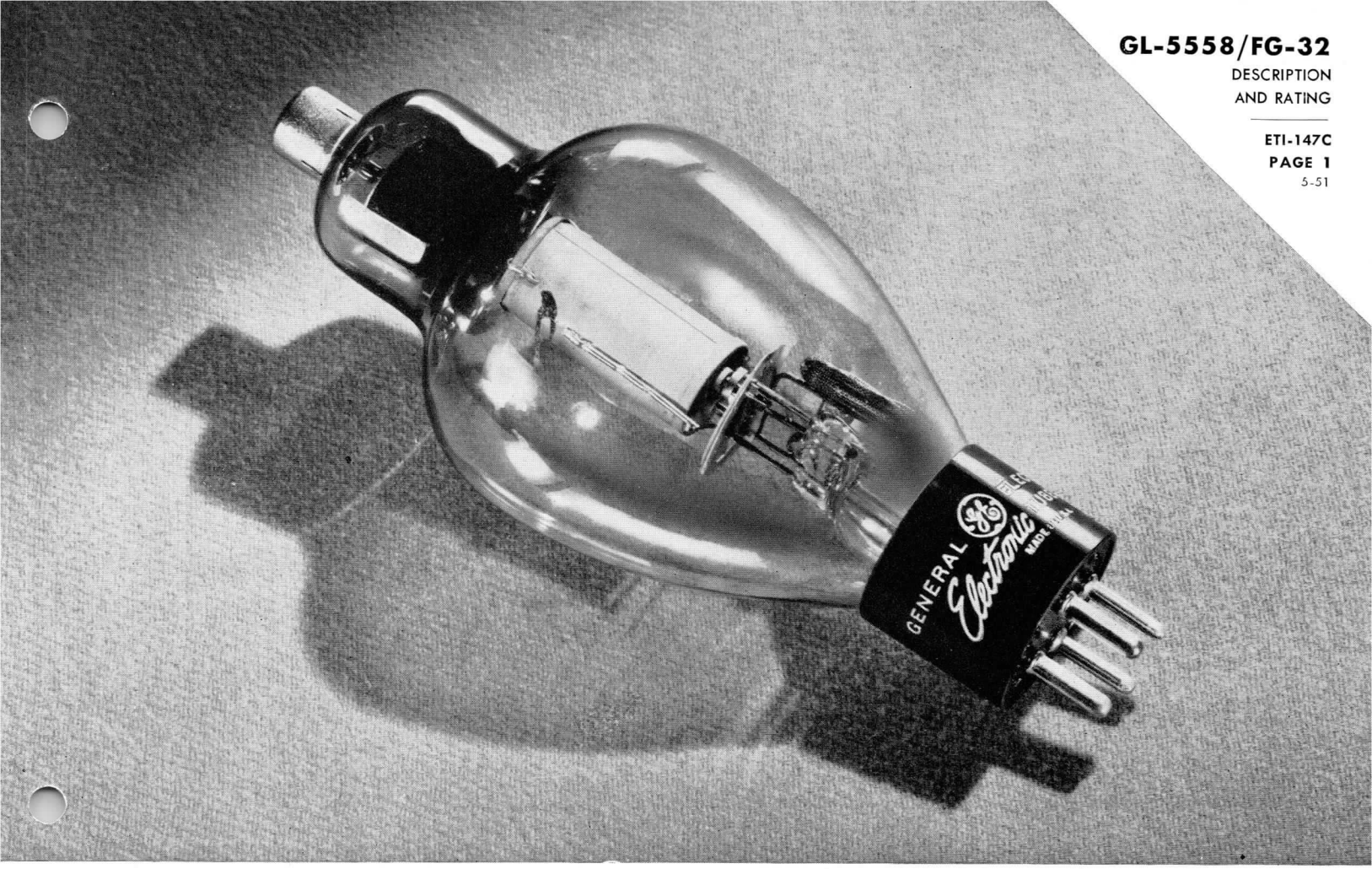

PHANOTRON

DESCRIPTION

The GL-5558/FG-32 is a half-wave, mercury-vapor rectifier for converting alternating current to direct current. It is adapted to applications where rectification of higher currents at lower frequencies and voltages is desired than is possible with high-vacuum tubes. In comparison with high-vacuum tubes the GL-5558/FG-32 has a relatively low and constant voltage drop which is an advantage in low-voltage rectifier applications as it allows more efficient utilization of power and results in lower circuit losses.

♦TECHNICAL INFORMATION

These data are for reference only. For design information refer to specifications.

GENERAL

Electrical Data	Minimum	Bogey	Maximum	
Cathode—Indirectly heated				
Heater voltage	4.75	5.0	5.25	volts
Heater current at 5 volts	—	4.5	4.9	amperes
Cathode heating time	5	—	—	minutes
Anode voltage drop	—	15	—	volts
Critical anode voltage	—	—	50	volts

♦ Completely revised.

Electronic TUBE

GENERAL ELECTRIC

Supersedes ETI-147B dated 10-47

TECHNICAL INFORMATION (CONT'D)

Mechanical Data

Type of cooling—Convection
Equilibrium condensed-mercury-temperature rise above ambient
At full load, approximate . . . . . 28 C
At no load, approximate . . . . . 22 C
Mounting position—Vertical, base down
Net weight, maximum . . . . . 5 ounces

MAXIMUM RATINGS, Absolute Values

Maximum peak inverse anode voltage	2000	5000 volts
Condensed-mercury temperature limits	+30 to +80	+30 to +60 C
Maximum cathode current		
Peak	15	15 amperes
Average	2.5	2.5 amperes
Surge (maximum duration 0.1 second)	200	200 amperes
Maximum averaging time	15	15 seconds
Maximum frequency	150	150 cycles per sec.

GL-5558/FG-32
RATE OF RISE OF CONDENSED-MERCURY TEMPERATURE ABOVE AMBIENT

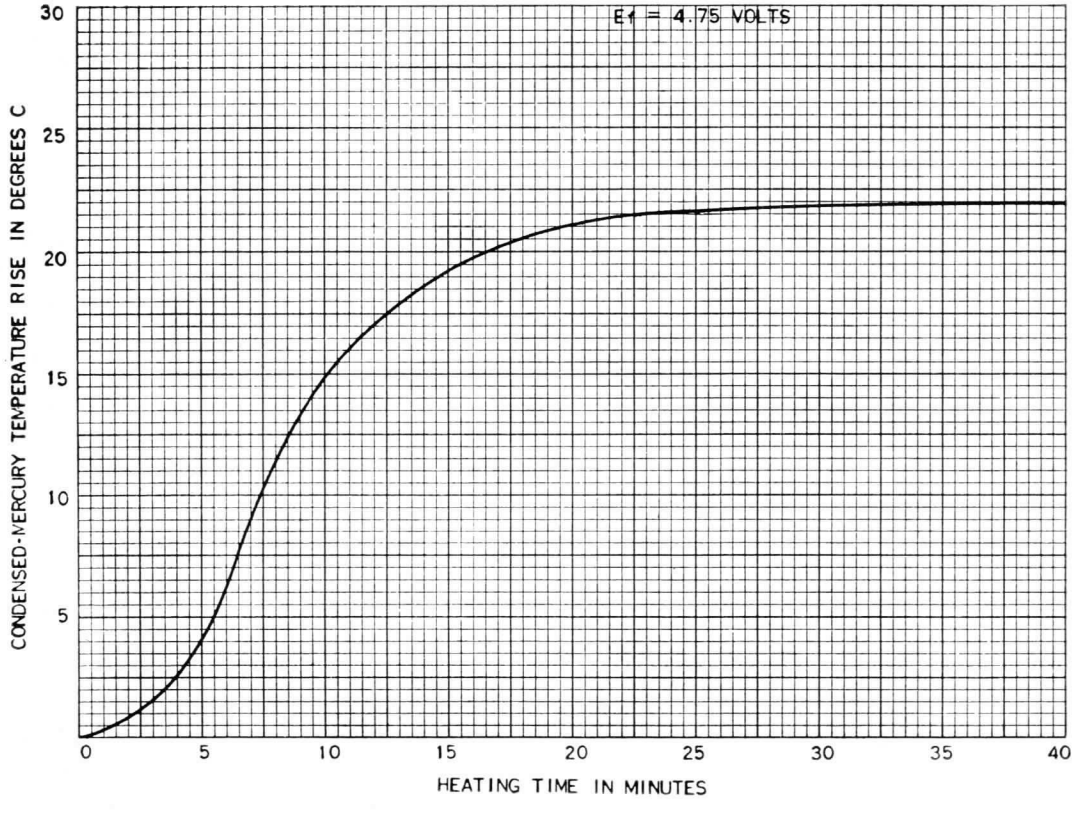

N-21534ZA

3-11-47

OUTLINE
GL-5558/FG-32 PHANOTRON

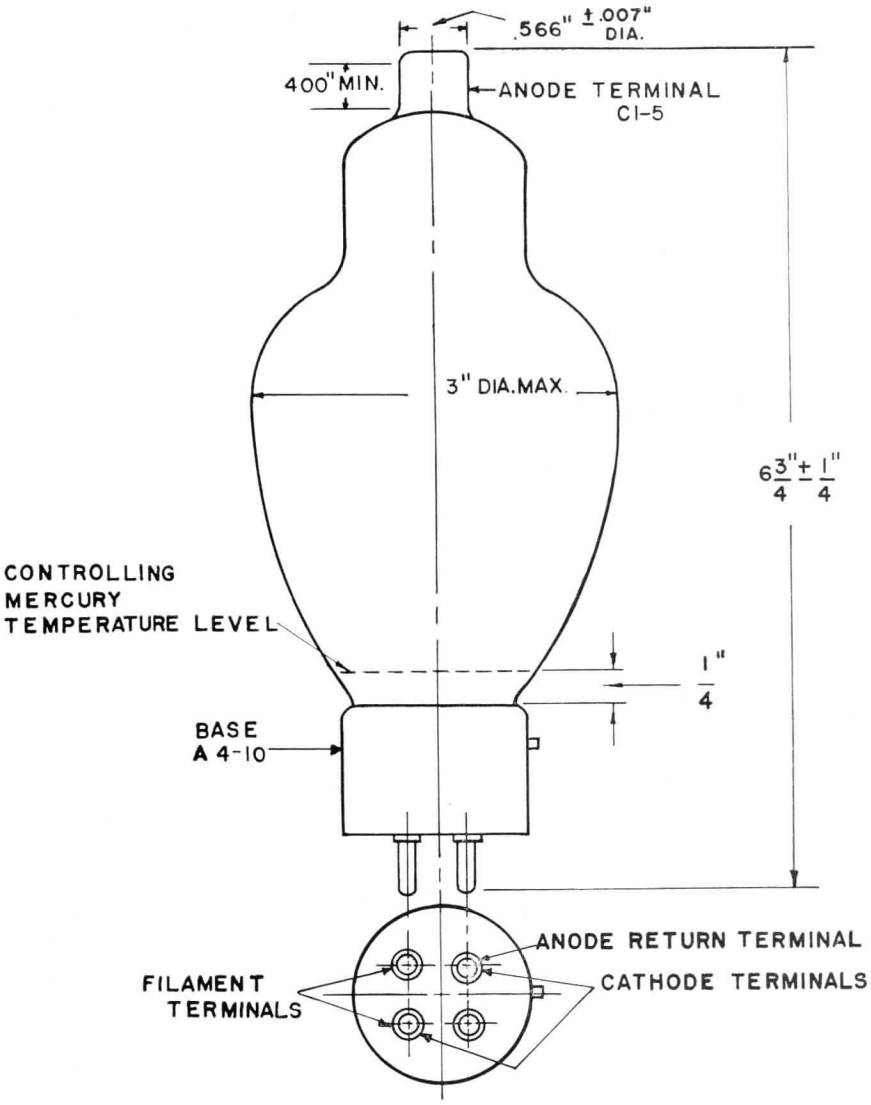

K-4373333

10-15-45

Tube Divisions, Electronics Department

GENERAL ELECTRIC

Schenectady, N. Y.

5-51 (11M)

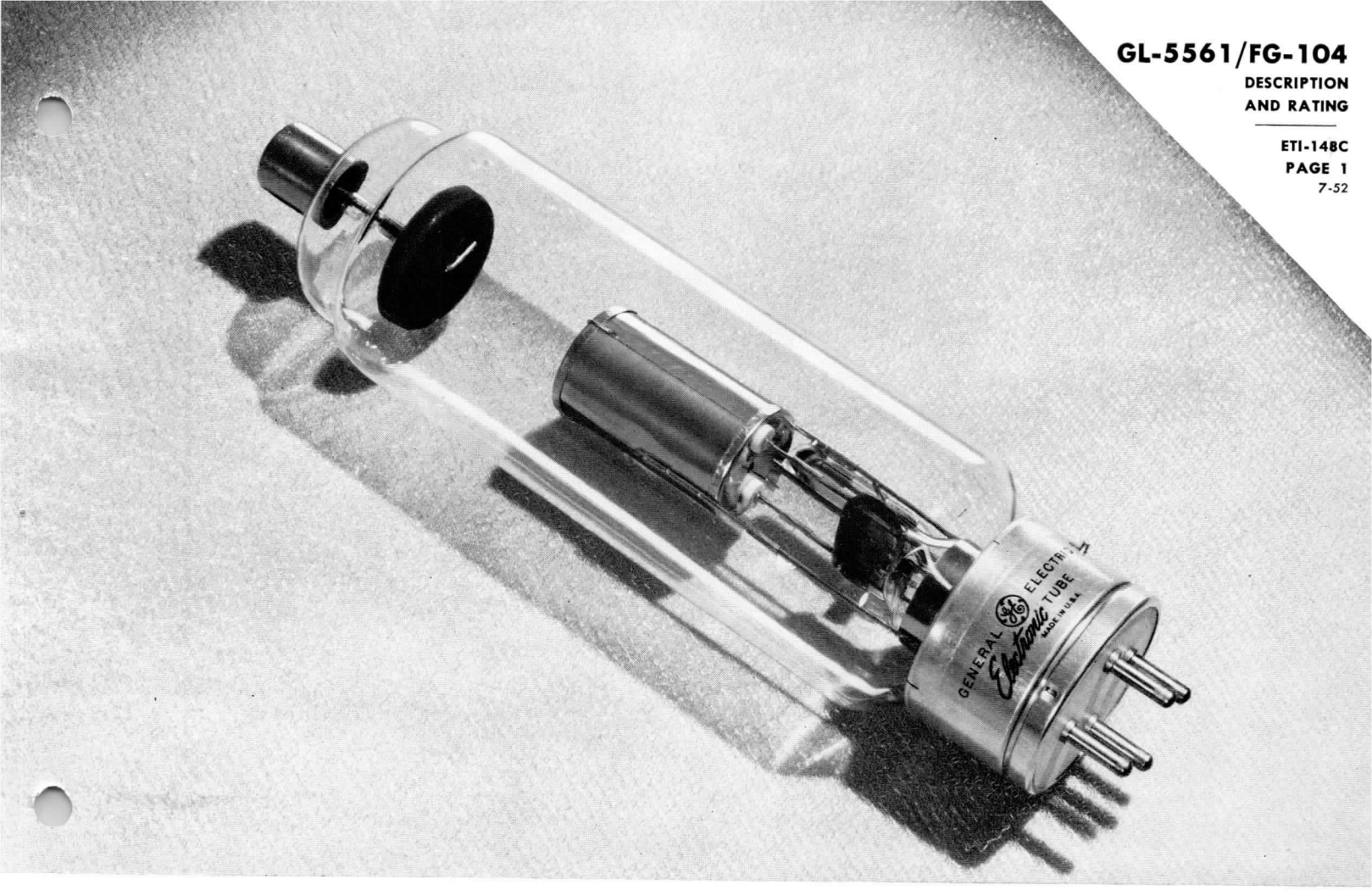

PHANOTRON

DESCRIPTION

The GL-5561/FG-104 is a half-wave, mercury-vapor rectifier for converting alternating current to direct current. It is suitable for applications where rectification of higher currents at lower frequencies and voltages is desired than is possible with high-vacuum tubes. In comparison with high-vacuum tubes, the GL-5561/FG-104 has a low and constant voltage drop which is an advantage in low-voltage rectifier applications since it allows more efficient utilization of power and results in lower circuit losses.

TECHNICAL INFORMATION

These data are for reference only. For design information refer to specifications.

GENERAL CHARACTERISTICS

Number of electrodes 2

Electrical	Minimum	Bogey	Maximum	
Heater voltage	4.75	5.0	5.25	volts
Heater current		10.0	10.75	amperes
Cathode heating time required	300			seconds
Anode voltage drop, typical		15		volts
Critical anode voltage			50	volts
Mechanical Data				
Type of cooling—convection				
Mounting position—vertical, base-down				
Net weight, maximum			1	pound

Electronic TUBE

GENERAL ELECTRIC

Supersedes ETI-148B dated 4-48

TECHNICAL INFORMATION (CONT'D)

MAXIMUM RATINGS

	Continuous Service	Welder-Control Service	
Maximum peak inverse anode voltage	3000	10,000	volts
Maximum anode current			
Instantaneous	40	16	amperes
Average anode current	6.4	4	amperes
Surge anode current, for design only	400	160	amperes
Duration of surge current	0.1	0.1	second
Maximum time of averaging current	15	15	seconds
Temperature limits, condensed mercury	+40 to +80	+25 to +50	centigrade

GL-5561/FG-104
RATE OF RISE OF CONDENSED-MERCURY TEMPERATURE ABOVE AMBIENT

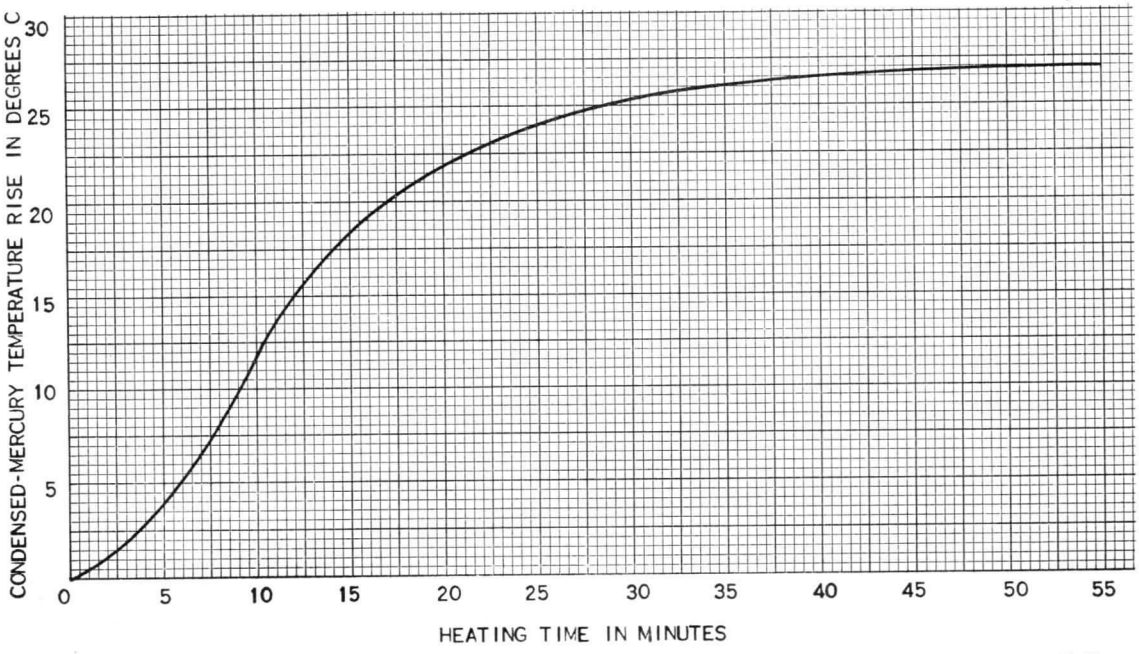

N-21540ZA

3-11-47

♦CATHODE REHEATING CURVE
ANODE VOLTAGE = 0

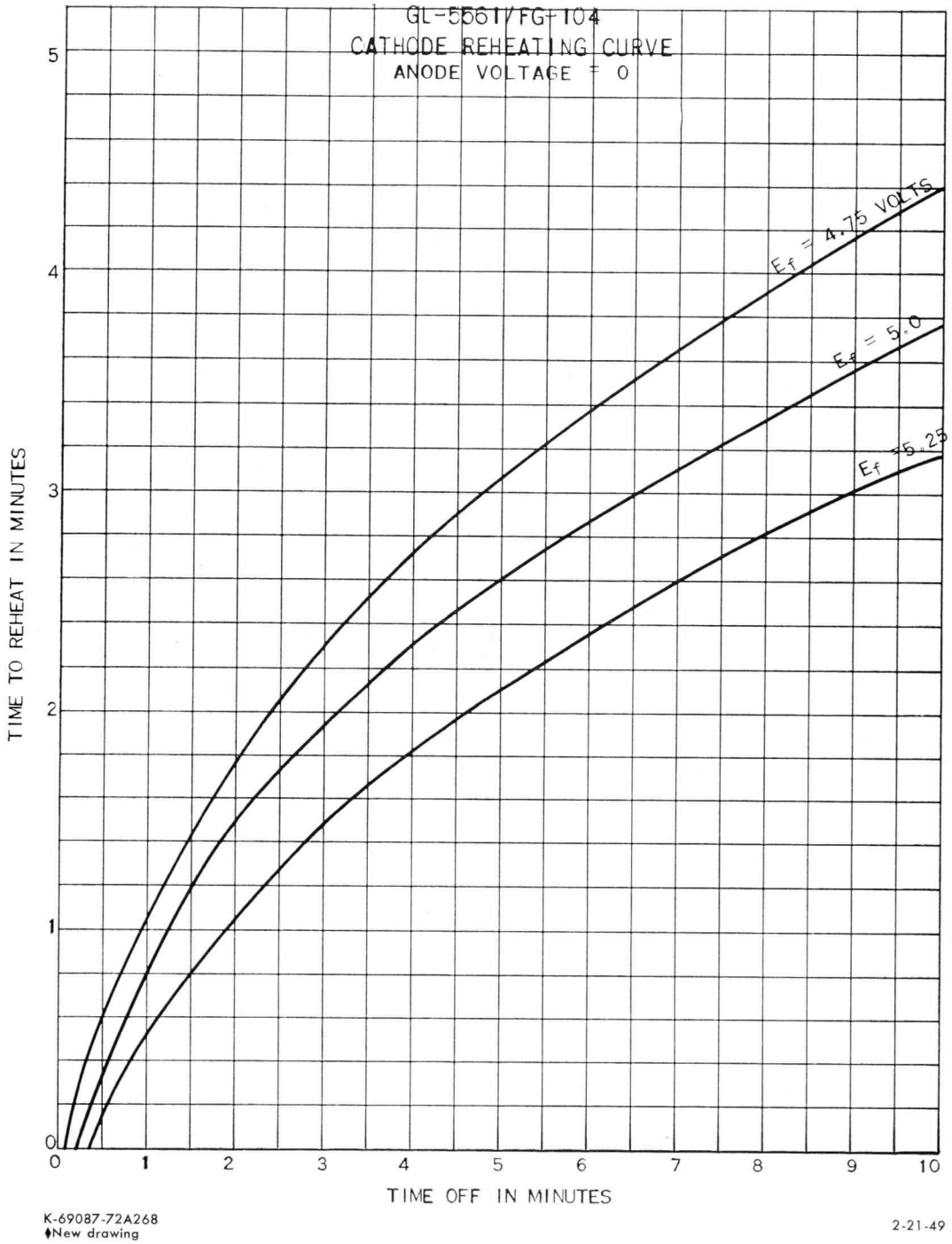

K-69087-72A268
♦New drawing

2-21-49

OUTLINE

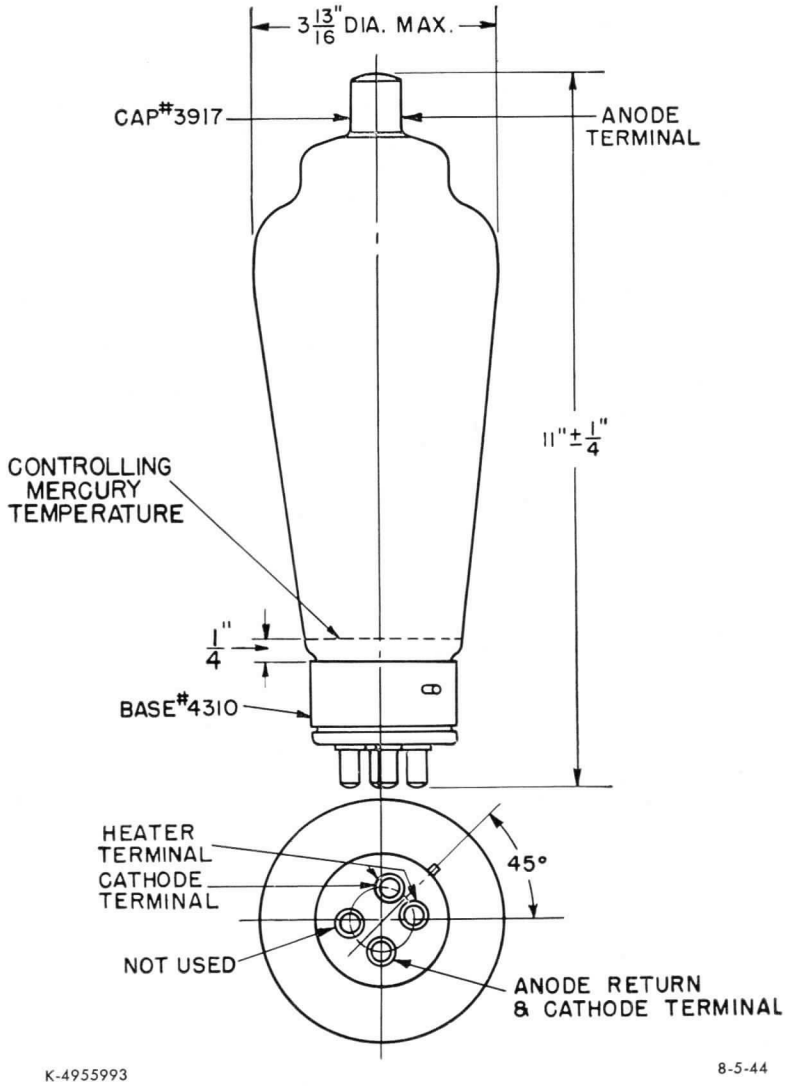

Tube Department

GENERAL ELECTRIC

Schenectady, N. Y.



KENOTRON

PLATE DISSIPATION—800 WATTS
THORIATED-TUNGSTEN FILAMENT
RECTIFIER AND LIMITER DIODE

LOW VOLTAGE DROP
20 AMPERES AT 75 KILOVOLTS
1.25 AMPERES DC AT 40 KILOVOLTS

The GL-5973 is a two-electrode high-vacuum tube for use as a rectifier or surge-limiting diode. Design features include a thoriated-tungsten filament and a low voltage drop which enable the tube to carry high average currents.

In rectifier service the tube will operate at average currents as high as 1.25 amperes at 40,000 volts and one ampere at higher voltages. In limiter service ratings as high as 20 amperes at 75,000 volts apply. These ratings make the tube particularly suitable for use in radar as a charging diode to supply d-c power to magnetrons or as a limiter to restrict fault currents. Other applications include high-voltage power supplies in cable-testing service and smoke precipitators.

TECHNICAL INFORMATION

GENERAL

Electrical	Minimum	Bogey	Maximum	
Filament Voltage	15.2	16	16.8	Volts
Filament Current at 16 Volts	18.0	19.1	20.2	Amperes
Filament Starting Current	—	—	30	Amperes
Filament Cold Resistance	—	0.1	—	Ohms
Filament Heating Time, before applying plate voltage	30	—	—	Seconds
Tube Voltage Drop, $I_b = 5$ amperes	850	950	1050	Volts
Interelectrode Capacitance	—	14	—	$\mu\mu f$

GENERAL ELECTRIC

Supersedes ET-T1038 dated 2-53

TECHNICAL INFORMATION (Cont'd)

Mechanical

Maximum Glass Temperature*	300	C
Maximum Base Temperature	150	C
Mounting Position—Vertical, Base Down		
Net Weight, approximate	3	Pounds

MAXIMUM RATINGS AND TYPICAL OPERATING CONDITIONS

Rectifier Service

Maximum Ratings, Absolute Values		
Peak Inverse Voltage	75	Kilovolts
Plate Current		
Peak	5	Amperes
Average		
Peak Inverse Voltage = 40 Kilovolts or Less	1.25	Amperes
Peak Inverse Voltage = more than 40 Kilovolts	1.00	Amperes
Average Plate Dissipation		
Peak Inverse Voltage = 40 Kilovolts or Less†	850	Watts
Peak Inverse Voltage = more than 40 Kilovolts‡	800	Watts

Limiter Service

Maximum Ratings, Absolute Values		
Peak Inverse Voltage	75	Kilovolts
Peak Plate Current	20	Amperes
Average Plate Dissipation‡	800	Watts

*Where tubes are enclosed or operated in close proximity to each other, forced-air cooling may be required to limit bulb and base temperatures to the allowable maximum.
†Maximum observed temperature of 1010 C at any point on the anode.
‡Maximum observed temperature of 985 C at any point on the anode.

□Denotes an addition.

□X-RAY WARNING NOTICE

If the GL-5973 is operated at anode voltages in excess of 16 kilovolts, x-ray radiation shielding may be necessary to protect the user against possible danger of personal injury from prolonged exposure at close range. For further information consult the following references or other standard texts on the subject:

(a) *X-Ray Protection Design,* Handbook No. 50. National Bureau of Standards, Washington, D.C.
(b) *X-Ray Protection,* Handbook No. 60. National Bureau of Standards, Washington, D.C.

The above references are available from the Superintendent of Documents, Government Printing Office, Washington 25, D.C.

TYPICAL FILAMENT CURRENT CHARACTERISTIC

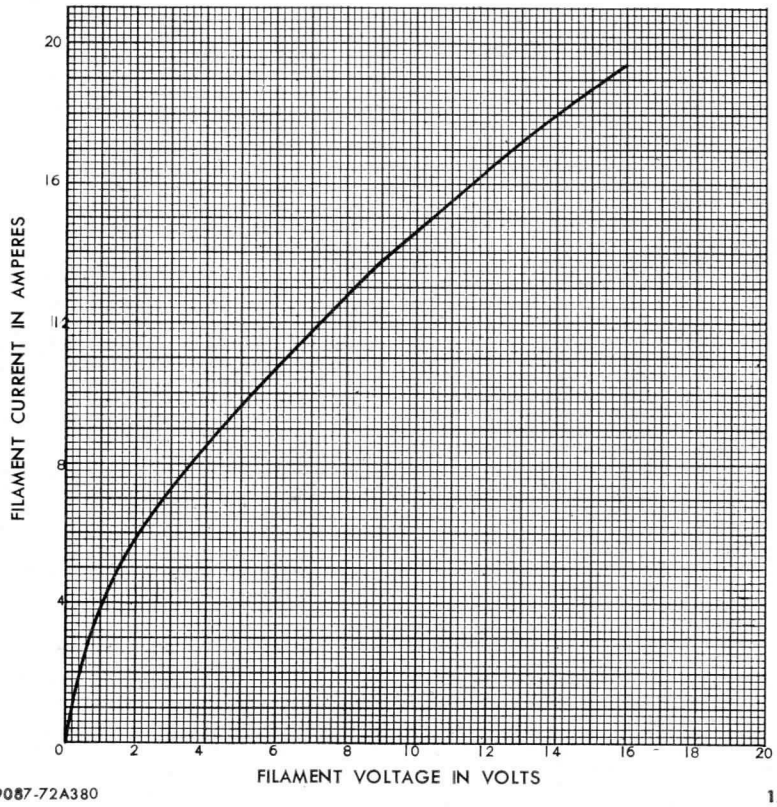

K-69087-72A380

12-7-50

TYPICAL PLATE CHARACTERISTIC

$E_f = 16$ VOLTS

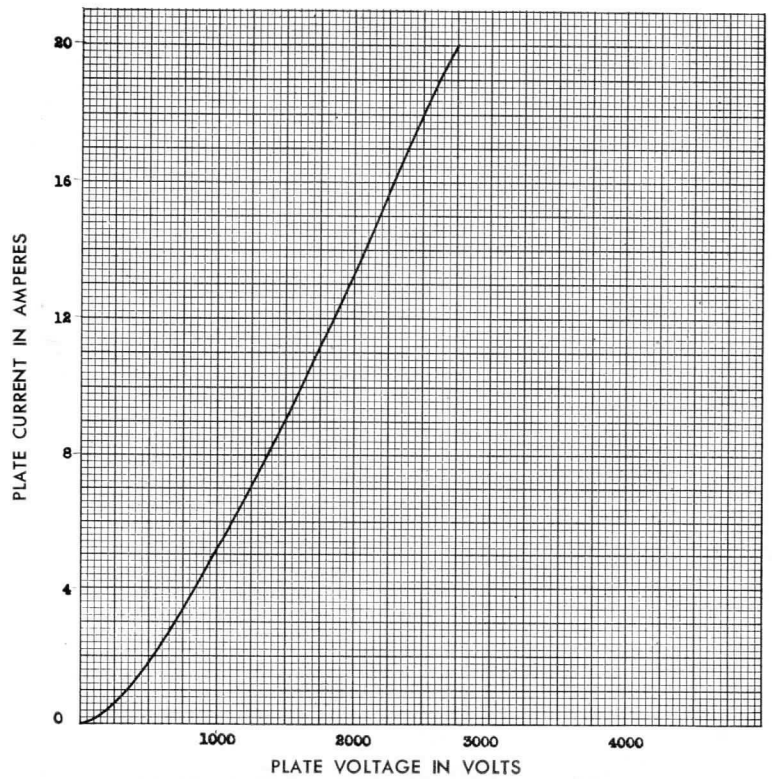

K-69087-72A381

3-14-52

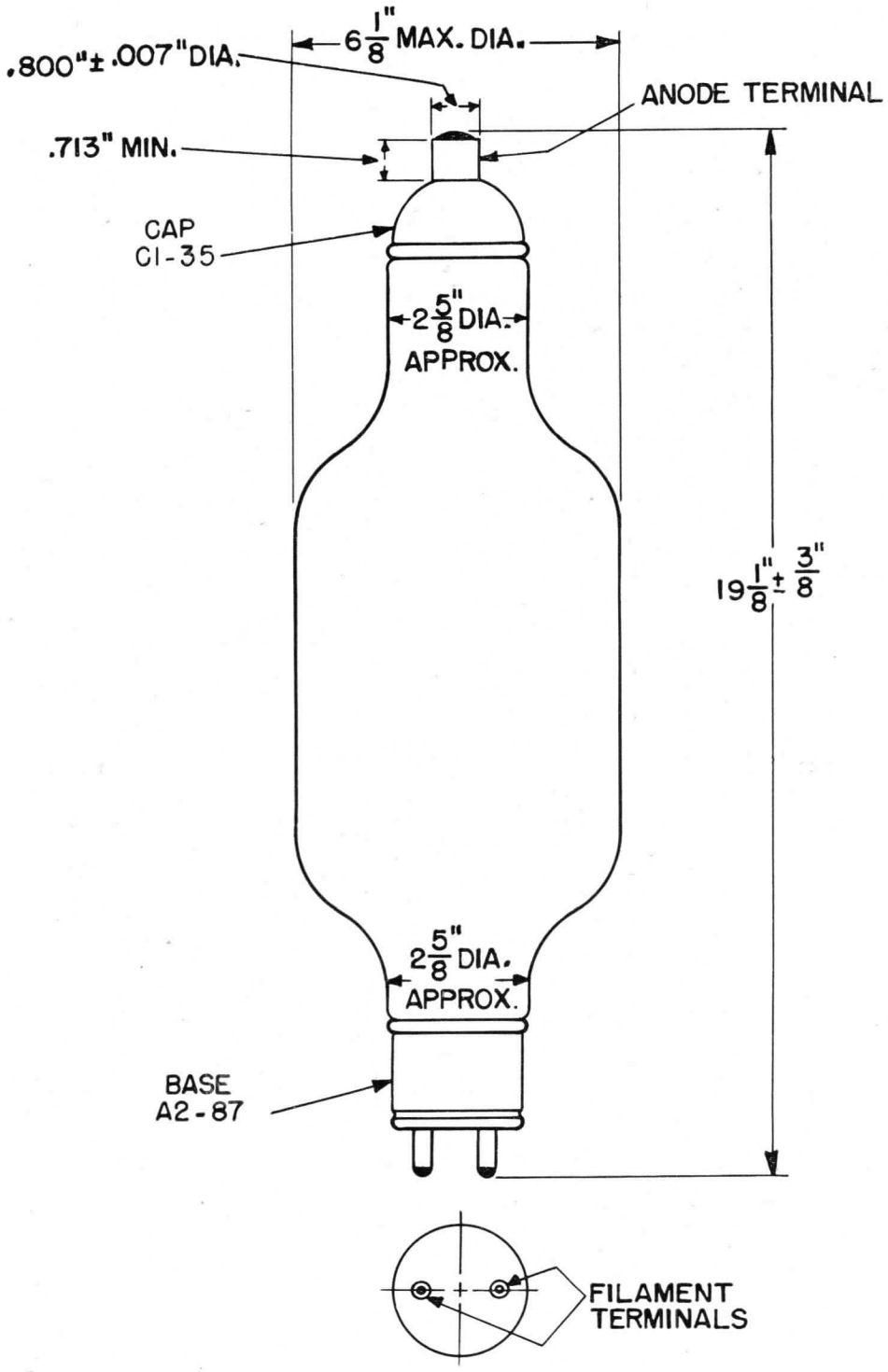

N-21009AZ

11-25-53

ELECTRONIC COMPONENTS DIVISION

GENERAL ELECTRIC

Schenectady 5, N. Y.

PRINTED IN U.S.A.

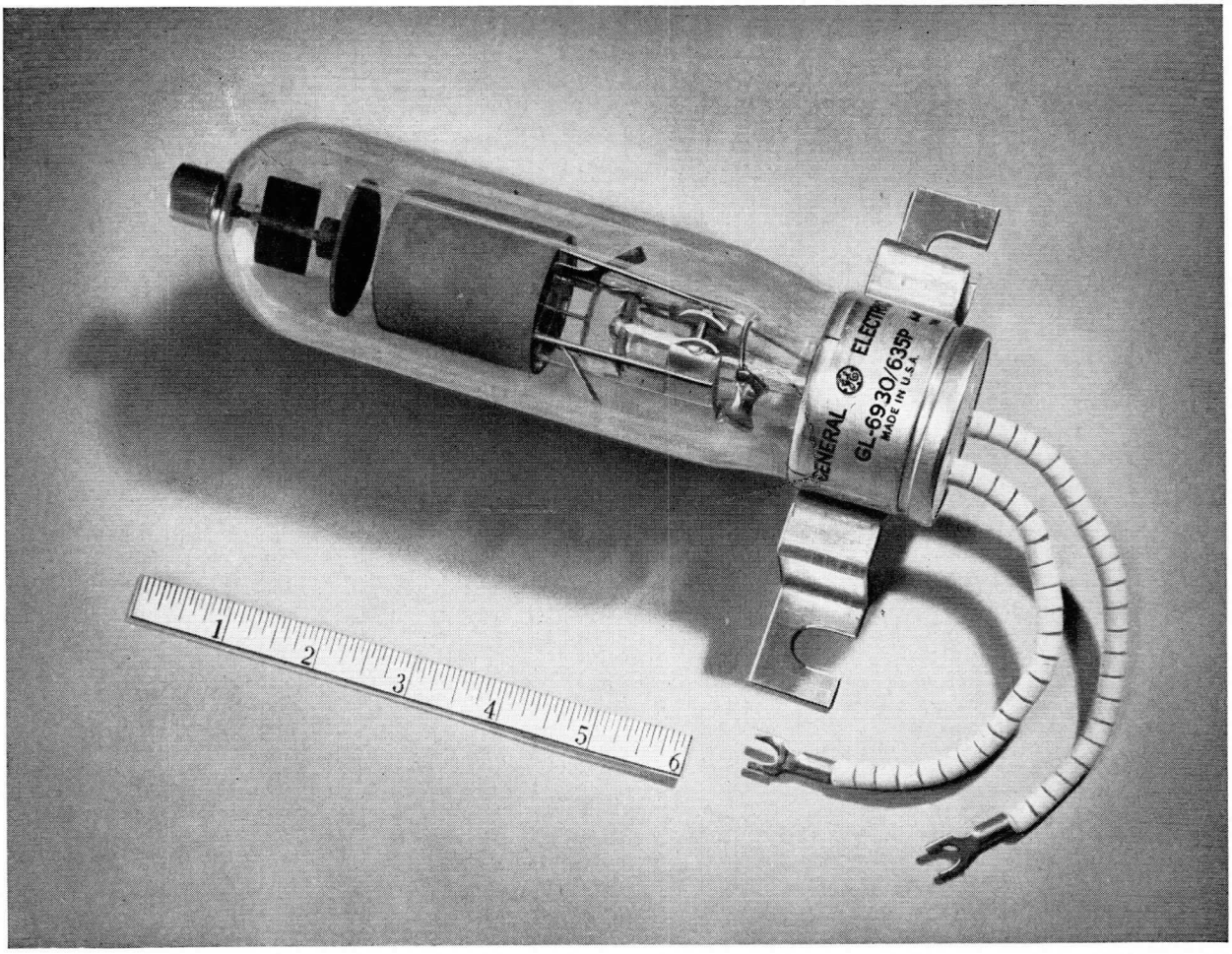

RECTIFIER

HALF-WAVE MERCURY-VAPOR

The GL-6930/635-P is a half-wave, mercury-vapor rectifier tube for use in industrial power-rectifier applications that require 250 volts d-c.

TECHNICAL INFORMATION

GENERAL

Electrical	Minimum	Bogey	Maximum	
Cathode*—Filamentary				
Filament Voltage	—	2.5	—	Volts
Filament Current at 2.5 Volts	16	—	20	Amperes
Heating Time	1	—	—	Minutes
Arc Drop at 20 Peak Amperes	—	9	—	Volts
Filament Starting Voltage	—	20	—	Volts

TECHNICAL INFORMATION (Cont'd)

Mechanical

Mounting Position—Vertical, Base Down		
Equilibrium Condensed-Mercury Temperature		
Rise Above Ambient		
No Load	30	C
Full Load	40	C
Net Weight, approximate	6	Ounces

MAXIMUM RATINGS, Absolute Values

Maximum Peak Anode Voltage		
Inverse	1000	Volts
Maximum Cathode Current		
Peak	77	Amperes
Average	6.4	Amperes
Maximum Averaging Time	20	Seconds
Fault	770	Amperes
Maximum Duration	0.1	Seconds
Condensed-Mercury Temperature Limits	+35 to +100	C
Maximum Frequency	150	Cycles per Second

* Most satisfactory performance and life will result with quadrature filament operation, i.e., with the filament voltage 90 degrees out of phase with the anode voltage. When quadrature operation is used the voltage on the filament and cathode terminal should be crossing zero from positive toward negative when the anode voltage is at the peak of the positive half cycle.

In three-phase systems each tube should be connected so that its anode and filament voltages approximate as nearly as possible the quadrature phasing, i.e., filament voltage 90 plus or minus 30 degrees out of phase with the anode voltage.

When quadrature operation is not practicable, the filament and cathode terminal should be negative when the anode is positive.

The anode and grid-circuit returns should be made to the filament and cathode terminal. However, they can be made to the center tap of the filament transformer.

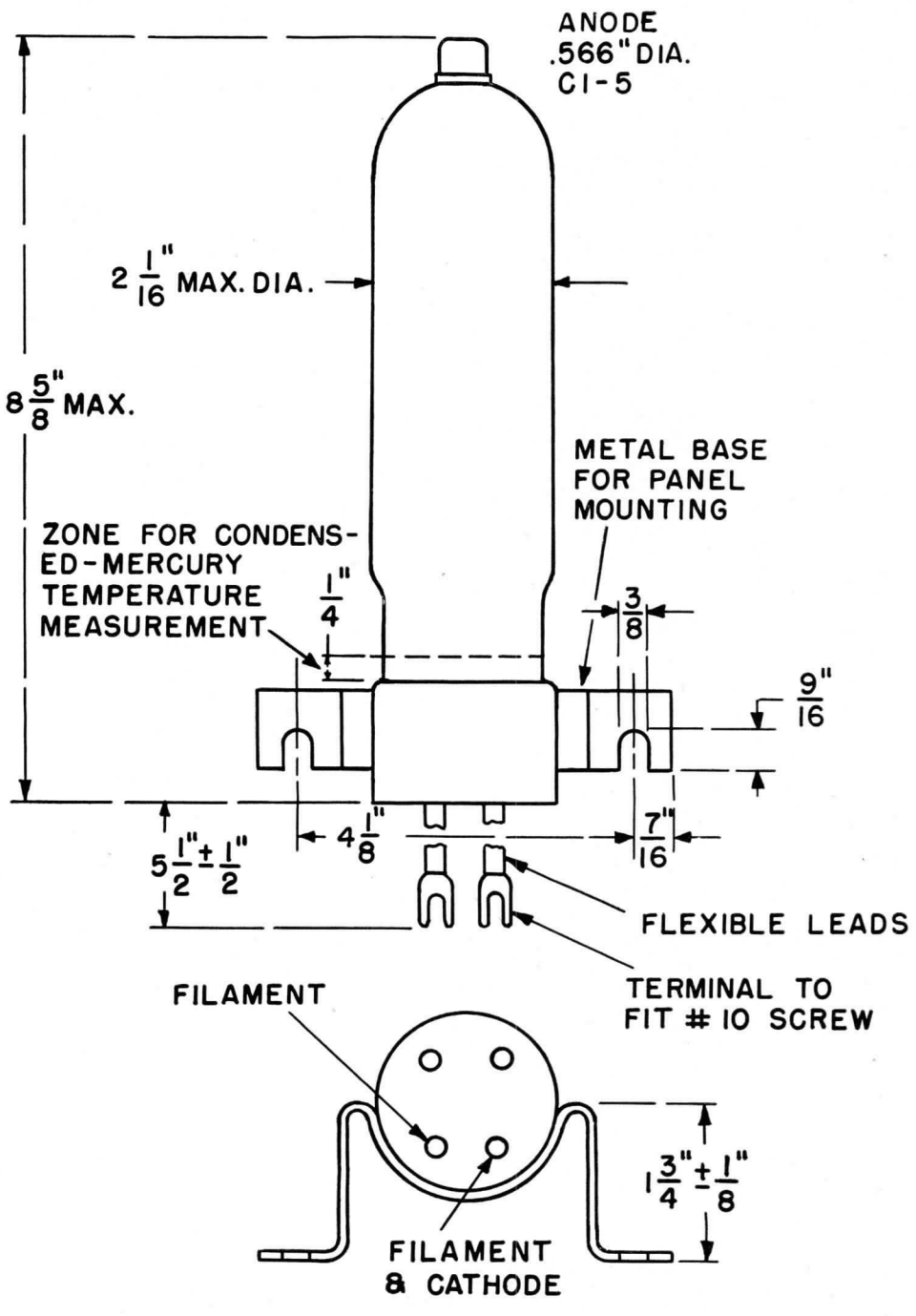
ANODE
.566" DIA.
C1-5
2 1/16" MAX. DIA.
8 5/8" MAX.
METAL BASE
FOR PANEL
MOUNTING
ZONE FOR CONDENS-
ED-MERCURY
TEMPERATURE
MEASUREMENT
1/4"
3/8
9/16"
4 1/8"
7/16"
5 1/2" ± 1/2"
FLEXIBLE LEADS
TERMINAL TO
FIT # 10 SCREW
FILAMENT
1 3/4" ± 1/8"
FILAMENT
& CATHODE

ELECTRONIC COMPONENTS DIVISION

GENERAL ELECTRIC

Schenectady 5, N. Y.

PRINTED IN U.S.A.

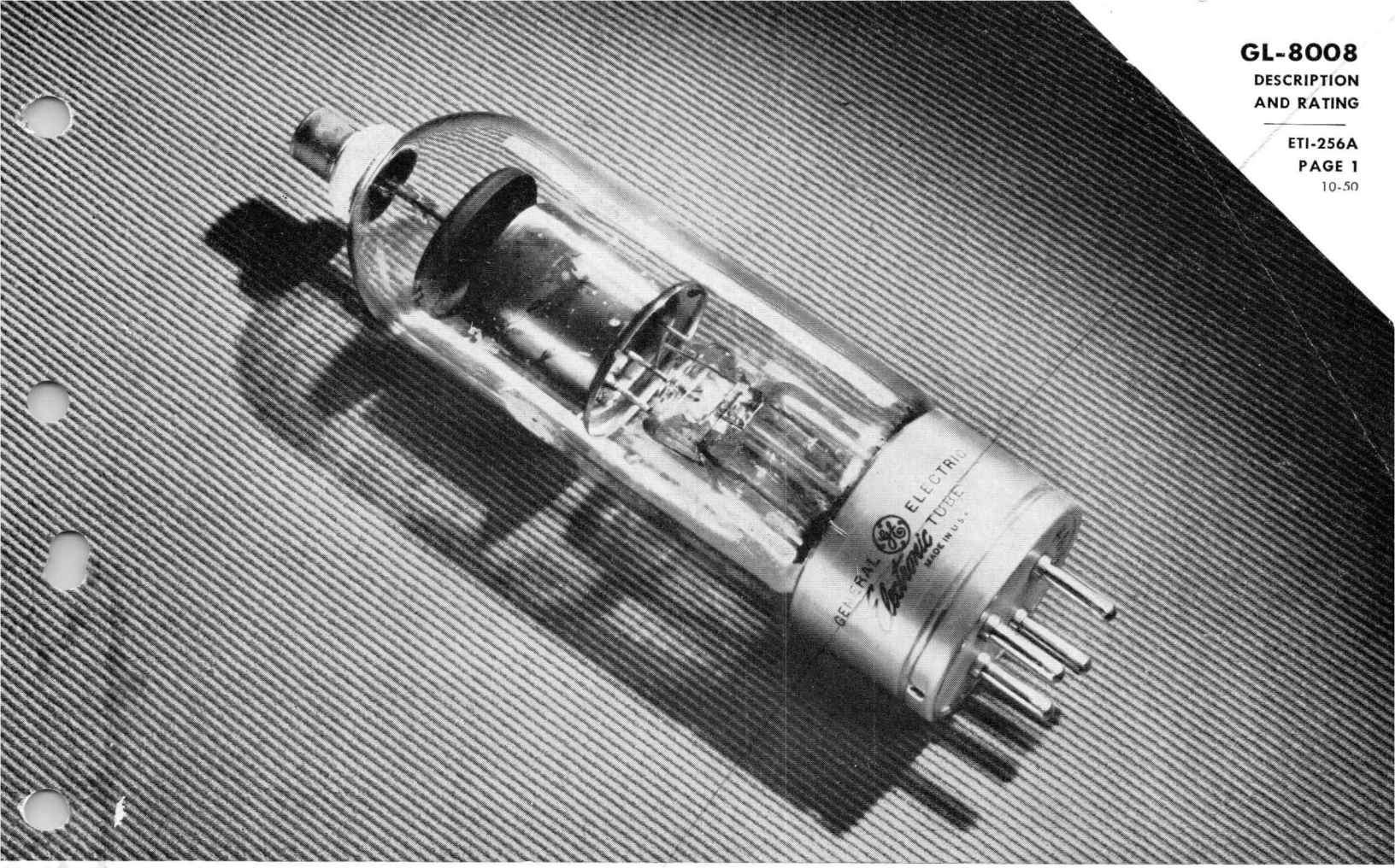

PHANOTRON

The GL-8008 is a half-wave, mercury-vapor rectifier tube designed to withstand high peak inverse voltages and to conduct at relatively low applied voltages. The ratings are the same as those for the 872-A. The 8008, however, has a Super-Jumbo push-type base.

♦TECHNICAL INFORMATION

GENERAL

Electrical	Minimum	Bogey	Maximum	
Filament voltage	4.75	5.0	5.25	volts
Filament current at 5.0 volts		7.5	8.0	amperes
Cathode heating time required	30			seconds
Anode voltage drop, typical		15		volts
Critical anode voltage			50	volts

Mechanical

Type of cooling—Convection

Equilibrium condensed-mercury-temperature rise above ambient

At full load, approximate	20	C
At no load, approximate	14	C

Mounting position—Vertical, base down

Net weight, maximum	7.5	ounces

♦ Technical information completely revised.

GE Electronic TUBE

GENERAL ELECTRIC

Supersedes ETI-256 dated 12-45

TECHNICAL INFORMATION (CONT'D)

MAXIMUM RATINGS, Absolute Values

Maximum peak inverse anode voltage	5000	10,000	volts
Maximum cathode current			
Peak	5.0	5.0	amperes
Average	1.25	1.25	amperes
Surge (maximum duration 0.2 second)	50	50	amperes
Maximum averaging time	15	15	seconds
Maximum frequency	150	150	cycles per second
Condensed-mercury temperature limits	+20 to +70	+20 to +60	C

OUTLINE

♦ GL-8008 PHANOTRON

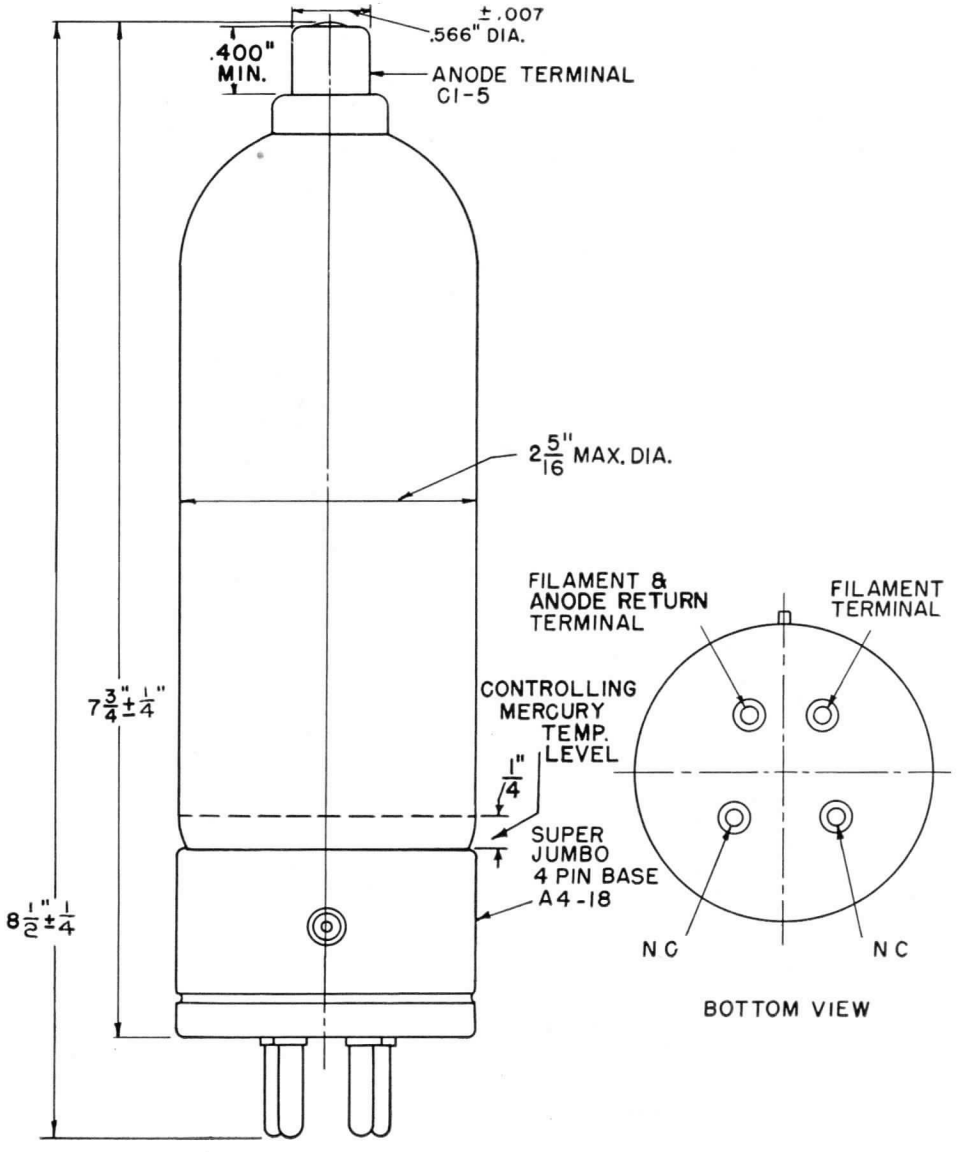

N-21502AZ
♦ Drawing revised.

9-7-45

TUBE DEPARTMENT

GENERAL ELECTRIC

Schenectady 5, N. Y.

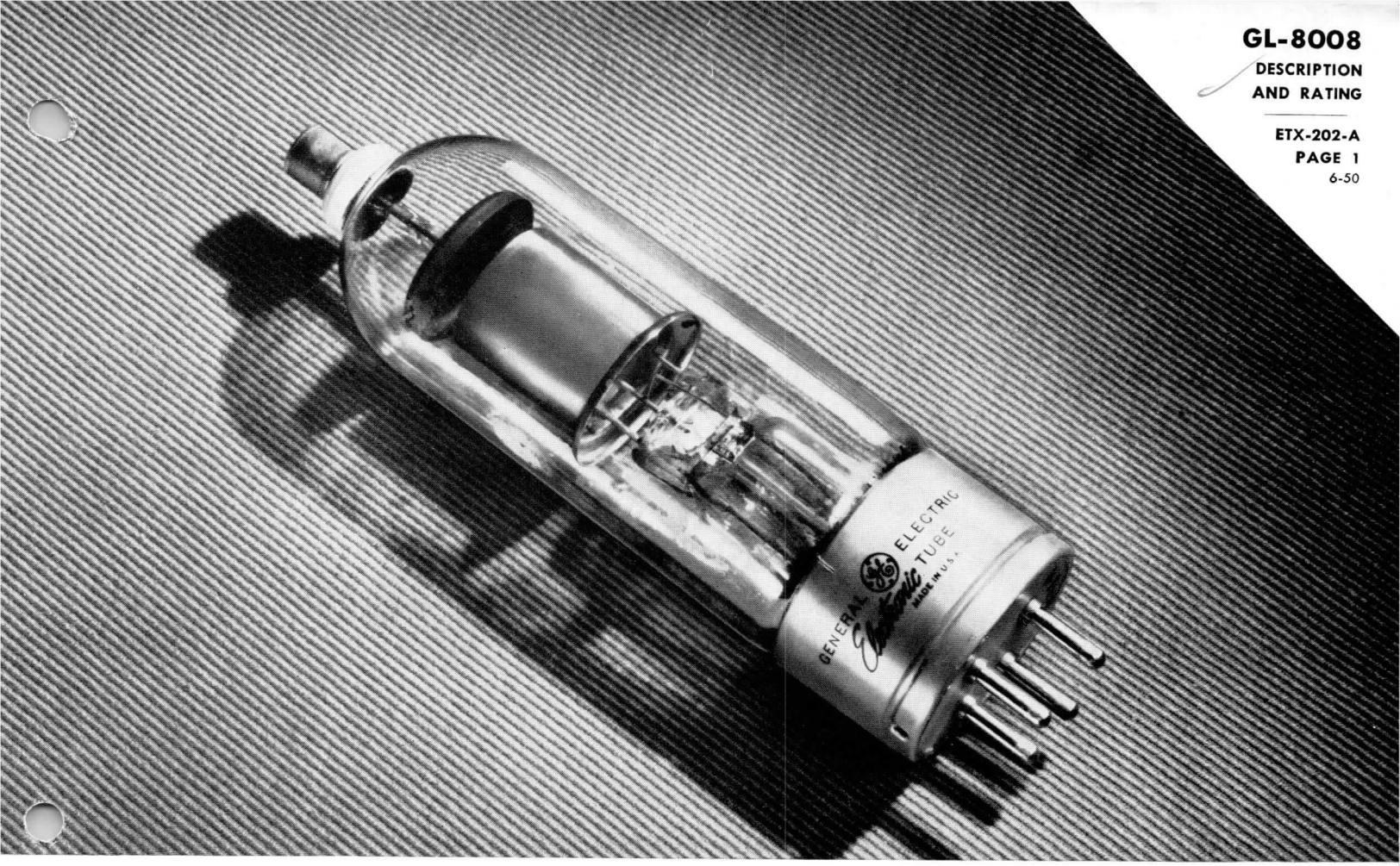

MERCURY-VAPOR RECTIFIER

DESCRIPTION

The GL-8008 is a half-wave, mercury-vapor rectifier tube designed to withstand high peak inverse voltages, and to conduct at relatively low applied voltages. The ratings of this tube are the same as those for the 872-A. The GL-8008, however, has a Super-Jumbo push-type base.

♦TECHNICAL INFORMATION

These data are for reference only. For design information refer to specifications.

GENERAL

Electrical Data	Minimum	Bogey	Maximum	
Filament Voltage	4.75	5.0	5.25	Volts
Filament Current at 5.0 Volts	....	7.5	8.0	Amperes
Cathode Heating Time Required	30	....	....	Seconds
Anode Voltage Drop, typical	....	15	....	Volts
Critical Anode Voltage	....	....	50	Volts
Mechanical Data				
Type of Cooling—Convection				
Equilibrium Condensed-Mercury-Temperature Rise Above Ambient				
At Full Load, approximate	....	....	20	C
At No Load, approximate	....	....	14	C
Mounting Position—Vertical, base down				
Net Weight, maximum	....	....	7.5	Ounces

♦Technical Information completely revised.

Electronic TUBE

GENERAL ELECTRIC

Supersedes ETX-202 dated 5-46

TECHNICAL INFORMATION (CONT'D)

MAXIMUM RATINGS, Absolute Values

Maximum peak inverse anode voltage	5000	10,000 volts
Maximum cathode current		
Peak	5.0	5.0 amperes
Average	1.25	1.25 amperes
Surge (maximum duration 0.2 second)	50	50 amperes
Maximum averaging time	15	15 seconds
Maximum frequency	150	150 cycles per sec.
Condensed-mercury temperature limits	+20 to +70	+20 to +60 C

♦ GL-8008 OUTLINE

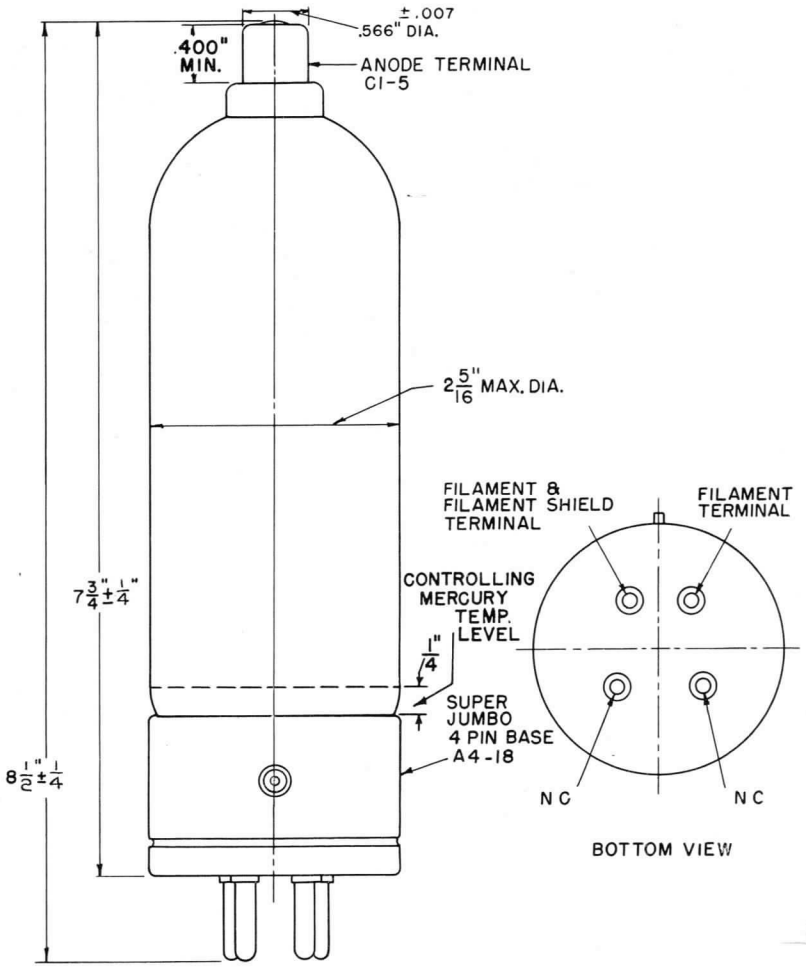

N-21502AZ
♦Drawing revised.

8-29-47

Tube Divisions, Electronics Department

GENERAL ELECTRIC

Schenectady, N. Y.

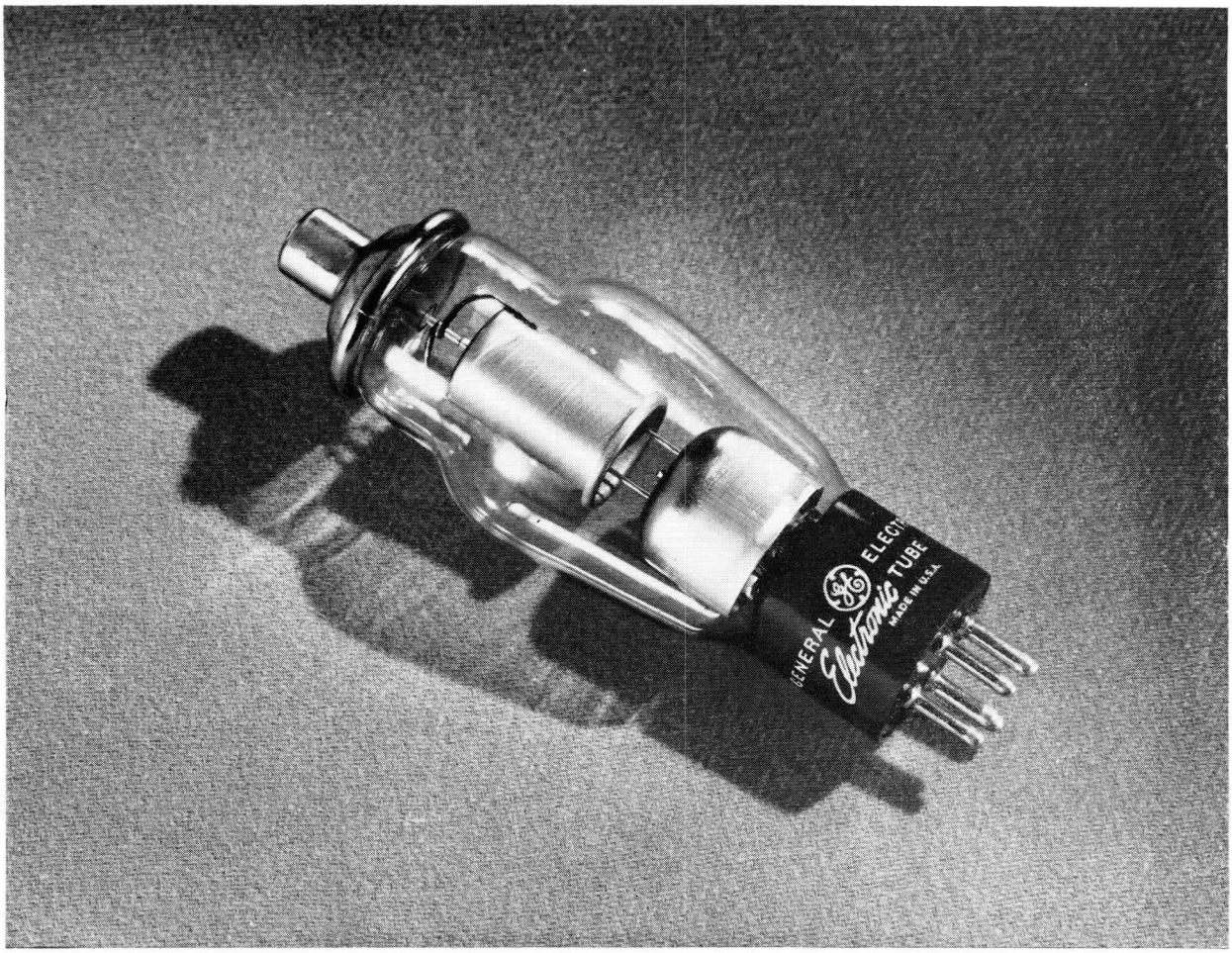

HIGH-VACUUM RECTIFIER

GL-8013-A is a half-wave, high-vacuum rectifier. A small capacitor across the output of the rectifier will ordinarily supply the filter. If a single-section filter does not provide sufficient filtering, a two-section filter is recommended. The GL-8013-A may be used at voltages up to 40,000 volts peak inverse.

TECHNICAL INFORMATION

GENERAL

Number of Electrodes	2	
Electrical		
Cathode—Thoriated Tungsten		
Filament Voltage	2.5	Volts
Filament Current at 2.5 Volts	5	Amperes
Heating Time	5	Seconds
Mechanical		
Mounting Position—Vertical, Base Down		
Cap—Skirted Medium with Rolled Edge		
Base—Medium 4-Pin		
Net Weight, approximate	2.9	Ounces

TECHNICAL INFORMATION (CONT'D)

MAXIMUM RATINGS, ABSOLUTE VALUES

Maximum Peak Anode Voltage		
Forward	40,000*	Volts
Inverse	40,000*	Volts
Maximum Anode Current		
Peak	150	Milliamperes
Average	20	Milliamperes
Fault	500	Milliamperes
Plate Dissipation, maximum	12	Watts

* This value may be increased to 55,000 volts when the GL-8013-A is immersed in oil.

X-RAY WARNING NOTICE

If the GL-8013-A is operated at anode voltages in excess of 16 kilovolts, x-ray radiation shielding may be necessary to protect the user against possible danger of personal injury from prolonged exposure at close range. For further information consult the following references or other standard texts on the subject:

(a) *X-Ray Protection Design,* Handbook No. 50. National Bureau of Standards, Washington, D.C.

(b) *X-Ray Protection,* Handbook No. 60. National Bureau of Standards, Washington, D.C.

The above references are available from the Superintendent of Documents, Government Printing Office, Washington 25, D.C.

AVERAGE PLATE CHARACTERISTIC
$E_f = 2.5$ Volts AC

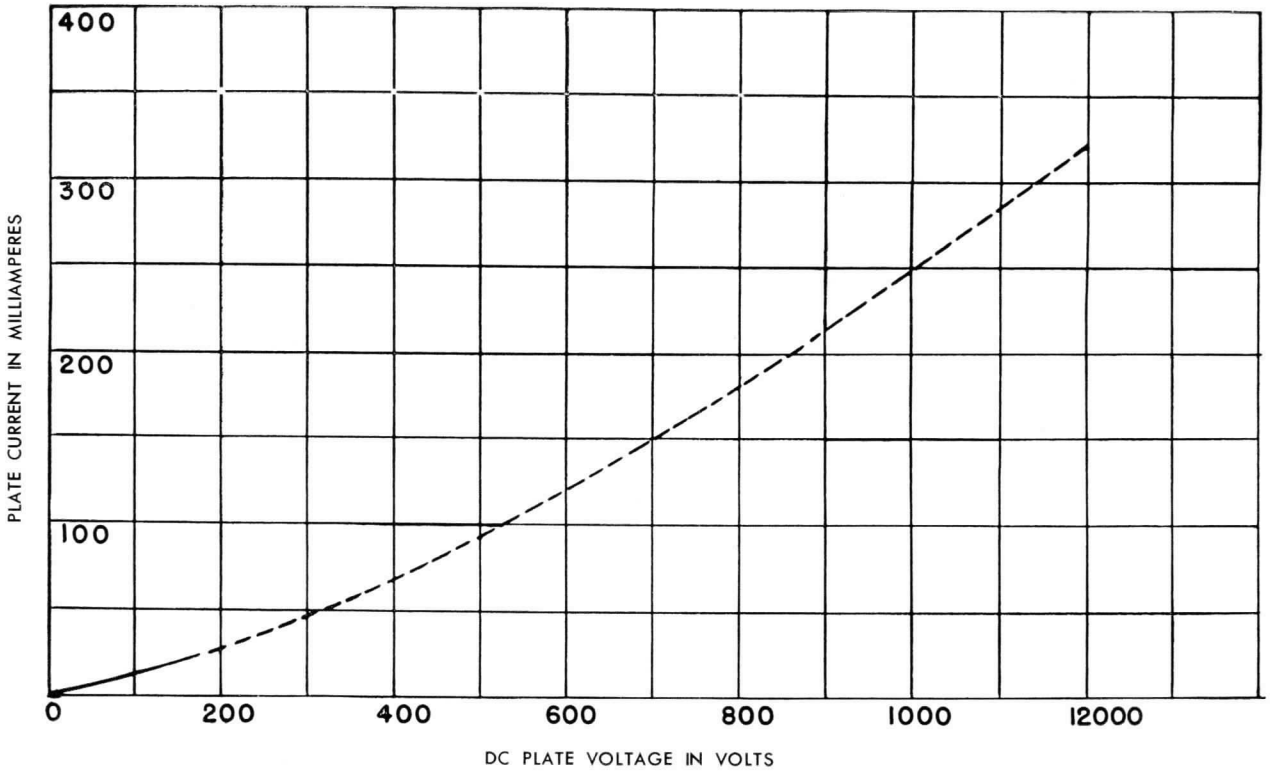

K-8639383

6-8-43

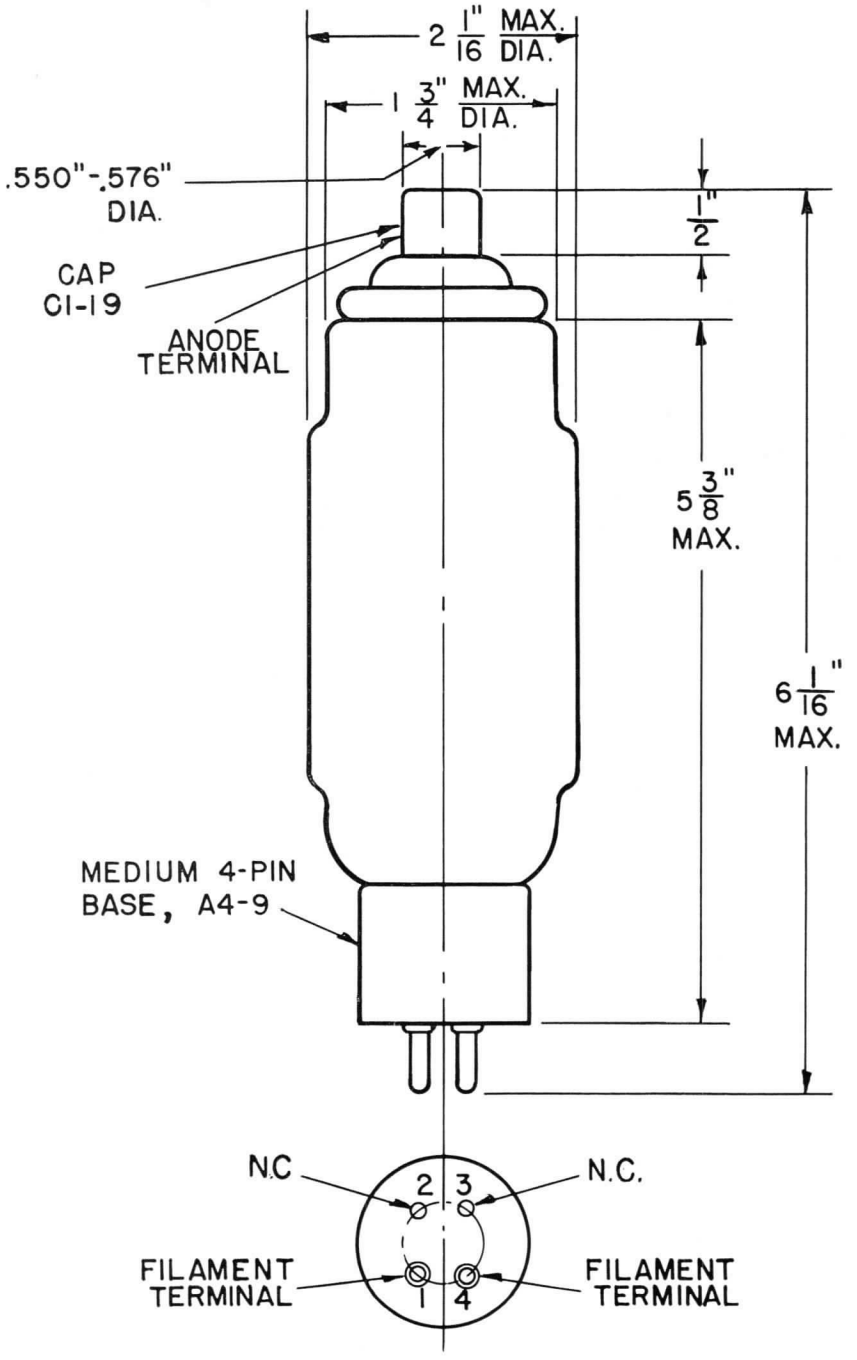

K-8639382

5-14-53

TUBE DEPARTMENT

GENERAL ELECTRIC

Schenectady 5, N. Y.

PRINTED IN U.S.A.

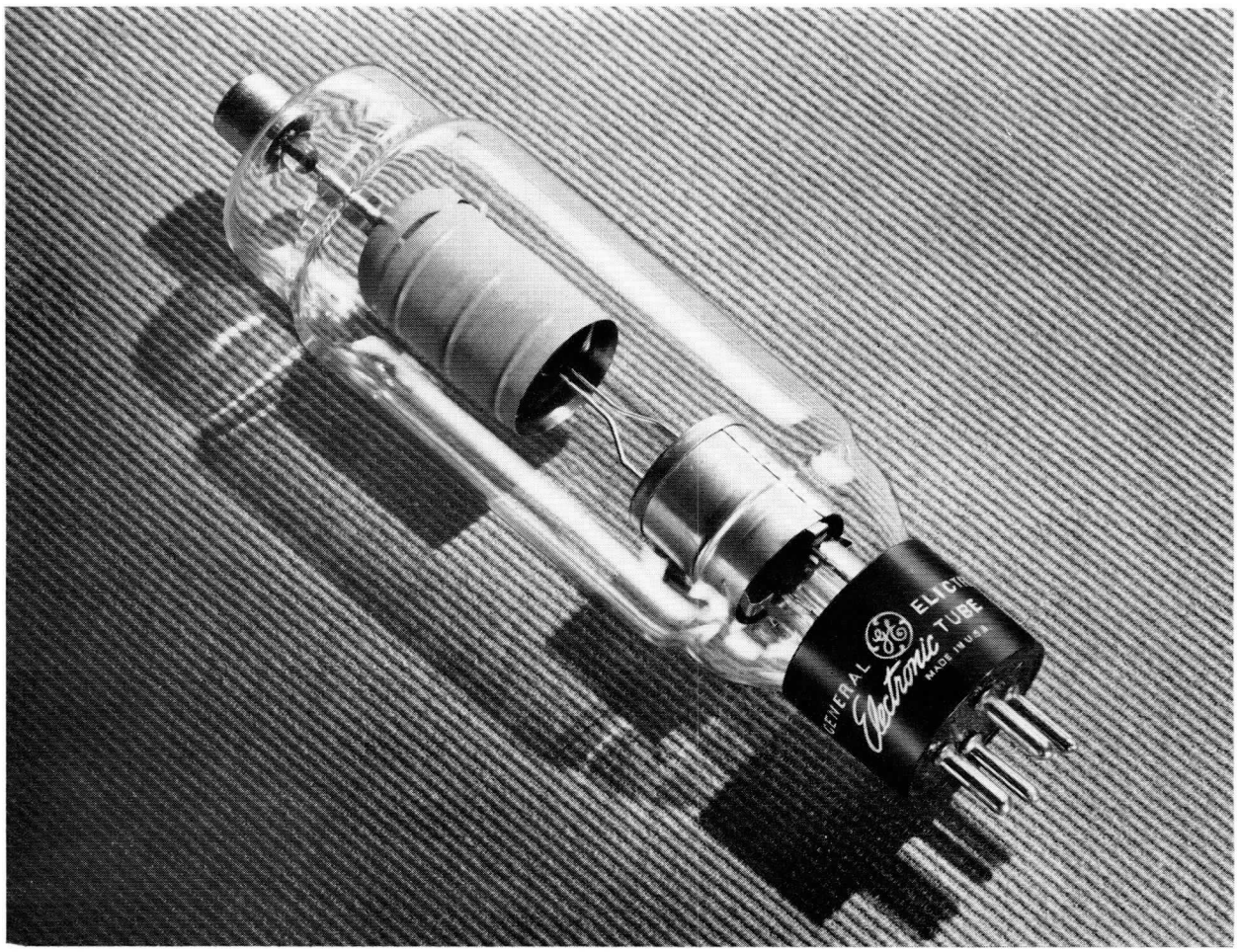

HIGH-VACUUM RECTIFIER

The GL-8020 is a high-vacuum rectifier that may be used at voltages as high as 40,000 volts peak inverse. This tube is particularly useful in applications which require high voltage and low current.

TECHNICAL INFORMATION

GENERAL

Number of Electrodes	2	
Electrical		
Cathode—Thoriated Tungsten		
Filament Voltage	5	Volts
Filament Current	5.5 to 6.5	Amperes
Heating Time, minimum	5	Seconds
Tube Voltage Drop at 100 Milliamperes	200	Volts
Capacitance, plate-filament	1.4	$\mu\mu$f
Mechanical		
Type of Cooling—Convection		
Maximum Ambient Temperature	60	C
Mounting Position—Vertical, Base Down		
Cap—Medium Metal		
Base—Medium 4-Pin Bayonet		
Net weight, approximate	3	Ounces

GENERAL ELECTRIC

Supersedes pages 1 and 2 only dated 5-46

TECHNICAL INFORMATION (CONT'D)

MAXIMUM RATINGS AND TYPICAL OPERATING CONDITIONS

Rectifier Operation

	Typical Operation	Maximum Ratings	
Peak Inverse Voltage		40,000	Volts
Peak Anode Current		750	Milliamperes
Average Anode Current		100	Milliamperes

Surge Limiting Diode Operation

Filament Voltage	5.5	5.8	Volts
Peak Forward Anode Voltage	10,000	12,500	Volts
Peak Anode Current, minimum	2	...	Amperes
Average Anode Dissipation		75	Watts

X-RAY WARNING NOTICE

If the GL-8020 is operated at anode voltages in excess of 16 kilovolts, x-ray radiation shielding may be necessary to protect the user against possible danger of personal injury from prolonged exposure at close range. For further information consult the following references or other standard texts on the subject:

(a) *X-Ray Protection Design,* Handbook No. 50. National Bureau of Standards, Washington, D. C.
(b) *X-Ray Protection,* Handbook No. 60. National Bureau of Standards, Washington, D. C.

The above references are available from the Superintendent of Documents, Government Printing Office, Washington, 25, D. C.

PLATE CHARACTERISTIC

$E_f = 5$ VOLTS

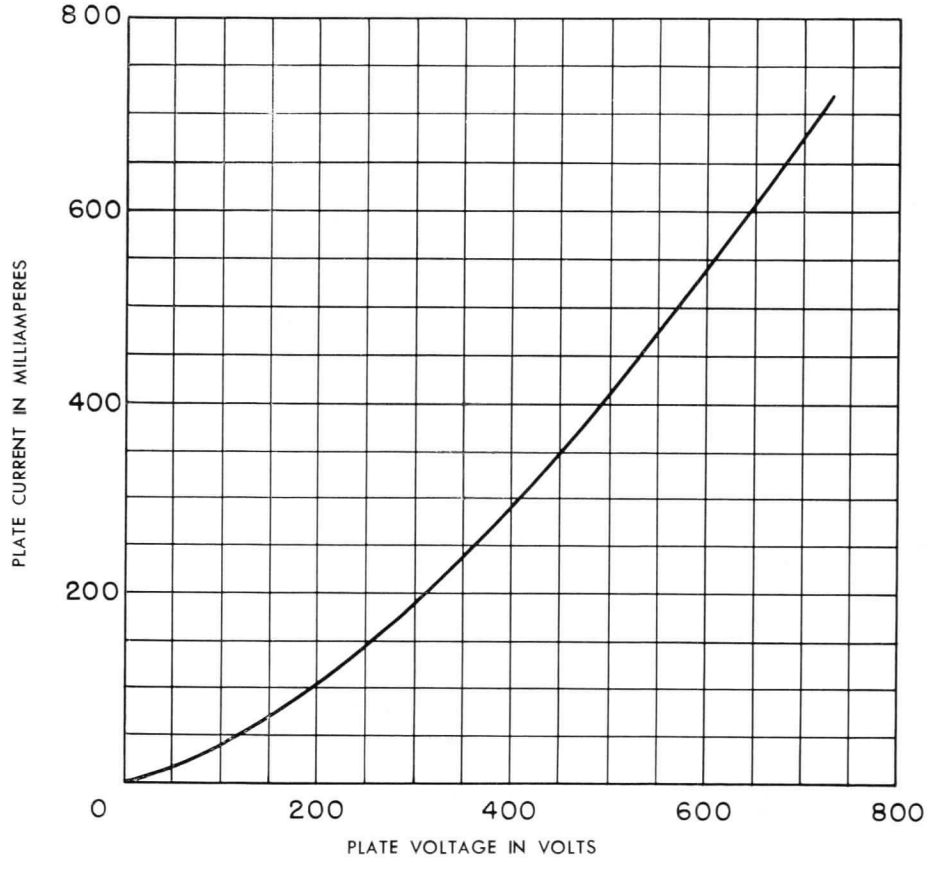

K-5964496 9-26-44

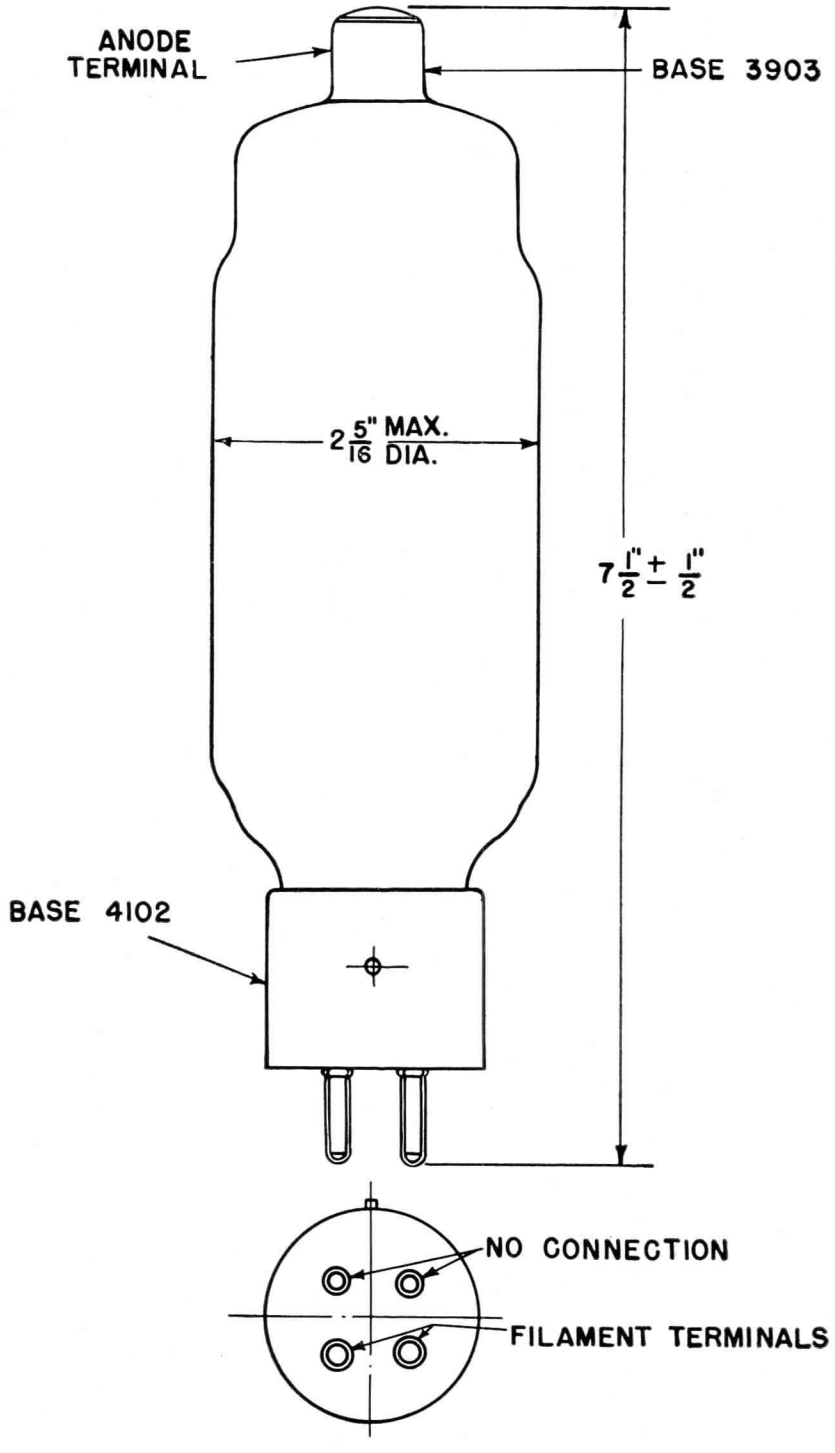

K-6979168

9-23-44

GL-8020 OUTLINE

Electronics Department
GENERAL ELECTRIC
Schenectady, N. Y.

5-46 (7M)
Filing No. 8850

2B22

PLANAR DIODE

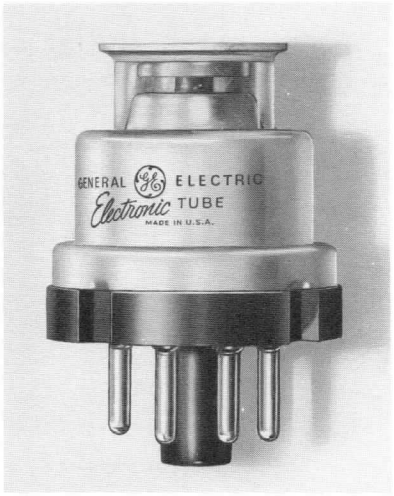

DESCRIPTION AND RATING

The 2B22 is a high-perveance diode of the disk-seal type. It is intended for use as a detector or monitor at frequencies as high as 1500 megacycles.

GENERAL

ELECTRICAL

Cathode—Coated Unipotential
Heater Characteristics and Ratings

Heater Voltage, AC or DC*	6.3 ± 0.3	Volts
Heater Current†	0.75	Amperes

Direct Interelectrode Capacitances‡

Plate to Cathode: (p to k)	2.18	pf

MECHANICAL

Mounting Position—Any

Net Weight, approximate	1	Ounce

Cooling—Convection

MAXIMUM RATINGS

ABSOLUTE-MAXIMUM VALUES

Duty Factor§	0.05	
Peak Plate Voltage	100	Volts
Peak Inverse Plate Voltage	300	Volts
Average Cathode Current	20	Milliamperes
Peak Cathode Current§	0.7	Amperes
DC Output Voltage	150	Volts

Absolute-Maximum ratings are limiting values of operating and environmental conditions applicable to any electron tube of a specified type as defined by its published data and should not be exceeded under the worst probable conditions.

The tube manufacturer chooses these values to provide acceptable serviceability of the tube, making no allowance for equipment variations, environmental variations, and the effects of changes in operating conditions due to variations in the characteristics of the tube under consideration and of all other electron devices in the equipment.

The equipment manufacturer should design so that initially and throughout life no absolute-maximum value for the intended service is exceeded with any tube under the worst probable operating conditions with respect to supply-voltage variation, equipment component variation, equipment control adjustment, load variation, signal variation, environmental conditions, and variations in the characteristics of the tube under consideration and of all other electron devices in the equipment.

The tubes and arrangements disclosed herein may be covered by patents of General Electric Company or others. Neither the disclosure of any information herein nor the sale of tubes by General Electric Company conveys any license under patent claims covering combinations of tubes with other devices or elements. In the absence of an express written agreement to the contrary, General Electric Company assumes no liability for patent infringement arising out of any use of the tubes with other devices or elements by any purchaser of tubes or others.

Supersedes ET-T1561 dated 9-49

AVERAGE CHARACTERISTICS

Tube Voltage Drop
Ib = 20 milliamperes . . . . . 6.0 Volts

* The equipment designer should design the equipment so that heater voltage is centered at the specified bogey value, with heater supply variations restricted to maintain heater voltage within the specified tolerance.
† Heater current of a bogey tube at Ef = 6.3 volts.
‡ Without external shield.
§ In any 100 microsecond interval.

PHYSICAL DIMENSIONS

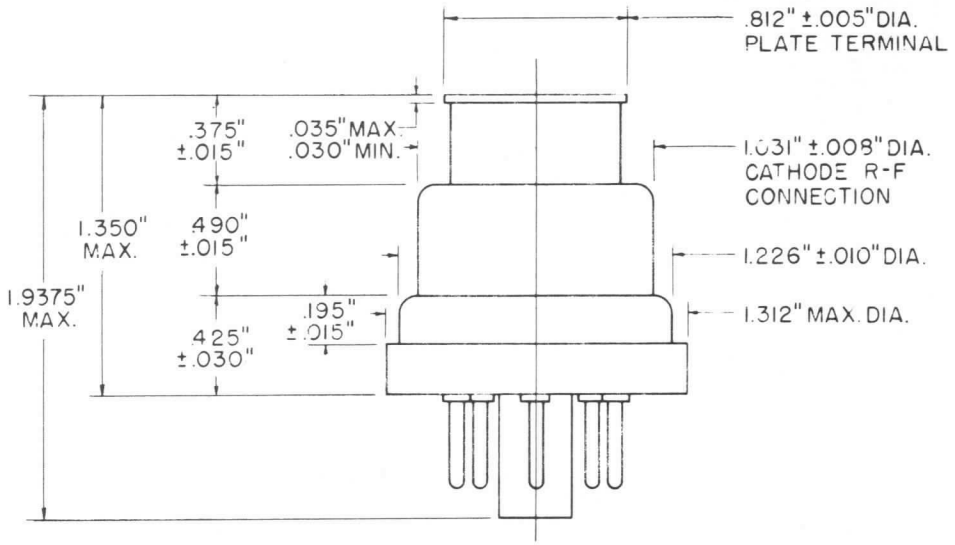

NOTE 1
Glass will not protrude beyond edge of plate terminal.

NOTE 2
Maximum eccentricity of the center-line of the plate terminal with the center-line of the R-F cathode connection 0.020".

BASING DIAGRAM

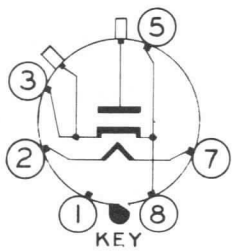

Pin	Connection
1	Internal Connection
2	Heater
3	Cathode
5	Cathode
7	Heater
8	Cathode

RECEIVING TUBE DEPARTMENT

GENERAL ELECTRIC

Owensboro, Kentucky

LOW NOISE TWT — PPM FOCUSED — DATA SUMMARY

	Tube Type	Data Sheet	Freq. Range Gc	Max. N. F. db	Min. S. S. Gain db	Min. Power out mw	Length in.	Wt. lb	RF Connector	Elect. 1 vdc	Elect. 2 vdc	Elect. 3 vdc	Elect. 4 vdc	Helix vdc	Max. Helix μa	Coll. vdc	Max. Beam μa	Temp. °C Min.	Temp. °C Max.	Alt. 1000 ft	Shock G	Vib. G
P	ZM-3302*	---	.5 - 1.0	8	35	10	14.0	3.5	TNC	0 to -40	10-40	25-250	25-250	250-300	100	250-450	1500	-60	+ 71	100	50	15
	ZM-3377	DS-123	.775-1.45	11	28	10	15.5	3.5	TNC	0 to -40	10-40	25-250	25-250	200-300	100	200-450	1600	-60	+ 71	100	50	15
L	ZM-3303*	---	1.0 - 2.0	8	35	10	14.0	3.5	TNC	0 to -40	10-50	25-125	25-250	300-400	100	300-650	1500	-60	+ 71	100	50	15
	ZM-3350	DS-123	1.0 - 2.0	10	30	10	15.5	↓	↓	↓	↓	↓	↓	↓	↓	↓	↓	↓	↓	↓	↓	↓
	ZM-3341*	---	1.2 - 1.4	6	35	10	14.0															
	ZM-3351	DS-123	1.2 - 1.4	8	35	10	15.5															
	ZM-3333*	---	1.7 - 2.4	6	35	10	14.0															
	ZM-3352	DS-123	1.7 - 2.4	9	35	10	15.5															
S	ZM-3304*	---	2.0 - 4.0	10	30	10	14.0	3.5	N	0 to -40	20-60	50-150	100-300	300-500	100	450-750	1000	-60	+ 71	100	50	15
	ZM-3340*	---	2.3 - 4.45	10	30	10	14.0	3.5	N	0 to -40	20-60	50-150	100-300	300-500	100	450-750	1000	-60	+ 71	100	50	15
C	ZM-3245	DS-107	4.0 - 8.0	11	30	10	9.3	2.3	TNC	0 to -30	20-75	50-200	100-400	600-700	100	750-1000	1000	-55	+ 85	100	50	15
	ZM-3263	DS-117	4.0 - 8.0	15	30	10	9.45	1.25	↓	0 to -50	0-100	↓	100-670	↓	200	600-850	↓	↓	↓	↓	↓	↓
	ZM-3246	DS-107	4.3 - 7.35	10	30	10	9.3	2.3	↓	0 to -30	20-75	↓	100-400	↓	100	750-1000	↓	↓	↓	↓	↓	↓
	ZM-3249	DS-107	4.4 - 5.0	9.5	33	10	9.3	↓	↓	↓	↓	↓	↓	↓	↓	↓	↓	↓	↓	↓	↓	↓
	ZM-3248	DS-107	5.0 - 6.0	9	33	10	9.3															
	ZM-3247	DS-107	5.0 - 7.0	10	33	10	9.3															
X	ZM-3270	DS-116	7.0 - 8.5	8	35	10	11.0	5.5	N	0 to -25	0-75	0-200	50-400	700-900	150	900-1100	1000	-65	+100	100	30	15
	ZM-3443	DS-111	7.0 - 8.5	9	37	20	12.81	4.25	↓	0 to -50	0-100	10-200	200-550	1125-1250	500	1225-1400	1000	↓	↓	↓	↓	↓
	ZM-3441	DS-113	7.0 - 8.5	11	37	50	14.6	4.5	↓	0 to -50	0-150	70-300	300-800	1100-1300	500	1100-1500	1500	↓	↓	↓	↓	↓
	ZM-3266	DS-116	7.0 - 11.0	8	30	10	11.0	5.5	↓	0 to -25	0-75	0-200	50-400	700-900	150	900-1100	1000	↓	↓	↓	↓	↓
	ZM-3258	DS-111	7.0 - 11.0	10	37	20	12.81	4.25	↓	0 to -50	0-100	10-200	200-550	1125-1250	500	1225-1400	1000	↓	↓	↓	↓	↓
	ZM-3197	DS-113	7.0 - 11.0	13	37	30	14.6	4.5	↓	↓	0-150	70-300	300-800	1100-1300	↓	1100-1500	1500	↓	↓	↓	↓	↓
	ZM-3186	DS-113	7.0 - 11.0	18	37	30	14.6	4.0	↓	↓	0-150	70-300	300-800	1100-1300	↓	1100-1500	1500	↓	↓	↓	↓	↓
	ZM-3265	DS-116	7.0 - 12.0	9	30	3	11.0	5.5	↓	0 to -25	0-75	0-200	50-400	700-900	150	900-1100	1000	↓	↓	↓	↓	↓
	ZM-3202	DS-111	7.0 - 12.0	11	33	10	12.81	4.25	↓	0 to -50	0-100	10-200	200-550	1125-1250	500	1225-1400	1000	↓	↓	↓	↓	↓
	ZM-3326	DS-113	7.0 - 12.0	15	37	30	14.6	4.5	↓	↓	0-150	70-300	300-800	1100-1300	↓	1100-1500	1500	↓	↓	↓	↓	↓
	ZM-3199	DS-113	7.0 - 12.0	20	37	30	14.6	4.0	↓	↓	0-150	70-300	300-800	1100-1300	↓	1100-1500	1500	↓	↓	↓	↓	↓
	ZM-3271	DS-116	7.5 - 8.5	7.5	35	10	11.0	5.5	↓	0 to -25	0-75	0-200	50-400	700-900	150	900-1100	1000	↓	↓	↓	↓	↓
	ZM-3267	DS-116	8.0 - 12.0	8.5	30	5	11.0	5.5	↓	0 to -25	0-75	0-200	50-400	700-900	150	900-1100	1000	↓	↓	↓	↓	↓
	ZM-3259	DS-111	8.0 - 12.0	10	33	10	12.81	4.25	↓	0 to -50	0-100	10-200	200-550	1125-1250	500	1225-1400	1000	↓	↓	↓	↓	↓
	ZM-3209	DS-113	8.0 - 12.0	13	33	30	14.6	4.5	↓	↓	0-150	70-300	300-800	1100-1300	↓	1100-1500	1500	↓	↓	↓	↓	↓
	ZM-3198	DS-113	8.0 - 12.0	18	33	30	14.6	4.0	↓	↓	0-150	70-300	300-800	1100-1300	↓	1100-1500	1500	↓	↓	↓	↓	↓
	ZM-3268	DS-116	8.5 - 9.6	7.5	35	10	11.0	5.5	↓	0 to -25	0-75	0-200	50-400	700-900	150	900-1100	1000	↓	↓	↓	↓	↓
	ZM-3444	DS-111	8.5 - 9.6	9	37	20	12.81	4.25	↓	0 to -50	0-100	10-200	200-550	1125-1250	500	1225-1400	1000	↓	↓	↓	↓	↓
	ZM-3442	DS-113	8.5 - 9.6	11	37	50	14.6	4.5	↓	0 to -50	0-150	70-300	300-800	1100-1300	500	1100-1500	1500	↓	↓	↓	↓	↓
	ZM-3272	DS-116	9.0 - 10.0	8	33	10	11.0	5.5	↓	0 to -25	0-75	0-200	50-400	700-900	150	900-1100	1000	↓	↓	↓	↓	↓

Note 1. Heaters of these TWTs are 6.3 v (rms), 0.35 amp or less.

* Development type.

1-8-65

LOW NOISE TWT — SRPM FOCUSED — DATA SUMMARY

	Tube Type	Data Sheet	Freq. Range Gc	Max. N. F. db	Min. S. S. Gain db	Min. Power out mw	Length in.	Wt. lb	RF Connector	Elect. 1 vdc	Elect. 2 vdc	Elect. 3 vdc	Elect. 4 vdc	Helix vdc	Max. Helix μa	Coll. vdc	Max. Beam μa	Temp. °C Min.	Temp. °C Max.	Alt. 1000 ft	Shock G	Vib. G
S	ZM-3378	DS-103	2.0- 4.0	8	30	5	13.84	9.3	N	0 to-35	25-75	30-120	100-300	250-300	100	550- 600	1200	-65	+71	100	30	15
	ZM-3334	DS-103	2.2- 2.3	5.5	30	5	↓	↓	↓	↓	↓	↓	↓	↓	↓	↓	↓	↓	↓	↓	↓	↓
	ZM-3335	DS-103	2.7- 3.3	6	30	7	↓	↓	↓	↓	↓	↓	↓	↓	↓	↓	↓	↓	↓	↓	↓	↓
C	ZM-3235	DS-106	4.0- 8.0	8	25	5	13.84	9.3	N	0 to-35	25-75	25-150	50-350	550-750	100	800-1000	1200	-65	+71	100	30	15
	ZM-3220	DS-106	4.3- 7.35	7	30	10	↓	↓	↓	↓	↓	↓	↓	↓	↓	↓	↓	↓	↓	↓	↓	↓
	ZM-3250	DS-106	4.4- 5.0	6	30	10	↓	↓	↓	↓	↓	↓	↓	↓	↓	↓	↓	↓	↓	↓	↓	↓
	ZM-3237	DS-106	5.4- 5.9	6	30	10	↓	↓	↓	↓	↓	↓	↓	↓	↓	↓	↓	↓	↓	↓	↓	↓
	ZM-3238	DS-106	5.9- 6.5	6	30	10	↓	↓	↓	↓	↓	↓	↓	↓	↓	↓	↓	↓	↓	↓	↓	↓
X	ZM-3204	DS-109	7.0- 8.5	7	30	10	13.84	9.3	N	0 to-35	25-75	25-150	200-450	720-850	100	950-1100	1200	-65	+71	100	30	15
	ZM-3203	DS-109	7.0-11.0	8.0	25	5	↓	↓	↓	↓	↓	↓	↓	↓	↓	↓	↓	↓	↓	↓	↓	↓
	ZM-3178	DS-109	7.0-11.0	9.0	25	5	↓	↓	↓	↓	↓	↓	↓	↓	↓	↓	↓	↓	↓	↓	↓	↓
	ZM-3205	DS-109	7.5- 8.5	6.5	30	10	↓	↓	↓	↓	↓	↓	↓	↓	↓	↓	↓	↓	↓	↓	↓	↓
	ZM-3305	DS-109	8.0-12.0	8	25	5	↓	↓	↓	↓	↓	↓	↓	↓	↓	↓	↓	↓	↓	↓	↓	↓
	ZM-3240	DS-109	8.0-12.0	9	25	5	↓	↓	↓	↓	↓	↓	↓	↓	↓	↓	↓	↓	↓	↓	↓	↓
	ZM-3206	DS-109	8.5- 9.6	7	30	10	↓	↓	↓	↓	↓	↓	↓	↓	↓	↓	↓	↓	↓	↓	↓	↓
	ZM-3222	DS-109	9.0-10.0	7	30	10	↓	↓	↓	↓	↓	↓	↓	↓	↓	↓	↓	↓	↓	↓	↓	↓
K_U	ZM-3349	DS-122	9.75-15.0	11	30	5	12.1	9.3	WG	0 to-35	25-75	50-150	250-500	900-1200	100	1050-1350	1200	-65	+71	100	30	15
	ZM-3331	DS-122	12.0-16.0	10	30	5	↓	↓	↓	↓	↓	↓	↓	↓	↓	↓	↓	↓	↓	↓	↓	↓
	ZM-3330*		12.0-18.0	10	25	5	↓	↓	↓	↓	↓	↓	↓	↓	↓	↓	↓	↓	↓	↓	↓	↓

Note 1. Heaters of these TWTs are 6.3 v (rms), 0.35 amp or less.

1-6-65

* Development type.

LOW NOISE TWT — PM FOCUSED — DATA SUMMARY

	Tube Type	Data Sheet	Freq. Range Gc	Max. N. F. db	Min. S. S. Gain db	Min. Power out mw	Len gth in.	Wt. lb	RF Con- nector	Elect. 1 vdc	Elect. 2 vdc	Elect. 3 vdc	Elect. 4 vdc	Helix vdc	Max. Helix μa	Coll. vdc	Max. Beam μa	Temp. °C Min.	Temp. °C Max.	Alt. 1000 ft	Sh ock G	Vib. G
S	ZM-3153	DS-101	1.8- 2.4	7	25	1	9.25	11.5	N	0 to-10	10-30	25-100	50-200	150-275	50	400-600	600	-60	+100	100	50	15
	ZM-3113	DS-101	2.0- 4.0	8	25	1	9.25	11.5	N	↓	↓	↓	↓	↓	↓	↓	↓	-60	+100	100	50	15
	ZM-3183	DS-102	2.0- 4.0	8	25	1	12.5	18.0	N	↓	↓	↓	↓	↓	↓	↓	↓	-20	+ 70	100	30	5
	ZM-3142	DS-101	2.3- 4.45	8	25	1	9.25	11.5	N	↓	↓	↓	↓	↓	↓	↓	↓	-60	+100	100	50	15
	ZM-3283	DS-102	2.3- 4.45	8	25	1	12.5	18.0	N	↓	↓	↓	↓	↓	↓	↓	↓	-20	+ 70	100	30	5
	ZM-3157	DS-101	2.7- 2.9	5.5	30	3	9.25	11.5	N	↓	↓	↓	↓	↓	↓	↓	↓	-60	+100	100	50	15
	ZM-3158	DS-101	2.9- 3.1	5.5	30	3	9.25	11.5	N	↓	↓	↓	↓	↓	↓	↓	↓	-60	+100	100	50	15
	ZM-3159	DS-101	3.4- 3.6	6	30	1	9.25	11.5	N	↓	↓	↓	↓	↓	↓	↓	↓	-60	+100	100	50	15
C	GL -7393	DS-104	4.0- 8.0	10	25	5	9.5	11.5	N	0 to-25	25-50	30-100	150-300	400-550	50	550-750	1000	-20	+ 70	100	30	5
	ZM-3224	DS-104	4.0- 8.0	10	25	5	9.25	11.75	N	↓	↓	↓	↓	↓	↓	↓	↓	-20	+ 70	100	50	5
	ZM-3327	DS-104	4.0- 8.0	10	25	5	9.25	11.75	N	↓	↓	↓	↓	↓	↓	↓	↓	-20	+ 70	100	50	5
	ZM-3121	DS-104	5.2- 6.0	7	25	5	9.5	11.5	N	↓	↓	↓	↓	↓	↓	↓	↓	-20	+ 70	100	30	5
	ZM-3122	DS-104	5.9- 6.5	7	25	5	9.5	11.5	N	↓	↓	↓	↓	↓	↓	↓	↓	-20	+ 70	100	30	5
X	ZM-3226	DS-108	7.0-11.0	10	25	5	9.25	11.75	N	0 to-25	20-55	30-150	200-450	650-850	50	900-1100	1000	-20	+ 70	100	50	5
	GL -8154	DS-108	7.0-11.0	10	25	5	9.5	11.5	N	↓	30-60	40-150	250-450	700-850	↓	900-1000	↓	-20	+ 70	100	30	5
	ZM-3329	DS-108	7.0-11.0	10	25	5	9.25	11.75	N	↓	20-55	30-150	200-450	650-850	↓	900-1100	↓	-20	+ 70	100	50	5
	ZM-3093	DS-108	7.5- 8.5	7.5	25	5	9.5	11.5	WG	↓	30-60	40-150	250-450	700-850	↓	900-1000	↓	-20	+ 70	100	30	5
	GL -7394	DS-108	8.0-12.0	10	25	5	9.5	11.5	WG	↓	30-60	40-150	250-450	700-850	↓	900-1000	↓	-20	+ 70	100	30	5
	ZM-3225	DS-108	8.0-12.0	10	25	5	9.25	11.75	WG	↓	20-55	30-150	200-450	650-850	↓	900-1100	↓	-20	+ 70	100	50	5
	ZM-3328	DS-108	8.0-12.0	10	25	5	9.25	11.75	WG	↓	20-55	30-150	200-450	650-850	↓	900-1100	↓	-20	+ 70	100	50	5
	ZM-3145	DS-108	8.5- 9.6	7	25	5	9.5	11.5	WG	↓	30-60	40-150	250-450	700-850	↓	900-1000	↓	-20	+ 70	100	30	5
	ZM-3123	DS-108	8.5- 9.6	8	25	5	9.5	11.5	WG	↓	30-60	40-150	250-450	700-850	↓	900-1000	↓	-20	+ 70	100	30	5

9-10-64

Note 1. Heaters of these TWTs are 6.3 v (rms), 0.35 amp or less.

Note 2. Types ZM-3183 and ZM-3283 are magnetically shielded.

Note 3. These PM-focused TWTs are supplied for replacement in existing equipment. We recommend reference to SRPM and PPM summaries for new applications.

LOW NOISE INTEGRAL POWER SUPPLY TWT DATA SUMMARY

	Tube Type			Data Sheet	Freq. Range Gc	Max. N. F. db	Min. S. S. Gain db	Min. Power Output mw	Focus	Length in.	Wt. lb	RF Connector	Temp. °C		Alt. 1000 ft	Shock G	Vib. G
	28 vdc Power Supply	115 v 400 cps Power Supply	115 v 60 cps Power Supply										Min.	Max.			
P	ZM-3353	ZM-3354	ZM-3355	DS-124	.775-1.45	11	28	10	PPM	16.0	9.0	TNC	-54	+71	100	30	15
L	ZM-3356	ZM-3357	ZM-3358	DS-124	1.0-2.0	10	30	10	PPM	16.0	9.0	TNC	-54	+71	100	30	15
	ZM-3359	ZM-3360	ZM-3361	DS-124	1.2-1.4	8	35	10	↓	↓	↓	↓	↓	↓	↓	↓	↓
	ZM-3362	ZM-3363	ZM-3364	DS-124	1.7-2.4	9	35	10	↓	↓	↓	↓	↓	↓	↓	↓	↓
S	ZM-3365	ZM-3366	ZM-3367	DS-118	2.0-4.0	8	30	5	SRPM	13.85	15.5	N	-54	+71	100	30	15
	ZM-3368	ZM-3369	ZM-3370	DS-118	2.2-2.3	5.5	30	5	↓	↓	↓	↓	↓	↓	↓	↓	↓
	ZM-3371	ZM-3372	ZM-3373	DS-118	2.7-3.3	6	30	7	↓	↓	↓	↓	↓	↓	↓	↓	↓
C	ZM-3291	ZM-3292	ZM-3293	DS-118	4.0-8.0	8	25	5	SRPM	13.85	15.5	N	-54	+71	100	30	15
	ZM-3416	ZM-3417	ZM-3418	DS-118	4.3-7.35	7	30	10	↓	↓	↓	↓	↓	↓	↓	↓	↓
	ZM-3419	ZM-3420	ZM-3421	DS-118	4.4-5.0	6	30	10	↓	↓	↓	↓	↓	↓	↓	↓	↓
	ZM-3422	ZM-3423	ZM-3424	DS-118	5.4-5.9	6	30	10	↓	↓	↓	↓	↓	↓	↓	↓	↓
	ZM-3425	ZM-3426	ZM-3427	DS-118	5.9-6.5	6	30	10	↓	↓	↓	↓	↓	↓	↓	↓	↓
X	ZM-3404	ZM-3405	ZM-3406	DS-118	7.0-8.5	7	30	10	SRPM	13.85	15.5	N	-54	+71	100	30	15
	ZM-3294	ZM-3295	ZM-3296	DS-118	7.0-11.0	8	25	5	↓	↓	↓	↓	↓	↓	↓	↓	↓
	ZM-3306	ZM-3307	ZM-3308	DS-118	7.0-11.0	9	25	5	↓	↓	↓	↓	↓	↓	↓	↓	↓
	ZM-3407	ZM-3408	ZM-3409	DS-118	7.5-8.5	6.5	30	10	↓	↓	↓	↓	↓	↓	↓	↓	↓
	ZM-3309	ZM-3310	ZM-3311	DS-118	8.0-12.0	8	25	5	↓	↓	↓	↓	↓	↓	↓	↓	↓
	ZM-3297	ZM-3298	ZM-3299	DS-118	8.0-12.0	9	25	5	↓	↓	↓	↓	↓	↓	↓	↓	↓
	ZM-3410	ZM-3411	ZM-3412	DS-118	8.5-9.6	7	30	10	↓	↓	↓	↓	↓	↓	↓	↓	↓
	ZM-3413	ZM-3414	ZM-3415	DS-118	9.0-10.0	7	30	10	↓	↓	↓	↓	↓	↓	↓	↓	↓
K_U	ZM-3374	ZM-3375	ZM-3376	DS-118	9.75-15.0	11	30	5	SRPM	12.11	16.0	WG	-54	+71	100	30	15
	ZM-3436	ZM-3437	ZM-3438	DS-118	12.0-16.0	10	30	5	SRPM	12.11	16.0	WG	-54	+71	100	30	15

1-13-65

MATCHED GAIN TWT DATA SUMMARY

	Tube Type	Data Sheet	Freq. Range Gc	Max. N. F. db	Min. S. S. Gain db	Min. Power out mw	Focus	Length in.	Wt. lb	RF Connector	Htr. vac or vdc	Max. Htr. amp.	Cath. vdc	Nom. Cath. Ma	Focus Elect. vdc	Anode vdc	Temp. °C		Alt. 1000 ft	Shock G	Vib. G
																	Min.	Max.			
S	ZM-3189	DS-114	2.4-8.0	25	10	5	PPM	11.0	2.0	N	6.3	0.75	-700 to-900	3.0	0 to-50	200-500	-65	+100	100	30	15
X	ZM-3190	DS-114	7.0-11.0	30	28	7	PPM	10.0	2.0	N	6.3	0.35	-900 to-1000	1.0	0 to-50	650-850	Ruggedized Metal Ceramic				
K	ZM-3191	DS-114	11.0-20.0	30	20	10	PPM	8.5	3.0	WG	6.3	0.35	-1400 to-1600	3.0	0 to-15	300-400	"	"	"		

3-3-64

MEDIUM POWER TWT DATA SUMMARY

	Tube Type	Data Sheet	Freq. Range Gc	Min. CW Power Output watts	Min. SS Gain db	Max. NF db	Focus	Control	Length in.	Wt. lb	Cooling	RF Connector	Heater Volts	Max. Htr. amp	Cath. kvdc	Max. Cath. ma	Grid vdc (resp. to cath.)		Focus vdc (resp. to cath.)	Anode vdc (resp. to cath.)	Helix vdc	Max. Helix ma	Coll vdc	Temp. °C		Alt. 1000 ft	Shock G	Vib. G
																	Opera.	Cutoff						min.	max.			
C/X	ZM-3273	DS-201	5-10	10	60	30	PPM	–	10.3	3	Cond.	N	6-7.5	.8	−2.6 to −2.9	65	–	–	0 to −30	–	−100 to +100	10	–	Ruggedized metal-ceramic				
	ZM-3274	DS-201	5-12	10	60	30	PPM	–	10.3	3	Cond.	N	6-7.5	.8	"	65	–	–	"	–	"	10	–	"				
	ZM-3275	DS-201	5.4-11	10	60	30	PPM	–	10.3	3	Cond.	N	6-7.5	.8	"	65	–	–	"	–	"	10	–	"				
X	ZM-3276	DS-201	7-11	15	60	30	PPM	–	10.3	3	Cond.	N	6-7.5	.8	"	65	–	–	"	–	"	10	–	"				
	ZM-3277	DS-201	7-12	10	60	30	PPM	–	10.3	3	Cond.	N	6-7.5	.8	"	65	–	–	"	–	"	10	–	"				
	ZM-3278	DS-201	8-10	20	60	30	PPM	–	10.3	3	Cond.	N	6-7.5	.8	"	65	–	–	"	–	"	10	–	"				
	ZM-3279	DS-201	8-12	10	60	30	PPM	–	10.3	3	Cond.	N	6-7.5	.8	"	65	–	–	"	–	"	10	–	"				
	ZM-3185	DS-202	7-11	2	40	30	PPM	–	8.80	2.2	F. Air	TNC	6-7.5	.75	−1.65 to −1.85	27	–	–	0 to −20	300-400	–	3	0	−40	+85	100	30	10
	ZM-3107	DS-202	7-11	10	30	30	PPM	–	8.55	2.1	F. Air	TNC	6-7.5	.75	−2.3 to −2.7	55	–	–	"	400-550	–	5	0	−40	+85	100	30	10
	ZM-3143	DS-202	8-10	10	35	30	PPM	–	8.55	2.1	F. Air	TNC	6-7.5	.75	"	55	–	–	"	400-550	–	5	0	−40	+85	100	30	10
	ZM-3179	DS-202	8-12.4	10	30	30	PPM	–	8.55	2.1	F. Air	TNC	6-7.5	.75	"	55	–	–	"	400-550	–	5	0	−40	+85	100	30	10
	ZM-3172	DS-203	7-11	5	30	30	PPM	Grid	8.55	2.1	F. Air	TNC	6-7.5	.75	"	40	60 to 100	−18 to −22	–	400-550	–	5	0	−40	+85	100	30	10
	ZM-3173	DS-204	7-11	10	30	30	PPM	–	8.55	2.1	F. Air	TNC	6-7.5	.75	"	55	–	–	0 to −20	–	–	5	0	−40	+85	100	30	10
K_U	ZM-3290	DS-207	11-20	1	30	30	PPM	Grid	9	2	F. Air	WG	6.3	.5	−3.4 to −3.6	35	0 to −10	−330 to −350	–	–	–	5	0	−65	+90	100	50	10
	ZM-3289	DS-207	12-15.4	10	35	30	PPM	Grid	9	2	F. Air	WG	6.3	.5	−4.0 to −5.0	50	0 to −30	−430 to −450	–	–	–	5	0	−65	+90	100	50	10
	ZM-3231	DS-207	12-18	5	35	30	PPM	Grid	9	2	F. Air	WG	6.3	.5	−3.4 to −3.6	35	0 to −10	−330 to −350	–	–	–	5	0	−65	+90	100	50	10
	ZM-5182	DS-205	12-18	150mw	35	–	PPM	Grid	8.8	3.8	Conv.	WG	5.3-7.3	.4	−1.7 to −2.1	7	0 to −15	−130 to −150	–	–	–	1	125 to 170	−65	+100	100	30	10

1-7-65

HIGH POWER TWT DATA SUMMARY

	Tube Type	Data Sheet	Freq. Range Gc	Min. Sat. Power Output kw	Max. Duty	Max. Pulse μs	Min. Sat. Gain db	Focus	Pulse Control	Length in.	Wt. lb	Cooling	RF Connector	Heater Volts	Max. Htr. amp	Cath. kvdc (resp. to anode)	Max. Cath. amp	Grid Bias vdc (resp. to cath.)	Grid Swing vdc	Max. Peak Grid amp	Coll. kvdc	Temp. °C Min.	Temp. °C Max.	Alt. 1000 ft	Shock G	Vib. G
L	ZM-3392	DS-310	1.2-1.5	5	0.05	20	36	PPM	Cath	25	12	Liq.	N	6.3	3.0	-9.5 to -10.5	3	–	–	–	–	-54	+71	70	30	*
	ZM-3393	DS-310	1.2-1.5	5	0.05	20	36	PPM	Cath	25	12	F. Air						–	–	–	–					
	ZM-3394	DS-310	1.2-1.5	5	0.05	20	50	PPM	Cath	31	16	Liq.						–	–	–	–					
	ZM-3395	DS-310	1.2-1.5	5	0.05	20	50	PPM	Cath	31	16	F. Air						–	–	–	–					
	ZM-3396	DS-310	1.2-1.5	10	0.05	20	36	PPM	Cath	25	12	Liq.				-11.5 to -12.5	4	–	–	–	–					
	ZM-3397	DS-310	1.2-1.5	10	0.05	20	36	PPM	Cath	25	12	F. Air						–	–	–	–					
	ZM-3398	DS-310	1.2-1.5	10	0.05	20	50	PPM	Cath	31	16	Liq.						–	–	–	–					
	ZM-3399	DS-310	1.2-1.5	10	0.05	20	50	PPM	Cath	31	16	F. Air						–	–	–	–					
S	ZM-3389	DS-309	2.7-3.1	5.0	0.01	20	37	PPM	Cath	18	10.5	F. Air	N	6.3	3.0	-11.5 to -13	3	–	–	–	–	-54	+71	–	30	*
	ZM-3314	DS-309	2.9-3.1	2.5	0.03	40	37	PPM	Cath	18	10.5	Liq.	TNC			-8.5 to -9.5	2	–	–	–	–			–		
	ZM-3387	DS-309	2.9-3.1	2.5	0.03	40	37	PPM	Cath	18	10.5	Liq.	N					–	–	–	–			–		
	ZM-3388	DS-309	2.9-3.1	2.5	0.03	40	37	PPM	Cath	18	10.5	F. Air	N					–	–	–	–			–		
C	ZM-3174†	DS-301	5.4-6.2	1	0.01	10	40	PPM	Grid	11.8	5	Cond	OSM	6.3	1.4	-9 to -10	1.2	-300 to -350	375-450	0.2	0	-55	+85	120	35	15
	ZM-3133	DS-302	5.2-6.0	5	0.002	20	35	PPM	Grid	18	13	F. Air	N	6-6.6	3.0	-15 to -18	5	-300 to -400	700-900	1.0	–	Ruggedized metal ceramic				
	ZM-3282	DS-302	5.4-5.9	5	0.002	20	51	PPM	Cath	21.5	13	F. Air		6-6.6	3.0	-15 to -17	4.5	–	–	–	–	"				
	ZM-3167	DS-308	5.4-5.9	5	0.002	10	51	PPM	Cath	20.0	13	F. Air		6.3	3.5	-14 to -16	4.5	–	–	–	–	"				
	ZM-3092†	DS-303	5.4-5.9	12	0.028	6	40	PPM	Grid	24	13	Liq.		10-12	2.5	-20 to -25	5	-250 to -350	500-600	0.75	0 to -12	"				
X	ZM-3126	OTI-68	8.5-9.6	1	0.01	6	35	PPM	Grid	12	6	Cond														
	ZM-3280†	DS-305	8.5-9.6	10	0.01	20	33	PPM	Grid	21	17	F. Air	WG	9-11	2.5	-24 to -26	5	-275 to -325	450-550	1.0	0	Ruggedized metal ceramic				
	ZM-3281†	DS-305	8.5-9.6	10	0.01	20	33	PPM	Grid	21	15	Liq.	WG	9-11	2.5	-24 to -26	5	-275 to -325	450-550	1.0	0	"				
K_u	ZM-5184†	DS-307	14 - 17	0.5	0.01	10	25	EM	Grid	12	20	Liq.	WG	6.3	0.8	-10 to -10.8	2.2	-150 to -200	400-500	0.55	–	-65	+100	100	30	10

* Refer to data sheet for rating.

† Includes a 2800 vdc vacuum ion pump.

1-7-65

TUBE DEPARTMENT
GENERAL ELECTRIC
Owensboro, Kentucky

GENERAL ELECTRIC
POWER TUBE DEPARTMENT
Schenectady 5, N. Y.

PRELIMINARY
TECHNICAL INFORMATION

Not In Data Book

These ratings represent those of current developmental samples of this type. Refer to the Objective Technical Information sheet for design-objective ratings.

DEVELOPMENTAL TYPE
Z-3028
PTI-10B

10-20-60

This technical information is considered to be proprietary and is furnished as a service to customers for their private use only

TRAVELING-WAVE TUBE

TPD

25 db Gain
Less than 10 db Noise Figure

Low-Noise

4000-8000 Megacycles
Metal and Ceramic

The Z-3028 is a ruggedized low-noise, broadband traveling-wave tube for use in the 4000- to-8000-megacycle frequency range. It provides a noise figure of less than 10 decibels across the entire band with a power output of more than one milliwatt.

The tube is of metal-and-ceramic construction and is supplied as a complete packaged assembly which includes the focusing magnets, connectors, and housing. The entire assembly weighs approximately 12.25 pounds.

The broad bandwidth, low-noise, high gain, freedom from tuning adjustments, and rugged construction make this tube particularly useful in military systems. As the input tube for radar receivers, it has the decided advantages of low noise and protection to the crystal mixer. Other applications include electronic countermeasures equipment, microwave relay systems, and radiometry.

GENERAL

Electrical

Heater Voltage*	5 to 7	Volts
Heater Current	0.2 to 0.35	Amperes
Frequency	4000 to 8000	Megacycles
Noise Figure+	Less than 10	Decibels
Saturated Power Output, minimum	1.0	Milliwatts
Small Signal Gain	25	Decibels
Variation, maximum	6	Decibels
Collector Dissipation	0.5	Watts
Impedance, coaxial		
Input	50	Ohms
Output	50	Ohms

Mechanical

Mounting Position – Any †
DC Socket – Winchester PM6P-LS
Helix and Collector Sockets – PM1P-LS
RF Connections, coaxial
Input and Output – Type N, UG-58/U
Over-all Dimensions

Length	9.25	Inches
Width	4.525	Inches
Height	2.914	Inches
Weight, approximate	12.25	Pounds
Shock	50	G
Vibration	15	G
Altitude	100,000	Feet, Mean Sea Level

Thermal

Type of Cooling – Convection

Temperature, maximum	200	C

The specifications of this tube type are subject to change. This tube is now under development and is made available for experimental purposes only. Delivery of tube samples and the existence of these data do not imply continued availability of tubes with the same characteristics or dimensions. For the most recent information concerning the status of this development please consult your local Power Tube Department Regional Sales Office.

TYPICAL OPERATING CONDITIONS¶

Electrode-No. 1, grid		
Voltage	-10 to -25	Volts
Current	0	Microamperes
Electrode-No. 2, anode		
Voltage	25 to 50	Volts
Current	0	Milliamperes
Electrode-No. 3 Voltage	30 to 150	Volts
Electrode-No. 4 Voltage	100 to 400	Volts
Helix Voltage.	400 to 550	Volts
Helix Current, maximum	50	Microamperes
Collector Voltage	550 to 750	Volts
Beam Current	500 to 800	Microamperes
Magnetic Field Strength, approximate	600	Gausses

* A maximum heater-voltage regulation of ± 2 percent is recommended to realize the optimum gain parameter and noise figure.

+ Less than 10 decibels noise figure over the frequency range with the same operating voltages that provide minimum gain variation.

† For best results, the tube should be spaced at least 2 inches away from other magnetic sources.

¶ For helix and waveguide at ground potential.

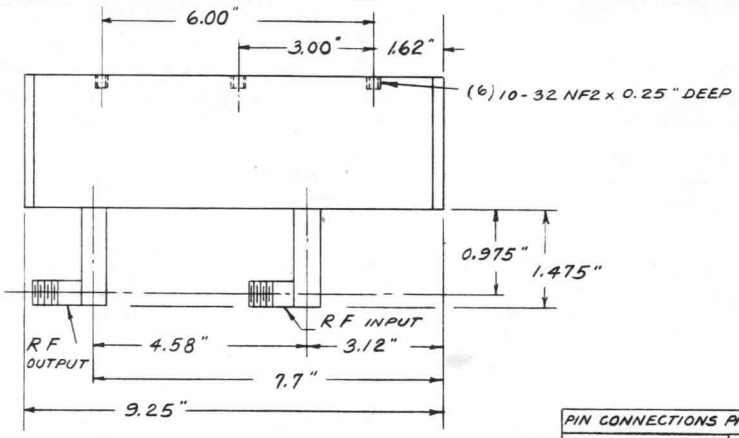

PIN CONNECTIONS PM6P-LS	
ELECTRODE	PIN
CATHODE	F
HEATER	A
NO.1, GRID	B
NO.2, ANODE	C
NO.3 FOCUS	D
NO.4 FOCUS	E

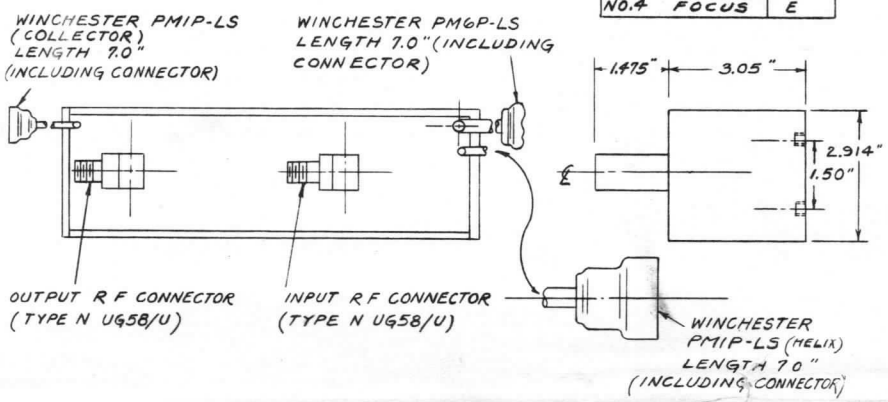

GENERAL ELECTRIC
TUBE DEPARTMENT
Schenectady 5, N. Y.

OBJECTIVE
TECHNICAL INFORMATION

These ratings represent the design objective for this tube.

DEVELOPMENTAL TYPE

Z-3086
OTI-56A
Page 1
3-15-64

This technical information is considered to be proprietary and is furnished as a service to customers for their private use only

TRAVELING-WAVE TUBE

Z-3086

The Z-3086 is a lightweight high-power traveling-wave tube with the following objective ratings and features.

Electrical	
Frequency	8500-9600 Megacycles
Power Output, minimum	30-50 Kilowatts
Power Gain, minimum	50-60 Decibels
Duty Cycle, maximum	0.005
Pulse Length, maximum	6 Microseconds
Focusing	Periodic Permanent Magnet
Mechanical	
Tube Construction	Metal-Ceramic
Dimensions, approximate	
Length	20 Inches
Diameter	3.5 Inches
Total Weight, approximate	17 Pounds
RF Connections	Waveguide
Cooling Method	Liquid

The specifications of this tube type are subject to change. This tube is now under development and is made available for experimental purposes only. Delivery of tube samples and the existence of these data do not imply continued availability of tubes with the same characteristics or dimensions. For the most recent information concerning the status of this development please consult your local Tube Department Regional Sales Office.

Traveling-Wave Tubes

Technical Information

- HIGH POWER
- C-BAND
- PPM FOCUSING

RF PERFORMANCE

Tube Type	Frequency Range (Gc)	Min. Peak Saturated Power Output, (kw)	Maximum Duty	Maximum Pulse Width (μ sec)	Minumum Saturated Gain (db)
ZM-3092	5.4 - 5.9	12	0.028	6	40

FEATURES

high gain

broad bandwidth

periodic permanent magnet focusing

metal-ceramic construction

ring-bar circuit

military environments

light weight

grid control

APPLICATIONS

radar

ecm

MECHANICAL & MISCELLANEOUS

VSWR, max	
Input	2.5
Output	2.5
Grid-to-other elements $\mu\mu$f (max.)	30
Phase Shift, deg/1% change in cathode voltage (max)	35
Weight, lb	13
Over-all length, in	24.0
Mounting position	Any
Cooling	Liquid
Min. flow (water)gpm	0.3
Pressure drop, psi	10
Connectors	
RF input	N, female
RF output	N, female

TYPICAL CHARACTERISTICS

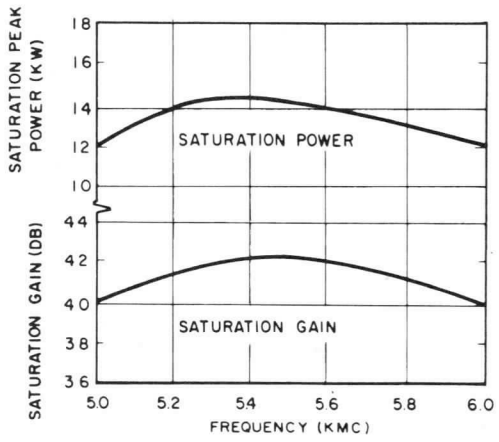

GENERAL ELECTRIC

OPERATING CONDITIONS*†

Htr. vac or vdc.....	10 to 12
Htr. amp (max)	2.5
Cath. kv dc, with resp. to anode	-20 to -25
Peak cath. amp (max)	5
Grid-bias vdc, with resp. to cath	-250 to -350
Grid swing vdc, with resp. to grid-bias voltage.....	500 to 600
Peak grid amp (max).....	0.75
Coll. kv dc#, with resp. to anode	0 to -12
Ion pump vdc, with resp. to anode	2800

OUTLINE

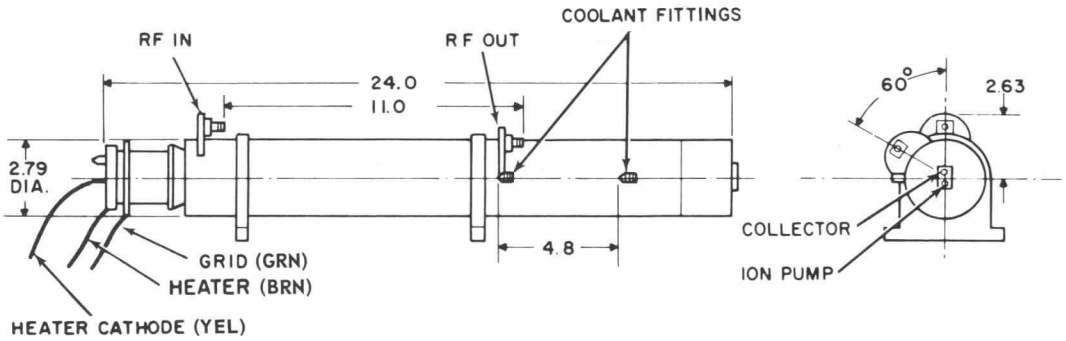

DIMENSIONS ARE IN INCHES AND ARE APPROXIMATE

NOTES

* For the performance ratings specified, voltages should be adjusted to values specified by instructions accompanying each tube. These values will be within the ranges given above.

† The cathode voltage may be set at various values between -20 and -25 kv to obtain different power and gain characteristics.

\# The collector may be operated at the anode voltage (0 kv) or it may be depressed to -12 kv.

These data are subject to change without notice.

TUBE DEPARTMENT

GENERAL ELECTRIC

Owensboro, Kentucky

Rev 12-23-64 DS-108

ZM-3093 ZM-3226
ZM-3123 ZM-3328
ZM-3145 ZM-3329
ZM-3225 GL-7394
GL-8154

Traveling-Wave Tubes

Technical Information

RF PERFORMANCE

Tube Type	Frequency Range (Gc)	Maximum Noise Figure (db)	Minimum SS Gain (db)	Minimum Saturation Power Output (mw)	Data Group
GL-8154	7.0 - 11.0	10	25	5	X-3
ZM-3226	7.0 - 11.0	10	25	5	X-4
ZM-3329	7.0 - 11.0	10	25	5	X-5
ZM-3093	7.5 - 8.5	7.5	25	5	X-1
GL-7394	8.0 - 12.0	10	25	5	X-1
ZM-3225	8.0 - 12.0	10	25	5	X-2
ZM-3328	8.0 - 12.0	10	25	5	X-6
ZM-3145	8.5 - 9.6	7	25	5	X-1
ZM-3123	8.5 - 9.6	8	25	5	X-1

- LOW NOISE
- X-BAND
- PM FOCUSING

FEATURES

lowest noise
broadband
permanent magnet focused#
metal ceramic construction
military environments
lightweight
crystal mixer protection

APPLICATIONS

radar
ecm
instrumentation
communications
radiometry

MECHANICAL & MISCELLANEOUS

Data Group	X-1, X-3	X-2, X-4, X-5, X-6
VSWR, max *		
Input	2.5	2.5
Output	3.5	3.5
Mounting Position	Any	Any
Weight, lb	11.5	11.75
Overall Length, in.	9.5	9.25
Cooling	Convection	Convection
RF Connectors	See Outlines	
DC Connector	Winchester PM6P-LS	Winchester PM6P-LS
Helix Connector	Winchester PM1P-LS	Winchester PM1P-LS
Collector Connector	Winchester PM1P-LS	Winchester PM1P-LS

TYPICAL CHARACTERISTICS

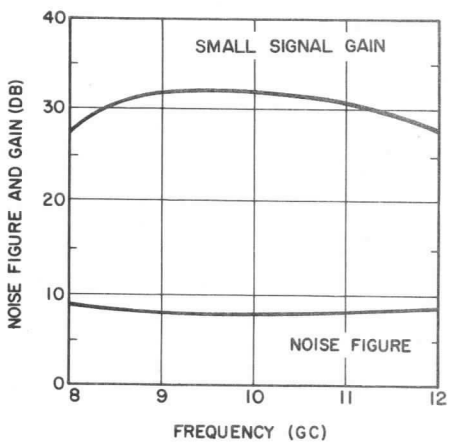

OPERATING CONDITIONS†

Data Group	X-1, X-3	X-2, X-4 X-5, X-6
Htr, vac or vdc	6.3	6.3
Htr, amp (max)	0.35	0.35
Elect. 1, vdc	-25 to 0	-25 to 0
Elect. 2, vdc	30 to 60	20 to 55
Elect. 3, vdc	40 to 150	30 to 150
Elect. 4, vdc	250 to 450	200 to 450
Helix, vdc	700 to 850	650 to 850
Helix, μa (max)	50	50
Collector, vdc	900 to 1000	900 to 1100
Beam, μa (max)	1000	1000

ENVIRONMENTAL

Data Group	X-1, X-3	X-2, X-4 X-5, X-6
Shock (energized)	30G, 11 ms 3 axes	50G, 11 ms 3 axes
Vibration (operating)	5G, 55 to 1500 cps	5G, 55 to 2000 cps
Temp, Ambient (operating)	-20 C to +70 C	-20 C to +70 C
Acoustic Noise (operating)	135 db, 25 to 12,000 cps	135 db, 25 to 12,000 cps
Altitude (operating)	100,000 ft	100,000 ft

GENERAL ELECTRIC

OUTLINE (GROUP X-1)

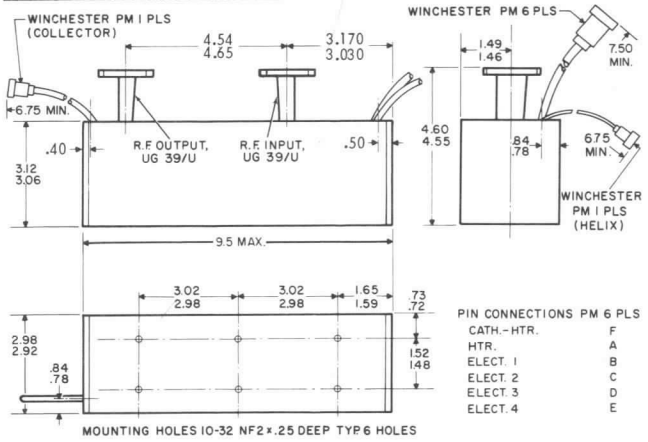

PIN CONNECTIONS PM 6 PLS	
CATH.-HTR.	F
HTR.	A
ELECT. 1	B
ELECT. 2	C
ELECT. 3	D
ELECT. 4	E

ALL DIMENSIONS ARE IN INCHES; THOSE WITHOUT TOLERANCES ARE APPROXIMATE.

OUTLINE (GROUP X-2)

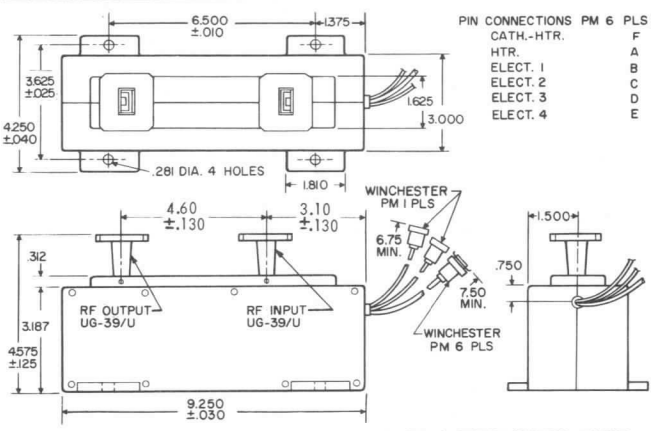

PIN CONNECTIONS PM 6 PLS	
CATH.-HTR.	F
HTR.	A
ELECT. 1	B
ELECT. 2	C
ELECT. 3	D
ELECT. 4	E

ALL DIMENSIONS ARE IN INCHES; THOSE WITHOUT TOLERANCES ARE APPROXIMATE

OUTLINE (GROUP X-3)

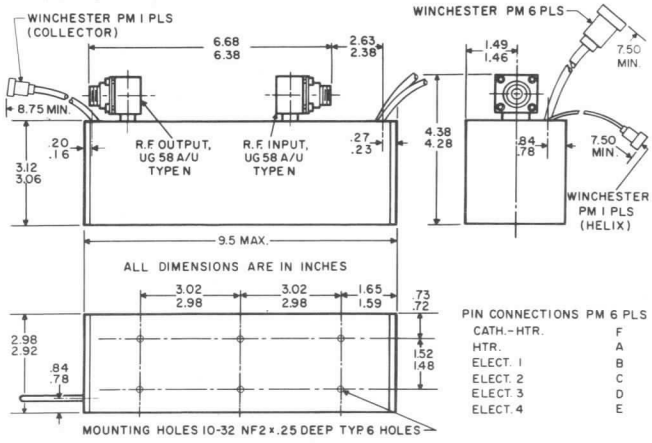

PIN CONNECTIONS PM 6 PLS	
CATH.-HTR.	F
HTR.	A
ELECT. 1	B
ELECT. 2	C
ELECT. 3	D
ELECT. 4	E

OUTLINE (GROUP X-4)

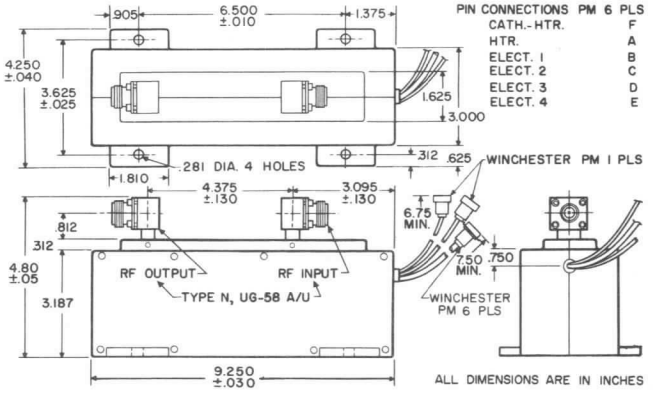

PIN CONNECTIONS PM 6 PLS	
CATH.-HTR.	F
HTR.	A
ELECT. 1	B
ELECT. 2	C
ELECT. 3	D
ELECT. 4	E

OUTLINE (GROUP X-5)

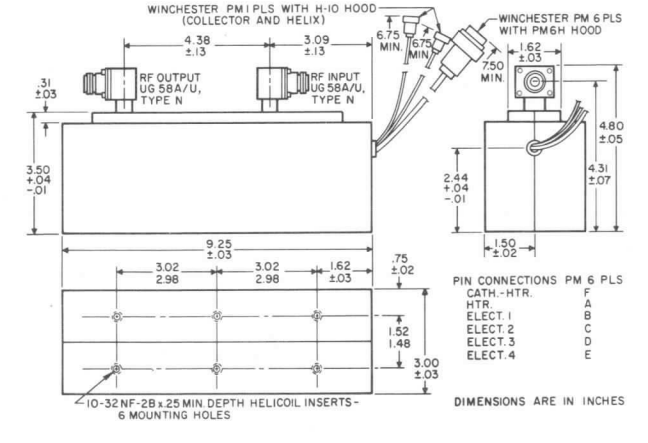

PIN CONNECTIONS PM 6 PLS	
CATH.-HTR.	F
HTR.	A
ELECT. 1	B
ELECT. 2	C
ELECT. 3	D
ELECT. 4	E

DIMENSIONS ARE IN INCHES

OUTLINE (GROUP X-6)

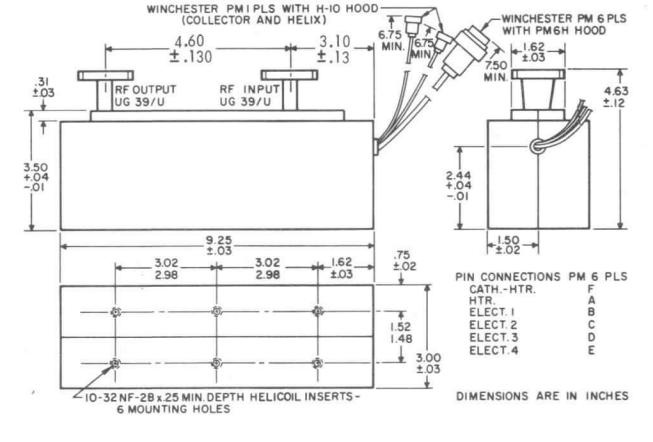

PIN CONNECTIONS PM 6 PLS	
CATH.-HTR.	F
HTR.	A
ELECT. 1	B
ELECT. 2	C
ELECT. 3	D
ELECT. 4	E

DIMENSIONS ARE IN INCHES

NOTES

 # Locating one of these PM-focused tubes near magnets or significant amounts of magnetic material may cause permanent damage to the tube by defocusing it. For further information, call your nearest General Electric Tube Department sales office or refer to instructions supplied with your PM-focused TWT.

*** ZM-3093 only, maximum VSWR – 2.0 to 1 input, 3.0 to 1 output.**

† All voltages may be isolated from ground; i.e., it is not necessary to operate the cathode, helix, collector, or any other electrode at ground potential. Voltages shown are measured with respect to cathode. For minimum noise and optimum gain characteristics, voltages should be adjusted within ranges specified by instructions accompanying each tube.

These data are subject to change without notice.

TUBE DEPARTMENT

GENERAL ELECTRIC

Owensboro, Kentucky

ZM-3105 ZM-3199
ZM-3186 ZM-3208
ZM-3187 ZM-3209
ZM-3197 ZM-3210
ZM-3198 ZM-3326

Traveling-Wave Tubes

Technical Information

- LOW LEVEL
- X-BAND
- PPM FOCUSING

RF PERFORMANCE

Tube Type	Frequency Range (Gc)	Maximum Noise Figure (db)	Minimum SS Gain * (db)	Minimum Saturation Power Output * (mw)	Data Group
ZM-3197	7.0 - 11.0	15	37	20	X-9
ZM-3186	7.0 - 11.0	20	30	30	X-10
ZM-3105	7.0 - 11.0	25	30	30	X-10
ZM-3187	7.0 - 11.0	20	30	20	X-11
ZM-3326	7.0 - 12.0	15	30	10	X-9
ZM-3199	7.0 - 12.0	20	30	20	X-10
ZM-3209	8.0 - 12.0	15	30	10	X-9
ZM-3198	8.0 - 12.0	20	30	25	X-10
ZM-3208	8.0 - 12.0	25	30	30	X-10
ZM-3210	8.0 - 12.0	20	30	20	X-11

FEATURES

low noise
broad bandwidth
periodic permanent magnet focusing
metal-ceramic construction
military environments
light weight
crystal mixer protection

APPLICATIONS

radar
ecm
instrumentation
communications
radiometry

MECHANICAL & MISCELLANEOUS

Data Group	X-9	X-10	X-11
VSWR, max			
Input	2.5	2.5	2.5
Output	2.5	2.5	2.5
Mounting Position	Any	Any	Any
Weight, lb	4.5	4.0	3.0
Overall Length, in.	14.6	14.6	12.7
Cooling	Conv.	Conv.	Conv.
RF Connectors	Type N	Type N	Type N
DC Connector	Winch'r M12P or equiv.	Winch'r M12P or equiv.	Winch'r M12P or equiv.
Collector Connector	--	--	PM1P-LS

TYPICAL CHARACTERISTICS

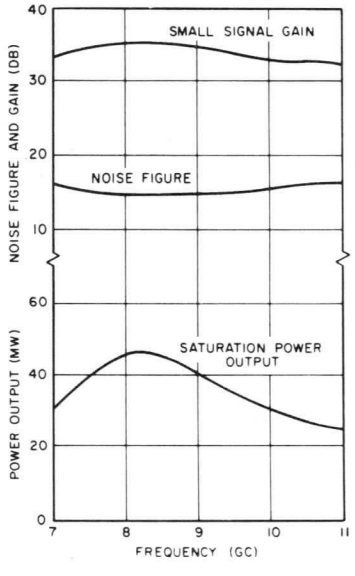

GENERAL ELECTRIC

OPERATING CONDITIONS†

Data Group	All
Htr, vac or vdc	6.3
Htr, amp (max)	0.26
Elect. 1, vdc	-50 to 0
Elect. 2, vdc	0 to 150
Elect. 3, vdc	70 to 300
Elect. 4, vdc	300 to 800
Helix, vdc	1100 to 1300
Helix, μa (max)	500
Collector, vdc	1100 to 1500
Cathode, μa (max)	1500

ENVIRONMENTAL

Shock (energized)	30G, 11 ms, 3 axes
Vibration (operating)	15G, 55 to 2000 cps
Temp, Ambient (operating)	-65 C to +100 C
Acoustic Noise (operating)	150 db, 25 to 12,000 cps
Altitude (operating)	100,000 ft.

OUTLINE (GROUPS X-9, X-10)

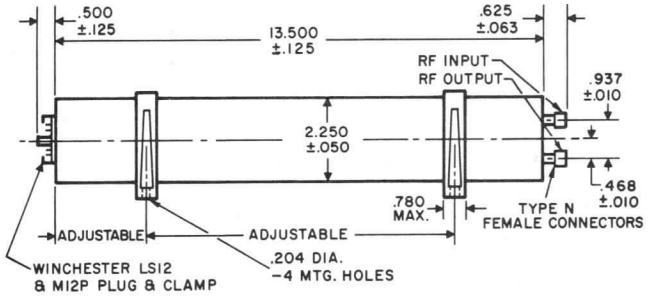

DIMENSIONS ARE IN INCHES

MI2P CONNECTIONS

TUBE ELEMENT	PIN
HEATER	H
CATHODE-HEATER	F
CATHODE	J
ELECTRODE 1	B
ELECTRODE 2	E
ELECTRODE 3	K
ELECTRODE 4	N
COLLECTOR	C
HELIX	L
CAPSULE GND.	D

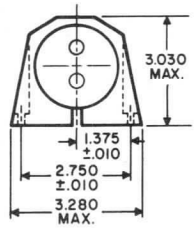

OUTLINE (GROUP X-11)

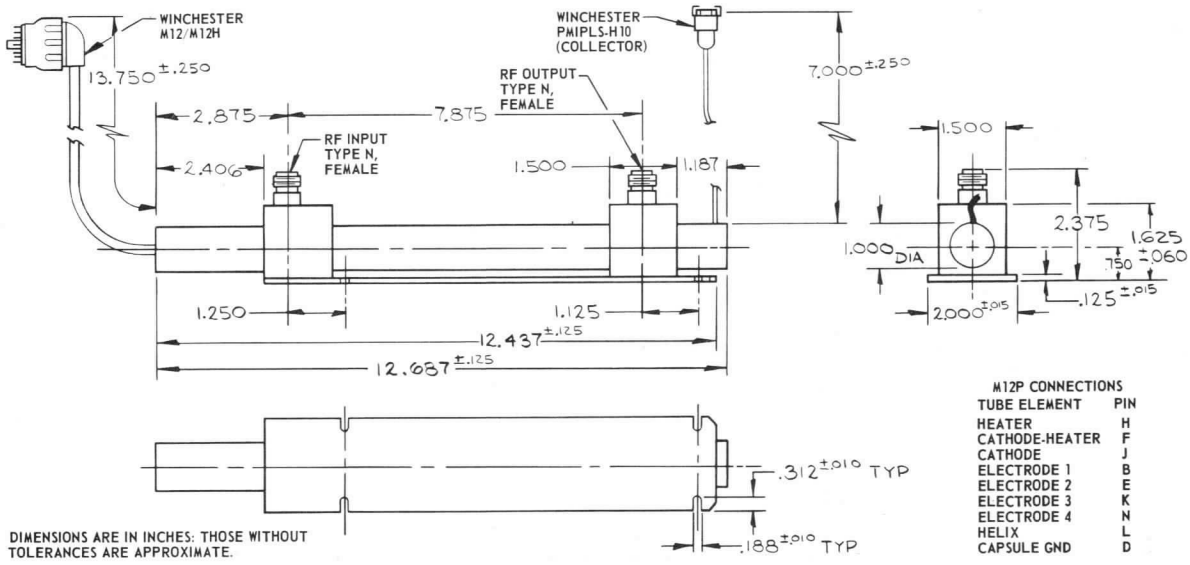

DIMENSIONS ARE IN INCHES: THOSE WITHOUT TOLERANCES ARE APPROXIMATE.

M12P CONNECTIONS

TUBE ELEMENT	PIN
HEATER	H
CATHODE-HEATER	F
CATHODE	J
ELECTRODE 1	B
ELECTRODE 2	E
ELECTRODE 3	K
ELECTRODE 4	N
HELIX	L
CAPSULE GND	D

NOTES

* Increased gain and power ratings are possible when these tubes are optimized for a narrow frequency band. If requirements exist for such increased ratings over a narrow band, consult the nearest Tube Department sales office.

† All voltages may be isolated from ground, i.e., it is not necessary to operate the cathode, helix, collector, or any other electrode at ground potential. Voltages shown are measured with respect to cathode. For minimum noise and optimum gain characteristics, voltages should be adjusted to values specified by instructions accompanying each tube. These values will be within the ranges given above.

TUBE DEPARTMENT

GENERAL ELECTRIC

Owensboro, Kentucky

ZM-3107
ZM-3143
ZM-3179
ZM-3185

Traveling-Wave Tubes

Technical Information

- MEDIUM POWER
- X-BAND
- PPM FOCUSING

RF PERFORMANCE

Tube Type	Frequency Range (Gc)	Min. CW Saturated Power Output (watts)	Minimum Small Signal Gain (db)	Maximum Noise Figure (db)	Data Group
ZM-3185	7-11	2	40	30	X-2
ZM-3107	7-11	10	30	30	X-1
ZM-3143	8-10	10	35	30	X-1
ZM-3179	8-12.4	10	30	30	X-1

FEATURES

high gain
broad bandwidth
periodic permanent magnet focusing
metal-ceramic construction
military environments
light weight
air cooling

APPLICATIONS

radar
ecm
communications
instrumentation

MECHANICAL & MISCELLANEOUS

Data Group	X-1	X-2
VSWR, max		
Input	2.5	2.5
Output	2.5	2.5
Mounting position	Any	Any
Weight, lb.	2.1	2.2
Overall length, in.	8.55	8.80
Cooling	Forced air	Forced air
Flow, cfpm#	30	20
Max. Inlet air temp., °C	25	25
Min. air press. in ft. (alt.)	10,000	10,000
Connectors		
RF input	TNC, female	TNC, female
RF output	TNC, female	TNC, female
DC	Flying leads	Flying leads

TYPICAL CHARACTERISTICS

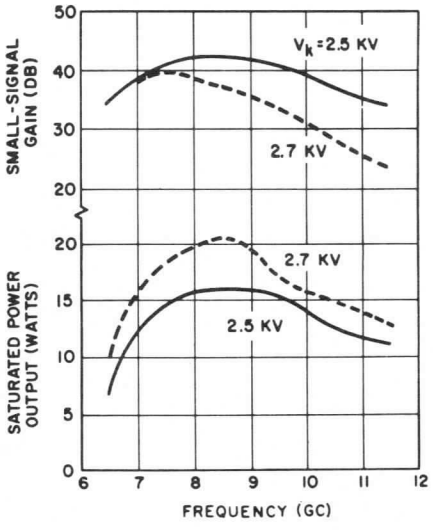

GENERAL ELECTRIC

OPERATING CONDITIONS*†

Data Group	X-1	X-2
Htr. vac or vdc	6.0 to 7.5	6.0 to 7.5
Htr. amp (max)	0.75	0.75
Cath. kv dc, with resp. to helix	-2.3 to -2.7	-1.65 to -1.85
Cath. ma, (max)	55	27
Focus elect. vdc, with resp. to cathode	0 to -20	0 to -20
Anode 1 vdc, with resp. to cathode	400 to 550	300 to 400
Coll. vdc, with resp. to helix	0	0
Helix ma (max.)	5	3

ENVIRONMENTAL

Data Group	X-1 & X-2
Shock (energized)	30 G, 11 ms, 3 axes
Vibration (operating)	10 G, 70-2000 cps, 3 axes
Temp., ambient (operating)	-40 to +85°C
Altitude (operating)	100,000 ft
Acoustic noise (operating)	135 db, 25 to 12,000 cps

OUTLINE (GROUP X-1)

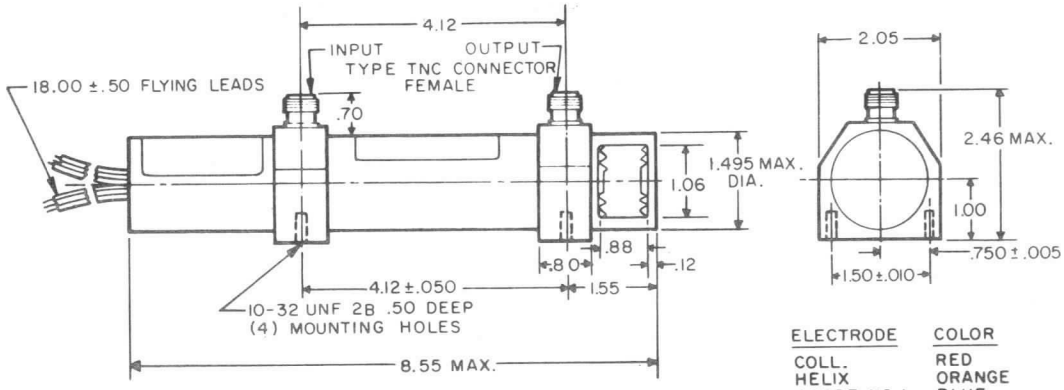

ELECTRODE	COLOR
COLL.	RED
HELIX	ORANGE
ANODE NO. 1	BLUE
FOCUS	GREEN
CATH.-HTR.	YELLOW
HTR.	BROWN

DIMENSIONS ARE IN INCHES

OUTLINE (GROUP X-2)

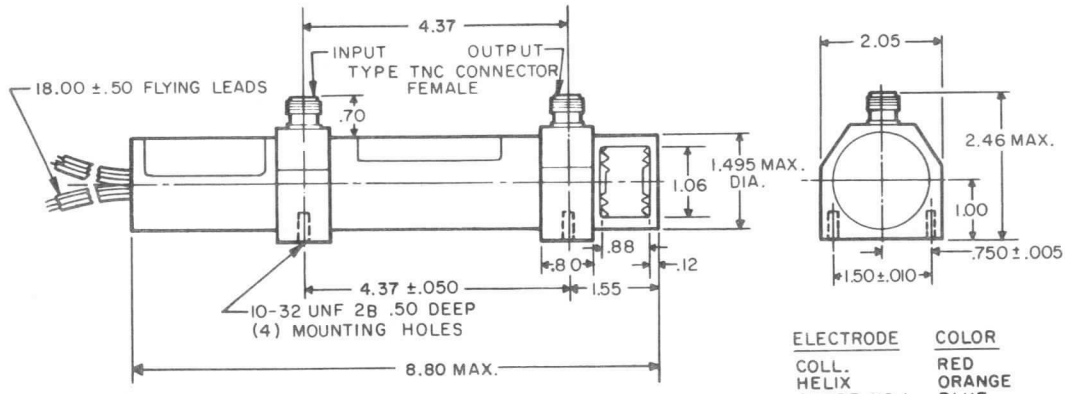

ELECTRODE	COLOR
COLL.	RED
HELIX	ORANGE
ANODE NO. 1	BLUE
FOCUS	GREEN
CATH.-HTR.	YELLOW
HTR.	BROWN

DIMENSIONS ARE IN INCHES

NOTES

\# Sufficient air must be supplied to this tube to hold the collector temperature below 150°C.

* For the performance ratings specified, voltages should be adjusted to values specified by instructions accompanying each tube. These values will be within the ranges given above.

† The helix is connected to the package which should be grounded in the normal installation of this tube.

These data are subject to change without notice.

TUBE DEPARTMENT

GENERAL ELECTRIC

Owensboro, Kentucky

ZM-3113 ZM-3157
ZM-3142 ZM-3158
ZM-3153 ZM-3159

Traveling-Wave Tubes

Technical Information

- LOW NOISE
- S-BAND
- PM FOCUSING

RF PERFORMANCE

Tube Type	Frequency Range (Gc)	Maximum Noise Figure* (db)	Minimum SS Gain (db)	Minimum Saturation Power Output (mw)
ZM-3153	1.8 - 2.4	7	25	1
ZM-3142	2.3 - 4.45	8	25	1
ZM-3113	2.0 - 4.0	8	25	1
ZM-3157	2.7 - 2.9	5.5	30	3
ZM-3158	2.9 - 3.1	5.5	30	3
ZM-3159	3.4 - 3.6	6	30	1

FEATURES

lowest noise
broadband
permanent magnet focused ‡
metal ceramic construction
military environments
lightweight
crystal mixer protection

APPLICATIONS

radar
ecm
instrumentation
communications
radiometry

MECHANICAL & MISCELLANEOUS

VSWR, max.	
Input	2.5
Output	3.0
Mounting Position	Any
Weight, lb.	11.5
Overall Length, in	9.25
Cooling	Convection
RF Connectors	Type N
DC Connector	Winchester M10P-LSH-19

TYPICAL CHARACTERISTICS

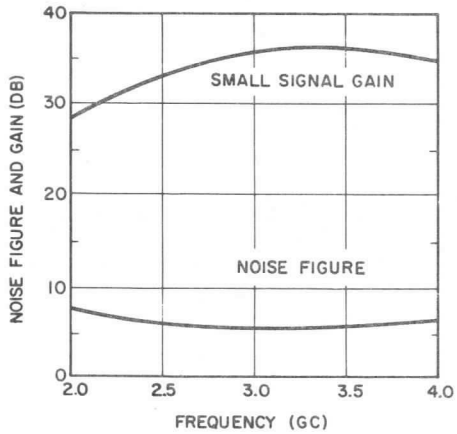

GENERAL ELECTRIC

OPERATING CONDITIONS#

Htr, vac or vdc	6.3
Htr, amp (max.)	0.35
Elect. 1, vdc	-10 to 0
Elect. 2, vdc	10 to 30
Elect. 3, vdc	25 to 100
Elect. 4, vdc	50 to 200
Helix, vdc	150 to 275
Helix, μa (max.)	50
Collector, vdc	400 to 600
Beam, μa (max.)	600

ENVIRONMENTAL

Shock (energized)	50 G, 11 ms, 3 axes
Vibration (operating)	15 G, 70 to 2,000 cps
Temp, Ambient (operating)	-60 C to +100 C
Altitude (operating)	100,000 ft.
Acoustic Noise (operating)	135 db, 25-12,000 cps

OUTLINE

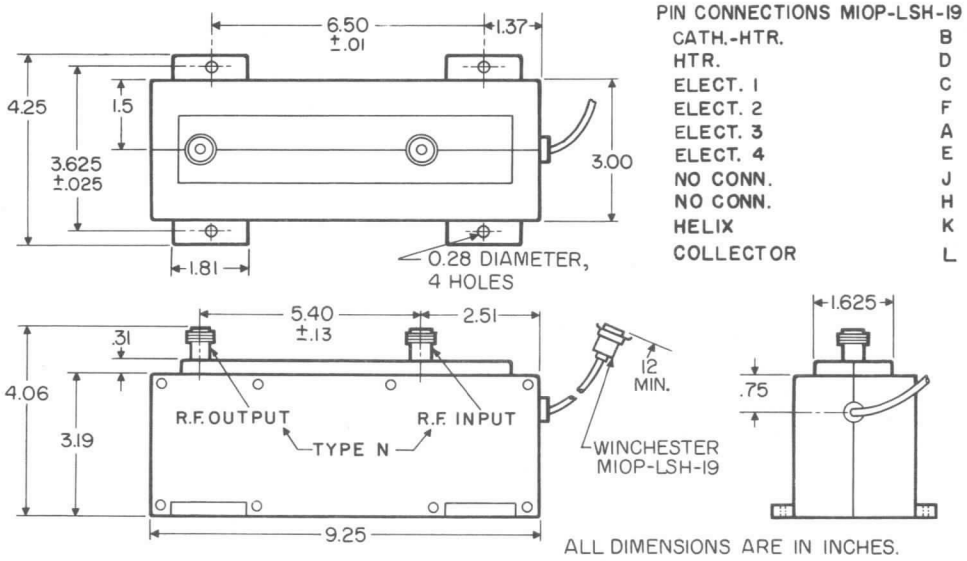

ALL DIMENSIONS ARE IN INCHES.

NOTES

* Noise figures apply over the entire band with the same operating voltages that provide minimum gain variation.

‡ Locating one of these PM-focused tubes near magnets or significant amounts of magnetic material may cause permanent damage to the tube by defocusing it. For further information, call your nearest General Electric Tube Department sales office or refer to instructions supplied with your PM-focused TWT.

\# All voltages may be isolated from ground; i.e., it is not necessary to operate the cathode, helix, collector, or any other electrode at ground potential. Voltages shown are measured with respect to cathode. For minimum noise and optimum gain characteristics, voltages should be adjusted within ranges specified by instructions accompanying each tube.

These data are subject to change without notice.

TUBE DEPARTMENT

GENERAL ELECTRIC

Owensboro, Kentucky

ZM-3121 ZM-3224
ZM-3122 ZM-3327
GL-7393

Traveling-Wave Tubes

Technical Information

RF PERFORMANCE

Tube Type	Frequency Range (Gc)	Maximum Noise Figure (db)	Minimum SS Gain (db)	Minimum Saturation Power Output (mw)	Data Group
GL-7393	4.0 - 8.0	10	25	5	C-1
ZM-3224	4.0 - 8.0	10	25	5	C-2
ZM-3327	4.0 - 8.0	10	25	5	C-3
ZM-3121	5.2 - 6.0	7	25	5	C-1
ZM-3122	5.9 - 6.5	7	25	5	C-1

- LOW NOISE
- C-BAND
- PM FOCUSING

FEATURES

lowest noise
broadband
permanent magnet focused†
metal ceramic construction
military environments
lightweight
crystal mixer protection

APPLICATIONS

radar
ecm
instrumentation
communications
radiometry

MECHANICAL & MISCELLANEOUS

Data Group	C-1	C-2, C-3
VSWR, max		
Input	2.5	2.5
Output	3.5	3.5
Weight, lb	11.5	11.75
Overall Length, in.	9.5	9.25
Mounting Position	Any	Any
Cooling	Convection	Convection
RF Connectors	Type N	Type N
DC Connector	Winchester PM6P-LS	Winchester M10P-LSH-19
Helix Connector	Winchester PM1P-LS	N/A
Collector Connector	Winchester PM1P-LS	N/A

TYPICAL CHARACTERISTICS

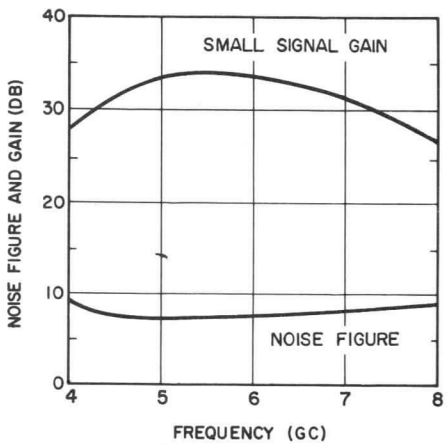

OPERATING CONDITIONS*

Data Group	C-1, C-2, C-3
Htr, vac or vdc	6.3
Htr, amp(max)	0.35
Elect. 1, vdc	-25 to 0
Elect. 2, vdc	25 to 50
Elect. 3, vdc	30 to 100
Elect. 4, vdc	150 to 300
Helix, vdc	400 to 550
Helix, μa (max)	50
Collector, vdc	550 to 750
Beam, μa (max)	1000

ENVIRONMENTAL

Data Group	C-1	C-2, C-3
Shock (energized)	30G, 11 ms, 3 axes	50G, 11 ms, 3 axes
Vibration (operating)	5G, 55 to 1500 cps	5G, 55 to 2000 cps
Temp, Ambient (operating)	-20C to +70C	-20C to +70C
Acoustic Noise (operating)	135db, 25 to 12,000 cps	135db, 25 to 12,000 cps
Altitude (operating)	100,000 ft	100,000 ft

GENERAL ELECTRIC

OUTLINE (GROUP C-1)

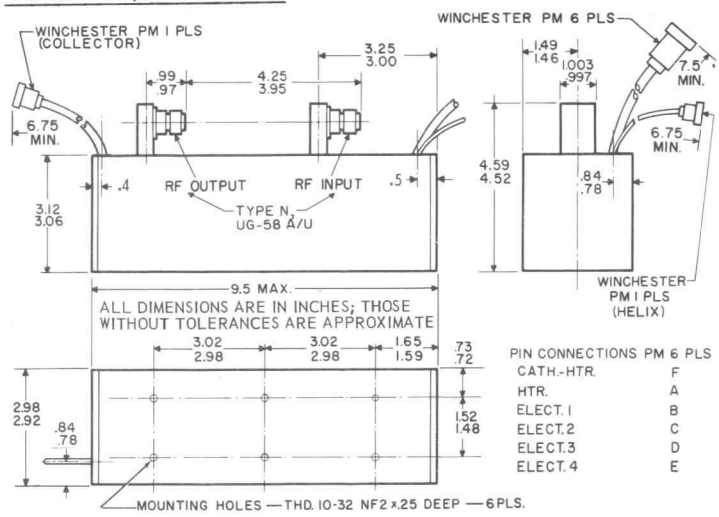

OUTLINE (GROUP C-3)

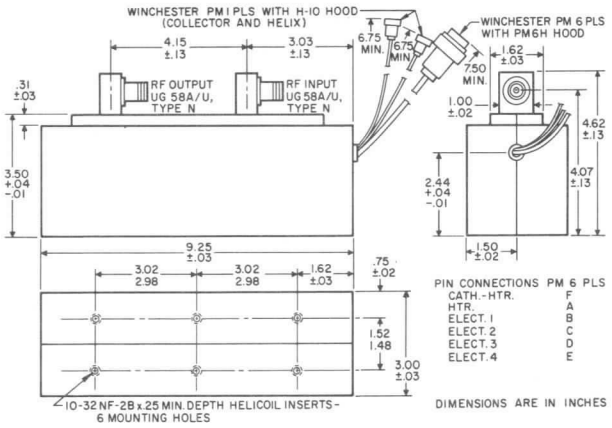

OUTLINE (GROUP C-2)

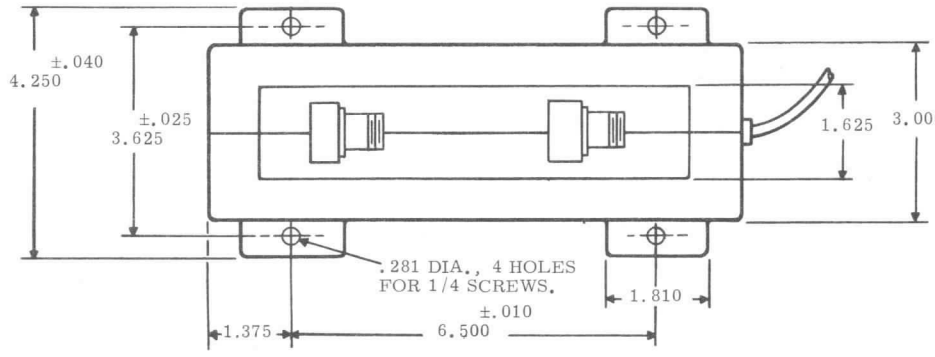

PIN CONNECTIONS	
ELECTRODE	PIN
CATHODE	B
HEATER	D
NO. 1 GRID	C
NO. 2 ANODE	F
NO. 3 FOCUS	A
NO. 4 FOCUS	E
	J
	H
HELIX	K
COLLECTOR	L

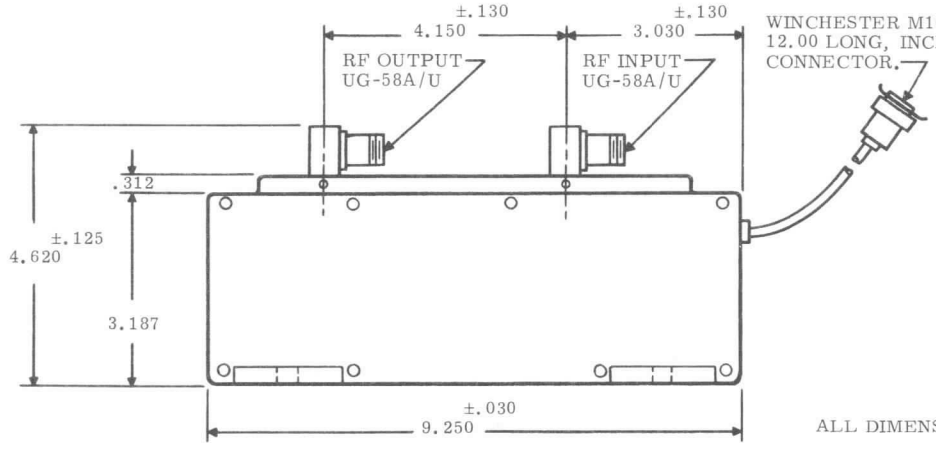

ALL DIMENSIONS IN INCHES.

NOTES

* All voltages may be isolated from ground; i. e., it is not necessary to operate the cathode, helix, collector, or any other electrode at ground potential. Voltages shown are measured with respect to cathode. For minimum noise and optimum gain characteristics, voltages should be adjusted to values specified by instructions accompanying each tube.

† Locating one of these PM-focused tubes near magnets or significant amounts of magnetic material may cause permanent damage to the tube by defocusing it. For further information, call your nearest General Electric Tube Department sales office or refer to instructions supplied with your PM-focused TWT.

These data are subject to change without notice.

TUBE DEPARTMENT

GENERAL ELECTRIC

Owensboro, Kentucky

GENERAL ELECTRIC

TUBE DEPARTMENT
Schenectady 5, N. Y.

OBJECTIVE
TECHNICAL INFORMATION

These ratings represent the design objective for this product. Refer to the Preliminary Technical Information sheet for ratings currently achieved in the progression towards design objectives. If PTI sheets do not exist, consult your local Tube Department Regional Sales Office.

DEVELOPMENTAL TYPE

ZM-3126
OTI-68A
Page 1
3-15-64

This technical information is proprietary and is furnished only as a service to customers.

ZM-3126

TRAVELING-WAVE TUBE

1 Kilowatt Peak Power Output — 8500-9600 Megacycles

Periodic Permanent Magnet

The ZM-3126 is a high-power, gridded traveling-wave tube with the following objective ratings and features.

ELECTRICAL		
Frequency	8500-9600	Megacycles
Cathode Voltage	-10	Kilovolts
Saturation Peak Power Output, minimum	1	Kilowatt
Saturation Gain, minimum	35	Decibels
Duty Cycle, maximum	0.01	
Pulse Length, maximum	6	Microseconds
Focusing – Periodic Permanent Magnet		
Grid Amplification Factor	25	
MECHANICAL		
Tube Construction – Metal-Ceramic		
Dimensions, approximate		
Length	17	Inches
Diameter	3	Inches
Total Weight, approximate	15	Pounds
RF Connections – Waveguide		
THERMAL		
Cooling – Liquid		

The specifications of this type are subject to change. This device is now under development and is made available for experimental purposes only. For the most recent information concerning the status of this development, please consult your local Tube Department Regional Sales Office, or current Preliminary Technical Information for the same catalog number.

GENERAL ELECTRIC
POWER TUBE DEPARTMENT
Schenectady 5, N. Y.

OBJECTIVE
TECHNICAL INFORMATION

These ratings represent the design objective for this product. Refer to the Preliminary Technical Information sheet for ratings currently achieved in the progression towards design objectives. If PTI sheets do not exist, consult your local Power Tube Department Regional Sales Office.

DEVELOPMENTAL TYPE

This technical information is proprietary and is furnished only as a service to customers.

ZM-3127

TRAVELING-WAVE TUBE

10 Kilowatts Peak Power Output — 8500-9600 Megacycles

Periodic Permanent Magnet

The ZM-3127 is a high-power, gridded traveling-wave tube with the following objective ratings and features.

ELECTRICAL		
Frequency	8500-9600	Megacycles
Cathode Voltage	-25	Kilovolts
Saturation Peak Power Output, minimum	10	Kilowatts
Saturation Gain, minimum	35	Decibels
Duty Cycle, maximum	0.01	
Pulse Length, maximum	6	Microseconds
Focusing – Periodic Permanent Magnet		
Grid Amplification Factor	25	
MECHANICAL		
Tube Construction – Metal-Ceramic		
Dimensions, approximate		
Length	17	Inches
Diameter	8	Inches
Total Weight, approximate	15	Pounds
RF Connections – Waveguide		
THERMAL		
Cooling – Liquid		

The specifications of this type are subject to change. This device is now under development and is made available for experimental purposes only. For the most recent information concerning the status of this development, please consult your local Power Tube Department Regional Sales Office, or current Preliminary Technical Information for the same catalog number.

GENERAL ELECTRIC
POWER TUBE DEPARTMENT
Schenectady 5, N. Y.

PRELIMINARY
TECHNICAL INFORMATION

These ratings represent those of current samples of this type. Refer to the Objective Technical Information sheet for design-objective ratings.

DEVELOPMENTAL TYPE
ZM-3128
PTI-75A

1-15-63

This technical information is proprietary and is furnished only as a service to customers.

ZM-3128

TRAVELING-WAVE TUBE

5 Milliwatts CW Output
25 db Gain

8000-12,000 Megacycles
Less Than 13 db Noise Figure

Periodic-Permanent-Magnet

The ZM-3128 is a ruggedized, low-noise, broadband traveling-wave tube for use in the 8000-to-12,000-megacycle frequency range. It has a noise figure of less than 13 decibels across the entire band with a CW power output of 5 milliwatts.

The tube is of metal-ceramic construction and is supplied as a completely packaged assembly which includes a periodic-permanent-magnet focusing structure, connectors and housing. The entire assembly weighs approximately 3.5 pounds.

The broad bandwidth, low noise, high gain, freedom from tuning adjustments and rugged construction are important features for application in military systems. It is particularly useful as the input tube for radar receivers, when its low noise and protection to the crystal mixer are decided advantages. Other applications include electronic countermeasures equipment, microwave relay systems, and radiometry.

Since this tube is periodic-permanent-magnet focused, it is well suited to applications requiring close physical spacing with magnetic materials or other tubes.

ELECTRICAL

	Minimum	Bogey	Maximum	
Frequency	8000		12,000	Megacycles
Heater				
Voltage	—	6.3		Volts
Current	—	—	0.4	Ampere
A heater-voltage regulation of ± 2 percent is recommended to realize optimum gain and noise figure.				
Focusing Method – Periodic Permanent Magnet				
Noise Figure †, maximum	–	12	13	Decibels
Small-signal Gain	25	–		Decibels
Saturated Power Output	—	5.0		Milliwatts
Collector Dissipation	—	—	1.0	Watt
Impedance, Coaxial	—	—	50	Ohms
Input, VSWR	—	–	2.5 to 1	
Output, VSWR	—	—	2.5 to 1	

MECHANICAL

Mounting Position – Any
Connectors
- DC Socket – Winchester M9P (or equivalent)
- Collector – Winchester PM 1 PLS (or equivalent)
- RF Connectors, Coaxial
  - Input – Type N, Female
  - Output – Type N, Female

Over-all Dimensions

Length	10.20	Inches
Width	2.60	Inches
Height	3.30	Inches
Weight (Complete Assembly), approximate	3.5	Pounds

THERMAL

Cooling – Convection

The specifications of this type are subject to change. Delivery of samples and the existence of these data do not imply continued availability of types with the same characteristics or dimensions. For the most recent information concerning the status of this device, please consult your local Power Tube Department Regional Sales Office.

ENVIRONMENTAL

Shock (energized)	30 G for 11 milliseconds on each of three mutually perpendicular axes.
Vibration (operating)	0.060 inch double amplitude from 5 to 15 cycles per second, 0.036 inch double amplitude from 15 to 55 cycles per second, and 5 G from 55 to 2000 cycles per second with sweep over 5 to 2000 cycles per second for 100 minutes on each of three mutually perpendicular axes (Refer to Fig. 1 of MIL-E-5272 C).
Humidity (non-operating)	MIL-E-5272 C, Paragraph 4.4.1 (Procedure I); i.e., non-operating tube in 95 percent relative humidity atmosphere for 10 days with temperature cycled slowly from approximately 30 C to 71 C each day.
Acoustic noise (operating)	135 decibels, 25 to 12,000 cycles per second random noise.
Altitude (operating)	100,000 feet mean sea level.
Operating temperature, ambient ‡	-65 to +100 C

TYPICAL OPERATING CONDITIONS**

	Minimum	Bogey	Maximum	
Electrode – No. 1 (Grid) Voltage	0		-50	Volts
Electrode – No. 2 (Anode) Voltage	40		75	Volts
Electrode – No. 3 Voltage	50		200	Volts
Electrode – No. 4 Voltage	75		400	Volts
Helix				
Voltage	720		850	Volts
Current			100	Microamperes
Collector Voltage	950		1100	Volts
Cathode Current	650		850	Microamperes

† An improved noise figure is possible when this tube is optimized for a narrow frequency band. If requirements exist for an improved noise figure over a narrow band, consult the nearest Power Tube Department sales office.

** All voltages may be isolated from ground; i.e., it is not necessary to operate the cathode, helix, collector, or any other electrode at ground potential. Voltages shown are measured with respect to cathode. For minimum noise and optimum gain characteristics, voltages should be adjusted to values specified on data sheet accompanying each tube.

‡ From -65 to 0 C, the noise figure may increase by 1.5 decibels and the gain may decrease by 3.5 decibels.

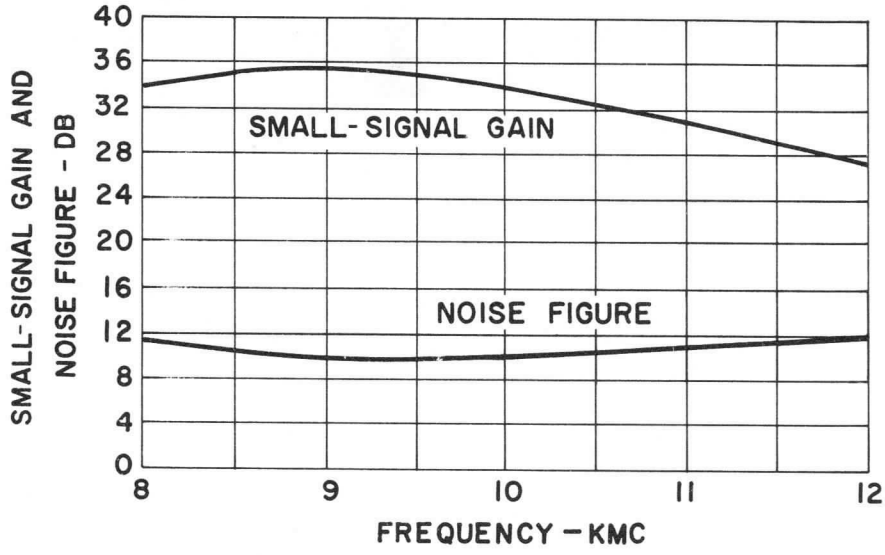

M9P CONNECTIONS	
TUBE ELEMENT	PIN
HEATER	E
CATHODE-HEATER	J
ELECTRODE 1	A
ELECTRODE 2	D
ELECTRODE 3	F
ELECTRODE 4	K
HELIX	H

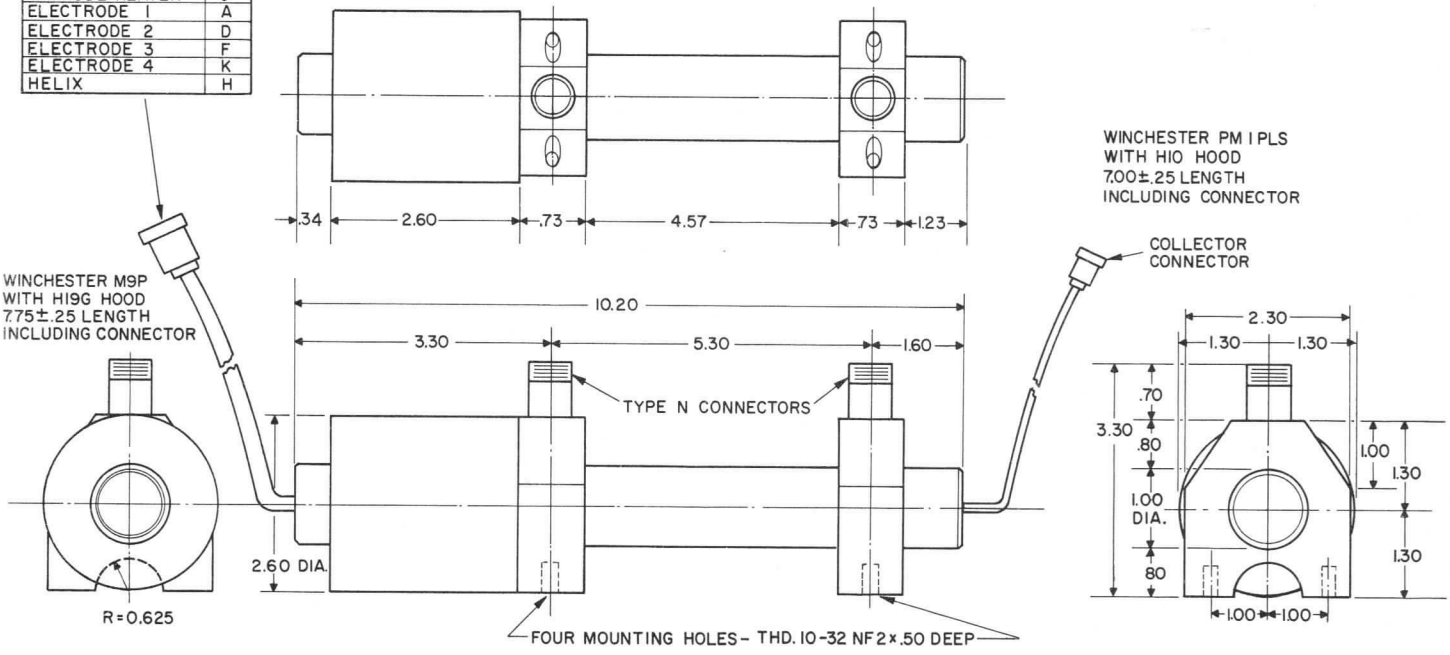

DIMENSIONS ARE IN INCHES

GENERAL ELECTRIC
POWER TUBE DEPARTMENT
Schenectady 5, N. Y.

OBJECTIVE
TECHNICAL INFORMATION

These ratings represent the design objective for this product. Refer to the Preliminary Technical Information sheet for ratings currently achieved in the progression towards design objectives. If PTI sheets do not exist, consult your local Power Tube Department Regional Sales Office.

DEVELOPMENTAL TYPE

This technical information is proprietary and is furnished only as a service to customers.

ZM-3129

TRAVELING-WAVE TUBE

1 Megawatt Peak Output
30 db Saturation Gain

8500-9000 Megacycles
Metal-Ceramic

Periodic Permanent Magnet

The ZM-3129 is a lightweight high-power traveling-wave tube.

ELECTRICAL

Frequency	8500-9000 Megacycles
Saturation Peak Power Output, minimum	1 Megawatt
Saturation Gain, minimum	30 Decibels
Duty Cycle, maximum	0.005
Pulse Length, maximum	6 Microseconds
Cathode Voltage	100 Kilovolts

Focusing Method – Periodic Permanent Magnet

MECHANICAL

Construction – Metal-Ceramic
Dimensions, approximate

Length	22 Inches
Diameter	8 Inches
Total Weight, approximate	35 Pounds

RF Connections – Waveguide

THERMAL

Cooling – Liquid

The specifications of this type are subject to change. This device is now under development and is made available for experimental purposes only. For the most recent information concerning the status of this development, please consult your local Power Tube Department Regional Sales Office, or current Preliminary Technical Information for the same catalog number.

GENERAL ELECTRIC
POWER TUBE DEPARTMENT
Schenectady 5, N. Y.

OBJECTIVE
TECHNICAL INFORMATION

These ratings represent the design objective for this product. Refer to the Preliminary Technical Information sheet for ratings currently achieved in the progression towards design objectives. If PTI sheets do not exist, consult your local Power Tube Department Regional Sales Office.

DEVELOPMENTAL TYPE

This technical information is proprietary and is furnished only as a service to customers.

ZM-3130

TRAVELING-WAVE TUBE

1 Megawatt Peak Output
30 db Saturation Gain

8500-9000 Megacycles
Metal-Ceramic

Solenoid

The ZM-3130 is a high-power traveling-wave tube.

ELECTRICAL

Frequency	8500-9000 Megacycles
Saturation Peak Power Output, minimum	1 Megawatt
Saturation Gain, minimum	30 Decibels
Duty Cycle, maximum	0.05
Pulse Length, maximum	6 Microseconds
Cathode Voltage	100 Kilovolts

Focusing Method – Solenoid

MECHANICAL

Construction – Metal–Ceramic
Dimensions, approximate

Length	22 Inches
Diameter (including solenoid)	10 Inches
Total Weight, approximate (including solenoid)	65 Pounds

RF Connections – Waveguide

THERMAL

Cooling – Liquid

The specifications of this type are subject to change. This device is now under development and is made available for experimental purposes only. For the most recent information concerning the status of this development, please consult your local Power Tube Department Regional Sales Office, or current Preliminary Technical Information for the same catalog number.

GENERAL ELECTRIC
POWER TUBE DEPARTMENT
Schenectady 5, N. Y.

PRELIMINARY
TECHNICAL INFORMATION

These ratings represent those of current samples of this type. Refer to the Objective Technical Information sheet for design-objective ratings.

DEVELOPMENTAL TYPE
ZM-3133
PTI-74

3-15-62

This technical information is proprietary and is furnished only as a service to customers.

ZM-3133

TRAVELING-WAVE TUBE

5 Kilowatts Peak Output
40 db Saturation Gain

5000-6000 Megacycles
Metal-Ceramic

Periodic Permanent Magnet

The ZM-3133 is a ruggedized, high-power, broadband traveling-wave tube for use in the 5000-to-6000-megacycle frequency range. It has a saturation gain of 40 decibels with a peak power output of 5 kilowatts.

The tube is of metal-and-ceramic construction and is supplied as a complete packaged assembly which includes the tube, the periodic-permanent-magnet focusing structure, and the r-f connectors. The periodic permanent magnets do not require temperature compensation. The entire assembly weighs approximately 13 pounds.

The broad bandwidth, high gain, freedom from tuning adjustments, and rugged construction make this tube particularly useful in military systems. Applications include pulse amplification in radar, electronic countermeasures equipment, and similar systems, including phased-array radars.

GENERAL

Unless otherwise noted, voltages are with respect to the anode. Anode and collector are connected to the body of the tube. These parts of the tube should be grounded.

ELECTRICAL	Minimum	Bogey	Maximum	
Frequency	5000	–	6000	Megacycles
Heater				
Voltage*	4.5	5.0	5.5	Volts
Current	–	4	–	Amperes
Focusing Method – Periodic Permanent Magnet				
Saturation Gain	–	40	–	Decibels
Saturation Power Output, peak	5	–	10	Kilowatts
Duty Cycle**	–	–	0.001	
Pulse Length	–	–	6.0	Microseconds
Cathode Voltage†	-15	-16	-18	Kilovolts
Cathode Current	–	4.6	–	Amperes
Grid Bias (with respect to cathode)	-300	-350	-500	Volts
Grid Swing	–	+800	–	Volts
Grid Current, peak	–	0.6	–	Amperes
Collector Current, peak	–	3.25	–	Amperes
Helix Current, peak	–	0.75	–	Amperes
Grid-Cathode Capacitance	–	25	–	Micromicro farads
Phase Shift	–	10	–	Degrees per one percent change in beam voltage
Vacuum Ion-Pump Voltage	–	2800	–	Volts
Waveguide VSWR				
Input	–	–	2.5 to 1	
Output	–	–	2.5 to 1	

The specifications of this type are subject to change. Delivery of samples and the existence of these data do not imply continued availability of types with the same characteristics or dimensions. For the most recent information concerning the status of this device, please consult your local Power Tube Department Regional Sales Office.

MECHANICAL

Mounting Position – Any
Over-all Dimensions, approximate

Length	18	Inches
Diameter	2.88	Inches
Weight, approximate	13	Pounds

Connectors
RF Input – Low Height C-band WG or Type N Coaxial Connector (choice optional)
RF Output – Low Height C-band WG or Type N Coaxial Connector (choice optional)
Cathode-Heater, Heater – Flexible Leads

THERMAL

Cooling – Forced Air on both Collector and Cathode

NOTE: This tube is available without grid with the electrical parameters substantially the same except that cathode current is 4 amperes at 16 kilovolts.

* For the bogey performance ratings specified on this data sheet, heater voltage should be set at the particular value specified in the instructions accompanying each tube. The value specified will be within the range given above. D-c is recommended for the heater.

** Duty is 0.001 when forced-air cooling is used. With liquid cooling on collector and body, duty can be increased to 0.01.

† The cathode voltage may be set at various values between -15 to -18 kilovolts to obtain different power and gain characteristics.

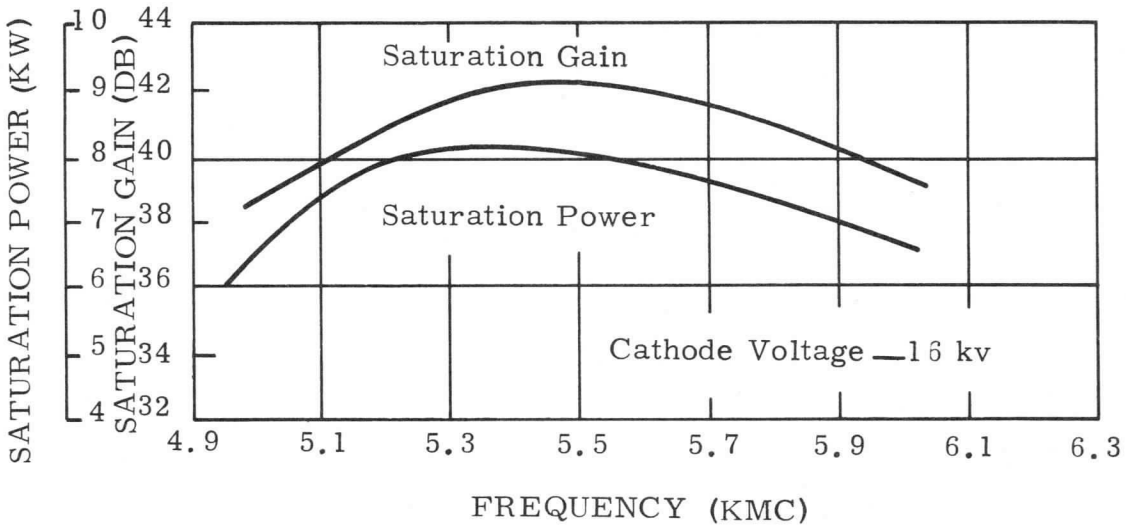

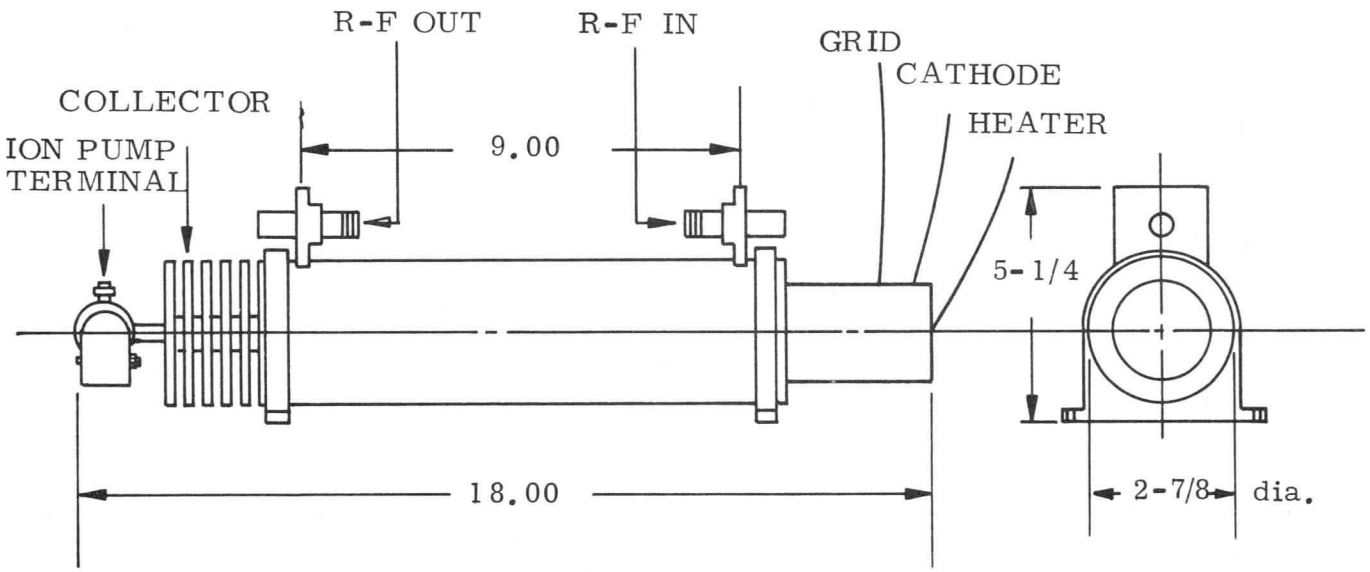

DIMENSIONS ARE IN INCHES

ZM-3133
ZM-3282

Traveling-Wave Tubes

Technical Information

- HIGH POWER
- C-BAND
- PPM FOCUSING

RF PERFORMANCE

Tube Type	Frequency Range (Gc)	Min. Peak Saturated Power Output, (kw)	Maximum Duty	Maximum Pulse Width (μ sec)	Minimum Saturated Gain (db)	Data Group
ZM-3133	5.2 - 6.0	5	0.002‡	20	35	C-1
ZM-3282	5.4 - 5.9	5	0.002#	20	51	C-2

FEATURES

high gain
broad bandwidth
periodic permanent magnet focusing
metal-ceramic construction
ring-loop circuit
military environments
light weight

APPLICATIONS

radar
ecm

MECHANICAL & MISCELLANEOUS

Data Group	C-1	C-2
VSWR, max		
Input	2.5	2.5
Output	2.5	2.5
Grid-to-other elements $\mu\mu$f(max)	30	—
Phase Shift, deg/1% change in cathode voltage (max)	45	45
Weight, lb	13	13
Over-all length, in.	18	21.5
Mounting position	Any	Any
Cooling	Forced air on coll.	Forced air on coll.
Flow, cfm	20	20
Connectors		
RF input	N, female	N, female
RF output	N, female	N, female

TYPICAL CHARACTERISTICS

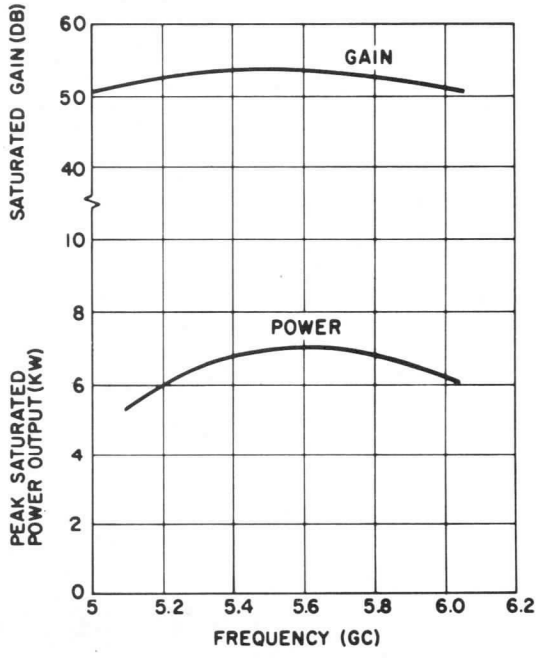

GENERAL ELECTRIC

OPERATING CONDITIONS * †

Data Group	1	2
Htr. vac or vdc	6.3	6.3
Htr. amp (max)	0.5	0.5
Cath. kv dc, with resp. to helix	-3.4 to -3.6	-4 to -5
Cath. ma, (max)	35	50
Coll. vdc, with resp. to helix	0	0
Helix ma (max)	5	5
Grid vdc		
Operating, with resp. to cath.	0 to -10	0 to -30
Cutoff, with resp. to cath.	-330 to -350	-430 to -450

ENVIRONMENTAL

Shock (energized)	50 G, 11 ms
Vibration (operating)	10 G, 70 to 3000 cps
Temp., ambient (operating)	-65 C to +90 C
Altitude (operating)	100,000 ft.

OUTLINE

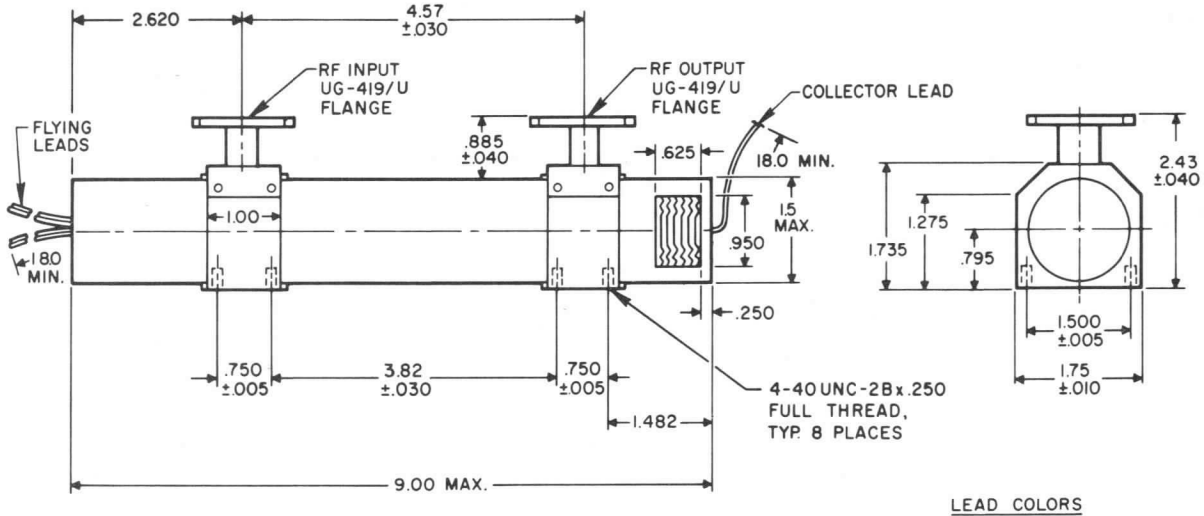

LEAD COLORS

COLL.	RED
HELIX, ANODE & PACKAGE	ORANGE
GRID	GREEN
CATH.-HTR.	YELLOW
HTR.	BROWN

ALL DIMENSIONS ARE IN INCHES.

NOTES

* For the performance ratings specified, voltages should be adjusted to values specified by instructions accompanying each tube. These values will be within the ranges given above.

† The helix is connected to the package which is grounded in the normal installation of this tube.

\# Sufficient air must be supplied to this tube to hold the collector temperature below 150°C.

These data are subject to change without notice.

TUBE DEPARTMENT

GENERAL ELECTRIC

Owensboro, Kentucky

GENERAL ELECTRIC
POWER TUBE DEPARTMENT
Schenectady 5, N. Y.

PRELIMINARY
TECHNICAL INFORMATION

These ratings represent those of current samples of this type. Refer to the Objective Technical Information sheet for design-objective ratings.

DEVELOPMENTAL TYPE

This technical information is proprietary and is furnished only as a service to customers.

ZM-3142

TRAVELING-WAVE TUBE

1 Milliwatt Power Output
25 db Gain

Permanent Magnet

2300 – 4450 Megacycles
Less than 8 db Noise Figure

The ZM-3142 is a ruggedized, low-noise, broadband traveling-wave tube for use in the 2300-to-4450-megacycle frequency range. It has a noise figure of less than 8 decibels across the entire band with a power output of 1 milliwatt.

The tube is of metal-and-ceramic construction and is supplied as a completely packaged assembly which includes a permanent-magnet focusing structure, connectors and housing. The entire assembly weighs approximately 12.3 pounds.

The broad bandwidth, low noise, high gain, freedom from tuning adjustments, and rugged construction are important features for application in military systems. The device is particularly useful as the input tube for radar receivers, where its low noise and protection to the crystal mixer are decided advantages. Other applications include electronic countermeasures equipment, microwave relay systems, and radiometry.

GENERAL

Electrical

Frequency	2300 to 4450	Megacycles
Heater		
Voltage	6.3	Volts
Current, nominal	0.4	Ampere
A heater-voltage regulation of ±2 percent is recommended to realize optimum gain and noise figure.		
Focusing Method – Permanent Magnet		
Noise Figure*#, maximum	8	Decibels
Small Signal Gain, minimum	25	Decibels
Saturation Power Output, nominal	1.0	Milliwatt
Collector Dissipation	1.0	Watt
Impedance, Coaxial	50	Ohms
Input, VSWR	Less than 2.5 to 1	
Output, VSWR	Less than 2.5 to 1	

Mechanical

Mounting Position – Any

Connectors

DC Socket – Winchester M10P-LSH-19 (or equivalent)

RF Connectors, Coaxial

Input – Type N, Female

Output – Type N, Female

Over-all Dimensions

Length, approximate	9.25	Inches
Width, approximate	4.25	Inches
Height, approximate	4.25	Inches
Weight (Complete Assembly), approximate	11.5	Pounds

Thermal

Cooling – Convection

The specifications of this type are subject to change. Delivery of samples and the existence of these data do not imply continued availability of types with the same characteristics or dimensions. For the most recent information concerning the status of this device, please consult your local Power Tube Department Regional Sales Office.

TYPICAL OPERATING CONDITIONS**

Electrode-No. 1 (Grid) Voltage	-10 to 0	Volts
Electrode-No. 2 (Anode) Voltage	10 to 30	Volts
Electrode-No. 3 Voltage	25 to 100	Volts
Electrode-No. 4 Voltage	50 to 200	Volts
Helix		
Voltage	150 to 275	Volts
Current, maximum	50	Microamperes
Collector Voltage	400 to 600	Volts
Beam Current	200 to 600	Microamperes

ENVIRONMENTAL

Shock (energized)	50 G for 11 milliseconds on each of three mutually perpendicular axes.
Vibration (operating)	0.06 inches double amplitude from 5 to 70 cycles per second and 15 G from 70 to 2000 cycles per second with sweep over 5 to 2000 cycles per second for 100 minutes on each of three mutually perpendicular axes.
Humidity (non-operating)	MIL-E-5272C, Paragraph 4.4.1 (Procedure I); i.e., non-operating tube in 95 percent relative humidity atmosphere for 10 days with temperature cycled slowly from approximately 30 C to 71 C each day.
Acoustic noise (operating)	135 decibels, 25 to 12,000 cycles per second random noise.
Altitude (operating)	100,000 feet mean sea level.
Operating temperature, ambient	-60 to +100C

* Over band with the same operating voltages that provide minimum gain variation.

\# Noise figures of 5.5 to 7 db can be supplied for narrow-band optimized versions of this tube. If requirements exist for an improved noise figure over a limited bandwidth, consult the nearest Power Tube Department sales office.

** All voltages may be isolated from ground; i.e., it is not necessary to operate the cathode, helix, collector, or any other electrode at ground potential. Voltages shown are measured with respect to cathode. For minimum noise and optimum gain characteristics, voltages should be adjusted within ranges specified by instructions accompanying each tube.

PERMANENT-MAGNET PRECAUTIONS

This tube uses a uniform-field permanent magnet as the focusing structure. A label on the tube specifies a nominal lower limit of two inches on magnetic-material proximity. It must be realized that strong external magnets or large amounts of magnetic material at this distance may permanently damage the tube. A small screwdriver will not, while a large a-c transformer or a large sheet of steel at this distance may cause damage by defocusing the tube.

In addition, a related caution is important and must be remembered whenever handling a uniform-field tube. The permanent magnets of these tubes cause a large attractive force between the tube and magnetic material. Unless one is always careful to hold the tube and/or magnetic objects near the tube firmly, the result is sudden direct contact. The magnetic object may cause tube damage due to violations of the minimum spacing requirement.

For small steel hand tools, a two-inch limit is sufficient. For large magnetic objects with magnetic fields of their own, the lower minimum distance should be determined accurately by testing. To accomplish this, the tube may be secured to a suitable three-foot-long dielectric support and the tube case grounded. With the tube operating and its helix current being measured, the tube may be moved slowly by the dielectric support toward the magnetic object. (CAUTION: Appropriate electrical safety procedures should be followed at all times.) The minimum distance for which there is no degradation in r-f performance is the point at which the helix current starts to increase. If a slight degradation in noise figure can be accepted, the helix current may be allowed to increase somewhat as long as it stays below its operating maximum.

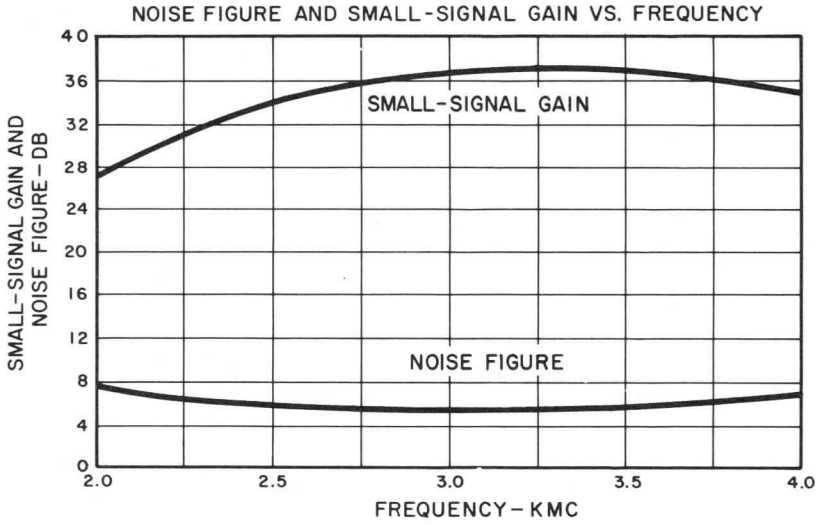

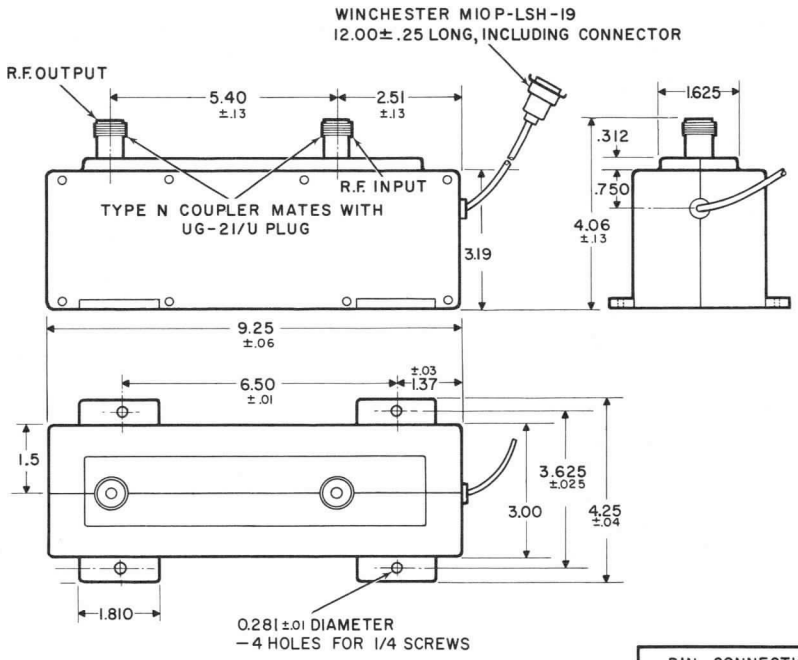

ALL DIMENSIONS ARE IN INCHES AND THOSE WITHOUT TOLERANCES ARE APPROXIMATE.

PIN CONNECTIONS MIOP-LSH-19	
ELECTRODE	PIN
CATHODE	B
HEATER	D
NO. 1, GRID	C
NO. 2, ANODE	F
NO. 3, FOCUS	A
NO. 4, FOCUS	E
NO CONNECTION	J
NO CONNECTION	H
HELIX	K
COLLECTOR	L

GENERAL ELECTRIC
POWER TUBE DEPARTMENT
Schenectady 5, N. Y.

PRELIMINARY
TECHNICAL INFORMATION

These ratings represent those of current samples of this type. Refer to the Objective Technical Information sheet for design-objective ratings.

DEVELOPMENTAL TYPE
ZM-3143
PTI-82A

11-15-62

This technical information is proprietary and is furnished only as a service to customers.

ZM-3143

TRAVELING-WAVE TUBE

10 Watt CW Power Output
35 db Small Signal Gain

8000 – 10,000 Megacycles
30 db Noise Figure

Periodic Permanent Magnet

The ZM-3143 is a ruggedized, medium-power, broadband traveling-wave tube for use in the 8000-to-10,000-megacycle frequency range. This tube has a small signal gain of 35 decibels across the entire frequency range and a CW power output of 10 watts (100% duty).

The tube is of metal-and-ceramic construction and is supplied as a complete packaged assembly which includes the periodic permanent magnet focusing structure, r-f connectors, housing and d-c flying leads. The entire assembly weighs approximately 2 pounds.

The broad bandwidth, high gain, freedom from tuning adjustments, and rugged construction make this tube particularly useful in military systems. Applications include radar, electronic countermeasures and communications equipment.

GENERAL

ELECTRICAL

Frequency	8000 – 10,000	Megacycles
Heater		
Voltage, nominal	8.5	Volts
Current, nominal	0.8	Ampere
Heater regulation of ±2 percent is recommended for optimum life. Either a-c or d-c power may be used.		
Focusing Method – Periodic Permanent Magnet		
Noise Figure, maximum	30	Decibels
Small Signal Gain, minimum	35	Decibels
Saturated CW Power Output, minimum	10	Watts
Collector Dissipation, maximum	120	Watts
Impedance, Coaxial	50	Ohms
Input, VSWR	Less than 2.5 to 1	
Output VSWR	Less than 2.5 to 1	

MECHANICAL

Mounting Position – Any
Connectors
DC Supply – Flying Leads
RF Connectors, Coaxial
Input – Type TNC, Female
Output – Type TNC, Female

Over-all Dimensions, approximate		
Length	8.9	Inches
Diameter, excluding connectors	1.5	Inches
Height, including connectors	2.2	Inches
Weight (Complete Assembly), approximate	2	Pounds

The specifications of this type are subject to change. Delivery of samples and the existence of these data do not imply continued availability of types with the same characteristics or dimensions. For the most recent information concerning the status of this device, please consult your local Power Tube Department Regional Sales Office.

THERMAL

Cooling – Forced Air
(A liquid-cooled version is also available.)

TYPICAL OPERATING CONDITIONS*

Cathode Voltage (with respect to ground)	2300 to 2600 Volts
Cathode Current	40 to 55 Milliamperes
Focus-Electrode Voltage (with respect to cathode)	0 to -10 Volts
Anode-No. 1 Voltage (with respect to cathode)	350 to 450 Volts
Collector Voltage (with respect to ground)	0 Volts
Helix Current, maximum	10 Milliamperes

*It is necessary to operate this tube with the helix at ground potential (see connection diagram below). For rated performance, voltages should be adjusted to values specified by instructions accompanying each tube.

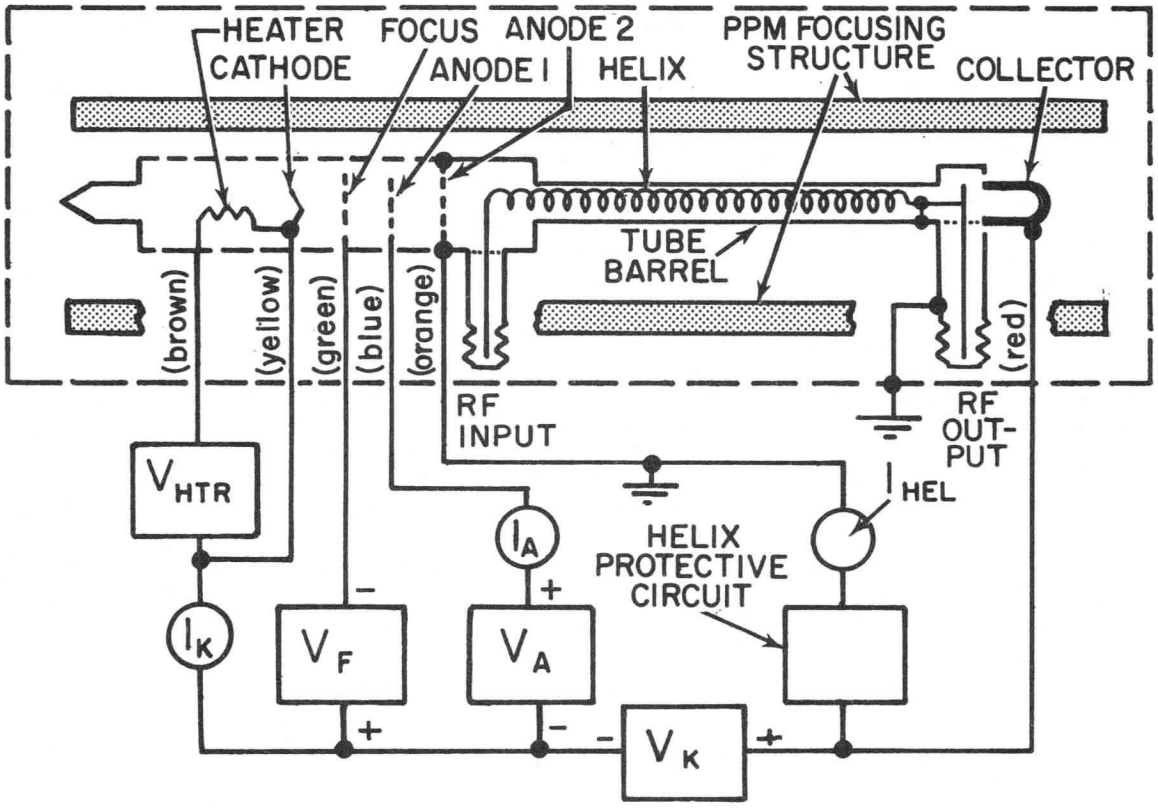

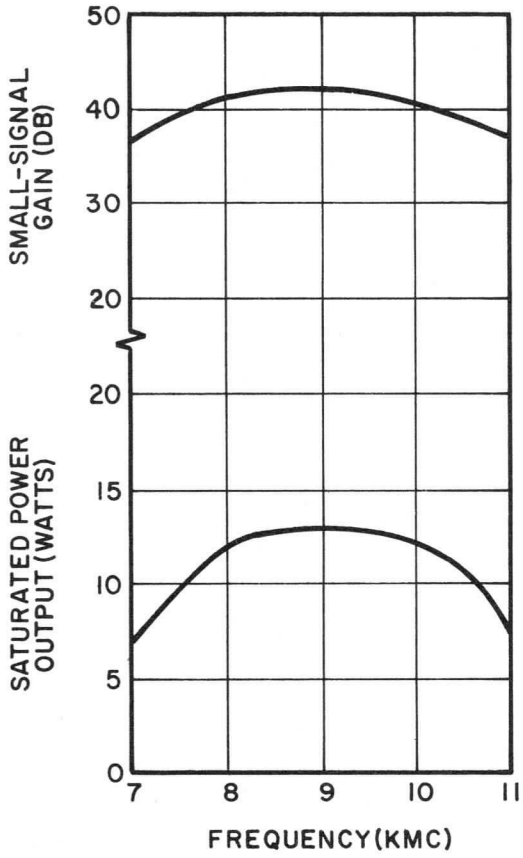

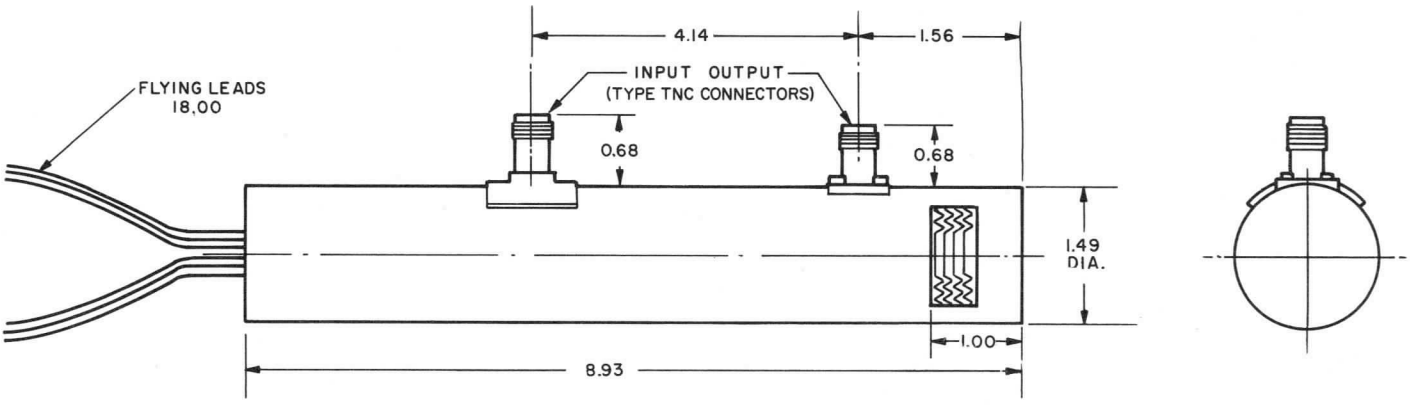

DIMENSIONS ARE IN INCHES

GENERAL ELECTRIC
POWER TUBE DEPARTMENT
Schenectady 5, N. Y.

OBJECTIVE
TECHNICAL INFORMATION

These ratings represent the design objective for this product. Refer to the Preliminary Technical Information sheet for ratings currently achieved in the progression towards design objectives. If PTI sheets do not exist, consult your local Power Tube Department Regional Sales Office.

DEVELOPMENTAL TYPE

This technical information is proprietary and is furnished only as a service to customers.

ZM-3146

TRAVELING-WAVE TUBE

5 Milliwatts Output
30 Decibels Signal Gain

4000 - 8000 Megacycles
Less Than 10 db Noise Figure

Periodic Permanent Magnet

The ZM-3146 is a ruggedized low-noise traveling-wave tube.

Electrical

Frequency	4000 - 8000 Megacycles
Noise Figure	Less than 10 Decibels
Saturated Power Output, nominal	5 Milliwatts
Small Signal Gain, minimum	30 Decibels

Focusing Method – Periodic Permanent Magnet

Mechanical

Construction – Metal-Ceramic

Package Dimensions, approximate

Length	9.1 Inches
Diameter	2.0 Inches
Total Weight, approximate	2.2 Pounds

RF Connections – Coaxial

The specifications of this type are subject to change. This device is now under development and is made available for experimental purposes only. For the most recent information concerning the status of this development, please consult your local Power Tube Department Regional Sales Office, or current Preliminary Technical Information for the same catalog number.

GENERAL ELECTRIC
POWER TUBE DEPARTMENT
Schenectady 5, N. Y.

PRELIMINARY
TECHNICAL INFORMATION

These ratings represent those of current samples of this type. Refer to the Objective Technical Information sheet for design-objective ratings.

DEVELOPMENTAL TYPE

This technical information is proprietary and is furnished only as a service to customers.

ZM-3152

TRAVELING-WAVE TUBE

0.1 Milliwatt Power Output
20 db Gain

2000 - 6000 Megacycles
Less Than 12 db Noise Figure

Permanent Magnet

The ZM-3152 is a ruggedized, low-noise, broadband traveling-wave tube for use in the 2000-to-6000-megacycle frequency range. It has a noise figure of less than 12 decibels across the entire band with a power output of 0.1 milliwatt.

The tube is of metal-and-ceramic construction and is supplied as a completely packaged assembly which includes a permanent-magnet focusing structure, connectors and housing. The entire assembly weighs approximately 11.5 pounds.

The broad bandwidth, low noise, high gain, freedom from tuning adjustments, and rugged construction are important features for application in military systems. The device is particularly useful as the input tube for radar receivers, where its low noise and protection to the crystal mixer are decided advantages. Other applications include electronic countermeasures equipment, microwave relay systems and radiometry.

GENERAL

ELECTRICAL

Frequency	2000 to 6000	Megacycles
Heater		
Voltage	6.3	Volts
Current, nominal	0.4	Ampere
A heater-voltage regulation of ± 2 percent is recommended to realize optimum gain and noise figure.		
Focusing Method – Permanent Magnet		
Noise Figure *#, maximum	12	Decibels
Small Signal Gain, minimum	20	Decibels
Saturation Power Output, nominal	0.1	Milliwatt
Collector Dissipation	1.0	Watt
Impedance, Coaxial	50	Ohms
Input, VSWR	Less than 2.5 to 1	
Output, VSWR	Less than 3.0 to 1	

MECHANICAL

Mounting Position – Any
Connectors
DC Socket – Winchester M10P-LSH-19 (or equivalent)
RF Connectors, Coaxial
Input – Type N, Female
Output – Type N, Female
Over-all Dimensions

Length, approximate	9.25	Inches
Width, approximate	4.25	Inches
Height, approximate	4.25	Inches
Weight (Complete Assembly), approximate	11.5	Pounds

The specifications of this type are subject to change. Delivery of samples and the existence of these data do not imply continued availability of types with the same characteristics or dimensions. For the most recent information concerning the status of this device, please consult your local Power Tube Department Regional Sales Office.

THERMAL

Cooling - Convection

TYPICAL OPERATING CONDITIONS**

Electrode - No. 1 (Grid) Voltage	-10 to 0	Volts
Electrode - No. 2 (Anode) Voltage	10 to 30	Volts
Electrode - No. 3 Voltage	25 to 100	Volts
Electrode - No. 4 Voltage	50 to 200	Volts
Helix		
Voltage	150 to 275	Volts
Current, maximum	50	Microamperes
Collector Voltage	400 to 600	Volts
Beam Current	200 to 600	Microamperes

ENVIRONMENTAL

Shock (energized)	50 G for 11 milliseconds on each of three mutually perpendicular axes.
Vibration (operating)	0.06 inches double amplitude from 5 to 70 cycles per second and 15 G from 70 to 2000 cycles per second with sweep over 5 to 2000 cycles per second for 100 minutes on each of three mutually perpendicular axes.
Humidity (non-operating)	MIL-E-5272C, Paragraph 4.4.1 (Procedure I); i.e., non-operating tube in 95 per-cent relative humidity atmosphere for 10 days with temperature cycled slowly from approximately 30 C to 71 C each day.
Acoustic noise (operating)	135 decibels, 25 to 12,000 cycles per second random noise.
Altitude (operating)	100,000 feet mean sea level.
Operating temperature, ambient	-60 to + 100 C

*Over band with the same operating voltages that provide minimum gain variation.

#Noise figures of 5 to 7 db can be supplied for narrow-band optimized versions of this tube. If requirements exist for an improved noise figure over a limited bandwidth, consult the nearest Power Tube Department sales office.

**All voltages may be isolated from ground; i.e., it is not necessary to operate the cathode, helix, collector, or any other electrode at ground potential. Voltages shown are measured with respect to cathode. For minimum noise and optimum gain characteristics, voltages should be adjusted within ranges specified by instructions accompanying each tube.

PERMANENT-MAGNET PRECAUTIONS

This tube uses a uniform-field permanent magnet as the focusing structure. A label on the tube specifies a nominal lower limit of two inches on magnetic-material proximity. It must be realized that strong external magnets or large amounts of magnetic material at this distance may permanently damage the tube. A small screwdriver will not, while a large a-c transformer or a large sheet of steel at this distance may cause damage by defocusing the tube.

In addition, a related caution is important and must be remembered whenever handling a uniform-field tube. The permanent magnets of these tubes cause a large attractive force between the tube and magnetic material. Unless one is always careful to hold the tube and/or magnetic objects near the tube firmly, the result is sudden direct contact. The magnetic object may cause tube damage due to violations of the minimum spacing requirement.

For small steel hand tools, a two-inch limit is sufficient. For large magnetic objects with magnetic fields of their own, the lower minimum distance should be determined accurately by testing. To accomplish this, the tube may be secured to a suitable three-foot-long dielectric support and the tube case grounded. With the tube operating and its helix current being measured, the tube may be moved slowly by the dielectric support toward the magnetic object. (CAUTION: Appropriate electrical safety procedures should be followed at all times.) The minimum distance for which there is no degradation in r-f performance is the point at which the helix current starts to increase. If a slight degradation in noise figure can be accepted, the helix current may be allowed to increase somewhat as long as it stays below its operating maximum.

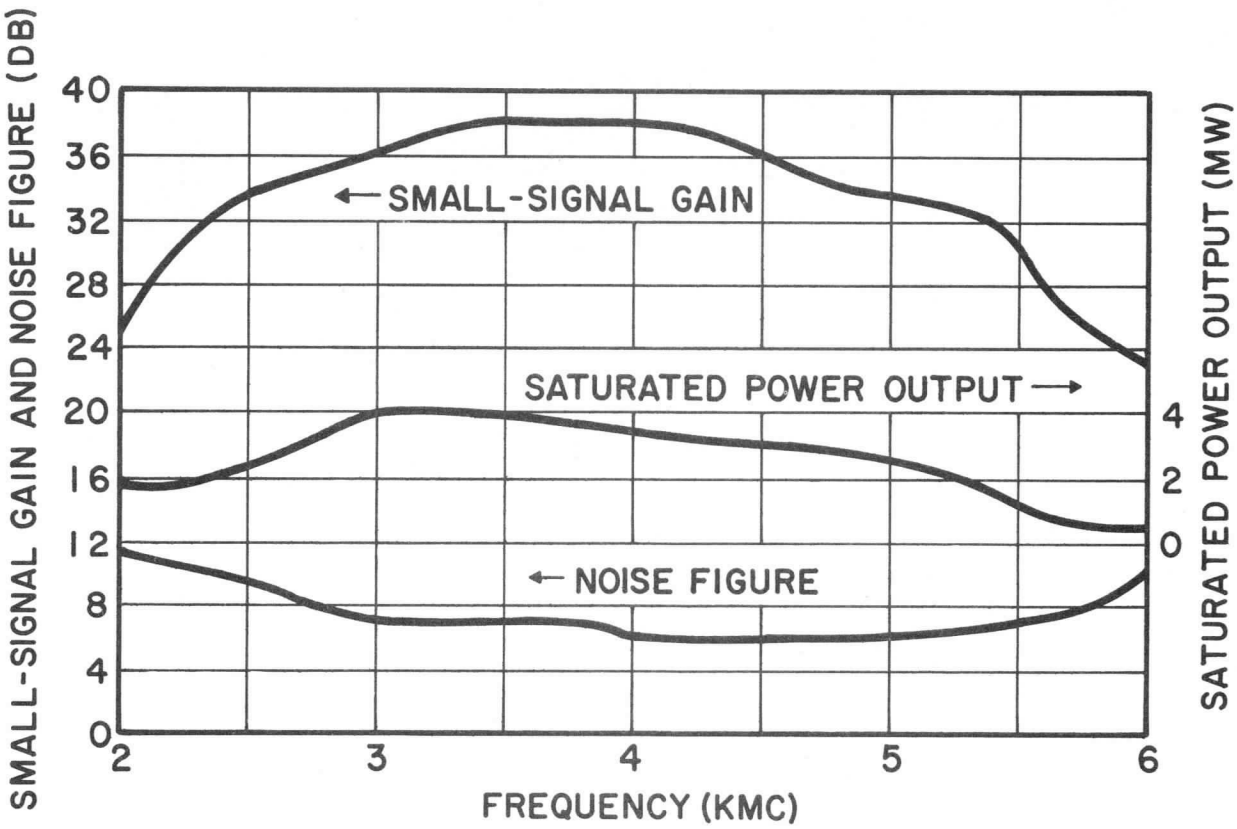

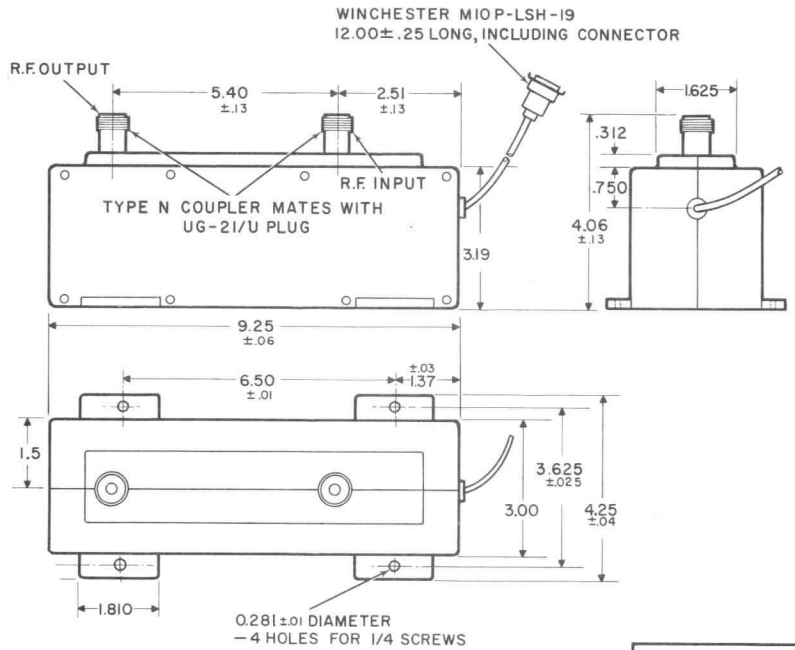

ALL DIMENSIONS ARE IN INCHES AND THOSE WITHOUT TOLERANCES ARE APPROXIMATE.

PIN CONNECTIONS MIOP-LSH-19	
ELECTRODE	PIN
CATHODE	B
HEATER	D
NO. 1, GRID	C
NO. 2, ANODE	F
NO. 3, FOCUS	A
NO. 4, FOCUS	E
NO CONNECTION	J
NO CONNECTION	H
HELIX	K
COLLECTOR	L

GENERAL ELECTRIC
POWER TUBE DEPARTMENT
Schenectady 5, N. Y.

PRELIMINARY
TECHNICAL INFORMATION

These ratings represent those of current samples of this type. Refer to the Objective Technical Information sheet for design-objective ratings.

DEVELOPMENTAL TYPE

This technical information is proprietary and is furnished only as a service to customers.

ZM-3153

TRAVELING-WAVE TUBE

1 Milliwatt Power Output
25 db Gain

1800 - 2400 Megacycles
Less Than 7 db Noise Figure

Permanent Magnet

The ZM-3153 is a ruggedized, low-noise traveling-wave tube for use in the 1800-to-2400-megacycle frequency range. It has a noise figure of less than 7 decibels across the band with a power output of 1 milliwatt.

The tube is of metal-and-ceramic construction and is supplied as a completely packaged assembly which includes a permanent-magnet focusing structure, connectors and housing. The entire assembly weighs approximately 11.5 pounds.

The low noise, high gain, freedom from tuning adjustments, and rugged construction are important features for application in military systems. The device is particularly useful as the input tube for radar receivers, where its low noise and protection to the crystal mixer are decided advantages. Other applications include electronic countermeasures equipment, microwave relay systems and radiometry.

GENERAL

ELECTRICAL

Frequency	1800 to 2400	Megacycles
Heater		
Voltage	6.3	Volts
Current, nominal	0.4	Ampere
A heater-voltage regulation of ± 2 percent is recommended to realize optimum gain and noise figure.		
Focusing Method – Permanent Magnet		
Noise Figure *, maximum	7	Decibels
Small Signal Gain, minimum	25	Decibels
Saturation Power Output, nominal	1.0	Milliwatt
Collector Dissipation	1.0	Watt
Impedance, Coaxial	50	Ohms
Input, VSWR	Less than 2.5 to 1	
Output, VSWR	Less than 3.0 to 1	

MECHANICAL

Mounting Position – Any
Connectors
DC Socket – Winchester M10P-LSH-19 (or equivalent)
RF Connectors, Coaxial
Input – Type N, Female
Output – Type N, Female

Over-all Dimensions		
Length, approximate	9.25	Inches
Width, approximate	4.25	Inches
Height, approximate	4.25	Inches
Weight (Complete Assembly), approximate	11.5	Pounds

The specifications of this type are subject to change. Delivery of samples and the existence of these data do not imply continued availability of types with the same characteristics or dimensions. For the most recent information concerning the status of this device, please consult your local Power Tube Department Regional Sales Office.

THERMAL

Cooling – Convection

TYPICAL OPERATING CONDITIONS**

Electrode – No. 1 (Grid) Voltage	-10 to 0	Volts
Electrode – No. 2 (Anode) Voltage	10 to 30	Volts
Electrode – No. 3 Voltage	25 to 100	Volts
Electrode – No. 4 Voltage	50 to 200	Volts
Helix		
Voltage	150 to 275	Volts
Current, maximum	50	Microamperes
Collector Voltage	400 to 600	Volts
Beam Current	200 to 600	Microamperes

ENVIRONMENTAL

Shock (energized)	50 G for 11 milliseconds on each of three mutually perpendicular axes.
Vibration (operating)	0.06 inches double amplitude from 5 to 70 cycles per second and 15 G from 70 to 2000 cycles per second with sweep over 5 to 2000 cycles per second for 100 minutes on each of three mutually perpendicular axes.
Humidity (non-operating)	MIL-E-5272C, Paragraph 4.4.1 (Procedure I); i.e., non-operating tube in 95 per-cent relative humidity atmosphere for 10 days with temperature cycled slowly from approximately 30 C to 71 C each day.
Acoustic noise (operating)	135 decibels, 25 to 12,000 cycles per second random noise.
Altitude (operating)	100,000 feet mean sea level.
Operating temperature, ambient	-60 to + 100 C

*Over band with the same operating voltages that provide minimum gain variation.

**All voltages may be isolated from ground; i.e., it is not necessary to operate the cathode, helix, collector, or any other electrode at ground potential. Voltages shown are measured with respect to cathode. For minimum noise and optimum gain characteristics, voltages should be adjusted within ranges specified by instructions accompanying each tube.

PERMANENT-MAGNET PRECAUTIONS

This tube uses a uniform-field permanent magnet as the focusing structure. A label on the tube specifies a nominal lower limit of two inches on magnetic-material proximity. It must be realized that strong external magnets or large amounts of magnetic material at this distance may permanently damage the tube. A small screwdriver will not, while a large a-c transformer or a large sheet of steel at this distance may cause damage by defocusing the tube.

In addition, a related caution is important and must be remembered whenever handling a uniform-field tube. The permanent magnets of these tubes cause a large attractive force between the tube and magnetic material. Unless one is always careful to hold the tube and/or magnetic objects near the tube firmly, the result is sudden direct contact. The magnetic object may cause tube damage due to violations of the minimum spacing requirement.

For small steel hand tools, a two-inch limit is sufficient. For large magnetic objects with magnetic fields of their own, the lower minimum distance should be determined accurately by testing. To accomplish this, the tube may be secured to a suitable three-foot-long dielectric support and the tube case grounded. With the tube operating and its helix current being measured, the tube may be moved slowly by the dielectric support toward the magnetic object. (CAUTION: Appropriate electrical safety procedures should be followed at all times.) The minimum distance for which there is no degradation in r-f performance is the point at which the helix current starts to increase. If a slight degradation in noise figure can be accepted, the helix current may be allowed to increase somewhat as long as it stays below its operating maximum.

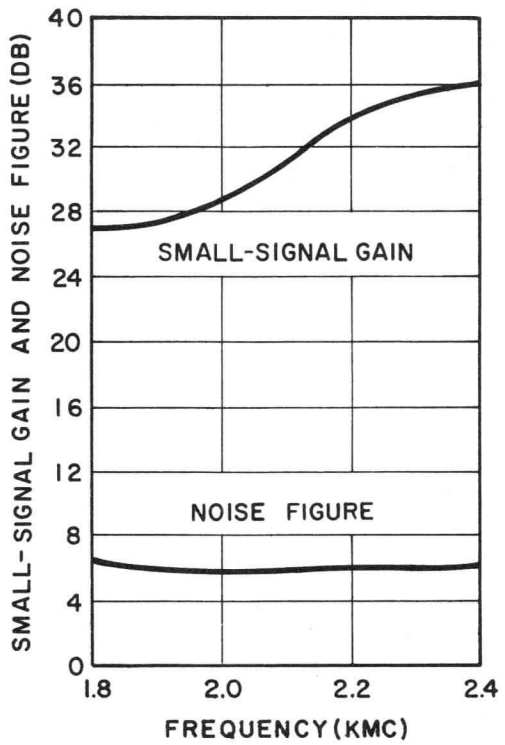

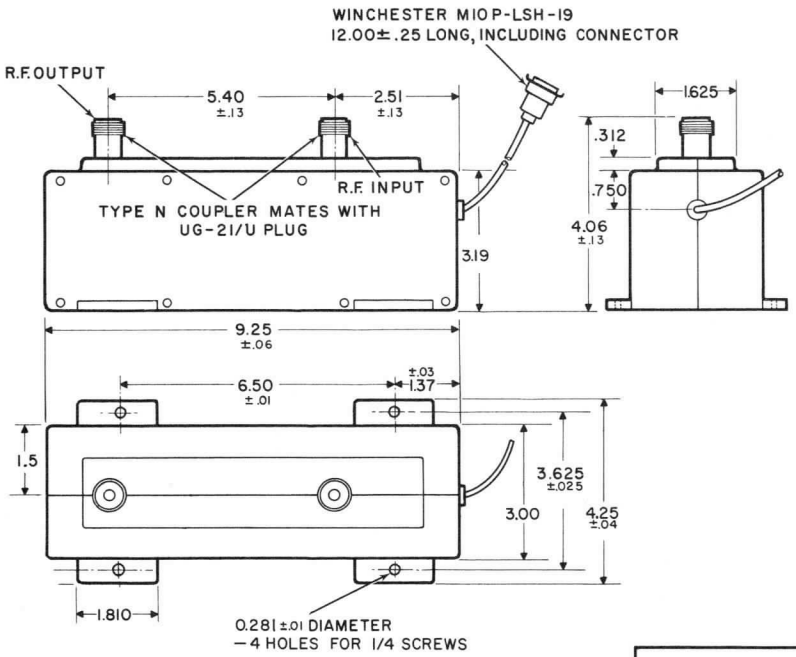

ALL DIMENSIONS ARE IN INCHES AND THOSE WITHOUT TOLERANCES ARE APPROXIMATE.

PIN CONNECTIONS MIOP-LSH-19	
ELECTRODE	PIN
CATHODE	B
HEATER	D
NO. 1, GRID	C
NO. 2, ANODE	F
NO. 3, FOCUS	A
NO. 4, FOCUS	E
NO CONNECTION	J
NO CONNECTION	H
HELIX	K
COLLECTOR	L

GENERAL ELECTRIC
POWER TUBE DEPARTMENT
Schenectady 5, N. Y.

PRELIMINARY
TECHNICAL INFORMATION

These ratings represent those of current samples of this type. Refer to the Objective Technical Information sheet for design-objective ratings.

DEVELOPMENTAL TYPE

This technical information is proprietary and is furnished only as a service to customers.

ZM-3154

TRAVELING-WAVE TUBE

1 Milliwatt Power Output
28 db Gain

2100-2400 Megacycles
Less Than 6 db Noise Figure

Permanent Magnet

The ZM-3154 is a ruggedized, low-noise, traveling-wave tube for use in the 2100-to-2400-megacycle frequency range. It has a noise figure of less than 6 decibels across the band with a power output of 1 milliwatt.

The tube is of metal-and-ceramic construction and is supplied as a completely packaged assembly which includes a permanent-magnet focusing structure, connectors and housing. The entire assembly weighs approximately 11.5 pounds.

The low noise, high gain, freedom from tuning adjustments, and rugged construction are important features for application in military systems. The device is particularly useful as the input tube for radar receivers, where its low noise and protection to the crystal mixer are decided advantages. Other applications include electronic countermeasures equipment, microwave relay systems and radiometry.

GENERAL

ELECTRICAL

Frequency	2100-2400	Megacycles
Heater		
Voltage	6.3	Volts
Current, nominal	0.4	Ampere
A heater-voltage regulation of ±2 percent is recommended to realize optimum gain and noise figure.		
Focusing Method – Permanent Magnet		
Noise Figure *, maximum	6	Decibels
Small Signal Gain, minimum	28	Decibels
Saturation Power Output, nominal	1.0	Milliwatt
Collector Dissipation	1.0	Watt
Impedance, Coaxial	50	Ohms
Input, VSWR		Less than 2.5 to 1
Output, VSWR		Less than 3.0 to 1

MECHANICAL

Mounting Position – Any		
Connectors		
DC Socket – Winchester M10P-LSH-19 (or equivalent)		
RF Connectors, Coaxial		
Input – Type N, Female		
Output – Type N, Female		
Over-all Dimensions		
Length, approximate	9.25	Inches
Width, approximate	4.25	Inches
Height, approximate	4.25	Inches
Weight (Complete Assembly), approximate	11.5	Pounds

The specifications of this type are subject to change. Delivery of samples and the existence of these data do not imply continued availability of types with the same characteristics or dimensions. For the most recent information concerning the status of this device, please consult your local Power Tube Department Regional Sales Office.

THERMAL

Cooling – Convection

TYPICAL OPERATING CONDITIONS**

Electrode – No. 1 (Grid) Voltage	-10 to 0	Volts
Electrode – No. 2 (Anode) Voltage	10 to 30	Volts
Electrode – No. 3 Voltage	25 to 100	Volts
Electrode – No. 4 Voltage	50 to 200	Volts
Helix		
Voltage	150 to 275	Volts
Current, maximum	50	Microamperes
Collector Voltage	400 to 600	Volts
Beam Current	200 to 600	Microamperes

ENVIRONMENTAL

Shock (energized)	50 G for 11 milliseconds on each of three mutually perpendicular axes.
Vibration (operating)	0.06 inches double amplitude from 5 to 70 cycles per second and 15 G from 70 to 2000 cycles per second with sweep over 5 to 2000 cycles per second for 100 minutes on each of three mutually perpendicular axes.
Humidity (non-operating)	MIL-E-5272C, Paragraph 4.4.1 (Procedure I); i.e., non-operating tube in 95 percent relative humidity atmosphere for 10 days with temperature cycled slowly from approximately 30 C to 71 C each day.
Acoustic noise (operating)	135 decibels, 25 to 12,000 cycles per second random noise.
Altitude (operating)	100,000 feet mean sea level.
Operating temperature, ambient	-60 to +100 C

* Over band with the same operating voltages that provide minimum gain variation.

** All voltages may be isolated from ground; i.e., it is not necessary to operate the cathode, helix, collector, or any other electrode at ground potential. Voltages shown are measured with respect to cathode. For minimum noise and optimum gain characteristics, voltages should be adjusted within ranges specified by instructions accompanying each tube.

PERMANENT-MAGNET PRECAUTIONS

This tube uses a uniform-field permanent magnet as the focusing structure. A label on the tube specifies a nominal lower limit of two inches on magnetic-material proximity. It must be realized that strong external magnets or large amounts of magnetic material at this distance may permanently damage the tube. A small screwdriver will not, while a large a-c transformer or a large sheet of steel at this distance may cause damage by defocusing the tube.

In addition, a related caution is important and must be remembered whenever handling a uniform-field tube. The permanent magnets of these tubes cause a large attractive force between the tube and magnetic material. Unless one is always careful to hold the tube and/or magnetic objects near the tube firmly, the result is sudden direct contact. The magnetic object may cause tube damage due to violations of the minimum spacing requirement.

For small steel hand tools, a two-inch limit is sufficient. For large magnetic objects with magnetic fields of their own, the lower minimum distance should be determined accurately by testing. To accomplish this, the tube may be secured to a suitable three-foot-long dielectric support and the tube case grounded. With the tube operating and its helix current being measured, the tube may be moved slowly by the dielectric support toward the magnetic object. (CAUTION: Appropriate electrical safety procedures should be followed at all times.) The minimum distance for which there is no degradation in r-f performance is the point at which the helix current starts to increase. If a slight degradation in noise figure can be accepted, the helix current may be allowed to increase somewhat as long as it stays below its operating maximum.

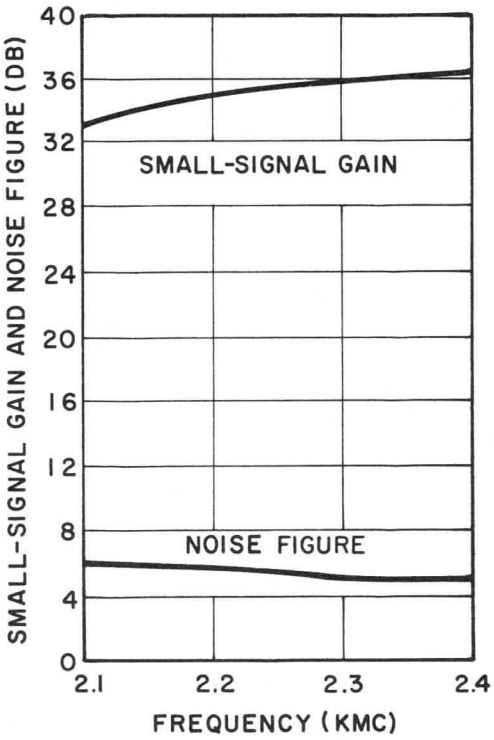

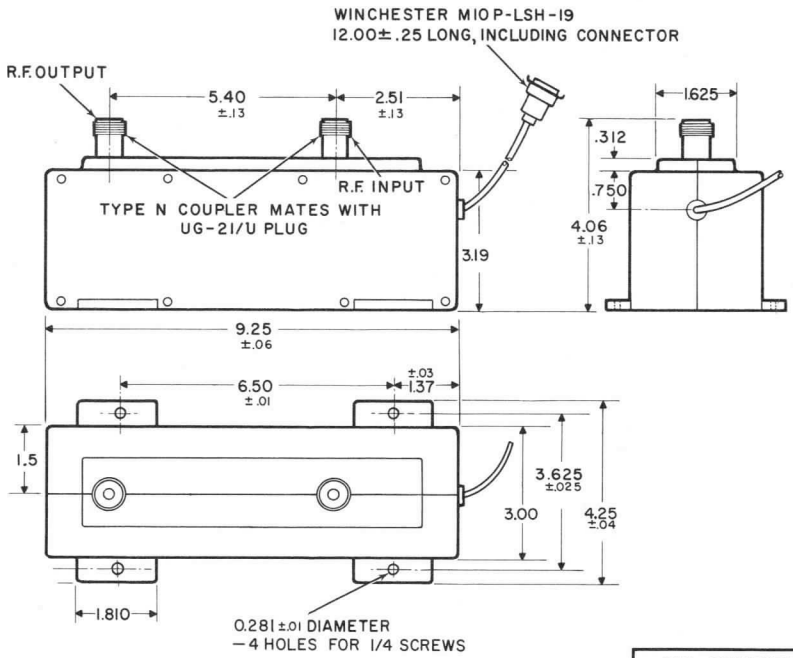

ALL DIMENSIONS ARE IN INCHES AND THOSE WITHOUT TOLERANCES ARE APPROXIMATE.

PIN CONNECTIONS MIOP-LSH-19	
ELECTRODE	PIN
CATHODE	B
HEATER	D
NO. 1, GRID	C
NO. 2, ANODE	F
NO. 3, FOCUS	A
NO. 4, FOCUS	E
NO CONNECTION	J
NO CONNECTION	H
HELIX	K
COLLECTOR	L

GENERAL ELECTRIC
POWER TUBE DEPARTMENT
Schenectady 5, N. Y.

PRELIMINARY
TECHNICAL INFORMATION

These ratings represent those of current samples of this type. Refer to the Objective Technical Information sheet for design-objective ratings.

DEVELOPMENTAL TYPE

This technical information is proprietary and is furnished only as a service to customers.

ZM-3155

TRAVELING-WAVE TUBE

1 Milliwatt Power Output
30 db Gain

2300-2700 Megacycles
Less Than 6 db Noise Figure

Permanent Magnet

The ZM-3155 is a ruggedized, low-noise traveling-wave tube for use in the 2300-to-2700-megacycle frequency range. It has a noise figure of less than 6 decibels across the band with a power output of 1 milliwatt.

The tube is of metal-and-ceramic construction and is supplied as a completely packaged assembly which includes a permanent-magnet focusing structure, connectors and housing. The entire assembly weighs approximately 11.5 pounds.

The low noise, high gain, freedom from tuning adjustments, and rugged construction are important features for application in military systems. The device is particularly useful as the input tube for radar receivers, where its low noise and protection to the crystal mixer are decided advantages. Other applications include electronic countermeasures equipment, microwave relay systems and radiometry.

GENERAL

ELECTRICAL

Frequency	2300-2700	Megacycles
Heater		
Voltage	6.3	Volts
Current, nominal	0.4	Ampere
A heater-voltage regulation of ± 2 percent is recommended to realize optimum gain and noise figure.		
Focusing Method – Permanent Magnet		
Noise Figure*, maximum	6	Decibels
Small Signal Gain, minimum	30	Decibels
Saturation Power Output, nominal	1.0	Milliwatt
Collector Dissipation	1.0	Watt
Impedance, Coaxial	50	Ohms
Input, VSWR	Less than 2.5 to 1	
Output, VSWR	Less than 3.0 to 1	

MECHANICAL

Mounting Position – Any
Connectors
- DC Socket – Winchester M10P-LSH-19 (or equivalent)
- RF Connectors, Coaxial
  - Input – Type N, Female
  - Output – Type N, Female
- Over-all Dimensions

Length, approximate	9.25	Inches
Width, approximate	4.25	Inches
Height, approximate	4.25	Inches
Weight (Complete Assembly), approximate	11.5	Pounds

The specifications of this type are subject to change. Delivery of samples and the existence of these data do not imply continued availability of types with the same characteristics or dimensions. For the most recent information concerning the status of this device, please consult your local Power Tube Department Regional Sales Office.

THERMAL

Cooling – Convection

TYPICAL OPERATING CONDITIONS**

Electrode – No. 1 (Grid) Voltage	-10 to 0	Volts
Electrode – No. 2 (Anode) Voltage	10 to 30	Volts
Electrode – No. 3 Voltage	25 to 100	Volts
Electrode – No. 4 Voltage	50 to 200	Volts
Helix		
Voltage	150 to 275	Volts
Current, maximum	50	Microamperes
Collector Voltage	400 to 600	Volts
Beam Current	200 to 600	Microamperes

ENVIRONMENTAL

Shock (energized)	50 G for 11 milliseconds on each of three mutually perpendicular axes.
Vibration (operating)	0.06 inches double amplitude from 5 to 70 cycles per second and 15 G from 70 to 2000 cycles per second with sweep over 5 to 2000 cycles per second for 100 minutes on each of three mutually perpendicular axes.
Humidity (non-operating)	MIL-E-5272C, Paragraph 4.4.1 (Procedure I); i.e., non-operating tube in 95 percent relative humidity atmosphere for 10 days with temperature cycled slowly from approximately 30 C to 71 C each day.
Acoustic noise (operating)	135 decibels, 25 to 12,000 cycles per second random noise.
Altitude (operating)	100,000 feet mean sea level.
Operating temperature, ambient	-60 to +100 C

*Over band with the same operating voltages that provide minimum gain variation.

**All voltages may be isolated from ground; i.e., it is not necessary to operate the cathode, helix, collector, or any other electrode at ground potential. Voltages shown are measured with respect to cathode. For minimum noise and optimum gain characteristics, voltages should be adjusted within ranges specified by instructions accompanying each tube.

PERMANENT-MAGNET PRECAUTIONS

This tube uses a uniform-field permanent magnet as the focusing structure. A label on the tube specifies a nominal lower limit of two inches on magnetic-material proximity. It must be realized that strong external magnets or large amounts of magnetic material at this distance may permanently damage the tube. A small screwdriver will not, while a large a-c transformer or a large sheet of steel at this distance may cause damage by defocusing the tube.

In addition, a related caution is important and must be remembered whenever handling a uniform-field tube. The permanent magnets of these tubes cause a large attractive force between the tube and magnetic material. Unless one is always careful to hold the tube and/or magnetic objects near the tube firmly, the result is sudden direct contact. The magnetic object may cause tube damage due to violations of the minimum spacing requirement.

For small steel hand tools, a two-inch limit is sufficient. For large magnetic objects with magnetic fields of their own, the lower minimum distance should be determined accurately by testing. To accomplish this, the tube may be secured to a suitable three-foot-long dielectric support and the tube case grounded. With the tube operating and its helix current being measured, the tube may be moved slowly by the dielectric support toward the magnetic object. (CAUTION: Appropriate electrical safety procedures should be followed at all times.) The minimum distance for which there is no degradation in r-f performance is the point at which the helix current starts to increase. If a slight degradation in noise figure can be accepted, the helix current may be allowed to increase somewhat as long as it stays below its operating maximum.

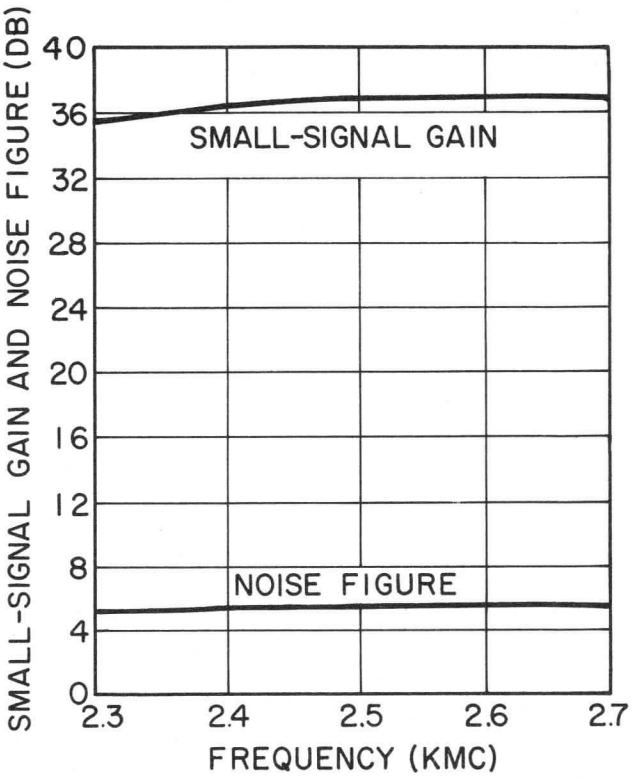

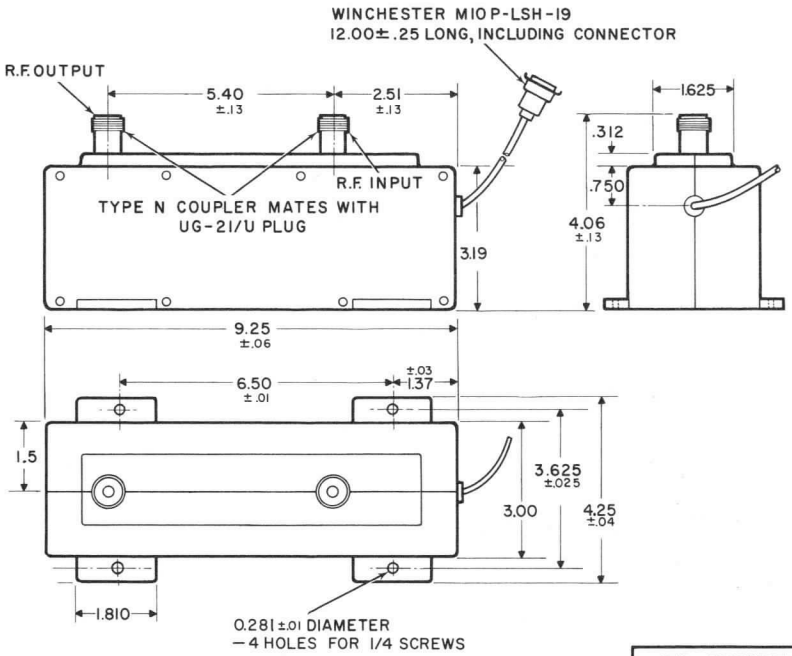

ALL DIMENSIONS ARE IN INCHES AND THOSE WITHOUT TOLERANCES ARE APPROXIMATE.

PIN CONNECTIONS MIOP-LSH-19	
ELECTRODE	PIN
CATHODE	B
HEATER	D
NO. 1, GRID	C
NO. 2, ANODE	F
NO. 3, FOCUS	A
NO. 4, FOCUS	E
NO CONNECTION	J
NO CONNECTION	H
HELIX	K
COLLECTOR	L

GENERAL ELECTRIC
POWER TUBE DEPARTMENT
Schenectady 5, N. Y.

PRELIMINARY
TECHNICAL INFORMATION

These ratings represent those of current samples of this type. Refer to the Objective Technical Information sheet for design-objective ratings.

DEVELOPMENTAL TYPE
ZM-3156
PTI-95

11-15-62

This technical information is proprietary and is furnished only as a service to customers.

ZM-3156

TRAVELING-WAVE TUBE

3 Milliwatts Power Output
30 db Gain

2700-3300 Megacycles
Less Than 6 db Noise Figure

Permanent Magnet

The ZM-3156 is a ruggedized, low-noise traveling-wave tube for use in the 2700-to-3300-megacycle frequency range. It has a noise figure of less than 6 decibels across the band with a power output of 3 milliwatts.

The tube is of metal-and-ceramic construction and is supplied as a completely packaged assembly which includes a permanent-magnet focusing structure, connectors and housing. The entire assembly weighs approximately 11.5 pounds.

The broad bandwidth, low noise, high gain, freedom from tuning adjustments, and rugged construction are important features for application in military systems. The device is particularly useful as the input tube for radar receivers, where its low noise and protection to the crystal mixer are decided advantages. Other applications include electronic countermeasures equipment, microwave relay systems and radiometry.

ELECTRICAL

Frequency	2700-3300	Megacycles
Heater		
Voltage	6.3	Volts
Current, nominal	0.4	Ampere
A heater-voltage regulation of ±2 percent is recommended to realize optimum gain and noise figure.		
Focusing Method – Permanent Magnet		
Noise Figure *, maximum	6	Decibels
Small Signal Gain, minimum	30	Decibels
Saturation Power Output, nominal	3.0	Milliwatts
Collector Dissipation	1.0	Watt
Impedance, Coaxial	50	Ohms
Input, VSWR	Less than 2.5 to 1	
Output, VSWR	Less than 3.0 to 1	

MECHANICAL

Mounting Position – Any
Connectors
DC Socket – Winchester M10P-LSH-19 (or equivalent)
RF Connectors, Coaxial
Input – Type N, Female
Output – Type N, Female

Over-all Dimensions		
Length, approximate	9.25	Inches
Width, approximate	4.25	Inches
Height, approximate	4.25	Inches
Weight (Complete Assembly), approximate	11.5	Pounds

The specifications of this type are subject to change. Delivery of samples and the existence of these data do not imply continued availability of types with the same characteristics or dimensions. For the most recent information concerning the status of this device, please consult your local Power Tube Department Regional Sales Office.

THERMAL

Cooling – Convection

TYPICAL OPERATING CONDITIONS**

Electrode – No. 1 (Grid) Voltage	-10 to 0	Volts
Electrode – No. 2 (Anode) Voltage	10 to 30	Volts
Electrode – No. 3 Voltage	25 to 100	Volts
Electrode – No. 4 Voltage	50 to 200	Volts
Helix		
Voltage	150 to 275	Volts
Current, maximum	50	Microamperes
Collector Voltage	400 to 600	Volts
Beam Current	200 to 600	Microamperes

ENVIRONMENTAL

Shock (energized)	50 G for 11 milliseconds on each of three mutually perpendicular axes.
Vibration (operating)	0.06 inches double amplitude from 5 to 70 cycles per second and 15 G from 70 to 2000 cycles per second with sweep over 5 to 2000 cycles per second for 100 minutes on each of three mutually perpendicular axes.
Humidity (non-operating)	MIL-E-5272C, Paragraph 4.4.1 (Procedure I); i.e., non-operating tube in 95 percent relative humidity atmosphere for 10 days with temperature cycled slowly from approximately 30 C to 71 C each day.
Acoustic noise (operating)	135 decibels, 25 to 12,000 cycles per second random noise.
Altitude (operating)	100,000 feet mean sea level.
Operating temperature, ambient	-60 to +100 C

* Over band with the same operating voltages that provide minimum gain variation.

** All voltages may be isolated from ground; i.e., it is not necessary to operate the cathode, helix, collector, or any other electrode at ground potential. Voltages shown are measured with respect to cathode. For minimum noise and optimum gain characteristics, voltages should be adjusted within ranges specified by instructions accompanying each tube.

PERMANENT-MAGNET PRECAUTIONS

This tube uses a uniform-field permanent magnet as the focusing structure. A label on the tube specifies a nominal lower limit of two inches on magnetic-material proximity. It must be realized that strong external magnets or large amounts of magnetic material at this distance may permanently damage the tube. A small screwdriver will not, while a large a-c transformer or a large sheet of steel at this distance may cause damage by defocusing the tube.

In addition, a related caution is important and must be remembered whenever handling a uniform-field tube. The permanent magnets of these tubes cause a large attractive force between the tube and magnetic material. Unless one is always careful to hold the tube and/or magnetic objects near the tube firmly, the result is sudden direct contact. The magnetic object may cause tube damage due to violations of the minimum spacing requirement.

For small steel hand tools, a two-inch limit is sufficient. For large magnetic objects with magnetic fields of their own, the lower minimum distance should be determined accurately by testing. To accomplish this, the tube may be secured to a suitable three-foot-long dielectric support and the tube case grounded. With the tube operating and its helix current being measured, the tube may be moved slowly by the dielectric support toward the magnetic object. (CAUTION: Appropriate electrical safety procedures should be followed at all times.) The minimum distance for which there is no degradation in r-f performance is the point at which the helix current starts to increase. If a slight degradation in noise figure can be accepted, the helix current may be allowed to increase somewhat as long as it stays below its operating maximum.

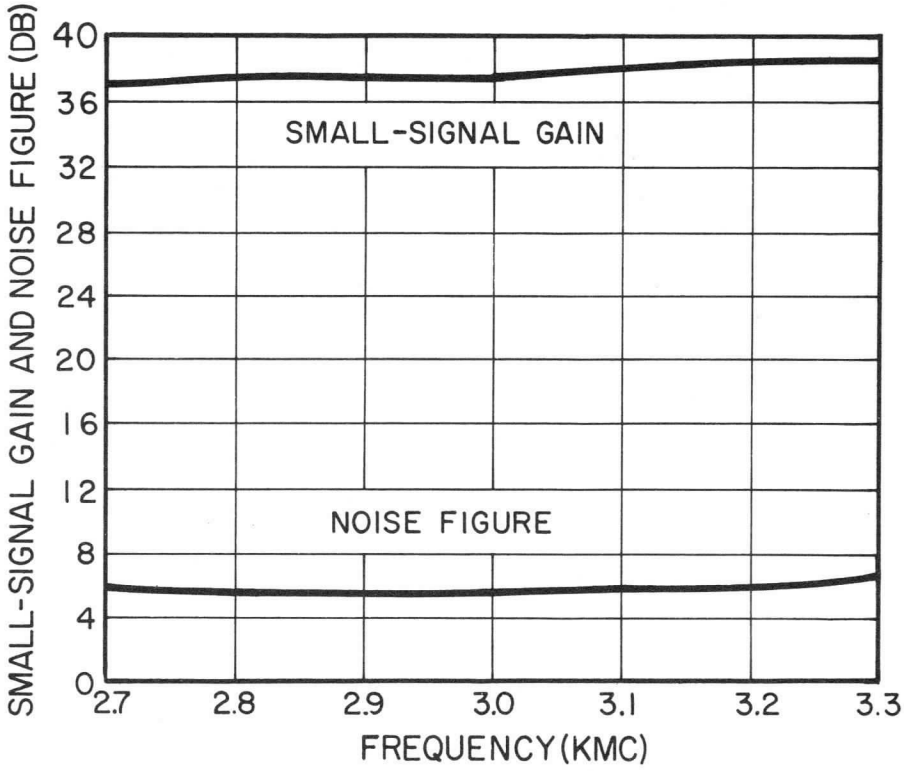

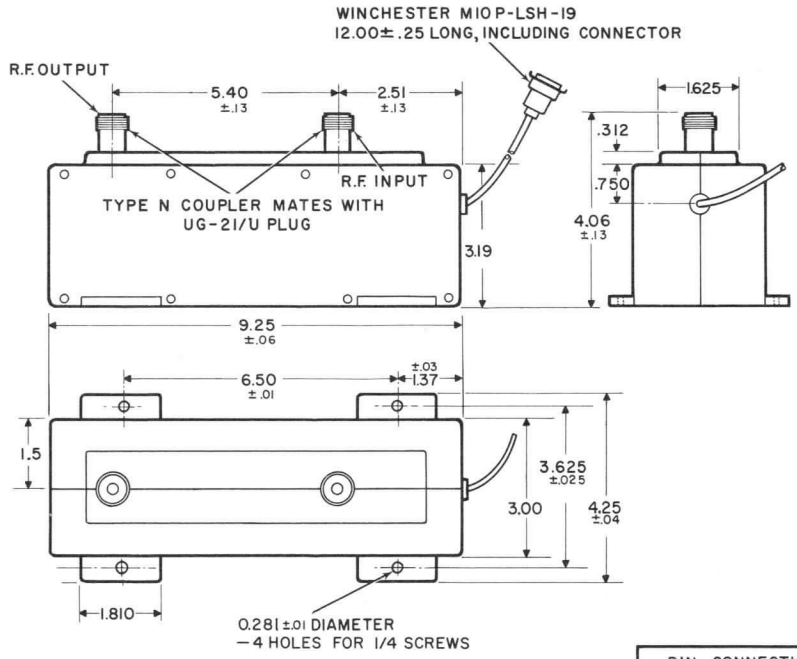

ALL DIMENSIONS ARE IN INCHES AND THOSE WITHOUT TOLERANCES ARE APPROXIMATE.

PIN CONNECTIONS M10P-LSH-19	
ELECTRODE	PIN
CATHODE	B
HEATER	D
NO. 1, GRID	C
NO. 2, ANODE	F
NO. 3, FOCUS	A
NO. 4, FOCUS	E
NO CONNECTION	J
NO CONNECTION	H
HELIX	K
COLLECTOR	L

GENERAL ELECTRIC
POWER TUBE DEPARTMENT
Schenectady 5, N. Y.

PRELIMINARY
TECHNICAL INFORMATION

These ratings represent those of current samples of this type. Refer to the Objective Technical Information sheet for design-objective ratings.

DEVELOPMENTAL TYPE

This technical information is proprietary and is furnished only as a service to customers.

ZM-3157

TRAVELING-WAVE TUBE

3 Milliwatts Power Output
30 db Gain

2700-2900 Megacycles
Less Than 5.5 db Noise Figure

Permanent Magnet

The ZM-3157 is a ruggedized, low-noise traveling-wave tube for use in the 2700-to-2900-megacycle frequency range. It has a noise figure of less than 5.5 decibels across the band with a power output of 3 milliwatts.

The tube is of metal-and-ceramic construction and is supplied as a completely packaged assembly which includes a permanent-magnet focusing structure, connectors and housing. The entire assembly weighs approximately 11.5 pounds.

The low noise, high gain, freedom from tuning adjustments, and rugged construction are important features for application in military systems. The device is particularly useful as the input tube for radar receivers, where its low noise and protection to the crystal mixer are decided advantages. Other applications include electronic countermeasures equipment, microwave relay systems and radiometry.

ELECTRICAL

Frequency	2700-2900	Megacycles
Heater		
Voltage	6.3	Volts
Current, nominal	0.4	Ampere
A heater-voltage regulation of ± 2 percent is recommended to realize optimum gain and noise figure.		
Focusing Method – Permanent Magnet		
Noise Figure*, maximum	5.5	Decibels
Small Signal Gain, minimum	30	Decibels
Saturation Power Output, nominal	3.0	Milliwatts
Collector Dissipation	1.0	Watt
Impedance, Coaxial	50	Ohms
Input, VSWR	Less than 2.5 to 1	
Output, VSWR	Less than 3.0 to 1	

MECHANICAL

Mounting Position – Any
Connectors
- DC Socket – Winchester (M10P-LSH-19) (or equivalent)
- RF Connectors, Coaxial
  - Input – Type N, Female
  - Output – Type N, Female
- Over-all Dimensions

Length, approximate	9.25	Inches
Width, approximate	4.25	Inches
Height, approximate	4.25	Inches
Weight (Complete Assembly), approximate	11.5	Pounds

The specifications of this type are subject to change. Delivery of samples and the existence of these data do not imply continued availability of types with the same characteristics or dimensions. For the most recent information concerning the status of this device, please consult your local Power Tube Department Regional Sales Office.

THERMAL

Cooling – Convection

TYPICAL OPERATING CONDITIONS**

Electrode – No. 1 (Grid) Voltage	-10 to 0	Volts
Electrode – No. 2 (Anode) Voltage	10 to 30	Volts
Electrode – No. 3 Voltage	25 to 100	Volts
Electrode – No. 4 Voltage	50 to 200	Volts
Helix		
Voltage	150 to 275	Volts
Current, maximum	50	Microamperes
Collector Voltage	400 to 600	Volts
Beam Current	200 to 600	Microamperes

ENVIRONMENTAL

Shock (energized)	50 G for 11 milliseconds on each of three mutually perpendicular axes.
Vibration (operating)	0.06 inches double amplitude from 5 to 70 cycles per second and 15 G from 70 to 2000 cycles per second with sweep over 5 to 2000 cycles per second for 100 minutes on each of three mutually perpendicular axes.
Humidity (non-operating)	MIL-E-5272C, Paragraph 4.4.1 (Procedure I); i.e., non-operating tube in 95 percent relative humidity atmosphere for 10 days with temperature cycled slowly from approximately 30 C to 71 C each day.
Acoustic noise (operating)	135 decibels, 25 to 12,000 cycles per second random noise.
Altitude (operating)	100,000 feet mean sea level.
Operating temperature, ambient	-60 to +100 C

*Over band with the same operating voltages that provide minimum gain variation.

**All voltages may be isolated from ground; i.e., it is not necessary to operate the cathode, helix, collector, or any other electrode at ground potential. Voltages shown are measured with respect to cathode. For minimum noise and optimum gain characteristics, voltages should be adjusted within ranges specified by instructions accompanying each tube.

PERMANENT-MAGNET PRECAUTIONS

This tube uses a uniform-field permanent magnet as the focusing structure. A label on the tube specifies a nominal lower limit of two inches on magnetic-material proximity. It must be realized that strong external magnets or large amounts of magnetic material at this distance may permanently damage the tube. A small screwdriver will not, while a large a-c transformer or a large sheet of steel at this distance may cause damage by defocusing the tube.

In addition, a related caution is important and must be remembered whenever handling a uniform-field tube. The permanent magnets of these tubes cause a large attractive force between the tube and magnetic material. Unless one is always careful to hold the tube and/or magnetic objects near the tube firmly, the result is sudden direct contact. The magnetic object may cause tube damage due to violations of the minimum spacing requirement.

For small steel hand tools, a two-inch limit is sufficient. For large magnetic objects with magnetic fields of their own, the lower minimum distance should be determined accurately by testing. To accomplish this, the tube may be secured to a suitable three-foot-long dielectric support and the tube case grounded. With the tube operating and its helix current being measured, the tube may be moved slowly by the dielectric support toward the magnetic object. (CAUTION: Appropriate electrical safety procedures should be followed at all times.) The minimum distance for which there is no degradation in r-f performance is the point at which the helix current starts to increase. If a slight degradation in noise figure can be accepted, the helix current may be allowed to increase somewhat as long as it stays below its operating maximum.

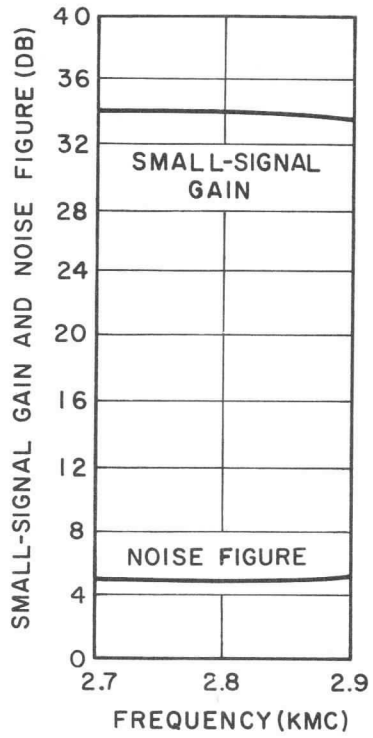

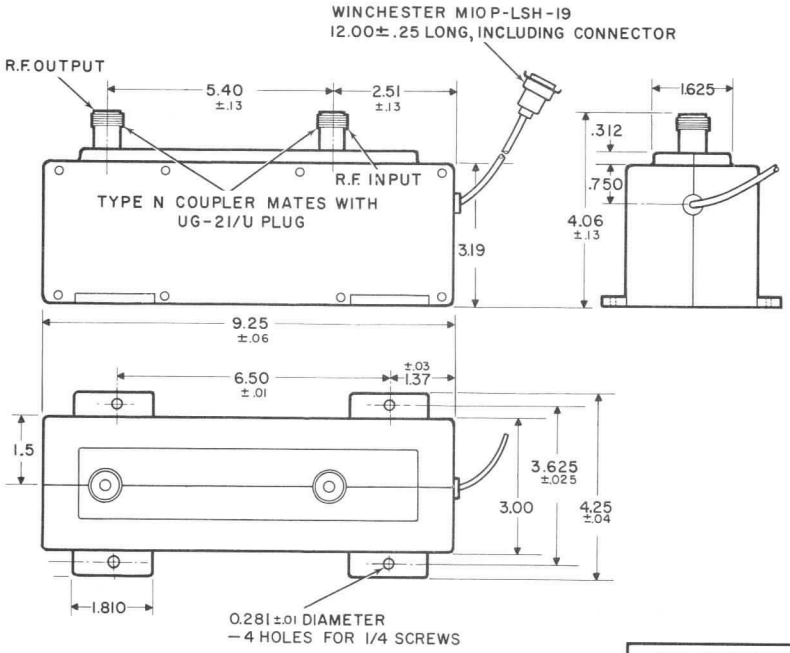

ALL DIMENSIONS ARE IN INCHES AND THOSE WITHOUT TOLERANCES ARE APPROXIMATE.

PIN CONNECTIONS MIOP-LSH-19	
ELECTRODE	PIN
CATHODE	B
HEATER	D
NO. 1, GRID	C
NO. 2, ANODE	F
NO. 3, FOCUS	A
NO. 4, FOCUS	E
NO CONNECTION	J
NO CONNECTION	H
HELIX	K
COLLECTOR	L

GENERAL ELECTRIC
POWER TUBE DEPARTMENT
Schenectady 5, N. Y.

PRELIMINARY
TECHNICAL INFORMATION

These ratings represent those of current samples of this type. Refer to the Objective Technical Information sheet for design-objective ratings.

DEVELOPMENTAL TYPE

This technical information is proprietary and is furnished only as a service to customers.

ZM-3158

TRAVELING-WAVE TUBE

3 Milliwatts Power Output
30 db Gain

2900-3100 Megacycles
Less Than 5.5 db Noise Figure

Permanent Magnet

The ZM-3158 is a ruggedized, low-noise traveling-wave tube for use in the 2900-to-3100 megacycle frequency range. It has a noise figure of less than 5.5 decibels across the band with a power output of 3 milliwatts.

The tube is of metal-and-ceramic construction and is supplied as a completely packaged assembly which includes a permanent-magnet focusing structure, connectors and housing. The entire assembly weighs approximately 11.5 pounds.

The low noise, high gain, freedom from tuning adjustments, and rugged construction are important features for application in military systems. The device is particularly useful as the input tube for radar receivers, where its low noise and protection to the crystal mixer are decided advantages. Other applications include electronic countermeasures equipment, microwave relay systems and radiometry.

ELECTRICAL

Frequency	2900-3100	Megacycles
Heater		
Voltage	6.3	Volts
Current, nominal	0.4	Ampere
A heater-voltage regulation of ± 2 percent is recommended to realize optimum gain and noise figure.		
Focusing Method – Permanent Magnet		
Noise Figure *, maximum	5.5	Decibels
Small Signal Gain, minimum	30	Decibels
Saturation Power Output, nominal	3.0	Milliwatts
Collector Dissipation	1.0	Watt
Impedance, Coaxial	50	Ohms
Input, VSWR	Less than 2.5 to 1	
Output, VSWR	Less than 3.0 to 1	

MECHANICAL

Mounting Position – Any
Connectors
- DC Socket – Winchester M10P-LSH-19 (or equivalent)
- RF Connectors, Coaxial
  - Input – Type N, Female
  - Output – Type N, Female
- Over-all Dimensions

Length, approximate	9.25	Inches
Width, approximate	4.25	Inches
Height, approximate	4.25	Inches
Weight (Complete Assembly), approximate	11.5	Pounds

The specifications of this type are subject to change. Delivery of samples and the existence of these data do not imply continued availability of types with the same characteristics or dimensions. For the most recent information concerning the status of this device, please consult your local Power Tube Department Regional Sales Office.

THERMAL

Cooling – Convection

TYPICAL OPERATING CONDITIONS**

Electrode – No. 1 (Grid) Voltage	-10 to 0	Volts
Electrode – No. 2 (Anode) Voltage	10 to 30	Volts
Electrode – No. 3 Voltage	25 to 100	Volts
Electrode – No. 4 Voltage	50 to 200	Volts
Helix		
Voltage	150 to 275	Volts
Current, maximum	50	Microamperes
Collector Voltage	400 to 600	Volts
Beam Current	200 to 600	Microamperes

ENVIRONMENTAL

Shock (energized)	50 G for 11 milliseconds on each of three mutually perpendicular axes.
Vibration (operating)	0.06 inches double amplitude from 5 to 70 cycles per second and 15 G from 70 to 2000 cycles per second with sweep over 5 to 2000 cycles per second for 100 minutes on each of three mutually perpendicular axes.
Humidity (non-operating)	MIL-E-5272C, Paragraph 4.4.1 (Procedure I); i.e., non-operating tube in 95 percent relative humidity atmosphere for 10 days with temperature cycled slowly from approximately 30 C to 71 C each day.
Acoustic noise (operating)	135 decibels, 25 to 12,000 cycles per second random noise.
Altitude (operating)	100,000 feet mean sea level.
Operating temperature, ambient	-60 to +100 C

*Over band with the same operating voltages that provide maximum gain variation.

**All voltages may be isolated from ground; i.e., it is not necessary to operate the cathode, helix, collector, or any other electrode at ground potential. Voltages shown are measured with respect to cathode. For minimum noise and optimum gain characteristics, voltages should be adjusted within ranges specified by instructions accompanying each tube.

PERMANENT-MAGNET PRECAUTIONS

This tube uses a uniform-field permanent magnet as the focusing structure. A label on the tube specifies a nominal lower limit of two inches on magnetic-material proximity. It must be realized that strong external magnets or large amounts of magnetic material at this distance may permanently damage the tube. A small screwdriver will not, while a large a-c transformer or a large sheet of steel at this distance may cause damage by defocusing the tube.

In addition, a related caution is important and must be remembered whenever handling a uniform-field tube. The permanent magnets of these tubes cause a large attractive force between the tube and magnetic material. Unless one is always careful to hold the tube and/or magnetic objects near the tube firmly, the result is sudden direct contact. The magnetic object may cause tube damage due to violations of the minimum spacing requirement.

For small steel hand tools, a two-inch limit is sufficient. For large magnetic objects with magnetic fields of their own, the lower minimum distance should be determined accurately by testing. To accomplish this, the tube may be secured to a suitable three-foot-long dielectric support and the tube case grounded. With the tube operating and its helix current being measured, the tube may be moved slowly by the dielectric support toward the magnetic object. (CAUTION: Appropriate electrical safety procedures should be followed at all times). The minimum distance for which there is no degradation in r-f performance is the point at which the helix current starts to increase. If a slight degradation in noise figure can be accepted, the helix current may be allowed to increase somewhat as long as it stays below its operating maximum.

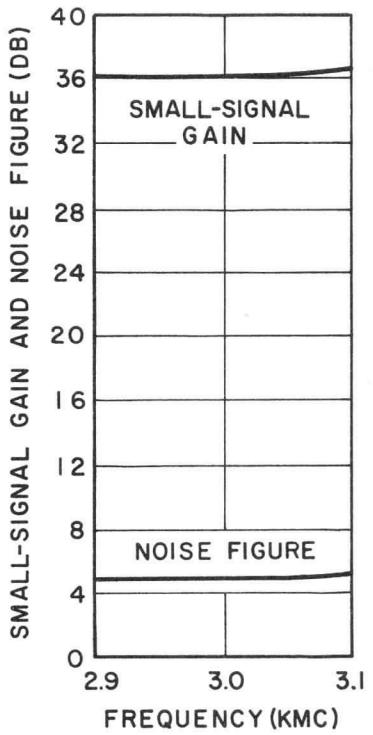

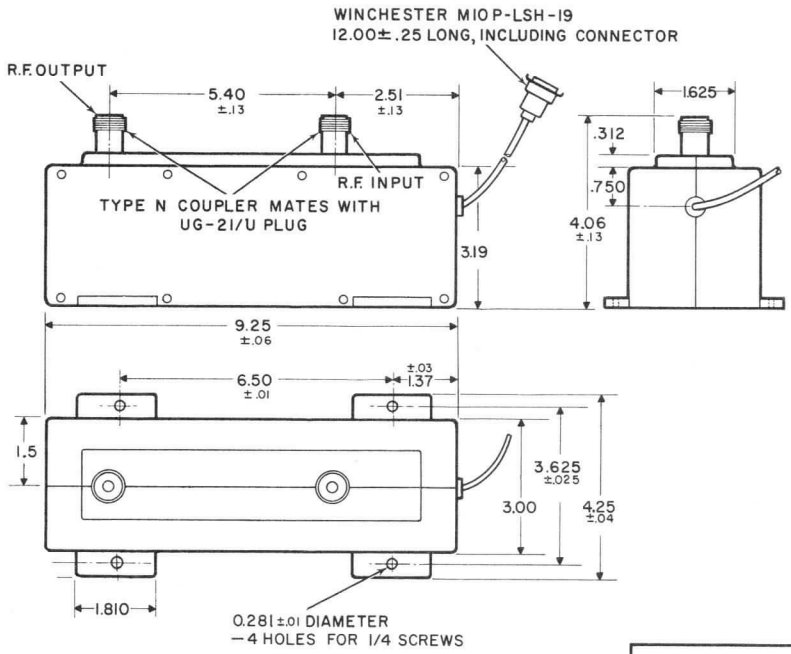

ALL DIMENSIONS ARE IN INCHES AND THOSE WITHOUT TOLERANCES ARE APPROXIMATE.

PIN CONNECTIONS MIOP-LSH-19	
ELECTRODE	PIN
CATHODE	B
HEATER	D
NO. 1, GRID	C
NO. 2, ANODE	F
NO. 3, FOCUS	A
NO. 4, FOCUS	E
NO CONNECTION	J
NO CONNECTION	H
HELIX	K
COLLECTOR	L

GENERAL ELECTRIC
POWER TUBE DEPARTMENT
Schenectady 5, N. Y.

PRELIMINARY
TECHNICAL INFORMATION

These ratings represent those of current samples of this type. Refer to the Objective Technical Information sheet for design-objective ratings.

DEVELOPMENTAL TYPE

This technical information is proprietary and is furnished only as a service to customers.

ZM-3159

TRAVELING-WAVE TUBE

1 Milliwatt Power Output
30 db Gain

3400-3600 Megacycles
Less Than 6 db Noise Figure

Permanent Magnet

The ZM-3159 is a ruggedized, low-noise traveling-wave tube for use in the 3400-to-3600-megacycle frequency range. It has a noise figure of less than 6 decibels across the band with a power output of 1 milliwatt.

The tube is of metal-and-ceramic construction and is supplied as a completely packaged assembly which includes a permanent-magnet focusing structure, connectors and housing. The entire assembly weighs approximately 11.5 pounds.

The broad bandwidth, low noise, high gain, freedom from tuning adjustments, and rugged construction are important features for application in military systems. The device is particularly useful as the input tube for radar receivers, where its low noise and protection to the crystal mixer are decided advantages. Other applications include electronic countermeasures equipment, microwave relay systems and radiometry.

ELECTRICAL

Frequency	3400-3600	Megacycles
Heater		
Voltage	6.3	Volts
Current, nominal	0.4	Ampere
A heater-voltage regulation of ±2 percent is recommended to realize optimum gain and noise figure.		
Focusing Method – Permanent Magnet		
Noise Figure *, maximum	6	Decibels
Small Signal Gain, minimum	30	Decibels
Saturation Power Output, nominal	1.0	Milliwatt
Collector Dissipation	1.0	Watt
Impedance, Coaxial	50	Ohms
Input, VSWR	Less than 2.5 to 1	
Output, VSWR	Less than 3.0 to 1	

MECHANICAL

Mounting Position – Any
Connectors
DC Socket – Winchester M10P-LSH-19 (or equivalent)
RF Connectors, Coaxial
Input – Type N, Female
Output – Type N, Female

Over-all Dimensions		
Length, approximate	9.25	Inches
Width, approximate	4.25	Inches
Height, approximate	4.25	Inches
Weight (Complete Assembly), approximate	11.5	Pounds

The specifications of this type are subject to change. Delivery of samples and the existence of these data do not imply continued availability of types with the same characteristics or dimensions. For the most recent information concerning the status of this device, please consult your local Power Tube Department Regional Sales Office.

THERMAL

Cooling – Convection

TYPICAL OPERATING CONDITIONS**

Electrode – No. 1 (Grid) Voltage	-10 to 0	Volts
Electrode – No. 2 (Anode) Voltage	10 to 30	Volts
Electrode – No. 3 Voltage	25 to 100	Volts
Electrode – No. 4 Voltage	50 to 200	Volts
Helix		
Voltage	150 to 275	Volts
Current, maximum	50	Microamperes
Collector Voltage	400 to 600	Volts
Beam Current	200 to 600	Microamperes

ENVIRONMENTAL

Shock (energized)	50 G for 11 milliseconds on each of three mutually perpendicular axes.
Vibration (operating)	0.06 inches double amplitude from 5 to 70 cycles per second and 15 G from 70 to 2000 cycles per second with sweep over 5 to 2000 cycles per second for 100 minutes on each of three mutually perpendicular axes.
Humidity (non-operating)	MIL-E-5272C, Paragraph 4.4.1 (Procedure I); i.e., non-operating tube in 95 percent relative humidity atmosphere for 10 days with temperature cycled slowly from approximately 30 C to 71 C each day.
Acoustic noise (operating)	135 decibels, 25 to 12,000 cycles per second random noise.
Altitude (operating)	100,000 feet mean sea level.
Operating temperature, ambient	-60 to +100 C

* Over band with the same operating voltages that provide minimum gain variation.

** All voltages may be isolated from ground; i.e., it is not necessary to operate the cathode, helix, collector, or any other electrode at ground potential. Voltages shown are measured with respect to cathode. For minimum noise and optimum gain characteristics, voltages should be adjusted within ranges specified by instructions accompanying each tube.

PERMANENT-MAGNET PRECAUTIONS

This tube uses a uniform-field permanent magnet as the focusing structure. A label on the tube specifies a nominal lower limit of two inches on magnetic-material proximity. It must be realized that strong external magnets or large amounts of magnetic material at this distance may permanently damage the tube. A small screwdriver will not, while a large a-c transformer or a large sheet of steel at this distance may cause damage by defocusing the tube.

In addition, a related caution is important and must be remembered whenever handling a uniform-field tube. The permanent magnets of these tubes cause a large attractive force between the tube and magnetic material. Unless one is always careful to hold the tube and/or magnetic objects near the tube firmly, the result is sudden direct contact. The magnetic object may cause tube damage due to violations of the minimum spacing requirement.

For small steel hand tools, a two-inch limit is sufficient. For large magnetic objects with magnetic fields of their own, the lower minimum distance should be determined accurately by testing. To accomplish this, the tube may be secured to a suitable three-foot-long dielectric support and the tube case grounded. With the tube operating and its helix current being measured, the tube may be moved slowly by the dielectric support toward the magnetic object. (CAUTION: Appropriate electrical safety procedures should be followed at all times.) The minimum distance for which there is no degradation in r-f performance is the point at which the helix current starts to increase. If a slight degradation in noise figure can be accepted, the helix current may be allowed to increase somewhat as long as it stays below its operating maximum.

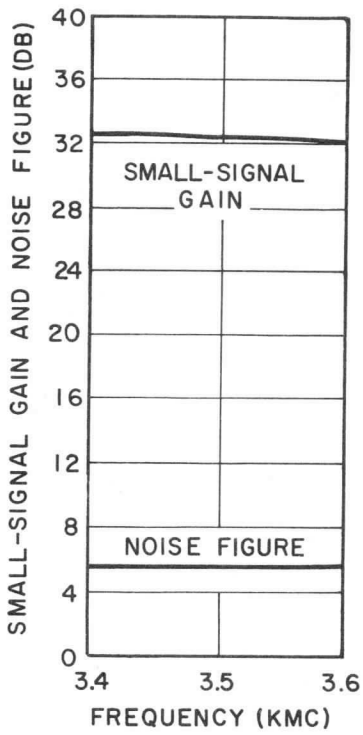

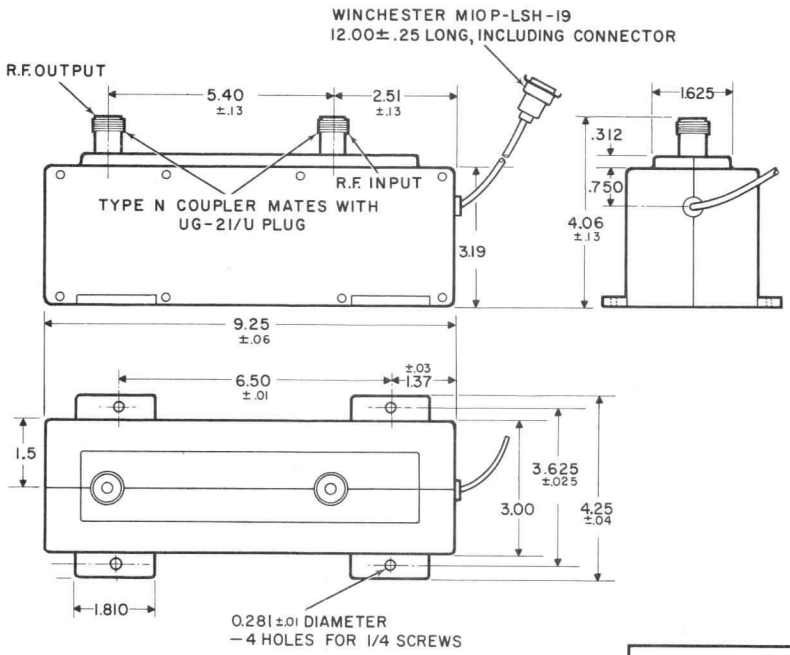

ALL DIMENSIONS ARE IN INCHES AND THOSE WITHOUT TOLERANCES ARE APPROXIMATE.

PIN CONNECTIONS MIOP-LSH-19	
ELECTRODE	PIN
CATHODE	B
HEATER	D
NO. 1, GRID	C
NO. 2, ANODE	F
NO. 3, FOCUS	A
NO. 4, FOCUS	E
NO CONNECTION	J
NO CONNECTION	H
HELIX	K
COLLECTOR	L

GENERAL ELECTRIC
POWER TUBE DEPARTMENT
Schenectady 5, N. Y.

PRELIMINARY
TECHNICAL INFORMATION

These ratings represent those of current samples of this type. Refer to the Objective Technical Information sheet for design-objective ratings.

DEVELOPMENTAL TYPE

This technical information is proprietary and is furnished only as a service to customers.

ZM-3160

TRAVELING-WAVE TUBE

1 Milliwatt Power Output
30 db Gain

3700-4200 Megacycles
Less Than 7 db Noise Figure

Permanent Magnet

The ZM-3160 is a ruggedized, low-noise traveling-wave tube for use in the 3700-to-4200-megacycle frequency range. It has a noise figure of less than 7 decibels across the band with a power output of 1 milliwatt.

The tube is of metal-and-ceramic construction and is supplied as a completely packaged assembly which includes a permanent-magnet focusing structure, connectors and housing. The entire assembly weighs approximately 11.5 pounds.

The low noise, high gain, freedom from tuning adjustments, and rugged construction are important features for application in military systems. The device is particularly useful as the input tube for radar receivers, where its low noise and protection to the crystal mixer are decided advantages. Other applications include electronic countermeasures equipment, microwave relay systems and radiometry.

ELECTRICAL

Frequency	3700-4200	Megacycles
Heater		
Voltage	6.3	Volts
Current, nominal	0.4	Ampere
A heater-voltage regulation of ±2 percent is recommended to realize optimum gain and noise figure.		
Focusing Method – Permanent Magnet		
Noise Figure *, maximum	7	Decibels
Small Signal Gain, minimum	30	Decibels
Saturation Power Output, nominal	1.0	Milliwatt
Collector Dissipation	1.0	Watt
Impedance, Coaxial	50	Ohms
Input, VSWR	Less than 2.5 to 1	
Output, VSWR	Less than 3.0 to 1	

MECHANICAL

Mounting Position – Any
Connectors
DC Socket – Winchester M10P-LSH-19 (or equivalent)
RF Connectors, Coaxial
Input – Type N, Female
Output – Type N, Female
Over-all Dimensions

Length, approximate	9.25	Inches
Width, approximate	4.25	Inches
Height, approximate	4.25	Inches
Weight (Complete Assembly), approximate	11.5	Pounds

The specifications of this type are subject to change. Delivery of samples and the existence of these data do not imply continued availability of types with the same characteristics or dimensions. For the most recent information concerning the status of this device, please consult your local Power Tube Department Regional Sales Office.

THERMAL

Cooling – Convection

TYPICAL OPERATING CONDITIONS**

Electrode – No. 1 (Grid) Voltage	-10 to 0	Volts
Electrode – No. 2 (Anode) Voltage	10 to 30	Volts
Electrode – No. 3 Voltage	25 to 100	Volts
Electrode – No. 4 Voltage	50 to 200	Volts
Helix		
Voltage	150 to 275	Volts
Current, maximum	50	Microamperes
Collector Voltage	400 to 600	Volts
Beam Current	200 to 600	Microamperes

ENVIRONMENTAL

Shock (energized)	50 G for 11 milliseconds on each of three mutually perpendicular axes.
Vibration (operating)	0.06 inches double amplitude from 5 to 70 cycles per second and 15 G from 70 to 2000 cycles per second with sweep over 5 to 2000 cycles per second for 100 minutes on each of three mutually perpendicular axes.
Humidity (non-operating)	MIL-E-5272C, Paragraph 4.4.1 (Procedure I); i.e., non-operating tube in 95 percent relative humidity atmosphere for 10 days with temperature cycled slowly from approximately 30 C to 71 C each day.
Acoustic noise (operating)	135 decibels, 25 to 12,000 cycles per second random noise.
Altitude (operating)	100,000 feet mean sea level.
Operating temperature, ambient	-60 to +100 C

* Over band with the same operating voltages that provide minimum gain variation.

** All voltages may be isolated from ground; i.e., it is not necessary to operate the cathode, helix, collector, or any other electrode at ground potential. Voltages shown are measured with respect to cathode. For minimum noise and optimum gain characteristics, voltages should be adjusted within ranges specified by instructions accompanying each tube.

PERMANENT-MAGNET PRECAUTIONS

This tube uses a uniform-field permanent magnet as the focusing structure. A label on the tube specifies a nominal lower limit of two inches on magnetic-material proximity. It must be realized that strong external magnets or large amounts of magnetic material at this distance may permanently damage the tube. A small screwdriver will not, while a large a-c transformer or a large sheet of steel at this distance may cause damage by defocusing the tube.

In addition, a related caution is important and must be remembered whenever handling a uniform-field tube. The permanent magnets of these tubes cause a large attractive force between the tube and magnetic material. Unless one is always careful to hold the tube and/or magnetic objects near the tube firmly, the result is sudden direct contact. The magnetic object may cause tube damage due to violations of the minimum spacing requirement.

For small steel hand tools, a two-inch limit is sufficient. For large magnetic objects with magnetic fields of their own, the lower minimum distance should be determined accurately by testing. To accomplish this, the tube may be secured to a suitable three-foot-long dielectric support and the tube case grounded. With the tube operating and its helix current being measured, the tube may be moved slowly by the dielectric support toward the magnetic object. (CAUTION: Appropriate electrical safety procedures should be followed at all times.) The minimum distance for which there is no degradation in r-f performance is the point at which the helix current starts to increase. If a slight degradation in noise figure can be accepted, the helix current may be allowed to increase somewhat as long as it stays below its operating maximum.

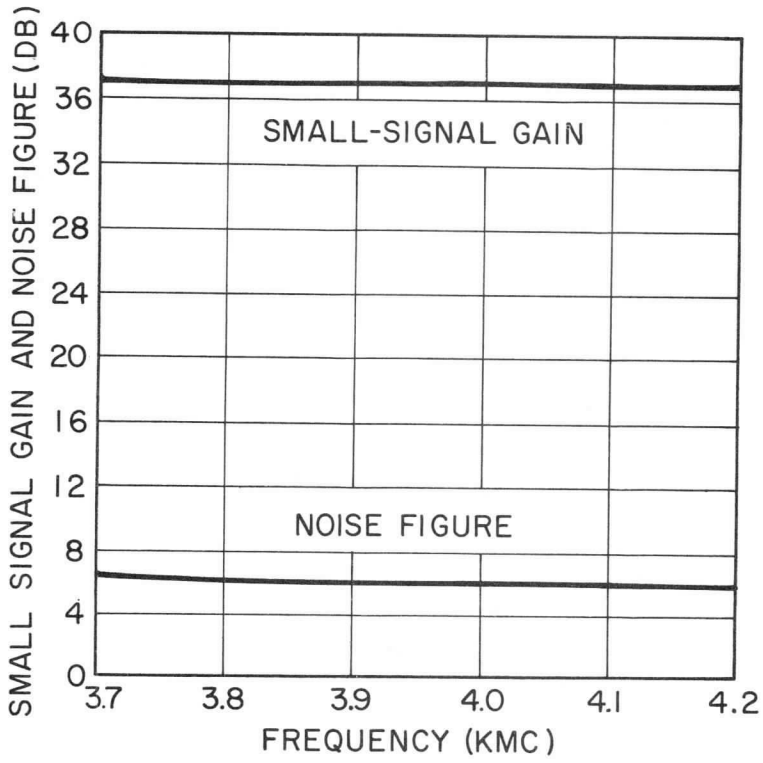

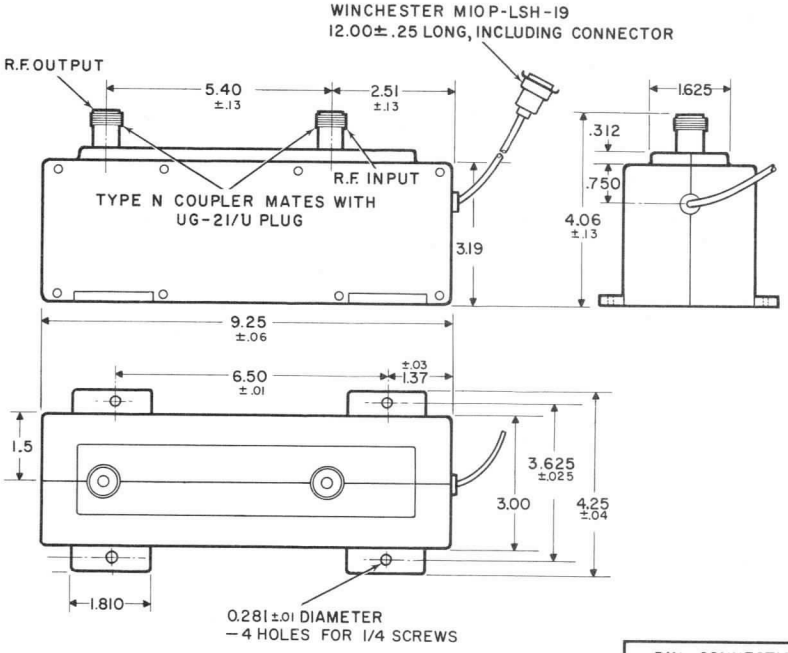

ALL DIMENSIONS ARE IN INCHES AND THOSE WITHOUT TOLERANCES ARE APPROXIMATE.

PIN CONNECTIONS MIOP-LSH-19	
ELECTRODE	PIN
CATHODE	B
HEATER	D
NO. 1, GRID	C
NO. 2, ANODE	F
NO. 3, FOCUS	A
NO. 4, FOCUS	E
NO CONNECTION	J
NO CONNECTION	H
HELIX	K
COLLECTOR	L

GENERAL ELECTRIC
POWER TUBE DEPARTMENT
Schenectady 5, N. Y.

PRELIMINARY
TECHNICAL INFORMATION

These ratings represent those of current samples of this type. Refer to the Objective Technical Information sheet for design-objective ratings.

DEVELOPMENTAL TYPE

This technical information is proprietary and is furnished only as a service to customers.

ZM-3161

TRAVELING-WAVE TUBE

1 Milliwatt Power Output
30 db Gain

4000 - 5250 Megacycles
Less Than 7 db Noise Figure

Permanent Magnet

The ZM-3161 is a ruggedized, low-noise traveling-wave tube for use in the 4000-to-5250-megacycle frequency range. It has a noise figure of less than 7 decibels across the band with a power output of 1 milliwatt.

The tube is of metal-and-ceramic construction and is supplied as a completely packaged assembly which includes a permanent-magnet focusing structure, connectors and housing. The entire assembly weighs approximately 11.5 pounds.

The low noise, high gain, freedom from tuning adjustments, and rugged construction are important features for application in military systems. The device is particularly useful as the input tube for radar receivers, where its low noise and protection to the crystal mixer are decided advantages. Other applications include electronic countermeasures equipment, microwave relay systems and radiometry.

ELECTRICAL

Frequency	4000 to 5250	Megacycles
Heater		
Voltage	6.3	Volts
Current, nominal	0.4	Ampere
A heater-voltage regulation of ±2 percent is recommended to realize optimum gain and noise figure.		
Focusing Method – Permanent Magnet		
Noise Figure *, maximum	7	Decibels
Small Signal Gain, minimum	30	Decibels
Saturation Power Output, nominal	1.0	Milliwatt
Collector Dissipation	1.0	Watt
Impedance, Coaxial	50	Ohms
Input, VSWR	Less than 2.5 to 1	
Output, VSWR	Less than 3.0 to 1	

MECHANICAL

Mounting Position – Any
Connectors
DC Socket – Winchester M10P-LSH-19 (or equivalent)
RF Connectors, Coaxial
Input – Type N, Female
Output – Type N, Female

Over-all Dimensions		
Length, approximate	9.25	Inches
Width, approximate	4.25	Inches
Height, approximate	4.25	Inches
Weight (Complete Assembly), approximate	11.5	Pounds

The specifications of this type are subject to change. Delivery of samples and the existence of these data do not imply continued availability of types with the same characteristics or dimensions. For the most recent information concerning the status of this device, please consult your local Power Tube Department Regional Sales Office.

THERMAL

Cooling – Convection

TYPICAL OPERATING CONDITIONS**

Electrode – No. 1 (Grid) Voltage	-10 to 0	Volts
Electrode – No. 2 (Anode) Voltage	10 to 30	Volts
Electrode – No. 3 Voltage	25 to 100	Volts
Electrode – No. 4 Voltage	50 to 200	Volts
Helix		
Voltage	150 to 275	Volts
Current, maximum	50	Microamperes
Collector Voltage	400 to 600	Volts
Beam Current	200 to 600	Microamperes

ENVIRONMENTAL

Shock (energized)	50 G for 11 milliseconds on each of three mutually perpendicular axes.
Vibration (operating)	0.06 inches double amplitude from 5 to 70 cycles per second and 15 G from 70 to 2000 cycles per second with sweep over 5 to 2000 cycles per second for 100 minutes on each of three mutually perpendicular axes.
Humidity (non-operating)	MIL-E-5272C, Paragraph 4.4.1 (Procedure I); i.e., non-operating tube in 95 per-cent relative humidity atmosphere for 10 days with temperature cycled slowly from approximately 30 C to 71 C each day.
Acoustic noise (operating)	135 decibels, 25 to 12,000 cycles per second random noise.
Altitude (operating)	100,000 feet mean sea level.
Operating temperature, ambient	-60 to +100 C

*Over band with the same operating voltages that provide minimum gain variation.
**All voltages may be isolated from ground; i.e., it is not necessary to operate the cathode, helix, collector, or any other electrode at ground potential. Voltages shown are measured with respect to cathode. For minimum noise and optimum gain characteristics, voltages should be adjusted within ranges specified by instructions accompanying each tube.

PERMANENT-MAGNET PRECAUTIONS

This tube uses a uniform-field permanent magnet as the focusing structure. A label on the tube specifies a nominal lower limit of two inches on magnetic material proximity. It must be realized that strong external magnets or large amounts of magnetic material at this distance may permanently damage the tube. A small screwdriver will not, while a large a-c transformer or a large sheet of steel at this distance may cause damage by defocusing the tube.

In addition, a related caution is important and must be remembered whenever handling a uniform-field tube. The permanent magnets of these tubes cause a large attractive force between the tube and magnetic material. Unless one is always careful to hold the tube and/or magnetic objects near the tube firmly, the result is sudden direct contact. The magnetic object may cause tube damage due to violations of the minimum spacing requirement.

For small steel hand tools, a two-inch limit is sufficient. For large magnetic objects with magnetic fields of their own, the lower minimum distance should be determined accurately by testing. To accomplish this, the tube may be secured to a suitable three-foot-long dielectric support and the tube case grounded. With the tube operating and its helix current being measured, the tube may be moved slowly by the dielectric support toward the magnetic object. (CAUTION: Appropriate electrical safety procedures should be followed at all times.) The minimum distance for which there is no degradation in r-f performance is the point at which the helix current starts to increase. If a slight degradation in noise figure can be accepted, the helix current may be allowed to increase somewhat as long as it stays below its operating maximum.

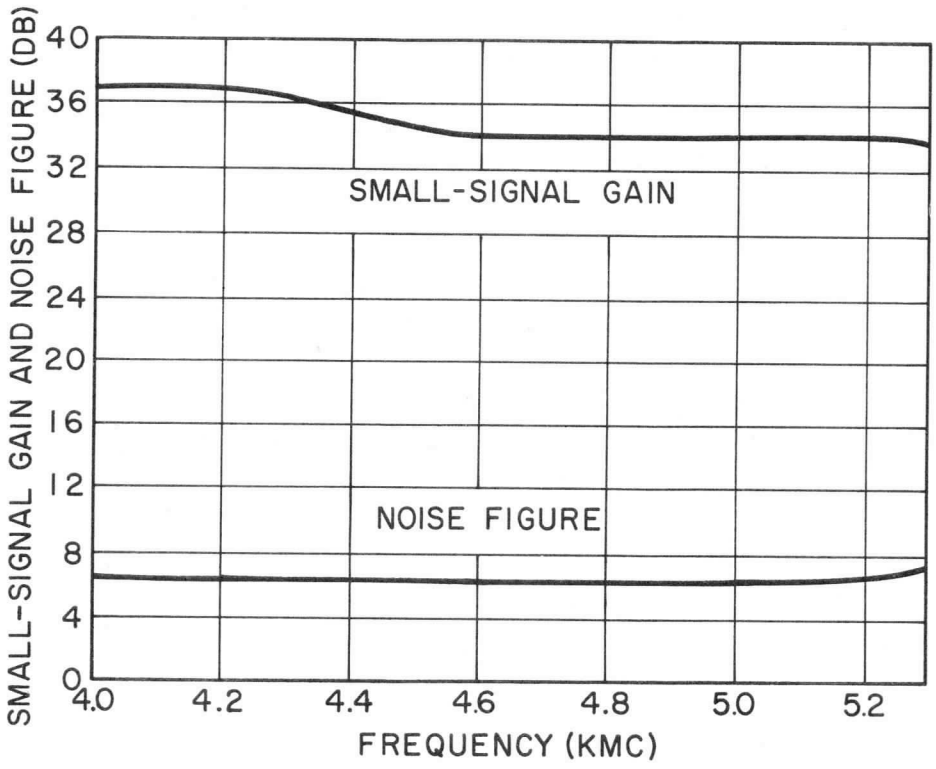

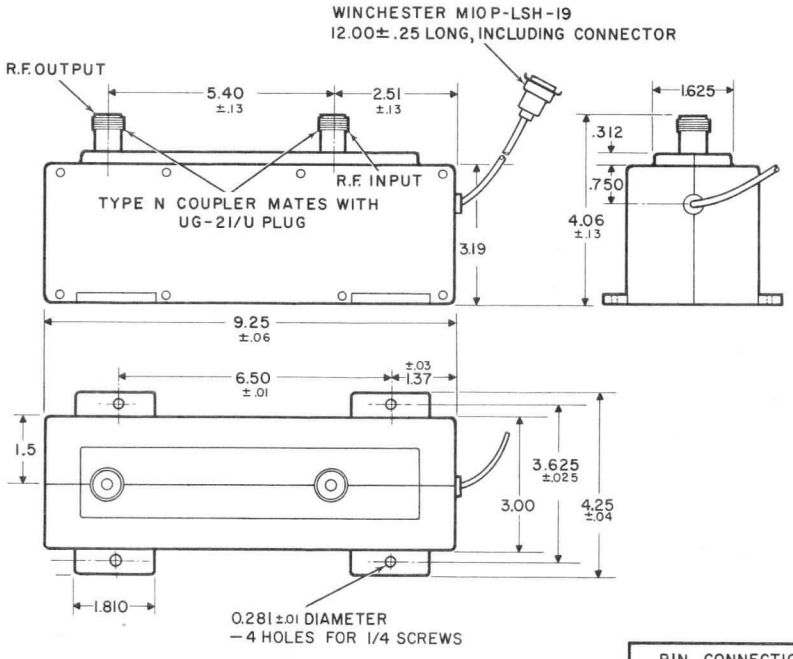

ALL DIMENSIONS ARE IN INCHES AND THOSE WITHOUT TOLERANCES ARE APPROXIMATE.

PIN CONNECTIONS M10P-LSH-19	
ELECTRODE	PIN
CATHODE	B
HEATER	D
NO. 1, GRID	C
NO. 2, ANODE	F
NO. 3, FOCUS	A
NO. 4, FOCUS	E
NO CONNECTION	J
NO CONNECTION	H
HELIX	K
COLLECTOR	L

GENERAL ELECTRIC
POWER TUBE DEPARTMENT
Schenectady 5, N. Y.

PRELIMINARY
TECHNICAL INFORMATION

These ratings represent those of current samples of this type. Refer to the Objective Technical Information sheet for design-objective ratings.

DEVELOPMENTAL TYPE
ZM-3162
PTI-101

11-15-62

This technical information is proprietary and is furnished only as a service to customers.

ZM-3162

TRAVELING-WAVE TUBE

1 Milliwatt Power Output
30 db Gain

4400 - 5000 Megacycles
Less Than 6.5 db Noise Figure

Permanent Magnet

The ZM-3162 is a ruggedized, low-noise traveling-wave tube for use in the 4400-to-5000-megacycle frequency range. It has a noise figure of less than 6.5 decibels across the band with a power output of 1 milliwatt.

The tube is of metal-and-ceramic construction and is supplied as a completely packaged assembly which includes a permanent-magnet focusing structure, connectors and housing. The entire assembly weighs approximately 11.5 pounds.

The low noise, high gain, freedom from tuning adjustments, and rugged construction are important features for application in military systems. The device is particularly useful as the input tube for radar receivers, where its low noise and protection to the crystal mixer are decided advantages. Other applications include electronic countermeasures equipment, microwave relay systems and radiometry.

ELECTRICAL

Frequency	4400 to 5000	Megacycles
Heater		
Voltage	6.3	Volts
Current, nominal	0.4	Ampere
A heater-voltage regulation of ±2 percent is recommended to realize optimum gain and noise figure.		
Focusing Method – Permanent Magnet		
Noise Figure *, maximum	6.5	Decibels
Small Signal Gain, minimum	30	Decibels
Saturation Power Output, nominal	1.0	Milliwatt
Collector Dissipation	1.0	Watt
Impedance, Coaxial	50	Ohms
Input, VSWR	Less than 2.5 to 1	
Output, VSWR	Less than 3.0 to 1	

MECHANICAL

Mounting Position – Any
Connectors
DC Socket – Winchester M10P-LSH-19 (or equivalent)
RF Connectors, Coaxial
Input – Type N, Female
Output – Type N, Female

Over-all Dimensions		
Length, approximate	9.25	Inches
Width, approximate	4.25	Inches
Height, approximate	4.25	Inches
Weight (Complete Assembly), approximate	11.5	Pounds

The specifications of this type are subject to change. Delivery of samples and the existence of these data do not imply continued availability of types with the same characteristics or dimensions. For the most recent information concerning the status of this device, please consult your local Power Tube Department Regional Sales Office.

THERMAL

Cooling – Convection

TYPICAL OPERATING CONDITIONS**

Electrode – No. 1 (Grid) Voltage	-10 to 0	Volts
Electrode – No. 2 (Anode) Voltage	10 to 30	Volts
Electrode – No. 3 Voltage	25 to 100	Volts
Electrode – No. 4 Voltage	50 to 200	Volts
Helix		
Voltage	150 to 275	Volts
Current, maximum	50	Microamperes
Collector Voltage	400 to 600	Volts
Beam Current	200 to 600	Microamperes

ENVIRONMENTAL

Shock (energized)	50 G for 11 milliseconds on each of three mutually perpendicular axes.
Vibration (operating)	0.06 inches double amplitude from 5 to 70 cycles per second and 15 G from 70 to 2000 cycles per second with sweep over 5 to 2000 cycles per second for 100 minutes on each of three mutually perpendicular axes.
Humidity (non-operating)	MIL-E-5272C, Paragraph 4.4.1 (Procedure I); i.e., non-operating tube in 95 per-cent relative humidity atmosphere for 10 days with temperature cycled slowly from approximately 30 C to 71 C each day.
Acoustic noise (operating)	135 decibels, 25 to 12,000 cycles per second random noise.
Altitude (operating)	100,000 feet mean sea level.
Operating temperature, ambient	-60 to +100 C

*Over band with the same operating voltages that provide minimum gain variation.

**All voltages may be isolated from ground; i.e., it is not necessary to operate the cathode, helix, collector, or any other electrode at ground potential. Voltages shown are measured with respect to cathode. For minimum noise and optimum gain characteristics, voltages should be adjusted within ranges specified by instructions accompanying each tube.

PERMANENT-MAGNET PRECAUTIONS

This tube uses a uniform-field permanent magnet as the focusing structure. A label on the tube specifies a nominal lower limit of two inches on magnetic-material proximity. It must be realized that strong external magnets or large amounts of magnetic material at this distance may permanently damage the tube. A small screwdriver will not, while a large a-c transformer or a large sheet of steel at this distance may cause damage by defocusing the tube.

In addition, a related caution is important and must be remembered whenever handling a uniform-field tube. The permanent magnets of these tubes cause a large attractive force between the tube and magnetic material. Unless one is always careful to hold the tube and/or magnetic objects near the tube firmly, the result is sudden direct contact. The magnetic object may cause tube damage due to violations of the minimum spacing requirement.

For small steel hand tools, a two-inch limit is sufficient. For large magnetic objects with magnetic fields of their own, the lower minimum distance should be determined accurately by testing. To accomplish this, the tube may be secured to a suitable three-foot-long dielectric support and the tube case grounded. With the tube operating and its helix current being measured, the tube may be moved slowly by the dielectric support toward the magnetic object. (CAUTION: Appropriate electrical safety procedures should be followed at all times.) The minimum distance for which there is no degradation in r-f performance is the point at which the helix current starts to increase. If a slight degradation in noise figure can be accepted, the helix current may be allowed to increase somewhat as long as it stays below its operating maximum.

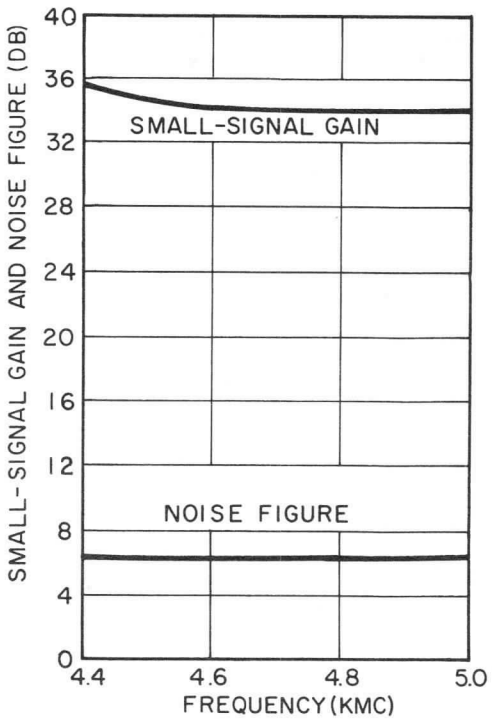

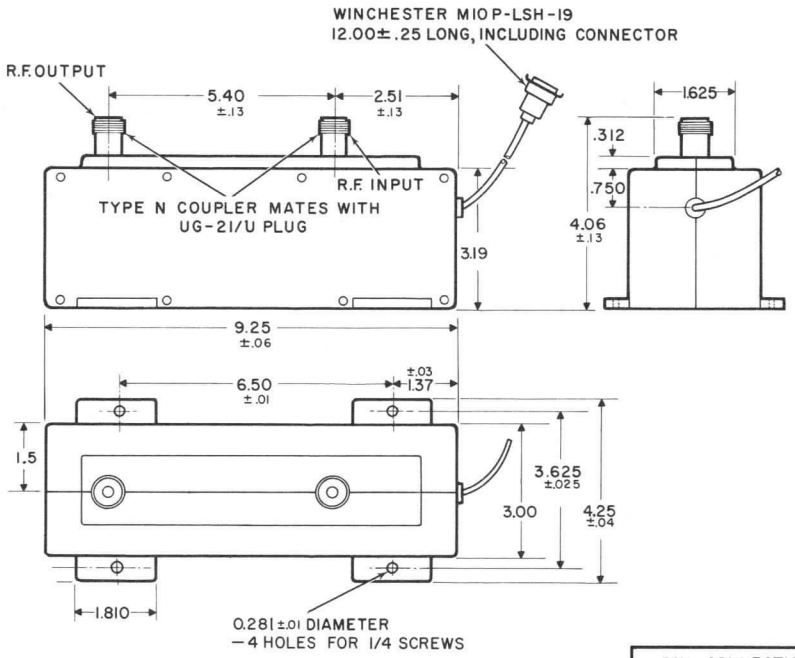

ALL DIMENSIONS ARE IN INCHES AND THOSE WITHOUT TOLERANCES ARE APPROXIMATE.

PIN CONNECTIONS MIOP-LSH-19	
ELECTRODE	PIN
CATHODE	B
HEATER	D
NO. 1, GRID	C
NO. 2, ANODE	F
NO. 3, FOCUS	A
NO. 4, FOCUS	E
NO CONNECTION	J
NO CONNECTION	H
HELIX	K
COLLECTOR	L

GENERAL ELECTRIC
POWER TUBE DEPARTMENT
Schenectady 5, N. Y.

PRELIMINARY
TECHNICAL INFORMATION

These ratings represent those of current samples of this type. Refer to the Objective Technical Information sheet for design-objective ratings.

DEVELOPMENTAL TYPE

This technical information is proprietary and is furnished only as a service to customers.

ZM-3166

TRAVELING-WAVE TUBE

10 Watts CW Output | 25 db Saturation Gain | 13,000-17,000 Megacycles

Electromagnet

The ZM-3166 is a ruggedized, medium-power, broadband traveling-wave tube for use in the 13,000-to-17,000-megacycle frequency range. It has a saturation gain greater than 25 decibels across the entire band and a CW output of 10 watts.

The tube is of metal-and-ceramic construction and is supplied as a complete packaged assembly which includes the focusing electromagnet, tube, and housing. The entire assembly weighs approximately 20 pounds.

The broad bandwidth, high gain, freedom from tuning adjustments, grid control, and rugged construction make this tube particularly useful in military systems. Applications include CW amplification in radar, electronic countermeasures equipment, microwave relay systems, and radiometry.

Unless otherwise noted, voltages are with respect to the anode which is connected to the solenoid housing and the body of the tube. These parts of the tube should be grounded.

	Minimum	Bogey	Maximum	
ELECTRICAL				
Frequency*	13,000	–	17,000	Megacycles
Heater				
Voltage †	–	6.3	–	Volts
Current	–	0.65	–	Amperes
Focusing Method – Electromagnet				
Saturation Gain	25	30	–	Decibels
Small Signal Gain	34	–	–	Decibels
Saturation Power Output, CW	10	10	–	Watts
Collector Dissipation	–	–	250	Watts
Collector Voltage	–	–	–	
Waveguide VSWR				
Input	–	–	3.0 to 1	
Output	–	–	3.0 to 1	
MECHANICAL				
Mounting Position – Any				
Over-all Dimensions, approximate				
Length			11.0	Inches
Diameter			4.5	Inches
Connectors				
RF Input – UG-419/U				
RF Output – UG-419/U				
Cathode-heater, Heater, Focusing Electrode, Helix, Collector – Flying Leads				
Weight, Tube and Electromagnet, approximate			20	Pounds

The specifications of this type are subject to change. Delivery of samples and the existence of these data do not imply continued availability of types with the same characteristics or dimensions. For the most recent information concerning the status of this device, please consult your local Power Tube Department Regional Sales Office.

THERMAL

Cooling - Liquid**		
Flow Rate, minimum (Coolant 50 C or less)	1	Gallon per Minute
Pressure Drop	30-40	Pounds per Square Inch Gage

TYPICAL OPERATING CONDITIONS

	Minimum	Bogey	Maximum	
Cathode Voltage ‡	-4200	-3900	-3700	Volts
Focusing Electrode Voltage, with Respect to Cathode				
Operating †	-15	-5	0	Volts
Cutoff	-500	-450	-400	Volts
Collector Voltage	0	0	0	Volts
Cathode Current	50	55	65	Milliamperes
Solenoid				
Voltage #	–	85	–	Volts
Current †	5.5	7.0	8.0	Amperes
Helix				
Voltage	–	–	–	
Current ¶	–	0.3	4.0	Milliamperes

*The power-output and gain curves indicate performance possible at rated bandwidth. Increased performance can be obtained under narrow-band operation. For further information consult your nearest Power Tube Department sales office.

†For the bogey performance ratings specified on this sheet, these parameters should be set at the particular value specified in the instructions accompanying each tube. The value specified will be within the range given above. The specific value of heater voltage should be held within plus or minus five percent.

‡The cathode voltage may be set at various values between -3700 and -4200 volts to obtain different power and gain characteristics.

**Coolanol ***45 or equivalent. Tubes for water cooling can be supplied on special order.

#Solenoid voltage depends upon coolant temperature.

¶Since current in excess of the maximum will seriously damage the tube an overcurrent device should be provided for protection.

***Registered Trademark of Monsanto Chemical Company.

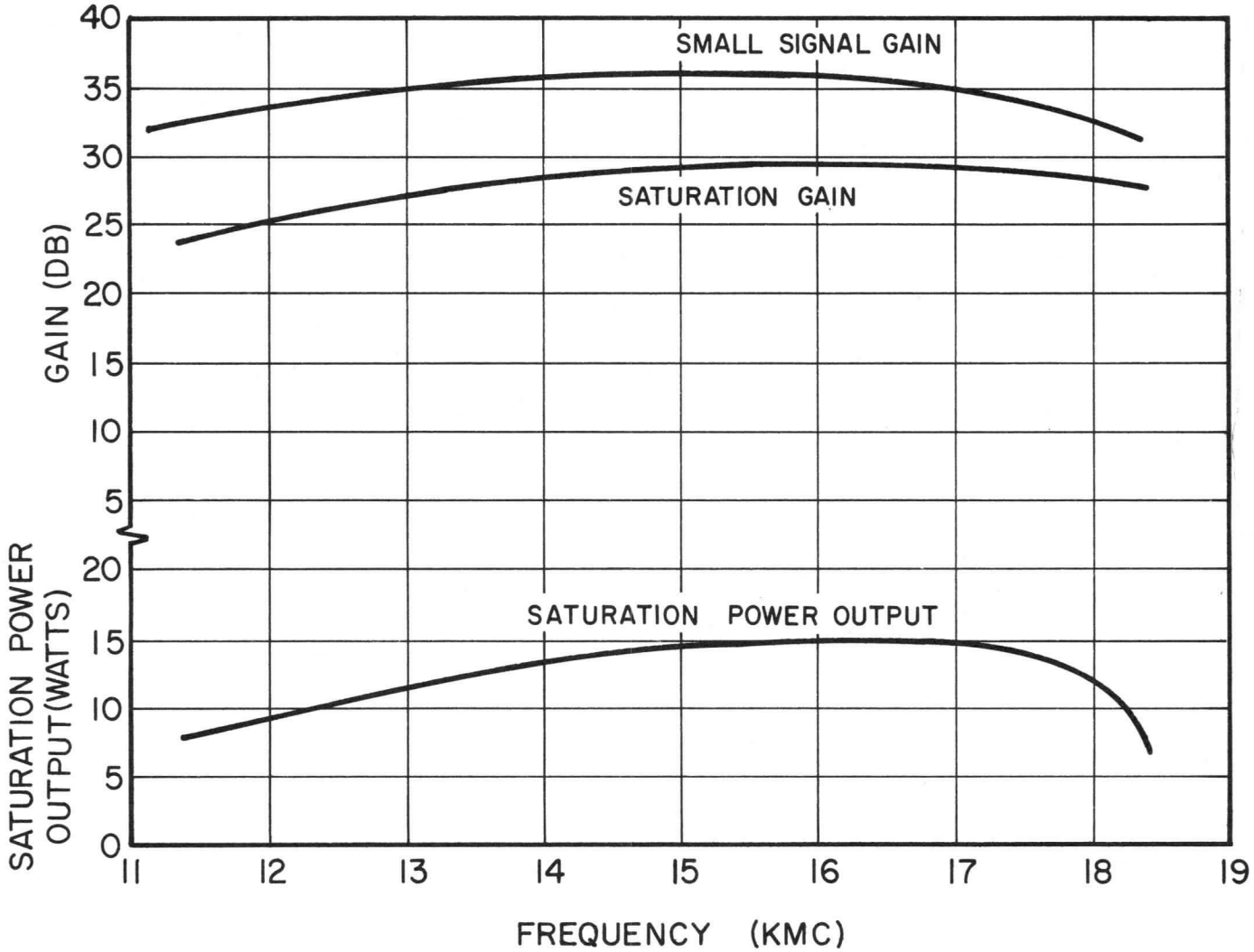
SMALL SIGNAL GAIN
SATURATION GAIN
SATURATION POWER OUTPUT
GAIN (DB)
SATURATION POWER OUTPUT (WATTS)
FREQUENCY (KMC)
40
35
30
25
20
15
10
5
20
15
10
5
0
11
12
13
14
15
16
17
18
19

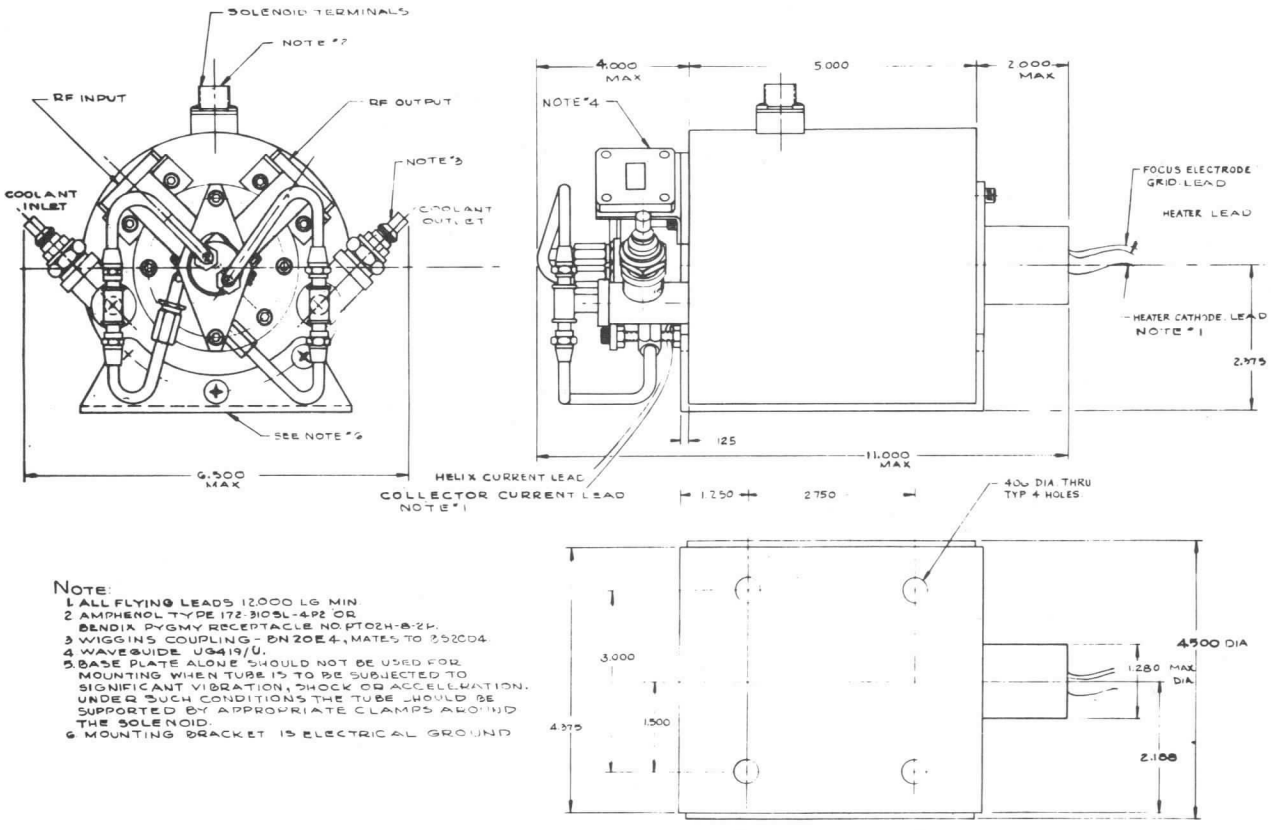

NOTE:
1. ALL FLYING LEADS 12.000 LG MIN.
2. AMPHENOL TYPE 172-3105L-4P2 OR BENDIX PYGMY RECEPTACLE NO. PT02H-8-2P.
3. WIGGINS COUPLING - BN 20E4 - MATES TO 2.920D4.
4. WAVEGUIDE UG419/U.
5. BASE PLATE ALONE SHOULD NOT BE USED FOR MOUNTING WHEN TUBE IS TO BE SUBJECTED TO SIGNIFICANT VIBRATION, SHOCK OR ACCELERATION. UNDER SUCH CONDITIONS THE TUBE SHOULD BE SUPPORTED BY APPROPRIATE CLAMPS AROUND THE SOLENOID.
6. MOUNTING BRACKET IS ELECTRICAL GROUND

GENERAL ELECTRIC
POWER TUBE DEPARTMENT
Schenectady 5, N. Y.

PRELIMINARY
TECHNICAL INFORMATION

These ratings represent those of current samples of this type. Refer to the Objective Technical Information sheet for design-objective ratings.

DEVELOPMENTAL TYPE

This technical information is proprietary and is furnished only as a service to customers.

ZM-3167

TRAVELING-WAVE TUBE

10 Kilowatts Peak Output | 51 db Saturation Gain | 5400-5900 Megacycles

Periodic Permanent Magnet | Ring-bar Helix

The ZM-3167 is a ruggedized, high-power, broadband traveling-wave tube for use in the 5400-to-5900-megacycle frequency range. It has a saturation gain of 51 decibels with a peak power output of 10 kilowatts.

The tube is of metal-and-ceramic construction, uses a ring-bar radio-frequency circuit, and is supplied as a complete packaged assembly which includes the tube, the periodic-permanent-magnet focusing structure, and the r-f connectors. The periodic permanent magnets do not require temperature compensation. The entire assembly weighs approximately 16 pounds.

The broad bandwidth, high gain, freedom from tuning adjustments, and rugged construction make this tube particularly useful in military systems. Applications include pulse amplification in radar, electronic countermeasures equipment, and similar systems, including phased-array radars.

Anode and collector are connected to the body of the tube which should be grounded.

ELECTRICAL

	Minimum	Bogey	Maximum	
Frequency	5400	–	5900	Megacycles
Heater				
Voltage*	4.0	4.5	5.0	Volts
Current	–	4	–	Amperes
Focusing Method – Periodic Permanent Magnet				
Saturation Gain	51	–	–	Decibels
Saturation Power Output, peak	5	–	10	Kilowatts
Duty Cycle**	–	–	0.002	
Pulse Length	–	–	6.0	Microseconds
Cathode Voltage †	-15	-16	-17	Kilovolts
Cathode Current	–	4.0	–	Amperes
Collector Current, peak	–	3.25	–	Amperes
Helix Current, peak	–	0.75	–	Amperes
Cathode-to-Anode Capacitance	–	12	–	*uuf*
Phase Shift	–	22	–	Degrees per One Percent Change in Beam Voltage
Ion-Pump Voltage	–	2800	–	Volts
Waveguide VSWR				
Input	–	–	2.5 to 1	
Output	–	–	2.5 to 1	

The specifications of this type are subject to change. Delivery of samples and the existence of these data do not imply continued availability of types with the same characteristics or dimensions. For the most recent information concerning the status of this device, please consult your local Power Tube Department Regional Sales Office.

MECHANICAL

Mounting Position – Any

Over-all Dimensions, approximate		
Length	21.50	Inches
Diameter	3.0	Inches
Weight, approximate	16	Pounds

Connectors
RF Input – Low Height C-band WG or Type N Coaxial Connector (choice optional)
RF Output – Low Height C-band WG or Type N Coaxial Connector (choice optional)
Cathode-Heater, Heater – Special

THERMAL**

Cooling – Forced Air on Both Collector and Cathode

* For the bogey performance ratings specified on this sheet, the heater voltage should be set at the particular value specified in the instructions accompanying each tube. The value specified will be within the range given above. DC is recommended for the heater.

** Duty is 0.002 when forced-air cooling is used. With liquid cooling on collector and body, duty can be increased to 0.01. Convection cooling of collector may be used at duty cycle of 0.0008.

† The cathode voltage, which is with respect to the anode, may be set at various values between -15 and -18 kilovolts to obtain different power and gain characteristics.

NOTE: The high-voltage bushing need not be immersed in oil.

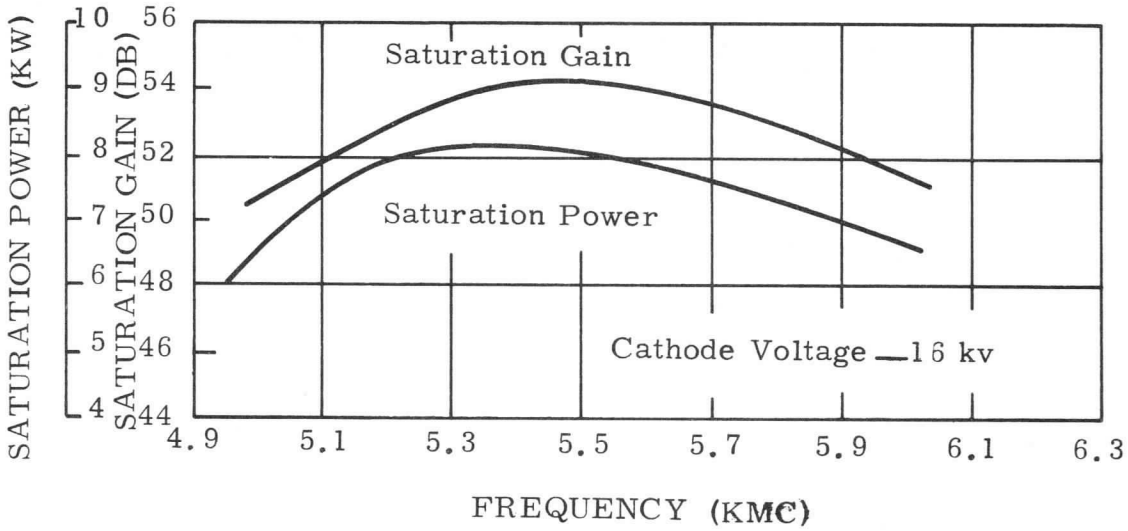

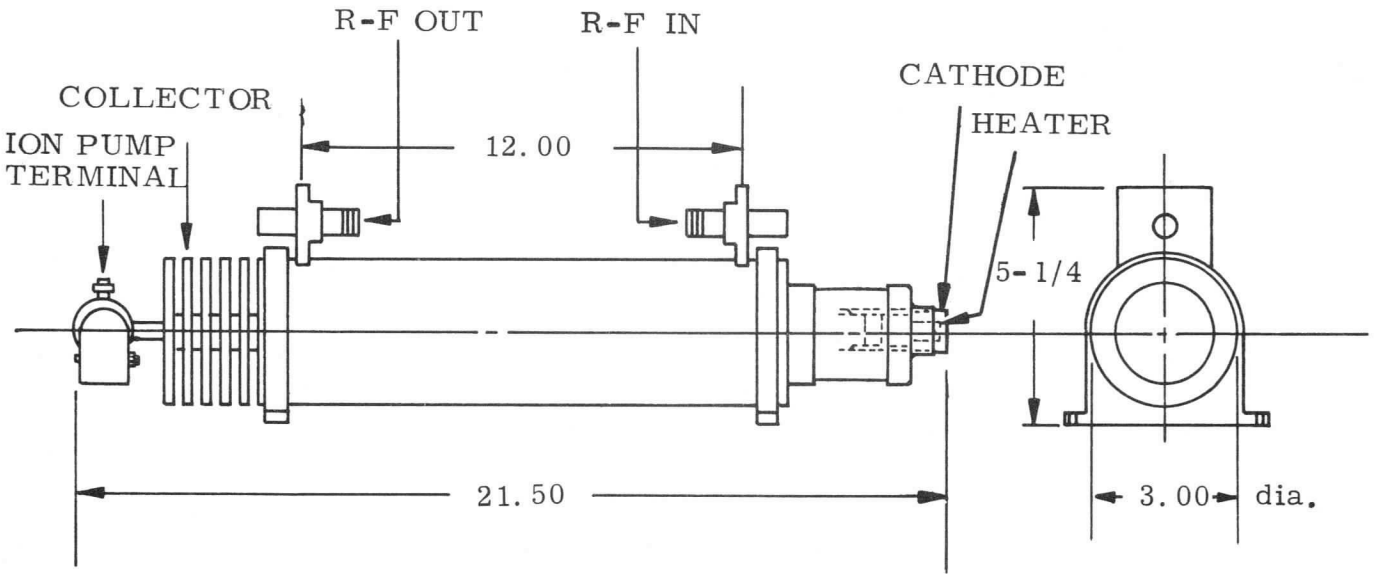

DIMENSIONS ARE IN INCHES

ZM-3167

Traveling-Wave Tubes

Technical Information

- HIGH POWER
- C-BAND
- PPM FOCUSING

RF PERFORMANCE

Tube Type	Frequency Range (Gc)	Min. Peak Saturated Power Output, (kw)	Maximum Duty	Maximum Pulse Width (μ sec)	Minimum Saturated Gain (db)
ZM-3167	5.4 - 5.9	5	0.002	10	51

FEATURES

- high gain
- broad bandwidth
- periodic permanent magnet focusing
- metal-ceramic construction
- ring-bar circuit
- military environments
- light weight

APPLICATIONS

- radar
- ecm

MECHANICAL & MISCELLANEOUS

VSWR, max, cold	
Input	3.0
Output	3.0
Cath.-to-ground pf (max)	20
Phase Shift, deg/1% change in cathode voltage (max)	45
Weight, lb. max	13
Over-all length, in.	20
Mounting position	Any
Cooling	Forced air on coll.
Flow, cfm min.	20
Connectors	
RF input	N, female
RF output	N, female

TYPICAL CHARACTERISTICS

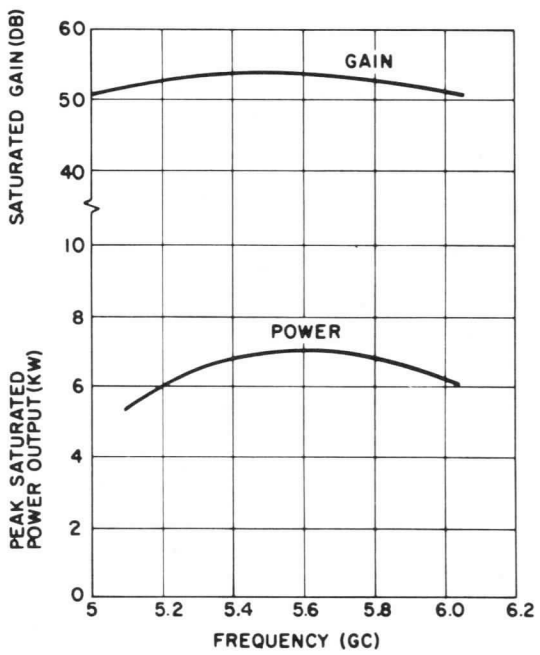

GENERAL ELECTRIC

OPERATING CONDITIONS * †

Htr. v ac or dc	6.3
Htr. amp (max.)	3.5
Cath. kv dc**	
with resp. to anode	-14 to -16
Peak cath. amp	4.5

OUTLINE

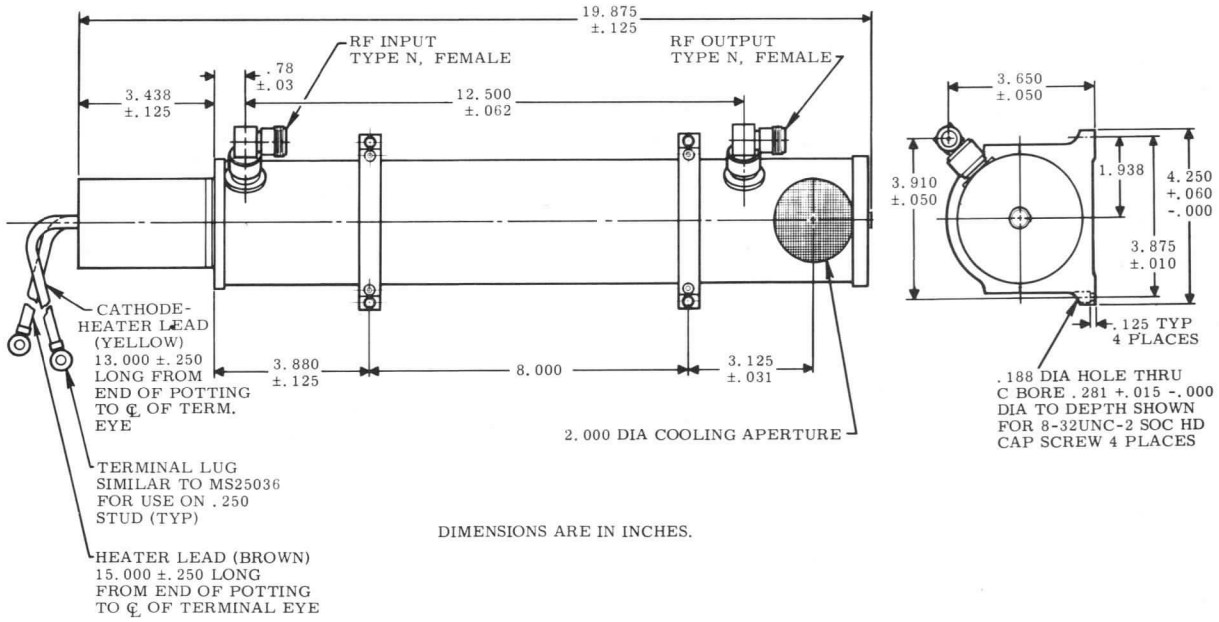

DIMENSIONS ARE IN INCHES.

NOTES

* For the performance ratings specified, the cathode voltage should be adjusted to the value specified by instructions accompanying each tube. This value will be within the range given above.

† The cathode voltage may be set at various values between -14 and -16 kv to obtain different power and gain characteristics.

** The anode, r-f circuit, and collector are connected to the tube package which should be grounded.

TUBE DEPARTMENT

GENERAL ELECTRIC

Owensboro, Kentucky

ZM-3172

Traveling-Wave Tubes

Technical Information

- MEDIUM POWER
- X-BAND
- PPM FOCUSING

RF PERFORMANCE

Tube Type	Frequency Range (Gc)	Min. CW Saturated Power Output (watts)	Min. Peak Power Output (watts)	Minimum Small Signal Gain (db)	Maximum Noise Figure (db)
ZM-3172	7-11	5	10 at 0.10 max. duty	30	30

FEATURES

- high gain
- broad bandwidth
- periodic permanent magnet focusing
- metal-ceramic construction
- military environments
- light weight
- air cooling
- grid control

APPLICATIONS

- radar
- ecm
- communications
- instrumentation

MECHANICAL & MISCELLANEOUS

VSWR, max	
Input	2.5
Output	2.5
Mounting position	Any
Weight, lb.	2.1
Overall length, in.	8.55
Cooling	Forced air
Flow, cfpm#	30
Max. inlet air temp., °C	25
Min. air press. in ft. (alt.)	10,000
Connectors	
RF input	TNC, female
RF output	TNC, female
DC	Flying leads

TYPICAL CHARACTERISTICS

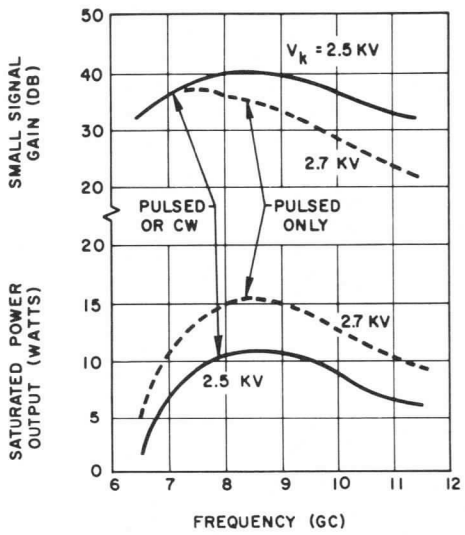

GENERAL ELECTRIC

OPERATING CONDITIONS* †

Htr. vac or vdc	6.0 to 7.5
Htr. amp (max)	0.75
Cath. kv dc, with resp. to helix	-2.3 to -2.7
Cath. ma, (max)**	40
Anode 1 vdc, with resp. to cathode	400 to 550
Coll. vdc, with resp. to helix	0
Helix ma (max.)	5
Grid vdc	
Operating, with resp. to cath.	60 to 100
Cutoff, with resp. to cath.	-18 to -22
Grid ma	
Peak (max)	10
CW (max)	6

ENVIRONMENTAL

Shock (energized)	30 G, 11 ms, 3 axes
Vibration (operating)	10 G, 70-2000 cps, 3 axes
Temp., ambient (operating)	-40 to +85°C
Altitude (operating)	100,000 ft
Acoustic noise	135 db, 25 to 12,000 cps

OUTLINE

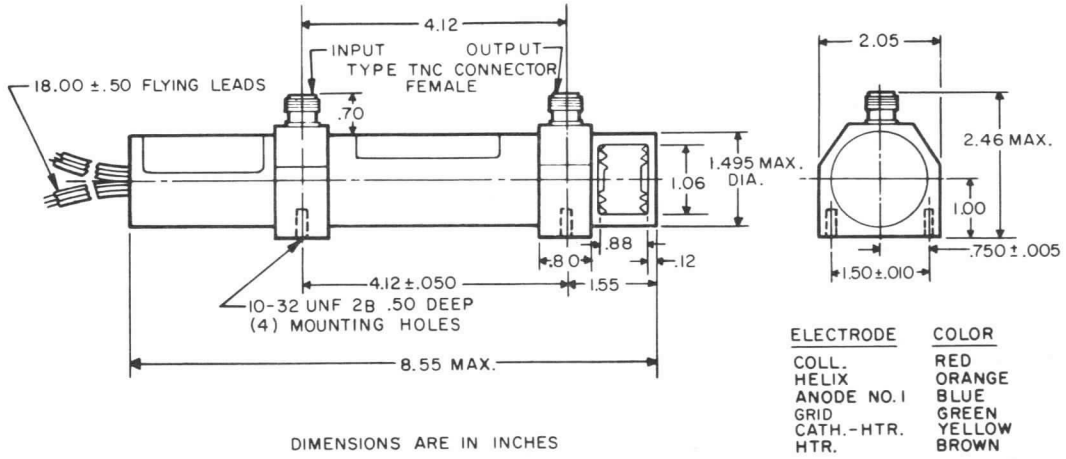

DIMENSIONS ARE IN INCHES

ELECTRODE	COLOR
COLL.	RED
HELIX	ORANGE
ANODE NO. 1	BLUE
GRID	GREEN
CATH.-HTR.	YELLOW
HTR.	BROWN

NOTES

\# Sufficient air must be supplied to this tube to hold the collector temperature below 150°C.

* For the performance ratings specified, voltages should be adjusted to values specified by instructions accompanying each tube. These values will be within the ranges given above.

† The helix is connected to the package which should be grounded in the normal installation of this tube.

** Under light duty (less than 0.1) a peak power output of 10 watts may be obtained. Cathode current may go as high as 50 ma under these conditions.

These data are subject to change without notice.

TUBE DEPARTMENT

GENERAL ELECTRIC

Owensboro, Kentucky

ZM-3173

Traveling-Wave Tubes

Technical Information

- MEDIUM POWER
- X-BAND
- PPM FOCUSING

RF PERFORMANCE

Tube Type	Frequency Range (Gc)	Min. CW Saturated Power Output (watts)	Minimum Small Signal Gain (db)	Maximum Noise Figure (db)
ZM-3173	7-11	10	30	30

FEATURES

- high gain
- broad bandwidth
- periodic permanent magnet focusing
- metal-ceramic construction
- military environments
- light weight
- air cooling
- no anode power source required

APPLICATIONS

- radar
- ecm
- communications
- instrumentation

MECHANICAL & MISCELLANEOUS

VSWR, max	
Input	2.5
Output	2.5
Mounting position	Any
Weight, lb.	2.1
Overall length, in.	8.55
Cooling	Forced air
Flow, cfpm#	30
Max, inlet air temp., °C	25
Min. air press. in ft (alt.)	10,000
Connectors	
RF input	TNC, female
RF output	TNC, female
DC	Flying leads

TYPICAL CHARACTERISTICS

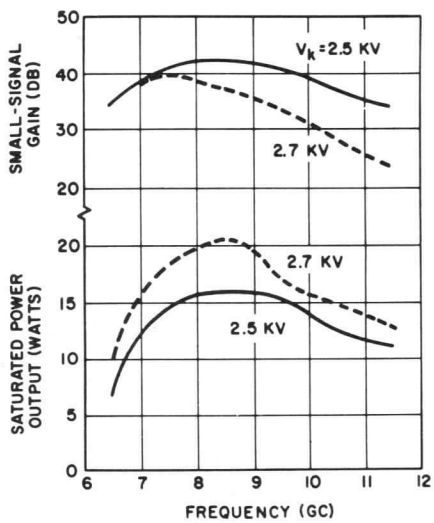

GENERAL ELECTRIC

OPERATING CONDITIONS*†

Htr. vac or vdc	6.0 to 7.5
Htr. amp (max)	0.75
Cath. kv dc, with resp. to helix	-2.3 to -2.7
Cath. ma, (max)	55
Focus elect. vdc, with resp. to cathode	0 to -20
Coll. vdc, with resp. to helix	0
Helix ma (max.)	5

ENVIRONMENTAL

Shock (energized)	30 G, 11 ms, 3 axes
Vibration (operating)	10 G, 70-2000 cps, 3 axes
Temp., ambient (operating)	-40 to +85°C
Altitude (operating)	100,000 ft
Acoustic noise (operating)	135 db, 25 to 12,000 cps

OUTLINE

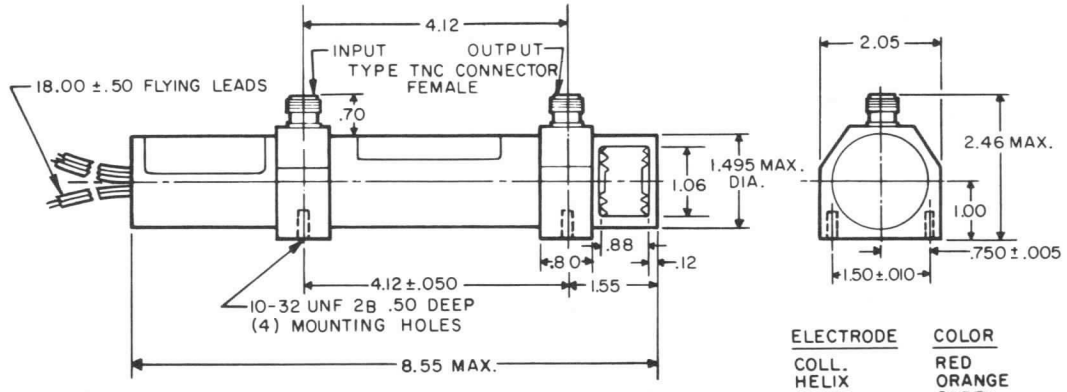

ELECTRODE	COLOR
COLL.	RED
HELIX	ORANGE
FOCUS	GREEN
CATH.-HTR.	YELLOW
HTR.	BROWN

DIMENSIONS ARE IN INCHES

NOTES

\# Sufficient air must be supplied to this tube to hold the collector temperature below 150°C.

* For the performance ratings specified, voltages should be adjusted to values specified by instructions accompanying each tube. These values will be within the ranges given above.

† The helix is connected to the package which should be grounded in the normal installation of this tube.

These data are subject to change without notice.

TUBE DEPARTMENT

GENERAL ELECTRIC

Owensboro, Kentucky

GENERAL ELECTRIC
POWER TUBE DEPARTMENT
Schenectady 5, N. Y.

OBJECTIVE
TECHNICAL INFORMATION

These ratings represent the design objective for this product. Refer to the Preliminary Technical Information sheet for ratings currently achieved in the progression towards design objectives. If PTI sheets do not exist, consult your local Power Tube Department Regional Sales Office.

DEVELOPMENTAL TYPE

ZM-3174
OTI-81
Page 1
2-1-63

This technical information is proprietary and is furnished only as a service to customers.

ZM-3174

TRAVELING-WAVE TUBE

1 Kilowatt Peak Output | 40 db Saturation Gain | 5400-5900 Megacycles

Periodic Permanent Magnet | Ring-bar Helix

The ZM-3174 is a ruggedized, high-power, gridded, broad-band traveling-wave tube for use in the 5400-to-5900-megacycle frequency range. It has a minimum saturation gain of 40 decibels with a minimum peak power output of 1 kilowatt.

The tube is of metal-and-ceramic construction, uses a ring-bar radio-frequency circuit, and is supplied as a complete packaged assembly which includes the tube, the periodic-permanent-magnet focusing structure, and the r-f connectors. The periodic permanent magnets do not require temperature compensation. The entire assembly weighs approximately 6 pounds.

The broad bandwidth, high gain, freedom from tuning adjustments, and rugged construction make this tube particularly useful in military systems. Applications include pulse amplification in radar, electronic counter-measures equipment, and similar systems, including phased-array radars.

Unless otherwise noted, voltages are with respect to the anode which is connected to the body of the tube. The body of the tube should be grounded.

ELECTRICAL

	Minimum	Bogey	Maximum	
Frequency	5400	--	5900	Megacycles
Heater				
Voltage	--	6.3	--	Volts
Current	--	1.1	--	Amperes
Focusing Method – Periodic Permanent Magnet				
Saturation Gain	40	--	--	Decibels
Saturation Power Output, peak	1	--	--	Kilowatts
Duty Cycle	--	--	0.01	
Pulse Length	--	--	10.0	Microseconds
Cathode Voltage*	-8	-9	-10	Kilovolts
Cathode Current, Peak	--	1.0	--	Amperes
Grid to Cathode Capacitance	--	12	--	μμf
Grid to Anode Capacitance	--	4	--	μμf
Ion-Pump Voltage	--	2800	--	Volts
Impedance, Coaxial	--	--	50	Ohms
Input VSWR	--	--	2.5 to 1	
Output VSWR	--	--	2.5 to 1	

MECHANICAL

Mounting Position – Any		
Over-all Dimensions, approximate		
Length	13.25	Inches
Diameter	2.38	Inches
Weight, approximate	6	Pounds

The specifications of this type are subject to change. This device is now under development and is made available for experimental purposes only. For the most recent information concerning the status of this development, please consult your local Power Tube Department Regional Sales Office, or current Preliminary Technical Information for the same catalog number.

MECHANICAL (Cont'd)

Connectors
RF Input – Type TNC Coaxial
RF Output – Type TNC Coaxial
Cathode-Heater, Heater, Grid, Collector and Ion Pump – Flying Leads

THERMAL

Cooling – Liquid

TYPICAL OPERATING CONDITIONS

	Minimum	Bogey	Maximum	
Grid-Bias Voltage, With Respect to Cathode	--	-250	--	Volts
Grid Swing, With Respect to Grid Bias Voltage	--	500	--	Volts
Grid Current, Peak	--	0.1	--	Amperes
Collector Voltage	--	0	--	Kilovolts

*The cathode voltage may be set at various values between -8 and -10 kilovolts to obtain different power and gain characteristics.

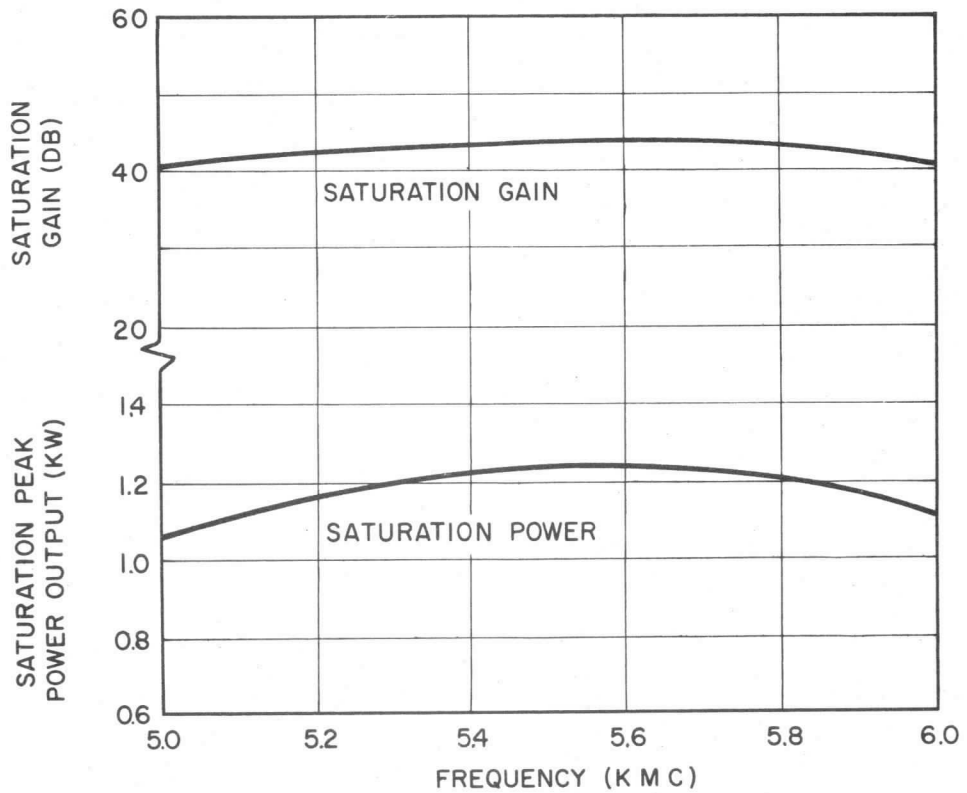

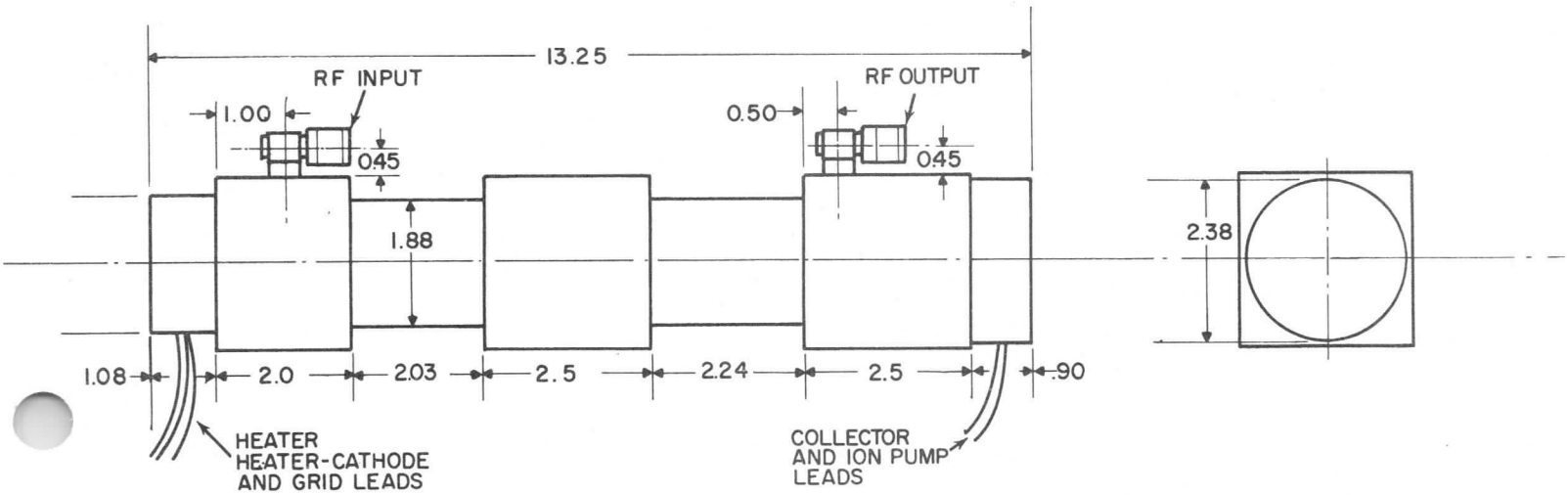

DIMENSIONS ARE IN INCHES AND ARE APPROXIMATE

ZM-3174

Traveling-Wave Tubes

Technical Information

- HIGH POWER
- C-BAND
- PPM FOCUSING

RF PERFORMANCE

Tube Type	Frequency Range (Gc)	Min. Peak Saturated Power Output, (kw)	Maximum Duty	Maximum Pulse Width (μ sec)	Minimum Saturated Gain (db)
ZM-3174	5.4-6.2	1	0.01	10	40

FEATURES

high gain
broad bandwidth
periodic permanent magnet focusing
metal-ceramic construction
ring-loop circuit
military environments
light weight
grid control
conduction cooling

APPLICATIONS

radar
ecm
instrumentation
satellite telemetry

MECHANICAL & MISCELLANEOUS

VSWR, max	
Input	2.5
Output	2.5
Grid-to-other elements $\mu\mu$f (max)	20
Phase Shift, deg/1% change in cathode voltage (max)	30
Weight, lb.	5
Overall length, in.	11.8
Mounting position	Any
Cooling	Conduction from base#
Connectors	
RF input	Mates with Omni-Spectra OSM-201 or equiv.
RF output	Mates with Omni-Spectra OSM hi-volt plug or equiv.
DC	Flying leads

TYPICAL CHARACTERISTICS

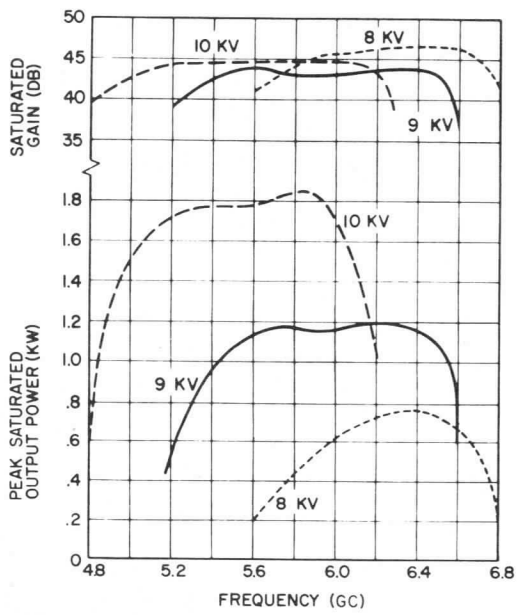

GENERAL ELECTRIC

OPERATING CONDITIONS* †

Htr. vac or vdc	6.3
Htr. amp (max)	1.4
Cath. kv dc with resp. to anode	-9 to -10
Peak cath. amp (max)	1.2
Grid-bias vdc, with resp. to cath.	-300 to -350
Grid swing vdc, with resp. to grid-bias voltage	375 to 450
Peak grid amp (max)	0.2
Coll. kv dc**, with resp. to anode	0
Ion pump vdc	2800

ENVIRONMENTAL

Shock (energized)	35 G, 12 ms, 3 axes
Vibration (operating)	15 G, 60-3000 cps, 3 axes
Acceleration (operating)	30 G, 1 min, 3 axes
Temp., ambient	
(operating)	-55 to +85°C
(storage)	-55 to +125°C
Altitude (operating)	120,000 ft

OUTLINE

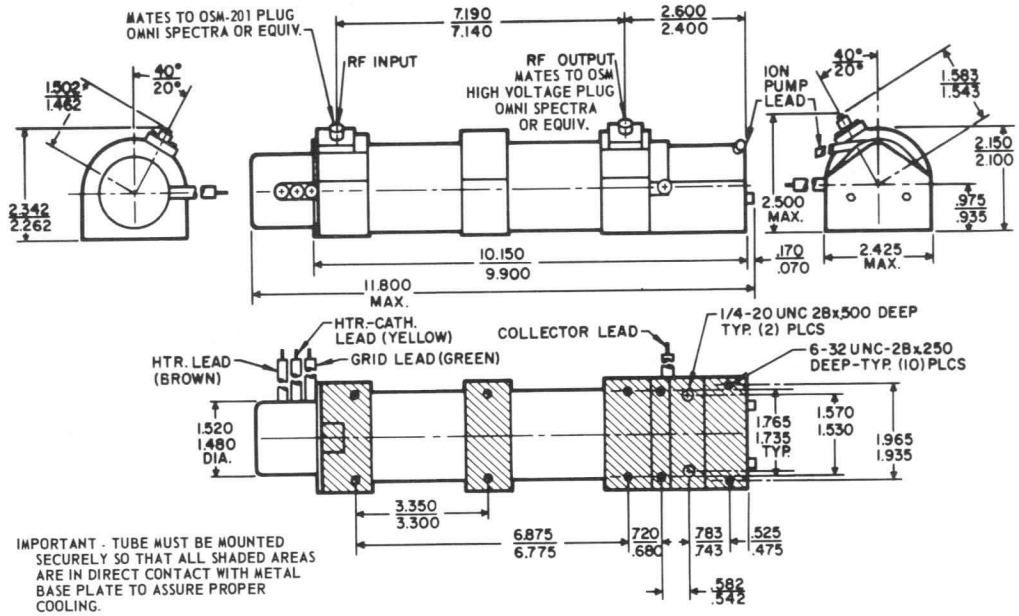

NOTES

\# To assure adequate cooling this tube must be securely mounted with maximum contact area to a good heat-conducting surface of sufficient heat capacity. Do not allow mounting surface temperature to exceed 115°C with tube operating at 1 kw, 0.01 duty.

* For the performance ratings specified, voltages should be adjusted to values specified by instructions accompanying each tube. These values will be within the ranges given above.

† The cathode voltage may be set at various values between -8 and -10.5 kv to obtain different power and gain characteristics.

** A modified version of the ZM-3174 with depressed collector is available.

These data are subject to change without notice.

TUBE DEPARTMENT

GENERAL ELECTRIC

Owensboro, Kentucky

GENERAL ELECTRIC
POWER TUBE DEPARTMENT
Schenectady 5, N. Y.

PRELIMINARY
TECHNICAL INFORMATION

These ratings represent those of current samples of this type. Refer to the Objective Technical Information sheet for design-objective ratings.

DEVELOPMENTAL TYPE

This technical information is proprietary and is furnished only as a service to customers.

ZM-3178

TRAVELING-WAVE TUBE

9 db Noise Figure, Maximum	Metal-Ceramic	7 to 11 Gigacycles
25 db Gain, Minimum	Single Reversal PM Focused	5 Milliwatts Output

The ZM-3178 is a ruggedized, low-noise, low-power, broadband traveling-wave tube with noise figure, gain, and power-performance specifications which apply over the entire frequency rating. The tube is of metal-and-ceramic construction and is supplied as a completely packaged assembly which includes a single-reversal permanent-magnet focusing structure, connectors, and housing. The entire assembly weighs approximately 8.6 pounds.

The broad bandwidth, low noise, high gain, freedom from tuning adjustments, and rugged construction are important features for application in military systems. Applications include radar transmitters and receivers, electronic countermeasures equipment, microwave relay systems, radiometry, and instrumentation.

Since this tube is single reversal permanent magnet focused and magnetically shielded, it is well suited to applications requiring close physical spacing with magnetic materials or other tubes.

PERFORMANCE*	Minimum	Nominal	Maximum	
Frequency	7	--	11	Gigacycles
Noise Figure	--	8	9	Decibels
Small Signal Gain	25	--	--	Decibels
Saturation Power Output	--	5	--	Milliwatts
VSWR, Input and Output			2.5:1	

MECHANICAL

Mounting Position – Any
Connectors
DC Socket-Cannon KPT-02H12-10PN
RF Input and Output – Coaxial Type N, Female

Dimensions, approximate		
Length, including r-f connectors	13	Inches
Diameter	4	Inches
Weight, approximate	8.6	Pounds

THERMAL

Cooling – Convection

ENVIRONMENTAL

Shock (energized)	30 g for 11 milliseconds on each of three mutually perpendicular axes.
Vibration (operating)	0.121 inch double amplitude from 5 to 15 cycles per second, 0.062 inch double amplitude from 16 to 25 cycles per second and 5 g from 26 to 400 cycles per second.

The specifications of this type are subject to change. Delivery of samples and the existence of these data do not imply continued availability of types with the same characteristics or dimensions. For the most recent information concerning the status of this device, please consult your local Power Tube Department Regional Sales Office.

ENVIRONMENTAL (Continued)

Humidity (non-operating)	MIL-E-5272 C, Paragraph 4.4.1 (Procedure I); i.e., non-operating tube in 95 percent relative humidity atmosphere for 10 days with temperature cycled slowly from approximately 30 C to 71 C each day.
Acoustic Noise (operating)	150 decibels above 2×10^{-4} dynes/second^2, 25 to 12,000 cycles per second random noise.
Altitude (operating)	100,000 feet mean sea level.
Temperature, ambient (operating)	-65 to +65 C with 1 decibel noise figure degradation

OPERATING CONDITIONS†	Minimum	Nominal	Maximum	
Heater Voltage (regulate to ±2% for optimum performance)	--	6.3	--	Volts AC or DC
Heater Current	--	--	0.5	Amperes
Electrode 1 (Grid) Voltage	0	--	-35	Volts
Electrode 2 (Anode) Voltage	25	--	75	Volts
Electrode 3 Voltage	25	--	150	Volts
Electrode 4 Voltage	200	--	450	Volts
Helix Voltage	720	--	850	Volts
Helix Current	--	--	100	Microamperes
Collector Voltage	950	--	1100	Volts
Collector Dissipation	--	--	1.32	Watts
Cathode Current	650	--	1200	Microamperes

*Increased gain and power ratings are possible when this tube is optimized for a narrow frequency band.

†Voltages shown are measured with respect to cathode. All voltages may be isolated from ground. For minimum noise and optimum gain characteristics, voltages should be adjusted to values specified by instructions accompanying each tube. These values will be within the ranges given above.

TYPICAL CHARACTERISTICS

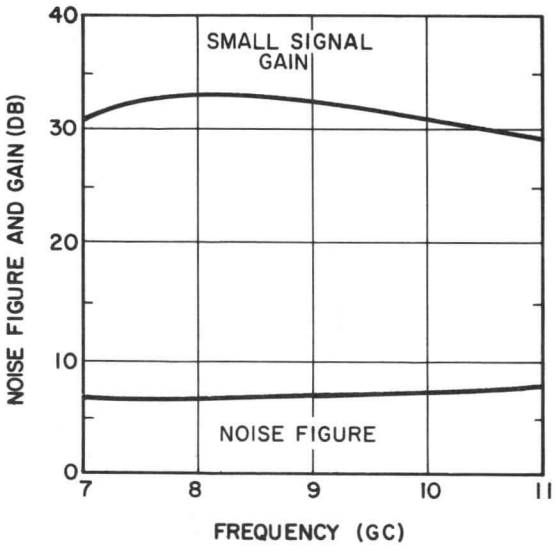

KPT-02HI2-10PN CANNON CONNECTIONS

CONNECTED TO	PIN
ELECTRODE 1	A
ELECTRODE 2	B
ELECTRODE 3	C
ELECTRODE 4	D
HELIX	E
COLLECTOR	F
CATHODE-HEATER	G
HEATER	J
NO CONNECTION	K
NO CONNECTION	H

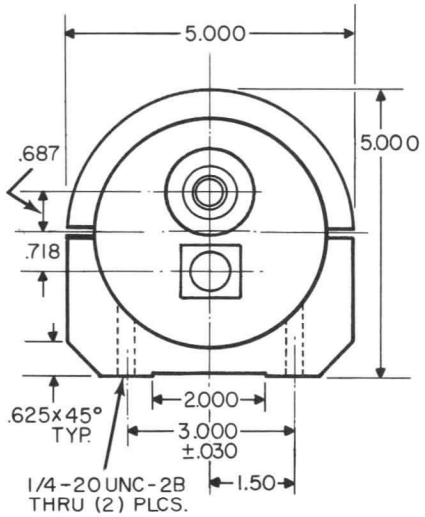

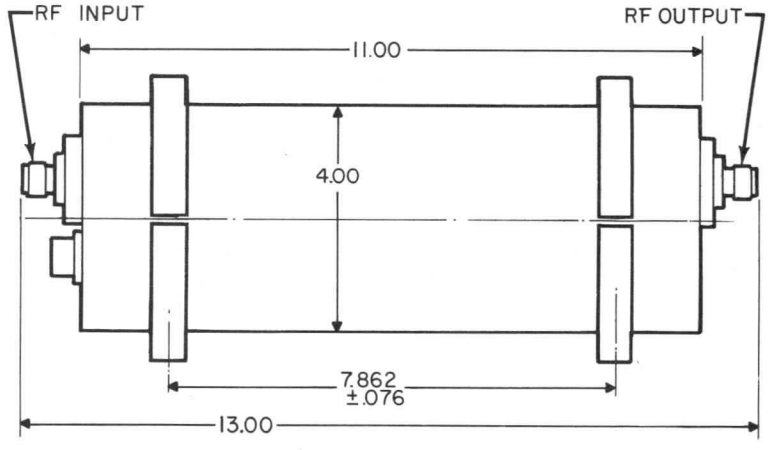

DIMENSIONS ARE IN INCHES

ZM-3178 ZM-3206
ZM-3203 ZM-3222
ZM-3204 ZM-3240
ZM-3205 ZM-3305

Traveling-Wave Tubes

Technical Information

- LOW NOISE
- X-BAND
- SRPM FOCUSING

RF PERFORMANCE

Tube Type	Frequency Range (Gc)	Maximum Noise Figure (db)	Minimum Small Signal Gain (db)	Minimum Saturation Power Output (mw)
ZM-3178	7.0 - 11.0	9	25	5
ZM-3203	7.0 - 11.0	8	25	5
ZM-3240	8.0 - 12.0	9	25	5
ZM-3305	8.0 - 12.0	8	25	5
ZM-3204	7.0 - 8.5	7	30	10
ZM-3205	7.5 - 8.5	6.5	30	10
ZM-3206	8.5 - 9.6	7	30	10
ZM-3222	9.0 - 10.0	7	30	10

FEATURES

low noise
broad bandwidth
single-reversal permanent-magnet focusing*
metal-ceramic construction
military environments
lightweight
crystal mixer protection

APPLICATIONS

radar
ecm
instrumentation
communications
radiometry

MECHANICAL AND MISCELLANEOUS

VSWR, max
Input 2.5
Output 2.5
Mounting Position ..... Any
Weight, lb. 9.3
Overall Length, in. 13.84
Cooling ..... Convection
RF Connectors ..... Type N, female
DC Connector ..... Cannon KPT-02H12-10PN (or equiv.)

TYPICAL CHARACTERISTICS

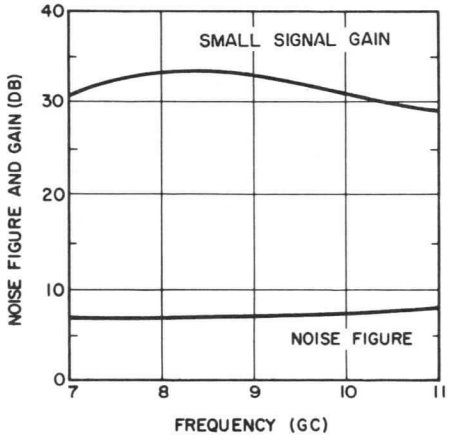

GENERAL ELECTRIC

OPERATING CONDITIONS †

Htr, vac or vdc	6.3
Htr, amp (max)	0.35
Elect. 1, vdc	-35 to 0
Elect. 2, vdc	25 to 75
Elect. 3, vdc	25 to 150
Elect. 4, vdc	200 to 450
Helix, vdc	720 to 850
Helix, μa (max)	100
Collector, vdc	950 to 1100
Beam, μa (max.)	1200

ENVIRONMENTAL

Shock (energized)	30 G, 11 ms, 3 axes
Vibration (operating)	15 G, 90 to 2000 cps
Temp. Ambient (operating)	-65 to +71 C#
Altitude (operating)	100,000 ft
Acoustic Noise (operating)	150 db, 25 to 12,000 cps

OUTLINE

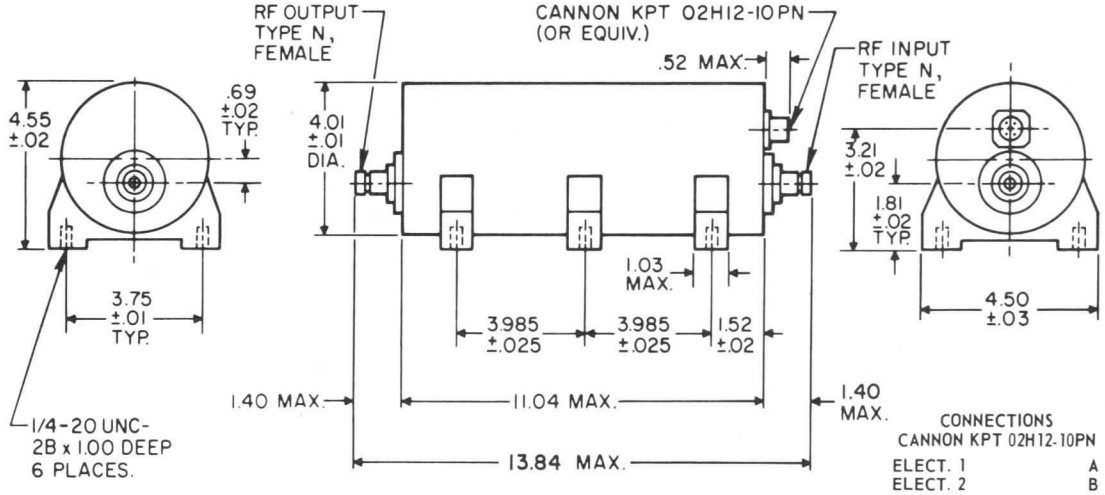

DIMENSIONS ARE IN INCHES; THOSE WITHOUT TOLERANCES ARE APPROXIMATE.

CONNECTIONS
CANNON KPT 02H12-10PN

ELECT. 1	A
ELECT. 2	B
ELECT. 3	C
ELECT. 4	D
HELIX	E
COLL.	F
CATH.-HTR.	G
HTR.	J
PACKAGE GROUND	K

NOTES

* Since these tubes are single-reversal permanent-magnet focused and magnetically shielded, they are well suited for applications requiring close physical spacing with other tubes or magnetic materials.

† Voltages shown are measured with respect to cathode. All voltages may be isolated from ground. For minimum noise and optimum gain characteristics, voltages should be adjusted to values specified by instructions accompanying each tube. These values will be within the ranges given above.

\# This tube is capable of operating to +100 C with approximately 0.5 db degradation in noise figure.

These data are subject to change without notice.

TUBE DEPARTMENT

GENERAL ELECTRIC

Owensboro, Kentucky

ZM-3183
ZM-3283

Traveling-Wave Tubes

Technical Information

- LOW NOISE
- S-BAND
- PM FOCUSING
- MAGNETICALLY SHIELDED

RF PERFORMANCE

Tube Type	Frequency Range (Gc)	Maximum Noise Figure* (db)	Minimum SS Gain (db)	Minimum Saturation Power Output (mw)
ZM-3183	2.0 - 4.0	8	25	1
ZM-3283	2.3 - 4.45	8	25	1

FEATURES

lowest noise
broadband
permanent magnet focused
metal ceramic construction
military environments
lightweight
crystal mixer protection
magnetically shielded#

APPLICATIONS

radar
ecm
instrumentation
communications
radiometry

MECHANICAL & MISCELLANEOUS

VSWR, max.	
Input	2.5
Output	3.0
Mounting Position	Any
Weight, lb.	18
Overall Length, in.	12.5
Cooling	Convection
RF Connectors	Type N
DC Connector	Cannon KPT-02H12-10PN

TYPICAL CHARACTERISTICS

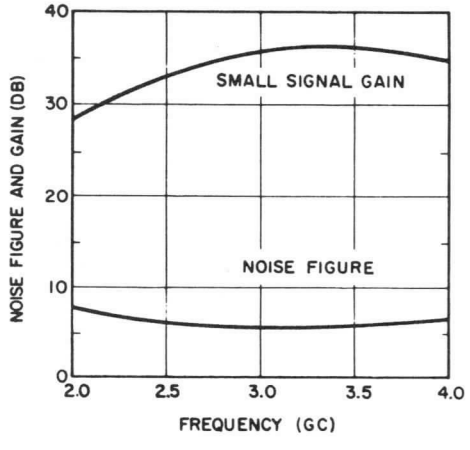

GENERAL ELECTRIC

OPERATING CONDITIONS †

Htr, vac or vdc	6.3
Htr, amp (max.)	0.35
Elect. 1, vdc	-10 to 0
Elect. 2, vdc	10 to 30
Elect. 3, vdc	25 to 100
Elect. 4, vdc	50 to 200
Helix, vdc	150 to 275
Helix, μa (max.)	50
Collector, vdc	400 to 600
Beam, μa (max.)	600

ENVIRONMENTAL

Shock (energized)	30 G, 11 ms, 3 axes
Vibration (operating)	5 G, 55 to 2000 cps
Temp. Ambient (operating)	-20 C to + 70 C
Altitude (operating)	100,000 ft.
Acoustic Noise (operating)	135 db, 25 to 12,000 cps

OUTLINE

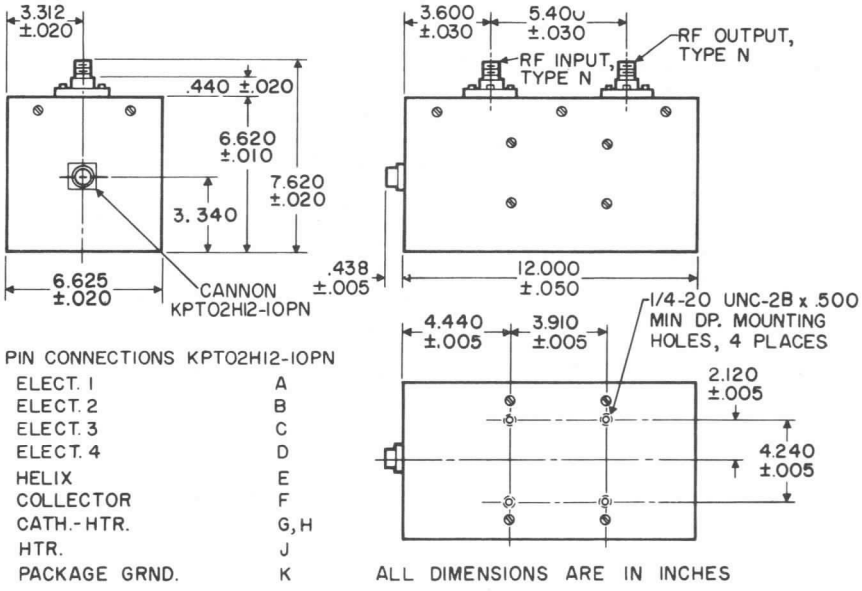

PIN CONNECTIONS KPT02H12-10PN

ELECT. 1	A
ELECT. 2	B
ELECT. 3	C
ELECT. 4	D
HELIX	E
COLLECTOR	F
CATH.-HTR.	G, H
HTR.	J
PACKAGE GRND.	K

ALL DIMENSIONS ARE IN INCHES

NOTES

* Noise figures apply over the entire band with the same operating voltages that provide minimum gain variation. Noise figures of 5.5 to 7 db can be supplied for narrow-band optimized versions of this tube. If requirements exist for an improved noise figure over a limited bandwidth, consult the nearest Tube Department sales office.

† All voltages may be isolated from ground; i.e., it is not necessary to operate the cathode, helix, collector, or any other electrode at ground potential. Voltages shown are measured with respect to cathode. For minimum noise and optimum gain characteristics, voltages should be adjusted within ranges specified by instructions accompanying each tube.

\# Since these tubes are magnetically shielded they are suitable for applications requiring close physical spacing with other tubes or magnetic materials.

These data are subject to change without notice.

TUBE DEPARTMENT

GENERAL ELECTRIC

Owensboro, Kentucky

Rev. 1-6-65 DS-113

ZM-3186 ZM-3209
ZM-3197 ZM-3326
ZM-3198 ZM-3441
ZM-3199 ZM-3442

Traveling-Wave Tubes

Technical Information

- LOW NOISE
- X-BAND
- PPM FOCUSING

RF PERFORMANCE

Tube Type	Frequency Range (Gc)	Maximum Noise Figure (db)	Minimum SS Gain * (db)	Minimum Saturation Power Output * (mw)	Data Group
ZM-3441	7.0 - 8.5	11	37	50	1
ZM-3197	7.0 - 11.0	13	37	30	1
ZM-3186	7.0 - 11.0	18	37	30	2
ZM-3326	7.0 - 12.0	15	37	30	1
ZM-3199	7.0 - 12.0	20	37	30	2
ZM-3209	8.0 - 12.0	13	33	30	1
ZM-3198	8.0 - 12.0	18	33	30	2
ZM-3442	8.5 - 9.6	11	37	50	1

FEATURES

low noise

broad bandwidth

periodic permanent magnet focusing

metal-ceramic construction

military environments

light weight

crystal mixer protection

APPLICATIONS

radar

ecm

instrumentation

communications

radiometry

TYPICAL CHARACTERISTICS

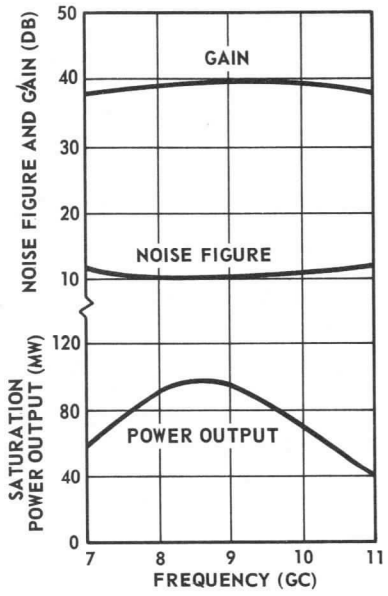

MECHANICAL & MISCELLANEOUS

Data Group	1	2
VSWR, max		
Input	2.5	2.5
Output	2.5	2.5
Mounting Position	Any	Any
Weight, lb	4.5	4.0
Overall Length, in.	14.6	14.6
Cooling	Conv.	Conv.
RF Connectors	Type N	Type N
DC Connector	Winch'r M12P or equiv.	Winch'r M12P or equiv.
Collector Connector	--	--

GENERAL ELECTRIC

OPERATING CONDITIONS†

Data Group	All
Htr, vac or vdc	6.3
Htr, amp (max)	0.26
Elect. 1, vdc	-50 to 0
Elect. 2, vdc	0 to 150
Elect. 3, vdc	70 to 300
Elect. 4, vdc	300 to 800
Helix, vdc	1100 to 1300
Helix, μa (max)	500
Collector, vdc	1100 to 1500
Cathode, μa (max)	1500

ENVIRONMENTAL

Shock (energized)	30G, 11 ms, 3 axes
Vibration (operating)	15G, 55 to 2000 cps
Temp, Ambient (operating)	-65 C to +100 C
Acoustic Noise (operating)	150 db, 25 to 12,000 cps
Altitude (operating)	100,000 ft.

OUTLINE

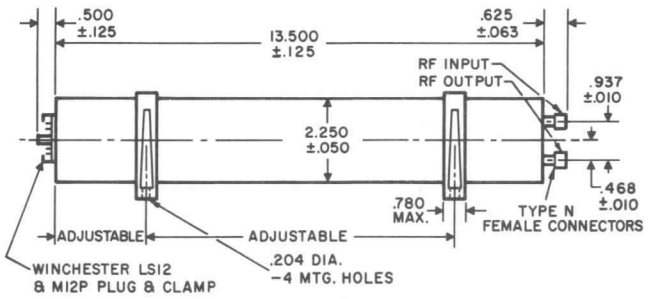

DIMENSIONS ARE IN INCHES

MI2P CONNECTIONS

TUBE ELEMENT	PIN
HEATER	H
CATHODE-HEATER	F
CATHODE	J
ELECTRODE 1	B
ELECTRODE 2	E
ELECTRODE 3	K
ELECTRODE 4	N
COLLECTOR	C
HELIX	L
CAPSULE GND.	D

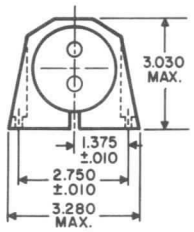

NOTES

* Increased gain and power ratings are possible when these tubes are optimized for a narrow frequency band. If requirements exist for such increased ratings over a narrow band, consult the nearest Tube Department sales office.

† All voltages may be isolated from ground, i.e., it is not necessary to operate the cathode, helix, collector, or any other electrode at ground potential. Voltages shown are measured with respect to cathode. For minimum noise and optimum gain characteristics, voltages should be adjusted to values specified by instructions accompanying each tube. These values will be within the ranges given above.

These data are subject to change without notice.

TUBE DEPARTMENT

GENERAL ELECTRIC

Owensboro, Kentucky

GENERAL ELECTRIC
POWER TUBE DEPARTMENT
Schenectady 5, N. Y.

PRELIMINARY
TECHNICAL INFORMATION

These ratings represent those of current samples of this type. Refer to the Objective Technical Information sheet for design-objective ratings.

DEVELOPMENTAL TYPE

This technical information is proprietary and is furnished only as a service to customers.

ZM-3189

TRAVELING-WAVE TUBE

5 Milliwatts Power Output
10 db Gain
±2 db Gain Matching

2400 to 8000 Megacycles
Metal-Ceramic
Periodic Permanent Magnet

The ZM-3189 is a ruggedized, low-power, very broadband traveling-wave tube for use in the 2400-to-8000-megacycle frequency range. It has a minimum gain of 10 decibels and power output of 5 milliwatts across the entire band. This tube can be supplied in ±2 db matched-gain pairs, i.e., with the gain characteristics of a pair of tubes matched to each other within ±2 db over the frequency band.

The tube is of metal-and-ceramic construction and is supplied as a completely packaged assembly which includes a periodic-permanent-magnet focusing structure, connectors and housing. The entire assembly weighs approximately 2.0 pounds.

The very broad bandwidth, freedom from tuning adjustments, and rugged construction are important features for application in military systems. Applications include radar transmitters and receivers, electronic countermeasures equipment, microwave relay systems, radiometry and instrumentation.

Since this tube is periodic-permanent-magnet focused, it is well suited to applications requiring close physical spacing with magnetic materials or other tubes.

ELECTRICAL	Minimum	Nominal	Maximum	
Frequency	2400	--	8000	Megacycles
Heater				
Voltage	--	6.3	--	Volts
Current	--	0.7	--	Amperes
Focusing Method – Periodic Permanent Magnet				
Noise Figure	--	--	25	Decibels
Small Signal Gain*	10	--	--	Decibels
Saturation Power Output*	5	--	--	Milliwatts
Collector Dissipation	--	2	--	Watts
Impedance, Coaxial	--	50	--	Ohms
Input, VSWR			2.5	
Output, VSWR			2.5	

MECHANICAL

Mounting Position – Any
Connectors
- DC Socket – Winchester PM6P-LS or equivalent
- RF Connectors
  - Input – Type N, Female
  - Output – Type N, Female

Over-all Dimensions		
Length	11.0	Inches
Diameter	1.0	Inches
Weight (Complete Assembly), approximate	2.0	Pounds

The specifications of this type are subject to change. Delivery of samples and the existence of these data do not imply continued availability of types with the same characteristics or dimensions. For the most recent information concerning the status of this device, please consult your local Power Tube Department Regional Sales Office.

THERMAL

Cooling – Convection

ENVIRONMENTAL

Shock (energized)	30 g for 11 milliseconds on each of three mutually perpendicular axes.
Vibration (operating)	0.062 inches double amplitude from 5 to 55 cycles per second and 15 g from 55 to 2000 cycles per second, with sweep over 5 to 2000 cycles per second for 100 minutes on each of three mutually perpendicular axes.
Humidity (non-operating)	MIL-E-5272 C, Paragraph 4.4.1 (Procedure I); i.e., non-operating tube in 95 percent relative humidity atmosphere for 10 days with temperature cycled slowly from approximately 30 C to 71 C each day.
Acoustic noise (operating)	150 decibels above 2×10^{-4} dynes/second^2, 25 to 12,000 cycles per second random noise.
Altitude (operating)	100,000 feet mean sea level.
Operating Temperature, ambient	-65 to +100 C.

OPERATING CONDITIONS†	Minimum	Nominal	Maximum	
Cathode Voltage (with respect to ground)	-700	--	-900	Volts
Cathode Current	2	3	5	Milliamperes
Focus-electrode voltage (with respect to cathode)	0	--	-50	Volts
Anode Voltage (with respect to cathode)	200	--	500	Volts

Helix-collector-package‡ – Connect to Ground

* Increased gain and power are possible when this tube is optimized for a narrow frequency band. If requirements exist for such increased ratings over a narrow band, consult the nearest Power Tube Department sales office.

† For rated performance the operating voltages of each tube must be set at specific values within the above ranges. These specific values are supplied with each tube.

‡ The helix, collector, and tube package are connected together within the tube and should be grounded when the tube is operated.

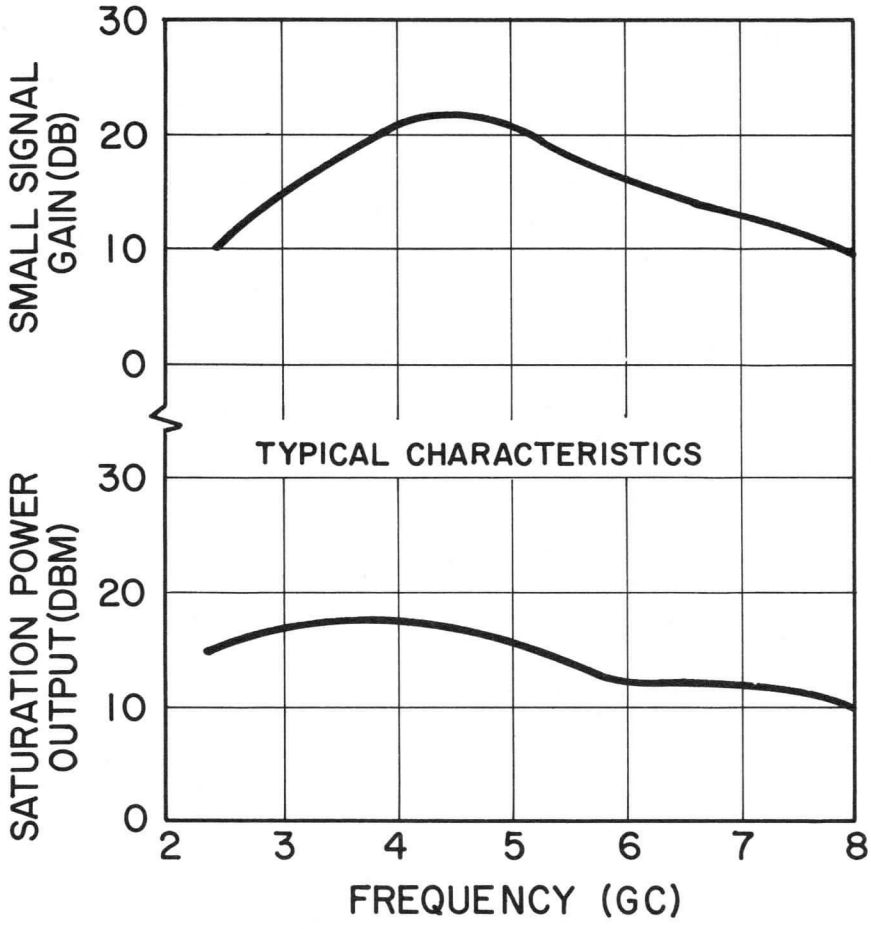

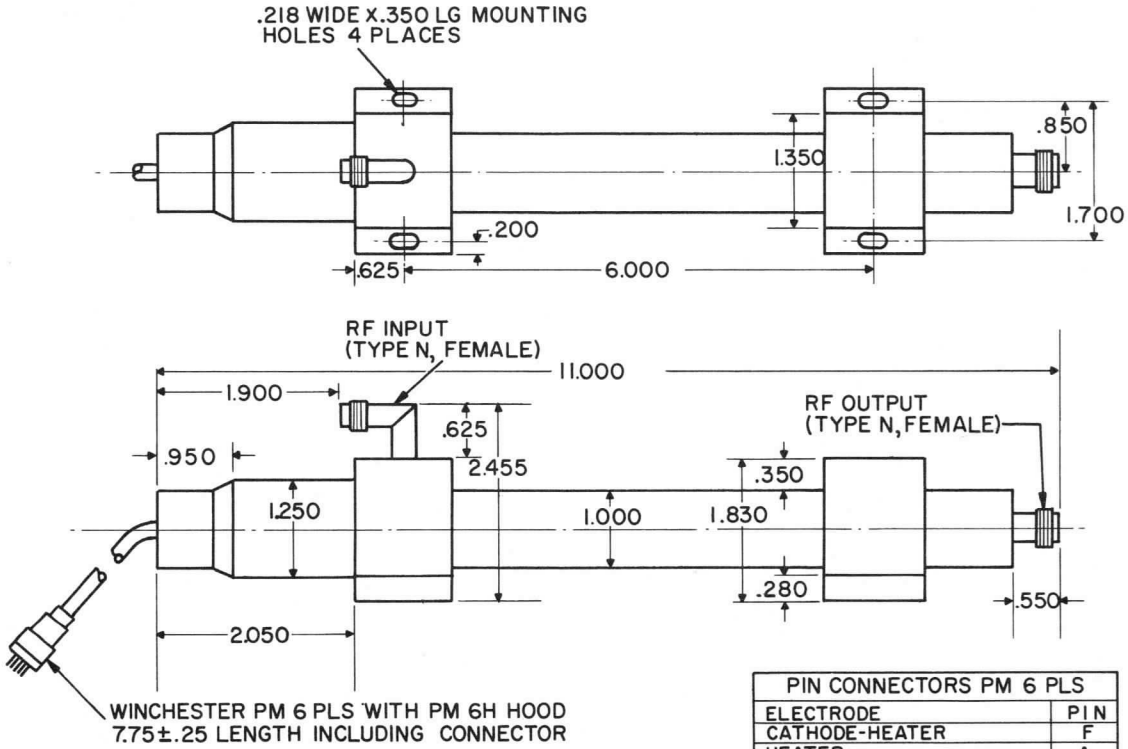

PIN CONNECTORS PM 6 PLS	
ELECTRODE	PIN
CATHODE-HEATER	F
HEATER	A
FOCUS	B
ANODE	C
HELIX-COLLECTOR-PACKAGE	D

DIMENSIONS ARE IN INCHES AND ARE APPROXIMATE

Traveling-Wave Tubes

Technical Information

- MATCHED GAIN
- S- TO K-BAND
- PPM FOCUSING

RF PERFORMANCE

Tube Type	Frequency Range (Gc)	Maximum Noise Figure (db)	Minimum SS Gain* (db)	Minimum Saturation Power Output* (mw)	Data Group
ZM-3189	2.4 - 8.0	25	10	5	S
ZM-3190	7.0 - 11.0	30	28	7	X
ZM-3191	11.0 - 20.0	30	20	10	K

THESE TUBES CAN BE SUPPLIED IN MATCHED GAIN PAIRS WITH ONLY ±2 DB GAIN VARIATION ACROSS THE FREQUENCY BAND.

FEATURES

- ±2 db matched gain
- broadband
- periodic permanent magnet focused
- metal ceramic construction
- military environments
- lightweight
- crystal mixer protection

APPLICATIONS

- radar
- ecm
- instrumentation
- communications
- radiometry

MECHANICAL & MISCELLANEOUS

Data Group	S	X	K
VSWR, max			
Input	2.5	2.5	3.0
Output	2.5	2.5	3.0
Mounting Position	Any	Any	Any
Weight, lb	2.0	2.0	3.0
Overall Length, in.	11.0	10.0	8.5
Cooling	Conv.	Conv.	Conv.
RF Connectors	Type N	Type N	RG-419/U WG
DC Connectors	Winch'r. PM6PLS	Winch'r. PM6PLS	Flying Leads

TYPICAL CHARACTERISTICS

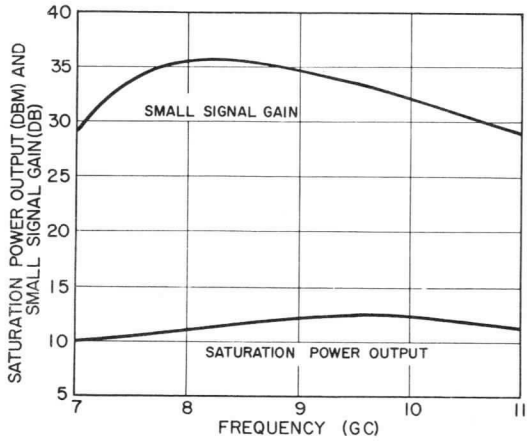

OPERATING CONDITIONS†

Data Group	S	X	K
Htr, vac or vdc	6.3	6.3	6.3
Htr, amp (max)	0.75	0.35	0.35
Cathode, vdc#	-700 to -900	-900 to -1000	-1400 to -1600
Cathode, ma	3.0 (nom.)	1.0 (nom.)	3.0 (nom.)
Focus Elect., vdc**	0 to -50	0 to -50	0 to -15
Anode, vdc**	200 to 500	650 to 850	300 to 400
Helix, collector, pkg	Ground	Ground	Ground

with respect to ground ** with respect to cathode

ENVIRONMENTAL

Data Group	S
Shock (energized)	30G, 11 ms, 3 axes
Vibration (operating)	15G, 55 to 2000 cps
Temp. Ambient (operating)	-65 C to +100 C
Acoustic Noise (operating)	150 db, 25 - 12000 cps
Altitude (operating)	100,000 ft.

Groups X and K not presently rated.

GENERAL ELECTRIC

OUTLINE (GROUP S)

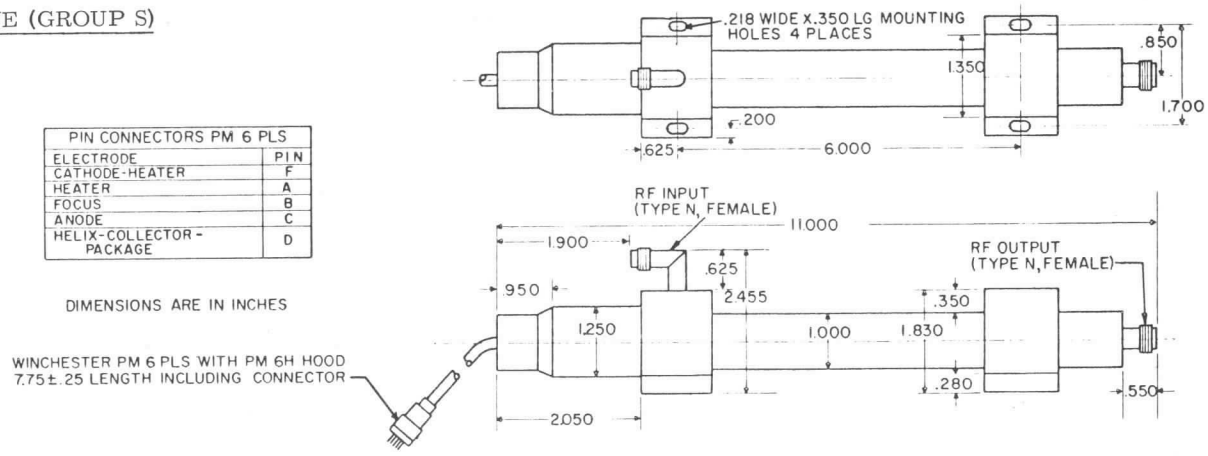

PIN CONNECTORS PM 6 PLS	
ELECTRODE	PIN
CATHODE-HEATER	F
HEATER	A
FOCUS	B
ANODE	C
HELIX-COLLECTOR-PACKAGE	D

DIMENSIONS ARE IN INCHES

OUTLINE (GROUP X)

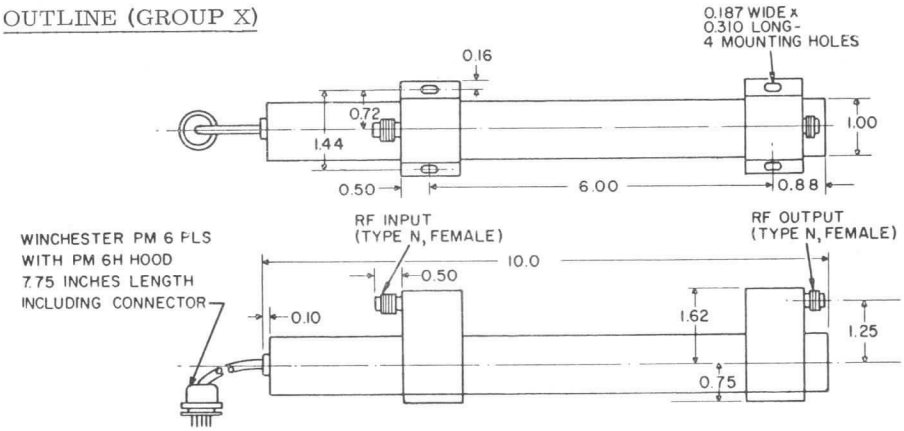

PIN CONNECTORS PM 6 PLS	
ELECTRODE	PIN
CATHODE-HEATER	F
HEATER	A
FOCUS	B
ANODE	C
HELIX-COLLECTOR-PACKAGE	D

DIMENSIONS ARE IN INCHES

OUTLINE (GROUP K)

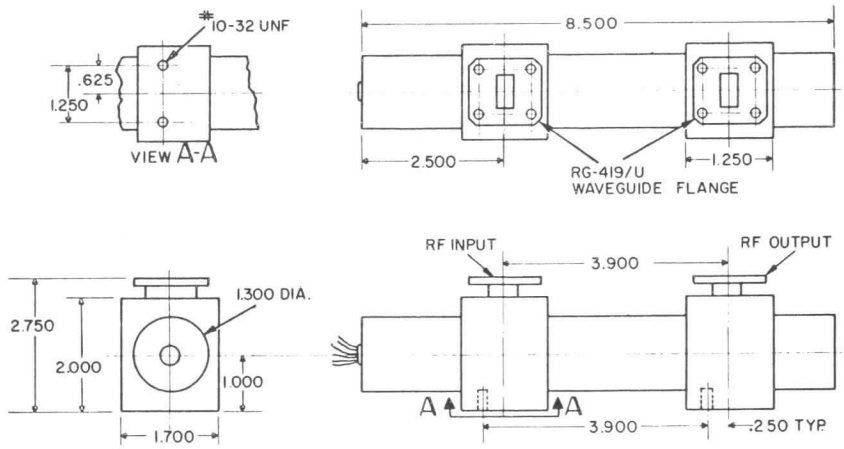

COLOR CODE OF LEADS	
HEATER	BROWN
HEATER-CATHODE	YELLOW
FOCUS	GREEN
ANODE	BLUE
HELIX-PACKAGE	ORANGE
COLLECTOR	RED

DIMENSIONS ARE IN INCHES

NOTES

* Increased gain and power are possible when this tube is optimized for a narrow frequency band. If requirements exist for such increased ratings over a narrow band, consult the nearest Tube Department sales office.

† For rated performance the operating voltages of each tube must be set at specific values within the above ranges. These specific values are supplied with each tube. The helix, collector, and tube package are connected together within the tube and should be grounded when the tube is operated.

These data are subject to change without notice.

TUBE DEPARTMENT

GENERAL ELECTRIC

Owensboro, Kentucky

GENERAL ELECTRIC
POWER TUBE DEPARTMENT
Schenectady 5, N. Y.

PRELIMINARY
TECHNICAL INFORMATION

These ratings represent those of current samples of this type. Refer to the Objective Technical Information sheet for design-objective ratings.

DEVELOPMENTAL TYPE

This technical information is proprietary and is furnished only as a service to customers.

ZM-3190

TRAVELING-WAVE TUBE

7 Milliwatts Power Output
28 db Gain
±2 db Gain Matching

7000 to 11,000 Megacycles
Metal-Ceramic
Periodic Permanent Magnet

The ZM-3190 is a ruggedized, low-power, broadband traveling-wave tube for use in the 7000-to-11,000-megacycle frequency range. It has a minimum gain of 28 decibels and power output of 7 milliwatts across the entire band. This tube can be supplied in ±2 db matched-gain pairs, i.e., with the gain characteristics of a pair of tubes matched to each other within ±2 db over the frequency band.

The tube is of metal-and-ceramic construction and is supplied as a completely packaged assembly which includes a periodic-permanent-magnet focusing structure, connectors and housing. The entire assembly weighs approximately 2 pounds.

The broad bandwidth, high gain, freedom from tuning adjustments, and rugged construction are important features for application in military systems. Applications include radar transmitters and receivers, electronic countermeasures equipment, microwave relay systems, radiometry and instrumentation.

Since this tube is periodic-permanent-magnet focused, it is well suited to applications requiring close physical spacing with magnetic materials or other tubes.

ELECTRICAL	Minimum	Nominal	Maximum	
Frequency	7000	--	11,000	Megacycles
Heater				
Voltage	--	6.3	--	Volts
Current	--	0.4	--	Amperes
Focusing Method – Periodic Permanent Magnet				
Noise Figure	--	--	30	Decibels
Small Signal Gain*	28	--	--	Decibels
Saturation Power Output*	7	15	--	Milliwatts
Collector Dissipation	--	1.0	--	Watts
Impedance, Coaxial	--	50	--	Ohms
Input, VSWR	--	--	2.5	
Output, VSWR	--	--	2.5	

MECHANICAL

Mounting Position – Any
Connectors
- DC Socket – Winchester PM6P-LS or equivalent
- RF Connectors
  - Input – Type N, Female
  - Output – Type N, Female

Over-all Dimensions		
Length	10.0	Inches
Diameter	1.0	Inches
Weight (Complete Assembly), approximate	2.0	Pounds

THERMAL

Cooling – Convection

The specifications of this type are subject to change. Delivery of samples and the existence of these data do not imply continued availability of types with the same characteristics or dimensions. For the most recent information concerning the status of this device, please consult your local Power Tube Department Regional Sales Office.

OPERATING CONDITIONS†	Minimum	Nominal	Maximum	
Cathode Voltage (with respect to ground)	-900	--	-1000	Volts
Cathode Current	--	1.0	--	Milliamperes
Focus-electrode voltage (with respect to cathode)	--	--	-50	Volts
Anode Voltage (with respect to cathode)	650	--	850	Volts

Helix-collector-package‡ – Connect to Ground

* Increased gain and power are possible when this tube is optimized for a narrow frequency band. If requirements exist for such increased ratings over a narrow band, consult the nearest Power Tube Department sales office.

† For rated performance the operating voltages of each tube must be set at specific values within the above ranges. These specific values are supplied with each tube.

‡ The helix, collector, and tube package are connected together within the tube and should be grounded when the tube is operated.

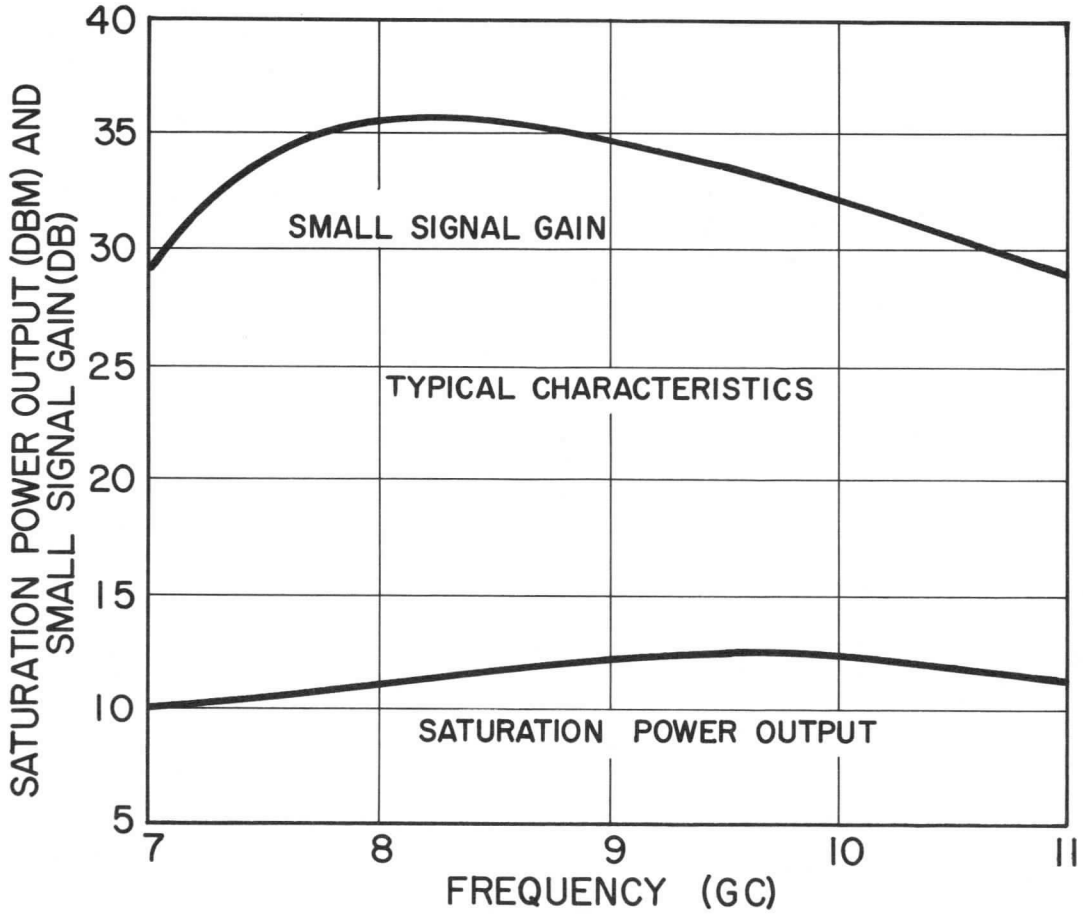

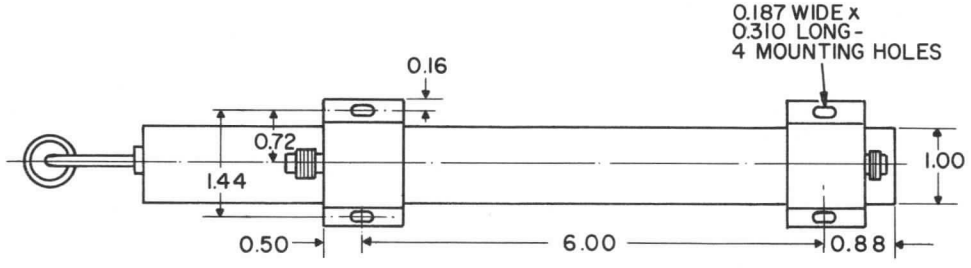

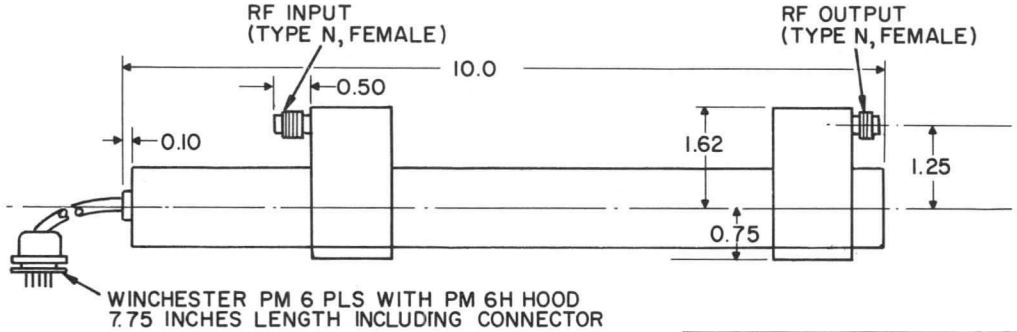

PIN CONNECTORS PM 6 PLS	
ELECTRODE	PIN
CATHODE-HEATER	F
HEATER	A
FOCUS	B
ANODE	C
HELIX-COLLECTOR-PACKAGE	D

DIMENSIONS ARE IN INCHES AND ARE APPROXIMATE

GENERAL ELECTRIC
POWER TUBE DEPARTMENT
Schenectady 5, N. Y.

PRELIMINARY
TECHNICAL INFORMATION

These ratings represent those of current samples of this type. Refer to the Objective Technical Information sheet for design-objective ratings.

DEVELOPMENTAL TYPE

This technical information is proprietary and is furnished only as a service to customers.

ZM-3191

TRAVELING-WAVE TUBE

10 Milliwatts Power Output
20 db Gain
± 2 db Gain Matching

11,000 to 20,000 Megacycles
Metal-Ceramic
Periodic Permanent Magnet

The ZM-3191 is a ruggedized, low-power, very broadband traveling-wave tube for use in the 11,000-to-20,000-megacycle frequency range. It has a minimum gain of 20 decibels and power output of 10 milliwatts across the entire band. This tube can be supplied in ± 2 db matched gain pairs, i.e., with the gain characteristics of a pair of tubes matched to each other within ± 2 db over the frequency band.

The tube is of metal-and-ceramic construction and is supplied as a completely packaged assembly which includes a periodic-permanent-magnet focusing structure, connectors and housing. The entire assembly weighs approximately 3.0 pounds.

The broad bandwidth, high gain, freedom from tuning adjustments, and rugged construction are important features for application in military systems. Applications include radar transmitters and receivers, electronic countermeasures equipment, microwave relay systems, radiometry and instrumentation.

Since this tube is periodic-permanent-magnet focused, it is well suited to applications requiring close physical spacing with magnetic materials or other tubes.

ELECTRICAL	Minimum	Nominal	Maximum	
Frequency	11,000	--	20,000	Megacycles
Heater				
Voltage	4	6.3	7	Volts
Current	--	0.2	--	Amperes
Focusing Method – Periodic Permanent Magnet				
Noise Figure	--	--	30	Decibels
Small Signal Gain*	20	--	--	Decibels
Saturation Power Output*	10	20	--	Milliwatts
Collector Dissipation	--	5.0	--	Watts
Impedance, Coaxial	--	50	--	Ohms
Input, VSWR	--	--	3.0	
Output, VSWR	--	--	3.0	

MECHANICAL

Mounting Position – Any
Connectors
- Flying Leads
- RF Connectors
  - Input – Type N, Female
  - Output – Type N, Female

Over-all Dimensions

Length	8.5	Inches
Diameter	1.3	Inches
Weight (Complete Assembly), approximate	3.0	Pounds

The specifications of this type are subject to change. Delivery of samples and the existence of these data do not imply continued availability of types with the same characteristics or dimensions. For the most recent information concerning the status of this device, please consult your local Power Tube Department Regional Sales Office.

THERMAL

Cooling - Convection

OPERATING CONDITIONS †	Minimum	Nominal	Maximum	
Cathode Voltage (with respect to ground)	-1400	--	-1600	Volts
Cathode Current	--	3	--	Milliamperes
Focus-electrode Voltage (with respect to cathode)	--	--	-15	Volts
Anode Voltage (with respect to cathode)	300	--	400	Volts
Collector	0	--	0	Volts
Helix Current ‡	--	0.5	1.0	Milliamperes

* Increased gain and power are possible when this tube is optimized for a narrow frequency band. If requirements exist for such increased ratings over a narrow band, consult the nearest Power Tube Department sales office.

† For rated performance the operating voltages of each tube must be set at specific values within the above ranges. These specific values are supplied with each tube.

‡ The helix and tube package are connected together within the tube and should be grounded when the tube is operated. A helix protective circuit should be provided.

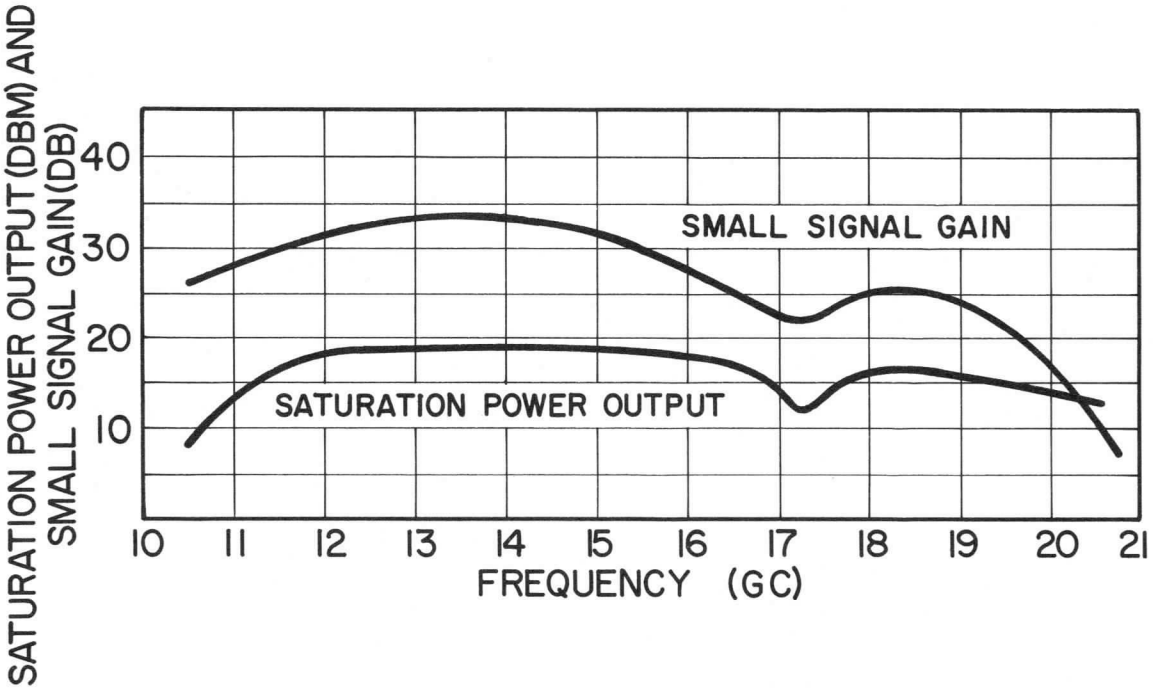

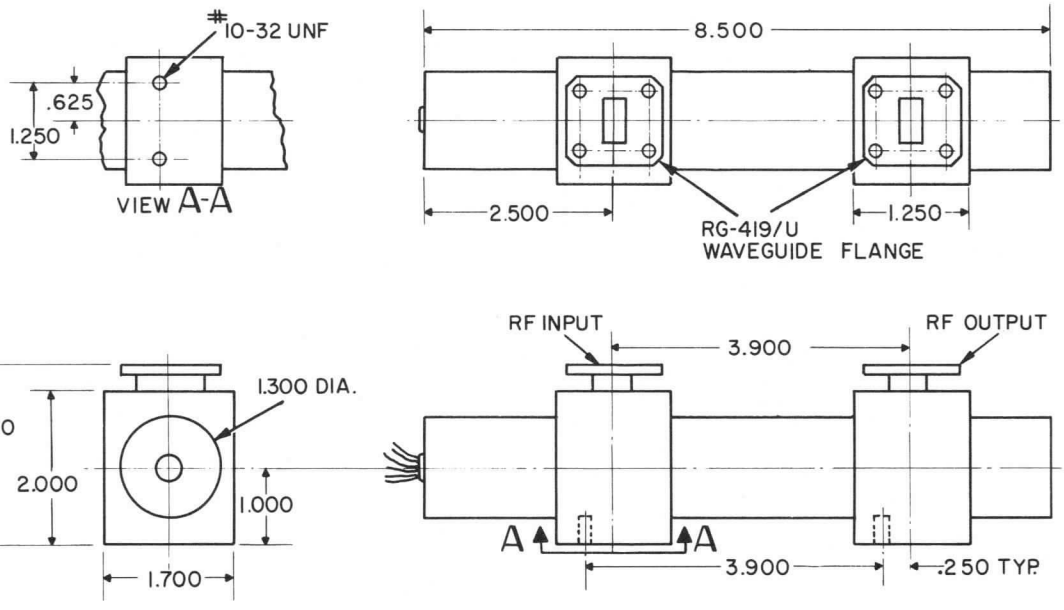

COLOR CODE OF LEADS	
HEATER	BROWN
HEATER-CATHODE	YELLOW
FOCUS	GREEN
ANODE	BLUE
HELIX-PACKAGE	ORANGE
COLLECTOR	RED

DIMENSIONS ARE IN INCHES AND ARE APPROXIMATE

ZM-3200
ZM-3201
ZM-3202
ZM-3214
ZM-3215
ZM-3258
ZM-3259

Traveling-Wave Tubes

Technical Information

- LOW NOISE
- X-BAND
- PPM FOCUSING

RF PERFORMANCE

Tube Type	Frequency Range (Gc)	Maximum Noise Figure (db)	Minimum SS Gain (db)	Minimum Saturation Power Output (mw)
ZM-3258	7.0 - 11.0	10	30	10
ZM-3214	7.0 - 11.0	12	30	10
ZM-3200	7.0 - 11.0	14	35	20
ZM-3202	7.0 - 12.0	16	30	10
ZM-3259	8.0 - 12.0	10	30	10
ZM-3215	8.0 - 12.0	12	30	10
ZM-3201	8.0 - 12.0	15	35	20

FEATURES

lowest noise
broadband
periodic permanent magnet focused
metal ceramic construction
military environments
lightweight
crystal mixer protection

APPLICATIONS

radar
ecm
instrumentation
communications
radiometry

MECHANICAL & MISCELLANEOUS

VSWR, max.	
Input	2.5
Output	2.5
Mounting Position	Any
Weight, lb.	4.5
Overall Length, in.	12.81
Cooling	Convection
RF Connectors	Type N
DC Connector	Winchester M12P or equiv.
Collector Connector	Winchester PM1P-LS or equiv.

TYPICAL CHARACTERISTICS

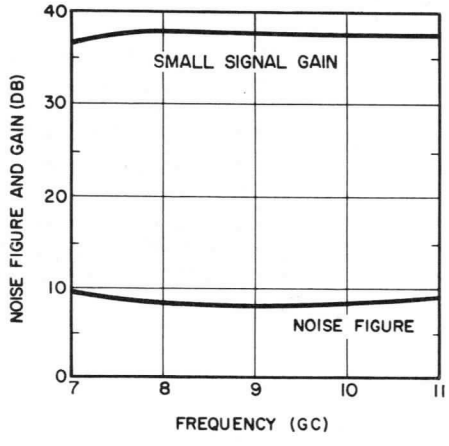

GENERAL ELECTRIC

OPERATING CONDITIONS†

Htr, vac or vdc	6.3
Htr, amp (max.)	0.26
Grid 1, vdc	-50 to 0
Grid 2, vdc	0 to 100
Grid 3, vdc	10 to 200
Grid 4, vdc	200 to 550
Helix, vdc	1125 to 1250
Helix, μa (max.)	500
Collector, vdc	1225 to 1400
Beam, μa (max.)	1000

ENVIRONMENTAL

Shock (energized)	30 G, 11 ms, 3 axes
Vibration (operating)	15 G, 55 to 2,000 cps
Temp, Ambient# (operating)	-65 C to +100 C
Altitude (operating)	100,000 ft.
Acoustic Noise (operating)	135 db, 25 to 12,000 cps

OUTLINE

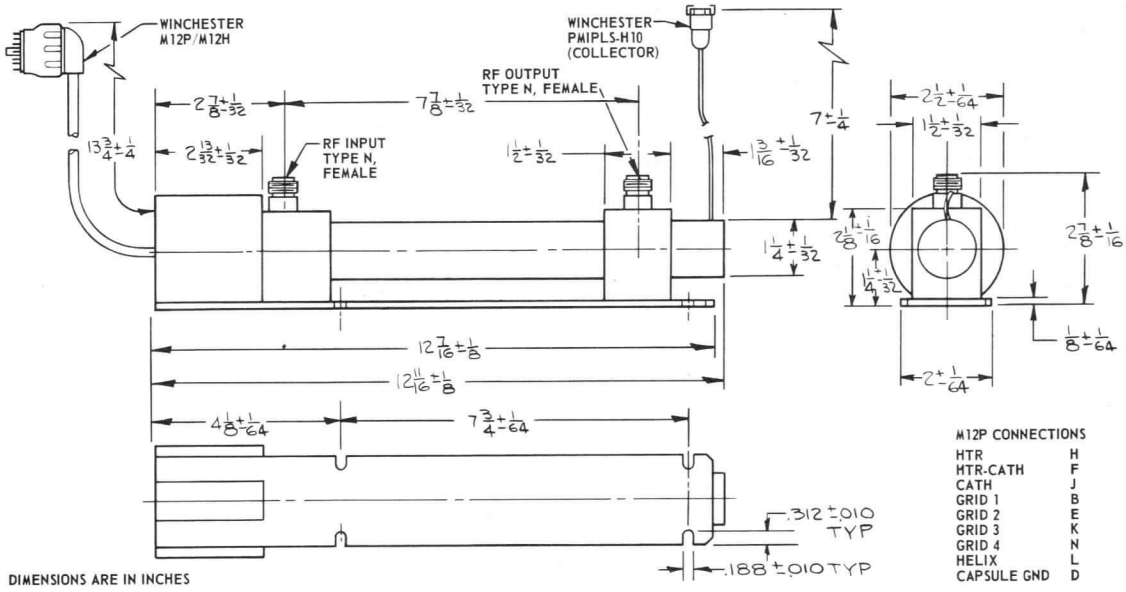

NOTES

† Voltages shown are measured with respect to cathode. All voltages may be isolated from ground. For minimum noise and optimum gain characteristics, voltages should be adjusted to values specified by instructions accompanying each tube. These values will be within the ranges given above.

\# Some degradation of performance may occur under extremes of indicated environmental conditions.

Increased gain and power ratings are available when these tubes are optimized for a narrow frequency band. If such requirements exist, consult the nearest regional sales office of the Tube Department.

These data are subject to change without notice.

TUBE DEPARTMENT

GENERAL ELECTRIC

Owensboro, Kentucky

ZM-3202 ZM-3443
ZM-3258 ZM-3444
ZM-3259

Traveling-Wave Tubes

Technical Information

- LOW NOISE
- X-BAND
- PPM FOCUSING

RF PERFORMANCE

Tube Type	Frequency Range (Gc)	Maximum Noise Figure (db)	Minimum SS Gain (db)	Minimum Saturation Power Output (mw)
ZM-3443	7.0 - 8.5	9.0	37	20
ZM-3258	7.0 - 11.0	10.0	37	20
ZM-3202	7.0 - 12.0	11.0	33	10
ZM-3259	8.0 - 12.0	10.0	33	10
ZM-3444	8.5 - 9.6	9.0	37	20

FEATURES

lowest noise
broadband
periodic permanent magnet focused
metal ceramic construction
military environments
lightweight
crystal mixer protection

APPLICATIONS

radar
ecm
instrumentation
communications
radiometry

MECHANICAL & MISCELLANEOUS

VSWR, max.	
Input	2.5
Output	2.5
Mounting Position	Any
Weight, lb.	4.25
Overall Length, in.	12.81
Cooling	Convection
RF Connectors	Type N
DC Connector	Winchester M12P or equiv.
Collector Connector	Winchester PM1P-LS or equiv.

TYPICAL CHARACTERISTICS

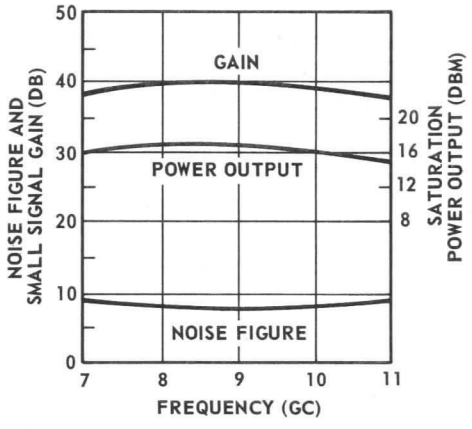

GENERAL ELECTRIC

OPERATING CONDITIONS†

Htr, vac or vdc	6.3
Htr, amp (max.)	0.26
Grid 1, vdc	-50 to 0
Grid 2, vdc	0 to 100
Grid 3, vdc	10 to 200
Grid 4, vdc	200 to 550
Helix, vdc	1125 to 1250
Helix, μa (max.)	500
Collector, vdc	1225 to 1400
Beam, μa (max.)	1000

ENVIRONMENTAL

Shock (energized)	30 G, 11 ms, 3 axes
Vibration (operating)	15 G, 55 to 2,000 cps
Temp, Ambient# (operating)	-65 C to +100 C
Altitude (operating)	100,000 ft.
Acoustic Noise (operating)	135 db, 25 to 12,000 cps

OUTLINE

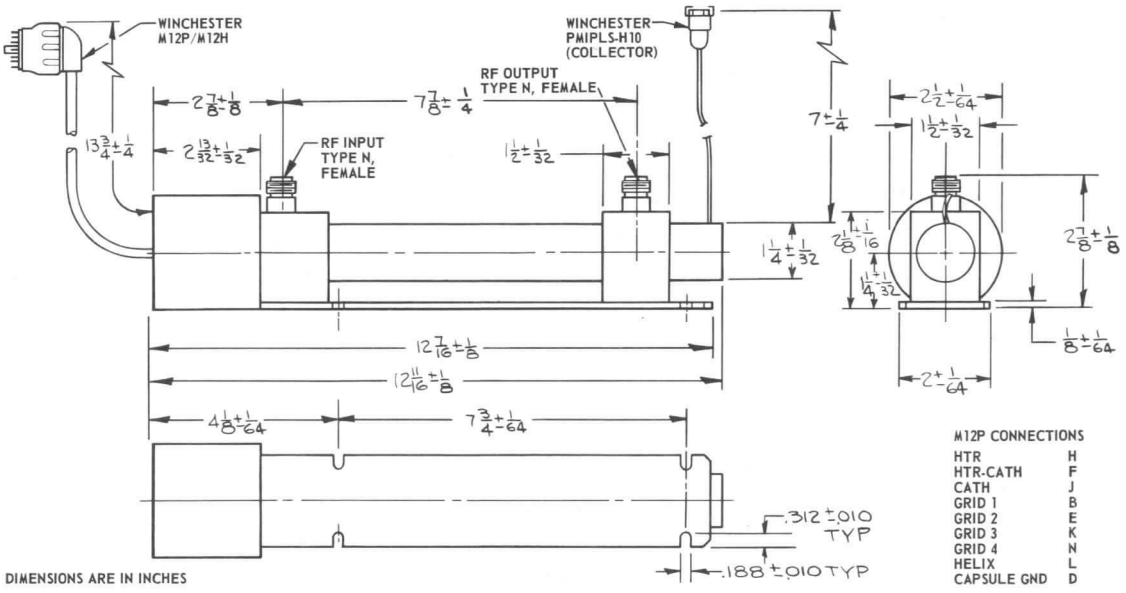

NOTES

† Voltages shown are measured with respect to cathode. All voltages may be isolated from ground. For minimum noise and optimum gain characteristics, voltages should be adjusted to values specified by instructions accompanying each tube. These values will be within the ranges given above.

\# Some degradation of performance may occur under extremes of indicated environmental conditions.

Increased gain and power ratings are available when these tubes are optimized for a narrow frequency band. If such requirements exist, consult the nearest regional sales office of the Tube Department.

These data are subject to change without notice.

TUBE DEPARTMENT

GENERAL ELECTRIC

Owensboro, Kentucky

GENERAL ELECTRIC
POWER TUBE DEPARTMENT
Schenectady 5, N. Y.

PRELIMINARY
TECHNICAL INFORMATION

These ratings represent those of current samples of this type. Refer to the Objective Technical Information sheet for design-objective ratings.

DEVELOPMENTAL TYPE

This technical information is proprietary and is furnished only as a service to customers.

ZM-3203

TRAVELING-WAVE TUBE

8 db Noise Figure, Maximum
25 db Gain, Minimum

Metal-Ceramic
Single Reversal PM Focused

7 to 11 Gigacycles
5 Milliwatts Output

The ZM-3203 is a ruggedized, low-noise, low power, broadband traveling-wave tube with noise figure, gain, and power-performance specifications which apply over the entire frequency rating. The tube is of metal-and-ceramic construction and is supplied as a completely packaged assembly which includes a single-reversal permanent-magnet focusing structure, connectors, and housing. The entire assembly weighs approximately 8.6 pounds.

The broad bandwidth, low noise, high gain, freedom from tuning adjustments, and rugged construction are important features for application in military systems. Applications include radar transmitters and receivers, electronic countermeasures equipment, microwave relay systems, radiometry, and instrumentation.

Since this tube is single reversal permanent magnet focused and magnetically shielded, it is well suited to applications requiring close physical spacing with magnetic materials or other tubes.

PERFORMANCE*	Minimum	Nominal	Maximum	
Frequency	7	--	11	Gigacycles
Noise Figure	--	7.5	8	Decibels
Small Signal Gain	25	--	--	Decibels
Saturation Power Output	--	5	--	Milliwatts
VSWR, Input and Output	--	--	2.5:1	

MECHANICAL

Mounting Position – Any
Connectors
DC Socket-Cannon KPT-02H12-10PN
RF Input and Output – Coaxial Type N, Female
Dimensions, approximate

Length, including r-f connectors	13	Inches
Diameter	4	Inches
Weight, approximate	8.6	Pounds

THERMAL

Cooling – Convection

ENVIRONMENTAL

Shock (energized) — 30 g for 11 milliseconds on each of three mutually perpendicular axes.

Vibration (operating) — 0.121 inch double amplitude from 5 to 15 cycles per second, 0.062 inch double amplitude from 16 to 25 cycles per second and 5 g from 26 to 400 cycles per second.

The specifications of this type are subject to change. Delivery of samples and the existence of these data do not imply continued availability of types with the same characteristics or dimensions. For the most recent information concerning the status of this device, please consult your local Power Tube Department Regional Sales Office.

ENVIRONMENTAL (Continued)

Humidity (non-operating)	MIL-E-5272 C, Paragraph 4.4.1 (Procedure I); i.e., non-operating tube in 95 percent relative humidity atmosphere for 10 days with temperature cycled slowly from approximately 30 C to 71 C each day.
Acoustic Noise (operating)	150 decibels above 2×10^{-4} dynes/second^2, 25 to 12,000 cycles per second random noise.
Altitude (operating)	100,000 feet mean sea level.
Temperature, ambient (operating)	-65 to +65 C with 1 decibel noise figure degradation.

OPERATING CONDITIONS†	Minimum	Nominal	Maximum	
Heater Voltage (regulate to ±2% for optimum performance)	--	6.3	--	Volts AC or DC
Heater Current	--	--	0.5	Amperes
Electrode 1 (Grid) Voltage	0	--	-35	Volts
Electrode 2 (Anode) Voltage	25	--	75	Volts
Electrode 3 Voltage	25	--	150	Volts
Electrode 4 Voltage	200	--	450	Volts
Helix Voltage	720	--	850	Volts
Helix Current	--	--	100	Microamperes
Collector Voltage	950	--	1100	Volts
Collector Dissipation	--	--	1.32	Watts
Cathode Current	650	--	1200	Microamperes

*Increased gain and power ratings are possible when this tube is optimized for a narrow frequency band.

† Voltages shown are measured with respect to cathode. All voltages may be isolated from ground. For minimum noise and optimum gain characteristics, voltages should be adjusted to values specified by instructions accompanying each tube. These values will be within the ranges given above.

TYPICAL CHARACTERISTICS

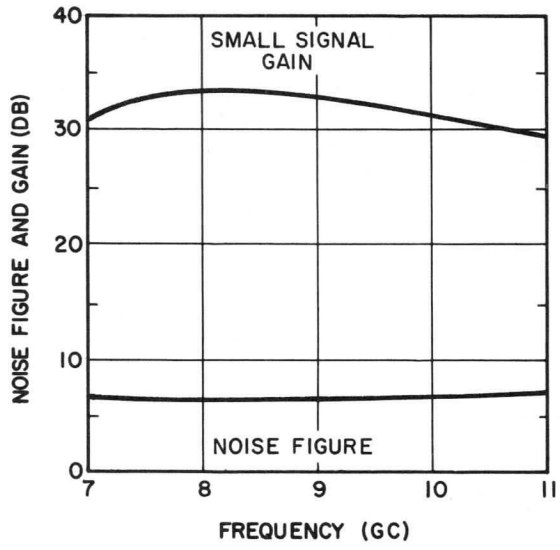

KPT-02H12-10PN CANNON CONNECTIONS

CONNECTED TO	PIN
ELECTRODE 1	A
ELECTRODE 2	B
ELECTRODE 3	C
ELECTRODE 4	D
HELIX	E
COLLECTOR	F
CATHODE-HEATER	G
HEATER	J
NO CONNECTION	K
NO CONNECTION	H

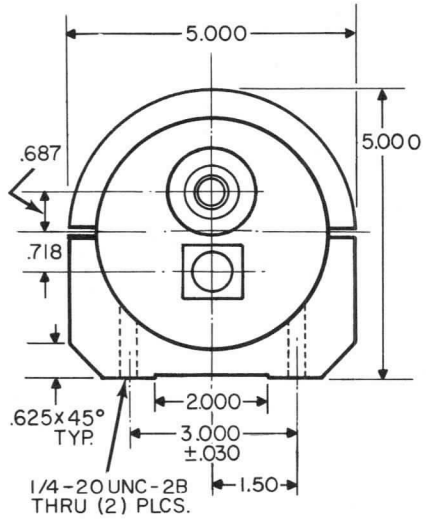

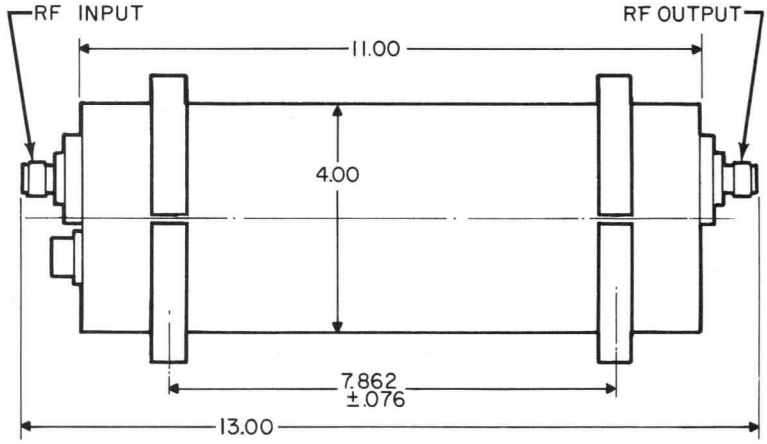

DIMENSIONS ARE IN INCHES

GENERAL ELECTRIC
POWER TUBE DEPARTMENT
Schenectady 5, N. Y.

PRELIMINARY
TECHNICAL INFORMATION

These ratings represent those of current samples of this type. Refer to the Objective Technical Information sheet for design-objective ratings.

DEVELOPMENTAL TYPE

This technical information is proprietary and is furnished only as a service to customers.

ZM-3204

TRAVELING-WAVE TUBE

7 db Noise Figure, Maximum	Metal-Ceramic	7 to 8.5 Gigacycles
28 db Gain, Minimum	Single Reversal PM Focused	5 Milliwatts Output

The ZM-3204 is a ruggedized, low-noise, low-power, traveling-wave tube with noise figure, gain, and power-performance specifications which apply over the entire frequency rating. The tube is of metal-and-ceramic construction and is supplied as a completely packaged assembly which includes single-reversal permanent-magnet focusing structure, connectors, and housing. The entire asssembly weighs approximately 8.6 pounds.

The broad bandwidth, low noise, high gain, freedom from tuning adjustments, and rugged construction are important features for application in military systems. Applications include radar transmitters and receivers, electronic countermeasures equipment, microwave relay systems, radiometry, and instrumentation.

Since this tube is single reversal permanent magnet focused and magnetically shielded, it is well suited to applications requiring close physical spacing with magnetic materials or other tubes.

PERFORMANCE	Minimum	Nominal	Maximum	
Frequency	7	--	8.5	Gigacycles
Noise Figure	--	--	7	Decibels
Small Signal Gain	28	--	--	Decibels
Saturation Power Output	--	5	--	Milliwatts
VSWR, Input and Output	--	--	2.5:1	

MECHANICAL

Mounting Position – Any
Connectors
DC Socket – Cannon KPT-02H12-10PN
RF Input and Output – Coaxial Type N, Female
Dimensions, approximate

Length, including r-f connectors	13	Inches
Diameter	4	Inches
Weight, approximate	8.6	Pounds

THERMAL

Cooling – Convection

ENVIRONMENTAL

Shock (energized)	30 g for 11 milliseconds on each of three mutually perpendicular axes.
Vibration (operating)	0.121 inch double amplitude from 5 to 15 cycles per second, 0.062 inch double amplitude from 16 to 25 cycles per second and 5 g from 26 to 400 cycles per second.

The specifications of this type are subject to change. Delivery of samples and the existence of these data do not imply continued availability of types with the same characteristics or dimensions. For the most recent information concerning the status of this device, please consult your local Power Tube Department Regional Sales Office.

ENVIRONMENTAL (Continued)

Humidity (non-operating)	MIL-E-5272 C, Paragraph 4.4.1 (Procedure I); i.e., non-operating tube in 95 percent relative humidity atmosphere for 10 days with temperature cycled slowly from approximately 30 C to 71 C each day.
Acoustic Noise (operating)	150 decibels above 2 x 10^{-4} dynes/second^2, 25 to 12,000 cycles per second random noise.
Altitude (operating)	100,000 feet mean sea level.
Temperature, ambient (operating)	-65 to +65 C with 1 decibel noise figure degradation.

OPERATING CONDITIONS*	Minimum	Nominal	Maximum	
Heater Voltage (regulate to ±2% for optimum performance)	--	6.3	--	Volts AC or DC
Heater Current	--	--	0.5	Amperes
Electrode 1 (Grid) Voltage	0	--	-35	Volts
Electrode 2 (Anode) Voltage	25	--	75	Volts
Electrode 3 Voltage	25	--	150	Volts
Electrode 4 Voltage	200	--	450	Volts
Helix Voltage	720	--	850	Volts
Helix Current	--	--	100	Microamperes
Collector Voltage	950	--	1100	Volts
Collector Dissipation	--	--	1.32	Watts
Cathode Current	650	--	1200	Microamperes

* Voltages shown are measured with respect to cathode. All voltages may be isolated from ground. For minimum noise and optimum gain characteristics, voltages should be adjusted to values specified by instructions accompanying each tube. These values will be within the ranges given above.

TYPICAL CHARACTERISTICS

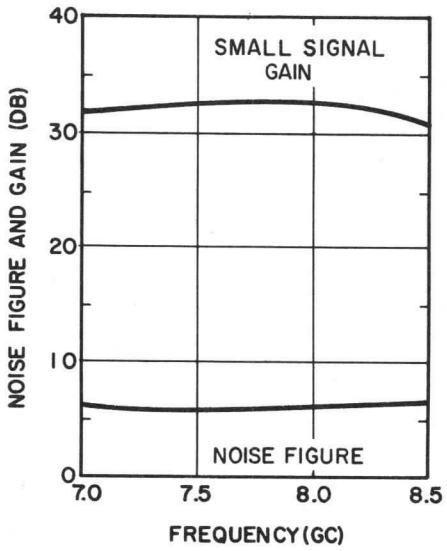

KPT-02HI2-10PN CANNON CONNECTIONS

CONNECTED TO	PIN
ELECTRODE 1	A
ELECTRODE 2	B
ELECTRODE 3	C
ELECTRODE 4	D
HELIX	E
COLLECTOR	F
CATHODE-HEATER	G
HEATER	J
NO CONNECTION	K
NO CONNECTION	H

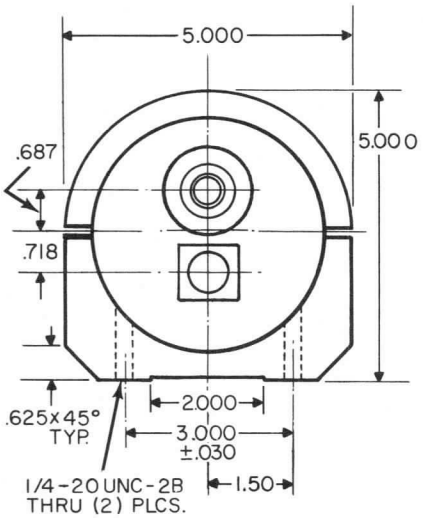

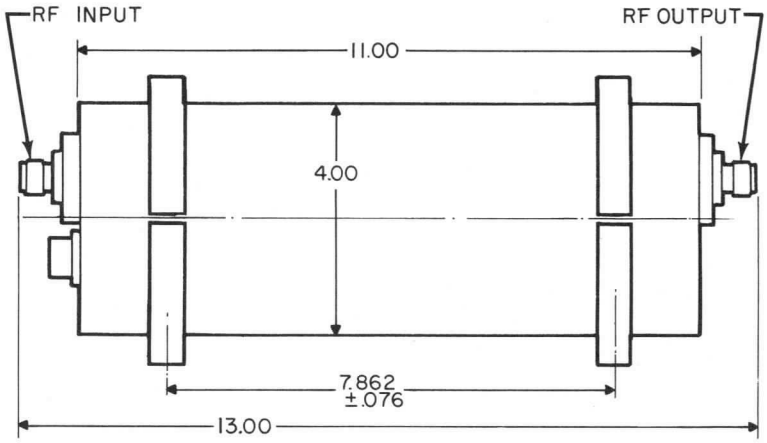

DIMENSIONS ARE IN INCHES

GENERAL ELECTRIC
POWER TUBE DEPARTMENT
Schenectady 5, N. Y.

PRELIMINARY
TECHNICAL INFORMATION

These ratings represent those of current samples of this type. Refer to the Objective Technical Information sheet for design-objective ratings.

DEVELOPMENTAL TYPE

This technical information is proprietary and is furnished only as a service to customers.

ZM-3205

TRAVELING-WAVE TUBE

6.5 db Noise Figure, Maximum	Metal-Ceramic	7.5 to 8.5 Gigacycles
30 db Gain, Minimum	Single Reversal PM Focused	5 Milliwatts Output

The ZM-3205 is a ruggedized, low-noise, low-power, traveling-wave tube with noise figure, gain, and power-performance specifications which apply over the entire frequency rating. The tube is of metal-and-ceramic construction and is supplied as a completely packaged assembly which includes a single-reversal permanent-magnet focusing structure, connectors, and housing. The entire assembly weighs approximately 8.6 pounds.

The broad bandwidth, low noise, high gain, freedom from tuning adjustments, and rugged construction are important features for application in millitary systems. Applications include radar transmitters and receivers, electronic countermeasures equipment, microwave relay systems, radiometry, and instrumentation.

Since this tube is single reversal permanent magnet focused and magnetically shielded, it is well suited to applications requiring close physical spacing with magnetic materials or other tubes.

PERFORMANCE	Minimum	Nominal	Maximum	
Frequency	7.5	--	8.5	Gigacycles
Noise Figure	--	--	6.5	Decibels
Small Signal Gain	30	--	--	Decibels
Saturation Power Output	--	5	--	Milliwatts
VSWR, Input and Output	--	--	2.5:1	

MECHANICAL

Mounting Position – Any
Connectors
DC Socket – Cannon KPT-02H12-10PN
RF Input and Output – Coaxial Type N, Female

Dimensions, approximate		
Length, including r-f connectors	13	Inches
Diameter	4	Inches
Weight, approximate	8.6	Pounds

THERMAL

Cooling – Convection

ENVIRONMENTAL

Shock (energized)	30 g for 11 milliseconds on each of three mutually perpendicular axes.
Vibration (operating)	0.121 inch double amplitude from 5 to 15 cycles per second, 0.062 inch double amplitude from 16 to 25 cycles per second and 5 g from 26 to 400 cycles per second.
Humidity (non-operating)	MIL-E-5272 C, Paragraph 4.4.1 (Procedure I); i.e., non-operating tube in 95 percent relative humidity atmosphere for 10 days with temperature cycled slowly from approximately 30 C to 71 C each day.

The specifications of this type are subject to change. Delivery of samples and the existence of these data do not imply continued availability of types with the same characteristics or dimensions. For the most recent information concerning the status of this device, please consult your local Power Tube Department Regional Sales Office.

ENVIRONMENTAL (Continued)

Acoustic Noise (operating)	150 decibels above 2 x 10^{-4} dynes/second^2, 25 to 12,000 cycles per second random noise.
Altitude (operating)	100,000 feet mean sea level.
Temperature, ambient (operating)	-65 to + 65 C with 1 decibel noise figure degradation.

OPERATING CONDITIONS*	Minimum	Nominal	Maximum	
Heater Voltage (regulate to ±2% for optimum performance)	--	6.3	--	Volts AC or DC
Heater Current	--	--	0.5	Amperes
Electrode 1 (Grid) Voltage	0	--	-35	Volts
Electrode 2 (Anode) Voltage	25	--	75	Volts
Electrode 3 Voltage	25	--	150	Volts
Electrode 4 Voltage	200	--	450	Volts
Helix Voltage	720	--	850	Volts
Helix Current	--	--	100	Microamperes
Collector Voltage	950	--	1100	Volts
Collector Dissipation	--	--	1.32	Watts
Cathode Current	650	--	1200	Microamperes

* Voltages shown are measured with respect to cathode. All voltages may be isolated from ground. For minimum noise and optimum gain characteristics, voltages should be adjusted to values specified by instructions accompanying each tube. These values will be within the ranges given above.

TYPICAL CHARACTERISTICS

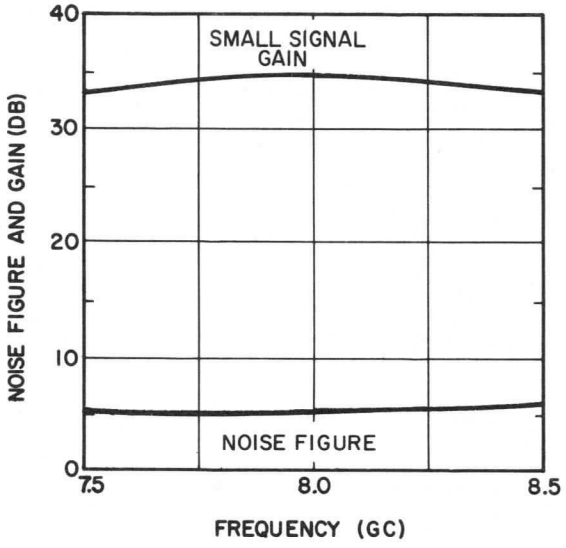

KPT-02HI2-10PN CANNON CONNECTIONS

CONNECTED TO	PIN
ELECTRODE 1	A
ELECTRODE 2	B
ELECTRODE 3	C
ELECTRODE 4	D
HELIX	E
COLLECTOR	F
CATHODE-HEATER	G
HEATER	J
NO CONNECTION	K
NO CONNECTION	H

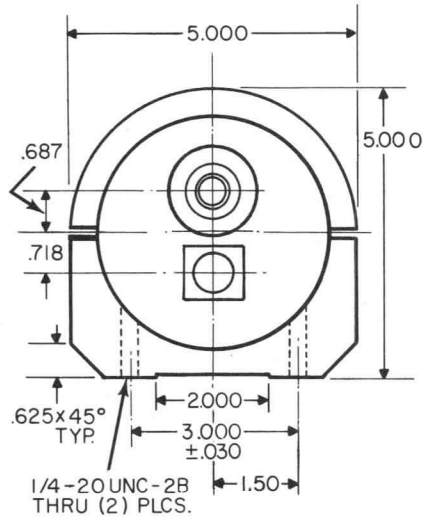

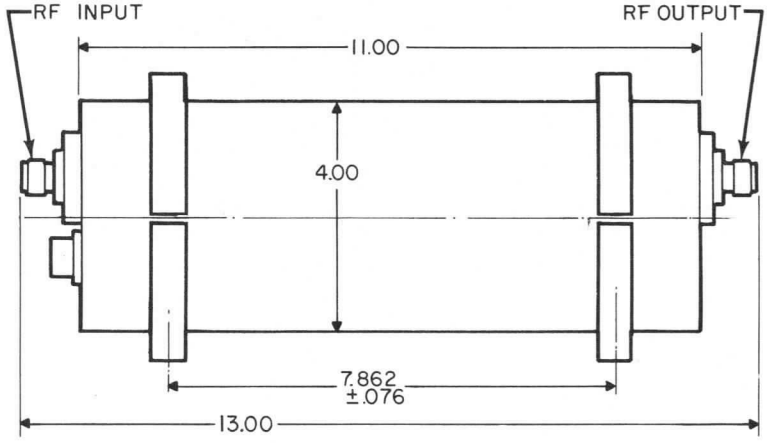

DIMENSIONS ARE IN INCHES

GENERAL ELECTRIC
POWER TUBE DEPARTMENT
Schenectady 5, N. Y.

PRELIMINARY
TECHNICAL INFORMATION

These ratings represent those of current samples of this type. Refer to the Objective Technical Information sheet for design-objective ratings.

DEVELOPMENTAL TYPE

This technical information is proprietary and is furnished only as a service to customers.

ZM-3206

TRAVELING-WAVE TUBE

7 db Noise Figure, Maximum	Metal-Ceramic	8.5 to 9.6 Gigacycles
28 db Gain, Minimum	Single Reversal PM Focused	5 Milliwatts Output

The ZM-3206 is a ruggedized, low-noise, low-power, traveling-wave tube with noise figure, gain, and power-performance specifications which apply over the entire frequency rating. The tube is of metal-and-ceramic construction and is supplied as a completely packaged assembly which includes a single-reversal permanent-magnet focusing structure, connectors, and housing. The entire assembly weighs approximately 8.6 pounds.

The broad bandwidth, low noise, high gain, freedom from tuning adjustments, and rugged construction are important features for application in military systems. Applications include radar transmitters and receivers, electronic countermeasures equipment, microwave relay systems, radiometry, and instrumentation.

Since this tube is single reversal permanent magnet focused and magnetically shielded, it is well suited to applications requiring close physical spacing with magnetic materials or other tubes.

PERFORMANCE	Minimum	Nominal	Maximum	
Frequency	8.5	--	9.6	Gigacycles
Noise Figure	--	--	7	Decibels
Small Signal Gain	28	--	--	Decibels
Saturation Power Output	--	5	--	Milliwatts
VSWR, Input and Output	--	--	2.5:1	

MECHANICAL

Mounting Position – Any
Connectors
DC Socket – Cannon KPT-02H12-10PN
RF Input and Output – Coaxial Type N, Female

Dimensions, approximate		
Length, including r-f connectors	13	Inches
Diameter	4	Inches
Weight, approximate	8.6	Pounds

THERMAL

Cooling – Convection

ENVIRONMENTAL

Shock (energized)	30 g for 11 milliseconds on each of three mutually perpendicular axes.
Vibration (operating)	0.121 inch double amplitude from 5 to 15 cycles per second, 0.062 inch double amplitude from 16 to 25 cycles per second and 5 g from 26 to 400 cycles per second.
Humidity (non-operating)	MIL-E-5272 C, Paragraph 4.4.1 (Procedure I); i.e., non-operating tube in 95 percent relative humidity atmosphere for 10 days with temperature cycled slowly from approximately 30 C to 71 C each day.

The specifications of this type are subject to change. Delivery of samples and the existence of these data do not imply continued availability of types with the same characteristics or dimensions. For the most recent information concerning the status of this device, please consult your local Power Tube Department Regional Sales Office.

ENVIRONMENTAL (Continued)

Acoustic Noise (operating)	150 decibels above 2 x 10^{-4} dynes/second^2, 25 to 12,000 cycles per second random noise.
Altitude (operating)	100,000 feet mean sea level.
Temperature, ambient (operating)	-65 to +65 C with 1 decible noise figure degradation.

OPERATING CONDITIONS*	Minimum	Nominal	Maximum	
Heater Voltage (regulate to ±2% for optimum performance)	--	6.3	--	Volts AC or DC
Heater Current	--	--	0.5	Amperes
Electrode 1 (Grid) Voltage	0	--	-35	Volts
Electrode 2 (Anode) Voltage	25	--	75	Volts
Electrode 3 Voltage	25	--	150	Volts
Electrode 4 Voltage	200	--	450	Volts
Helix Voltage	720	--	850	Volts
Helix Current	--	--	100	Microamperes
Collector Voltage	950	--	1100	Volts
Collector Dissipation	--	--	1.32	Watts
Cathode Current	650	--	1200	Microamperes

* Voltages shown are measured with respect to cathode. All voltages may be isolated from ground. For minimum noise and optimum gain characteristics, voltages should be adjusted to values specified by instructions accompanying each tube. These values will be within the ranges given above.

TYPICAL CHARACTERISTICS

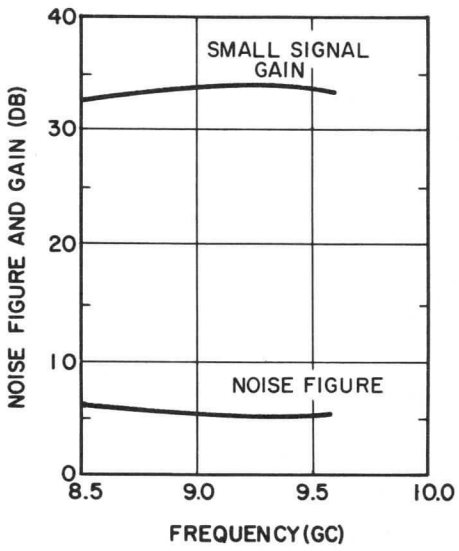

KPT-02HI2-10PN CANNON CONNECTIONS

CONNECTED TO	PIN
ELECTRODE 1	A
ELECTRODE 2	B
ELECTRODE 3	C
ELECTRODE 4	D
HELIX	E
COLLECTOR	F
CATHODE-HEATER	G
HEATER	J
NO CONNECTION	K
NO CONNECTION	H

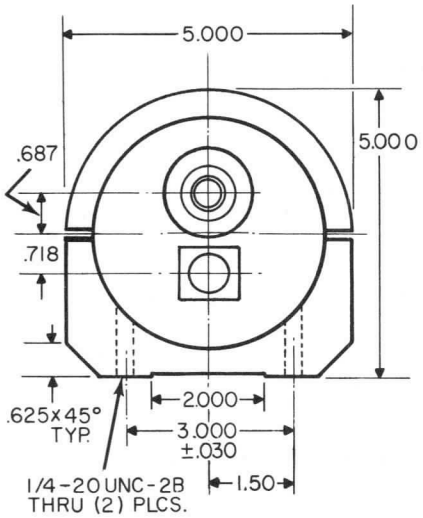

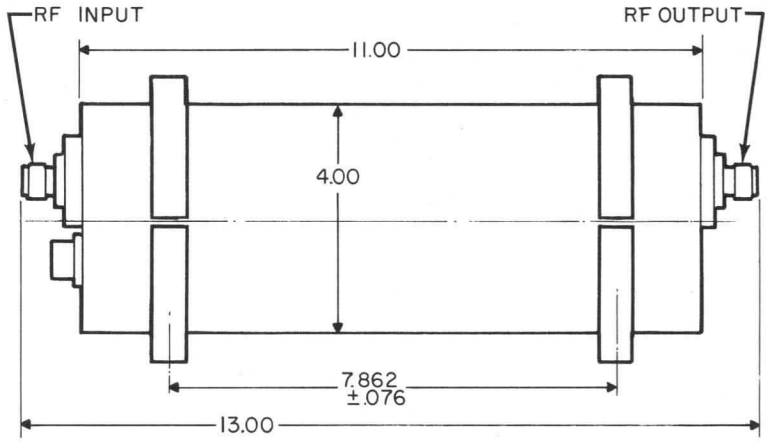

DIMENSIONS ARE IN INCHES

GENERAL ELECTRIC
POWER TUBE DEPARTMENT
Schenectady 5, N. Y.

OBJECTIVE
TECHNICAL INFORMATION

These ratings represent the design objective for this product. Refer to the Preliminary Technical Information sheet for ratings currently achieved in the progression towards design objectives. If PTI sheets do not exist, consult your local Power Tube Department Regional Sales Office.

DEVELOPMENTAL TYPE

ZM-3207
OTI-83
Page 1
6-18-63

This technical information is proprietary and is furnished only as a service to customers.

ZM-3207

TRAVELING-WAVE TUBE

10 db Noise Figure, Maximum	Metal-Ceramic	6 to 12 Gigacycles
25 db Gain, Minimum	Single Reversal PM Focused	3 Milliwatts Output

The ZM-3207 is a ruggedized, low-noise, low-power, broadband traveling-wave tube with noise figure, gain, and power-performance specifications which apply over the entire frequency rating. The tube is of metal-and-ceramic construction and is supplied as a completely packaged assembly which includes a single-reversal permanent-magnet focusing structure, connectors, and housing. The entire assembly weighs approximately 8.6 pounds.

The broad bandwidth, low noise, high gain, freedom from tuning adjustments, and rugged construction are important features for application in military systems. Applications include radar transmitters and receivers, electronic countermeasures equipment, microwave relay systems, radiometry, and instrumentation.

Since this tube is single-reversal permanent-magnet focused and magnetically shielded it is well suited to applications requiring close physical spacing with magnetic materials or other tubes.

PERFORMANCE*	Minimum	Nominal	Maximum	
Frequency	6	--	12	Gigacycles
Noise Figure	--	8.5	10	Decibels
Small Signal Gain	25	--	--	Decibels
Saturation Power Output	--	3	--	Milliwatts
VSWR, Input and Output	--	--	2.5:1	

MECHANICAL

Mounting Position – Any
Connectors
DC Socket – Cannon KPT-02H12-10PN
RF Input and Output – Coaxial Type N, Female

Dimensions, approximate		
Length, including r-f connectors	13	Inches
Diameter	4	Inches
Weight, approximate	8.6	Pounds

THERMAL

Cooling – Convection

ENVIRONMENTAL

Shock (energized)	50 g for 11 milliseconds on each of three mutually perpendicular axes.
Vibration (operating)	0.062 inch double amplitude from 5 to 55 cycles per second and 15 g from 55 to 2000 cycles per second, with sweep over 5 to 2000 cycles per second for 100 minutes on each of three mutually perpendicular axes.
Humidity (non-operating)	MIL-E-5272 C, Paragraph 4.4.1 (Procedure I); i.e., non-operating tube in 95 percent relative humidity atmosphere for 10 days with temperature cycled slowly from approximately 30 C to 71 C each day.

The specifications of this type are subject to change. This device is now under development and is made available for experimental purposes only. For the most recent information concerning the status of this development, please consult your local Power Tube Department Regional Sales Office, or current Preliminary Technical Information for the same catalog number.

ENVIRONMENTAL (Continued)

Acoustic Noise (operating)	150 decibels above 2 x 10^{-4} dynes/second^2, 25 to 12,000 cycles per second random noise.
Altitude (operating)	100,000 feet mean sea level.
Temperature, ambient (operating)	-65 to +100 C.

OPERATING CONDITIONS†	Minimum	Nominal	Maximum	
Heater Voltage (regulate to ±2% for optimum performance)	--	6.3	--	Volts AC or DC
Heater Current	--	--	0.5	Amperes
Electrode 1 (Grid) Voltage	0	--	-35	Volts
Electrode 2 (Anode) Voltage	25	--	75	Volts
Electrode 3 Voltage	25	--	150	Volts
Electrode 4 Voltage	200	--	450	Volts
Helix Voltage	720	--	850	Volts
Helix Current	--	--	100	Microamperes
Collector Voltage	950	--	1100	Volts
Collector Dissipation	--	--	1.32	Watts
Cathode Current	650	--	1200	Microamperes

* Increased gain and power ratings are possible when this tube is optimized for a narrow frequency band.

† Voltages shown are measured with respect to cathode. All voltages may be isolated from ground. For minimum noise and optimum gain characteristics, voltages should be adjusted to values specified by instructions accompanying each tube. These values will be within the ranges given above.

KPT-02HI2-10PN CANNON CONNECTIONS

CONNECTED TO	PIN
ELECTRODE 1	A
ELECTRODE 2	B
ELECTRODE 3	C
ELECTRODE 4	D
HELIX	E
COLLECTOR	F
CATHODE-HEATER	G
HEATER	J
NO CONNECTION	K
NO CONNECTION	H

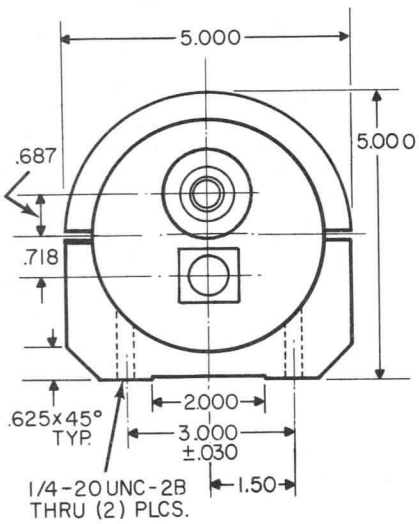

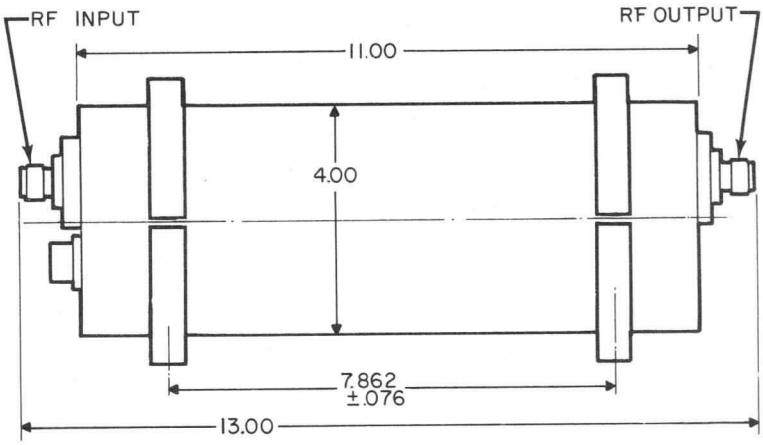

DIMENSIONS ARE IN INCHES

GENERAL ELECTRIC

POWER TUBE DEPARTMENT
Schenectady 5, N. Y.

OBJECTIVE
TECHNICAL INFORMATION

These ratings represent the design objective for this product. Refer to the Preliminary Technical Information sheet for ratings currently achieved in the progression towards design objectives. If PTI sheets do not exist, consult your local Power Tube Department Regional Sales Office.

DEVELOPMENTAL TYPE

ZM-3212
OTI-84
Page 1
6-18-63

This technical information is proprietary and is furnished only as a service to customers.

ZM-3212

TRAVELING-WAVE TUBE

9 db Noise Figure, Maximum	Metal-Ceramic	4 to 8 Gigacycles
25 db Gain, Minimum	Single Reversal PM Focused	3 Milliwatts Output

The ZM-3212 is a ruggedized, low-noise, low-power, broadband traveling-wave tube with noise figure, gain, and power performance specifications which apply over the entire frequency rating. The tube is of metal-and-ceramic construction and is supplied as a completely packaged assembly which includes a single-reversal permanent-magnet focusing structure, connectors, and housing. The entire assembly weighs approximately 9.5 pounds.

The broad bandwidth, low noise, high gain, freedom from tuning adjustments, and rugged construction are important features for application in military systems. Applications include radar transmitters and receivers, electronic countermeasures equipment, microwave relay systems, radiometry, and instrumentation.

Since this tube is single-reversal permanent-magnet focused and magnetically shielded, it is well suited to applications requiring close physical spacing with magnetic materials or other tubes.

PERFORMANCE*	Minimum	Nominal	Maximum	
Frequency	4	--	8	Gigacycles
Noise Figure	--	7.5	9.0	Decibels
Small Signal Gain	25	--	--	Decibels
Saturation Power Output	1	3	--	Milliwatts
VSWR, Input and Output	--	--	2.5:1	

MECHANICAL

Mounting Position – Any
Connectors
DC Socket – Cannon KPT-02H12-10PN
RF Input and Output – Coaxial Type N, Female
Dimensions, approximate

Length, including r-f connectors	13.5	Inches
Diameter	4.0	Inches
Weight, approximate	9.5	Pounds

THERMAL

Cooling – Convection

ENVIRONMENTAL

Shock (energized)	50 g for 11 milliseconds on each of three mutually perpendicular axes.
Vibration (operating)	0.062 inch double amplitude from 5 to 55 cycles per second and 15 g from 55 to 2000 cycles per second, with sweep over 5 to 2000 cycles per second for 100 minutes on each of three mutually perpendicular axes.

The specifications of this type are subject to change. This device is now under development and is made available for experimental purposes only. For the most recent information concerning the status of this development, please consult your local Power Tube Department Regional Sales Office, or current Preliminary Technical Information for the same catalog number.

ENVIRONMENTAL (Continued)

Humidity (non-operating)	MIL-E-5272 C, Paragraph 4.4.1 (Procedure I); i.e., non-operating tube in 95 percent relative humidity atmosphere for 10 days with temperature cycled slowly from approximately 30 C to 71 C each day.
Acoustic Noise (operating)	150 decibels above 2×10^{-4} dynes/second^2, 25 to 12,000 cycles per second random noise.
Altitude (operating)	100,000 feet mean sea level.
Temperature, ambient (operating)	-65 to +65 C.

OPERATING CONDITIONS†	Minimum	Nominal	Maximum	
Heater Voltage (regulate to ±2% for optimum performance)	--	6.3	--	Volts AC or DC
Heater Current	--	--	0.5	Amperes
Electrode 1 (Grid) Voltage	0	--	-35	Volts
Electrode 2 (Anode) Voltage	25	--	75	Volts
Electrode 3 Voltage	25	--	150	Volts
Electrode 4 Voltage	50	--	350	Volts
Helix Voltage	530	--	640	Volts
Helix Current	--	--	100	Microamperes
Collector Voltage	750	--	900	Volts
Collector Dissipation	--	--	0.9	Watts
Cathode Current	400	--	1000	Microamperes

* Increased gain and power ratings are possible when this tube is optimized for narrow frequency band.

† Voltages shown are measured with respect to cathode. All voltages may be isolated from ground. For minimum noise and optimum gain characteristics, voltages should be adjusted to values specified by instructions accompanying each tube. These values will be within the ranges given above.

KPT-02HI2-10PN CANNON CONNECTIONS

CONNECTED TO	PIN
ELECTRODE 1	A
ELECTRODE 2	B
ELECTRODE 3	C
ELECTRODE 4	D
HELIX	E
COLLECTOR	F
CATHODE-HEATER	G
HEATER	J
NO CONNECTION	K
NO CONNECTION	H

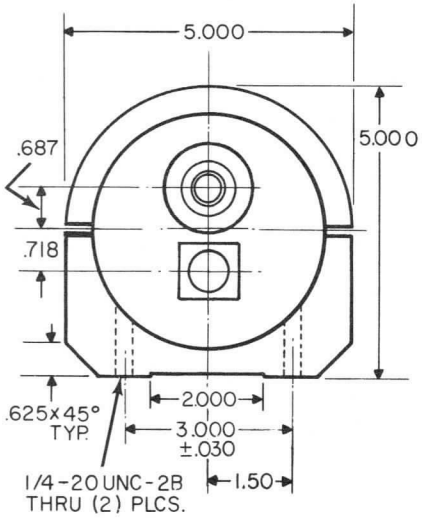

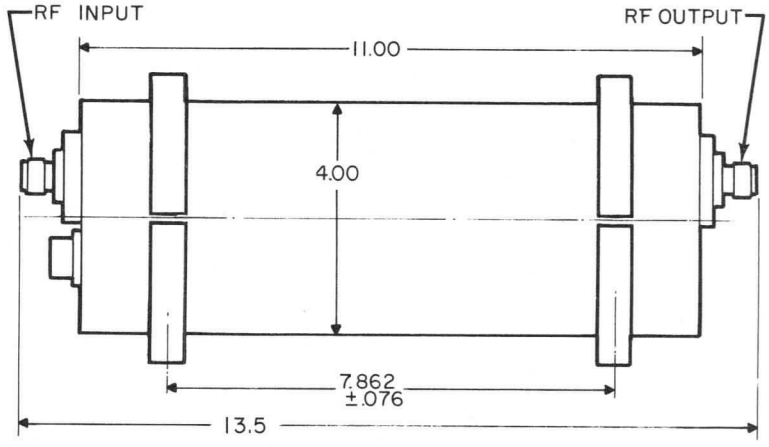

DIMENSIONS ARE IN INCHES

ZM-3220 ZM-3238
ZM-3235 ZM-3250
ZM-3237

Traveling-Wave Tubes

Technical Information

- LOW NOISE
- C-BAND
- SRPM FOCUSING

RF PERFORMANCE

Tube Type	Frequency Range (Gc)	Maximum Noise Figure (db)	Minimum SS Gain (db)	Minimum Saturation Power Output (mw)
ZM-3235	4.0 - 8.0	8	25	5
ZM-3220	4.3 - 7.35	7	30	10
ZM-3250	4.4 - 5.0	6	30	10
ZM-3237	5.4 - 5.9	6	30	10
ZM-3238	5.9 - 6.5	6	30	10

FEATURES

low noise
broad bandwidth
single-reversal permanent-magnet focusing*
metal-ceramic construction
military environments
lightweight
crystal mixer protection

APPLICATIONS

radar
ecm
instrumentation
communications
radiometry

MECHANICAL & MISCELLANEOUS

VSWR, Input and Output (max)
ZM-3235 ..... 2.5
ZM-3220, ZM-3250, ZM-3237, ZM-3238 ..... 2.0
Mounting Position ..... Any
Weight, lb 9.3
Overall Length, in. 13.84
Cooling ..... Convection
RF Connectors ..... Type N, female
DC Connector ..... Cannon KPT-02H12-10PN (or equiv.)

TYPICAL CHARACTERISTICS

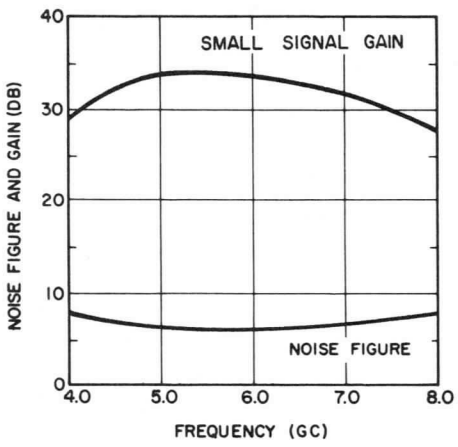

GENERAL ELECTRIC

OPERATING CONDITIONS †

Htr, vac or vdc	6.3
Htr, amp (max.)	0.35
Elect. 1, vdc	-35 to 0
Elect. 2, vdc	25 to 75
Elect. 3, vdc	25 to 150
Elect. 4, vdc	50 to 350
Helix, vdc	550 to 750
Helix, μa (max.)	100
Collector, vdc.	800 to 1000
Beam, μa(max.)	1200

ENVIRONMENTAL

Shock (energized)	30 G, 11ms, 3 axes
Vibration (operating)	15G, 90 to 2000 cps
Temp. Ambient (operating)	-65 to +71C #
Altitude (operating)	100,000 ft
Acoustic Noise (operating)	150db, 25 to 12,000 cps

OUTLINE

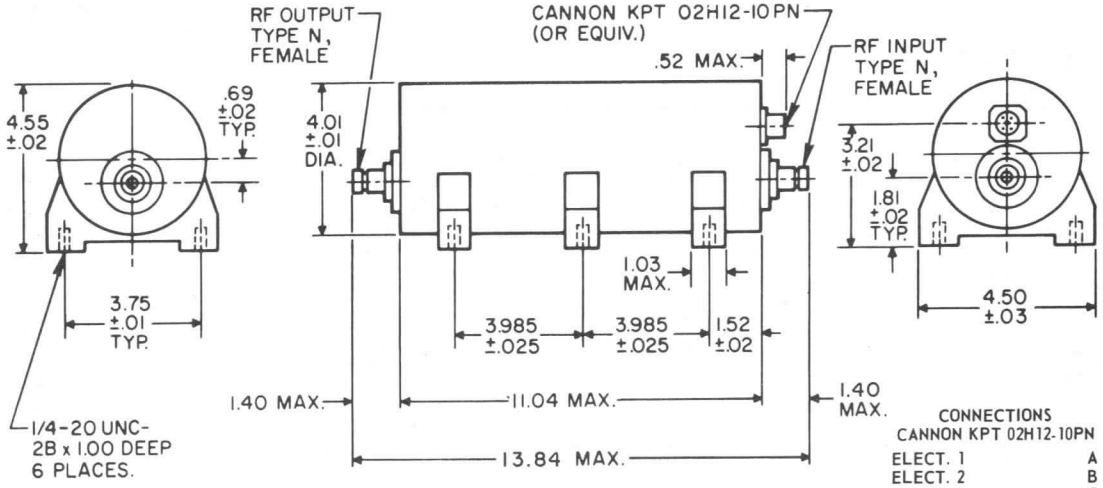

DIMENSIONS ARE IN INCHES; THOSE WITHOUT TOLERANCES ARE APPROXIMATE.

CONNECTIONS
CANNON KPT 02H12-10PN

ELECT. 1	A
ELECT. 2	B
ELECT. 3	C
ELECT. 4	D
HELIX	E
COLL.	F
CATH.-HTR.	G
HTR.	J
PACKAGE GROUND	K

NOTES

* Since these tubes are single-reversal permanent-magnet focused and magnetically shielded, they are well suited for applications requiring close physical spacing with other tubes or magnetic materials.

† Voltages shown are measured with respect to cathode. All voltages may be isolated from ground. For minimum noise and optimum gain characteristics, voltages should be adjusted to values specified by instructions accompanying each tube. These values will be within the ranges given above.

\# This tube is capable of operating to +100 C with approximately 0.5 db degradation in noise figure.

These data are subject to change without notice.

TUBE DEPARTMENT

GENERAL ELECTRIC

Owensboro, Kentucky

Traveling-Wave Tubes

ZM-3231
ZM-3289
ZM-3290

Technical Information

- MEDIUM POWER
- K_u-BAND
- PPM FOCUSING

RF PERFORMANCE

Tube Type	Frequency Range (Gc)	Min. CW Saturated Power Output (watts)	Minimum Small Signal Gain (db)	Minimum Saturated Gain (db)	Maximum Noise Figure (db)	VSWR (max)	Data Group
ZM-3231	12.0 - 18.0	5	35	30	30	2.5	1
ZM-3289	12.0 - 15.4	10	35	30	30	2.0	2
ZM-3290	11.0 - 20.0	1	30	25	30	3.0	1

FEATURES

- high gain
- broad bandwidth
- periodic permanent magnet focusing
- metal-ceramic construction
- military environments
- lightweight
- air cooling
- grid control

APPLICATIONS

- radar
- ecm
- communications
- instrumentation
- radiometry

MECHANICAL & MISCELLANEOUS

Mounting position	Any
Weight, lb.	2
Overall length, in.	9
Cooling	Forced Air
Flow, cfpm#	30
Max. Inlet air temp. °C.	90
Min. air press. in ft. (alt.)	10,000
Connectors	
RF input	UG-419/U
RF output	UG-419/U
DC	Flying leads

TYPICAL CHARACTERISTICS

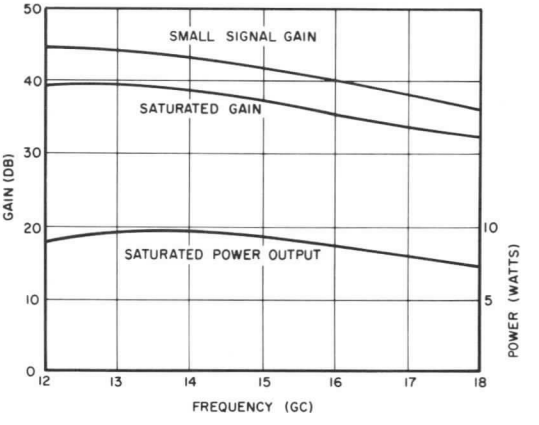

GENERAL ELECTRIC

OPERATING CONDITIONS *†

Data Group	C-1	C-2
Htr. dc	6.0 to 6.6	6.0 to 6.6
Htr. amp (max.)	3.0	3.0
Cath. kv dc**, with resp. to anode	-15 to -18	-15 to -17
Peak cath. amp (max)	5.0	4.5
Grid-bias vdc, with resp. to cath.	-300 to -400	---
Grid swing vdc, with resp. to grid-bias voltage	700 to 900	---
Peak grid amp (max)	1.0	---

OUTLINE

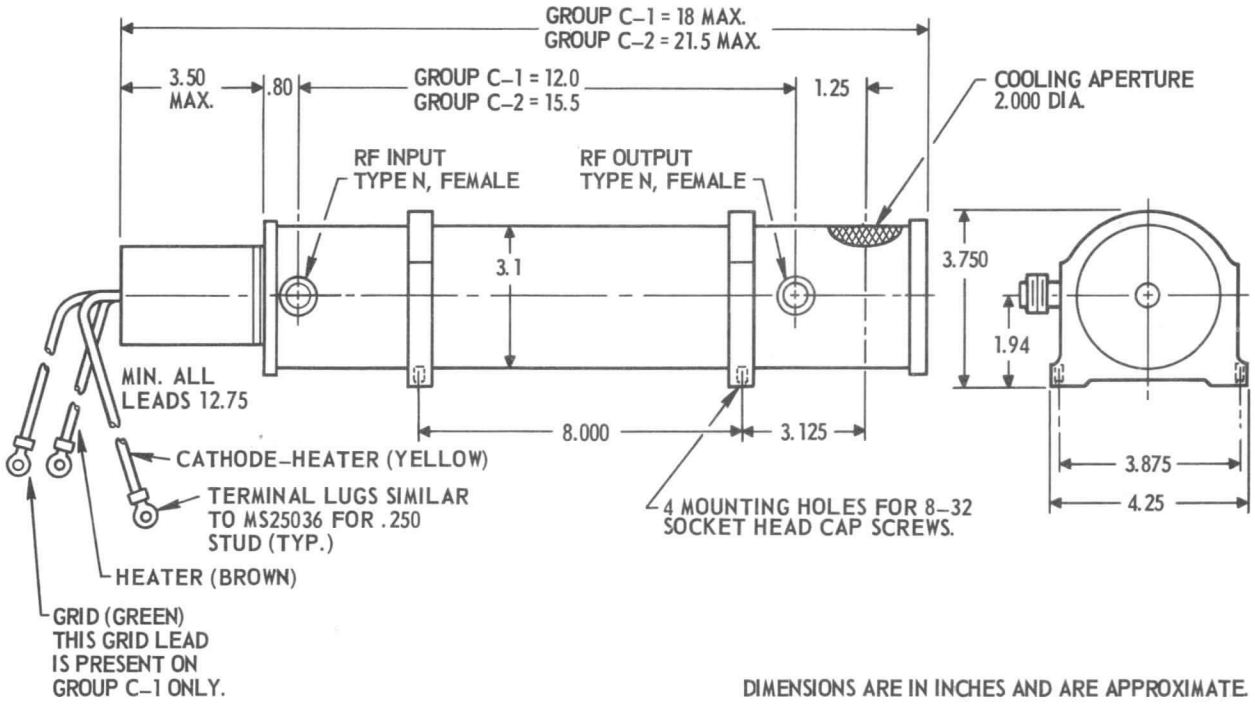

NOTES

‡ Duty of ZM-3133 is 0.002 when forced-air cooling is used. With liquid cooling on collector and body, duty can be increased to 0.01.

Duty of ZM-3282 is 0.002 when forced air cooling is used. With liquid cooling on collector and body, duty can be increased to 0.01. Convection cooling of collector may be used at duty cycle of 0.0008.

* For the performance ratings specified, voltages should be adjusted to values specified by instructions accompanying each tube. These values will be within the ranges given above.

† The cathode voltage may be set at various values between -15 to -18 kv to obtain different power and gain characteristics.

** The anode, collector, and circuit are connected to the tube package which must be grounded when the tube is installed.

These data are subject to change without notice.

TUBE DEPARTMENT
GENERAL ELECTRIC
Owensboro, Kentucky

Traveling-Wave Tubes

Technical Information

- LOW NOISE
- C-BAND
- PPM FOCUSED

RF PERFORMANCE

Tube Type	Frequency Range (Gc)	Maximum Noise Figure (db)	Minimum SS Gain (db)	Minimum Saturation Power Output (mw)
ZM-3245	4.0 - 8.0	11	30	10
ZM-3246	4.3 - 7.35	10	30	10
ZM-3247	5.0 - 7.0	10	33	10
ZM-3248	5.0 - 6.0	9	33	10
ZM-3249	4.4 - 5.0	9.5	33	10

FEATURES

lowest noise
broadband
periodic permanent magnet focusing
metal ceramic construction
military environments
lightweight
crystal mixer protection

APPLICATIONS

radar
ecm
instrumentation
communications
radiometry

MECHANICAL & MISCELLANEOUS

VSWR,† max	
Input	2.0
Output	2.0
Mounting Position	Any
Weight, lb	2.3
Overall Length, in.	9.3
Cooling	Convection
RF Connectors	Type TNC
Power Connection	Flying Leads
Collector Connection	Flying Lead

TYPICAL CHARACTERISTICS

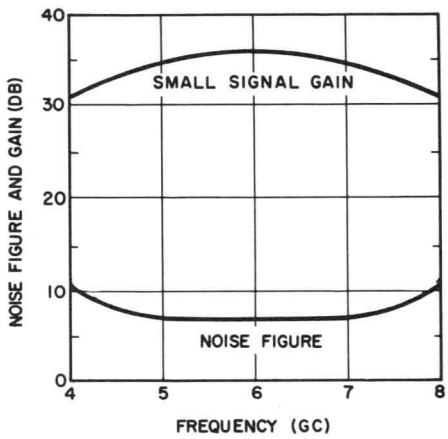

GENERAL ELECTRIC

OPERATING CONDITIONS*

Htr,# vac or vdc.....	6.3
Htr, amp (max.).....	0.35
Elect. 1, vdc.....	-30 to 0
Elect. 2, vdc.....	20 to 75
Elect. 3, vdc.....	50 to 200
Elect. 4, vdc.....	100 to 400
Helix, vdc	600 to 700
Helix, μa (max.).....	100
Collector, vdc.....	750 to 1000
Beam, μa (max.)	1000

ENVIRONMENTAL

Shock..... (energized)	50 G, 12 ms, 3 axes
Vibration ..... (operating)	15 G, 55 to 3000 cps
Temp, Ambient .... (operating)	-55 C to +85 C
Altitude ..... (operating)	100,000 ft.
Acoustic Noise ..... (operating)	135 db, 25 to 12,000 cps

OUTLINE

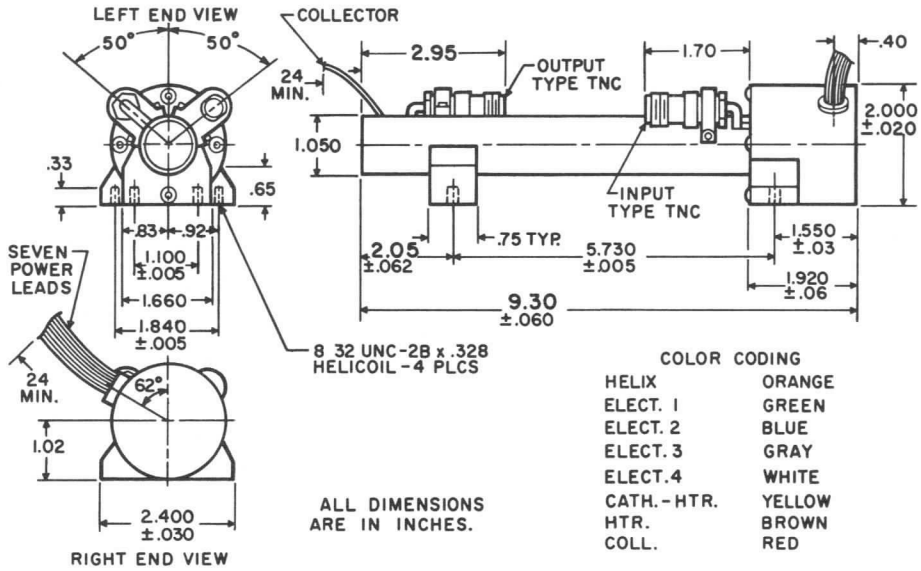

NOTES

* All voltages may be isolated from ground; i.e., it is not necessary to operate the cathode, helix, collector, or any other electrode at ground potential. Voltages shown are measured with respect to cathode. For minimum noise and optimum gain characteristics, voltages should be adjusted to values specified by instructions accompanying each tube.

† Max. VSWR of ZM-3245 is 2.5.

\# A 6-sec fast warmup heater is available at increased cost.

These data are subject to change without notice.

TUBE DEPARTMENT

GENERAL ELECTRIC

Owensboro, Kentucky

Traveling-Wave Tubes

Technical Information

- LOW NOISE
- C-BAND
- PPM FOCUSING

RF PERFORMANCE

Tube Type	Frequency Range (Gc)	Maximum Noise Figure (db)	Minimum Small Signal Gain (db)	Minimum Saturation Power Output (mw)
ZM-3263	4.0 - 8.0	15	30	10

FEATURES

low noise
broad bandwidth
PPM focusing
metal-ceramic construction
military environments
extremely light weight
crystal mixer protection

APPLICATIONS

radar
ecm
instrumentation
communications
radiometry

MECHANICAL AND MISCELLANEOUS

VSWR, max	
Input	2.5
Output	2.5
Mounting position	Any
Weight, lb	1.25
Overall length, in.	9.45
Cooling	Convection
Connectors	
RF input	TNC*
RF output	TNC*
DC	Winch'r. M10P-LS or equiv.
Collector	Winch'r. PM1P-LS

TYPICAL CHARACTERISTICS

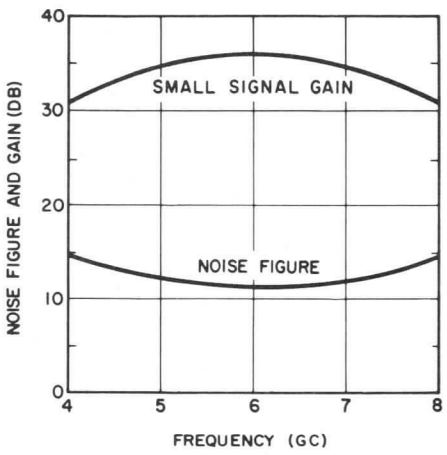

GENERAL ELECTRIC

OPERATING CONDITIONS †

Htr. vac or vdc	6.3
Htr. amp (max)	0.35
Elect. 1, vdc	0 to -50
Elect. 2, vdc	0 to 100
Elect. 3, vdc	50 to 200
Elect. 4, vdc	100 to 670
Helix, vdc	600 to 700
Helix, μa (max.)	200
Collector, vdc	600 to 850
Beam, μa (max.)	1000

ENVIRONMENTAL

Shock (energized)	50 G, 11 ms 3 axes
Vibration (operating)	15 G, 55 to 3000 cps
Temp. Ambient (operating)	-55 to +85°C
Altitude (operating)	100,000 ft
Acoustic Noise (operating)	135 db, 25 to 12,000 cps

OUTLINE

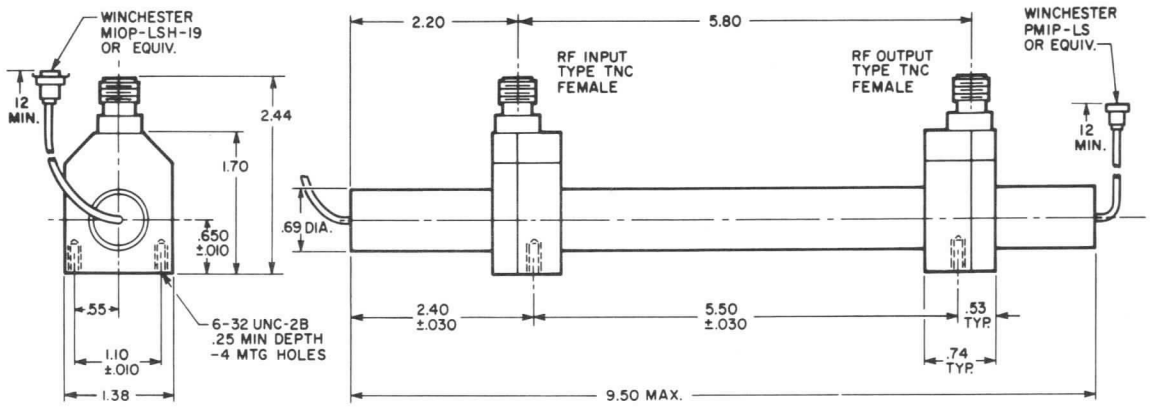

NOTES

* This tube can be furnished with Omni Spectra OSM (or equiv.) r-f connectors.

\+ All voltages may be isolated from ground; i.e., it is not necessary to operate the cathode, helix, collector, or any other electrode at ground potential. Voltages shown are measured with respect to cathode. For minimum noise and optimum gain characteristics, voltages should be adjusted to values specified by instructions accompanying each tube.

These data are subject to change without notice.

TUBE DEPARTMENT

GENERAL ELECTRIC

Owensboro, Kentucky

ZM-3265
ZM-3266
ZM-3267
ZM-3268
ZM-3270
ZM-3271
ZM-3272

Traveling-Wave Tubes

Technical Information

- LOW NOISE
- X-BAND
- PPM FOCUSING

RF PERFORMANCE

Tube Type	Frequency Range (Gc)	Maximum Noise Figure (db)	Minimum Small Signal Gain (db)	Minimum Saturation Power Output (mw)
ZM-3270	7.0 - 8.5	8.0	35	10
ZM-3266	7.0 - 11.0	8.0	30	10
ZM-3265	7.0 - 12.0	9.0	30	3
ZM-3271	7.5 - 8.5	7.5	35	10
ZM-3267	8.0 - 12.0	8.5	30	5
ZM-3268	8.5 - 9.6	7.5	35	10
ZM-3272	9.0 - 10.0	8.0	33	10

FEATURES

low noise
broad bandwidth
periodic permanent magnet focusing
metal-ceramic construction
military environments
light weight
crystal mixer protection

APPLICATIONS

radar
ecm
instrumentation
communications
radiometry

MECHANICAL & MISCELLANEOUS

VSWR, max	
Input	2.5
Output	2.5
Mounting position	Any
Weight, lb	5.5
Over-all length, in	11.0
Cooling	Convection
Connectors	
RF input	Type N
RF output	Type N
DC	Winch'r M12P or equiv.
Collector	Winch'r PM1PLS or equiv.

TYPICAL CHARACTERISTICS

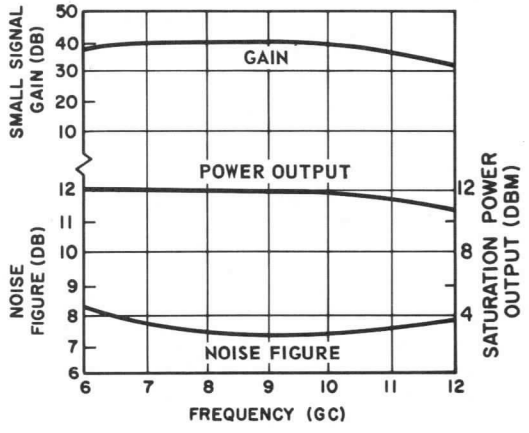

GENERAL ELECTRIC

OPERATING CONDITIONS*

Htr. vac or vdc	6.3
Htr. amp (max)	0.35
Elect. 1, vdc	0 to -25
Elect. 2, vdc	0 to 75
Elect. 3, vdc	0 to 200
Elect. 4, vdc	50 to 400
Helix, vdc	700 to 900
Helix, μa (max.)	150
Collector, vdc	900 to 1100
Beam, μa (max.)	1000

ENVIRONMENTAL

Shock (energized)	30 G, 11 ms 3 axes
Vibration (operating)	15 G, 70 to 2,000 cps
Temp. Ambient† (operating)	-65 C to +100 C
Altitude (operating)	100,000 ft.
Acoustic Noise (operating)	135 db, 25 to 12,000 cps

OUTLINE

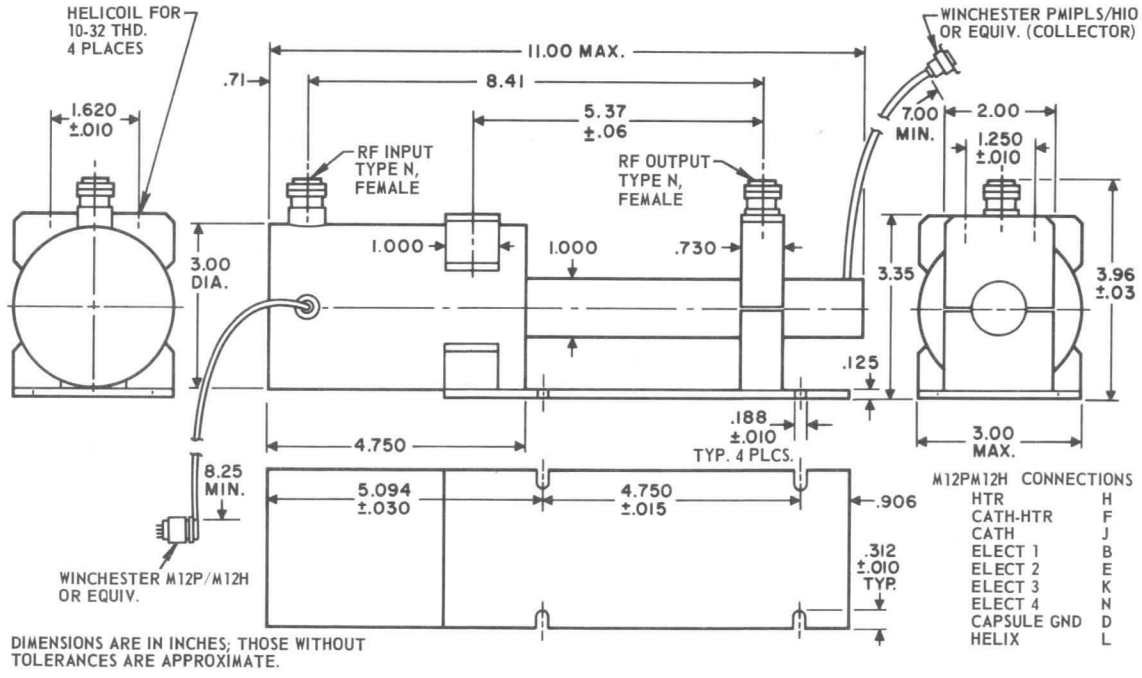

NOTES

* Voltages shown are measured with respect to cathode. All voltages may be isolated from ground. For minimum noise and optimum gain characteristics, voltages should be adjusted to values specified by instructions accompanying each tube. These values will be within the ranges given above.

† Some degradation of performance may occur under extremes of indicated environmental conditions.

These data are subject to change without notice.

TUBE DEPARTMENT

GENERAL ELECTRIC

Owensboro, Kentucky

ZM-3273 ZM-3277
ZM-3274 ZM-3278
ZM-3275 ZM-3279
ZM-3276

Traveling-Wave Tubes

Technical Information

- MEDIUM POWER
- C/X-BAND
- PPM FOCUSING

RF PERFORMANCE

Tube Type	Frequency Range (Gc)	Min. CW Saturated Power Output (watts)	Minimum Small Signal Gain# (db)	Maximum Noise Figure (db)
ZM-3273	5-10	10	60	30
ZM-3274	5-12	10	60	30
ZM-3275	5.4-11	10	60	30
ZM-3276	7-11	15	60	30
ZM-3277	7-12	10	60	30
ZM-3278	8-10	20	60	30
ZM-3279	8-12	10	60	30

FEATURES

high gain
broad bandwidth
periodic permanent magnet focusing
metal-ceramic construction
military environments
light weight
conduction cooling

APPLICATIONS

radar
ecm
communications
instrumentation
augmentor

MECHANICAL & MISCELLANEOUS

VSWR, max	
Input	2.5
Output	2.5
Mounting position	Any
Weight, lb.	3
Overall length, in.	10.3
Cooling	Conduction from base.* (Air cooled versions are also available.)
Connectors	
RF input	N, female
RF output	N, female
DC	Flying leads

TYPICAL CHARACTERISTICS

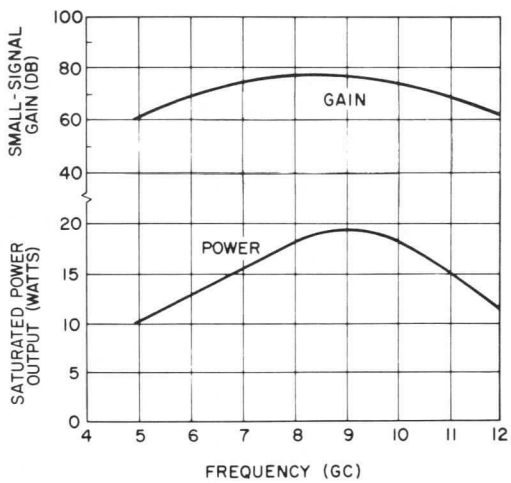

GENERAL ELECTRIC

OPERATING CONDITIONS † ‡

Htr. vac or vdc	6.0 to 7.5
Htr. amp (max)	0.80
Cath. kv dc, with resp. to coll.	-2.6 to -2.9
Cath. ma, (max)	65
Focus elect. vdc, with resp. to cathode	0 to -30
Helix vdc, with resp. to coll.	-100 to +100
Helix ma (max)	10

OUTLINE

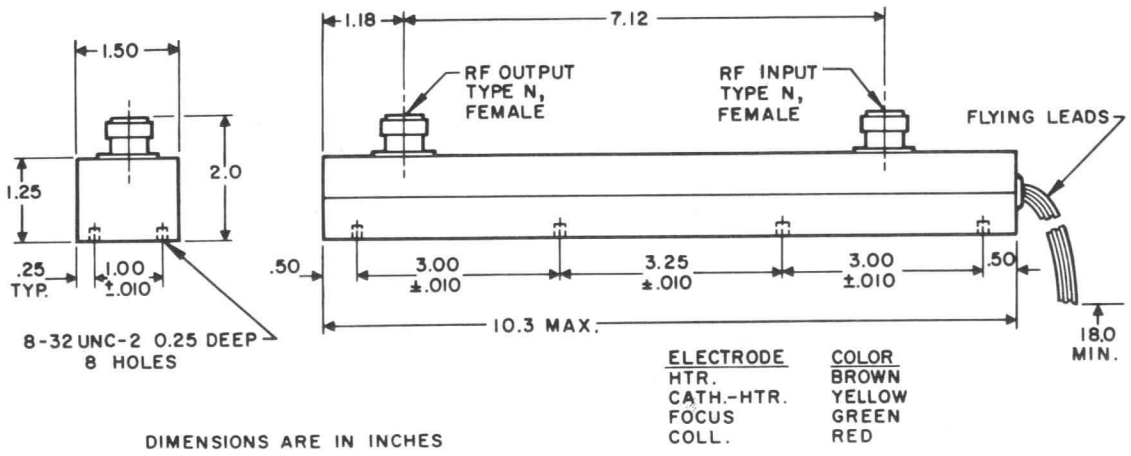

DIMENSIONS ARE IN INCHES

NOTES

\# Lower gain versions of these tubes are available.

* To assure adequate cooling these tubes must be securely mounted with maximum contact area to a good heat-conducting surface of sufficient heat capacity to hold the tube package temperature below 150°C.

† For the performance ratings specified, voltages should be adjusted to values specified by instructions accompanying each tube. These values will be within the ranges given above.

‡ The collector is connected to the package which should be grounded in the normal installation of this tube. The helix is connected to the center pins of the r-f input and output connectors. D-c power should be connected to the helix by use of a three-way, r-f and d-c connector at the r-f input or output, such as Microlab HU-90N (7-13 Gc) and HU-60N (4-8 Gc) or equivalent. (Connection of d-c to r-f input connector is preferred.)

These data are subject to change without notice.

TUBE DEPARTMENT

GENERAL ELECTRIC

Owensboro, Kentucky

ZM-3280
ZM-3281

Traveling-Wave Tubes

Technical Information

- HIGH POWER
- X-BAND
- PPM FOCUSING

RF PERFORMANCE

Tube Type	Frequency Range (Gc)	Min. Peak Saturated Power Output, (kw)	Maximum Duty	Maximum Pulse Width (μsec)	Minimum Saturated Gain (db)	Data Group
ZM-3280 (air cooled)	8.5-9.6	10	0.01	20	33	X-1
ZM-3281 (liquid cooled)	8.5-9.6	10	0.01	20	33	X-2

FEATURES

high gain
broad bandwidth
periodic permanent magnet focusing
metal-ceramic construction
loaded-waveguide circuit
military environments
light weight
grid control

APPLICATIONS

radar
ecm

MECHANICAL & MISCELLANEOUS

Data Group	X-1	X-2
VSWR, max		
Input	1.6	1.6
Output	1.6	1.6
Grid to other elements $\mu\mu$f (max)	35	35
Circuit insertion loss, db.	90	90
Phase shift, deg/1% change in cathode voltage (max)	30	30
Weight, lb	17	15
Overall length, in.	21	21
Mounting position	Any	Any
Cooling	Forced air	Liquid
Flow rate	50 cfm	0.3 gpm(water)
Pressure drop	1.0 in. H_2O	10 psi
Connectors		
RF input	Mates with UG-40A/U	Mates with UG-40A/U
RF output	Mates with UG-40A/U	Mates with UG-40A/U
DC	Flying leads	Flying leads
Ion pump	See outline	See outline

TYPICAL CHARACTERISTICS

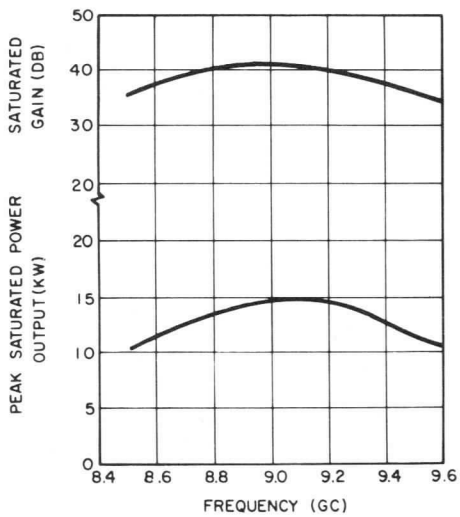

GENERAL ELECTRIC

OPERATING CONDITIONS * †

Data Group	X-1 & X-2
Htr. vac or vdc	9 to 11
Htr. amp (max)	2.5
Cath. kv dc, with resp. to anode	-24 to -26
Peak cath. amp (max)	5.0
Grid-bias vdc, with resp. to cath.	-275 to -325
Grid swing vdc, with resp. to grid-bias voltage	450 to 550
Peak grid amp. (max)	1.0
Coll. kv dc, with resp. to anode	0
Ion pump vdc	2800

OUTLINE (GROUP X-1)

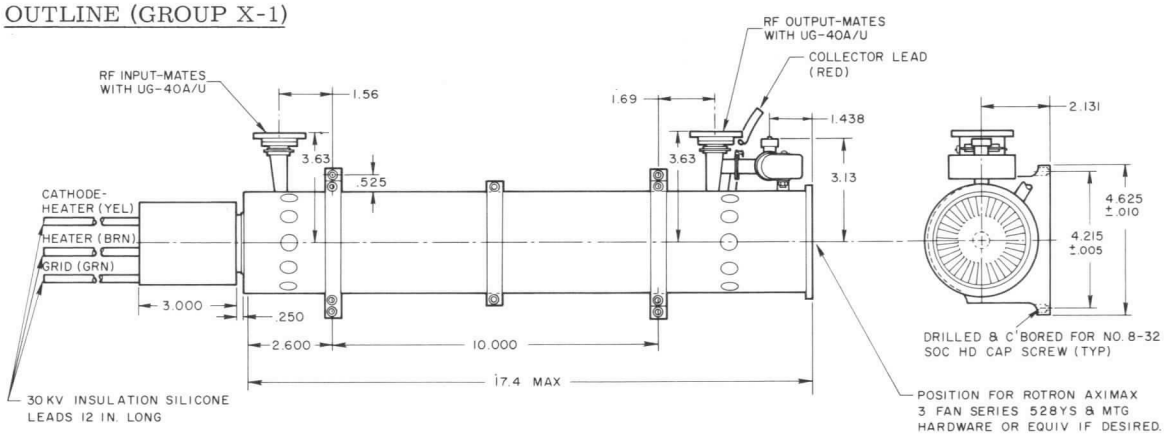

DIMENSIONS ARE IN INCHES

OUTLINE (GROUP X-2)

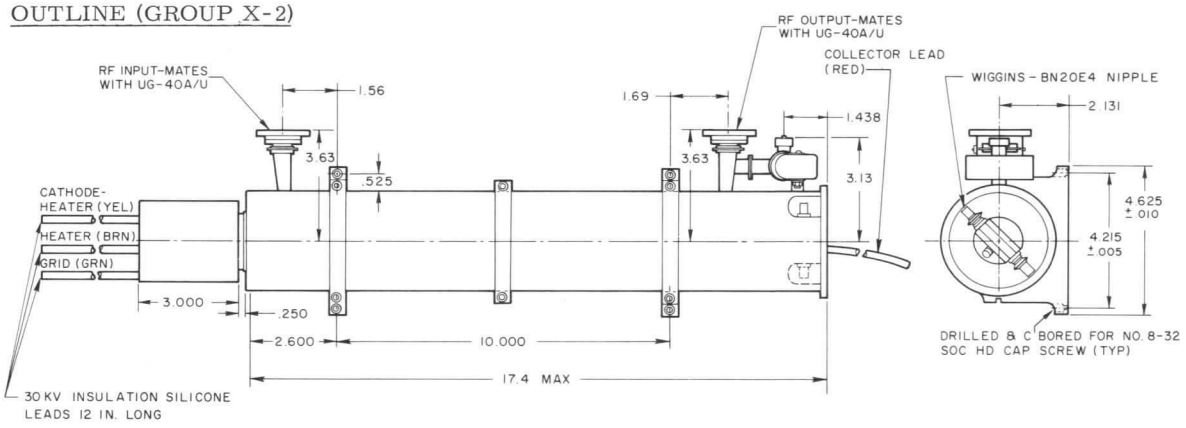

DIMENSIONS ARE IN INCHES

NOTES

† With a small price increase the ZM-3280 can be supplied with a blower.

* For the performance ratings specified, voltages should be adjusted to values specified by instructions accompanying each tube. These values will be within the ranges given above.

† The cathode voltage may be set at various values between -24 and -26 kv to obtain different power and gain characteristics.

\# The anode is connected to the tube package which should be grounded in the normal installation of this tube.

These data are subject to change without notice.

TUBE DEPARTMENT

GENERAL ELECTRIC

Owensboro, Kentucky

Traveling-Wave Tubes

Technical Information

- LOW NOISE
- C-& X-BAND
- SRPM FOCUSING
- INTEGRAL POWER SUPPLY

RF PERFORMANCE

TUBE TYPE			Frequency Range (Gc)	Maximum Noise Figure (db)	Minimum Small Signal Gain (db)	Minimum Saturation Power Output (mw)
28 vdc Power Supply	115 v 400 cps Power Supply	115 v 60 cps Power Supply				
ZM-3291	ZM-3292	ZM-3293	4.0 - 8.0	8	25	5
ZM-3294	ZM-3295	ZM-3296	7.0 - 11.0	8	25	5
ZM-3306	ZM-3307	ZM-3308	7.0 - 11.0	9	25	5
ZM-3309	ZM-3310	ZM-3311	8.0 - 12.0	8	25	5
ZM-3297	ZM-3298	ZM-3299	8.0 - 12.0	9	25	5

FEATURES

- low noise
- broad bandwidth
- single-reversal permanent-magnet focusing‡
- metal-ceramic construction
- military environment
- light weight
- crystal mixer protection
- integral power supply
  - solid state
  - line surge protection
  - long term stability

APPLICATIONS

- radar
- ecm
- instrumentation
- communications
- radiometry

MECHANICAL AND MISCELLANEOUS

VSWR, max	
Input	2.5
Output	2.5
Mounting position	Any
Weight, lb.	15.5
Overall length, in.	13.85
Cooling	Convection
Connectors	
RF input	Type N, female
RF output	Type N, female
Power	Deutsch DM9601-3P (or equiv.)

TYPICAL CHARACTERISTICS

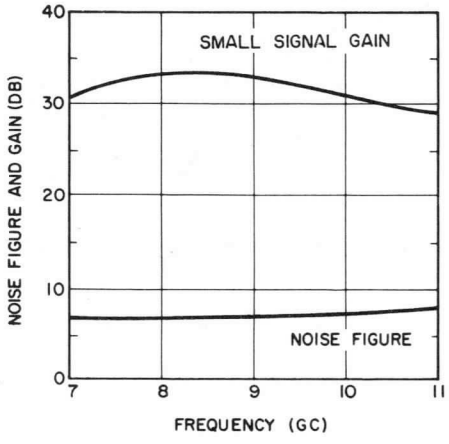

GENERAL ELECTRIC

POWER SUPPLY REQUIREMENTS

Nominal Rating	115 v 60 cps	115 v 400 cps	28 vdc
Voltage range	100-135 vac	100-135 vac	24-29 vdc
Voltage transients	*	*	**
Freq. range	48-75 cps	380-420 cps	—
Power, max.	30 w	30 w	30 w

* Transients per MIL-STD-704 par. 5.1.4.2. If voltage exceeds 175 volts for 3 sec, the fuse will blow.

** Transients per MIL-STD-704 par. 5.2.3.2.

ENVIRONMENTAL

Shock (energized)	30 G, 11 ms,	3 axes
Vibration (operating)	15 G, 90 to	2000 cps
Temp. Ambient (operating)	-54 to +71 C	#
Altitude (operating)	100, 000 ft	
Acoustic Noise (operating)	150 db, 25 to	12, 000 cps

OUTLINE

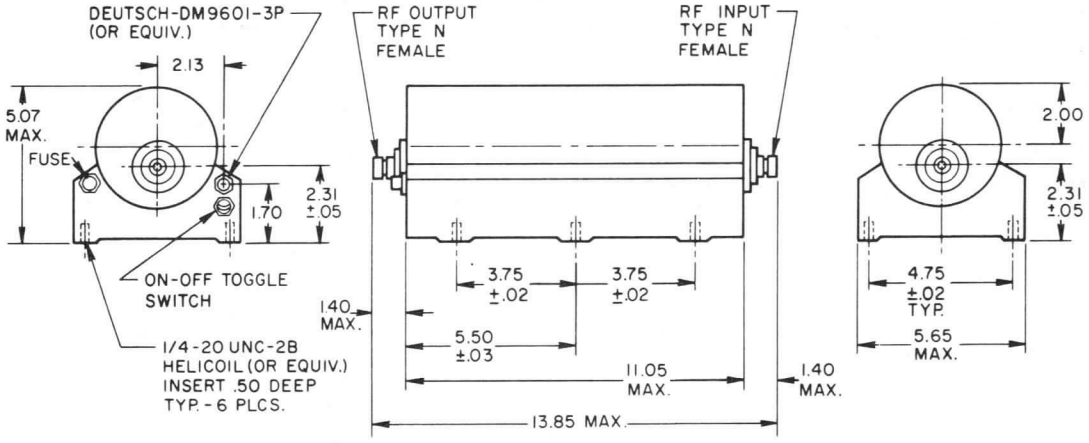

DIMENSIONS ARE IN INCHES; THOSE WITHOUT TOLERANCES ARE APPROXIMATE.

PIN CONNECTIONS

	115V, 60 CPS POWER SUPPLY	115V, 400 CPS POWER SUPPLY	28 VDC POWER SUPPLY
PIN 1	115V LINE	115V LINE	28 VDC LINE
PIN 2	CHASSIS GND.	CHASSIS GND.	GND. (CHASSIS & CIRCUIT)
PIN 3	115V LINE	115V LINE	GND. (CHASSIS & CIRCUIT)

NOTES

ǂ Since these tubes are single-reversal permanent-magnet focused and magnetically shielded, they are well suited for applications requiring close physical spacing with other tubes or magnetic materials.

† Narrowband versions of these tubes with improved noise figure and gain ratings are available, e.g., since these tubes correspond to the ZM-3203 and ZM-3235 except for the integral power supplies, corresponding narrowband ratings are applicable.

\# This tube is capable of operating to +85 C with approximately 0.5 db degradation in noise figure.

These data are subject to change without notice.

TUBE DEPARTMENT

GENERAL ELECTRIC

Owensboro, Kentucky

Rev 1-6-65 DS-118

ZM-3291 thru ZM-3299
ZM-3306 thru ZM-3311
ZM-3365 thru ZM-3376
ZM-3404 thru ZM-3427
ZM-3436 thru ZM-3438

Traveling-Wave Tubes

Technical Information

RF PERFORMANCE

TUBE TYPE			Frequency Range (Gc)	Max. Noise Figure (db)	Min. Small Signal Gain (db)	Min. Sat. Power Output (mw)	Data Group
28 vdc Power Supply	115 v 400 cps Power Supply	115 v 60-400 cps Power Supply					
ZM-3365	ZM-3366	ZM-3367	2.0-4.0	8	30	5	1
ZM-3368	ZM-3369	ZM-3370	2.2-2.3	5.5	30	5	1
ZM-3371	ZM-3372	ZM-3373	2.7-3.3	6.0	30	7	1
ZM-3291	ZM-3292	ZM-3293	4.0-8.0	8	25	5	1
ZM-3416	ZM-3417	ZM-3418	4.3-7.35	7	30	10	1
ZM-3419	ZM-3420	ZM-3421	4.4-5.0	6	30	10	1
ZM-3422	ZM-3423	ZM-3424	5.4-5.9	6	30	10	1
ZM-3425	ZM-3426	ZM-3427	5.9-6.5	6	30	10	1
ZM-3404	ZM-3405	ZM-3406	7.0-8.5	7	30	10	1
ZM-3294	ZM-3295	ZM-3296	7.0-11.0	8	25	5	1
ZM-3306	ZM-3307	ZM-3308	7.0-11.0	9	25	5	1
ZM-3407	ZM-3408	ZM-3409	7.5-8.5	6.5	30	10	1
ZM-3309	ZM-3310	ZM-3311	8.0-12.0	8	25	5	1
ZM-3297	ZM-3298	ZM-3299	8.0-12.0	9	25	5	1
ZM-3410	ZM-3411	ZM-3412	8.5-9.6	7	30	10	1
ZM-3413	ZM-3414	ZM-3415	9.0-10.0	7	30	10	1
ZM-3374	ZM-3375	ZM-3376	9.75-15.0	11	30	5	3
ZM-3436	ZM-3437	ZM-3438	12.0-16.0	10	30	5	2

- LOW NOISE
- S, C, X, & Ku BANDS
- SRPM FOCUSING
- INTEGRAL POWER SUPPLY

FEATURES

low noise

broad bandwidth

single-reversal permanent-magnet focusing ‡

metal-ceramic construction

military environment

light weight

crystal mixer protection

integral power supply
- solid state
- line surge protection
- long term stability

APPLICATIONS

radar

ecm

instrumentation

communications

radiometry

MECHANICAL AND MISCELLANEOUS

DATA GROUP	1	2 & 3
VSWR, max		
Input	2.5	2.5
Output	2.5	2.5
Mounting position	Any	Any
Weight, lb.	15.5	16.0
Overall length, in	13.85	12.11
Cooling	Convection	Convection
Connectors		
RF input	Type N, female	See outline
RF output	Type N, female	See outline
Power	Deutsch DM9601-3P (or equiv.)	Deutsch DM9601-3P (or equiv.)

TYPICAL CHARACTERISTICS

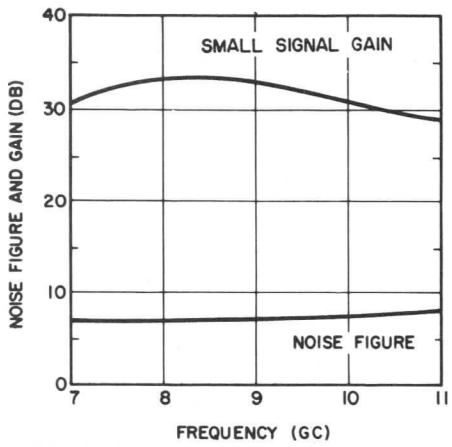

GENERAL ELECTRIC

POWER SUPPLY REQUIREMENTS

Nominal Rating	115 v 60-400 cps	115 v 400 cps	28 vdc
Voltage range	100-135 vac	100-135 vac	24-29 vdc
Voltage transients	*	*	**
Freq. range	48-420 cps	380-420 cps	—
Power, max.	30 w	30 w	30 w

* Transients per MIL-STD-704 par. 5.1.4.2. If voltage exceeds 175 volts for 3 sec, the fuse will blow.

** Transients per MIL-STD-704 par. 5.2.3.2.

ENVIRONMENTAL

Shock (energized)	30 G, 11 ms, 3 axes
Vibration (operating)	15 G, 90 to 2000 cps
Temp. Ambient (operating)	-54 to +71 C#
Altitude (operating)	100,000 ft
Acoustic Noise (operating)	150 db, 25 to 12,000 cps

OUTLINE (Data Group 1)

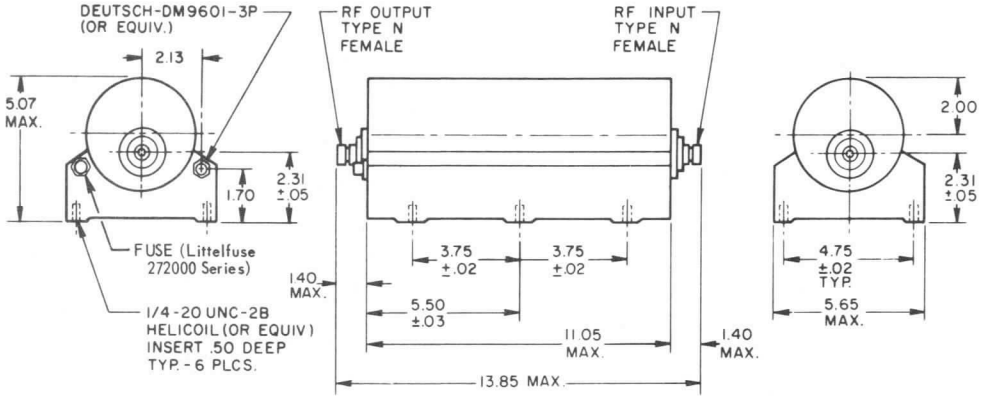

DIMENSIONS ARE IN INCHES; THOSE WITHOUT TOLERANCES ARE APPROXIMATE.

PIN CONNECTIONS

	115V, 60-400 CPS POWER SUPPLY	115V, 400 CPS POWER SUPPLY	28 VDC POWER SUPPLY
PIN	115V LINE	115V LINE	28 VDC LINE
PIN 2	CHASSIS GND.	CHASSIS GND.	GND. (CHASSIS & CIRCUIT)
PIN 3	115V LINE	115V LINE	GND. (CHASSIS & CIRCUIT)

OUTLINE (Data Groups 2 and 3)

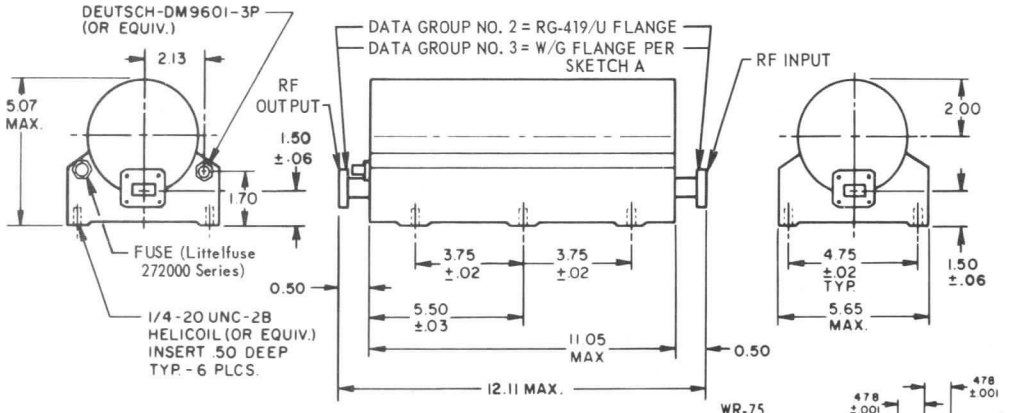

DIMENSIONS ARE IN INCHES; THOSE WITHOUT TOLERANCES ARE APPROXIMATE.

NOTE - THE PIN CONNECTIONS OF THE POWER CONNECTOR ARE THE SAME AS IN OUTLINE GROUP 1 ABOVE

SKETCH A
(FOR DATA GROUP NO. 3)

NOTES

‡ Since these tubes are single-reversal permanent-magnet focused and magnetically shielded, they are well suited for applications requiring close physical spacing with other tubes or magnetic materials.

\# This tube is capable of operating to +85°C with approximately 0.5 db degradation in noise figure.

These data are subject to change without notice.

TUBE DEPARTMENT

GENERAL ELECTRIC

Owensboro, Kentucky

ZM-3314 ZM-3388
ZM-3387 ZM-3389

Traveling-Wave Tubes

Technical Information

- HIGH POWER
- S-BAND
- PPM FOCUSING

RF PERFORMANCE

Tube Type	Frequency Range (Gc)	Min. Peak Saturated Power Output (kw)	Maximum Duty	Maximum Pulse Width (μsec)	Minimum Saturated Gain (db)	Data Group
ZM-3389	2.7 - 3.1	5.0	0.01	20	37	S-4
ZM-3314	2.9 - 3.1	2.5	0.03	40	37	S-1
ZM-3387	2.9 - 3.1	2.5	0.03	40	37	S-2
ZM-3388	2.9 - 3.1	2.5	0.03	40	37	S-3

FEATURES

high gain
flat power output
low voltage
periodic permanent magnet focusing
metal-ceramic construction
ring-loop circuit
military environments
lightweight

APPLICATIONS

radar
ecm

MECHANICAL & MISCELLANEOUS

Data Group	S-1	S-2	S-3	S-4
VSWR, max (cold)				
Input	2.5	2.5	2.5	2.5
Output	2.5	2.5	2.5	2.5
Cath.-to-ground pf (max)	20	20	20	20
Power flatness with constant drive (db)	1.0	1.0	1.0	1.0
Phase Shift, deg/1% change in cathode voltage (max).	45	45	45	60
Weight, lb	10.5	10.5	10.5	10.5
Overall length, in.	18	18	18	18
Mounting position	Any	Any	Any	Any
Cooling				
Liquid, water, flow, gpm.	0.2	0.2	---	---
Forced air, cfm(sea level)	---	---	50	50
Connectors (Female)				
RF input	TNC	N	N	N
RF output	TNC	N	N	N

TYPICAL CHARACTERISTICS

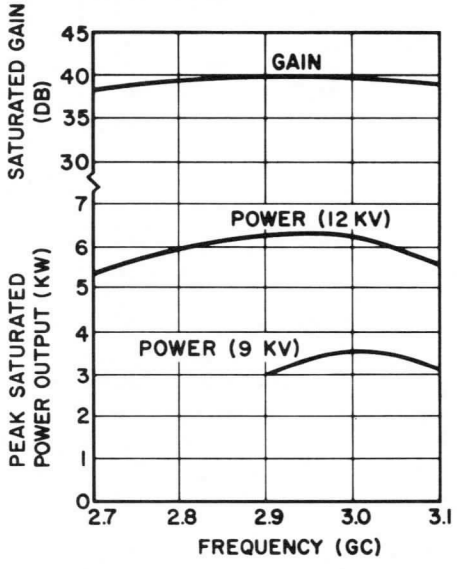

GENERAL ELECTRIC

OPERATING CONDITIONS*

Data Group	S-1, S-2, S-3	S-4
Htr. vac or vdc.....	6.3	6.3
Htr. amp (max.)	3.0	3.0
Cath. kv dc#.....	-8.5 to -9.5	-11.5 to -13
Peak cath. amp (nom)	2.0	3.0

ENVIRONMENTAL

Shock..... (energized)	30 G, 11 msec
Vibration..... (operating)	0.1 in DA, 5-23 cps
Temp., ambient	
(operating).....	-54 to +71C
(storage).....	-62 to +95C

OUTLINE – DATA GROUPS S-1 AND S-2

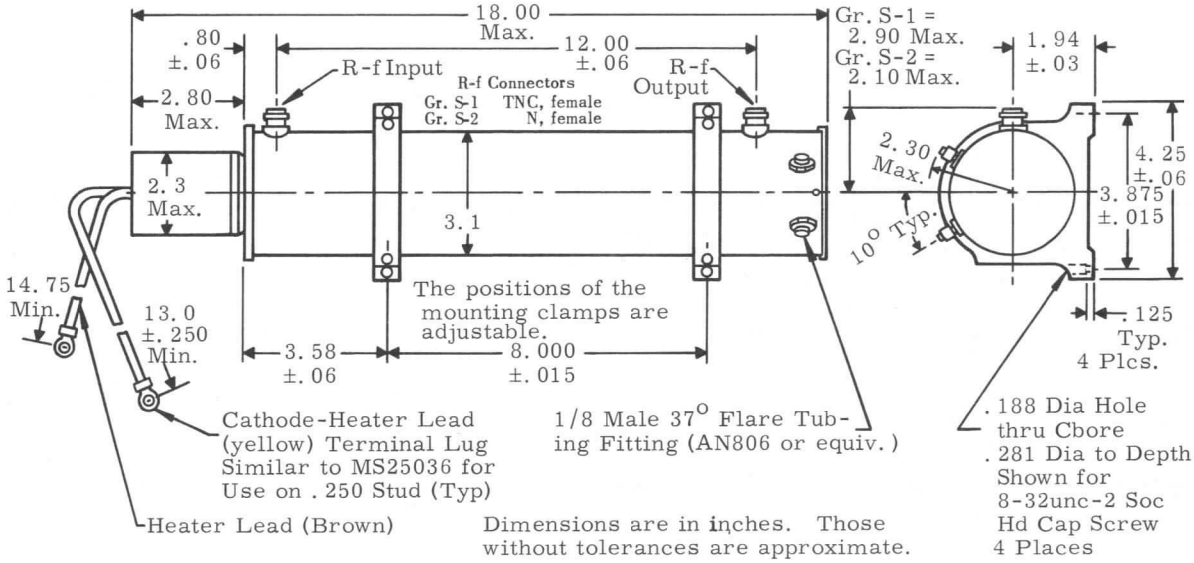

OUTLINE – DATA GROUPS S-3 AND S-4

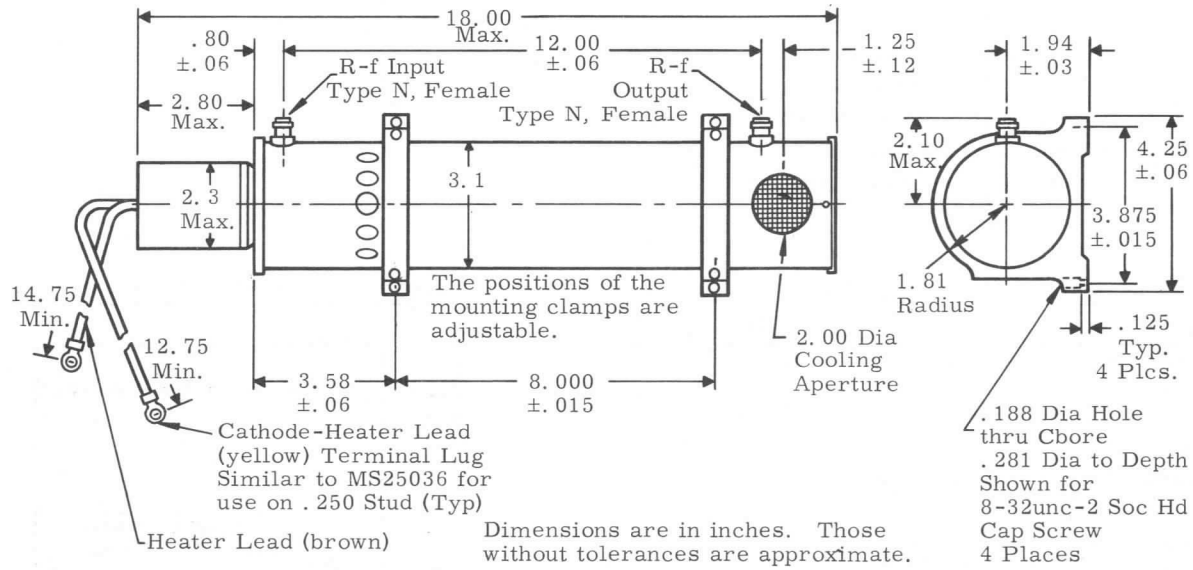

NOTES

† Coolants other than water may be used at appropriate flow rates.

* For the performance ratings specified, voltages should be adjusted to values specified by instructions accompanying each tube. These values will be within the ranges given above.

\# Cathode voltage is with respect to ground. The anode, r-f circuit, and collector are connected to the tube package which must be grounded prior to application of voltages.

These data are subject to change without notice.

TUBE DEPARTMENT

GENERAL ELECTRIC

Owensboro, Kentucky

Traveling-Wave Tubes

ZM-3331 ZM-3349

Technical Information

- LOW NOISE
- Ku-BAND
- SRPM FOCUSING

RF PERFORMANCE

Tube Type	Frequency Range (Gc)	Maximum Noise Figure (db)	Minimum Small Signal Gain (db)	Minimum Saturation Power Output (mw)	Data Group
ZM-3349	9.75 - 15.0	11	30	5	2
ZM-3331	12.0 - 16.0	10	30	5	1

FEATURES

- low noise
- broad bandwidth
- single-reversal permanent-magnet focusing*
- metal-ceramic construction
- military environments
- lightweight
- crystal mixer protection

APPLICATIONS

- radar
- ecm
- instrumentation
- communications
- radiometry

MECHANICAL & MISCELLANEOUS

VSWR, Input and Output (max)	2.5
Mounting Position	Any
Weight, lb	9.3
Overall Length, in.	12.1
Cooling	Convection
RF Connectors	See Outline
DC Connector	Cannon KPT-02H12-10PN (or equiv.)

TYPICAL CHARACTERISTICS

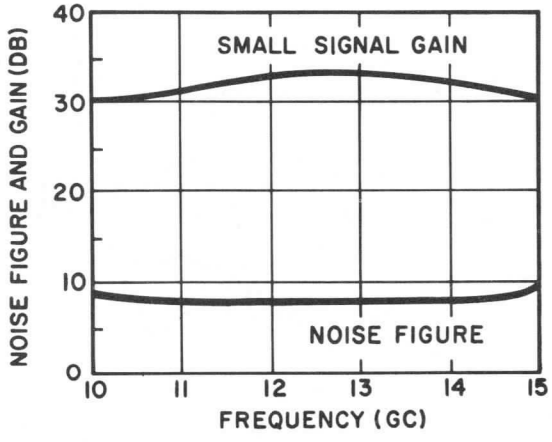

GENERAL ELECTRIC

OPERATING CONDITIONS †

Htr, vac or vdc	6.3
Htr, amp (max.)	0.35
Elect. 1, vdc	-35 to 0
Elect. 2, vdc	25 to 75
Elect. 3, vdc	50 to 150
Elect. 4, vdc	250 to 500
Helix, vdc	900 to 1200
Helix, μa (max.)	100
Collector, vdc	1050 to 1350
Beam, μa (max.)	1200

ENVIRONMENTAL

Shock (energized)	30 G, 11 ms, 3 axes
Vibration (operating)	15 G, 90 to 2000 cps
Temp. Ambient (operating)	-65 to +71 C#
Altitude (operating)	100,000 ft
Acoustic Noise (operating)	150 db, 25 to 12,000 cps

OUTLINE (Data Groups 1 and 2)

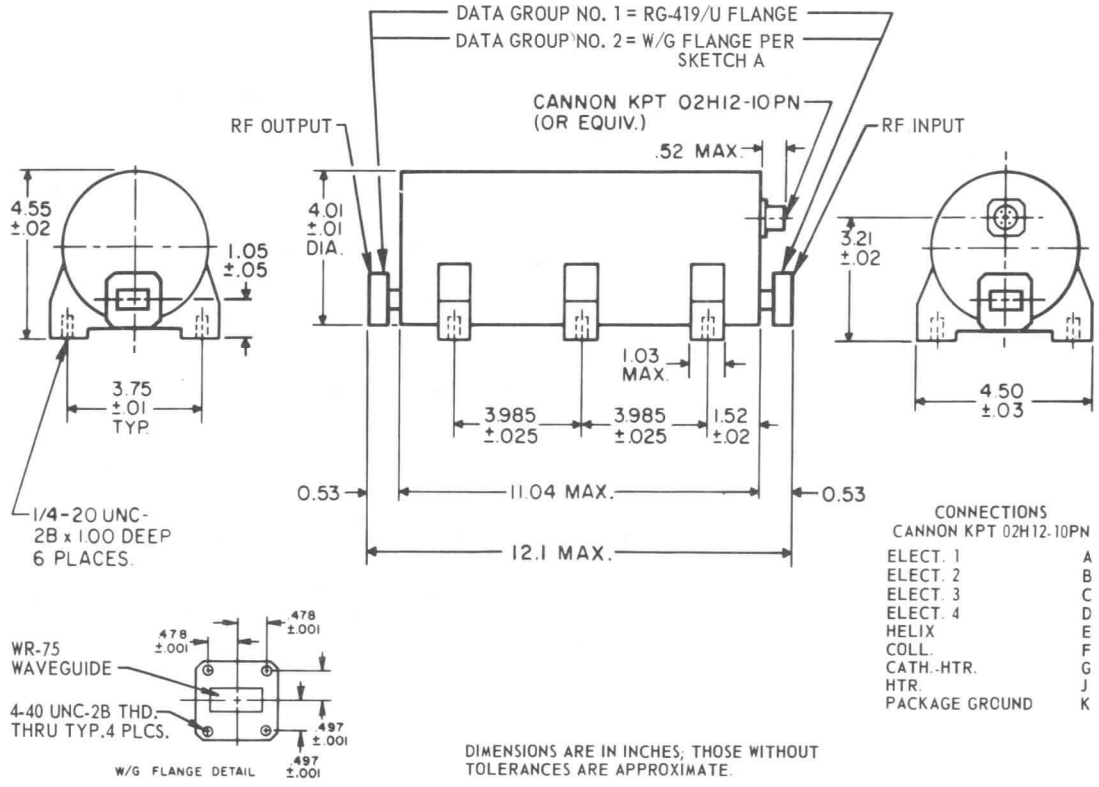

NOTES

* Since these tubes are single-reversal permanent-magnet focused and magnetically shielded, they are well suited for applications requiring close physical spacing with other tubes or magnetic materials.

† Voltages shown are measured with respect to cathode. All voltages may be isolated from ground. For minimum noise and optimum gain characteristics, voltages should be adjusted to values specified by instructions accompanying each tube. These values will be within the ranges given above.

\# This tube is capable of operating to +100 C with approximately 0.5 db degradation in noise figure.

These data are subject to change without notice.

TUBE DEPARTMENT

GENERAL ELECTRIC

Owensboro, Kentucky

Traveling-Wave Tubes

ZM-3334
ZM-3335
ZM-3378

Technical Information

- LOW NOISE
- S-BAND
- SRPM FOCUSING

RF PERFORMANCE

Tube Type	Frequency Range (Gc)	Maximum Noise Figure (db)	Minimum SS Gain (db)	Minimum Saturation Power Output (mw)
ZM-3378	2.0-4.0	8	30	5
ZM-3334	2.2-2.3	5.5	30	5
ZM-3335	2.7-3.3	6	30	7

FEATURES

- low noise
- broad bandwidth
- single-reversal permanent-magnet focusing*
- metal-ceramic construction
- military environments
- lightweight
- crystal mixer protection

APPLICATIONS

- radar
- ecm
- instrumentation
- communications
- radiometry

MECHANICAL & MISCELLANEOUS

VSWR (max.)	
Input	2.5
Output	2.5
Mounting Position	Any
Weight, lb	9.3
Overall Length, in.	13.84
Cooling	Convection
RF Connectors	Type N, female
DC Connector	Cannon KPT-02H12-10PN (or equiv.)

TYPICAL CHARACTERISTICS

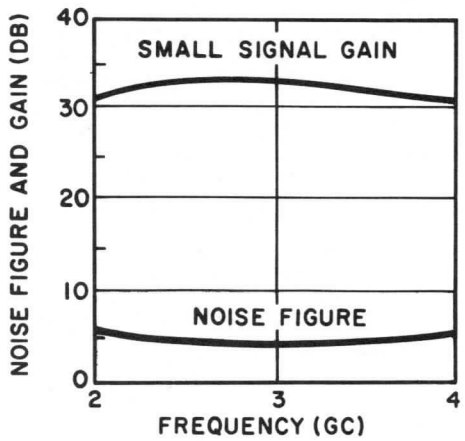

GENERAL ELECTRIC

OPERATING CONDITIONS †

Htr, vac or vdc	6.3
Htr, amp (max.)	0.35
Elect. 1, vdc	-35 to 0
Elect. 2, vdc	25 to 75
Elect. 3, vdc	30 to 120
Elect. 4, vdc	100 to 300
Helix, vdc	250 to 300
Helix, μa (max.)	100
Collector, vdc	550 to 600
Beam, μa (max.)	1200

ENVIRONMENTAL

Shock (energized)	30 G, 11ms, 3 axes
Vibration (operating)	15 G, 90 to 2000 cps
Temp. Ambient (operating)	-65 to +71C #
Altitude (operating)	100,000 ft
Acoustic Noise (operating)	150 db, 25 to 12,000 cps

OUTLINE

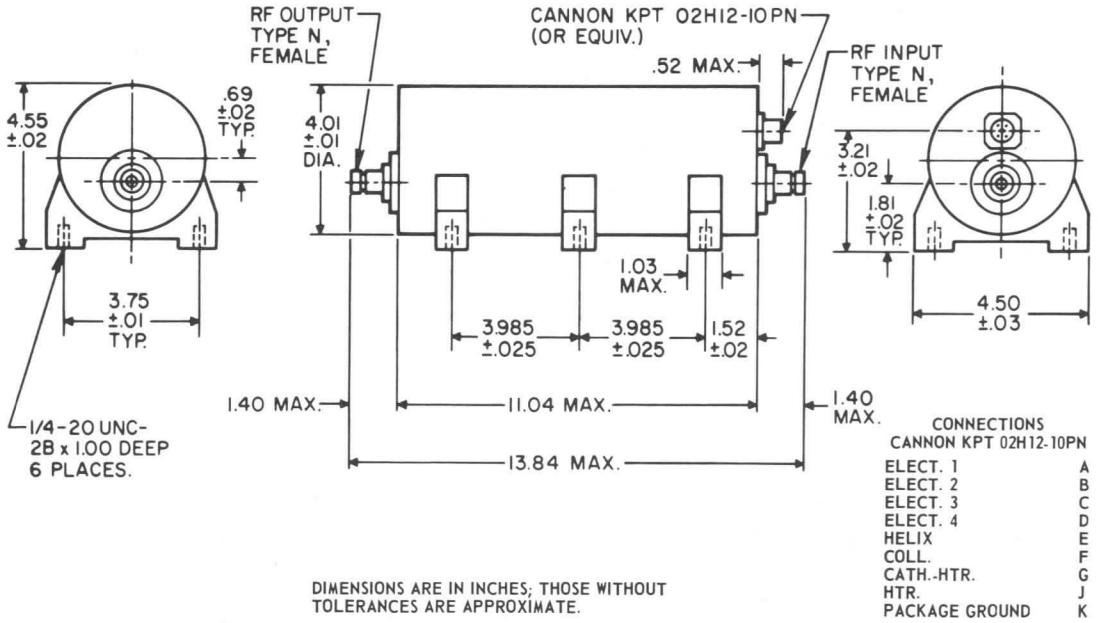

DIMENSIONS ARE IN INCHES; THOSE WITHOUT TOLERANCES ARE APPROXIMATE.

CONNECTIONS
CANNON KPT 02H12-10PN

ELECT. 1	A
ELECT. 2	B
ELECT. 3	C
ELECT. 4	D
HELIX	E
COLL.	F
CATH.-HTR.	G
HTR.	J
PACKAGE GROUND	K

NOTES

* Since these tubes are single-reversal permanent-magnet focused and magnetically shielded, they are well suited for applications requiring close physical spacing with other tubes or magnetic materials.

† Voltages shown are measured with respect to cathode. All voltages may be isolated from ground. For minimum noise and optimum gain characteristics, voltages should be adjusted to values specified by instructions accompanying each tube. These values will be within the ranges given above.

\# This tube is capable of operating to +100 C with approximately 0.5 db degradation in noise figure.

These data are subject to change without notice.

TUBE DEPARTMENT

GENERAL ELECTRIC

Owensboro, Kentucky

ZM-3350 ZM-3352
ZM-3351 ZM-3377

Traveling-Wave Tubes

Technical Information

- LOW NOISE
- P&L-BAND
- PPM FOCUSED

RF PERFORMANCE

Tube Type	Frequency Range (Gc)	Maximum Noise Figure (db)	Minimum Small Signal Gain (db)	Minimum Saturation Power Output (mw)	Data Group
ZM-3377	775-1.45	11	28	10	2
ZM-3350	1.0-2.0	10	30	10	1
ZM-3351	1.2-1.4	8	35	10	1
ZM-3352	1.7-2.4	9	35	10	1

FEATURES

lowest noise
broadband
periodic permanent magnet focusing
military environments
lightweight
crystal mixer protection

APPLICATIONS

radar
ecm
instrumentation
communications
radiometry

MECHANICAL & MISCELLANEOUS

VSWR, max	
Input	2.0
Output	2.0
Mounting Position	Any
Weight, lb	3.5
Overall Length, in.	15.5
Cooling	Convection
RF Connectors	Type TNC
Power Connection	Winch'r M12P or equiv.
Collector Connection	Winch'r PM1PLS or equiv.

TYPICAL CHARACTERISTICS

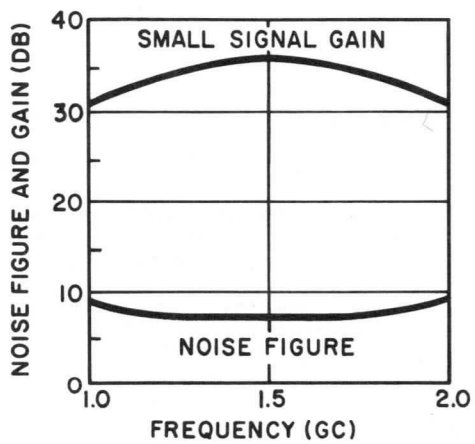

GENERAL ELECTRIC

OPERATING CONDITIONS*

Data Group	Gr. 1	Gr. 2
Htr, vac or vdc.....	6.3	6.3
Htr, amp (max.).....	0.35	0.35
Elect. 1, vdc.....	-40 to 0	-40 to 0
Elect. 2, vdc.....	10-50	10-40
Elect. 3, vdc.....	25-125	25-250
Elect. 4, vdc.....	25-250	25-250
Helix, vdc	300-400	200-300
Helix, μa (max.).....	100	100
Collector, vdc.....	300-650	200-450
Beam, μa (max.)	1500	1600

ENVIRONMENTAL

Shock..... (energized)	50 G, 12 ms, 3 axes
Vibration ..... (operating)	15 G, 55 to 3000 cps
Temp, Ambient..... (operating)	-60 C to +71 C
Altitude..... (operating)	100,000 ft.
Acoustic Noise ..... (operating)	135 db, 25 to 12,000 cps

OUTLINE

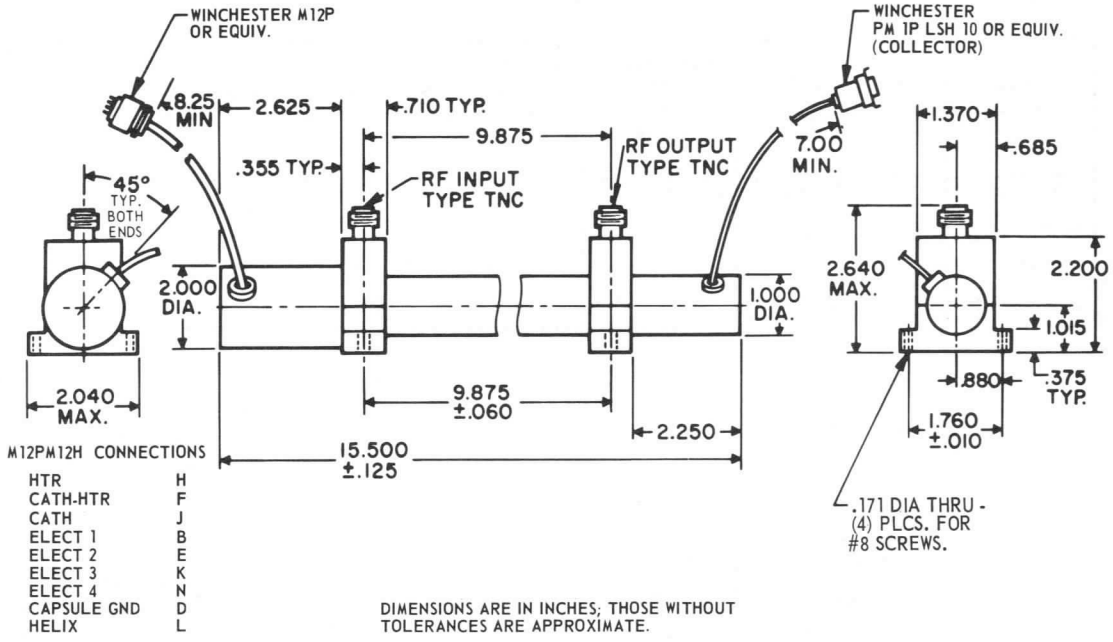

NOTES

* All voltages may be isolated from ground; i.e., it is not necessary to operate the cathode, helix, collector, or any other electrode at ground potential. Voltages shown are measured with respect to cathode. For minimum noise and optimum gain characteristics, voltages should be adjusted to values specified by instructions accompanying each tube.

These data are subject to change without notice.

TUBE DEPARTMENT

GENERAL ELECTRIC

Owensboro, Kentucky

Traveling-Wave Tubes

Technical Information

- LOW NOISE
- P & L BANDS
- PPM FOCUSING
- INTEGRAL POWER SUPPLY

RF PERFORMANCE

TUBE TYPE			Frequency Range (Gc)	Maximum Noise Figure (db)	Minimum Small Signal Gain (db)	Minimum Saturation Power Output (db)
28 vdc Power Supply	115 v 400 cps Power Supply	115 v 60 cps Power Supply				
ZM-3353	ZM-3354	ZM-3355	775-1.45	11	28	10
ZM-3356	ZM-3357	ZM-3358	1.0-2.0	10	30	10
ZM-3359	ZM-3360	ZM-3361	1.2-1.4	8	35	10
ZM-3362	ZM-3363	ZM-3364	1.7-2.4	9	35	10

FEATURES

low noise
broad bandwidth
periodic permanent-magnet focusing
military environment
lightweight
crystal mixer protection
integral power supply
solid state
line surge protection
long term stability

APPLICATIONS

radar
ecm
instrumentation
communications
radiometry

MECHANICAL AND MISCELLANEOUS

VSWR, max	
Input	2.0
Output	2.0
Mounting position	Any
Weight, lb.	9.0
Overall length, in	16.0
Cooling	Convection
Connectors	
RF input	TNC
RF output	TNC
Power	Deutsch DM9601-3P (or equiv.)

TYPICAL CHARACTERISTICS

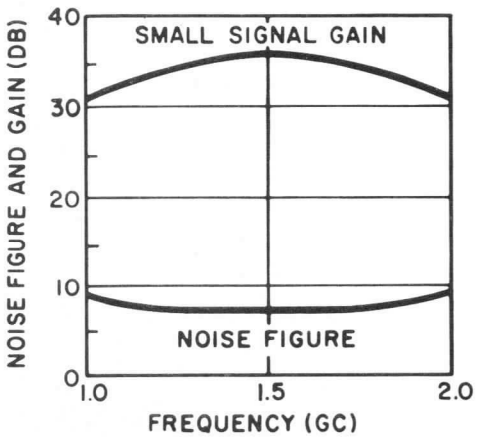

GENERAL ELECTRIC

POWER SUPPLY REQUIREMENTS

Nominal Rating	115 v 60 cps	115 v 400 cps	28 vdc
Voltage range	100-135 vac	100-135 vac	24-29 vdc
Voltage transients	*	*	**
Freq. range	48-75 cps	380-420 cps	—
Power, max.	30 w	30 w	30 w

* Transients per MIL-STD-704 par. 5.1.4.2. If voltage exceeds 175 volts for 3 sec, the fuse will blow.

** Transients per MIL-STD-704 par. 5.2.3.2

ENVIRONMENTAL

Shock (energized)	30 G, 11 ms, 3 axes
Vibration (operating)	15 G, 90 to 2000 cps
Temp. Ambient (operating)	-54 to +71 C
Altitude (operating)	100,000 ft.
Acoustic Noise (operating)	150 db, 25 to 12,000 cps

OUTLINE

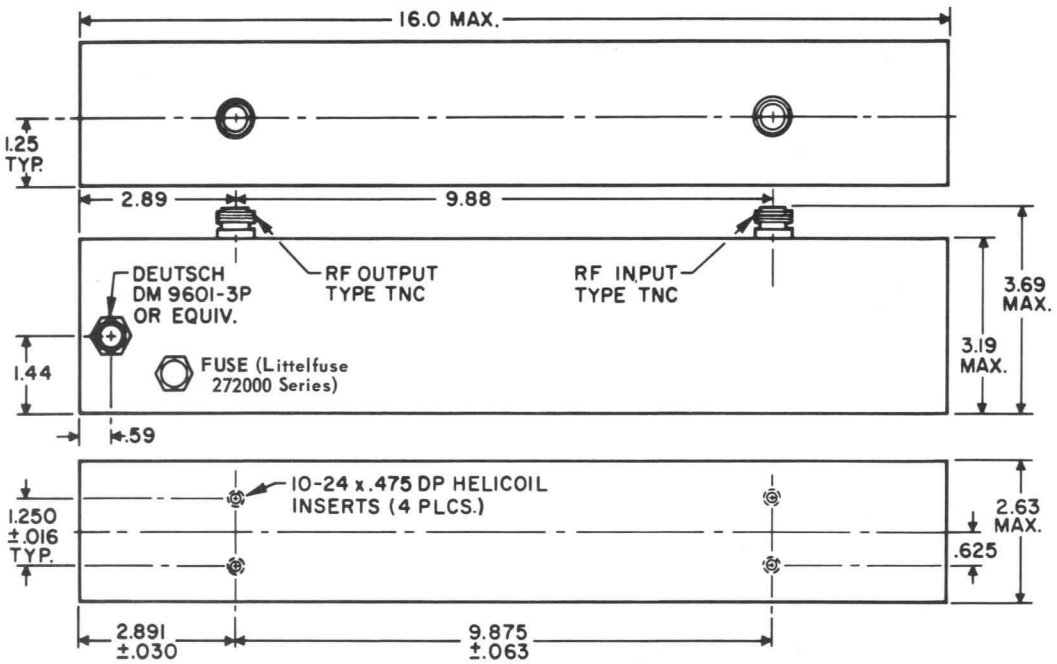

DIMENSIONS ARE IN INCHES; THOSE WITHOUT TOLERANCES ARE APPROXIMATE

PIN CONNECTIONS

	115V, 60 CPS POWER SUPPLY	115V, 400 CPS POWER SUPPLY	28 VDC POWER SUPPLY
PIN 1	115V LINE	115V LINE	28 VDC LINE
PIN 2	CHASSIS GND.	CHASSIS GND.	GND. (CHASSIS & CIRCUIT)
PIN 3	115V LINE	115V LINE	GND. (CHASSIS & CIRCUIT)

These data are subject to change without notice.

TUBE DEPARTMENT

GENERAL ELECTRIC

Owensboro, Kentucky

ZM-3392 ZM-3396
ZM-3393 ZM-3397
ZM-3394 ZM-3398
ZM-3395 ZM-3399

Traveling-Wave Tubes

Technical Information

- HIGH POWER
- L-BAND
- PPM FOCUSING

RF PERFORMANCE

Tube Type	Frequency Range (Gc)	Min. Peak Saturated Power Output (kw)	Maximum Duty	Maximum Pulse Width (μ sec)	Minimum Saturated Gain (db)	Data Group
ZM-3392	1.2 - 1.5	5	0.05	20	36	L-1
ZM-3393	1.2 - 1.5	5	0.05	20	36	L-2
ZM-3394	1.2 - 1.5	5	0.05	20	50	L-3
ZM-3395	1.2 - 1.5	5	0.05	20	50	L-4
ZM-3396	1.2 - 1.5	10	0.05	20	36	L-5
ZM-3397	1.2 - 1.5	10	0.05	20	36	L-6
ZM-3398	1.2 - 1.5	10	0.05	20	50	L-7
ZM-3399	1.2 - 1.5	10	0.05	20	50	L-8

FEATURES

high efficiency
high gain
broadband
periodic permanent magnet focusing
metal-ceramic construction
ring-loop circuit
military environments
lightweight

APPLICATIONS

radar
ecm

MECHANICAL & MISCELLANEOUS

VSWR, max. (cold)
Input 2.0
Output 2.0
Cath.-to-ground, pf (max) 20
Mounting position..... Any
RF Connectors..... Type N, female

Data Group	L-1, 2, 5, 6	L-3, 4, 7, 8
Phase shift, deg/1% change in cath. voltage (max).....	40	50
Weight, lb.	12	16
Over-all length, in.	25	31

Data Group	L-1, 3, 5, 7	L-2, 4	L-6, 8
Cooling			
Liquid, flow, gpm.....	0.5	---	---
Forced air, cfm (sea level)	---	60	100

TYPICAL CHARACTERISTICS

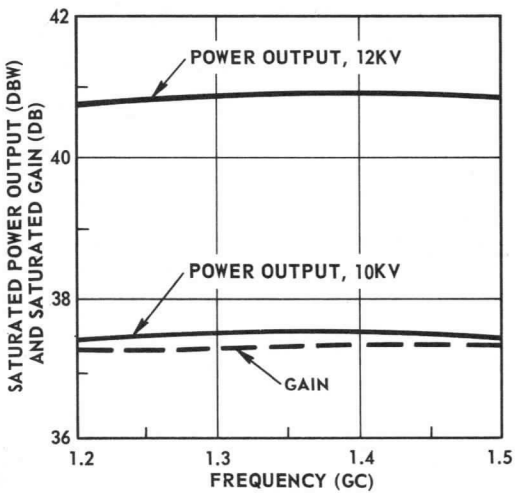

GENERAL ELECTRIC

OPERATING CONDITIONS *

Data Group	L-1, 2, 3, 4	L-5, 6, 7, 8
Htr. vac or vdc	6.3	6.3
Htr. amp (max)	3.0	3.0
Cathode kv dc #	-9.5 to -10.5	-11.5 to -12.5
Peak cathode amp (max)	3.0	4.0

ENVIRONMENTAL

Shock (energized)	30 g, 11 msec
Vibration (operating)	0.06 in. D.A., 5-23 cps
Temp., ambient (operating)	-54 to +71°C
(storage)	-62 to +95°C
Altitude (operating)	70,000 feet

OUTLINE (GROUPS L-1, L-3, L-5, L-7)

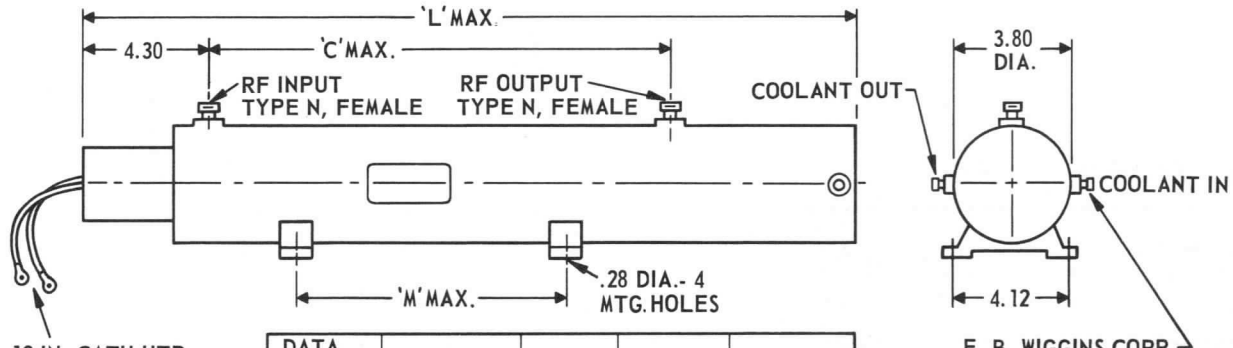

DATA GROUP	TUBE NO.	'L' DIM	'M' DIM	'C' DIM
L-1	ZM3392	25.00	9.00	15.30
L-3	ZM3394	31.00	15.30	21.60
L-5	ZM3396	25.00	9.00	15.30
L-7	ZM3398	31.00	15.30	21.60

DIMENSIONS ARE IN INCHES AND ARE APPROXIMATE.

OUTLINE (GROUPS L-2, L-4, L-6, L-8)

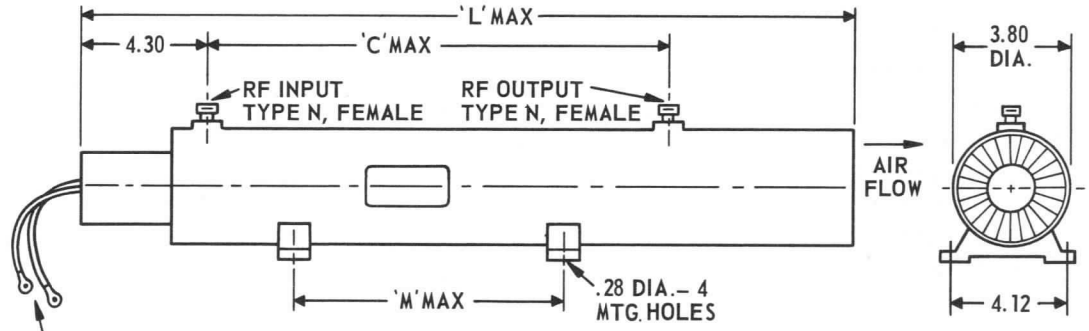

DATA GROUP	TUBE NO.	'L' DIM	'M' DIM	'C' DIM
L-2	ZM3393	25.00	9.00	15.30
L-4	ZM3395	31.00	15.30	21.60
L-6	ZM3397	25.00	9.00	15.30
L-8	ZM3399	31.00	15.30	21.60

DIMENSIONS ARE IN INCHES AND ARE APPROXIMATE.

NOTES

* For the performance ratings specified, the cathode voltage should be adjusted to the value specified by instructions accompanying each tube. This value will be within the applicable range given above.

\# Cathode voltage is with respect to ground. The anode, r-f circuit, and collector are connected to the tube package which must be grounded prior to application of voltages.

These data are subject to change without notice.

TUBE DEPARTMENT

GENERAL ELECTRIC

Owensboro, Kentucky

GENERAL ELECTRIC
POWER TUBE DEPARTMENT
Schenectady 5, N. Y.

PRELIMINARY
TECHNICAL INFORMATION

These ratings represent those of current samples of this type. Refer to the Objective Technical Information sheet for design-objective ratings.

DEVELOPMENTAL TYPE

This technical information is proprietary and is furnished only as a service to customers.

ZM-5182

TRAVELING-WAVE TUBE

300 Milliwatts CW Output | 30 db Saturation Gain | 12,000-18,000 Megacycles

Periodic Permanent Magnet

The ZM-5182 is a ruggedized, low-power, broadband, traveling-wave tube for use in the 12,000-to-18,000 megacycle frequency range. It has a saturation gain greater than 30 decibels across the entire band and a power output of 300 milliwatts CW.

The tube is of metal-and-ceramic construction and is supplied as a complete packaged assembly, including the periodic-permanent-magnet focusing structure. The entire assembly weighs approximately 3.0 pounds.

The broad bandwidth, high gain, freedom from tuning adjustments, grid control, and rugged construction make this tube particularly useful in military systems. Applications include CW amplification in radar, electronic countermeasures equipment, microwave relay systems and radiometry.

Unless otherwise noted, voltages are with respect to the anode which is connected to the body of the tube. The body (package) of the tube should be grounded.

ELECTRICAL

	Minimum	Bogey	Maximum	
Frequency*	12,000	–	18,000	Megacycles
Heater				
Voltage †	5.3	6.3	7.3	Volts
Current	–	0.3	–	Amperes
Focusing Method – Periodic Permanent Magnet				
Saturation Gain	30	–	–	Decibels
Small Signal Gain	35	–	–	Decibels
Saturation Power Output, CW	150	300	500	Milliwatts
Collector Dissipation	–	–	12	Watts
Waveguide VSWR				
Input	–	–	2.5 to 1	
Output	–	–	2.5 to 1	

MECHANICAL

Mounting Position – Any

Over-all Dimensions, approximate		
Length	8.8	Inches
Height	3.0	Inches
Width	1.5	Inches

Connectors
RF Input – UG-419/U
RF Output – UG-419/U
Cathode-Heater, Heater, Helix, Focusing Electrode – Flying Leads

Weight, approximate . . . . . 3.0 Pounds

The specifications of this type are subject to change. Delivery of samples and the existence of these data do not imply continued availability of types with the same characteristics or dimensions. For the most recent information concerning the status of this device, please consult your local Power Tube Department Regional Sales Office.

THERMAL

Cooling – Convection

TYPICAL OPERATING CONDITIONS

	Minimum	Bogey	Maximum	
Cathode Voltage ‡	-2100	-1900	-1700	Volts
Focusing Electrode Voltage, with Respect to Cathode				
Operating †	-15	-5	0	Volts
Cutoff	-150	–	-130	Volts
Collector Voltage	125	150	170	Volts
Cathode Current	5.0	6.0	7.0	Milliamperes
Helix				
Voltage	–	–	–	
Current ¶	–	0.5	1.0	Milliamperes

*The power and gain curves indicate performance possible at rated bandwidth. Increased performance can be obtained under narrow-band operation. For further information consult your nearest Power Tube Department sales office.

†For the bogey performance ratings specified on this sheet, these parameters should be set at the particular value specified in the instructions accompanying each tube. The value specified will be within the range given above. The specific value of heater voltage should be held within plus or minus two percent.

‡The cathode voltage may be set at various values between -2100 and -1700 volts to obtain different power and gain characteristics.

¶Since current in excess of the maximum will seriously damage the tube an overcurrent device should be provided for protection.

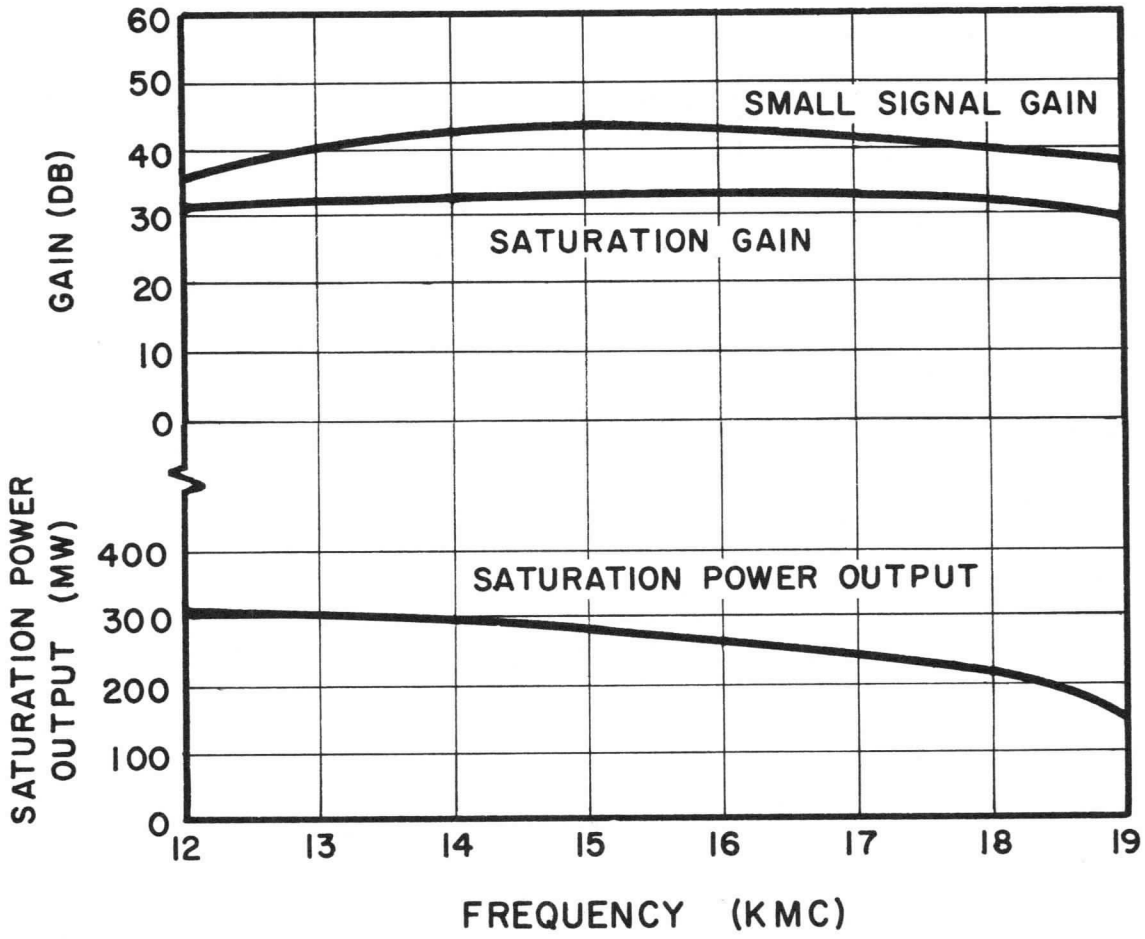
60
50
40
30
20
10
0
GAIN (DB)
SMALL SIGNAL GAIN
SATURATION GAIN
400
300
200
100
0
SATURATION POWER OUTPUT (MW)
SATURATION POWER OUTPUT
12
13
14
15
16
17
18
19
FREQUENCY (KMC)

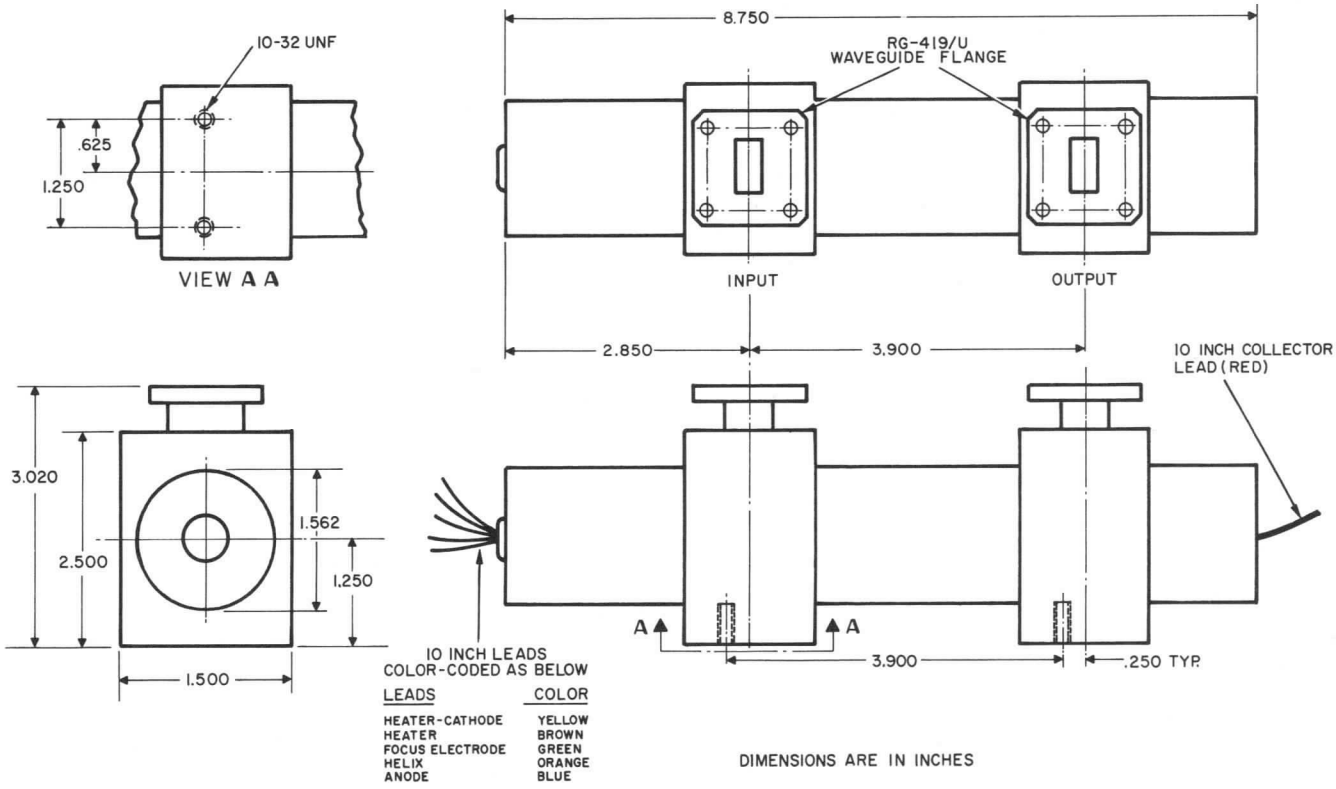

DIMENSIONS ARE IN INCHES

ZM-5182

Traveling-Wave Tubes

Technical Information

- MEDIUM POWER
- K_u-BAND
- PPM FOCUSING

RF PERFORMANCE

Tube Type	Frequency Range (Gc)	Min. CW Saturated Power Output (mw)	Minimum Small Signal Gain (db)	Minimum Saturated Gain (db)
ZM-5182	12-18	150	35	30

FEATURES

high gain
broad bandwidth
periodic permanent magnet focusing
metal-ceramic construction
military environments
light weight
current control electrode

APPLICATIONS

radar
ecm
communications
instrumentation

MECHANICAL & MISCELLANEOUS

VSWR, max	
Input	2.5
Output	2.5
Mounting position	Any
Weight, lb.	3.8
Overall length, in.	8.8
Cooling	Convection
Connectors	
RF input	UG-419/U
RF output	UG-419/U
DC	Flying leads

TYPICAL CHARACTERISTICS

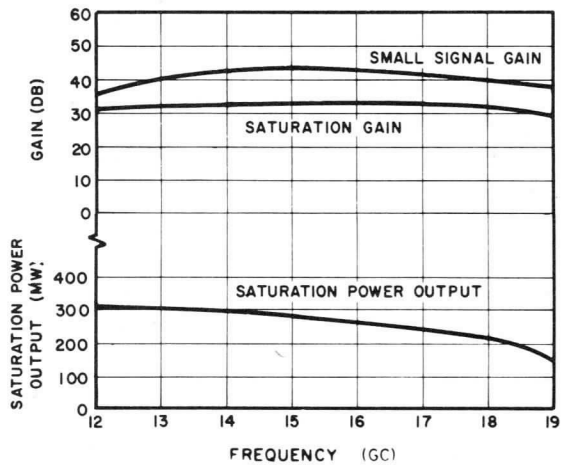

GENERAL ELECTRIC

OPERATING CONDITIONS*

Htr. vac or vdc	5.3 to 7.3
Htr. amp (max)	0.4
Cath. kv dc#, with resp. to helix.	-1.7 to -2.1
Cath. ma, (max)	7
Coll. vdc, with resp. to helix	125 to 170
Helix ma (max)	1.0
Current control elect. vdc	
Operating, with resp. to cath.	0 to -15
Cutoff, with resp. to cath.	-130 to -150

ENVIRONMENTAL

Shock (energized)	30 G, 11 ms, 3 axes
Vibration (operating)	10 G, 70-3000 cps
Temp., ambient (operating)	-65 to +100°C
Altitude (operating)	100,000 ft
Acceleration	30 G

OUTLINE

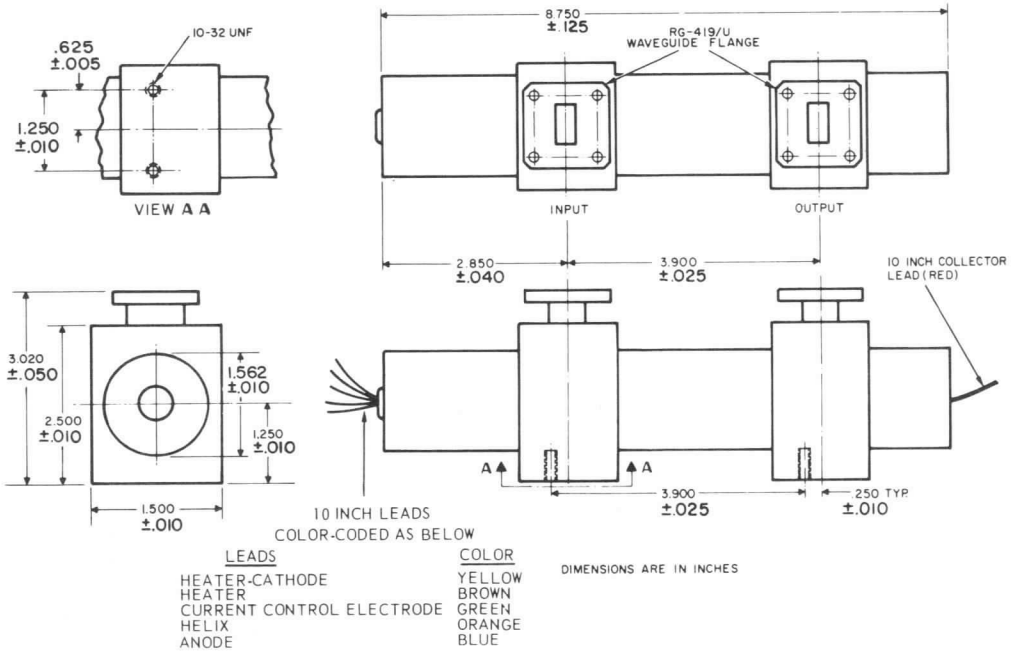

NOTES

* For the performance ratings specified, voltages should be adjusted to values specified by instructions accompanying each tube. These values will be within the ranges given above.

\# The cathode voltage may be set at various values between -1.7 and -2.1 kv to obtain different power and gain characteristics.

These data are subject to change without notice.

TUBE DEPARTMENT

GENERAL ELECTRIC

Owensboro, Kentucky

GENERAL ELECTRIC
POWER TUBE DEPARTMENT
Schenectady 5, N. Y.

PRELIMINARY
TECHNICAL INFORMATION

These ratings represent those of current samples of this type. Refer to the Objective Technical Information sheet for design-objective ratings.

DEVELOPMENTAL TYPE

This technical information is proprietary and is furnished only as a service to customers.

ZM-5183

TRAVELING-WAVE TUBE

10 Watts CW Output | 25 db Saturation Gain | 12,000-18,000 Megacycles

Electromagnet

The ZM-5183 is a ruggedized, medium-power, broadband traveling-wave tube for use in the 12,000-to-18,000-megacycle frequency range. It has a saturation gain greater than 25 decibels and a power output of 10 watts CW across the 13,000-to-17,000-megacycle band.

The tube is of metal-and-ceramic construction and is supplied as a complete packaged assembly which includes the focusing electromagnet, tube and housing. The entire assembly weighs approximately 20 pounds.

The broad bandwidth, high gain, freedom from tuning adjustments, grid control, and rugged construction make this tube particularly useful in military systems. Applications include CW amplification in radar, electronic countermeasures equipment, microwave relay systems, and radiometry.

Unless otherwise noted, voltages are with respect to the anode which is connected to the solenoid housing and the body of the tube. These parts of the tube should be grounded.

	Minimum	Bogey	Maximum	
ELECTRICAL				
Frequency*	12,000	–	18,000	Megacycles
Heater				
Voltage†	–	6.3	–	Volts
Current	–	0.65	–	Amperes
Focusing Method – Electromagnet				
Saturation Gain	25	30	–	Decibels
Small Signal Gain	–	34	–	Decibels
Saturation Power Output, CW	5	10	–	Watts
Collector Dissipation	–	–	250	Watts
Collector Voltage	–	–	–	
Waveguide VSWR				
Input	–	–	3.0 to 1	
Output	–	–	3.0 to 1	
MECHANICAL				
Mounting Position – Any				
Over-all Dimensions, approximate				
Length			11.0	Inches
Diameter			4.5	Inches
Connectors				
RF Input – UG-419/U				
RF Output – UG-419/U				
Cathode-heater, Heater, Focusing Electrode, Helix, Collector – Flying Leads				
Weight, Tube and Electromagnet, approximate			20	Pounds

The specifications of this type are subject to change. Delivery of samples and the existence of these data do not imply continued availability of types with the same characteristics or dimensions. For the most recent information concerning the status of this device, please consult your local Power Tube Department Regional Sales Office.

THERMAL

Cooling - Liquid**		
Flow Rate, minimum		
Coolant 50 C or less	1	Gallon per Minute
Coolant 100 C or less	2	Gallons per Minute
Pressure Drop		
At 1 Gallon per Minute	30-40	Pounds per Square Inch Gage
At 2 Gallons per Minute	90	Pounds per Square Inch Gage

TYPICAL OPERATING CONDITIONS

	Minimum	Bogey	Maximum	
Cathode Voltage ‡	-4200	-3900	-3700	Volts
Focusing Electrode Voltage, with Respect to Cathode				
Operating †	-15	-5	0	Volts
Cutoff	-500	-450	-400	Volts
Collector Voltage	0	0	0	Volts
Cathode Current	50	55	65	Milliamperes
Solenoid				
Voltage#	–	85	–	Volts
Current†	5.5	7.0	8.0	Amperes
Helix				
Voltage	–	–	–	
Current ¶	–	0.3	4.0	Milliamperes

* The power-output and gain curves indicate performance possible at rated bandwidth. Increased performance can be obtained under narrow-band operation. For further information consult your nearest Power Tube Department sales office.

† For the bogey performance ratings specified on this sheet, these parameters should be set at the particular value specified in the instructions accompanying each tube. The value specified will be within the range given above. The specific value of heater voltage should be held within plus or minus two percent.

‡ The cathode voltage may be set at various values between -3700 and -4200 volts to obtain different power and gain characteristics.

** Coolanol ***45 or equivalent. Tubes for water cooling can be supplied on special order.

Solenoid voltage depends upon coolant temperature.

¶ Since current in excess of the maximum will seriously damage the tube an overcurrent device should be provided for protection.

*** Registered Trademark of Monsanto Chemical Company.

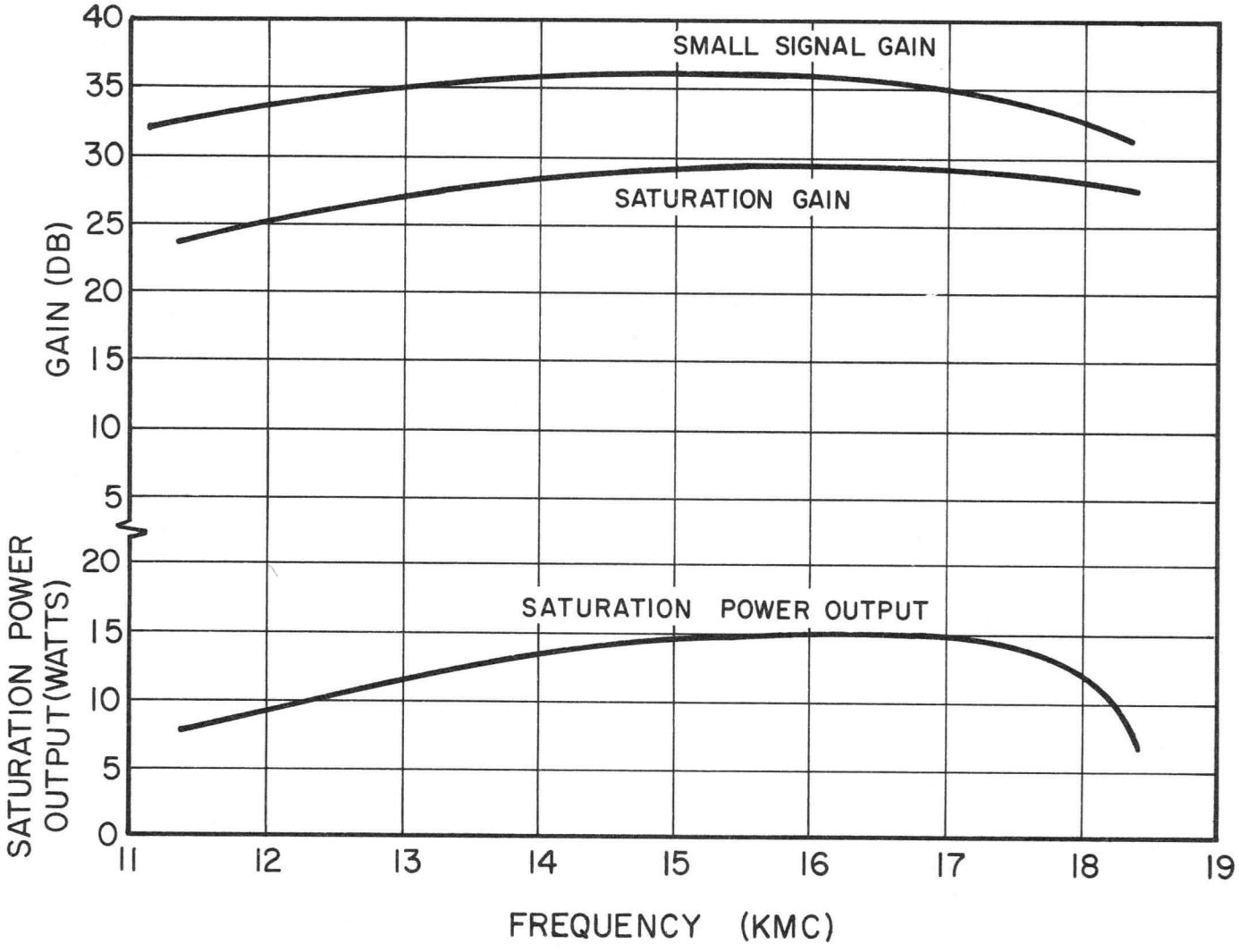
SMALL SIGNAL GAIN
SATURATION GAIN
SATURATION POWER OUTPUT
GAIN (DB)
SATURATION POWER OUTPUT (WATTS)
FREQUENCY (KMC)
40
35
30
25
20
15
10
5
20
15
10
5
0
11
12
13
14
15
16
17
18
19

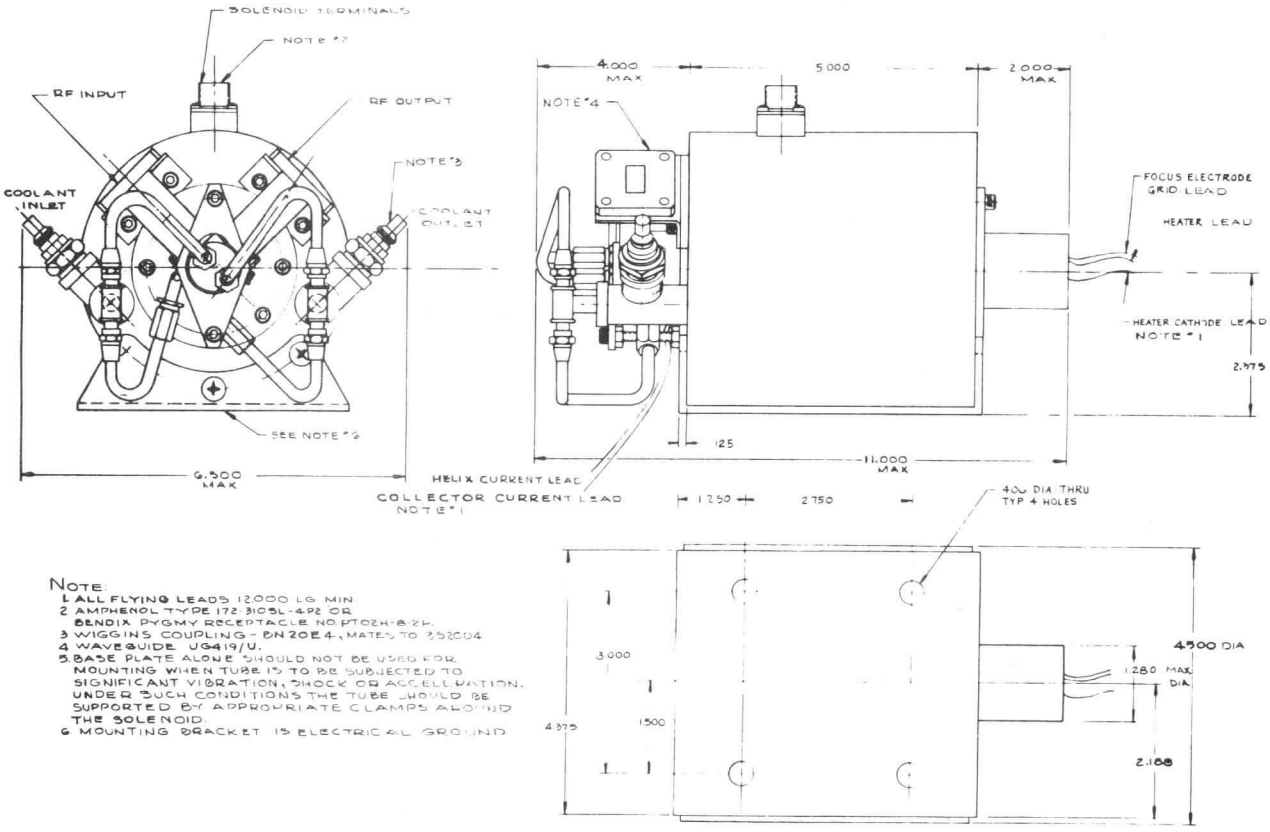

NOTE:
1. ALL FLYING LEADS 12.000 LG MIN
2. AMPHENOL TYPE 172-3105L-4P2 OR BENDIX PYGMY RECEPTACLE NO PT02H-8-2P.
3. WIGGINS COUPLING - BN 20E4, MATES TO 352C04
4. WAVEGUIDE UG419/U.
5. BASE PLATE ALONE SHOULD NOT BE USED FOR MOUNTING WHEN TUBE IS TO BE SUBJECTED TO SIGNIFICANT VIBRATION, SHOCK OR ACCELLERATION. UNDER SUCH CONDITIONS THE TUBE SHOULD BE SUPPORTED BY APPROPRIATE CLAMPS AROUND THE SOLENOID.
6. MOUNTING BRACKET IS ELECTRICAL GROUND

GENERAL ELECTRIC
POWER TUBE DEPARTMENT
Schenectady 5, N. Y.

PRELIMINARY
TECHNICAL INFORMATION

These ratings represent those of current samples of this type. Refer to the Objective Technical Information sheet for design-objective ratings.

DEVELOPMENTAL TYPE

This technical information is proprietary and is furnished only as a service to customers.

ZM-5184

TRAVELING-WAVE TUBE

1 Kilowatt Peak Output
25 db Saturation Gain

Electromagnet

14,000-18,000 Megacycles
Metal-Ceramic

The ZM-5184 is a ruggedized, high-power, gridded, broadband traveling-wave tube for use in the 14,000-to 18,000-megacycle frequency range. It has a saturation gain of 25 decibels with a peak power output of one kilowatt.

The tube is of metal-and-ceramic construction and is supplied as a complete packaged assembly including the tube, solenoid, and r-f connectors. The entire assembly weighs approximately 20 pounds.

The broad bandwidth, high gain, freedom from tuning adjustments, and rugged construction make this tube particularly useful in military systems. Applications include pulse amplification in radar, electronic countermeasures equipment, and similar systems.

GENERAL

Unless otherwise noted voltages are with respect to the anode. Anode and collector are connected to the solenoid housing and the body of the tube. These parts of the tube should be grounded.

ELECTRICAL

	Minimum	Bogey	Maximum	
Frequency*	14,000	–	18,000	Megacycles
Heater				
Voltage ∠	–	6.3	–	Volts
Current	–	0.7	–	Amperes
Focusing Method – Electromagnet				
Saturation Gain	–	25	–	Decibels
Small Signal Gain	–	30	–	Decibels
Saturation Power Output, Peak	–	1.0	–	Kilowatts
Duty Cycle	–	–	0.01	
Pulse Length	–	–	10	Microseconds
Vacuum Ion Pump Voltage	–	-2800	–	Volts
Cutoff Attenuation	35	–	–	Decibels
Waveguide VSWR				
Input	–	–	2.5 to 1	
Output	–	–	2.5 to 1	
Capacitance				
Grid-Cathode	10	15	20	Micromicrofarads
Grid-Anode	5	8	10	Micromicrofarads

MECHANICAL

Mounting Position – Any		
Over-all Dimensions, approximate		
Length	11.0	Inches
Diameter	5.37	Inches

The specifications of this type are subject to change. Delivery of samples and the existence of these data do not imply continued availability of types with the same characteristics or dimensions. For the most recent information concerning the status of this device, please consult your local Power Tube Department Regional Sales Office.

MECHANICAL (Cont'd)

Connectors		
RF Input – UG-419/U		
RF Output – UG-419/U		
Cathode-Heater, Heater, Grid, Ion Pump – Flying Leads		
Coolant – Wiggins BN20E4 Nipple (mates to Wiggins BS20D4 socket) or equivalent.		
Weight, Tube and Electromagnet, approximate	20	Pounds
Shock	50	G
Vibration	15	G
Altitude, Operating	80,000	Feet Mean Sea Level
Acceleration, Constant, Energized	30	G

THERMAL

Operating Temperature, Ambient	-65 to +100	C
Cooling – Liquid		
Coolant Flow Rate, approximate	1.0	Gallons per Minute
Supply Pressure, maximum	100	Pounds per Square Inch Gage
Coolant Temperature, maximum		
Inlet	100	C
Outlet	115	C

Coolanol** 45 or equivalent required

TYPICAL OPERATING CONDITIONS

	Minimum	Bogey	Maximum	
Cathode Voltage≠	-10.8	-10.3	-10.0	Kilovolts
Grid Bias Voltage, with Respect to Cathode	-150	-175	-200	Volts
Grid Pulse Voltage, Total Swing, with Respect to Grid Bias Voltage≠	+400	+475	+500	Volts
Peak Cathode Current	1.6	1.8	2.2	Amperes
Peak Grid Current, Percentage of Peak Cathode Current	15	18	25	Percent
Electromagnet				
Voltage	–	50	–	Volts
Current≠	7	8.0	10	Amperes

PERFORMANCE ASSURANCE SPECIFICATIONS

Shock (Energized) — 50 G for 11 milliseconds on each of three mutually perpendicular axes.

Vibration (Operating) — 0.06 inches double amplitude from 5 to 70 cycles per second and 15 G from 70 to 3000 cycles per second with sweep over 5 to 3000 cycles per second for 100 minutes on each of three mutually perpendicular axes.

* The power-output and saturation gain curves indicate performance possible at greater bandwidth. Increased performance can be obtained under narrow-band operation. For further information consult your nearest Power Tube Department sales office.

≠ For the bogey performance ratings specified on this data sheet, these parameters should be set at the particular value specified in the instructions accompanying each tube. The value specified will be within the range given above. The specific value of heater voltage should be held within plus or minus four percent.

≠ The cathode voltage may be set at various values between -10.8 and -10.0 kilovolts to obtain different power and gain characteristics.

** Registered trademark of Monsanto Chemical Company.

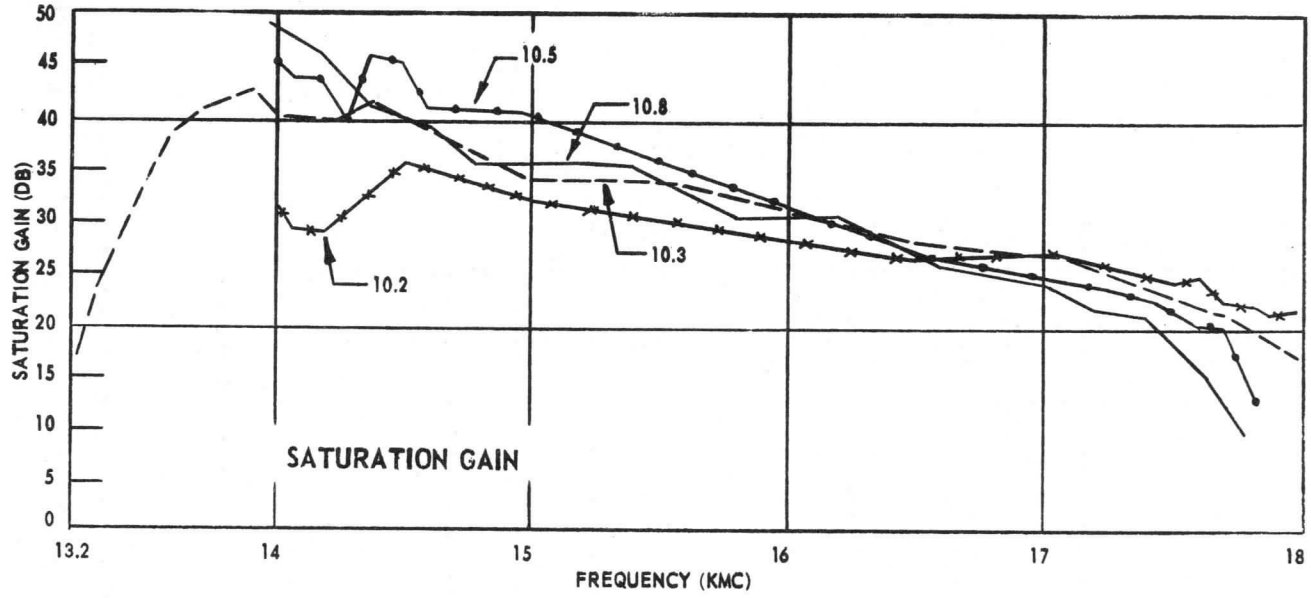
SATURATION GAIN (DB)
50
45
40
35
30
25
20
15
10
5
0
10.5
10.8
10.3
10.2
SATURATION GAIN
13.2
14
15
16
17
18
FREQUENCY (KMC)

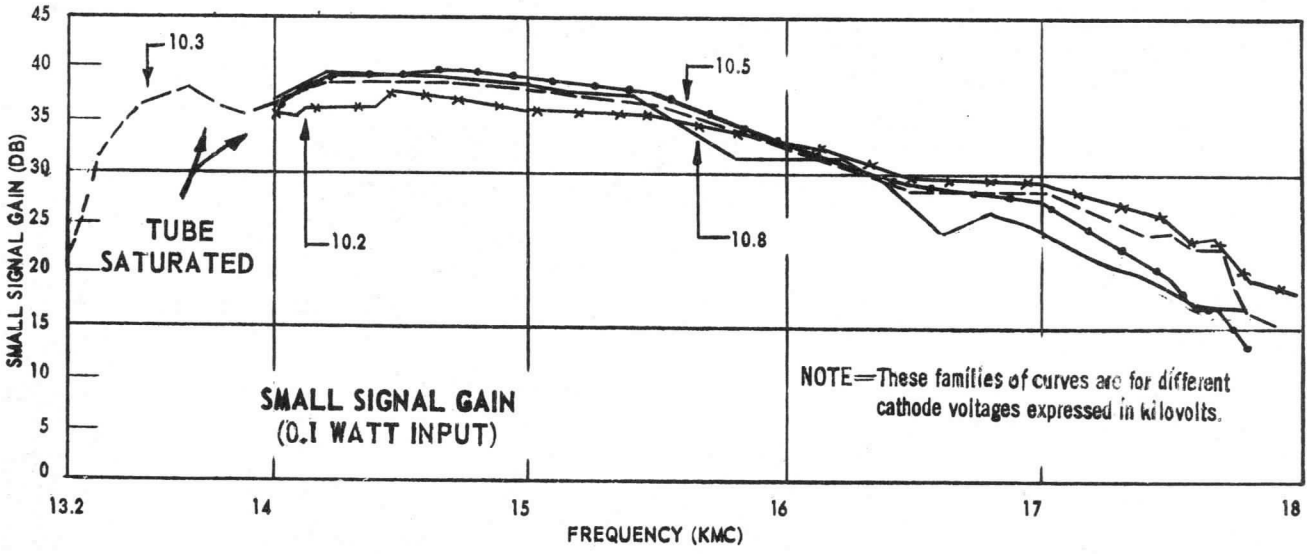
SMALL SIGNAL GAIN (DB)
45
40
35
30
25
20
15
10
5
0
10.3
TUBE SATURATED
10.2
10.5
10.8
SMALL SIGNAL GAIN
(0.1 WATT INPUT)
NOTE—These families of curves are for different cathode voltages expressed in kilovolts.
13.2
14
15
16
17
18
FREQUENCY (KMC)

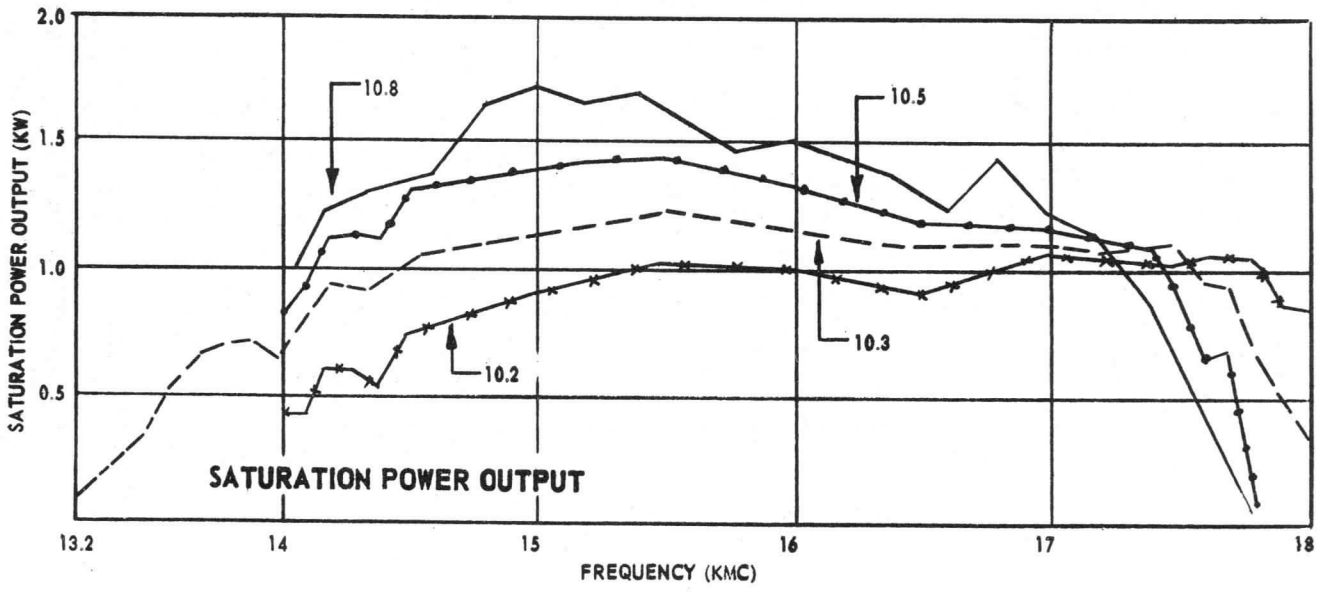
SATURATION POWER OUTPUT (KW)
2.0
1.5
1.0
0.5
10.8
10.5
10.3
10.2
SATURATION POWER OUTPUT
13.2
14
15
16
17
18
FREQUENCY (KMC)

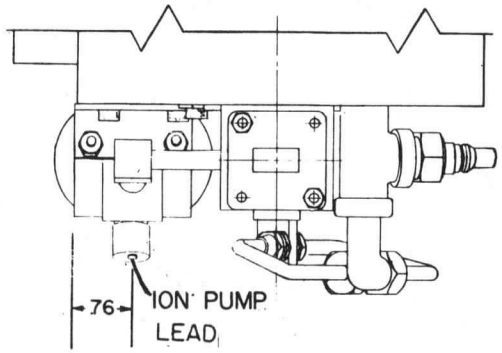

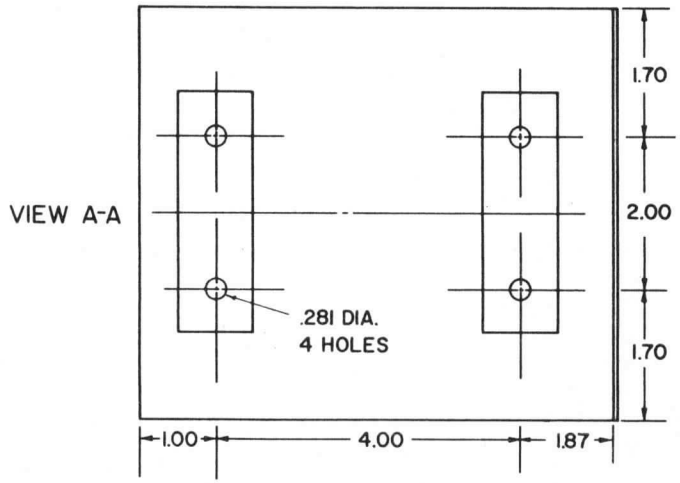

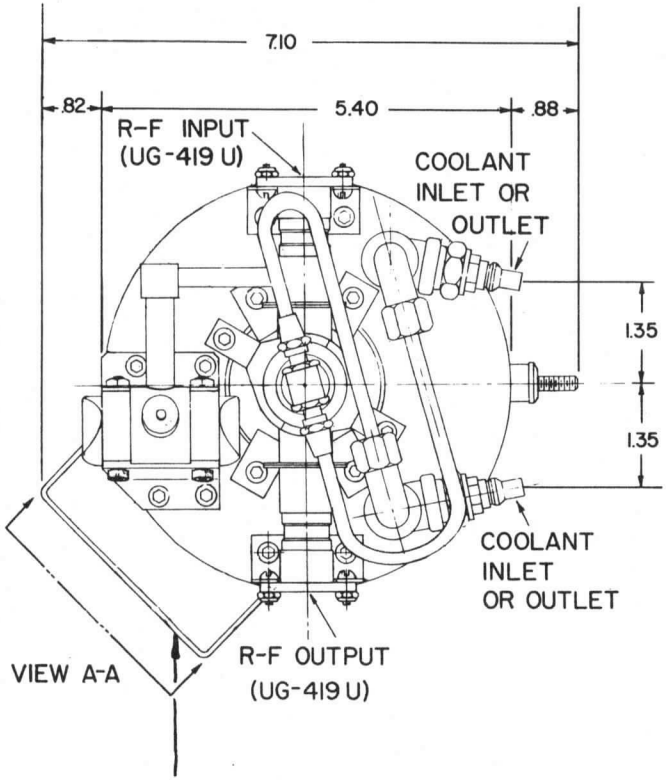

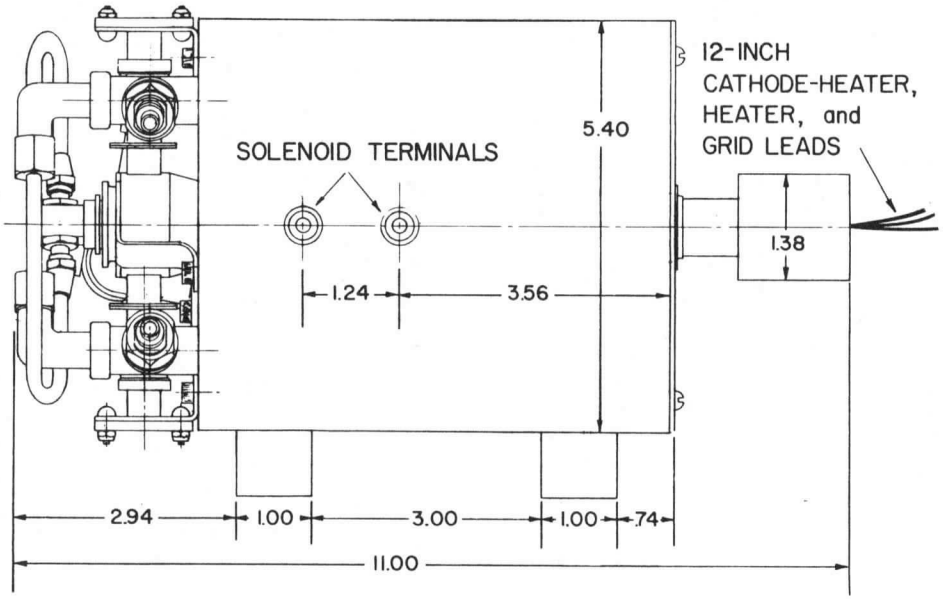

NOTE—THIS BRACKET SHOULD NOT BE USED FOR MOUNTING WHEN THE TUBE IS TO BE SUBJECTED TO SIGNIFICANT VIBRATION, SHOCK, OR ACCELERATION. UNDER SUCH CONDITIONS THE TUBE SHOULD BE SUPPORTED BY APPROPRIATE CLAMPS AROUND THE SOLENOID.

NOTE—THIS IS A SCALE DRAWING AND THE DIMENSIONS ARE APPROXIMATE AND IN INCHES.

Traveling-Wave Tubes

Technical Information

- HIGH POWER
- K_u-BAND
- EM FOCUSING

RF PERFORMANCE

Tube Type	Frequency Range (Gc)	Min. Peak Saturated Power Output, (kw)	Maximum Duty	Maximum Pulse Width (μsec)	Minimum Saturated Gain (db)	Minimum Small Signal Gain (db)
ZM-5184	14-17	0.5	0.01	10	25	30

FEATURES

high gain
broad bandwidth
electromagnet focusing
metal-ceramic construction
loaded-waveguide circuit
military environments
light weight
grid control

APPLICATIONS

radar
ecm

MECHANICAL & MISCELLANEOUS

VSWR, max	
Input	2.5
Output	2.5
Grid to other elements $\mu\mu$f (max)	20
Phase shift, deg/1% change in cathode voltage (max)	35
Weight, lb	20
Overall length, in	12
Mounting position	Any
Cooling	Liquid#
Flow rate, gpm	1.0
Max. supply pressure, psig	100
Max. inlet coolant temp., °C	100
Max. outlet coolant temp., °C	115
Connectors	
RF input	UG-419/U
RF output	UG-419/U
DC	Flying leads

TYPICAL CHARACTERISTICS

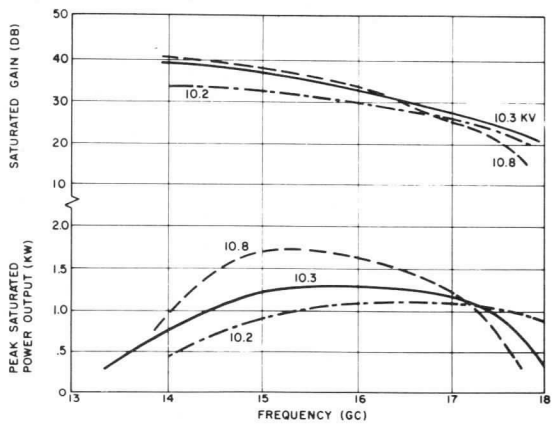

GENERAL ELECTRIC

OPERATING CONDITIONS* † ‡

Htr. vac or vdc	6.3
Htr. amp (max)	0.8
Cath. kv dc, with resp. to anode	-10 to -10.8
Peak cath. amp (max)	2.2
Grid-bias vdc, with resp. to cath.	-150 to -200
Grid swing vdc, with resp. to grid-bias voltage	400 to 500
Peak grid amp (max)	0.55
Ion pump vdc	2800
Electromagnet vdc	50
Electromagnet amp. (max)	10

ENVIRONMENTAL

Shock (energized)	30 G, 11 ms, 3 axes
Vibration (operating)	10 G, 70-3000 cps
Acceleration (no voltages)	30 G
Temp., ambient (operating)	-65 to +100°C
Altitude (operating)	100,000 ft

OUTLINE

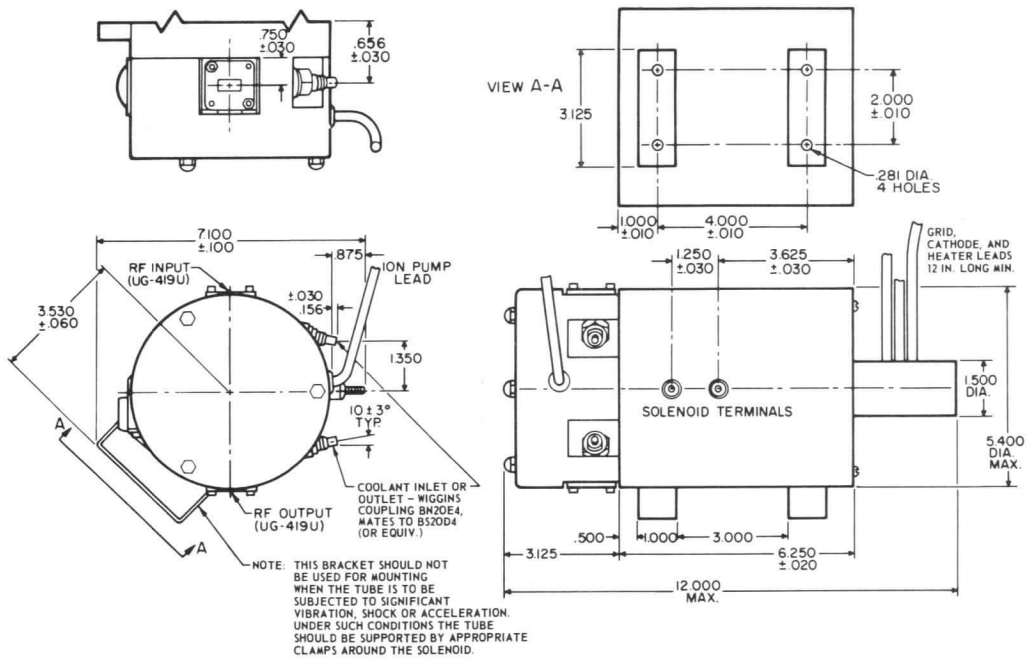

NOTES

\# Use Monsanto Coolanol 45 or equivalent.

* For the performance ratings specified, voltages should be adjusted to values specified by instructions accompanying each tube. These values will be within the ranges given above.

† The cathode voltage may be set at various values between -10 and -10.8 kv to obtain different power and gain characteristics.

‡ The anode and collector are connected to the body of the tube which should be grounded in the normal installation of this tube.

These data are subject to change without notice.

TUBE DEPARTMENT

GENERAL ELECTRIC

Owensboro, Kentucky

GL-7393

TRAVELING-WAVE TUBE

5 MILLIWATTS POWER OUTPUT **4000-8000 MEGACYCLES**

25 DB GAIN **LESS THAN 10 DB NOISE FIGURE**

PERMANENT MAGNET

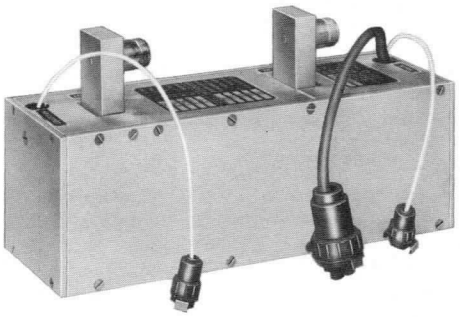

The GL-7393 is a ruggedized, low-noise, broadband traveling-wave tube for use in the 4000-to-8000-megacycle frequency range. It has a noise figure of less than 10 decibels across the entire band with a power output of five milliwatts.

The tube is of metal-and-ceramic construction and is supplied as a complete packaged assembly which includes the focusing magnets, connectors, and housing. The entire assembly weighs approximately 11.5 pounds.

The broad bandwidth, low-noise, high gain, freedom from tuning adjustments, and rugged construction make this tube particularly useful in military systems. As the input tube for radar receivers, it has the decided advantages of low noise and protection to the crystal mixer. Other applications include electronic countermeasures equipment, microwave relay systems, and radiometry.

ELECTRICAL

Frequency	4000–8000	Megacycles
Heater		
Voltage	6.3	Volts
Current, maximum	0.4	Ampere
A heater-voltage regulation of ±2 percent is recommended to realize optimum gain and noise figure.		
Focusing Method—Permanent Magnet		
Noise Figure, maximum	10	Decibels
Small-Signal Gain, minimum	25	Decibels
Saturated Power Output, nominal	5.0	Milliwatts
Collector Dissipation	1.0	Watt
Impedance, Coaxial	50	Ohms
Input VSWR	Less than 2.5 to 1	
Output VSWR	Less than 3.5 to 1	

MECHANICAL

Mounting Position—Any

Connectors

- DC Socket—Winchester PM6P-LS (or equivalent)
- Helix—Winchester PM1P-LS (or equivalent)
- Collector—Winchester PM1P-LS (or equivalent)
- RF Connectors, Coaxial
  - Input—Type N, UG-58A/U
  - Output—Type N, UG-58A/U

Over-all Dimensions, maximum		
Length	9.50	Inches
Width	2.98	Inches
Height	4.59	Inches
Weight, Tube and Magnet, approximate	11.5	Pounds

THERMAL

Cooling—Convection

ENVIRONMENTAL

Shock (energized)	30 G for 11 milliseconds on each of three mutually perpendicular axes.
Vibration (operating)	0.031 inches double amplitude from 5 to 55 cycles per second and 5 G from 55 to 1500 cycles per second with sweep over 5 to 1500 cycles per second for 100 minutes on each of three mutually perpendicular axes.
Humidity (non-operating)	MIL-E-5272 C, Paragraph 4.4.1 (Procedure I); i.e., non-operating tube in 95 percent relative humidity atmosphere for 10 days with temperature cycled slowly from approximately 30 C to 71 C each day.
Acoustic noise (operating)	135 decibels, 25 to 12,000 cycles per second random noise.
Altitude (operating)	100,000 feet mean sea level.
Operating temperature, ambient	−20 to +70 C

TYPICAL OPERATING CONDITIONS*

Electrode-No. 1 (Grid) Voltage	0 to −25	Volts
Electrode-No. 2 (Anode) Voltage	25 to 50	Volts
Electrode-No. 3 Voltage	30 to 100	Volts
Electrode-No. 4 Voltage	150 to 300	Volts
Helix		
Voltage	400 to 550	Volts
Current, maximum	50	Microamperes
Collector voltage	550 to 750	Volts
Beam Current, maximum	1000	Microamperes
Magnetic Field Strength, approximate	600	Gausses

*All voltages may be isolated from ground; i.e., it is not necessary to operate the cathode, helix, collector, or any other electrode at ground potential. Voltages shown are measured with respect to cathode. For minimum noise and optimum gain characteristics, voltages should be adjusted to values specified by instructions accompanying each tube.

GENERAL ELECTRIC

Supersedes ET-T1667A dated 1-63

PERMANENT-MAGNET PRECAUTIONS

This tube uses a uniform-field permanent magnet as the focusing structure. A label on the tube specifies a nominal lower limit of two inches on magnetic-material proximity. It must be realized that strong external magnets or large amounts of magnetic material at this distance may permanently damage the tube. A small screwdriver will not, while a large a-c transformer or a large sheet of steel at this distance may cause damage by defocusing the tube.

In addition, a related caution is important and must be remembered whenever handling a uniform-field tube. The permanent magnets of these tubes cause a large attractive force between the tube and magnetic material. Unless one is always careful to hold the tube and/or magnetic objects near the tube firmly, the result is sudden direct contact. The magnetic object may cause tube damage due to violations of the minimum spacing requirement.

For small steel hand tools, a two-inch limit is sufficient. For large magnetic objects with magnetic fields of their own, the lower minimum distance should be determined accurately by testing. To accomplish this, the tube may be secured to a suitable three-foot-long dielectric support and the tube case grounded. With the tube operating and its helix current being measured, the tube may be moved slowly by the dielectric support toward the magnetic object.

Appropriate electrical safety procedures should be followed at all times.

The minimum distance for which there is no degradation in r-f performance is the point at which the helix current starts to increase. If a slight degradation in noise figure can be accepted, the helix current may be allowed to increase somewhat as long as it stays below its operating maximum.

NOISE FIGURE AND SMALL-SIGNAL GAIN VS. FREQUENCY

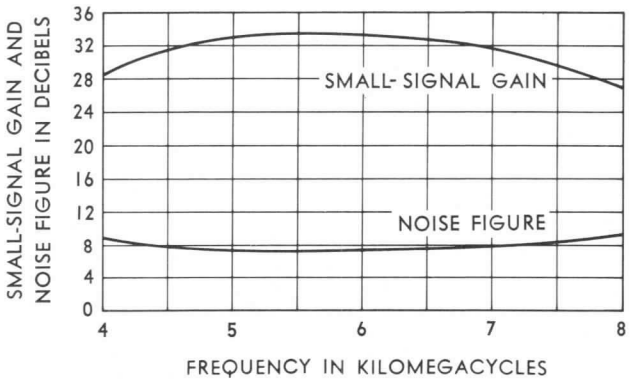

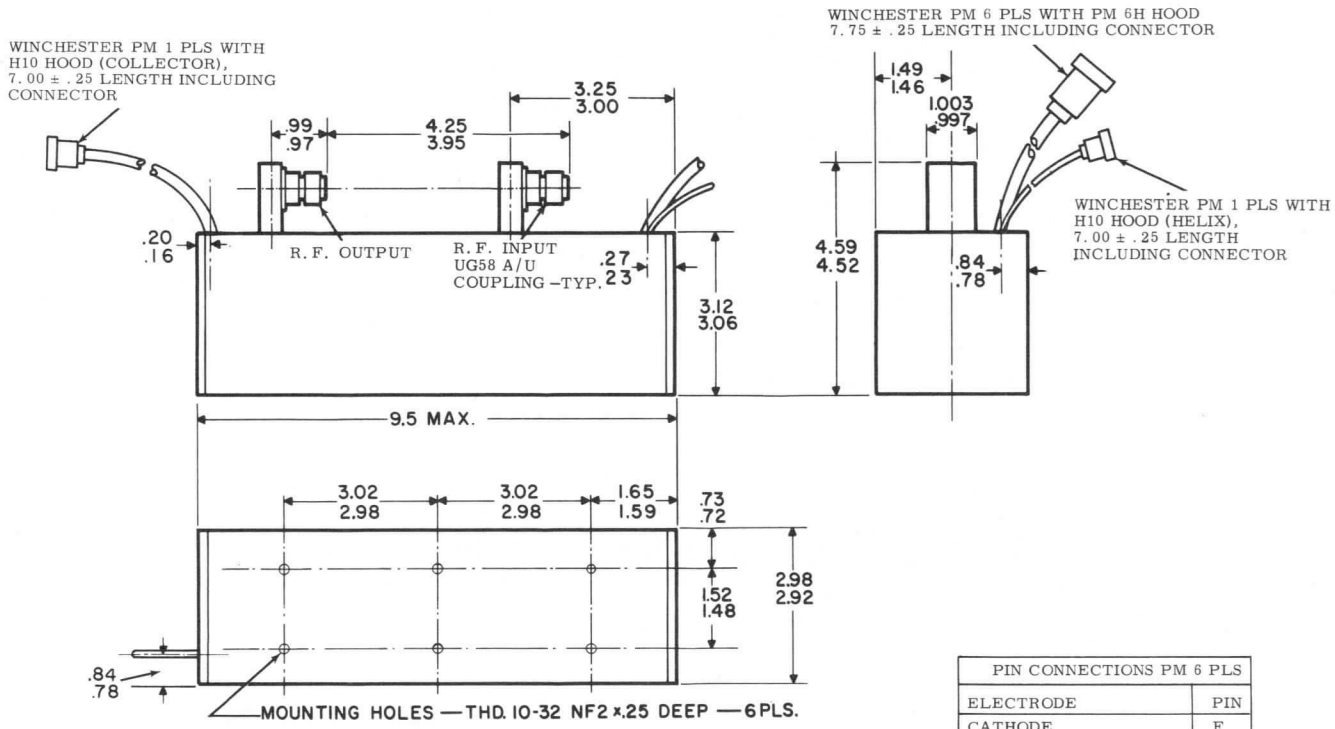

ALL DIMENSIONS ARE IN INCHES

PIN CONNECTIONS PM 6 PLS	
ELECTRODE	PIN
CATHODE	F
HEATER	A
NO. 1, GRID	B
NO. 2, ANODE	C
NO. 3, FOCUS	D
NO. 4, FOCUS	E

GENERAL ELECTRIC

POWER TUBE DEPARTMENT

Schenectady 5, N. Y. Palo Alto, Calif.

PRINTED IN U.S.A.

GL-7394

TRAVELING-WAVE TUBE

5 MILLIWATTS POWER OUTPUT — **8000-12,000 MEGACYCLES**
25 DB GAIN — **LESS THAN 10 DB NOISE FIGURE**
PERMANENT MAGNET

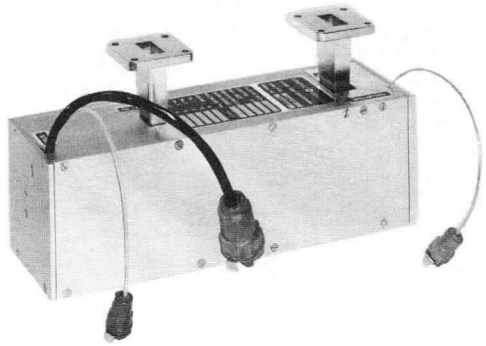

The GL-7394 is a ruggedized, low-noise, broadband traveling-wave tube for use in the 8000-to-12,000 megacycle frequency range. It has a noise figure of less than 10 decibels across the entire band with a power output of 5 milliwatts.

The tube is of metal-and-ceramic construction and is supplied as a complete packaged assembly which includes permanent focusing magnets, connectors, and housing. The entire assembly weighs approximately 11.5 pounds.

The broad bandwidth, low-noise, high gain, freedom from tuning adjustments, and rugged construction make this tube particularly useful in military systems. As the input tube for radar receivers, it has the decided advantages of low noise and protection to the crystal mixer. Other applications include electronic countermeasures equipment, microwave relay systems, and radiometry.

ELECTRICAL

Frequency	8000 to 12,000	Megacycles
Heater		
Voltage	6.3	Volts
Current, maximum	0.4	Ampere
A heater-voltage regulation of ±2 percent is recommended to realize optimum gain and noise figure.		
Focusing Method—Permanent Magnet		
Noise Figure, maximum	10	Decibels
Small-Signal Gain, minimum	25	Decibels
Saturated Power Output, nominal	5.0	Milliwatts
Collector Dissipation	1.0	Watt
Waveguide VSWR		
Input	Less than 2.5 to 1	
Output	Less than 3.5 to 1	

MECHANICAL

Mounting Position—Any
Connectors
- DC Socket—Winchester PM6P-LS (or equivalent)
- Helix—Winchester PM1P-LS (or equivalent)
- Collector—Winchester PM1P-LS (or equivalent)
- RF Connectors, Waveguide
  - Input—UG-39/U
  - Output—UG-39/U

Over-all Dimensions, maximum		
Length	9.50	Inches
Width	2.98	Inches
Height	4.60	Inches
Weight, Tube and Magnet, approximate	11.5	Pounds

THERMAL

Cooling—Convection

ENVIRONMENTAL

Shock (energized)	30 G for 11 milliseconds on each of three mutually perpendicular axes
Vibration (operating)	0.031 inches double amplitude from 5 to 55 cycles per second and 5 G from 55 to 1500 cycles per second with sweep over 5 to 1500 cycles per second for 100 minutes on each of three mutually perpendicular axes.
Humidity (non-operating)	MIL-E-5272 C, Paragraph 4.4.1 (Procedure I); i.e., non-operating tube in 95 percent relative humidity atmosphere for 10 days with temperature cycled slowly from approximately 30 C to 71 C each day.
Acoustic noise (operating)	135 decibels, 25 to 12,000 cycles per second random noise.
Altitude (operating)	100,000 feet mean sea level.
Operating temperature, ambient	−20 to +70 C

TYPICAL OPERATING CONDITIONS*

Electrode-No. 1 (Grid) Voltage	0 to −25	Volts
Electrode-No. 2 (Anode) Voltage	30 to 60	Volts
Electrode-No. 3 Voltage	40 to 150	Volts
Electrode-No. 4 Voltage	250 to 450	Volts
Helix		
Voltage	700 to 850	Volts
Current, maximum	50	Microamperes
Collector Voltage	900 to 1000	Volts
Beam Current, maximum	1000	Microamperes
Magnetic Field Strength, approximate	600	Gausses

*All voltages may be isolated from ground; i.e., it is not necessary to operate the cathode, helix, collector, or any other electrode at ground potential. Voltages shown are measured with respect to cathode. For minimum noise and optimum gain characteristics, voltages should be adjusted to values specified by instructions accompanying each tube.

GENERAL ELECTRIC

Supersedes ET-T1668 dated 9-61

PERMANENT-MAGNET PRECAUTIONS

This tube uses a uniform-field permanent magnet as the focusing structure. A label on the tube specifies a nominal lower limit of two inches on magnetic-material proximity. It must be realized that strong external magnets or large amounts of magnetic material at this distance may permanently damage the tube. A small screwdriver will not, while a large a-c transformer or a large sheet of steel at this distance may cause damage by defocusing the tube.

In addition, a related caution is important and must be remembered whenever handling a uniform-field tube. The permanent magnets of these tubes cause a large attractive force between the tube and magnetic material. Unless one is always careful to hold the tube and/or magnetic objects near the tube firmly, the result is sudden direct contact. The magnetic object may cause tube damage due to violations of the minimum spacing requirement.

For small steel hand tools, a two-inch limit is sufficient. For large magnetic objects with magnetic fields of their own, the lower minimum distance should be determined accurately by testing. To accomplish this, the tube may be secured to a suitable three-foot-long dielectric support and the tube case grounded. With the tube operating and its helix current being measured, the tube may be moved slowly by the dielectric support toward the magnetic object.

Appropriate electrical safety procedures should be followed at all times.

The minimum distance for which there is no degradation in r-f performance is the point at which the helix current starts to increase. If a slight degradation in noise figure can be accepted, the helix current may be allowed to increase somewhat as long as it stays below its operating maximum.

NOISE FIGURE AND SMALL-SIGNAL GAIN VS. FREQUENCY

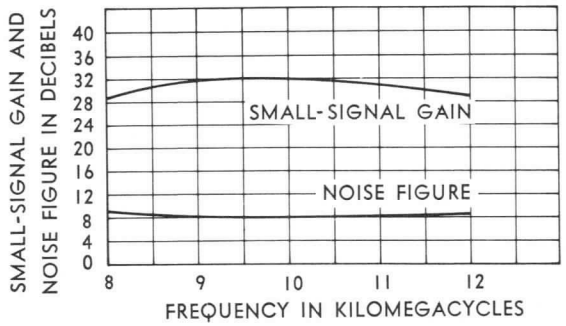

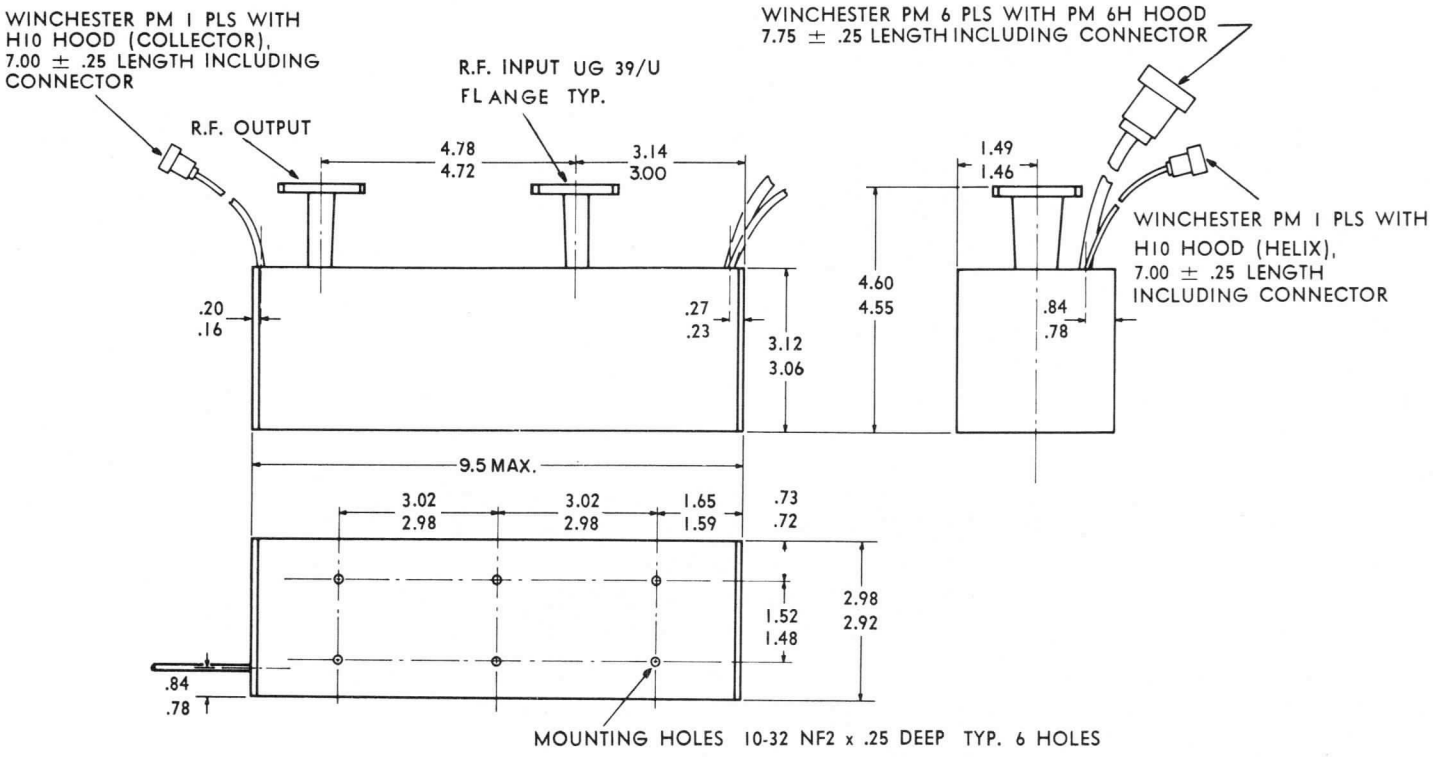

DIMENSIONS ARE IN INCHES

PIN CONNECTIONS PM 6 PLS	
ELECTRODE	PIN
CATHODE	F
HEATER	A
NO. 1, GRID	B
NO. 2, ANODE	C
NO. 3, FOCUS	D
NO. 4, FOCUS	E

GENERAL ELECTRIC

POWER TUBE DEPARTMENT

Schenectady 5, N. Y. Palo Alto, Calif.

PRINTED IN U.S.A.

GL-8154

TRAVELING-WAVE TUBE

5 MILLIWATTS POWER OUTPUT — **7000–11,000 MEGACYCLES**
25 DB GAIN — **LESS THAN 10 DB NOISE FIGURE**
PERMANENT MAGNET

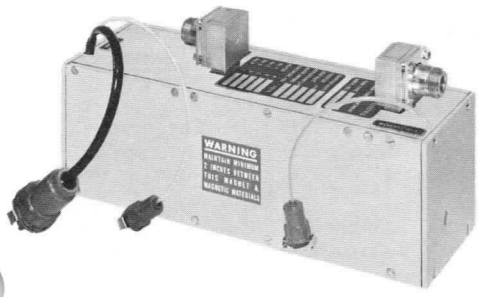

The GL-8154 is a ruggedized, low-noise, broadband traveling-wave tube for use in the 7000-to-11,000 megacycle frequency range. It has a noise figure of less than 10 decibels across the entire band with a power output of 5 milliwatts.

The tube is of metal-and-ceramic construction and is supplied as a complete packaged assembly which includes permanent focusing magnets, connectors, and housing. The entire assembly weighs approximately 11.5 pounds.

The broad bandwidth, low-noise, high gain, freedom from tuning adjustments, and rugged construction make this tube particularly useful in military systems. As the input tube for radar receivers, it has the decided advantages of low noise and protection to the crystal mixer. Other applications include electronic countermeasures equipment, microwave relay systems, and radiometry.

ELECTRICAL

Frequency	7000 to 11,000	Megacycles
Heater		
Voltage	6.3	Volts
Current, maximum	0.4	Ampere
A heater-voltage regulation of ±2 percent is recommended to realize optimum gain and noise figure.		
Focusing Method—Permanent Magnet		
Noise Figure*, maximum	10	Decibels
Small-Signal Gain, minimum	25	Decibels
Saturated Power Output, nominal	5.0	Milliwatts
Collector Dissipation	1.0	Watt
Impedance, Coaxial	50	Ohms
Input, VSWR	Less than 2.5 to 1	
Output, VSWR	Less than 3.5 to 1	

MECHANICAL

Mounting Position—Any
Connectors
- DC Socket—Winchester PM6P-LS (or equivalent)
- Helix—Winchester PM1P-LS (or equivalent)
- Collector—Winchester PM1P-LS (or equivalent)
- RF Connectors, Coaxial
  - Input—Type N, UG-58/U
  - Output—Type N, UG-58/U

Over-all Dimensions, maximum		
Length	9.50	Inches
Width	2.98	Inches
Height	4.38	Inches
Weight (Complete Assembly), approximate	11.5	Pounds

THERMAL

Cooling—Convection

ENVIRONMENTAL

Shock (energized)	30 G for 11 milliseconds on each of three mutually perpendicular axes.
Vibration (operating)	0.031 inches double amplitude from 5 to 55 cycles per second and 5 G from 55 to 1500 cycles per second with sweep over 5 to 1500 cycles per second for 100 minutes on each of three mutually perpendicular axes.
Humidity (non-operating)	MIL-E-5272 C, Paragraph 4.4.1 (Procedure I); i.e., non-operating tube in 95 percent relative humidity atmosphere for 10 days with temperature cycled slowly from approximately 30 C to 71 C each day.
Acoustic noise (operating)	135 decibels, 25 to 12,000 cycles per second random noise.
Altitude (operating)	100,000 feet mean sea level.
Operating temperature, ambient	−20 to +70 C

TYPICAL OPERATING CONDITIONS ψ

Electrode-No. 1 (Grid) Voltage	0 to −25	Volts
Electrode-No. 2 (Anode) Voltage	30 to 60	Volts
Electrode-No. 3 Voltage	40 to 150	Volts
Electrode-No. 4 Voltage	250 to 450	Volts
Helix		
Voltage	700 to 850	Volts
Current, maximum	50	Microamperes
Collector Voltage	900 to 1000	Volts
Beam Current, maximum	1000	Microamperes
Magnetic Field Strength, approximate	600	Gausses

* An improved noise figure is possible when this tube is optimized for a narrow frequency band. If requirements exist for an improved noise figure over a narrow band, consult the nearest Power Tube Department sales office.

ψ All voltages may be isolated from ground; i.e., it is not necessary to operate the cathode, helix, collector, or any other electrode at ground potential. Voltages shown are measured with respect to cathode. For minimum noise and optimum gain characteristics, voltages should be adjusted within ranges specified by instructions accompanying each tube.

GENERAL ELECTRIC

Supersedes ET-T1673 dated 12-61

PERMANENT-MAGNET PRECAUTIONS

This tube uses a uniform-field permanent magnet as the focusing structure. A label on the tube specifies a nominal lower limit of two inches on magnetic-material proximity. It must be realized that strong external magnets or large amounts of magnetic material at this distance may permanently damage the tube. A small screwdriver will not, while a large a-c transformer or a large sheet of steel at this distance may cause damage by defocusing the tube.

In addition, a related caution is important and must be remembered whenever handling a uniform-field tube. The permanent magnets of these tubes cause a large attractive force between the tube and magnetic material. Unless one is always careful to hold the tube and/or magnetic objects near the tube firmly, the result is sudden direct contact. The magnetic object may cause tube damage due to violations of the minimum spacing requirement.

For small steel hand tools, a two-inch limit is sufficient. For large magnetic objects with magnetic fields of their own, the lower minimum distance should be determined accurately by testing. To accomplish this, the tube may be secured to a suitable three-foot-long dielectric support and the tube case grounded. With the tube operating and its helix current being measured, the tube may be moved slowly by the dielectric support toward the magnetic object.

Appropriate electrical safety procedures should be followed at all times.

The minimum distance for which there is no degradation in r-f performance is the point at which the helix current starts to increase. If a slight degradation in noise figure can be accepted, the helix current may be allowed to increase somewhat as long as it stays below its operating maximum.

NOISE FIGURE AND SMALL-SIGNAL GAIN VS. FREQUENCY

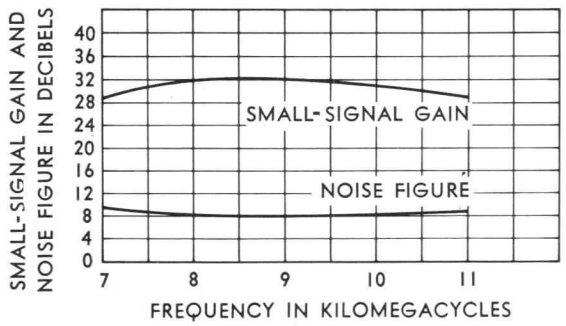

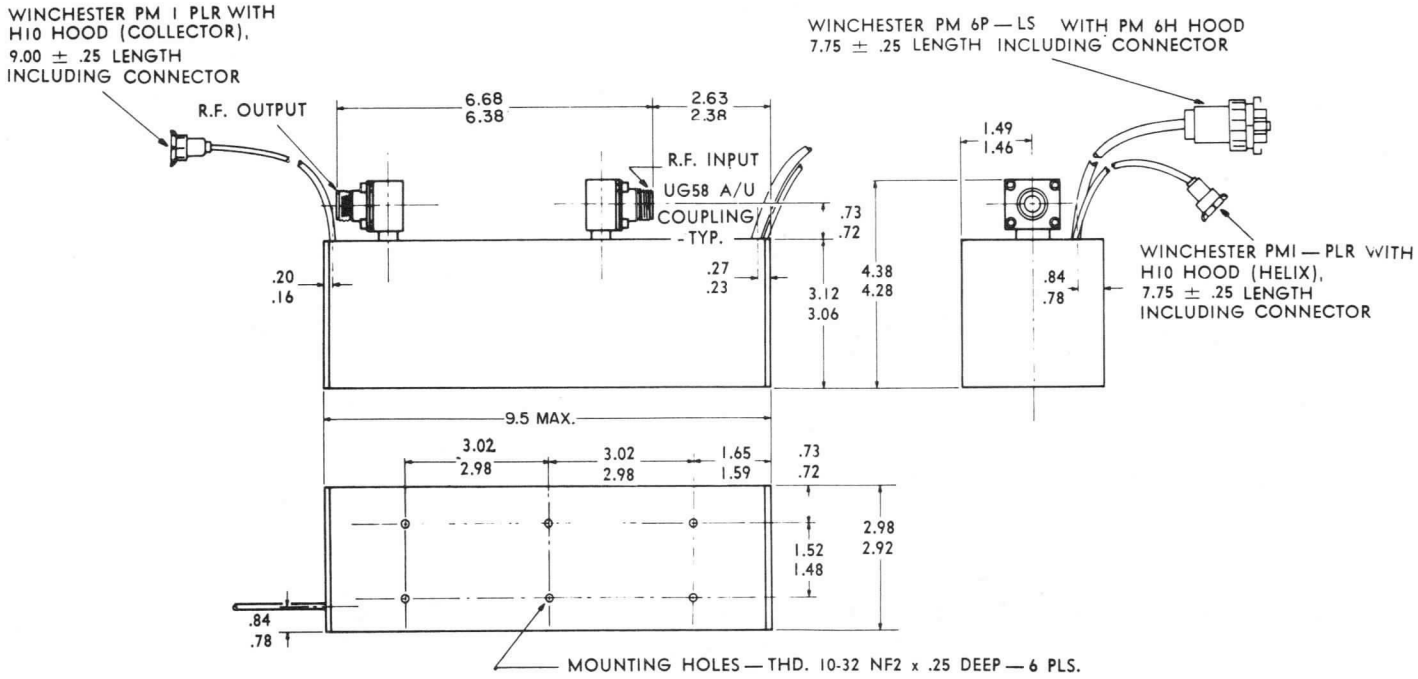

DIMENSIONS ARE IN INCHES

PIN CONNECTIONS PM6P-LS	
ELECTRODE	PIN
CATHODE	F
HEATER	A
NO. 1, GRID	B
NO. 2, ANODE	C
NO. 3, FOCUS	D
NO. 4, FOCUS	E

GENERAL ELECTRIC

POWER TUBE DEPARTMENT

Schenectady 5, N. Y. Palo Alto, Calif.

PRINTED IN U.S.A.

GENERAL ELECTRIC

Supersedes ETX-108

TRANSMITTING TUBES

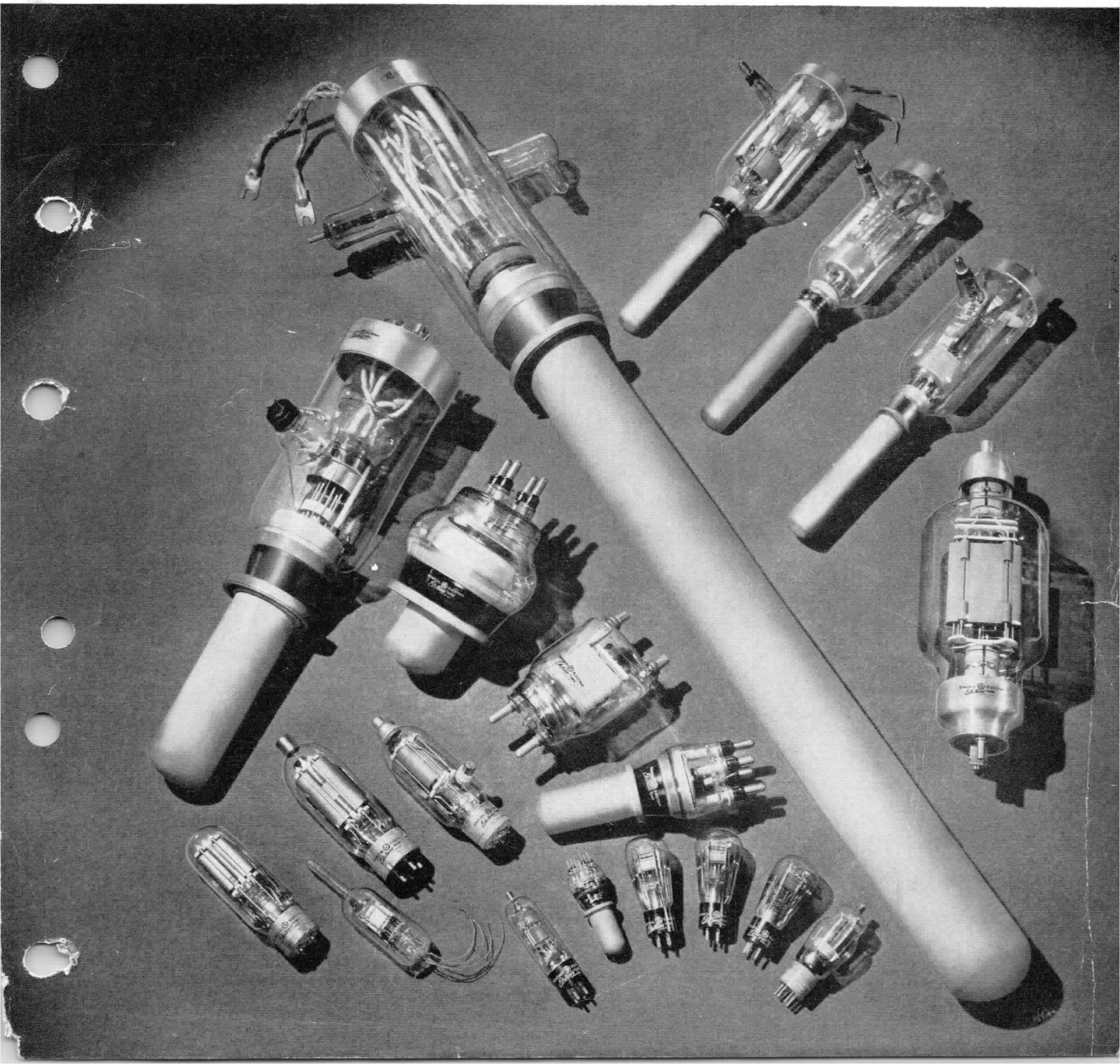

DESCRIPTION

The term "transmitting tubes" is broad in implication. Power output ratings for example, range from a few watts to many kilowatts and tube lengths from three inches to more than five feet. No exact line of demarcation exists between transmitting and receiving tubes either in function or in name. The technical and application data contained in this manual deals primarily with tubes normally found in transmitters and associated equipment.

One of the most significant methods of classifying transmitting tubes is by the system of cooling used. The three main classes are convection, forced-air, and water cooling, each roughly related to power output rating and physical size. Other systems of division are by the number and nature of the electrodes involved, by frequency range, or by common application. Since no single breakdown is all inclusive, technical information sheets are arranged by type number, and correlation charts and tables supplied in the "Quick Selection Chart"; ETX-104.

DEFINITIONS

The following definitions of terms which appear in this manual have been obtained from the IRE Standards for 1938. The key number refers to the identification number appearing in the Standards.

1E17. Cathode. A cathode is an electrode which is the primary source of an electron stream.

1E18. Filament. A filament is a cathode of a thermionic tube, usually in the form of a wire or ribbon, to which heat may be supplied by passing current through it.

1E19. Indirectly Heated Cathode. (Equipotential Cathode, Unipotential Cathode.) An indirectly heated cathode is a cathode of a thermionic tube to which heat is supplied by an independent heater element.

1E20. Heater. A heater is an electric heating element for supplying heat to an indirectly heated cathode.

1E21. Control Electrode. A control electrode is an electrode on which a voltage is impressed to vary the current flowing between two or more other electrodes.

1E22. Grid. A grid is an electrode having one or more openings for the passage of electrons or ions.

1E23. Space-Charge Grid. A space-charge grid is a grid which is placed adjacent to the cathode and positively biased so as to reduce the limiting effect of space charge on the current through the tube.

1E24. Control Grid. A control grid is a grid, ordinarily placed between the cathode and an anode, for use as a control electrode.

1E25. Screen Grid. A screen grid is a grid placed between a control grid and an anode, and usually maintained at a fixed positive potential, for the purpose of reducing the electrostatic influence of the anode in the space between the screen grid and the cathode.

1E26. Suppressor Grid. A suppressor grid is a grid which is interposed between two electrodes (usually the screen grid and plate), both positive with respect to the cathode, in order to prevent the passing of secondary electrons from one to the other.

1E27. Anode. An anode is an electrode to which a principal electron stream flows.

1E28. Plate. Plate is a common name for the principal anode in a vacuum tube.

1E29. Electron Emission. Electron emission is the liberation of electrons from an electrode into the surrounding space. Quantitatively, it is the rate at which electrons are emitted from an electrode.

1E30. Thermionic Emission. Thermionic emission is electron or ion emission due directly to the temperature of the emitter.

1E31. Secondary Emission. Secondary emission is electron emission due directly to impact by electrons or ions.

1E32. Grid Emission. Grid emission is electron or ion emission from a grid.

1E33. Emission Characteristic. An emission characteristic is a relation, usually shown by a graph, between the emission and a factor controlling the emission (as temperature, voltage, or current of the filament or heater).

1E34. Cathode Current. Cathode current is the total current passing to or from the cathode through the vacuous space.

1E35. Filament Current. Filament current is the current supplied to a filament to heat it.

1E36. Filament Voltage. Filament voltage is the voltage between the terminals of a heater.

1E37. Heater Current. Heater current is the current flowing through a heater.

1E38. Heater Voltage. Heater voltage is the voltage between the terminals of a heater.

1E39. Electrode Current. Electrode current is the current passing to or from an electrode through the vacuous space. The terms grid current, anode current, plate current, etc., are used to designate currents passing to or from these specific electrodes.

1E40. Electrode Voltage. Electrode voltage is the voltage between an electrode and a specified point of the cathode. The terms grid voltage, anode voltage, plate voltage, etc., are used to designate the voltage between these specific electrodes and the cathode.

1E41. Direct Grid Bias. Direct grid bias is the direct component of grid voltage. This is commonly called grid bias.

1E42. Grid Driving Power. Grid driving power is the average product of the instantaneous value of the grid current and of the alternating component of the grid voltage over a complete cycle. This comprises the power supplied to the biasing device and to the grid.

1E43. Peak Forward Anode Voltage. Peak forward anode voltage is the maximum instantaneous anode voltage in the direction in which the tube is designed to pass current.

1E44. Peak Inverse Anode Voltage. Peak inverse anode voltage is the maximum instantaneous anode voltage in the direction opposite to that in which the tube is designed to pass current.

1E45. Tube Voltage Drop. Tube voltage drop in a gas or vapor-filled tube is the anode voltage during the conducting period.

1E46. Electrode Dissipation. Electrode dissipation is the power dissipated in the form of heat by an electrode as a result of electron and/or ion bombardment.

1E47. Ionization Current. Ionization current is the electric current resulting from the movement of electric charges in an ionizing medium under the influence of an applied electric field.

1E48. Gas Current. Gas current is a current flowing to an electrode and composed of positive ions which have been produced as a result of gas ionization by an electron current flowing between other electrodes.

1E49. Leakage Current. Leakage current is a conductive current which flows between two or more electrodes by any path other than across the vacuous space.

1E50. Electrode Admittance. Electrode admittance is the quotient of the alternating component of the electrode current by the alternating component of the electrode voltage, all other electrode voltages being maintained constant. As most precisely used, the term refers to infinitesimal amplitudes.

1E52. Electrode Conductance. Electrode conductance is the quotient of the in-phase component of the electrode alternating current by the electrode alternating voltage, all other electrode voltages being maintained constant. This is a variational and not a total conductance. As most precisely used, the term refers to infinitesimal amplitudes.

1E53. Electrode Resistance. Electrode resistance is the reciprocal of the electrode conductance. This is the effective parallel resistance and is not the real component of the electrode impedance.

1E54. Transadmittance. Transadmittance from one electrode to another is the quotient of the alternating component of the current of the second electrode by the alternating component of the voltage of the first electrode, all other electrode voltages being maintained constant. As most precisely used, the term refers to infinitesimal amplitudes.

1E55. Transconductance. Transconductance from one electrode to another is the quotient of the in-phase component of the alternating current of the second electrode by the alternating voltage of the first electrode, all other electrode voltages being maintained constant. As most precisely used, the term refers to infinitesimal amplitudes.

1E56. Control-Grid-Plate Transconductance. Control-grid-plate transconductance is the name for the plate-current-to-grid-voltage transconductance. This is ordinarily the most important transconductance and is commonly understood when the term "transconductance" is used.

1E60. Conversion Transconductance. Conversion transconductance is the quotient of the magnitude of a single beat-frequency component (f_1+f_2) or (f_1-f_2) of the output-electrode current by the magnitude of the control-electrode voltage of frequency f_1, under the conditions that all direct electrode voltages and the magnitude of the electrode alternating voltage f_2 remain constant and that no impedances at the frequencies f_1 or f_2 are present in the output circuit. As most precisely used, the term refers to an infinitesimal magnitude of the voltage of frequency f_1.

1E61. μ Factor. μ factor is the ratio of the change in one electrode voltage to the change in another electrode voltage, under the conditions that a specified current remains unchanged and that all other electrode voltages are maintained constant. It is a measure of the relative effect of the voltages on two electrodes upon the current in the circuit of any specified electrode. As most precisely used, the term refers to infinitesimal changes.

1E62. Amplification Factor. Amplification factor is the ratio of the change in plate voltage to a change in control-electrode voltage under the conditions that the plate current remains unchanged and that all other electrode voltages are maintained constant. It is a measure of the effectiveness of the control-electrode voltage relative to that of the plate voltage upon the plate current. The sense is usually taken as positive when the voltages are changed in opposite directions. As most precisely used, the term refers to infinitesimal changes. Amplification factor is a special case of u factor.

1E63. Electrode Characteristic. An electrode characteristic is a relation, usually shown by a graph, between an electrode voltage and current, other electrode voltages being maintained constant.

1E64. Transfer Characteristic. A transfer characteristic is a relation, usually shown by a graph, between the voltage of one electrode and the current to another electrode, all other voltages being maintained constant.

1E65. Interelectrode Capacitance. Interelectrode capacitance is the direct capacitance between two electrodes.

1E66. Electrode Capacitance. Electrode capacitance is the capacitance of one electrode to all other electrodes connected together.

1E67. Input Capacitance. The input capacitance of a vacuum tube is the sum of the direct capacitances between the control grid and the cathode and such other electrodes as are operated at the alternating potential of the cathode. This is not the effective input capacitance, which is a function of the impedances of the associated circuits.

1E68. Output Capacitance. The output capacitance of a vacuum tube is the sum of the direct capacitances between the output electrode (usually the plate) and the cathode and such other electrodes as are operated at the alternating potential of the cathode. This is not the effective output capacitance, which is a function of the impedances of the associated circuits.

1E69. Class A Amplifier. A Class A amplifier is an amplifier in which the grid bias and alternating grid voltages are such that plate current in a specific tube flows at all times.

1E70. Class AB Amplifier. A Class AB amplifier is an amplifier in which the grid bias and alternating grid voltages are such that plate current in a specific tube flows for appreciably more than half but less than the entire electrical cycle.

1E71. Class B Amplifier. A Class B amplifier is an amplifier in which the grid bias is approximately equal to the cutoff value so that the plate current is approximately zero when no exciting grid voltage is applied and so that plate current in a specific tube flows for approximately one half of each cycle when an alternating grid voltage is applied.

1E72. Class C Amplifier. A Class C amplifier is an amplifier in which the grid bias is appreciably greater than the cutoff value so that the plate current in each tube is zero when no alternating grid voltage is applied, and so that the plate current in each tube is zero when no alternating grid voltage is applied, and so that plate current in a specific tube flows for appreciably less than one half of each cycle when an alternating grid voltage is applied. To denote that grid current does not flow during any part of the input cycle, the suffix 1 may be added to the letter or letters of the class identification. The suffix 2 may be used to denote that grid current flows during some part of the cycle.

PRINCIPLES AND FUNDAMENTALS OF OPERATION

CONSTRUCTION OF TRANSMITTING TUBES

Cathodes

Three cathodes commonly used in transmitting tubes are those of pure tungsten, thoriated tungsten, and oxides of a mixture of barium, strontium and calcium. The choice of cathode in the design of an electronic tube depends on a number of factors; the most important ones are discussed here.

Tungsten—The pure metal cathode is suited for use in tubes operating at high voltages. The principal advantage of pure tungsten is its long life. Positive ion bombardment, resulting from residual gases in the tube, has little effect on the quality of the emitter. The tungsten metal is continuous through the cross section of the cathode, and the emissive area remains substantially constant. Another important advantage of tungsten filament is its mechanical strength, a highly desirable feature in the design of the larger transmitting tubes.

Thoriated Tungsten—Formed of tungsten infused with thoria, this cathode is widely used in tubes of intermediate voltage ratings. In proc-

CONSTRUCTION OF TRANSMITTING TUBES (CONT'D)

essing this type of cathode, an overlayer of pure thorium is formed, and this material,

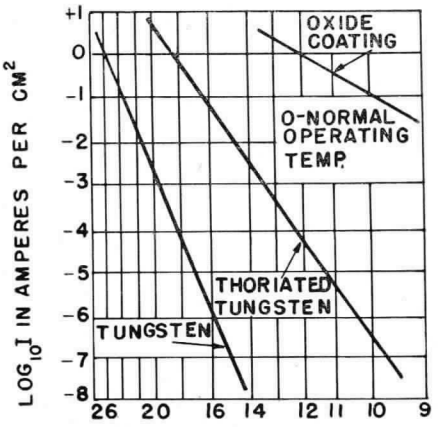

K-9186000 12-7-45

Fig. 1—Emission Versus Temperature for Various Cathodes

which emits at a lower temperature than tungsten, is used as the active surface. Its efficiency is greater than that of tungsten, and for a given bulb size, allows higher ratings to be applied to other electrodes in the tube.

Coated—Coated cathodes are constructed in two general forms. One type has the emissive oxide formed directly on the surface of the heater. The other has a coated sleeve and separate, insulated heater. These types are widely used in receiving and low voltage transmitting tubes because of their relatively high emission efficiency.

The separately, or indirectly heated cathode is an equipotential surface and is insulated from the heater, permitting operation of the cathode at potentials differing from those of the heater circuit. This feature is especially valuable in circuit problems involving self-bias, current feedback, or impedance transformation. The curves of Fig. 1, illustrate the relation between emission and temperature for various cathodes.

Grids—The choice of a suitable material for grid structures in transmitting tubes is generally made between tungsten, tantalum, and molybdenum. All of the materials possess good mechanical strength, an important consideration in avoiding small deformations which may greatly alter characteristics of the tube. Tantalum, easily welded, proves particularly desirable for grids which are formed by spiraling and welding wire to supports. Tantalum also displays excellent gettering qualities when properly treated, and low primary and secondary emission.

Plates—A wide variety of materials have found favor in the design of transmitting tube plates. For convection-cooled tubes, tantalum, molybdenum, graphite, zirconium coated base metals, and carbonized nickel are extensively used at the present time.

Tantalum—Tantalum is widely used for plates in transmitting tubes; it is easily formed and welded, and its high melting point allows correspondingly high dissipation ratings. Its excellent gettering action makes it a nearly ideal material for use in high-voltage tubes.

Molybdenum—Molybdenum is similar to tantalum in general properties. It displays a comparatively low emissivity versus temperature characteristic and good heat conductivity. The addition of fins and surface roughening by carborundum blasting is often employed to increase the heat radiating ability of molybdenum plates.

Graphite—Graphite plates are commonly employed in small transmitting tubes. They can be formed in a great variety of shapes, and, if properly processed, have good thermal emissivity. The graphite plate is usually rather thick to provide good mechanical strength. This, plus the fact that it is a black body, help to make it an excellent radiator.

Carbonized Nickel—Nickel has the advantages of economy and workability and is easily subjected to any number of mechanical processes. By itself, this metal does not always possess the desired radiation qualities and is, therefore, often carbonized to blacken and roughen the surface. This process affords increased radiation ability.

Zirconium—Zirconium coatings are used on base metals such as molybdenum, tungsten, and nickel. It is a dark, dull metal with excellent properties as a radiator and, if properly processed, a first class getter. Although zirconium coated plates approach tantalum as an ideal plate material, their vapor pressure and melting point are not quite as favorable. One of the chief advantages of zirconium coatings is that an easily worked base metal may be formed in any desired shape and then coated.

Copper—In forced-air cooled tubes of the exposed plate type and in water-cooled tubes, oxygen-free copper is the standard material. Of the common metals, copper has the highest heat and electrical conductivity. It is easily formed in a great variety of shapes by spinning, drawing and machining. Molecular hydrogen, generally present to a certain extent in the cooling water, does not pervade copper plates to any serious extent as it will with many other metals.

Inverted Anode Construction—An especially interesting form of high-frequency tube construction was pioneered by the General Electric Company in 1941. As the practical upper limit of the frequency spectrum moved higher, accepted approaches in tube design became impractical and, in some cases, impossible.

CONSTRUCTION OF TRANSMITTING TUBES (CONT'D)

A number of apparently conflicting requirements for high-frequency operation had to be satisfied. Small electrode spacings, for high transconductance and minimum transit time effects, conflicted with the need for high dissipation ability and voltage insulation; large electrode areas to satisfy the power requirements affected the maximum frequency of operation because of their inherently high capacitance and inductance; and proper voltage insulation seemed incompatible with short lead length and low lead inductance.

The GL-880 (see cross-sectional view of fig. 2) represents a successful solution of these problems. This tube was designed for 20 kilowatts plate dissipation and with maximum ratings applying up to 25 megacycles. The anode is inverted, that is, folded back on itself twice, reducing the lead length approximately 10 inches below that required in previous designs, without sacrifice of good cooling properties and insulation factor.

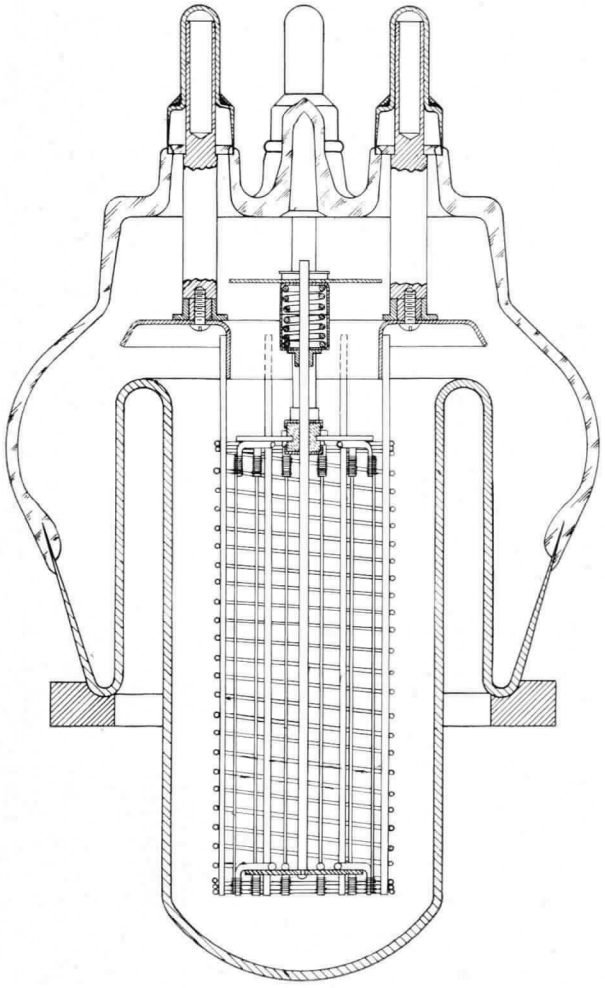

Fig. 2—Cross-sectional View of GL-880

Fin Coolers—The GL-8002-R, illustrated in cross-sectional view of Fig. 3, is an example of the fin cooled high-frequency tube. The same tube without the radiator fins is available for water-cooled service.

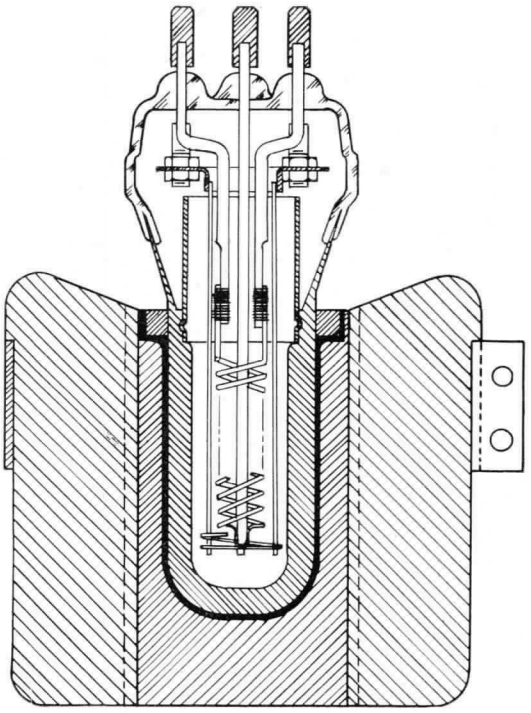

Fig. 3—Cross-sectional View of GL-8002-R

The fin cooler for the GL-8002-R is designed for optimum cooling performance in order to result in the smallest possible size consistent with air-velocity and air-volume limitations. The cooler itself consists of 60 copper fins silver soldered to a copper hub. A retainer band encloses a portion of the fin length to facilitate mounting in the air duct. The GL-8002-R is widely used in frequency-modulation transmitters. In pairs these tubes develop three kilowatts at frequencies ranging to 120 megacycles.

GENERAL CLASSES OF OPERATION

Amplifiers

Amplifiers are classified into four general groups, A, AB, B, and C. These designations are standard throughout the industry and are used in all technical data. This method of classification is based primarily on the plate current characteristic under full-load operation. A further distinction is made between circuits in which grid current does not flow and those in which grid current flows for at least part of the cycle. The former is indicated by the suffix 1 appended to the general designation and the latter by suffix 2.

Class A

In an ideal Class A system, amplification is accomplished without distortion. As a rule, Class A amplifiers are not operated in the positive grid region although such operation is possible if the driving source is capable of supplying enough energy to sustain the wave form. In no case may it be driven below plate current cutoff. Fig. 4 shows a conventional triode Class A amplifier, and Fig. 5 demonstrates the wave forms for various conditions of operation from a high impedance source.

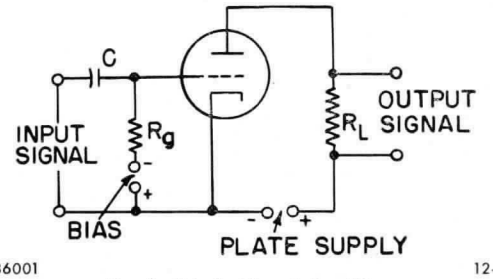

K-9186001 12-7-45

Fig. 4—Triode Class A Amplifier

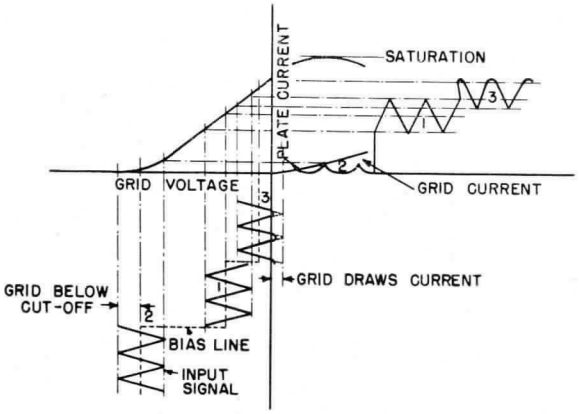

K-9186002 12-7-45

Fig. 5—Wave Forms for Class A Amplifier Operation

When operating in region 1, the Ip–Eg characteristic is straight, and linear amplification takes place. In region 2, the tube is biased near cutoff, and the output wave is clipped. Due to the curvature of the characteristic near cutoff, distortion of the unclipped portion of the wave also occurs. In region 3, the grid is driven into the positive range and grid current flows causing wave form distortion, which results in a similar distortion of the output wave form. Distortion may also be caused by driving the tube to current saturation, or with a strong driving source, the positive grid current may become a large portion of the total current available from the cathode.

Class AB

The region of operation of Class AB amplifiers as well as that of other types is shown in Fig. 5. In an AB amplifier, the grid bias is somewhat lower than in a Class A system, and plate current reaches zero for a portion of the negative excursion of the input signal. Because of the bias condition, the average value of plate current is lower and the efficiency of the amplifier higher than in a Class A amplifier. Distortion is introduced, of course, in this type of amplifier. In the audio range this is limited by using push-pull circuits.

Class B

In a Class B amplifier, grid bias is held approximately equal to the cutoff voltage. Plate current is close to zero without excitation and flows during the positive half cycle of the grid signal. Here, as in the class AB amplifier, special precautions must be taken to reduce distortion.

Class C

In a Class C amplifier the grid bias is at a value appreciably lower than that necessary for cutoff, the plate current flows only under grid drive, and then only for portion of the positive excursion of the signal. It is used almost exclusively at radio frequencies with resonant circuits in the plate.

Oscillators

Oscillators are, in general, a special case of amplifier service. Their general theory is discussed in the "application section."

Rectifiers

Rectifier tubes fall into two main groups: high-vacuum and mercury-vapor. The first group is especially suited for high-voltage applications where the inverse voltage across the tube may rise to very high values (see applications circuits). Mercury-vapor tubes are characterized by a practically constant internal voltage drop and high current capacity. This constant drop feature is often utilized in systems which require close regulation of the d-c voltage over a large range of load currents.

RATINGS OF TRANSMITTING TUBES

General

Transmitting tubes are rated by the "absolute" system. In this system, the maximum ratings listed for a particular type give the limiting value above which the operating life may be seriously affected. The equipment designer should, therefore, consider these ratings as absolute limits which cannot be exceeded. Line voltage variations, supply regulation, manufacturing tolerances in production equipment, etc., must be taken into account in the design program.

In some instances both CCS and ICAS ratings have been listed for a tube. The first, CCS (Continuous Commercial Service) applies to equipment in which long life and reliable opera-

tion are of primary importance. Almost all commercial installations are designed by these ratings. Where factors of weight, cost, and size vs. power output appear most important, the ICAS (Intermittent Commercial and Amateur Service), rating may be applied. Intermittent service is generally considered to be service in which the operating period never exceeds five minutes, and the stand-by interval is at least equal to this operating period.

Filament Circuit—Filament and heater ratings are invariably given in terms of average voltage. Nominal current at rated voltage is included only as an aid in equipment design. The filament circuit should be so regulated as to limit the possible voltage deviation to ±5 per cent of the rated value unless otherwise specified on the data sheet.

Plate Circuit—In the plate ratings of transmitting tubes, the operating frequency of the tubes is an important parameter. Wherever a tube is designed for high-frequency operation, the data sheet includes a tabulation of the maximum permissible percentage of maximum rated plate voltage and plate input as a function of frequency.

It will be noted that in most cases the product of maximum plate voltage and maximum plate current is higher than the maximum permissible plate dissipation. Plate current as a function of plate voltage, or voltage as a function of current should be determined on the basis of the rated maximum dissipation.

CALCULATION OF TUBE OPERATING CONDITIONS

General

In order to make optimum adjustment of transmitting tube operating conditions, it is necessary to visualize clearly the effect on tube operation, and hence on circuit output, of varying grid bias voltage, grid drive, plate voltage and plate circuit impedance.

A complete sample set of calculations will

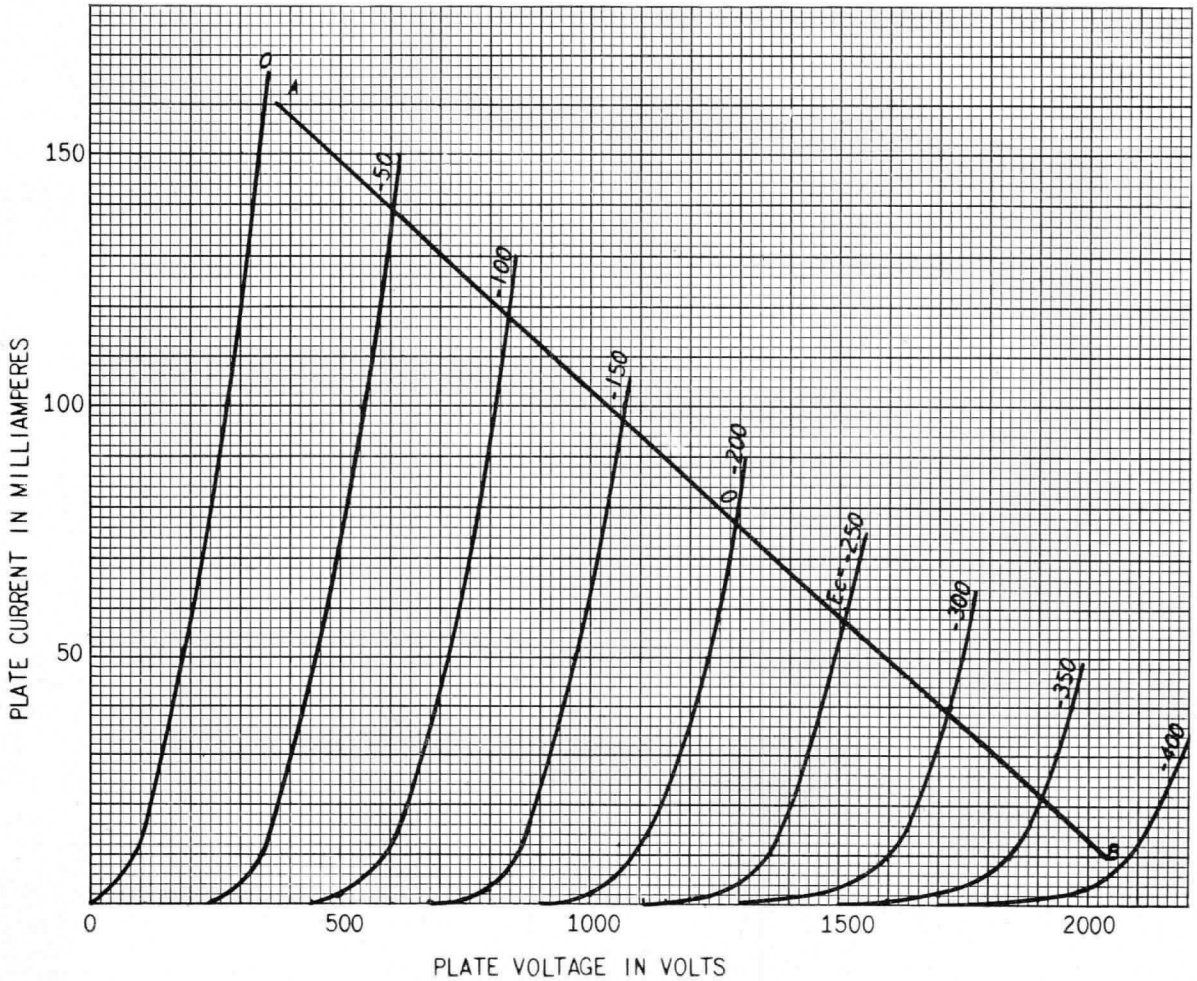

K-9186120

Fig. 6—GL-845 Characteristics with A-B Operating Line

12-31-45

be made for the various classes of operation, using the GL-889-A as an example except for the Class A amplifier analysis in which the GL-845 is used. All of the work for Class B and C operation is based on use of the "constant-current" curves. Experience has shown that the results so obtained compare closely with actual operating test results.

Several sets of calculations should be made for any particular class of operation to be sure that the optimum conditions are met as far as plate efficiency and grid drive are concerned. Operating conditions should be chosen so as to always fall within the maximum ratings.

For Class A Amplifiers (Resistance Loads)

The Class A amplifier analysis is based on characteristic curves of the GL-845 tube which is particularly suited for Class A operation, rather than on the curves of the GL-889-A which is designed for other classes of service. Also tube applications do not generally require a tube of high-power rating for Class A service, since operating efficiency of high-power tubes becomes an important factor and Class B linear service is desirable.

Referring to Fig. 6 of page 8, it is first necessary to draw the load line A-B about the operating point O. The following factors should be considered in locating the operating line:

(1) The point O must be located so that the product of the plate current and plate voltage at that location does not exceed the maximum rated anode dissipation.

(2) The position of point O on a proposed operating line must be such that the grid swing does not go past the zero bias curve, as shown at A. At the extreme negative grid swing, point B, operation should not extend appreciably into the non-linear portion of the curves. In general, point B should not be below 10 to 15 per cent of the plate current at point O. The grid swing from O to A is equal to the grid swing from O to B.

(3) The calculations will show that the power output is proportional to the product of the total plate current and plate voltage change when operating over the load line from A to B. Thus it is apparent that lowering the point O would reduce the possible plate current swing and therefore the power output. To raise it, would cause the anode dissipation rating to be exceeded, as explained above.

Having thus located the line A-B, Fig. 6, it is possible to calculate specific conditions of tube operation, as follows:

(1) Power output $= \dfrac{(E_{max} - E_{min})\ (I_{max} = I_{min})}{8}$

From Fig. 6:

E_{max} = plate voltage at B = 2030 volts
E_{min} = plate voltage at A = 380 volts
I_{max} = plate current at A = 0.159 amperes
I_{min} = plate current at B = 0.010 amperes

$$\text{Power output} = \frac{(2030-380)\ (0.159-0.010)}{8}$$
$$= 30.6 \text{ watts}$$

(2) Plate dissipation is the product of the plate current and the plate voltage at operating point O. Plate dissipation, from Fig. 6 = $0.080 \times 1250 = 100$ watts.

(3) Required load resistance is equal to the ratio of the plate voltage change to the plate current change, on the load line A-B. From Fig. 6 the load resistance is calculated as follows:

Plate current at A = 159 milliamperes
Plate current at O = 80 milliamperes
Plate voltage at A = 380 volts
Plate voltage at O = 1250 volts

$$R_L = \frac{1250-380}{159-80} = 11{,}000 \text{ ohms}$$

(4) The d-c plate current will be equal to the value of plate current at the point O, or from Fig. 6, this value is 80 milliamperes.

(5) Some distortion is always present due to non-linearity. This distortion is comprised almost entirely of a second harmonic. The allowable percentage of second harmonic is generally specified at 5 per cent maximum and may be calculated from the following relation:

$$\text{Percentage 2nd harmonic} = \frac{\frac{1}{2}(I_{max} + I_{min}) - I_o \times 100}{I_{max} - I_{min}}$$

Where, referring to Fig. 6:

I_{max} = plate current at A = 159 ma.
I_{min} = plate current at B = 10 ma.
I_o = plate current at O = 80 ma.
then percentage second harmonic is:

$$\frac{\frac{1}{2}(159+10) - 80}{159-10} \times 100 = 2.8 \text{ per cent}$$

The above calculations set up conditions of operation which would deliver the maximum power possible, yet not exceed any of the maximum ratings of the tube. Several sets of calculations may be required to obtain the optimum operating conditions to fulfill other special requirements, such as operation at reduced power output, reduced plate voltage, different load impedance or combination of the above.

CALCULATION OF TUBE OPERATING CONDITIONS (CONT'D)

For Class C Radio-frequency Amplifiers and Oscillators

Certain conditions of operation are arbitrarily assigned, as follows:

1. D-c plate voltage = 7500 volts
2. Grid bias voltage = −800 volts
3. Peak grid voltage swing = 1800 volts
4. Plate voltage swing = 6000 volts

All the above values may be obtained in practice by applying them directly or by varying the grid drive or load impedance.

Referring to Fig. 7, the first step is to determine the operating line A-A′, as established by the four assigned conditions of operation. The point A is determined by the d-c plate voltage and grid bias voltage. As the plate voltage swings down and the grid voltage rises in sinusoidal fashion, their instantaneous values describe a straight line, terminated at A′. The point A′ is automatically determined, having chosen A as the starting point and having previously determined the amplitude of grid and plate voltage swing.

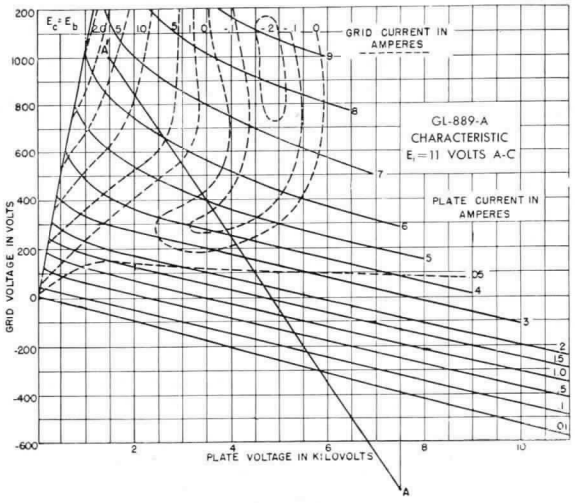

Fig. 7—GL-889-A Characteristic Curves with A-A′ Line

CLASS C AMPLIFIER AND OSCILLATOR SERVICE

Angle Degrees	Sine	e_p Volts	i_p Amperes	Product Sine Amperes	e_g Volts	i_g Amperes	Product Sine Amperes
0	0	7500		—	−800		—
5	.087	6978			−643		
15	.258	5950			−335		
25	.423	4960	1.25	.529	−40		
35	.574	4060	3.80	2.18	230	−0.020	−0.0115
45	.707	3260	5.20	3.68	470	0.020	0.0141
55	.819	2600	6.0	4.91	670	0.50	0.409
65	.906	2070	6.4	5.80	830	0.90	0.815
75	.966	1700	6.5	6.28	940	1.25	1.208
85	.996	1520	6.5	6.48	990	1.70	1.692
90	1.00	1500	(*)	—	1000	(*)	—
5–85 Incl.	Summation		35.65	29.85		4.35	4.126
	Divide By		18	18		18	18
Average Current			I_b = 1.98	1.66	(I_g) =	.242	.229
0°		E_b = 7500			E_c = −800		
90°		e_p = 1500			e_g = 1000		
Difference (Swing)		6000		(Swing)	1800		

Plate Input = $E_b \times I_b$ = 7500 × 1.98 ..... = 14.85 kilowatts

Plate Output = Plate Swing × Average Product Sine Amperes = 6000 × 1.66 = 9.95 kilowatts

$$\text{Efficiency} = \frac{\text{Output}}{\text{Input}} = \frac{9.95}{14.85} = 67 \text{ per cent}$$

Total Grid Excitation Power = Grid Swing × Average Product Sine Amperes = 410

Grid Bias Loss = $I_g \times E_c$ = 800 × .242 = 193

*Peak value—for reference only—omit from calculation of average currents.

Fig. 8—Chart Showing Calculation of GL-889-A Typical Operating Conditions

The point A is set at a point corresponding to a plate voltage of 7500 volts and grid bias of −800 volts. With a grid swing of 1800 volts and a plate swing of 6000 volts, the point A′ is located at a grid voltage of 1000 volts and a plate voltage of 1500 volts. Thus the operating line A-A′ is determined.

The rest of the work is simply mechanical integration. The instantaneous values of plate voltage and current, and grid voltage and current are tabulated as shown in table of Fig. 8, page 10. By simple relations indicated in Fig. 8, the operating conditions are completely determined.

By studying this set of calculations, it is possible to determine:

1. D-c plate input power
2. Plate output power
3. Plate efficiency
4. Grid excitation power
5. Grid bias loss
6. D-c grid current

It will be found that the location of the point A′ on the curves of Fig. 7, affects the tube operation very greatly since a small change in its position changes the working range in the high grid current and plate current region.

A few sets of calculations will indicate the optimum operating conditions for a particular installation. By referring to Fig. 9, a general idea may be gained as to the relation of the performance factors involved.

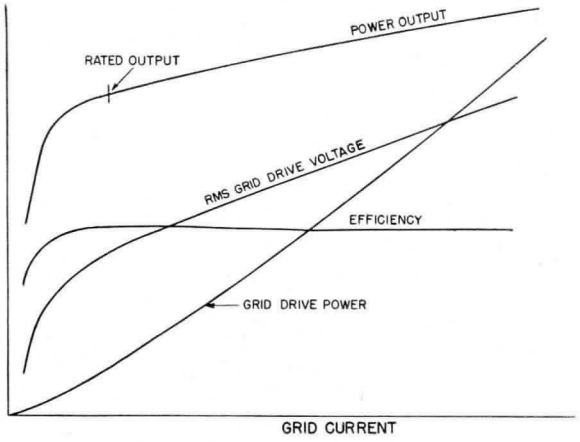

Fig. 9—Performance Curves for Class C Amplifier and Oscillator

K-9186142 1-2-46

For Class C Radio-frequency Power Amplifiers, Plate Modulated

The operation of a tube under plate modulation conditions may be analyzed in a manner similar to that for a Class C oscillator, unmodulated. In this type of service, operating conditions are specified for carrier conditions. Modulation is used by superimposing the signal voltage on the applied d-c plate potential. 100 per cent modulation means that the applied plate potential varies from zero to twice the d-c applied voltage throughout the audio cycle as shown in Fig. 10.

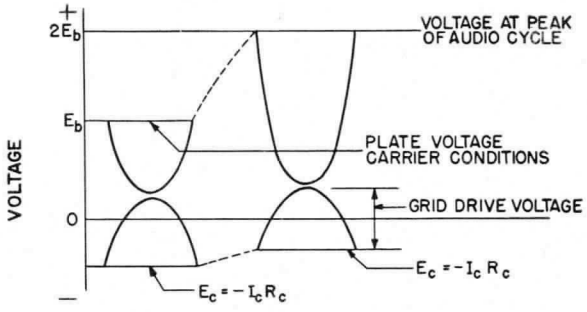

K-9186141 1-2-46

Fig. 10—Wave Shapes Showing Plate Voltage Variation

In establishing the operating lines for plate modulated service, the carrier conditions are determined. It will be noted that the maximum anode dissipation for carrier conditions is less than that for Class C oscillator rating. This must be so since 100 per cent modulation causes the plate input and plate dissipation to increase 50 per cent, the additional plate input being supplied by the modulator.

When establishing the operating line for carrier conditions, it must be borne in mind that a second line must be drawn for conditions obtained at double the d-c plate voltage. This second line corresponds to the conditions under which the tube is operating, at the peak of the modulating voltage. Certain relations, as enumerated below, must exist between these two lines in order that the output be free from distortion.

(1) If the modulation is to be free from distortion, a linear relation must exist between the radio-frequency voltage and current. Therefore, for 100 per cent modulation, at the peak of the modulation cycle, the radio-frequency voltage and current must be double that of the carrier condition, while at the other extreme of the modulation cycle the radio-frequency voltage and current are zero. It should be noted that the r-f current is proportional to the average current calculated under the column "Product Sine Amperes" in Fig. 8.

(2) The operating line for the peak of the modulation cycle must be drawn so that the load impedance will be the same as that for the operating line at carrier conditions. The load impedance may be expressed by the relation $\frac{E_p^2}{2P_o}$, where E_p = plate voltage swing, and P_o = power output in watts.

(3) It will be found upon examination of the constant current curves that in order to double the current, at double the voltage when operat-

CALCULATION OF TUBE OPERATING CONDITIONS (CONT'D)

ing at the peak of the audio cycle, it will be necessary to work to rather high peak currents. This will require that the grid be driven to a considerably higher positive peak than for the carrier conditions. It is not generally desirable to modulate the grid drive, but the higher positive grid drive may be accomplished in practice by two factors. If a combination fixed and grid resistor bias is used, the bias voltage developed will be reduced at the peak of the audio cycle. This will be true since the minimum plate voltage on this operating line is higher than for the carrier operating line, which results in working the tube in a lower grid current region. This reduces the grid current, and hence the bias voltage. Thus, with constant grid excitation the positive grid voltage peak will be raised by the amount of reduced grid bias. In actual practice, with reduced loading of the grid excitation supply, the grid drive voltage will increase to some extent, thus increasing further the positive peak grid voltage.

For Class B Audio Amplifiers

Operating conditions and calculations are those for a two-tube push-pull amplifier, since this is the type of circuit generally encountered in this class of service.

The applied conditions of operation must first be determined as follows:

(1) The d-c plate voltage is arbitrarily assigned to be 7500 volts.

(2) The plate current is to be chosen for zero signal input.

Fig. 11 represents a composite plate characteristic curve for two tubes.[1] Use of this curve clarifies the analysis which is complicated by the fact that the plate currents of the two tubes act on a common magnetic circuit in the output transformer. The composite curve is formed by placing two sets of static plate characteristic curves back to back as indicated in the figure.

Since the plate currents for the two tubes act through the output transformer in opposite directions, only their differences contribute to useful output. Therefore, the dotted lines indicate useful composite plate characteristics for the two tubes, the grid voltage lines now corresponding to signal voltages.

The output operating line is shown as X-Y. The individual tube operating lines are YAB and XCD.

The individual tube operating lines of Fig. 11 are based on a zero signal plate current of 0.2 ampere. In general a value of 10 to 15 per cent of the average plate current is used. If too high a value of zero signal current is used, the distortion, and plate dissipation will be excessive.

(3) The grid bias voltage is established, since a d-c plate voltage of 7500 volts, and a zero signal plate current of 0.2 ampere has been chosen for this set of calculations. From the plate current curves, this would require −300 volts bias.

(4) Assume a peak positive grid voltage of 550 volts. This is an arbitrary value, and may be applied by a suitable driving stage. The peak grid swing is then 850 volts. If too high a value of positive grid voltage is chosen, the driving power will be greatly increased with little increase in power output.

(5) For this set of calculations a plate voltage swing of 6000 volts will be used. This again is an arbitrary value, and ordinarily is approximately 80 per cent of the d-c plate voltage. If too low a minimum plate voltage dip is used, excessive distortion and grid drive will result. If too high a minimum plate voltage dip is used, plate efficiency is sacrificed. The value of the load impedance in the plate output circuit to give this swing will be determined from the ratio of the plate voltage swing to the peak plate current as determined later in the calculations.

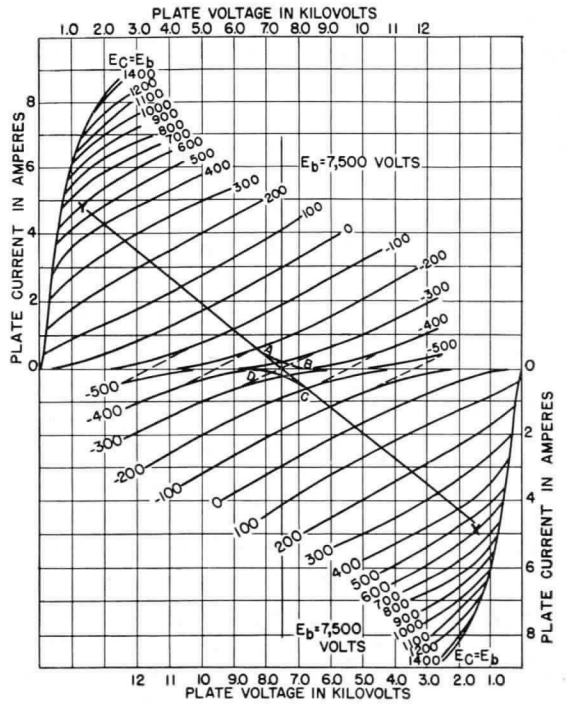

K-9186128 1-3-46

Fig. 11—Composite Plate Characteristic Curve for Combined Tubes and Transformer (Class B Audio Service)

[1]. B. J. Thompson, "Push-Pull Audio Amplifier," Proceedings of the I.R.E. (April, 1933), p. 591.

Summarizing the above, the following conditions of operation have been established thus far:

(1) D-c plate voltage = 7500 volts

(2) Grid bias voltage = −300 volts

(3) Peak grid voltage swing = 850 volts. This results in a maximum positive grid voltage of 550 volts, at maximum signal.

(4) Peak plate voltage swing = 6000 volts. This results in a minimum plate voltage dip of 1500 volts at maximum signal.

The above conditions completely determine the operating line X-Y, Fig. 11.

Efficient operating conditions for Class B audio amplifiers normally result in some distortion. This can be tolerated since the even order harmonics are eliminated from the output in the push-pull amplifier. However, this makes it impossible to draw a straight operating line between points A and B of Fig. 12, as was done in the case of the Class C amplifier for calculation of operating conditions. However, items 1 through 4 above do define the extreme points of grid and plate voltage and current excursions as shown by points X and Y, of Fig. 11, and A and B, Fig. 12.

Reference is again made to Fig. 11. The load line X-Y must be straight, since the load current must vary directly with the plate voltage, the load impedance being constant. Working from Fig. 11, the operating line A-B of Fig. 12, is laid out so that the grid voltage for any value of plate voltage correspond on the two curves. For example, on Fig. 11 for a grid of voltage plus 300 the plate voltage is 2700. This then determined one of the points, P along which the curve A-B, Fig. 12, was to lie. Having laid out the operating line A-B, Fig. 12, it remains to calculate the tube operation as shown in the chart of Fig. 13.

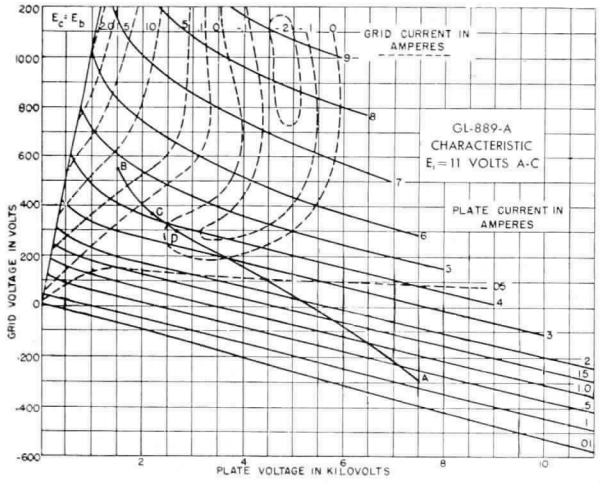

Fig. 12—GL-889-A Characteristic Curves with A-P-C-B Line

Complete tube performance may thus be determined for the chosen set of conditions, as follows:

(1) D-c plate input kw (per tube)

(2) Plate output power (per tube)

(3) Plate dissipation

(4) Plate efficiency

(5) Grid excitation power

(6) Load resistance—plate to plate

(7) D-c grid current

(8) Grid bias loss

All of the above results are for maximum signal operation. The maximum anode dissipation, however, will be found to occur at a signal less than unity, approximately at $S=\frac{2}{K}$ where:

K = ratio of plate voltage swing to the d-c plate voltage, at maximum signal S = 1.

S = ratio of the signal under consideration (grid swing), to the maximum signal, as used in the sample calculation.

Thus for the conditions of operation chosen for the sample calculation the signal for maximum anode dissipation is determined as follows:

$$K=\frac{6000}{7500}=0.80$$

$$S=\frac{2}{0.8\times 3.14}=0.794$$

The maximum signal grid swing (S = 1), in the example, Fig. 13, was 850 volts. For S = 10.794, the grid swing will be 675 volts, with a maximum positive grid voltage peak of 375 volts. The operating line for S = 0.794 is then A-C, Fig. 12. Carrying through calculations for this operating line, similar to those in the chart of Fig. 13, it will be found that the anode dissipation is 4.42 kilowatts. Since this value is within the rated anode dissipation of the tube, the conditions chosen for operating line A-B are satisfactory.

If the operating line A-B deviates greatly from a straight line, it is an indication that distortion is present, and the output should be checked for harmonic content.

CALCULATION OF TUBE OPERATING CONDITIONS (CONT'D)

TYPE GL-889A CALCULATION OF TYPICAL OPERATING CONDITIONS BY_____DATE_____
CLASS B AUDIO AMPLIFIER SERVICE

Angle Degrees	Sine	e_p Volts	Plate Swing Volts	i_p Amperes	Product Plate Swing and i_p	e_g Volts	i_g Amperes	Product Sine Amperes
0	0	7500			—	−300		—
5	0.087	7000	500	.5	250	−226		
15	0.258	5900	1900	1.3	2,080	−81		
25	0.423	4800	2700	2.1	5,670	+59	0.05	0.021
35	0.574	3700	3800	2.95	11,200	187		
45	0.707	2700	4800	3.8	18,250	300		
55	0.819	2100	5400	4.2	22,700	395	0.10	0.082
65	0.906	1800	5700	4.5	25,700	470	0.40	0.362
75	0.966	1600	5900	4.6	27,100	520	0.70	0.676
85	0.996	1500	6000	4.7	28,200	547	0.75	0.746
90	1.00	1500		(*)	—	550	(*)	—
5–85 Incl.		Summation		28.65	141,150		2.00	1.887
		Divided By		18	18		18	18
Average Current		I_b =		159		(I_g) =	0.111	0.105
0°		E_b = 7500				E_c = −300		
90°		e_p = 1500				e_g = 550		
Difference (Swing)		6000				(Swing) 850		

Plate Input = $E_b \times I_b$ = 7500 × 1.59 = 11.92 kilowatts

Plate Output = $\frac{141.50}{18}$ = 7.83 kilowatts

Plate Dissipation = Plate Input − Plate Output = 4.09 kilowatts

Efficiency = $\frac{\text{Output}}{\text{Input}} = \frac{850}{11.92} = \frac{7.83}{11.92}$ .105 = 65.6%

Total Grid Excitation Power = Grid Swing × Average Product Sine Amperes = 89.2 watts

Grid Bias Loss = $I_g \times E_c$ = .111 × 300 = 33 watts

* Peak value—for reference only—omit from calculation of average currents.

Load Resistance = $\frac{\text{Peak plate voltage swing}}{\text{Peak plate current}} = \frac{6000}{4.7}$
= 1276 ohms

Effective load, plate to plate = 4 × 1305 = 5220 ohms

Fig. 13—Chart Showing Calculation of Typical Operating Conditions for Class B Audio Amplifier

FOR CLASS B RADIO-FREQUENCY AMPLIFIERS

In Class B radio-frequency amplifier service, the radio-frequency current and voltage relations are as indicated in Fig. 14 below.

If the amplifier output is free from distortion, the plate voltage and plate current will vary linearly with the grid swing. Thus for a maximum modulation factor of 1.0 at the crest of the audio cycle the radio-frequency voltage and currents will be double those for the carrier conditions.

In calculating the performance of the Class B radio-frequency amplifier, the operating line A-B, Fig. 15, must be established by the following steps:

(1) Point A depends upon the value of d-c plate voltage and grid bias chosen. The higher the plate voltage the greater the power capa-

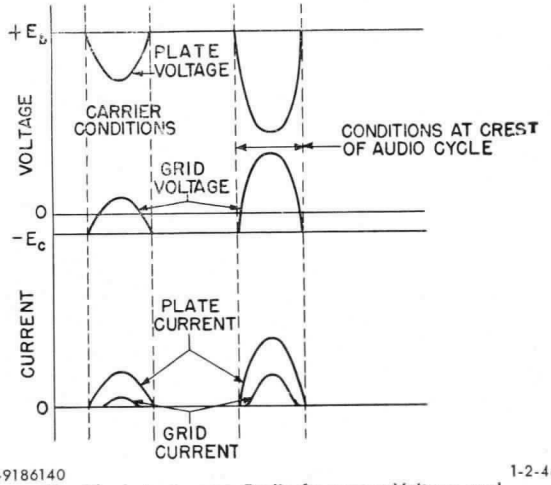

K-9186140 1-2-46

Fig. 14—Instantaneous Radio-frequency Voltage and Current Relations

bilities of the tube. The grid bias voltage is such as to allow a zero signal plate current of 10 to 15 per cent of the average d-c plate current under carrier conditions. The same factors apply as explained under Class B audio service. In the curve, Fig. 15, the point A is located at a plate voltage of 7500 volts, and a grid voltage of −300 volts.

(2) The location of point B depends upon a number of considerations. If it approaches too close to the diode line the grid drive and distortion are likely to become excessive for maximum modulation. If B is located too high in the positive grid region the grid drive would be increased at maximum modulation. It is usually necessary to make several sets of calculations to determine the optimum conditions for minimum distortion at the desired power output and maximum efficiency. Taking the above factors into account the point B for the curve on Fig. 15 was located at a plate voltage of 2500 volts and a grid voltage of 700 volts.

As in the case of the Class C oscillator the operating line on Fig. 15 is a straight line connecting points A and B.

Calculations for maximum modulation conditions will then be identical to those described for Class C operation, operating over the entire line from A to B.

Under carrier conditions, the tube operates over the same line, but the grid and plate swing are only one half that for maximum modulation. Therefore, for carrier conditions, calculations similar to those for maximum modulation are made, but the operating line extends only from A to C. Maximum plate dissipation occurs under carrier conditions so the value of dissipation calculated should be checked to see that the maximum ratings are not exceeded.

It is advisable to plot the rms value of the plate current versus the grid voltage for the conditions chosen for maximum modulation and to analyze the current wave for excessive distortion.

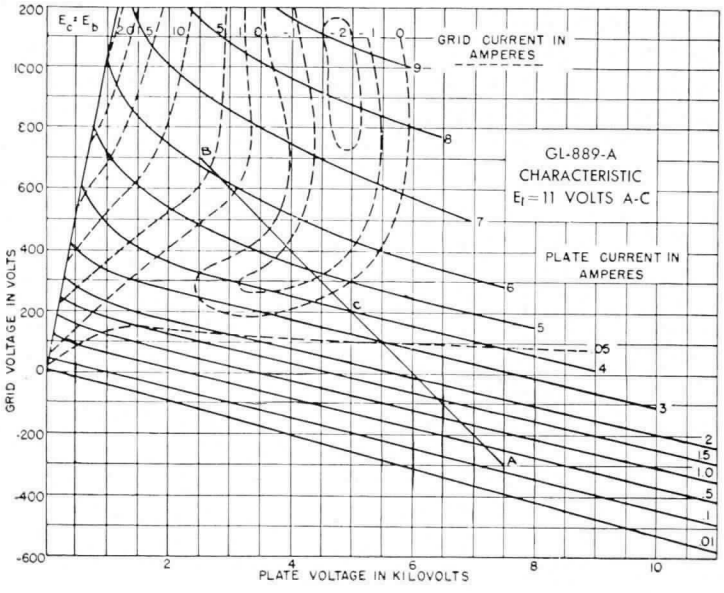

Fig. 15—GL-889-A Characteristic Curves with A-C-B Line

APPLICATIONS

General

Although the number and variety of tube types presented in this manual may seem somewhat bewildering at first glance, the selection of the most suitable tubes for a specific application is not difficult. The "Quick Selection Chart," included in the manual, provides a breakdown of tube types by method of cooling and maximum power input at various frequencies. Correlating design considerations such as size, cost, and mobility must be taken into account, but are too varied and complex for treatment here.

A number of circuits are included to cover typical installations for rectifiers, oscillators, multipliers, and power amplifiers. Each circuit represents only one of the many accepted approaches to the problem involved, and is intended only as a guide to the designer.

 # Circuits shown in ETX-108 are examples of possible tube applications and the description and illustration of them does not convey to the purchaser of tubes any license under patent rights of General Electric Company.

APPLICATIONS # (CONT'D)

Rectifiers

The switching action of the simple diode is most widely used in power supplies. Fig. 16 and Figs. 17 through 26, illustrate some of the most popular rectifier circuits with companion wave forms, and the accompanying table on page 18 provides useful conversion ratios.

The single-phase, half-wave rectifier, Fig. 16, has the obvious advantages of simplicity and low cost. However, these gains may be materially reduced by the increased cost of filter components resulting from the comparatively low fundamental ripple frequency, and the tendency of the transformer core to saturate due to the unidirectional current flow in its secondary.

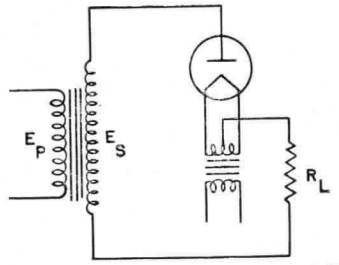

K-9186003 12-7-45
Fig. 16—Single-phase, Half-wave Rectifier

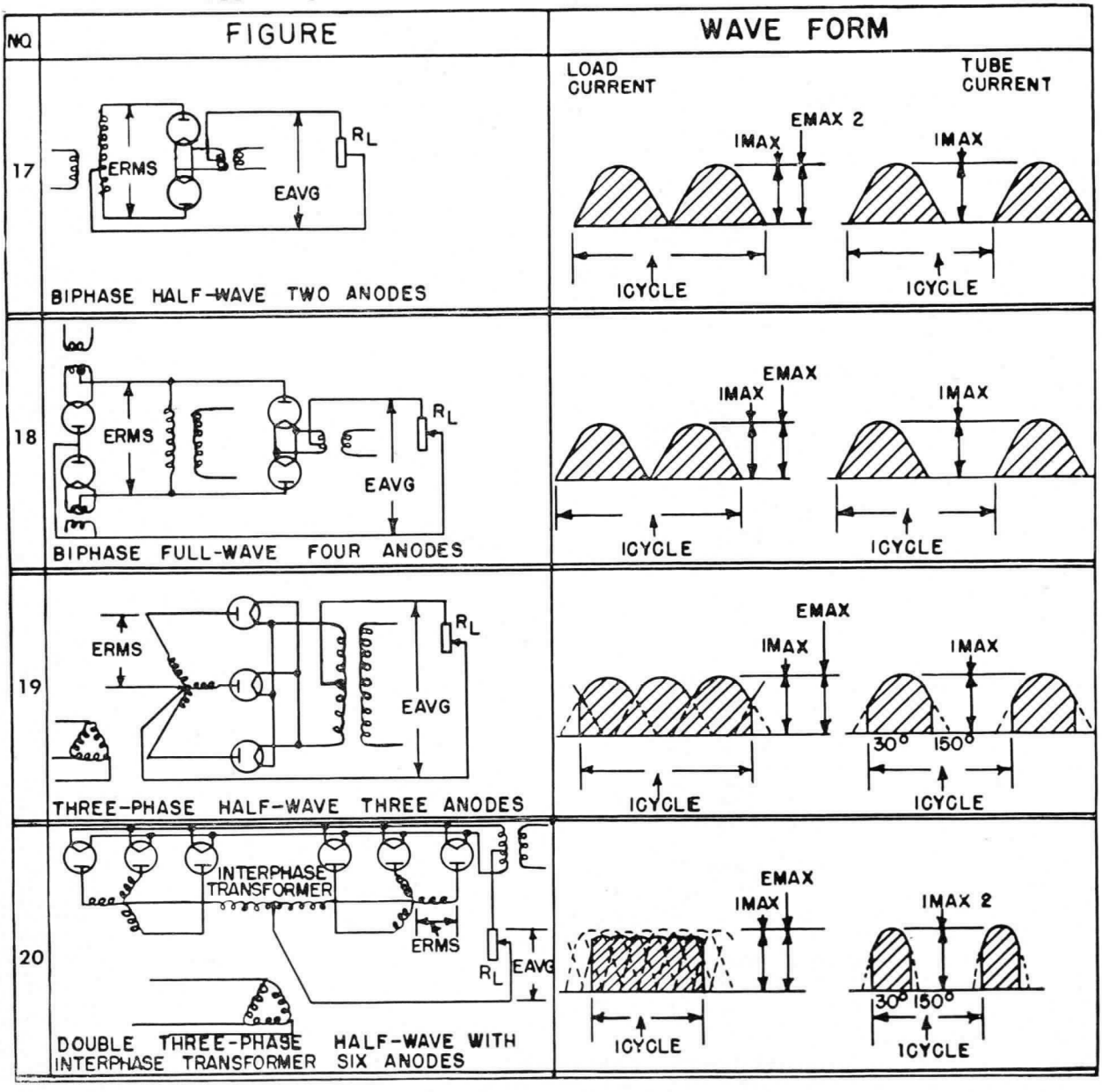

Figs. 17 through 26

 # Circuits shown in ETX-108 are examples of possible tube applications and the description and illustration of them does not convey to the purchaser of tubes any license under patent rights of General Electric Company.

21

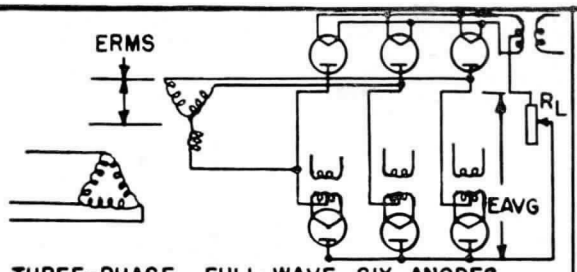

THREE-PHASE FULL-WAVE SIX ANODES

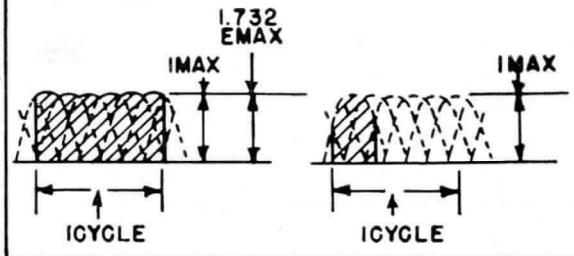

22

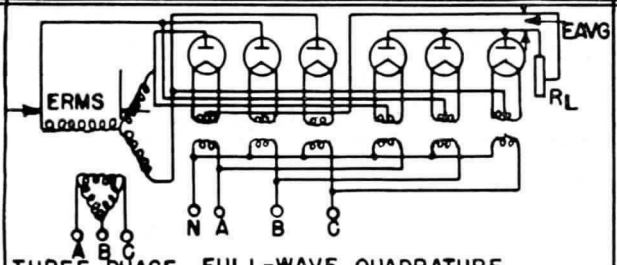

THREE-PHASE FULL-WAVE QUADRATURE EXCITATION, Δ-Y MAIN TRANSFORMER

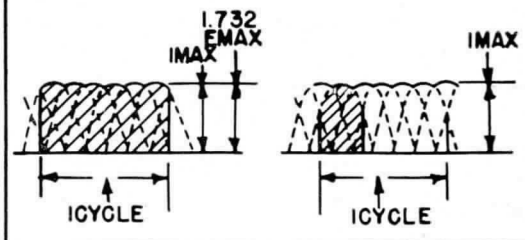

23

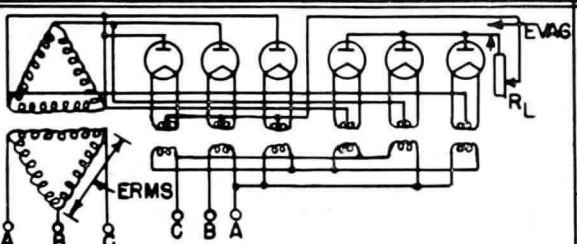

THREE-PHASE FULL-WAVE QUADRATURE EXCITATION ΔΔMAIN TRANSFORMER

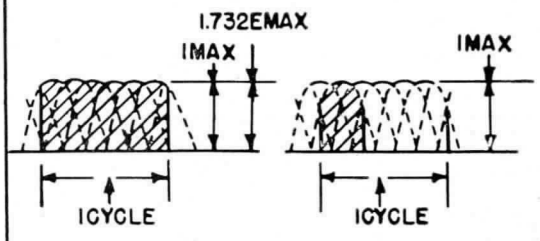

24

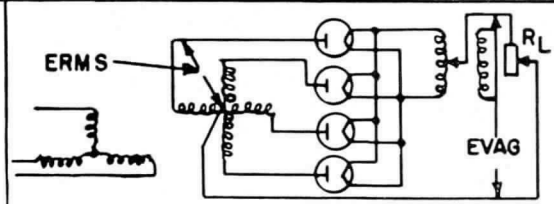

FOUR-PHASE HALF-WAVE FOUR ANODES

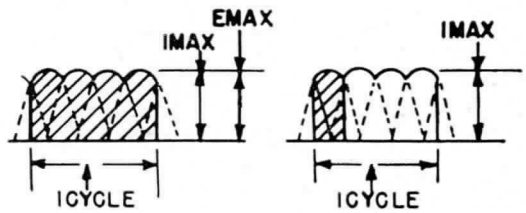

25

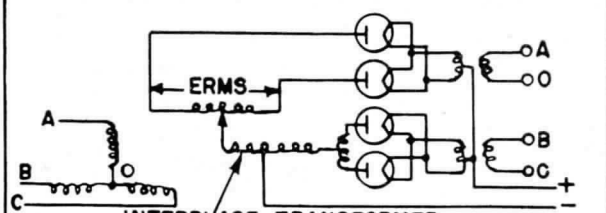

DOUBLE-BIPHASE HALF-WAVE FOUR ANODES WITH QUADRATURE EXCITATION

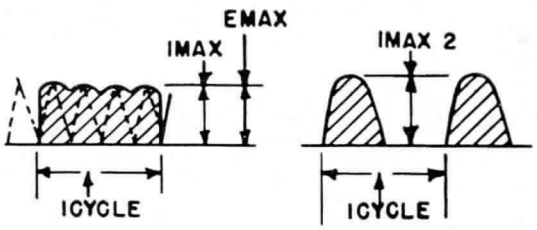

26

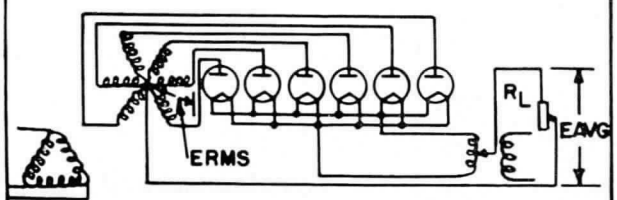

SIX-PHASE HALF-WAVE SIX ANODES

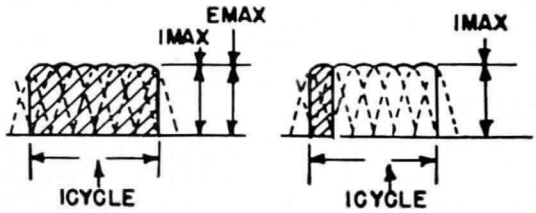

APPLICATIONS (CONT'D)

USEFUL RATIOS

Fig. No.	Tube 1 (Avg.) Load 1 (Avg.)	E—Avg.	E—Inverse	I—Avg.
17	0.500	0.318 E—Max 0.450 E—Rms	E—Max 3.140 E—Avg.	0.636 I—Max
18	0.500	0.636 E—Max 0.900 E—Rms	E—Max 1.570 E—Avg.	0.636 I—Max
19	0.333	0.827 E—Max 1.170 E—Rms	$\sqrt{3}$ E—Max 2.090 E—Avg.	0.827 I—Max
20	0.167	0.827 E—Max 1.170 E—Rms	$\sqrt{3}$ E—Max 2.090 E—Avg.	0.827 I—Max
21	0.333	1.650 E—Max 2.340 E—Rms	$\sqrt{3}$ E—Max 1.050 E—Avg.	0.955 I—Max
22	0.333	1.650 E—Max 2.340 E—Rms	$\sqrt{3}$ E—Max 1.050 E—Avg.	0.955 I—Max
23	0.333	0.955 E—Max 1.340 E—Rms	E—Max 1.050 E—Avg.	0.955 I—Max
24	0.250	0.900 E—Max 1.274 E—Rms	2.220 E—Avg.	0.900 I—Max
25	0.250	0.318 E—Max 0.450 E—Rms	3.140 E—Avg.	0.318 I—Max
26	0.167	0.955 E—Max 1.350 E—Rms	2.090 E—Avg.	0.955 I—Max

The biphase half-wave rectifier, Fig. 17, of page 16 is a popular system in most applications. Compared to the single-phase system, its double frequency ripple voltage, with characteristically lower amplitude, represents the more desirable approach to power-supply design. Supplies intended to deliver high voltages at very low currents, i.e. peak rectifiers, are exceptions and do employ the single-phase half-wave rectifier. Inspection of the various circuit wave forms, and the table of ratios above, will convey to the reader the complexity and applicability of each of the circuits.

Voltage Multipliers: In the many applications requiring a high-voltage, low-current power supply, the voltage multiplier often represents the most economical and compact design. Some preliminary discussion of the action of capacitor filters will serve to clarify the principles involved.

Fig. 27 shows a simple single-phase, half-wave rectifier with capacitor output.

On the assumption that the voltage wave shown in Fig. 28 is a sawtooth (a good approximation at light loads) it may be shown that the fundamental ripple amplitude approaches ΔE,

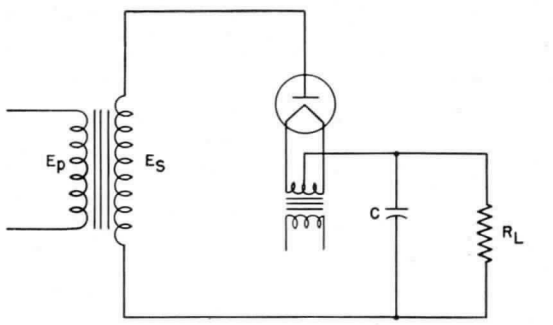

K-9186004 12-7-45

Fig. 27—Single-phase, Half-wave Rectifier with Capacitor Output

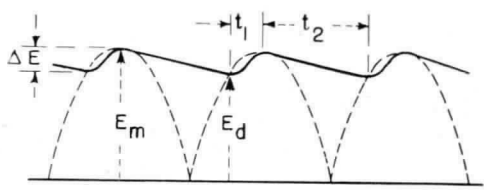

K-9186005 12-7-45

Fig. 28—Wave Form of the Capacitor Voltage under Light Load

Fig. 28—H. J. Reich, Theory and Application of Electron Tubes p. 539, Fig. 14-7; McGraw-Hill Book Co., Inc., 1939

where ΔE is the total voltage excursion, and that the ripple factor is P.

$$P = \frac{1}{\pi f R C}$$

The expression, under the assumptions made, is valid only when p is small, at most a few per cent.

At heavy loads, the problem can be solved by a series of successive approximations, but the process is fairly tedious. Fig. 29, graphically representing the expected ripple factor for a number of resistance-capacitance combinations at various frequencies, can be used both for the simple single-phase half-wave supply and for the more complex multipliers.

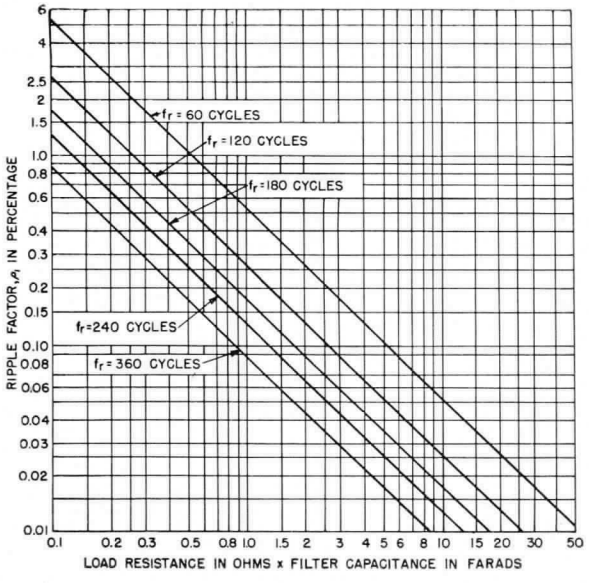

K-9186006 12-7-45

Fig. 29—Ripple Factor for Resistance Load Shunted by a Capacitor

A form of voltage doubler is shown in Fig. 30. Its operation depends on the ability of the circuit to charge each of two capacitors in series to the peak voltage of the transformer. On the half cycle when point A goes positive C_1 is charged to full transformer voltage (less tube drop). C_2 charges on the alternate half cycle and the output voltage across R_1 thus becomes the instantaneous sum of the two capacitor voltages. Obviously the fundamental ripple frequency has become twice the line frequency of the input transformer.

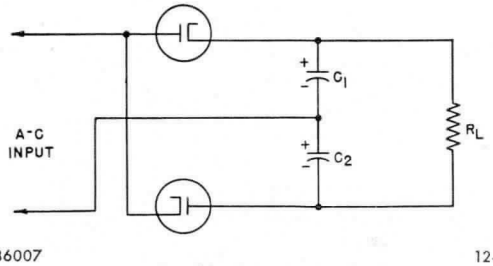

K-9186007 12-7-45

Fig. 30—Voltage Doubler

Fig. 29—H. J. Reich, Theory and Application of Electron Tubes p. 542, Fig. 14-9; McGraw-Hill Book Co., Inc., 1939

Fig. 31 is another form of the doubler which allows grounding one end of the transformer secondary.

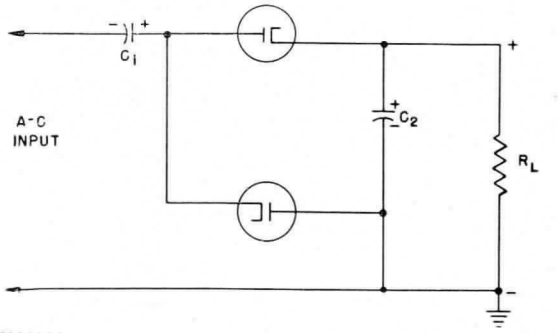

K-9186008 12-7-45

Fig. 31—Voltage Doubler for Grounded Input

Fig. 32 shows an extension of the doubler system to provide a d-c voltage almost equal to three times the peak transformer voltage.

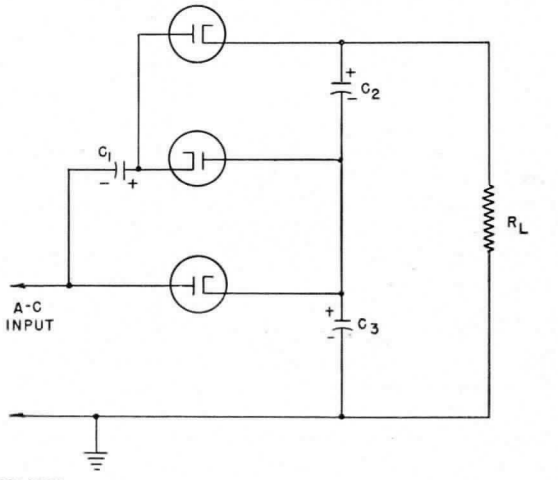

K-9186009 12-7-45

Fig. 32—Voltage Tripler

An interesting multiplier is shown in Fig. 33. It is especially adaptable to high-frequency rectifiers.

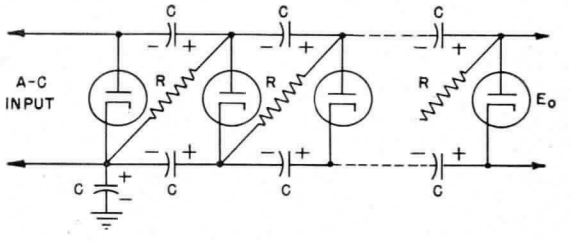

K-9186010 12-7-45

Fig. 33—Voltage Multiplier

APPLICATIONS (CONT'D)

Filters for Rectifiers: The single-section inverted L filter shown in Fig. 34 is subject to simple analysis. The standard definition of ripple factor is taken to be the ratio of the rms value of the ripple voltage to the algebraic average value of the total voltage, expressed in percentage.

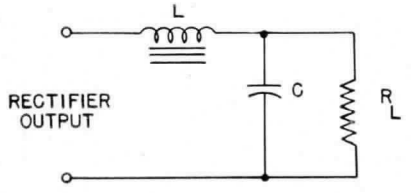

K-9186011 12-7-45

Fig. 34—Single-section Inverted L Filter

Inspection will show that the smoothing factor is equal to the total input impedance of the filter divided by the impedance of the capacitor and load resistance in parallel. In a well designed choke, the resistance of the choke is inconsequential compared to the reactance and, with the further assumption that the reactance of the capacitor is small compared to the resistance of the load, the expression for the smoothing factor becomes:

$$=\frac{X_1 - X_c}{X_c} = W^2LC - 1$$

In a multi-stage filter such as shown in Fig. 35, simple cumulation of smoothing factors for each section gives a good but somewhat conservative approximation of actual conditions.

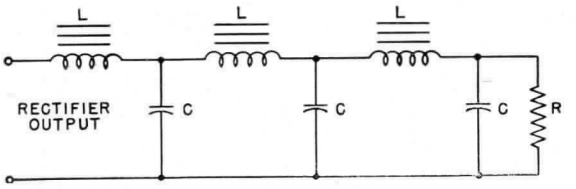

K-9186012 12-7-45

Fig. 35—Multi-stage Filter

Since it may be shown that for a given total amount of capacitance and reactance, maximum filtering is achieved when all sections are alike, a working formula for the design of rectifier filters may be taken as

$$LC = \frac{\sqrt[n]{\lambda + 1}}{40\, f_r^{\,2} 1}$$

where N is the number of sections
λ is the smoothing factor
f_r is the fundamental ripple frequency

The value of λ is simply the ratio of the input ripple factor, as determined from Fig. 29, to the desired factor at the load.

The relative values of L and C for optimum performance are:

$$C = \frac{\sqrt{1 + \sqrt[n]{\lambda}}}{2\pi f_r R}$$

$$L = R\sqrt{1 + \sqrt[n]{\lambda_1}}$$

Precaution should be taken to avoid LC combinations which will resonate at fundamental or harmonic frequencies of the supply voltage or load.

Filter Charts

Fig. 36 and Fig. 37 present a simple graphical means of designing choke input filter systems for power supplies. These apply to full-wave, single-phase circuits only (60-cycle sine-wave supply). When the supply is a 50-cycle source, multiply the selected values of inductance and capacitance by 1.2. When the supply is a 25-cycle source, multiply the filter values by 2.4.

Erms = Maximum volts (RMS) per plate applied to rectifier tube.

RL = Load Resistance.

ER_1 = Percentage ripple in d-c output voltage from (1) the first section of a double-section filter, or (2) a single-section filter.

ER_2 = Percentage ripple in d-c output voltage from second section of a double-section filter.

Erms = Maximum volts (RMS) per plate applied to rectifier tube.

Rl = Load Resistance.

Er_1 = Percentage ripple in d-c output voltage from (1) the first section of a double-section filter, or (2) a single-section filter.

Er_2 = Percentage ripple in d-c output voltage from second section of a double-section filter.

General Rules for Selection of Filter Constants

SINGLE-SECTION FILTER (FIG. 36)

Select Inductance Values

(1) above proper Rl Curve
(2) to left of proper ERMS Curve
(3) along desired Er_1 Curve

For each selected inductance value, use corresponding value of filter capacitance.

DOUBLE-SECTION FILTER (FIG. 37)

(1) Select desired percentage of output ripple voltage Er_2 on appropriate curve of Er_1.
(2) Read corresponding L_2 C_2 product.
(3) To satisfy this product, choose convenient values of L_2 and C_2.
(4) Check value of selected L_2 to make sure that it is greater than 3 $(C_1+C_2)+2C_1$ C_2.

Single-section Filter

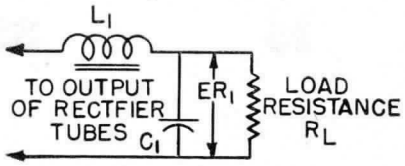

K-9186127 12-11-45

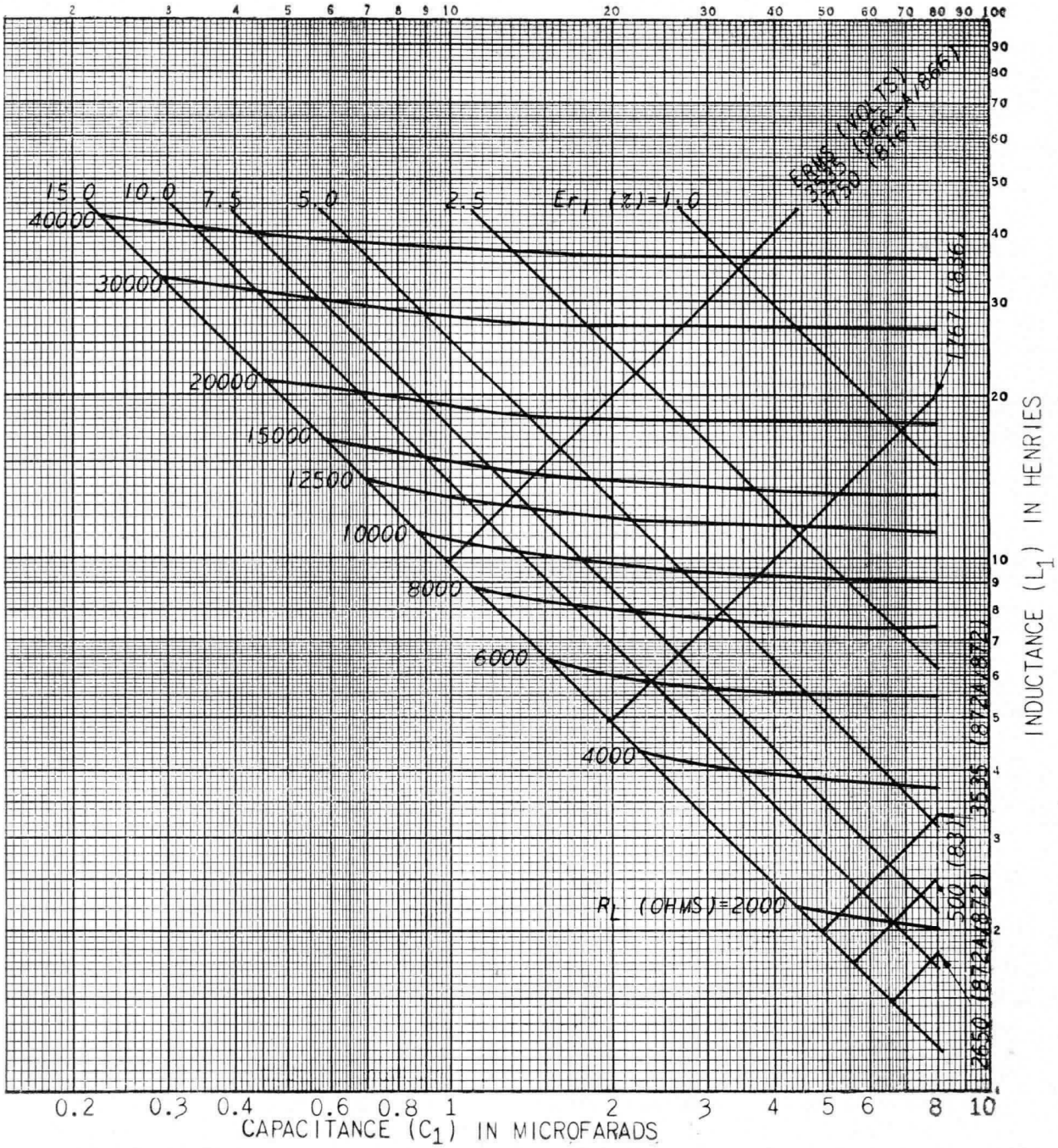

K-9186070 12-10-45

Fig. 36—Design Chart for Single-section Filter

APPLICATIONS (CONT'D)

Double-section Filter

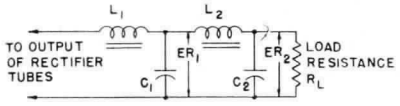

K-9186014 12-7-45

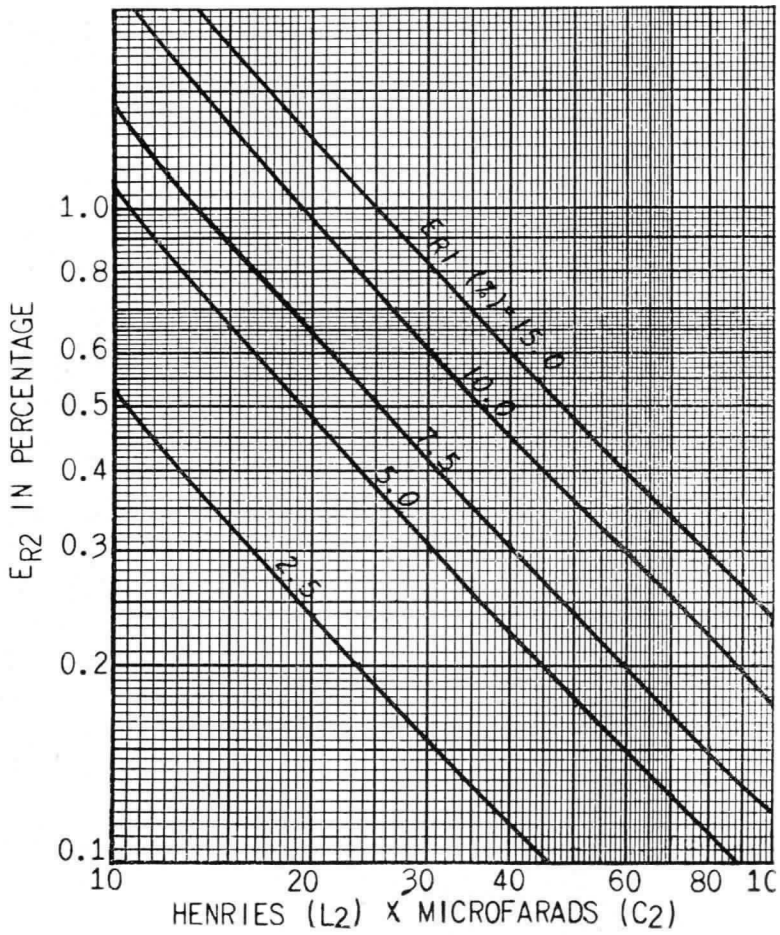

K-9186071 12-10-45

Fig. 37—Design Chart for Double-section Filter

Selection of Tubes for Rectifiers

In general, the choice of tubes for rectifier service is based on the voltage and current requirements of the load circuit. For high current applications, the gaseous rectifier is recommended, and, for high voltages, the high vacuum rectifier is most desirable. The following points should be considered in the selection:

1. Output voltage required at load.
2. Average current required at load.
3. Peak inverse voltage on rectifier.
4. Peak rectifier current at full load.
5. Effects of nearby fields on gaseous rectifiers.
6. Effects of high-frequency transients generated by gaseous rectifiers.

AMPLIFIER AND OSCILLATOR CIRCUITS

Five important factors are involved in the design of amplifiers and oscillator circuits for radio frequencies:

1. Grid Bias
2. Tank Circuits
3. Interstage Coupling
4. Neutralizing
5. Output Coupling

These, modified by considerations such as power supply capabilities, power output, power sensitivity, frequency range, space limitations, and cost, are the governing parameters the designer must consider.

1. Grid Bias—Three basic methods of obtaining grid bias are in common use, and it is important to understand the nature and capabilities of each, since they are not universally applicable.

Fig. 38 illustrates a simple amplifier employing fixed bias. An inductance-capacitance filter is sometimes used to block radio frequency from the bias supply, although it must be carefully designed and placed to avoid parasitic oscillations. An important advantage of the fixed bias system is the protection it offers to circuit and tubes against excessive current in cases where excitation fails.

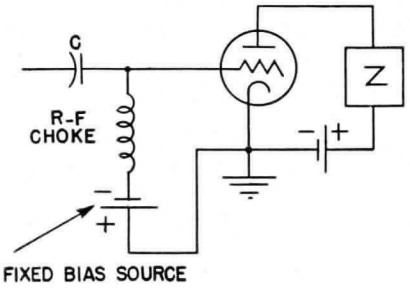

K-9186015 12-7-45

Fig. 38—Amplifier Employing Fixed Bias

Fig. 39 shows an amplifier with grid-leak resistor bias. Bias is developed across the grid resistor by the diode action of the grid and cathode, and is proportional to the excitation voltage. Investigation of the biasing action indicates that the value of the grid resistor is not critical, and that it may be determined from the characteristic data by Ohm's Law.

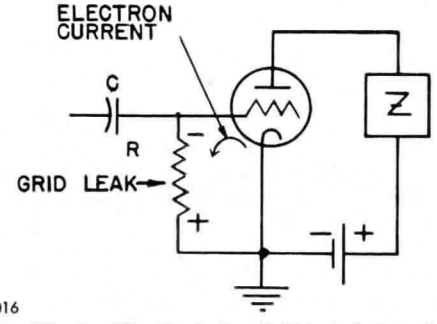

K-9186016 12-7-45

Fig. 39—Amplifier Employing Grid-leak Resistor Bias

The grid-leak bias generator has important applications in d-c transmission systems where a fixed reference level must be maintained, although the principle is generally modified to include a separate diode bias generator.

The advantages of simplicity are offset by the inability of the system to protect itself against loss of excitation and the resultant excessive plate current. Some over-current protection must, therefore, be included.

Fig. 40 represents a self-biased amplifier. Here, bias is developed across the cathode resistor by the flow of total tube current. The action of the capacitor prevents signal degeneration; it must be large enough to provide, with the cathode resistor, a time constant considerably longer than the period of the lowest frequency to be amplified. Since it is basically a degenerative bias, the self-bias system automatically protects the tube against destructive current overloads. Two disadvantages are evident: first, the effective plate voltage is lowered by the magnitude of the bias developed, necessitating a more generous power supply, and, second, the value and physical size of the by-pass capacitor must be fairly large to maintain gain at low frequencies.

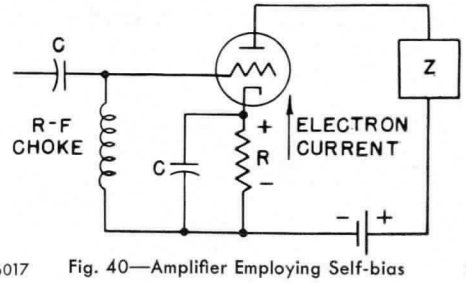

K-9186017 Fig. 40—Amplifier Employing Self-bias 12-7-45

Very often, combinations of all three bias schemes are used and compensation for the individual disadvantages of each is achieved.

2. Design of Tank Circuits. The design of tuned circuits for radio-frequency amplifiers and oscillators can be a very complex problem. The wealth of experience, however, which has been gained from many years of radio development has established many simplifications and shortcuts which the circuit designer may employ.

No sharp dividing line is drawn between frequencies at which lumped circuit parameters can be successfully employed and those at which effective design becomes critically dependent upon the use of cavities, tuned lines, wave guides, etc. The change starts somewhere between 150 and 200 megacycles and is fairly complete above 500 megacycles. This section will be concerned with the first group and a later section, ETX-110, will cover the high-frequency problems.

The resonant frequency of a parallel tank circuit is variously given as:

1. The frequency for which the amplitude of the impedance is maximum.

AMPLIFIER AND OSCILLATOR CIRCUITS (CONT'D)

2. The frequency for which the power factor is unity.
3. The frequency for which the power absorbed is minimum for given impressed voltage.
4. The frequency (or frequencies) which occur in the circuit in transient response, i.e., the "natural" frequencies.

The fact that these frequencies differ is primarily based on variations in the types of parallel circuits under consideration. For our purposes, however, frequency differences are so slight (less than 1 per cent), that any definition will suffice. Using the unity power factor relation then:

$$X_L = X_C$$

or

$$f = \frac{10^3}{2\pi\,(LC)^{1/2}}$$

where,

f is the frequency in megacycles,

L the inductance in microhenries,

C the capacitance in micromicrofarads.

The operating Q of a circuit is defined as the ratio of the tank volt-amperes to the power supplied to the circuit by the tube. It is, in a sense, a measure of the ability of the resonant circuit to sustain itself. At low Q's the generation of harmonics is severe, and, since these harmonics represent unused power, the efficiency of the system is poor. These harmonics may also be responsible for interference with other radio services if they are radiated and should be minimized on this account.

Too high an operating Q results in excessive losses in the tank due to the large circulating current, and, therefore, needless expenditure of power. A Q between 10 and 15, generally 4π, is used as the design figure.

Fig. 41, 42, 43 and 44 illustrates a number of common tank circuits. The voltage E is the radio-frequency voltage developed to ground and is approximately equal to the plate voltage.

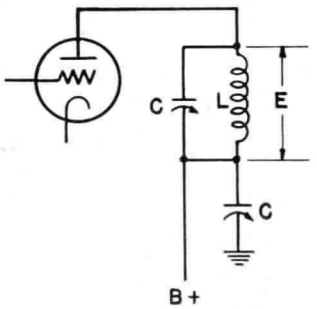

K-9186018 12-7-45

Fig. 41—Tank Circuit with Series Feed

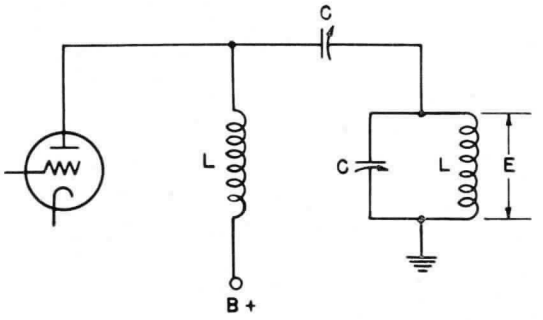

K-9186019 12-7-45

Fig. 42—Tank Circuit with Shunt Feed

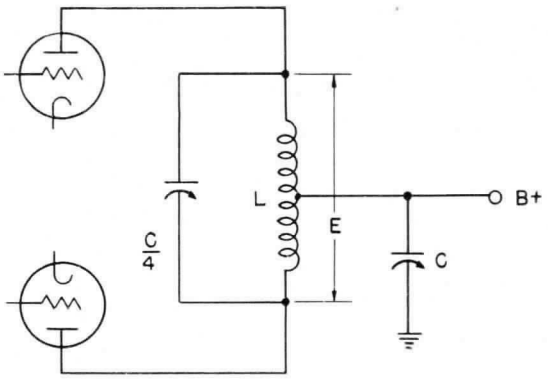

K-9186020 12-7-45

Fig. 43—Push-Pull Tank Circuit with Series Feed, Single Stator

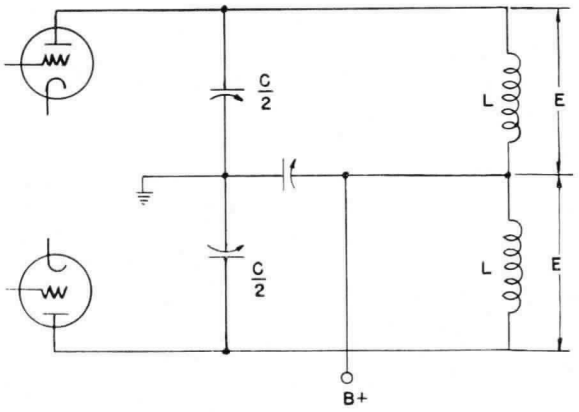

K-9186021 12-7-45

Fig. 44—Push-Pull Tank Circuit with Series Feed, Split Stator

Fig. 45, 46 and 47 may be used for determining the optimum design capacitance for a number of operating frequencies and Q's and Figs. 48 and 49 to determine the proper value of inductance for the chosen frequency. Allowances of the order of five to 50 micromicrofarads should be made for the various distributed capacitances which will be encountered in the circuit.

AMPLIFIER AND OSCILLATOR CIRCUITS (CONT'D)

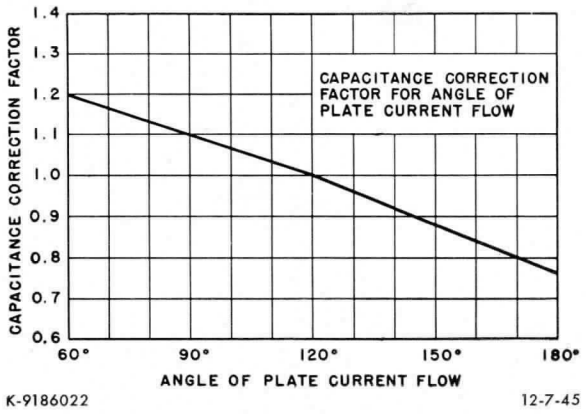

Fig. 45—Correction Factor by which Capacitance of Fig. 47 Should be Multiplied for Angles of Current Flow Different from 70 Per Cent

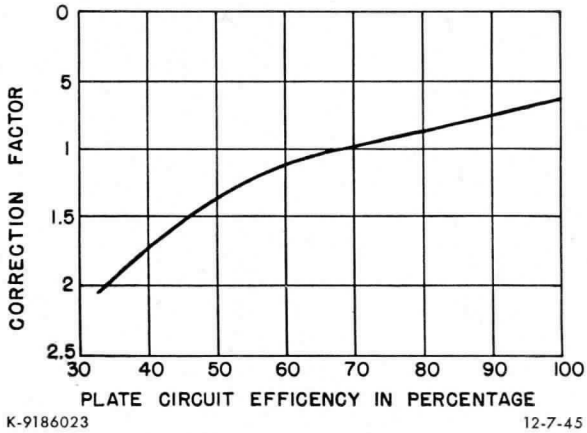

Fig. 46—Multiply Capacitance Value from Fig. 47 by Correction Factor from this Chart if Efficiency of Plate Circuit is Different from 70 Per Cent

Fig. 45 and 46—Batcher and Moulic; Electronic Engineering Handbook, p-216; Electronic Development Associates (O. H. Caldwell, M. Clements); 1944

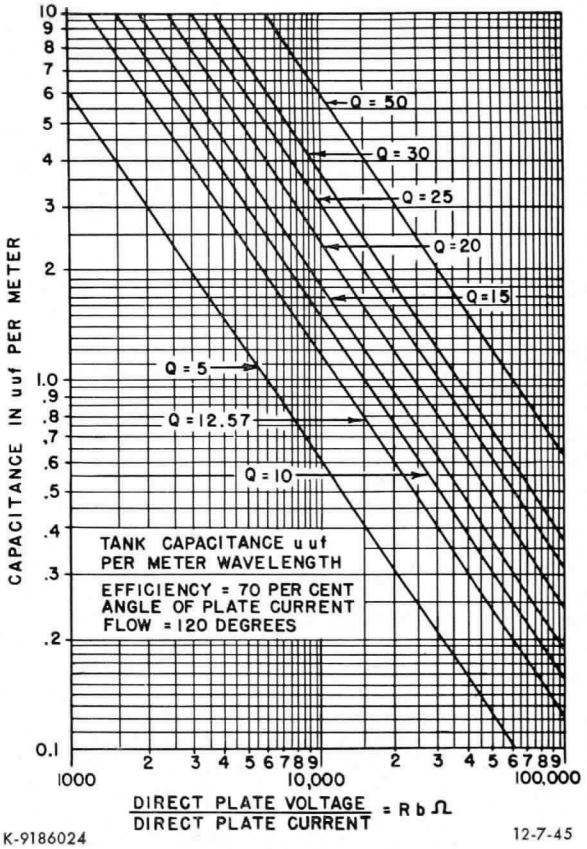

Fig. 47—Tank Capacitance Calculator for Class C Amplifiers. Capacitance value is to be multiplied by operating wavelength in meters. Q value is for fully loaded operation and is usually 4 or 12.57. Use Fig. 45 and Fig. 46 to correct for other angles of current flow and circuit efficiency. The circuit resistance scale R_b is in ohms

Fig. 47—Batcher and Moulic; Electronic Engineering Handbook, p-215; Electronic Development Associates (O. H. Caldwell, M. Clements); 1944

HOW TO USE CHARTS OF FIG. 48 AND 49

Use of Figure 48:

The chart of Fig. 48 may be used to find:

(1) The reactance of a given inductance at a given frequency.

(2) The reactance of a given capacitance at a given frequency.

(3) The resonant frequency of a given inductance and capacitance.

In order to facilitate the determination of magnitude of the quantities involved to two or three significant figures the chart is divided into two parts. Fig. 48 is the complete chart to be used for rough calculations. Fig. 49, which is a single decade of Fig. 48, enlarged approximately 7 times, is to be used where the significant two or three figures are to be determined.

To Find Reactance

Enter the charts vertically from the bottom (frequency) and along the lines slanting upward to the left (capacitance) or to the right (inductance). Corresponding scales (upper or lower) must be used throughout. Project horizontally to the left from the intersection and read reactance.

To Find Resonant Frequency

Enter the slanting lines for the given inductance and capacitance. Project downward from their intersection and read resonant frequency from the bottom scale. Corresponding scales (upper or lower) must be used throughout.

Example: The sample point indicated (Fig. 48) corresponds to a frequency of about 700 kilocycles and an inductance of 0.5 henry, or a capacitance of 0.1 micromicrofarad, giving in either case a reactance of about 2,000,000 ohms. The resonant frequency of a circuit containing these values of inductance and capacitance is, of course, 700 kilocycles, approximately.

AMPLIFIER AND OSCILLATOR CIRCUITS (CONT'D)

Use of Figure 49

Fig. 49 is used to obtain additional precision of reading but does not place the decimal point which must be located from a preliminary entry in Fig. 48. Since the chart necessarily requires two logarithmic decades for inductance and capacitance for every single decade of frequency and reactance, unless the correct decade for L and C is chosen, the calculated values of reactance and frequency will be in error by a factor of 3.16.

Example: (continued) The reactance corresponding to 0.5 henry or 0.1 micromicrofarad is 2,230,000 ohms at 712 kilocycles, their resonant frequency.

†† Fig. 48—Reactance Chart →

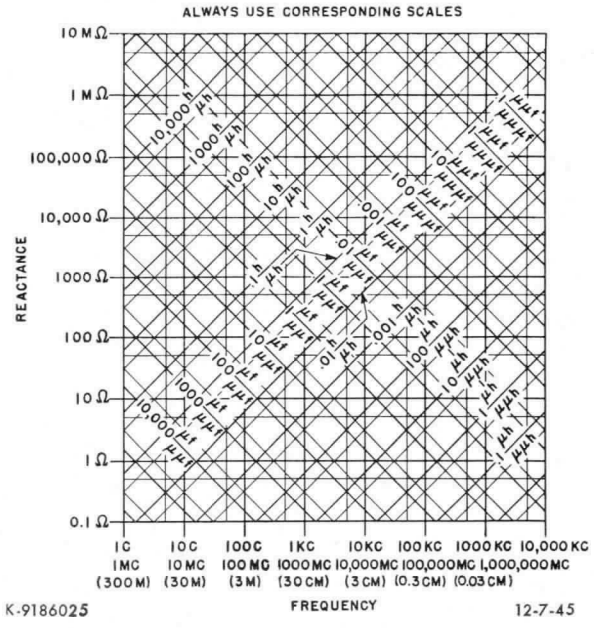

Always obtain approximate value from Figure 48 before using Figure 49

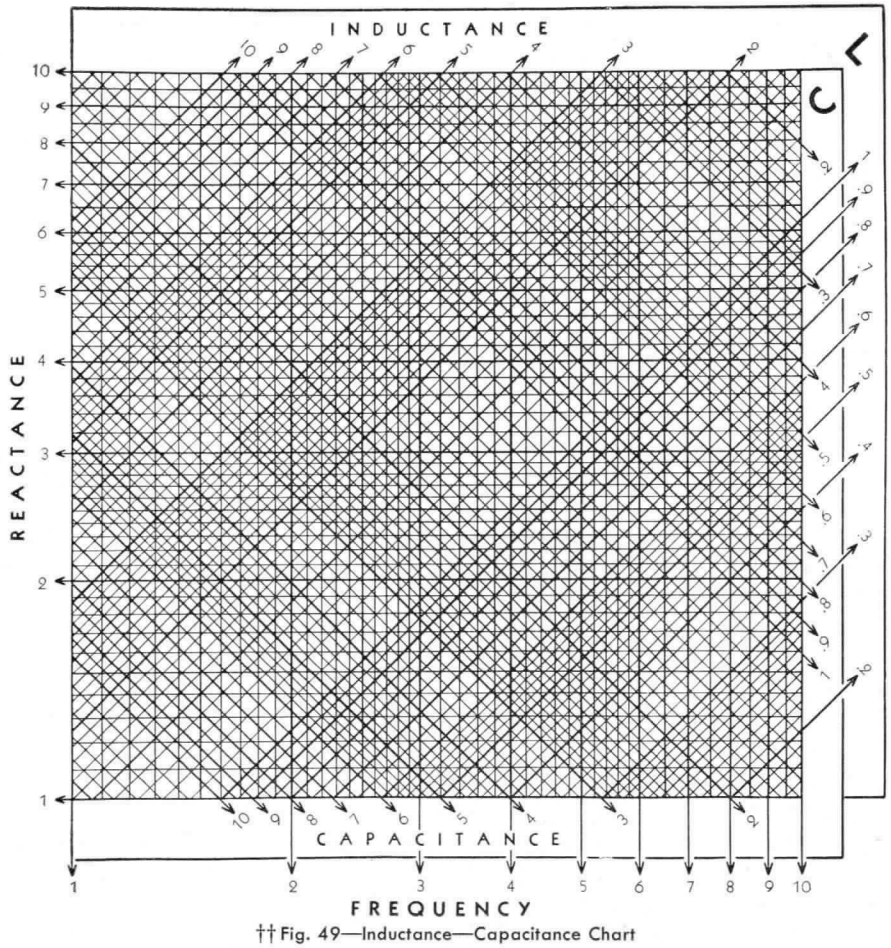

†† Fig. 49—Inductance—Capacitance Chart

†† Fig. 48 and 49. Courtesy of General Radio Company

AMPLIFIER AND OSCILLATOR CIRCUITS (CONT'D)

Tank Inductance

The design of the tank inductance can be carried out with the aid of Fig. 50. From the desired inductance, L, the value of L_0 is determined by:

$$L_0 = \frac{L}{N^2}$$

where N is the number of turns per inch to be used. The winding length, s, is established from the graph and the total number of turns is simply the product, Ns. Fig. 50 may also be used for the inverse operation, i.e., determining the inductance from the dimensions of a given coil.

It is important to remember that coupling circuits will, in general, have important effects on the apparent capacitance and inductance of a circuit and these effects must be included in the tank circuit design calculations.

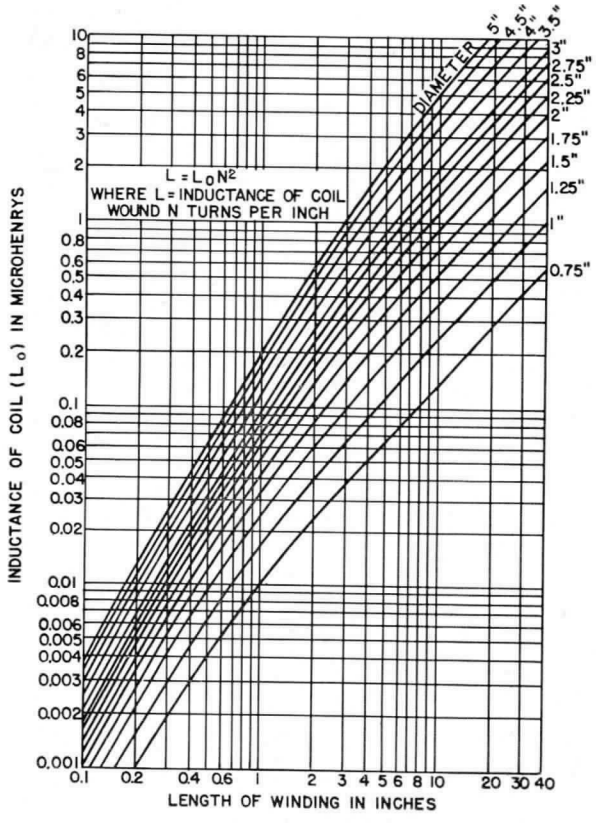

K-9186026 12-7-45

Fig. 50—Inductance of Coils Wound One Turn per Inch (from Nagaoka's Formula)

3. Interstage Coupling. Interstage coupling in radio-frequency amplifiers may be effected by either capacitive or inductive coupling. In capacitive coupling, energy is fed from one stage to another through a d-c blocking capacitor. As shown in Fig. 51, the coupling can be made a fraction of the total output of the first stage by tapping the plate tank. The circuit has the advantage of simplicity, but may be the cause of spurious resonances.

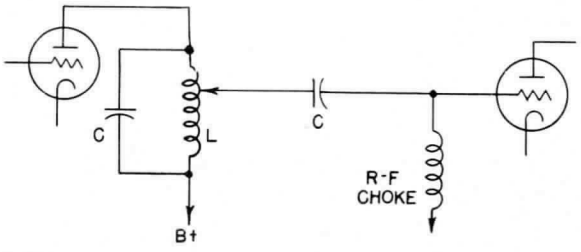

K-9186027 12-7-45

Fig. 51—Amplifier with Capacitive Coupling

Inductive coupling (Fig. 52 and Fig. 53) may be either direct, or through transmission lines. If direct coupling is used, mechanical problems may result from the necessity of maintaining short leads. Transmission lines, such as the link coupling, allow reasonable separation of components. The link consists of a twisted pair terminated at each end by a few turns inductively coupled to the plate and grid tanks. For maximum transfer of energy the coils must be placed at the current maxima of the tanks. Other forms of inductive couplings, parallel lines, coaxial lines, etc. are practical and often used.

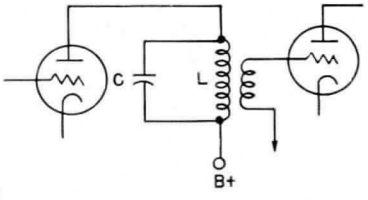

K-9186028 12-7-45

Fig. 52—Amplifier with Direct Inductive Coupling

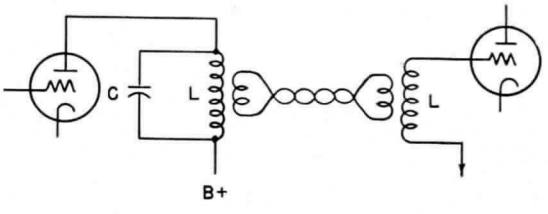

K-9186029 12-7-45

Fig. 53—Amplifier with Link Inductive Coupling

AMPLIFIER AND OSCILLATOR CIRCUITS (CONT'D)

4. Neutralizing. One of the most serious problems encountered in the design of radio-frequency amplifiers employing triodes is the capacitive feedback of energy from plate to grid. It may be shown that the effect of this feedback is to increase tremendously the apparent input capacitance of the system. At optimum tuning, when the grid and plate voltage are exactly opposite in phase,

$$C_i = C_{gp}\left(\frac{1+E_p}{E_g}\right)$$

Since the ratio, E_p/E_g, is not simply the u of the tube, but is the actual gain of the amplifier, C becomes a function of the nature of the load, the tube bias, plate voltage, tuning, etc., and subject to so many variables that it becomes difficult to predict or control.

With a triode, no possible method of avoiding feedback exists, and neutralization must be used. This is accomplished by applying, to the grid circuit, a current equal in magnitude and opposite in phase to that flowing through C_{gp}.

An interesting form of neutralization is shown in Fig. 54. The circuit is adjusted so that the inductance reactance of L_n is equal to the capacitive reactance of C_{gp} and C_n together. Although L_n could be made adjustable to equal C_{gp}, variable reactors are difficult to build, and by making L_n slightly larger than needed, the easily controlled C_n can be added. Since the circuit formed by L_n and $C_{gp}+C_n$ are in resonance, the impedance is very nearly a maximum and the grid-plate current circulates only in the loop.

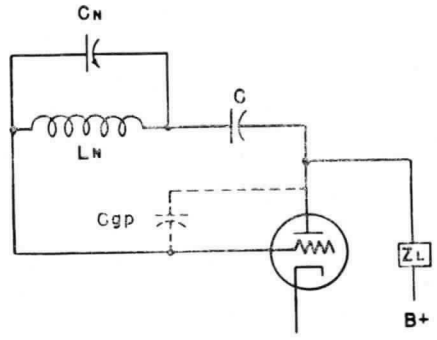

K-9186030 12-7-45

Fig. 54—Neutralization Circuit for Triode Amplifier

When grid modulation is used, the circuit arrangement is as shown in Fig. 55. This arrangement is necessary to avoid phase shift at audio frequencies across the grid circuit but does not provide neutralization as good as the first circuit.

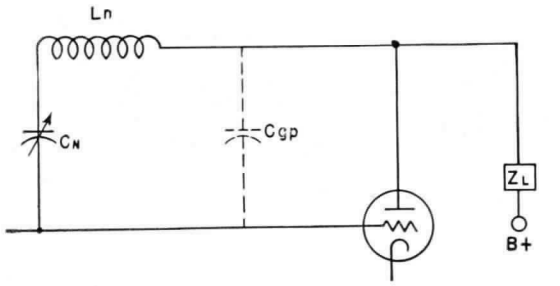

K-9186031 12-7-45

Fig. 55—Neutralization for Circuit with Grid Modulation

A widely used neutralization is the so-called "built-out" circuit. The neutralizing current is fed back from a point having a voltage opposite in phase to the anode voltage, and the built-out circuit produces this voltage.

It is convenient to have this voltage roughly equal to the anode voltage, so that the neutralizing capacitor can be equal to the grid-plate capacitance. The circuit often takes the form of Fig. 56. It is important to remember these points concerning this circuit:

1. The currents through C_{gp} and C_n are not equal under ideal operating conditions since the voltage across C_{gp} is the arithmetic sum of the grid and plate voltage, while the voltage across C_n is their arithmetic difference. The components of current that are equal and opposite are due to the plate, the criterion for neutralization, but the components due to the grid are in phase, so that the input is capacitive.
2. C_2 acts in parallel with C_n to produce the total built-out reactance.
3. If the load is coupled to L, neutralization cannot be complete because of the phase shift introducted by the load. The load coupling must be separate from the neutralizing circuit.

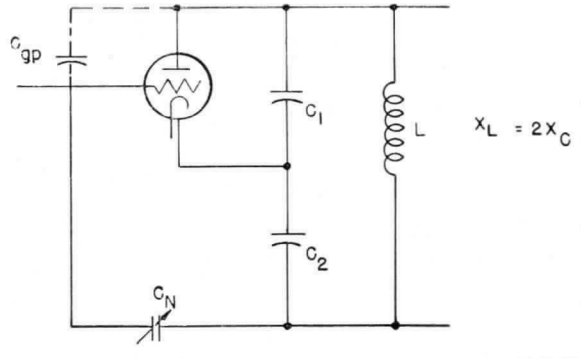

K-9186032 12-7-45

Fig. 56—Built-out Neutralization Circuit

AMPLIFIER AND OSCILLATOR CIRCUITS (CONT'D)

It is apparent that neutralization is most easily accomplished with push-pull circuits. Here, the out-of-phase voltages are ready and waiting. A simple criss-cross network is added as in Fig. 57.

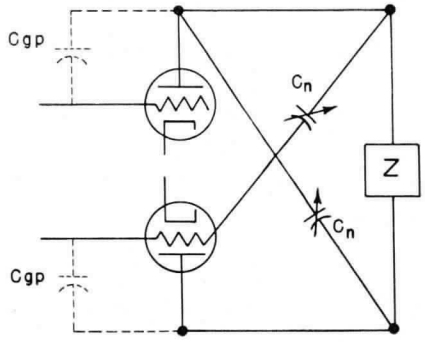

K-9186033 12-7-45

Fig. 57—Criss-Cross Neutralization Circuit

The circuits shown in Fig. 58 and Fig. 59 have been used, but, while they give some of the desired effects during adjustment, they do not produce true neutralization. Ordinarily, excitation is applied with the plate voltage removed and C_n adjusted to give a minimum on a radio-frequency indicator. A good null is obtained when C_n is equal to C_{gp}. If, however, we consider an r-f voltage on the anode of Fig. 58, it is apparent that while this voltage will cause equal and opposite currents to flow through the capacitors, no net current flows in the grid inductance. The currents produce voltages across the grid capacitors which are in phase with the plate voltage. Since this is in phase opposition to the grid excitation, negative feedback is produced.

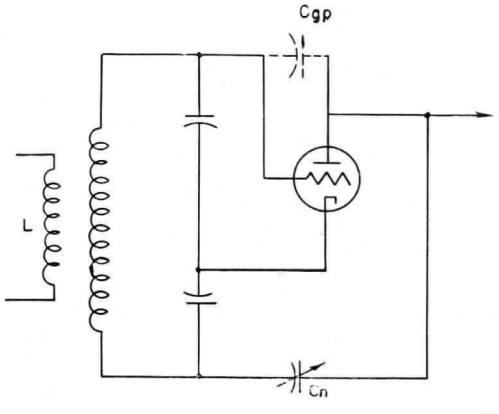

K-9186034 12-7-45

Fig. 58—Imperfect Neutralization Circuit

On the build-out, the excitation voltage and feedback voltage are in phase. The apparent null indicates neutralization only so long as the system is in balance.

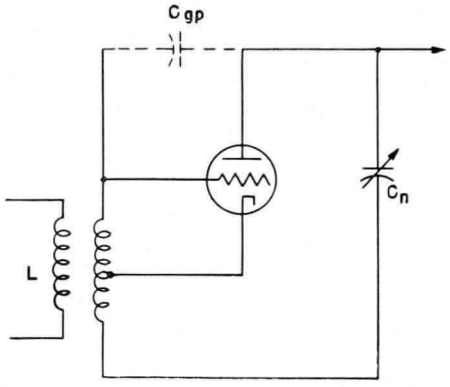

K-9186035 12-7-45

Fig. 59—Another Circuit Employing Imperfect Neutralization

Two more circuits are shown in Fig. 60 and Fig. 61. Instead of a built-out circuit, phase reversal is obtained by using a transformer. Using the legend shown in the figure, the following relations may be used for the design:

$$\frac{X_n}{X_{gp}} = \frac{K\sqrt{X_2 1 X_1}}{1 - \frac{X_2}{X_n}(1-K^2)}$$

If $X_n >> X_2$ or if the coefficient of coupling approaches unity

$$\frac{X_n}{X_{gp}} = K\sqrt{\frac{X_2}{X_1}}$$

If $C_n = C_{gp}$, then

$$\frac{X_2}{X_1} = \frac{1}{K_2}$$

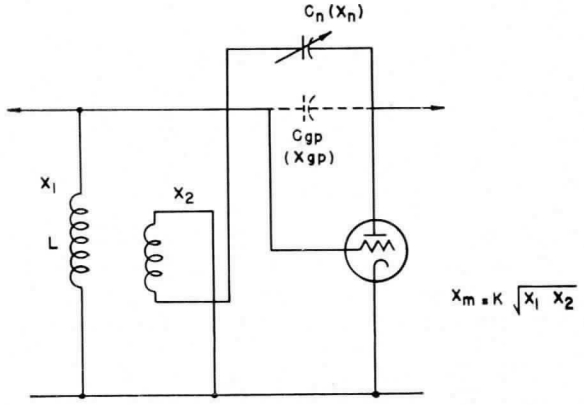

K-9186036 12-7-45

Fig. 60—Hazeltine Grid-neutralization Circuit

Amplifier and Oscillator Circuits (Cont'd)

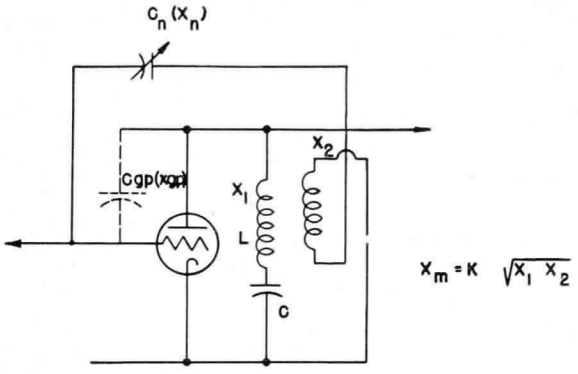

K-9186037 12-7-45

Fig. 61—Hazeltine Plate-neutralization Circuit

5. Output Coupling. The problems involved in coupling an amplifier to a load such as an antenna are very similar to those of interstage coupling. Capacitive coupling can be used but is useless in the suppression of harmonics. Inductive coupling reduces the transfer of harmonics to the antenna and effective isolates the load from the high d-c voltages of the final amplifier, and allows the use of transmission lines.

PARASITIC AND TUNING CONSIDERATIONS

Parasitic oscillations are a frequent and occasionally serious problem in the design of both audio and radio-frequency amplifiers. Although a good deal can be done to eliminate them in the design program, they sometimes appear in even the most carefully designed circuits.

Parasitics generally occur at frequencies somewhat higher than the operating frequency and without necessarily integral relation to that frequency. They are caused by various circuit components which in combination satisfy the conditions required for oscillation. As a rule, the tube capacitances form an important part of the resonant circuit. Besides representing a severe power loss, parasitics may be responsible for erratic and even intermittent operation, high distortion, flashover, and tube failure. They may take the form of continuous, self-sustained oscillations, or be triggered by various circuit transients.

The parasite can usually be located with a neon lamp or high frequency receiver; the latter method helps to fix the frequency of oscillation. Cures can be effected by careful analysis or by a trial and error method. Pass filters, series resistors, detuning of parasitic circuit, and rearrangement of layout and wiring may be necessary, singly or in combination. The series resistors should be placed so as to present a severe load to the parasite circuit and little load to the amplifier itself. In parallel tube operation, series resistors isolating the tube grids and, possibly, low resistance radio-frequency chokes should be included as a matter of course in the design.

Multiple radio-frequency grounds should be avoided and the utmost simplicity maintained in the layout. Shunt fed grid and plate supplies should not be used together since the complex resonant combinations which result may cause serious parasiting. Tuning and loading taps, long leads, crowding of components and poor power supply filtering may also cause trouble.

TUNING CLASS C AMPLIFIERS

The first step in tuning a Class C amplifier is to obtain proper neutralization. Adjustment of the neutralizing circuit is made without plate voltage on the tube by applying grid excitation, and tuning for minimum radio-frequency voltage between plate and ground or minimum radio-frequency current in one of the output circuit elements. Another method is to adjust the neutralizing circuit so that no change in d-c grid current occurs as the plate circuit is tuned through its range. In low power amplifiers, a neon lamp near the plate circuit is an effective null indicator. If the load causes detuning of the circuit, the tank must be re-trimmed during the process.

The grid circuit is tuned to resonance as indicated by maximum grid current. If the rectified current is less than that recommended for the tube, the excitation, should be increased.

It is important to remember that the tuning of an amplifier is a step by step process, and that any one adjustment may entail resetting of other circuit components.

AMPLITUDE MODULATORS

Some typical amplitude modulation circuits are shown in Fig. 62 through 66. Fig. 62 is the Heising constant-current circuit for plate modulation. The polarity of induced voltages in the reactor due to the audio drive applied to the modulator tends to maintain constant supply current. As modulator current increases, the radio-frequency amplifier current drops and the radio-frequency carrier amplitude is reduced. The purpose of the dropping resistor R is to limit the amplifier voltage so that 100 per cent modulation can be achieved. C serves as low-impedance by-pass capacitor around R for the audio-signal current.

AMPLITUDE MODULATORS (CONT'D)

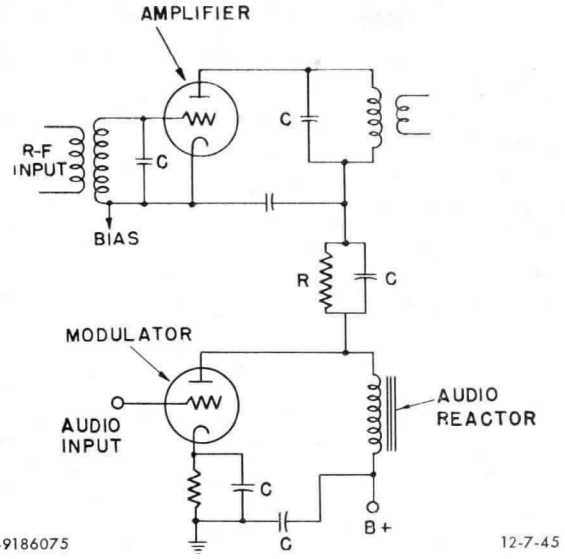

Fig. 62—Heising Constant Current Circuit or Plate Modulation

Fig. 63 employs a transformer rather than a reactor. It may be driven by a Class A, Class B, or Class AB amplifier. The audio signal is superimposed upon the plate supply as a series voltage. When the impedances of the modulator and radio-frequency tube plate circuits are properly matched, 100 per cent modulation with low distortion can be accomplished.

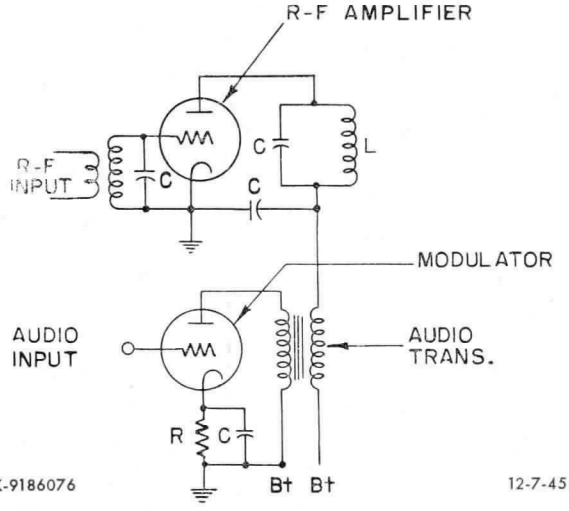

Fig. 63—Modulator Employing Transformer

Fig. 64 shows a grid modulation circuit. The bias of the radio-frequency amplifier is varied at the audio rate with consequent variation in the radio-frequency envelope. The advantage of the system is that it takes very little audio driving power, but, since operating conditions must be carefully chosen and maintained, the circuit is difficult to use.

Suppressor modulation, Fig. 65, involves the introduction of the audio component in series with the suppressor bias. As with grid modulation, driving power is small, but the circuit is critical and tends to distort at high modulation levels.

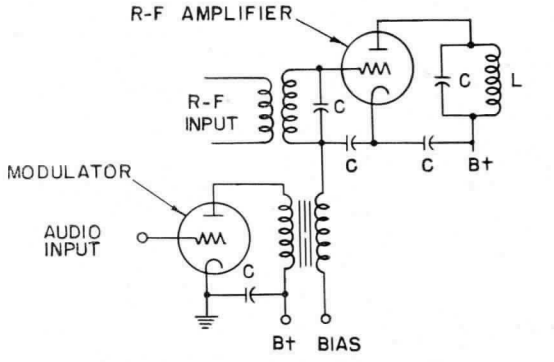

Fig. 64—Grid-modulation Circuit

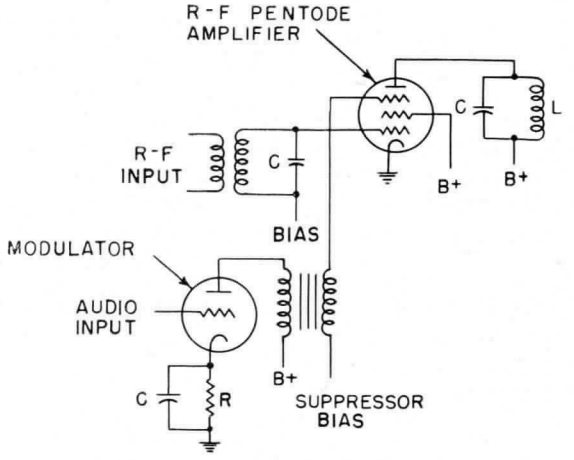

Fig. 65—Suppressor-modulation Circuit

The cathode modulator, shown in Fig. 66, gives a combination of both grid and plate modulation since both the effective grid bias and the plate voltage are varied. The amount of grid modulation is generally kept small to improve carrier efficiency by adjustment of the grid leak resistance and positioning of the grid return on the tapped secondary of the modulation transformer.

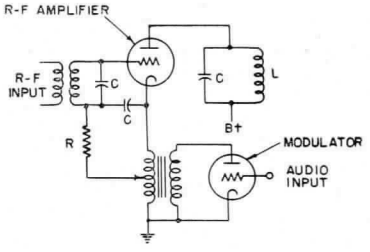

Fig. 66—Cathode-modulation Circuit

In general, the plate modulated amplifier provides the highest operating efficiency, about 70 to 80 per cent. Grid modulated stages rarely have efficiencies greater than about 35 per cent. The cathode-modulated amplifier, since it represents a combination of plate and grid modulation, normally is operated at about 55 per cent.

TYPICAL CIRCUITS

Fig. 67 through 73 shown on this page are selected to illustrate a few circuits commonly used in typical transmitting applications.

In general the diagrams of Fig. 67 through 73 are conventional circuits which experience has proven to be dependable and practicable.

The designer may find it desirable in certain applications to use a part of one circuit in combination with other circuits or portions of circuits to meet the requirements of a particular design.

Specific tube type numbers are not indicated on the diagrams as the choice of a particular transmitting triode, tetrode or pentode will depend upon the power output desired, operating frequency, size, cost and other design considerations.

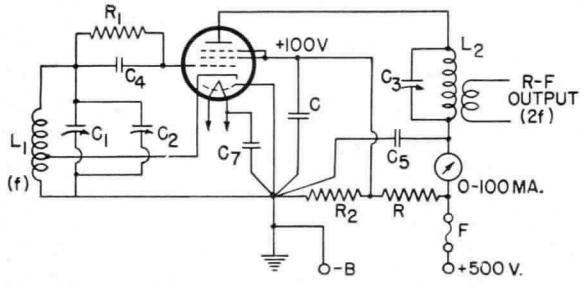

K-9186149 Fig. 67—Electron—Coupled Oscillator 1-9-46

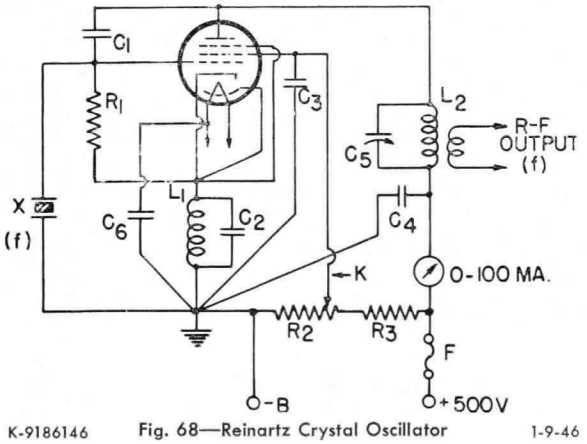

K-9186146 Fig. 68—Reinartz Crystal Oscillator 1-9-46

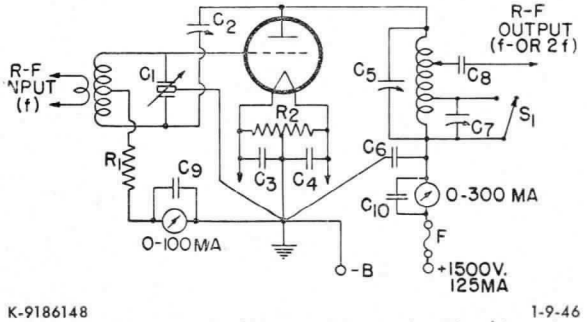

K-9186148 1-9-46

Fig. 69—Frequency Doubler or R-F Power Amplifier (Class C Telegraphy)

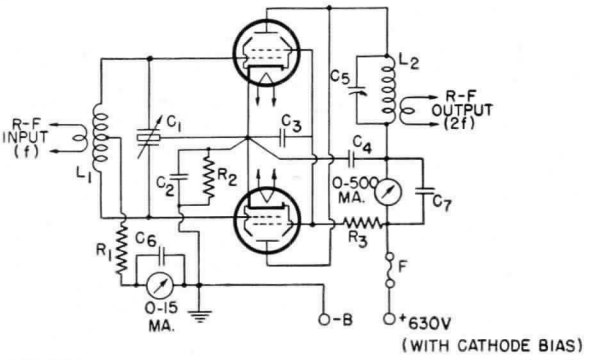

K-9186144 1-9-46

Fig. 70—Push-Pull Frequency Doubler of High Efficiency

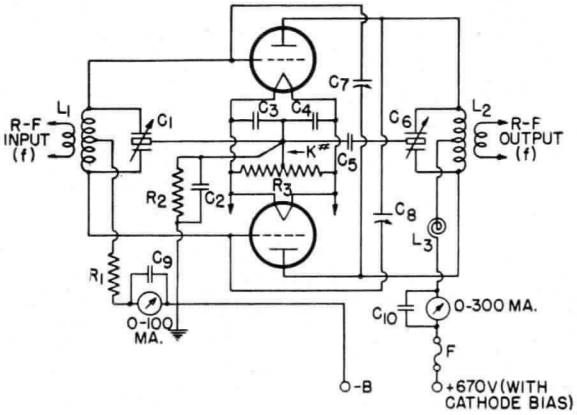

K-9186147 1-9-46

Fig. 71—Push-Pull Class C R-F Amplifier for C-W Telegraphy

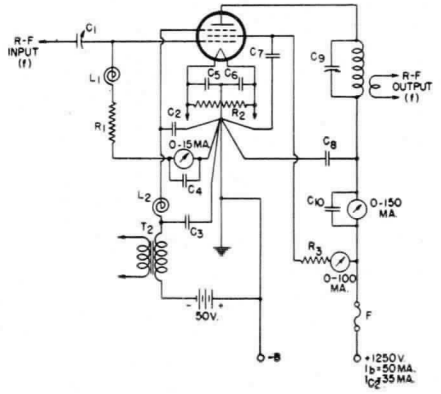

K-9186143 1-9-46

Fig. 72—Suppressor-modulated Pentode R-F Power Amplifier

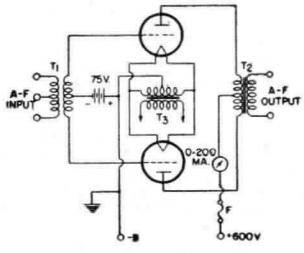

K-9186145 1-9-46

Fig. 73—Class B Modulator

INSTALLATION AND OPERATION

CONVECTION-COOLED TYPES

INSTALLATION

Mechanical

Mountings must be of good quality and should be so installed as to minimize danger from impact. If the set is subject to vibration, a shock-absorbing suspension must be employed.

Cooling

All apparatus should be arranged to allow free circulation of air around the tube. The bulb becomes very hot during operation and, therefore, should neither come in contact with any metalllic object nor be subjected to drops or spray of liquid.

Sets using more than one tube should provide adequate spacing between tubes so that adjacent portions of the bulbs do not operate appreciably hotter than the other sections.

Electrical

To avoid danger of corona discharge, all wires and connections should be made to allow several inches of free space around the tube. For tubes using a metal base, the metal shell must not be connected to any part of the circuit.

The filament should be operated preferably from an a-c source, although a d-c supply may be used. The filament voltmeter should be connected to indicate the voltage at the filament terminals. The filament supply should be designed to allow operation at rated filament voltage. The filament transformer shall have good regulation and should be designed for at least thirty per cent above rated filament wattage.

Thoriated-tungsten filaments should be operated at eighty per cent of normal filament voltage during stand-by periods of less than two hours and shut down entirely for longer periods. However, for small tubes of less than 250 watts plate dissipation rating the filament voltage may be removed for stand-by periods greater than 15 minutes. There should be no reduction of filament voltage for periods of less than five minutes. The filament voltage may be reduced to eighty per cent during periods greater than five minutes if desired.

Oxide-coated filaments or cathode heaters should be operated at normal filament voltage during stand-by periods. If the stand-by periods exceed two hours the filament current may be shut off.

Overheating by severe overload may decrease filament emission. Unless the overload has liberated a large amount of gas, the activity of the filament usually can be restored by operating the filament at rated voltage for ten minutes or more with no voltage on the plate or grid. This process may be accelerated by increasing the filament voltage to 20 per cent above the normal value (not higher) for a few minutes.

The grid-circuit and plate-circuit return leads should be connected to the center tap of the filament-transformer secondary. When d-c filament excitation is used, the return leads from the grid and plate circuits should be connected to the negative filament terminal.

The circuits should be arranged to prevent parasitic oscillations so that the tube will not be subjected to excessive voltages and current.

An ammeter in the plate circuit of each tube should be connected so that the direct-plate current may be checked regularly.

The plate circuit should be provided with a protective device such as a fuse or relay in order to prevent overheating caused by improper circuit adjustments or overloading. This device should remove the plate voltage instantly if the direct-plate current reaches a value 50 per cent above normal.

In rating transmitting tubes, certain values are given as maximum; that is, the values beyond which it is unsafe to go from the viewpoint of life and performance. In order not to exceed the maximum ratings, changes in plate and filament voltage caused by line-voltage fluctuation, load variation, and manufacturing variation of the associated apparatus must be determined. Then, an average value of plate voltage should be chosen so that under the usual operating conditions the maximum ratings will not be exceeded.

IN TRYING OUT A NEW CIRCUIT OR WHEN ADJUSTMENTS ARE BEING MADE, THE PLATE VOLTAGE SHOULD BE REDUCED IN ORDER TO PREVENT DAMAGE TO THE TUBE OR ASSOCIATED APPARATUS IN CASE THE ADJUSTMENTS ARE INCORRECT.

OPERATION

General

Maximum ratings and typical operating conditions for each recommended class of service are given on the Description and Rating Sheet covering the individual type of tube. The typical values given must not be considered as ratings, because the tube may be used at any suitable conditions within the maximum ratings.

Class A Audio-frequency Amplifier or Modulator

Grid bias for this type of service may be obtained from a separate voltage source or by means of a self-biasing resistor shunted by a filter network to avoid degenerative effects at the low audio-frequencies. When several tubes are operated in parallel, it is necessary to make provision for individual adjustment of grid bias to insure that the plate dissipation of any tube does not exceed the maximum value. This may be accomplished by means of a tapped C battery or, if self bias is used, by means of a variable cathode resistor for each tube. When the self-

INSTALLATION AND OPERATION (CONT'D)

biasing method is used, separate filament supplies are necessary for each tube.

An output device such as a choke or transformer should be used to transfer power efficiently from the tube to the load.

Class B Audio-frequency Power Amplifier or Modulator

In this type of service two tubes are used in a "balanced" circuit, each tube conducting only half the time. The plate loss becomes maximum at a signal slightly less than 1, depending on the circuit conditions, and therefore the plate dissipation must be limited so that at this value of sustained signal, the plate loss will not exceed the maximum rating.

The input transformer should be designed to give good frequency response when operated into an open circuit, such as that represented by the grid circuit of the Class B stage when the signal amplitude is small. It should be designed also to handle the required input power for maximum signal conditions.

The output transformer should be designed so that the resistance presented by the load is reflected as the proper plate-to-plate loading in the Class B stage. For example, if the load is a modulated Class C amplifier operating at 2000 volts and 500 milliamperes, the ratio of the output transformer to provide a plate-to-plate loading of 10,000 ohms would be $10000 \div 4000$, or 1.58 to 1, step-down. The transformer should be designed with a core large enough to avoid saturation effects, which would impair the quality of the output. If the secondary is to carry the direct plate current of the modulated amplifier, the core should be made larger and should include an air gap.

Class B Radio-frequency Amplifier

In Class B radio-frequency service, the plate is supplied with unmodulated direct voltage, and the grid is excited by modulated r-f voltage. It is important to note that in this service the plate dissipation is greatest when the carrier is unmodulated. Therefore, the circuit should be adjusted so that, without modulation, the plate loss will not exceed the maximum rating.

Grid bias for Class B a-f or r-f service should be obtained from a battery or other d-c source of good regulation. It should not be obtained from a high-resistance supply such as a grid leak.

Class C Radio-frequency Power Amplifier Plate Modulator

In this type of service, the plate supply voltage is modulated so that the tube output is modulated radio frequency. Assuming a value, P, of plate input to be modulated, the amount of audio-frequency power to be supplied is equal to $\frac{m^2P}{2}$, where m is the modulation factor.

The maximum ratings and typical operating conditions given in the Technical Information are such that a modulation factor up to 1.0 may be used. When a lower value of modulation is used, the plate dissipation allowed may be increased, but should be limited so that with the modulation sustained at its peak value, m, the plate loss will not exceed a value $\frac{3}{2+m^2}$ times the plate dissipation rating.

Grid bias for this service may be obtained from a grid leak or from a combination of grid leak and generator, rectifier, or cathode-bias resistor, suitably by-passed for audio and radio frequencies. The combination method is desirable because distortion effects may be minimized.

Class C Radio-frequency Power Amplifier and Oscillator

In telegraph service, the plate input power is keyed, i.e., is on and off alternately in accordance with the characters of some code. During the key-down periods, the tube functions as an unmodulated radio-frequency power amplifier. The tube may be used also as an amplifier or oscillator without keying. In both types of service, the ratings given are for key-down conditions.

Certain methods of modulation may be applied to this class of service provided the modulation is essentially negative and the positive peak of the audio-frequency envelope does not exceed 115 per cent of the carrier conditions.

Grid bias for Class C service may be obtained from a grid leak, from a battery, from a rectifier of good regulation, or from a self-biasing resistor by-passed with a suitable capacitor. With the grid-leak method, the grid excitation must not be removed without also removing the plate voltage. Grid-bias values are not particularly critical, and correct circuit adjustment may be obtained with widely different values.

Note: The ratings and characteristics of a particular transmitting tube are given on the Description and Rating Sheet for that tube.

FORCED AIR-COOLED TYPES

INSTALLATION

Mechanical

The tube should be tested upon receipt in the equipment in which it is to be used. The glass bulb, and particularly the glass area around the terminals, should be free from foreign matter. The leads become hot during operation so that any foreign material may become charred and cause puncture of the bulb.

The standard mounting supports the tube in the correct vertical position with the glass end up. The tube must not be subjected to vibration or shock. It is advisable to secure the tube in its mounting jacket in the desired location be-

fore making the electrical connections. The grid and filament leads should not be taut, but should allow for some movement without placing a strain on the glass bulb. Before readjustment of the tube is made, the leads should be disconnected.

Cooling

The air-cooling system for the anode consists of a blower with a suitable air duct leading to the fin cooler of the tube. The air flow required is specified on the Description and Rating Sheet for each type. The temperature of the incoming air should not exceed 45 C.

Proper cooling must be provided to limit the glass temperature to not more than 150 C at the hottest point. Usually deflecting vanes diverting the outgoing air toward the terminal seals provide sufficient cooling. In some cases it may be necessary to provide a separate cooling system. This system may consists of a blower and an air duct of suitable cross-sectional area leading to a nozzle directing the air flow. For the 893A-R a nozzle is incorporated in the cathode base. The air flow required is specified on the Description and Rating Sheet for each type.

The cooling air must not contain any foreign matter. The air-cooling systems should be properly installed to insure safe operation of the tube under all conditions and for this reason should be electrically interconnected with the filament and plate supplies to prevent the application of voltages to the tube without suitable cooling. An air-flow interlock which removes the filament and plate power is necessary to protect the tube when the air flow is insufficient or ceases. Precautions should be taken to insulate the air-cooling system from the anode and grid.

Electrical

Suitable meters should be provided for reading filament voltage, plate voltage and current, and d-c grid current. A tube life recording meter (to read hours of operation) should also be provided.

The installation of all wires and connections must be made so that they do not lie on or close to the glass of the tube. Otherwise, severe trouble may arise from corona discharge or increased dielectric loss which will result in almost certain puncture.

The filament circuit carries a high current at low voltage. Therefore, precautions should be taken against loss of voltage and heating due to poor connections. The filament connectors particularly should be large and make good contact.

In the case of the 8002-R tube, three filament leads are brought out to terminals. These may be paralleled by capacitors to reduce the inductance of the filament circuit for the r-f returns. The filament sections must be operated in series from the filament supply. The center tap is to be used only for r-f or power supply returns.

The high initial rush of current through the filament when the switch is first closed should be limited by the use of some form of filament starter. This may be a system of time-delay relays cutting resistance out of the circuit, a high-reactance filament transformer, or a manual control. In any case, the starting current must never, even momentarily, exceed $1\frac{1}{2}$ times the normal value. Provision must be made also for accurate adjustment and maintenance of the filament voltage. The filament voltmeter should be connected to indicate the voltage at the filament terminals. The filament base should not be connected to ground or to any part of the circuit. Filament power may be alternating current or direct current. When alternating current is used, the plate and grid circuit returns should be made to the center point of the filament supply. When direct current is used, these returns should be made to the negative terminal.

For multiphase filament tubes it is essential that the connections for each type of filament voltage supply be made according to the circuit diagram to prevent distortion and possible failure of the filament.

The plate circuit should be provided with a time-delay relay to delay the application of plate voltage until the filament has reached at least eighty per cent of the normal voltage. It must be provided also with protective devices to prevent the tube from drawing a heavy overload. The coil of an instantaneous overload relay (set for slightly higher than normal plate current) placed in the ground lead of the plate return and operating to remove the plate voltage, may be used for this purpose. The total time required for the operation of the relay and breaker should be in the order of one-tenth second and not more than one-sixth second. Plate series protective resistors should also be provided to protect the tube from excessive energy dissipation during instantaneous failure of insulation, within the tube or within the transmitter. The minimum value of this resistor which will give adequate protection with minimum power loss is given on the Description and Rating Sheet. Precautions must be taken so that no high capacitance is connected directly across the tube in such a manner that a disturbance within the tube will discharge appreciable energy from the capacitor.

The grid circuit should be provided with heavy conductors, carefully connected, in order to prevent overheating of the grid terminal due to r-f currents.

In the 8002-R tube three grid leads are brought out to terminals. These may be used in parallel to reduce the inductance of the grid circuit. If desired, to reduce coupling, one lead may be used for the neutralizing circuit and the other two for the grid-excitation circuit. When the tube is used in an oscillator circuit at the higher frequencies, it may be necessary to

FORCED AIR-COOLED TYPES (CONT'D)

INSTALLATION (CONT'D)

neutralize the feedback partially in order to prevent excess grid excitation caused by the normal grid-plate capacitance.

If two or more tubes are used in the circuit, controls should be provided so that adjustment may be made to balance properly the plate current taken by each tube.

In Class B service, grid bias of excellent regulation is usually required.

In Class C service, the bias voltage may be supplied by a grid leak, or by a combination of grid leak and generator, grid leak and rectifier, or grid leak and cathode-bias resistor suitably by-passed. The combination method is particularly suitable to reduce distortion, especially in plate-modulated operation. Since the grid-bias voltage for Class C service is not particularly critical, correct circuit adjustment may be obtained with values differing widely from those indicated for this service.

The circuits should be arranged to prevent parasitic oscillations so that the tube will not be subjected to excessive voltages and currents.

OPERATION

When a new tube is first placed in operation, it should be operated without plate voltage for fifteen minutes at rated filament voltage. After this initial preheating schedule, plate voltage can be applied. Operate for fifteen minutes at approximately one-half the usual plate voltage. Full voltage may then be applied and the tube operated under the normal load conditions for a period of one hour or more. Every three months spare tubes should be given this preheating and initial operation schedule.

The filament should be operated at constant voltage rather than constant current and must be allowed to reach at least eighty per cent normal voltage before plate voltage is applied. Intermittent power supply interruptions may be allowed provided the time off does not exceed one second. If the tube is to be used at relatively low output, the plate current will be less than normal, requiring less than normal emission of the filament. The filament, therefore, may be operated at a voltage slightly lower than rated voltage, giving longer life. The permissible reduction in filament voltage may be checked by reducing the filament voltage with the transmitter under normal operation to a value where reduction in output or increase in distortion can just be detected. The filament voltage must then be increased by an amount equivalent to the maximum percentage regulation of the filament supply voltage. Care must be taken that sufficient emission is provided. Otherwise, instability of operation or excessive distortion may be experienced, or the rated plate dissipation of the tube may be exceeded. From the viewpoint of tube life, it is usually economically advantageous to provide good regulation of the filament voltage. For example, if the filament is operated continuously at six per cent above normal voltage, the evaporation life will be reduced to approximately one half.

When a multiphase filament-supply voltage is used, the phase voltages must all balance within fifteen per cent during the filament starting period. During normal operation the phase voltages must never, even momentarily, exceed ten per cent unbalance.

If the apparatus in which the tube is used is to be idle for periods not exceeding two hours, voltage should be maintained on the filament. However, if desired, provision may be made to reduce the filament voltage to approximately eighty per cent of the rated value during the stand-by. Where stand-by periods exceed two hours the filament voltage may be removed.

When direct-current filament excitation is used, the filament leads should be reversed every five hundred hours of operation.

Maximum ratings and typical operating conditions for each recommended class of service are given on the Description and Rating Sheet. The amplifier classifications used are those given in the Report of the Standards Committee of the Institute of Radio Engineers

The output values given in the tabulation on the Description and Rating Sheet are approximate tube outputs under certain typical operating conditions. These must not be used as output ratings; circuit losses must be subtracted from the tube output in calculating the useful output.

In determining the value of plate voltage for normal operation, the line voltage fluctuation, load variation, and manufacturing variations must be estimated so that the maximum rated values will not be exceeded.

When a new circuit is tried or when adjustments are made, the plate voltage should be reduced to approximately one-half the rated value to prevent damage to the tube or associated apparatus. After correct adjustment has been made with the tube operating smoothly and without excessive heating of the cooler or the glass bulb, the plate voltage may be raised in several steps to the desired value. Adjustments should be made at each step for optimum operation.

In case of overload and resultant overheating of the tube, the vacuum may be impaired. When the quantity of gas is not too great, the tube may be operated to bring about an electrical clean-up of the gas. The first step in the process should be a short period of operation at a plate voltage of one-half the normal value. The plate voltage should then be increased to the normal value and the tube allowed to operate for a period of one hour or more. In severe cases it may be possible to age the tube by operating with a series resistor in the plate supply. Short periods of operation may be conducted at each step as the resistor is reduced until stable operation at the normal plate voltage is obtained.

WATER-COOLED TYPES

INSTALLATION

Mechanical

The handling of a transmitting tube requires care since a tube may be damaged if subjected to shock or vibration.

The tube should be tested upon receipt in the equipment in which it is to be used. The glass bulb, and particularly the glass area around the terminals, should be free from foreign matter. The leads become hot during operation so that any foreign material may become charred and cause puncture of the bulb.

The standard jacket supports the tube in the correct vertical position with the filament end up. The tube must not be subjected to vibration or shock.

The tube should be placed in its water jacket carefully, centered accurately, and then firmly fastened. Secure the tube in its jacket before making the electrical connections. When the jacket-clamping device is tightened, the contacts must seat properly on the tube flange. Proper seating in the jacket will be obtained by use of the standard gasket which is supplied with each tube. A new gasket must be used whenever a tube is placed in the jacket. It is recommended that the gasket be coated with a thin film of prodag to prevent sticking. The clamping device should first be tightened gently to prevent possible strain at the anode seal caused by improper seating of the flange. When this preliminary adjustment indicates the tube is seated properly, the jacket can be tightened securely. Do not tighten more than required to seat the anode flange properly on the gasket. If these precautions are not taken, the tube may be ruined by a glass crack caused by the uneven pressure on the flange. The grid and filament leads should not be taut, but should allow for some movement without placing a strain on the glass bulb. When electrical connections are made to the tube, care should be taken to exert as little bending movement as possible to the terminal pins. Before a readjustment of either the tube or its jacket is made, the leads should be disconnected. The retaining lugs, threads, and moving parts of the jacket may be kept free from rusting and sticking by coating them with a thin film of oil or oildag. Do not use an adhesive to seal the jacket against leaks because any sticking of the anode in the jacket may cause the tube to be damaged during its removal.

The water-cooling system for the anode consists, in general, of a source of cooling water, a water jacket, and a feed-pipe system which carries the water to and from the jacket. When the anode is at a high potential above ground, the feed-pipe system should have good insulation qualities and proper design to reduce the leakage current to a negligible value.

An outlet water thermometer and a water flowmeter are advisable since water flow and temperature are important. The water must not be allowed to boil and the flow must be great enough to prevent steam bubbles forming on the plate surface. The temperature of the water at the outlet must not exceed 70 C. Proper functioning of the water-cooling system is of the utmost importance. Even a momentary failure of the water flow will damage the tube. It is, therefore, necessary to provide a method for preventing operation of the tube during such a condition. This may be accomplished by the use of water-flow circuit breakers, or interlocks, which open the filament and plate power supplies whenever the flow is insufficient or ceases.

The cooling water should flow upward along the anode and the piping must be arranged to avoid air traps in the jacket. Excessive water hammer may develop peak water pressures sufficient to deform the anode. Therefore, the piping system must be installed and operated properly so that water hammer does not occur. The pressure in the jacket must not exceed 80 pounds per square inch. If necessary, relief valves should be installed to prevent excessive pressure. The rate of water flow given on the Description and Rating Sheet is usually sufficient for all types of service. Under abnormal conditions an increased rate of flow may be necessary to prevent overheating. The formation of steam may be detected by the use of an improvised stethoscope which may consist of six feet of insulating tubing with proper safety precautions. The stethoscope is pressed against the jacket at various points while suitable listening observations are made.

Distilled water is recommended for cooling because it greatly reduces the probability of scale formation on the anode during life. Scale hinders proper transfer of heat from the anode to the water. The mineral content, flow, heat dissipation, temperature, etc., of undistilled water are so varied that no specific recommendations to prevent scale can be made. A sample of the cooling water should be analyzed before plans are made for the water system. In general, water which shows a hardness greater than 10 grains per gallon should not be used. Regardless of the kind of water used, the system should be kept free from accumulation of foreign material. A 10 per cent solution of hydrochloric acid will ordinarily dissolve scale in emergency cases. After such treatment, the anode should be rinsed carefully. The tube must be removed from its jacket for this treatment and, since frequent removals are objectionable because of danger from accidental breakage, it is desirable to prevent the formation of scale.

When forced-air cooling is called for on the Description and Rating Sheet, a system should be used which consists of a blower with air

WATER-COOLED TYPES (CONT'D)

INSTALLATION (CONT'D)

ducts of proper cross-sectional area which supply air to suitable air nozzles. In certain of the larger tubes (such as the 862-A and the 898-A) both the bulb and the stem must be air cooled. In these tubes the nozzle which supplies air to the filament stem is incorporated in the base, and the nozzle which supplies air to the bulb is part of the water jacket and acts as a combination air nozzle and electrostatic shield.

Tubes which require forced-air cooling on the stem only have an air nozzle incorporated in the cathode base.

Where the air nozzle is not part of the base or water jacket and the grid and filament terminals and the bulb require air cooling, a nozzle should be provided as part of the air-cooling system to direct the cooling air toward the top portion of the bulb.

The system should be arranged so that the temperature of the glass is not more than 150 C at the hottest point. Even when forced-air cooling is not called for on the Description and Rating Sheet, free circulation of air must be provided to limit the temperature of the glass to this value. When there is inadequate ventilation or where a tube is used at the higher frequencies, forced-air cooling may be required. In such cases a small blower may be used with suitable nozzles directing the air to the areas where cooling is necessary.

The cooling air must not contain any foreign matter. The air-cooling system should be electrically interconnected with the filament and plate supplies to prevent the application of voltage to the tube without suitable cooling. Precautions should be taken to insulate the air-cooling system from the anode and grid.

Air and water cooling of the GL-862-A and -898-A must be continued for ten minutes after power has been removed. For all other types water cooling only must be continued for two minutes after shutdown.

Electrical

Suitable meters should be provided for reading filament voltage, plate voltage, and current, and d-c grid current. A tube life recording meter (to read hours of operation) should also be provided.

The installation of all wires and connections must be made so that they do not lie on or close to the glass of the tube. Otherwise, severe trouble may arise from corona discharge or increased dielectric loss which will result in almost certain puncture.

The filament circuit carries a high current at low voltage. Therefore, the usual precautions should be taken against loss of voltage and heating due to poor connections. The filament connectors particularly should be large and make good contact.

In the case of the 8002 tube, three filament leads are brought out to terminals. These may be paralleled by capacitors to reduce the inductance of the filament circuit for the r-f returns. The filament sections must be operated in series from the filament supply. The center tap is to be used only for r-f or power supply returns.

The high initial rush of current through the filament when the switch is first closed should be limited by the use of some form of filament starter. This may be a system of time-delay relays cutting resistance out of the circuit or high-reactance filament transformer or a manual control. In any case, the starting current must never, even momentarily, exceed $1\frac{1}{2}$ times the normal value. Provision must be made also for accurate adjustment and maintenance of the filament voltage. The filament voltmeter should be connected to indicate the voltage at the filament terminals. The filament base should not be connected to ground or to any part of the circuit. Filament power may be alternating current or direct current. When alternating current is used, the plate and grid circuit returns should be made to the center point of the filament supply. When direct current is used, these returns should be made to the negative terminal.

For multiphase filament tubes it is essential that the connections for each type of filament voltage supply be made according to the circuit diagram to prevent distortion and possible failure of the filament.

The plate circuit should be provided with a time-delay relay to delay the application of plate voltage until the filament has reached at least 80 per cent of the normal voltage. It must be provided also with protective devices to prevent the tube from drawing a heavy overload. The coil of an instantaneous overload relay (set for slightly higher than normal plate current) placed in the ground lead of the plate return and operating to remove the plate voltage may be used for this purpose. The total time required for the operation of the relay and breaker should be in the order of one-tenth second and not more than one-sixth second. Plate series protective resistors should also be provided to protect the tube from excessive energy dissipation during instantaneous failure of insulation, within the tube or within the transmitter. The minimum value of this resistor which will give adequate protection with minimum power loss is given on the Description and Rating Sheet. Precautions must be taken so that no high capacitance is connected directly across the tube in such a manner that a disturbance within the tube will discharge appreciable energy from the capacitor.

The grid circuit should be provided with heavy conductors, carefully connected, in order to prevent overheating of the grid terminal due to r-f currents.

In the 8002 tube three grid leads are brought out to terminals. These may be used in parallel

to reduce the inductance of the grid circuit. If desired, to reduce coupling, one lead may be used for the neutralizing circuit and the other two for the grid-excitation circuit. When the tube is used in an oscillator circuit at the higher frequencies, it may be necessary partially to neutralize the feedback in order to prevent excess grid excitation caused by the normal grid-plate capacitance.

If two or more tubes are used in the circuit, controls should be provided so that adjustment may be made to balance properly the plate current taken by each tube.

In Class B service, grid bias of excellent regulation is usually required.

In Class C service, the bias voltage may be supplied by a grid leak, or by a combination of grid leak and generator, grid leak and rectifier, or grid leak and cathode-bias resistor suitably by-passed. The combination method is particularly suitable to reduce distortion, especially in plate-modulated operation. Since the grid-bias voltage for Class C service is not particularly critical, correct circuit adjustment may be obtained with values differing widely from those indicated for this service.

The circuits should be arranged to prevent parasitic oscillations so that the tube will not be subjected to excessive voltages and currents.

OPERATION

When a new tube is first placed in operation, it should be operated without plate voltage for fifteen minutes at rated filament voltage. After this initial preheating schedule, plate voltage can be applied. Operate for fifteen minutes at approximately one-half the usual plate voltage. Full voltage may then be applied and the tube operated under the normal load conditions for a period of one hour or more. Every three months spare tubes should be given the preheating and initial operation schedule discussed above.

The filament should be operated at constant voltage rather than constant current and must be allowed to reach at least 80 per cent normal voltage before plate voltage is applied. Intermittent power supply interruptions may be allowed provided the time off does not exceed one second. If the tube is to be used at relatively low output, the plate current will be less than normal, requiring less than normal emission of the filament. The filament, therefore, may be operated at a voltage slightly lower than rated voltage, giving longer life. The permissible reduction in filament voltage may be checked by reducing the filament voltage with the transmitter under normal operation to a value where reduction in output or increase in distortion can just be detected. The filament voltage must then be increased by an amount equivalent to the maximum percentage regulation of the filament supply voltage. Care must be taken that sufficient emission is provided. Otherwise, instability of operation or excessive distortion may be experienced, or the rated plate dissipation of the tube may be exceeded. From the viewpoint of tube life, it is usually economically advantageous to provide good regulation of the filament voltage. For example, if the filament is operated continuously at 6 per cent above normal voltage, the evaporation life will be reduced to approximately one half.

When a three-phase or six-phase a-c filament-supply voltage is used, the phase voltages must all balance within 15 per cent during the filament starting period. During normal operation the phase voltages must never, even momentarily, exceed 10 per cent unbalance.

If the apparatus in which the tube is used is to be idle for periods not exceeding two hours, voltage should be maintained on the filament. However, if desired, provision may be made to reduce the filament voltage to approximately 80 per cent of the rated value during the stand-by. Where stand-by periods exceed two hours the filament voltage may be removed.

When direct-current filament excitaton is used, the filament leads should be reversed every 500 hours of operation.

Maximum ratings and typical operating conditions for each recommended class of service are given on the Description and Rating Sheet. The amplifier classifications used are those given in the Report of the Standards Committee of the Institute of Radio Engineers.

The output values given in the tabulation on the Description and Rating Sheet are approximate tube outputs under certain typical operating conditions. These must not be used as output ratings; circuit losses must be subtracted from the tube output in calculating the useful output.

The approximate anode dissipation may be calculated from the following expression:

$$P(\text{kilowatts}) = n\frac{(T_2 - T_1)}{(\quad 4 \quad)}$$

in which (T_1) is the known initial temperature of the cooling water in degrees centigrade, (T_2) the temperature of the water at the water jacket outlet in degrees centigrade, and (n) the water flow in gallons per minute.

In determining the value of plate voltage for normal operation, the line voltage fluctuation, load variation, and manufacturing variations must be estimated so that the maximum rated values will not be exceeded.

When a new circuit is tried or when adjustments are made, the plate voltage should be reduced to approximately one-half the rated value to prevent damage to the tube or associated apparatus. After correct adjustment has been made with the tube operating smoothly and without excessive heating of the cooling water or the glass bulb, the plate voltage may be raised in several steps to the desired

WATER-COOLED TYPES (CONT'D)

OPERATION (CONT'D)

value. Adjustments should be made at each step for optimum operation.

In case of overload and resultant overheating of the tube, the vacuum may be impaired. When the quantity of gas is not too great, the tube may be operated to bring about an electrical cleanup of the gas. The first step in the process should be a short period of operation at a plate voltage of one-half the normal value. The plate voltage should then be increased to the normal value and the tube allowed to operate for a period of one hour or more. In severe cases it may be possible to age the tube by operating with a series resistor in the plate supply. Short periods of operation may be conducted at each step as the resistor is reduced until stable operation at the normal plate voltage is obtained.

Before turning off the water preparatory to removing the tube, be sure that the inner electrodes are below red heat. Do not force the tube when removing it from the jacket. Release the securing device so that it will not stick, then manipulate the tube carefully to avoid putting strains on the glass. If sticking does occur, rotate the tube gently back and forth, at the same time raising it carefully.

HIGH-VACUUM RECTIFIERS

INSTALLATION

Mechanical

Each tube is suspended within its shipping carton so that it will not come in contact with the sides of the carton during shipment. The tube should be stored in the carton and should be protected from moisture and extreme temperature changes. Furthermore, while the tube is being handled it should be kept in a vertical position with the cathode end down. Under no circumstances should crated tubes be piled on top of one another.

In installations where a nonrigid anode connection is used, reasonable flexibility must be provided to prevent placing a strain on the cathode base. Since the bulb becomes hot during continuous operation, it should not come in contact with any metallic body, nor be subjected to the drops or spray of any liquid.

The accumulation of dust and metallic particles on the outer surface of the glass walls will increase the leakage over this surface. As this may result in tube failure from arc-over, periodic cleaning of these surfaces should be maintained.

Cooling

Free circulation of cool air around the glass bulb should be maintained. High-temperature air from other apparatus should be prevented from circulating around the tubes.

Filament power should be supplied from a filament-lighting transformer insulated for the proper voltage. This transformer should be provided with a secondary midtap for the plate circuit return lead. The filament excitation supply must be provided with suitable resistors or other regulating devices to apply the power to the filament gradually and to adjust it accurately during operation. The filament voltage should be measured directly at the filament terminals.

The installation of all wires and connections should be made so that they do not lie on or close to the glass of the tube. An air space of approximately the length of the tube should be maintained between the bulb and any metallic body during operation. Otherwise, corona discharge may develop and result in puncture of the glass bulb.

OPERATION

Ordinary care in handling and provision for the necessary operating conditions will minimize accidental damage to the tube.

The maximum values given in the rating of these tubes are the values beyond which it is unsafe to operate, if the maximum life and performance are desired. For example, the maximum operating plate voltage can be obtained from the Technical Information and the amount of voltage fluctuation, due to line, load, and manufacturing variation in the apparatus must be determined or estimated. An average value of plate voltage must be used which, under normal operating variations, does not exceed the maximum rated value.

The ratings given on the Technical Information prescribe two limiting operating conditions. The first is a maximum peak inverse voltage which should not exceed a certain safe value determined by the insulation between electrodes of the tube. The maximum peak inverse voltage is the highest voltage that the tube will insulate on the half cycle when no current is passing through the tube. Line surges, circuit capacitance, wave form distortion, and the maximum peak voltage of the applied alternating voltage may cause the inverse voltage to exceed the maximum peak voltage rating.

The second limiting value is the power dissipation of the plate, determined by the d-c load current and the resultant tube voltage drop. Since the over-all rectifier design, and in particular the filter capacitances, determine the amount of current available from a system, oscilloscopic checks should be made of the actual load conditions. If the rectifier is to be operated at full peak current ratings, it will be necessary to maintain exactly the rated filament voltage. If the peak current to be drawn is less than the full rated value, the allowable filament

voltage regulation increases as the value of the peak current decreases.

The following tabulation shows the reduction of the maximum peak current with reduced filament voltage:

Filament Voltage Per Cent of Rated	Maximum Peak Current Per Cent of Rated
100	100
95	65
90	40
85	25
80	10

Excessive anode temperature is an indication of abnormal voltage drop in the tube and is usually caused by low filament temperature. Filament voltage greater than the rated value, while increasing the maximum peak current available, will result in decreased tube life.

Note: The ratings and characteristics of a particular tube are given under Technical Information on the Description and Rating Sheet for that tube.

MERCURY-VAPOR RECTIFIERS—INSTALLATION AND OPERATION

INSTALLATION

Mechanical

Mercury-vapor rectifiers should be mounted in sockets or supports of good quality with connections of sufficient current-carrying capacity, and should be operated only in a vertical position, as indicated by the outline drawing. A shock-absorbing mounting must be used if the tube is to be subjected to excessive vibration or shock. Since the tube becomes hot during continuous operation, any glass parts, including the seals, should not come in contact with any metallic body; nor be subjected to the drops or spray of any liquid.

Electrical

The cathode information is given in terms of the normal heating voltage and the approximate current. The cathode should be operated preferably from an a-c source. If alternating current is not available, a d-c source may be used. With each installation it is good practice, where economically justified, to provide a voltmeter connected directly across the filament terminals of the socket.

The cathode must assume operating temperature before electron current is drawn. The delay may be accomplished either by manual or automatic control of the anode circuit. The automatic method is recommended where economically justified, because of the greater protection. The time required for the cathode to come up to normal operating temperature under conditions of good filament circuit regulation is included under Technical Information. In the case of mercury-filled tubes, it is also necessary to bring the condensed-mercury temperature to the minimum operating value. Where the ambient temperature is low and/or where the cathode is quick-heating, this may require a longer time than to bring the cathode to proper temperature.

When tubes with the midtapped filamentary type of cathode are used, the return leads from the anode circuit should be connected to the midtap. If the filament is not midtapped, these leads should be connected to the midtap of the filament transformer winding in the case of alternating current, or to the negative filament terminal in the case of a d-c supply. When an a-c supply is used, it is desirable both with the midtapped filamentary type of cathode and with the type where the filament is not midtapped, to use a filament winding with the filament voltage approximately 90 degrees out of phase with the anode voltage. However, the midtap of the filament transformer must not be used with tubes employing the indirectly heated type of cathode. In tubes of this type, the cathode is connected to one side of the filament, and only corresponding filament prongs should be connected when operating the filaments of two or more tubes in parallel.

An appreciable glow in the tube, when plate voltage is not applied, is an indication that the tube is exposed to radio frequency. Such a condition should be corrected; otherwise the tube life and performance will be adversely affected.

Thermal

When a mercury-vapor tube is first placed in operation, it is necessary to distribute the mercury properly before anode voltage is applied. This is usually accomplished by applying filament voltage for a period of time sufficient to distill the mercury into the cooling chamber of the tube. The location of the cooling chamber is indicated on the outline drawing by the words "controlling mercury temperature."

This time is generally less than one hour. This procedure need not be repeated unless, during subsequent handling or treatment the mercury is spattered or distilled on the elements or upper portion of the tube.

The design of equipment in which a mercury-vapor tube is used, should be such as to ensure the tube's operating within the condensed-mercury temperature limits over the range of ambient temperatures to be encountered.

When mercury-vapor tubes are subjected to low ambient temperatures or when it is desired to reduce the mercury-heating time (the time required to raise the mercury temperature to operating range), some form of heat-conserving enclosure should be used. This may be provided

INSTALLATION (CONT'D)

with thermostatically controlled shutters and/or heaters to bring the condensed-mercury temperature up within the operating range. When heaters are used, they should be located in such a position that the normal condensed-mercury region always remains the coolest portion of the tube enclosure.

When high ambient temperatures are encountered, it may be possible to utilize "chimneylike" enclosures to increase the natural convection cooling. In some cases the use of forced air may be necessary.

OPERATION

Careful handling and conservative operation will be amply repaid by longer and more uniform tube life. Three of the fundamental limits on the operation of mercury-vapor tubes are the maximum peak inverse anode voltage, maximum instantaneous anode current, and the maximum average anode current.

Cathode Circuit

The cathode voltage, as indicated by the voltmeter, should not deviate from the rated value by more than five per cent. Filament voltage should be set so that voltage fluctuations give an average value equal to the rated filament voltage. Too low filament voltage may result in very short life or perhaps immediate failure due to loss of emission. Too high voltage will shorten the life of the cathode somewhat.

During stand-by periods the filament should be operated at normal voltage.

Anode Circuit

The peak inverse voltage applied to the anode should never exceed the rated value. In the usual single-phase circuits, the peak inverse voltage, for sine-wave conditions may be taken as the total anode-transformer secondary voltage (rms value) multiplied by 1.4. The relations between the peak inverse voltage, the direct voltage, and the rms value of alternating voltage depend largely upon the individual characteristics of the rectifier circuit and the power supply. Line surges, keying surges or any other transient or wave-form distortion may raise the actual peak voltage to a value which is higher than that calculated from the sine-wave voltages in the transformer. It should, therefore, be emphasized that the maixmum rating of the tube refers to the actual inverse voltage and not to the calculated values. A cathode-ray oscilloscope or a spark gap connected across the tube is useful in determining the actual peak inverse voltage.

The instantaneous anode current experienced is affected largely by the characteristics of the output circuit, including a filter if one is used. In the case of a circuit giving full-wave rectification, if the output circuit is highly inductive with respect to the tube, the instantaneous current may approach the d-c reading in the load circuit. If the output circuit is highly capacitive with respect to the tube, the instantaneous current in the tube may be many times the load current. Analysis of the individual circuit is necessary.

The average anode current must not exceed the rated value. With a steady load this may be read directly on a d-c meter. In the case of fluctuating loads, however, the reading should be averaged over a period not exceeding the time shown under Technical Information.

The maximum surge current is the maximum instantaneous current that can pass through the tube under the most adverse conditions. This rating is intended to form a basis for set design, as it not only limits the currents which might flow during abnormal conditions, but also assures more reliable tube performance than would be obtained with circuits having too low a value of impedance. It does not mean that the tubes can be subjected to short circuit without the probability of a corresponding reduction in life and the possibility of failure. The duration of the surge current shall not be greater than the time shown on the Technical Information.

The voltage drop from anode to cathode is so low that it has little effect on the complete circuit except when the anode voltage used is low. This drop varies with the cathode voltage, with individual tubes, with life, and (in the case of mercury tubes) with the ambient temperature. The range given covers the maximum variations caused by all these factors as long as the tube is operated under the allowable conditions. Rapid changes are rarely encountered.

In installations where uninterrupted service is desired, the tube voltage drop should be checked at regular intervals. Since the tube drop is one criterion of tube condition, failure of tubes may be determined and even anticipated. The end of life will usually be preceded by an acceleration in the rate of increase at the test intervals. Tubes should be withdrawn from use at the beginning of this stage for maximum reliability of the installation.

NOTICE: GAS- OR VAPOR-FILLED TUBES, BECAUSE OF THEIR CONSTANT DROP PROPERTIES, REQUIRE SUFFICIENT PROTECTIVE RESISTANCE IN THE ANODE CIRCUIT TO LIMIT THE CURRENT TO THE RATED VALUE.

ELECTRONIC COMPONENTS DIVISION
GENERAL ELECTRIC
Schenectady 5, N. Y.

PRINTED IN U.S.A.

GENERAL ELECTRIC

LIGHTHOUSE TUBES

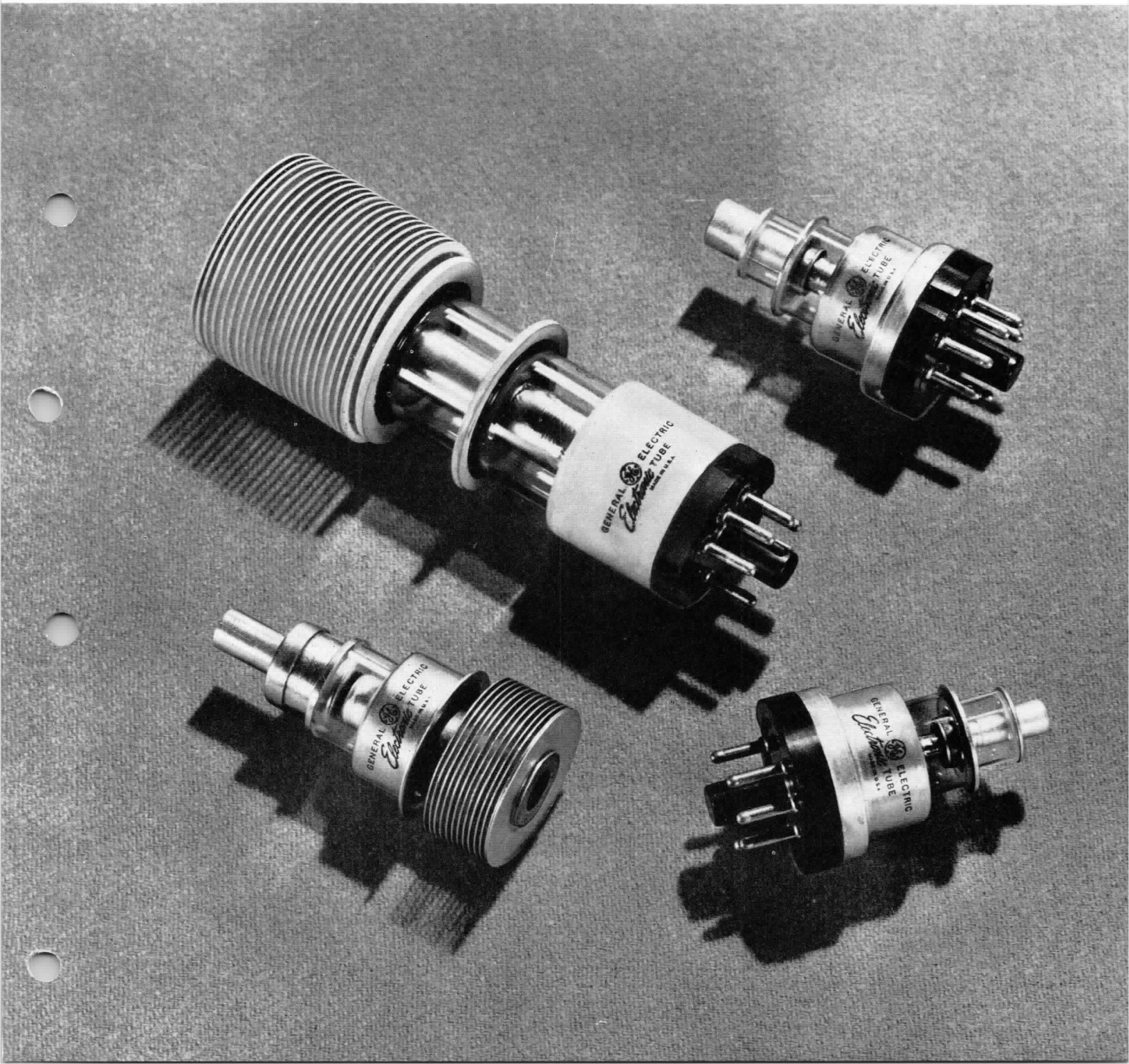

DESCRIPTION

The disk-seal triodes 2C39, 2C43, and 3C22 are used in transmitting applications as power amplifiers, c-w and pulsed oscillation generators for frequencies up to 3000 megacycles per second or higher. Their unique performance characteristics in the microwave range result from the following mechanical design features:

1. Lead inductances are reduced to a negligible value by use of the disk seals.
2. The parallel-plane structure permits the use of relatively small electrode areas; this makes possible low interelectrode capacitances, even with the close spacing of electrodes which is necessary at the frequencies at which the tubes operate.
3. Although the relatively small anode area makes radiation cooling from the anode surface impracticable, the anode lead has the same cross-sectional diameter as the anode surface, and heat conduction through the lead to the external circuit makes cooling relatively simple.
4. The coaxial structure makes possible practically complete enclosure of the radio-frequency fields in the types of circuits described later. This factor is extremely important in the microwave range where radiation from practical open-wire circuits becomes excessive.
5. Silver-plated parts reduce radio-frequency resistance to a minimum.

Another important application consideration features external cavities which allow continuous tuning and replacement of tubes without changing the cavity.

AMPLIFIER APPLICATIONS *

Power Amplifier

The useful frequency range of the disk-seal tube may be divided into three parts: a low-frequency range, a higher-frequency range, and a transition range. The frequency dividing lines are not actually fixed but depend upon the operating voltages, the external circuit used, and, of course, the tube type. For general purposes the lower range may be taken as those frequencies below 500 megacycles per second, the upper range those above 1000 megacycles per second, and the transition range those frequencies between 500 and 1000 megacycles per second. In the lower range, parallel-wire-line-type circuits are most commonly used, transit-time effects in the tube are negligible or small, and end effects due to the tube are small though not completely negligible. Efficiencies of operation in the low range are good and performance may be calculated with satisfactory accuracy from the d-c characteristics by using standard techniques. Ordinary precautions in the circuit assembly are sufficient to give good circuit efficiency, since shunting impedances due to ordinary losses are appreciably higher than the low load impedance required by G-E lighthouse tubes. Plate modulation may be used to give audio modulation without appreciable frequency-modulation and with reasonably low harmonic distortion.

In the higher-frequency range, the output, efficiency, and power gain fall off, and eventually reach zero at some frequency which depends upon the tube type but is appreciably above 3000 megacycles per second for the 2C39 and 2C43 tubes, but nearer 2000 megacycles per second for the 3C22. Self-enclosed coaxial circuits are used almost exclusively and much greater care must be used in guarding against radiation losses, poor contacts, leaky by-pass capacitors, and corrosion of circuits, since the tubes require much higher load impedances in this frequency range. Plate modulation produces phase as well as amplitude modulation because of transit-time effects in the tube.

The intermediate range is defined as the range of transition which lies between the two frequency extremes, and so has characteristics somewhere between the two.

Grounded-grid amplifier circuits are used almost exclusively with these tubes in all the ranges from 200 megacycles per second up. That is, one resonator is connected between plate and grid, and a second resonator between grid and cathode. This is done at the lower frequencies to decrease regeneration due to the grid-plate capacitance. The plate-cathode capacitance, the feedback element in a grid-return circuit, is smaller than the plate-grid capacitance by a factor of about 100, resulting in negligible regeneration in the lower-frequency range. This eliminates the need for undesirable neutralizing circuits. In the highest ranges of usefulness, the feedback susceptance arising from the finite plate-cathode capacitance is not completely negligible, and may give regeneration difficulties. It is possible, but not easy, to neutralize this feedback with the proper amount of external feedback. With self-enclosed coaxial circuits used at the highest frequencies, the grounded-grid type of circuit is also the only choice from mechanical considerations, for it is physically impossible to connect a self-enclosed, cathode-return-type circuit to the tube.

* *Circuits shown in ETX-110 are examples of possible tube applications and the description and illustration of them does not convey to the purchaser of tubes any license under patent rights of General Electric Company.*

AMPLIFIER APPLICATIONS (CONT'D)

Low-Frequency Amplifier

The circuit in Fig. 1 using 2C39 tubes is an example of the parallel-wire-line circuits used with the disk-seal tubes in the few hundred megacycles per second range.

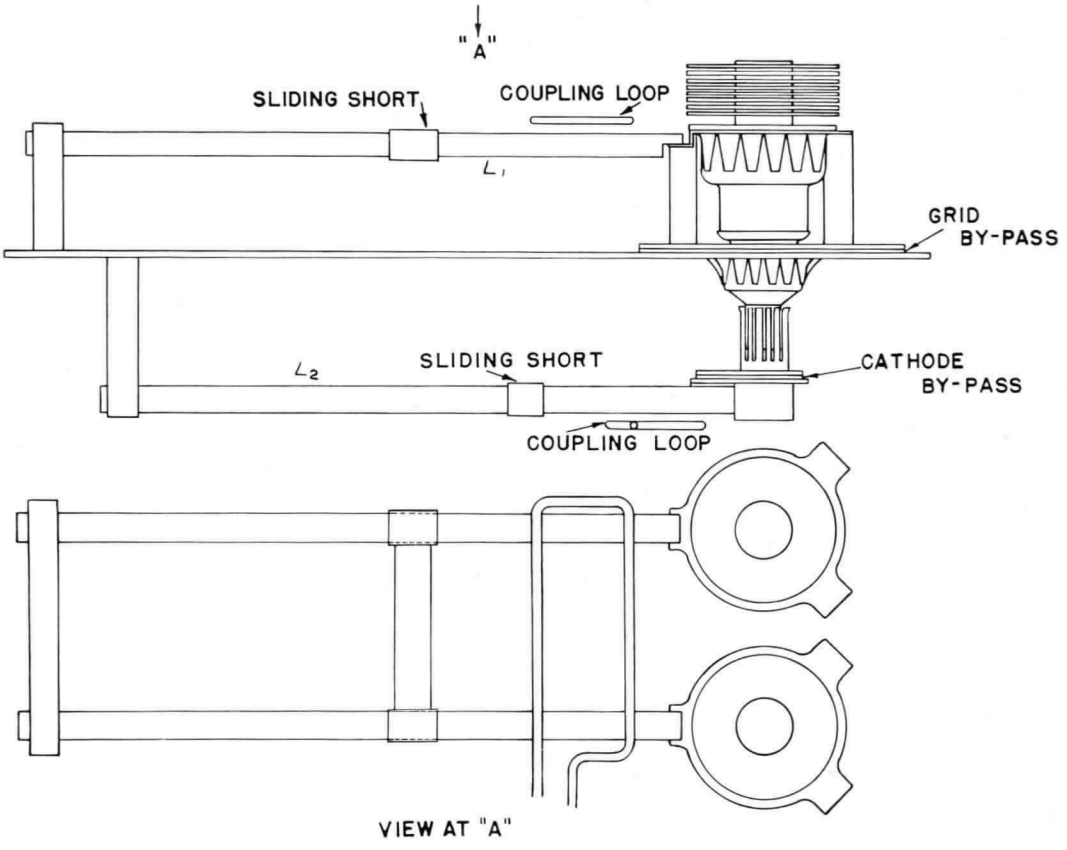

Fig. 1—Push-Pull Power-Amplifier Circuit for 2C39 Using Parallel-Wire Lines

The circuit is a grounded-grid connection and the two tubes are set with axes parallel, their grid rings making good contact with the conducting grid plane. One parallel-wire line is connected between the two anodes and runs parallel to the grid plane on the upper side, a second similar line is connected between the two cathodes on the under side. Both lines have sliding, shorting bars for tuning, and conducting plates should be connected to these bars to close off the dead region of the line from the active region. B-supply voltage is applied between the plate-to-plate line and the cathode-to-cathode line; bias voltage is applied between the cathode-to-cathode line and ground. This bias usually may be obtained by means of a grid-leak resistance, a cathode resistance, or a combination of the two. The filament leads are brought out through the hollow conductors of the cathode-to-cathode line. Power may be coupled in and out by means of loops placed with their planes parallel to the plane of the cathode-to-cathode and plate-to-plate lines respectively. Suitable matching arrangements should be provided on the lines to match to the driving source and to the load.

The entire circuit described above may be enclosed in a shielded box to prevent the occurrence of stray losses and feedback effects. If regeneration difficulties still persist, the contact to the grid ring should be investigated, for slight leaks through this contact invariably cause trouble. A lead sleeve placed around the grid ring before the grid ring makes contact with the circuit will often eliminate this difficulty.

AMPLIFIER APPLICATIONS (CONT'D)

Higher-Frequency Amplifier

The power-amplifier circuit in Fig. 2, also using Type 2C39, is an example of the coaxial circuits used with disk-seal tubes in the few thousand megacycles per second range.

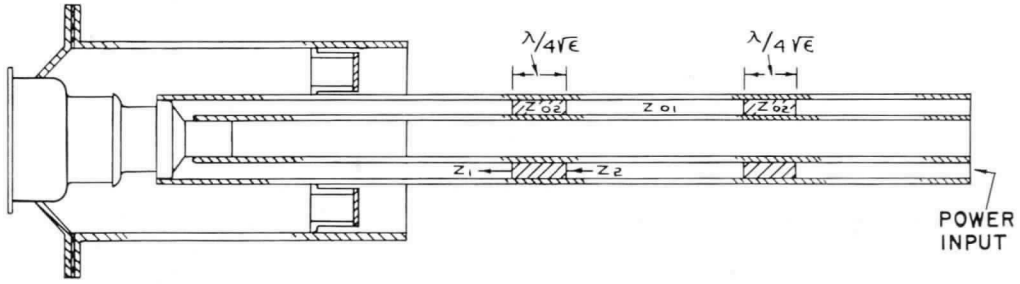

K-69087-21A15 9-12-45

Fig. 2—Coaxial Power-Amplifier Circuit for 2C39

The input line in this example is not so much a tuned circuit as it is a transmission line matched to the grid-cathode impedance by the dielectric slug matching system. This is possible because of the low value of the grid-cathode impedance. The output resonator must develop a high impedance for good operation in this frequency range, and much more care must, therefore, be taken in its design than in the design of lower frequency circuits. As shown, it consists of a larger coaxial line connected between plate and grid, with a by-pass capacitor breaking the d-c continuity at the plate end. A by-pass capacitor is also provided in the center conductor of the grid-cathode line to allow application of bias. A sliding plunger closes the resonator and tunes the circuit. Power is coupled out from the grid-plate resonator by introducing a loop or probe through the open tube provided for this purpose, and is connected to a coaxial line with proper matching controls.

OSCILLATOR APPLICATIONS

C-W Oscillator

Since the triode oscillator circuit may always be considered as a power amplifier with its r-f input supplied by feeding back a portion of its output in proper phase, the design of an oscillator consists in making the best possible power amplifier and then adding a feedback which delivers the right fraction of the output back to the input with proper phase. The power output from the oscillator would be expected to be less than that from a similarly operating power amplifier by the amount of the input driving power. Nearly all of the considerations discussed under Power Amplifier apply directly, and it remains only to design a satisfactory feedback system.

The feedback inherently present in the plate-cathode capacitance was discussed under Power Amplifier. Under certain conditions it is sufficient to cause oscillations, but usually not of sufficient strength to make a good power oscillator. Loops,

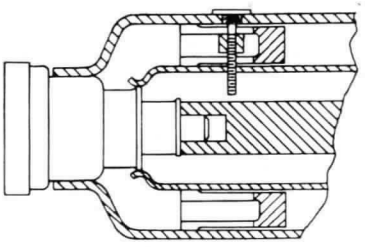

Fig. 3A—Movable Probe Feedback, Folded-Back Cavity

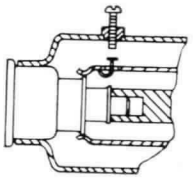

Fig. 3B—Loop-Probe Feedback, Folded-Back Cavity

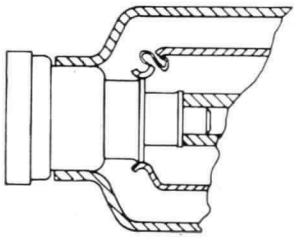

Fig. 3C—Loop Feedback, Folded-Back Cavity

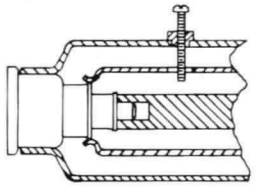

Fig. 3D—Fixed-Probe Feedback, Folded-Back Cavity

K-5109739 3-28-45

OSCILLATOR APPLICATIONS (CONT'D)

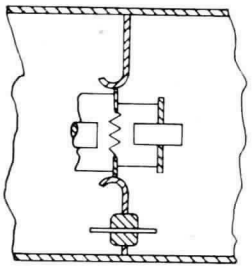

Fig. 3E—Probe Feedback, End-to-End Cavity

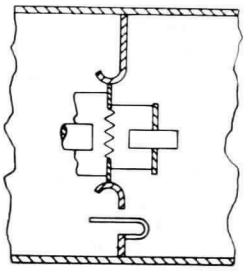

Fig. 3G—Loop-Probe Feedback, End-to-End Cavity

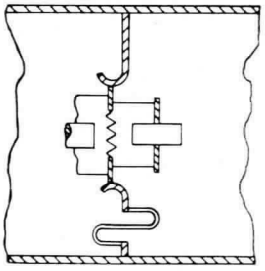

Fig. 3F—Loop Feedback, End-to-End Cavity

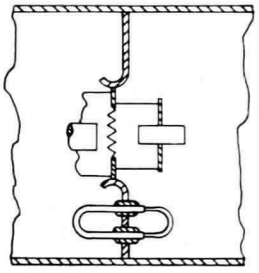

Fig. 3H—Adjustable Loop Feedback, End-to-End Cavity

K-5109740

3-28-45

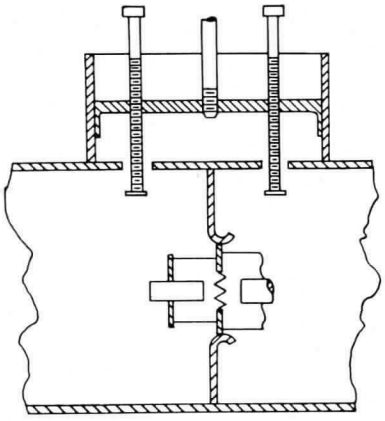

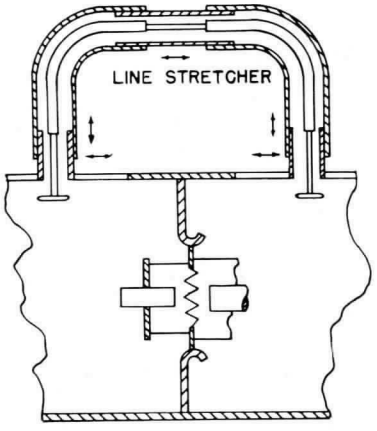

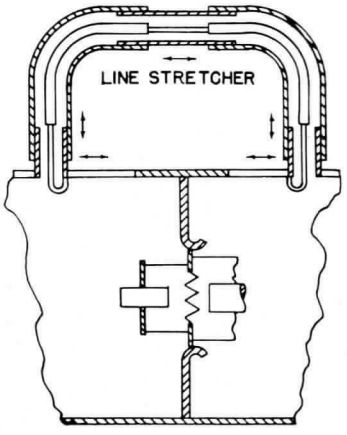

K-5109741

3-28-45

Fig. 3J and 3K—Adjustable Probe Feedback with Phasing Network End-to-End Cavity

Fig. 3L—Adjustable Loop Feedback with Phasing Network, End-to-End Cavity

OSCILLATOR APPLICATIONS (CONT'D)

probes, or holes between the input and output cavities are favorite means of obtaining additional feedback. Several methods of applying loop and probe feedbacks in their simplest forms are shown in Fig. 3A to 3H on page 5, together with cavities suitable for the 2C40 and 2C43 lighthouse tubes.

The limitations on the use of the simplest loop and probe feedbacks arise mainly because these feedbacks do not have parameters enough to adjust both the phase of feedback and the magnitude of feedback to optimum. Fig. 3J and 3K illustrate the addition of phasing networks between the two loops or probes to control the phase separately.

A modified oscillator circuit particularly useful above 2000 megacycles is shown in Fig. 4 above. This circuit is commonly called a re-entrant oscillator. Fig. 5 shows a curve of essential dimensions versus frequency for this circuit. In the re-entrant circuit the radio-frequency fields from the grid-plate space are coupled directly back to the grid-cathode space. The figures shown below and the explanation following describe the operation of this type of circuit.

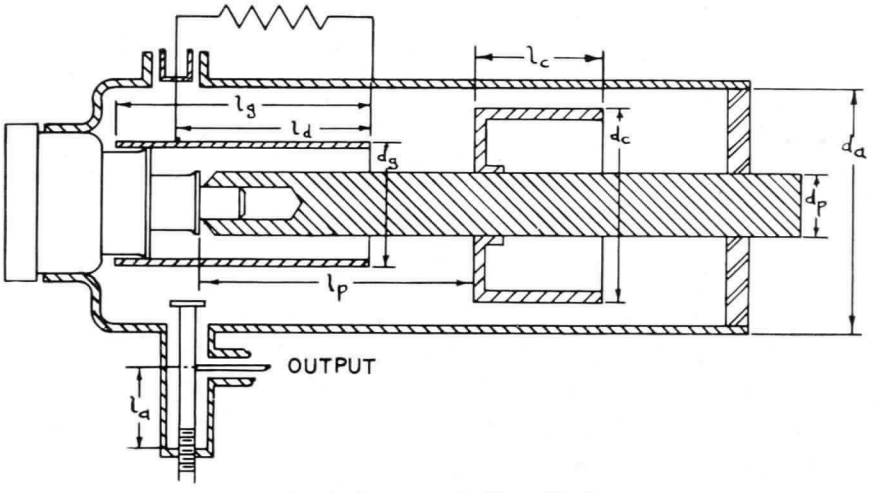

Fig. 4—Re-entrant Oscillator Circuit

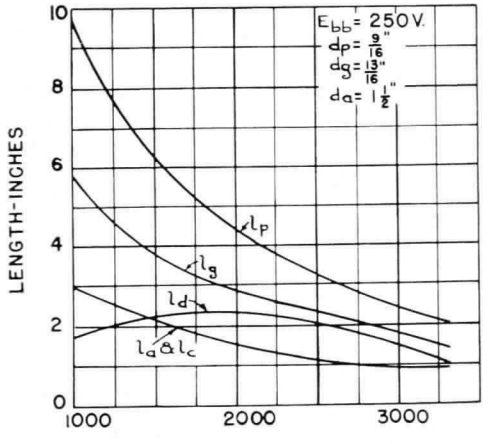

K-5109727 12-15-44

Fig. 5—Curves of Approximate Dimensions for Circuit Shown in Fig. 4

The radio-frequency fields between grid and anode are propagated along the grid-plate line to the point at which the grid cylinder is terminated. At this point, the presence of the choke or plunger causes this energy to propagate along the grid-cathode line in the direction of the base of the tube. A certain amount of the power propagated in this direction is coupled to the output by the output probe, and enough additional power to supply the tube loss is fed back into the grid-cathode circuit, thus sustaining oscillation. The length of the grid cylinder, l_g, is the most im-

OSCILLATOR APPLICATIONS (CONT'D)

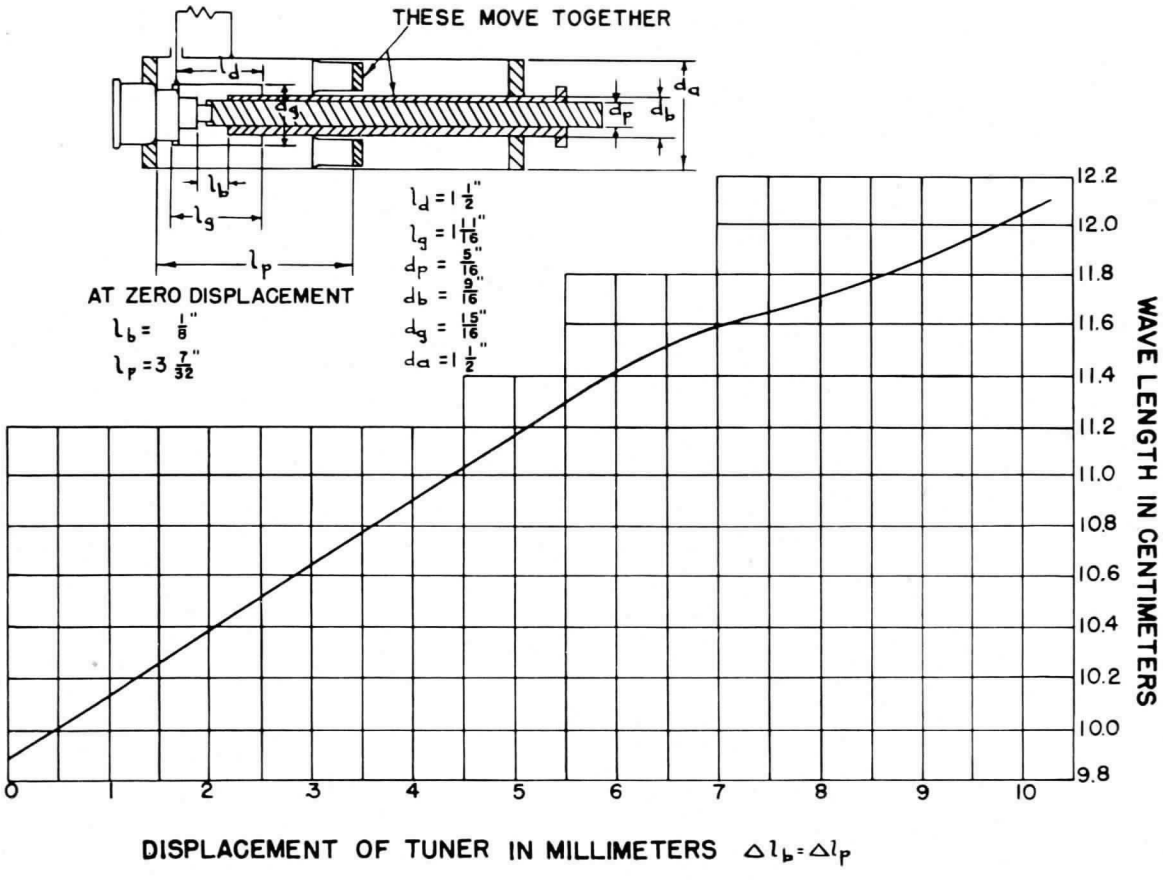

Fig. 6—Method for Tuning Re-entrant Oscillator

K-5109742 12-22-44

portant factor in determining frequency. The position of the choke, l_p, with respect to the anode of the tube has some small effect upon frequency, but for the most part, the choke is primarily important in its ability to change the phase of the feedback to the cathode. In this respect its position affects quite materially the efficiency of the oscillator. The length of the choke, l_c, is made one-quarter wave length at the center of the frequency band to be tuned. This provides essentially a radio-frequency short circuit on the tube side of this choke, yet provides for isolation of d-c voltages.

Tuning of the re-entrant oscillator can be accomplished in a number of ways; two recommended methods are illustrated here. Fig. 6 above shows a method of tuning which utilizes a two-piece concentric rod which makes connection to the plate of the tube. The inner rod is held in a fixed position and the outer cylinder slides over it. The

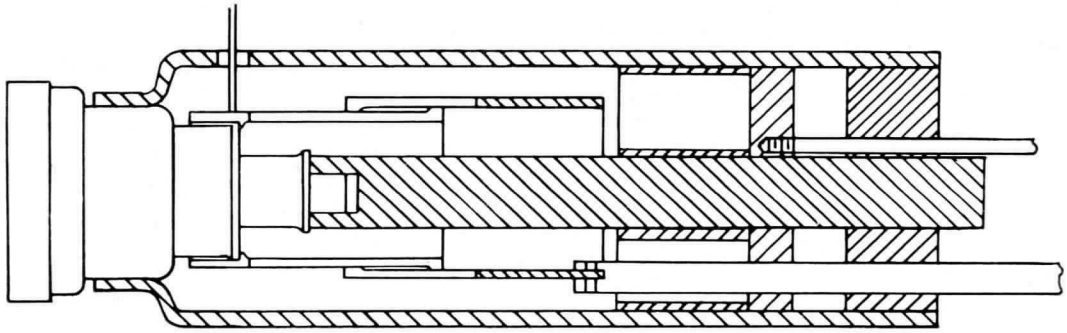

Fig. 7—Method for Tuning Re-entrant Oscillator Circuit over a Wider Range than Is Possible with Circuit in Fig. 6

K-5109743 12-20-44

OSCILLATOR APPLICATIONS (CONT'D)

tuning range of this particular oscillator versus the tuner displacement is shown. A simple explanation for this tuning action follows:

With the tuner at zero displacement, the grid-plate line has a surge impedance determined primarily by a ratio of d_g to d_b. As the tuner is withdrawn, the surge impedance of the line is determined more and more by the ratio of d_g to d_p. The result is that as the tuner is slowly moved outward, the effective surge impedance of the line is increased. This in turn results in more effective capacitance foreshortening of the line, and will therefore make the oscillator operate at a lower frequency. It can be seen from this explanation that the primary factors affecting the tuning range are the ratios d_g/d_p and d_b/d_p. As either of these ratios is made larger, the possible tuning range will be increased.

Where a wider tuning range is necessary, tuning can be accomplished in the manner indicated in Fig. 7 shown at the bottom of page 7. Here the grid cylinder is made so that its length can be extended and the anode plunger is moved independently. In this case, frequency is primarily determined by the length of the grid cylinder and frequency decreases as the length of the grid cylinder increases. The phase of the feed-back in the oscillator is controlled independently by the position of the plunger on the anode line.

Pulsed Oscillator

Pulsed oscillators using the 2C43 tube are not essentially different from c-w oscillators except that the plate by-pass capacitor must not break down under the high voltages of plate pulsing. For this reason the plate by-pass capacitors in pulsed oscillators are generally of the choke-by-pass type, as used in the re-entrant oscillator of Fig. 4. A given oscillator, if operated for both pulse and c-w applications, will have a different frequency under pulse conditions from that under c-w operation for the same circuit adjustment. The circuit settings for optimum output are also different for the two operations and a c-w oscillator designed for optimum conditions occasionally will not oscillate under pulsed conditions until the circuit is readjusted. All of these phenomena occur because of the transit-time phase shift inside the tube, expressed as the phase angle of transadmittance, which changes with the plate voltage.

OPERATING NOTES

Contacts

Losses have greater effect as frequency increases and more consideration must be given to avoid them. Poor contacts cause much of the difficulty in circuits which operate inefficiently at the higher frequencies. For this reason, all contacts should be carefully soldered if possible. When an unsoldered contact cannot be avoided, the contact should be kept clean and subjected to pressure. Sliding contacts, as on tuning plungers, should be designed so that the finger contacts are stiff enough to exert a firm pressure against the member on which they slide without binding or gouging.

By-Pass Capacitors

Suitable by-pass capacitors in c-w oscillators may be made by using a sheet of mica between two plates for a flat by-pass capacitor and between two cylinders or conical surfaces for a coaxial by-pass capacitor. The capacitance value may be estimated from the approximate formula.

$$C = \frac{0.0885\ E'A}{d}, \text{ in micromicrofarads}$$

where A is the area of effective surface in square centimeters, d, the thickness of the mica in centimeters, and E′, the specific dielectric constant of mica, which is about 5.4. The capacitance required depends upon frequency and the location of the by-pass capacitor in the circuit. However, values of at least 100 micromicrofarads are recommended in critical parts of the circuit even at 3000 megacycles. Space limitations sometimes make it difficult to provide this capacitance since the mica thickness must be maintained large enough to withstand the voltage; 100 volts per millimeter of mica is conservative.

The choke-type by-pass capacitors used in the oscillator of Fig. 4 and shown again in Fig. 8a are in reality transmission line filters. The impedance, Z_3, is infinite if the length l is one-quarter wave length. Impedance, Z_4, is usually low, so that the terminating impedance, Z_2, which is equal to Z_3, and Z_4 in series, is infinite. The input impedance Z_1 is then zero, omitting losses, and the plunger acts as a perfect short circuit to radio-frequency and is open to d-c. The adjustment is exactly correct only for a single frequency, but is reasonably good over bandwidths of 10 to 20 per cent. More choke sections may be added if one is not sufficient (Fig. 8b) and, for wide-band tuning, these may be adjusted to slightly different frequencies.

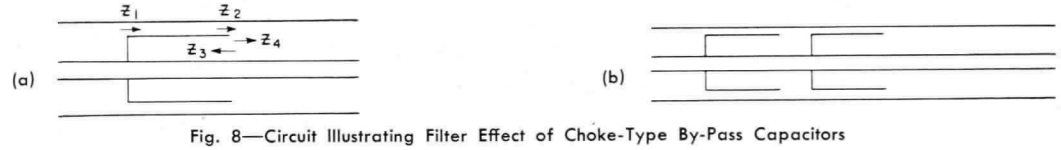

Fig. 8—Circuit Illustrating Filter Effect of Choke-Type By-Pass Capacitors

OPERATING NOTES (CONT'D)

Modulation

Conventional plate modulation of disk-seal power amplifier tubes may be used to obtain amplitude modulation approaching 100 per cent with reasonable distortion at the lower-frequency range where transit times are negligible. When the transit time and consequent phase angle of transadmittance is important, plate voltage changes cause changes in phase as well as amplitude, thus producing phase modulation as well as amplitude modulation.

For similar reasons, plate voltage changes in an oscillator at transit-time frequencies, produce frequency modulation as well as amplitude modulation.

Back Heating of Cathode

All space-charge control tubes, when operated with relatively high-power signals (class B or C) in the transit-time range, exhibit effects of cathode bombardment caused by electrons returned to the cathode by the reversal of electric field before the electrons reach the grid-plate region. This effect is noticeable in the disk-seal triodes near the upper limits of useful frequency, and may appreciably decrease cathode life if heater power is not reduced. The energy in the returned electrons comes from the radio-frequency driving source, so that the phenomenon is accompanied by an increase in effective input conductance.

The returned electrons are also responsible for some of the decrease in output, since they represent a decrease in the useful current passing into the grid-plate region. Since the phenomenon becomes more marked with increased degree of Class-C operation, extreme Class-C conditions should be avoided at frequencies where this is an important factor in tube performance.

Electronics Department
GENERAL ELECTRIC
Schenectady, N. Y.

5-46 (7M)
Filing No. 8850

GENERAL ELECTRIC

VACUUM CAPACITORS

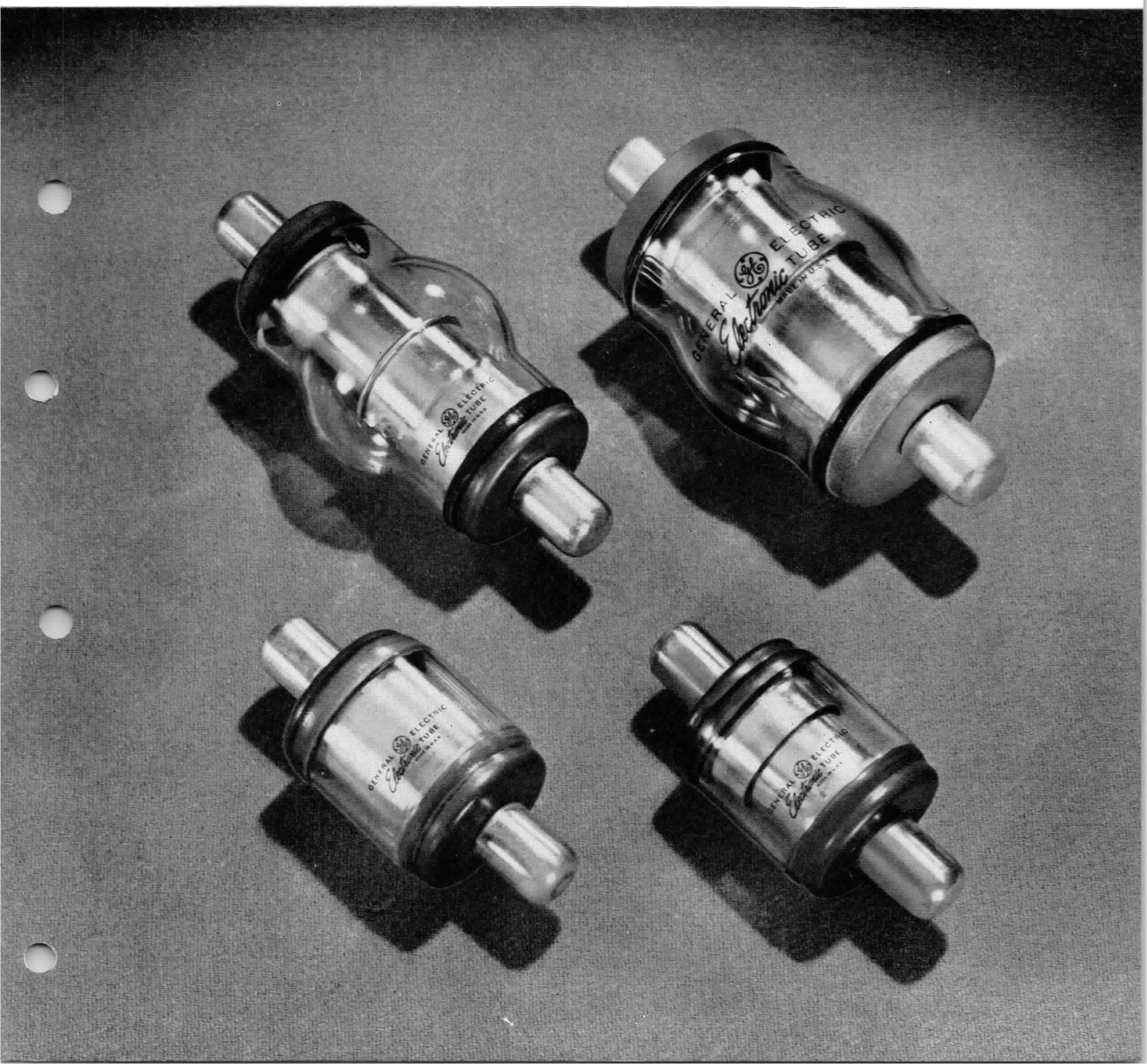

DESCRIPTION

The vacuum capacitor is a high-voltage, small-size vacuum-dielectric capacitor designed for use on d-c, a-c, or radio-frequencies. G-E vacuum capacitors are especially suited for high-voltage circuits where stability of operation and small size are important factors.

MECHANICAL ADVANTAGES

Vacuum-tightness and strong mechanical joints are assured by the use of glass-to-metal seals. (The fernico is imbedded in the glass, which adheres permanently to both inside and outside of the fernico cup.) Mechanical sturdiness is realized by using metals of sufficient strength and thickness to withstand vibrations of 20 G. The compactness of design required for high mechanical strength results in a vacuum capacitor which best utilizes the inside space and avoids long leads. Constructional features of a typical 7500-volt capacitor are shown in the cross-sectional view of Fig. 1. The bell-shaped construction of the 16,000-volt capacitor (see Fig. 2) minimizes circuit loss and also affords high-frequency operation.

All G-E vacuum capacitors are provided with terminals which fit a standard 30-ampere fuse clip, allowing rapid capacitance changes when desired.

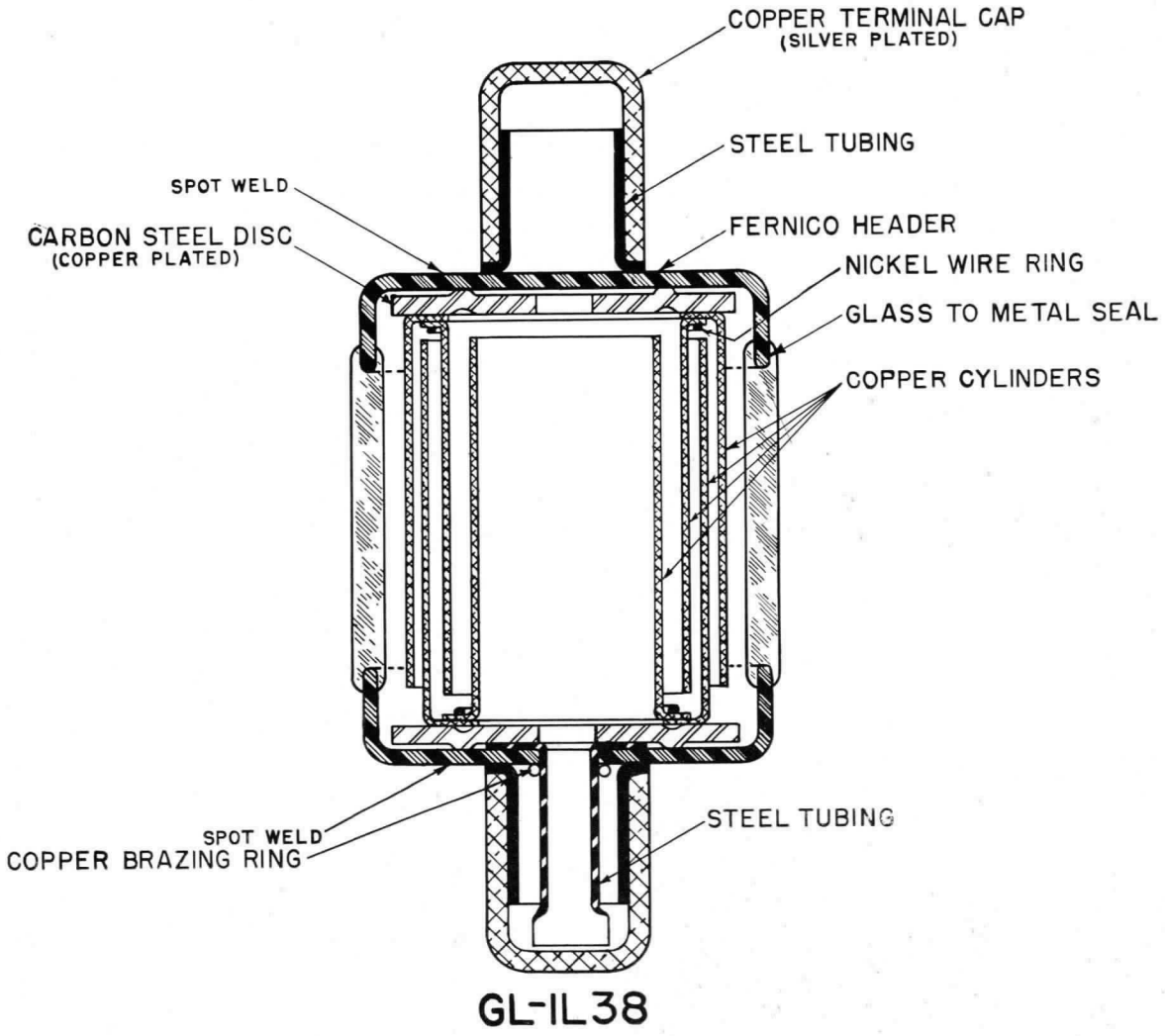

Fig 1—Cross-Sectional View of a 7500-Volt Capacitor

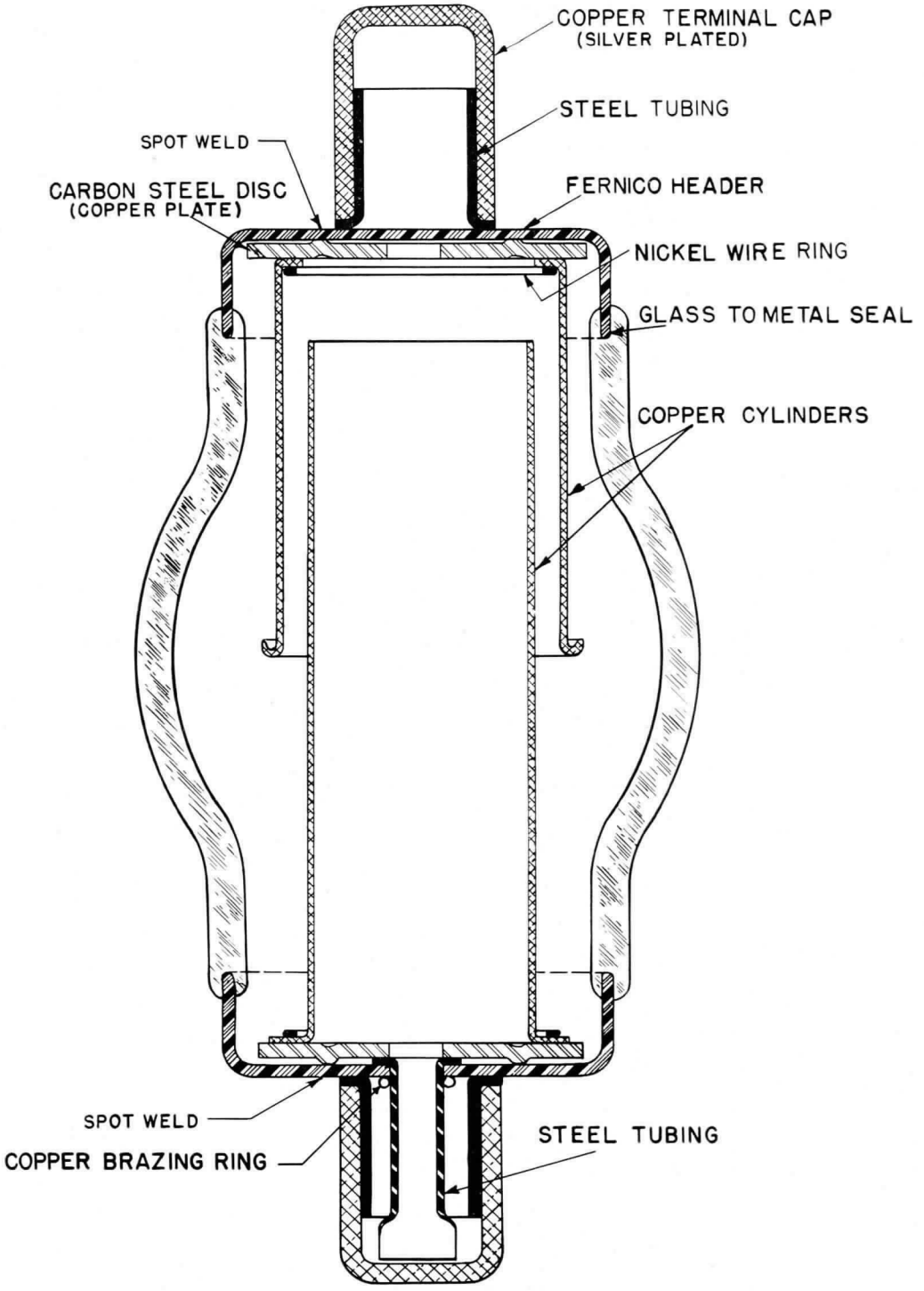

GL-IL31

Fig. 2—Cross-Sectional View of a 16,000-Volt Capacitor

ELECTRICAL ADVANTAGES

G-E vacuum capacitors are designed with sufficiently great internal spacing that d-c voltages up to the maximum voltage rating may be applied. No derating is required for d-c applications with G-E vacuum capacitors. Similarly, capacitors may be placed in any series or parallel combination for use on d-c, a-c, or radio frequencies.

The coaxial cylinders which are brazed to the fernico headers introduce into an electrical circuit a minimum value of inductance, resulting in a high Q vacuum capacitor.

The vacuum construction allows operation at high altitudes and minimizes maintenance. Conditions of high humidity have no effect on the capacitance of G-E vacuum capacitors.

Moisture can cause a slight leakage current across the outside surfaces of the capacitor, but this is usually only a momentary condition. With the capacitor operating, the surface dries in a few seconds and external breakdown potential returns to normal.

G-E vacuum capacitors have a low temperature coefficient as is shown from the curve of Fig. 3. The temperature coefficient of the GL-1L38, as shown in the curve, from -50 C to $+100$ C is 27×10^{-6} mmf/mmf/°C.

The G-E vacuum capacitor does not depend upon a solid dielectric for its voltage insulation. For that reason, there is no dielectric to puncture if overvoltages are accidentally applied. On either direct current or radio-frequencies, overvoltages may cause a discharge to take place internally. In most cases, this discharge is not injurious to the G-E vacuum capacitor, and when the overvoltage is removed, the capacitor will function as usual. Overvoltages should be avoided if there is sufficient power in the source to cause melting of the electrodes.

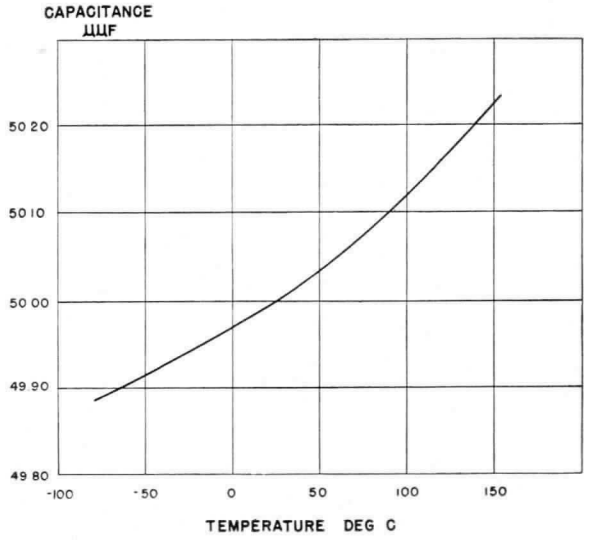

Fig. 3—Temperature Coefficient Curve for a GL-IL38 Vacuum Capacitor

RATINGS

Vacuum capacitors are rated in terms of the following characteristics:

Capacitance

All G-E vacuum capacitors are rated at a nominal capacitance $\pm5\%$.

Voltage Rating

G-E vacuum capacitors are rated to operate at a given peak voltage which may not be exceeded for continuous operation. Transient voltages in excess of rated voltage are allowable up to the voltage breakdown limit given in the specifications.

The total voltage across the vacuum capacitor (excluding transient voltages) shall be considered to be the sum of the d-c and a-c peak voltages.

Voltage-frequency, Current-frequency Characteristics

The voltage-frequency curve on the particular description and rating sheet shows the maximum allowable peak radio-frequency voltage which may be applied to the G-E vacuum capacitor at various frequencies. This radio-frequency voltage may be impressed upon a d-c voltage, if the sum of the two voltages does not exceed the voltage rating of the capacitor.

The current-frequency curve indicates the radio-frequency current which will flow through the capacitor when the maximum radio-frequency voltage is applied.

Operating Temperature

G-E vacuum capacitors may be operated from -40 C to $+65$ C. However, if the capacitor is carrying high radio-frequency currents, it is recommended that the ambient temperature be less than 50 C.

Types of Vacuum Capacitors

G-E vacuum capacitors are made in two voltage ranges, 7500-peak volts and 16,000-peak volts. They are available in capacitance values from 6 micromicrofarads to 100 micromicrofarads in both voltage ranges.

APPLICATIONS*

For the most part, vacuum capacitors are used in applications where their particular characteristics result in the greatest benefit to the user. Obvious applications of vacuum capacitors, with

** Circuits shown on this page and those following are examples of possible tube applications and the description and illustration of them does not convey to the purchaser of tubes any license under patent rights of General Electric Company.*

APPLICATIONS (CONT'D)

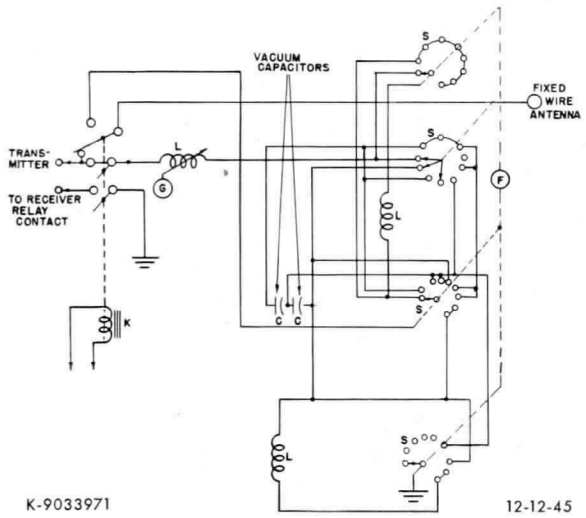

K-9033971 12-12-45

Fig. 4—Antenna Tuning Circuit of an Aircraft Communications Transmitter

their constant breakdown voltage, are in aircraft installations. Sturdiness, low maintenance cost, and ability to withstand extremes of temperature and humidity make G-E vacuum capacitors ideal for this service.

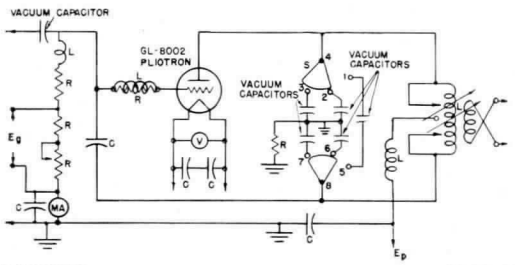

K-9033973 10-20-45

Fig. 5—I-F Amplifier Circuit of a High-Power Communications Transmitter

Fig. 4 illustrates the use of G-E vacuum capacitors as antenna-coupling capacitors in an aircraft transmitter. In this circuit, the vacuum capacitors are used to properly match the impedance of the transmitter output to the impedance of the fixed-wire antenna.

The circuit of Fig. 5 shows the use of vacuum capacitors in an intermediate power amplifier stage of a high-power, high-frequency communications transmitter.

In the circuit of Fig. 5, G-E vacuum capacitors serve both as plate-tank capacitors and as interstage coupling capacitors. Band-changing is automatically accomplished by switching in various values of capacitance.

The single vacuum capacitor in the GL-8002 grid line serves as the interstage coupling capacitor.

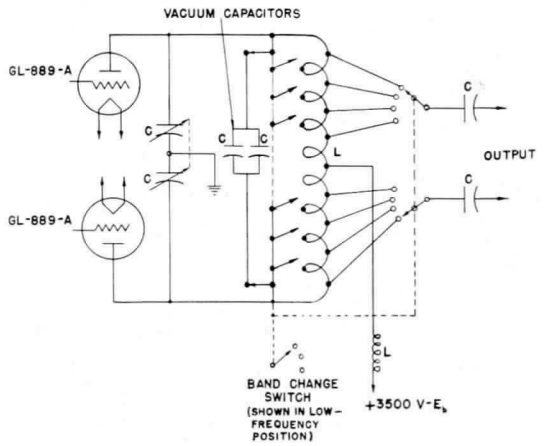

K-9033967 12-12-45

Fig. 6—Exciter Circuit of a 50-Kilowatt International Broadcast Transmitter

In some applications it is desirable to use vacuum capacitors as fixed padders for use at low frequencies. A circuit of this sort is shown in Fig. 6 above.

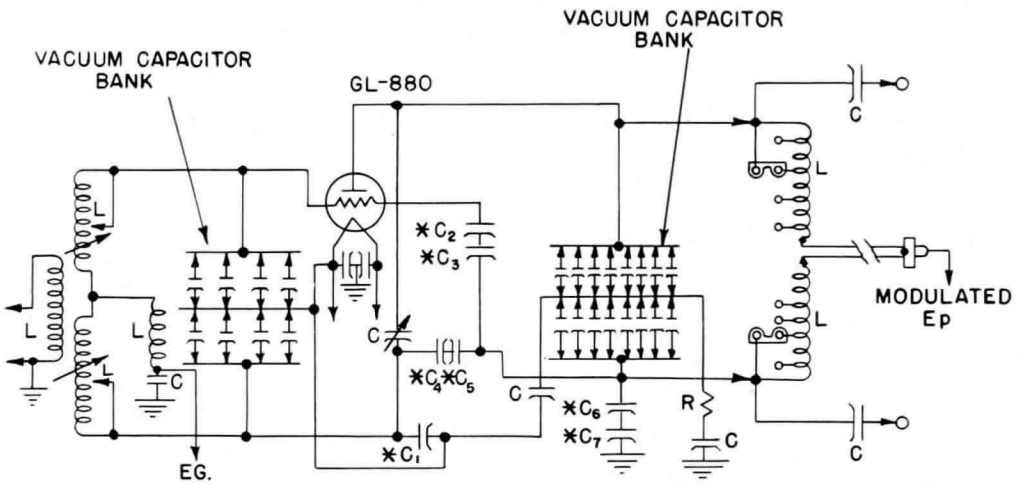

K-9033974 12-10-45

* C_1, C_2, C_3, C_4, C_5, C_6, & C_7 ARE ALSO VACUUM CAPACITORS

Fig. 7—Final Power Amplifier Circuit of a High-Power, High-Frequency Communications Transmitter

APPLICATIONS (CONT'D)

The G-E vacuum capacitors are in use only when the transmitter must be tuned to its lowest frequency. In the low frequency position, the band-change switch removes the shorts from the coil, and at the same time, connects the vacuum capacitor padders across the circuit.

Further evidence of the extent to which circuit design may be carried by the use of vacuum capacitors is demonstrated by Fig. 7 shown at the bottom of page 5.

In this power amplifier, the G-E vacuum capacitors are used as plate-tank and grid-tank padding capacitors, neutralizing capacitors, and as dummy-circuit load capacitors. A single tube is used in a push-pull circuit, and three vacuum capacitors serve in the dummy circuit to represent the missing tubes' interelectrode capacitances; grid to filament, grid-to-plate, and plate-to-filament. These capacitances are usually less than the equivalent tube capacitances, but the over-all circuit represents a push-pull circuit fairly accurately.

INSTALLATION AND OPERATION

In general, the exact method of mounting G-E vacuum capacitors will depend upon the circuit in which it is used. There are, however, several rules to be followed for maximum efficiency of operation.

Mechanical

The capacitor may be mounted in any position. Mounting terminals should exert sufficient force to hold the capacitor firmly in applications where vibrations will be encountered.

G-E vacuum capacitors may be identified readily as to proper capacitance by examining the letter stamped in the header on one end. Symbols indicate capacitance as follows:

A	6 mmf
B	12 mmf
C	25 mmf
D	50 mmf
E	100 mmf

The marked end of the capacitor is connected internally to the inner cylinder. For this reason it is advisable to connect the unmarked end to ground potential in those applications where a ground is permissible. This type of connection allows the outer cylinder of the capacitor to act as a shield to minimize the effects of nearby objects on the net capacitance of the unit.

Electrical

Vacuum capacitors should be mounted in such a way that the connections have ample current-carrying capacity. Fuse clips are not recommended for use as connectors if the current exceeds 10 amperes. A satisfactory connector may be made by drilling a hole approximately 0.550 inches in diameter in a block of copper or brass, splitting one side to allow the capacitor terminal to be inserted, and clamping the split sides together with a machine screw.

To prevent overheating, it is recommended that the vacuum capacitor be mounted so that it is as far as possible from any direct radio-frequency field.

Thermal

In cases where capacitors are connected to sources of heat, such as a hot radio-frequency coil, it is advisable to make the connectors of a large enough mass of material so that maximum heat radiation is obtained.

Applications using air-cooled tubes may provide for venting a portion of the air so that it flows over the vacuum capacitor in the circuit.

Electronics Department
GENERAL ELECTRIC
Schenectady, N. Y.

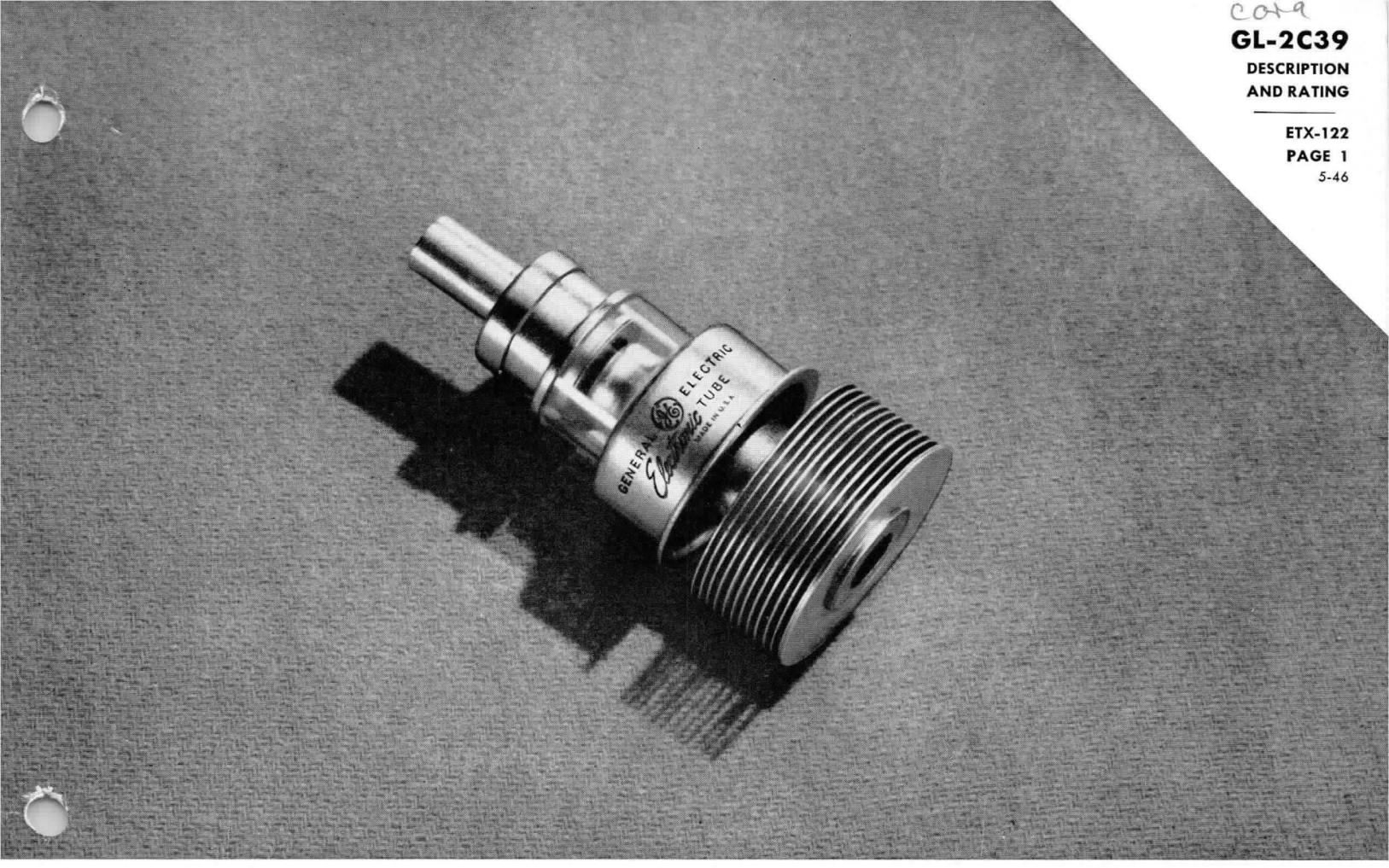

LIGHTHOUSE TRIODE

DESCRIPTION

The GL-2C39 is a triode designed for use as a low-power transmitting tube. It may be used at maximum ratings at frequencies as high as 500 megacycles. This tube is similar in structure to the lighthouse tubes but is designed for use in applications which require a higher-power tube.

TECHNICAL INFORMATION

These data are for reference only. For design information refer to specifications.

GENERAL CHARACTERISTICS

Number of electrodes	3	
Electrical		
Cathode—indirectly heated		
Heater voltage	6.3	volts
Heater current	1.1	amperes
Average Characteristics		
Amplification factor	100	
Grid-plate transconductance, $I_b = 80$ milliamperes	17,000	micromhos
Direct Interelectrode Capacitances		
Grid-plate	1.95	micromicrofarads
Grid-cathode	6.50	micromicrofarads
Plate-cathode, maximum	0.035	micromicrofarad
Frequency for maximum ratings	500	megacycles

GE Electronic TUBE

GENERAL ELECTRIC

TECHNICAL INFORMATION (CONT'D)

Mechanical

Type of cooling	forced-air	
Maximum seal temperature	175	centigrade
Base description	see outline	
Mounting position	any	
Net weight, approximate	3	ounces
Shipping weight, approximate	3	pounds

MAXIMUM RATINGS AND TYPICAL OPERATING CONDITIONS

CW OSCILLATOR

	Typical Operation	Maximum Ratings	
Grid Separation Circuit			
D-c plate voltage	1000	1000	volts
D-c grid voltage*	−48	−150	volts
D-c cathode current	58	100	milliamperes
D-c plate current	50		milliamperes
D-c grid current, approximate	8		milliamperes
Plate input	50		watts
Plate dissipation†	25		watts
Plate power output	25		watts
Frequency	500	500	megacycles

FREQUENCY MULTIPLIER

	Typical Operation 2 Tubes	Maximum Ratings per Tube	
Grid Separation Circuit			
D-c plate voltage	600	1000	volts
D-c grid voltage*	−80	−150	volts
D-c cathode current		100	milliamperes
D-c plate current	90		milliamperes
D-c grid current, approximate	16	55	milliamperes
Plate input	54		watts
Plate dissipation†	36		watts
Peak r-f grid input voltage, approximate	100		volts
Driving power, approximate	20		watts
Plate power output	18		watts
Output frequency	300	500	megacycles
Driving frequency	100		megacycles

CLASS C RADIO-FREQUENCY POWER AMPLIFIER, PLATE MODULATED

Carrier conditions for use with a maximum modulation factor of 1.0

	Typical Operation 2 Tubes	Typical Operation per Tube	Maximum Ratings per Tube	
Grid Separation Circuit				
D-c plate voltage	600	350	600	volts
D-c grid voltage*	−26	−20	−150	volts
D-c cathode current			100	milliamperes
D-c plate current	110	45		milliamperes
D-c grid current, approximate	45	30	55	milliamperes
Plate input	66	15.8		watts
Plate dissipation†	16	4.8		watts
Peak r-f grid input voltage, approximate	55	50.0		volts
Driving power	12	4.0		watts
Plate power output	40	10.0		watts
Frequency	390	350	500	megacycles

* Recommended minimum grid-leak resistance is 500 ohms.

† Up to 100 watts plate dissipation allowable with forced-air cooling sufficient to limit seal temperature to 175 C. Recommended air flow is 12.5 cubic feet per minute with cowling per drawing K-5108977.

GL-2C39
AVERAGE CHARACTERISTICS
(E_f = 6.3 VOLTS)

———— CONSTANT I_p
. . . . . CONSTANT I_g

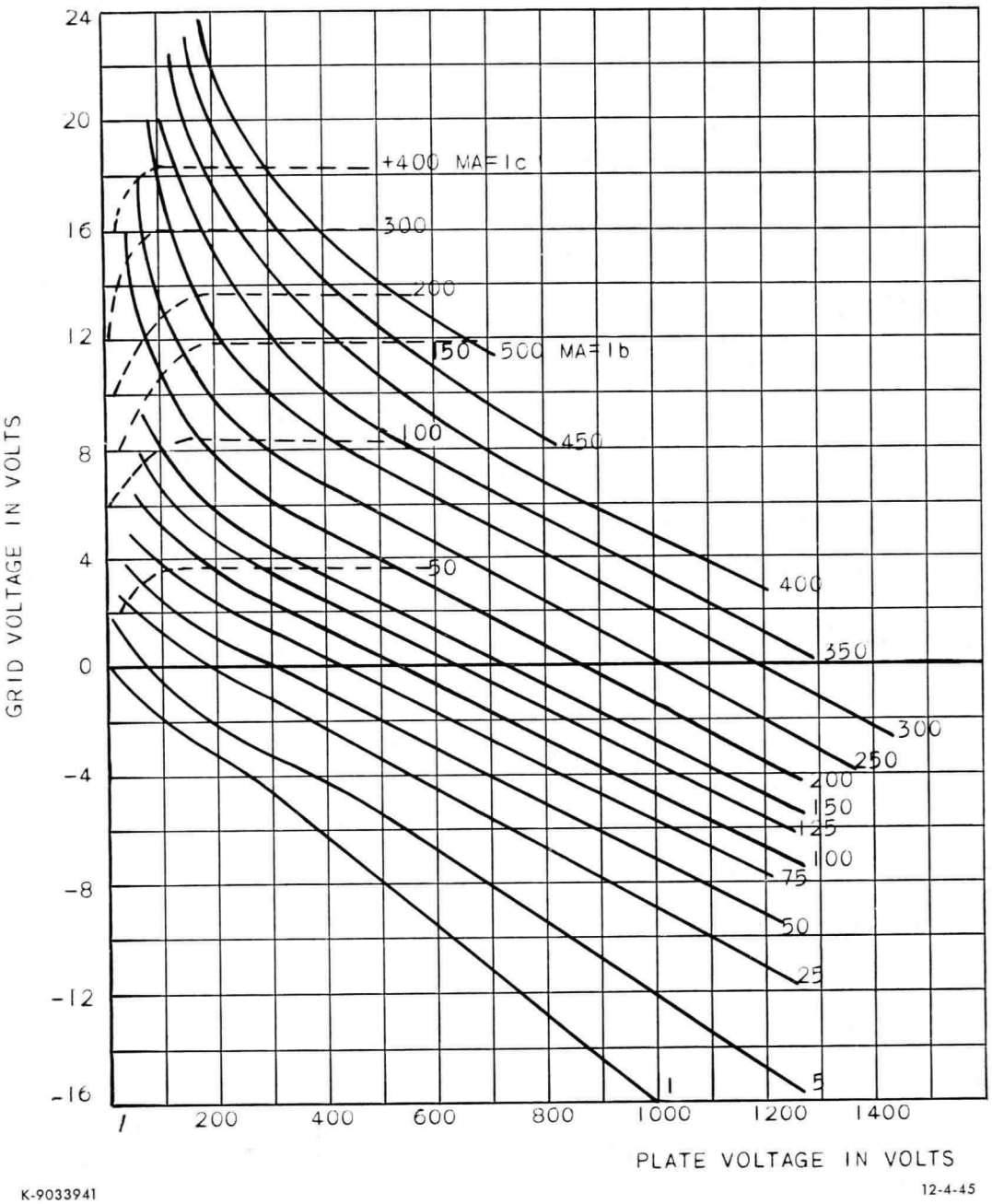

K-9033941

12-4-45

GL-2C39
AVERAGE CHARACTERISTICS
($E_f = 6.3$ VOLTS)

———————— I_p
. . . . . I_g

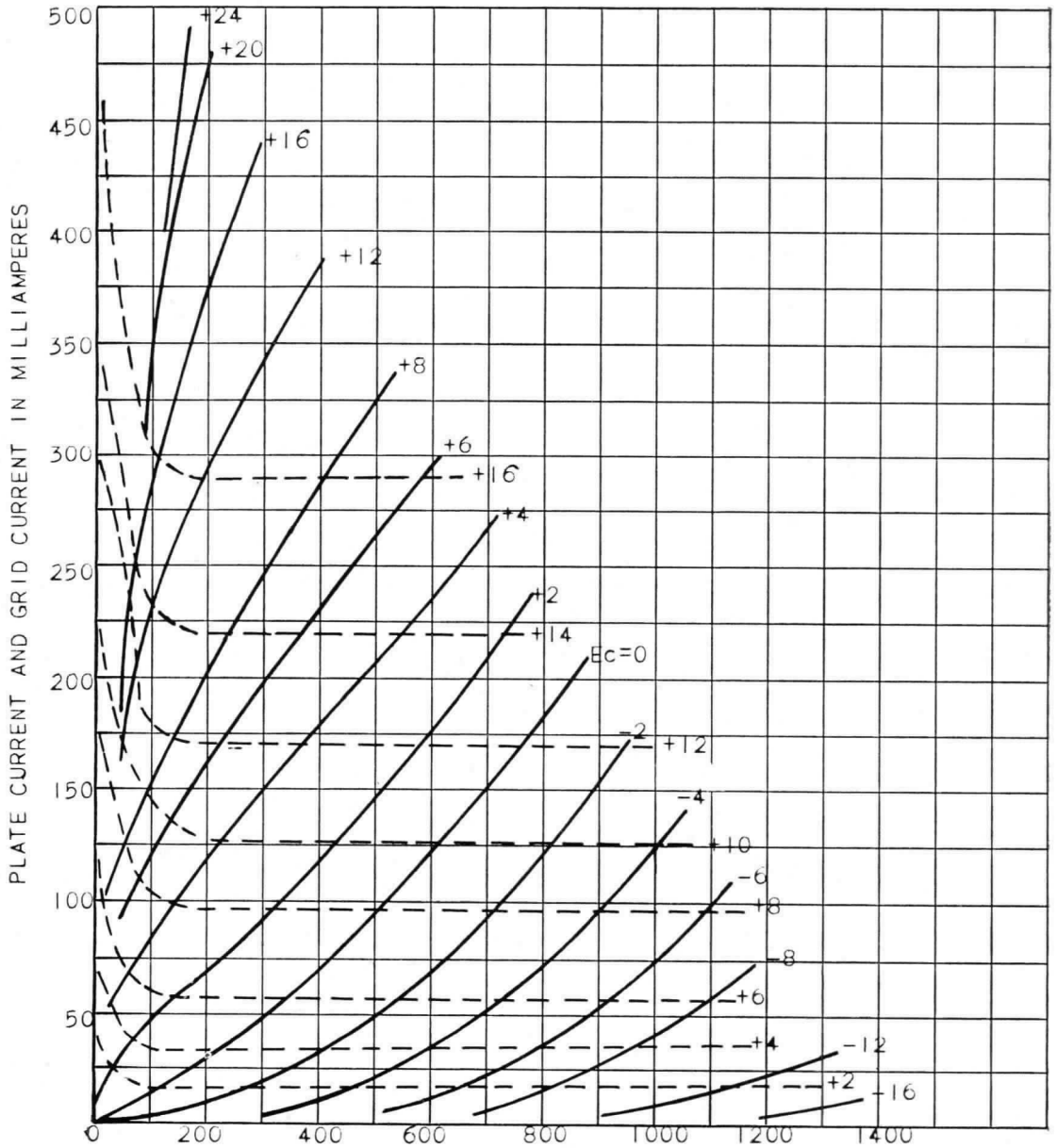

K-9033942

11-1-45

RECOMMENDED METHODS
OF COOLING THE GL-2C39

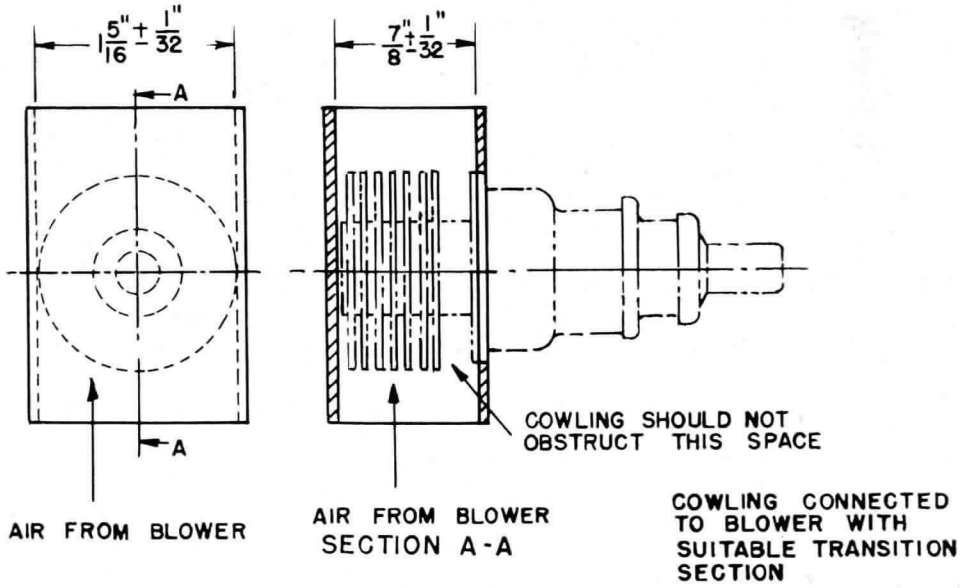

AIR FLOW VS. DISSIPATION GL-2C39

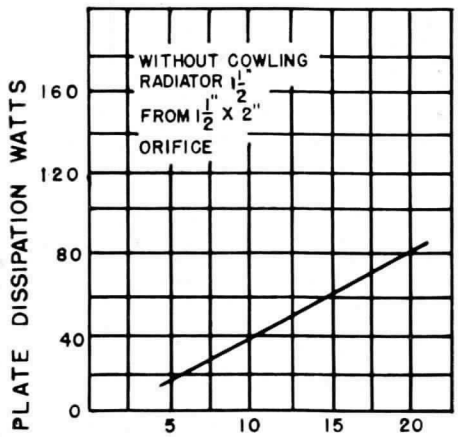

TEMPERATURE RISE
70°C

MAXIMUM SEAL TEMPERATURE
140°C

AIR FLOW VS. DISSIPATION GL-2C39

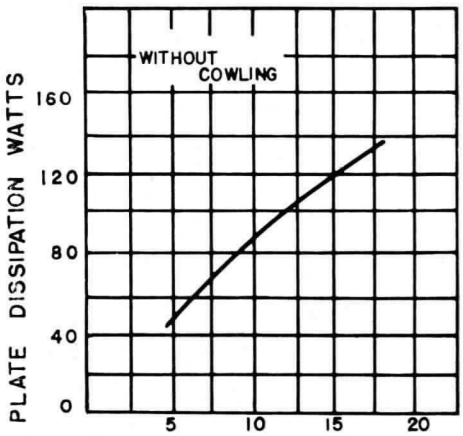

TEMPERATURE RISE
70°C

MAXIMUM SEAL TEMPERATURE
175°C

MAXIMUM AMBIENT
TEMPERATURE 70°C

K-5108977

3-19-46

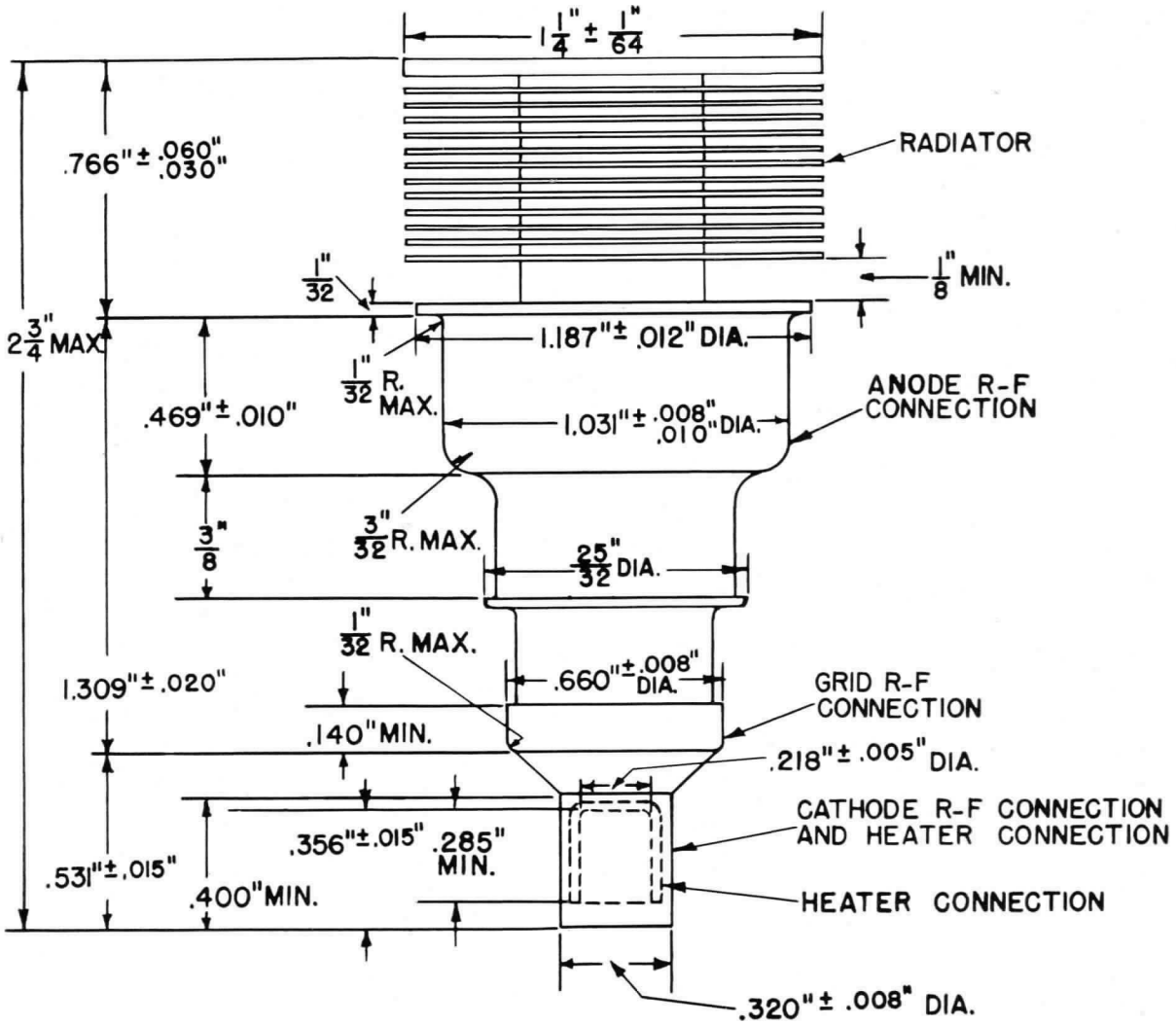

NOTE 1. EXTERNAL METAL PARTS (EXCEPT RADIATOR) PLATED WITH 100 MSI SILVER.
2. SOLDER NOT TO EXTEND RADIALLY BEYOND GRID R-F CONNECTION.
3. THE CATHODE R-F CONNECTION, GRID R-F CONNECTION & ANODE CONNECTION CONCENTRIC WITH RESPECT TO EACH OTHER WITHIN 0.020".
4. THE HEATER CONNECTION CONCENTRIC WITH RESPECT TO THE CATHODE R-F CONNECTION WITHIN 0.012".
5. MINIMUM CLEARANCE BETWEEN CATHODE AND HEATER CONNECTION 0.010".

K-9033513 GL-2C39 OUTLINE 7-1-46

Electronics Department
GENERAL ELECTRIC
Schenectady, N. Y.

5-46 (7M)
Filing No. 8850

2C40

PLANAR TRIODE



DESCRIPTION AND RATING

The 2C40 is a triode of lighthouse construction designed for use as an oscillator or radio-frequency amplifier at frequencies as high as 3370 megacycles.

The radio-frequency cathode connection is made through a disk-type capacitor which is incorporated in the tube. This results in a low-impedance radio-frequency path from the cathode to the external circuit.

The envelope construction results in low losses, provides convenient electrode contact surfaces, and enables the tube to fit easily into coaxial circuits.

GENERAL

ELECTRICAL

Cathode—Coated Unipotential		
Heater Characteristics and Ratings		
Heater Voltage, AC or DC*	6.3 ± 0.3	Volts
Heater Current†	0.75	Amperes
Direct Interelectrode Capacitances‡		
Grid to Plate: (g to p)	1.3	pf
Grid to Cathode: (g to k)	2.15	pf
Plate to Cathode: (p to k), maximum	0.03	pf
Cathode RF Connection to Cathode	100	pf

MECHANICAL

Mounting Position—Any		
Net Weight, approximate	1.2	Ounces
Cooling—Convection and Conduction		

MAXIMUM RATINGS

ABSOLUTE-MAXIMUM VALUES

Radio-Frequency Power Amplifier or Oscillator—Class C		
Frequency	3370	Megacycles
DC Plate Voltage	500	Volts
DC Grid Voltage	−50	Volts
DC Plate Current	25	Milliamperes
DC Grid Current	8.0	Milliamperes
Plate Dissipation	6.5	Watts
Heater-Cathode Voltage		
Heater Positive with Respect to Cathode	90	Volts
Heater Negative with Respect to Cathode	90	Volts
Cathode-Cathode RF Connection Voltage		
Cathode RF Connection Positive with Respect to Cathode	90	Volts
Cathode RF Connection Negative with Respect to Cathode	90	Volts
Envelope Temperature at Hottest Point	175	C

Absolute-Maximum ratings are limiting values of operating and environmental conditions applicable to any electron tube of a specified type as defined by its published data and should not be exceeded under the worst probable conditions.

The tube manufacturer chooses these values to provide acceptable serviceability of the tube, making no allowance for equipment variations, environmental variations, and the effects of changes in operating conditions due to variations in the characteristics of the tube under consideration and of all other electron devices in the equipment.

The equipment manufacturer should design so that initially and throughout life no absolute-maximum value for the intended service is exceeded with any tube under the worst probable operating conditions with respect to supply-voltage variation, equipment component variation, equipment control adjustment, load variation, signal variation, environmental conditions, and variations in the characteristics of the tube under consideration and of all other electron devices in the equipment.

The tubes and arrangements disclosed herein may be covered by patents of General Electric Company or others. Neither the disclosure of any information herein nor the sale of tubes by General Electric Company conveys any license under patent claims covering combinations of tubes with other devices or elements. In the absence of an express written agreement to the contrary, General Electric Company assumes no liability for patent infringement arising out of any use of the tubes with other devices or elements by any purchaser of tubes or others.

Supersedes ET-T1461 dated 9-57

CHARACTERISTICS AND TYPICAL OPERATION

AVERAGE CHARACTERISTICS

Heater Voltage	6.3	Volts
Plate Voltage	250	Volts
Cathode-Bias Resistor	200	Ohms
Amplification Factor	36	
Transconductance	4850	Micromhos
Plate Current	17	Milliamperes

RADIO-FREQUENCY OSCILLATOR

Frequency	3370	Megacycles
DC Plate Voltage	250	Volts
Grid Resistor	10000	Ohms
DC Grid Voltage	−5.0	Volts
DC Grid Current, approximate	0.5	Milliamperes
DC Plate Current	20	Milliamperes
Power Output	75	Milliwatts

* The equipment designer should design the equipment so that heater voltage is centered at the specified bogey value, with heater supply variations restricted to maintain heater voltage within the specified tolerance.

† Heater current of a bogey tube at Ef = 6.3 volts.

‡ Without external shield.

PHYSICAL DIMENSIONS

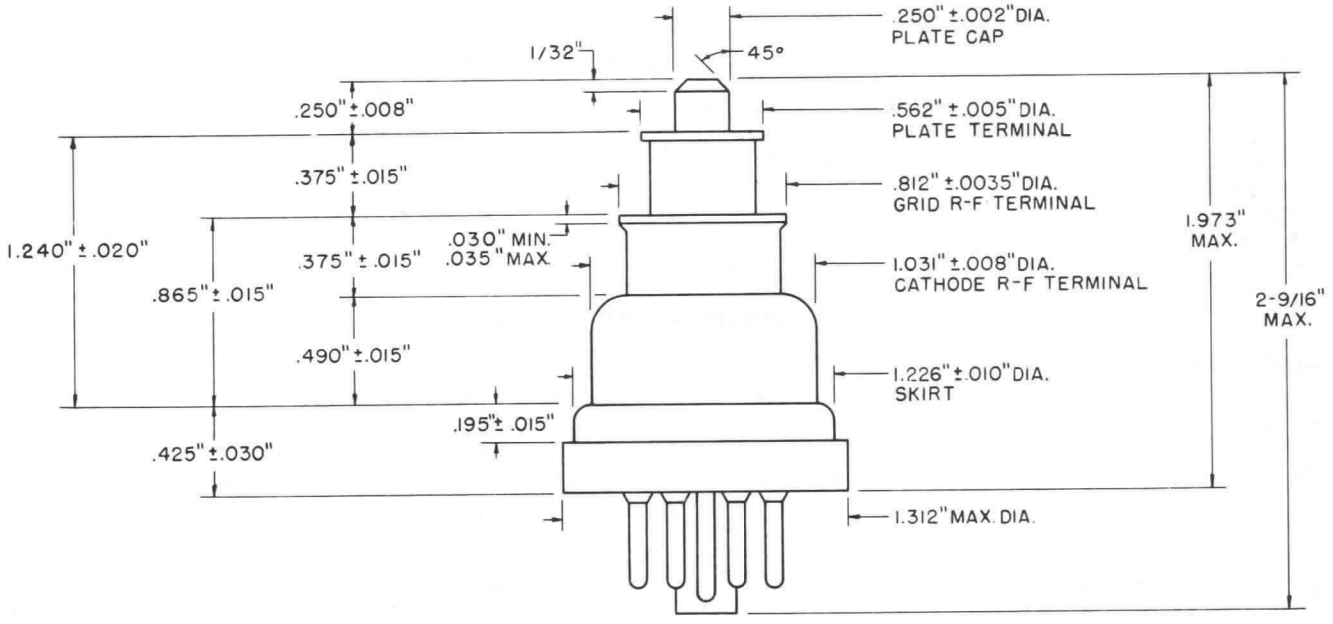

TERMINAL CONNECTIONS

Pin 1—Internal Connection—Do Not Use
Pin 2—Heater
Pin 3—Cathode
Pin 5—Cathode
Pin 7—Heater
Pin 8—Cathode
Top Cap—Plate
Disk Terminal—Grid
Shell—Cathode RF Terminal

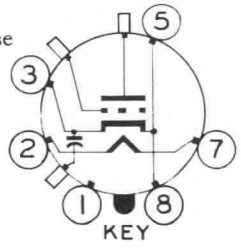

NOTES:

1. Glass shall not protrude beyond edge of anode RF terminal or grid RF terminal.
2. Plate cap and grid RF terminal to be concentric with respect to the cathode RF terminal within 1/64 inch (run-out of 1/32 inch maximum).

AVERAGE PLATE CHARACTERISTICS

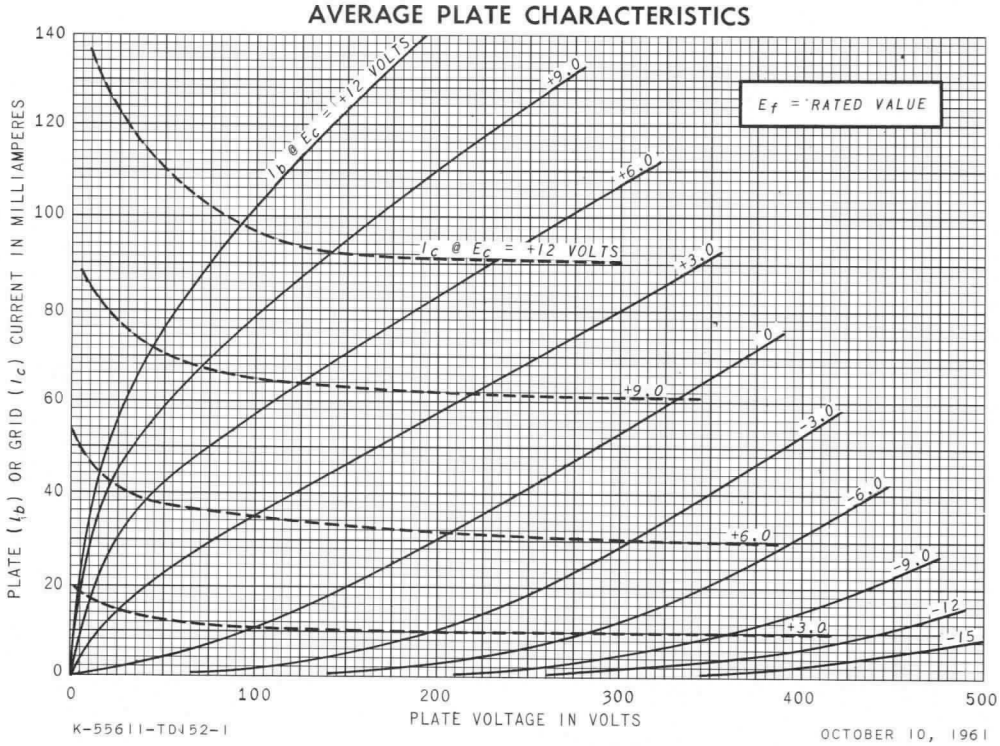

POWER OUTPUT VS. FREQUENCY

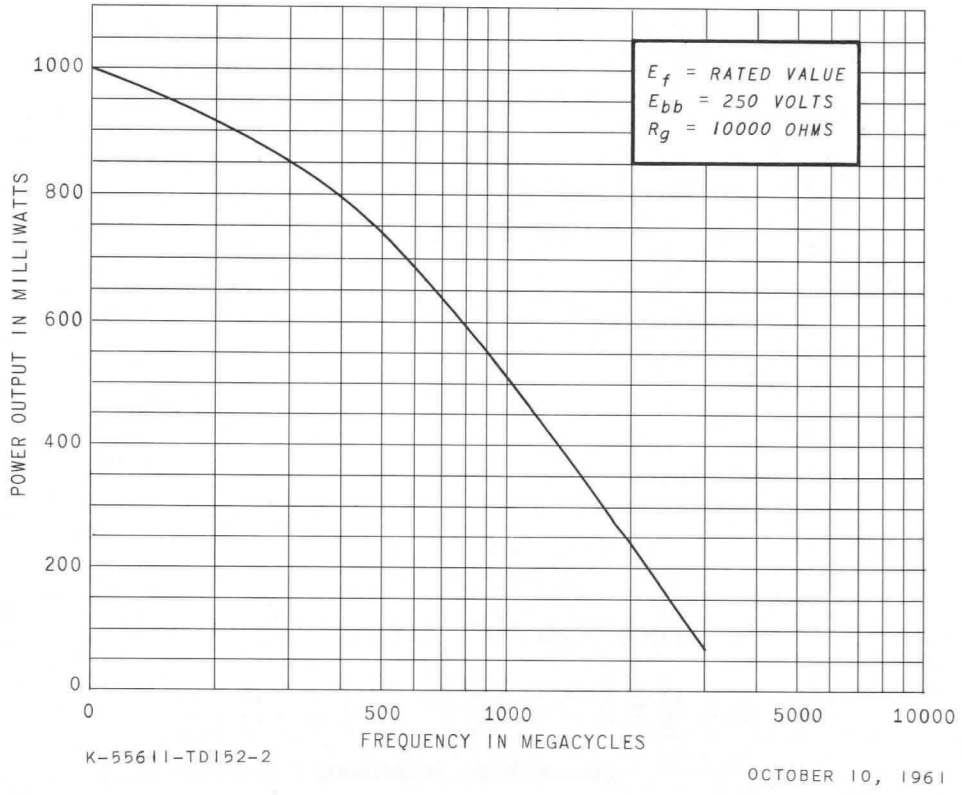

RECEIVING TUBE DEPARTMENT

GENERAL ELECTRIC

Owensboro, Kentucky

Entered
2E24

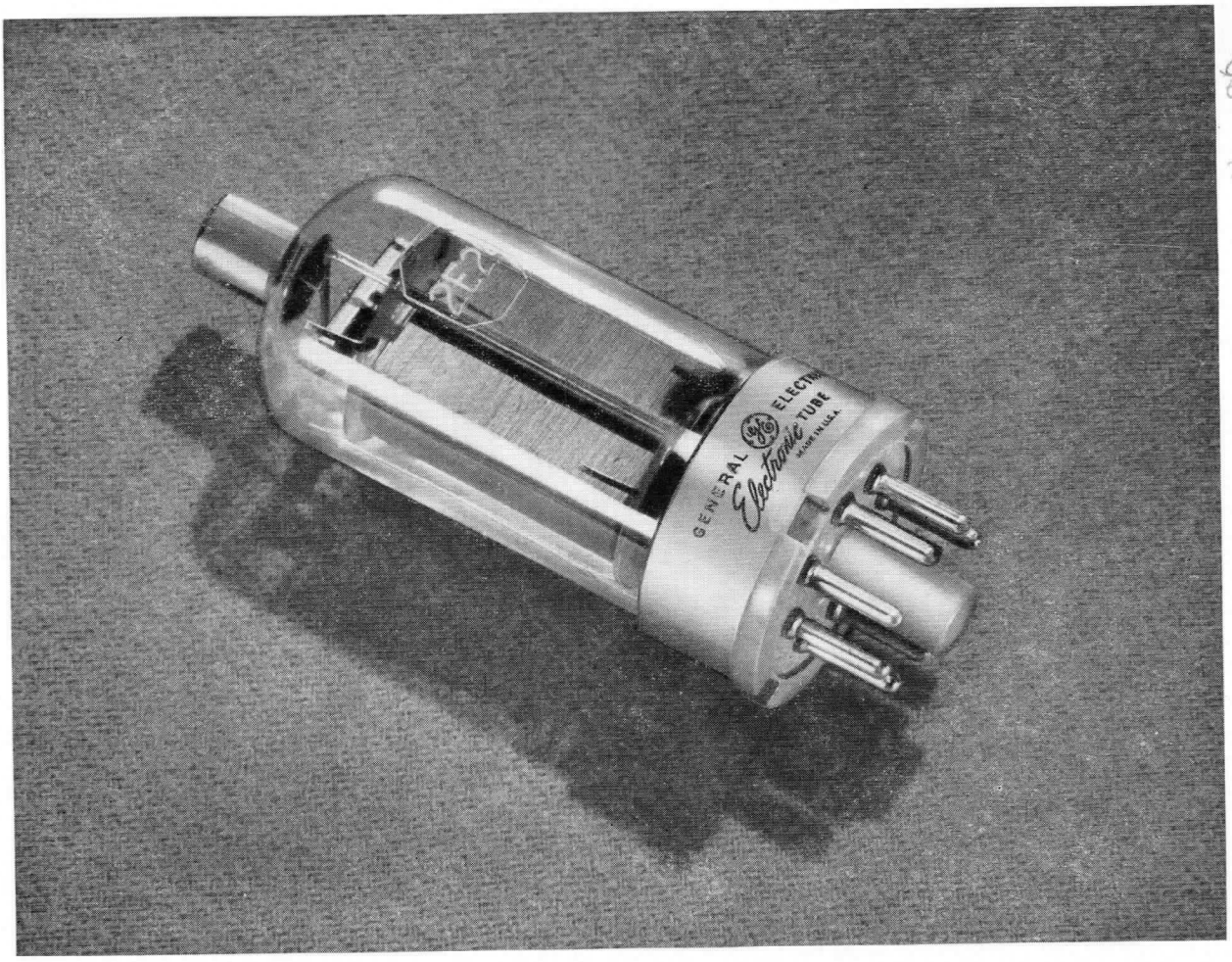

BEAM POWER TUBE

The GL-2E24 is a five-electrode beam power amplifier tube designed for use as a Class C radio-frequency amplifier and oscillator. The anode is capable of dissipating 13.5 watts, and cooling is accomplished by radiation. The cathode is a coated filament. Maximum ratings apply up to 125 megacycles.

This tube is designed for use in mobile and emergency-communications equipment. The quick-heating filament requires only about 4 watts, provides wide latitude in operating-voltage range, and requires less than 2 seconds heating time before power may be turned on. Having high power sensitivity and high efficiency, the GL-2E24 can be operated at relatively low plate voltage to give high power output with low driving power. The filament is designed for intermittent operation only and must not be operated continuously.

The basing arrangement, which provides triple base-pin connections for grid number 3 and filament center tap (both joined to an internal shield inside the tube), permits effective radio-frequency grounding. The metal sleeve of the base has a base-pin terminal and serves to shield the input to the tube and to isolate it from the output circuit.

TECHNICAL INFORMATION

GENERAL

Number of Electrodes	5	
Electrical		
Filament Voltage	6.3 ±10%	Volts
⊕Filament Current	0.65	Amperes
Transconductance, I_b = 16 ma	3200	Micromhos
Grid-Screen Amplification Factor	7.5	

⊕ *Denotes a change.*

GENERAL ELECTRIC

π *Supersedes pages 1 and 2 dated 9-47.*

TECHNICAL INFORMATION (CONT'D)

Interelectrode Capacitances*

Grid No. 1—Plate	0.11	μμf
Input	8.5	μμf
Output	6.5	μμf

Mechanical

Mounting Position—Vertical or Horizontal with Plane of Electrodes Vertical.

New Weight, approximate . . . . . 1½ Ounces

* With no external shielding and base sleeve connected to ground.

MAXIMUM RATINGS AND TYPICAL OPERATING CONDITIONS

PLATE-MODULATED RADIO-FREQUENCY POWER AMPLIFIER—CLASS C TELEPHONY

Carrier Conditions per Tube for Use with a Maximum Modulation Factor of 1.0

Maximum Ratings, Absolute Values	ICAS†	
DC Plate Voltage	500	Max Volts
DC Grid No. 2 Voltage	200	Max Volts
DC Grid No. 1 Voltage	−175	Max Volts
DC Plate Current	60	Max Milliamperes
DC Grid No. 1 Current	3.5	Max Milliamperes
Plate Input	27	Max Watts
Grid No. 2 Input	2.3	Max Watts
Plate Dissipation	9	Max Watts

Typical Operation	ICAS†	
DC Plate Voltage	500	Volts
DC Grid No. 2 Voltage‡	180	Volts
From a Series Resistor of	40,000	Ohms
DC Grid No. 1 Voltage**	−45	Volts
From a Grid Resistor of	18,000	Ohms
Peak RF Grid No. 1 Voltage	62	Volts
DC Plate Current	54	Milliamperes
DC Grid No. 2 Current	8	Milliamperes
DC Grid No. 1 Current, approximate	2.5	Milliamperes
Driving Power, approximate	0.16	Watts
Power Output, approximate	18	Watts

Maximum Circuit Values

Grid—No. 1—Circuit Resistance°	30,000	Max Ohms

‡ Obtained preferably from a separate source modulated with the plate supply, or from the modulated plate supply through series resistor of the value shown.

** Obtained from grid resistor of value shown or by partial self-bias methods.

RADIO-FREQUENCY POWER AMPLIFIER AND OSCILLATOR—CLASS C TELEGRAPHY

Key-Down Conditions per Tube Without Modulation ϕ

Maximum Ratings, Absolute Values	ICAS†	
DC Plate Voltage	600	Max Volts
DC Grid No. 2 Voltage	200	Max Volts
DC Grid No. 1 Voltage	−175	Max Volts
DC Plate Current	85	Max Milliamperes
DC Grid No. 1 Current	3.5	Max Milliamperes
Plate Input	40	Max Watts
Grid No. 2 Input	2.5	Max Watts
Plate Dissipation	13.5	Max Watts

TECHNICAL INFORMATION (CONT'D)

Typical Operation	Up to 125 Mc Max	At 160 Mc	
D-c plate voltage	600	350	volts
D-c grid No. 2 voltage #	195	170	volts
From a series resistor of	40,500	18,000	ohms
D-c grid No. 1 voltage	−50	−50	volts
From a grid resistor of	16,700	16,500	ohms
Peak r-f grid No. 1 voltage	71	70	volts
D-c plate current	66	85	milliamperes
D-c grid No. 2 current	10	10	milliamperes
D-c grid No. 1 current, approximate	3	3	milliamperes
Driving power, approximate	0.21	2.0	watts
Power output, approximate	27	16.5	watts
Maximum circuit values			
Grid—No. 1—circuit resistance°	30,000 max		ohms

ϕ Modulation essentially negative may be used in the positive peak of the envelope does not exceed 115 per cent of the carrier conditions.

#Obtained preferably from a separate source, or from the plate-supply voltage with a voltage divider, or through a series resistor of the value shown. The grid-number 2 voltage must not exceed 600 volts under key-up conditions.

° Any additional bias required must be supplied by a cathode resistor or a fixed supply.

† ICAS = Intermittent Commercial and Amateur Service.

APPLICATION NOTES

Maximum ratings apply up to 125 megacycles. The tube may be operated at higher frequencies provided the maximum values of plate voltage and power input are reduced according to the tabulation below (other maximum ratings are the same as shown above). Special attention should be given to adequate ventilation of the bulb at these frequencies.

Frequency	125	150	160	175	megacycles
Percentage of maximum rated plate voltage and plate input					
Class C plated modulated	100	83	75	68	per cent
Class C unmodulated	100	83	75	68	per cent

GL-2E24
AVERAGE PLATE CHARACTERISTICS
$E_f = 6.3$ VOLTS
SCREEN VOLTAGE = 200

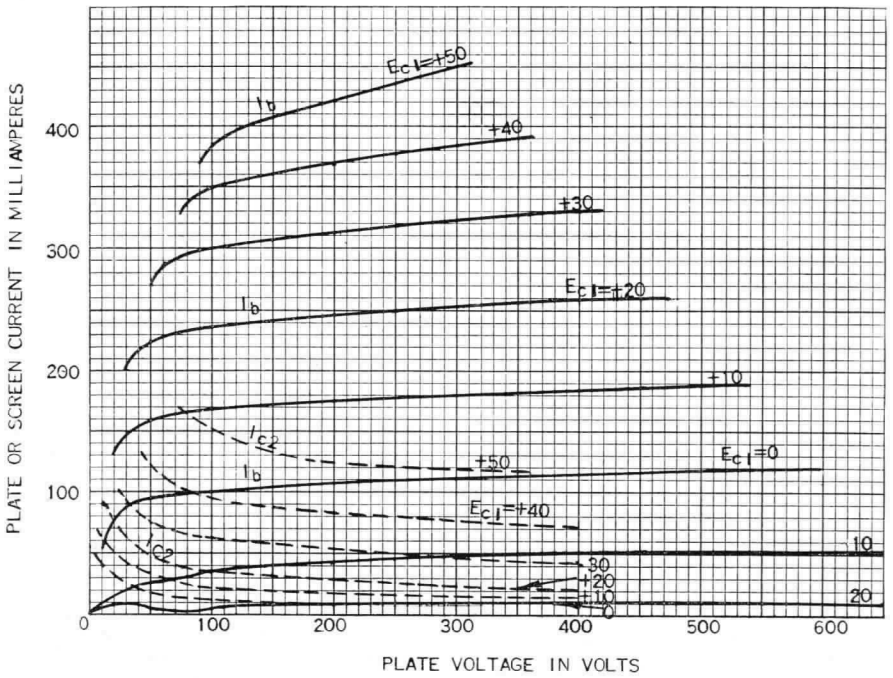

K-69087-72A125 3-28-47

GL-2E24
AVERAGE PLATE CHARACTERISTICS
$E_f = 6.3$ VOLTS
SCREEN VOLTAGE—160

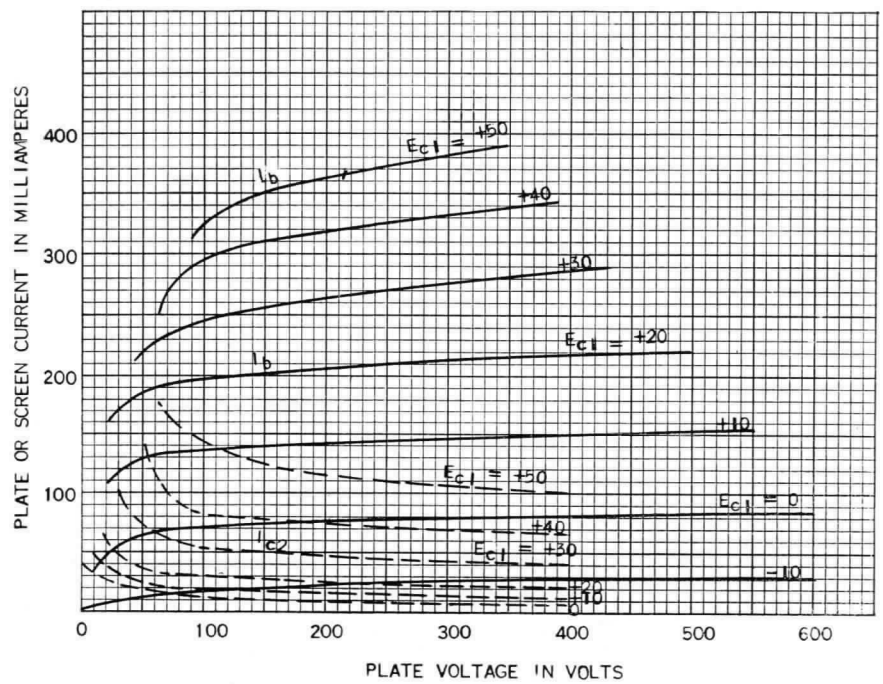

K-69087-72A126 3-28-47

GL-2E24
AVERAGE CHARACTERISTICS
$E_f = 6.3$ VOLTS
SCREEN VOLTAGE = 160

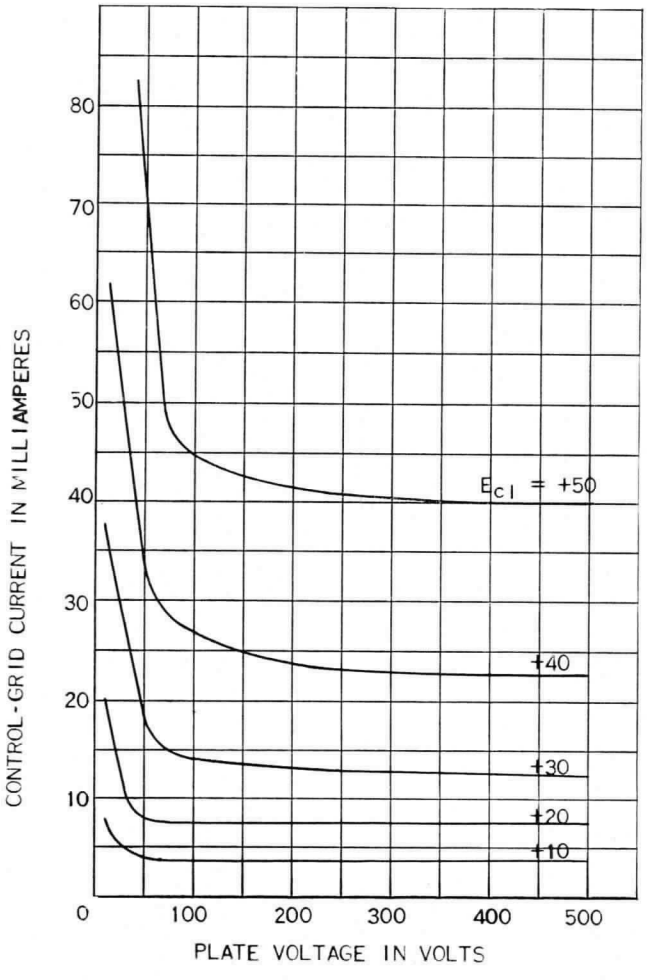

K-69087-72A123 3-28-47

GL-2E24
AVERAGE CHARACTERISTICS
$E_f = 6.3$ VOLTS
SCREEN VOLTAGE = 200

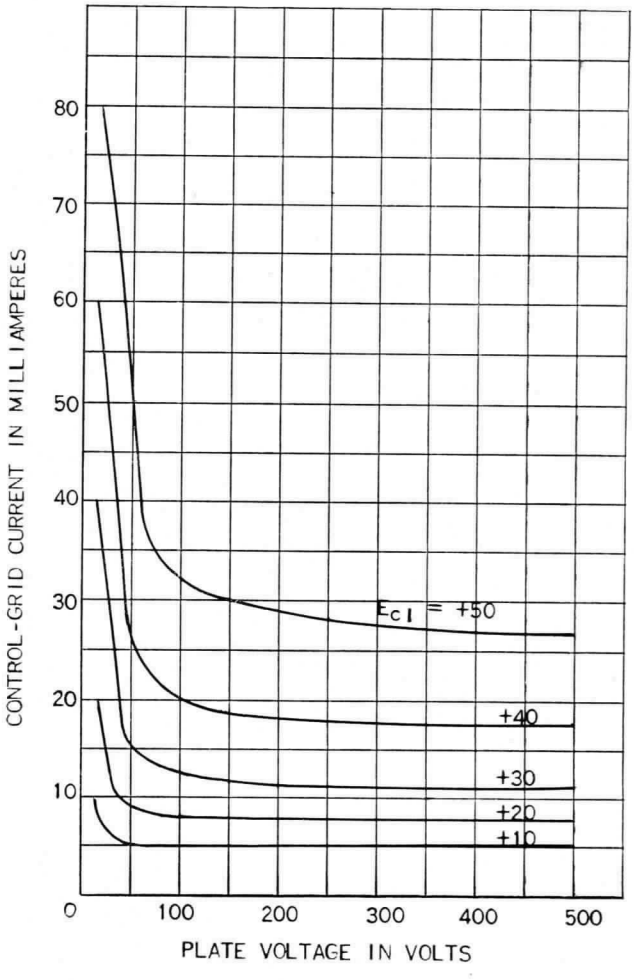

K-69087-72A124 3-28-47

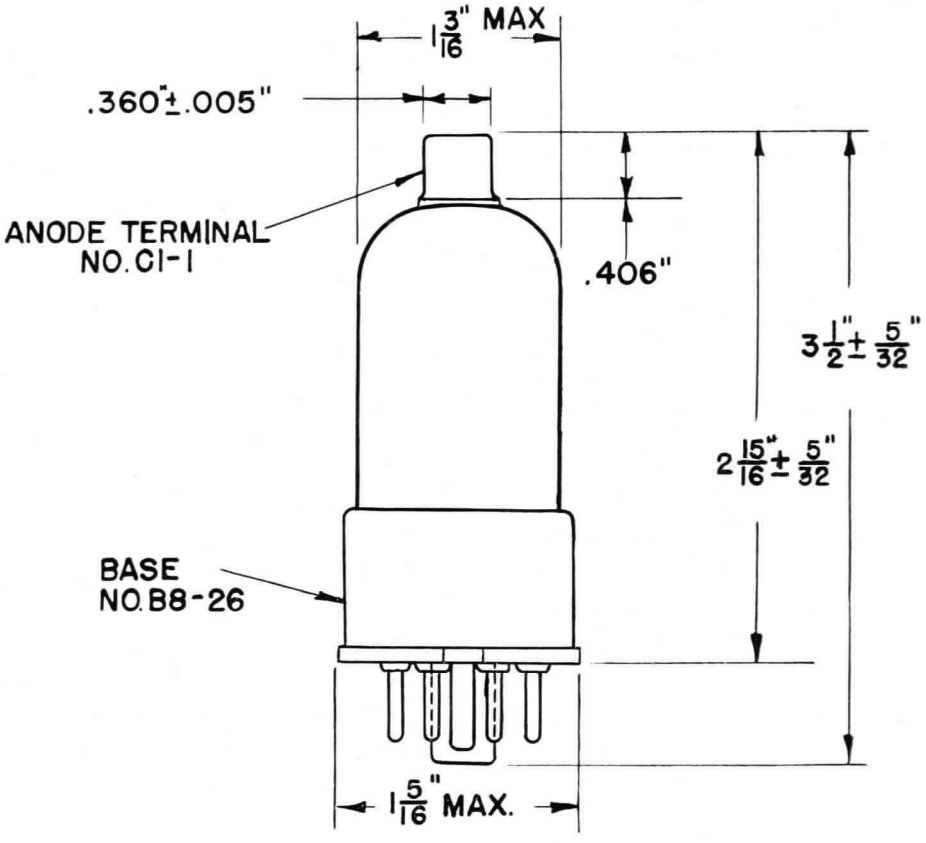

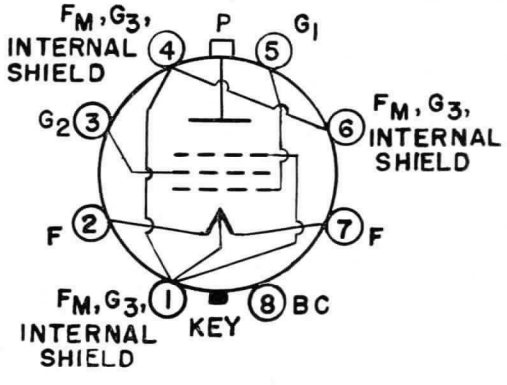

OUTLINE
GL-2E24

N-15098AZ

2-28-47

Electronics Department
GENERAL ELECTRIC
Schenectady, N. Y.



BEAM POWER TUBE

DESCRIPTION

The GL-2E26 is a five-electrode beam power amplifier tube designed for use in FM transmitters, either in low-power driver stages, or in the output stage when only low power output is required. It is also useful in audio-frequency power and modulator service. The anode is capable of dissipating 12.5 watts, and cooling is accomplished by radiation. The cathode is the indirectly heated type. Maximum ratings apply up to 125 megacycles.

The 2E26 has high power sensitivity and high efficiency and can be operated at relatively low plate voltage to give large power output with small driving power.

The base of this tube has a short metal sleeve which shields the input to the tube so completely that no other external shielding is required. Separation of input and output circuits is accomplished by bringing the plate lead out of the bulb to a cap opposite the base.

TECHNICAL INFORMATION

GENERAL CHARACTERISTICS

Number of electrodes	5	
Electrical		
Heater voltage, a-c or d-c	6.3	volts
Heater current	0.8	ampere
Transconductance, $I_b = 20$ ma	3500	micromhos
Grid-screen amplification factor	6.5	
Interelectrode capacitances*		
Grid-plate	0.20	micromicrofarads
Input	13	micromicrofarads
Output	7	micromicrofarads

GE Electronic TUBE

GENERAL ELECTRIC

TECHNICAL INFORMATION (CONT'D)

Mechanical

Mounting position—any
Net weight, approximate ..... 1½ ounces
* With no external shielding and base sleeve connected to ground.

MAXIMUM RATINGS AND TYPICAL OPERATING CONDITIONS

AUDIO-FREQUENCY POWER AMPLIFIER AND MODULATOR—CLASS A_1

Maximum ratings, absolute values	CCS†	
D-c plate voltage	300 max	volts
D-c grid No. 2 voltage	200 max	volts
Grid No. 2 input	2.5 max	watts
Plate dissipation	10 max	watts
Peak heater—cathode voltage		
Heater negative with respect to cathode	100 max	volts
Heater positive with respect to cathode	100 max	volts

Typical operation	CCS†	
D-c plate voltage	250	volts
D-c grid No. 2 voltage	160	volts
D-c grid No. 1 voltage	−12	volts
Peak a-f grid voltage	12	volts
Zero-signal d-c plate current	35	milliamperes
Maximum-signal d-c plate current	42	milliamperes
Zero-signal d-c grid No. 2 current	7	milliamperes
Maximum-signal d-c grid No. 2 current	10	milliamperes
Load resistance	5500	ohms
Total harmonic distortion	10	per cent
Power output	5.3	watts

Maximum circuit values		
Grid—No. 1—circuit resistance	30,000 max	ohms

PUSH-PULL AUDIO-FREQUENCY POWER AMPLIFIER AND MODULATOR—CLASS AB_2

Maximum ratings, absolute values	CCS†	ICAS†	
D-c plate voltage	400 max	500 max	volts
D-c grid No. 2 voltage	200 max	200 max	volts
Maximum signal d-c plate current‡	75 max	75 max	milliamperes
Maximum signal plate input‡	30 max	37.5 max	watts
Maximum signal grid No. 2 input‡	2.5 max	2.5 max	watts
Plate dissipation‡	10 max	12.5 max	watts
Peak heater-cathode voltage			
Heater negative with respect to cathode	100 max	100 max	volts
Heater positive with respect to cathode	100 max	100 max	volts

Typical operation	CCS†	ICAS†	
Values are for two tubes, unless otherwise specified			
D-c plate voltage	400	500	volts
D-c grid No. 2 voltage***△	125	125	volts
D-c grid No. 1 voltage, fixed bias	−15	−15	volts
Peak A-f grid—No. 1—to—grid No. 1 voltage	60	60	volts
Zero-signal d-c plate current	20	22	milliamperes
Maximum signal d-c plate current	150	150	milliamperes
Maximum signal d-c grid—No. 2 current	32	32	milliamperes
Effective load resistance, plate to plate	6200	8000	ohms
Maximum signal driving power**, approximate	0.36	0.36	watts
Maximum signal power output, approximate	42	54	watts

TECHNICAL INFORMATION (CONT'D)

‡ Averaged over any audio-frequency cycle of sine-wave form.

** Driver stage should be capable of supplying the No. 1 grids of the class AB_2, stage with the specified driving power at load distortion. The effective resistance per grid No. 1 circuit of the class AB_2, stage should be kept below 500 ohms and the effective impedance at the highest response frequency should not exceed 700 ohms.

*** Preferably obtained from a separate source, or from the plate-voltage supply with a voltage divider.

△ In applications requiring the use of screen voltages above 135 volts, provision should be made for the adjustment of grid—no. 1 bias for each tube separately. The necessity for this adjustment at the lower screen voltages depends on the distortion requirements and on whether the plate-dissipation rating is exceeded at zero-signal plate current.

PLATE-MODULATED RADIO-FREQUENCY POWER AMPLIFIER—CLASS C TELEPHONY

Carrier conditions per tube for use with a maximum modulation factor of 1.0

Maximum ratings, absolute values	CCS†	ICAS†	
D-c plate voltage	400 max	500 max	volts
D-c grid No. 2 voltage	200 max	200 max	volts
D-c grid No. 1 voltage	−175 max	−175 max	volts
D-c plate current	60 max	60 max	milliamperes
D-c grid No. 1 current	3.5 max	3.5 max	milliamperes
Plate input	20 max	27 max	watts
Grid No. 2 input	1.7 max	2.3 max	watts
Plate dissipation	6.7 max	9 max	watts

Maximum ratings, absolute values	CCS†	ICAS†	
Peak heater—cathode voltage			
Heater negative with respect to cathode	100 max	100 max	volts
Heater positive with respect to cathode	100 max	100 max	volts

Typical operation	CCS†	ICAS†	
D-c plate voltage	400	500	volts
D-c grid—No. 2 voltage****	160	180	volts
	32,000	35,500	ohms
D-c grid--No. 1 voltage*****	−50	−50	volts
	20,000	20,000	ohms
Peak r-f grid—No. 1 voltage	60	60	volts
D-c plate current	50	54	milliamperes
D-c grid—No. 2 current	7.5	9	milliamperes
D-c grid—No. 1 current, approximate	2.5	2.5	milliamperes
Driving power, approximate	0.15	0.15	watts
Power output, approximate	13.5	18	watts
Maximum circuit values			
Grid—No. 1 circuit resistance°	30,000 max	30,000 max	ohms

**** Obtained preferably from a separate source modulated with the plate supply, or from the modulated plate supply through series resistor of the value shown.

***** Obtained from grid resistor of value shown or by partial self-bias methods.

° Any additional bias required must be supplied by a cathode resistor or a fixed supply.

TECHNICAL INFORMATION (CONT'D)

RADIO-FREQUENCY POWER AMPLIFIER AND OSCILLATOR—CLASS C TELEGRAPHY

Key-down conditions per tube without modulation θ

	CCS†	ICAS†	
Maximum ratings, absolute values			
D-c plate voltage	500 max	600 max	volts
D-c grid No. 2 voltage	200 max	200 max	volts
D-c grid No. 1 voltage	−175 max	−175 max	volts
D-c plate current	75 max	75 max	milliamperes
D-c grid No. 1 current	3.5 max	3.5 max	milliamperes
Plate input	30 max	40 max	watts
Grid No. 2 input	2.5 max	2.5 max	watts
Plate dissipation	10 max	13.5 max	watts
Peak heater-cathode voltage			
Heater negative with respect to cathode	100 max	100 max	volts
Heater positive with respect to cathode	100 max	100 max	volts

Typical operation		Up to 125 Mc	At 160 Mc	Up to 125 Mc	At 160 Mc	
D-c plate voltage	400	500	300	600	350	volts
D-c grid No. 2 voltage△	190	185	170	185	200	volts
	19000	28500	18000	41500	20000	ohms
D-c grid No. 1 voltageϕ	−30	−40	−75	−45	−90	volts
	10000	13500	30000	15000	30000	ohms
Peak r-f grid No. 1 Voltage	41	50	85	57	105	volts
D-c plate current	75	60	75	66	85	milliamperes
D-c grid No. 2 current	11	11	6	10	7	milliamperes
D-c grid No. 1 current, approximate	3	3	2.5	3	3	milliamperes
Driving power, approximate	0.12	0.15	1.5	0.17	2	watts
Power output, approximate	20	20	13	27	16.5	watts

Maximum circuit values			
Grid No. 1 circuit resistance◆	30000 max	30000 max	ohms

◆Any additional bias required must be supplied by a cathode resistor or a fixed supply.

θ Modulation essentially negative may be used if the positive peak of the envelope does not exceed 115 per cent of the carrier conditions.

△Obtained preferably from a separate source, or from the plate-voltage supply with a voltage divider, or through a series resistor of the value shown. The grid No. 2 voltage must not exceed 600 volts under key-up conditions.

ϕ Obtained from fixed supply, or by grid No. 1 resistor of value shown.

† CCS = Continuous Commercial Service.

† IGAS = Intermittent Commercial and Amateur Service.

APPLICATION NOTES

Maximum ratings apply up to 125 megacycles. The tube may be operated at higher frequencies provided the maximum values of plate voltage and power input are reduced according to the tabulation below (other maximum ratings are the same as shown above). Special attention should be given to adequate ventilation of the bulb at these frequencies.

Frequency	125	150	160	175 megacycles
Percentage of maximum rated plate voltage and plate input				
Class C plate modulated	100	83	75	68 per cent
Class C unmodulated	100	83	75	68 per cent

GL-2E26
AVERAGE PLATE CHARACTERISTICS
$E_f = 6.3$ VOLTS
SCREEN VOLTAGE = 200

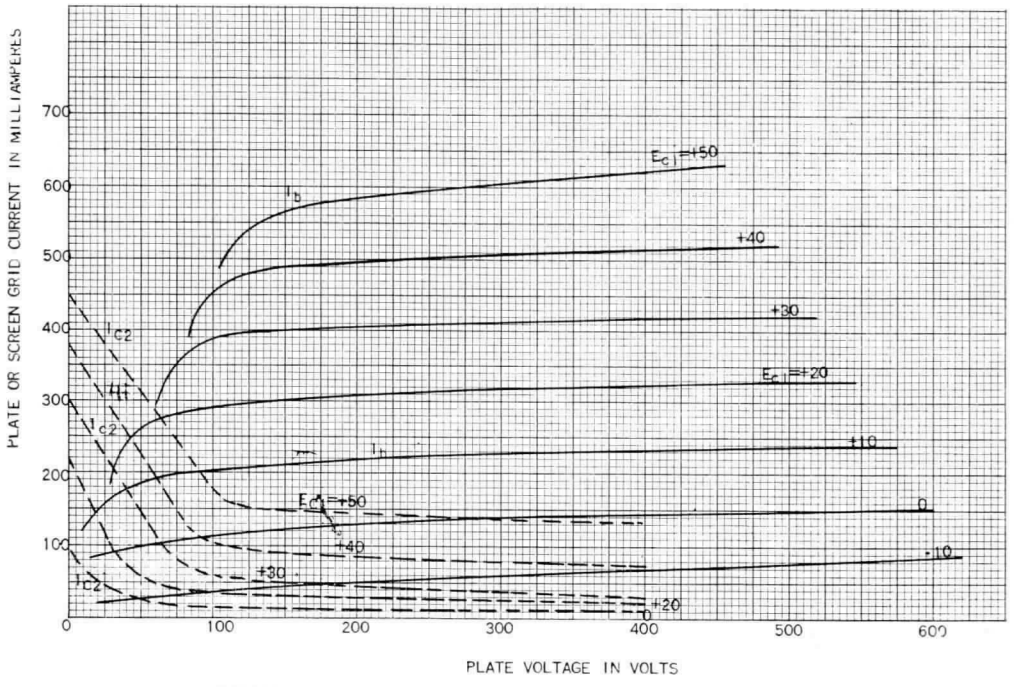

K-69087-72A149 6-17-47

GL-2E26
AVERAGE PLATE CHARACTERISTICS
$E_f = 6.3$ VOLTS
SCREEN VOLTAGE = 160

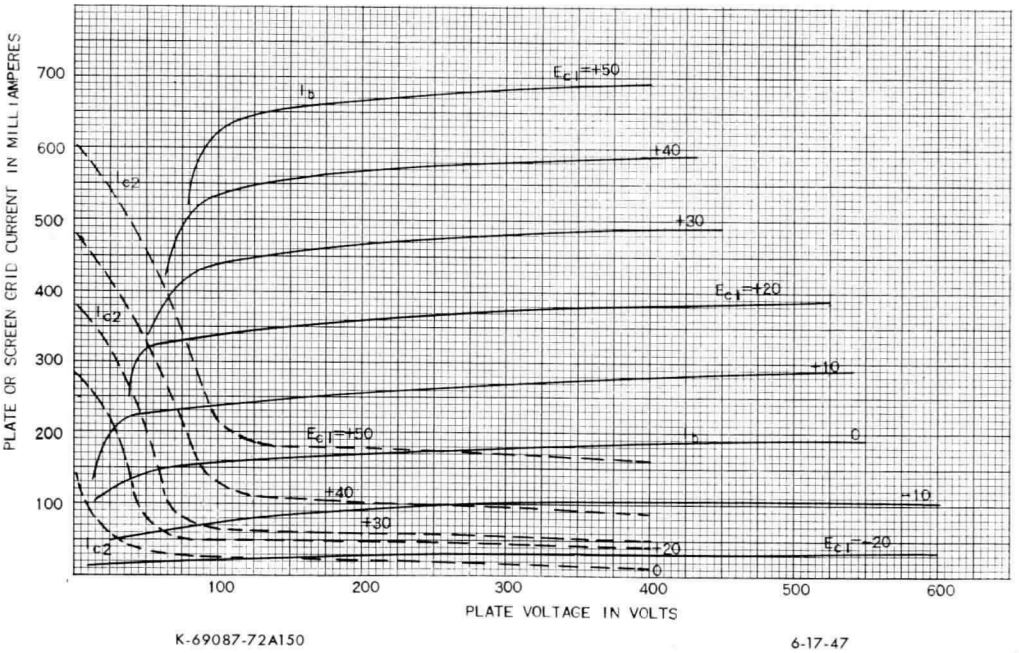

K-69087-72A150 6-17-47

GL-2E26
TYPICAL CHARACTERISTICS
$E_f = 6.3$ VOLTS
SCREEN VOLTAGE = 160

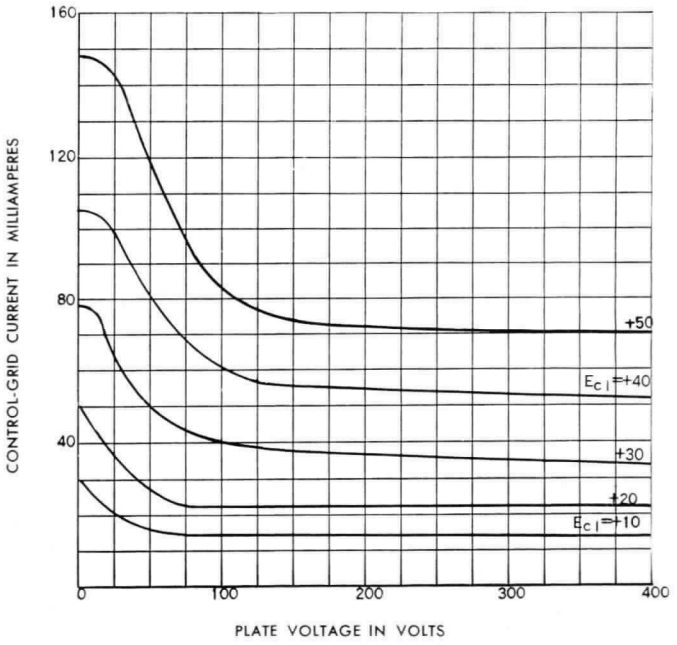

K-69087-72A151 6-24-47

GL-2E26
TYPICAL CHARACTERISTICS
$E_f = 6.3$ VOLTS
SCREEN VOLTAGE = 200

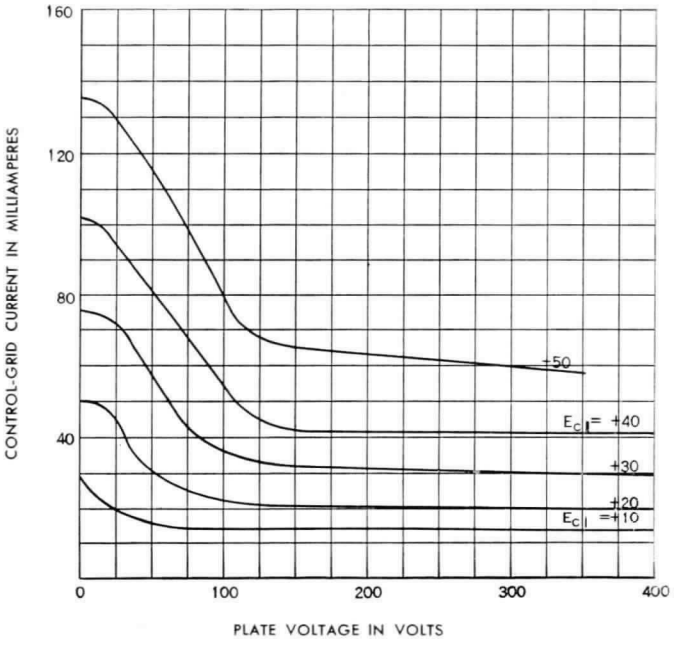

K-69087-72A154 6-20-47

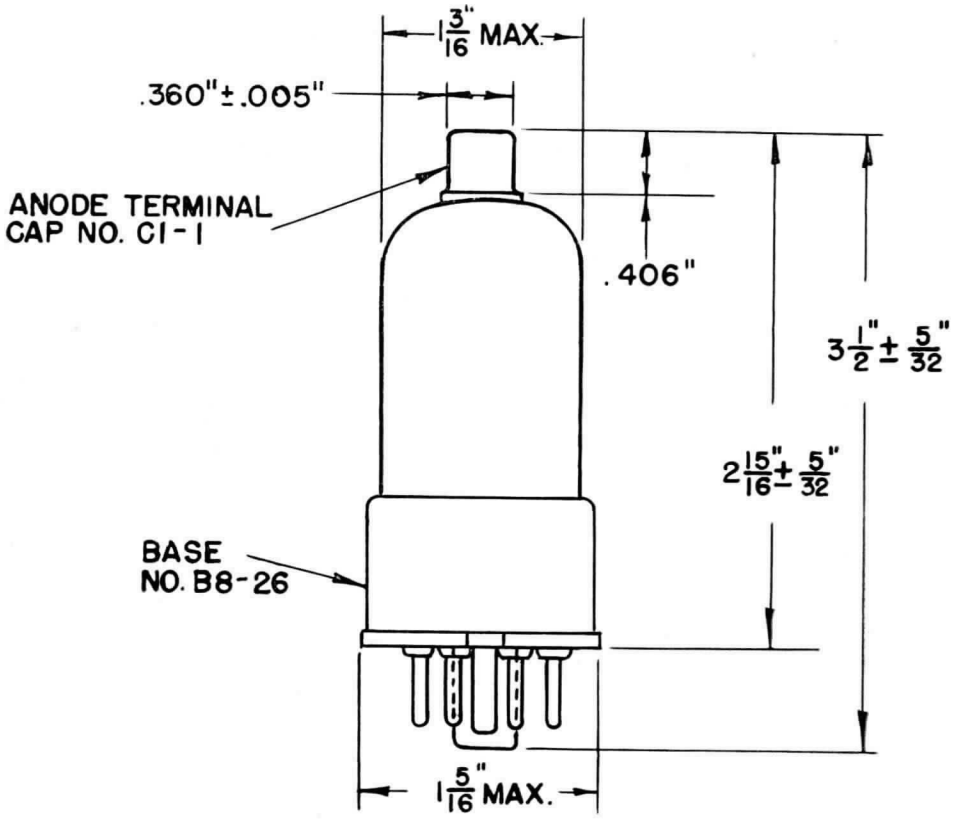

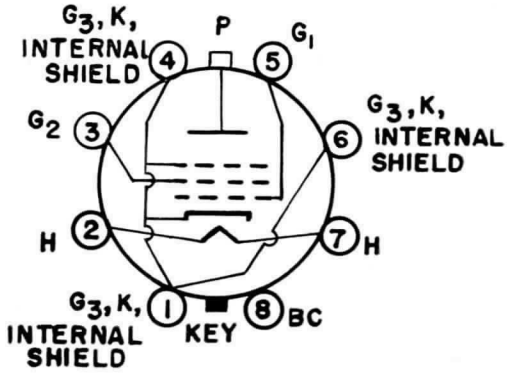

OUTLINE GL-2E26

N-5097AZ

2-28-47

Electronics Department
GENERAL ELECTRIC
Schenectady, N. Y.

9-47 (8M)
Filing No. 8850

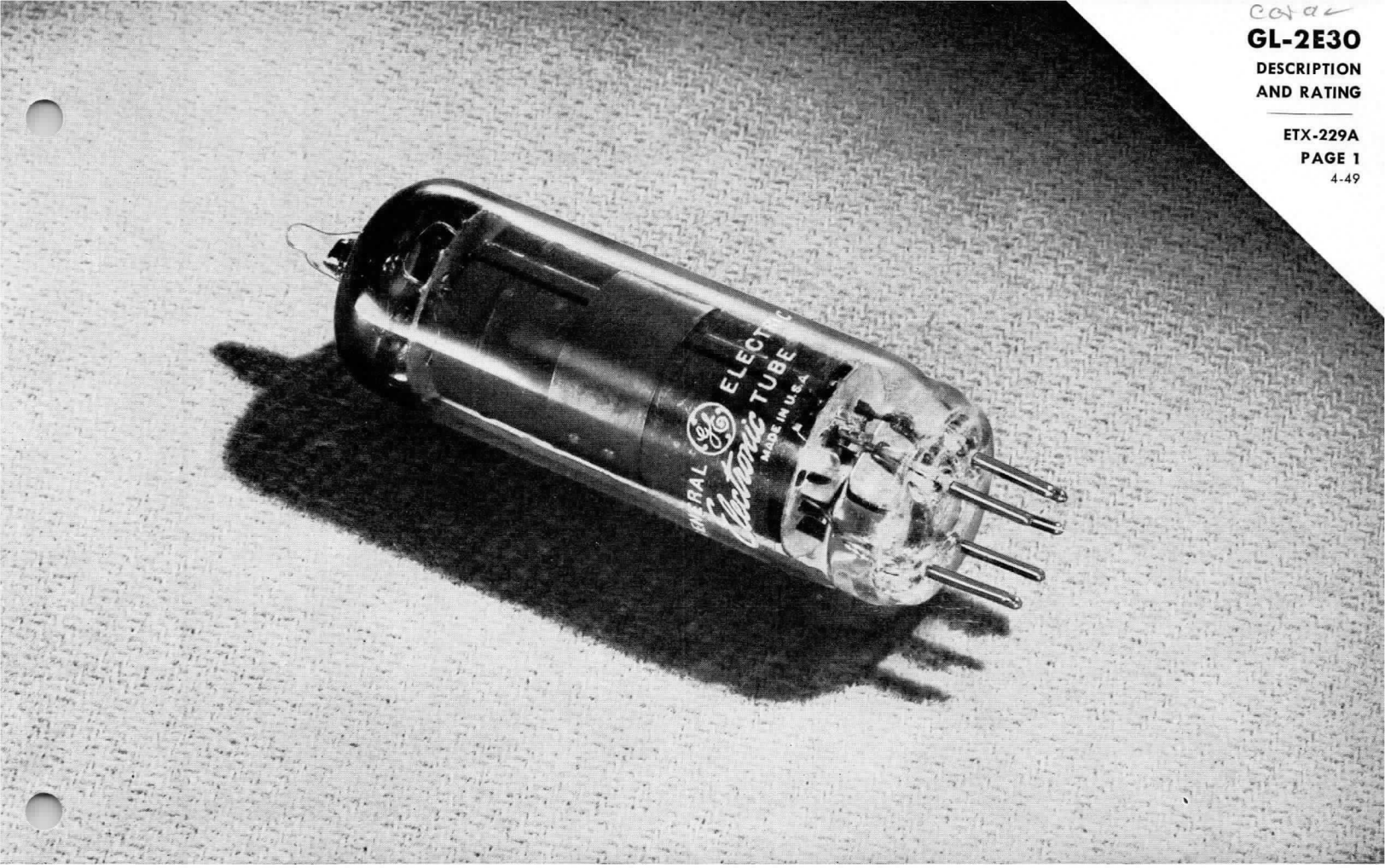

BEAM POWER TUBE

DESCRIPTION

The GL-2E30 is an instant-heating 10-watt miniature beam pentode power tube for use in both audio- and radio-frequency service. Its versatility permits its use in all stages of an entire low-power transmitter. This tube, because of the low-plate-voltage requirement, is especially adapted to portable and mobile applications. In such service the instant-heating filament can be turned off during standby periods. When the 2E30 is used as an audio-frequency output tube which is turned on only during active reception periods by a signal-actuated relay, the resultant saving in battery drain, when the transmitting or receiving time is a small percentage of the total time, provides appreciable power savings. When the 2E30 filament is heated from a transformer with a nominal output of 6.3 volts, the filament connections may be made with small wire to introduce the necessary voltage drop of 0.3 volts. The 2E30 in properly designed circuits requires no neutralization at frequencies up to 165 megacycles and can be used at full ratings at that frequency.

TECHNICAL INFORMATION

These data are for reference only. For design information refer to specifications.

GENERAL

Number of electrodes	5	
Electrical Data		
Filament—Center-tapped oxide-coated		
Filament voltage, a-c or d-c	6.0 ± 10%	volts
Filament current	0.65	ampere
Filament heating time	0.2	approx second
Amplification factor, G_1 to G_2	7	

Electronic TUBE

GENERAL ELECTRIC

Supersedes ETX-229 dated 7-48

TECHNICAL INFORMATION (CONT'D)

Direct interelectrode capacitances	With Close-fitting Shield	Without Shield	
Grid-plate, maximum	0.18	0.2	uuf
Input	9.6	9.5	uuf
Output	14	6.6	uuf

Mechanical Data

Mounting position—filament plane must be vertical.

Net weight . . . . . 0.4 ounce

The plate supply must be turned off before, or simultaneously with, the filament in all applications. When the 2E30 is used as an r-f driver for a tube with a thoriated-tungsten filament, provision must be made so that the driven tube(s) is not operated without a bias voltage when plate and screen potential is applied during the time interval required for the 2E30 to reach operating temperature. When the stand-by period is generally less than 15 minutes, additional life can be obtained by reducing the filament potential to 80 per cent of the nominal operating voltage: For longer stand-by periods the filament should be turned off.

MAXIMUM RATINGS AND TYPICAL OPERATING CONDITIONS

AUDIO-FREQUENCY POWER AMPLIFIER AND MODULATOR—CLASS A1

Maximum Ratings, Design-center Values

D-c plate voltage	250 max	volts
D-c grid No. 2 voltage	250 max	volts
D-c grid No. 2 input	2.5 max	watts
Plate dissipation†	10 max	watts

Typical Operation and Average Characteristics

Filament voltage	6.0 d-c	6.0 d-c	6.0 a-c	6.0 a-c	volts
D-c plate voltage	180	250	180	250	volts
D-c grid No. 2 voltage	180	250	180	250	volts
D-c grid No. 1 voltage‡ a	−10	−16.5	−13	−20	volts
D-c grid No. 1 voltage‡ b	.....	.....	.....	.....	
D-c grid No. 1 voltage‡ c	.....	.....	400	450	ohms
Peak A-F grid No. 1 voltage	9	14	11	14	volts
Zero signal d-c plate current	30	40	30	40	milliamperes
Maximum signal d-c plate current	32	44	32	44	milliamperes
Zero signal d-c grid No. 2 current	2.5	3.3	2.5	3.3	milliamperes
Maximum signal d-c grid No. 2 current	4.3	7.4	5.2	7.4	milliamperes
Plate resistance	59000	63000	59000	63000	ohms
Transconductance	3450	3700	3450	3700	micromhos
Load resistance	4500	4500	4500	4500	ohms
Maximum signal power output	1.8	4.5	2.25	4.5	watts
Total harmonic distortion	6.5	8	8	8	per cent

Typical Operation—Push-pull Amplifier

Unless otherwise specified, values are for two tubes

Filament voltage	6.0 d-c	6.0 d-c	6.0 a-c	6.0 a-c	volts
D-c plate voltage	180	250	180	250	volts
D-c grid No. 2 voltage	180	250	180	250	volts
D-c grid No. 1 voltage‡ a	−10	−16.5	−13	−20	volts
D-c grid No. 1 voltage‡ b	.....	.....	.....	.....	
D-c grid No. 1 voltage‡ c	.....	.....	200	225	ohms
Peak A-F grid to grid voltage	18	28	22	28	volts
Zero signal d-c plate current	60	80	60	80	milliamperes
Maximum signal d-c plate current	64	88	64	88	milliamperes
Zero signal d-c grid No. 2 current	5	6.6	5	6.6	milliamperes
Maximum signal d-c grid No. 2 current	8.6	14.8	10.4	14.8	milliamperes
Effective load resistance, plate to plate	9000	9000	9000	9000	ohms
Maximum signal power output	3.6	9	4.5	9	watts
Total harmonic distortion	5	6	6	6	per cent

AUDIO-FREQUENCY POWER AMPLIFIER AND MODULATOR—CLASS AB_1

Maximum Ratings, Design-center Values

D-c plate voltage	275 max	volts
D-c grid No. 2 voltage	250 max	volts
D-c grid No. 2 input	2.5 max	watts
Plate dissipation	10 max	watts

TECHNICAL INFORMATION (CONT'D)

AUDIO-FREQUENCY POWER AMPLIFIER AND MODULATOR—CLASS AB_1 (Cont'd)

Typical Operation and Average Characteristics (Cont'd)

Unless otherwise specified the values are for two tubes

A-c filament voltage#	6.0	6.0	6.0	volts
D-c plate voltage	180	250	250	volts
D-c grid No. 2 voltage	180	250	250	volts
D-c grid No. 1 voltage#	−17.5	−25	−25	volts
Peak A-F grid to grid voltage	31	45	45	volts
Zero signal d-c plate current	38	48	48	milliamperes
Maximum signal d-c plate current	54	80	82	milliamperes
Zero signal d-c grid No. 2 current	2	3	3	milliamperes
Maximum signal d-c grid No. 2 current	7.6	13.5	10	milliamperes
Effective load resistance, plate to plate	7000	8000	6000	ohms
Maximum signal power output	5	12.5	10	watts
Total harmonic distortion	4.5	7.5	3.6	per cent

AUDIO-FREQUENCY POWER AMPLIFIER AND MODULATOR—CLASS AB_2

Maximum Ratings, Absolute Values

D-c plate voltage	300 max	volts
D-c grid No. 2 voltage	275 max	volts
Peak position A-F grid No. 1 voltage	20 max	volts
Maximum signal d-c plate current**	60 max	milliamperes
Maximum signal plate input**	15 max	watts
Maximum signal grid No. 2 input**	2.5 max	watts
Plate dissipation**	10 max	watts

Typical Operation and Average Characteristics

Unless otherwise specified, values are for two tubes

A-c filament voltage#	6.0	6.0	volts
D-c plate voltage	180	250	volts
D-c grid No. 2 voltage	180	250	volts
D-c grid No. 1 voltage#	−22.5	−30	volts
Peak A-F grid to grid voltage	75	87	volts
Zero signal d-c plate current	16	40	milliamperes
Maximum signal d-c plate current	100	120	milliamperes
Zero signal d-c grid No. 2 current	1	4	milliamperes
Maximum signal d-c grid No. 2 current	16	20	milliamperes
Maximum signal d-c grid No. 1 current	3	2.3	milliamperes
Effective load resistance, plate to plate	2500	3800	ohms
Maximum signal grid No. 1 driving power	0.23	0.2	watts
Maximum signal power output	7.4	17	watts
Total harmonic distortion	3	4	per cent

RADIO-FREQUENCY POWER AMPLIFIER—CLASS C TELEPHONY PLATE AND SCREEN-GRID AMPLITUDE MODULATED

Carrier conditions for use with a maximum modulation factor of 1

Maximum Ratings, Absolute Values

D-c plate voltage	200 max	volts
D-c grid No. 2 voltage	200 max	volts
D-c grid No. 1 voltage	−150 max	volts
Grid No. 1 resistor	100,000 max	ohms
D-c plate current	60 max	milliamperes
D-c grid No. 1 current	2.5 max	milliamperes
D-c plate input power△	12 max	watts
D-c grid No. 2 input power△	2.5 max	watts
Plate dissipation△	6.6 max	watts

Typical Operation and Average Characteristics

D-c plate voltage		200	volts
D-c grid No. 2 voltage		200	volts
D-c grid No. 1 voltage‡	a	−46	volts
	b	20000	ohms
	c	850	ohms

TECHNICAL INFORMATION (CONT'D)

RADIO-FREQUENCY POWER AMPLIFIER—CLASS C TELEPHONY (CONT'D)

Typical Operation and Average Characteristics (Cont'd)

Peak R-F grid No. 1 voltage	66	volts
D-c plate current	45	milliamperes
D-c grid No. 2 current	10	milliamperes
D-c grid No. 1 current	2.3	milliamperes
Grid No. 1 driving power	0.15 approx	watts
Power output	5 approx	watts

RADIO-FREQUENCY POWER AMPLIFIER AND OSCILLATOR—CLASS C TELEGRAPHY AND FREQUENCY MODULATION

Key-down conditions per tube without amplitude modulation ¶

Maximum Ratings, Absolute Values

D-c plate voltage	300 max	volts
D-c grid No. 2 voltage	250 max	volts
D-c grid No. 1 voltage	−150 max	volts
Grid No. 1 resistor	100,000 max	ohms
D-c plate current	60 max	milliamperes
D-c grid No. 1 current	3 max	milliamperes
Peak positive R-F grid No. 1 voltage	30 max	volts
D-c plate input	18 max	watts
D-c screen input	2.5 max	watts
Plate dissipation	10 max	watts

Typical Operation and Average Characteristics		**Low Frequency**		**165 Megacycles**	
D-c plate voltage		200	250	300	volts
D-c grid No. 2 voltage		200	200	250	volts
D-c grid No. 1 voltage‡	a	−46	−50	−70	volts
	b	20,000	20,000	100,000	ohms
	c	850	850	1250	ohms
Peak R-F grid No. 1 voltage		66	72	75	volts
D-c plate current		45	50	50	milliamperes
D-c grid No. 2 current		10	10	5	milliamperes
D-c grid No. 1 current		2.3	2.5	0.7	milliamperes
Grid No. 1 Driving Power, approximate		0.15	0.2	1.7	watts
Power output, approximate		5	7.5	6	watts
Useful power output, approximate		.....	.....	5	watts

Typical Operation—Frequency Doubler		**To 82.5 mc**		**To 165 mc**	
D-c plate voltage		250	250	300	volts
D-c grid No. 2 voltage		220	200	225	volts
D-c grid No. 1 voltage‡	a	−100	−70	−70	volts
	b	70000	30000	100,000	ohms
	c	1750	1250	1400	ohms
Peak r-f grid No. 1 voltage		120	100	90	volts
D-c plate current		50	50	45	milliamperes
D-c grid No. 2 current		7	5	3.8	milliamperes
D-c grid No. 1 current		1.4	2.3	0.7	milliamperes
Grid No. 1 driving power, approximate		0.2	0.5	0.2	watts
Plate power output***, approximate		5	4	4.5	watts
Useful power output, approximate		4	3	3.5	watts

† Class A_1 dissipation rating is based upon tubes having average plate current. In the case of tubes whose plate current is the maximum acceptable under the testing specification, dissipation will be greater with somewhat higher power output capability.

‡ Obtained from (a) fixed supply (b) control-grid resistor (c) cathode resistor, or by a combination of these methods.

** Averaged over any audio-frequency cycle of sine-wave form.

*** Plate power output includes circuit losses and radio-frequency radiation as well as useful power delivered to the load.

When d-c is used on the filament, the bias should be reduced approximately 3½ volts, and the grid return made to the negative leg of the filament.

△When modulated 100 per cent with a sine wave, the average power increases by 50 per cent. With a complex wave form, such as is produced by speech or music, the average power increases approximately 20 per cent to 25 per cent.

¶ Modulation essentially negative may be used if the positive peak of the envelope does not exceed 115 per cent of the carrier conditions.

GL-2E30 AVERAGE PLATE CHARACTERISTICS
SCREEN VOLTAGE = 150 VOLTS D-C
E_f = 6 VOLTS A-C

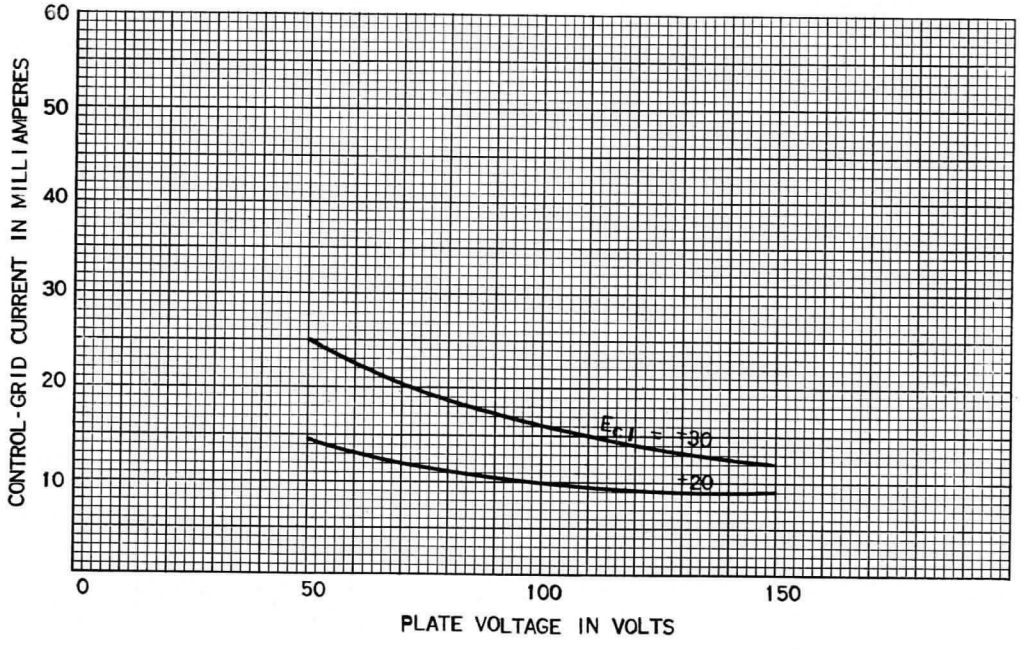

K-69087-72A198

1-28-48

GL-2E30 AVERAGE PLATE CHARACTERISTICS
SCREEN VOLTAGE = 150 VOLTS D-C
E_f = 6 VOLTS A-C

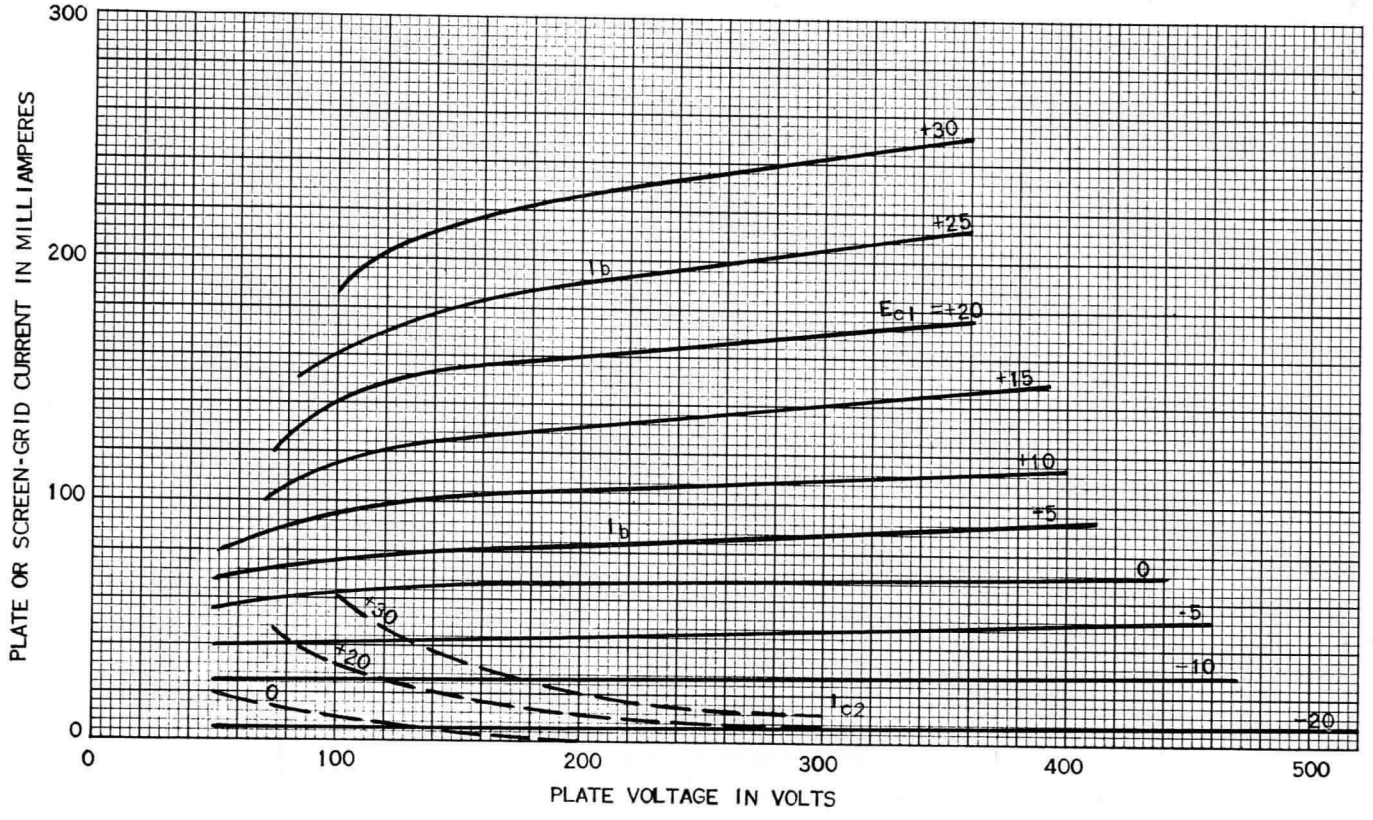

K-69087-72A265

1-28-49

GL-2E30 CONTROL GRID CHARACTERISTICS
SCREEN VOLTAGE = 200 VOLTS D-C
E_f = 6 VOLTS A-C

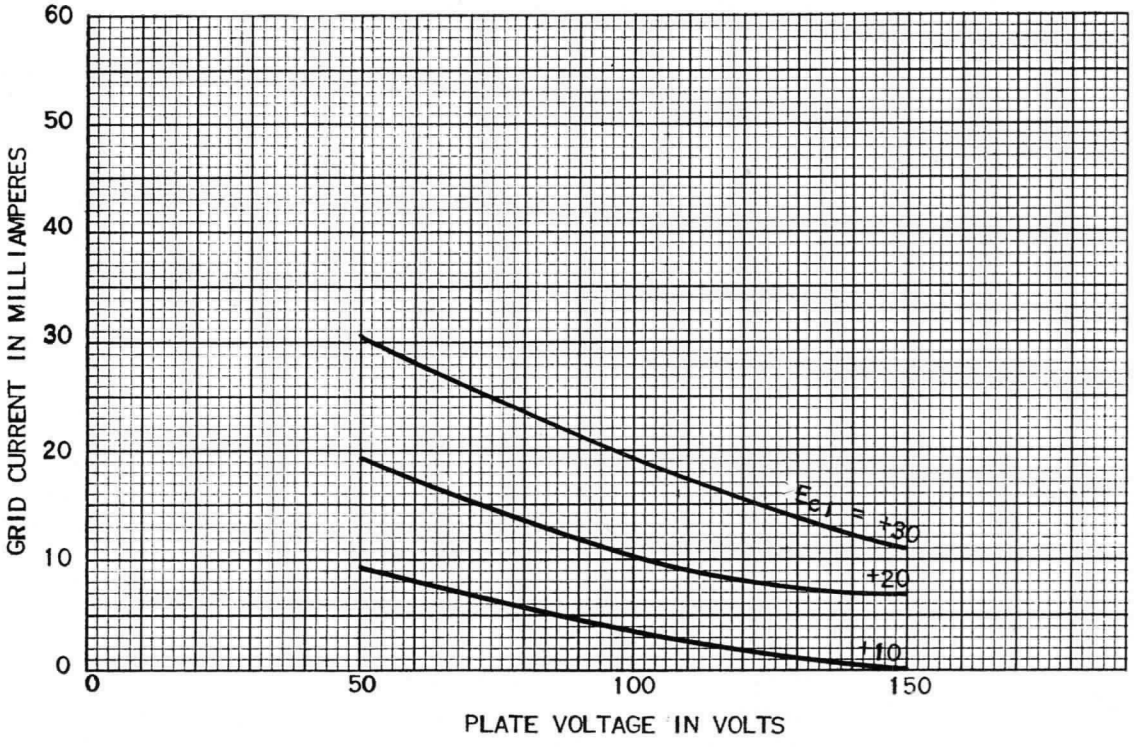

K-69087-72A266

1-28-49

GL-2E30 AVERAGE PLATE CHARACTERISTICS
SCREEN VOLTAGE = 200 VOLTS D-C
E_f = 6 VOLTS A-C

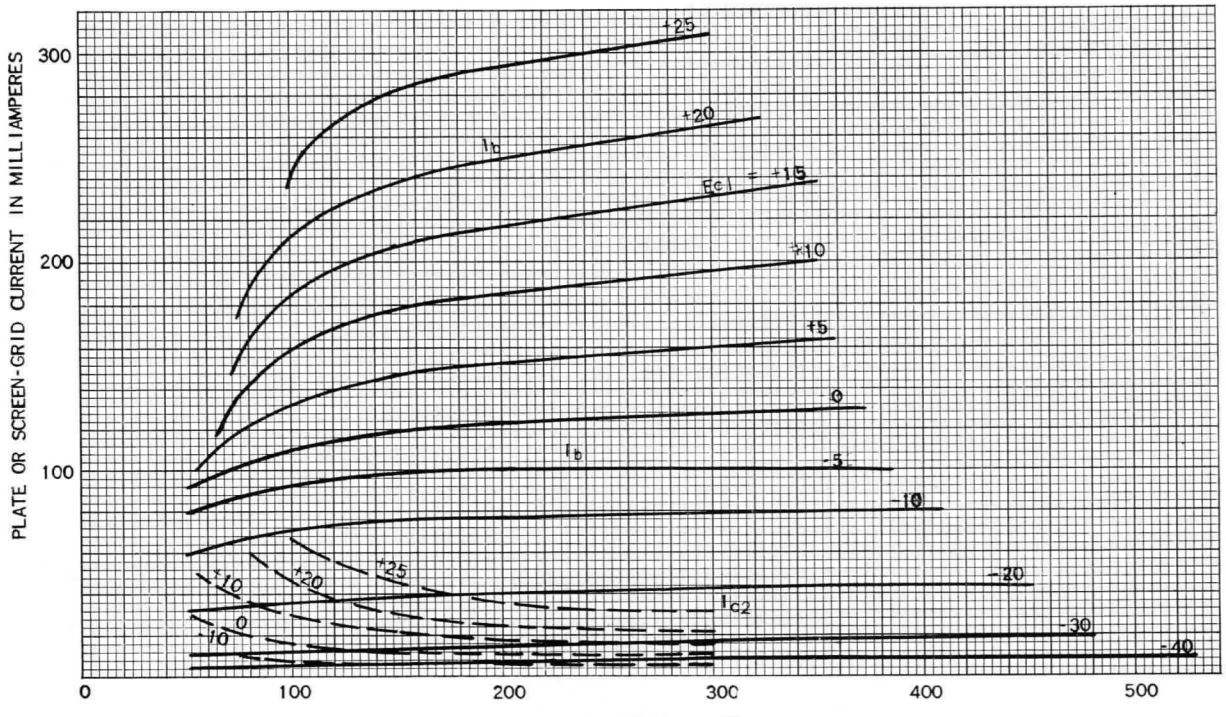

K-69087-72A202

1-28-48

GL-2E30 CONTROL GRID CHARACTERISTICS
SCREEN VOLTAGE = 250 VOLTS D-C
E_f = 6 VOLTS A-C

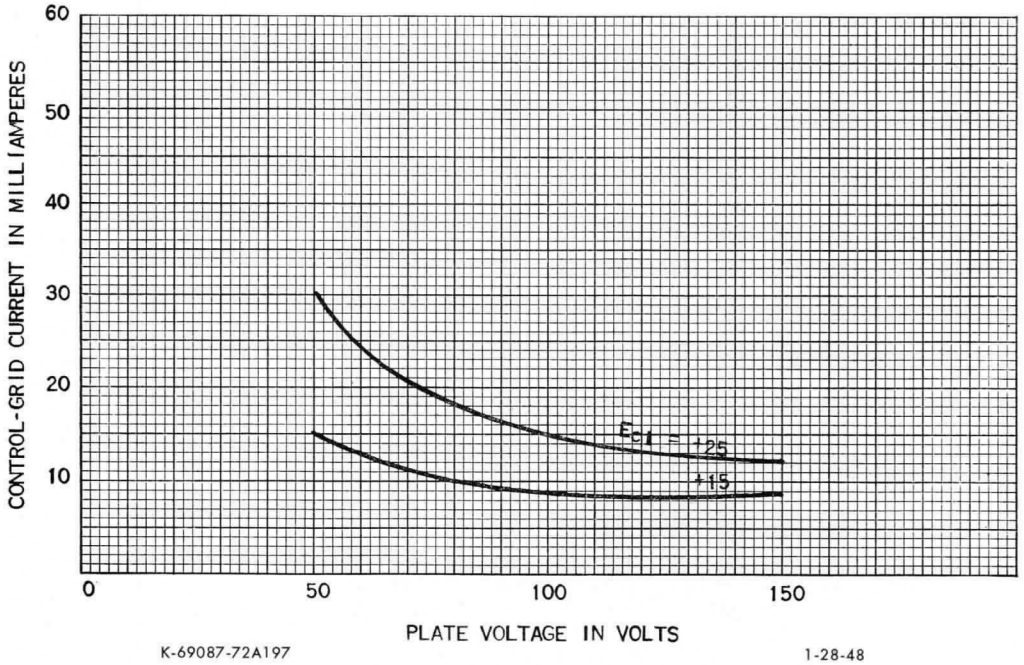

K-69087-72A197 1-28-48

GL-2E30 AVERAGE PLATE CHARACTERISTICS
SCREEN VOLTAGE = 250 VOLTS D-C
E_f = 6 VOLTS A-C

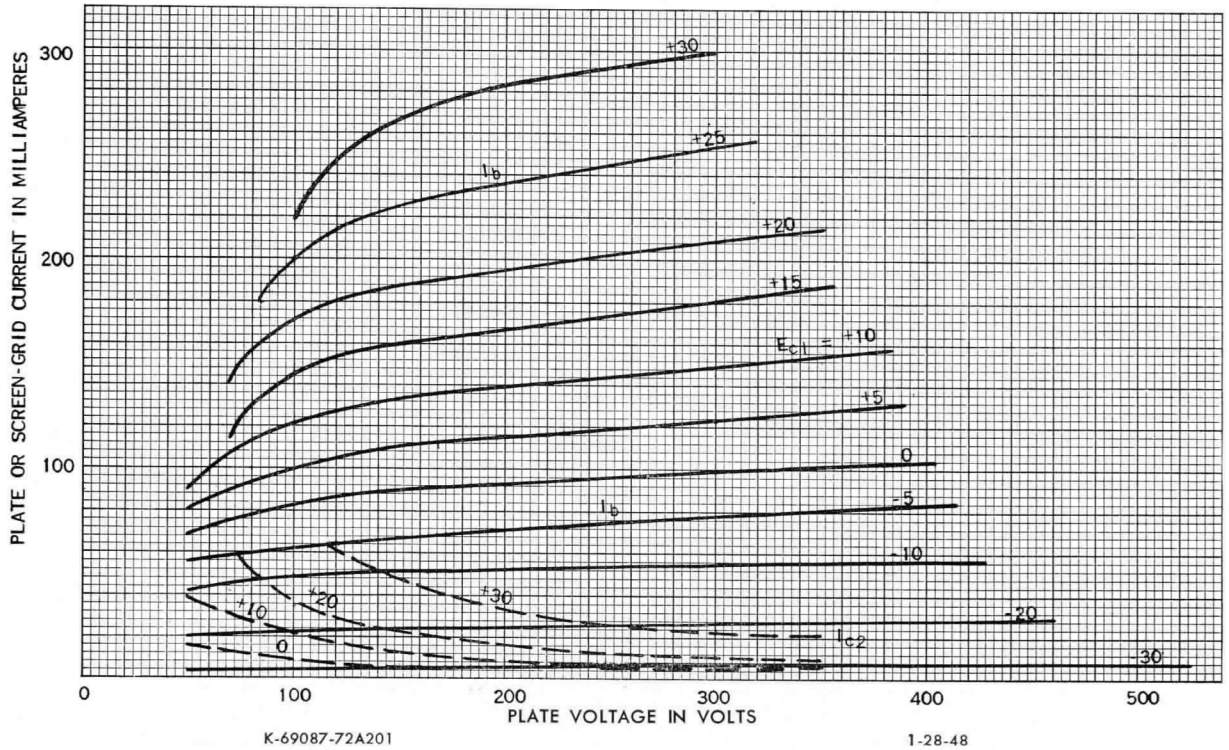

K-69087-72A201 1-28-48

GL-2E30 AVERAGE PLATE CHARACTERISTICS

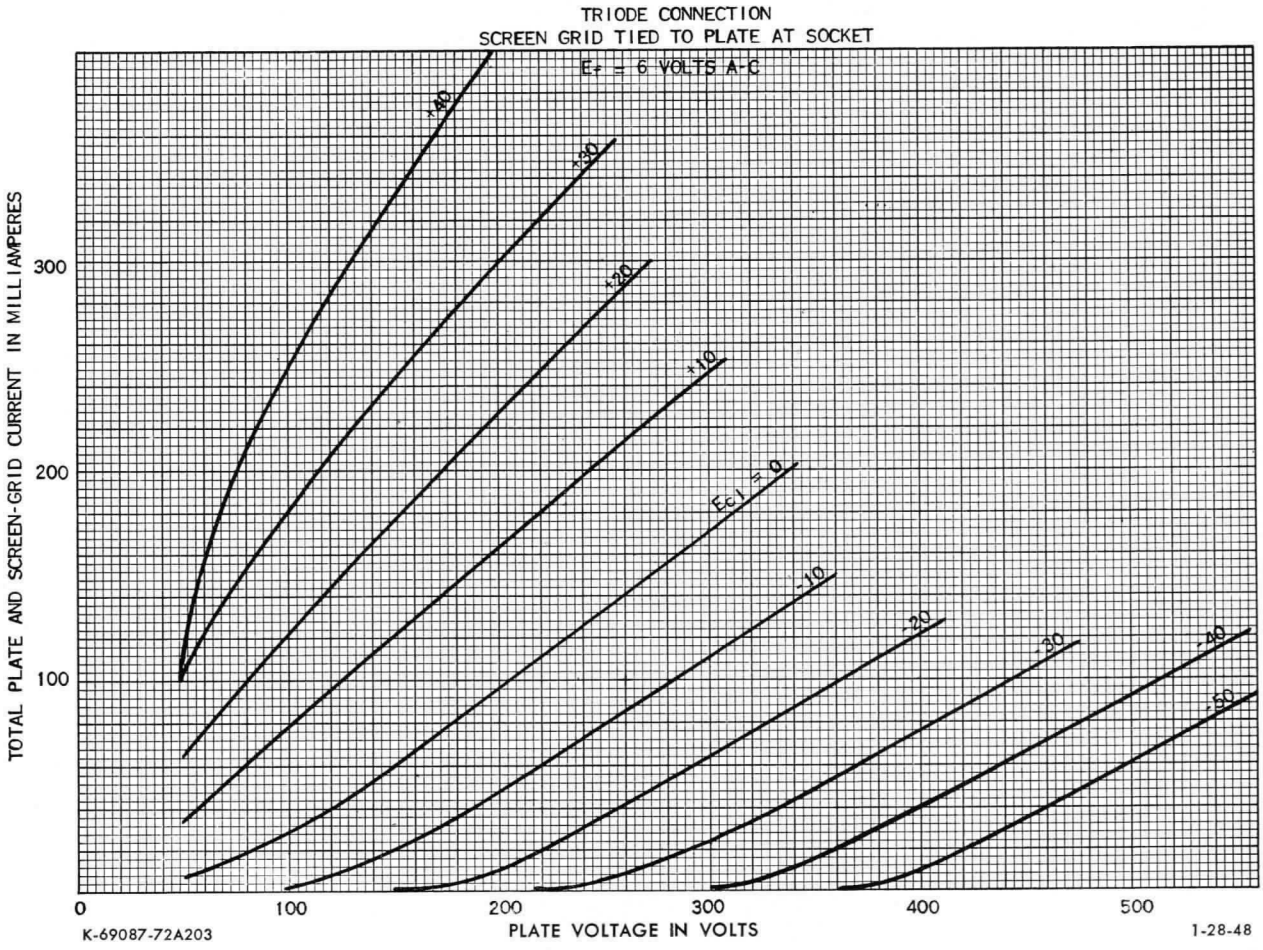

GL-2E30 CONTROL GRID CHARACTERISTICS

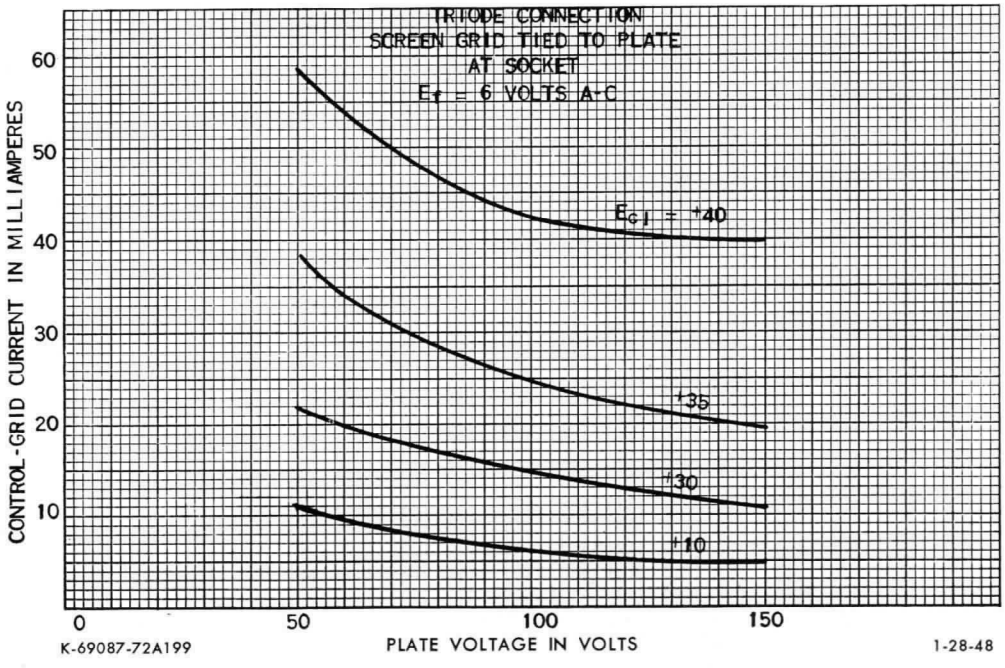

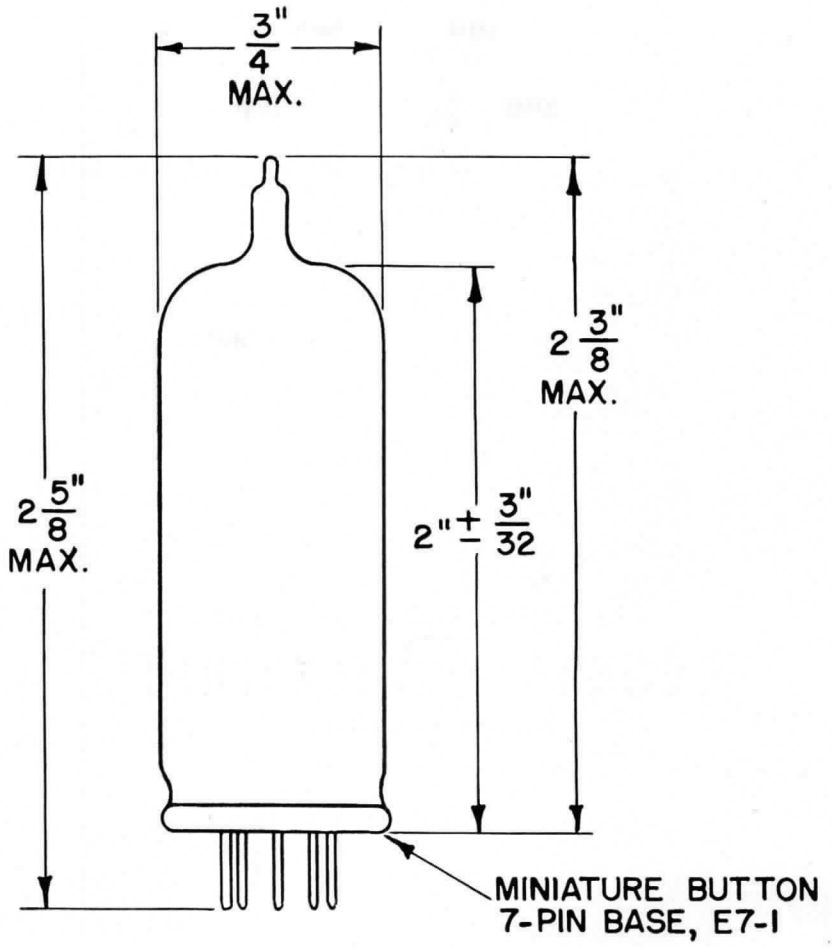

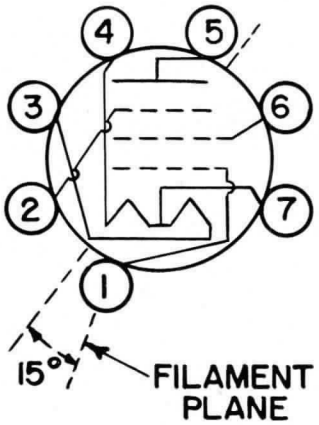

BASING DIAGRAM

THE BEAM PLATES SHOULD BE CONNECTED DIRECTLY TO GROUND OR FILAMENT CENTER TAP. IN VERY-HIGH-FREQUENCY CIRCUITS THE CENTER TAP SHOULD BE BY-PASSED TO, OR GROUNDED TO, A COMMON POINT TO PROVIDE LOWEST EFFECTIVE FILAMENT INDUCTANCE.

TRANSMITTING TUBE
GL-2E30

N-15116AZ

1-12-48

Electronics Department
GENERAL ELECTRIC
Schenectady, N. Y.

4-49 (8M)
Filing No. 8850

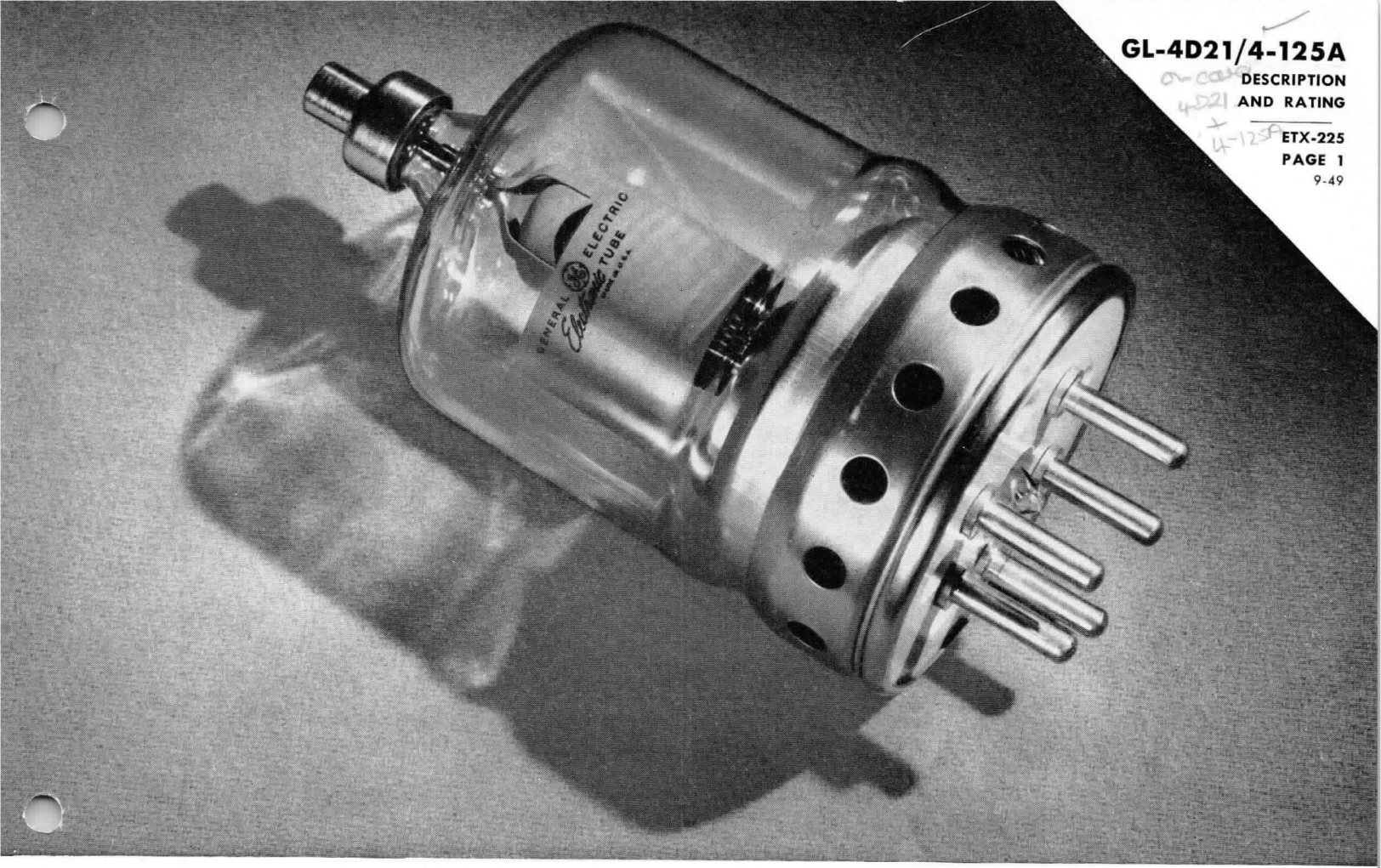

▲ TETRODE

DESCRIPTION

The GL-4D21/4-125A is a four-electrode tube designed for use as a power amplifier and oscillator. The anode is capable of dissipating 125 watts, and cooling is accomplished by radiation. The cathode is a thoriated-tungsten filament. Maximum ratings apply up to 120 megacycles.

TECHNICAL INFORMATION

These data are for reference only. For design information refer to specifications.

GENERAL CHARACTERISTICS

Number of electrodes	4	
Electrical		
Filament voltage	5.0	volts
Filament current	6.5	amperes
Grid-screen amplification factor	6.2	
Interelectrode capacitances		
Grid No. 1 to plate*	0.05	micromicrofarad
Input	10.8	micromicrofarads
Output	3.1	micromicrofarads
Transconductance, $I_b = 50$ ma, $E_b = 2500$ v, $E_{c2} = 400$v	2450	micromhos

* Without external shielding, base shell connected to ground.

▲Changed from BEAM POWER TUBE.

GE Electronic TUBE

GENERAL ELECTRIC

Supersedes page 1 and 2 only ETX-225 dated 9-47

TECHNICAL INFORMATION (CONT'D)

Mechanical

Mounting position—vertical	
Net weight, approximate	6.5 ounces

MAXIMUM RATINGS AND TYPICAL OPERATING CONDITIONS

CLASS AB_1 AUDIO-FREQUENCY POWER AMPLIFIER AND MODULATOR

Sinusoidal wave, two tubes unless otherwise specified

Maximum ratings, absolute values				
D-c plate voltage			3000 max	volts
D-c grid No. 2 voltage			600 max	volts
Maximum signal d-c plate current, per tube			225 max	milliamperes
Grid No. 2 dissipation, per tube			20 max	watts
Plate dissipation, per tube			125 max	watts
Typical operation				
D-c plate voltage	1500	2000	2500	volts
D-c grid No. 2 voltage	600	600	600	volts
D-c grid No. 1 voltage†	−90	−94	−96	volts
Peak a-f grid input voltage, per tube	90	94	96	volts
Zero-signal d-c plate current	60	50	50	milliamperes
Maximum signal d-c plate current	222	240	232	milliamperes
Zero-signal d-c grid No. 2 current	−1.0	−0.5	−0.3	milliamperes
Maximum signal d-c grid No. 2 current	17	6.4	8.5	milliamperes
Effective load resistance, plate to plate	10200	13400	20300	ohms
Driving power	0	0	0	watts
Maximum signal power output	158	230	330	watts
Total harmonic distortion	5	2	2.6	per cent
Maximum signal plate dissipation, per tube	87.5	125	125	watts

CLASS AB_2 AUDIO-FREQUENCY POWER AMPLIFIER AND MODULATOR

Sinusoidal wave, two tubes unless otherwise specified

Maximum ratings, absolute values					
D-c plate voltage				3000 max	volts
D-c grid No. 2 voltage				400 max	volts
Maximum signal d-c plate current, per tube				225 max	milliamperes
Grid No. 2 dissipation, per tube				20 max	watts
Plate dissipation, per tube				125 max	watts
Typical operation					
D-c plate voltage	1500	2000	2500	3000	volts
D-c grid No. 2 voltage	350	350	350	350	volts
D-c grid No. 1 voltage	−41	−45	−43	−51	volts
Peak a-f grid input voltage, per tube	141	105	89	99	volts
Zero-signal d-c plate current	87	72	93	55	milliamperes
Maximum signal d-c plate current	400	300	260	260	milliamperes
Zero-signal d-c grid No. 2 current	0	0	0	0	milliamperes
Maximum signal d-c grid No. 2 current	34	5	6	3.5	milliamperes
Effective load resistance, plate to plate	7200	13600	22200	27700	ohms
Maximum signal average driving power, approximate	2.5	1.4	1	1.1	watts
Maximum signal peak driving power	5.2	3.1	2.4	2.5	watts
Maximum signal power output	350	350	400	520	watts
Total harmonic distortion	2.5	1	2.2	1.8	per cent
Maximum signal plate dissipation, per tube	125	125	122	125	watts

TECHNICAL INFORMATION (CONT'D)

CLASS C TELEPHONY PLATE-MODULATED RADIO-FREQUENCY POWER AMPLIFIER

Carrier Conditions per Tube for Use with a Maximum Modulation Factor of 1.0

Maximum Ratings, Absolute Values

DC Plate Voltage	2500 Max	Volts
DC Grid No. 2 Voltage	400 Max	Volts
DC Grid No. 1 Voltage	−500 Max	Volts
DC Plate Current	200 Max	Milliamperes
Grid No. 1 Dissipation	5 Max	Watts
Grid No. 2 Dissipation	20 Max	Watts
Plate Dissipation	85 Max	Watts

Typical Operation

DC Plate Voltage	2000	2500	Volts
DC Grid No. 2 Voltage	350	350	Volts
DC Grid No. 1 Voltage	−220	−210	Volts
Peak RF Grid Input Voltage	375	360	Volts
Peak AF Grid No. 2 Voltage, 100 percent modulation	210	210	Volts
DC Plate Current	150	152	Milliamperes
DC Grid No. 2 Current	33	30	Milliamperes
DC Grid No. 1 Current, approximate	10	9	Milliamperes
Grid No. 1 Dissipation	1.6	1.4	Watts
Grid No. 2 Dissipation	11.5	10.5	Watts
Driving Power, approximate	3.8	3.3	Watts
Power Input	300	380	Watts
Power Output, approximate	225	300	Watts
Plate Dissipation	75	80	Watts

CLASS C TELEGRAPHY RADIO-FREQUENCY POWER AMPLIFIER AND OSCILLATOR

Key-Down Conditions per Tube without Modulation¶

Maximum Ratings, Absolute Values

DC Plate Voltage	3000 Max	Volts
DC Grid No. 2 Voltage	400 Max	Volts
DC Grid No. 1 Voltage	—500 Max	Volts
DC Plate Current	225 Max	Milliamperes
DC Grid No. 1 Dissipation	5 Max	Watts
Grid No. 2 Dissipation	20 Max	Watts
Plate Dissipation	125 Max	Watts

Typical Operation

DC Plate Voltage	2000	2500	3000	Volts
DC Grid No. 2 Voltage	350	350	350	Volts
DC Grid No. 1 Voltage	−100	−150	−150	Volts
Peak RF Grid Input Voltage	230	320	280	Volts
DC Plate Current	200	200	167	Milliamperes
DC Grid No. 2 Current	50	40	30	Milliamperes
DC Grid No. 1 Current, approximate	12	12	9	Milliamperes
Plate Dissipation	125	125	125	Watts
Grid No. 2 Dissipation	18	14	10.5	Watts
Grid No. 1 Dissipation	1.6	2	1.2	Watts
Driving Power, approximate	2.8	3.8	2.5	Watts
Power Input	400	500	500	Watts
Power Output, approximate	275	375	375	Watts

† The effective grid-circuit resistance must not exceed 250,000 ohms.

¶ Modulation essentially negative may be used if the positive peak of the envelope does not exceed 115 per cent of the carrier conditions.

‡ Supersedes pages 3 and 4 dated 9-47.

APPLICATION NOTES

Maximum ratings apply up to 120 megacycles. The tube may be operated at higher frequencies provided the maximum values of plate voltage and power input are reduced according to the tabulation below (other maximum ratings are the same as shown above). Special attention should be given to adequate ventilation of the bulb at these frequencies.

Frequency	120	150	200	250 Megacycles
Percentage of Maximum Rated Plate Voltage and Plate Input				
Class C Plate Modulated	100	84	64	— Percent
Class C Unmodulated	100	80	64	54 Percent

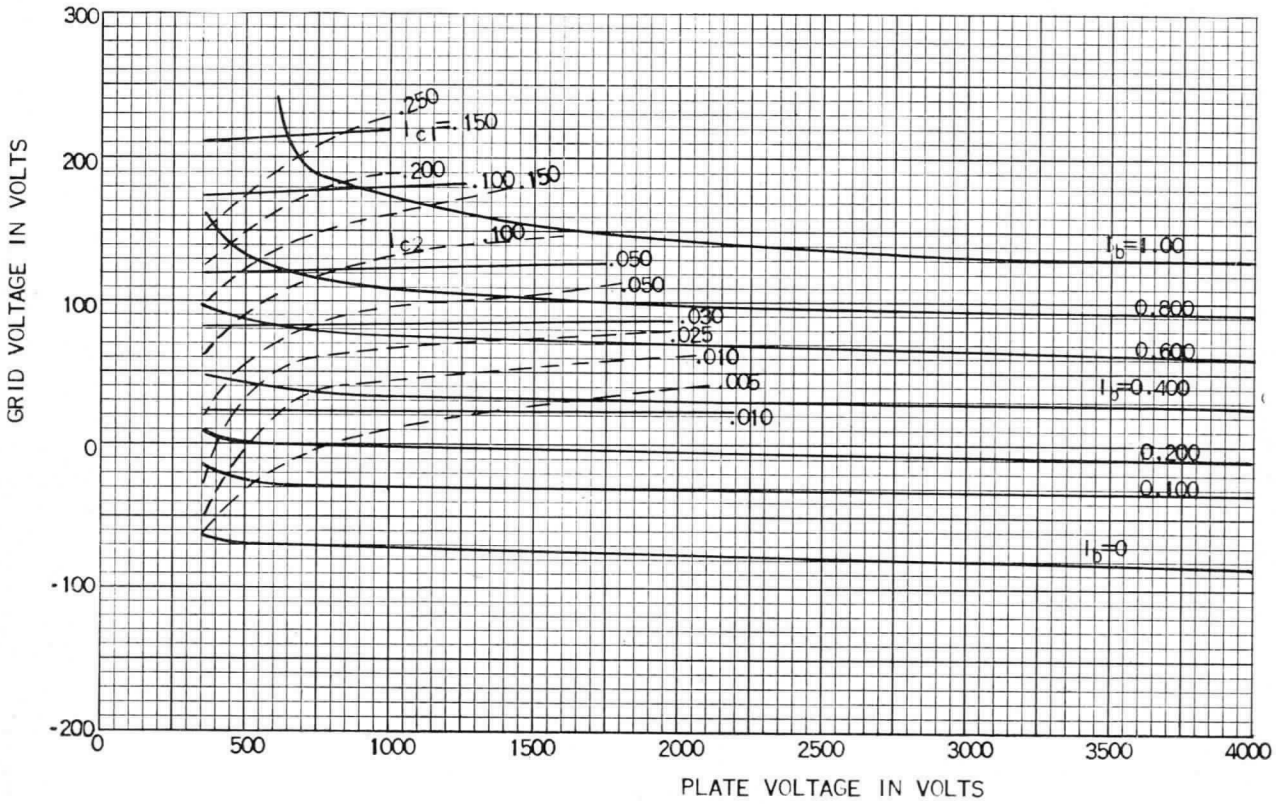

CONSTANT CURRENT CHARACTERISTICS
⊕SCREEN VOLTAGE = 350 VOLTS

K-69087-72A115
⊕ *Denotes a change.*

3-24-47

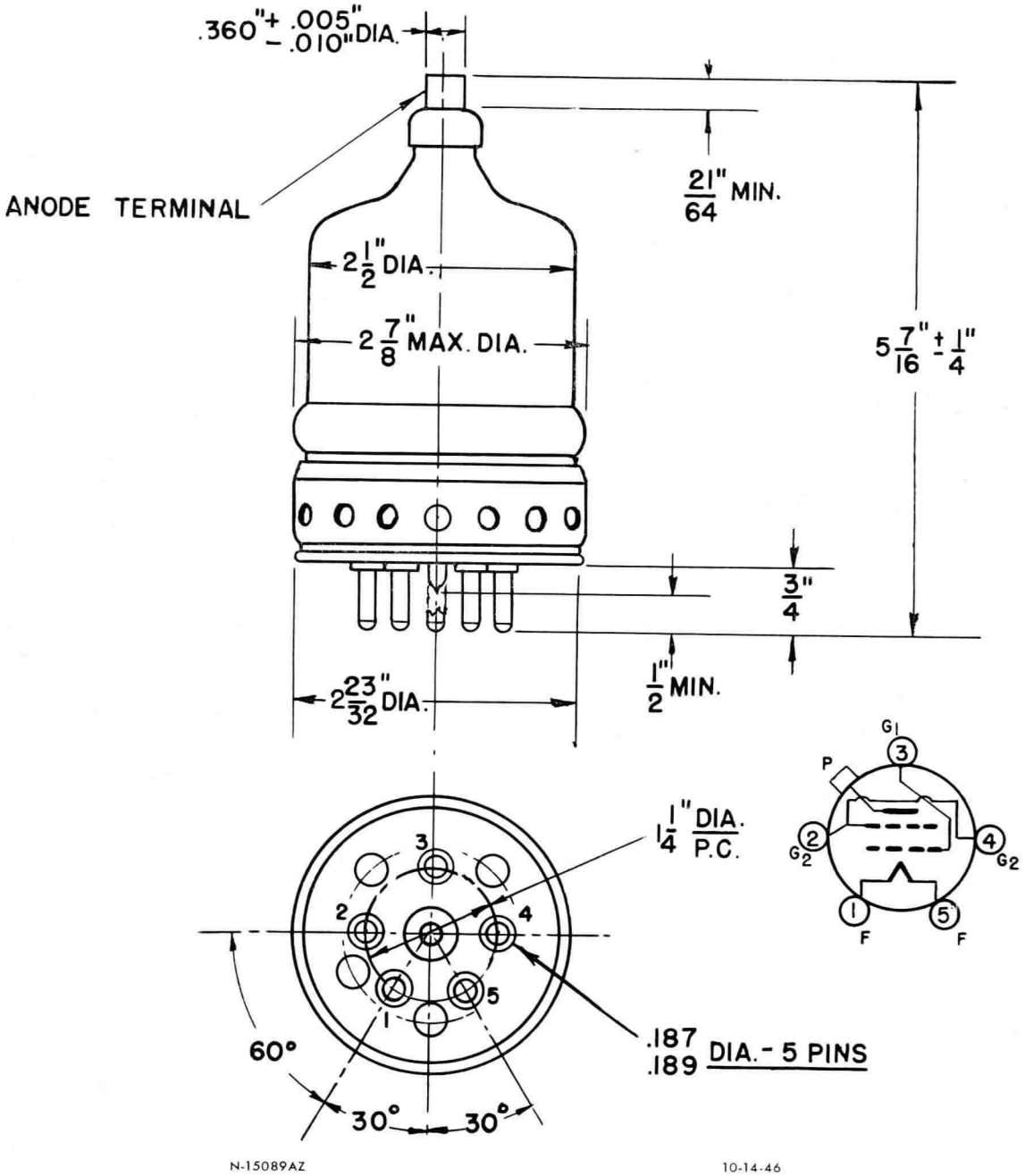

GL-4D21/4-125A OUTLINE

Electronics Department
GENERAL ELECTRIC
Schenectady, N. Y.

9-47 (8M)
Filing No. 8850



TETRODE

DESCRIPTION

The GL-4X150A is a small and compact four-electrode tube designed for use as a power amplifier or oscillator. The tube may also be used as a wide-band amplifier in video applications. The anode is forced-air cooled and is capable of dissipating 150 watts. The cathode is indirectly heated. Maximum ratings apply up to 500 megacycles.

A feature of this tube is a special terminal arrangement to facilitate its use in tank circuits of the coaxial type. The output circuit is effectively isolated from the input circuit at the higher frequencies by the contact-ring terminal for the screen grid. For operation of the GL-4X150A at the lower frequencies a base-pin terminal for the screen grid is available.

TECHNICAL INFORMATION

These data are for reference only. For design information refer to specifications.

GENERAL

Electrical Data

Heater Voltage	6.0	Volts
Heater Current	2.6	Amperes
Minimum Heating Time	30	Seconds
Transconductance, E_p = 500, E_{c2} = 250, I_p = 250 ma	12,000	Micromhos
Amplification Factor, Grid No. 2 to Grid No. 1	5	
Direct Interelectrode Capacitances*		
Control Grid to Plate	0.02	uuf
Input	16.1	uuf
Output	4.7	uuf

GE Electronic TUBE

GENERAL ELECTRIC

TECHNICAL INFORMATION (CONT'D)

Mechanical Data

Mounting position ..... any
Type of cooling ..... forced air

Required air flow on anode
Plate dissipation—Percentage of rating 100
Air flow—Cubic feet per minute 5.6
Pressure—Inches water 0.26
The specified air flow should be delivered by a blower through the radiator before and during the application of any voltages.

Required air flow on base

Forced-air-cooling of the base end of the tube must be provided to limit the temperature of the base seals to 150 C.

MAXIMUM RATINGS AND TYPICAL OPERATING CONDITIONS

PLATE-MODULATED RADIO-FREQUENCY POWER AMPLIFIER—CLASS C TELEPHONY

Carrier conditions per tube for use with a maximum modulation factor of 1.0

Maximum ratings, absolute values
For operating frequencies up to 500 megacycles

D-c plate voltage	1000 max	volts
D-c grid No. 2 voltage	300 max	volts
D-c grid No. 1 voltage	−250 max	volts
D-c plate current	200 max	milliamperes
Plate dissipation	100 max	watts
Grid No. 2 dissipation	15 max	watts
Grid No. 1 dissipation	2 max	watts

Maximum circuit value

Grid No. 1 circuit resistance	25,000 max	ohms

RADIO-FREQUENCY POWER AMPLIFIER AND OSCILLATOR—CLASS C TELEGRAPHY AND RADIO-FREQUENCY POWER AMPLIFIER—CLASS C FM TELEPHONY

Key-down conditions per tube without amplitude modulation ¶

Maximum Ratings, Absolute Values
For operating frequencies up to 500 megacycles

D-c plate voltage	1250 max	volts
D-c grid No. 2 voltage	300 max	volts
D-c grid No. 1 voltage	−250 max	volts
D-c plate current	250 max	milliamperes
Plate dissipation	150 max	watts
Grid No. 2 dissipation	15 max	watts
Grid No. 1 dissipation	2 max	watts

Typical operation
Frequencies up to 165 megacycles

Heater voltage	6	6	6	6	volts
D-c plate voltage	600	750	1000	1250	volts
D-c grid No. 2 voltage	250	250	250	250	volts
D-c grid No. 1 voltage	−75	−80	−80	−90	volts
Peak r-f grid No. 1 voltage, approximate	91	96	95	106	volts
D-c plate current	200	200	200	200	milliamperes
D-c grid No. 2 current	37	37	31	20	milliamperes
D-c grid No. 1 current, approximate†	11	11	10	11	milliamperes
Driving power, approximate†	1.0	1.1	1.0	1.2	watts
Power output, approximate	85	110	150	195	watts

TECHNICAL INFORMATION (CONT'D)

Typical Operation

At 500 megacycles with coaxial cavity					
Heater voltage‡	5.2	5.2	5.2	5.2	volts
D-c plate voltage	600	800	1000	1250	volts
D-c grid No. 2 voltage	250	250	250	280	volts
D-c grid No. 1 voltage	−110	−110	−110	−115	volts
D-c plate current	170	200	200	200	milliamperes
D-c grid No. 2 current	6	7	7	5	milliamperes
D-c grid No. 1 current, approximate†	6	10	11	10	milliamperes
Driver output power, approximate	15	20	25	30	watts
Power output, approximate	50	96	122	140	watts
Maximum circuit value					
Grid No. 1 circuit resistance				25,000 max	ohms

*With no external shield.

¶ Amplitude modulation essentially negative may be used if the positive peak of the audio-frequency envelope does not exceed 115 per cent of the carrier conditions.

†The grid No. 1 current and driving power required to obtain the desired power output will vary with the plate loading. If the plate circuit presents a relatively low resistance to the tube, the desired output can be obtained with relatively low grid No. 1 current and driving power, but plate-circuit efficiency is sacrificed. Conversely, if the tube operates into a relatively high load resistance, relatively high grid No. 1 current and driving power are required to obtain the desired output and the plate-circuit efficiency will be high. In practice, a compromise must be made between these extremes.

In order to permit considerable range of adjustment, and also to provide for losses in the grid No. 1 circuit and the coupling circuits, the driver stage should have considerably more output capability than the typical driving power shown in the tabulated data. This recommendation is particularly important near the maximum rated frequency where there are other losses of driving power, such as those caused by radiation and transit-time effects.

‡The cathode of the GL-4X150A in ultra-high frequency service is subjected to considerable back combardment resulting from transit-time effects. This back bombardment raises the temperature of the cathode. The magnitude of the heating due to back bombardment is a function of the operating conditions and frequency, and must be compensated by reduction of the heater input in order to prevent over-heating of the cathode and resultant short life. When long life in conti nuous ser vice is desired, the GL-4X150A should always be put in operation with full rated heater voltage (6 volts) which should then be reduced to a value depending on the operating conditions and frequency. At 500 megacycles and with typical operating conditions, the value of heater voltage should be approximately 5.2 volts. At lower frequencies, less reduction in heater voltage is required. After the heater voltage is reduced, circuit readjustment may be necessary.

GL-4X150A
AVERAGE CONSTANT CURRENT CHARACTERISTICS
$E_f = 6$ VOLTS, SCREEN GRID VOLTAGE = 250 VOLTS

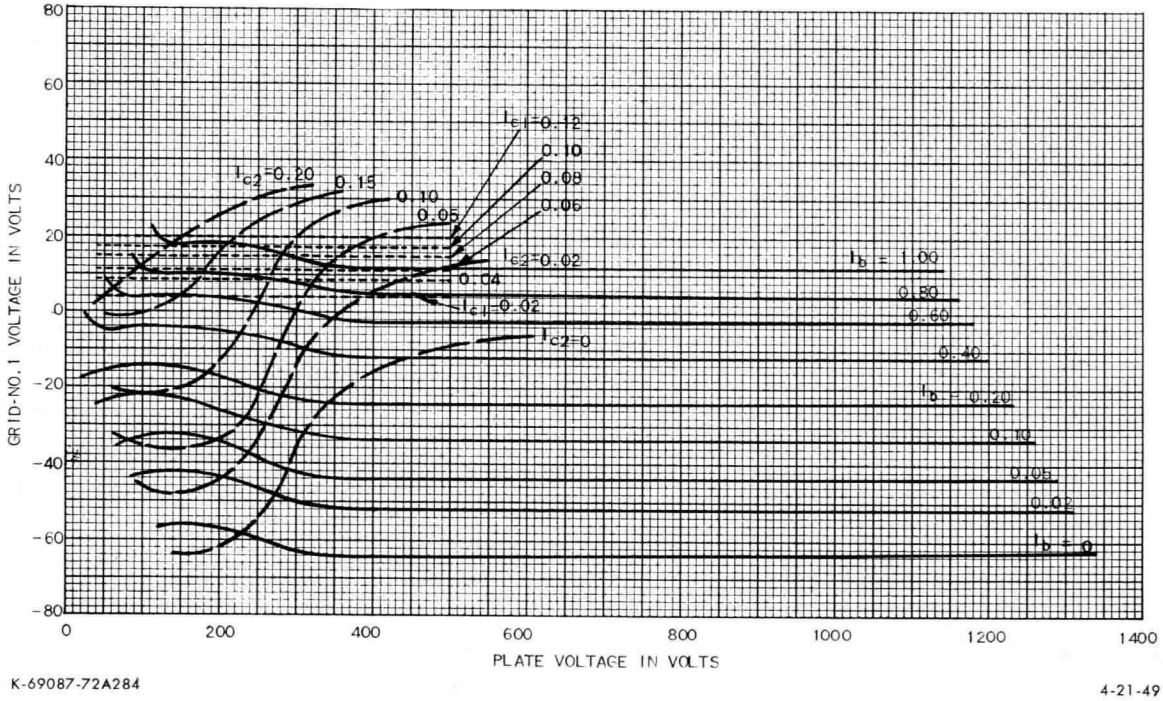

K-69087-72A284

4-21-49

GL-4X150A OUTLINE

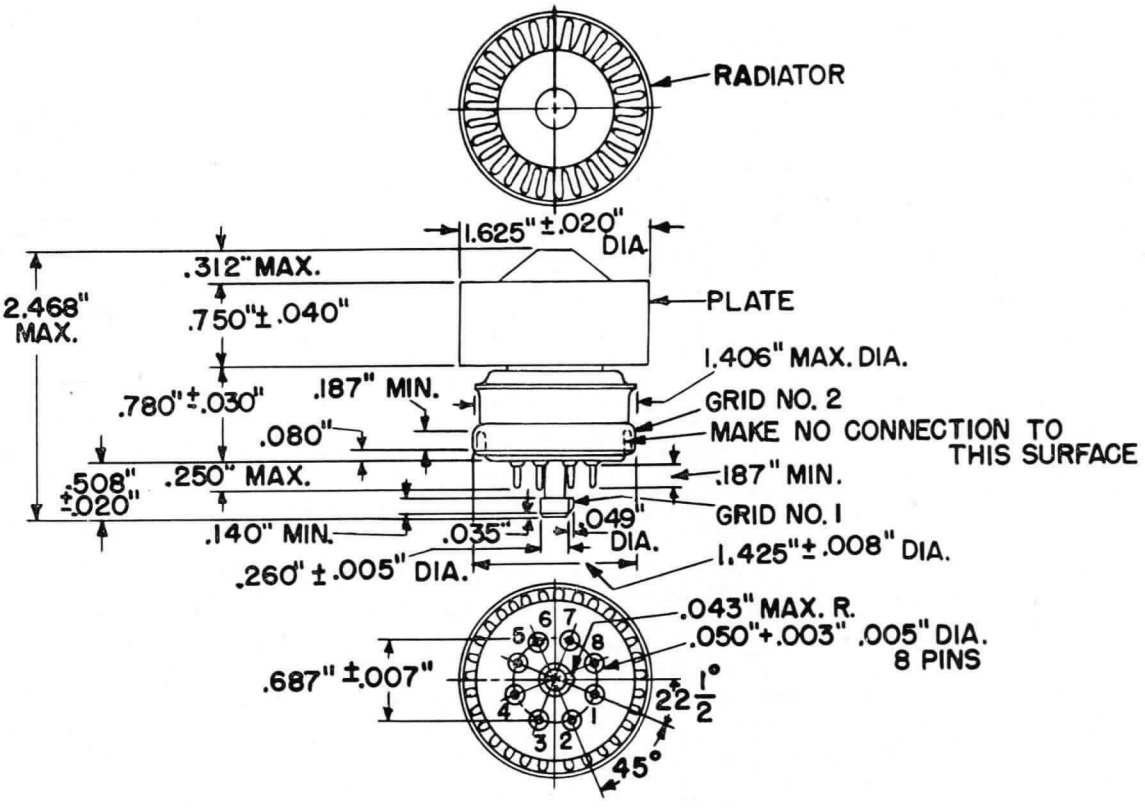

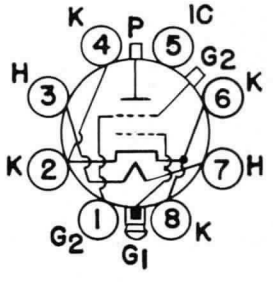

BASING DIAGRAM

PIN NO. 1 FOR USE AT LOWER FREQUENCIES, CONTACT RING FOR USE AT HIGHER FREQUENCIES.

N-15149AZ 4-21-49

Tube Divisions, Electronics Department

GENERAL ELECTRIC

Schenectady, N. Y.

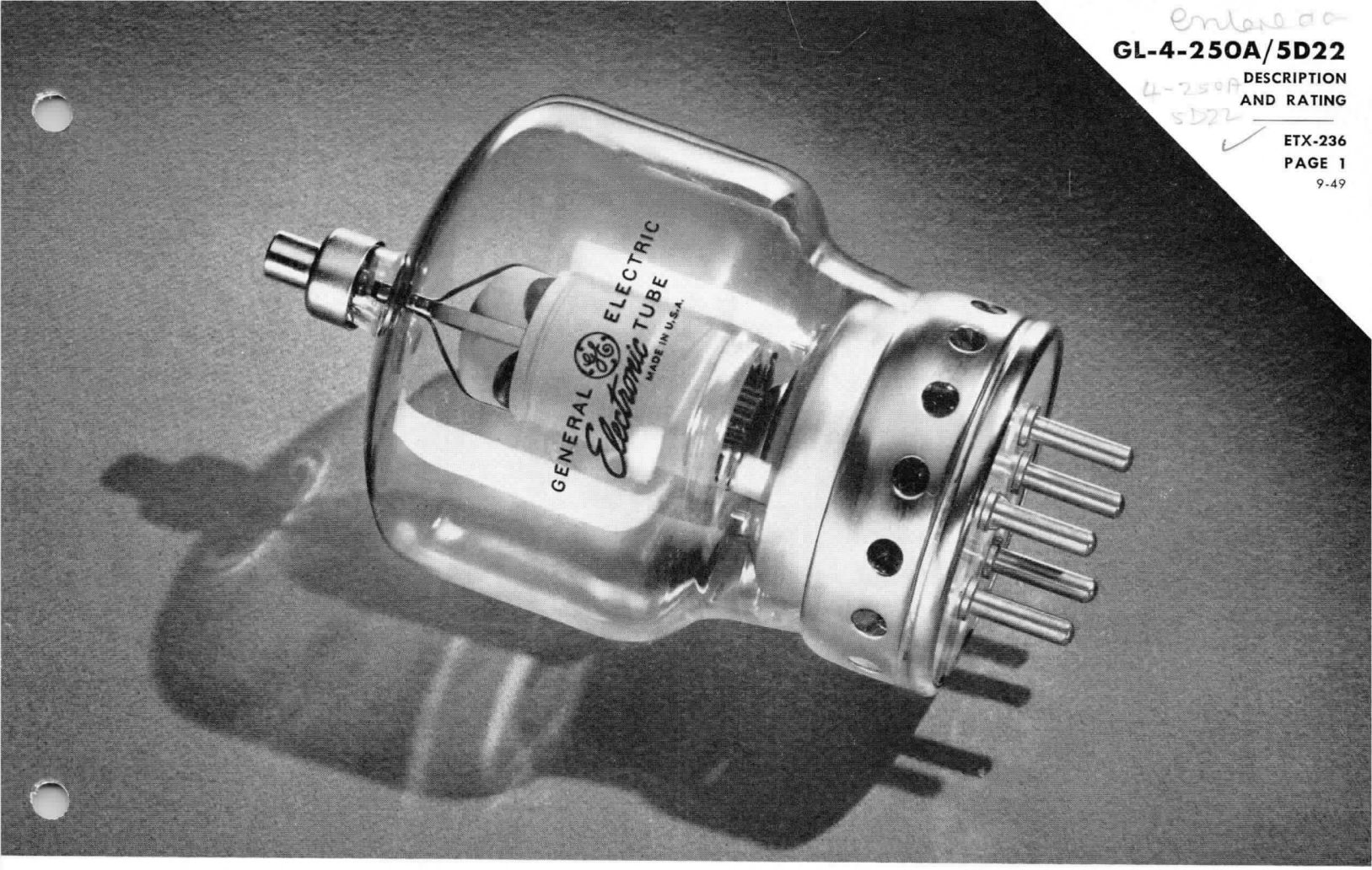

TETRODE

DESCRIPTION

The GL-4-250A/5D22 is a four-electrode tube designed for use as an amplifier, modulator and oscillator and is capable of dissipating 250 watts. The cathode is a thoriated-tungsten filament. Maximum ratings apply up to 75 megacycles.

TECHNICAL INFORMATION

These data are for reference only. For design information refer to specifications.

GENERAL

Electrical Data

Filament Voltage	5.0	Volts
Filament Current	14.5	Amperes
Amplification Factor, Grid to Screen	5.1	
Transconductance, $I_b = 100$ ma, $E_b = 2500$ v, $E_{c2} = 500$ v	4000	Micromhos
Direct Interelectrode Capacitances*		
Grid-Plate	0.12	uuf
Input	12.7	uuf
Output	4.5	uuf

Electronic TUBE

GENERAL ELECTRIC

TECHNICAL INFORMATION (CONT'D)

Mechanical Data

Mounting position—vertical, base up or down

Forced-air cooling:

Through base toward bulb ..... 5 cfm

The specified air flow from a small fan or centrifugal blower should be applied simultaneously with filament power.

Of Bulb and Plate Seal:

Continuous Service—At frequencies below 30 megacycles, relatively slow movement of air past the tube is sufficient to prevent exceeding the specified plate-seal temperature. At frequencies above 30 megacycles, special attention should be given to adequate cooling of bulb and plate seal. A small fan directed toward the upper part of the bulb will generally provide sufficient cooling.

Intermittent Service ("on" period does not exceed 5 minutes and is followed by "off" period of the same or greater duration)—At frequencies below 30 megacycles, forced-air cooling of the bulb and plate seal is not usually required if the ambient temperature is below 30 C, provided a heat-radiating plate connector is used and free circulation of air is provided.

Plate-seal temperature (measured on top of plate cap)

Continuous service ..... 170 C

Intermittent service (as defined above) ..... 220 C

Net weight ..... 8.0 ounces

MAXIMUM RATINGS AND TYPICAL OPERATING CONDITIONS

AUDIO-FREQUENCY POWER AMPLIFIER AND MODULATOR—CLASS AB_1

Maximum ratings, absolute values

D-c plate voltage	4000 max	volts
D-c grid No. 2 (screen) voltage	600 max	volts
Maximum signal d-c plate current**	350 max	milliamperes
Plate dissipation**	250 max	watts
Grid No. 2 dissipation**	35 max	watts

Typical Operation

Values are for two tubes

D-c plate voltage	1500	2000	2500	3000	volts
D-c grid No. 2 voltage***	500	500	500	500	volts
D-c grid No. 1 (control-grid) voltage†	−64	−88	−90	−93	volts
Peak a-f grid No. 1 to grid No. 1 voltage	128	176	180	186	volts
Zero-signal d-c plate current	120	110	120	120	milliamperes
Maximum signal d-c plate current	400	405	430	417	milliamperes
Zero-signal d-c grid No. 2 current	−0.4	−0.3	−0.3	−0.2	milliamperes
Maximum signal d-c grid No. 2 current	23	22	13	10.5	milliamperes
Effective load resistance, plate to plate	6250	9170	11,400	15,000	ohms
Maximum signal driving power	0	0	0	0	watts
Maximum signal power output, approximate	310	460	625	750	watts
Total harmonic distortion	4	2.5	2	2.5	per cent

AUDIO-FREQUENCY POWER AMPLIFIER AND MODULATOR—CLASS AB_2

Maximum ratings, absolute values

D-c plate voltage	4000 max	volts
D-c grid No. 2 (screen) voltage	600 max	volts
Maximum signal d-c plate current**	350 max	milliamperes
Plate dissipation**	250 max	watts
Grid No. 2 dissipation**	35 max	watts

TECHNICAL INFORMATION (CONT'D)

Typical operation

Values are for two tubes

D-c plate voltage	1500	2000	2500	3000	volts
D-c grid No. 2 voltage***	300	300	300	300	volts
D-c grid No. 1 (control-grid) voltage‡	−48	−48	−51	−53	volts
Peak a-f grid No. 1 to grid No. 1 voltage	192	198	200	198	volts
Zero-signal d-c plate current	100	120	120	125	milliamperes
Maximum signal d-c plate current	485	510	500	473	milliamperes
Zero-signal d-c grid No. 2 current	0	0	0	0	milliamperes
Maximum signal d-c grid No. 2 current	34	26	23	33	milliamperes
Effective load resistance, plate to plate	5400	8000	10,900	16,000	ohms
Maximum signal average driving power, approximate#	2.1	2.3	2.2	1.9	watts
Maximum signal peak driving power, approximate#	4.7	5.5	4.8	4.6	watts
Maximum signal power output, approximate	428	650	840	1040	watts
Total harmonic distortion	3	4	4	4.5	per cent

PLATE-MODULATED RADIO-FREQUENCY POWER AMPLIFIER—CLASS C TELEPHONY

Carrier conditions per tube for use with a maximum modulation factor of 1.0

Maximum ratings, absolute values

For operating frequencies up to 75 megacycles

D-c plate voltage	3200 max	volts
D-c grid No. 2 (screen) voltage	600 max	volts
D-c grid No. 1 (control-grid) voltage	−500 max	volts
D-c plate current	275 max	milliamperes
Plate dissipation	165 max	watts
Grid No. 2 dissipation	35 max	watts
Grid No. 1 dissipation	5 max	watts

Typical operation

D-c plate voltage	2500	3000	volts
D-c grid No. 2 voltage△	400	400	volts
D-c grid No. 1 voltage△△	−200	−310	volts
Peak r-f grid No. 1 voltage, approximate	255	365	volts
D-c plate current	200	225	milliamperes
D-c grid No. 2 current	30	30	milliamperes
D-c grid No. 1 current, approximate	9	9	milliamperes
Driving power, approximate	2.2	3.2	watts
Power output, approximate	375	510	watts

RADIO-FREQUENCY POWER AMPLIFIER AND OSCILLATOR—CLASS C TELEGRAPHY OR FM TELEPHONY

Key-down conditions per tube without amplitude modulation¶

Maximum Ratings, absolute values

For operating frequencies up to 75 megacycles

D-c plate voltage	4000 max	volts
D-c grid No. 2 (screen) voltage	600 max	volts
D-c grid No. 1 (control-grid) voltage	−500 max	volts
D-c plate current	350 max	milliamperes
Plate dissipation	250 max	watts
Grid No. 2 dissipation	35 max	watts
Grid No. 1 dissipation	5 max	watts

Typical operation

D-c plate voltage	2500	3000	4000	volts
D-c grid No. 2 voltage	500	500	500	volts
D-c grid No. 1 voltage	−150	−180	−225	volts
Peak r-f grid No. 1 voltage, approximate	220	265	303	volts
D-c plate current	300	345	312	milliamperes
D-c grid No. 2 current	60	60	45	milliamperes
D-c grid No. 1 current	9	10	9	milliamperes
Driving power, approximate	1.7	2.6	2.46	watts
Power output, approximate	575	800	1000	watts

TECHNICAL INFORMATION (CONT'D)

Maximum ratings apply up to 75 megacycles. The tube may be operated at higher frequencies provided the maximum values of plate voltage and power input are reduced according to the tabulation below (other maximum ratings are the same as shown above). Special attention should be given to adequate ventilation of the bulb at these frequencies.

Frequency	75	100	120	megacycles
Percentage of maximum rated plate voltage and plate input				
Class C Telephony plate modulated	100	75	66	per cent
Class C telegraphy	100	72	62	per cent

*With no external shielding, and base shell grounded.

**Averaged over any audio-frequency cycle of sine-wave form.

***Obtained from source having good regulation.

†Total effective grid No. 1 circuit resistance should not exceed 0.25 megohm.

‡Obtained from fixed supply having d-c resistance not exceeding 250 ohms.

#Driver stage should be capable of supplying the specified driving power at low distortion to the No. 1 grid of the class AB_2 stage. The effective resistance per grid No. 1 circuit of the class AB_2 stage should be held at a low value.

△Obtained preferably from a separate source modulated with the plate supply, or from the modulated plate supply through a series resistor.

△△For high-level modulated service, the use of partial grid-resistor bias is recommended. Bypass capacitors across the grid resistor should have a reactance at the highest modulation frequency equal to at least twice the grid-resistor value.

¶Modulation essentially negative may be used if the positive peak of the envelope does not exceed 115 per cent of the carrier conditions.

GL-4-250A/5D22
CONSTANT-CURRENT CHARACTERISTICS
E_{c1} = 5 VOLTS
SCREEN-GRID VOLTAGE = 500 VOLTS

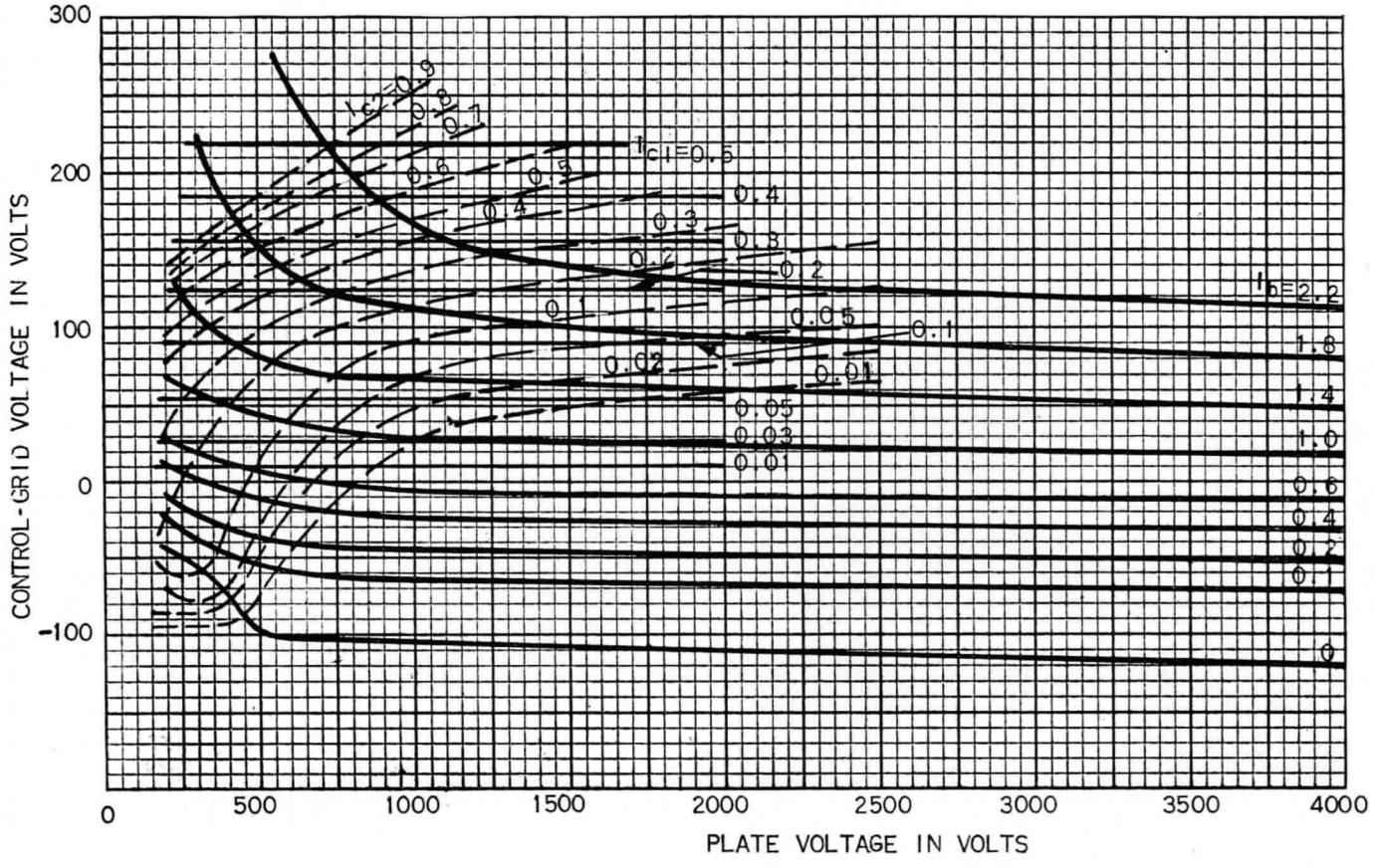

K-69087-72A294

6-18-49

OUTLINE
GL-4-250A/5D22

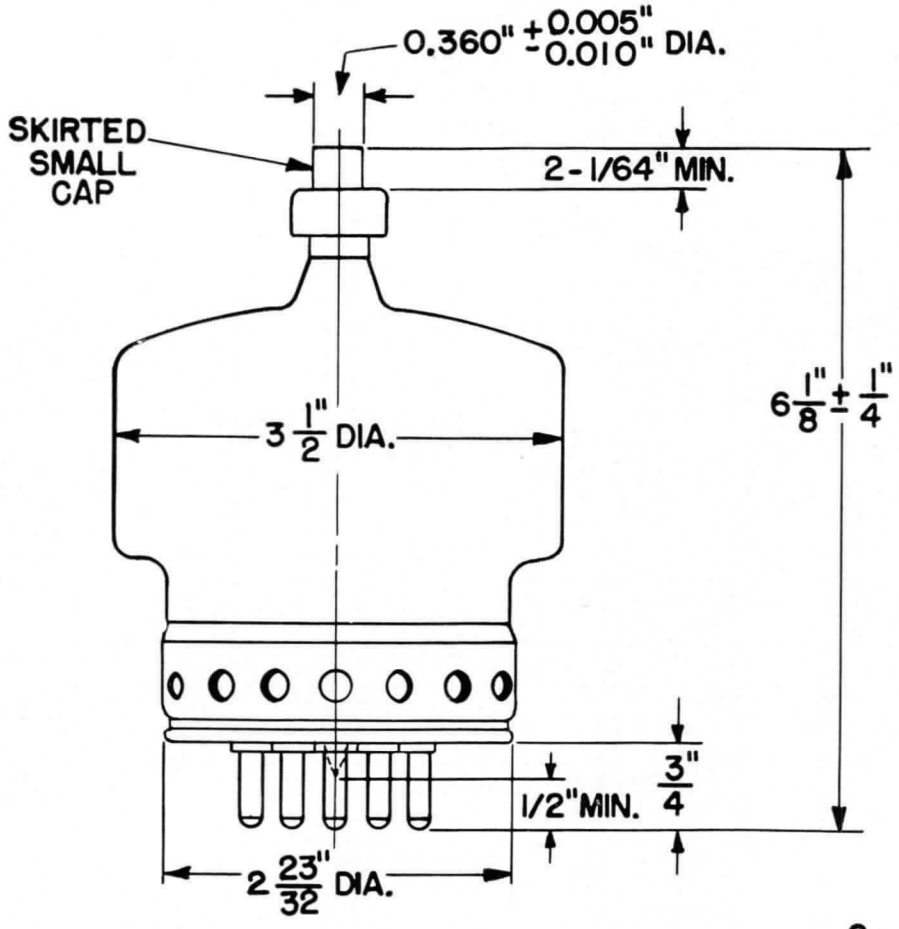

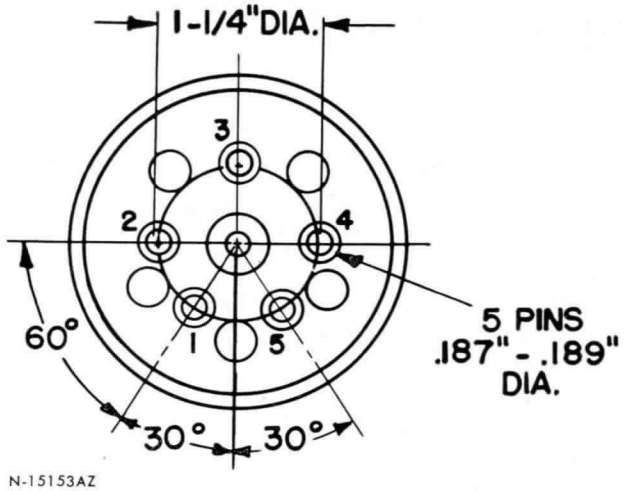

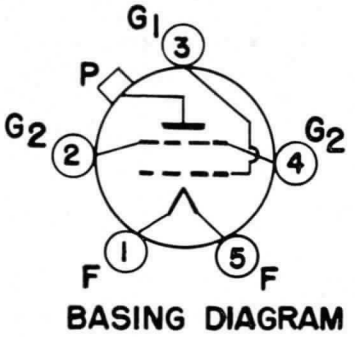

BASING DIAGRAM

N-15153AZ

6-13-49

Tube Divisions, Electronics Department

GENERAL ELECTRIC

Schenectady, N. Y.

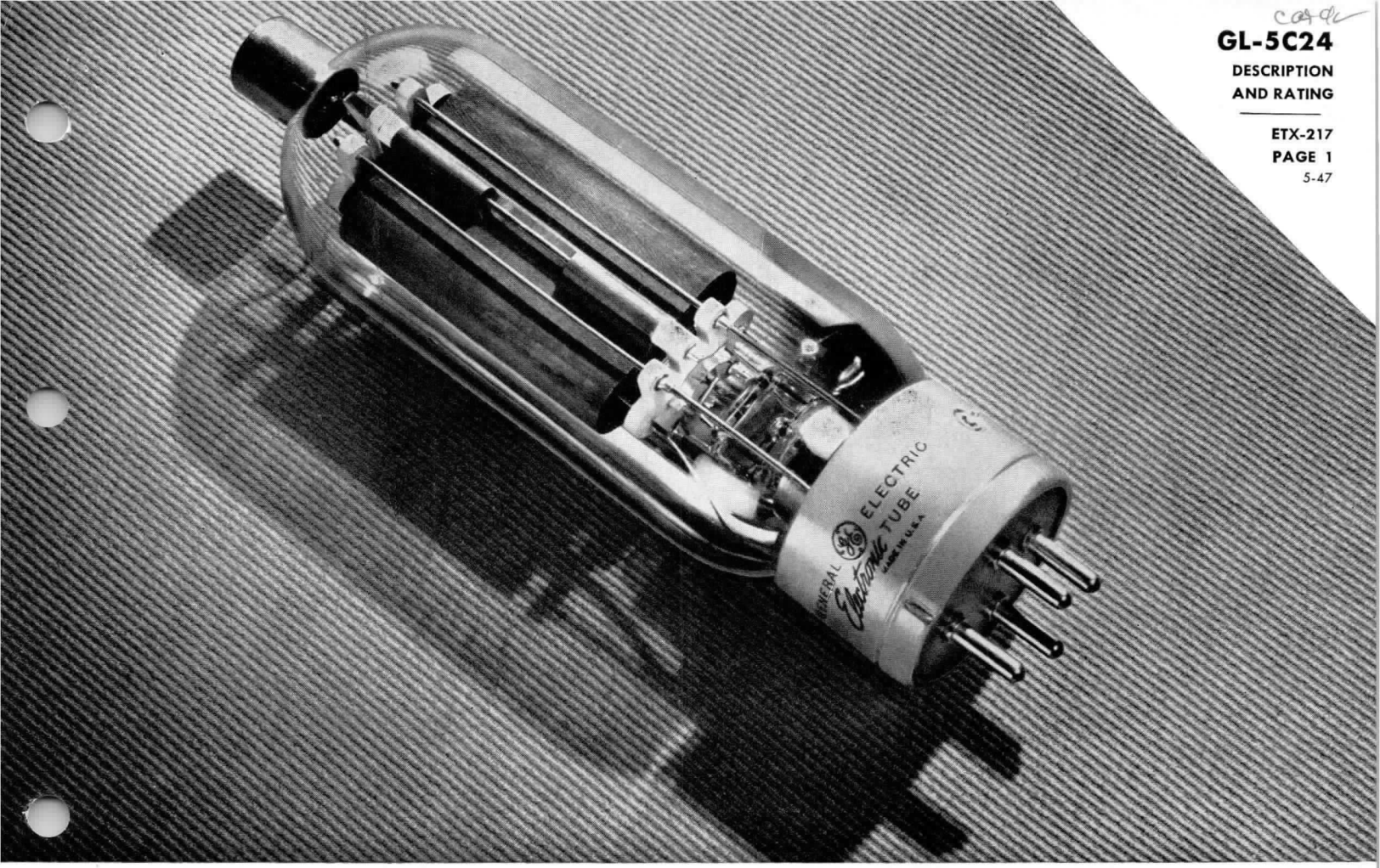

TRIODE

The GL-5C24 is a three-electrode tube designed for use as a Class A and Class AB_1 amplifier. The anode is capable of dissipating 160 watts and cooling is accomplished by radiation. The cathode is a thoriated-tungsten filament.

TECHNICAL INFORMATION

GENERAL CHARACTERISTICS

Electrical	Min.	Bogey	Max.	
Filament voltage	9.5	10	10.5	volts
Filament current at bogey filament voltage	4.9	5.2	5.6	amperes
Amplification factor	7.2	8	8.8	
Transconductance (I_b = 160 ma)	—	5500	—	micromhos
Interelectrode capacitance				
Grid-plate	7.6	8.8	10.0	micromicrofarads
Grid-cathode	4.6	5.6	6.6	micromicrofarads
Plate-cathode	2.5	3.3	4.1	micromicrofarads
Mechanical				
Mounting position				Vertical, or horizontal with plane of electrodes vertical
Maximum glass temperature			275	centigrade
Net weight, approximate			14	ounces

GE Electronic TUBE

GENERAL ELECTRIC

TECHNICAL INFORMATION (CONT'D)

MAXIMUM RATINGS AND TYPICAL OPERATING CONDITIONS

AUDIO-FREQUENCY POWER AMPLIFIER AND MODULATOR—CLASS A

Maximum Ratings, Absolute Values	**CCS**
D-c plate voltage	1750 volts
Plate input	250 watts
Plate dissipation	160 watts
Typical Operation	
D-c plate voltage	1500 volts
D-c grid voltage	−155 volts
Peak a-f grid voltage	150 volts
D-c plate current	107 milliamperes
Load resistance	8200 ohms
Power output (5% second harmonic)	55 watts

AUDIO-FREQUENCY POWER AMPLIFIER AND MODULATOR—CLASS AB_1

Maximum Ratings, Absolute Ratings (per Tube)	**CCS**
D-c plate voltage	1750 volts
D-c grid voltage	−300 volts
Maximum signal d-c plate current*	250 milliamperes
Maximum signal plate input*	300 watts
Plate dissipation*	160 watts
Typical Operation	
Unless Otherwise Specified, Values Are for Two Tubes	
D-c plate voltage	1750 volts
D-c grid voltage	−200 volts
Peak a-f grid-to-grid voltage	390 volts
Zero signal d-c plate current	110 milliamperes
Maximum signal d-c plate current	320 milliamperes
Effective load resistance, plate-to-plate	8000 ohms
Maximum signal power output	240 watts

*Averaged over any audio-frequency cycle of sine-wave form.

GL-5C24

PLATE CHARACTERISTICS

$E_f = 10$ V

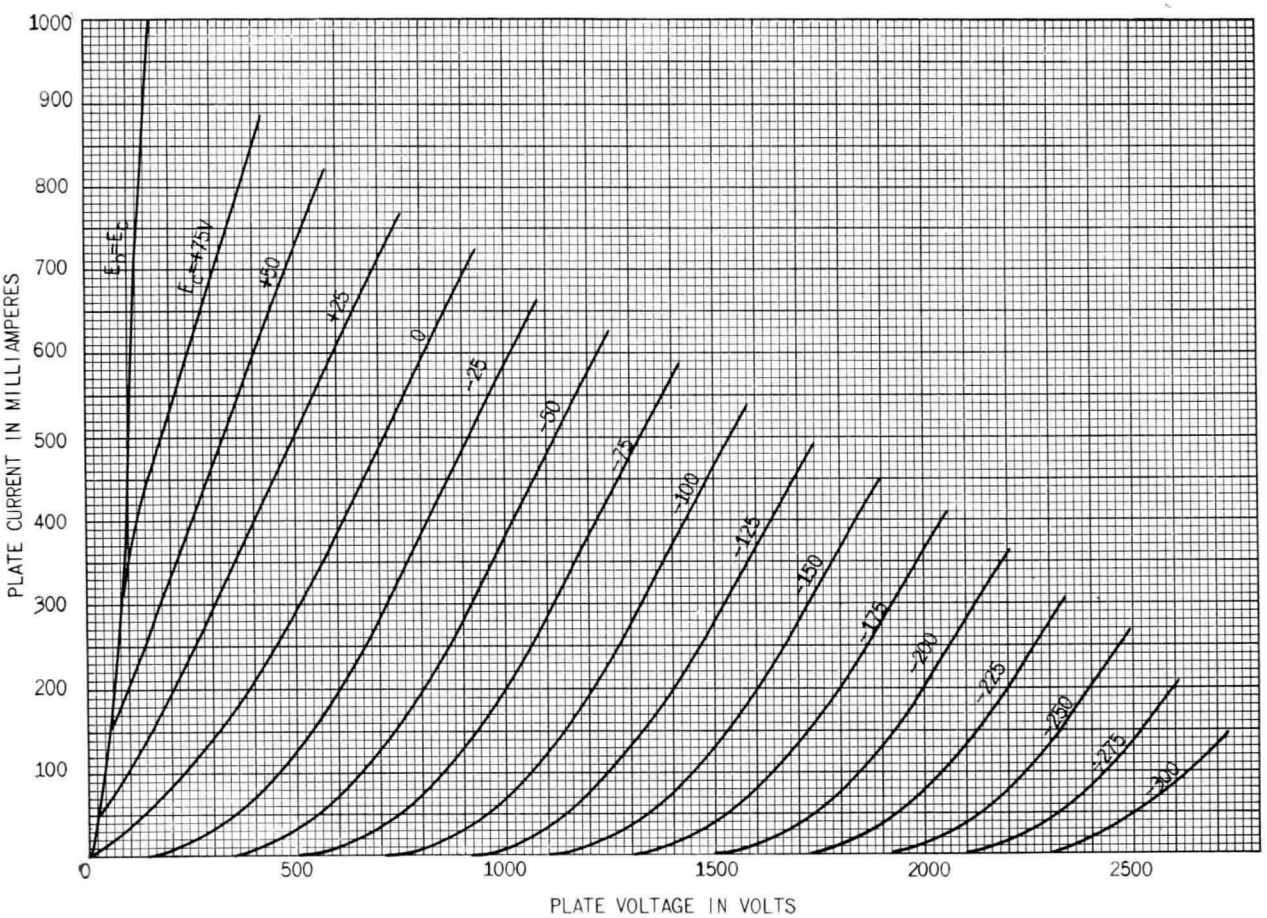

K-69087-77A1

11-7-46

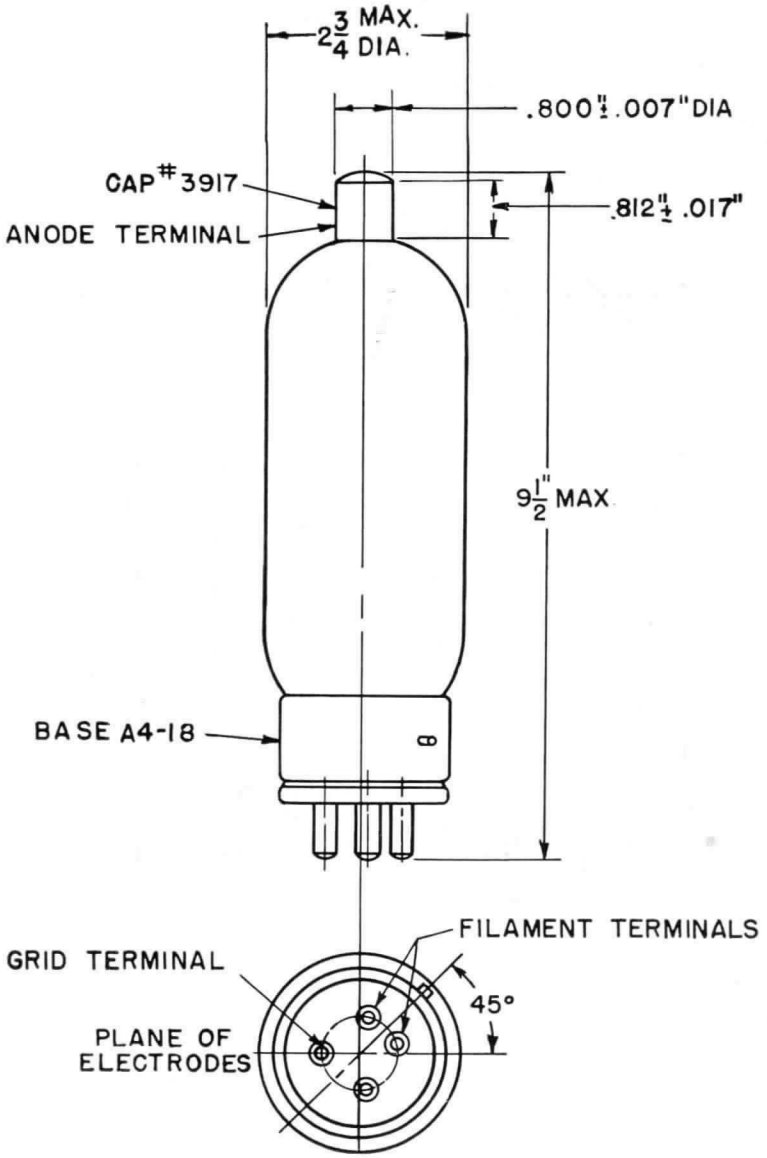

GL-5C24 OUTLINE

K-5182000

6-28-46

TUBE DEPARTMENT

GENERAL ELECTRIC

Schenectady 5, N. Y.

PRINTED IN U.S.A.

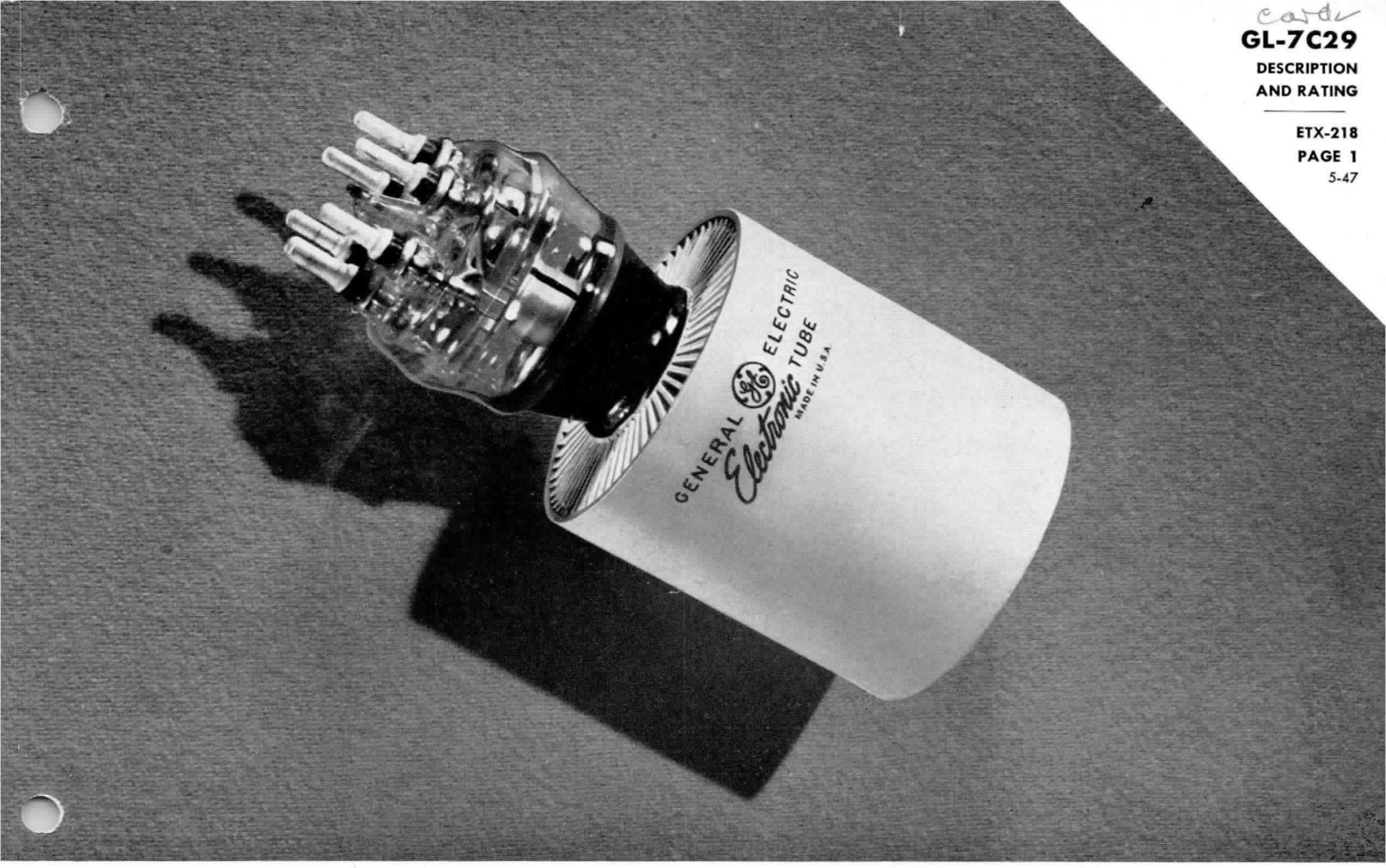

TRIODE

DESCRIPTION

The GL-7C29 is a three-electrode tube designed for use as a Class C amplifier. The anode is forced-air cooled, and capable of dissipating 500 watts. The cathode is a thoriated-tungsten filament. Maximum ratings apply up to 110 megacycles.

TECHNICAL INFORMATION

These data are for reference only. For design information refer to specifications.

Electrical Data—General	Minimum	Nominal	Maximum	
Filament voltage	10.0	10.5	11.0	volts
Filament current at nominal voltage	25.5	28.0	30.5	amperes
Filament starting current			50	amperes
Cold resistance of filament		0.052		ohm
Amplification factor	25	29	33	
I_b = 200 ma				
E_c = −50 volts d-c				
Interelectrode capacitances				
Grid-plate	6.6	7.6	8.6	micromicrofarads
Grid-filament	8.4	10.2	12.0	micromicrofarads
Plate-filament	0.34	0.45	0.56	micromicrofarad
Frequency for maximum ratings			110	megacycles

GE Electronic TUBE

GENERAL ELECTRIC

TECHNICAL INFORMATION (CONT'D)

Mechanical Data—General

Mounting position			vertical
Type of cooling			forced air
Maximum incoming air temperature			50 centigrade
Required air flow on anode			
Anode dissipation	500	335	watts
Air flow	75	60	cubic feet per minute
Pressure required	3	2	inches water
Maximum glass temperature		150	centigrade
Net weight—approximate		2¼	pounds

MAXIMUM RATINGS AND TYPICAL OPERATING CONDITIONS

CLASS C RADIO-FREQUENCY AMPLIFIER AND OSCILLATOR

*(Key-down conditions per tube without modulation)**

Maximum Ratings

Frequency	110	megacycles
D-c plate voltage	3000	volts
D-c grid voltage	−500	volts
D-c plate current	400	milliamperes
D-c grid current	100	milliamperes
Plate dissipation	500	watts
Plate input	1200	watts

Typical Operation

Frequency	110	megacycles
D-c plate voltage	2800	volts
D-c grid voltage	−250	volts
D-c plate current	330	milliamperes
D-c grid current	75	milliamperes
Plate dissipation	325	watts
Plate power output	600	watts

*Modulation, essentially negative, may be used if the positive peak of the audio-frequency envelope does not exceed 115 per cent of the carrier conditions.

GL-7C29
AVERAGE PLATE CHARACTERISTICS
$E_f = 11$ VOLTS

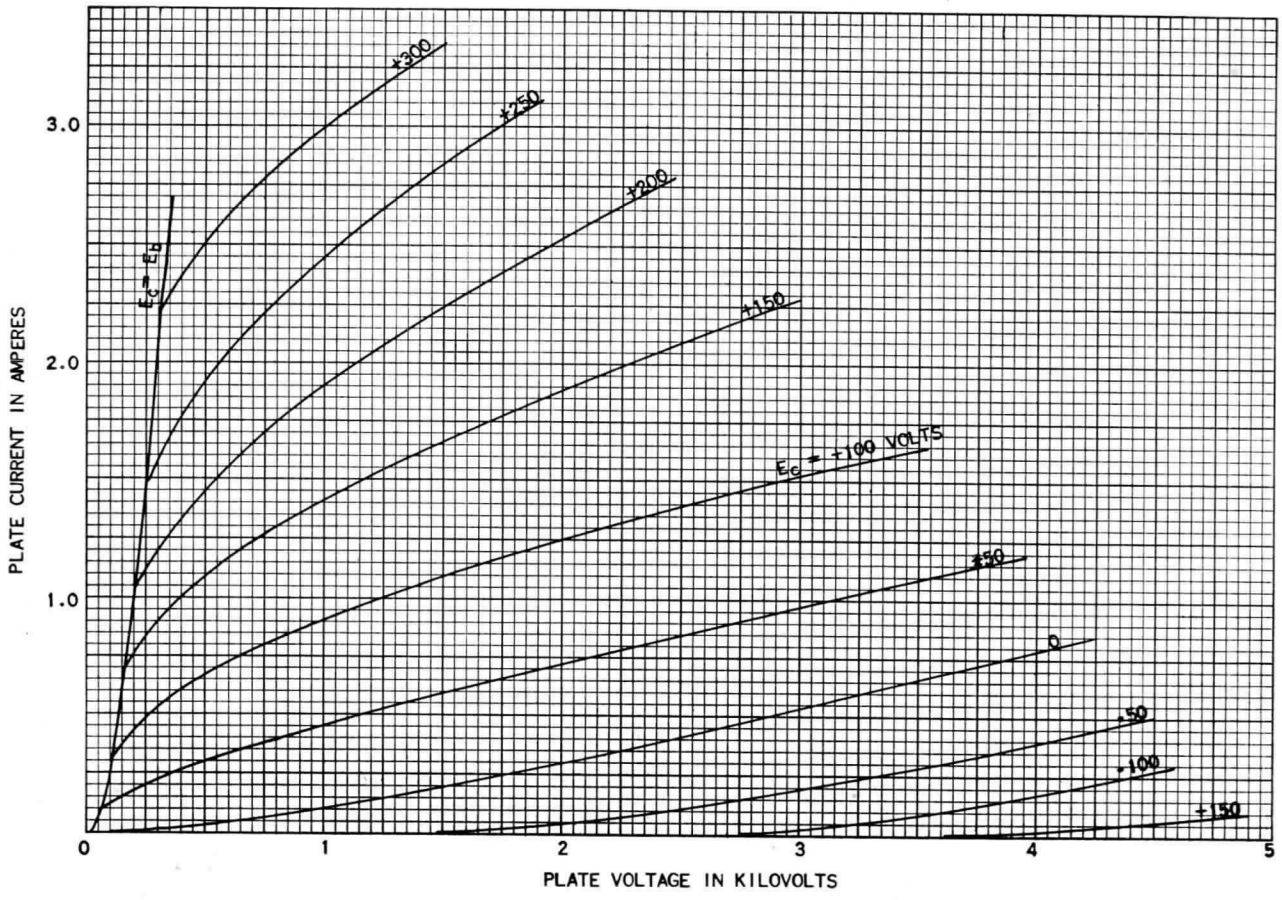

K-69087-72A119

3-24-47

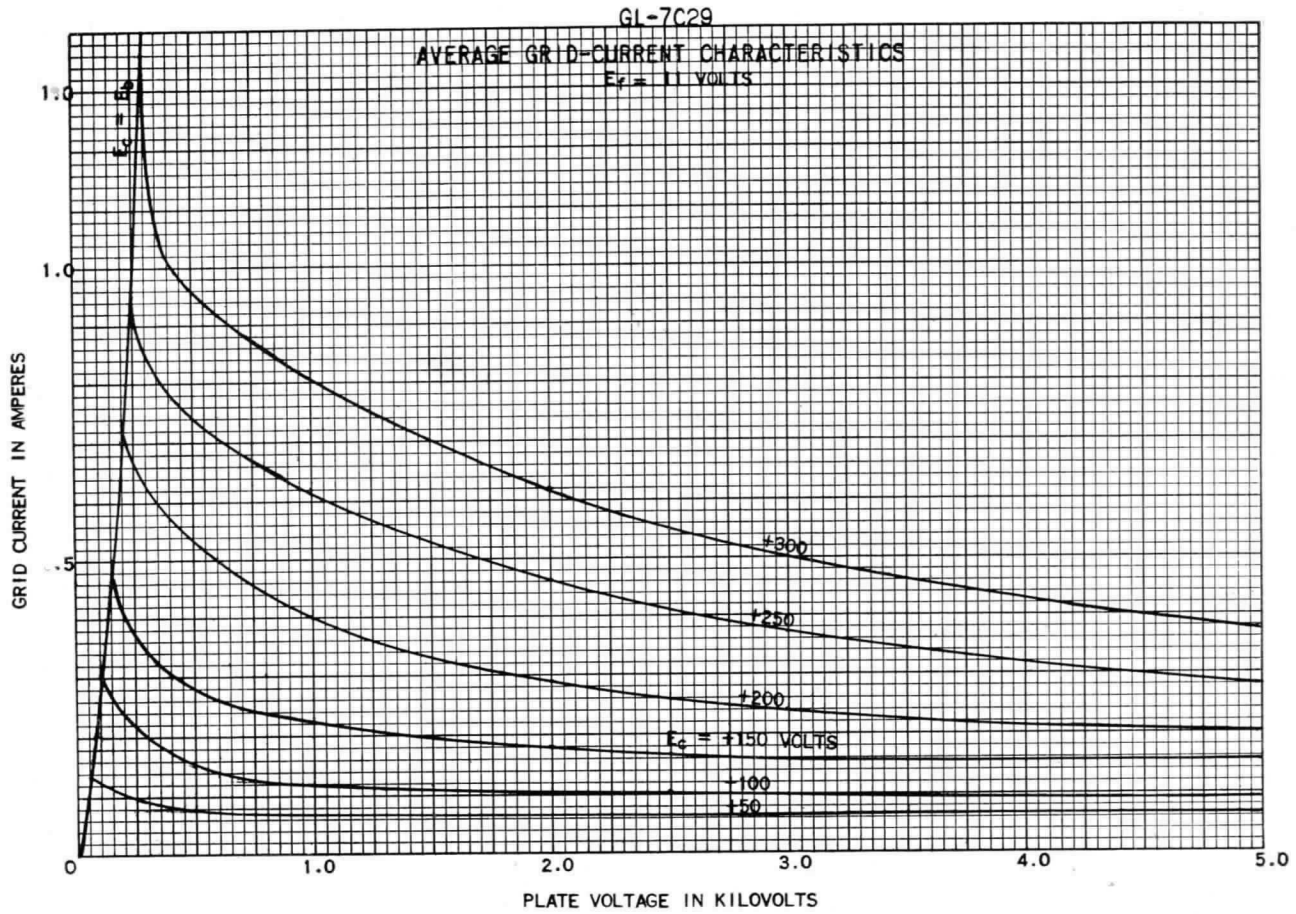

K-69087-72A127

3-24-47

GL-7C29
CHARACTERISTICS
$E_f = 11$ VOLTS

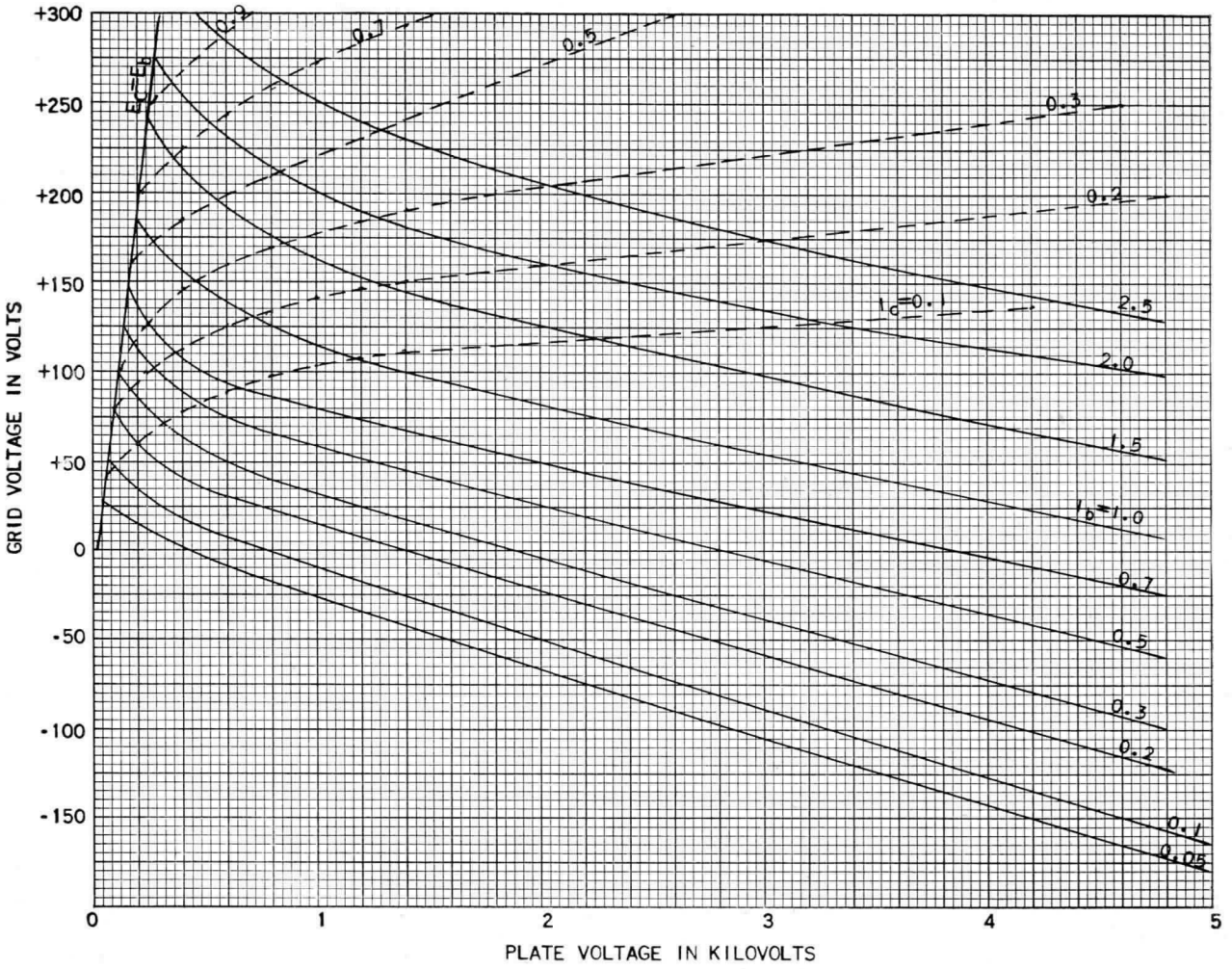

K-69087-72A112

3-25-47

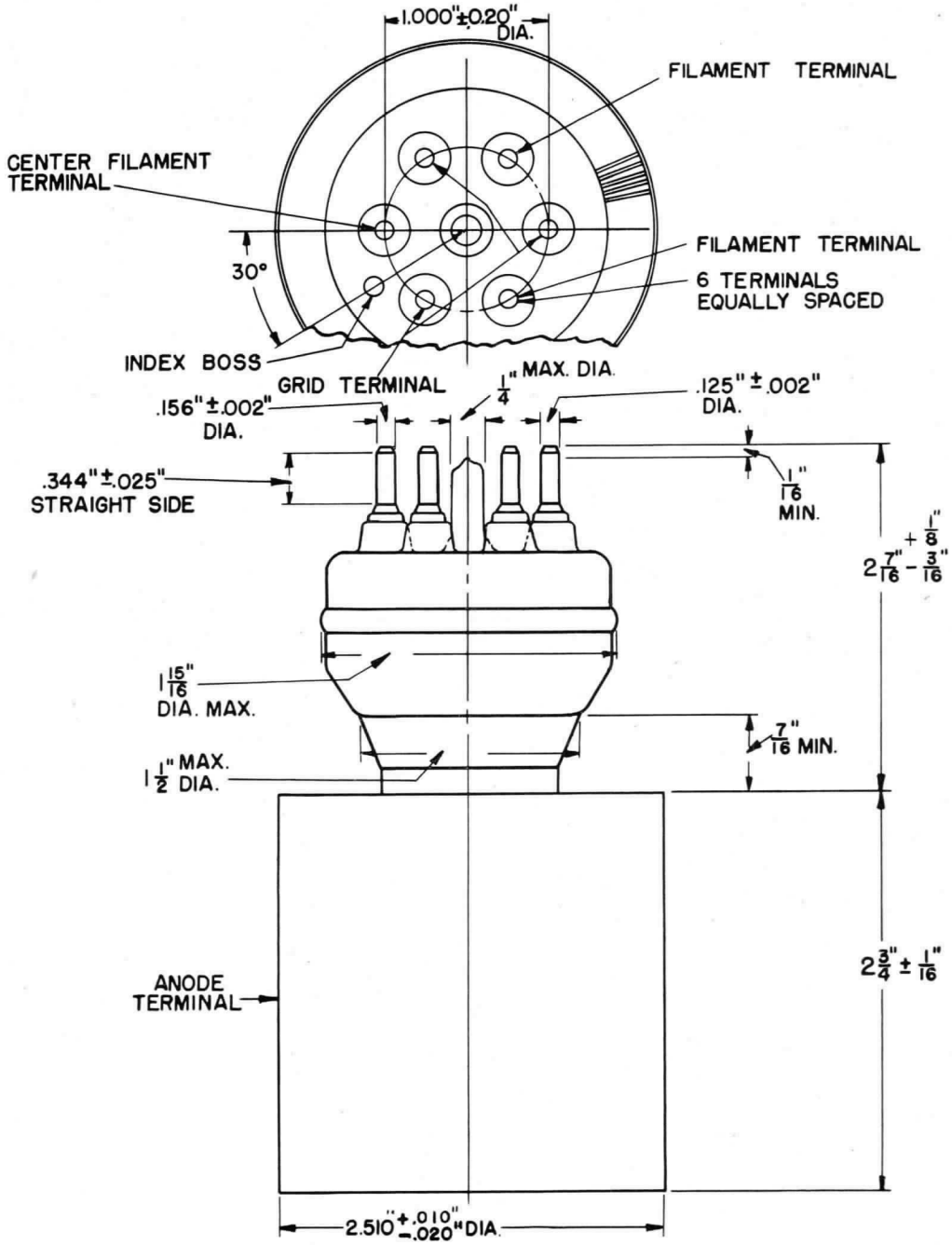

GL-7C29 OUTLINE

K-9186115

5-10-46

Electronics Department

GENERAL ELECTRIC

Schenectady, N. Y.



TETRODE

DESCRIPTION

The GL-7D21 is a four-electrode tube designed for use as a Class C radio-frequency amplifier. The anode is forced-air cooled and capable of dissipating 1200 watts. The cathode is a thoriated-tungsten filament. Maximum ratings apply up to 110 megacycles.

TECHNICAL INFORMATION

These data are for reference only. For design information refer to specifications.

Electrical Data—General	Nominal	Units
Filament voltage	6.3	volts
Filament current	30.0	amperes
Interelectrode capacitances		
Grid-plate	0.40	micromicrofarad
Input	39.0	micromicrofarads
Output	14.0	micromicrofarads
Grid-screen amplification factor	8	

Electronic TUBE

GENERAL ELECTRIC

Supersedes ETX-219 dated 5-47

TECHNICAL INFORMATION (CONT'D)

Mechanical Data—General

Mounting position		vertical, anode down
Type of cooling		forced air
Maximum incoming air temperature	50	centigrade
Required air flow on anode		
Plate dissipation	1200	watts
Air flow	55	cubic feet per minute
Pressure required	1½	inches water
Required air flow on filament terminals		
Air flow	5	cubic feet per minute
Maximum glass temperature	150	centigrade
Net weight, approximate	3¾	pounds

MAXIMUM RATINGS AND TYPICAL OPERATING CONDITIONS

CLASS C RADIO-FREQUENCY POWER AMPLIFIER AND OSCILLATOR

*Key-down conditions per tube without modulation**

Maximum Ratings, Absolute Values

D-c plate voltage	4000 volts
D-c screen voltage	750 volts
D-c grid voltage	−500 volts
D-c plate current	1.0 ampere
D-c grid current, approximate	135 milliamperes
Plate input	3000 watts
Screen input	60 watts
Plate dissipation	1200 watts
Radiator temperature‡	180 centigrade

Typical Operation

D-c plate voltage	3750 volts
D-c screen voltage	600 volts
D-c grid voltage	−102 volts
D-c plate current	0.67 ampere
D-c screen current	100 milliamperes
D-c grid current, approximate	51 milliamperes
Plate input	2510 watts
Screen input	60 watts
Peak r-f grid input voltage, approximate	300 volts
Driving power, approximate	60 watts
Plate power output, approximate	1575 watts

*Modulation, essentially negative, may be used if the positive peak of the audio-frequency envelope does not exceed 115 per cent of the carrier conditions.

†These operational data are a result of actual test at 108 megacycles. Power output measured in load.

‡This temperature corresponds to the maximum ratings when the air flow is 55 cubic feet per minute, and the incoming air temperature does not exceed 50 C.

GL-7D21
PLATE CHARACTERISTICS

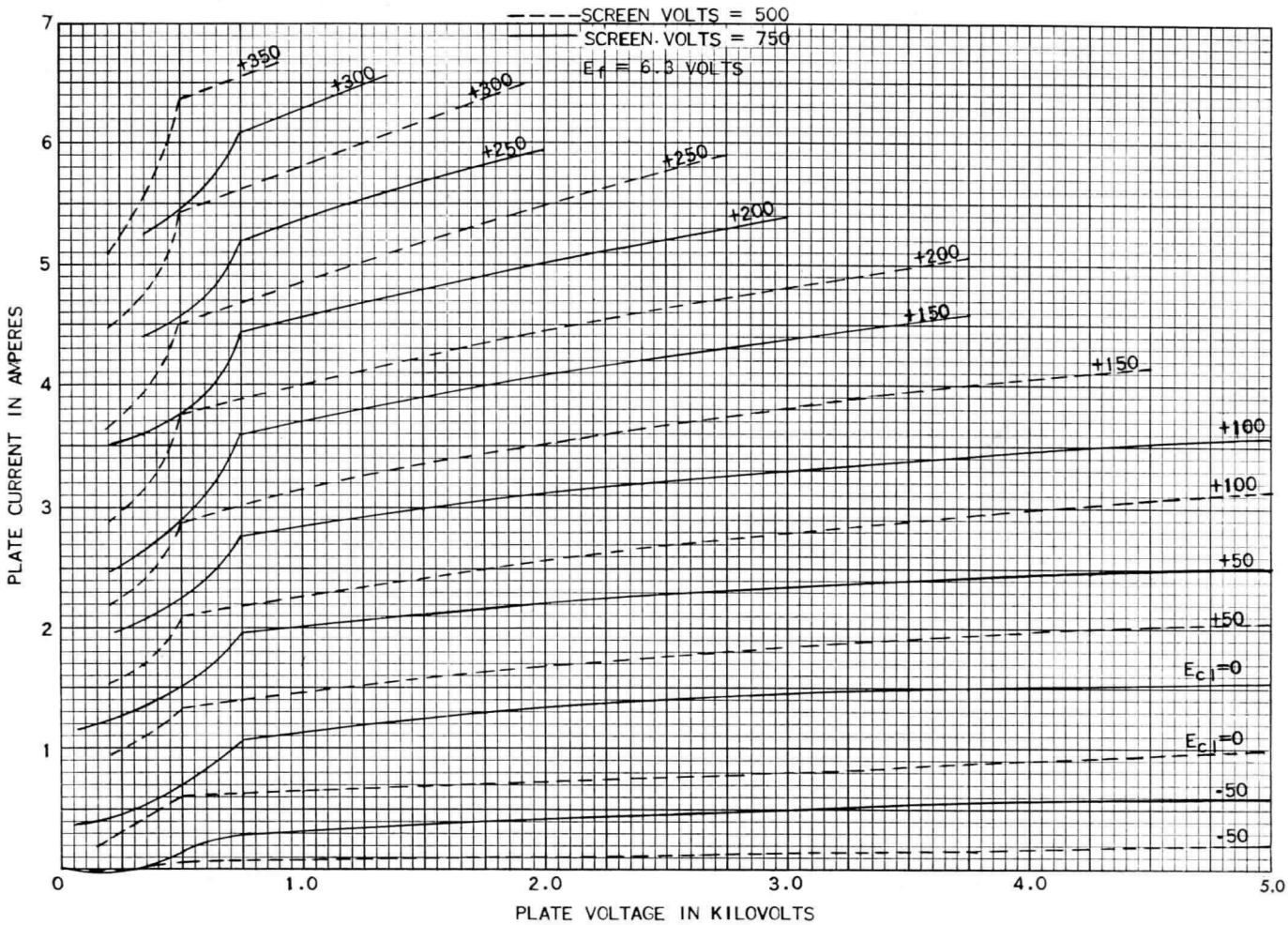

K-69087-72A114

3-24-47

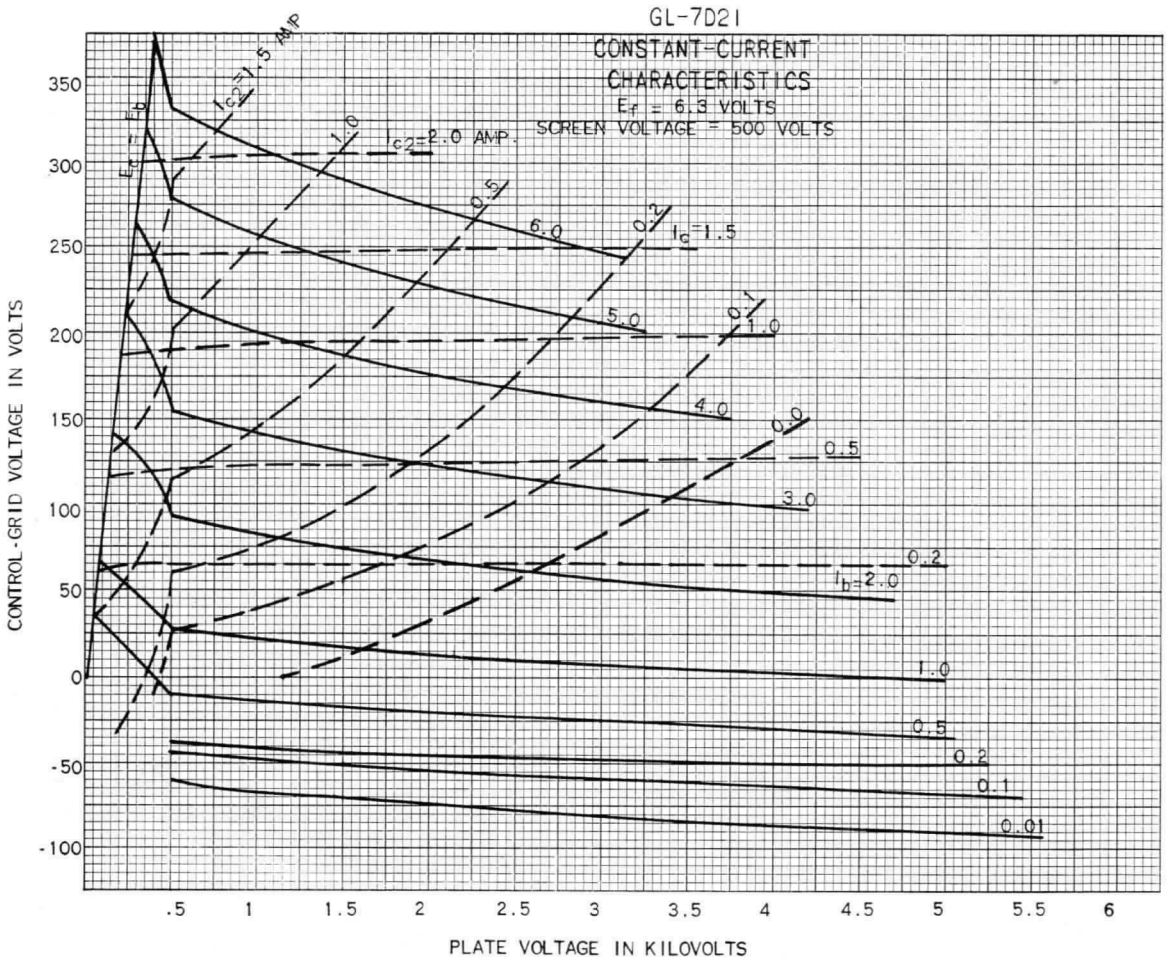

K-69087-72A88

7-1-47

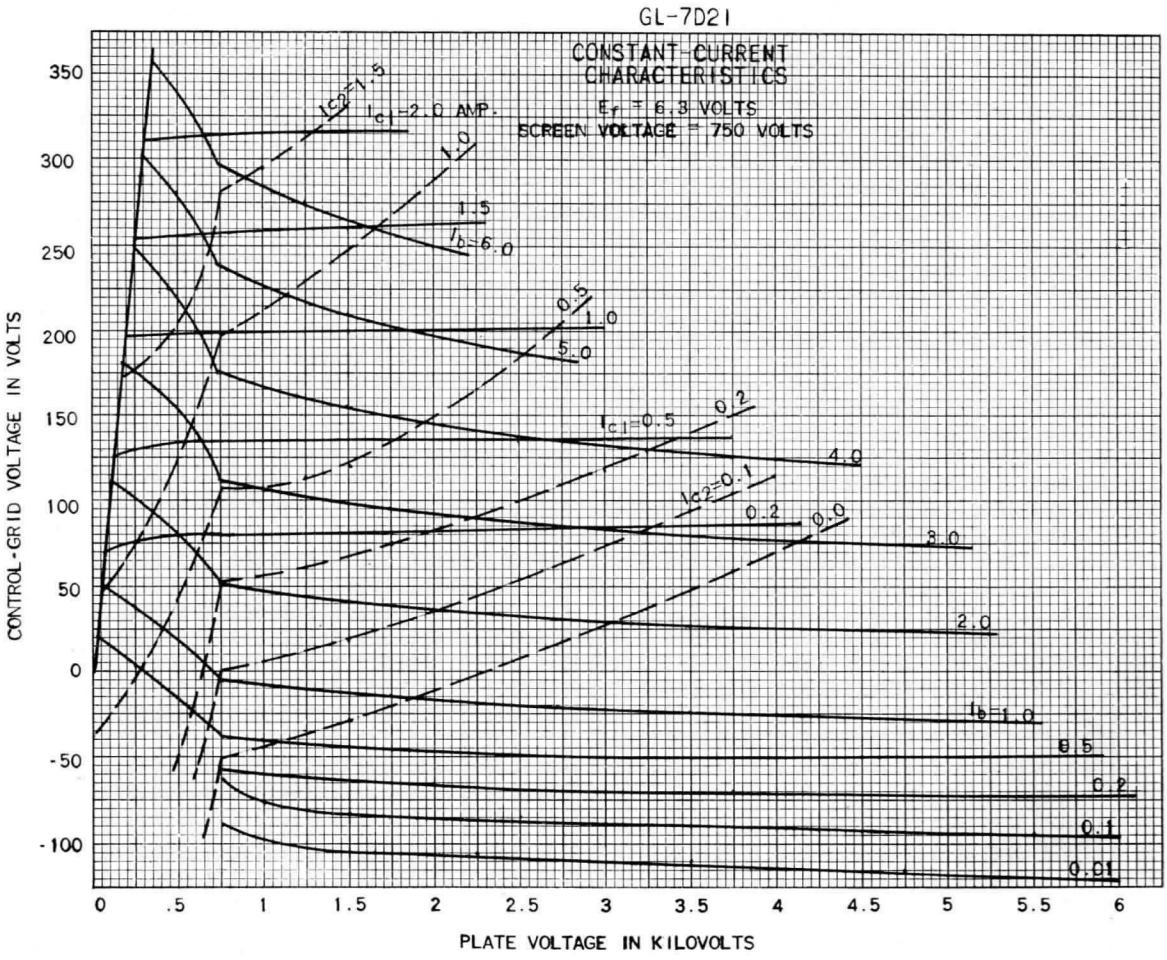

K-69087-72A89

7-1-47

GL-7D21 SCREEN GRID CHARACTERISTICS
(SCREEN VOLTS = 500, E_f = 6.3 VOLTS)

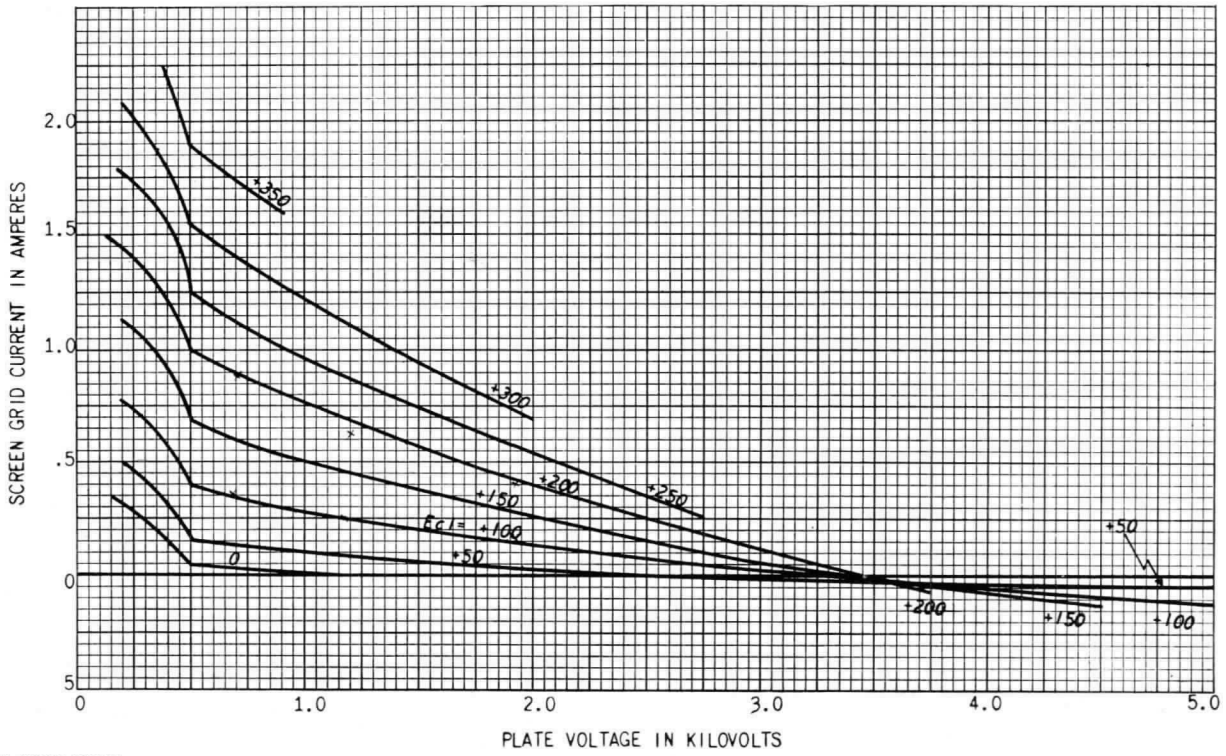

K-69087-72A54

2-5-47

GL-7D21 SCREEN GRID CHARACTERISTICS
(SCREEN VOLTS = 750, E_f = 6.3 VOLTS)

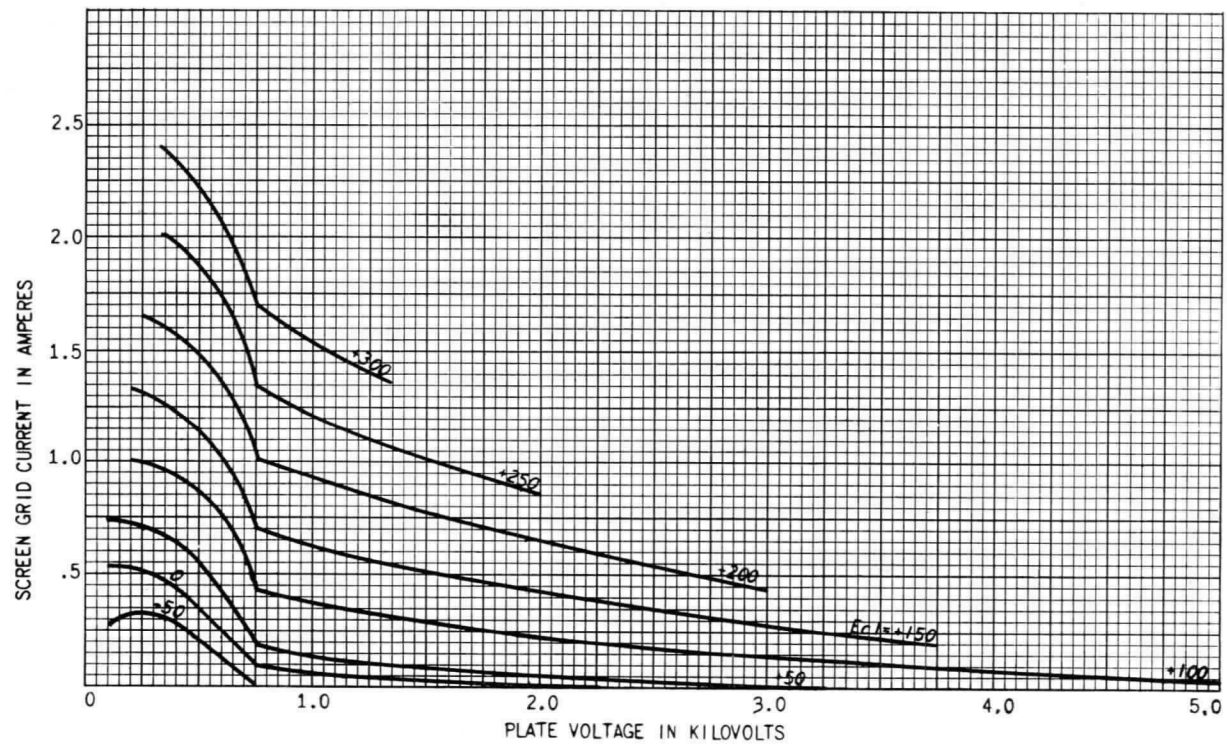

K-69087-72A51

2-5-47

GL-7D21
CONTROL GRID CHARACTERISTICS
- - - - - SCREEN VOLTS = 500
——— SCREEN VOLTS = 750
E_f = 6.3 VOLTS

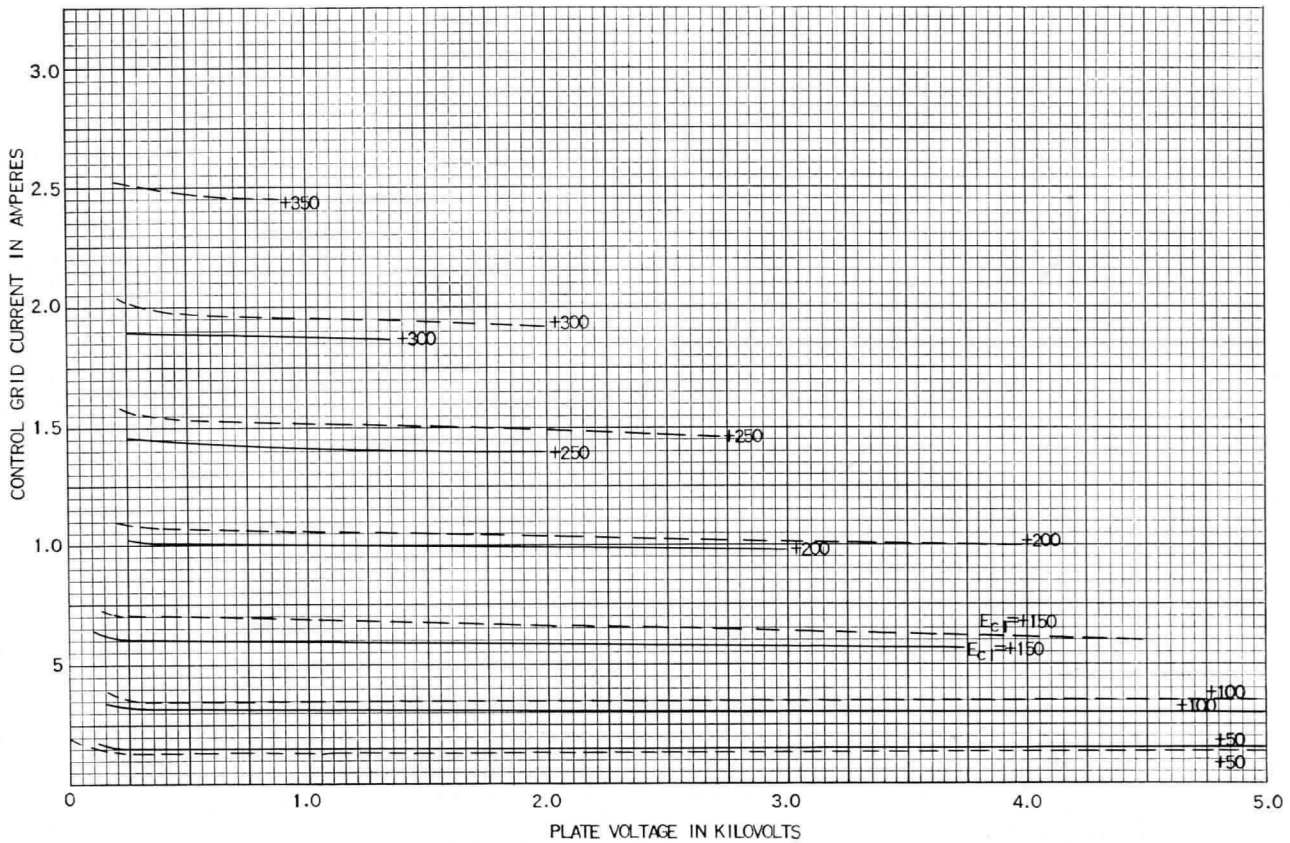

K-69087-72A120

3-24-47

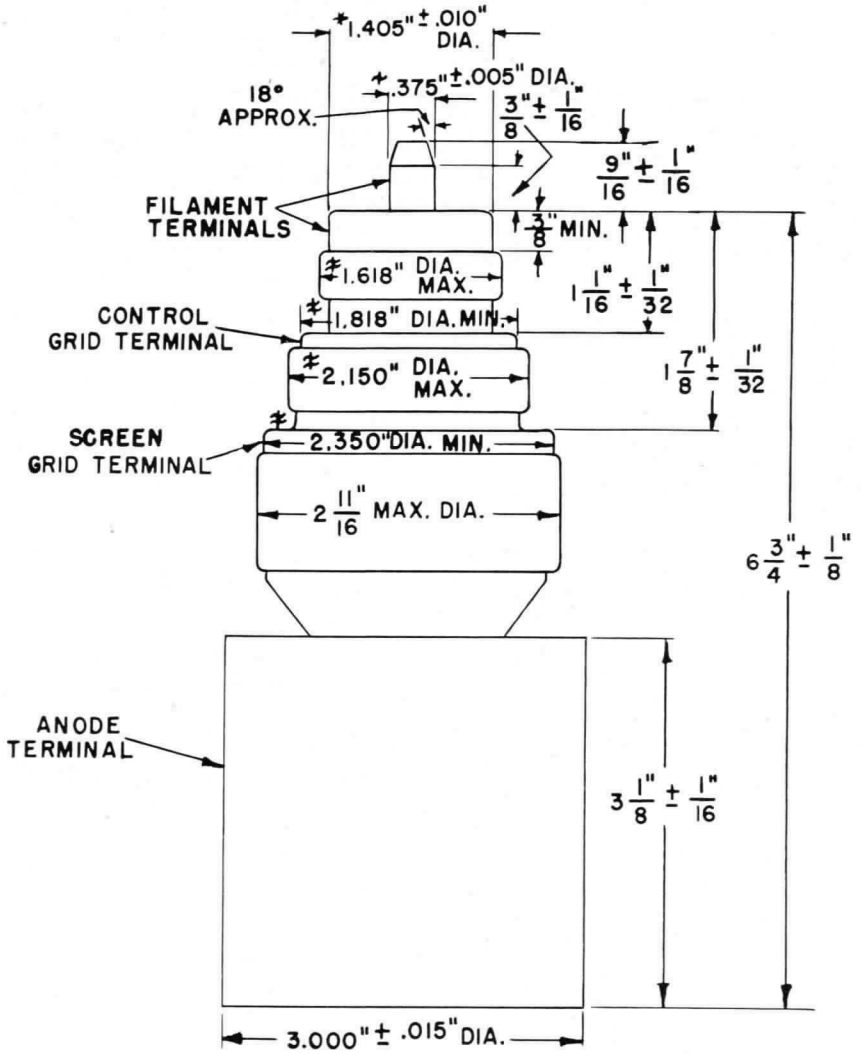

NOTES: * MAX. ECCENTRICITY OF LARGER DIA. FILAMENT TERMINAL IS .050" WITH RESPECT TO THE AXIS OF RADIATOR.

✦ MAX. ECCENTRICITY OF SMALLER DIA. FILAMENT TERMINAL IS .020" WITH RESPECT TO A CENTERLINE ESTABLISHED BY THE CENTER OF THE BOTTOM OF RADIATOR AND CENTER OF LARGER DIA. FILAMENT TERMINAL.

✲ MAX. OR MIN. DIMENSIONS OF ANY POINT ON CIRCUMFERENCE OF PART, CIRCUMFERENCES CONCENTRIC WITH A CENTERLINE ESTABLISHED BY THE CENTER OF THE BOTTOM OF RADIATOR AND CENTER OF LARGER DIA. FILAMENT TERMINAL.

GL-7D21 OUTLINE

N-21206AZ

4-18-46

Electronics Department

GENERAL ELECTRIC

Schenectady, N. Y.



TETRODE

The GL-7D21 is a four-electrode tube designed for use as a Class C radio-frequency amplifier. The anode is forced-air cooled and capable of dissipating 1200 watts. The cathode is a thoriated-tungsten filament. Maximum ratings apply up to 110 megacycles.

TECHNICAL INFORMATION

GENERAL

Electrical

Filament Voltage	6.3	Volts
Filament Current	30.0	Amperes
Interelectrode Capacitances		
Grid-Plate	0.40	$\mu\mu$f
Input	39.0	$\mu\mu$f
Output	14.0	$\mu\mu$f
Grid-Screen Amplification Factor	8	

GENERAL ELECTRIC

Supersedes ETX-219A

TECHNICAL INFORMATION (CONT'D)

Mechanical

Mounting Position		Vertical, Anode Down
Type of Cooling		Forced Air
Maximum Incoming Air Temperature	50	C
Required Air Flow on Anode		
Plate Dissipation	1200	Watts
Air Flow	55	Cubic Feet per Minute
Pressure Required	1½	Inches Water
Required Air Flow on Filament Terminals		
Air Flow	5	Cubic Feet per Minute
Maximum Glass Temperature	150	C
Net Weight, approximate	3¾	Pounds

MAXIMUM RATINGS AND TYPICAL OPERATING CONDITIONS

CLASS C RADIO-FREQUENCY POWER AMPLIFIER AND OSCILLATOR

*Key-down conditions per tube without modulation**

Maximum Ratings, Absolute Values

DC Plate Voltage	4000 Volts
DC Screen Voltage	750 Volts
DC Grid Voltage	−500 Volts
DC Plate Current	1.0 Ampere
DC Grid Current, approximate	135 Milliamperes
Plate Input	3000 Watts
Screen Input	60 Watts
Plate Dissipation	1200 Watts
Radiator-Temperature‡	180 C

Typical Operation

DC Plate Voltage	3750 Volts
DC Screen Voltage	600 Volts
DC Grid Voltage	−102 Volts
DC Plate Current	0.67 Ampere
DC Screen Current	100 Milliamperes
DC Grid Current, approximate	51 Milliamperes
Plate Input	2510 Watts
Screen Input	60 Watts
Peak RF Grid Input Voltage, approximate	300 Volts
Driving Power, approximate	60 Watts
Plate Power Output, approximate	1575 Watts

*Modulation, essentially negative, may be used if the positive peak of the audio-frequency envelope does not exceed 115 per cent of the carrier conditions.

†These operational data are a result of actual test at 108 megacycles. Power output measured in load.

‡This temperature corresponds to the maximum ratings when the air flow is 55 cubic feet per minute, and the incoming air temperature does not exceed 50 C.

PLATE CHARACTERISTICS

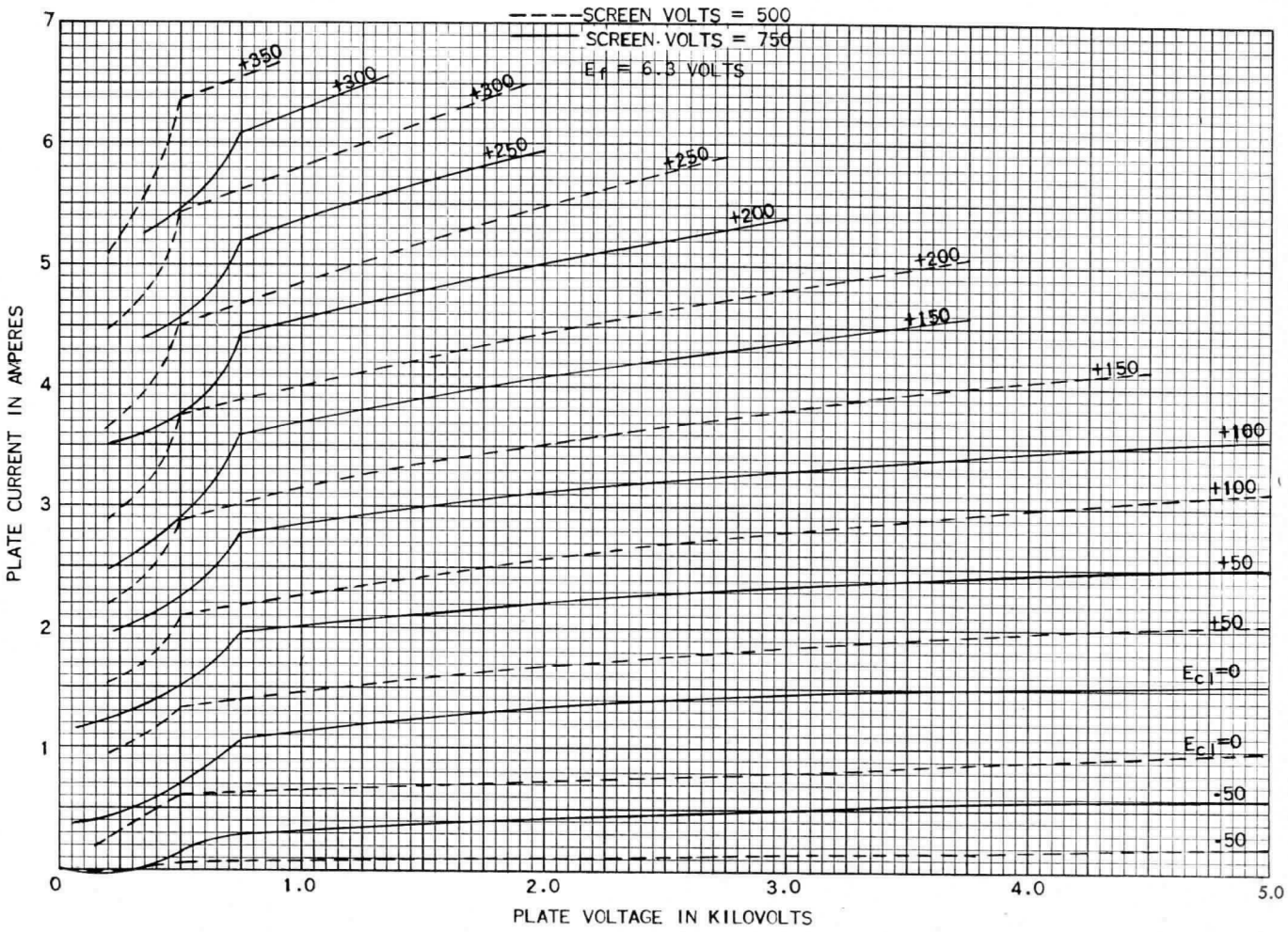

K-69087-72A114

3-24-47

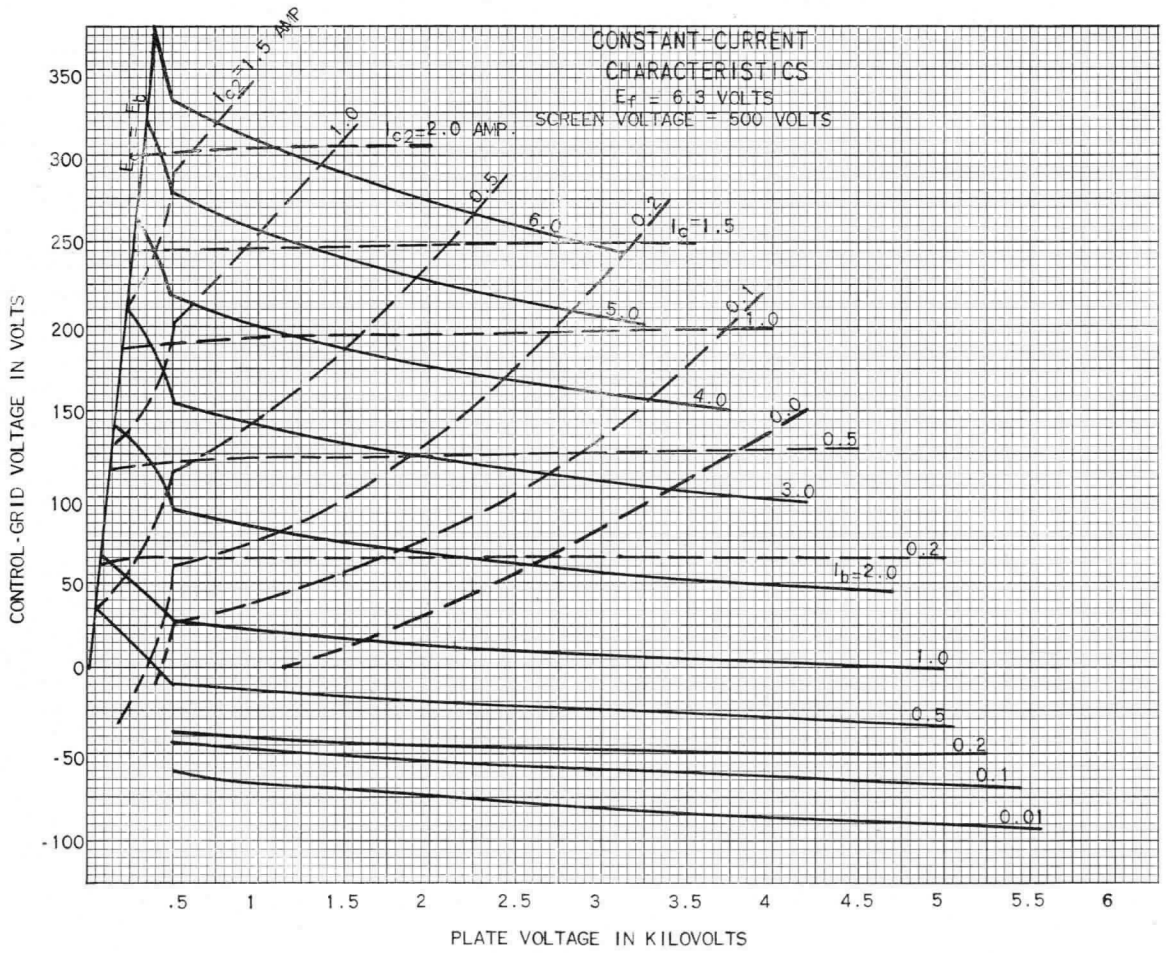

K-69087-72A88

7-1-47

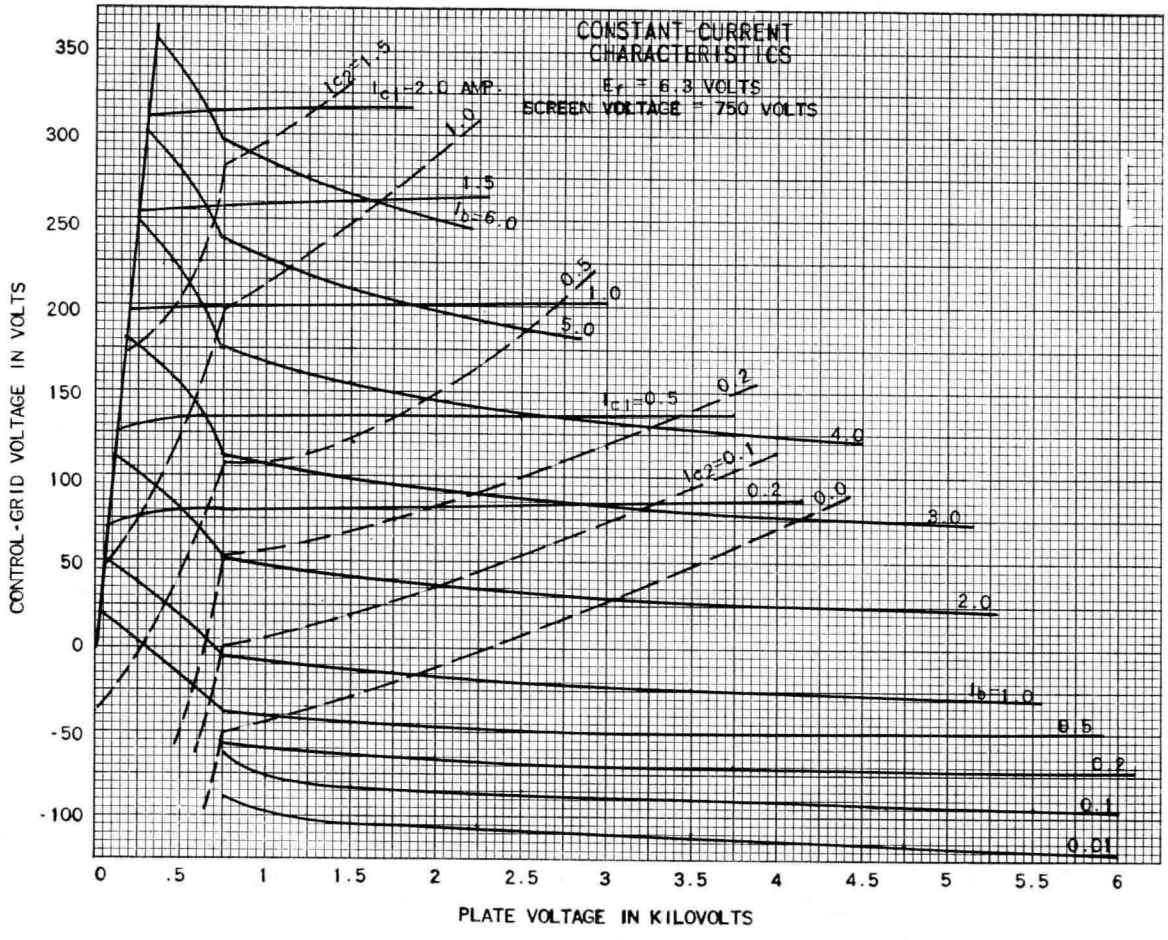

K-69087-72A89

7-1-47

SCREEN GRID CHARACTERISTICS
(Screen Volts = 500, E_f = 6.3 Volts)

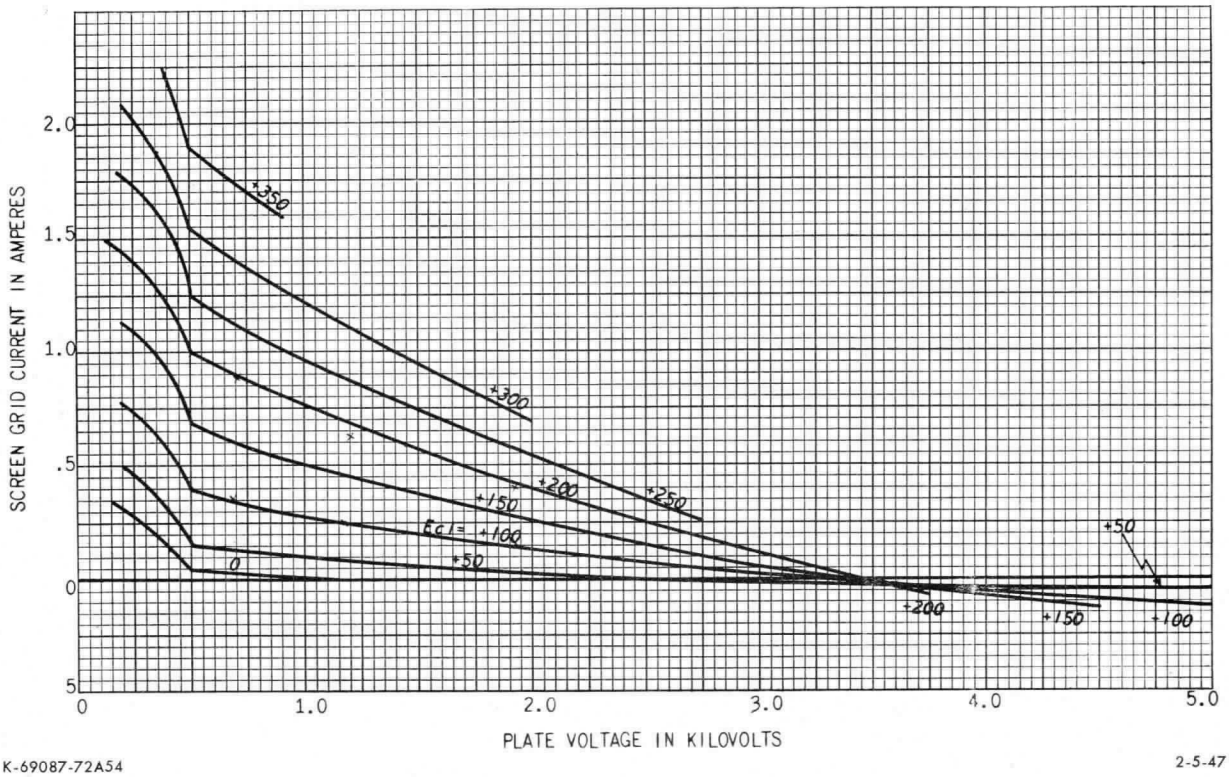

K-69087-72A54

2-5-47

SCREEN GRID CHARACTERISTICS
(Screen Volts = 750, E_f = 6.3 Volts)

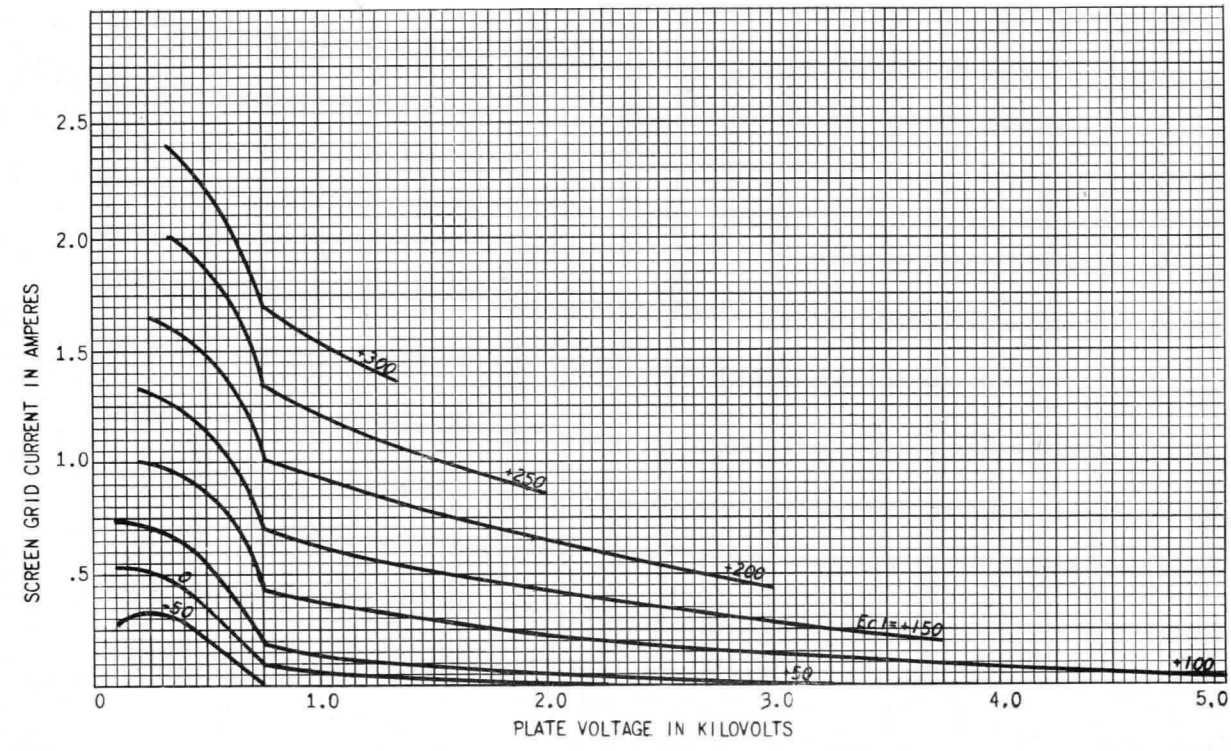

K-69087-72A51

2-5-47

CONTROL GRID CHARACTERISTICS
- - - - - Screen Volts = 500
—— Screen Volts = 750
E_f = 6.3 Volts

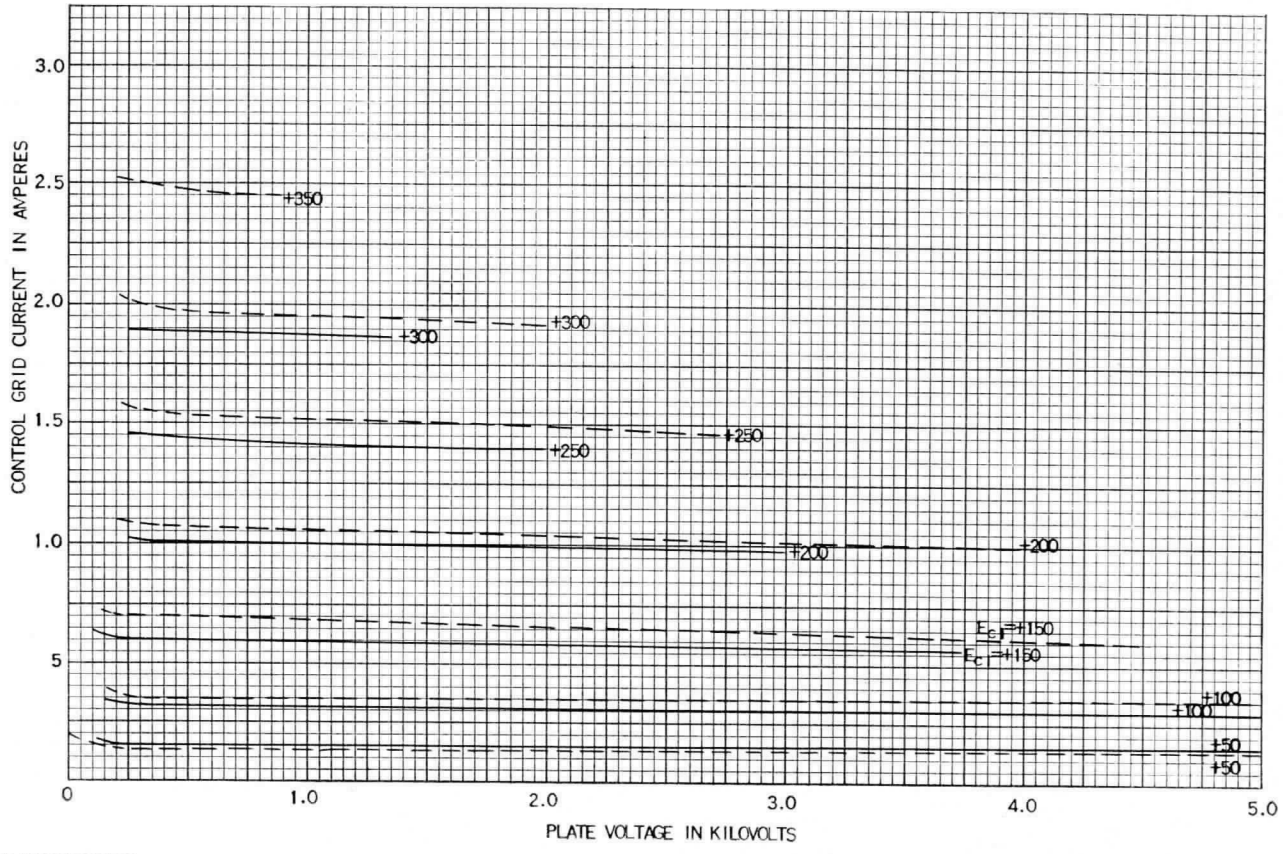

K-69087-72A120

3-24-47

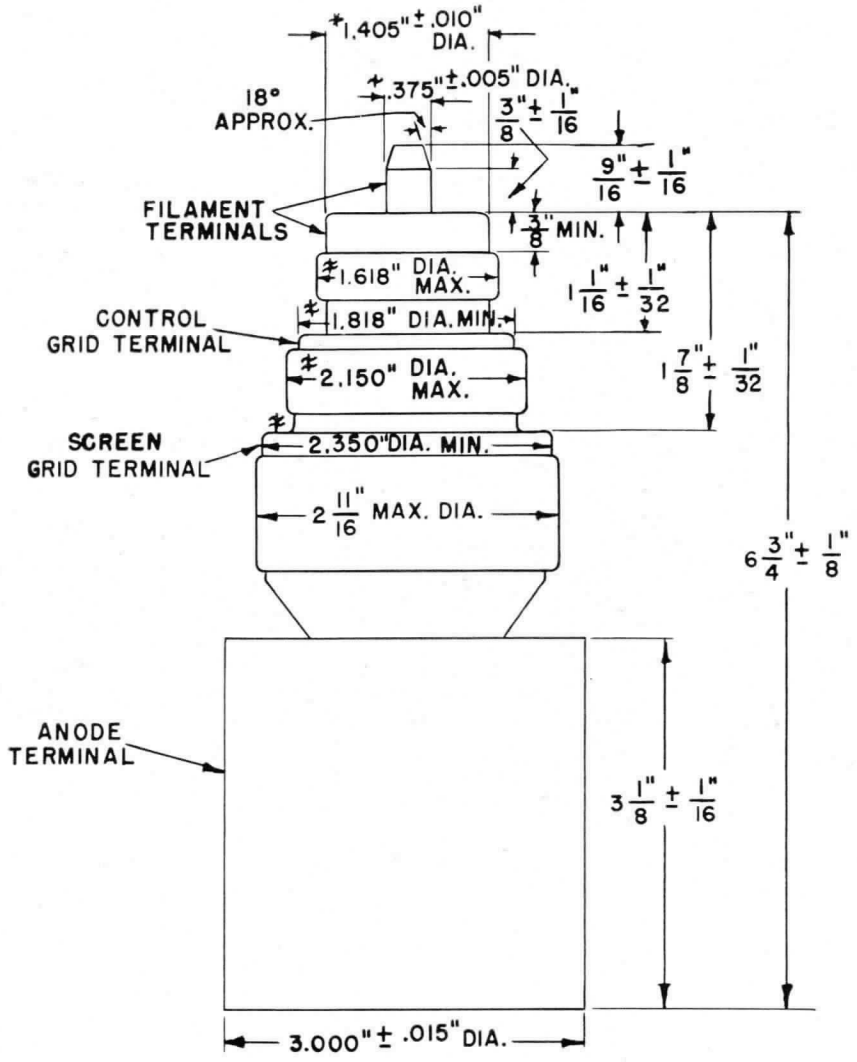

NOTES: * MAX. ECCENTRICITY OF LARGER DIA. FILAMENT TERMINAL IS .050" WITH RESPECT TO THE AXIS OF RADIATOR.

✦ MAX. ECCENTRICITY OF SMALLER DIA. FILAMENT TERMINAL IS .020" WITH RESPECT TO A CENTERLINE ESTABLISHED BY THE CENTER OF THE BOTTOM OF RADIATOR AND CENTER OF LARGER DIA. FILAMENT TERMINAL.

✲ MAX. OR MIN. DIMENSIONS OF ANY POINT ON CIRCUMFERENCE OF PART, CIRCUMFERENCES CONCENTRIC WITH A CENTERLINE ESTABLISHED BY THE CENTER OF THE BOTTOM OF RADIATOR AND CENTER OF LARGER DIA. FILAMENT TERMINAL.

N-21206AZ

4-18 46

ELECTRONIC COMPONENTS DIVISION

GENERAL ELECTRIC

Schenectady 5, N. Y.

PRINTED IN U.S.A.



TRIODE

DESCRIPTION

The GL-9C24 is a three-electrode tube designed for use as a grounded-grid class B r-f amplifier and class C r-f amplifier and oscillator. The anode is water-cooled and capable of dissipating 5 kilowatts. The cathode is a pure-tungsten filament. Maximum ratings apply up to 220 megacycles.

TECHNICAL INFORMATION

These data are for reference only. For design information refer to specifications.

GENERAL CHARACTERISTICS

Number of electrodes			3	
Electrical	Minimum	Bogey	Maximum	
Filament voltage		6.3	6.6	volts
Filament current at 6.3 volts	230	240	250	amperes
Filament starting current			360	amperes
Filament cold resistance	0.003			ohms
Amplification factor				
I_b = 1.0 amp E_c = −50 volts	17	21	25	
Interelectrode capacitances				
Grid-plate	13.8	15.7	17.6	micromicrofarads
Grid-filament	20	24	28	micromicrofarads
Grid-filament*	0.35	0.47	0.60	micromicrofarads
Frequency for maximum ratings			220	megacycles

* Measured with 10-inch outer diameter and 3⅝-inch inner diameter flat shield on grid terminal.

Electronic TUBE

GENERAL ELECTRIC

TECHNICAL INFORMATION (CONT'D)

Mechanical

Mounting position		vertical, anode down
Type of cooling		water and forced air
Water flow to filament terminal†	0.25	gallon per minute
Water flow on anode at rated anode dissipation	8	gallons per minute
Maximum outgoing water temperature	70	centigrade
Air flow around circumference of grid-anode seal, approximate	10	cubic feet per minute
Air flow around circumference of grid-cathode seal, approximate	10	cubic feet per minute
Maximum incoming air temperature	45	centigrade
Maximum glass temperature	150	centigrade
Net weight, approximate	3.5	pounds

† The filament terminals must be water-cooled. The center terminal is cooled internally by injecting water at the bottom of the well in the center filament terminal. The outer terminal is cooled by a contact cooler.

MAXIMUM RATINGS AND TYPICAL OPERATING CONDITIONS

RADIO-FREQUENCY POWER AMPLIFIER—CLASS B—VIDEO SERVICE

Synchronizing peak conditions per tube in a grounded-grid circuit. 5 megacycles bandwidth

Maximum Ratings, Absolute Values	CCS‡	
D-c plate voltage	5000	volts
D-c plate current	2	amperes
Plate input	10	kilowatts
Plate dissipation	5	kilowatts
Typical Operation‡	CCS	
D-c plate voltage	4000	volts
D-c grid voltage	−180	volts
Peak r-f grid voltage	540	volts
D-c plate current	1.7	amperes
D-c grid current, approximate	0.10	ampere
Total driving power, **approximate	650	watts
Power output, **approximate	3.4	kilowatts

‡ Continuous Commercial Service.

RADIO-FREQUENCY POWER AMPLIFIER AND OSCILLATOR—CLASS C TELEGRAPHY

Key-down conditions per tube without modulation in a grounded-grid circuit ¶

Maximum Ratings, Absolute Values	CCS‡		
D-c plate voltage	6500		volts
D-c grid voltage	−850		volts
D-c plate current	2.0		amperes
D-c grid current	0.25		ampere
Plate input	12		kilowatts
Plate dissipation	5		kilowatts
Typical Operation	CCS‡	CCS‡	
D-c plate voltage	6000	6000	volts
D-c grid voltage	−680	−655	volts
Peak r-f grid voltage	1100	1275	volts
D-c plate current	1.3	1.8	amperes
D-c grid current, approximate	0.125	0.240	ampere
Total driving power, **approximate	1460	2300	watts
Power output, **approximate	6.4	9.0	kilowatts

** This value includes power transferred from driver to output.

¶ Modulation essentially negative may be used if the positive peak of the envelope does not exceed 115 per cent of the carrier conditions.

‡ Continuous Commercial Service.

GL-9C24
AVERAGE PLATE CHARACTERISTICS
$E_f = 6.3$ VOLTS

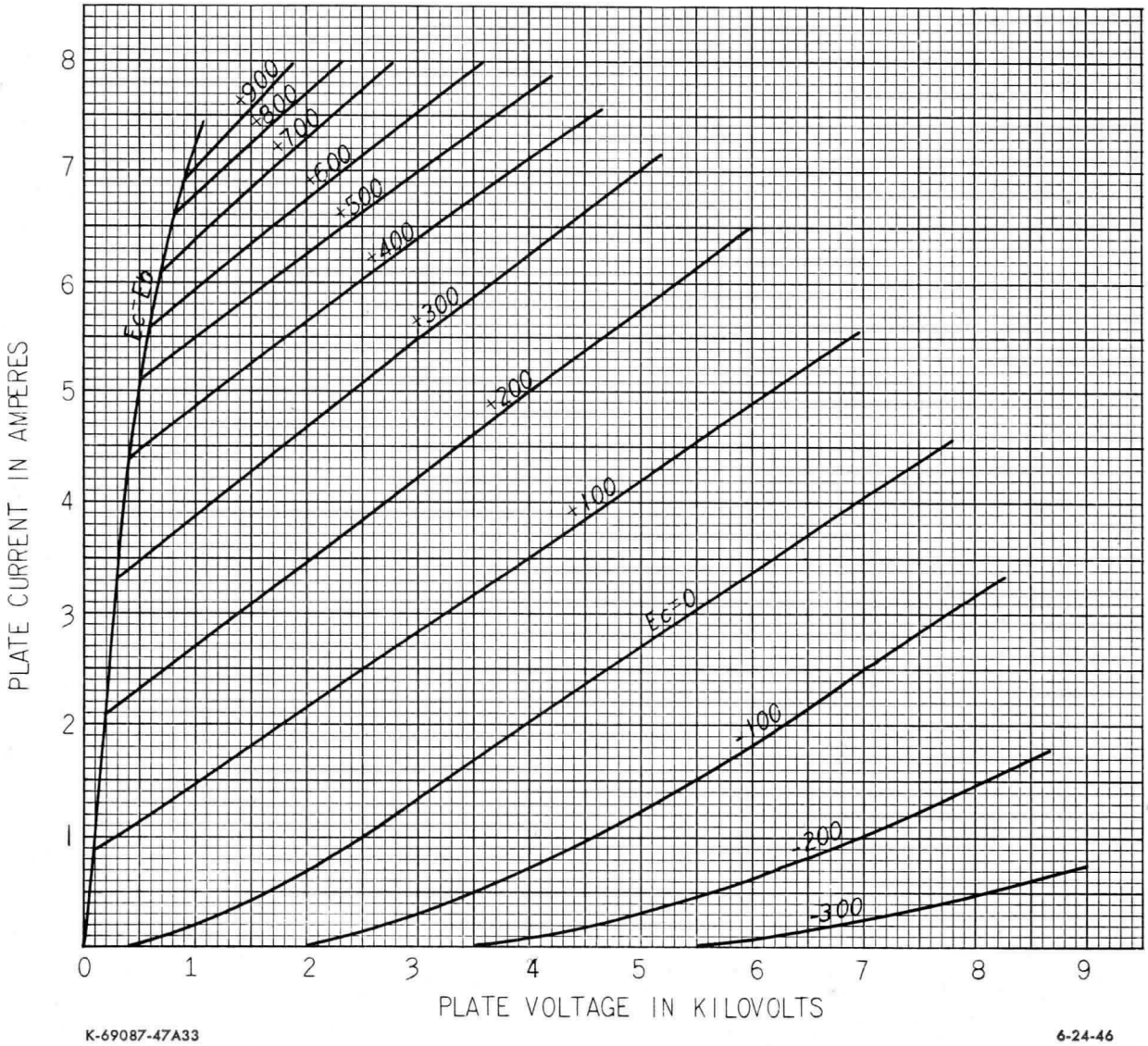

K-69087-47A33

6-24-46

GL-9C24 CHARACTERISTICS
$E_f = 6.3$ VOLTS

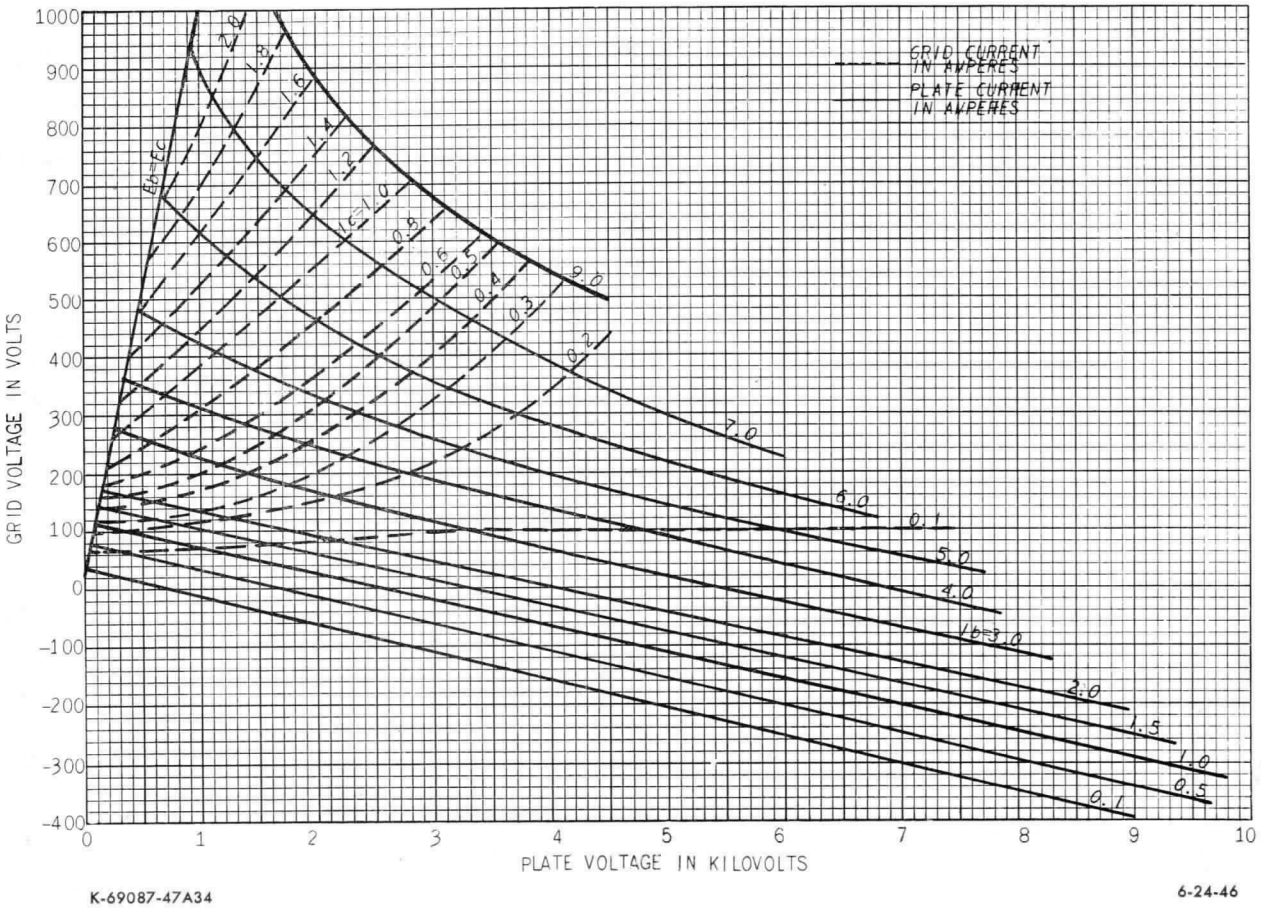

K-69087-47A34

6-24-46

GL-9C24 AVERAGE GRID CHARACTERISTICS
$E_f = 6.3$ VOLTS

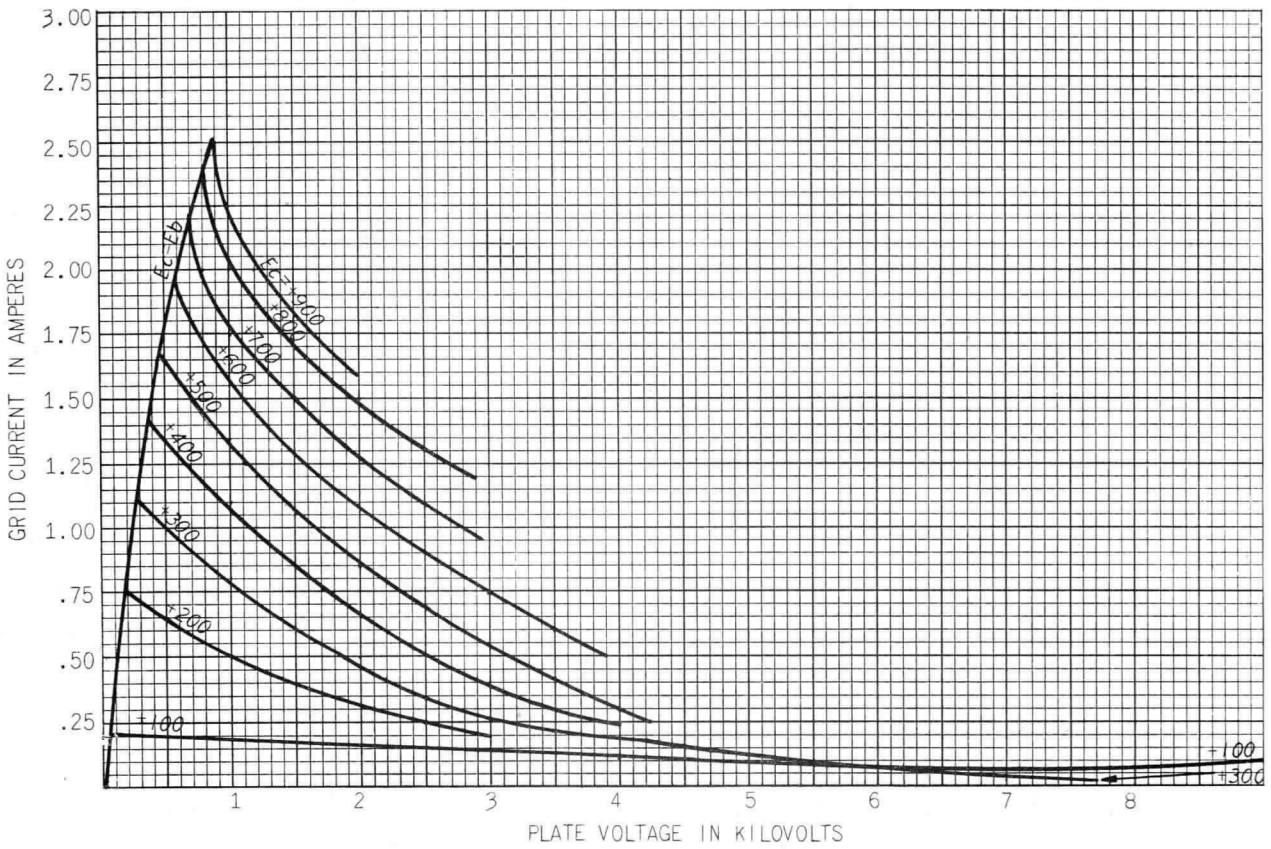

K-69087-47A32

6-24-46

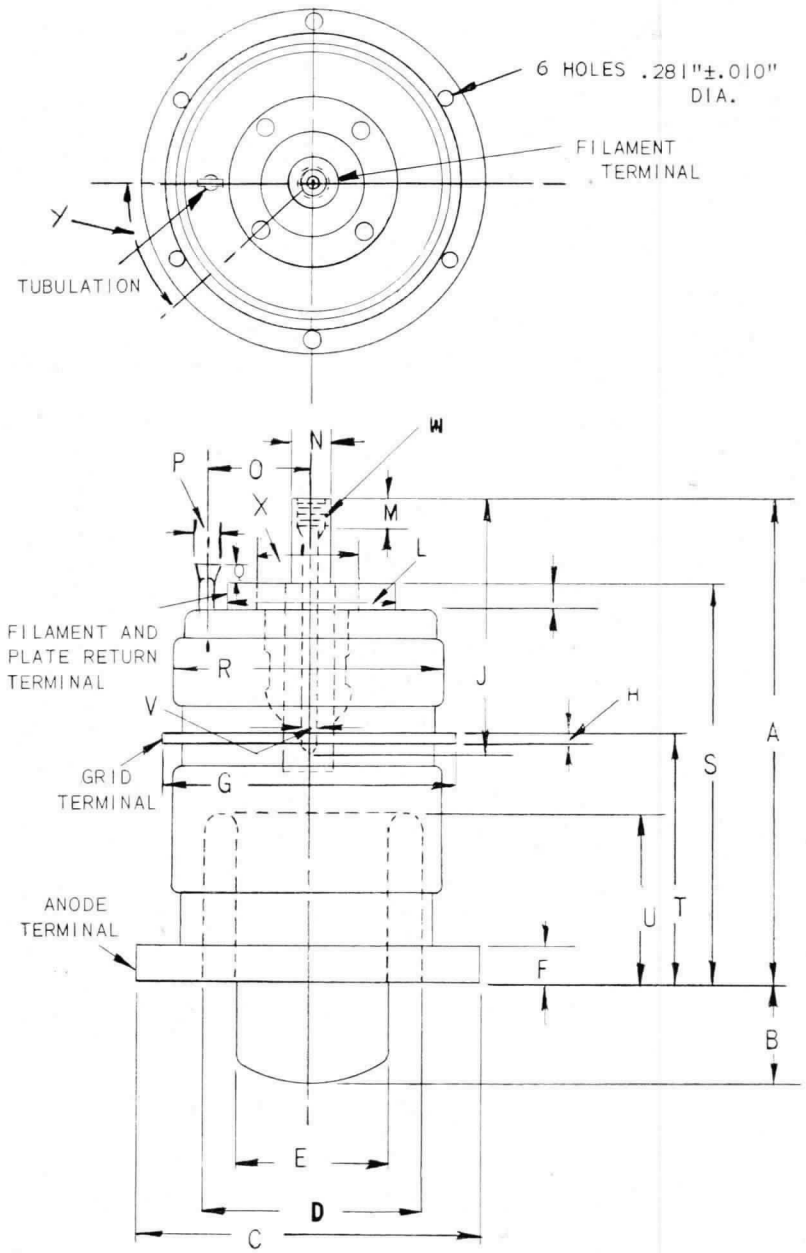

	DIMENSION
A	6⅛ in. ±5/32 in.
B	1⅜ in. ±⅛ in.
C	4.505 in. ±.025 in. dia.
D	2.750 in. ±.025 in. dia.
E	2.022 in. ±.030 in. dia.
F	.505 in. ±.020 in.
G***	3.875 in. ±.025 in. dia.
H	.127 ±.007 in.
J	2¼ in. min.
K	.375 in. .015 in.
L*	2.250 in. ±.025 in. dia.
M	5/16 min.
N**	.500 in. +.005 −.004 in. dia.
O	1.344 in. ±.031
P	.437 in. max.
Q	.625 in. max.
R	3.625 in. max. dia.
S	5⅛ in. ±⅛ in.
T	3.312 in. ±.062 in.
U	2.000 in. min.
V	.187 in. min.
W	5/16 in.—18 thd.
X	1.375 in. ±.025 in. dia.
Y	45 deg ±5 deg.

*Eccentricity .060 in. from center line of bolt holes in anode terminal.
**Eccentricity .060 in. from center line of bolt holes in plate-return terminal.
***Eccentricity .030 in. from center line of bolt holes in anode terminal.

GL-9C24 OUTLINE

N-20706AZ

6-6-46

Holes in filament and plate-return terminal positioned to fit four No. 10–24 screws inserted ¼ in. min. through a gage ⅛ in. thick with four .218 in. +.002 in. diameter holes located on a circle 1.812 in. ±.003 in. diameter at angles of 90 ±0 deg 10′.
−.001 in.
Holes in anode terminal positioned to fit six .250 in. +.002 in. diameter pins inserted to depth of flange and located on a circle 4.000 in. ±.003
−.000 in.
in. diameter at angles of 60 ± 0 deg 10′.
Holes in anode flange not indexed with respect to holes in filament and plate-return terminal.

Electronics Department
GENERAL ELECTRIC
Schenectady, N. Y.

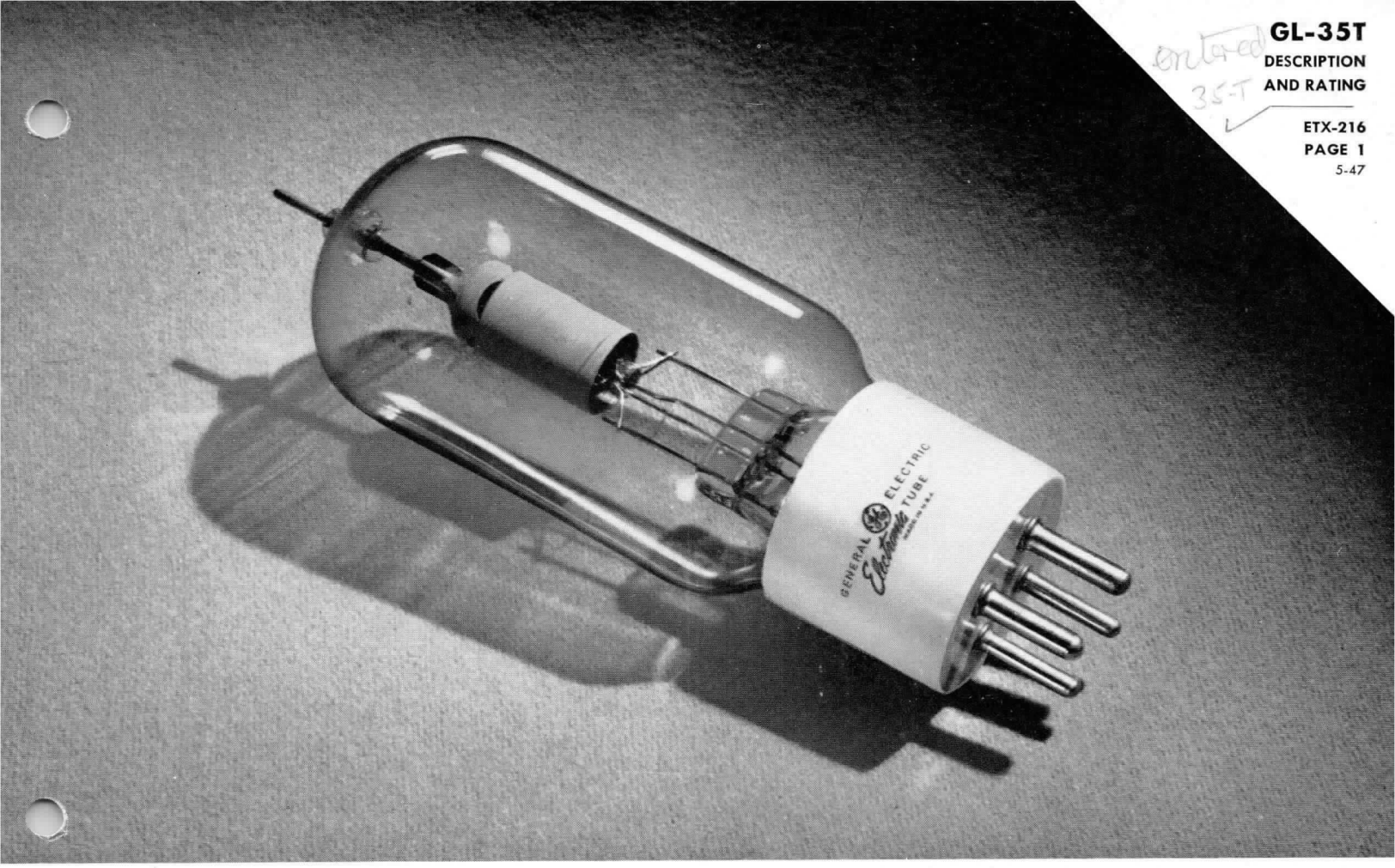

TRIODE

DESCRIPTION

The GL-35T is a three-electrode high-mu tube designed for use in Class B or C operation. The anode is capable of dissipating 50 watts, and cooling is accomplished by radiation. The cathode is a thoriated-tungsten filament. Maximum ratings apply up to 100 megacycles.

TECHNICAL INFORMATION

These data are for reference only. For design information refer to specifications.

GENERAL

Number of electrodes	3	

Electrical Data

Filament voltage	5.0	volts
Filament current	4.0	amperes
Amplification factor	39	
Interelectrode capacitances		
Grid-plate	1.8	micromicrofarad
Grid-filament	4.1	micromicrofarads
Plate-filament	0.3	micromicrofarad
Transconductance, $I_b = 100$ ma, $E_b = 2000$ v, $E_c = -30$ v.	2850	micromhos
Frequency for maximum ratings	100	megacycles

Mechanical Data

Net weight, approximate	2.5	ounces

GE Electronic TUBE

GENERAL ELECTRIC

TECHNICAL INFORMATION (CONT'D)

MAXIMUM RATINGS AND TYPICAL OPERATING CONDITIONS

AUDIO-FREQUENCY POWER AMPLIFIER AND MODULATOR—CLASS B

Maximum Ratings, Absolute Values

D-c plate voltage	2000 maximum	volts
Maximum signal d-c plate current‡	150 maximum	milliamperes
Plate dissipation‡	50 maximum	watts

Typical Operation

Unless otherwise specified, values are for two tubes

D-c plate voltage	1000	1500	2000	volts
D-c grid voltage	−8	−25	−40	volts
Peak a-f grid input voltage	240	250	255	volts
Zero signal d-c plate current	67	45	34	milliamperes
Maximum signal d-c plate current	240	200	167	milliamperes
Effective load resistance, plate to plate	7900	16200	27500	ohms
Maximum signal driving power, approximate	7	5	4	watts
Maximum signal power output, approximate	140	200	235	watts

PLATE-MODULATED RADIO-FREQUENCY POWER AMPLIFIER—CLASS C TELEPHONY

Carrier conditions per tube for use with a maximum modulation factor of 1.0

Maximum Ratings, Absolute Values

D-c plate voltage	2000 maximum	volts
D-c plate current	100 maximum	milliamperes
D-c grid current	50 maximum	milliamperes
Plate dissipation	34 maximum	watts

Typical Operation

D-c plate voltage	1000	1500	2000	volts
D-c grid voltage	−130	−150	−150	volts
Peak r-f grid voltage	260	278	270	volts
D-c plate current	90	90	84	milliamperes
D-c grid current, approximate	31	26	23	milliamperes
Plate dissipation	25	31	33	watts
Driving power, approximate	8	7	6	watts
Plate input	90	135	168	watts
Power output, approximate	65	104	135	watts

RADIO-FREQUENCY POWER AMPLIFIER AND OSCILLATOR—CLASS C TELEGRAPHY

Key-down conditions per tube without modulation¶

Maximum Ratings, Absolute Values

D-c plate voltage	2000 maximum	volts
D-c plate current	150 maximum	milliamperes
D-c grid current	50 maximum	milliamperes
Plate dissipation	50 maximum	watts

Typical Operation

D-c plate voltage	1000	1500	2000	volts
D-c grid voltage	−60	−120	−135	volts
Peak r-f grid input voltage	165	250	285	volts
D-c plate current	125	125	125	milliamperes
D-c grid current, approximate	40	40	45	milliamperes
Plate dissipation	38	47	50	watts
Driving power, approximate	7	9	13	watts
Plate input	125	188	250	watts
Power output, approximate	87	141	200	watts

‡Averaged over any audio-frequency cycle of sine-wave form.
¶Modulation essentially negative may be used if the positive peak of the envelope does not exceed 115 per cent of the carrier conditions.

GL-35T

CONSTANT-CURRENT CHARACTERISTICS

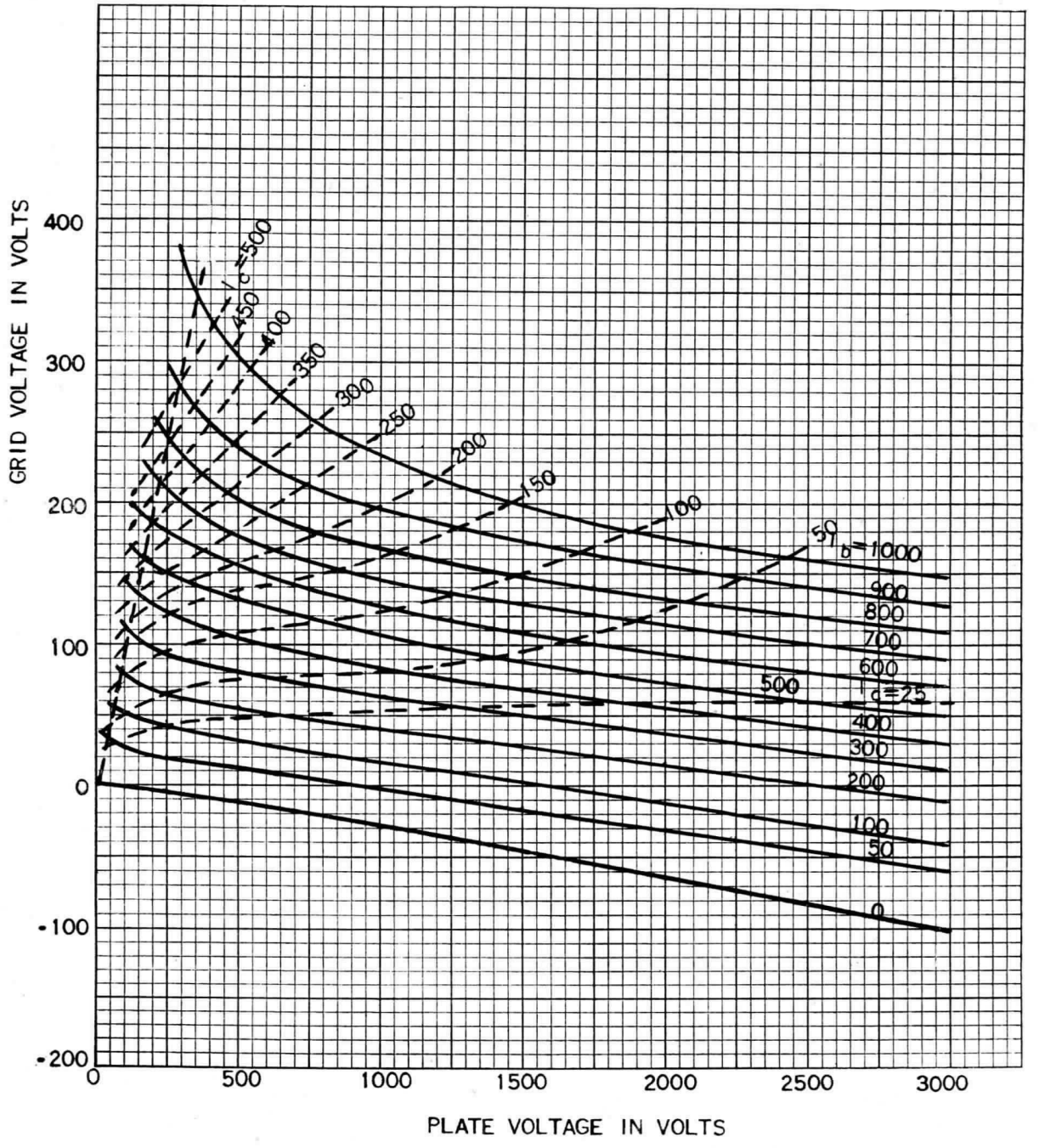

K-69087-72A70

11-29-46

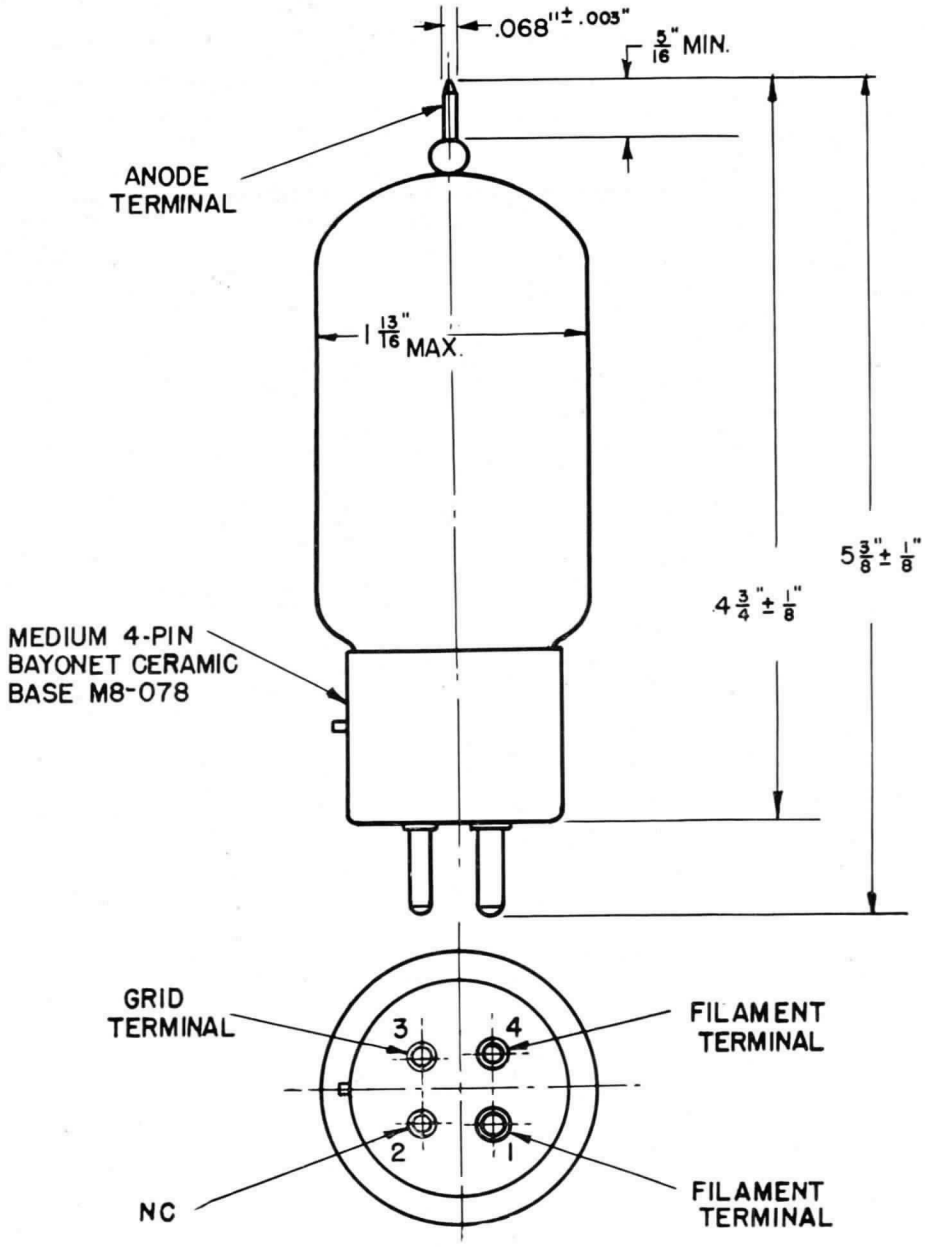

GL-35T OUTLINE

N-15087AZ

10-9-46

Electronics Department
GENERAL ELECTRIC
Schenectady, N. Y.

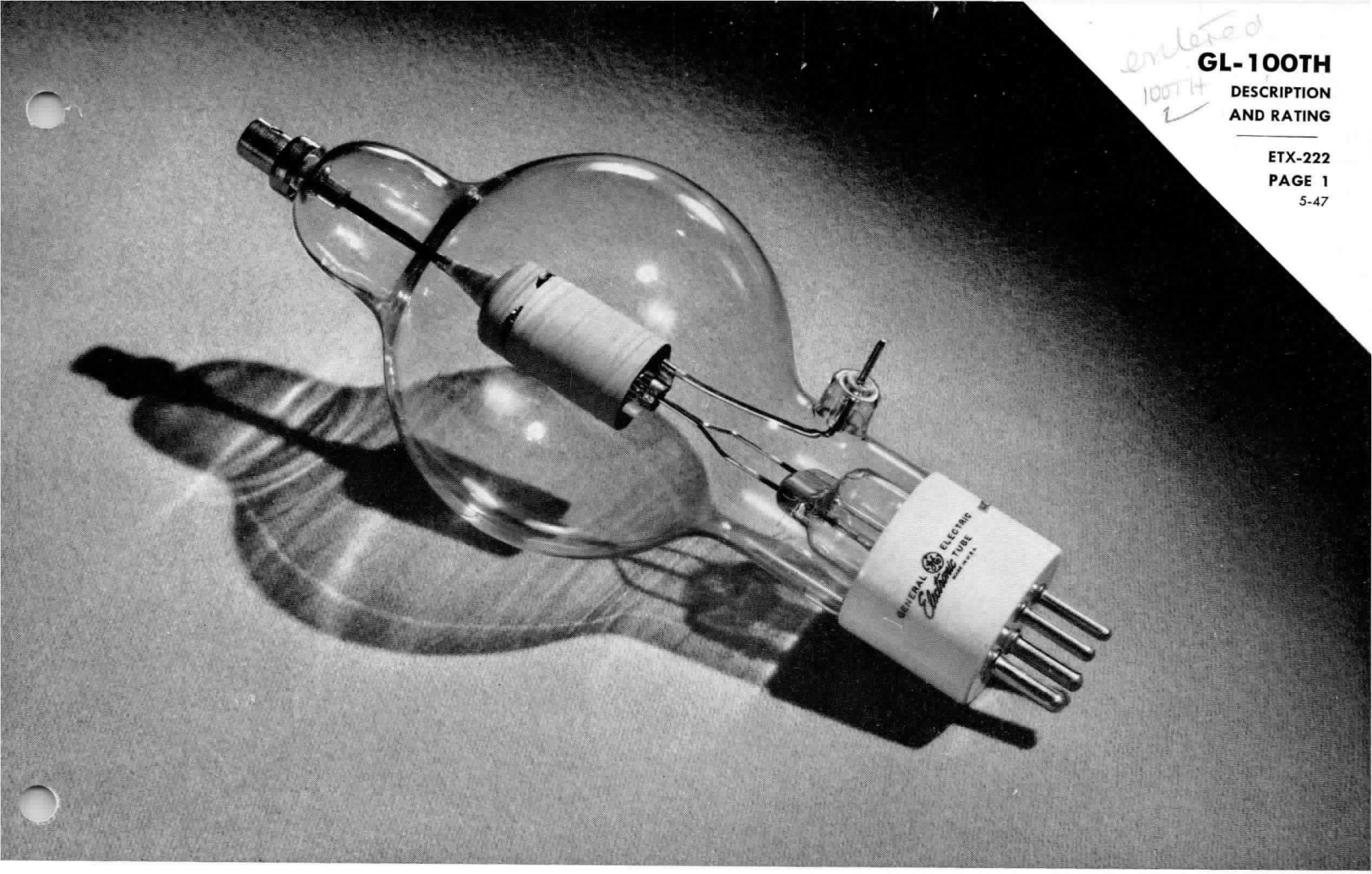

TRIODE

DESCRIPTION

The GL-100TH is a three-electrode tube designed for use in Class B or C operation. The anode is capable of dissipating 100 watts, and cooling is accomplished by radiation. The cathode is a thoriated-tungsten filament.

TECHNICAL INFORMATION

These data are for reference only. For design information refer to specifications.

GENERAL

Electrical Data

Filament voltage	5.0	volts
Filament current	6.3	amperes
Amplification factor	40	
Interelectrode capacitances		
Grid-plate	2.0	micromicrofarads
Grid-filament	2.9	micromicrofarads
Plate-filament	0.4	micromicrofarad
Transconductance, $I_b = 200$ ma, $E_b = 3000$ v, $E_c = 15$ v	5500	micromhos

Mechanical Data

Net weight, approximate	4	ounces

GE Electronic TUBE

GENERAL ELECTRIC

TECHNICAL INFORMATION (CONT'D)

MAXIMUM RATINGS AND TYPICAL OPERATING CONDITIONS

AUDIO-FREQUENCY POWER AMPLIFIER AND MODULATOR—CLASS B

Maximum Ratings, Absolute Values

D-c plate voltage	3000 maximum	volts
Maximum signal d-c plate current‡	225 maximum	milliamperes
Plate dissipation‡	100 maximum	watts

Typical Operation

Unless otherwise specified, values are for two tubes

D-c plate voltage	1500	2000	3000	volts
D-c grid voltage	−20	−35	−65	volts
Peak a-f grid input voltage	290	310	335	volts
Zero signal d-c plate current	80	60	40	milliamperes
Maximum signal d-c plate current	320	280	215	milliamperes
Effective load resistance, plate to plate	8750	15000	31000	ohms
Maximum signal driving power, approximate	7	7	5	watts
Maximum signal power output, approximate	280	360	650	watts

PLATE-MODULATED RADIO-FREQUENCY POWER AMPLIFIER—CLASS C TELEPHONY

Carrier conditions per tube for use with a maximum modulation factor of 1.0

Maximum Ratings, Absolute Values

D-c plate voltage	3000 maximum	volts
D-c plate current	150 maximum	milliamperes
D-c grid current	60 maximum	milliamperes
Plate dissipation	67 maximum	watts

Typical Operation

D-c plate voltage	1500	2000	3000	volts
D-c grid voltage	−120	−160	−275	volts
Peak r-f grid voltage	270	300	425	volts
D-c plate current	138	117	122	milliamperes
D-c grid current, approximate	30	25	26	milliamperes
Plate dissipation	63	56	61	watts
Driving power, approximate	8	8	11	watts
Plate input	207	234	366	watts
Power output, approximate	144	178	305	watts

RADIO-FREQUENCY POWER AMPLIFIER AND OSCILLATOR—CLASS C TELEGRAPHY

Key-down conditions per tube without modulation¶

Maximum Ratings, Absolute Values

D-c plate voltage	3000 maximum	volts
D-c plate current	225 maximum	milliamperes
D-c grid current	60 maximum	milliamperes
Plate dissipation	100 maximum	watts

Typical Operation

D-c plate voltage	1500	2000	3000	volts
D-c grid voltage	−65	−80	−200	volts
Peak r-f grid voltage	230	230	385	volts
D-c plate current	190	165	165	milliamperes
D-c grid current, approximate	48	39	51	milliamperes
Plate dissipation	100	100	100	watts
Driving power, approximate	10	8	18	watts
Plate input	285	335	500	watts
Power output, approximate	185	235	400	watts

‡Averaged over any audio-frequency cycle of sine-wave form.
¶Modulation essentially negative may be used if the positive peak of the envelope does not exceed 115 per cent of the carrier conditions.

GL-100TH

CONSTANT-CURRENT CHARACTERISTICS

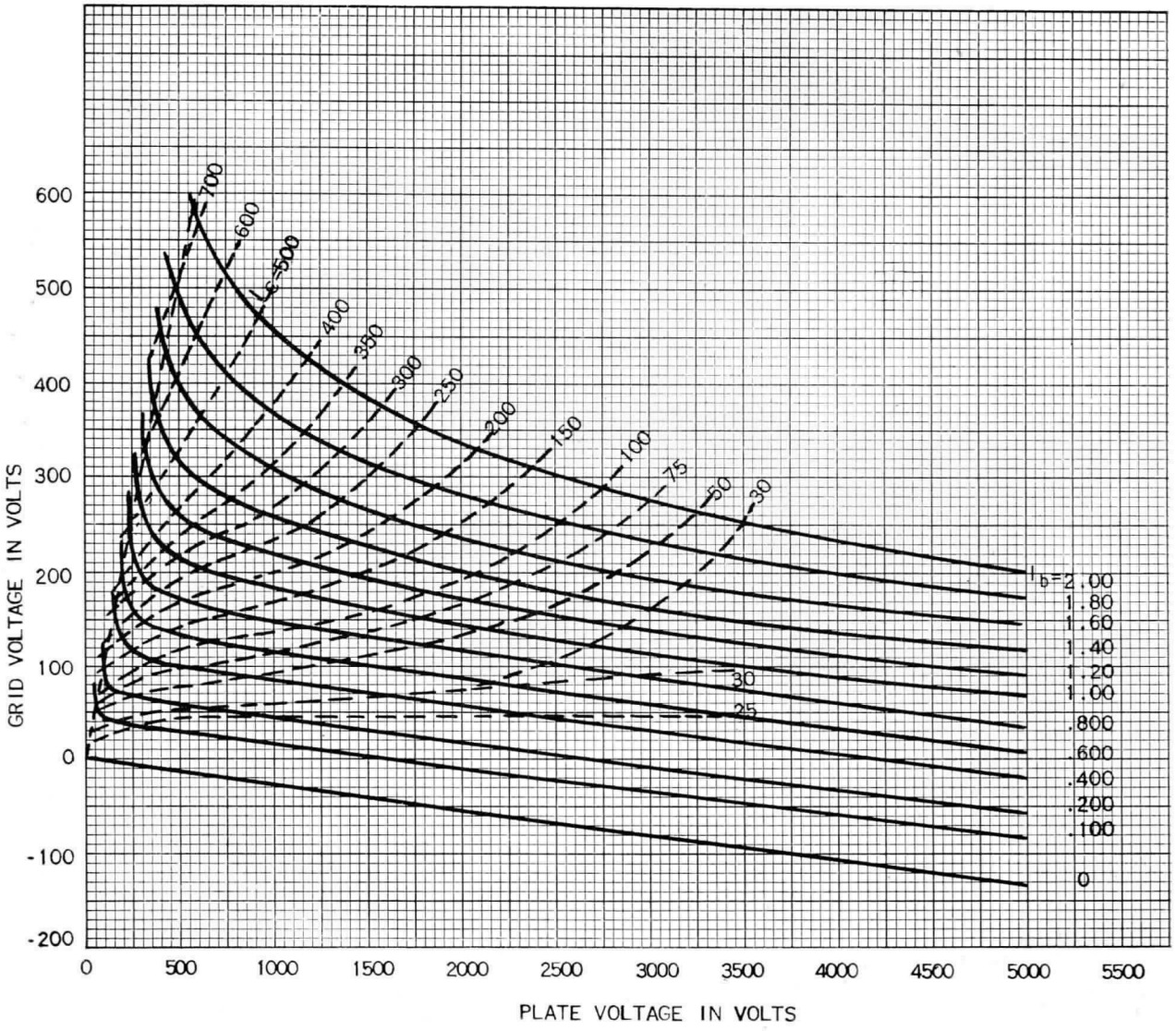

K-69087-72A71

11-29-46

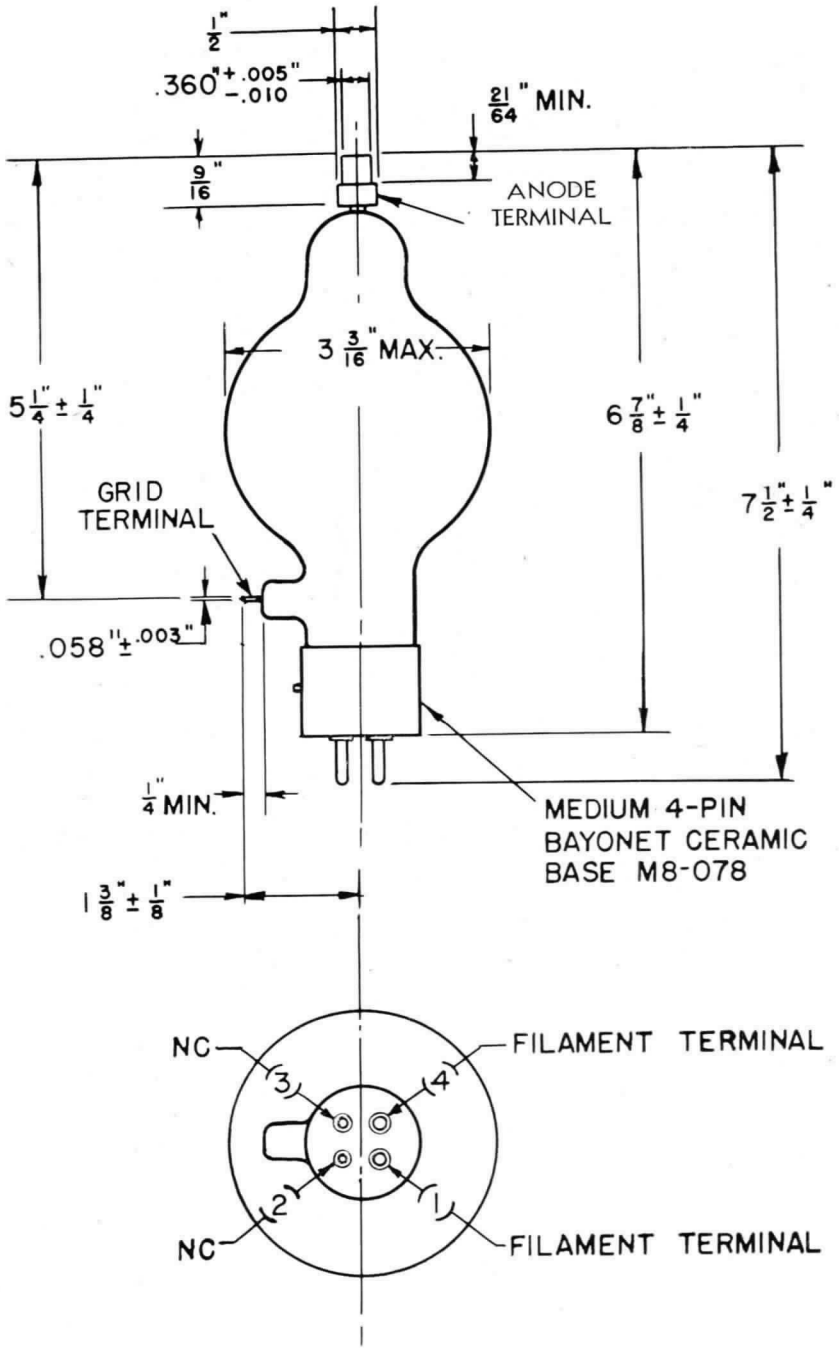

GL-100TH OUTLINE

N-15088AZ

4-23-47

Electronics Department

GENERAL ELECTRIC

Schenectady, N. Y.

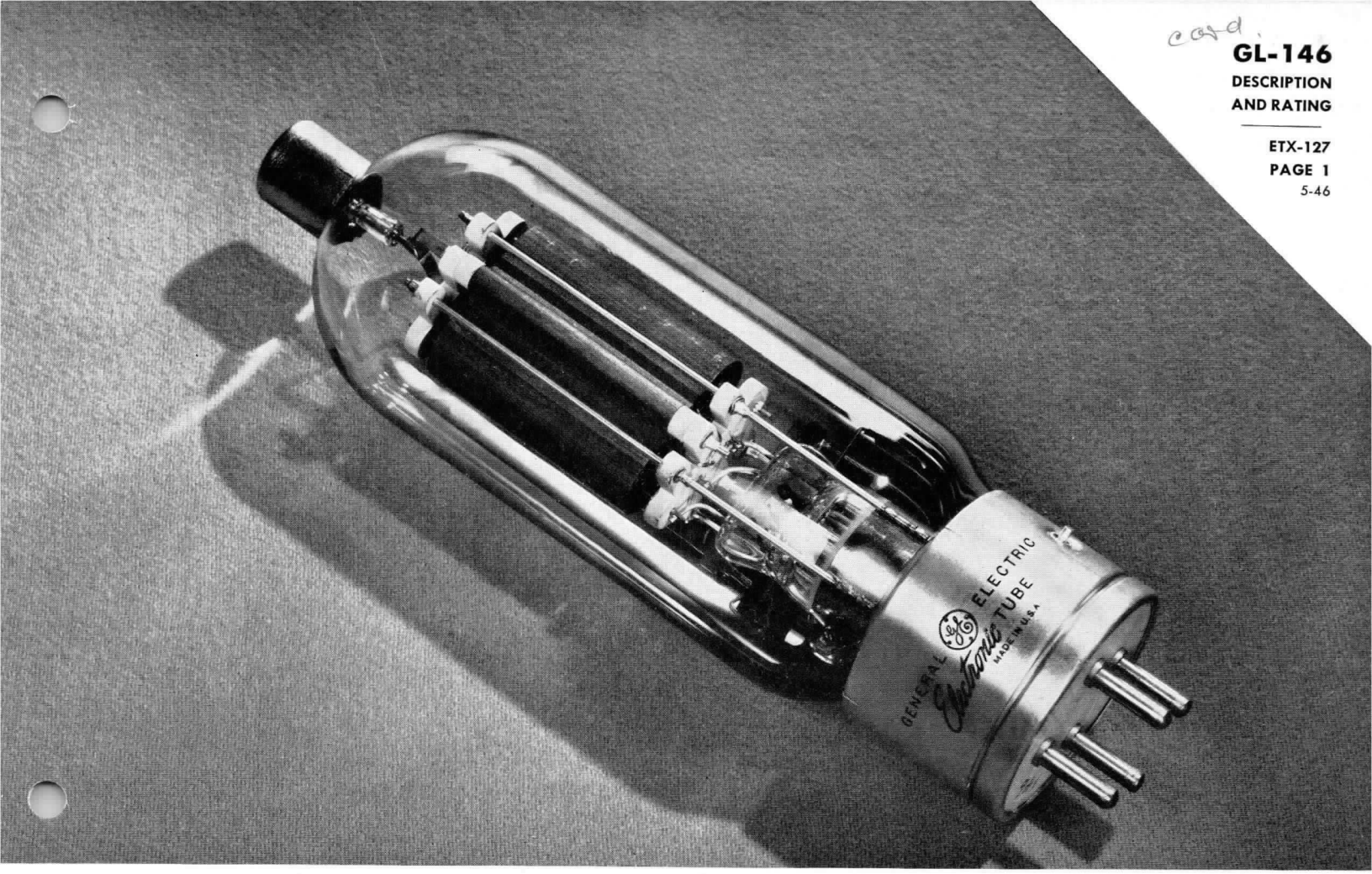

TRIODE

DESCRIPTION

The GL-146 is a three-electrode tube designed for use as a zero-bias Class B amplifier. It may be used also as a Class C radio-frequency power amplifier and oscillator. This tube can be operated at maximum ratings at frequencies as high as 15 megacycles and up to 60 megacycles at reduced ratings.

TECHNICAL INFORMATION

These data are for reference only. For design information refer to specifications.

GENERAL CHARACTERISTICS

Number of electrodes	3	
Electrical		
Cathode—Filamentary		
Filament voltage	10	volts
Filament current	3.25	amperes
Amplification factor, $I_b = 90$ ma	75	
Grid-plate transconductance	3900	micromhos
Direct interelectrode capacitances:		
Grid-plate	8.4	micromicrofarads
Input	7.6	micromicrofarads
Output	3.5	micromicrofarads
Mechanical		
Base	4310	
Net weight, approx.	14	ounces
Shipping weight, approx	3	pounds
Mounting position	vertical, base up or down—horizontal, filament in vertical plane	

GE Electronic TUBE

GENERAL ELECTRIC

TECHNICAL INFORMATION (CONT'D)

MAXIMUM RATINGS AND TYPICAL OPERATING CONDITIONS

CLASS B AUDIO-FREQUENCY POWER AMPLIFIER (TWO TUBES)

	Typical Operation		Maximum Ratings	
D-c plate voltage	1000	1250	1500	volts
Max signal plate current, per tube	0.160	0.160	0.175	ampere
D-c max signal plate input, per tube			250	watts
Plate dissipation, per tube			125	watts
D-c grid voltage	0	0		volts
Zero signal plate current	.02	.034		ampere
Max signal plate current	0.32	0.32		ampere
Max signal plate input*	320	400		watts
Effect load resistance, plate-to-plate	7000	8400		ohms
Max signal plate power output	200	250		watts

CLASS B RADIO-FREQUENCY AMPLIFIER

Carrier conditions per tube for use with a max modulation factor of 1.0

D-c plate voltage	1000	1250	1500	volts
D-c grid voltage	0	0	0	volts
D-c plate current	0.15	0.132	0.175	ampere
Plate input			200	watts
Plate dissipation			125	watts
Plate power output	45	55		watts

CLASS C RADIO-FREQUENCY POWER AMPLIFIER AND OSCILLATOR—PLATE MODULATED

Carrier conditions per tube for use with a max modulation factor of 1.0

D-c plate voltage	1000	1250	volts
D-c grid voltage	−200	−400	volts
D-c plate current	0.16	0.175	ampere
D-c grid current, approx	0.04	0.06	ampere
Plate input		220	watts
Plate dissipation		80	watts
Plate power output	100		watts

CLASS C RADIO-FREQUENCY POWER AMPLIFIER AND OSCILLATOR

Key-down conditions per tube without modulation†

D-c plate voltage	1250	1500	volts
D-c grid voltage	−150	−400	volts
D-c plate current	0.18	0.20	ampere
D-c grid current, approx	0.03	0.06	ampere
Plate input		300	watts
Plate dissipation		125	watts
Plate power output	150		watts

*Averaged over any audio-frequency cycle.
†Modulation, essentially negative, may be used if the positive peak of audio-frequency envelope does not exceed 115 per cent of the carrier conditions.

APPLICATION NOTES

GL-146 can be operated at maximum ratings in all classes of service at frequencies as high as 15 megacycles. The tube may be operated at higher frequencies provided the maximum values of plate voltage and power input are reduced as the frequency is raised. (Other maximum ratings are the same as shown under TECHNICAL INFORMATION.) The tabulation below shows the highest percentage of maximum plate voltage and power input that can be used up to 60 megacycles for the various classes of service. Special attention should be given to adequate ventilation of the bulb at these frequencies.

Frequency	15	30	60 megacycles
Maximum permissible percentage of Maximum Rated plate voltage and plate input:			
Class B telephony	100	85	69 per cent
Class C telephony, plate-modulated	100	75	50 per cent
Class C telegraphy	100	75	50 per cent

GL-146 AVERAGE PLATE CHARACTERISTICS

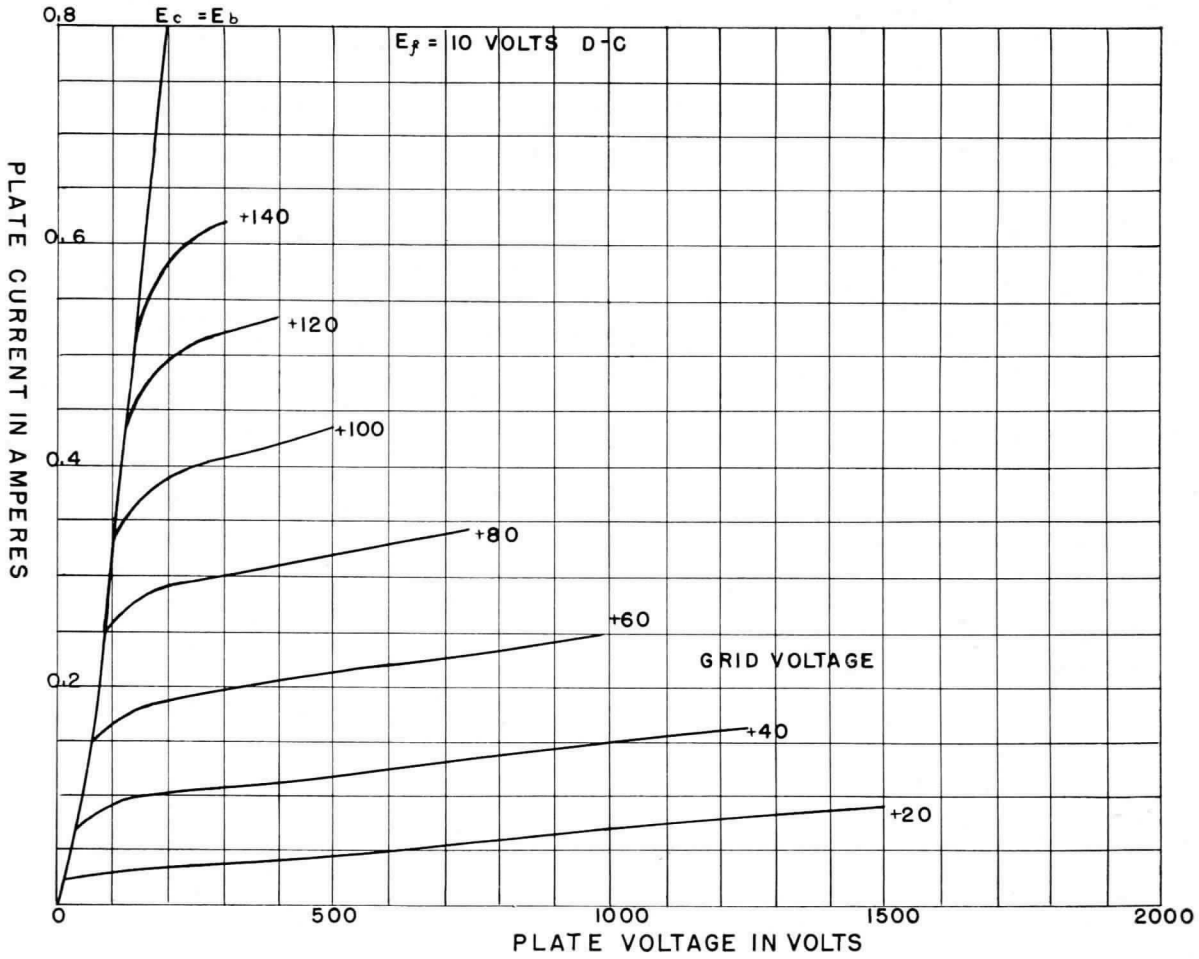

K-6917433

6-3-44

GL-146 PLATE-GRID TRANSFER CHARACTERISTICS

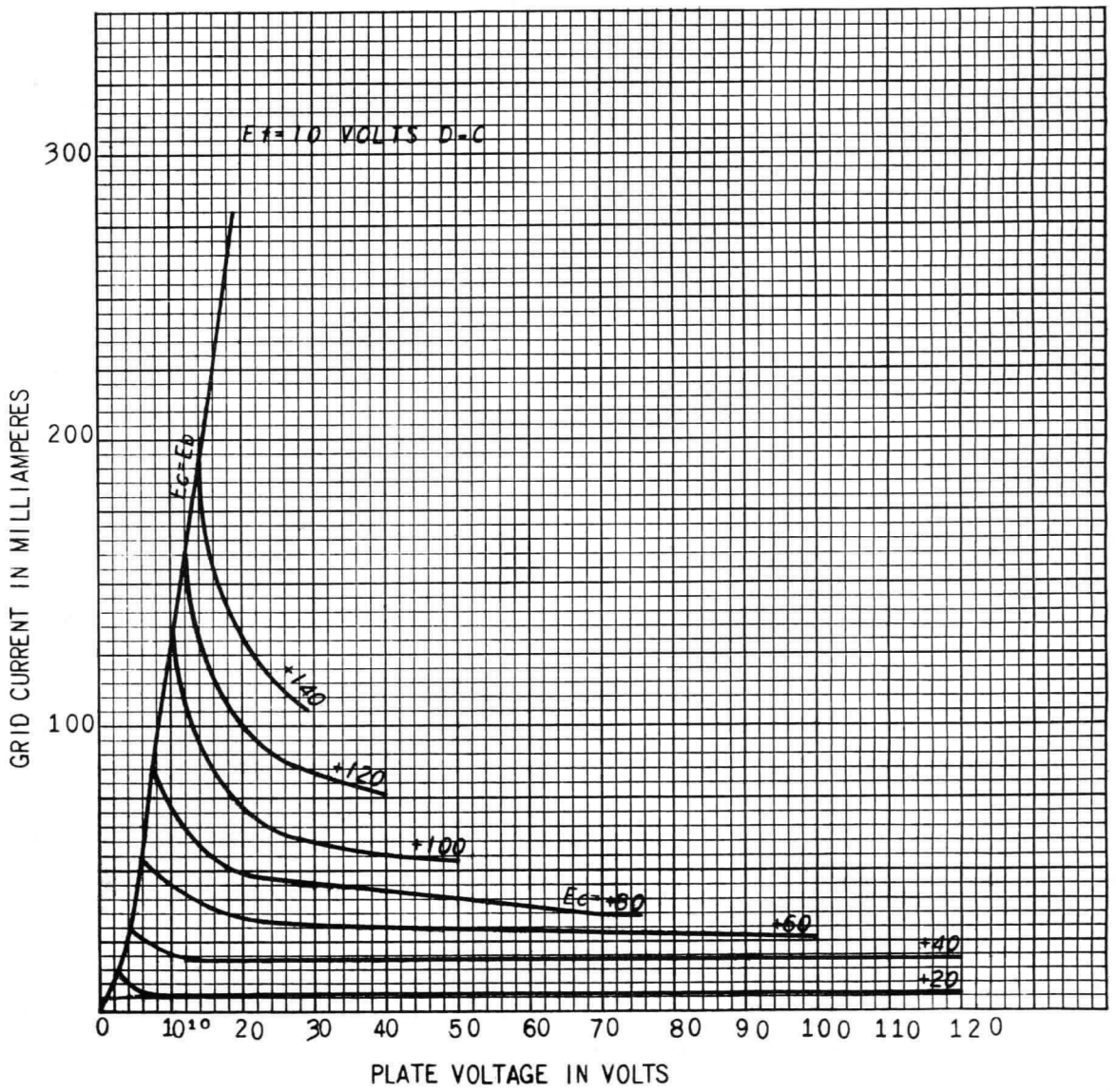

K-6917443

1-9-46

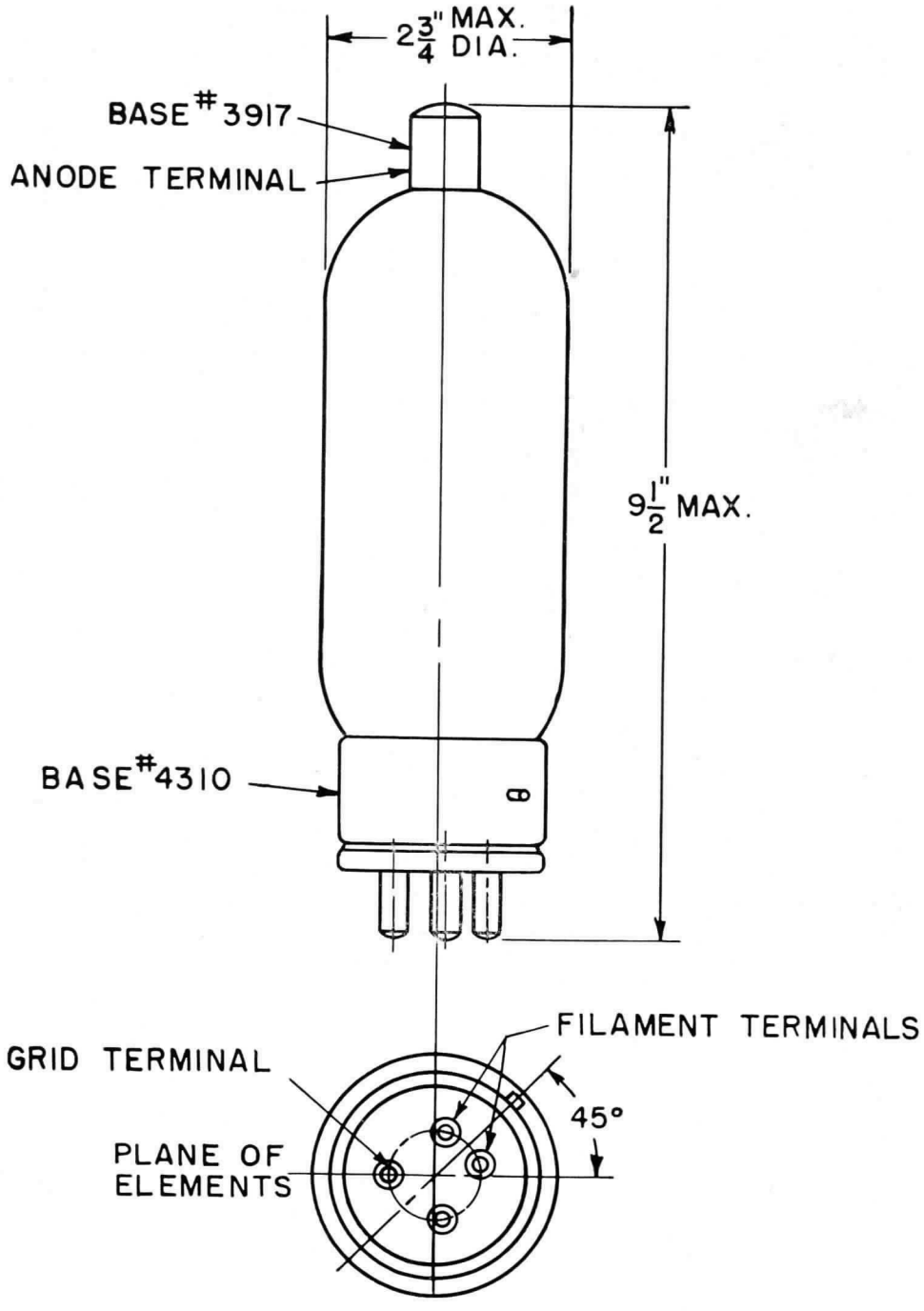

GL-146 OUTLINE

K-5182000

6-9-44

Electronics Department
GENERAL ELECTRIC
Schenectady, N. Y.

5-46 (7M)
Filing No. 8850

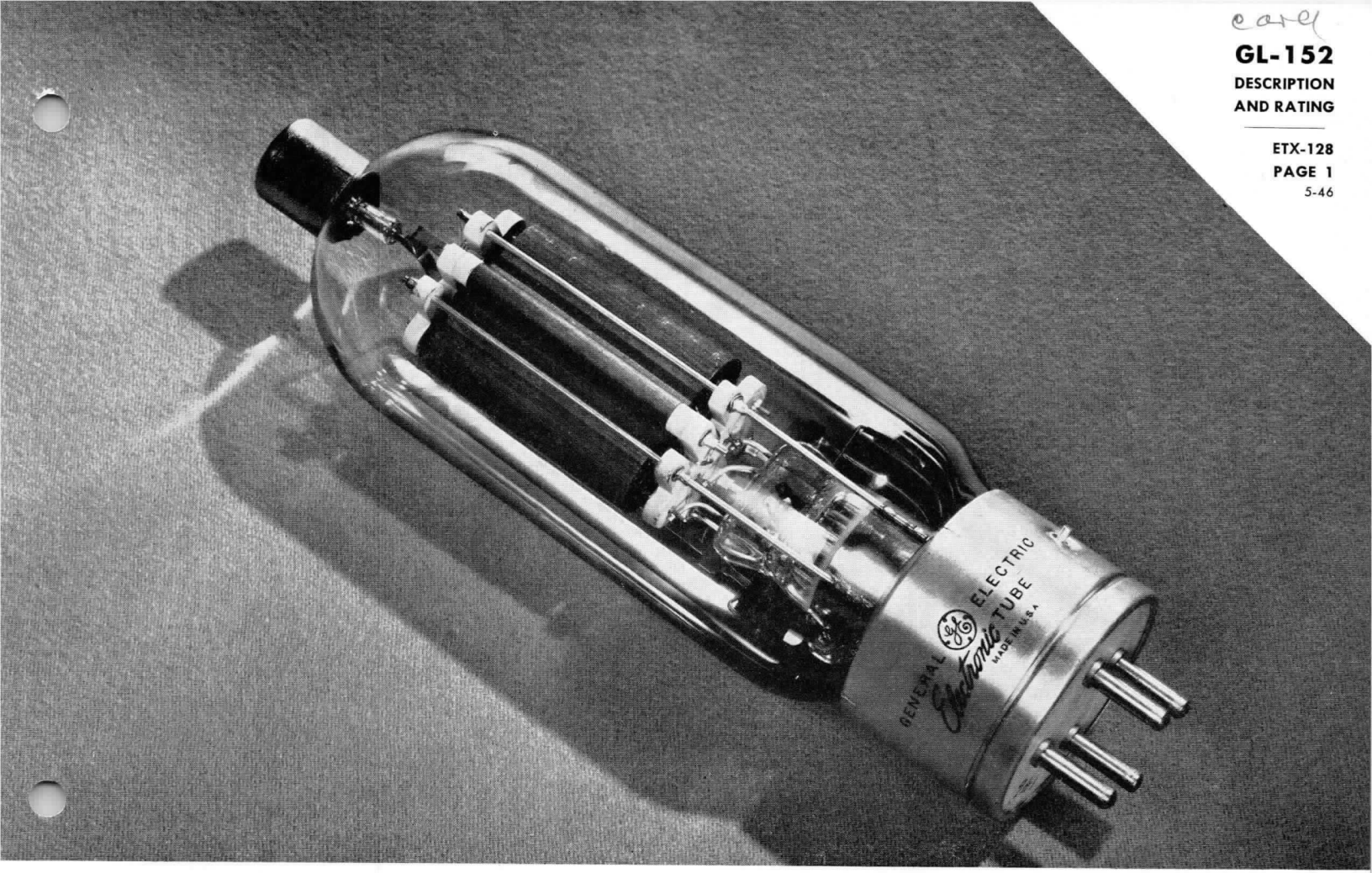

TRIODE

DESCRIPTION

The GL-152 is a three-electrode transmitting tube designed for use as a Class B and C radio-frequency power amplifier, Class C oscillator or as a Class B modulator. This tube can be operated at maximum ratings at frequencies as high as 15 megacycles and at frequencies up to 60 megacycles at reduced ratings.

TECHNICAL INFORMATION

These data are for reference only. For design information refer to specifications.

GENERAL CHARACTERISTICS

Number of electrodes	3	
Electrical		
Cathode—Filamentary		
Voltage	10	volts
Current	3.25	amperes
Average characteristics		
Amplification factor	25	
Grid-plate transconductance	4000	micromhos
Direct interelectrode capacitances		
Grid-plate	8.4	micromicrofarads
Grid-filament	7.5	micromicrofarads
Plate-filament	3.9	micromicrofarads
Frequency for maximum ratings	15	megacycles

GE Electronic TUBE

GENERAL ELECTRIC

TECHNICAL INFORMATION (CONT'D)

Mechanical

Type of cooling	Convection
Maximum ambient temperature	60 centigrade
Net weight, approx	14 ounces
Mounting position	vertical, base up or down—horizontal, filament in vertical plane

MAXIMUM RATINGS AND TYPICAL OPERATING CONDITIONS

CLASS B AUDIO-FREQUENCY POWER AMPLIFIER (TWO TUBES)

	Typical Operation	Maximum Ratings	
D-c plate voltage	1250	1500	volts
Maximum signal d-c plate current, per tube†		175	milliamperes
D-c max signal plate input, per tube†		250	watts
Plate dissipation, per tube†		125	watts
D-c grid voltage	−40		volts
Zero signal d-c plate current	16		milliamperes
Maximum signal d-c plate current	320		milliamperes
Effective load, plate-to-plate	8400		ohms
Maximum signal plate power output, approx	250		watts

CLASS B RADIO-FREQUENCY POWER AMPLIFIER

Carrier conditions per tube for use with a maximum modulation factor of 1.0

D-c plate voltage	1250	1500	volts
D-c grid voltage	−40		volts
D-c plate current	132	175	milliamperes
Plate input		200	watts
Plate dissipation		125	watts
Plate power output, approx	55		watts

CLASS C RADIO-FREQUENCY POWER AMPLIFIER AND OSCILLATOR, PLATE MODULATED

Carrier conditions per tube for use with a maximum modulation factor of 1.0

D-c plate voltage	1000	1250	volts
D-c grid voltage	−200	−400	volts
D-c plate current	160	175	milliamperes
D-c grid current, approx	30	60	milliamperes
Plate input		220	watts
Plate dissipation		80	watts
Plate power output	100		watts

CLASS C RADIO-FREQUENCY POWER AMPLIFIER AND OSCILLATOR

Key-down conditions per tube without modulation ‡

D-c plate voltage	1250	1500	volts
D-c grid voltage	−150	−400	volts
D-c plate current	180	200	milliamperes
D-c grid current, approx	30	60	milliamperes
Plate input		300	watts
Plate dissipation		125	watts
Plate power output, approx	150		watts

†Averaged over any audio-frequency cycle.
‡Modulation, essentially negative, may be used if the positive peak of the audio-frequency envelope does not exceed 115 per cent of the carrier conditions.

APPLICATION NOTES

The GL-152 can be operated at frequencies as high as 15 megacycles. The tube may be operated at higher frequencies provided the maximum values of plate voltage and power input are reduced as the frequency is raised (other maximum ratings are the same as shown above). The tabulation below shows the highest percentage of maximum plate voltage and power input that can be used up to 60 megacycles for the various classes of service. Special attention should be given to adequate ventilation of the bulb at these frequencies.

Frequency	15	30	60 megacycles
Percentage of maximum rated plate voltage and plate input			
Class B	100	85	69 per cent
Class C plate modulated	100	75	50 per cent
Class C unmodulated	100	75	50 per cent

GL-152 PLATE-GRID TRANSFER CHARACTERISTICS

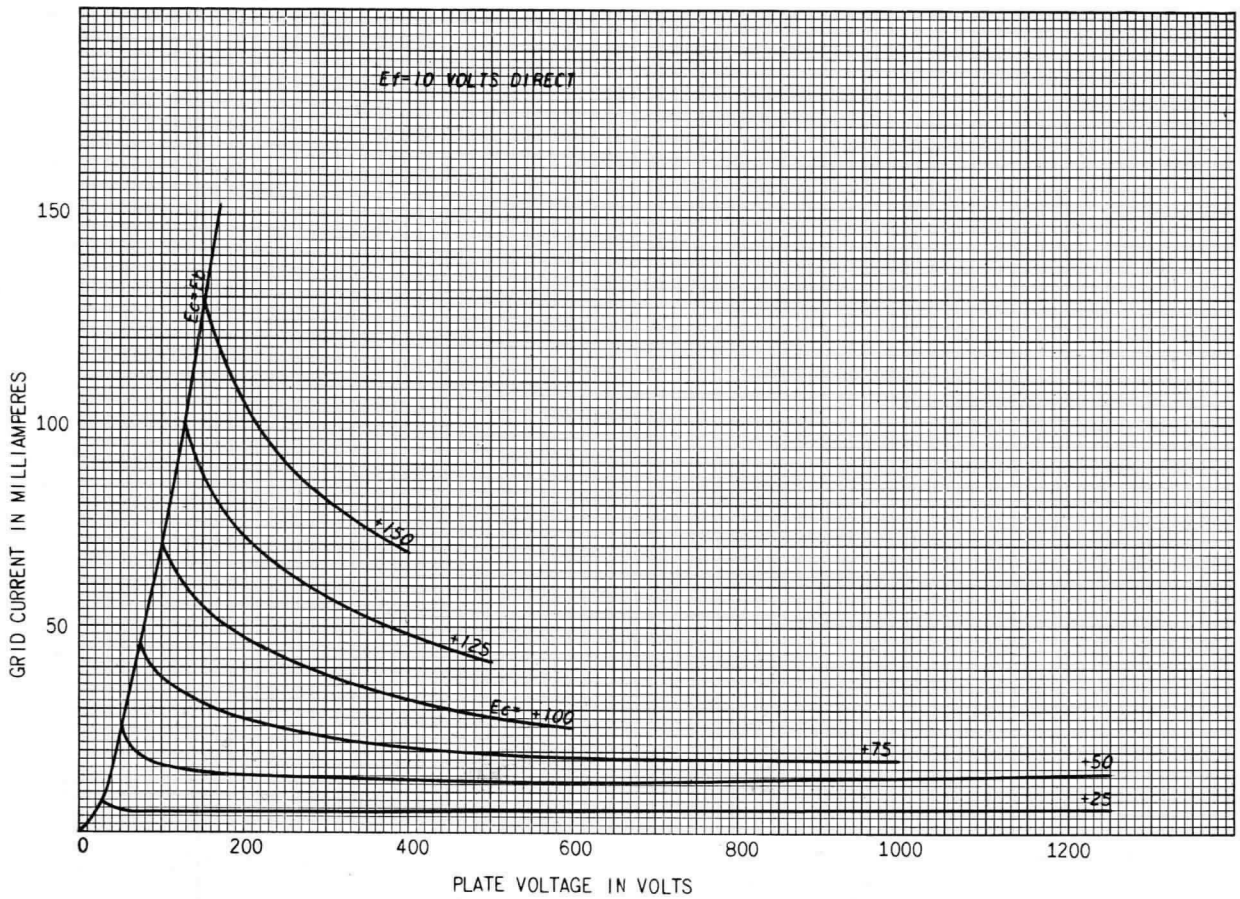

K-9186067

1-9-46

GL-152 AVERAGE PLATE CHARACTERISTICS

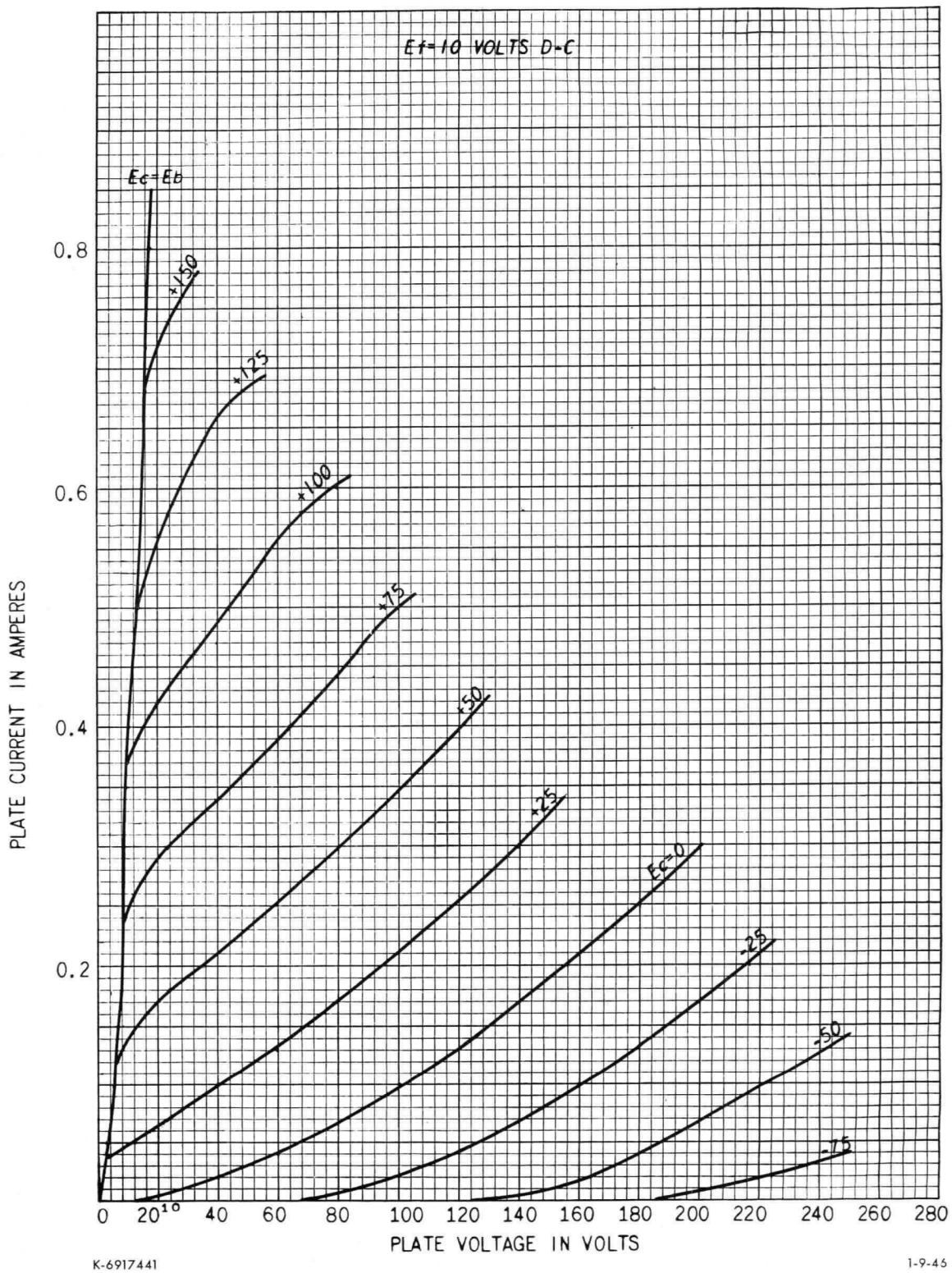

K-6917441

1-9-45

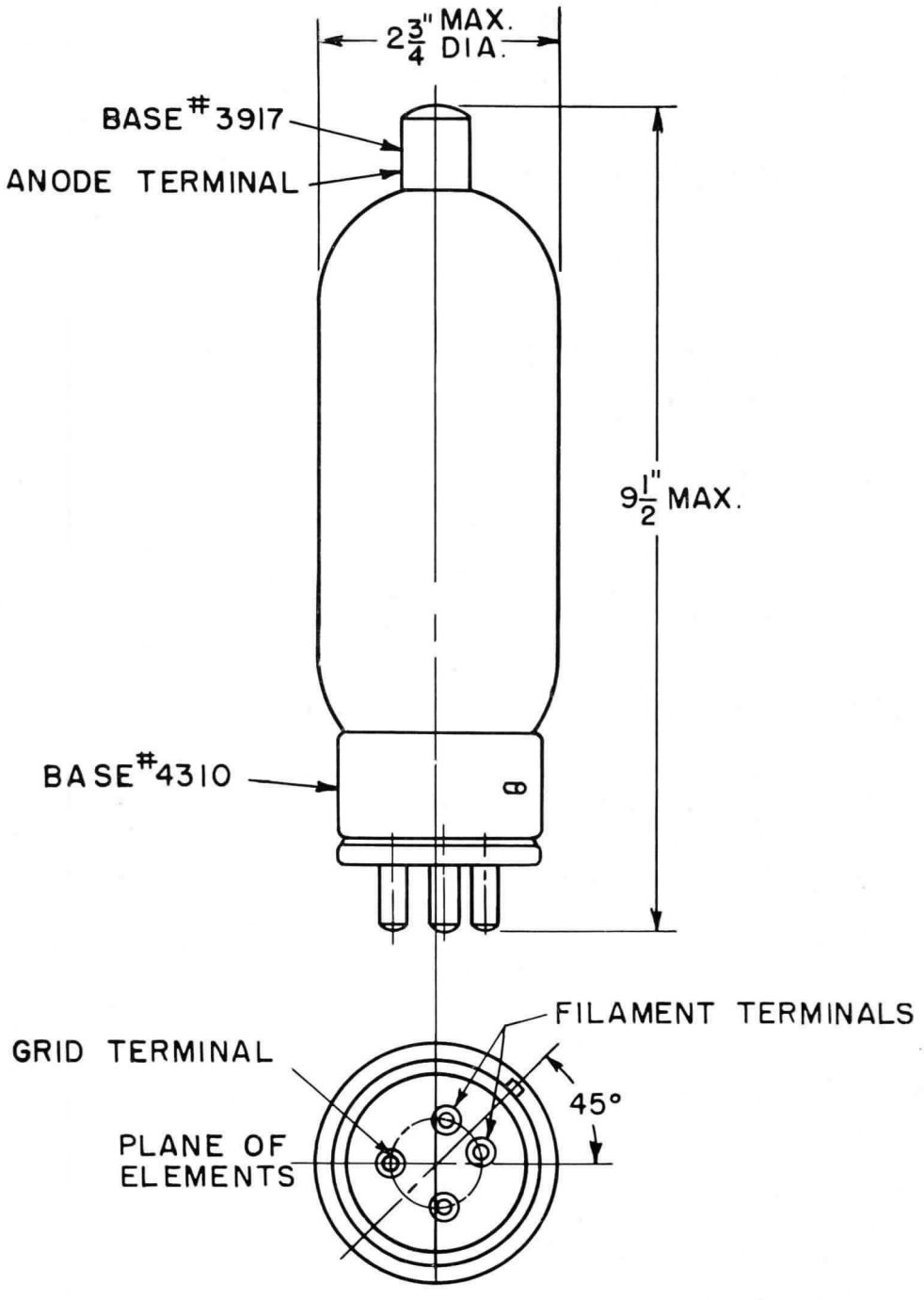

GL-152 OUTLINE

K-5182000

6-9-44

Electronics Department
GENERAL ELECTRIC
Schenectady, N. Y.

5-46 (7M)
Filing No. 8850

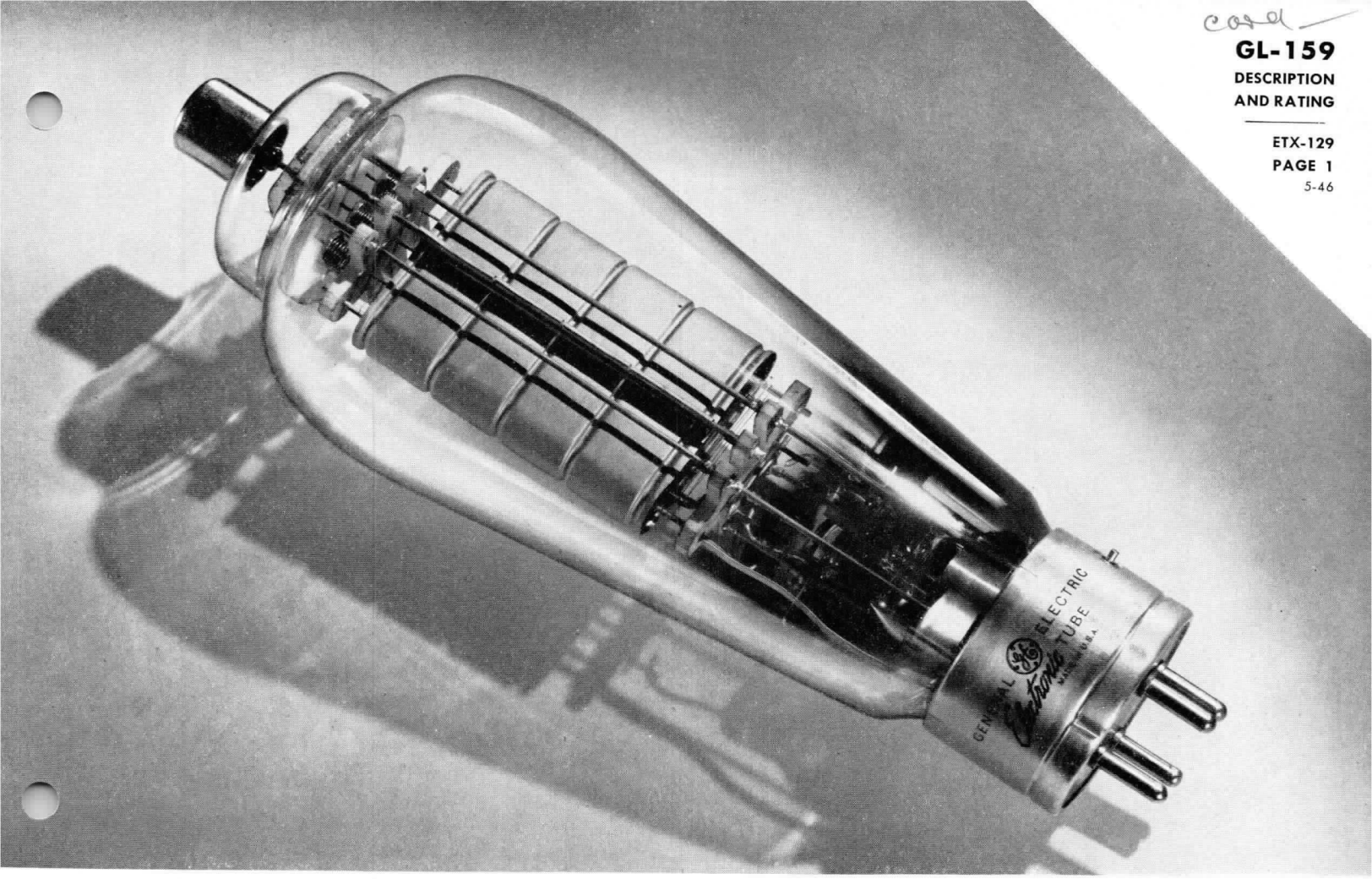

TRIODE

DESCRIPTION

The GL-159 is a three-electrode transmitting tube designed for use as a Class B and C radio-frequency power amplifier, Class C oscillator or as a Class B modulator. This tube can be operated at maximum ratings at frequencies as high as 15 megacycles and at frequencies up to 35 megacycles at reduced ratings.

TECHNICAL INFORMATION

These data are for reference only. For design information refer to specifications.

GENERAL CHARACTERISTICS

Number of electrodes	3	
Electrical		
Cathode—Filamentary		
Filament voltage	10	volts
Filament current	9.6	amperes
Average characteristics, $E_b = 2000$, $I_b = 100$ ma, $E_f = 10$ v a-c		
Grid voltage	−80	volts
Amplification factor	20	
Grid-plate transconductance	6500	micromhos
Direct interelectrode capacitances		
Grid-plate	17.6	micromicrofarads
Input	11	micromicrofarads
Output	5	micromicrofarads
Frequency for maximum ratings	15	megacycles

GE Electronic TUBE

GENERAL ELECTRIC

TECHNICAL INFORMATION (CONT'D)

Mechanical

Type of cooling	Convection
Maximum ambient temperature	60 centigrade
Net weight, approx	1 pound
Shipping weight, approx	3 pounds
Mounting position	vertical, base up or down—horizontal, filament in vertical plane

MAXIMUM RATINGS AND TYPICAL OPERATING CONDITIONS

CLASS B AUDIO-FREQUENCY POWER AMPLIFIER (TWO TUBES)

	Typical Operation		Maximum Ratings	
D-c plate voltage	1500	2000	2000	volts
Max signal d-c plate current, per tube			400	amperes
D-c max signal plate input, per tube†			750	watts
Plate dissipation, per tube†			250	
D-c grid voltage	−73	−100		volts
Peak a-f grid input voltage	370	400		volts
Zero signal plate current	0.030	0.030		ampere
Max signal plate current	0.720	0.660		ampere
Max driving power, approx	5	4		watts
Effective load, plate-to-plate	4400	6880		ohms
Max signal plate power output, approx	720	900		watts

CLASS B RADIO-FREQUENCY POWER AMPLIFIER

Carrier conditions per tube for use with a maximum modulation factor of 1.0

D-c plate voltage	1500	2000	2000	volts
D-c grid voltage	−65	−90		volts
D-c plate current	0.240	0.190	0.300	ampere
Plate input			400	watts
Plate dissipation			250	watts
Peak r-f grid input voltage	200	200		volts
Driving power output, § approx	3.5	2.5		watts
Plate power output, approx	120	130		watts

CLASS C RADIO-FREQUENCY POWER AMPLIFIER AND OSCILLATOR—PLATE-MODULATED

Carrier conditions per tube for use with a maximum modulation factor of 1.0

D-c plate voltage	1250	1500	1500	1500	volts
D-c grid voltage	−200	−240	−240	−400	volts
D-c plate current	0.360	0.360	0.400	0.400	ampere
Plate input				600	watts
Plate dissipation				150	watts
Peak r-f grid input voltage	350	390	400		volts
Driving power	7	7	9		watts
Plate power output	330	400	450		watts

CLASS C RADIO-FREQUENCY POWER AMPLIFIER AND OSCILLATOR

Key-down conditions per tube without modulation.‡

D-c plate voltage	1500	2000	2000	2000	volts
D-c grid voltage	−150	−200	−200	−400	volts
D-c plate current	0.360	0.360	0.400	0.400	ampere
D-c grid current, approx	0.014	0.014	0.017	0.100	ampere
Plate input				800	watts
Plate dissipation				250	watts
Peak r-f grid input voltage, approx	295	340	350		volts
Driving power, approx	4	5	6		watts
Plate power output, approx	400	560	620		watts

‡Modulation, essentially negative, may be used if the positive peak of the audio-frequency envelope does not exceed 115 per cent of the carrier conditions.

§At crest of audio-frequency cycle.

†Averaged over any audio-frequency cycle.

APPLICATION NOTES

The GL-159 can be operated at frequencies as high as 15 megacycles. The tube may be operated at higher frequencies provided the maximum values of plate voltage and power input are reduced as the frequency is raised (other maximum ratings are the same as shown above). The tabulation below shows the highest percentage of maximum plate voltage and power input that can be used up to 35 megacycles for the various classes of service. Special attention should be given to adequate ventilation of the bulb at these frequencies.

Frequency	15	25	35 megacycles
Percentage of maximum rated plate voltage and plate input			
Class B	100	85	74 per cent
Class C plate modulated	100	75	50 per cent
Class C unmodulated	100	75	50 per cent

GL-159 PLATE-GRID TRANSFER CHARACTERISTICS

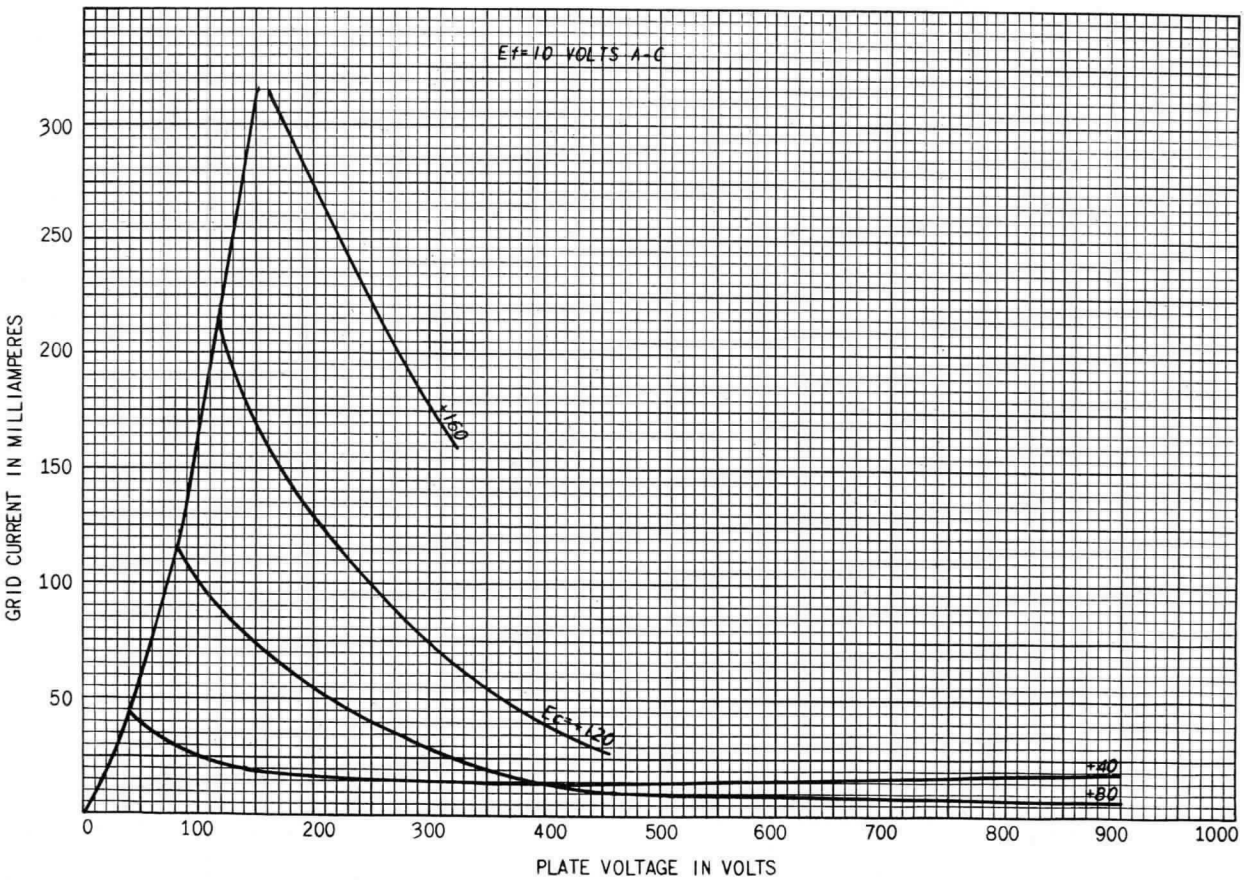

K-6917438

1-9-46

GL-159 AVERAGE PLATE CHARACTERISTICS

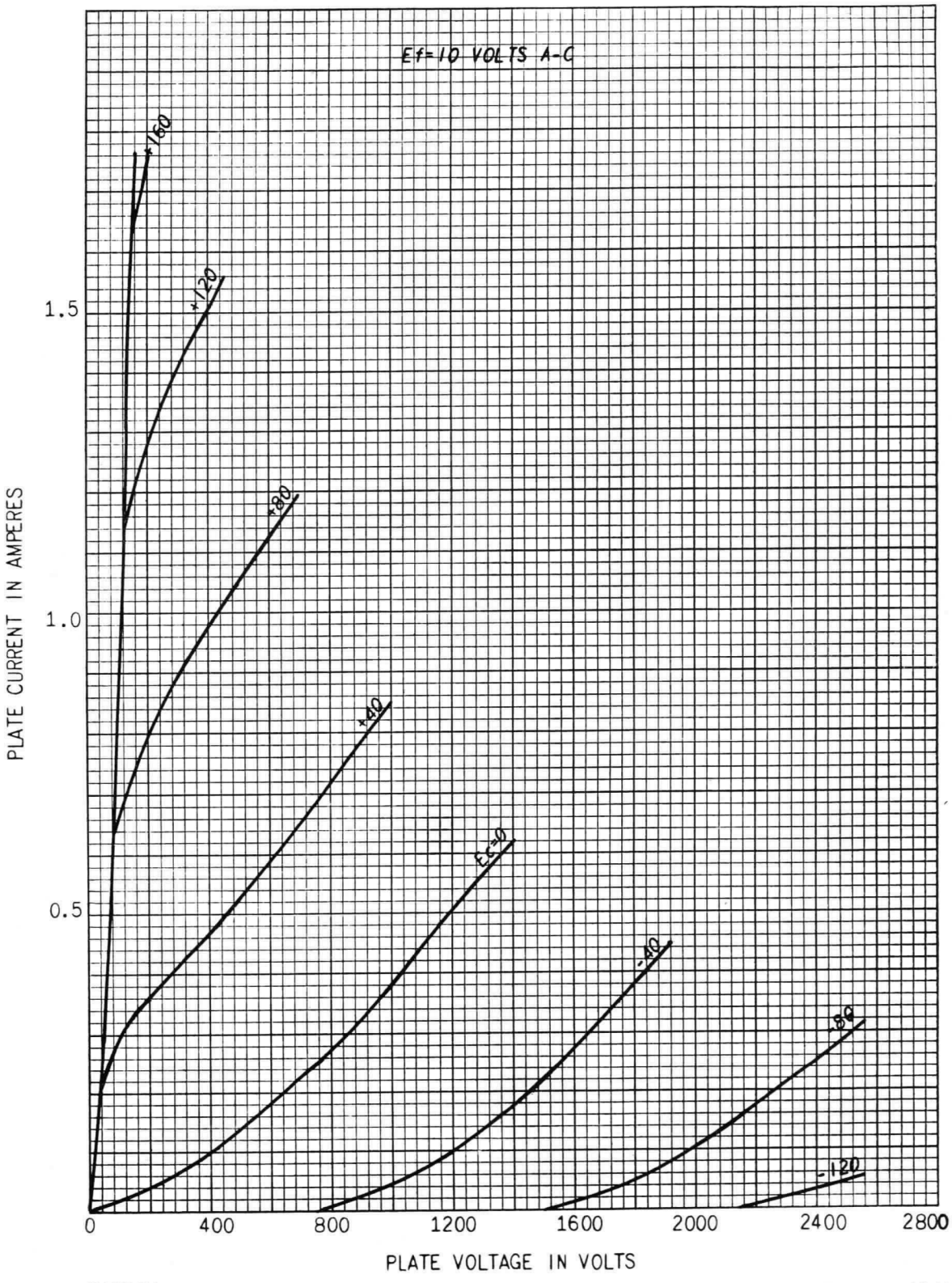

K-6917434

1-9-46

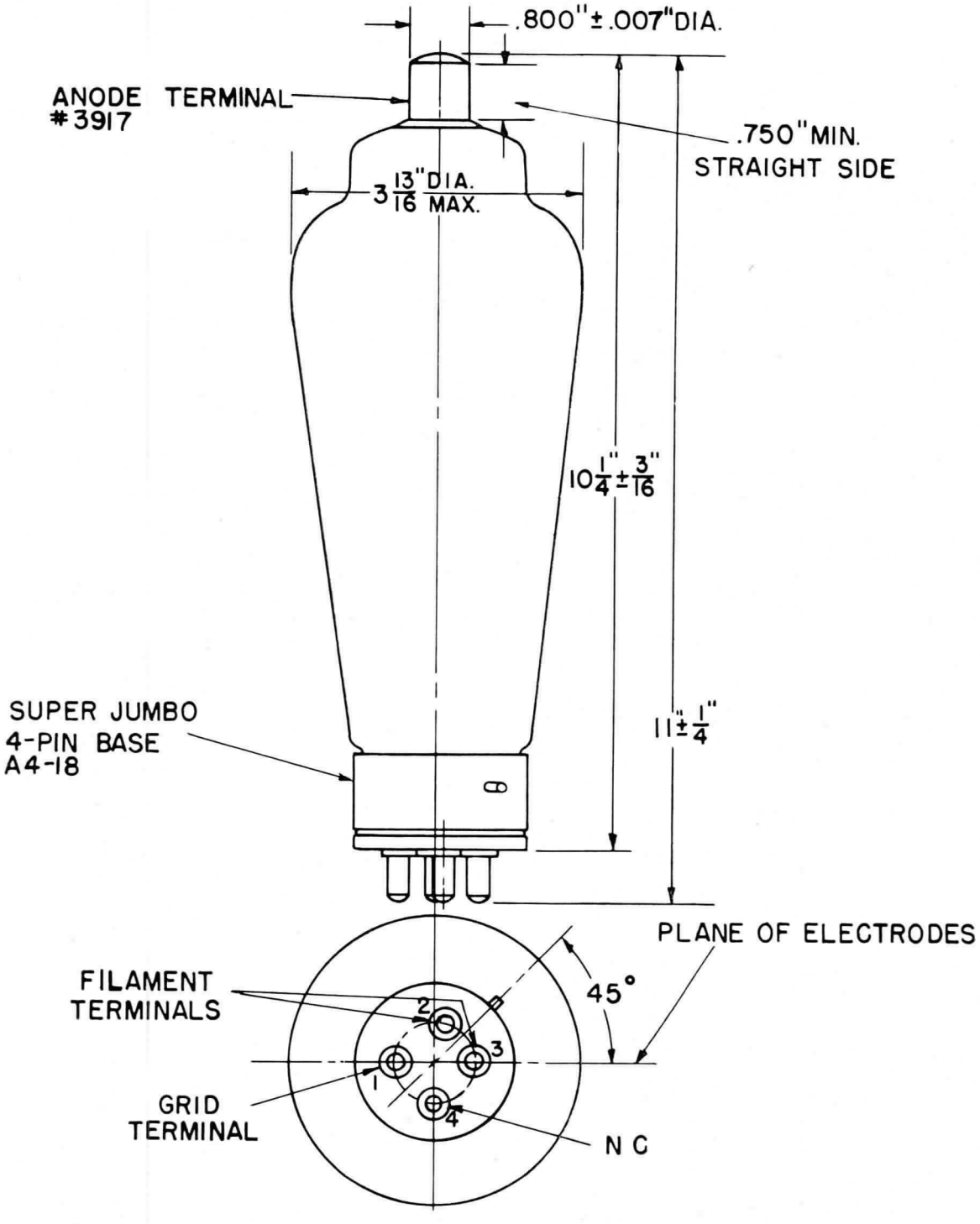

GL-159 OUTLINE

K-5302943

10-29-45

Electronics Department
GENERAL ELECTRIC
Schenectady, N. Y.

5-46 (7M)
Filing No. 8850

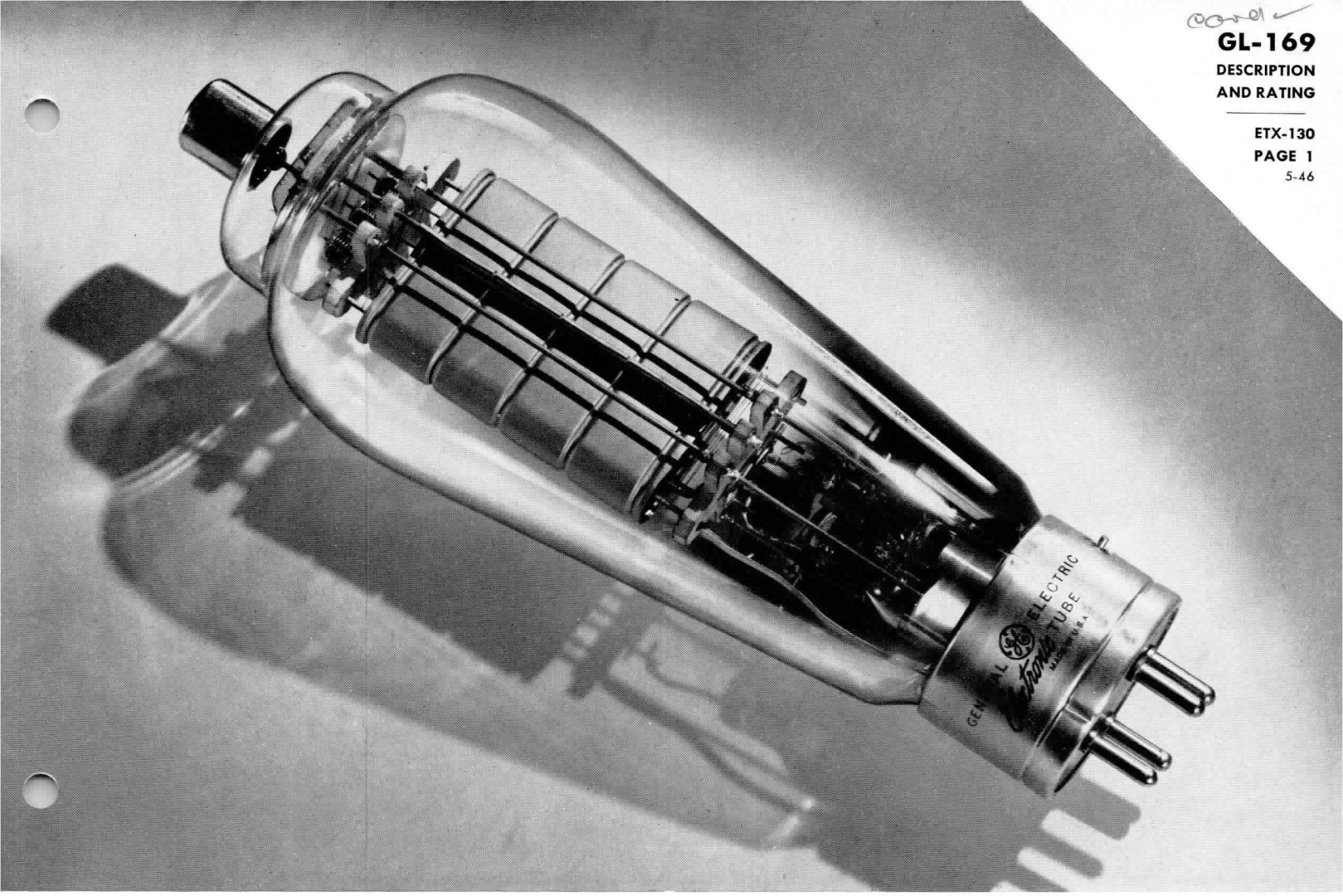

TRIODE

DESCRIPTION

The GL-169 is a three-electrode transmitting tube designed for use as a Class B and C radio-frequency power amplifier, Class C oscillator or as a Class B modulator. This tube can be operated at maximum ratings at frequencies as high as 15 megacycles and at frequencies up to 35 megacycles at reduced ratings.

TECHNICAL INFORMATION

These data are for reference only. For design information refer to specifications.

GENERAL CHARACTERISTICS

Number of electrodes	3	
Electrical		
Cathode—Filamentary		
Voltage	10	volts
Current	9.6	amperes
Average characteristics, $E_b = 2000$, $I_b = 100$ ma $E_f = 10$ a-c		
Grid voltage	−4	volts
Amplification factor	85	
Grid-plate transconductance, $I_b = 100$ ma	7500	micromhos
Direct interelectrode capacitances		
Grid-plate	19	micromicrofarads
Grid-filament	11.5	micromicrofarads
Plate-filament	4.7	micromicrofarads
Frequency for maximum ratings	15	megacycles

Electronic TUBE

GENERAL ELECTRIC

TECHNICAL INFORMATION (CONT'D)

Mechanical

Type of cooling	Convection
Maximum ambient temperature	60 centigrade
Net weight, approx	1 pound
Shipping weight, approx	3 pounds
Mounting position	vertical, base up or down—horizontal, filament in vertical plane

MAXIMUM RATINGS AND TYPICAL OPERATING CONDITIONS

CLASS B AUDIO-FREQUENCY POWER AMPLIFIER (TWO TUBES)

	Typical Operation		Maximum Ratings	
D-c plate voltage	1500	2000	2000	volts
Max signal plate current, per tube†			0.400	ampere
D-c max signal plate input, per tube†			750	watts
Plate dissipation, per tube†			250	watts
A-c grid voltage	−12	−18		volts
Peak a-f grid input voltage	220	220		volts
Zero signal plate current	0.030	0.030		ampere
Max signal plate current	0.720	0.660		ampere
Max signal driving power, approx	8	6		watts
Effective load, plate-to-plate	4600	7000		ohms
Max signal plate power output, approx	720	900		watts

CLASS B RADIO-FREQUENCY POWER AMPLIFIER

Carrier conditions per tube for use with a maximum modulation factor of 1.0

D-c plate voltage	1500	2000	2000	volts
A-c grid voltage	−5	−10		volts
D-c plate current	0.240	0.190	0.300	ampere
Plate input			400	watts
Plate dissipation			250	watts
Peak r-f grid input voltage	110	110		volts
Driving power, §approx	5	3.5		watts
Plate power output, approx	120	130		watts

CLASS C RADIO-FREQUENCY POWER AMPLIFIER AND OSCILLATOR, PLATE-MODULATED

Carrier conditions per tube for use with a maximum modulation factor of 1.0

D-c plate voltage	1250	1500	1500	1500	volts
D-c grid voltage	−80	−100	−100	−400	volts
D-c plate current	0.360	0.360	0.400	0.400	ampere
D-c grid current, approx	0.045	0.040	0.045	0.100	ampere
Plate input				600	watts
Plate dissipation				150	watts
Peak r-f grid input voltage	210	230	240		volts
Driving power	9	8.5	10		watts
Plate power output	330	400	450		watts

CLASS C RADIO-FREQUENCY POWER AMPLIFIER AND OSCILLATOR

Key-down conditions per tube without modulation‡

D-c plate voltage	1500	2000	2000	2000	volts
D-c grid voltage	−50	−100	−100	−400	volts
D-c plate current	0.360	0.360	0.400	0.400	ampere
D-c grid current, approx	0.038	0.037	0.042	0.100	ampere
Plate input				800	watts
Plate dissipation				250	watts
Peak r-f grid input voltage, approx	170	230	240		volts
Driving power, approx	6	8	10		watts
Plate power output, approx	400	560	620		watts

†Averaged over any audio-frequency cycle.

§At crest of audio-frequency cycle.

‡Modulation, essentially negative, may be used if the positive peak of the audio-frequency envelope does not exceed 115 per cent of the carrier conditions.

APPLICATION NOTES

The GL-169 can be operated at frequencies as high as 15 megacycles. The tube may be operated at higher frequencies provided the maximum values of plate voltage and power input are reduced as the frequency is raised (other maximum ratings are the same as shown above). The tabulation below shows the highest percentage of maximum plate voltage and power input that can be used up to 35 megacycles for the various classes of service. Special attention should be given to adequate ventilation of the bulb at these frequencies.

Frequency	15	25	35 megacycles
Percentage of maximum rated plate voltage and plate input			
Class B	100	85	74 per cent
Class C plate modulated	100	75	50 per cent
Class C unmodulated	100	75	50 per cent

GL-169 AVERAGE PLATE CHARACTERISTICS

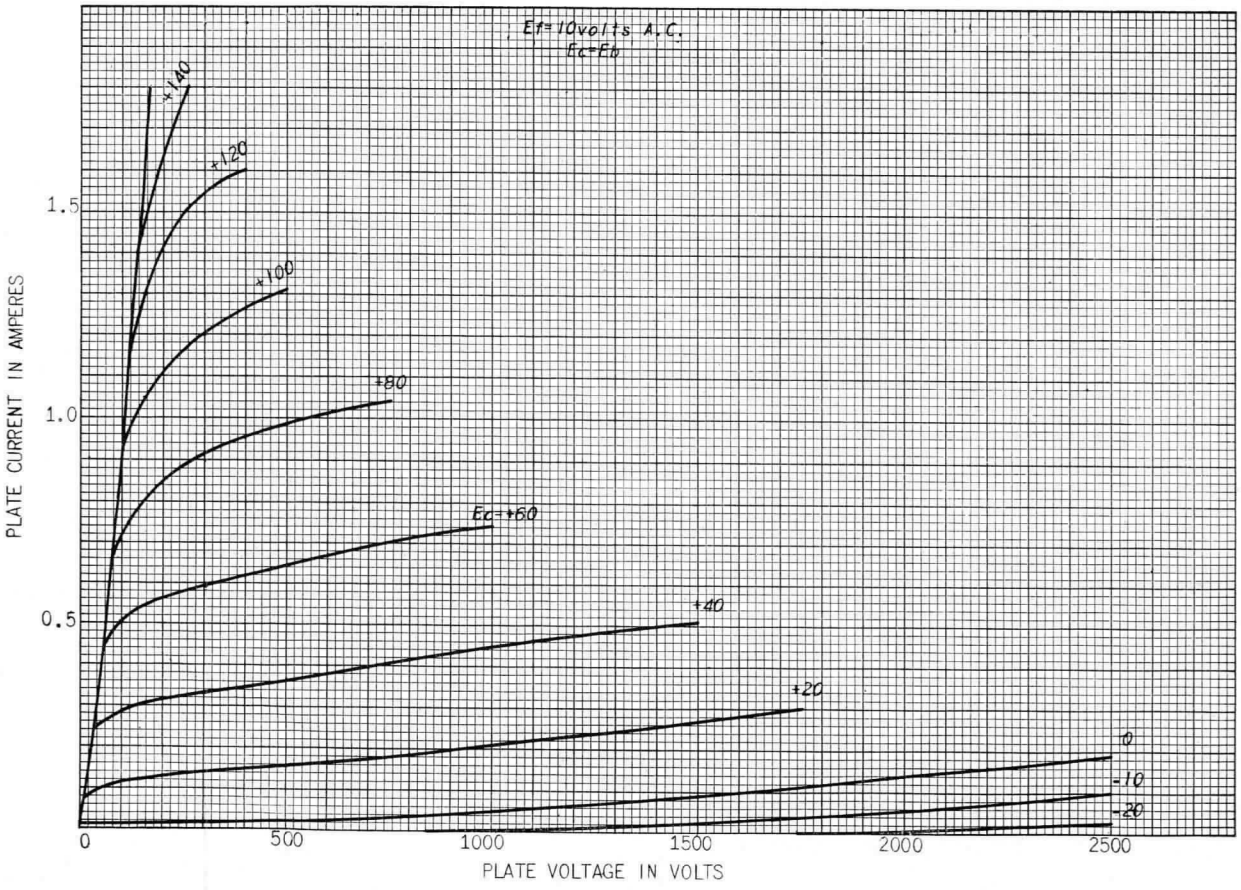

K-6917439

1-9-46

GL-169 AVERAGE PLATE-GRID CHARACTERISTICS

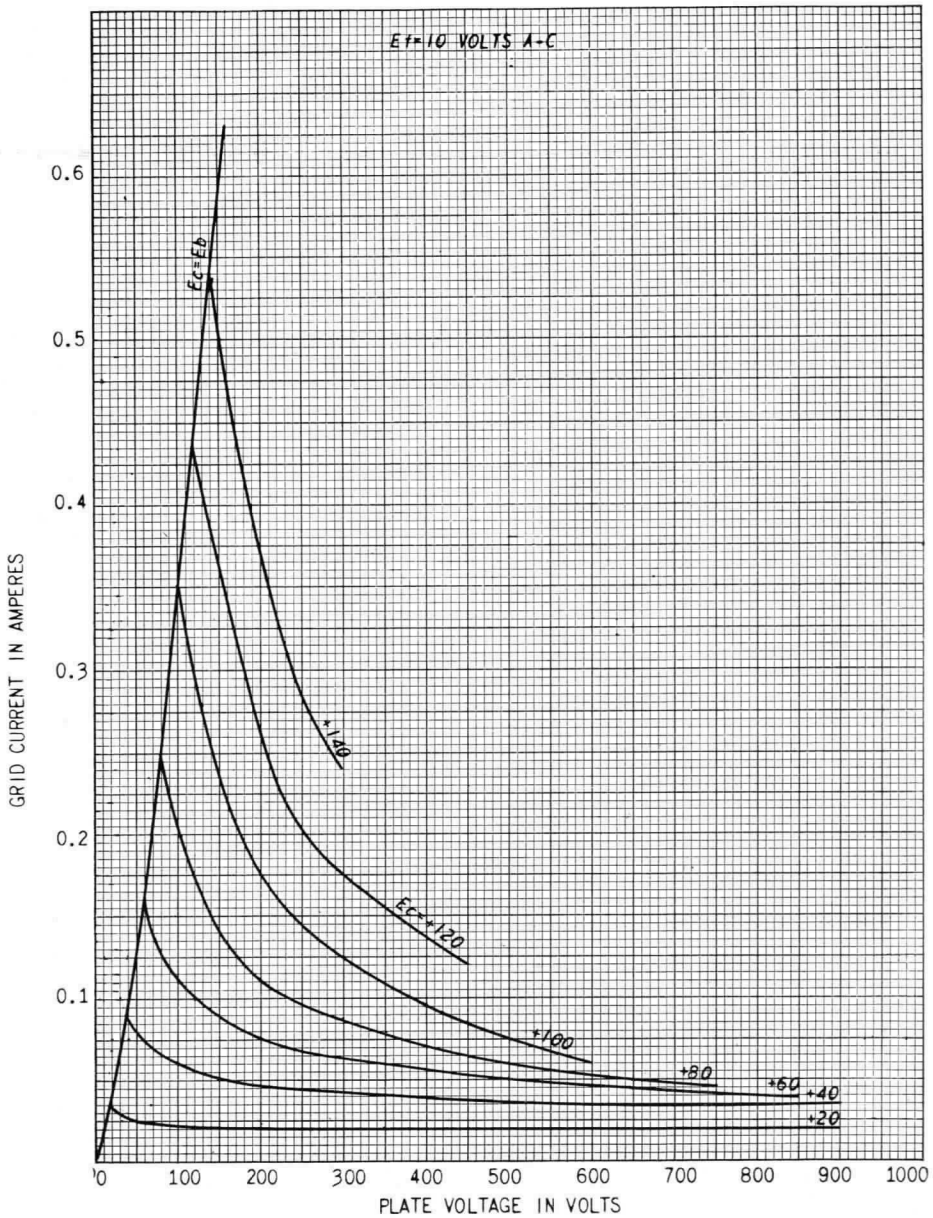

K-6917442

1-9-46

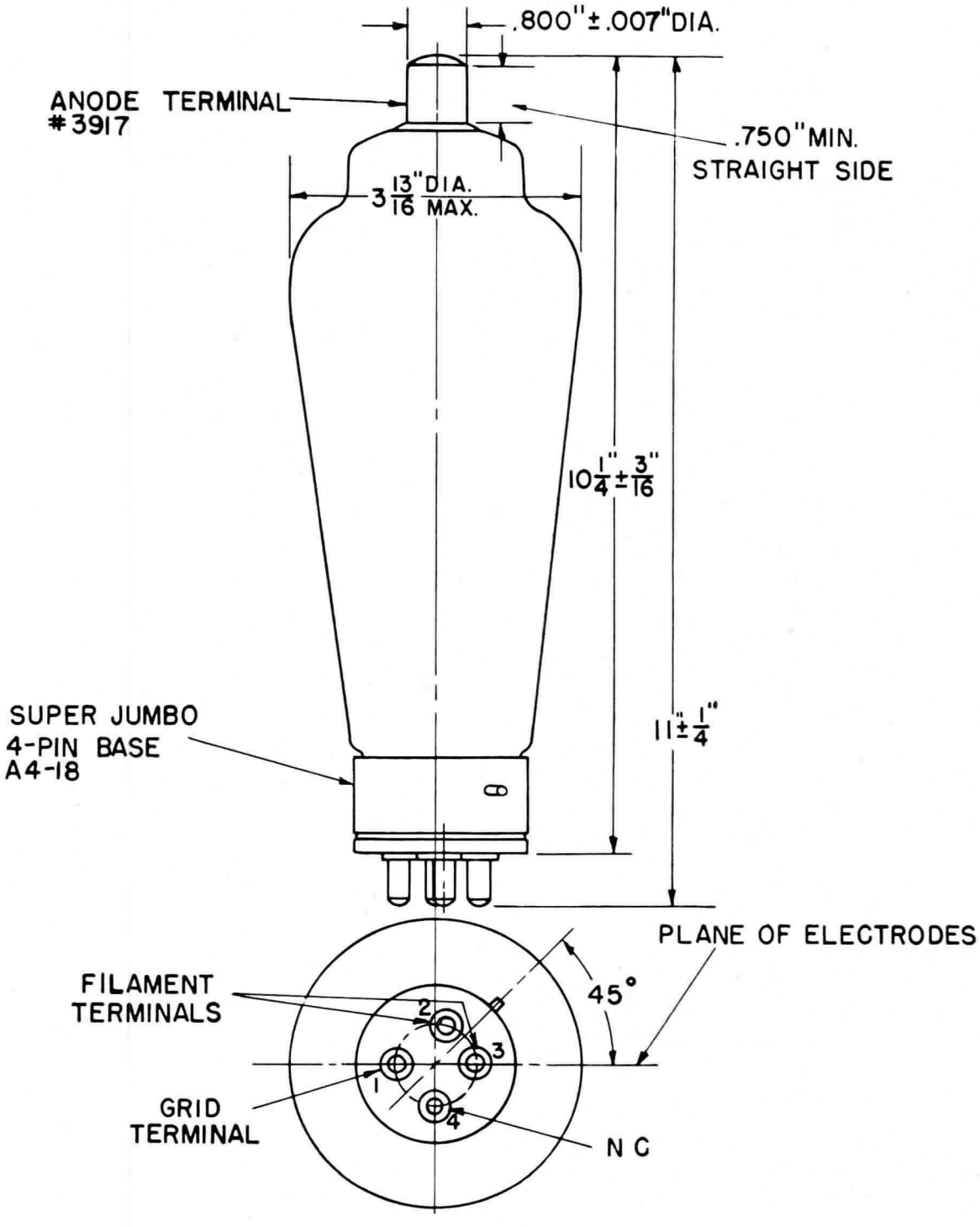

GL-169 OUTLINE

K-5302943 10-29-45

Electronics Department
GENERAL ELECTRIC
Schenectady, N. Y.

5-46 (7M)
Filing No. 8850

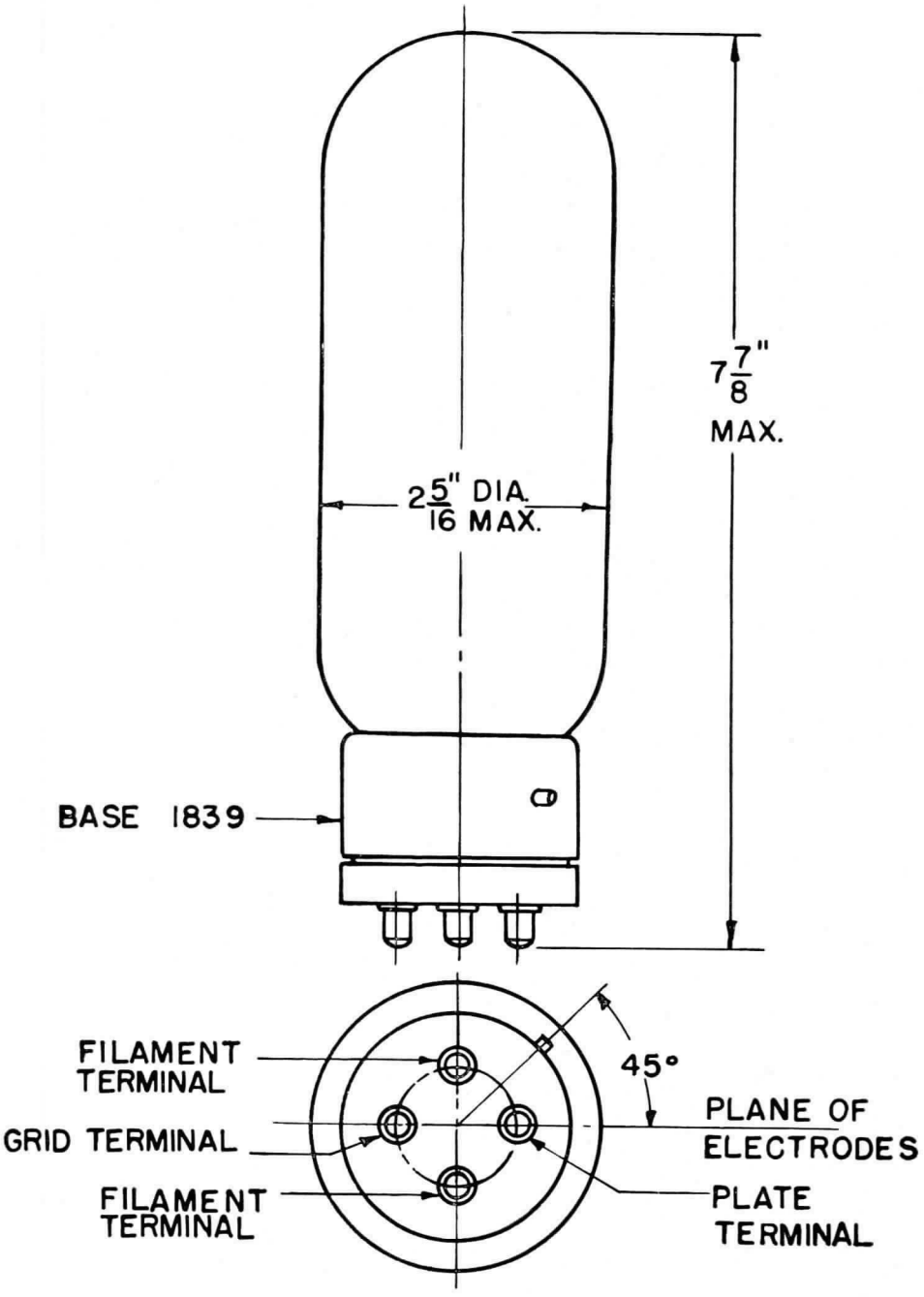

GL-203-A OUTLINE

K-4909036

8-18-45

Electronics Department
GENERAL ELECTRIC
Schenectady, N. Y.

5-46 (7M)
Filing No. 8850

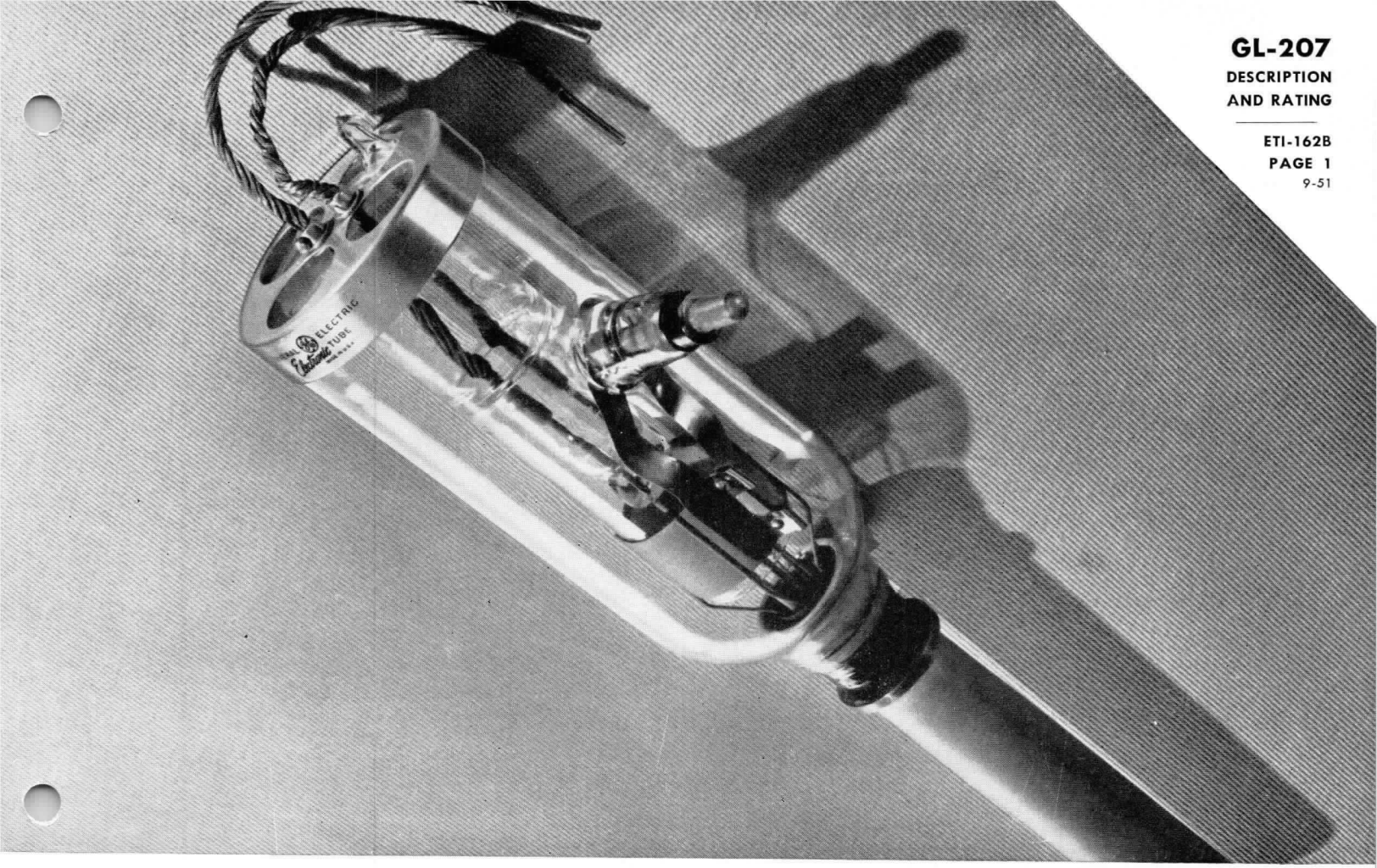

PLIOTRON

DESCRIPTION

The GL-207 is a three-electrode vacuum tube designed for use as a radio-frequency power amplifier, oscillator, or Class B modulator. The plate is water-cooled and capable of dissipating 6.6 to 10 kilowatts, depending on the service in which the tube is used. The cathode is a pure-tungsten filament. Maximum ratings apply up to 1.6 megacycles.

♦TECHNICAL INFORMATION

These data are for reference only. For design information refer to specifications.

GENERAL CHARACTERISTICS

Electrical Data

Filament voltage (A-c or D-c)	22	volts
Filament current	52	amperes
Filament starting current, maximum	100	amperes
Filament cold resistance	0.03	ohm
Amplification factor	20	
Direct interelectrode capacitances, approximate		
Grid-plate	27	uuf
Grid-filament	18	uuf
Plate-filament	2.0	uuf

♦Revised.

Electronic TUBE

GENERAL ELECTRIC

Supersedes ETI-162A dated 8-48

TECHNICAL INFORMATION (CONT'D)

Mechanical Data

Mounting position—vertical, filament end up
Type of cooling—water
Water flow on anode . . . . . 3–8 gallons per minute
Maximum outgoing water temperature . . . . . 70 C
Maximum glass temperature* . . . . . 150 C
Net weight, approximate . . . . . 3 pounds
Shipping weight, approximate . . . . . 10 pounds

* In installations where circulation of free air is restricted, or at the higher frequencies, forced-air cooling may be necessary to prevent this limit from being exceeded.

MAXIMUM RATINGS AND TYPICAL OPERATING CONDITIONS

AUDIO-FREQUENCY POWER AMPLIFIER AND MODULATOR—CLASS B

Maximum Ratings, Absolute Values

D-c plate voltage	15000	max volts
Maximum signal d-c plate current**	2	max amperes
Maximum signal plate input**	20	max kilowatts
Plate dissipation**	7.5	max kilowatts

Typical Operation

Unless otherwise specified, values are for two tubes

D-c plate voltage	6000	10000	12500	volts
D-c grid voltageχ	—210	—410	—575	volts
Peak a-f grid-to-grid voltage	1520	2140	2300	volts
Zero signal d-c plate current	0.5	0.5	0.4	ampere
Maximum signal d-c plate current	2.5	3.2	2.8	amperes
Effective load resistance, plate to plate	4200	6400	10000	ohms
Maximum signal driving power, approximate	190	380	400	watts
Maximum signal power output, approximate	8	20	22.5	kilowatts

**Averaged over any audio-frequency cycle of sine-wave form.
χFor d-c filament supply.

RADIO-FREQUENCY POWER AMPLIFIER—CLASS B TELEPHONY

Carrier conditions per tube for use with a maximum modulation factor of 1.0

Maximum Ratings, Absolute Values

D-c plate voltage	15000	max volts
D-c plate current	1	max ampere
Plate input	15	max kilowatts
Plate dissipation	10	max kilowatts

Typical Operation

D-c plate voltage	6000	10000	14000	volts
D-c grid voltageχ	—225	—440	—650	volts
Peak r-f grid voltage	400	600	730	volts
D-c plate current	0.62	0.93	1.0	ampere
Driving power, approximate***	72	16	0	watts
Power output, approximate	1	2.5	4	kilowatts

***At crest of audio-frequency cycle with modulation factor of 1.0.
χFor d-c filament supply.

PLATE-MODULATED RADIO-FREQUENCY POWER AMPLIFIER—CLASS C TELEPHONY

Carrier conditions per tube for use with a maximum modulation factor of 1.0

Maximum Ratings, Absolute Values

D-c plate voltage	10000	max volts
D-c grid voltage	—3000	max volts
D-c plate current	1	max ampere
D-c grid current	0.2	max ampere
Plate input	10	max kilowatts
Plate dissipation	6.6	max kilowatts

Typical Operation

D-c plate voltage	6000	8000	10000	volts
D-c grid voltage#	—1200	—1600	—2000	volts
Peak r-f grid voltage	1860	2300	2660	volts
D-c plate current	0.76	0.78	0.75	ampere
D-c grid current, approximate	0.15	0.14	0.07	ampere
Driving power, approximate	280	325	185	watts
Power output, approximate	3.5	5	6	kilowatts

#For a-c filament supply.

TECHNICAL INFORMATION (CONT'D)

RADIO-FREQUENCY POWER AMPLIFIER AND OSCILLATOR—CLASS C TELEGRAPHY

Key-down conditions per tube without modulation ¶

Maximum Ratings, Absolute Values

D-c plate voltage	15000 max volts
D-c grid voltage	—3000 max volts
D-c plate current	2 max amperes
D-c grid current	0.2 max ampere
Plate input	30 max kilowatts
Plate dissipation	10 max kilowatts

Typical Operation

D-c plate voltage	8000	10000	12000	volts
D-c grid voltage‡	—1000	—1200	—1600	volts
Peak r-f grid voltage	1730	2050	2650	volts
D-c plate current	1.10	1.33	1.67	amperes
D-c grid current, approximate	0.17	0.12	0.09	ampere
Driving power, approximate	295	245	235	watts
Power output, approximate	6.5	10	15	kilowatts

¶ Modulation essentially negative may be used if the positive peak of the envelope does not exceed 115 per cent of the carrier conditions.

‡ Obtained from fixed supply, by grid resistor, or by cathode resistor. For a-c filament supply.

APPLICATION NOTES

Maximum ratings apply up to 1.6 megacycles. The tube may be operated at higher frequencies provided the maximum values of plate voltage and power input are reduced according to the tabulation below (other maximum ratings are the same as shown above). Special attention should be given to adequate ventilation of the bulb at these frequencies.

Frequency	1.6	7.5	20 megacycles
Percentage of maximum rated plate voltage and plate input			
Class B	100	85	76 per cent
Class C plate modulated	100	85	75 per cent
Class C unmodulated	100	75	50 per cent

Plate series protective resistors						
Series resistor	25	50	200	250	275	300 ohms
Maximum power output of rectifier	16	40	100	250	640	1600 kilowatts

GL-207 FILAMENT EMISSION CHARACTERISTICS

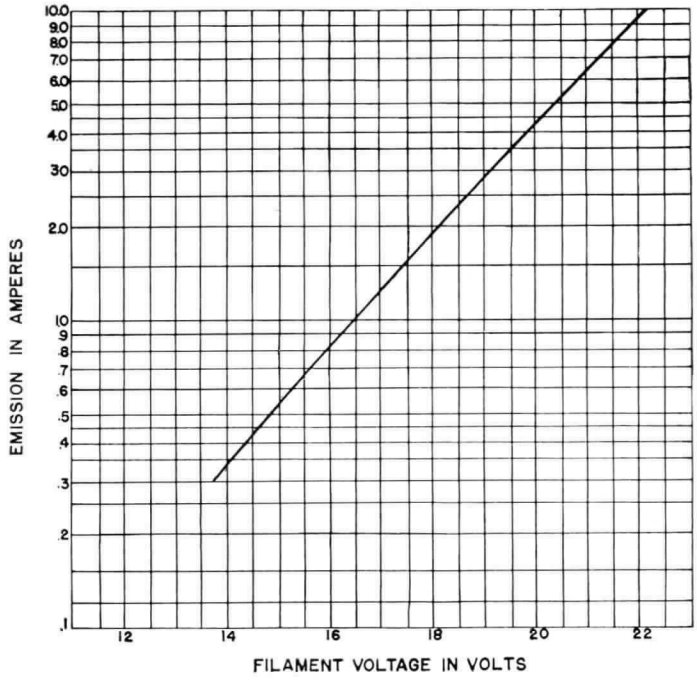

K-9033926

8-21-45

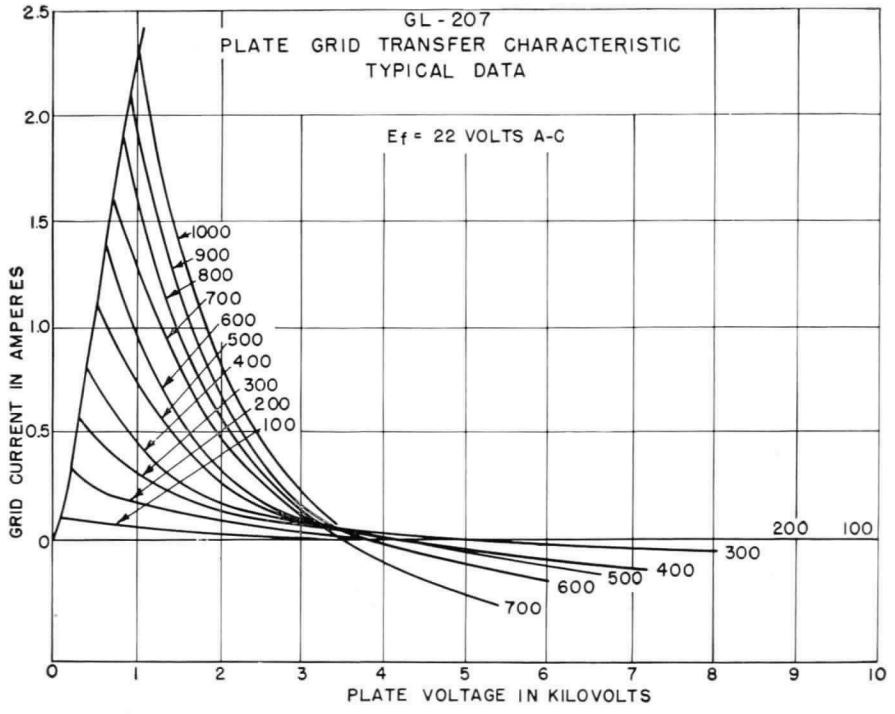

GL-207
CHARACTERISTICS
$E_f = 22$ VOLTS A-C

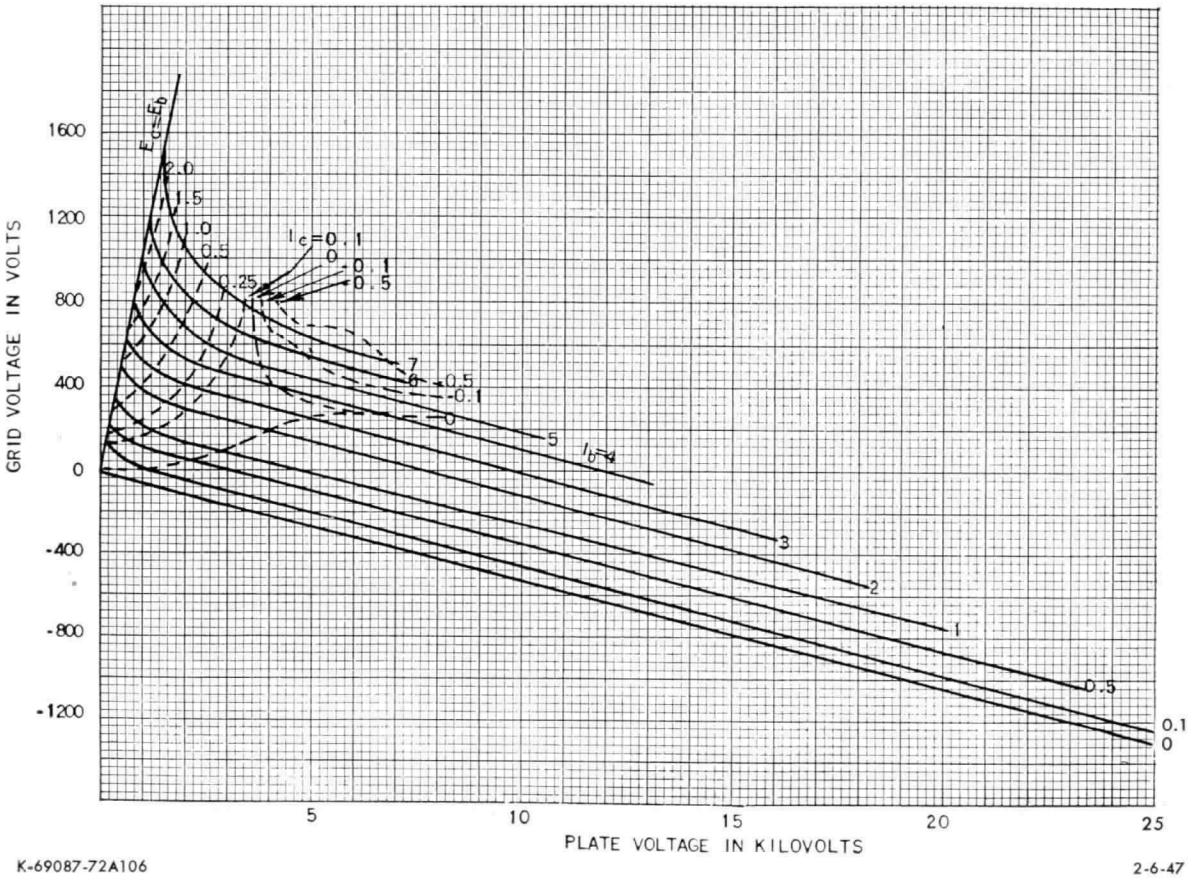

GL-207 FILAMENT CHARACTERISTIC

(COLD RESISTANCE OF FILAMENT = 0.03 OHMS)

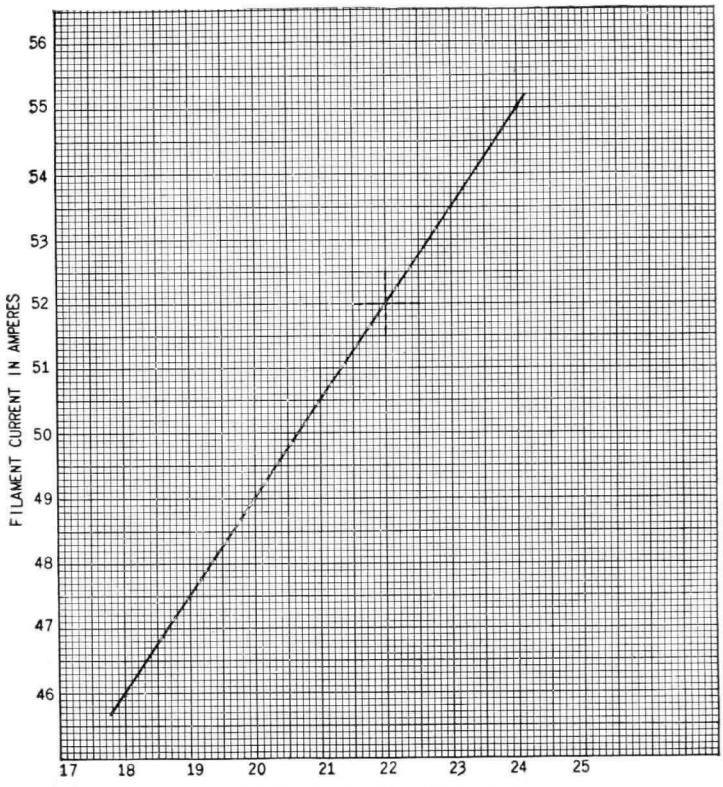

K-8074651 12-10-45

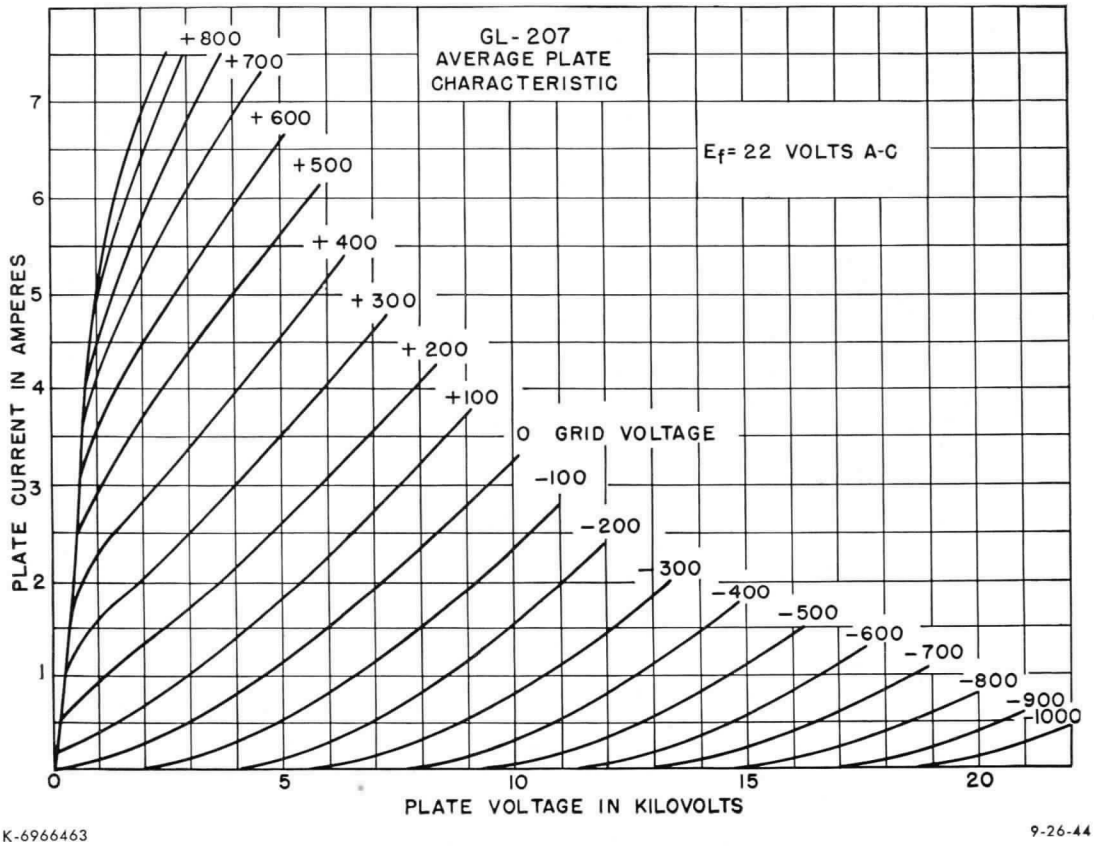

K-6966463 9-26-44

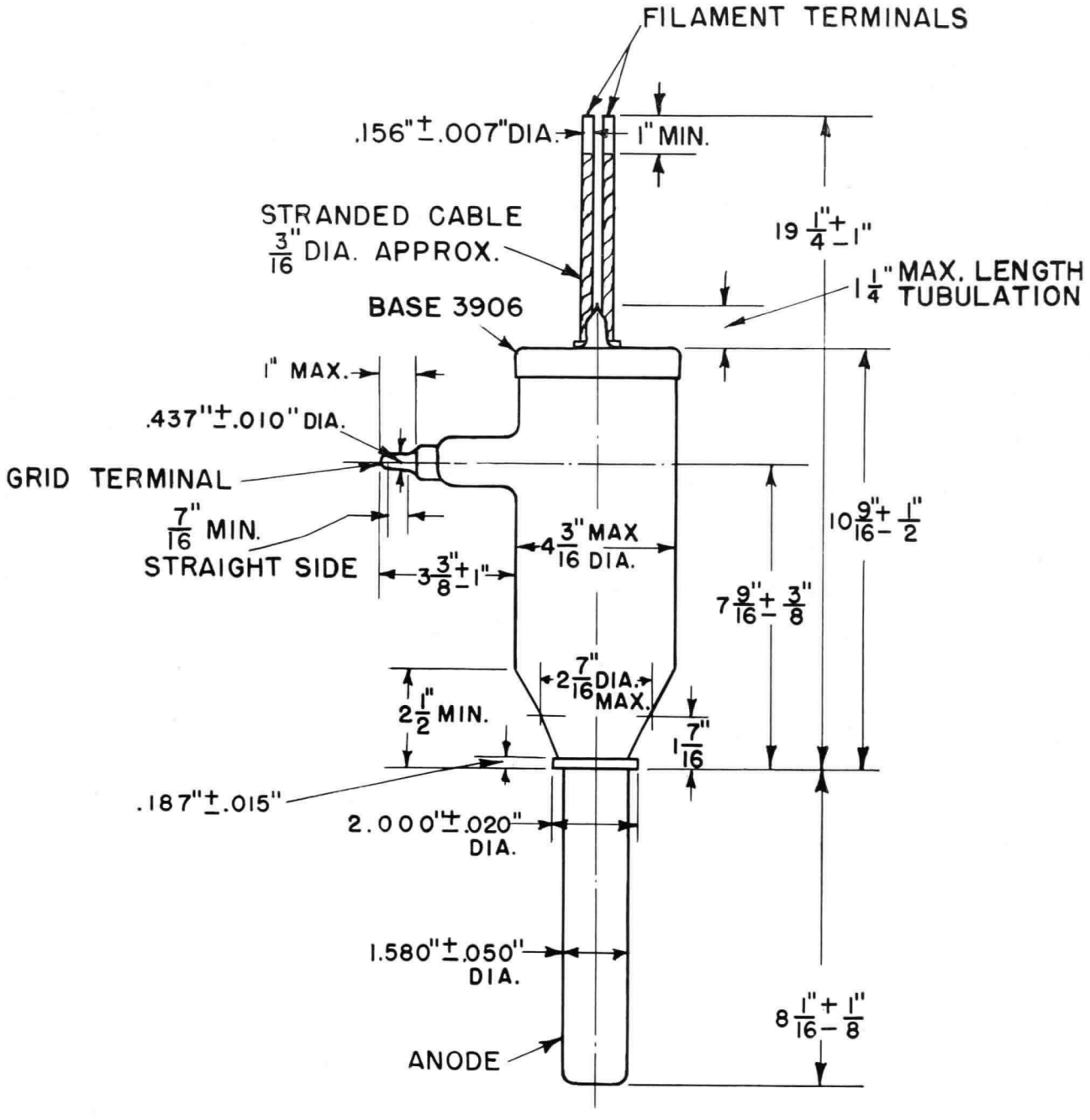

OUTLINE
GL-207 PLIOTRON

K-5182095

7-27-45

Tube Department, Electronics Division

GENERAL ELECTRIC

Schenectady, N. Y.

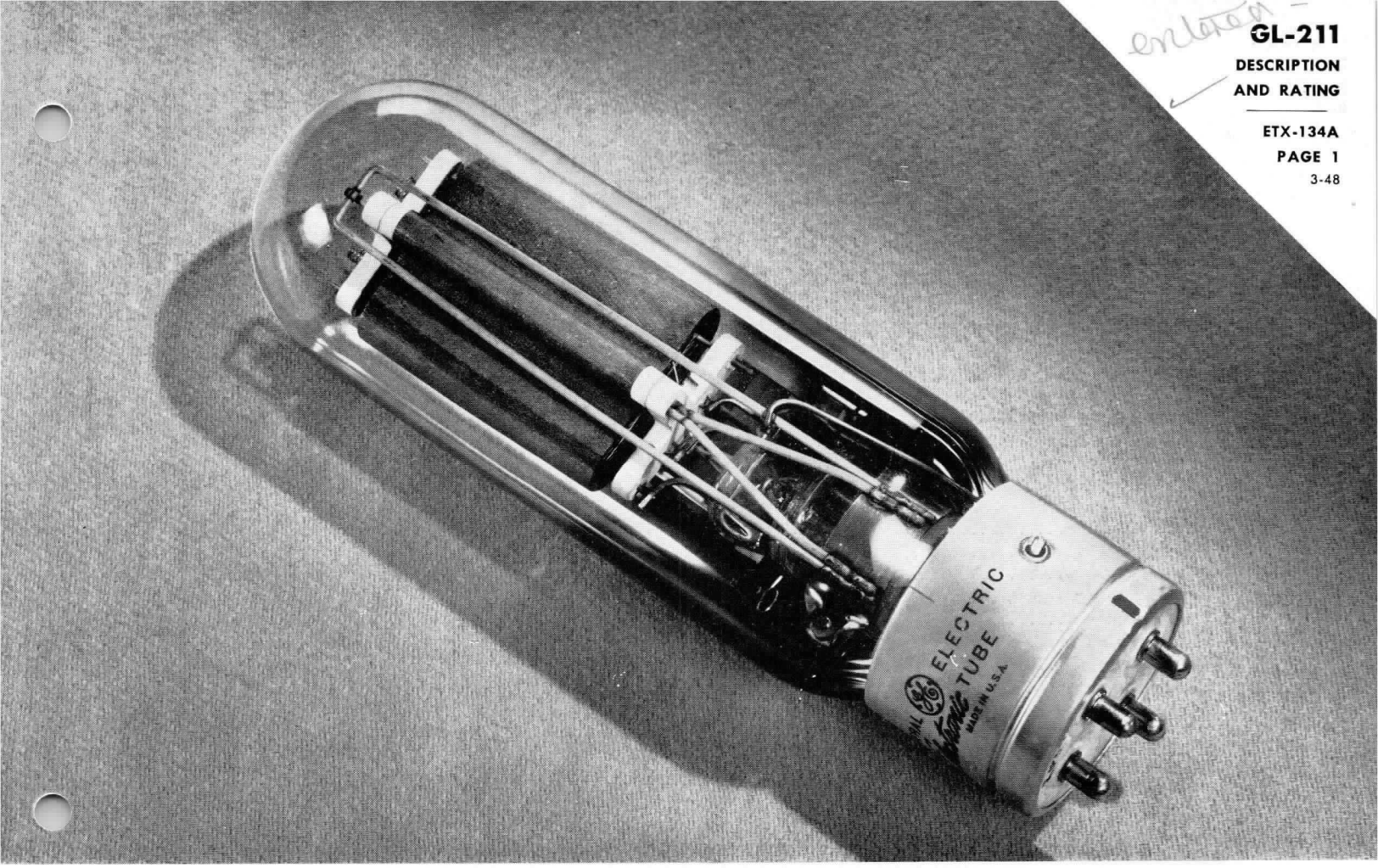

TRIODE

DESCRIPTION

The GL-211 is a general-purpose three-electrode transmitting tube designed for use as a Class A, B or C radio-frequency power amplifier. This tube can be operated at maximum ratings at frequencies as high as 15 megacycles and at frequencies up to 80 megacycles at reduced ratings.

TECHNICAL INFORMATION

These data are for reference only. For design information refer to specification.

GENERAL CHARACTERISTICS

Number of electrodes	3	
Electrical		
Cathode—Filamentary		
Filament voltage	10	volts
Filament current	3.25	amperes
Amplification factor	12	
Grid-plate transconductance, $I_b = 60$ ma	3600	micromhos
Direct interelectrode capacitances		
Grid-plate	14.0	micromicrofarads
Input	5.4	micromicrofarads
Output	4.8	micromicrofarads
Frequency for maximum ratings	15	megacycles

GE Electronic TUBE

GENERAL ELECTRIC

Supersedes ETX-134 dated 5-46

TECHNICAL INFORMATION (CONT'D)

Mechanical

Base description	jumbo 4—large pin
Net weight, approx	8 ounces
Shipping weight, approx	4 pounds
Mounting position	vertical, base up or down—horizontal, plate in vertical plane

MAXIMUM RATINGS AND TYPICAL OPERATING CONDITIONS

Class A Audio-frequency Amplifier and Modulator

Maximum Ratings, Absolute Values

D-c plate voltage	1250 volts
Plate dissipation	75 watts

Typical Operation

Filament voltage	10		volts
D-c plate voltage	750	1000	1250 volts
D-c grid voltage	−46	−61	−80 volts
Peak grid swing, approx	41	56	75 volts
D-c plate current	34	53	60 milliamperes
Plate resistance	4400	3800	3600 ohms
Load resistance	8800	7600	9200 ohms
Plate power output, 5% second harmonic	5.6	12	19.7 watts

Class B Audio-frequency Power Amplifier (Two Tubes)

Maximum Ratings, Absolute Values

D-c plate voltage	1250 volts
Max signal plate current, per tube§	0.175 ampere
D-c max signal plate input, per tube§	220 watts
Plate dissipation, per tube§	100 watts

Typical Operation

Filament voltage	10	volts
D-c plate voltage	1000	1250 volts
D-c grid voltage	−72	−95 volts
Peak a-f grid input voltage	380	410 volts
Zero signal plate current	20	20 milliamperes
Max signal plate current	320	320 milliamperes
Max signal driving power, approx	7.5	8 watts
Effective load, plate-to-plate	6900	9000 ohms
Max signal plate power output	200	260 watts

Class B Radio-frequency Power Amplifier

Carrier conditions per tube for use with a maximum modulation factor of 1.0

Maximum Ratings, Absolute Values

D-c plate voltage	1250 volts
D-c plate current	0.150 ampere
Plate input	150 watts
Plate dissipation	100 watts

Typical Operation

Filament voltage	10	volts
D-c plate voltage	1000	1250 volts
D-c grid voltage	−72	−95 volts
D-c plate current	0.130	0.106 ampere
Peak r-f grid input voltage	125	125 volts
D-c grid current, approx	5	1 milliampere
Driving power†, approx	10	7.5 watts
Plate power output	40	42.5 watts

CLASS C RADIO-FREQUENCY POWER AMPLIFIER AND OSCILLATOR, PLATE MODULATED

Carrier conditions per tube for use with a maximum modulation factor of 1.0

Maximum Ratings, Absolute Values

D-c plate voltage	1000 volts
D-c grid voltage	−400 volts
D-c plate current	0.175 ampere
D-c grid current, approx	0.50 ampere
Plate input	175 watts
Plate dissipation	67 watts

Typical Operation

Filament voltage	10	volts
D-c plate voltage	750	1000 volts
D-c grid voltage	−200	−260 volts
D-c plate current	0.150	0.150 ampere
D-c grid current, approx	0.035	0.035 ampere
Peak r-f grid input voltage, approx	350	410 volts
Driving power, approx	12	14 watts
Plate power output	65	100 watts

CLASS C RADIO-FREQUENCY POWER AMPLIFIER AND OSCILLATOR

Key down conditions per tube without modulation‡

Maximum Ratings, Absolute Values

D-c plate voltage	1250 volts
D-c grid voltage	−400 volts
D-c plate current	0.175 ampere
D-c grid current, approx	0.050 ampere
Plate input	220 watts
Plate dissipation	100 watts

Typical Operation

Filament voltage	10		volts
D-c plate voltage	750	1000	1250 volts
D-c grid voltage	−135	−175	−225 volts
D-c plate current	0.150	0.150	0.150 ampere
D-c grid current, approx	0.018	0.018	0.018 ampere
Peak r-f grid input voltage, approx	275	315	375 volts
Driving power, approx	5	6	7 watts
Plate power output	65	100	130 watts

§Averaged over any audio-frequency cycle.
†At crest of audio-frequency cycle.
‡Modulation, essentially negative, may be used if the positive peak of the audio-frequency envelope does not exceed 115 per cent of the carrier conditions.

APPLICATION NOTES

The normal value of grid leak, when the tube is used as an oscillator or radio-frequency power amplifier (Class C), is in the neighborhood of 5000 ohms, although this may be replaced by a suitable fixed bias. If self-bias is used the cathode resistor should be approximately 1000 ohms.

The 211 can be operated at frequencies as high as 15 megacycles. The tube may be operated at higher frequencies provided the maximum values of plate voltage and power input are reduced as the frequency is raised (other maximum ratings are the same as shown above). The tabulation below shows the highest percentage of maximum plate voltage and power input that can be used up to 80 megacycles for the various classes of service. Special attention should be given to adequate ventilation of the bulb at these frequencies.

Frequency	15	30	80 megacycles
Percentage of maximum rated plate voltage and plate input			
Class B	100	88	70 per cent
Class C	100	80	50 per cent

The resonant frequency of the grid-plate circuit is approximately 100 megacycles.

GL-211 AVERAGE PLATE CHARACTERISTICS
$E_f = 10$ VOLTS A-C

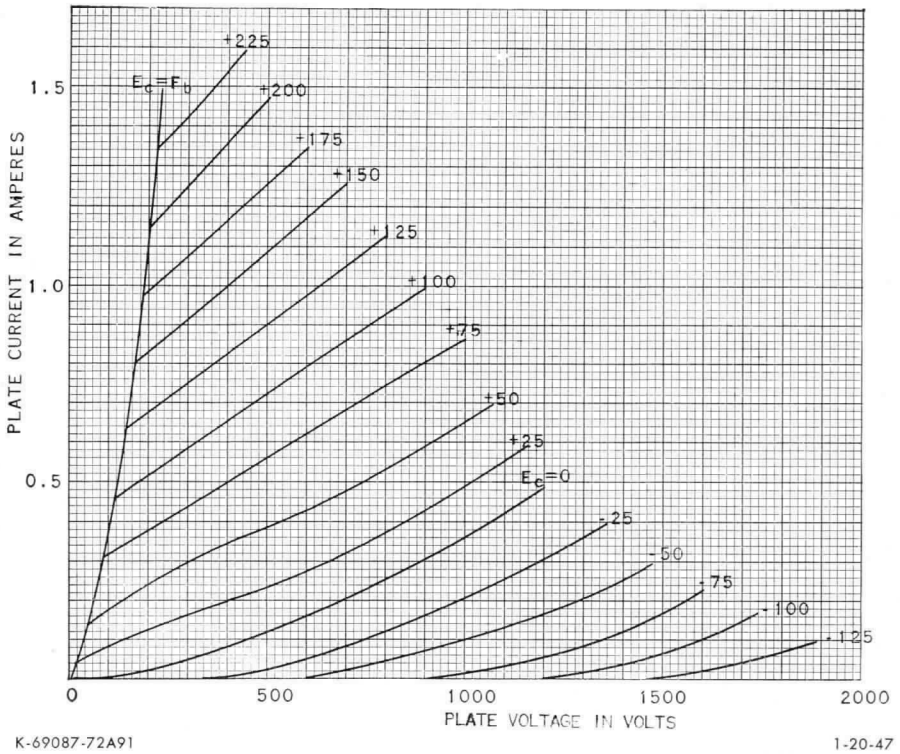

K-69087-72A91

1-20-47

GL-211 AVERAGE PLATE CHARACTERISTICS

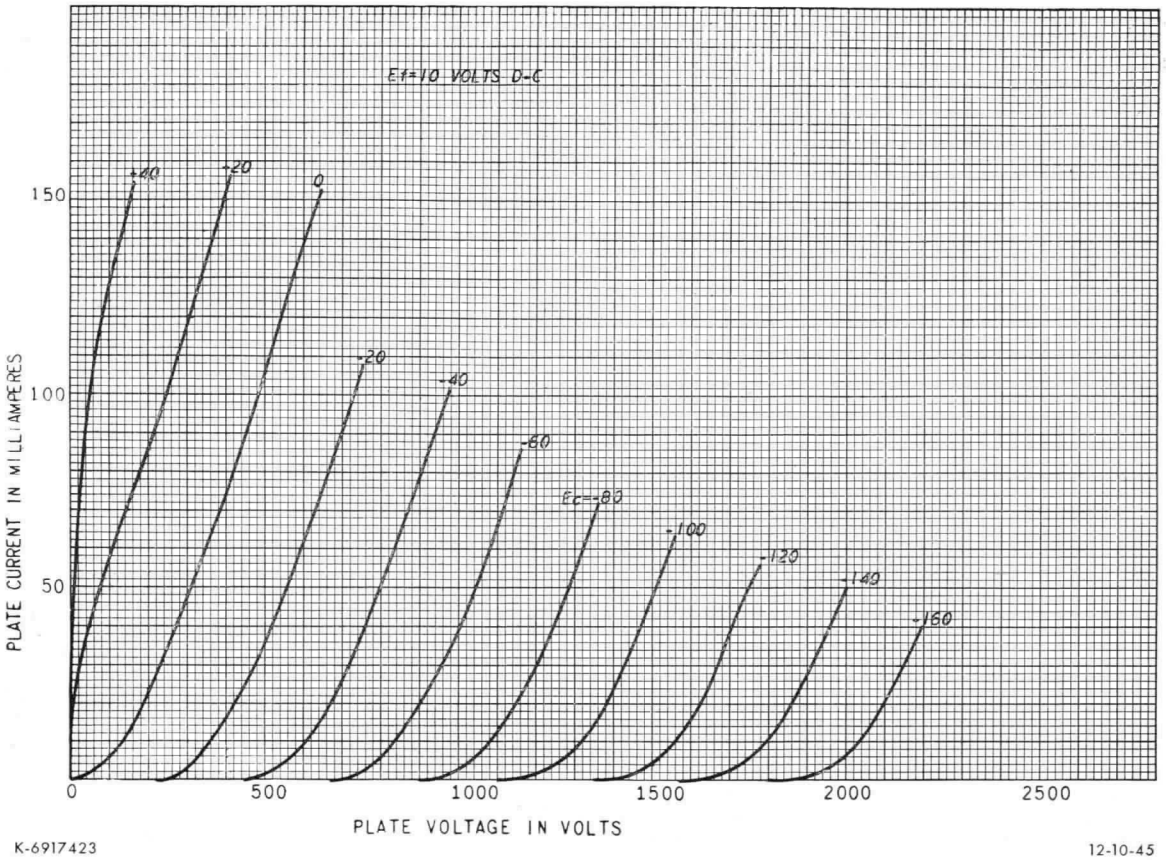

K-6917423

12-10-45

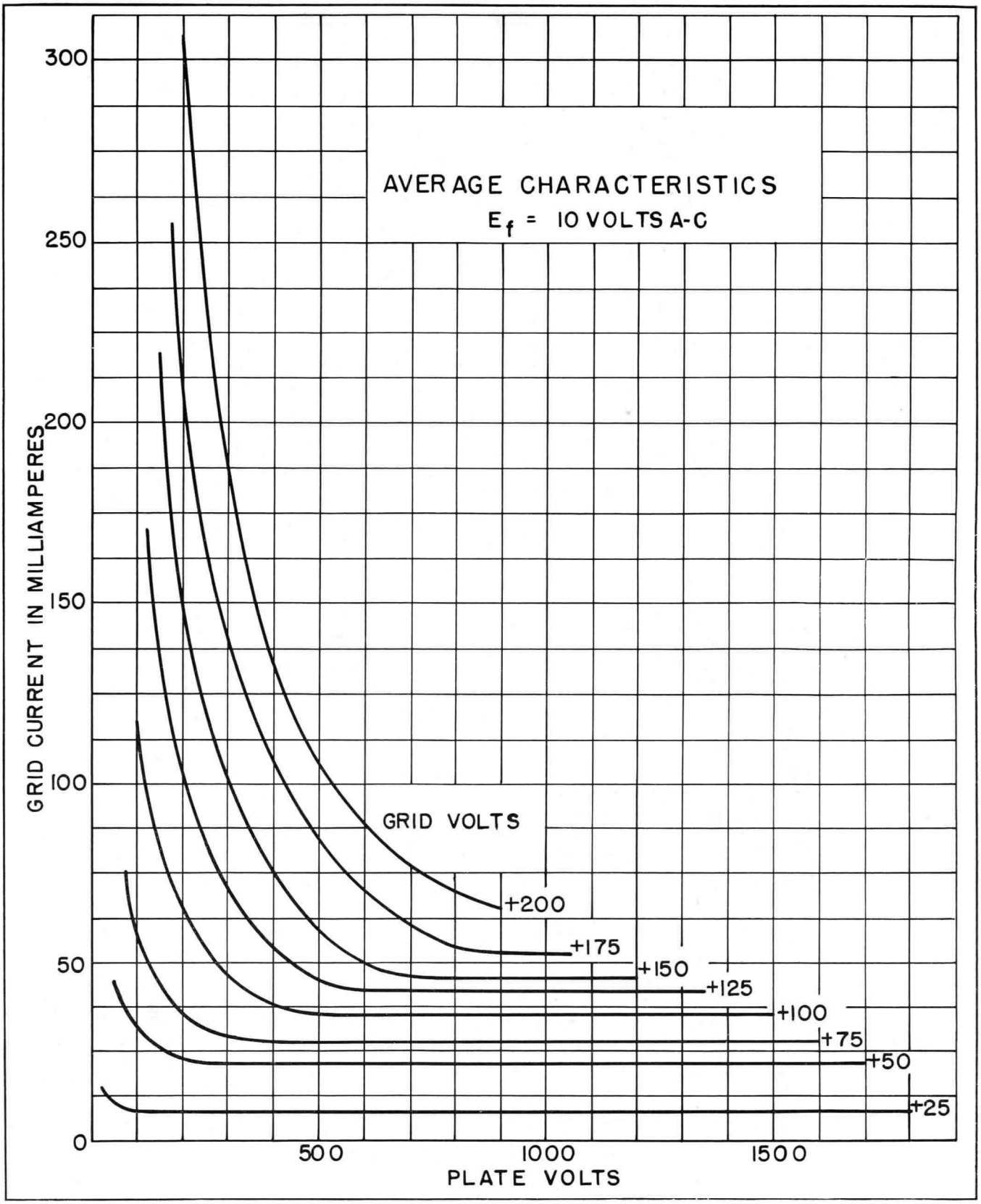

K-6917435

9-26-44

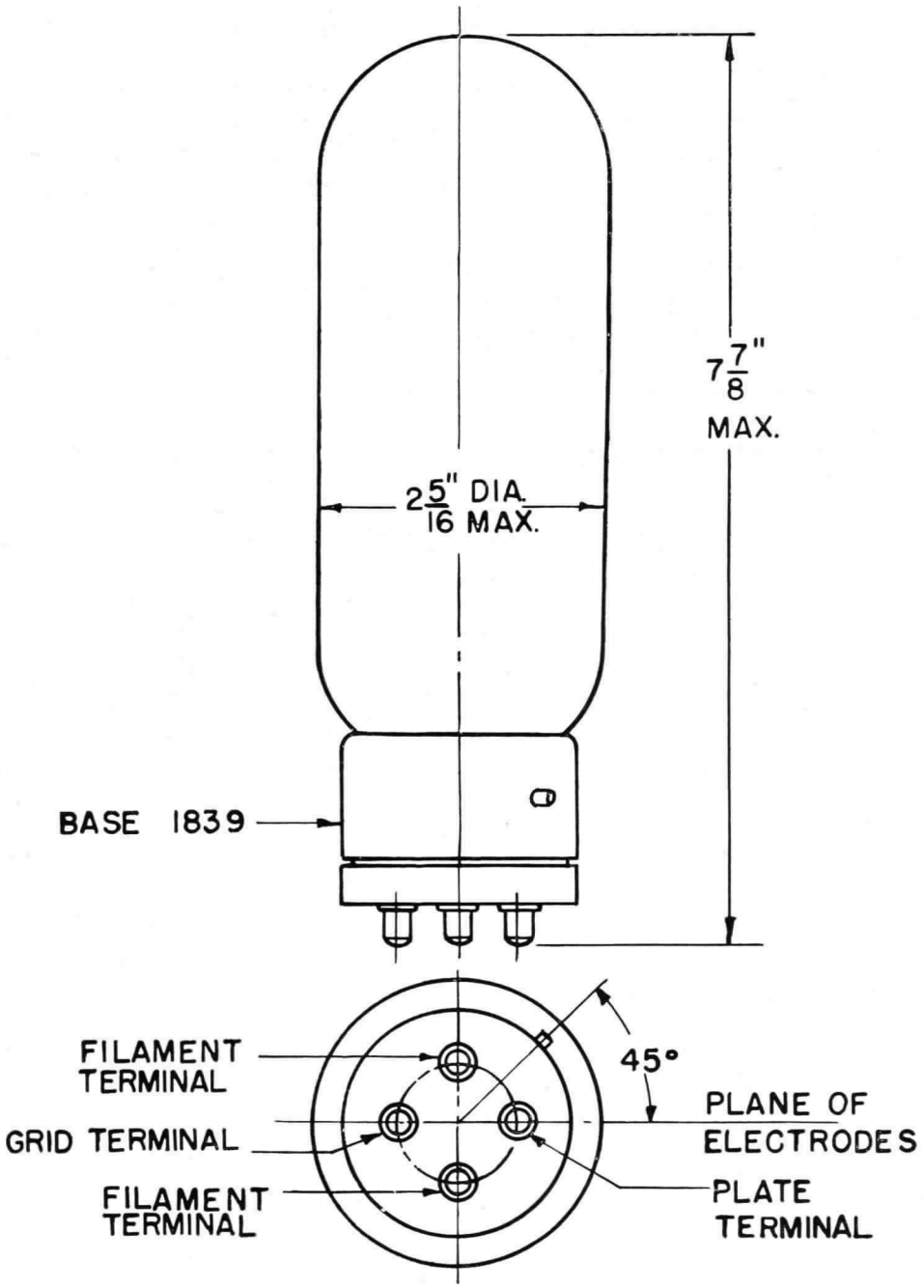

GL-211 OUTLINE

K-4909036

8-7-45

Electronics Department

GENERAL ELECTRIC

Schenectady, N. Y.

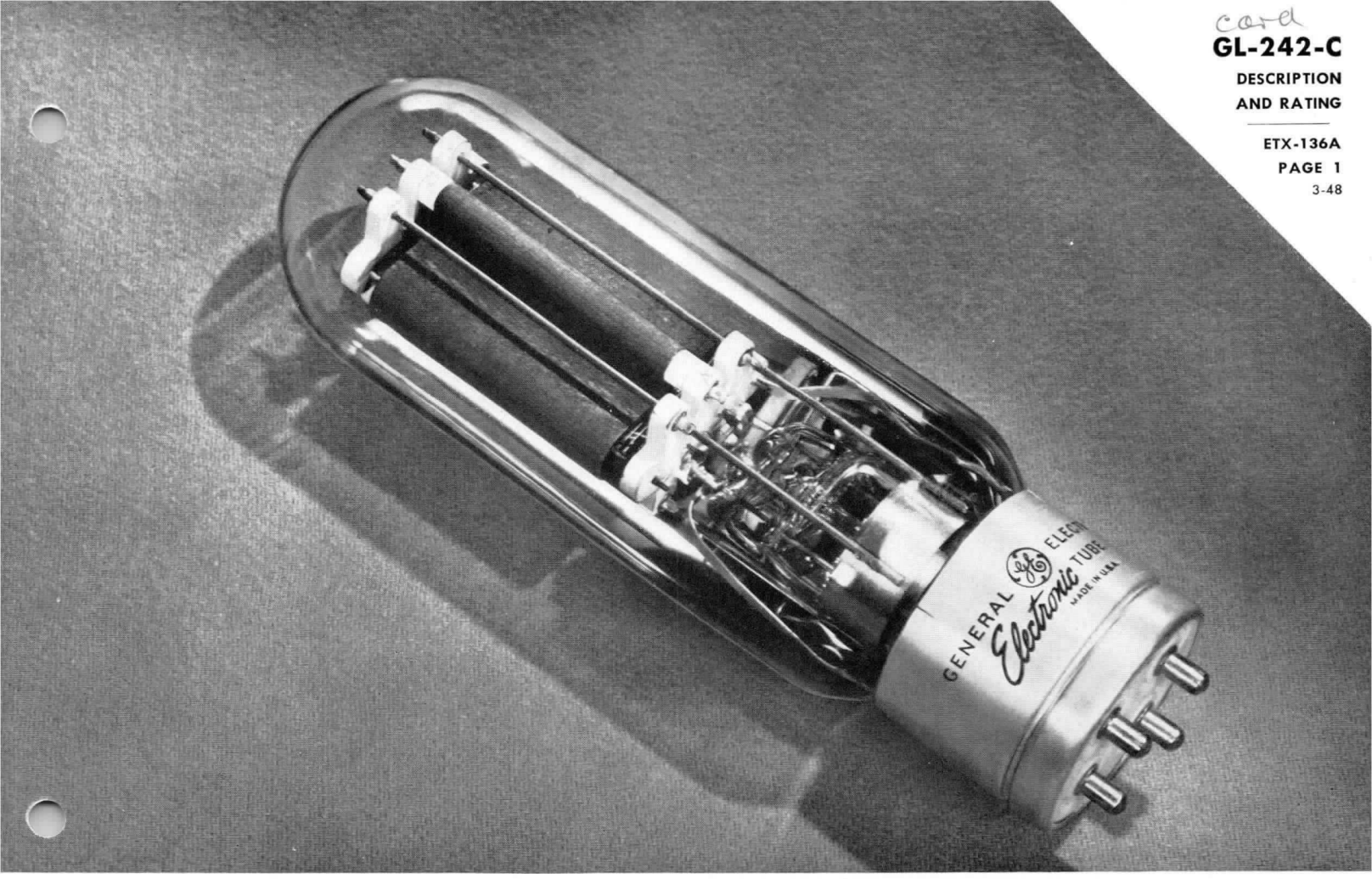

TRIODE

DESCRIPTION

The GL-242-C is a three-electrode tube designed for use as a Class B and C radio-frequency power amplifier and Class C oscillator. It also serves as an audio-frequency amplifier or modulator (Class A or B). The GL-242-C can be operated at maximum ratings at frequencies as high as 6 megacycles.

TECHNICAL INFORMATION

These data are for reference only. For design information refer to specifications.

GENERAL CHARACTERISTICS

Number of electrodes	3	
Electrical		
Cathode—Filamentary		
Filament voltage	10	volts
Filament current	3.25	amperes
Amplification factor (I_b = .068)	12.5	
Grid-plate transconductance	3600	micromhos
Direct interelectrode capacitances		
Grid-plate	13	micromicrofarads
Grid-cathode	6.1	micromicrofarads
Plate-cathode	4.7	micromicrofarads
Frequency for maximum ratings	6	megacycles
Mechanical		
Base description		jumbo 4-large pin
Net weight, approx	.8	ounces
Shipping weight, approx	.4	pounds
Mounting position		vertical, base up or down—horizontal, filament in vertical plane

GE Electronic TUBE

GENERAL ELECTRIC

Supersedes ETX-136 dated 5-46

TECHNICAL INFORMATION (CONT'D)

MAXIMUM RATINGS AND TYPICAL OPERATING CONDITIONS

CLASS A AUDIO-FREQUENCY AMPLIFIER AND MODULATOR

Maximum Ratings, Absolute Values

D-c plate voltage	1250 volts
Plate dissipation	85 watts

Typical Operation

D-c plate voltage	1000	1250 volts
D-c grid voltage	−56	−75 volts
Peak grid swing, approx	56	75 volts
D-c plate current	0.053	0.060 ampere
Plate resistance	3800	3600 ohms
Load resistance	7600	9200 ohms
Plate power output, 5 per cent second harmonic	12	20 watts

CLASS B AUDIO-FREQUENCY POWER AMPLIFIER (TWO TUBES)

Maximum Ratings, Absolute Values

D-c plate voltage	1250 volts
Max signal plate current, per tube†	0.150 ampere
D-c max signal plate input, per tube†	188 watts
Plate dissipation, per tube†	100 watts

Typical Operation

D-c plate voltage	1000	1250 volts
D-c grid voltage	−72	−95 volts
Peak a-f grid input voltage	370	400 volts
Zero signal plate current	0.020	0.020 ampere
Max signal plate current	0.300	0.300 ampere
Max signal plate input†	300	375 watts
Max signal driving power, approx	7.5	8 watts
Effective load, plate-to-plate	6000	7600 ohms
Max signal plate power output	165	200 watts

CLASS B RADIO-FREQUENCY POWER AMPLIFIER

Carrier conditions per tube for use with a max modulation factor of 1.0

Maximum Ratings, Absolute Values

D-c plate voltage	1250 volts
D-c plate current	0.150 ampere
Plate input	150 watts
Plate dissipation	100 watts

Typical Operation

D-c plate voltage	1000	1250 volts
D-c grid voltage	−72	−95 volts
D-c plate current	0.150	0.120 ampere
Peak r-f grid input voltage	135	160 volts
Driving power, approx‡	12	12 watts
Plate power-output	50	50 watts

CLASS C RADIO-FREQUENCY POWER AMPLIFIER AND OSCILLATOR—PLATE MODULATED

Carrier conditions per tube for use with a max modulation factor of 1.0

Maximum Ratings, Absolute Values

D-c plate voltage	1000 volts
D-c grid voltage	−400 volts
D-c plate current	0.150 ampere
D-c grid current	0.050 ampere
Plate input	150 watts
Plate dissipation	67 watts

Typical Operation

D-c plate voltage	750	1000 volts
D-c grid voltage	−200	−260 volts
D-c plate current	0.150	0.150 ampere
D-c grid current, approx	0.035	0.035 ampere
Peak r-f grid input voltage, approx	350	410 volts
Driving power, approx	12	14 watts
Plate power output	65	100 watts

TECHNICAL INFORMATION (CONT'D)

CLASS C RADIO-FREQUENCY POWER AMPLIFIER AND OSCILLATOR

Key-down conditions per tube without modulation§

Maximum Ratings, Absolute Values

D-c plate voltage	1250 volts
D-c grid voltage	−400 volts
D-c plate current	0.150 ampere
D-c grid current, approx	0.050 ampere
Plate input	188 watts
Plate dissipation	100 watts

Typical Operation

D-c plate voltage	1000	1250 volts
D-c grid voltage	−175	−225 volts
D-c plate current	0.150	0.150 ampere
D-c grid current, approx	0.020	0.020 ampere
Peak r-f grid input voltage, approx	315	375 volts
Driving power, approx	6	7 watts
Plate power output	100	130 watts

†Average over any audio-frequency cycle.

‡At crest of audio-frequency cycle.

§Modulation, essentially negative, may be used if the positive peak of the audio-frequency envelope does not exceed 115 per cent of the carrier conditions.

APPLICATION NOTES

The GL-242-C can be operated at frequencies as high as 6 megacycles. The tube may be operated at higher frequencies provided that maximum values of plate voltage and power input are reduced as the frequency is raised (other maximum ratings are the same as shown above). The tabulation below shows the highest percentage of maximum plate voltage and power input that can be used up to 30 megacycles for the various classes of service. Special attention should be given to adequate ventilation of the bulb at these frequencies.

Frequency	6	15	30 megacycles
Maximum permissible percentage of maximum rated plate voltage and plate input:			
Class B, r-f	100	85	70 per cent
Class C, plate modulated	100	75	50 per cent
Class C, unmodulated	100	75	50 per cent

GL-242-C AVERAGE PLATE CHARACTERISTICS

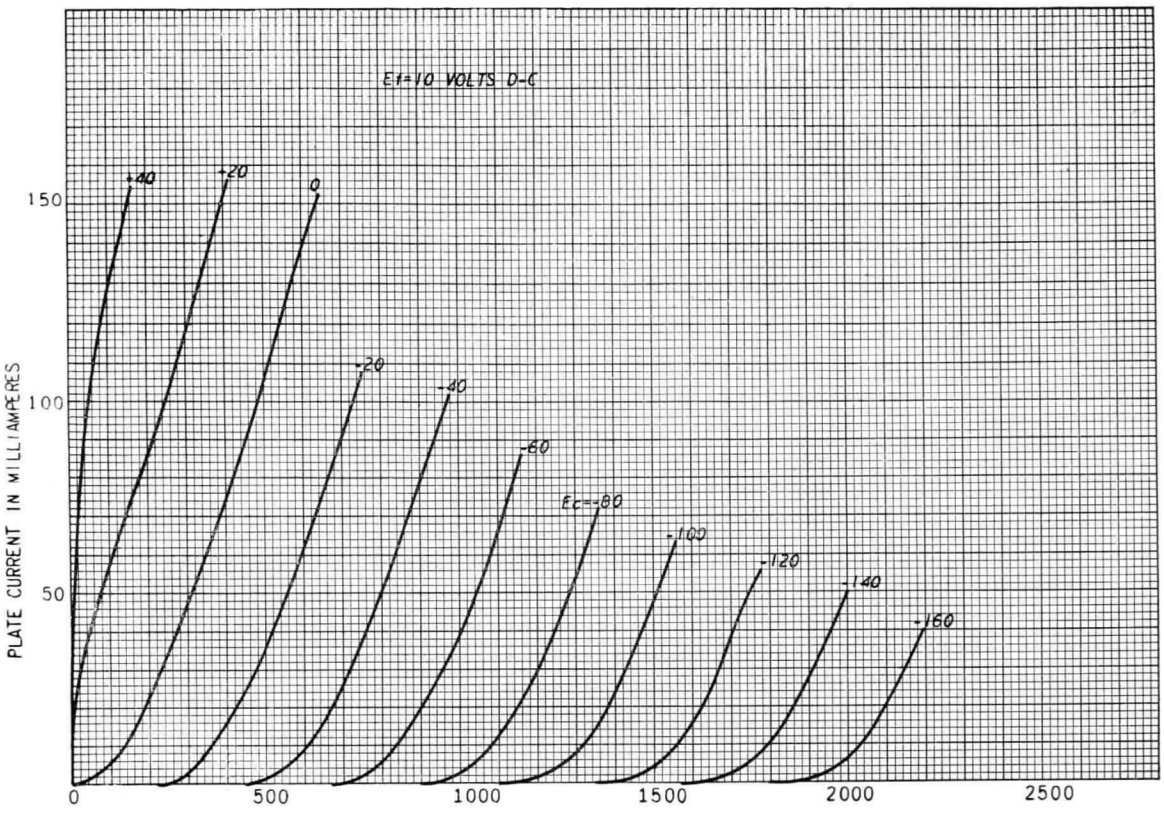

K-6917423

12-10-45

GL-242-C
AVERAGE PLATE CHARACTERISTICS
$E_f = 10$ VOLTS A-C

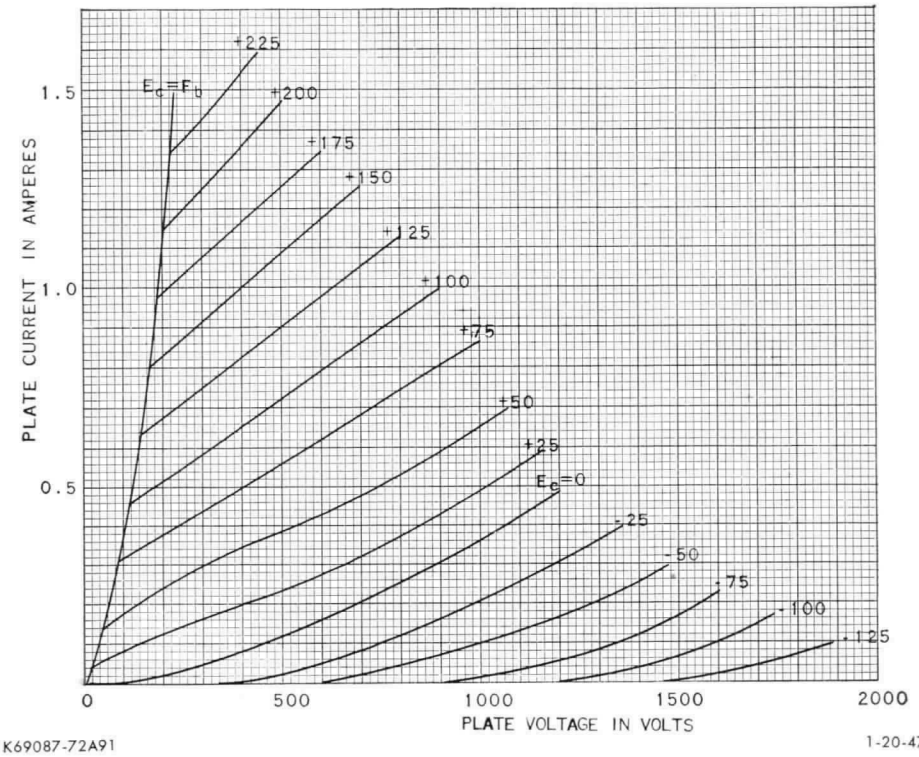

K69087-72A91 1-20-47

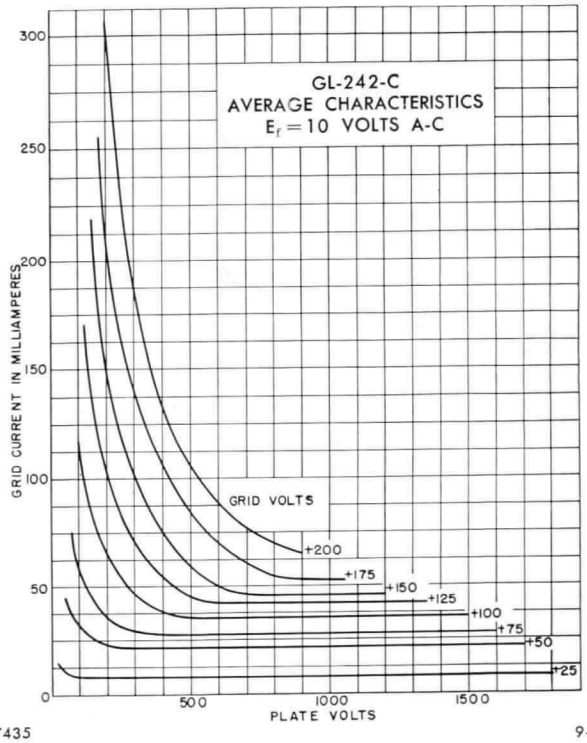

K-6917435 9-26-44

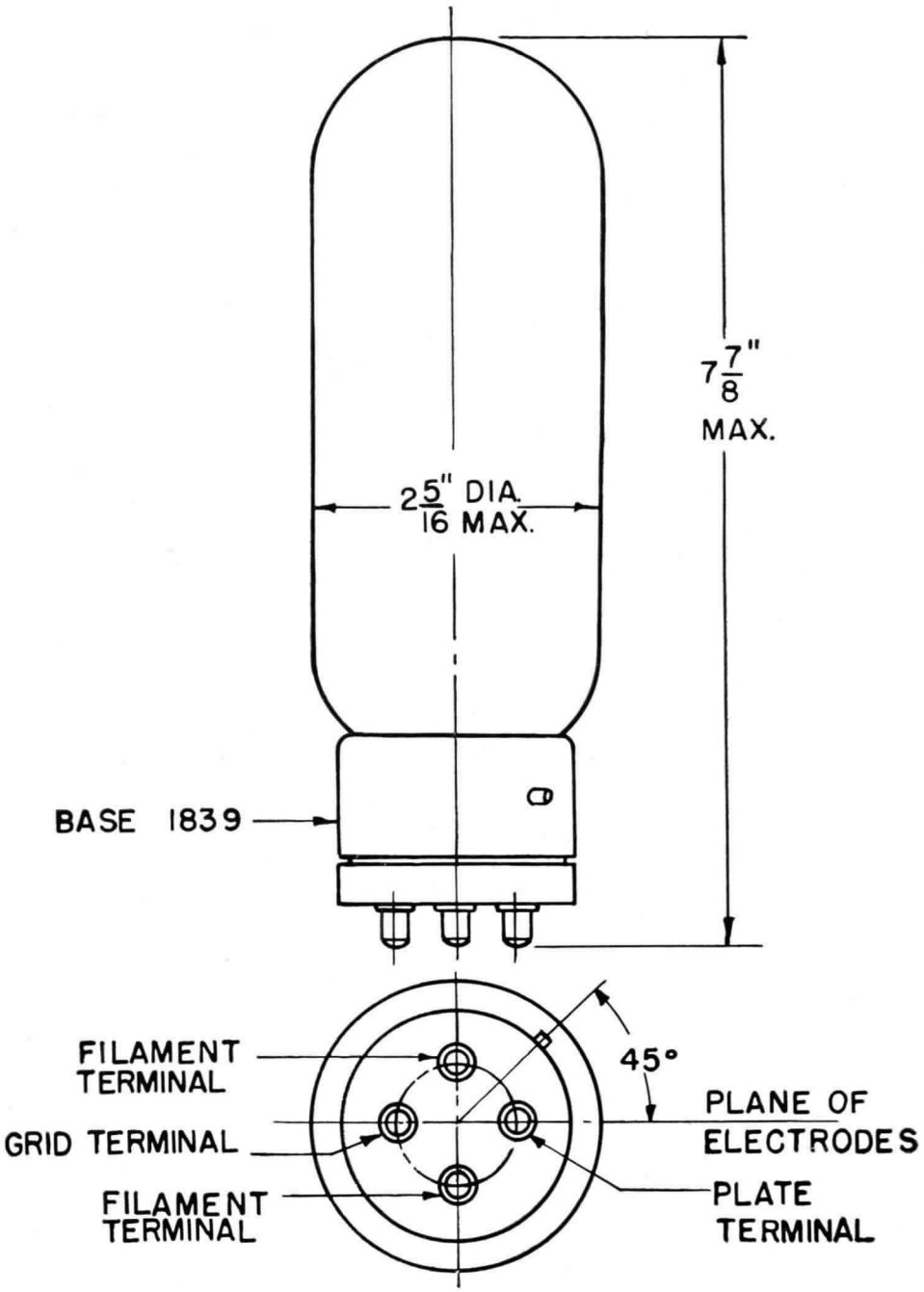

GL-242-C OUTLINE

K-4909036

8-7-45

Electronics Department
GENERAL ELECTRIC
Schenectady, N. Y.

3-48 (8M)
Filing No. 8850

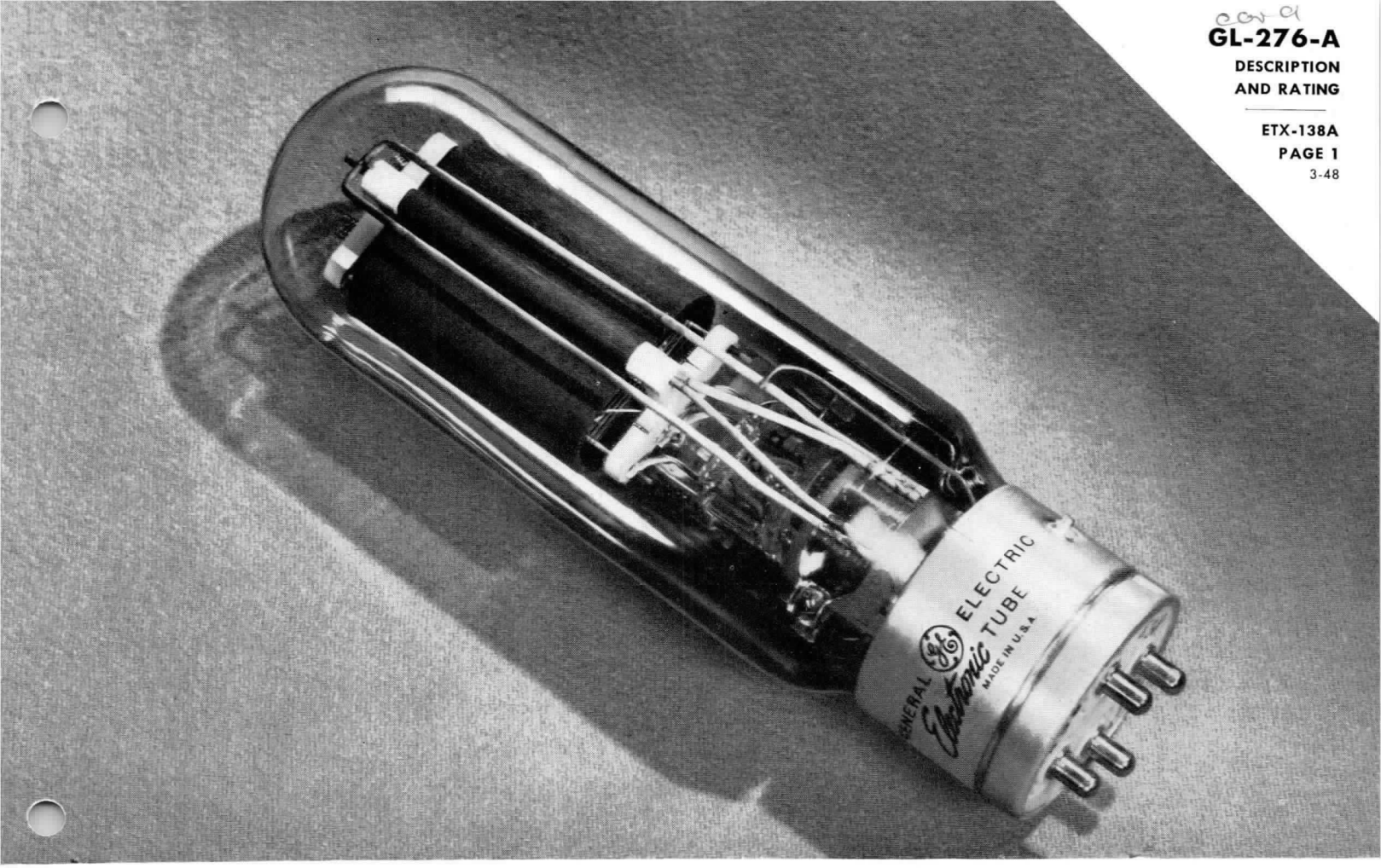

TRIODE

DESCRIPTION

The GL-276-A is a three-electrode tube for use as a Class B and C radio-frequency power amplifier and Class C oscillator. It may also serve as an audio-frequency amplifier or modulator (Class A or B). The GL-276-A can be operated at maximum ratings at frequencies as high as 20 megacycles.

TECHNICAL INFORMATION

These data are for reference only. For design information refer to specifications.

GENERAL CHARACTERISTICS

Number of electrodes	3	
Electrical		
Cathode—Filamentary		
Filament voltage	10	volts
Filament current	3.0	amperes
Amplification factor, $I_b = .060$	12	
Grid-plate transconductance	3600	micromhos
Direct interelectrode capacitances		
Grid-plate	9	micromicrofarads
Grid-cathode	6	micromicrofarads
Plate-cathode	4	micromicrofarads
Frequency for maximum ratings	20	megacycles

GE Electronic TUBE

GENERAL ELECTRIC

Supersedes ETX-138 dated 5-46

TECHNICAL INFORMATION (CONT'D)

Mechanical

Base		jumbo 4-large pin
Net weight, approx	8	ounces
Shipping weight, approx	4	pounds
Operating position	vertical, base up or down—horizontal filament in vertical plane	
Type of cooling		convection
Maximum ambient temperature	60	centigrade

MAXIMUM RATINGS AND TYPICAL OPERATING CONDITIONS

CLASS A AUDIO-FREQUENCY AMPLIFIER AND MODULATOR

Maximum Ratings, Absolute Values

D-c plate voltage	1250 volts
Plate dissipation	85 watts

Typical Operation

D-c plate voltage	1000	1250 volts
D-c grid voltage	−56	−75 volts
Peak grid swing, approx	56	75 volts
D-c plate current	0.053	0.060 ampere
Plate resistance	3800	3600 ohms
Load resistance	7600	9200 ohms
Plate power output, 5 per cent second harmonic	12	20 watts

CLASS B AUDIO-FREQUENCY POWER AMPLIFIER (TWO TUBES)

Maximum Ratings, Absolute Values

D-c plate voltage	1250 volts
Max signal plate current, per tube†	0.125 ampere
D-c max signal plate input, per tube†	150 watts
Plate dissipation, per tube†	100 watts

Typical Operation

D-c plate voltage	1000	1250 volts
D-c grid voltage	−72	−95 volts
Peak a-f grid input voltage	320	390 volts
Zero signal plate current	0.020	0.020 ampere
Maximum signal plate current	0.250	0.250 ampere
Maximum signal plate input†	250	312 watts
Max signal driving power, approx	7	7.5 watts
Effective load, plate-to-plate	7000	9000 ohms
Max signal plate power output	135	175 watts

CLASS B RADIO-FREQUENCY POWER AMPLIFIER

Carrier conditions per tube for use with a max modulation factor of 1.0

Maximum Ratings, Absolute Values

D-c plate voltage	1250 volts
D-c plate current	0.125 ampere
Plate input	150 watts
Plate dissipation	100 watts

Typcal Operation

D-c plate voltage	1000	1250 volts
D-c grid voltage	−72	−95 volts
D-c plate current	0.125	0.120 ampere
Peak r-f grid input voltage	125	145 volts
Driving power, approx‡	10	10 watts
Plate power output	42	50 watts

TECHNICAL INFORMATION (CONT'D)

CLASS C RADIO-FREQUENCY POWER AMPLIFIER AND OSCILLATOR—PLATE MODULATED

Carrier conditions per tube for use with a max modulation factor of 1.0

Maximum Ratings, Absolute Values

D-c plate voltage	1000 volts
D-c grid voltage	−400 volts
D-c plate current	0.125 ampere
D-c grid current, approx	0.050 ampere
Plate input	125 watts
Plate dissipation	67 watts

Typical Operation

D-c plate voltage	750	1000 volts
D-c grid voltage	−200	−260 volts
D-c plate current	0.125	0.125 ampere
D-c grid current, approx	0.035	0.035 ampere
Peak r-f grid input voltage, approx	325	385 volts
Driving power, approx	12	14 watts
Plate power output	55	85 watts

†Averaged over any audio-frequency cycle.
‡At crest of audio-frequency cycle.

CLASS C RADIO-FREQUENCY POWER AMPLIFIER AND OSCILLATOR

Key-down conditions per tube without modulation§

Maximum Ratings, Absolute Values

D-c plate voltage	1250 volts
D-c grid voltage	−400 volts
D-c plate current	0.125 ampere
D-c grid current, approx	0.050 ampere
Plate input	156 watts
Plate dissipation	100 watts

Typical Operation

D-c plate voltage	1000	1250 volts
D-c grid voltage	−175	−225 volts
D-c plate current	0.125	0.125 ampere
D-c grid current, approx	0.020	0.020 ampere
Peak r-f grid input voltage, approx	290	350 volts
Driving power, approx	6	7 watts
Plate power output	85	100 watts

§Modulation, essentially negative, may be used if the positive peak of the audio-frequency envelope does not exceed 115 per cent of the carrier conditions.

APPLICATION NOTES

The GL-276-A can be operated at frequencies as high as 20 megacycles. The tube may be operated at higher frequencies provided the maximum values of plate voltage and power input are reduced as the frequency is raised (other maximum ratings are the same as shown above). The tabulation below shows the highest percentage of maximum plate voltage and power input that can be used up to 100 megacycles for the various classes of service. Special attention should be given to adequate ventilation of the bulb at these frequencies.

Frequency	20	45	100 megacycles
Maximum permissible percentage of maximum rated plate voltage and plate input:			
Class B, r-f	100	85	70 per cent
Class C, plate modulated	100	75	50 per cent
Class C, unmodulated	100	75	50 per cent

GL-276A
AVERAGE PLATE CHARACTERISTICS
$E_f = 10$ VOLTS A-C

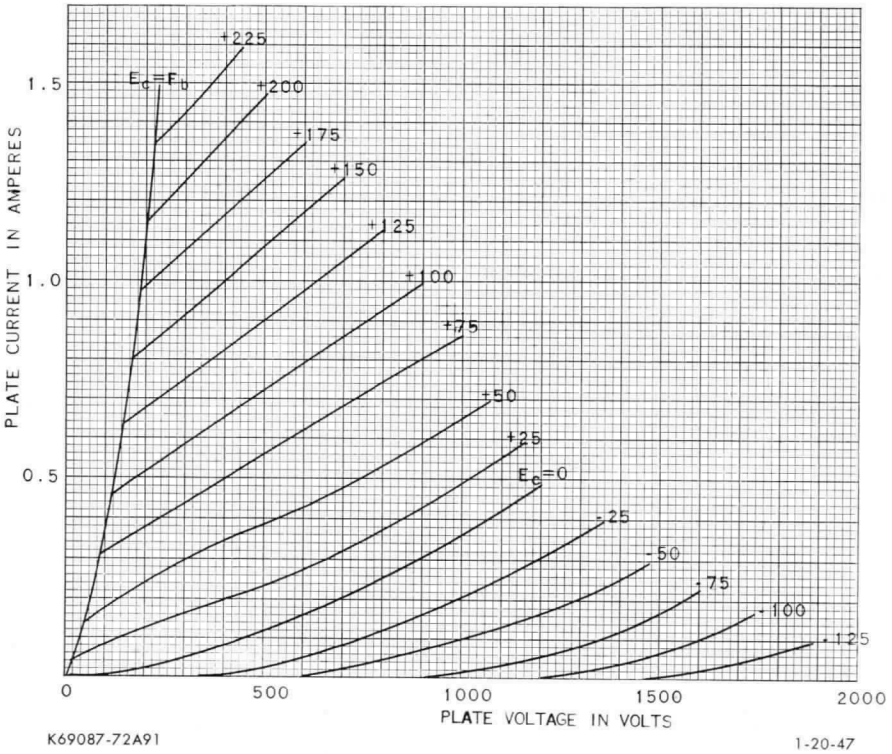

K69087-72A91

1-20-47

GL-276-A AVERAGE PLATE CHARACTERISTICS

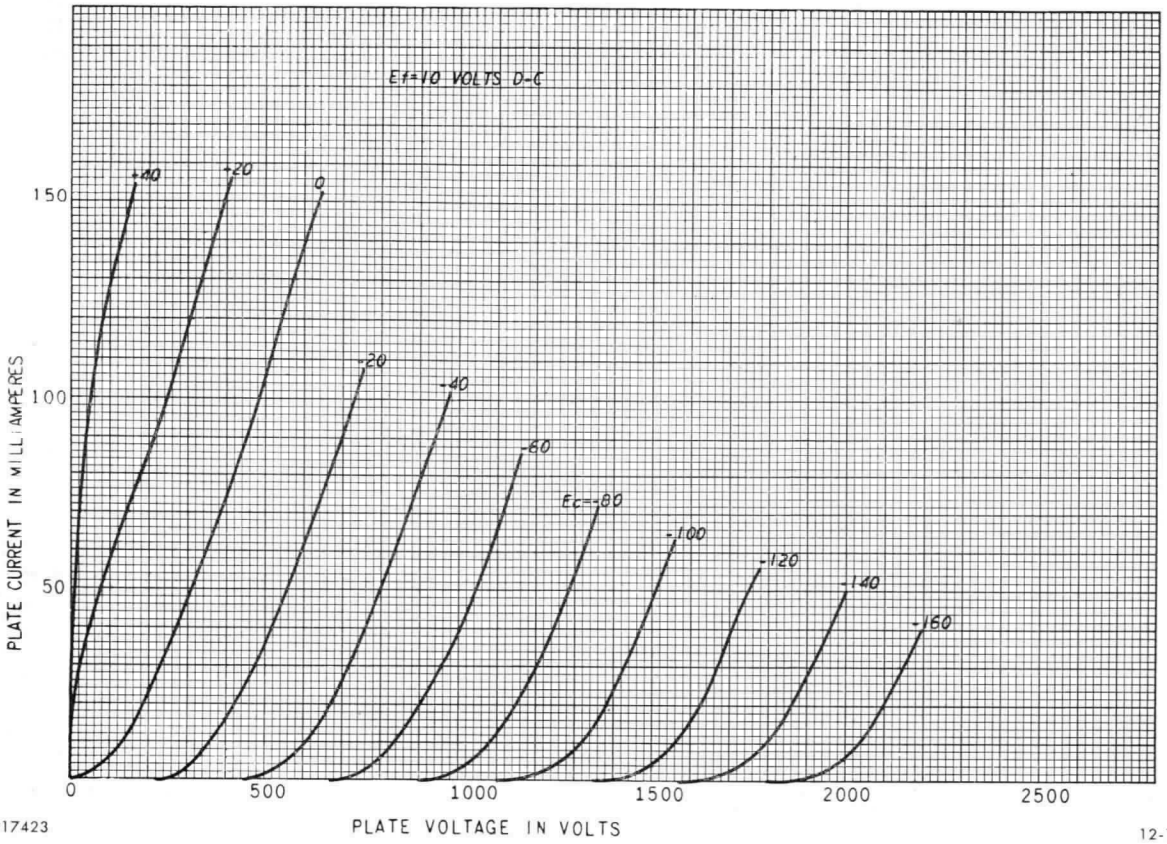

K-6917423

12-10-45

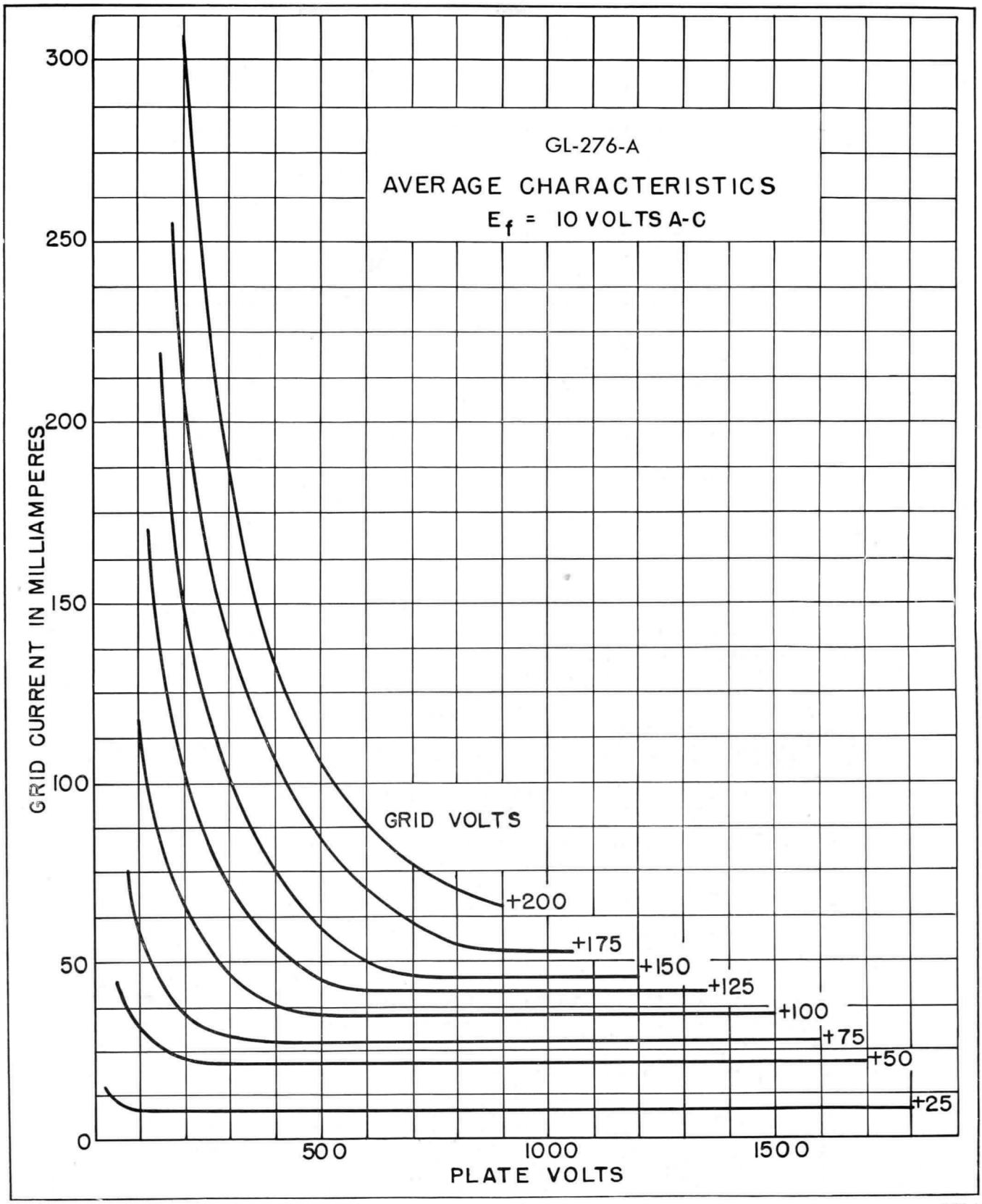

K-6917435

9-26-44

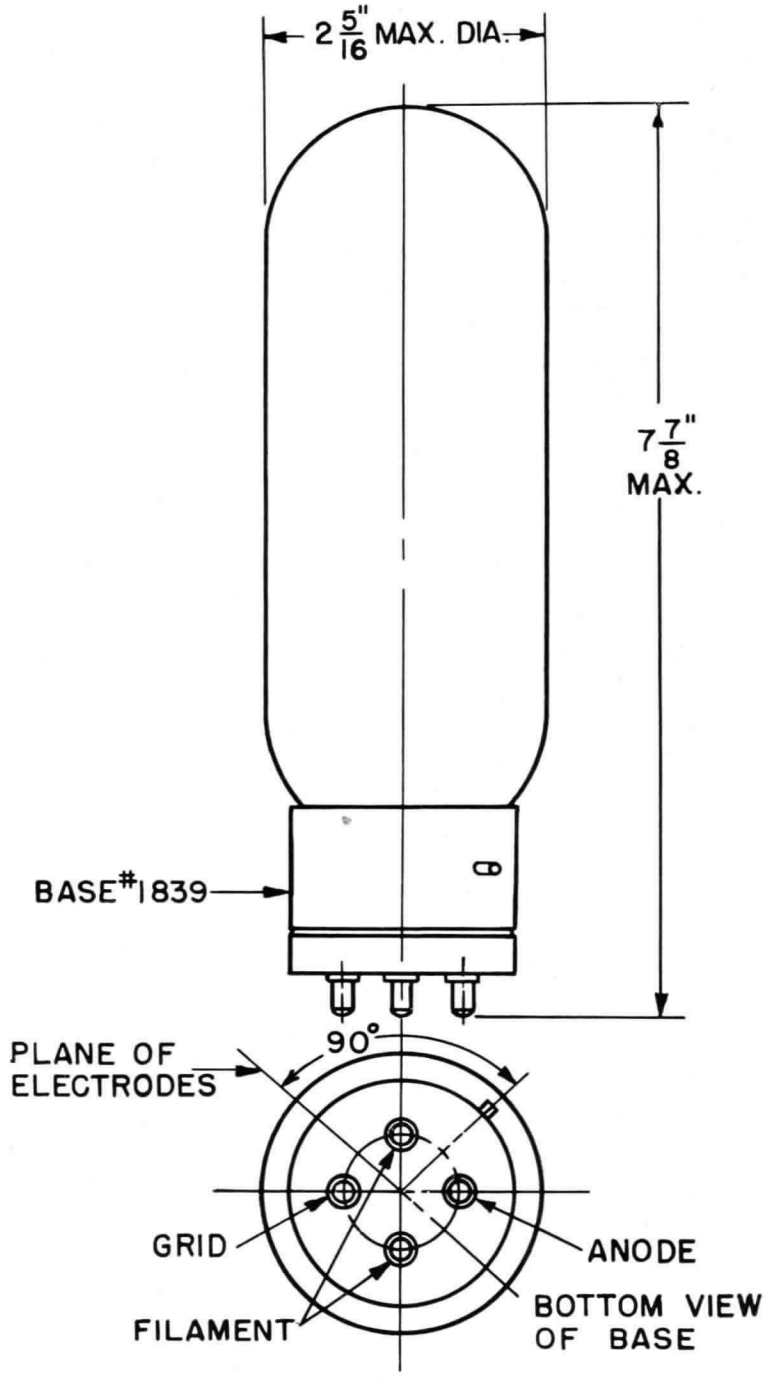

GL-276-A OUTLINE

K-5302946 8-7-45

Electronics Department
GENERAL ELECTRIC
Schenectady, N. Y.

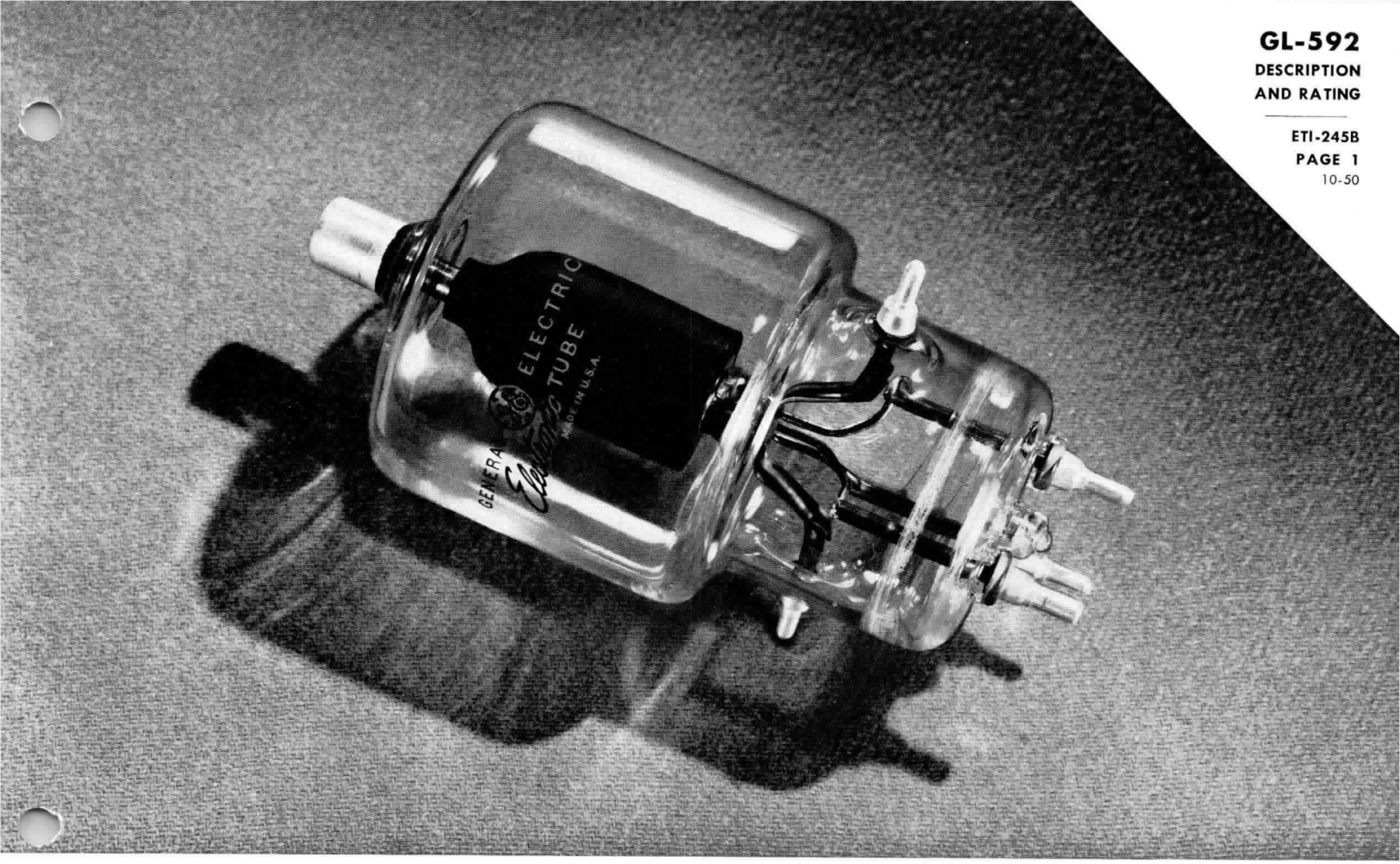

PLIOTRON

DESCRIPTION

The GL-592 is a three-electrode tube designed for use as an amplifier, oscillator or Class B modulator. The anode is capable of dissipating 200 watts for CCS conditions and 300 watts for ICAS conditions. Forced-air cooling of the envelope is required. The cathode is a thoriated-tungsten filament. Maximum ratings apply up to 150 megacycles.

TECHNICAL INFORMATION

These data are for reference only. For design information, see the specifications.

GENERAL

Electrical Data	Minimum	Bogey	Maximum	
Filament voltage	9.5	10.0	10.5	volts
Filament current at 10.0 volts	4.7	5.0	5.3	amperes
Amplification factor, $E_b = 2000$ volts; $I_b = 50$ ma d-c; $E_f = 10$ volts	21	25	29	
Interelectrode capacitances				
With external shield*				
Grid-plate	2.9	3.3	3.7	micromicrofarads
Grid-filament	3.0	3.6	4.2	micromicrofarads
Plate-filament	0.22	0.29	0.36	micromicrofarad

Electronic TUBE

GENERAL ELECTRIC

Supersedes ETI-245A dated 6-47

TECHNICAL INFORMATION (CONT'D)

Mechanical Data

Mounting position—vertical, anode or cathode end down	
Required air flow to envelope†	15 cubic feet per minute
Maximum bulb temperature	200 centigrade
Maximum seal temperature	150 centigrade
Net weight, approximate	6 ounces

MAXIMUM RATINGS AND TYPICAL OPERATING CONDITIONS

AUDIO-FREQUENCY POWER AMPLIFIER AND MODULATOR—CLASS B

Maximum Ratings, Absolute Values	**CCS****	**ICAS****	
D-c plate voltage	3500 max	3500 max	volts
Maximum signal d-c plate current‡	250 max	350 max	milliamperes
Maximum signal plate input‡	600 max	900 max	watts
Plate dissipation‡	200 max	300 max	watts

Typical Operation	**CCS****	**ICAS****	
Unless otherwise specified, values are for two tubes			
D-c plate voltage	2600	3000	volts
D-c grid voltage	−77	−90	volts
Peak a-f grid to grid voltage	475	540	volts
Zero signal d-c plate current	40	50	milliamperes
Maximum signal d-c plate current	390	490	milliamperes
Effective load resistance, plate to plate	14000	13250	ohms
Maximum signal driving power, approximate	16	20	watts
Maximum signal power output, approximate	670	950	watts

PLATE-MODULATED RADIO-FREQUENCY POWER AMPLIFIER—CLASS C TELEPHONY

Carrier conditions per tube for use with a maximum modulation factor of 1.0

Maximum Ratings, Absolute Values	**CCS****	**ICAS****	
D-c plate voltage	2600 max	3000 max	volts
D-c grid voltage	−500 max	−500 max	volts
D-c plate current	200 max	250 max	milliamperes
D-c grid current	50 max	100 max	milliamperes
Plate input	430 max	750 max	watts
Plate dissipation	130 max	225 max	watts

Typical Operation	**CCS****	**ICAS****	
D-c plate voltage	2500	2800	volts
D-c grid voltage	−360	−360	volts
Peak r-f grid voltage	550	625	volts
D-c plate current	158	250	milliamperes
D-c grid current, approximate	35	60	milliamperes
Driving power, approximate	19	34	watts
Power output, approximate	300	503	watts

RADIO-FREQUENCY POWER AMPLIFIER AND OSCILLATOR—CLASS C TELEGRAPHY

Key-down conditions per tube without amplitude modulation¶

Maximum Ratings, Absolute Values	**CCS****	**ICAS****	
D-c plate voltage	3500 max	3500 max	volts
D-c grid voltage	−500 max	−500 max	volts
D-c plate current	250 max	350 max	milliamperes
D-c grid current	50 max	100 max	milliamperes
Plate input	670 max	1000 max	watts
Plate dissipation	200 max	300 max	watts

Typical Operation	**CCS****	**ICAS****	
D-c plate voltage	2600	3000	volts
D-c grid voltage	−240	−250	volts
Peak r-f grid voltage	457	520	volts
D-c plate current	230	320	milliamperes
D-c grid current, approximate	45	60	milliamperes
Driving power, approximate	18	30	watts
Power output, approximate	425	680	watts

* Tube located in center of a metal box 8 in. x 8 in. x 12 in.

† Maximum incoming air temperature 45 C. Flow directed at the side of the bulb from 2-inch diameter nozzle 3 inches from the center line of the tube. Center line of nozzle 1 7/8 in. down from top of plate terminal. An alternate method of cooling for many applications is the use of an 8-inch household fan located 10 inches from the tube and blowing air directly at the tube. When operating under full ICAS rating it is necessary to use a finned anode connector.

‡ Averaged over any audio-frequency cycle of sine-wave form.

¶ Modulation essentially negative may be used if the positive peak of the envelope does not exceed 115 per cent of the carrier conditions.

** CCS = Continuous Commercial Service.

** ICAS = Intermittent Commercial and Amateur Service.

GL-592
AVERAGE PLATE CHARACTERISTIC
(E_f = 10 VOLTS A-C)

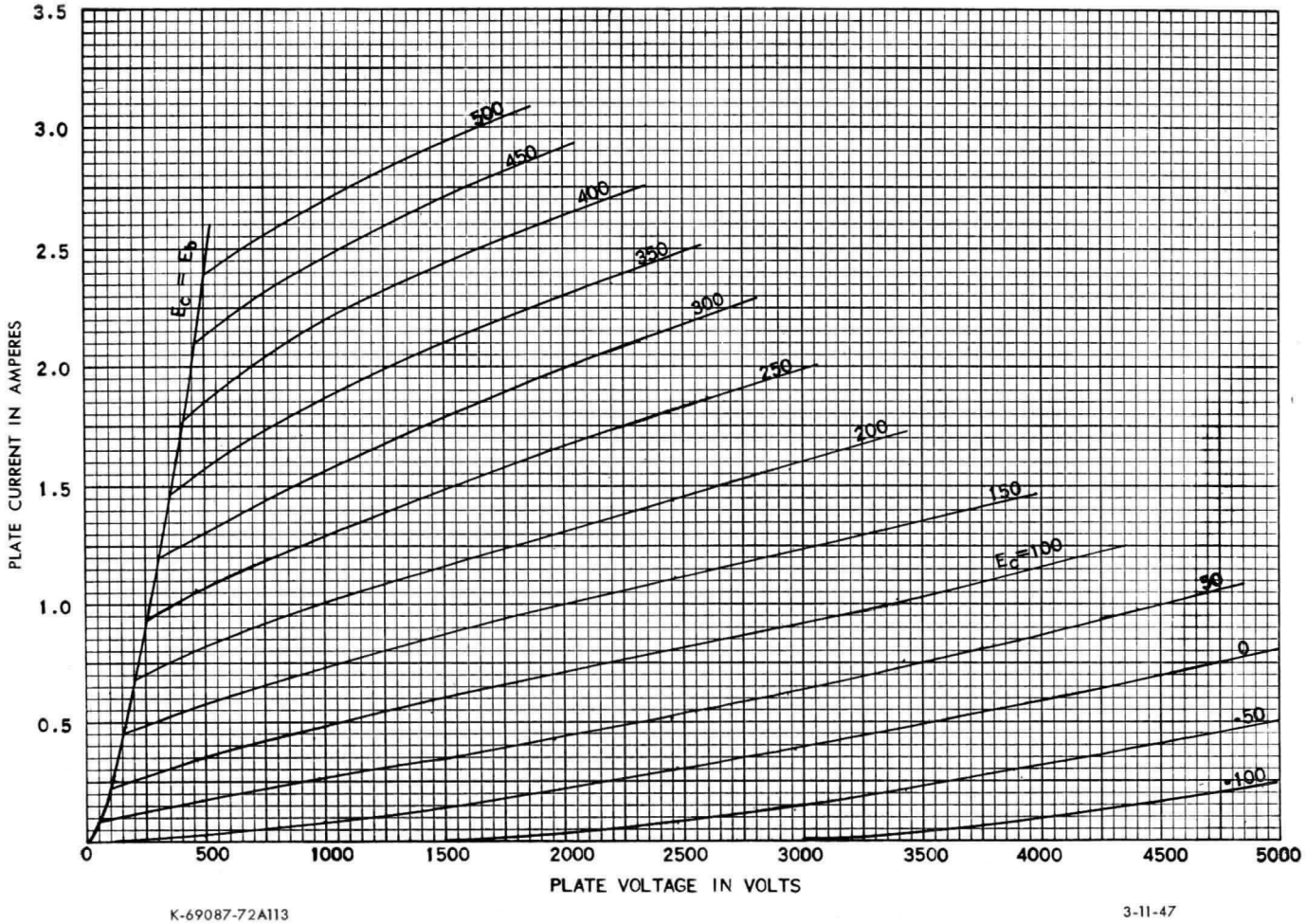

K-69087-72A113

3-11-47

GL-592
CHARACTERISTIC CURVES
$E_f = 10$ VOLTS A-C

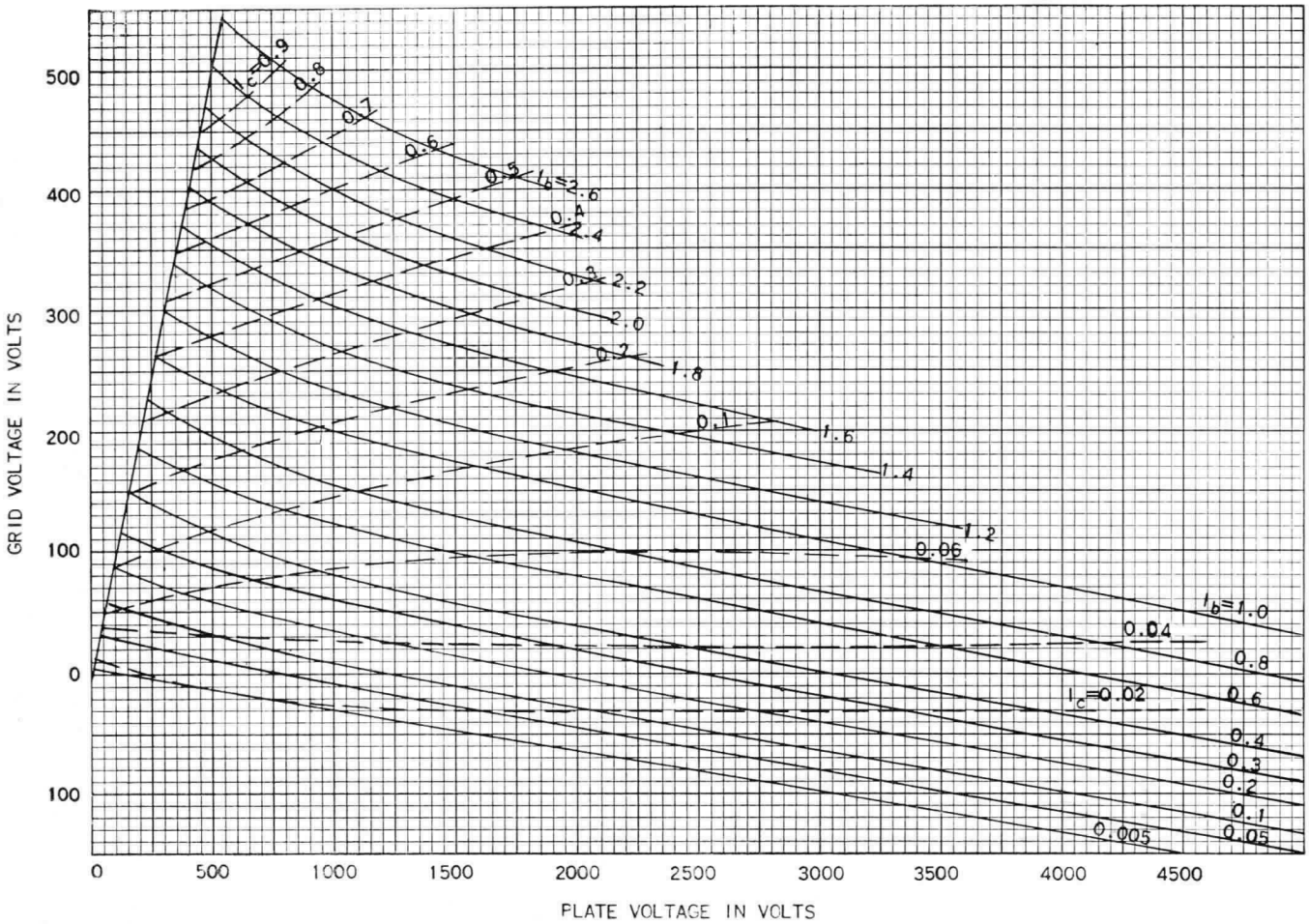

K-69087-7A116

3-24-47

GL-592
TYPICAL GRID-PLATE CHARACTERISTIC
$E_f = 10$ VOLTS A-C

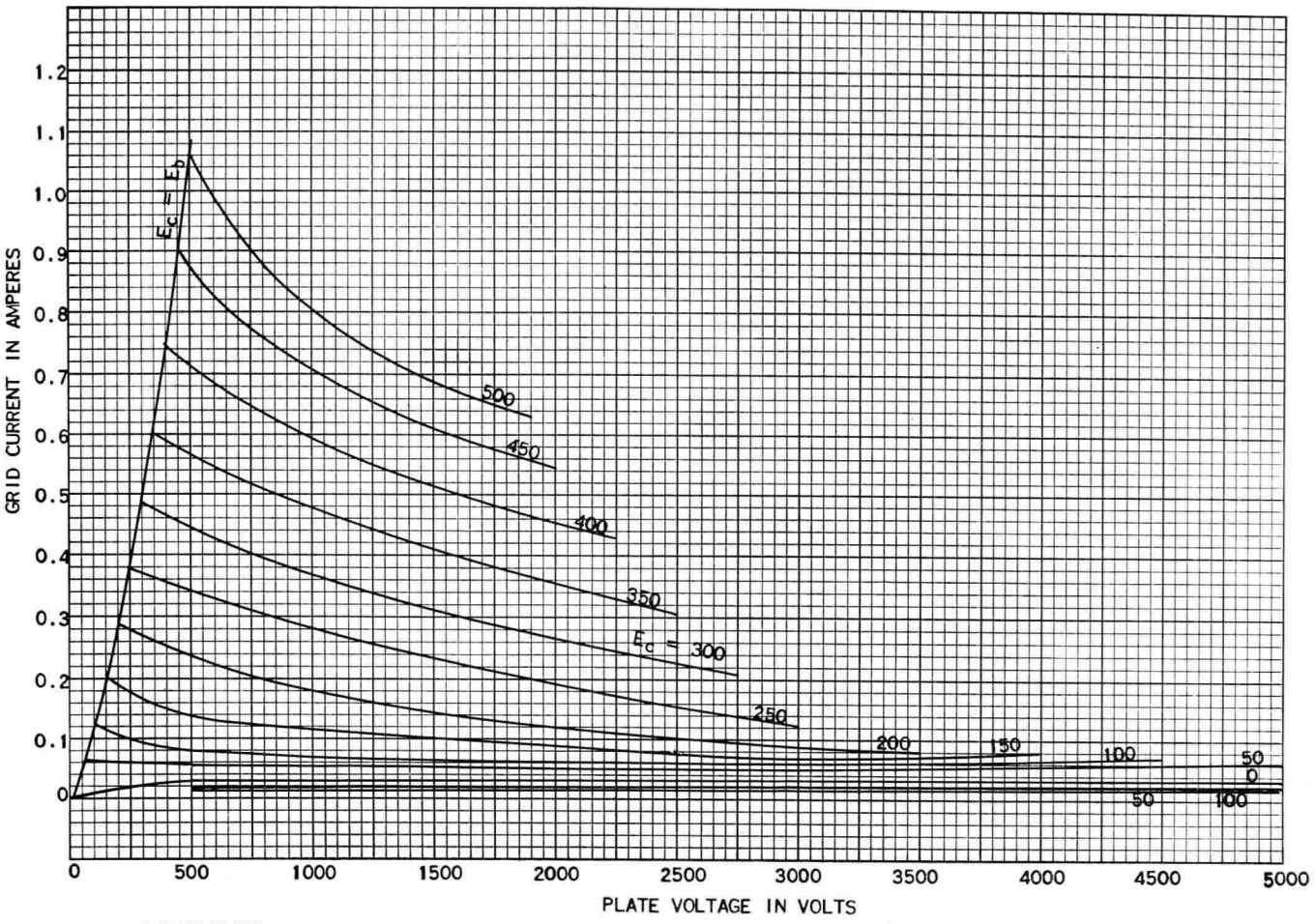

K-69087-72A117

3-11-47

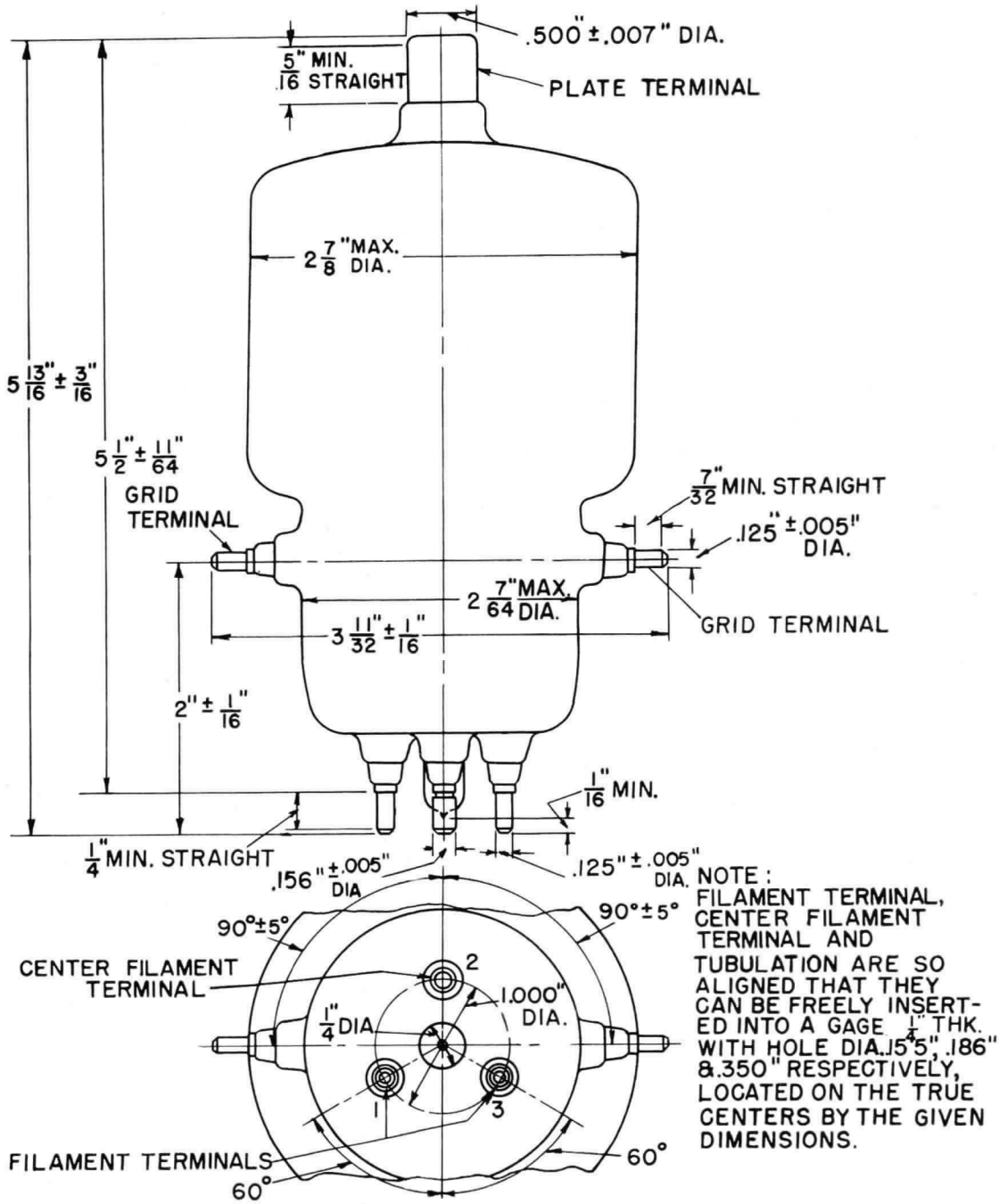

OUTLINE
GL-592 PLIOTRON

N-21200AZ

12-7-45

Tube Divisions, Electronics Department

GENERAL ELECTRIC

Schenectady, N. Y.

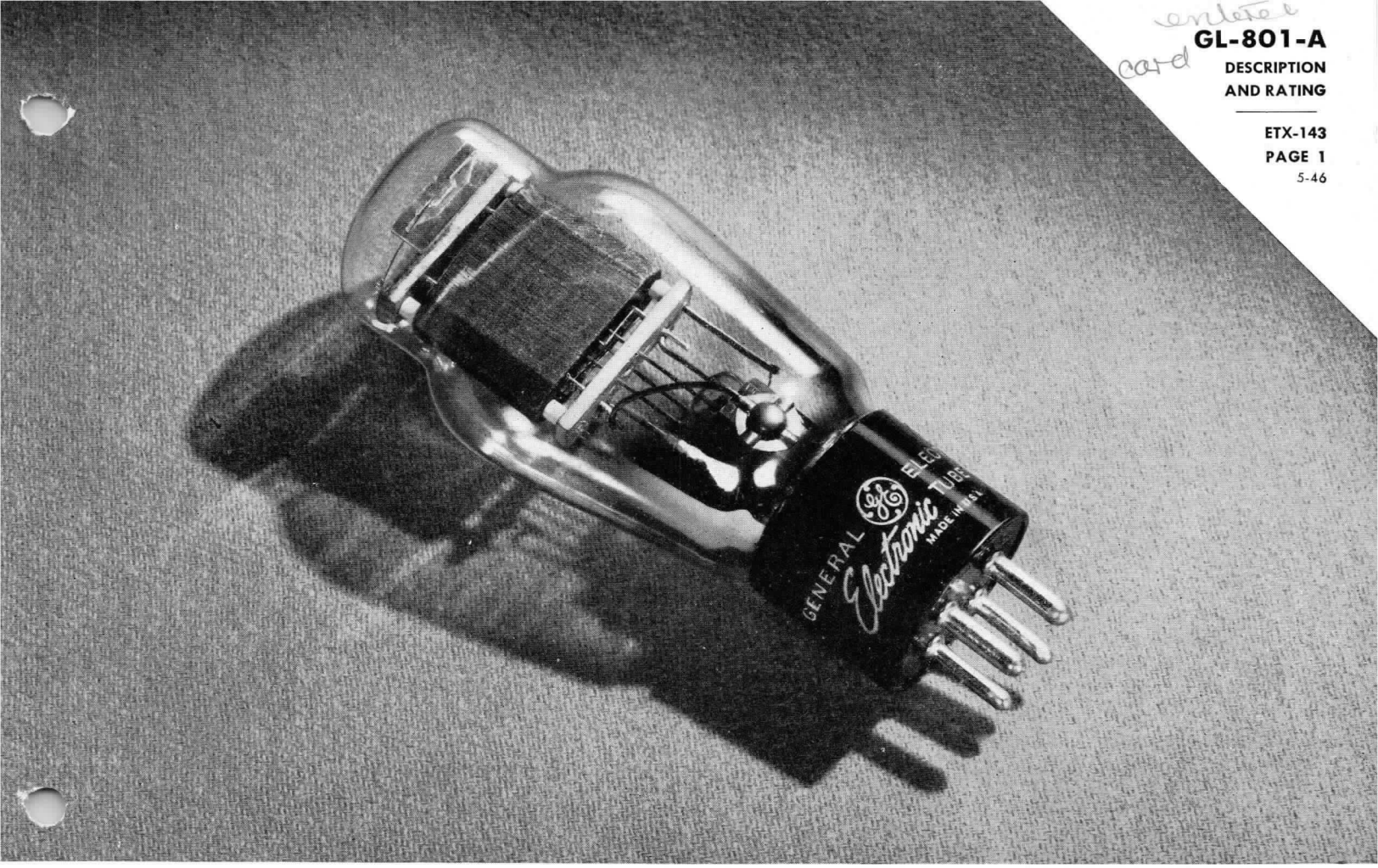

TRIODE

DESCRIPTION

The GL-801-A is a three-electrode high-vacuum tube for use as a radio-frequency amplifier and oscillator at high radio frequencies. It may also be used as an audio-frequency amplifier and modulator. The design of the tube is such that it may be operated at full ratings at frequencies as high as 60 megacycles and at frequencies up to 120 megacycles at reduced ratings.

TECHNICAL INFORMATION

These data are for reference only. For design information refer to specifications.

GENERAL CHARACTERISTICS

Number of electrodes	3	
Electrical		
Cathode—Filamentary		
Filament voltage	7.5	volts
Filament current	1.25	amperes
Amplification factor (I_b = .030)	8	
Grid-plate transconductance	1840	micromhos
Direct interelectrode capacitances:		
Grid-plate	6	micromicrofarads
Grid-filament	4.5	micromicrofarads
Plate-filament	1.5	micromicrofarads
Mechanical		
Base or terminal description	Medium 4-pin ceramic, bayonet	
Net weight, approx	3	ounces
Shipping weight, approx	3	pounds
Mounting position		vertical, base down—horizontal, plane of plate vertical

Electronic TUBE

GENERAL ELECTRIC

TECHNICAL INFORMATION (CONT'D)

MAXIMUM RATINGS AND TYPICAL OPERATING CONDITIONS

CLASS A_1 AUDIO-FREQUENCY POWER AMPLIFIER AND MODULATOR

		Typical Operation		Maximum Ratings	
D-c plate voltage	425	500	600	600	volts
D-c grid voltage§	−40	−45	−55		volts
D-c plate current	18	24	30		milliamperes
Plate dissipation				20	watts
Peak a-f grid voltage	35	40	50		volts
Plate resistance	5000	4600	4300		ohms
Transconductance	1600	1725	1840		micromhos
Load resistance	10200	8000	7800		ohms
U.P.O. 5% second harmonic	1.6	2.3	3.8		watts

CLASS B AUDIO-FREQUENCY POWER AMPLIFIER (TWO TUBES)

D-c plate voltage	400	500	600	600	volts
Maximum signal plate current (per tube)*				70	milliamperes
D-c maximum signal plate input (per tube)*				42	watts
Plate dissipation (per tube)*				20	watts
D-c grid voltage	−50	−60	−75		volts
Peak a-f grid input voltage	270	290	320		volts
Zero signal plate current	8	8	8		milliamperes
Max signal plate current	130	130	130		milliamperes
Max signal driving power, approx	3	3	3		watts
Effective load, plate-to-plate	6000	8000	10000		ohms
Max signal plate power output	27	36	45		watts

CLASS B RADIO-FREQUENCY POWER AMPLIFIER

Carrier conditions per tube for use with a max modulation factor of 1.0

D-c plate voltage	500	600	600	volts
D-c grid voltage△	−60	−75		volts
D-c plate current	45	45	50	milliamperes
Plate input			30	watts
Plate dissipation			20	watts
Peak r-f grid input voltage	85	90		volts
D-c grid current, approx**	0.2	0.2		milliampere
Driving power, approx†**	2.2	2.3		watts
Plate power output	6	7.5		watts

CLASS C RADIO-FREQUENCY POWER AMPLIFIER AND OSCILLATOR—PLATE-MODULATED

Carrier conditions per tube for use with a maximum modulation factor of 1.0

D-c plate voltage	400	500	500	volts
D-c grid voltage△◆	−150	−190	−200	volts
	10000	12700		ohms
D-c plate current	55	55	60	milliamperes
D-c grid current, approx**	15	15	15	milliamperes
Plate input			30	watts
Plate dissipation			13.5	watts
Peak r-f grid input voltage, approx	260	300		volts
Driving power, approx**	4	4.5		watts
Plate power output	14	18		watts

CLASS C RADIO-FREQUENCY POWER AMPLIFIER AND OSCILLATOR

Key-down conditions per tube without modulation‡

D-c plate voltage	500	600	600	volts
D-c grid voltage△π	−125	−150	−200	volts
	8300	10000		ohms
	1560	1875		ohms
D-c plate current	65	65	70	milliamperes
D-c grid current, approx	15	15	15	milliamperes
Plate input			42	watts
Plate dissipation			20	watts
Peak r-f grid input voltage, approx	235	260		volts
Driving power, approx	3.5	4		watts
Plate power output	20	25		watts

*Averaged over any audio-frequency cycle.

§The d-c resistance in the grid circuit should not exceed 0.5 megohm with cathode bias, or 0.1 megohm with fixed bias.

†At crest of audio-frequency cycle.

‡Modulation, essentially negative, may be used if the positive peak of the audio-frequency envelope does not exceed 115 per cent of the carrier conditions.

△With a-c filament supply.

**Subject to wide variation depending on the impedance of the load circuit. High-impedance load circuits require more grid current and driving power to obtain the desired output. Low-impedance circuits need less grid current and driving power but plate circuit efficiency is sacrificed. The driving stage should have a tank circuit of good regulation and should be capable of delivering considerably more than the required driving power.

◈Obtained by grid resistor of value shown, or by combination of grid resistor with either fixed supply or suitably by-passed cathode resistor.

π Obtained from fixed supply, by grid resistor (8300, 10000), or by cathode resistor (1560, 1875). When the 801 is used in the final amplifier or a preceding stage of a transmitter designed for break-in operation and oscillator keying, a small amount of fixed bias must be used to maintain the plate current at a safe value. With a plate voltage of 600 volts, a fixed bias of at least 50 volts should be used.

APPLICATION NOTES

The normal value of grid leak when the tube is used as an oscillator or radio-frequency amplifier (Class C) is in the neighborhood of 10,000 ohms, although this may be replaced by a suitable fixed bias. If self-bias is used the cathode resistor should be approximately 2000 ohms.

The maximum ratings apply only at frequencies below 60 megacycles. For operation at higher frequencies adequate ventilation and normal ambient temperatures must be maintained, and the plate voltage must be reduced as indicated.

Frequency	60	75	120 megacycles
Percentage of maximum rated plate Voltage and plate input			
Class B	100	93	78 per cent
Class C, plate-modulated	100	80	50 per cent
Class C, telegraphy	100	80	50 per cent

GL-801-A AVERAGE PLATE CHARACTERISTICS

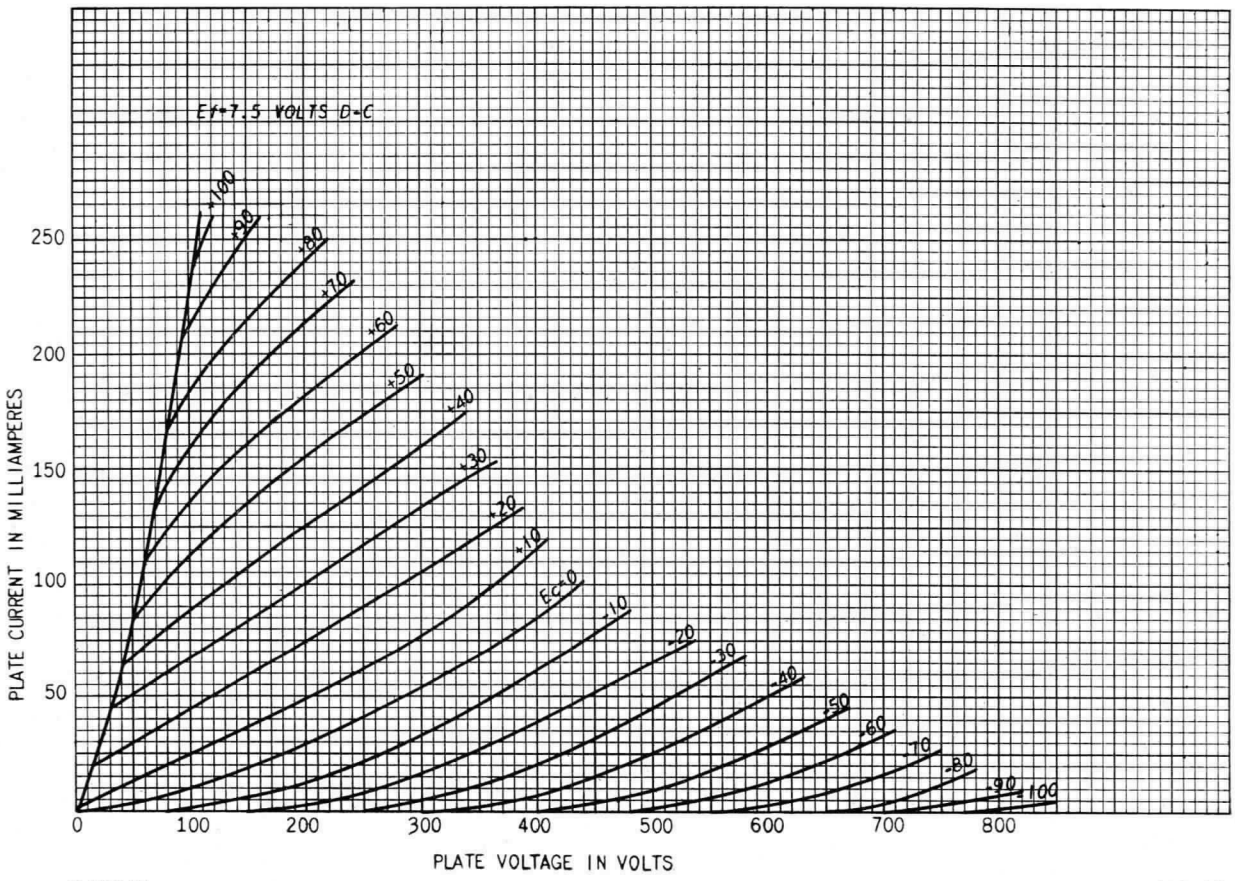

K-6917431

12-10-45

GL-801-A TYPICAL CHARACTERISTICS

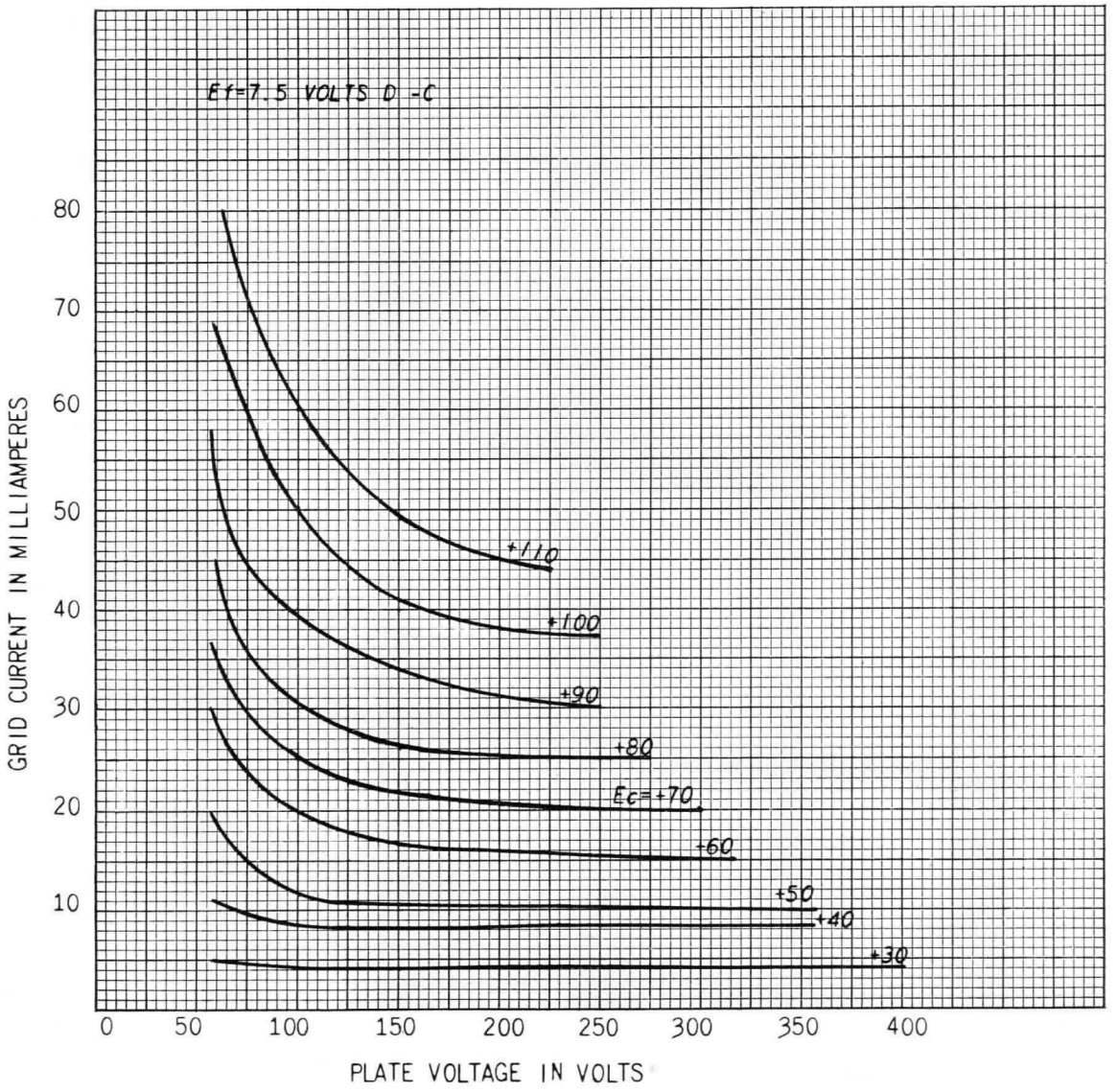

K-6917432

12-10-45

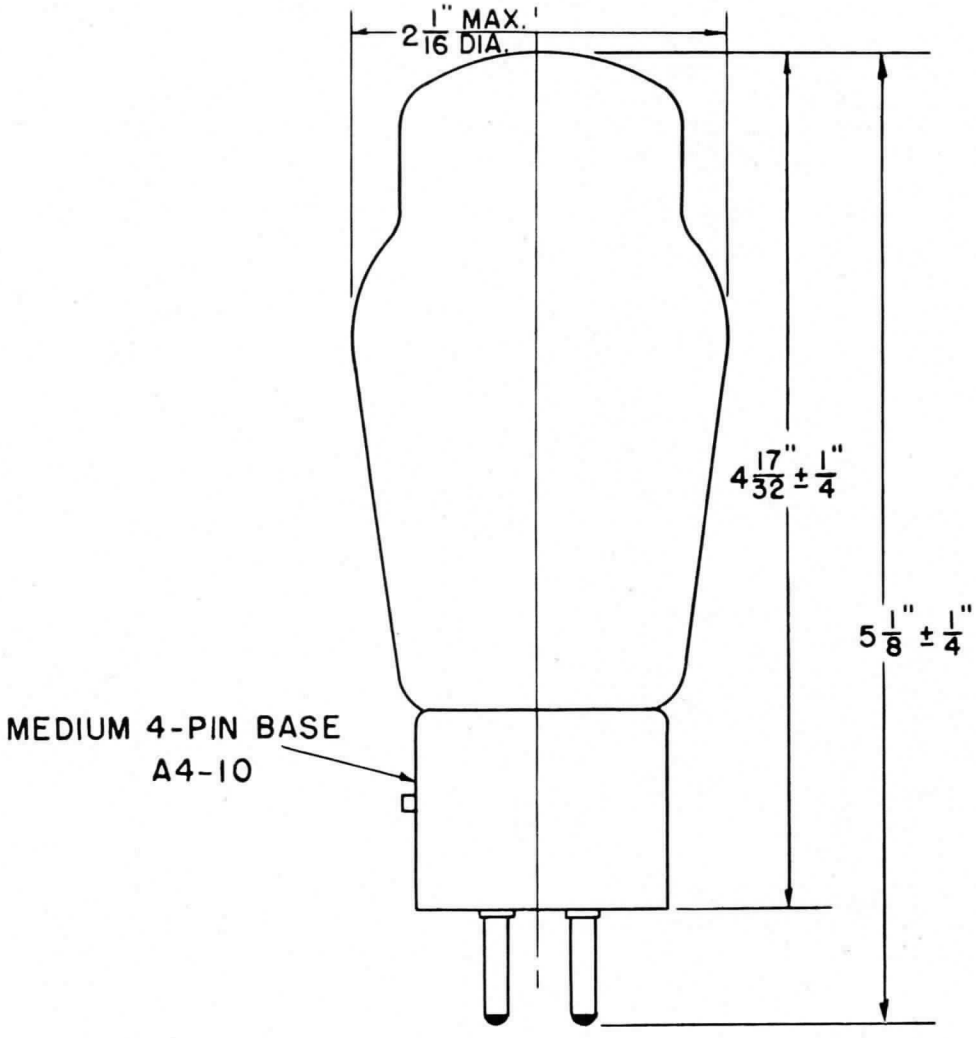

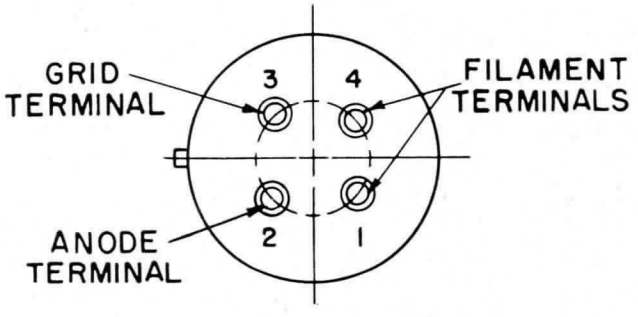

GL-801-A OUTLINE

K-6912326

10-29-45

Electronics Department
GENERAL ELECTRIC
Schenectady, N. Y.

5-46 (7M)
Filing No. 8850

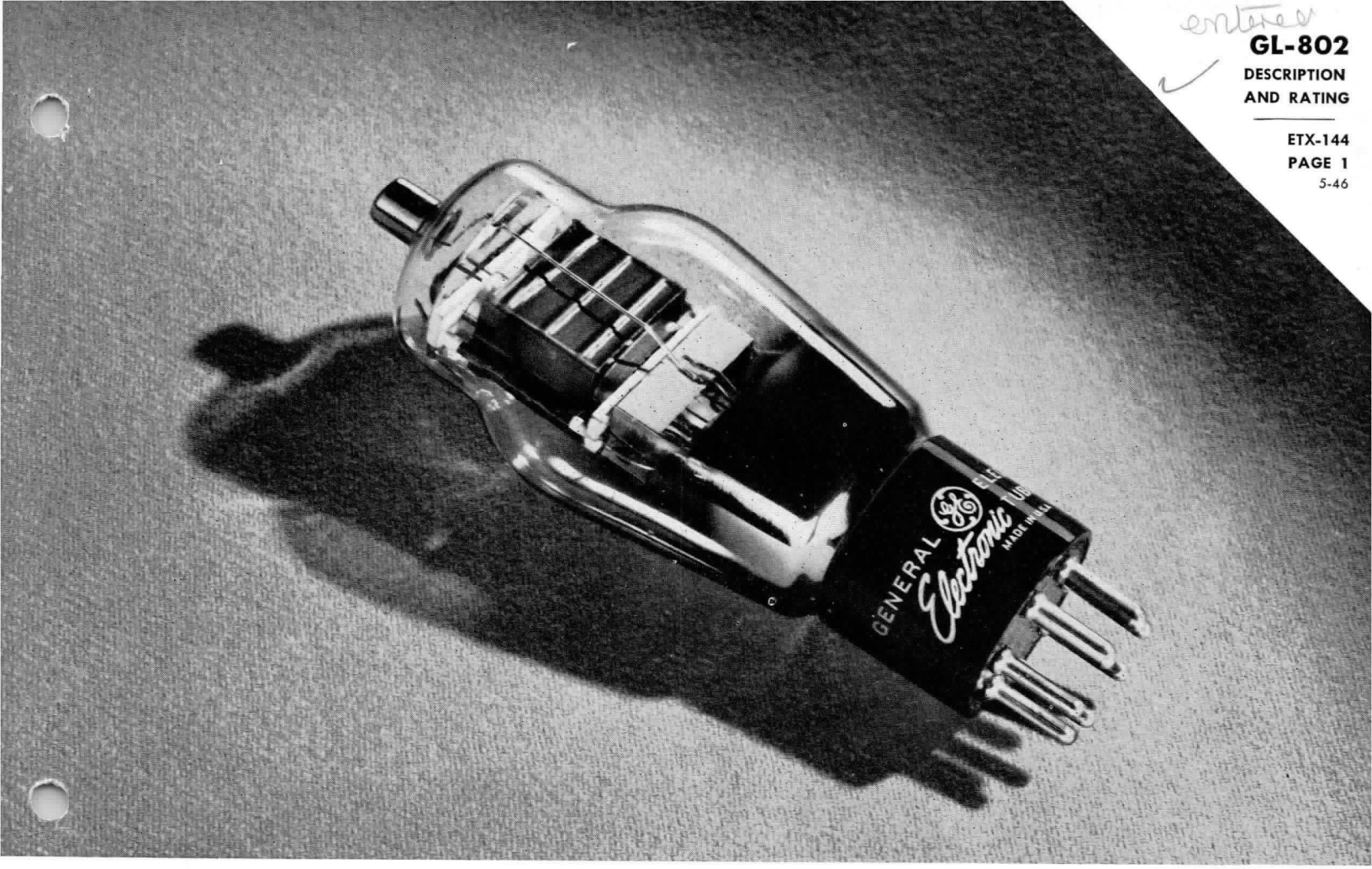

PENTODE

DESCRIPTION

The GL-802 is a pentode transmitting tube of the heater-cathode type having a maximum plate-dissipation rating of 13 watts (ICAS). The tube requires a driving power of only 1 watt or less, depending on the service in which it is used. The versatility of this pentode makes it well-suited for use as a radio-frequency amplifier, frequency multiplier, oscillator, and suppressor-, grid-, or plate-modulated amplifier. It may also be used as a Class A pentode amplifier or modulator. The plate connection is brought out of the tube through a separate seal at the top of the bulb to maintain low grid-plate capacitance. The suppressor and the special internal shield of this tube are connected to individual base pins. Neutralization is unnecessary in adequately shielded circuits. In radio-freqeuncy service, the 802 may be operated at maximum ratings at frequencies as high as 30 megacycles.

TECHNICAL INFORMATION

These data are for reference only. For design information refer to specifications.

GENERAL CHARACTERISTICS

Number of electrodes	5	
Electrical		
Heaterθ—Coated unipotential cathode		
Voltage, a-c or d-c	6.3	volts
Current	0.9	amperes
Transconductance for plate current of 20 ma	2250	micromhos
Direct interelectrode capacitances		
Grid to plate, with external shielding	0.15	max micromicrofarad
Input	12	micromicrofarads
Output	8.5	micromicrofarads

θIn circuits where the cathode is not directly connected to the heater, the potential difference between them should not exceed 100 volts.

GE Electronic TUBE

GENERAL ELECTRIC

TECHNICAL INFORMATION (CONT'D)

Mechanical

Cap	small metal
Base	medium 7-pin bayonet
Net weight, approximate	5 ounces
Shipping weight, approximate	3 pounds
Mounting position	vertical or horizontal

MAXIMUM RATINGS AND TYPICAL OPERTING CONDITIONS

AUDIO-FREQUENCY POWER AMPLIFIER AND MODULATOR—CLASS A

	Typical Operation				Maximum Ratings		
			CCS	ICAS	CCS	ICAS	
D-c plate voltage	400	500	500	600	500	600	volts
D-c screen voltage (Grid No. 2)					250	250	volts
Suppressor (Grid No. 3)	0*	0*	0*	40			volts
D-c screen voltage	250	175	225	250			volts
D-c grid voltage (Grid No. 1)◆	−18	−10	−17	−18.5			volts
From a grid resistor of	450	325	530	490			ohms
Peak a-f grid voltage	18	10	17	−18.5			volts
Internal shield*	—	—	—	—			
D-c plate current	30	25	25	30			milliamperes
Plate input					15	18	watts
D-c screen current	10	6	7	8			milliamperes
Screen input					3	3	watts
Load resistance	10000	18000	16000	13200			ohms
Total harmonic distortion	8	4	10	9			per cent
Power output	5.5	4	6.5	7.6			watts

RADIO-FREQUENCY POWER AMPLIFIER—CLASS B TELEPHONY

Carrier conditions per tube for use with a maximum modulation factor of 1.0

	CCS	ICAS	CCS	ICAS	
D-c plate voltage	400	500	600	500	600	volts
D-c suppressor voltage (Grid No. 3)*†				200	200	volts
D-c screen voltage (Grid No. 2)	150	200	225	250	250	volts
D-c plate current	25	25	30	30	30	milliamperes
Plate input				15	18	watts
Suppressor input				2	2	watts
Screen input				4	4	watts
Plate dissipation				10	13	watts
D-c grid voltage (Grid No. 1)	−22	−28	−30			volts
Peak r-f grid voltage	35	32	35			volts
Internal shield*	—	—	—			
D-c screen current	6.5	7	8			milliamperes
D-c grid current, approximate	1	0	0.5			milliamperes
Driving power, approximate°	0.5	0.18	0.18			watts
Power output, approximate	2.75	3.5	5.3			watts

SUPPRESSOR-MODULATED RADIO-FREQUENCY POWER AMPLIFIER—CLASS C TELEPHONY

Carrier conditions per tube for use with a maximum modulation factor of 1.0

	CCS		ICAS		CCS	ICAS	
D-c plate voltage	400	500	500	600	500	600	volts
D-c screen voltage (Grid No. 2)△					200	250	volts
From a resistor of	8900	10700	10700	14500			ohms
D-c grid voltage (Grid No. 1)	−85	−90	−90	−100	−200	−200	volts
On grid resistor of†	11000	18000	20000	20000			ohms
D-c plate current	18	20	22	30	30	30	milliamperes
D-c grid current	7.5	5	4.5	5	7.5	7.5	milliamperes
Plate input					15	18	watts
Screen input					6	6	watts
Plate dissipation					10	13	watts
D-c suppressor voltage (Grid No. 3)	−40	−53	−45	−45			volts
Peak a-f suppressor voltage	40	53	65	65			volts
Peak r-f grid voltage	125	125	125	125			volts
Internal shield*	—	—	—	—			
D-c screen current	28	28	28	24			milliamperes
Driving power, approximate	0.9	0.6	0.5	0.6			watts
Power output, approximate	2	3	3.5	6.3			watts

◆Obtained from fixed supply or by cathode resistor of value shown. The d-c resistance in the grid circuit should not exceed 10,000 ohms with fixed bias, or 50,000 ohms with cathode bias.

(See page 4 for other references)

TECHNICAL INFORMATION (CONT'D)

GRID-MODULATED RADIO-FREQUENCY POWER AMPLIFIER—CLASS C TELEPHONY

Carrier conditions per tube for use with a maximum modulation factor of 1.0

	Typical Operation		Maximum Ratings		
	CCS	ICAS	CCS	ICAS	
D-c plate voltage	400	500	600	500	600 volts
D-c suppressor voltage (Grid No. 3)*†				200	200 volts
D-c screen voltage (Grid No. 2)	150	200	250	250	250 volts
D-c grid voltage (Grid No. 1)	−105	−130	−130	−200	−200 volts
D-c plate current	25	25	25	30	30 milliamperes
Plate input				15	18 watts
Suppressor input				2	2 watts
Screen input				4	4 watts
Plate dissipation				10	13 watts
Peak a-f grid voltage	40	50	50		volts
Peak r-f grid voltage	125	145	145		volts
Internal shield*	—	—	—		
D-c screen current	7.5	8	8		milliamperes
D-c grid current, approximate	2	1	1		milliamperes
Driving power, approximate°	1	0.8	0.8		watts
Power output, approximate	3	4	6		watts

PLATE-MODULATED RADIO-FREQUENCY POWER AMPLIFIER—CLASS C TELEPHONY

Pentode Connection

Carrier conditions per tube for use with a maximum modulation factor of 1.0

	CCS	ICAS	CCS	ICAS	
D-c plate voltage	400	500	400	500	volts
D-c suppressor voltage (Grid No. 3)	40	40	200	200	volts
D-c screen voltageπ	195	245			volts
Or from resistor of	11500	16300			ohms
D-c grid voltage‡	−40	−40			volts
Or grid resistor of	27000	27000			ohms
D-c plate current	35	40	40	40	milliamperes
D-c grid current	1.5	1.5	7.5	7.5	milliamperes
Plate input			16	20	watts
Suppressor input			2	2	watts
Screen input			4	4	watts
Plate dissipation			6.7	8	watts
Peak r-f grid voltage	55	55			volts
Internal shield*	—	—			
D-c screen current	17	15			milliamperes
Driving power, approximate	0.1	0.1			watt
Power output, approximate	8	12			watts

PLATE-MODULATED RADIO-FREQUENCY POWER AMPLIFIER—CLASS C TELEPHONY

Tetrode Connection—Grids #2 and #3 tied together

Carrier conditions per tube for use with a maximum modulation factor of 1.0

	CCS	ICAS	CCS	ICAS	
D-c plate voltage	400	500	400	500	volts
D-c screen voltageϕ	85	195			volts
From a resistor of	15000	18000			ohms
D-c grid voltage‡	−120	−120			volts
Or from grid resistor of	20000	20000			ohms
D-c plate current	35	40	40	40	milliamperes
D-c grid current	6	6	7.5	7.5	milliamperes
Plate input			16	20	watts
Screen input			6	6	watts
Plate dissipation			6.7	8	watts
Peak r-f grid voltage	160	160			volts
Internal shield*	—	—			
D-c screen current	21	17			milliamperes
Driving power, approximate	0.9	0.9			watt
Power output, approximate	8	12			watts

(See page 4 for other references)

TECHNICAL INFORMATION (CONT'D)

RADIO-FREQUENCY POWER AMPLIFIER AND OSCILLATOR—CLASS C TELEGRAPHY

Pentode Connection

Key-down conditions per tube without modulation¶

	Typical Operation				Maximum Ratings		
	CCS		ICAS	CCS	ICAS	
D-c plate voltage	400	500	500	600	500	600	volts
D-c suppressor voltage (Grid No. 3)	0	0	40	40	200	200	volts
D-c screen voltage (Grid No. 2) ◆◆	200	200	250	250			volts
From a resistor of	8000	13600	20800	22000			ohms
D-c grid voltage (Grid No. 1) △△					−200	−200	volts
From grid resistor of	14000	17000	50000	42000			ohms
From cathode resistor of	1300	1370	1700	1620			ohms
D-c plate current	45	45	45	55	60	60	milliamperes
D-c grid current	7	6	2	2.4	7.5	7.5	milliamperes
Plate input					25	33	milliamperes
Suppressor input					2	2	watts
Screen input					6	6	watts
Plate dissipation					10	13	watts
Peak r-f grid voltage	155	155	155	165			volts
Internal shield*	—	—	—	—			
D-c screen current	25	22	12	16			milliamperes
Driving power, approximate	1.1	0.9	0.25	0.3			watts
Power output, approximate	10	14	16	23			watts

RADIO-FREQUENCY POWER AMPLIFIER AND OSCILLATOR—CLASS C TELEGRAPHY

Tetrode Connection—Grids #2 and #3 tied together

Key-down conditions per tube without modulation

	CCS		ICAS	CCS	ICAS	
D-c plate voltage	400	500	600	500	600	volts
D-c screen voltage (Grid No. 2) ◆◆	200	100	150	250	200	volts
From a resistor of	27000	27000	30000			ohms
D-c grid voltage (Grid No. 1) △△				−200	−200	volts
From a grid resistor of	8600	10000	10000			ohms
From a cathode resistor of	1000	1000	860			ohms
D-c plate current	45	45	55	60	60	milliamperes
D-c grid current	7	6	6	7.5	7.5	milliamperes
Plate input				25	33	watts
Screen input				6	6	watts
Plate dissipation				10	13	watts
Peak r-f grid voltage	90	90	90			volts
Internal shield*	—	—	—			
D-c screen current	15	15	15			milliamperes
Driving power, approximate	0.7	0.5	0.5			watt
Power output, approximate	10	12	23			watts

APPLICATION NOTES

The GL-802 can be operated at frequencies as high as 30 megacycles. The tube may be operated at higher frequencies provided the maximum values of plate voltage and power input are reduced as the frequency is raised (other maximum ratings are the same as shown above).

The tabulation below shows the highest percentage of maximum plate voltage and power input that can be used up to 100 megacycles for the various classes of service. Special attention should be given to adequate ventilation of the bulb at these frequencies.

Frequency	30	55	100	megacycles
Maximum permissible percentage of maximum rated plate voltage and plate input				
Telephony, Class B	100	88	76	per cent
Telephony, Class C, grid-modulated	100	88	76	per cent
Telephony, Class C, suppressor-modulated	100	88	76	per cent
Telephony C, plate-modulated	100	77	55	per cent
Telegraphy, Class C	100	77	55	per cent

*Connected to cathode at socket.
†Applying a positive voltage of not over 40 volts to suppressor gives slightly increased output.
‡Obtained by grid resistor shown or by partial self-bias methods.
°At crest of a-f cycle with modulation factor of 1.0.
△Voltage taken from unmodulated plate-voltage supply through resistor of value shown.
+From a fixed supply or grid resistor of value shown.
πFrom modulated fixed supply or modulated plate-voltage supply through resistor of value shown.
ϕPreferably from unmodulated plate-voltage supply through resistor of value shown.
△△Obtained from grid resistor shown, cathode resistor shown or from fixed supply.
¶Modulation, essentially negative, may be used if the positive peak of the a-f envelope does not exceed 115 per cent of the carrier conditions.
◆◆From fixed supply or plate-voltage supply through resistor of value shown. Under key-up conditions, maximum screen voltage should not exceed 500 volts. Series screen resistor of value shown should not be used except where GL-802 is employed as a buffer amplifier and is not keyed.

AVERAGE PLATE CHARACTERISTICS

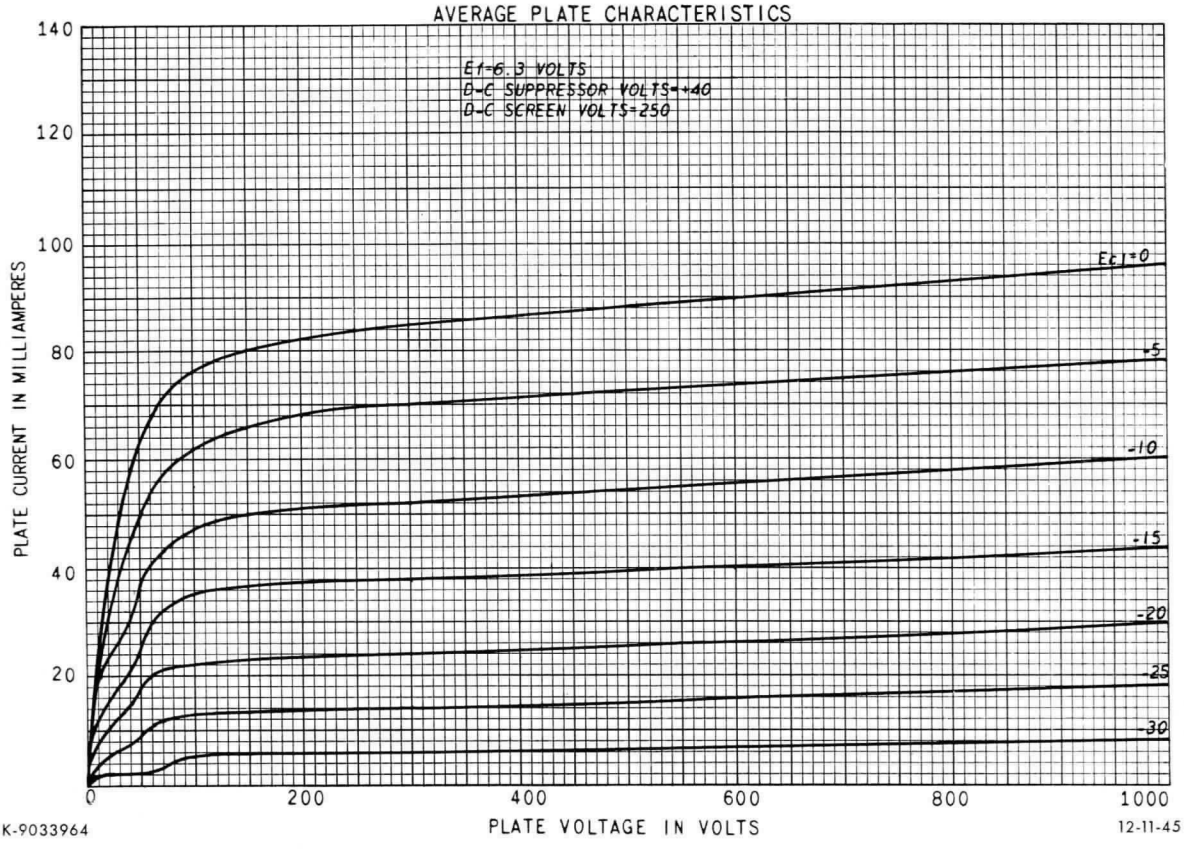

K-9033964 12-11-45

AVERAGE PLATE CHARACTERISTICS

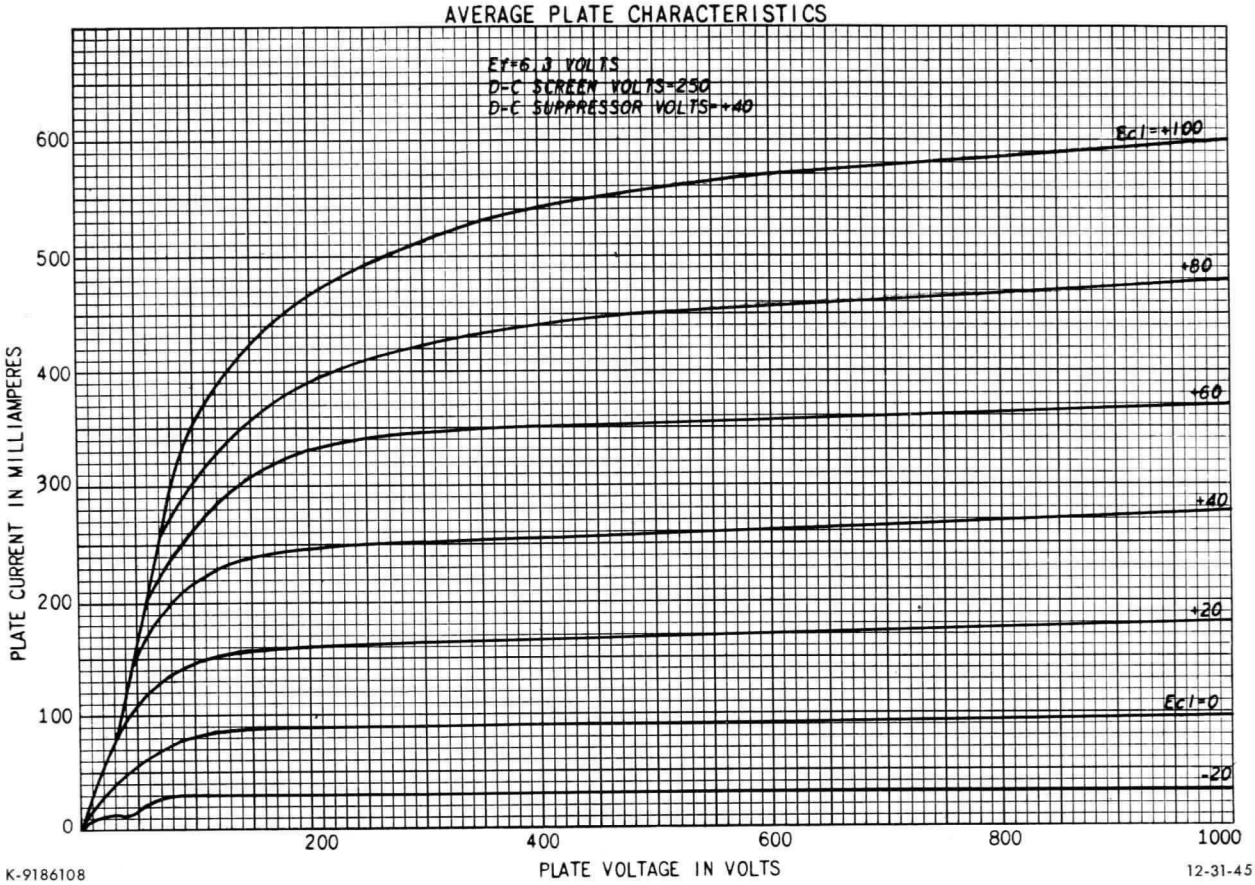

K-9186108 12-31-45

GL-802 AVERAGE CHARACTERISTICS

(E_f = 6.3 VOLTS, D-C SCREEN VOLTS = 250, D-C SUPPRESSOR VOLTS = +40)

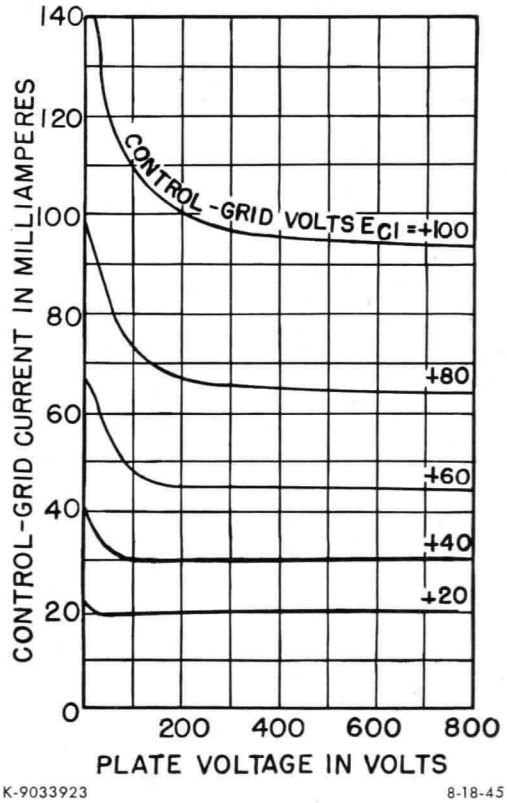

K-9033923 8-18-45

GL-802 AVERAGE CHARACTERISTICS

(E_f = 6.3 VOLTS, D-C SCREEN VOLTS = 250, D-C SUPPRESSOR VOLTS = +40)

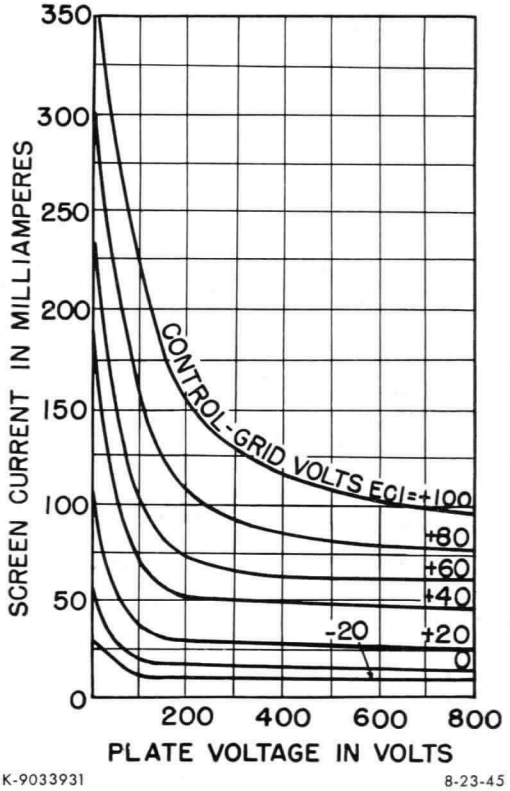

K-9033931 8-23-45

GL-802 CONTROL-GRID MODULATION CHARACTERISTICS

(E_f = 6.3 VOLTS, D-C PLATE VOLTS = 500, D-C SCREEN VOLTS = 200, D-C SUPPRESSOR VOLTS = 0)
(D-C GRID BIAS VOLTS = −130, PEAK R-F GRID VOLTS = 145, INTERNAL SHIELD CONNECTED TO CATHODE)
Note: Instantaneous Values Ignore Instantaneous R-f Components

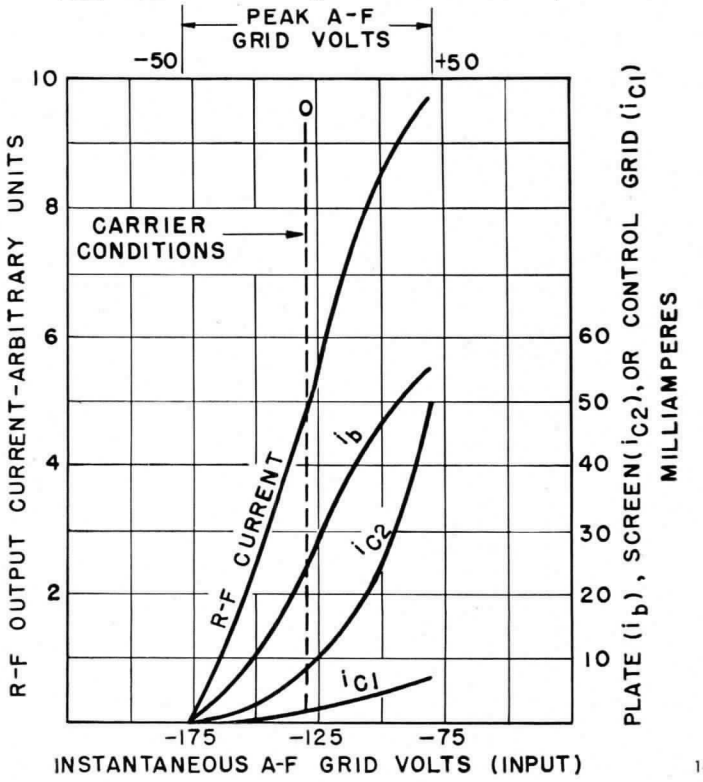

K-9186080 1-9-46

GL-802 SUPPRESSOR MODULATION CHARACTERISTICS

(E_f = 6.3 VOLTS, D-C PLATE VOLTS = 500, D-C SCREEN VOLTS = 200, D-C SUPPRESSOR VOLTS = −45)
(D-C GRID BIAS VOLTS = −90, PEAK R-F GRID VOLTS = 125, INTERNAL SHIELD CONNECTED TO CATHODE)
Note: Instantaneous Values Ignore Instantaneous R-f Components

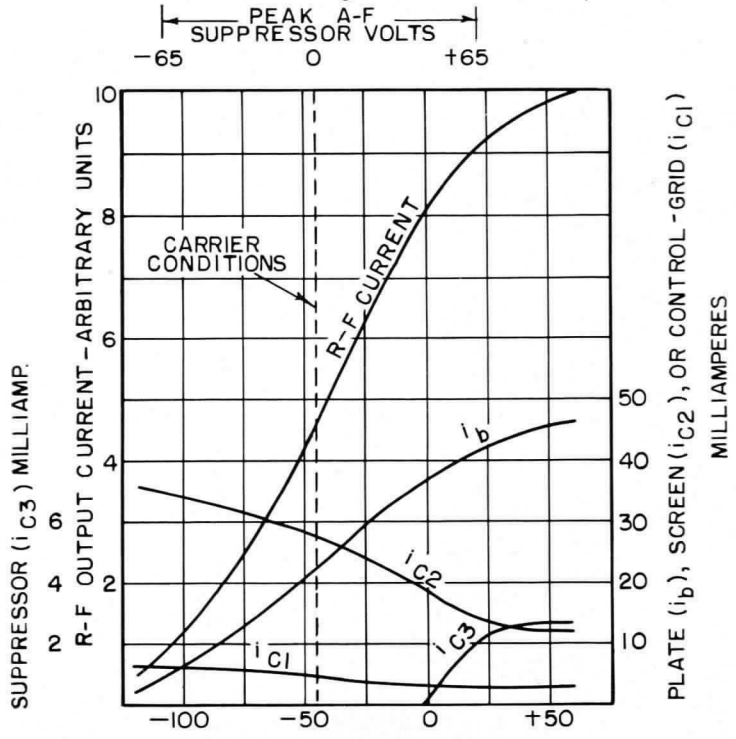

K-9033988 1-9-46

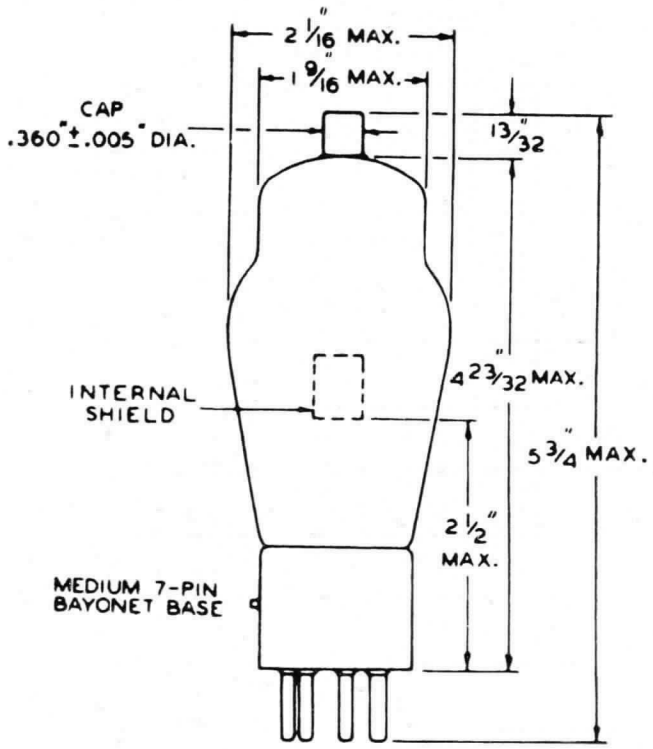

Bottom View of
Socket Connections

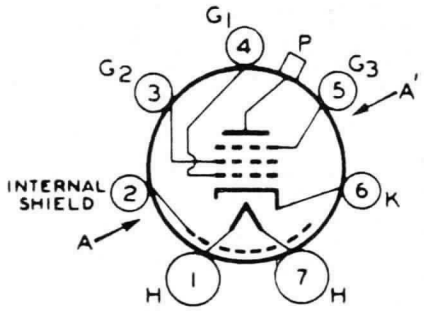

AA'=PLANE OF ELECTRODES

GL-802 OUTLINE

K-9033891 7-26-45

Electronics Department
GENERAL ELECTRIC
Schenectady, N. Y.

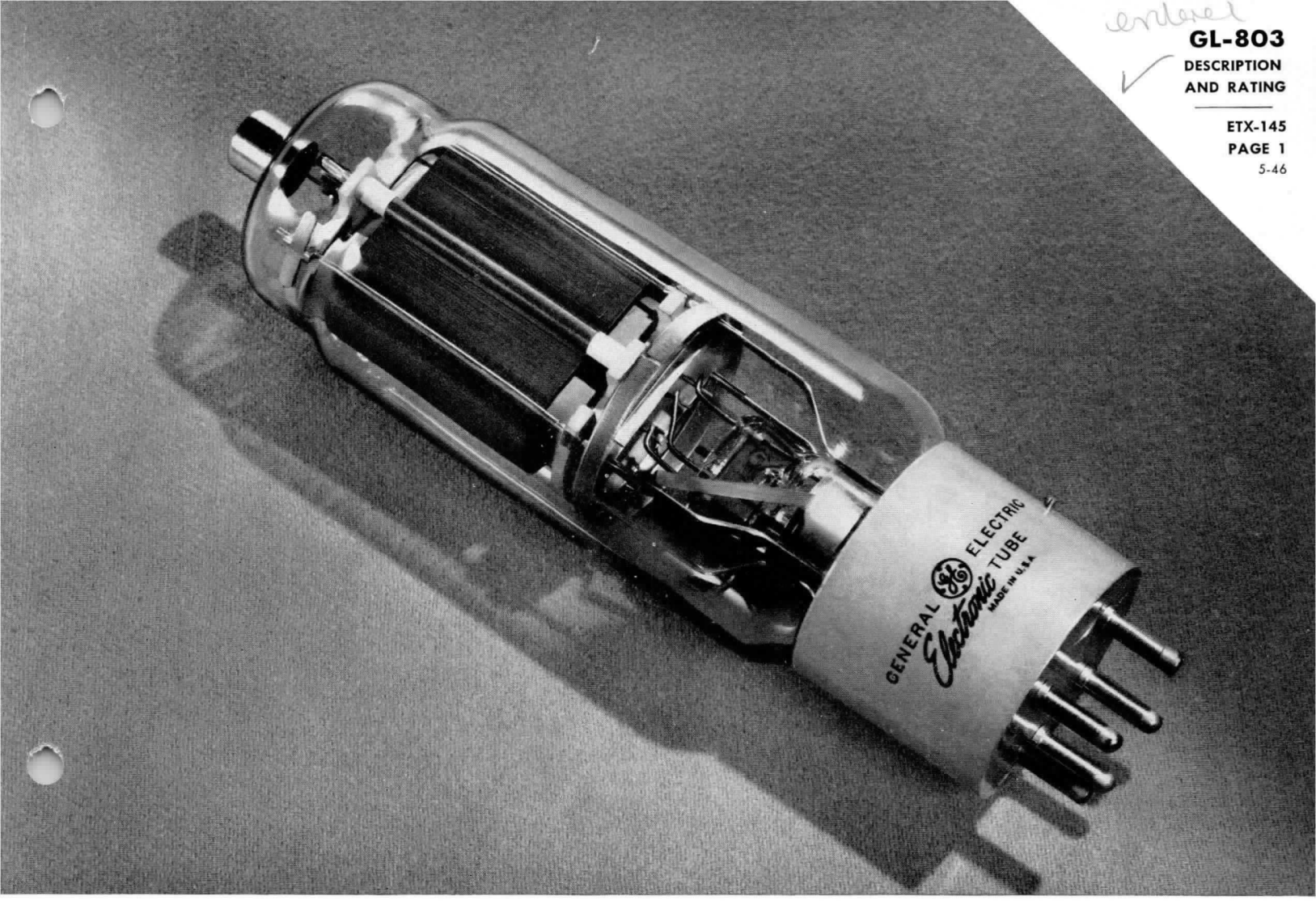

PENTODE

DESCRIPTION

The GL-803 is a pentode transmitting tube of the thoriated-tungsten filament type for use as a radio-frequency amplifier, frequency multiplier, oscillator, and suppressor-, grid-, or plate-modulated amplifier. The tube has a maximum plate dissipation of 125 watts. The plate connection is brought out through a separate seal at the top of the bulb to maintain low grid-plate capacitance. Neutralization is unnecessary in adequately shielded circuits. The suppressor is connected to its individual base pin. The 803 may be operated at maximum ratings at frequencies as high as 20 megacycles.

TECHNICAL INFORMATION

These data are for reference only. For design information refer to specifications.

GENERAL CHARACTERISTICS

Number of electrodes	5	
Electrical		
Cathode—Filamentary		
Filament voltage, a-c or d-c	10.0	volts
Filament current	5	amperes
Transconductance, for plate current of 62.5 ma	4000	micromhos
Direct interelectrode capacitances		
Grid-plate, with external shielding	0.15 max	micromicrofarad
Input	17.5	micromicrofarads
Output	29	micromicrofarads
Frequency for maximum ratings	20	megacycles

GE Electronic TUBE

GENERAL ELECTRIC

TECHNICAL INFORMATION (CONT'D)

Mechanical

Cap	medium metal
Base	giant 5-pin ceramic, bayonet
Net weight, approximate	10 ounces
Shipping weight, approximate	3 pounds
Mounting position	vertical, base up or down

MAXIMUM RATINGS AND TYPICAL OPERATING CONDITIONS

AS RADIO-FREQUENCY POWER AMPLIFIER PENTODE—CLASS B TELEPHONY

Carrier conditions per tube for use with a maximum modulation factor of 1.0

D-c plate voltage	1250	1500	2000	2000	volts
D-c suppressor voltage, Grid No. 3	40	40	40	500	volts
D-c screen voltage, Grid No. 2	500	550	600	600	volts
D-c grid voltage, Grid No. 1*	−30	−35	−40		volts
Peak r-f grid voltage	90	70	55		volts
D-c plate current	130	110	80	160	milliamperes
Plate input				180	watts
Suppressor input				10	watts
Screen input				20	watts
Plate dissipation				125	watts
D-c screen current	33	30	20		milliamperes
D-c grid current, approximate	8	5	3		milliamperes
Driving power, approximate†	4.5	3	1.5		watts
Power output, approximate	52	53	53		watts

AS SUPPRESSOR-MODULATED RADIO-FREQUENCY POWER AMPLIFIER—CLASS C TELEPHONY

Carrier conditions per tube for use with a maximum modulation factor of 1.0

D-c plate voltage	1250	1500	2000	2000	volts
Dc suppressor voltage, Grid No. 3	−70	−90	−110		volts
D-c grid voltage				−500	volts
From a fixed supply of	−110	−100	−100		volts
From a grid resistor of	5000	5000	7000		ohms
Peak r-f grid voltage	200	190	170		volts
Peak a-f suppressor voltage	110	130	150		volts
D-c plate current	100	100	80	110	milliamperes
D-c screen current	70	70	48		milliamperes
D-c grid current, approximate	22	20	15	50	milliamperes
Screen resistor	13000	17000	35000		ohms
Driving power, approximate	4	3.5	2.5		watts
Power output, approximate	40	50	53		watts
D-c screen voltage, Grid No. 2				600	volts
Plate input				180	watts
Screen input				30	watts
Plate dissipation				125	watts

AS GRID-MODULATED RADIO-FREQUENCY POWER AMPLIFIER PENTODE—CLASS C TELEPHONY

Carrier conditions per tube for use with a maximum modulation factor of 1.0

D-c plate voltage	1250	1500	2000	2000	volts
D-c suppressor voltage, Grid No. 3	40	40	40	500	volts
D-c screen voltage, Grid No. 2	500	550	600	600	volts
D-c grid voltage, Grid No. 1	−100	−90	−80	−500	volts
Peak r-f grid voltage	160	130	100		volts
Peak a-f grid voltage	75	65	50		volts
D-c plate current	130	110	80	160	milliamperes
D-c screen current	30	25	20		milliamperes
D-c grid current, approximate	8	6	4		milliamperes
Driving power, approximate†	4	3	2		watts
Power output, approximate	52	53	53		watts
Plate input				180	watts
Suppressor input				10	watts
Screen input				20	watts
Plate dissipation				125	watts

TECHNICAL INFORMATION (CONT'D)

AS PLATE-MODULATED RADIO-FREQUENCY POWER AMPLIFIER PENTODE—CLASS C TELEPHONY

Carrier conditions per tube for use with a maximum modulation factor of 1.0

D-c plate voltage	1250	1600	1600	volts
D-c suppressor voltage, Grid No. 3	100	100	500	volts
D-c screen voltage, Grid No. 2	400	500	500	volts
Dic grid voltage, Grid No. 1			−500	volts
From a fixed supply of	−80	−80		volts
From a grid resistor of	4000	4000		ohms
Peak r-f grid voltage	180	180		volts
D-c plate current	150	150	160	milliamperes
D-c screen current	55	55		milliamperes
D-c grid current, approximate	20	20	50	milliamperes
Screen resistor‡	16000	20000		ohms
Driving power, approximate	4	4		watts
Power output, approximate	125	155		watts
Plate input			250	watts
Suppressor input			10	watts
Screen input			20	watts
Plate dissipation			85	watts

AS PLATE-MODULATED RADIO-FREQUENCY POWER AMPLIFIER TETRODE—CLASS C TELEPHONY

Carrier conditions per tube for use with a maximum modulation factor of 1.0

Grids No. 2 and No. 3 connected together

D-c plate voltage	1250	1600	1600	volts
D-c screen voltage, Grids No. 2 and 3	130	130	500	volts
D-c grid voltage, Grid No. 1			−500	volts
From a fixed supply of	−180	−180		volts
From a grid resistor of	4000	4000		ohms
Peak r-f grid voltage	305	320		volts
D-c plate current	150	150	160	milliamperes
D-c screen current	75	75		milliamperes
D-c grid current, approximate	45	45	50	milliamperes
Screen resistor§	15000	20000		ohms
Driving power, approximate	15	15		watts
Power output, approximate	125	155		watts
Plate input			250	watts
Screen input			30	watts
Plate dissipation			85	watts

AS RADIO-FREQUENCY POWER AMPLIFIER AND OSCILLATOR PENTODE—CLASS C TELEGRAPHY

Key-down conditions per tube without modulation ◆

D-c plate voltage	1250	1500	2000	2000	volts
D-c suppressor voltage, Grid No. 3	40	40	40	500	volts
D-c screen voltage, Grid No. 2	500	500	500	600	volts
D-c grid voltage, Grid No. 1				−500	volts
From a fixed supply of	−90	−90	−90		volts
From a cathode resistor of	415	415	415		ohms
From a grid resistor of	7500	7500	7500		ohms
Peak r-f grid voltage	175	175	175		volts
D-c plate current	160	160	160	175	milliamperes
D-c screen current	45	45	45		milliamperes
D-c grid current, approximate	12	12	12	50	milliamperes
Screen resistor	not recommended				
Driving power, approximate	2	2	2		watts
Power output, approximate	130	160	210		watts
Plate input				350	watts
Suppressor input				10	watts
Screen input				30	watts
Plate dissipation				125	watts

TECHNICAL INFORMATION (CONT'D)

AS RADIO-FREQUENCY POWER AMPLIFIER AND OSCILLATOR TETRODE—CLASS C TELEGRAPHY

Key-down conditions per tube without modulation ◈

Grids No. 2 and No. 3 connected together

D-c plate voltage	1250	1500	2000	2000	volts
D-c screen voltage, Grids No. 2 and 3	150	150	150	600	volts
D-c grid voltage, Grid No. 1				−500	volts
From a fixed supply of	−90	−90	−90		volts
From a cathode resistor of	445	445	445		ohms
From a grid resistor of	3500	3500	3500		ohms
Peak r-f grid voltage	190	190	190		volts
D-c plate current	160	160	160	175	milliamperes
D-c screen current	15	15	15		milliamperes
D-c grid current, approximate	28	27	26	50	milliamperes
Screen resistor	not recommended				
Driving power, approximate	4.6	4.4	4.4		watts
Power output, approximate	130	160	210		watts
Plate input				350	watts
Screen input				30	watts
Plate dissipation				125	watts

* Grid voltages are given with respect to the midpoint of filament operated on alternating current. If direct current is used, each stated value of grid voltage should be decreased by one-half the filament voltage and the circuit returns connected to the negative end of the filament.

† At crest of audio-frequency cycle with modulation factor of 1.0.

‡ Connected to modulated plate-voltage supply.

§ Connected to unmodulated plate-voltage supply.

◈ Modulation, essentially negative, may be used if the positive peak of the audio-frequency envelope does not exceed 115 per cent of the carrier conditions.

APPLICATION NOTES

The maximum ratings apply only at frequencies below 20 megacycles. For operation at higher frequencies, adequate ventilation and normal ambient temperatures must be maintained, and the plate voltage must be reduced as indicated.

Frequency	20	40	60	megacycles
Percentage of maximum rated plate voltage and plate input				
Class B, r-f	100	86	80	per cent
Class C, grid- or suppressor-modulation	100	86	80	per cent
Class C, plate-modulation	100	77	60	per cent
Class C, telegraphy	100	77	60	per cent

GL-803 AVERAGE CHARACTERISTICS

(E_f = 10 VOLTS D-C, D-C SCREEN VOLTS = 600, D-C SUPPRESSOR VOLTS = +40)

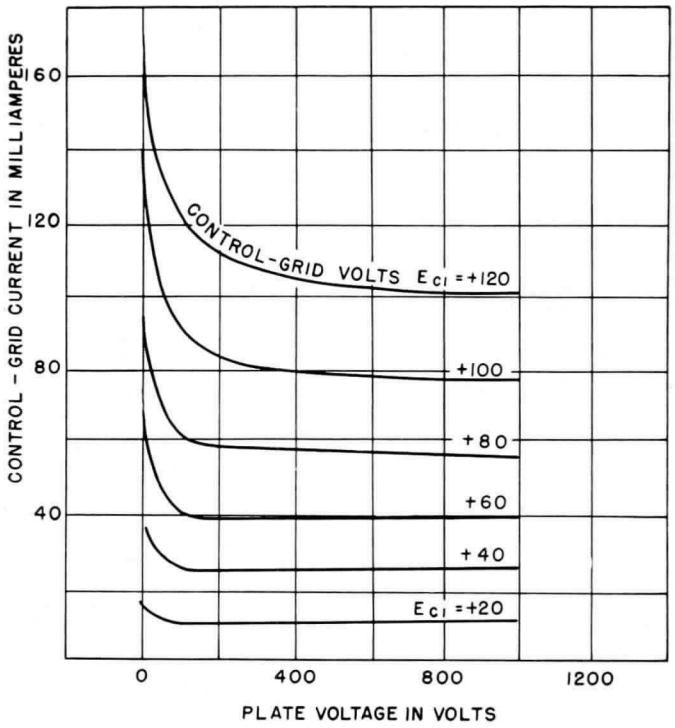

K-9033955 10-8-45

GL-803 AVERAGE PLATE CHARACTERISTICS

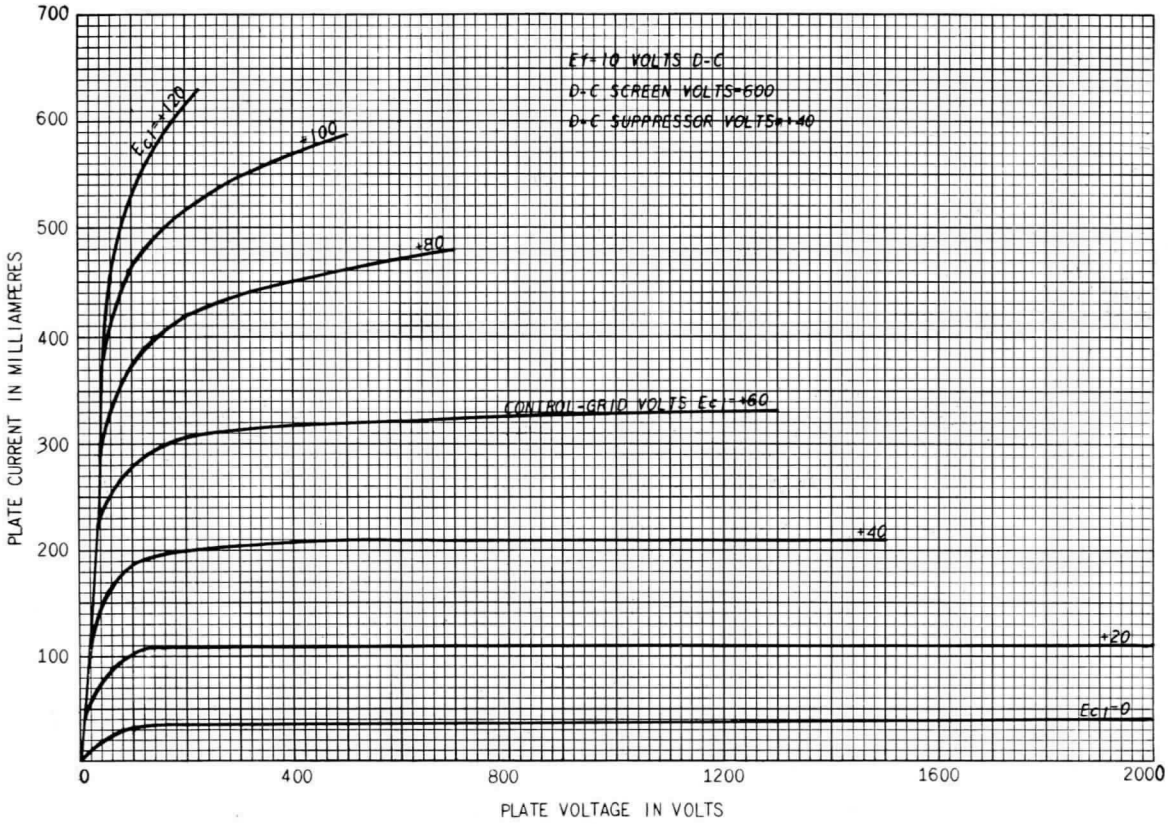

K-9186057 1-9-46

GL-803 AVERAGE CHARACTERISTICS

(E_f = 10 VOLTS D-C, D-C SCREEN VOLTS = 600, D-C SUPPRESSOR VOLTS = +40)

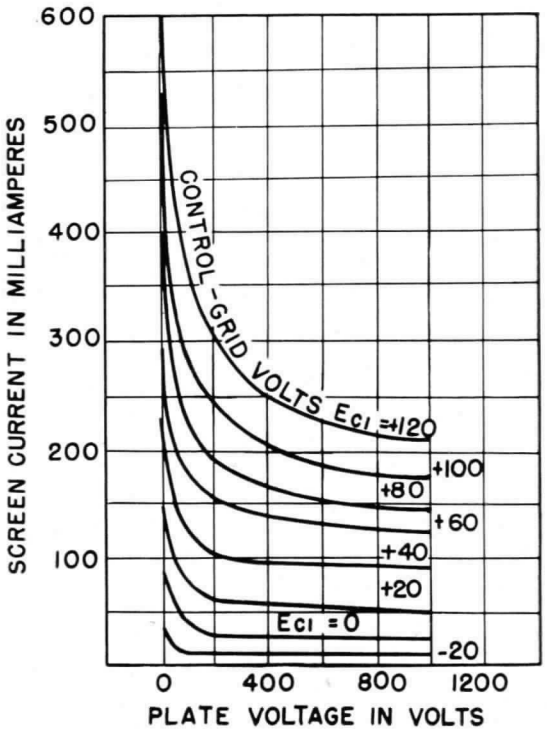

K-9033927 8-22-45

GL-803 OPERATION CHARACTERISTICS

CLASS B R-F AMPLIFIER

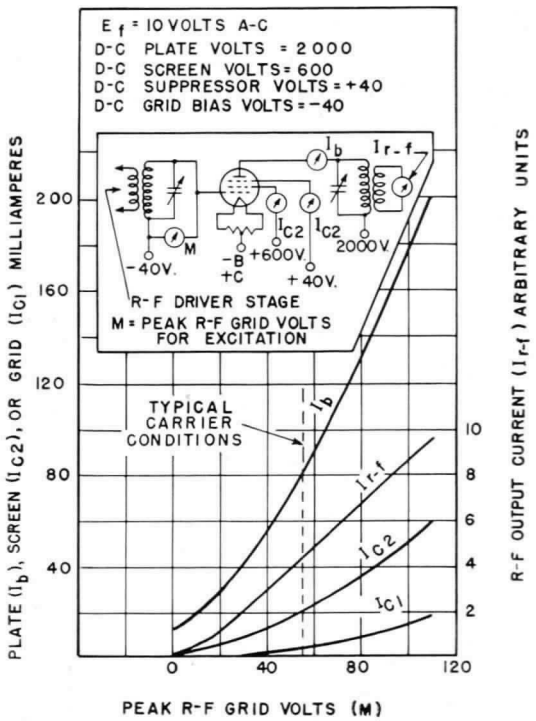

K-9186081 1-9-46

GL-803 GRID-MODULATION CHARACTERISTICS

(E_f=10 VOLTS A-C, D-C PLATE VOLTS=2000, D-C SCREEN VOLTS=600)
(D-C SUPPRESSOR VOLTS=+40, D-C GRID BIAS VOLTS=−80, PEAK R-F GRID VOLTS=100)
Note: Instantaneous Valves Ignore Instantaneous R-f Components

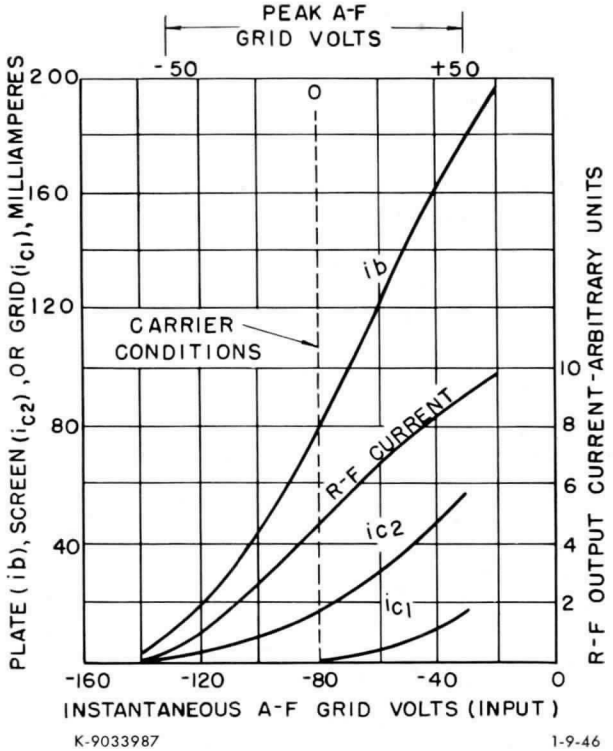

K-9033987 1-9-46

GL-803 SUPPRESSOR MODULATION CHARACTERISTICS

(E_f=10 VOLTS A-C, D-C PLATE VOLTS=2000, D-C SCREEN VOLTS=2000 MINUS DROP IN SERIES SCREEN RESISTOR OF 3500 OHMS
(D-C SUPPRESSOR VOLTS=110, D-C GRID BIAS VOLTS=VALVE SUPPLIED BY 7000-OHM GRID LEAK, PEAK R-F GRID VOLTS=170)
Note: Instantaneous Valves Ignore Instantaneous R-f Components

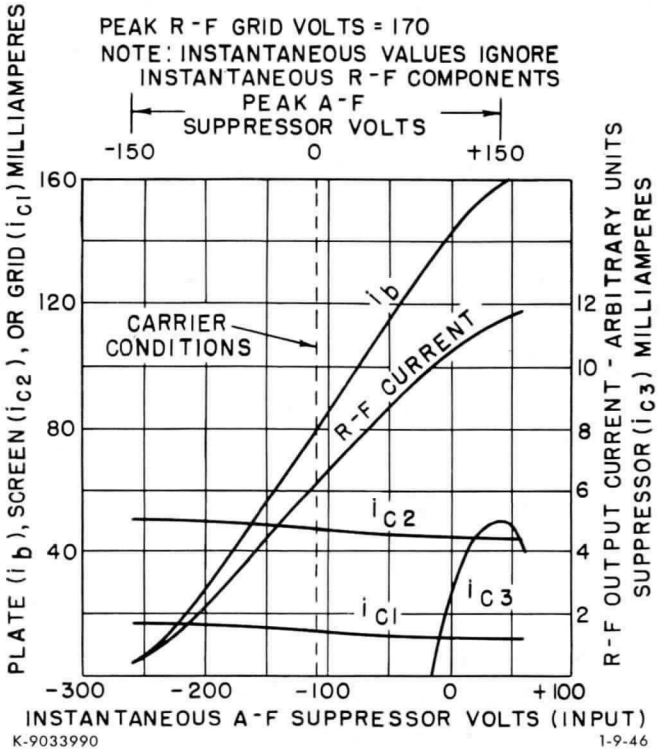

K-9033990 1-9-46

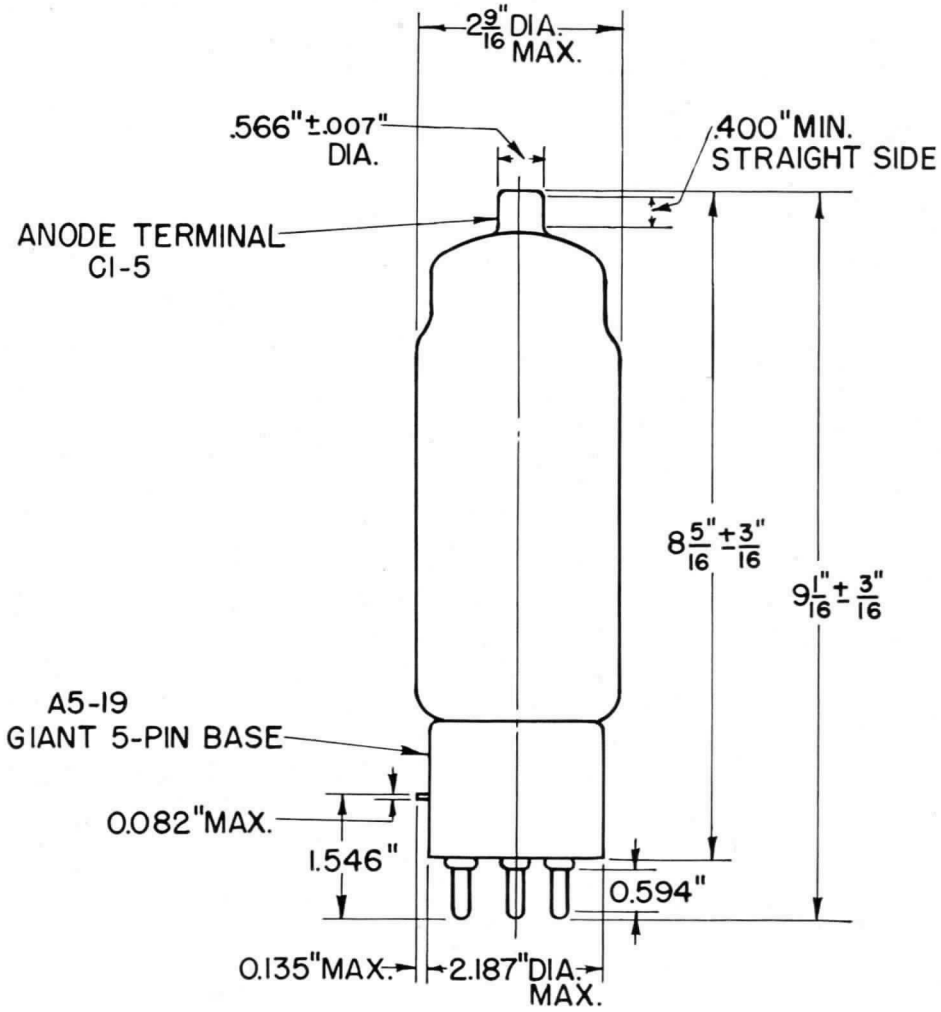

BOTTOM VIEW
BASING DIAGRAM

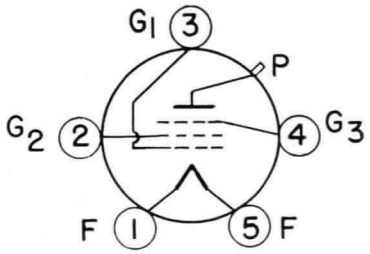

GL-803 OUTLINE

K-9033887 7-10-45

Electronics Department
GENERAL ELECTRIC
Schenectady, N. Y.

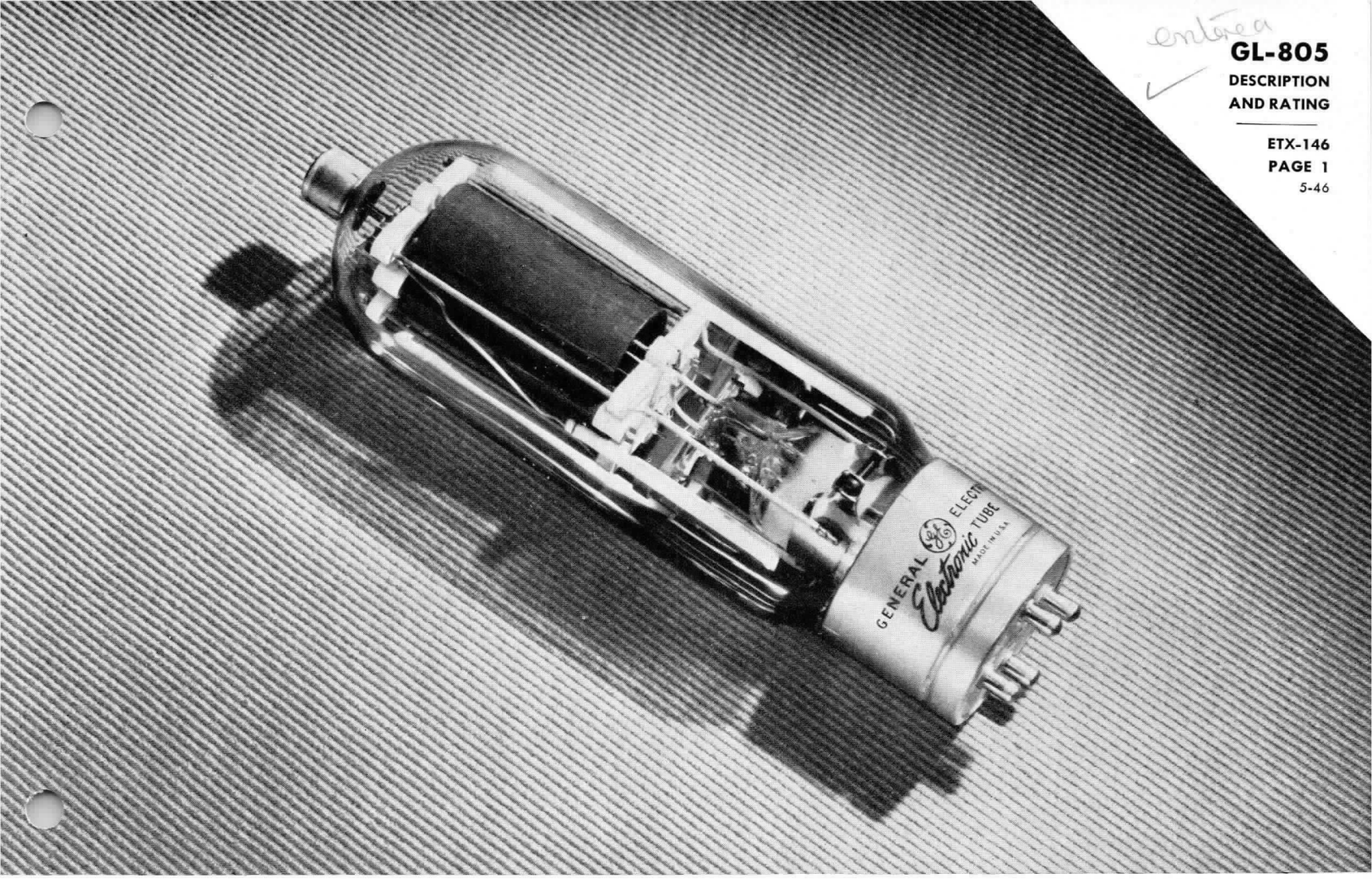

TRIODE

DESCRIPTION

The 805 is a high-mu, three-electrode tube designed for use as a radio-frequency amplifier, Class B modulator and oscillator. Valuable characteristics of this tube are high-power output at relatively low plate voltage and unusually low grid-bias requirements. This tube may be operated at maximum ratings at frequencies as high as 30 megacycles and up to 80 megacycles at reduced ratings.

TECHNICAL INFORMATION

These data are for reference only. For design information refer to specifications.

GENERAL CHARACTERISTICS

Number of electrodes	3	
Electrical		
Cathode—Filamentary		
Filament voltage	10.0	volts
Filament current	3.25	amperes
Direct interelectrode capacitances:		
Grid-plate	6.5	micromicrofarads
Input	8.5	micromicrofarads
Output	10.5	micromicrofarads
Frequency for maximum ratings	30	megacycles

Electronic TUBE

GENERAL ELECTRIC

TECHNICAL INFORMATION (CONT'D)

Mechanical

Base or terminal description	Jumbo 4-large pin
Type of cooling	Natural ventilation
Net weight, approx	8 ounces
Mounting position	vertical, base down—horizontal, plane of plate vertical

MAXIMUM RATINGS AND TYPICAL OPERATING CONDITIONS

CLASS B AUDIO-FREQUENCY POWER AMPLIFIER (TWO TUBES):

D-c plate voltage	1250	1500	1500	volts
Maximum signal plate current (per tube)*			210	milliamperes
D-c maximum signal plate input (per tube)*			315	watts
Plate dissipation (per tube)*			125	watts
D-c grid voltage		—16		volts
Peak a-f grid input voltage	235	280		volts
Zero signal plate current	148	84		milliamperes
Maximum signal plate current	400	400		milliamperes
Maximum signal plate input*	500	600		watts
Maximum signal driving power, approx.	6	7		watts
Effective load, plate-to-plate	6700	8200		ohms
Maximum signal plate power output	300	370		watts

CLASS B RADIO-FREQUENCY POWER AMPLIFIER

Carrier conditions per tube for use with a max modulation factor of 1.0

D-c plate voltage	1250	1500	1500	volts
D-c grid voltage		—10		volts
D-c plate current	135	115	150	milliamperes
Plate input			185	watts
Plate dissipation			125	watts
Peak r-f grid input voltage	75	70		volts
D-c grid current, approx	15	15		milliamperes
Driving power, approx**	11	7.5		watts
Plate power output	55	57.5		watts

CLASS C RADIO-FREQUENCY POWER AMPLIFIER AND OSCILLATOR—PLATE MODULATED

Carrier conditions per tube for use with a max modulation factor of 1.0

D-c plate voltage	1000	1250	1250	volts
D-c grid voltage	—155	—160	—500	volts
D-c plate current	160	160	175	milliamperes
D-c grid current, approx.	60	60	70	milliamperes
Plate input			220	watts
Plate dissipation			85	watts
Peak r-f grid input voltage, approx.	295	300		volts
Driving power, approx.	16	16		watts
Plate power output	110	140		watts

*Averaged over any audio-frequency cycle.
**At crest of audio-frequency cycle.
†Modulation, essentially negative, may be used if the positive peak of the audio-frequency envelope does not exceed 115 per cent of the carrier conditions.

CLASS C RADIO-FREQUENCY POWER AMPLIFIER AND OSCILLATOR

Key-down conditions per tube without modulation†

D-c plate voltage	1000	1250	1500	1500	volts
D-c grid voltage	—95	—100	—105	—500	volts
D-c plate current	200	200	200	210	milliamperes
D-c grid current, approx.	40	40	40	70	milliamperes
Plate input				315	watts
Plate dissipation				125	watts
Peak r-f grid input voltage, approx.	225	230	235		volts
Driving power, approx.	8.5	8.5	8.5		watts
Plate power output	130	170	215		watts

APPLICATION NOTES

GL-805 can be operated at maximum ratings in all classes of service at frequencies as high as 30 megacycles. The tube may be operated at higher frequencies provided the maximum values of plate voltage and power input are reduced as the frequency is raised (other maximum ratings are the same as shown under CHARACTERISTICS). The tabulation below shows the highest percentage of maximum plate voltage and power input that can be used up to 80 megacycles for the various classes of service. Special attention should be given to adequate ventilation of the bulb at these frequencies.

Frequency	30	45	80	megacycles
Maximum permissible percentage of maximum Rated plate voltage and plate input:				
Class B telephony	100	90	77	per cent
Class C telephony, plate-modulated; telegraphy	100	82	55	per cent

GL-805 AVERAGE PLATE CHARACTERISTICS

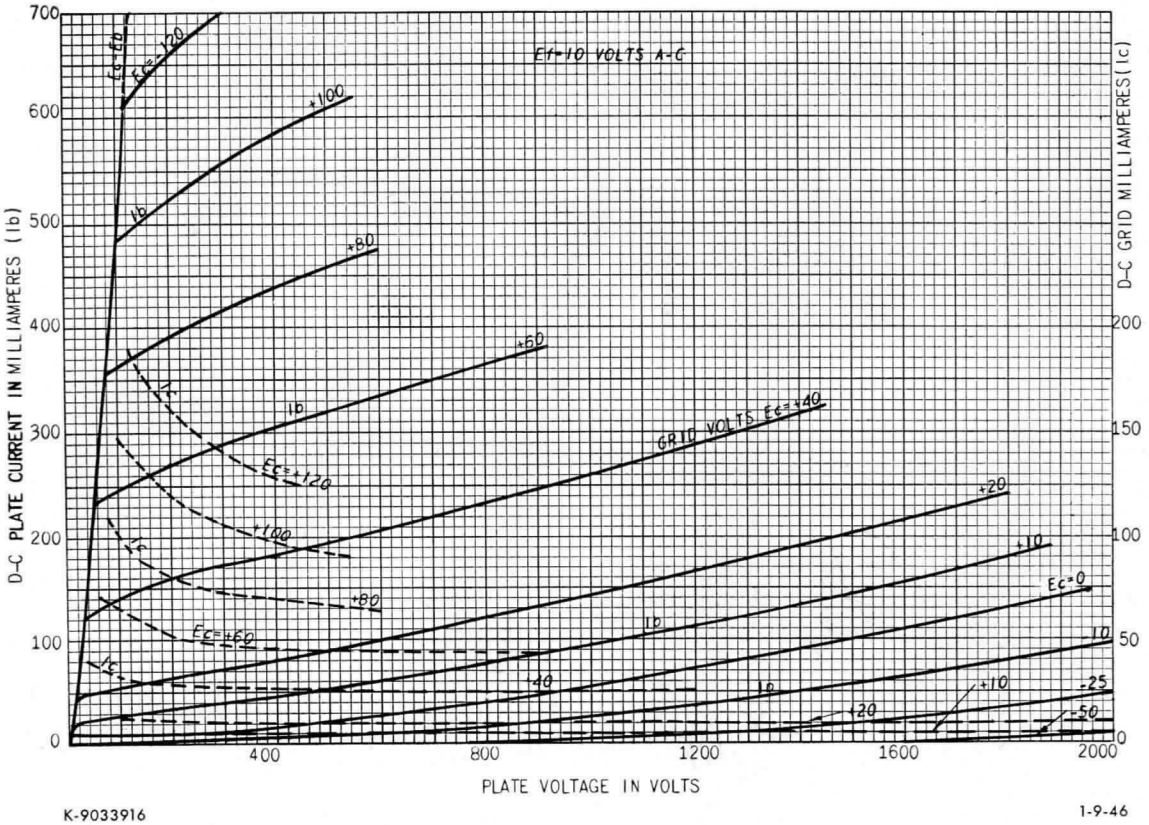

K-9033916

1-9-46

GL -805

DYNAMIC TRANSFER CHARACTERISTICS

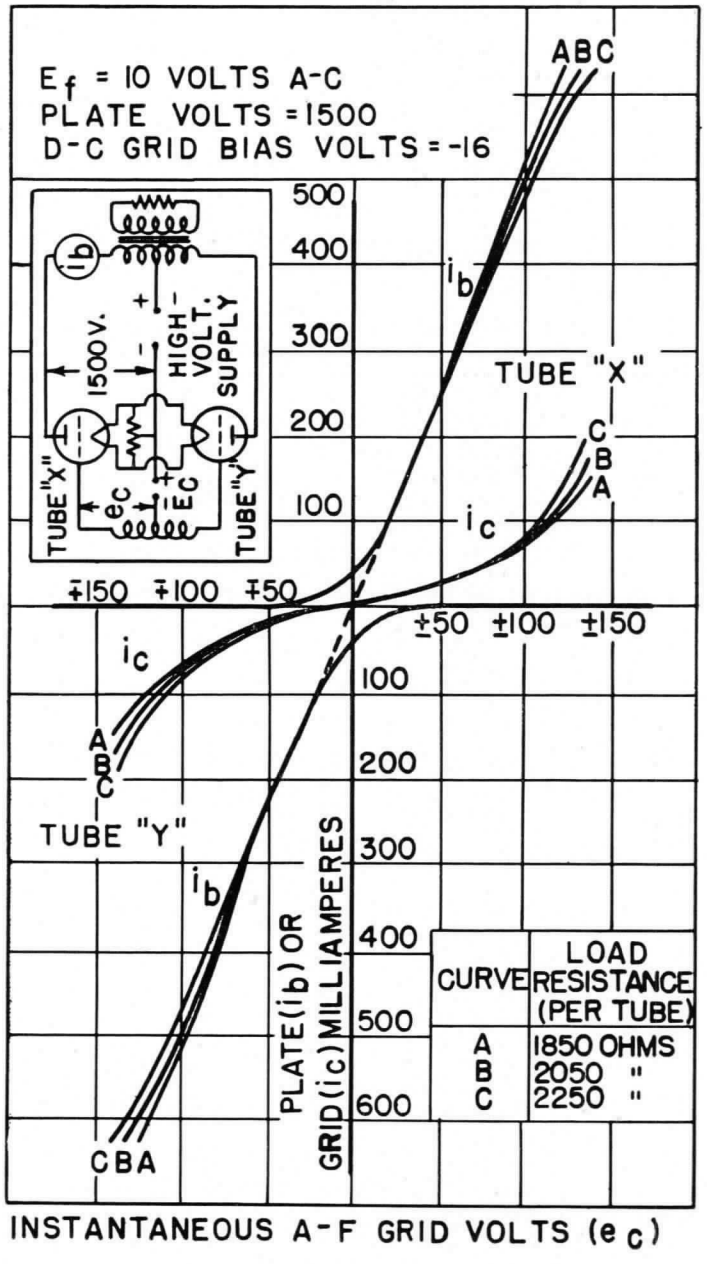

CURVE	LOAD RESISTANCE (PER TUBE)
A	1850 OHMS
B	2050 "
C	2250 "

K-9186082

1-9-46

GL-805

OPERATION CHARACTERISTICS

E_f = { 10 VOLTS A.C. FOR 805'S
2.5 VOLTS A.C. FOR 2A3'S

INPUT : CLASS AB-TWO TYPE 2A3'S PUSH-PULL
PLATE VOLTS = 300, GRID VOLTS = -62

OUTPUT: CLASS B-TWO TYPE 805'S
PLATE VOLTS = 1500, GRID VOLTS = -16

INTERSTAGE TRANSFORMER:

VOLTAGE RATIO $\frac{\text{PRIM}}{\text{1/2 SEC.}}$ = 3.0

PEAK POWER EFFICIENCY = 90 %

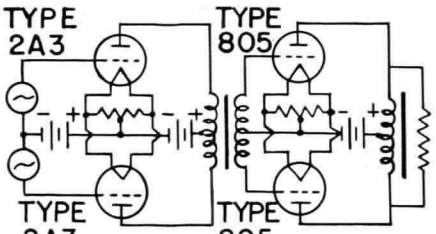

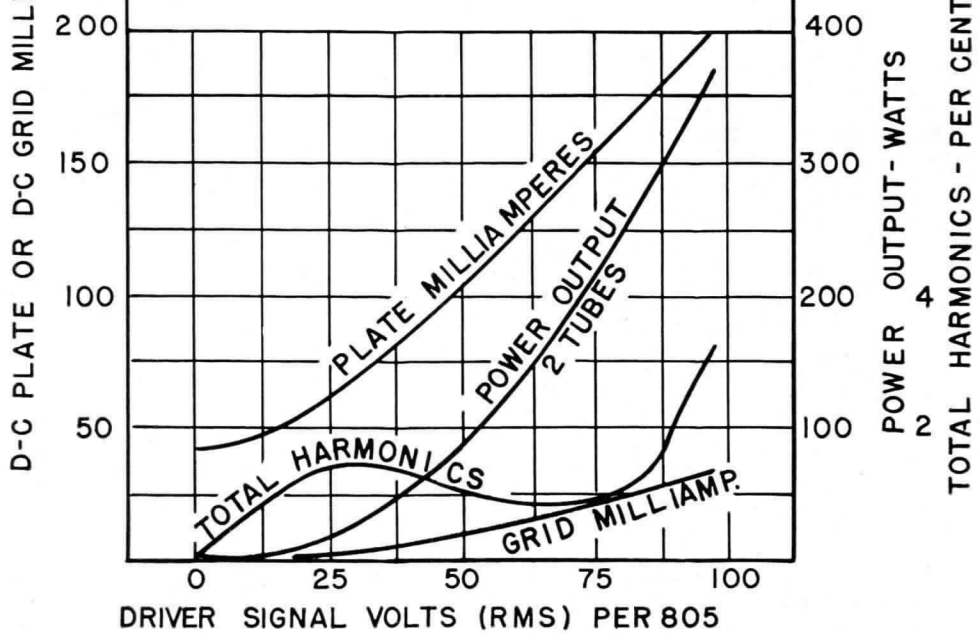

K-9033995

1-9-46

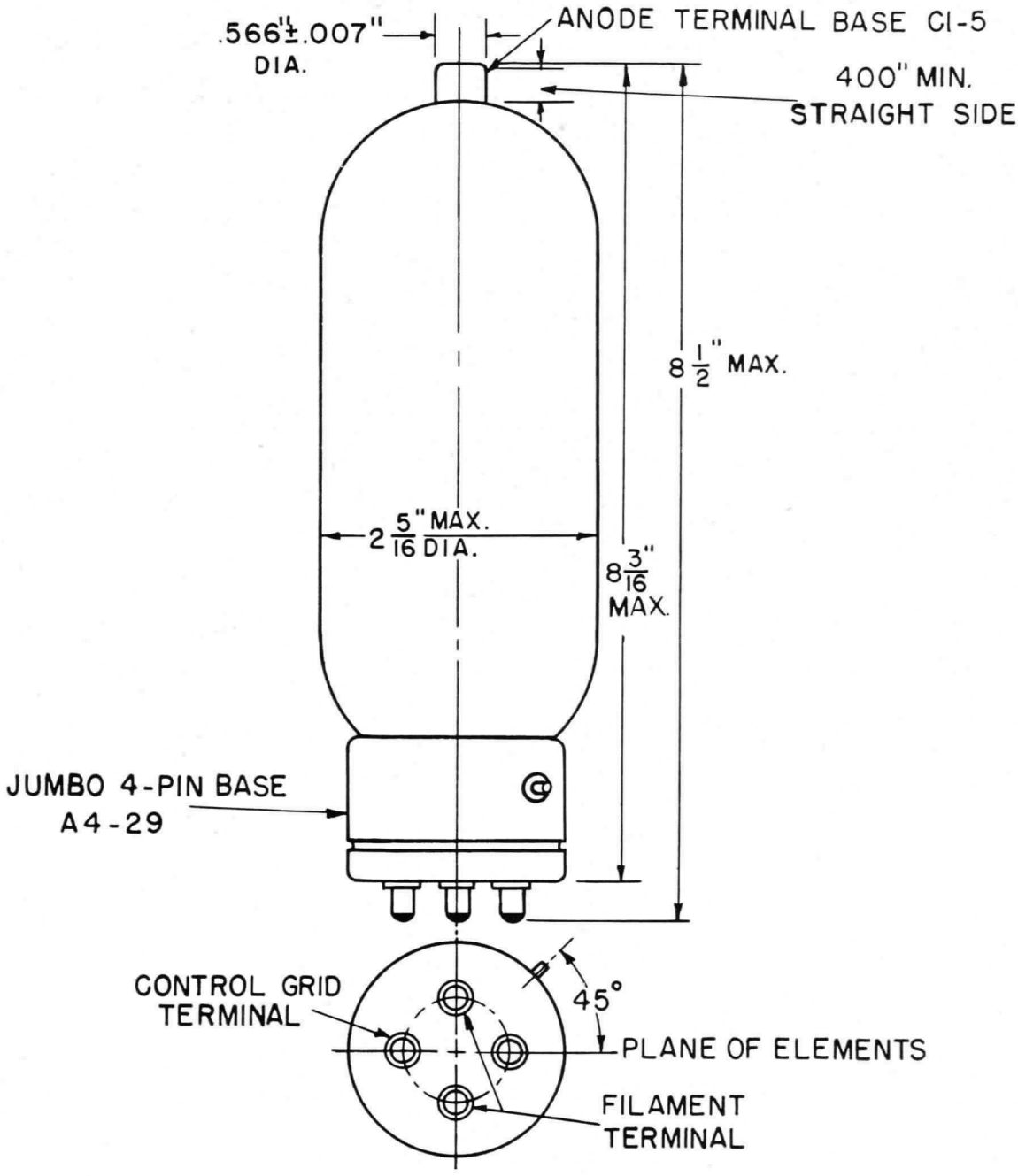

GL-805 OUTLINE

K-9033975

10-29-45

Electronics Department
GENERAL ELECTRIC
Schenectady, N. Y.

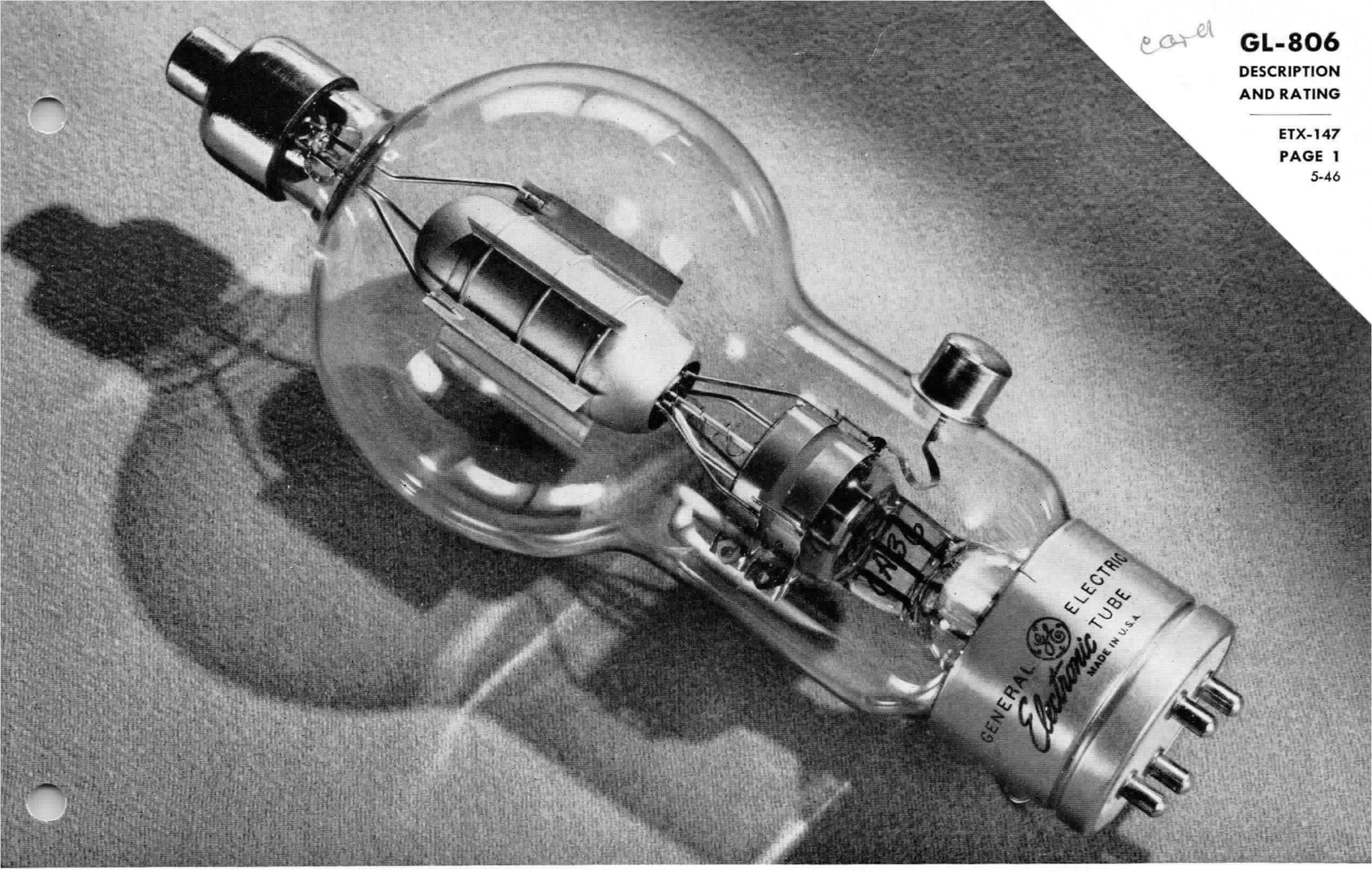

TRIODE

DESCRIPTION

The GL-806 is a three-electrode transmitting triode designed for use as a radio-frequency amplifier, oscillator, and Class B modulator. Maximum plate dissipation for Class C telegraph and Class B services is 225 watts (ICAS). The tantalum plate of this tube totally encloses the other electrodes and thus conserves power by eliminating loss from bulb bombardment and stray electrons. At 30 megacycles this construction provides the user with more than 75 watts of additional power per tube. The GL-806 may be operated at maximum ratings at frequencies as high as 100 megacycles. In Class B modulator service (ICAS), two GL-806's are capable of modulating 100 per cent a radio-frequency amplifier having an input of 2240 watts. Plate and grid connections, brought out to the top and side of the bulb respectively, provide low-tube capacitances and high insulation.

TECHNICAL INFORMATION

These data are for reference only. For design information refer to specifications.

GENERAL CHARACTERISTICS

Number of electrodes	3	
Electrical		
Cathode—Filamentary		
Filament voltage, a-c or d-c	5.0	volts
Filament current	9.5	amperes
Amplification factor	12.6	
Direct interelectrode capacitances:		
Grid-plate	4.0	micromicrofarads
Grid-filament	5.5	micromicrofarads
Plate-filament	0.4	micromicrofarads
Mechanical		
Cooling	Air†	
Mounting position	Vertical, base down	

GE Electronic TUBE

GENERAL ELECTRIC

TECHNICAL INFORMATION (CONT'D)

MAXIMUM RATINGS AND TYPICAL OPERATING CONDITIONS

CLASS B AUDIO-FREQUENCY POWER AMPLIFIER AND MODULATOR, TWO TUBES

	Typical Operation			Maximum Ratings		
Filament voltage, a-c or d-c					5.0	volts
	CCS		ICAS	CCS	ICAS	
D-c plate voltage	2000	3000	3300	3000	3300	volts
Max signal d-c plate current*				200	250	milliamperes
Max signal plate input*				500	825	watts
Plate dissipation*				150	225	watts
D-c grid voltage	−140	−230	−240			volts
Peak a-f grid-to-grid voltage	660	770	930			volts
Zero signal d-c plate current	80	50	80			milliamperes
Max signal d-c plate current	390	330	475			milliamperes
Load resistance, per tube	4500	5200	4000			ohms
Effective load resistance, plate-to-plate	18000	20800	16000			ohms
Max signal driving power, approx	19	15	35			watts
Max signal plate power output, approx	535	700	1120			watts

CLASS B RADIO-FREQUENCY POWER AMPLIFIER—TELEPHONY

Carrier conditions per tube for use with a max modulation factor of 1.0

D-c plate voltage	2000	3000	3300	3000	3300	volts
D-c grid voltage	−150	−240	−280			volts
D-c plate current	110	70	102	150	150	milliamperes
Plate input				225	338	watts
Plate dissipation				150	225	watts
Peak r-f grid voltage	180	200	290			volts
D-c grid current, approx	1	0	0			milliamperes
Driving power, approx°	8	5	10.3			watts
Power output, approx	70	70	115			watts

CLASS C RADIO-FREQUENCY POWER AMPLIFIER AND OSCILLATOR, PLATE MODULATED

Carrier conditions per tube for use with a maximum modulation factor of 1.0

D-c plate voltage	2000	2500	3000	2500	3000	volts
D-c grid voltage‡	−500	−600	−670	−1000	−1000	volts
	12500	15000	25000			ohms
D-c plate current	195	195	195	200	200	milliamperes
D-c grid current, approx**	40	40	27	50	50	milliamperes
Plate input				500	600	watts
Plate dissipation				110	150	watts
Peak r-f grid voltage	790	890	970			volts
Driving power, approx**	28	32	24			watts
Power output, approx	300	390	460			watts

CLASS C RADIO-FREQUENCY POWER AMPLIFIER AND OSCILLATOR—TELEGRAPHY

Key-down conditions per tube without modulation π

		CCS		ICAS	CCS	ICAS	
D-c plate voltage	2000	2500	3000	3300	3000	3300	volts
D-c grid voltage§	−400	−500	−600	−600	−1000	−1000	volts
	16000	20000	24000	15000			ohms
	1800	2300	2700	1730			ohms
D-c plate current	195	195	195	300	200	305	milliamperes
D-c grid current, approx**	25	25	25	40	50	50	milliamperes
Plate input					600	1000	watts
Plate dissipation					150	225	watts
Peak r-f grid voltage	640	755	870	930			volts
Driving power, approx**	15	17	20	34			watts
Power output, approx	280	370	450	780			watts

*Averaged over any audio-frequency cycle.

†Forced ventilation from fan directed at middle and upper portions of bulb is required for continuous key-down conditions in Class C telegraph service and is recommended for other servies at frequencies of 30 megacycles or higher.

**Subject to wide variations depending on the impedance of the load circuit. High-impedance load circuits require more grid current and driving power to obtain the desired output. Low-impedance circuits need less grid current and driving power, but plate-circuit efficiency is sacrificed. The driving stage should be capable of delivering considerably more than the required driving power.

‡Obtained by grid resistor of value shown or by partial self-bias methods.

§Obtained by grid resistor (16000, 20000, 24000, 12800), by cathode resistor (1800, 2300, 2700, 1730) or from fixed-bias source.

π Modulation, essentially negative, may be used if the positive peak of the audio-frequency envelope does not exceed 115 per cent of the carrier conditions.

° At crest of a-f cycle with modulation factor of 1.0.

APPLICATION NOTES

The GL-806 can be operated at frequencies as high as 30 megacycles. The tube may be operated at higher frequencies provided the maximum values of plate voltage and power input are reduced as the frequency is raised (other maximum ratings are the same as shown above). The tabulation below shows the highest percentage of maximum plate voltage and power input that can be used up to 100 megacycles for the various classes of service. Special attention should be given to adequate ventilation of the bulbs at these frequencies.

Frequency	30	50	100 megacycles
Max permissible percentage of max rated plate voltage and plate input			
Class B	100	90	78 per cent
Class C, plate modulated	100	80	50 per cent
Class C, unmodulated	100	80	50 per cent

GL-806 AVERAGE PLATE CHARACTERISTICS

$E_f = 5.0$ VOLTS D-C

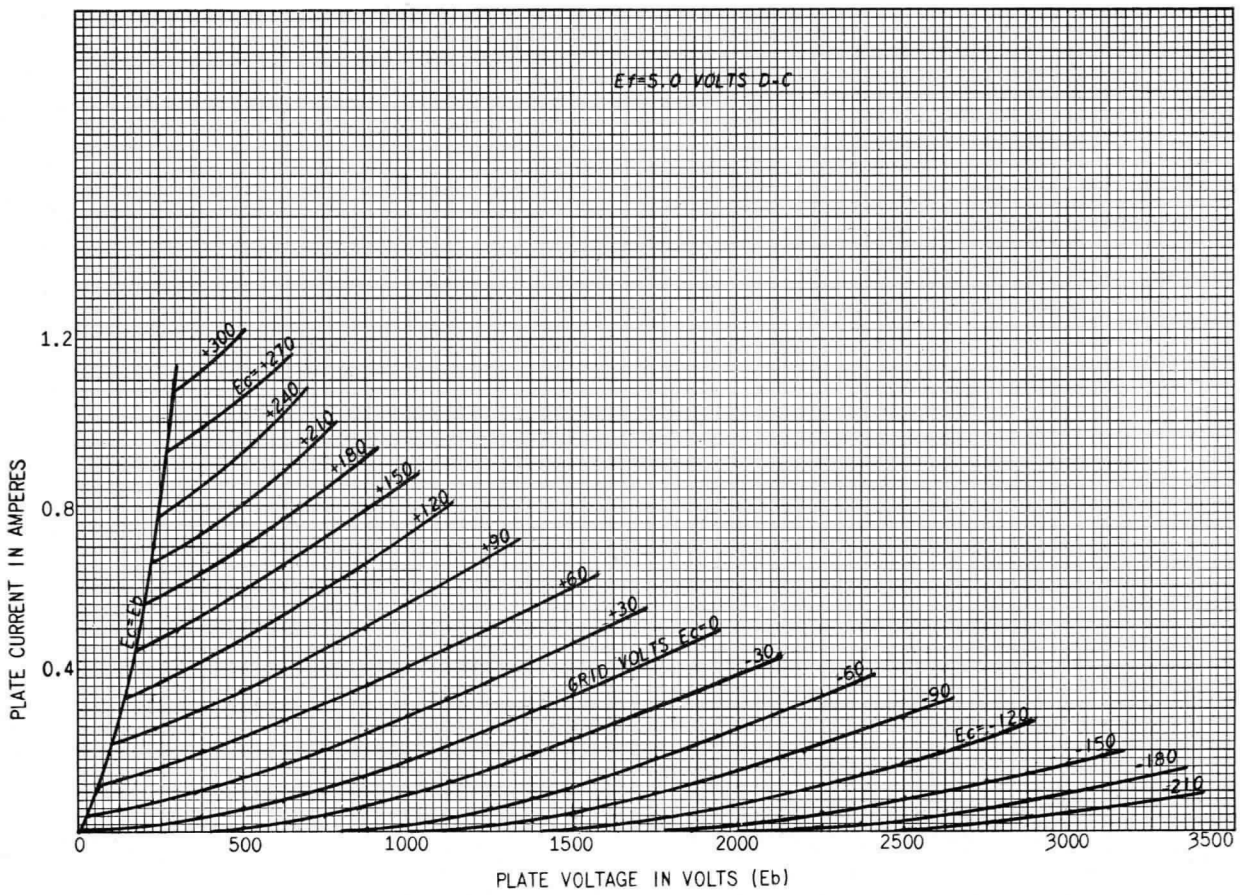

K-9033933

1-9-46

GL-806 TYPICAL CHARACTERISTICS

$E_f = 5.0$ VOLTS D-C

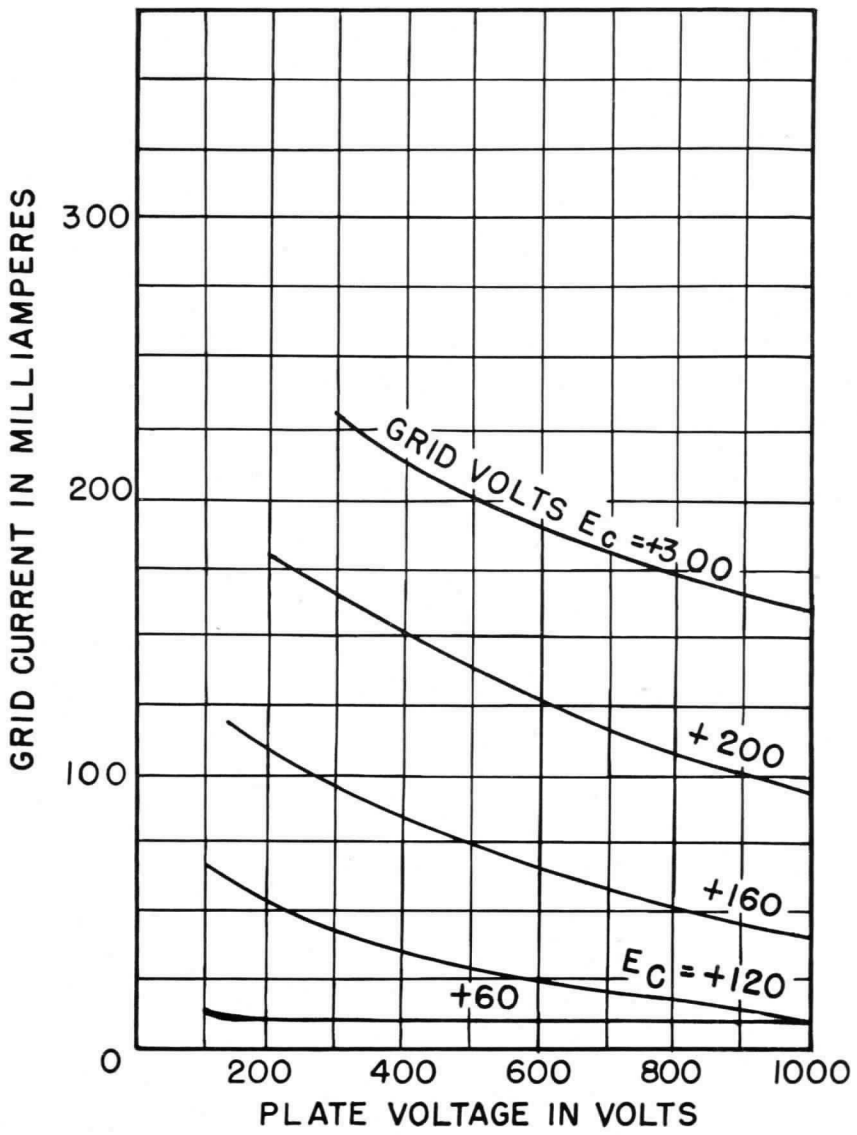

K-9033922

8-17-45

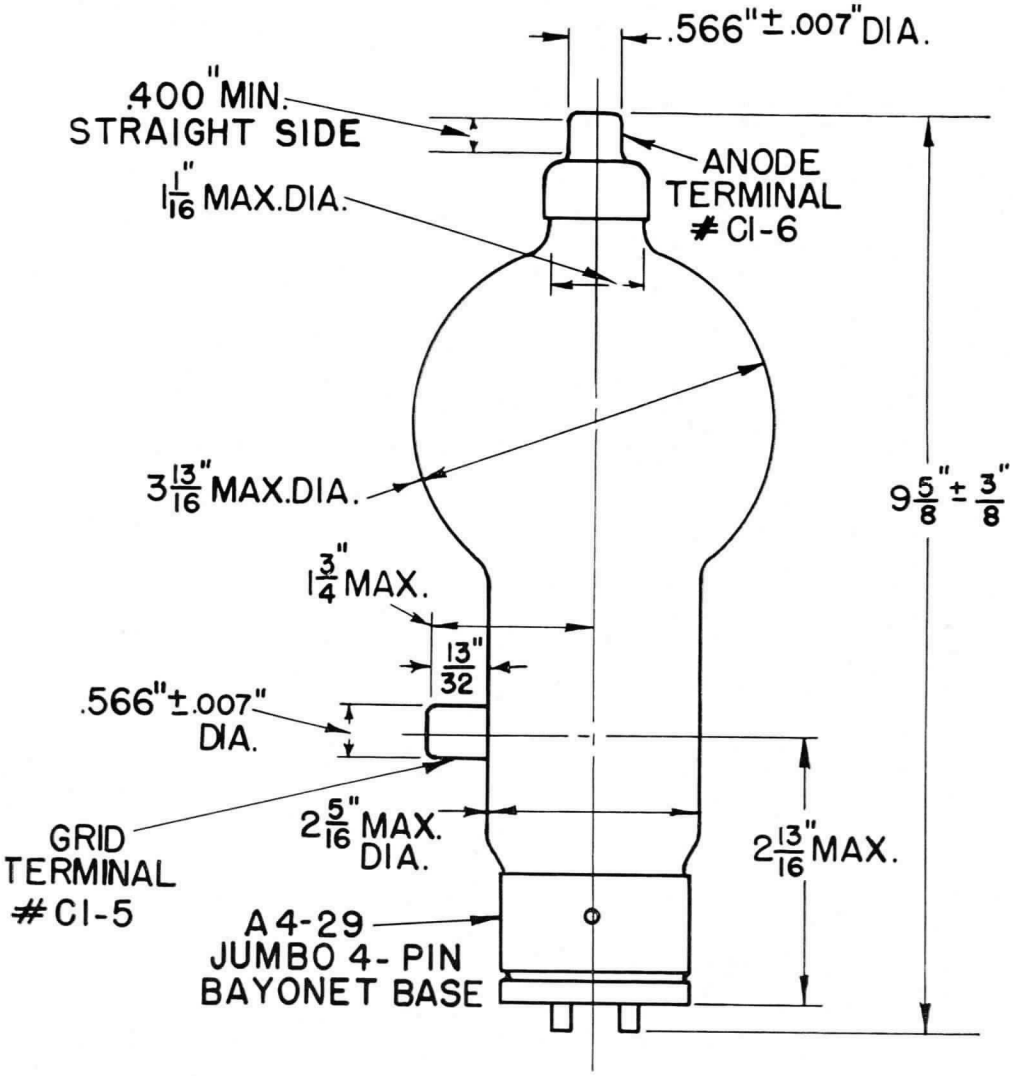

GL-806 OUTLINE

K-9033889

7-10-45

Electronics Department
GENERAL ELECTRIC
Schenectady, N. Y.

5-46 (7M)
Filing No. 8850



PLIOTRON

DESCRIPTION

The GL-807 is a five-electrode transmitting tube for use as an amplifier, modulator, and oscillator. The anode can dissipate 30 watts, and cooling is accomplished by radiation. The cathode is the indirectly heated type. Maximum ratings apply up to 60 megacycles.

♦ TECHNICAL INFORMATION

These data are for reference only. For design information refer to specifications.

GENERAL

Electrical Data	Minimum	Bogey	Maximum	
Heater Voltage	5.7	6.3	6.9	volts
Heater Current at Bogey Voltage	0.81	0.9	0.99	ampere
Amplification Factor, G1–G2, E_b =				
E_{c2} = 250 v, E_c = −10 v		8		
Direct Interelectrode Capacitances				
Grid-Plate (With External Shield)	——	——	0.2	uuf
Input	10	12	14	uuf
Output	5.3	7	8.7	uuf
Mechanical Data				
Mounting Position—Any				
Net Weight, approximate			2.5	ounces

♦ Technical information revised.

Electronic TUBE

Supersedes ETI-165 dated 4-45

GENERAL ELECTRIC

TECHNICAL INFORMATION (CONT'D)

MAXIMUM RATINGS AND TYPICAL OPERATING CONDITIONS

AUDIO-FREQUENCY POWER AMPLIFIER AND MODULATOR—CLASS AB1 (TRIODE CONNECTED)

Maximum ratings, absolute values	CCS	ICAS	
D-c plate and grid—No. 2 voltage	400 max	400 max	volts
Maximum signal d-c plate plus grid—No. 1 current*	125 max	125 max	milliamperes
Maximum signal d-c plate plus grid—No. 2 input*	50 max	50 max	watts
Plate plus grid—No. 2 dissipation*	25 max	30 max	watts

Typical operation	CCS	ICAS	
Unless otherwise specified, values are for two tubes			
D-c plate and grid—No. 2 voltage	400	400	volts
D-c grid—No. 1 voltage†	−45	−45	volts
Peak a-f grid—No. 1-to-grid-No. 1 voltage‡	90	90	volts
Zero—signal d-c plate plus grid—No. 2 current	60	60	milliamperes
Maximum—signal d-c plate plus Grid—No. 2 current	140	140	milliamperes
Effective load resistance, plate to plate	3000	3000	ohms
Maximum—signal driving power, approximate	0	0	watts
Maximum—signal power output, approximate	15	15	watts

AUDIO-FREQUENCY POWER AMPLIFIER AND MODULATOR—CLASS AB2

Maximum ratings, absolute values	CCS	ICAS	
D-c plate voltage	600 max	750 max	volts
D-c grid—No. 2 voltage	300 max	300 max	volts
Maximum signal d-c plate current*	120 max	120 max	milliamperes
Maximum signal plate input*	60 max	90 max	watts
Maximum signal grid—No. 2 input*	3.5 max	3.5 max	watts
Plate dissipation*	25 max	30 max	watts

Typical operation	CCS			ICAS	
Unless otherwise specified, values are for two tubes					
D-c plate voltage	400	500	600	750	volts
D-c grid—No. 2 voltage	300	300	300	300	volts
D-c grid—No. 1 voltage**	−25	−29	−30	−32	volts
Peak A-F grid No. 1 to grid No. 1 voltage	78	86	78	92	volts
Zero—signal d-c plate current	90	72	60	52	milliamperes
Maximum—signal d-c plate current	240	240	200	240	milliamperes
Zero—signal d-c grid—No. 2 current	2.0	0.9	0.7	0.5	milliamperes
Maximum—signal d-c grid—No. 2 current	15	12	16	17	milliamperes
Effective load resistance, plate to plate	3200	4240	6400	6950	ohms
Maximum—signal driving power, approximate***	0.2	0.2	0.1	0.2	watts
Maximum—signal power output, approximate	55	75	80	120	watts

RADIO-FREQUENCY POWER AMPLIFIER—CLASS B

Carrier conditions per tube for use with a maximum modulation factor of 1.0

Maximum ratings, absolute values	CCS	ICAS	
D-c plate voltage	600 max	750 max	volts
D-c grid—No. 2 voltage	300 max	300 max	volts
D-c plate current	80 max	90 max	milliamperes
Plate input	37.5 max	45 max	watts
Grid—No. 2 input	2.5 max	2.5 max	watts
Plate dissipation	25 max	30 max	watts

Typical operation	CCS			ICAS	
D-c plate voltage	400	500	600	750	volts
D-c grid—No. 2 voltage	250	250	250	300	volts
D-c grid—No. 1 voltage**	−25	−25	−25	−35	volts
Peak R-F grid—No. 1 voltage	30	30	20	27	volts
D-c plate current	75	75	62.5	60	milliamperes
D-c grid—No. 2 current	4	4	3	3	milliamperes
D-c grid—No. 1 current, approximate	0	0	0	0	milliamperes
Driving power, approximate//	0.25	0.25	0.2	0.12	watts
Power output, approximate	9	12.5	12.5	15	watts

TECHNICAL INFORMATION (CONT'D)

PLATE-MODULATED RADIO-FREQUENCY POWER AMPLIFIER—CLASS C TELEPHONY

Carrier conditions per tube for use with a maximum modulation factor of 1.0

Maximum ratings, absolute values	CCS	ICAS	
D-c plate voltage	475 max	600 max	volts
D-c grid—No. 2 voltage	300 max	300 max	volts
D-c grid—No. 1 voltage	−200 max	−200 max	volts
D-c plate current	83 max	100 max	milliamperes
D-c grid—No. 1 current	5 max	5 max	milliamperes
Plate input	40 max	60 max	watts
Grid—No. 2 input	2.5 max	2.5 max	watts
Plate dissipation	16.5 max	25 max	watts

Typical operation	CCS			ICAS	
D-c plate voltage	375	400	475	600	volts
D-c grid—No. 2 voltage	225	225	225	275	volts
D-c grid—No. 1 voltage**	−75	−80	−85	−90	volts
Peak R-F grid—No. 1 voltage	90	95	110	115	volts
D-c plate current	80	80	83	100	milliamperes
D-c grid—No. 2 current	5	5.75	5	6.5	milliamperes
D-c grid—No. 1 current, approximate	3	3.5	4	4	milliamperes
Driving power, approximate	0.25	0.3	0.4	0.4	watts
Power output, approximate	17.5	22.5	27.5	42.5	watts

RADIO-FREQUENCY POWER AMPLIFIER AND OSCILLATOR—CLASS C TELEGRAPHY

Key-down conditions per tube without amplitude modulation ¶

Maximum ratings, absolute values	CCS	ICAS	
D-c plate voltage	600 max	750 max	volts
D-c grid—No. 2 voltage	300 max	300 max	volts
D-c grid—No. 1 voltage	−200 max	−200 max	volts
D-c plate current	100 max	100 max	milliamperes
D-c grid No. 1 current	5 max	5 max	milliamperes
Plate input	60 max	75 max	watts
Grid—No. 2 input	3.5 max	3.5 max	watts
Plate dissipation	25 max	30 max	watts

Typical operation	CCS			ICAS	
D-c plate voltage	400	500	600	750	volts
D-c grid—No. 2 voltage	250	250	250	250	volts
D-c grid—No. 1 voltage**	−45	−45	−45	−45	volts
Peak r-f grid—No. 1 voltage	65	65	65	65	volts
D-c plate current	100	100	100	100	milliamperes
D-c grid—No. 2 current	7.5	6	7	6	milliamperes
D-c grid—No. 1 current, approximate	3.5	3.5	3.5	3.5	milliamperes
Driving power, approximate	0.2	0.2	0.2	0.2	watts
Power output, approximate	25	30	40	50	watts

*Averaged over any audio-frequency cycle of sine-wave form.

†The type of input coupling network used should not introduce too much resistance in the grid—No. 1 circuit. Transformer or impedance coupling devices are recommended. When the grid—No. 1 is operated in the negative region with fixed bias, the d-c grid—No. 1 circuit resistance should not exceed 100,000 ohms. For higher values of d-c grid—No. 1 circuit resistance, cathode bias is required. Under no circumstances should the total d-c grid—No. 1 circuit resistance exceed 0.5 megohms.

‡The driver stage should be capable of supplying the No. 1 grids of the class AB stage with the specified driving voltage at low-distortion.

**When the tube is operated at its maximum ratings and the grid is driven positive, the total d-c grid—No. 1 circuit resistance should not exceed 30,000 ohms. If additional bias is required, it must be supplied by a cathode resistor or a fixed supply. When the tube is operated at less than maximum ratings, the d-c grid—No. 1 circuit resistance may be as high as 100,000 ohms.

***Driver stage should be capable of supplying the No. 1 grids of the class AB stage with the specified driving power at low distortion. The effective resistance per grid—No. 1 circuit of the class AB stage should be kept below 500 ohms and the effective impedance at the highest response frequency should not exceed 700 ohms.

//At crest of audio-frequency cycle with modulation factor of 1.0.

¶Modulation essentially negative may be used if the positive peak of the envelope does not exceed 115 per cent of the carrier conditions.

TECHNICAL INFORMATION (CONT'D)

Maximum ratings apply up to 60 megacycles. The tube may be operated at higher frequencies provided the maximum values of plate voltage and power input are reduced according to the tabulation below (other maximum ratings are the same as shown above). Special attention should be given to adequate ventilation of the bulb at these frequencies.

Frequency	60	80	125	megacycles
Percentage of maximum rated plate Voltage and plate input				
Class B	100	90	75	per cent
Class C plate modulated	100	80	55	per cent
Class C unmodulated	100	80	55	per cent

♦ GL-807

AVERAGE PLATE CHARACTERISTICS

TRIODE CONNECTION

GRID NO. 2 CONNECTED TO PLATE, $E_f = 6.3$ VOLTS

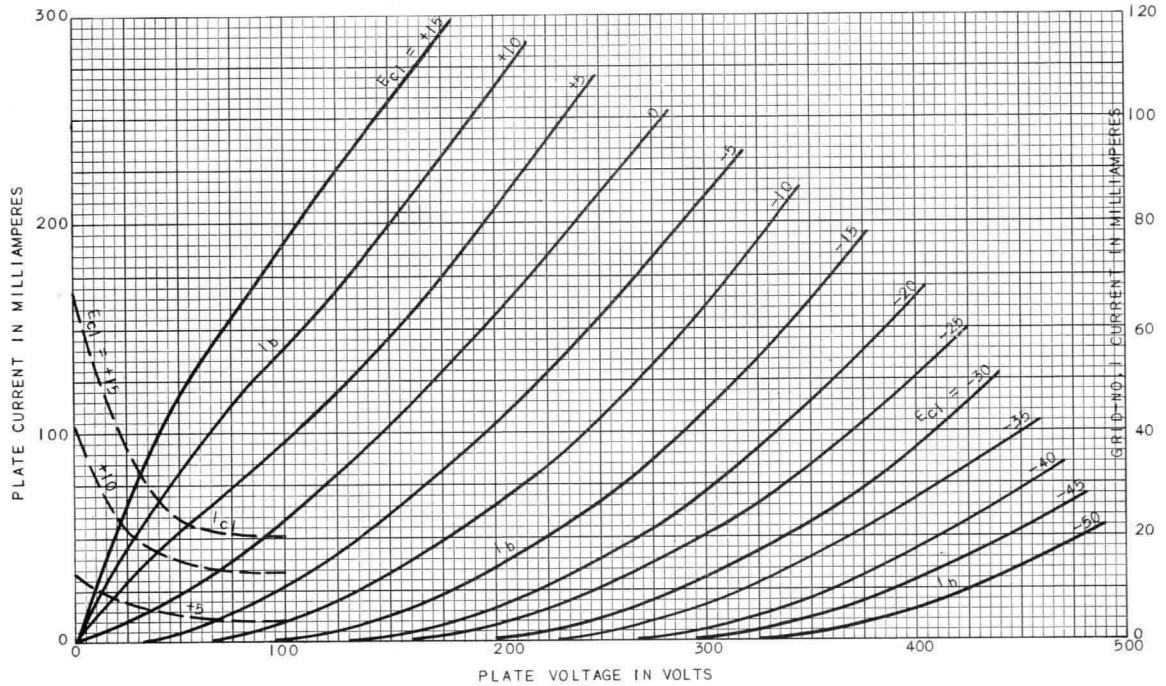

K-69087-72A369
♦New Drawing.

4-18-50

♦GL-807 AVERAGE PLATE CHARACTERISTICS WITH E_{c_1} AS VARIABLE

($E_f = 6.3$ VOLTS, SCREEN VOLTS = 250)

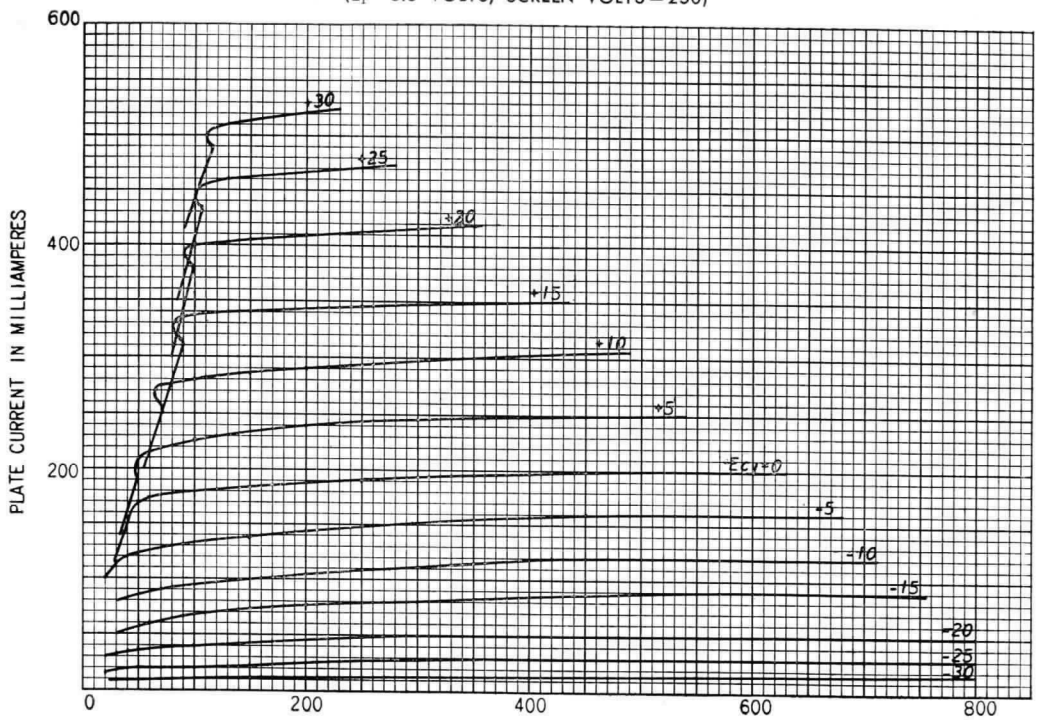

K-9033996
♦New Drawing.

12-10-45

♦GL-807 AVERAGE PLATE CHARACTERISTICS WITH E_{c_1} AS VARIABLE

($E_f = 6.3$ VOLTS, SCREEN VOLTS = 300)

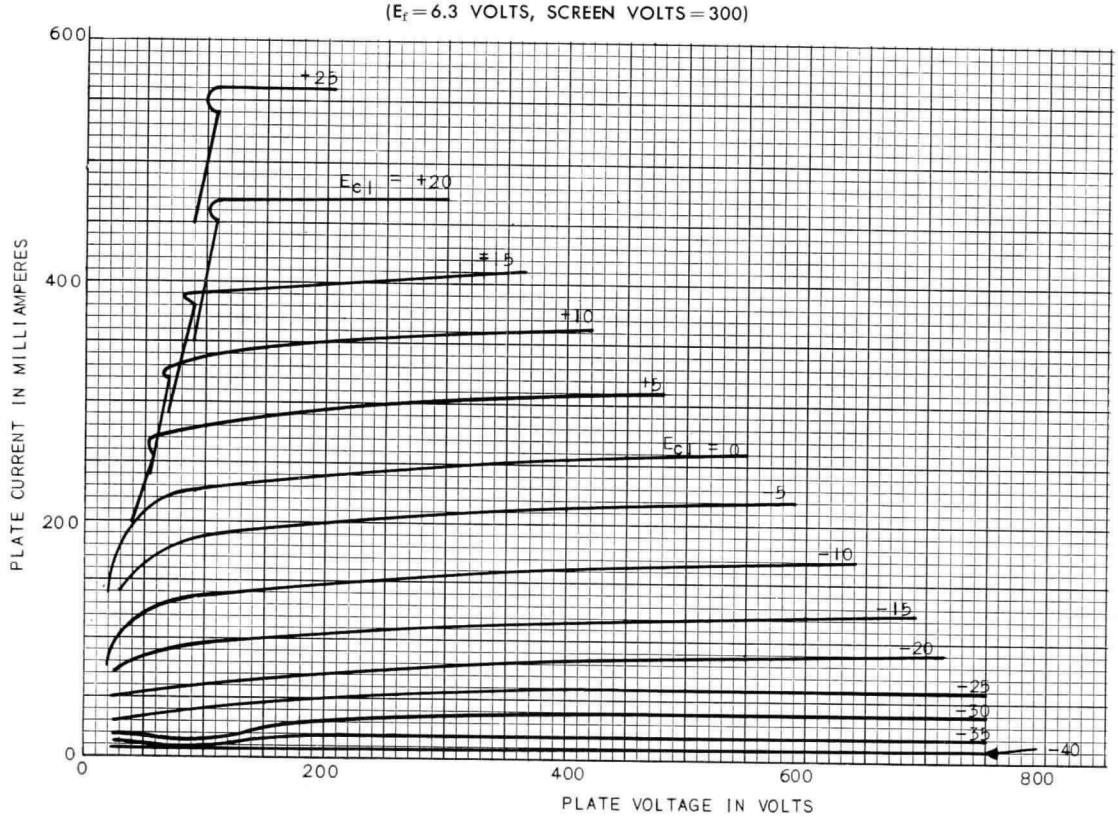

PLATE VOLTS

K-69087-72A363
♦New Drawing.

3-30-50

♦GL-807 AVERAGE CHARACTERISTICS
($E_f = 6.3$ VOLTS, SCREEN VOLTS = 300)

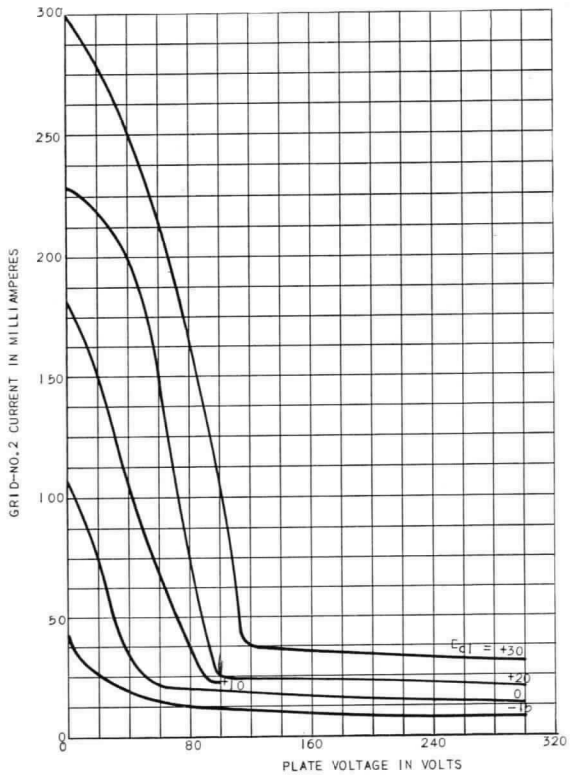

K-69087-72A370 4-20-50
♦Revised Drawing.

♦GL-807 AVERAGE CHARACTERISTICS
($E_f = 6.3$ VOLTS, SCREEN VOLTS = 250)

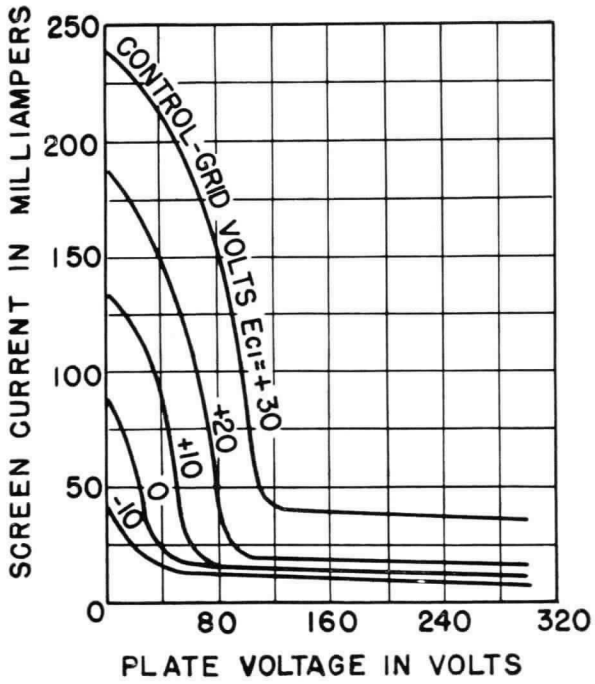

K-9033963 10-8-45
♦New Drawing.

♦GL-807 TYPICAL CHARACTERISTICS
($E_f = 6.3$ VOLTS, SCREEN VOLTS = 300)

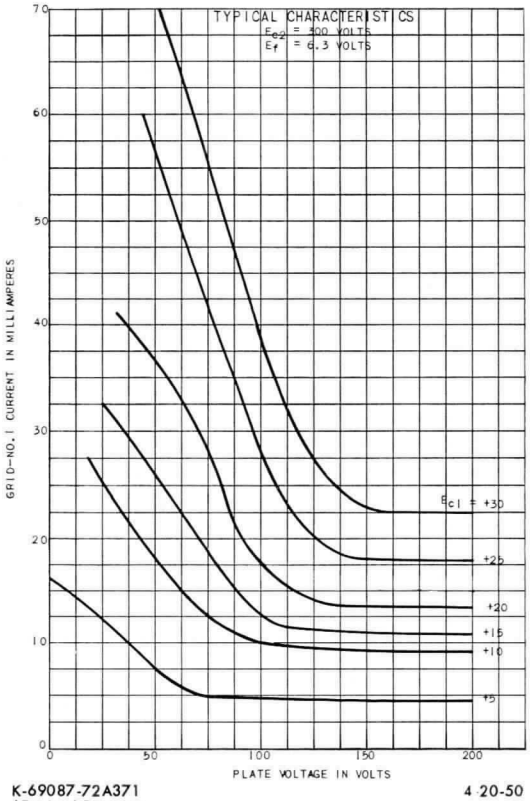

K-69087-72A371 4-20-50
♦Revised Drawing.

♦GL-807 TYPICAL CHARACTERISTICS
($E_f = 6.3$ VOLTS, SCREEN VOLTS = 250)

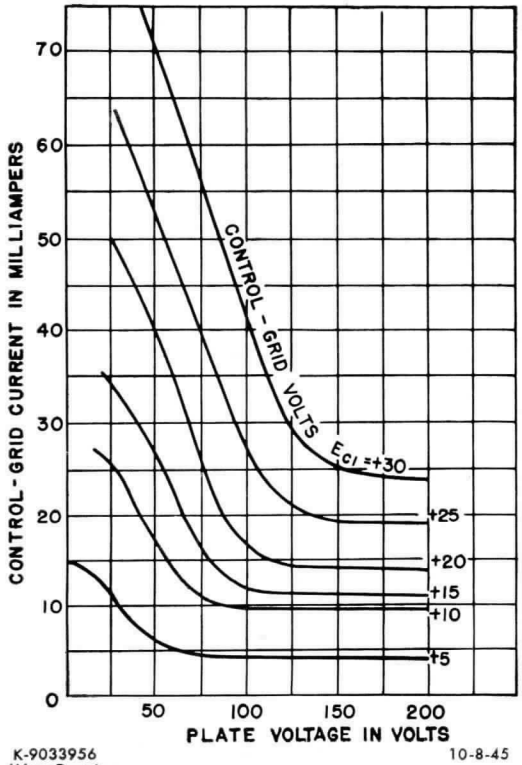

K-9033956 10-8-45
♦New Drawing.

♦OUTLINE
GL-807 PLIOTRON

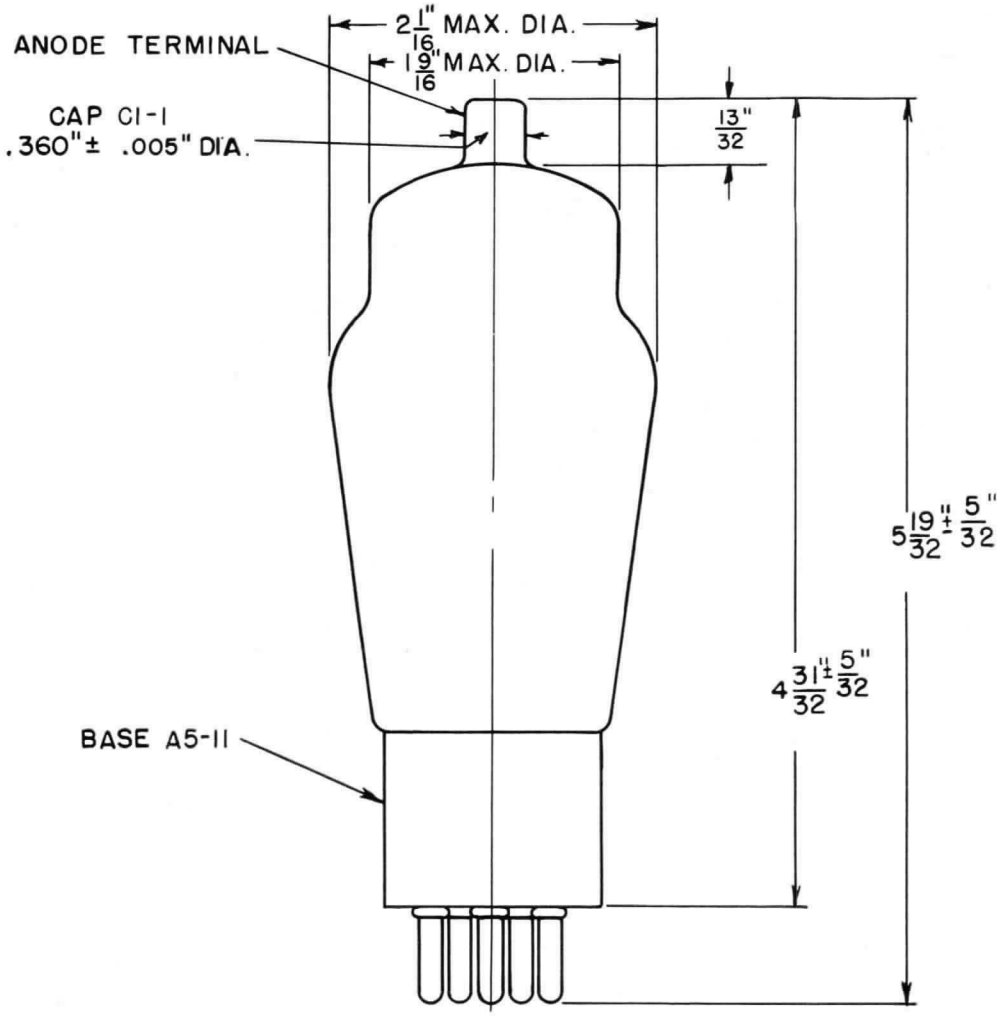

BASING DIAGRAM

K-8639602
♦Revised Drawing.

3-30-50

Tube Divisions, Electronics Department
GENERAL ELECTRIC
Schenectady, N. Y.



TRIODE

DESCRIPTION

The GL-809 is a high-mu transmitting triode with a typical power output of 75 watts (ICAS) for Class C telegraph service. Because of its high perveance, the tube can be operated at high plate efficiency and low driving power. Grid bias requirements are extremely low for Class B audio-frequency service. This transmitting tube can be operated at maximum ratings at frequencies as high as 60 megacycles and up to frequencies of 120 megacycles at reduced ratings.

TECHNICAL INFORMATION

These data are for reference only. For design information refer to specifications.

GENERAL CHARACTERISTICS

Number of electrodes	3	
Electrical		
Cathode—Filamentary		
Filament voltage	6.3	volts
Filament current	2.5	amperes
Amplification factor	50	
Direct interelectrode capacitances		
Grid-plate	6.7	micromicrofarads
Grid-cathode	5.7	micromicrofarads
Plate-cathode	0.9	micromicrofarad
Frequency for maximum ratings	60	megacycles

Electronic TUBE

GENERAL ELECTRIC

TECHNICAL INFORMATION (CONT'D)

Mechanical

Base description	medium 4-pin ceramic
Net weight, approximate	3 ounces
Shipping weight, approximate	3 pounds
Mounting position	vertical, base down or horizontal plane of electrodes vertical

MAXIMUM RATINGS AND TYPICAL OPERATING CONDITIONS

CLASS B AUDIO-FREQUENCY POWER AMPLIFIER (TWO TUBES)

	Typical Operation			Maximum Ratings*		
	CCS		ICAS	CCS	ICAS	
D-c plate voltage	500	750	1000	750	1000	volts
Maximum signal plate current, per tube‡				100	100	milliamperes
D-c maximum signal plate input, per tube‡				75	100	watts
Plate dissipation, per tube‡				25	30	watts
D-c grid voltage§	0	−4.5	−10			volts
Peak a-f grid input voltage	135	140	156			volts
Zero signal plate current	40	40	40			milliamperes
Maximum signal plate current	200	200	200			milliamperes
Load resistance, per tube	1300	2100	2900			ohms
Maximum signal driving power, approximate	2.4	2.4	3.4			watts
Effective load, plate-to-plate	5200	8400	11600			ohms
Maximum signal plate power output	60	100	145			watts

CLASS C RADIO-FREQUENCY POWER AMPLIFIER AND OSCILLATOR—PLATE-MODULATED

Carrier conditions per tube for use with a maximum modulation factor of 1.0

D-c plate voltage	500	600	750	600	750	volts
D-c grid voltage	−60	−60	−60	−200	−200	volts
From a grid resistor of	2000	2000	2000			ohms
D-c plate current	83	83	100	83	100	milliamperes
D-c grid current, approximate ◆	32	32	32	35	35	milliamperes
Plate input				50	75	watts
Plate dissipation				17.5	25	watts
Peak r-f grid input voltage, approximate	135	135	150			volts
Driving power, approximate ◆	3.2	3.2	4.3			watts
Plate power output	30	38	55			watts

CLASS C RADIO-FREQUENCY POWER AMPLIFIER AND OSCILLATOR

Key-down conditions per tube without modulation △

D-c plate voltage	500	750	1000	750	1000	volts
D-c grid voltage	−50	−60	−75	−200	−200	volts
From a grid resistor of	2500	3000	3000			ohms
From a cathode resistor of	420	500	600			ohms
D-c plate current	100	100	100	100	100	milliamperes
D-c grid current, approximate ◆	20	20	25	35	35	milliamperes
Plate input				75	100	watts
Plate dissipation				25	30	watts
Peak r-f grid input voltage, approximate	135	140	160			volts
Driving power, approximate ◆	2.5	2.5	3.8			watts
Plate power output	35	55	75			watts

‡ Averaged over any audio-frequency cycle of sine-wave form.

§ Grid voltages are given with respect to the midpoint of filament operated on alternating current. If direct current is used, each stated value of grid voltage should be reduced by one-half the filament voltage and the circuit returns made to the negative end of the filament.

◆Subject to wide variations depending upon the impedance of the load circuit. High-impedance load circuits require more grid current and driving power to obtain the desired output. Low-impedance circuits need less grid current and driving power, but plate circuit efficiency is sacrificed. The driving stage should be capable of delivering considerably more than the required driving power.

△Modulation, essentially negative, may be used if the positive peak of the audio-frequency envelope does not exceed 115 per cent of the carrier conditions.

APPLICATION NOTES

The GL-809 can be operated at frequencies as high as 60 megacycles. The tube may be operated at higher frequencies provided the maximum values of plate voltage and power input are reduced as the frequency is raised (other maximum ratings are the same as shown above).

The tabulation below shows the highest percentage of maximum plate voltage and power input that can be used up to 120 megacycles for the various classes of service. Special attention should be given to adequate ventilation of the bulb at these frequencies.

Frequency	60	70	120	megacycles
Maximum permissible percentage of maximum rated plate voltage and plate input				
Class B, r-f	100	93	75	per cent
Class C, plate-modulated	100	88	50	per cent
Class C, telegraphy	100	88	50	per cent

GL-809 AVERAGE CHARACTERISTICS

(E_f = 6.3 VOLTS D-C)

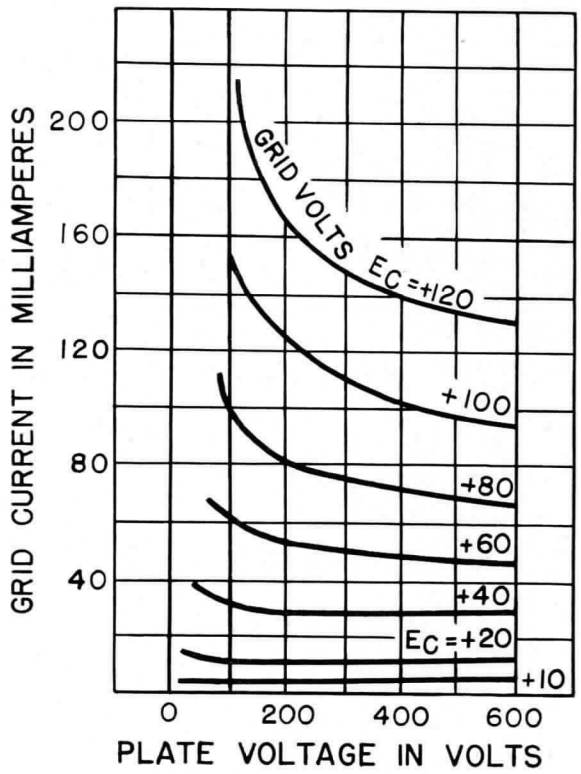

K-9033914

8-14-45

GL-809 AVERAGE PLATE CHARACTERISTICS

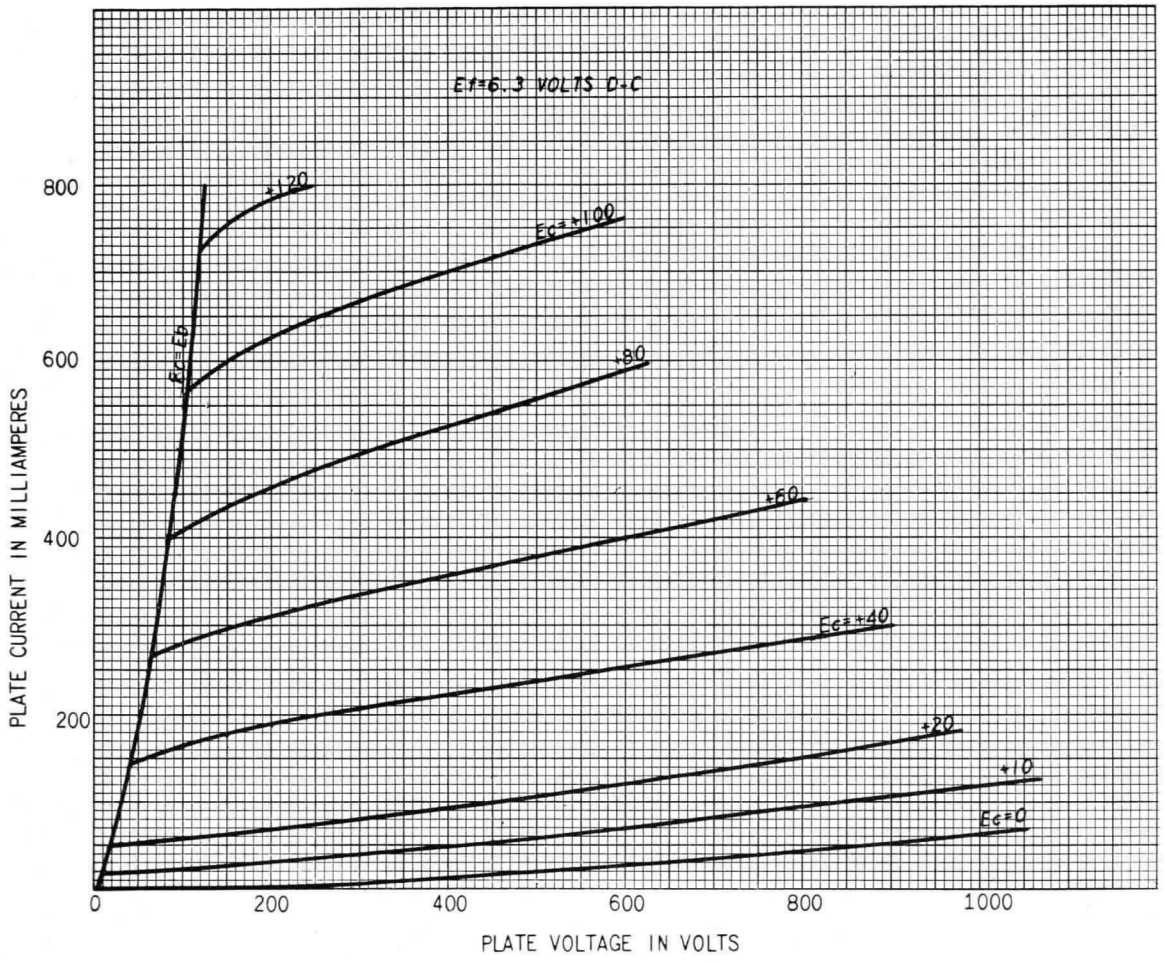

K-9186058

1-9-46

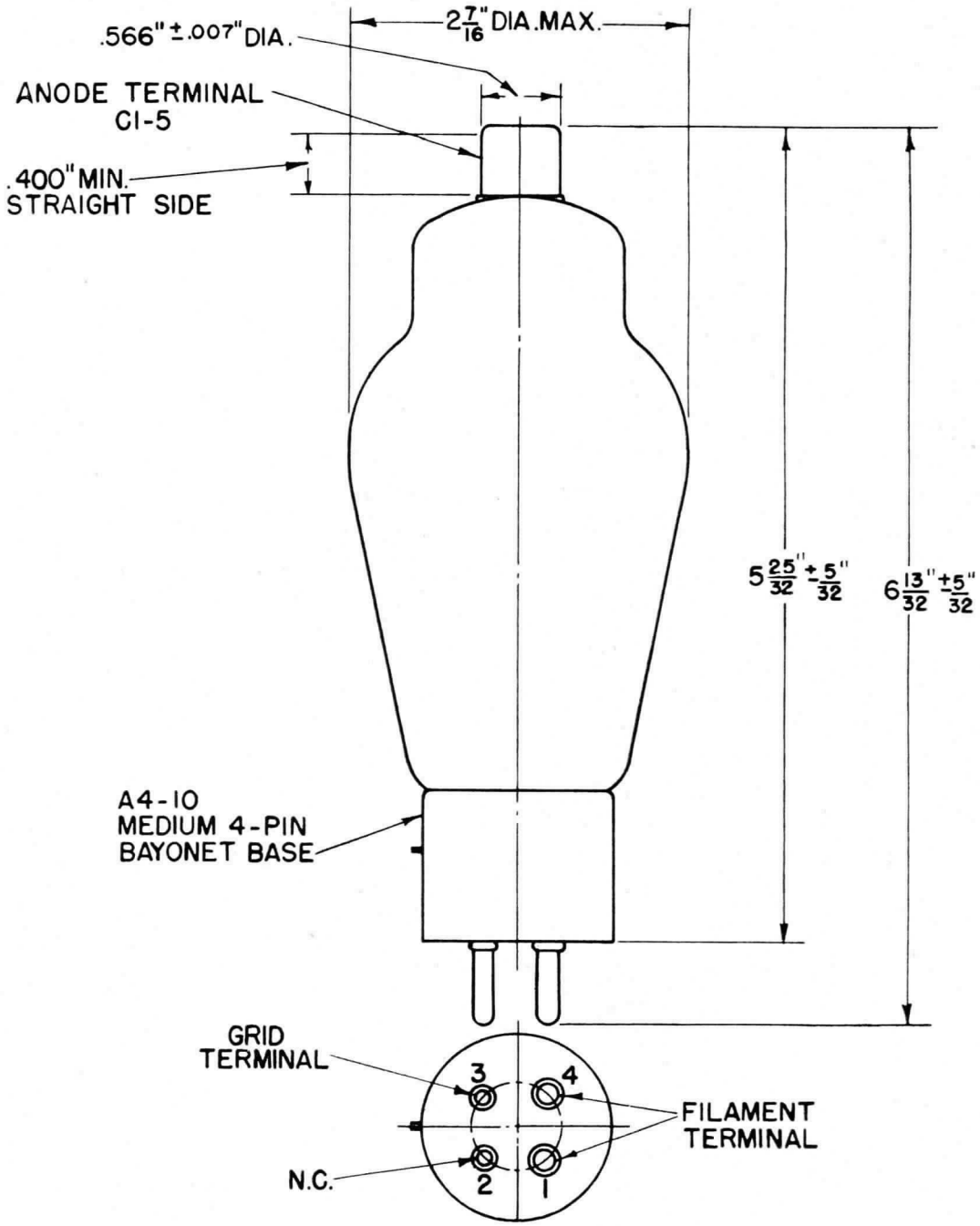

GL-809 CUTLINE

K-9033888

7-10-45

Electronics Department
GENERAL ELECTRIC
Schenectady, N. Y.

5-46 (7M)
Filing No. 8850

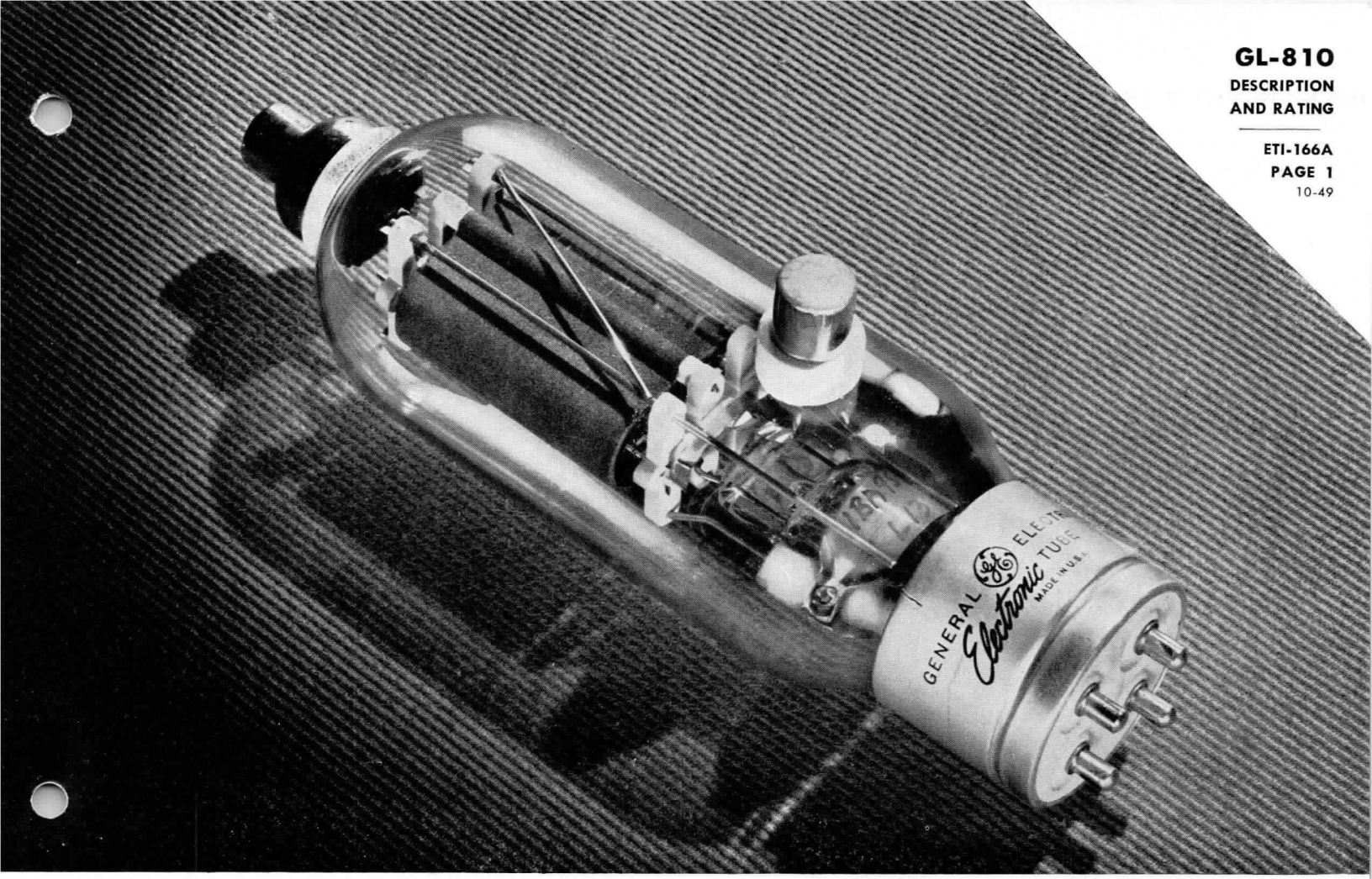

PLIOTRON

DESCRIPTION

The GL-810 is a three-electrode high-mu tube with a typical power output of 575 watts (ICAS) for Class C telegraph service. Because of its high perveance the tube can be operated at high plate efficiency with low driving power and relatively low plate voltage. The heavy duty filament, shielded at each end, conserves input power by eliminating bulb bombardment and stray electrons. The plate and grid leads are brought out to terminals at the top and side of the bulb, respectively—a design which provides very short internal leads, low internal lead inductance, and permits compact high-frequency circuits. Maximum ratings apply up to 30 megacycles.

▲TECHNICAL INFORMATION

These data are for reference only. For design information refer to specifications.

GENERAL

Electrical Data

Filament voltage	10	volts
Filament current	4.5	amperes
Amplification factor	36	
Interelectrode capacitances		
Grid-plate	4.8	uuf
Grid-filament	8.7	uuf
Plate-filament	12	uuf

▲Ratings completely revised.

TECHNICAL INFORMATION (CONT'D)

Mechanical Data

Mounting position..... Vertical, base down; or horizontal, pins 1 and 2 in vertical plane
Net weight, approximate..... 8 ounces

MAXIMUM RATINGS AND TYPICAL OPERATING CONDITIONS

AUDIO-FREQUENCY POWER AMPLIFIER AND MODULATOR—CLASS B

Maximum Ratings, Absolute Values	**CCS***	**ICAS†**	
D-c plate voltage	2500 max	2750 max	volts
Maximum signal d-c plate current‡	250 max	250 max	milliamperes
Maximum signal plate input‡	425 max	510 max	watts
Plate dissipation‡	125 max	175 max	watts

Typical Operation	**CCS***	**ICAS†**	
Unless otherwise specified, values are for two tubes			
D-c plate voltage	2000	2250	volts
D-c grid voltage**	−50	−60	volts
Peak A-F grid-to-grid voltage	345	380	volts
Zero signal d-c plate current	60	70	milliamperes
Maximum signal d-c plate current	420	450	milliamperes
Effective load resistance, plate to plate	11000	11600	ohms
Maximum signal driving power, approximate	10	13	watts
Maximum signal power output, approximate	590	725	watts

‡Averaged over any audio-frequency cycle of sine-wave form.
**For a-c filament supply.

RADIO-FREQUENCY POWER AMPLIFIER—CLASS B

Carrier conditions per tube for use with a maximum modulation factor of 1.0

Maximum Ratings, Absolute Values	**CCS***	**ICAS†**	
D-c plate voltage	2000 max	2500 max	volts
D-c plate current	185 max	185 max	milliamperes
Plate input	185 max	225 max	watts
Plate dissipation	125 max	175 max	watts

Typical Operation	**CCS***		**ICAS†**	
D-c plate voltage	1500	2000	2250	volts
D-c grid voltage**	−50	−65	−70	volts
Peak R-F grid voltage	110	100	100	volts
D-c plate current	115	93	100	milliamperes
D-c grid current, approximate	2	2	2	milliamperes
Driving power, approximate††	6	4	4	watts
Power output, approximate	60	60	75	watts

††At crest of audio-frequency cycle with modulation factor of 1.0.
**For a-c filament supply.

TECHNICAL INFORMATION (CONT'D)

PLATE-MODULATED RADIO-FREQUENCY POWER AMPLIFIER—CLASS C TELEPHONY

Carrier conditions per tube for use with a maximum modulation factor of 1.0

Maximum Ratings, Absolute Values	CCS*	ICAS†	
D-c plate voltage	1600 max	2000 max	volts
D-c grid voltage	−500 max	−500 max	volts
D-c plate current	210 max	250 max	milliamperes
D-c grid current	70 max	75 max	milliamperes
Plate input	335 max	500 max	watts
Plate dissipation	85 max	125 max	watts

Typical Operation	CCS*		ICAS†	
Dc- plate voltage	1250	1600	2000	volts
D-c grid voltage				
From a fixed supply of	−200	−200	−350	volts
From a grid resistor of	4000	4000	5000	ohms
Peak R-F grid voltage	370	370	550	volts
D-c plate current	210	210	250	milliamperes
D-c grid current, approximate	50	50	70	milliamperes
Driving power, approximate	17	17	35	watts
Power output, approximate	180	250	380	watts

RADIO-FREQUENCY POWER AMPLIFIER AND OSCILLATOR—CLASS C TELEGRAPHY

Key-down conditions per tube without modulation¶

Maximum Ratings, Absolute Values	CCS*	ICAS†	
D-c plate voltage	2000 max	2500 max	volts
D-c grid voltage	−500 max	−500 max	volts
D-c plate current	250 max	300 max	millliamperes
D-c grid current	70 max	75 max	milliamperes
Plate input	500 max	750 max	watts
Plate dissipation	125 max	175 max	watts

Typical Operation	CCS*		ICAS†	
D-c plate voltage	1500	2000	2500	volts
D-c grid voltage				
From a fixed supply of	−120	−160	−180	volts
From a grid resistor of	3000	4000	3000	ohms
From a cathode resistor of	415	550	500	ohms
Peak r-f grid voltage	280	330	350	volts
D-c plate current	250	250	300	milliamperes
D-c grid current, approximate	40	40	60	milliamperes
Driving power, approximate	10	12	19	watts
Power output, approximate	275	375	575	watts

¶Modulation essentially negative may be used if the positive peak of the audio-frequency envelope does not exceed 115 per cent of the carrier conditions.

Maximum ratings apply up to 30 megacycles. The tube may be operated at higher frequencies provided the maximum values of plate voltage and power input are reduced according to the tabulation below (other maximum ratings are the same as shown above). Special attention should be given to adequate ventilation of the bulb at these frequencies.

Frequency	30	60	100	megacycles
Percentage of Maximum Rated Plate Voltage and Plate Input				
Class B	100	80	80	per cent
Class C plate modulated	100	70	50	per cent
Class C unmodulated	100	70	50	per cent

* Continuous commercial service.

† Intermittent commercial and amateur service.

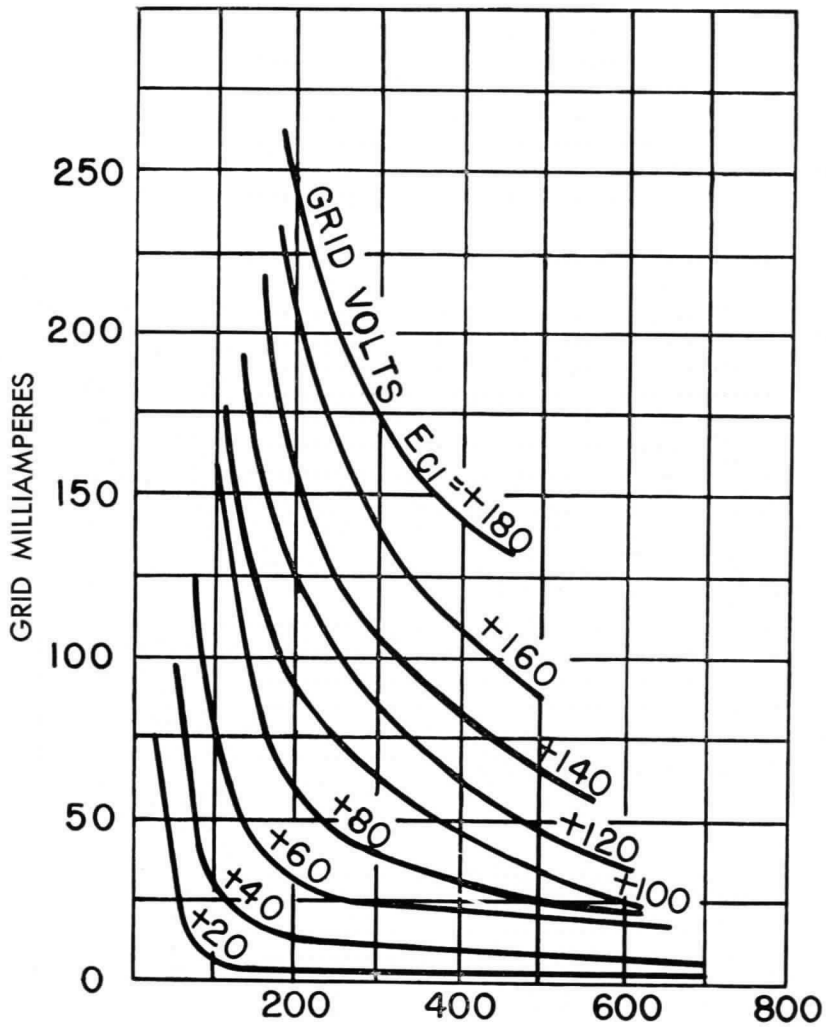

GL-810 TYPICAL CHARACTERISTICS (E_f = 10 VOLTS D-C)

K-8639692

9-28-44

▲ GL-810
AVERAGE PLATE CHARACTERISTICS
$E_f = 10$ VOLTS D-C

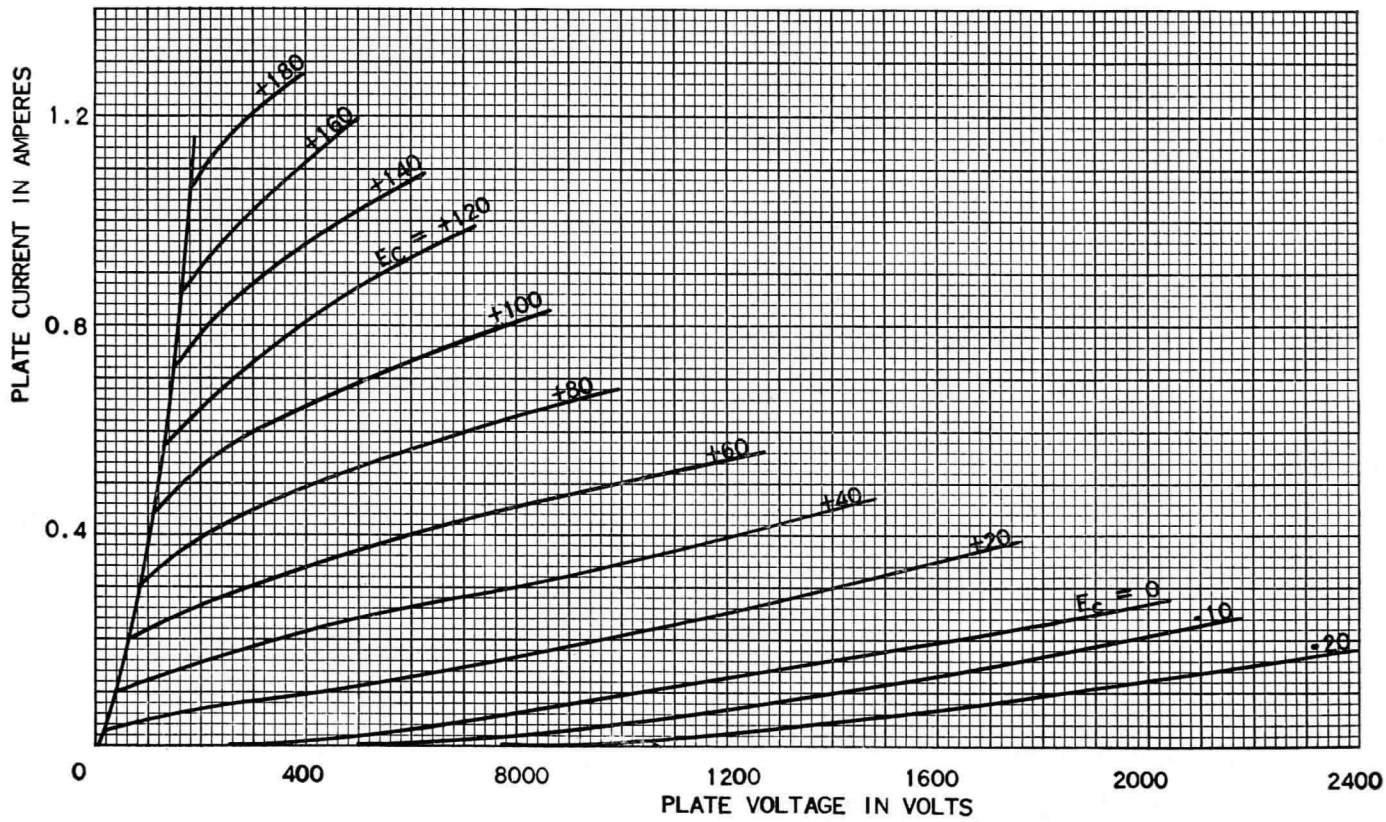

K-69087-72A103
▲New drawing.

2-6-47

■OUTLINE
GL-810

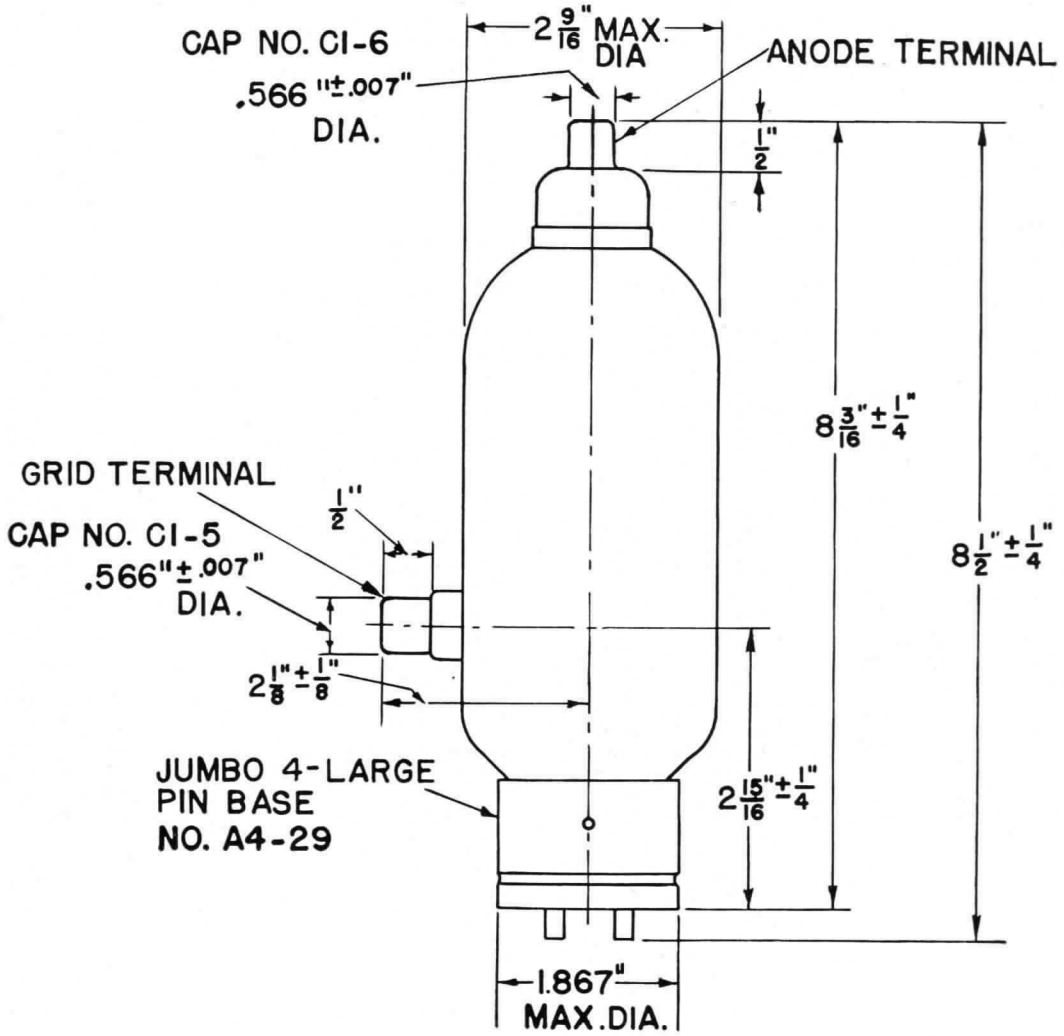

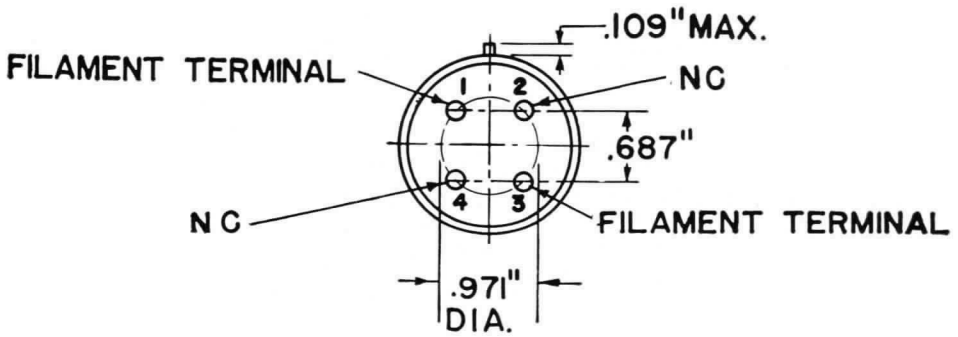

K-9033819
■ Revised drawing.

8-12-48

Tube Divisions, Electronics Department

GENERAL ELECTRIC

Schenectady, N. Y.

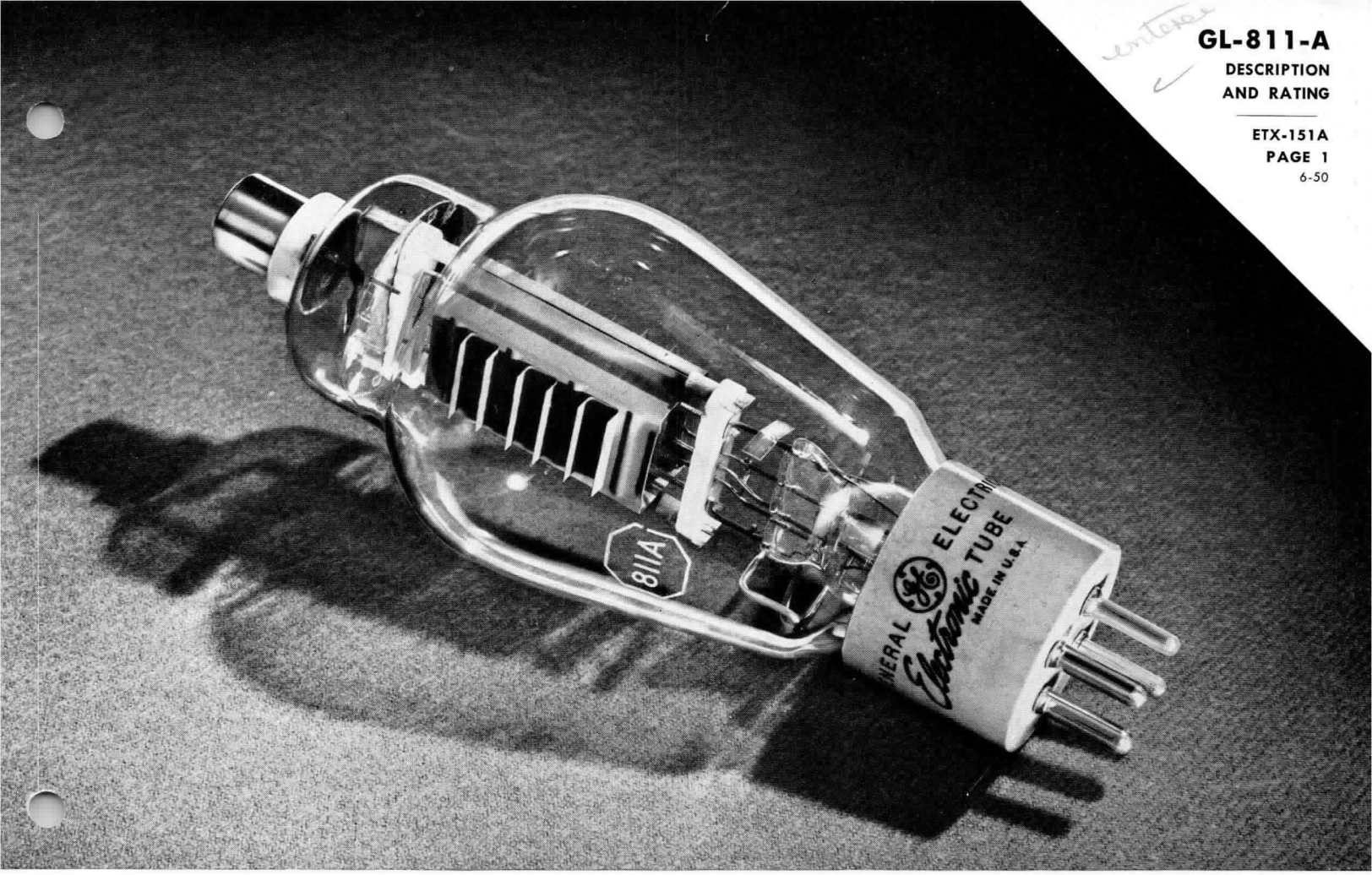

TRIODE

DESCRIPTION

The GL-811-A is a three-electrode tube designed for use as a class B audio-frequency power amplifier and modulator. It is well suited also for class C telephony, telegraphy, and self-rectifying service. In class B service and in unmodulated class C service, the GL-811-A has a maximum plate dissipation of 65 watts (ICAS).

Because of its high perveance, the GL-811-A operates at high efficiency and with low driving power. A pair of GL-811-A's in class B audio-frequency service with a plate input of 470 watts (ICAS) requires a driving power of only 4.4 watts, and can modulate 100 per cent a radio-frequency amplifier having an input of 680 watts.

In class C telegraph service under ICAS conditions, two GL-811-A's can be operated with a plate input of 520 watts and with the exceptionally low driving power at the tubes of only about 14 watts.

The GL-811-A may be operated at maximum ratings in all classes of r-f service at frequencies as high as 30 megacycles and with reduced ratings up to 100 megacycles.

Design features of the GL-811-A include a large zirconium-coated plate with radiating fins to give remarkably effective heat dissipation, heavy internal leads to grid and plate with resultant low radio-frequency losses, and a low-loss micanol base.

Supersedes ETX-151 dated 5-46

GENERAL ELECTRIC

Electronic TUBE

♦ TECHNICAL INFORMATION

GENERAL

Electrical Data

Filament Voltage (a-c or d-c)	6.3 ± 0.3	Volts
Filament Current, at E_f = 6.3 v	4	Amperes
Amplification Factor	160	
Direct Interelectrode Capacitances (With No External Shield)		
Grid-Plate	5.6	uuf
Grid-Filament	5.9	uuf
Plate-Filament	0.7	uuf

Mechanical Data

Mounting Position—Vertical, Base down; horizontal, With pins 1 and 4 in vertical plane
Cap —Medium No. C1-5
Base —Medium-shell small 4-pin, micanol with bayonet No. A4-10

MAXIMUM RATINGS AND TYPICAL OPERATING CONDITIONS

AUDIO-FREQUENCY POWER AMPLIFIER AND MODULATOR—CLASS B

Maximum ratings, absolute values	CCS*	ICAS**	
D-c plate voltage	1250 max	1500 max	volts
Maximum signal d-c plate current†	175 max	175 max	milliamperes
Maximum signal d-c plate input†	165 max	235 max	watts
Plate dissipation†	45 max	65 max	watts

Typical operation — Unless otherwise specified, values are for two tubes	CCS*			ICAS*		
D-c plate voltage	750	1250	1000	1250	1500	volts
D-c grid voltage‡	0	0	0	0	−4.5	volts
Peak A-F grid-to-grid voltage	197	145	185	175	170	volts
Zero-signal d-c plate current	32	50	44	54	32	milliamperes
Maximum signal d-c plate current	350	260	350	350	313	milliamperes
Effective load resistance, plate to plate	5100	12400	7400	9200	12400	ohms
Maximum signal driving power, approximate	9.7	3.8	7.5	6	4.4	watts
Maximum signal power output, approximate	178	235	248	310	340	watts

PLATE-MODULATED RADIO-FREQUENCY POWER AMPLIFIER—CLASS C TELEPHONY

Carrier conditions per tube for use with a maximum modulation factor of 1.0

Maximum ratings, absolute values	CCS*	ICAS**	
D-c plate voltage	1000 max	1250 max	volts
D-c grid voltage	−200 max	−200 max	volts
D-c plate current	125 max	150 max	milliamperes
D-c grid current	50 max	50 max	milliamperes
Plate input	115 max	175 max	watts
Plate dissipation	30 max	45 max	watts

Typical operation			
D-c plate voltage	1000	1250	volts
D-c grid voltage	−55	−120	volts
From a grid resistor of	1200	2700	ohms
Peak R-F grid voltage	150	250	volts
D-c plate current	115	140	milliamperes
D-c grid current, approximate	45	45	milliamperes
Driving power, approximate	6.1	10	watts
Power output, approximate	88	135	watts

RADIO-FREQUENCY POWER AMPLIFIER AND OSCILLATOR—CLASS C TELEGRAPHY

Key-down conditions per tube without amplitude modulation¶

Maximum ratings, absolute values	CCS*	ICAS**	
D-c plate voltage	1250 max	1500 max	volts
D-c grid voltage	−200 max	−200 max	volts
D-c plate current	175 max	175 max	milliamperes
D-c grid current	50 max	50 max	milliamperes
Plate input	175 max	260 max	watts
Plate dissipation	45 max	65 max	watts

TECHNICAL INFORMATION (CONT'D)

Typical operation			
D-c plate voltage	1250	1500	volts
D-c grid voltage	−50	−70	volts
From a grid resistor of	1100	1750	ohms
From a cathode resistor of	270	330	ohms
Peak r-f grid voltage	140	175	volts
D-c plate current	140	173	milliamperes
D-c grid current, approximate	45	40	milliamperes
Driving power, approximate	5.7	7.1	watts
Power output, approximate	135	200	watts

SELF-RECTIFYING AMPLIFIER§—CLASS C

Maximum ratings, absolute values	CCS*	
A-c plate voltage (rms)	1750	max volts
D-c grid voltage	−125	max volts
D-c plate current	65	max milliamperes
D-c grid current	25	max milliamperes
Plate input	125	max watts
Plate dissipation	45	max watts
Typical operation in push-pull circuit at 27 megacycles		
Unless otherwise specified, values are for two tubes		
A-c plate voltage (rms)	1750	volts
D-c grid voltage	−70	volts
From a grid resistor of	1500	ohms
D-c plate current	130	milliamperes
D-c grid current, approximate	46	milliamperes
Driving power, approximate ‡	12	watts
Power output, approximate	175	watts
Useful power output, approximate 75% circuit efficiency	130	watts

AMPLIFIER§—CLASS C

With separate, rectified, unfiltered, single-phase, full-wave plate supply

Maximum ratings, absolute values	CCS*	
D-c plate voltage	1125	max volts
D-c grid voltage	−125	max volts
D-c plate current	160	max milliamperes
D-c grid current	45	max milliamperes
Plate input	175	max watts
Plate dissipation	45	max watts
Typical operation		
D-c plate voltage	1125	volts
D-c grid voltage	−35	volts
From a grid resistor of	1400	ohms
D-c plate current	125	milliamperes
D-c grid current, approximate	25	milliamperes
Driving power, approximate△	3	watts
Power output, approximate	135	watts

◆Technical information completely revised.

*Continuous Commercial Service.

**Intermittent Commercial and Amateur Service.

†Averaged over any audio-frequency cycle of sine-wave form.

‡Grid voltages are given with respect to the mid-point of filament operated on alternating current. If direct current is used, each stated value of grid voltage should be reduced by one-half the filament voltage and the circuit returns made to the negative end of the filament.

¶Modulation, essentially negative, may be used if the positive peak of the audio-frequency envelope does not exceed 115 per cent of the carrier conditions.

§The GL-811-A is not recommended for oscillator service in applications involving wide variation in load. For such applications, the GL-812-A with its low amplification factor is preferred because of its ability to oscillate over a wide range of load variation.

#From a self-rectifying driver.

▲From a driver with a rectified, unfiltered, single-phase, full-wave plate supply.

Maximum ratings apply up to 30 megacycles. The tube may be operated at higher frequencies provided the maximum values of plate voltage and power input are reduced according to the tabulation below (other maximum ratings are the same as shown above). Special attention should be given to adequate ventilation of the bulb at these frequencies.

Frequency	30	60	80	100 megacycles
Percentage of maximum rated plate voltage and plate input				
Class C plate modulated	100	89	70	55 per cent
Class C unmodulated	100	89	70	55 per cent

♦GL-811-A
AVERAGE PLATE CHARACTERISTICS
$E_f = 6.3$ VOLTS D-C

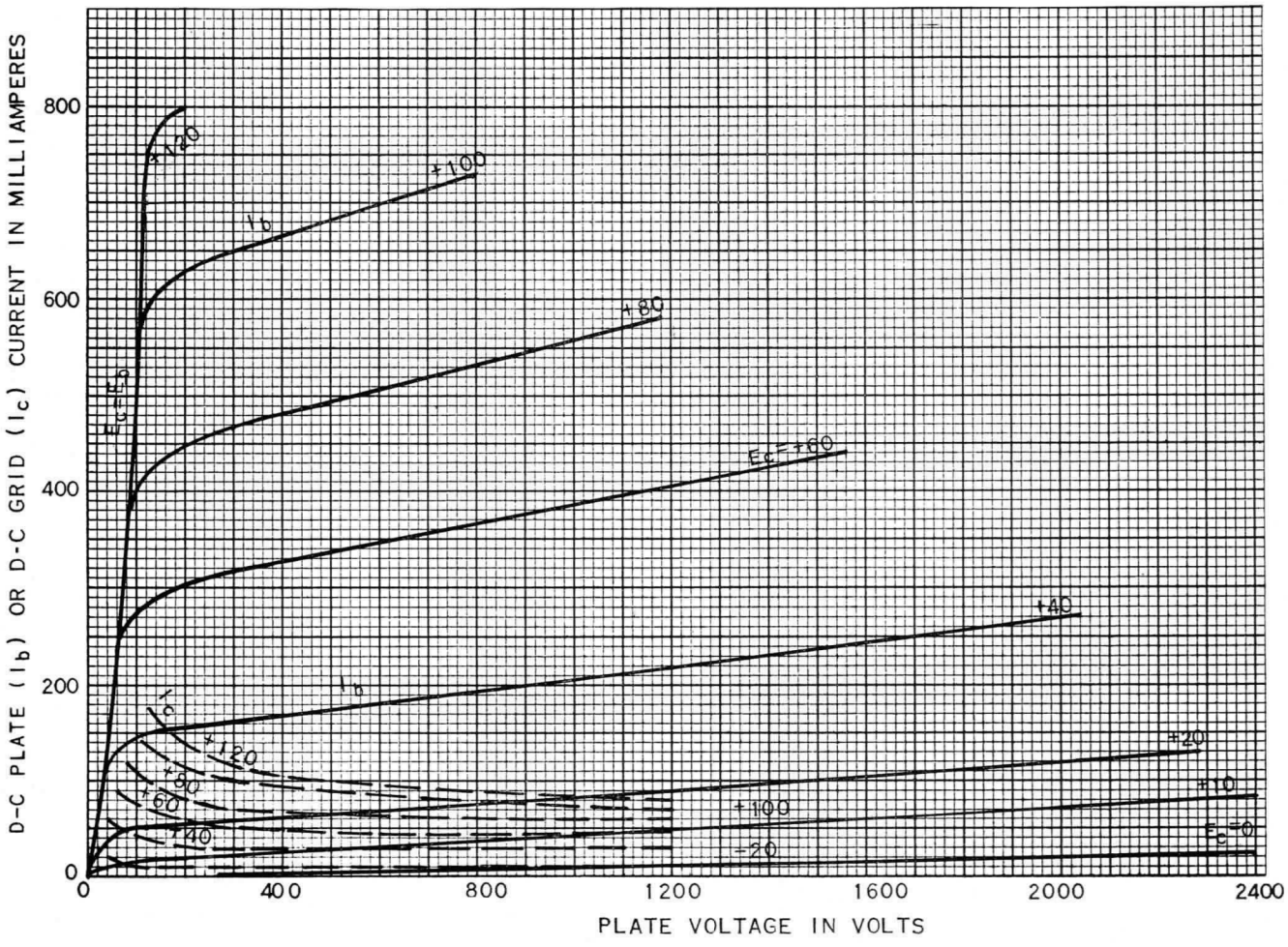

K-69087-72A320
♦ New drawing

11-14-49

♦ GL-811-A
OPERATION CHARACTERISTICS

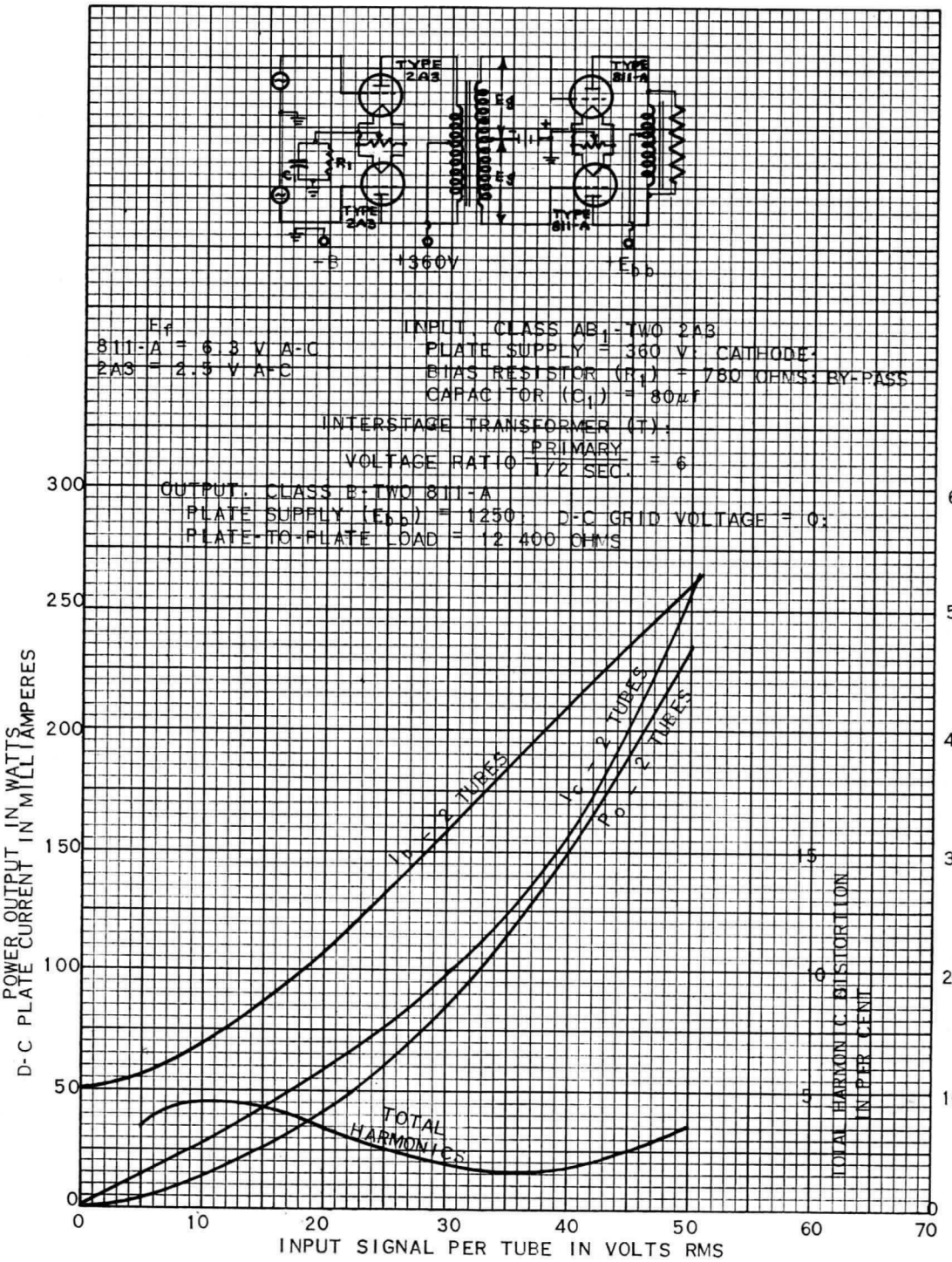

K-69087-72A318
♦New drawing

11-14-49

♦GL-811-A
OPERATION CHARACTERISTICS

E_f GL-811-A = 6.3 VOLTS 2A3 = 2.5 VOLTS
CIRCUIT SAME AS THAT ON DRAWING K-69087-72A318
INPUT, CLASS AB_1 —TWO 2A3, PLATE SUPPLY = 360 VOLTS
CATHODE BIAS RESISTOR (R_1) = 780 OHMS: BY-PASS CAPACITOR (C_1) = 80$_{uf}$
INTERSTAGE TRANSFORMER (T): VOLTAGE RATIO $\frac{\text{PRIMARY}}{\frac{1}{2}\text{ SEC.}} = 6$
OUTPUT, CLASS B—TWO 811-A, PLATE SUPPLY (E_{bb}) = 1500.
D-C GRID VOLTAGE = —4.5: PLATE-TO-PLATE LOAD = 12400 OHMS

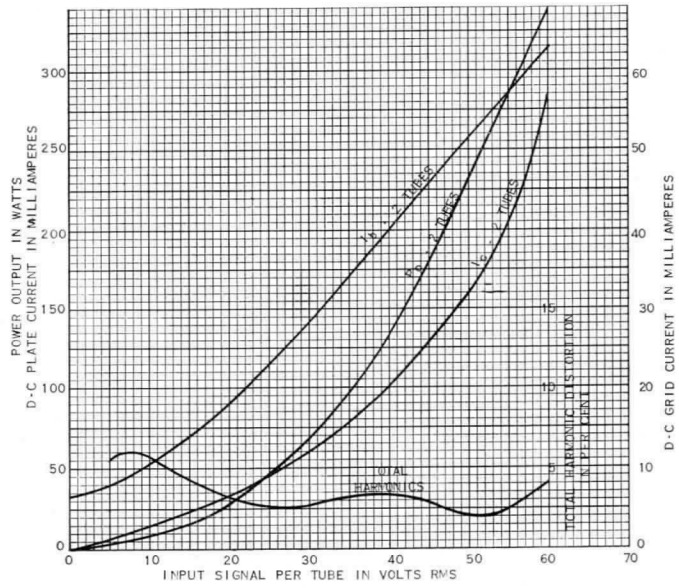

K-69087-72A319
♦New drawing

11-14-49

♦OUTLINE
GL-811-A

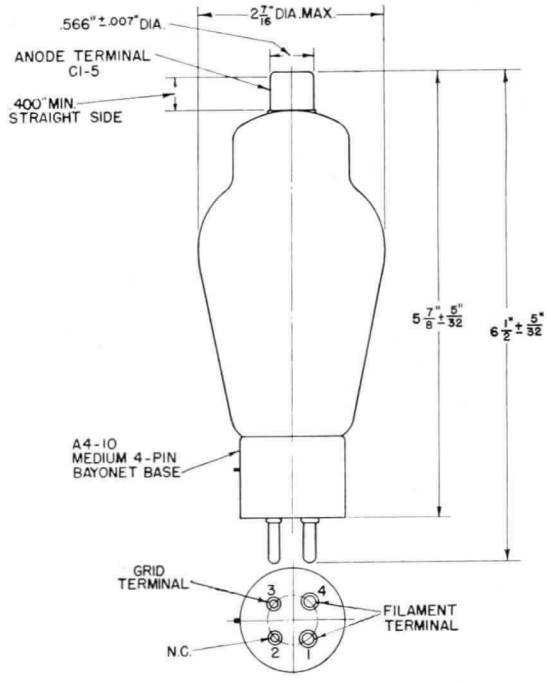

N-15158A2
♦Revised drawing

11-18-49

Electronics Department

GENERAL ELECTRIC

Schenectady, N. Y.

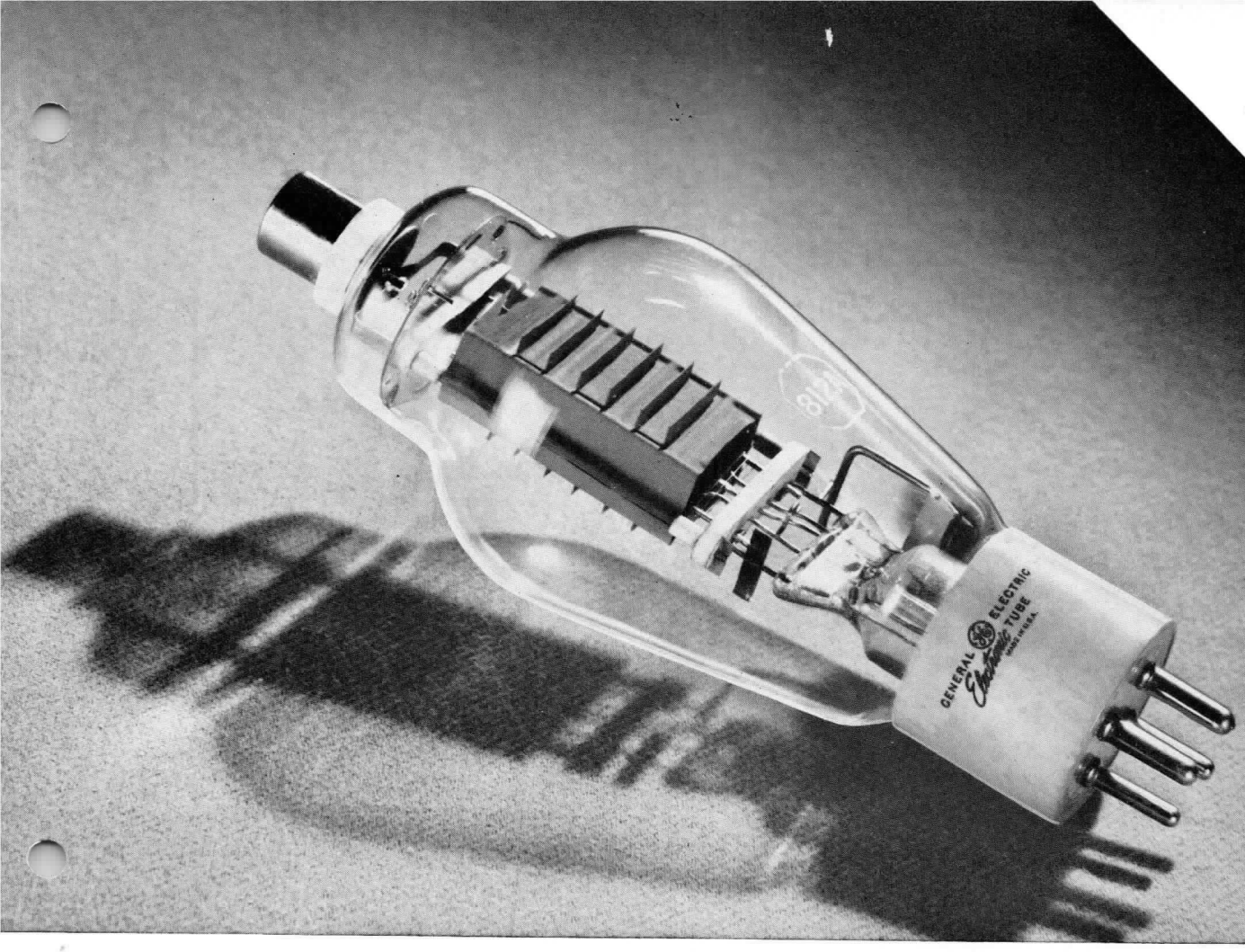

TRIODE

♦ DESCRIPTION

The GL-812-A is a three-electrode tube designed for use in unmodulated class C service, in plate-modulated radio-frequency power-amplifier service, or as a class B audio-frequency power amplifier and modulator. The anode is capable of dissipating 65 watts (ICAS) in class C unmodulated service. The cathode is a thoriated-tungsten filament. Maximum ratings apply up to 30 megacycles.

This tube will operate at high efficiency and low plate voltage because of its high perveance. Very low driving power is required. A pair of 812-A's in class C telegraph service (ICAS) can operate with a plate input of 520 watts and with the very low driving power at the tubes of only 13 watts. In class B modulator service (ICAS) two of these tubes will modulate 100 per cent a radio-frequency amplifier having an input of 680 watts.

The tube is sturdy and specific design features include a large zirconium-coated anode with radiating fins to give remarkably effective heat dissipation, low-loss anode and grid-lead construction, and a low-loss micanol base.

♦TECHNICAL INFORMATION

GENERAL

Electrical Data

Filament Voltage (A-C or D-C)	6.3±0.3	Volts
Filament Current, at E_f = 6.3 v	4	Amperes
Amplification Factor	29	
Direct Interelectrode Capacitances		
Grid-Plate	5.5	uuf
Grid-Filament	5.4	uuf
Plate-Filament	0.77	uuf

♦ Completely revised

Supersedes ETX152 dated 5-46

GENERAL ELECTRIC

Electronic TUBE

TECHNICAL INFORMATION (CONT'D)

Mechanical Data

Mounting position—Vertical, base down
Horizontal, plane of plate vertical

MAXIMUM RATINGS AND TYPICAL OPERATING CONDITIONS

AUDIO-FREQUENCY POWER AMPLIFIER AND MODULATOR—CLASS B

	CCS*	ICAS**	
Maximum ratings, absolute values			
D-c plate voltage	1250 max	1500 max	volts
Maximum signal d-c plate current†	175 max	175 max	milliamperes
Maximum signal d-c plate input†	165 max	235 max	watts
Plate dissipation†	45 max	65 max	watts
Typical operation			
Unless otherwise specified, values are for two tubes			
D-c plate voltage	1250	1500	volts
D-c grid voltage‡	−40	−48	volts
Peak a-f grid-to-grid voltage	225	270	volts
Zero signal d-c plate current	22	28	milliamperes
Maximum signal d-c plate current	260	310	milliamperes
Effective load resistance, plate to plate	12200	13200	ohms
Maximum signal driving power, approximate	3.5	5	watts
Maximum signal power output, approximate	235	340	watts

PLATE-MODULATED RADIO-FREQUENCY POWER AMPLIFIER—CLASS C TELEPHONY

Carrier conditions per tube for use with a maximum modulation factor of 1.0

	CCS*	ICAS**	
Maximum ratings, absolute values			
D-c plate voltage	1000 max	1250 max	volts
D-c grid voltage	−200 max	−200 max	volts
D-c plate current	125 max	150 max	milliamperes
D-c grid current	35 max	35 max	milliamperes
Plate input	115 max	175 max	watts
Plate dissipation	30 max	45 max	watts
Typical operation			
D-c plate voltage	1000	1250	volts
D-c grid voltage	−110	−115	volts
From a grid resistor of	3400	3300	ohms
Peak r-f grid voltage	220	240	volts
D-c plate current	115	140	milliamperes
D-c grid current, approximate	33	35	milliamperes
Driving power, approximate	6.6	7.6	watts
Power output, approximate	85	130	watts

RADIO-FREQUENCY POWER AMPLIFIER AND OSCILLATOR—CLASS C TELEGRAPHY

Key-down conditions per tube without modulation¶

	CCS*	ICAS**	
Maximum ratings, absolute values			
D-c plate voltage	1250 max	1500 max	volts
D-c grid voltage	−200 max	−200 max	volts
D-c plate current	175 max	175 max	milliamperes
D-c grid current	35 max	35 max	milliamperes
Plate input	175 max	260 max	watts
Plate dissipation	45 max	65 max	watts
Typical operation			
D-c plate voltage	1250	1500	volts
D-c grid voltage			
From a fixed supply of	−90	−120	volts
From a grid resistor of	3000	4000	ohms
From a cathode resistor of	530	590	ohms
Peak r-f grid voltage	200	240	volts
D-c plate current	140	173	milliamperes
D-c grid current, approximate	30	30	milliamperes
Driving power, approximate	5.4	6.5	watts
Power output, approximate	130	190	watts

TECHNICAL INFORMATION (CONT'D)

SELF-RECTIFYING OSCILLATOR OR AMPLIFIER—CLASS C

	CCS*	
Maximum ratings, absolute values		
A-c plate voltage (rms)	1750	max volts
D-c grid voltage	−125	max volts
D-c plate current	75	max milliamperes
D-c grid current	20	max milliamperes
Plate input	145	max watts
Plate dissipation	45	max watts
Typical operation in push-pull circuit at 27 megacycles		
Unless otherwise specified, values are for two tubes		
A-c plate voltage (rms)	1740	volts
Grid resistor	3500	ohms
D-c plate current	150	milliamperes
D-c grid current, approximate	29	milliamperes
Driving power, approximate #	12	watts
Power output, approximate	200	watts
Useful power output, approximate		
75% efficiency	150	watts

*Continuous Commercial Service.

**Intermittent Commercial and Amateur Service.

†Averaged over any audio-frequency cycle of sine-wave form.

‡Grid voltages are given with respect to the mid-point of filament operated on alternating current. If direct current is used, each stated value of grid voltage should be reduced by one-half the filament voltage and the circuit returns made to the negative end of the filament.

Modulation, essentially negative, may be used if the positive peak of the audio-frequency envelope does not exceed 115 per cent of the carrier conditions.

#From a self-rectified driver.

GL-812-A AVERAGE PLATE CHARACTERISTICS

(E_f = 6.3 VOLTS D-C)

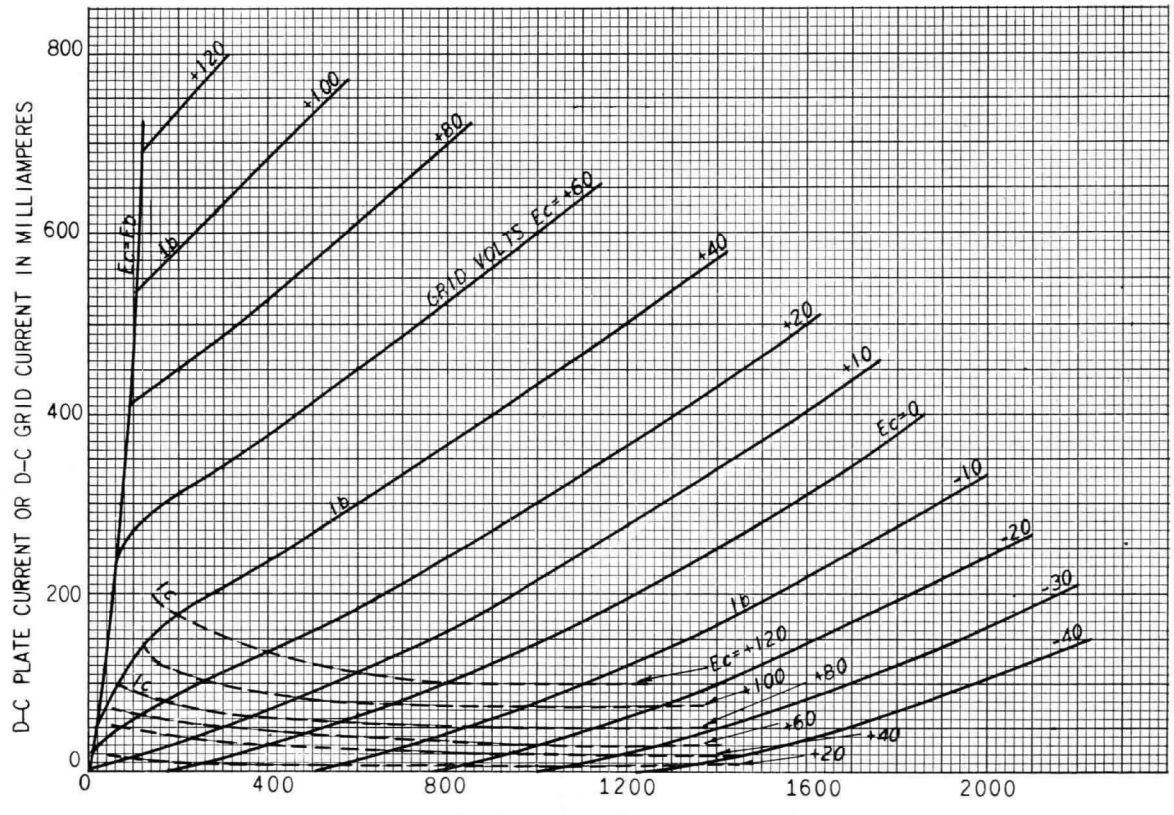

K-9033934

5-22-49

▲GL-812-A OPERATION CHARACTERISTICS

(E_f = 6.3 VOLTS A-C FOR GL-812'S AND 6L6'S)

CIRCUIT CONDITIONS: INPUT—INTERSTAGE TRANSFORMER (SAME AS K-9186084, PAGE 5) OUTPUT—CLASS B—TWO TYPE 812'S
PLATE VOLTS = 1500, GRID VOLTS = 46, LOAD, PLATE-TO-PLATE = 1800 OHMS

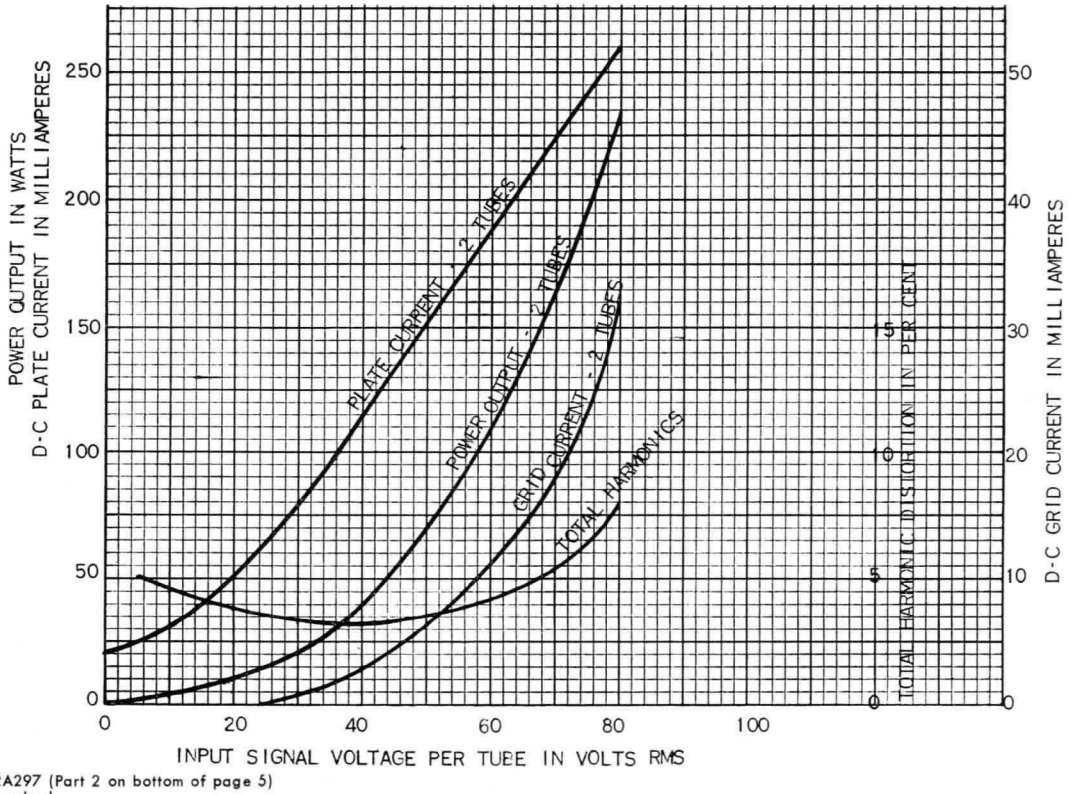

K-69087-72A297 (Part 2 on bottom of page 5)
▲Drawing revised

6-21-49

♦GL-812-A
OPERATION CHARACTERISTICS

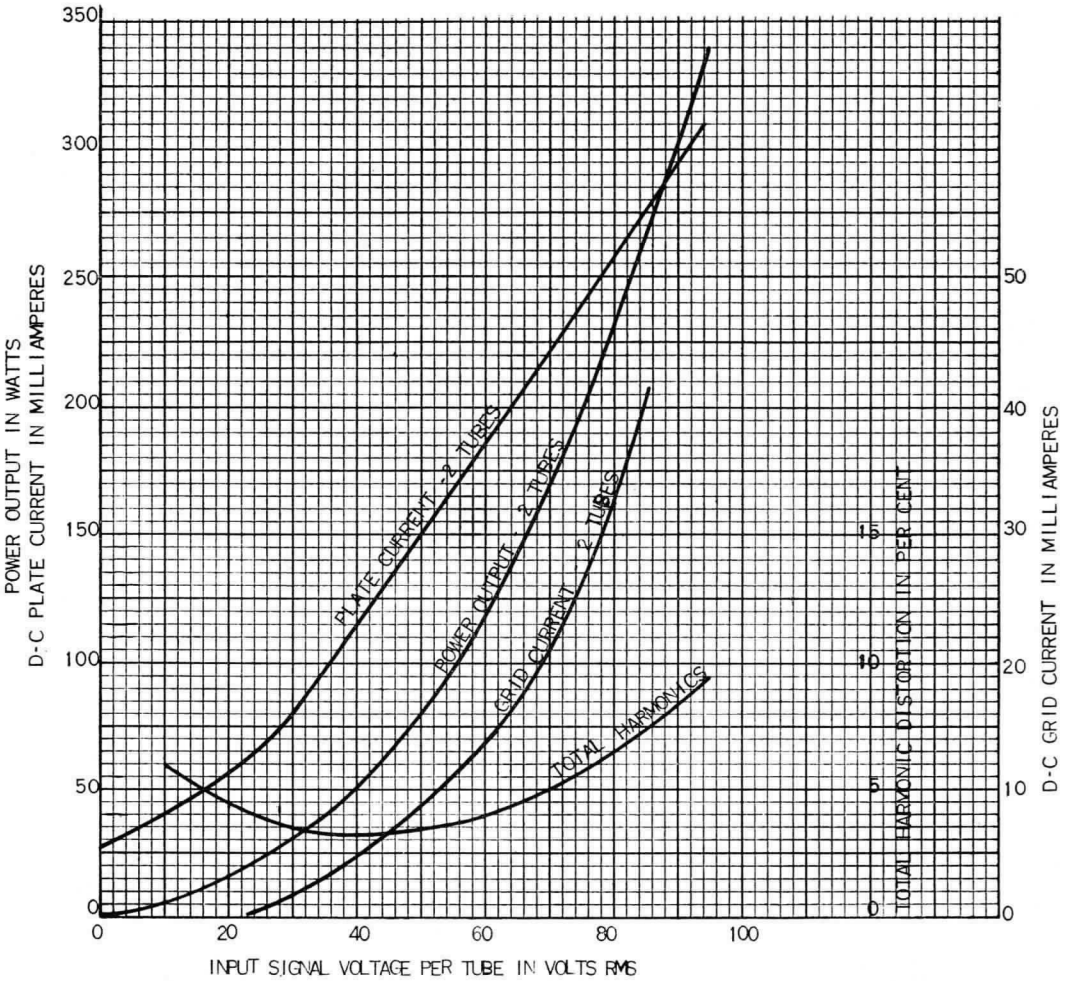

K-69087-72A298 (Part 2 below)
♦New drawing

6-21-49

CIRCUIT CONDITIONS

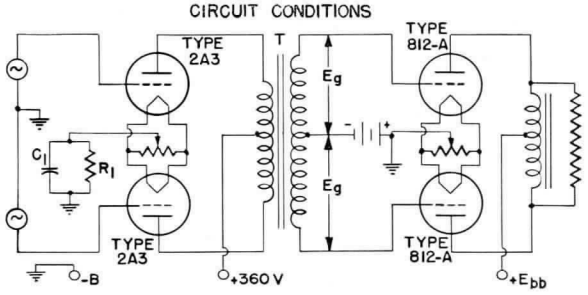

E_f = 6.3 VOLTS A-C (812-A) AND 2.5 VOLTS A-C (2A3)

INPUT: CLASS AB_1 - 2 TYPE 2A3; PLATE-SUPPLY VOLTS = 360; CATHODE-BIAS RESISTOR (R_1) = 780 OHMS; BYPASS CAPACITOR (C_1) = 80 µf

INTERSTAGE TRANSFORMER (T):

VOLTAGE RATIO $\frac{\text{PRIMARY}}{1/2 \text{ SEC.}}$ = 1.4

OUTPUT: CLASS B - 2 TYPE 812-A; PLATE VOLTS (E_{bb}) = 1250; D-C GRID VOLTS = -40; PLATE-TO-PLATE LOAD = 12200 OHMS

K-69087-72A297
New drawing

6-21-49

CIRCUIT CONDITIONS

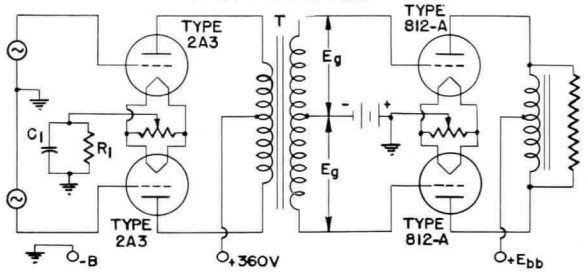

E_f = 6.3 VOLTS A-C (812-A) AND 2.5 VOLTS A-C (2A3)

INPUT: CLASS AB_1 - 2 TYPE 2A3; PLATE-SUPPLY VOLTS = 360; CATHODE-BIAS RESISTOR (R_1) = 780 OHMS; BYPASS CAPACITOR (C_1) = 80 µf

INTERSTAGE TRANSFORMER (T):

VOLTAGE RATIO $\frac{\text{PRIMARY}}{1/2 \text{ SEC.}}$ = 1.4

OUTPUT: CLASS B - 2 TYPE 812-A; PLATE VOLTS (E_{bb}) = 1500; D-C GRID VOLTS = -48; PLATE-TO-PLATE LOAD = 13200 OHMS

K-69087-72A298
New drawing

6-21-49

♦ GL-812-A OUTLINE

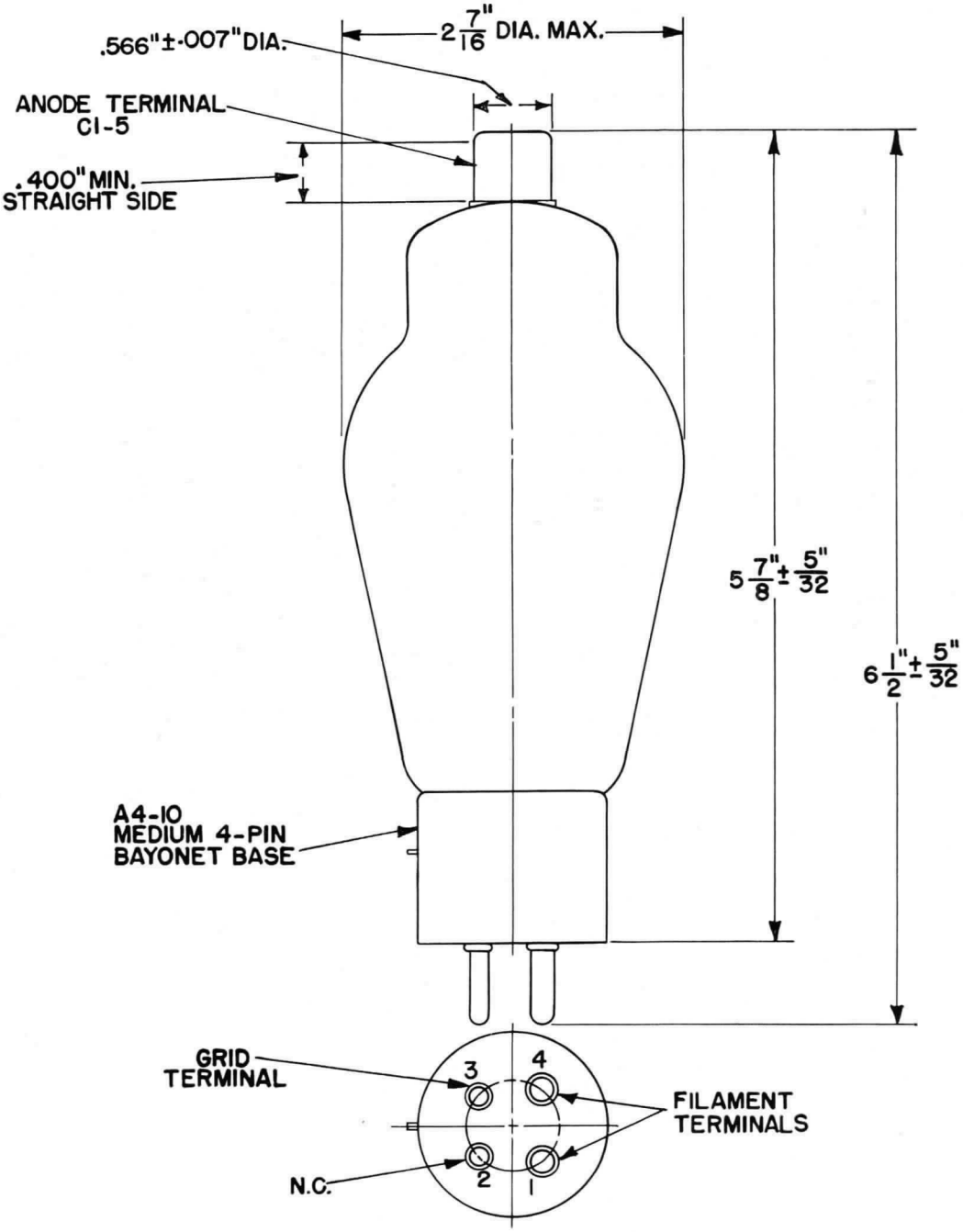

N-15152AZ
♦New drawing

6-10-49

Electronics Department

GENERAL ELECTRIC

Schenectady, N. Y.

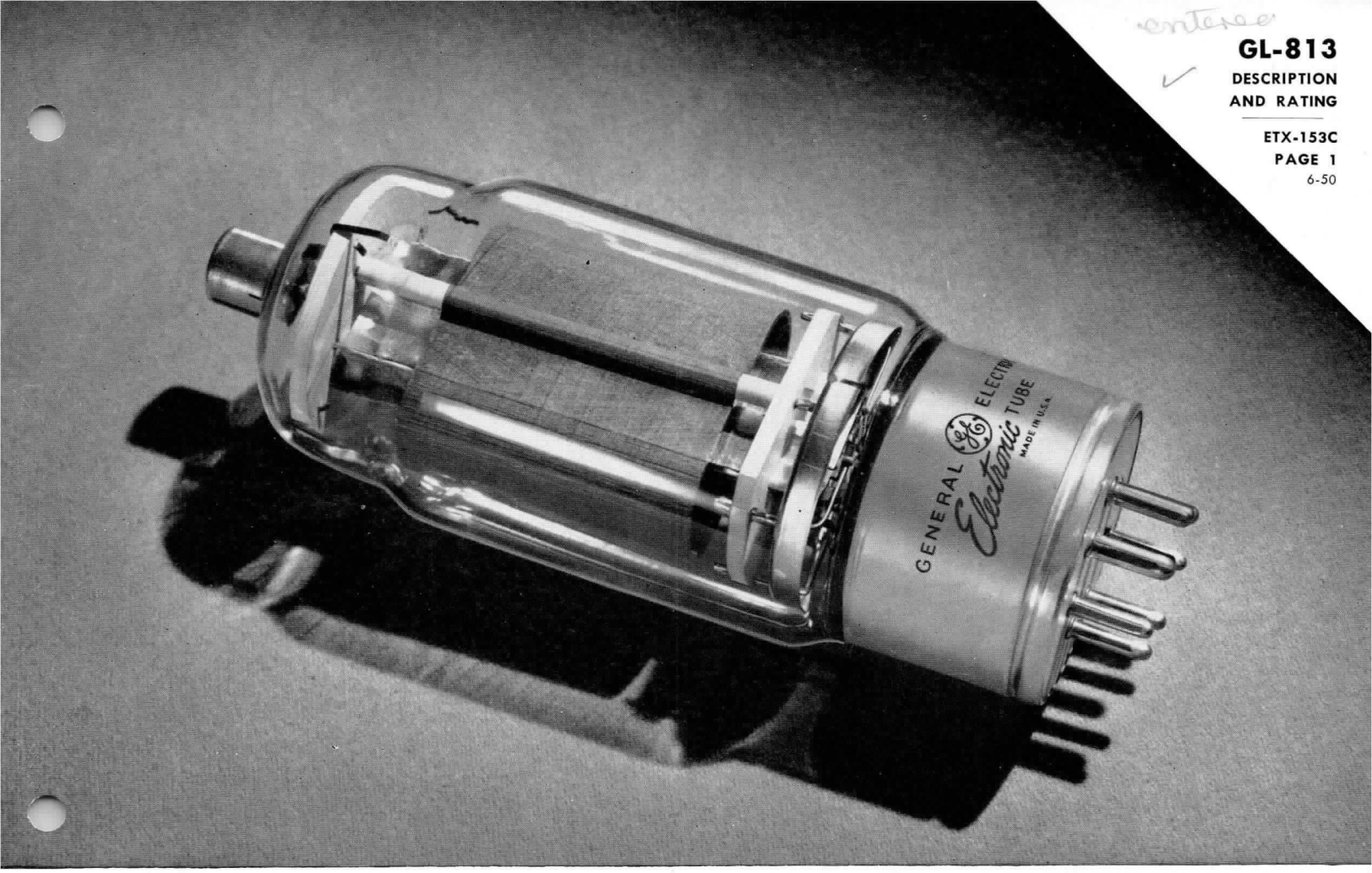

BEAM POWER TUBE

♦DESCRIPTION

The GL-813 is a radiation-cooled five-electrode, beam power transmitting tube with extremely high power sensitivity designed for use as a modulator, amplifier, and oscillator. The cathode is a thoriated-tungsten filament. The anode is capable of dissipating 125 watts and the typical power output for class C telegraph service is 275 watts. Maximum ratings apply up to a frequency of 30 megacycles.

Full power output can be obtained with very little driving power and with a reduced number of driver stages. Neutralization is unnecessary in adequately shielded circuits. The GL-813 makes an excellent power amplifier for the final stage of high-power amateur transmitters where quick band change without neutralizing adjustments is desirable. It is also an excellent high-power frequency multiplier and is capable of giving high harmonic output with unusually high efficiency. The reduced over-all length of the tube provides for short internal leads and minimizes lead inductance.

TECHNICAL INFORMATION

These data are for reference only. For design information refer to specifications.

GENERAL

Electrical Data	Minimum	Bogey	Maximum	
Filament Voltage	9.5	10	10.5	Volts
Filament Current at Bogey Voltage	4.7	5	5.3	Amperes
Amplification Factor, Grid No. 1 to Grid No. 2				
E_b = 2000 v d-c, I_b = 50 ma	..	8.5	..	
Interelectrode Capacitances				
Grid-Plate	..	..	0.25	uuf
Input	13	16.3	19.6	uuf
Output	10.5	14.0	17.5	uuf

♦ Description completely revised.

Supersedes ETX-153B dated 7-48

Electronic TUBE

GENERAL ELECTRIC

TECHNICAL INFORMATION (CONT'D)

Mechanical Data

Mounting position—Vertical, base up or down; horizontal—plate in vertical plane

Net weight, approximate ..... 8 ounces

MAXIMUM RATINGS AND TYPICAL OPERATING CONDITIONS

AUDIO-FREQUENCY POWER AMPLIFIER AND MODULATOR—CLASS AB2

Maximum ratings, absolute values	CCS*	ICAS*	
D-c plate voltage	2250 max	2500 max	volts
D-c grid No. 2 voltage	800 max	800 max	volts
Maximum signal d-c plate current**	180 max	225 max	milliamperes
Maximum signal plate input**	360 max	450 max	watts
Maximum signal grid No. 2 input**	22 max	22 max	watts
Plate dissipation**	100 max	125 max	watts

Typical operation	CCS*		ICAS*	
Unless otherwise specified, values are for two tubes				
D-c plate voltage	2000	2250	2500	volts
D-c grid No. 3 voltage	0	0	0	volts
D-c grid No. 2 voltage	750	750	750	volts
D-c grid No. 1 voltage	−90	−90	−95	volts
Peak a-f grid No. 1 to grid No. 1 voltage	230	230	235	volts
Zero-signal d-c plate current	40	45	35	milliamperes
Maximum signal d-c plate current	315	315	360	milliamperes
Zero-signal d-c grid No. 2 current	1.5	1.5	1.2	milliamperes
Maximum signal d-c grid No. 2 current	58	58	55	milliamperes
Effective load resistance, plate to plate	16000	18500	17000	ohms
Maximum signal driving power, approximate***	0.10	0.10	0.35	watts
Maximum signal power output, approximate	455	515	650	watts

RADIO-FREQUENCY POWER AMPLIFIER—CLASS B TELEPHONY

Carrier conditions per tube for use with a maximum modulation factor of 1.0

Maximum ratings, absolute values	CCS*	ICAS*	
D-c plate voltage	2000 max	2250 max	volts
D-c grid No. 2 voltage	400 max	400 max	volts
D-c plate current	100 max	125 max	milliamperes
Plate input	150 max	200 max	watts
Grid No. 2 input	15 max	20 max	watts
Plate dissipation	100 max	125 max	watts

Typical operation	CCS*		ICAS*	
D-c plate voltage	1500	2000	2250	volts
D-c grid No. 3 voltage	0	0	0	volts
D-c grid No. 2 voltage	400	400	400	volts
D-c grid No. 1 voltage	−60	−75	−60	volts
Peak r-f grid No. 1 voltage	70	80	70	volts
D-c plate current	100	75	85	milliamperes
D-c grid No. 2 current	4	3	3	milliamperes
D-c grid No. 1 current, approximate****	..	..	..	milliamperes
Driving power, approximate†	..	..	..	watts
Power output	50	50	70	watts

GRID-MODULATED RADIO-FREQUENCY POWER AMPLIFIER—CLASS B TELEPHONY

Carrier conditions per tube for use with a maximum modulation factor of 1.0

Maximum ratings, absolute values	CCS*	ICAS*	
D-c plate voltage	2000 max	2250 max	volts
D-c grid No. 2 voltage	400 max	400 max	volts
D-c grid No. 1 voltage	−200 max	−200 max	volts
D-c plate current	100 max	125 max	milliamperes
Plate input	150 max	200 max	watts
Grid No. 2 input	15 max	20 max	watts
Plate dissipation	100 max	125 max	watts

TECHNICAL INFORMATION (CONT'D)

Typical operation	CCS*		ICAS*	
D-c plate voltage	1500	2000	2250	volts
D-c grid No. 3 voltage‡	0	0	0	volts
D-c grid No. 2 voltage	400	400	400	volts
D-c grid No. 1 voltage	−140	−120	−110	volts
Peak r-f grid No. 1 voltage	145	120	135	volts
Peak a-f grid No. 1 voltage	60	60	55	volts
D-c plate current	70	75	85	milliamperes
D-c grid No. 2 current	3	3	2.5	milliamperes
D-c grid No. 1 current, approximate#	——	——	——	milliamperes
Driving power, approximate##	——	——	——	milliamperes
Power output, approximate	40	50	75	watts

PLATE-MODULATED RADIO-FREQUENCY POWER AMPLIFIER—CLASS C TELEPHONY

Carrier conditions per tube for use with a maximum modulation factor of 1.0

Maximum ratings, absolute values	CCS*	ICAS*	
D-c plate voltage	1600 max	2000	max volts
D-c grid No. 2 voltage	400 max	400	max volts
D-c grid No. 1 voltage	−300 max	−300	max volts
D-c plate current	150 max	200	max milliamperes
D-c grid No. 1 current	25 max	30	max milliamperes
Plate input	240 max	400	max watts
Grid No. 2 input	15 max	20	max watts
Plate dissipation	67 max	100	max watts

Typical operation	CCS*		ICAS*	
D-c plate voltage	1250	1600	2000	volts
D-c grid No. 3 voltage‡	0	0	0	volts
D-c grid No. 2 voltage	300	300	350	volts
D-c grid No. 1 voltage	−160	−160	−175	volts
Peak r-f grid No. 1 voltage	250	250	300	volts
D-c plate current	150	150	200	milliamperes
D-c grid No. 2 current	35	30	40	milliamperes
D-c grid No. 1 current, approximate	13	12	16	milliamperes
Driving power, approximate	2.9	2.7	4.3	watts
Power output, approximate	140	180	300	watts

RADIO-FREQUENCY POWER AMPLIFIER AND OSCILLATOR—CLASS C TELEGRAPHY

Key-down conditions per tube without amplitude modulation¶

Maximum ratings, absolute values	CCS*	ICAS*	
D-c plate voltage	2000 max	2250	max volts
D-c grid No. 2 voltage	400 max	400	max volts
D-c grid No. 1 voltage	−300 max	−300	max volts
D-c plate current	180 max	225	max milliamperes
D-c grid No. 1 current	25 max	30	max milliamperes
Plate input	360 max	500	max watts
Grid No. 2 input	22 max	22	max watts
Plate dissipation	100 max	125	max watts

Typical operation	CCS*			ICAS*	
D-c plate voltage	1250	1500	2000	2250	volts
D-c grid No. 3 voltage‡	0	0	0	0	volts
D-c grid No. 2 voltage	300	300	400	400	volts
D-c grid No. 1 voltage	−75	−90	−120	−155	volts
Peak r-f grid No. 1 voltage	160	175	205	275	volts
D-c plate current	180	180	180	220	milliamperes
D-c grid No. 2 current	35	30	45	40	milliamperes
D-c grid No. 1 current approximate	12	12	10	15	milliamperes
Driving power, approximate	1.7	1.9	1.9	4.0	watts
Power output, approximate	170	210	275	375	watts

TECHNICAL INFORMATION (CONT'D)

SELF-RECTIFYING OSCILLATOR OR AMPLIFIER—CLASS C

Maximum ratings, absolute values	CCS*	
A-c plate voltage (rms)	2800	max volts
A-c grid No. 2 voltage (rms)	550	max volts
D-c grid No. 1 voltage	−100	max volts
D-c plate current	95	max milliamperes
D-c grid No. 1 current	10	max milliamperes
Plate input	295	max watts
Grid No. 2 input	22	max watts
Plate dissipation	100	max watts
Typical operation	CCS*	
A-c plate voltage (rms)	2800	volts
D-c grid No. 3 voltage	0	volts
A-c grid No. 2 voltage (rms)	530	volts
D-c grid No. 1 voltage	−37	volts
From a grid resistor of	37000	ohms
D-c plate current	95	milliamperes
D-c grid No. 2 current	12	milliamperes
D-c grid No. 1 current, approximate	1	milliampere
Driving power, approximate △	1	watt
Power output, approximate	230	watts
Useful power output, approximate		
75% circuit efficiency	170	watts

AMPLIFIER OR OSCILLATOR—CLASS C

With rectified, unfiltered, single-phase, full-wave plate supply

Maximum ratings, absolute values	CCS*	
D-c plate voltage	1800	max volts
D-c grid No. 2 voltage	360	max volts
D-c grid No. 1 voltage	−200	max volts
D-c plate current	190	max milllamperes
D-c grid No. 1 current	22	max milliamperes
Plate input △ △	360	max watts
Grid No. 2 input	22	max watts
Plate dissipation	100	max watts
Typical operation	CCS*	
D-c plate voltage	1800	volts
D-c grid No. 3 voltage	0	volts
D-c grid No. 2 voltage	250	volts
D-c grid No. 1 voltage	−120	volts
From a grid resistor of	10000	ohms
D-c plate current	160	milliamperes
D-c grid No. 2 current	37	milliamperes
D-c grid No. 1 current, approximate	12	milliamperes
Driving power, approximate △ △ △	2	watts
Power output, approximate	280	watts
Useful power output, approximate		
75% circuit efficiency	210	watts

Maximum ratings apply up to 30 megacycles. The tube may be operated at higher frequencies provided the maximum values of plate voltage and power input are reduced according to the tabulation below (other maximum ratings are the same as shown above). Special attention should be given to adequate ventilation of the bulb at these frequencies.

Frequency	30	60	120	megacycles
Maximum permissible percentage of maximum rated plate voltage and plate input				
Class B	100	88	76	per cent
Class C plate-modulated	100	75	50	per cent
Class C unmodulated	100	75	50	per cent

*Continuous Commercial Service.
Intermittent Commercial and Amateur Service.
**Averaged over any audio-frequency cycle of sine-wave form.

TECHNICAL INFORMATION (CONT'D)

***Driver stage should be capable of supplying the No. 1 grids of the class AB_2 stage with the specified driving power at low distortion.

****Usually negligible. Fixed supply or by-passed cathode resistor bias recommended.

†Usually negligible. Never more than 2 watts. At crest of audio-frequency cycle with a modulation factor of 1.0.

‡Suppressor should be connected to the mid-point of the filament circuit operated on a-c or to the negative end operated on d-c.

#Usually negligible. Fixed supply or unby-passed cathode resistor bias recommended.

##Usually negligible. R-f driving power is never more than 2 watts; A-f power is usually not more than 1.0 watt. At crest of audio-frequency cycle with a modulation factor of 1.0.

¶Modulation essentially negative may be used if the positive peak of the envelope does not exceed 115 per cent of the carrier conditions.

△From a self-rectified driver.

△△Power input is 1.23 times the product of D-c plate voltage and d-c plate current.

△△△From a driver with a rectified, unfiltered, single-phase, full-wave plate supply.

GL-813 AVERAGE PLATE CHARACTERISTICS
$E_f = 10$ VOLTS D-C, SCREEN VOLTAGE = 300

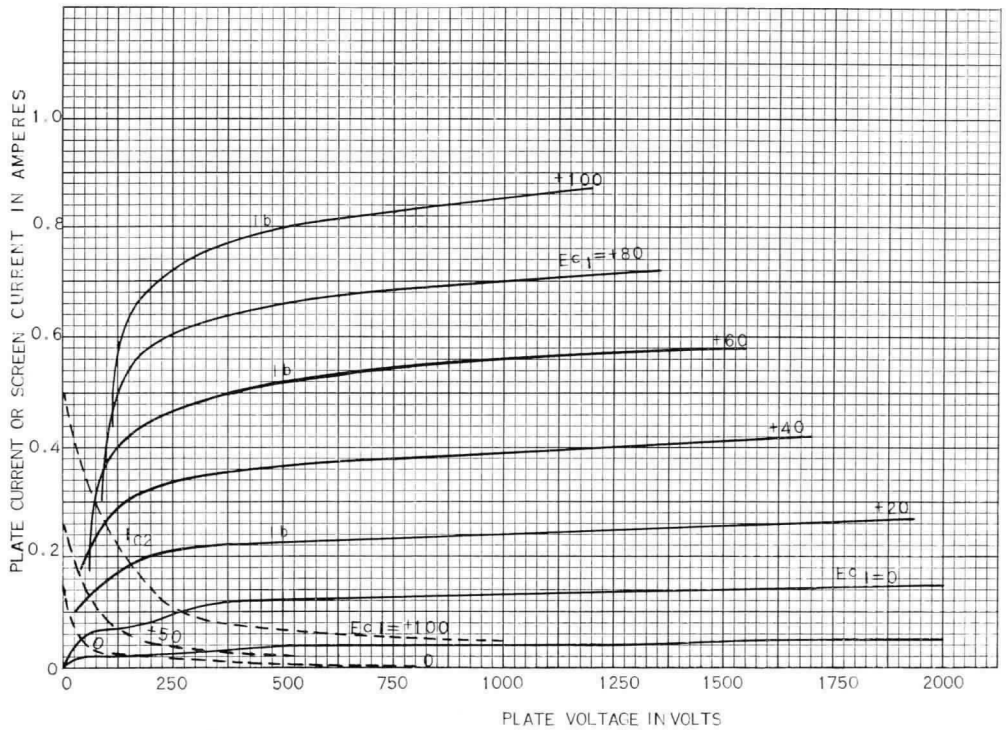

K-69087-72A92

1-20-47

GL-813 AVERAGE PLATE CHARACTERISTICS

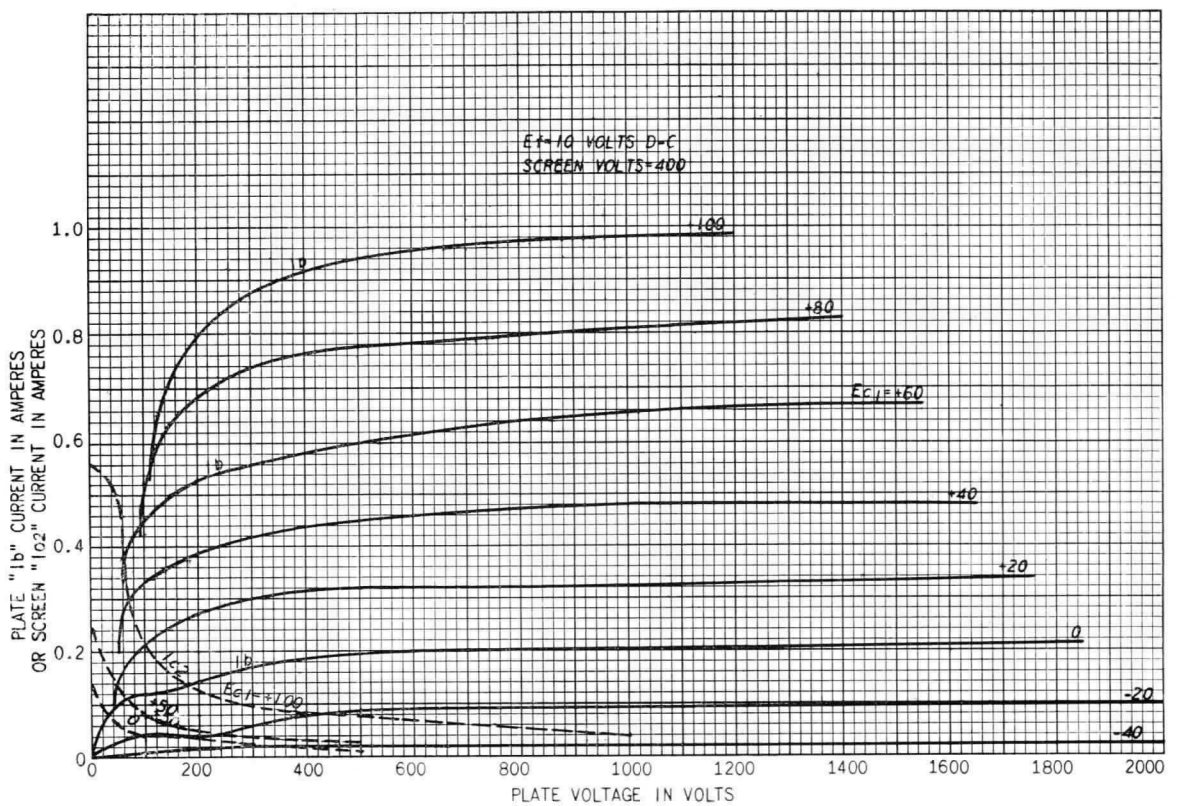

K-8639611

1-9-46

GL-813 AVERAGE PLATE CHARACTERISTICS

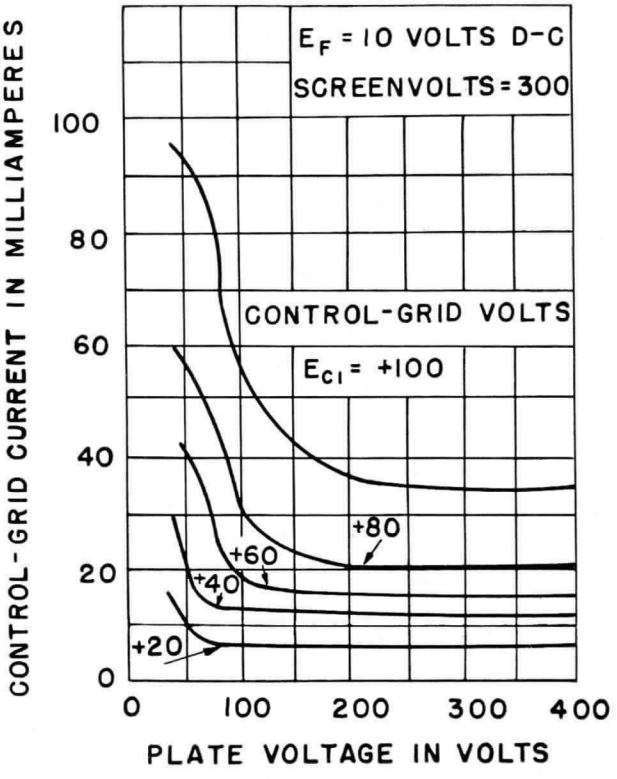

K-8639612 1-9-46

GL-813 AVERAGE CHARACTERISTICS

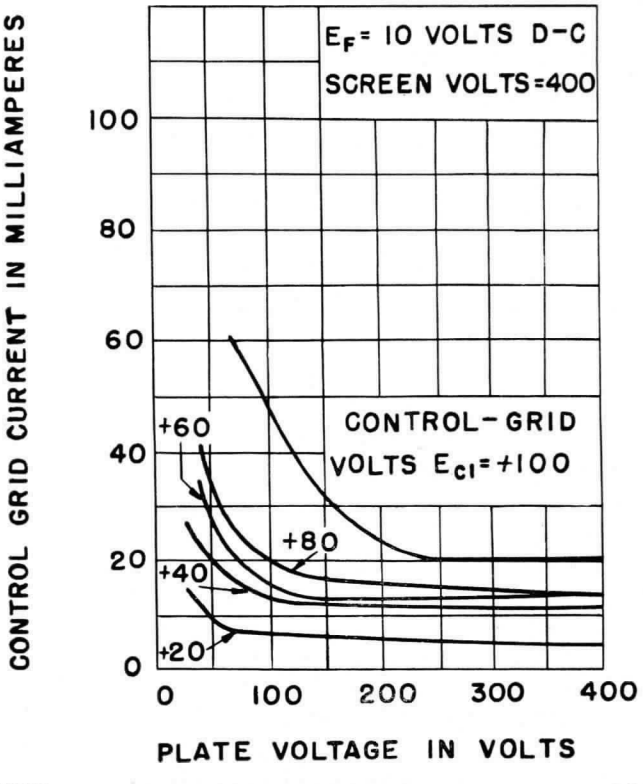

K-8639613 1-9-46

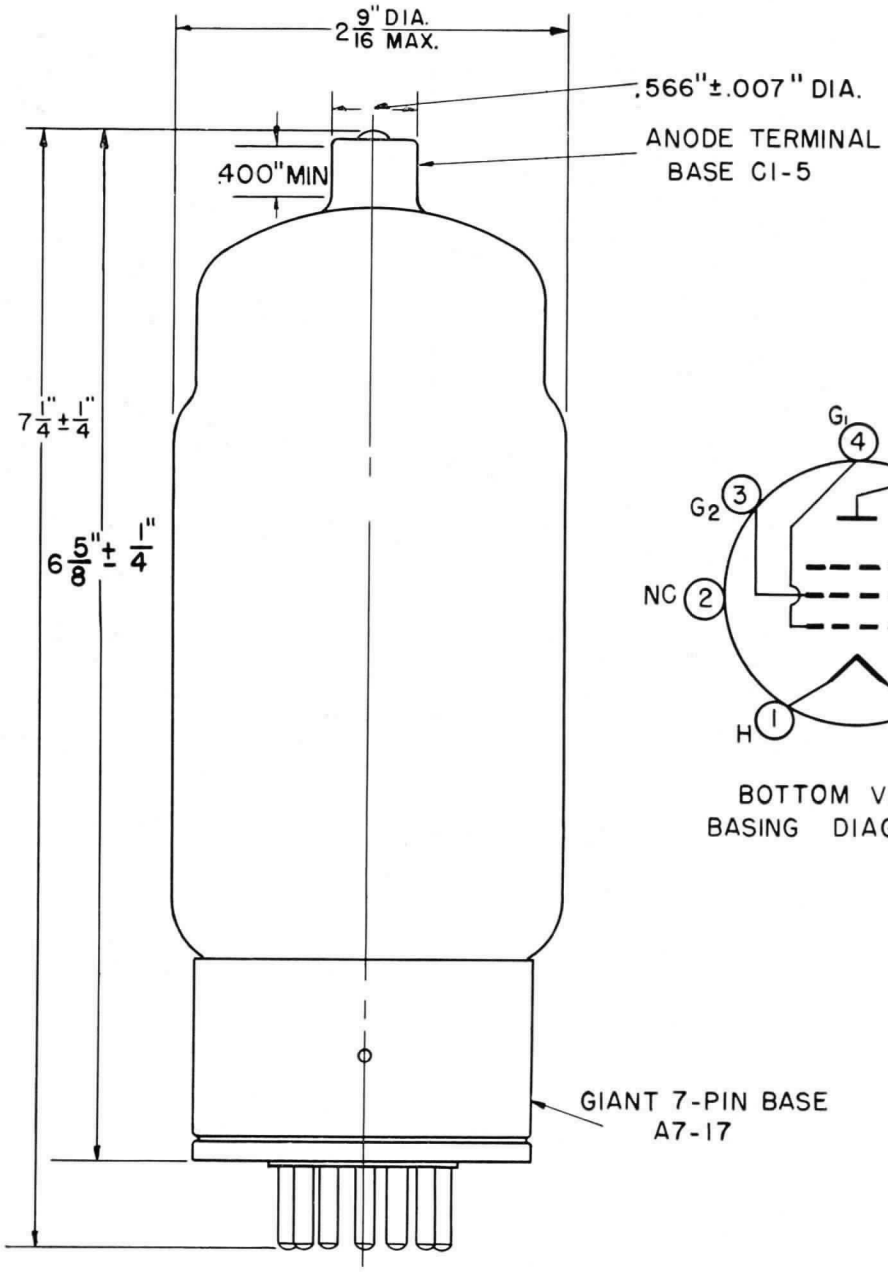

BOTTOM VIEW
BASING DIAGRAM

OUTLINE
GL-813 PLIOTRON

K-8277247

6-5-47

Electronics Department
GENERAL ELECTRIC
Schenectady, N. Y.

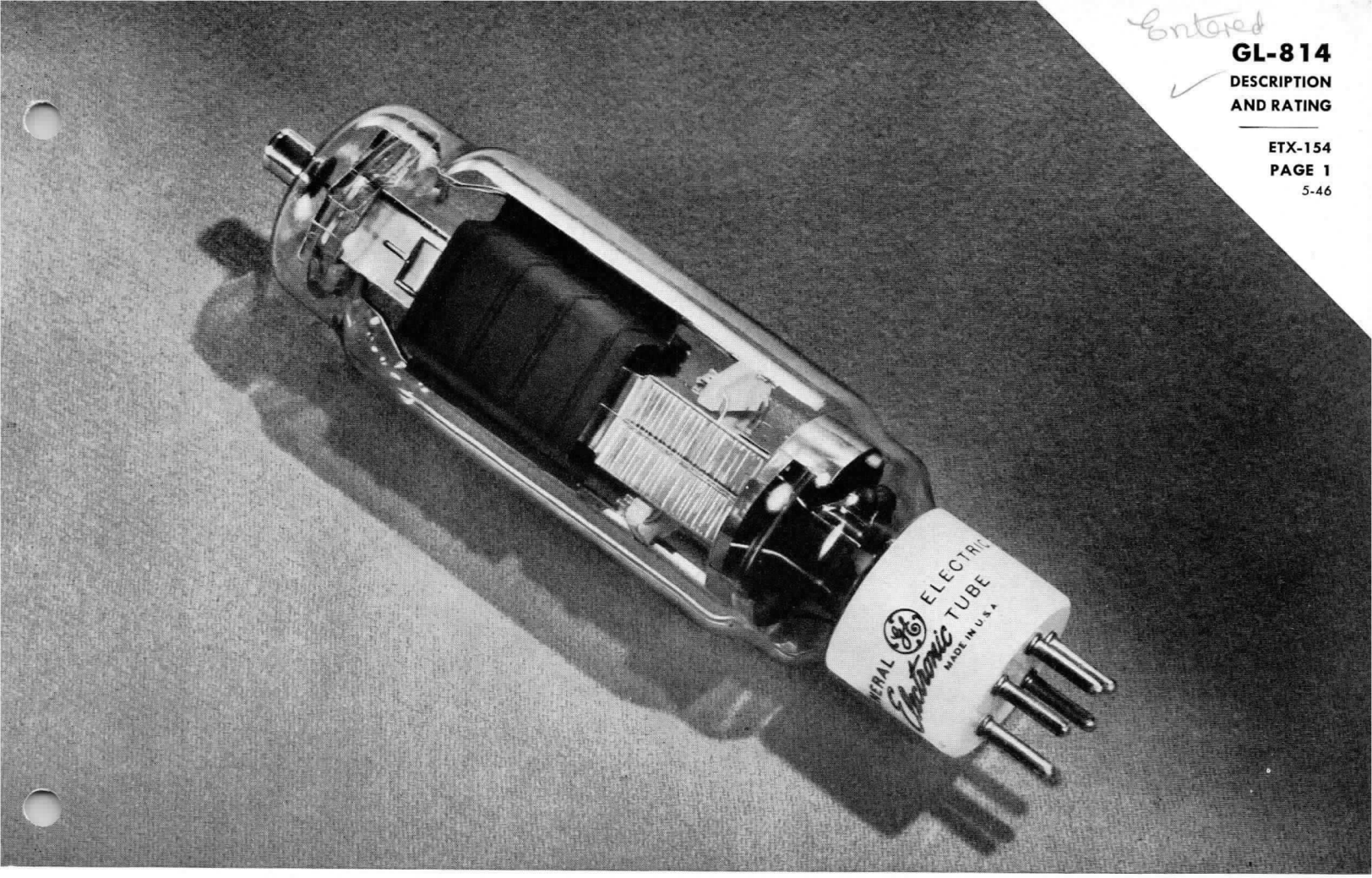

BEAM POWER TUBE

DESCRIPTION

GL-814 is a filament type of transmitting tube incorporating new design principles involving the use of directed electron beams. Features resulting from the use of these principles in the 814 are that the screen absorbs little power and that efficient suppressor action is supplied by space-charge effects produced between the screen and the plate. The resultant high power sensitivity makes this tube especially suited for use as a radio-frequency amplifier, frequency multiplier, oscillator, and plate-modulated amplifier. The plate connection is brought out through a separate seal at the top of the bulb to maintain low grid-plate capacitance. The GL-814 can be operated at maximum ratings at frequencies as high as 30 megacycles and up to 75 megacycles at reduced ratings.

TECHNICAL INFORMATION

These data are for reference only. For design information refer to specifications.

GENERAL CHARACTERISTICS

Number of electrodes	5	
Electrical		
Cathode—Filamentary		
Voltage	10	volts
Current	3.25	amperes
Grid-plate transconductance	3300	micromhos
Direct interelectrode capacitances		
Grid-plate	0.15	micromicrofarad
Input or grid—filament	13.5	micromicrofarads
Output or plate—filament	13.5	micromicrofarads
Frequency for maximum ratings	30	megacycles

GE Electronic TUBE

GENERAL ELECTRIC

TECHNICAL INFORMATION (CONT'D)

Mechanical

Type of cooling	Convection
Maximum ambient temperature	60 centigrade
Cap description	C1-1
Base Description	Medium 5-pin, ceramic, A5-11
Mounting position	
Vertical	Base down
Horizontal	Filament in vertical plane (on edge)
Maximum over-all dimensions	See outline
Length	$7\frac{11}{16}$ inches
Diameter	$2\frac{1}{16}$ inches
Net weight, approx	8 ounces
Shipping weight, approx	8 pounds

MAXIMUM RATINGS AND TYPICAL OPERATING CONDITIONS

CLASS B RADIO-FREQUENCY POWER AMPLIFIER

Carrier conditions per tube for use with a maximum modulation factor of 1.0

	Typical Operation			Maximum Ratings		
	CCS		ICAS	CCS	ICAS	
D-c plate voltage	1000	1250	1500	1250	1500	volts
D-c grid voltage (grid No. 1)	−28	−28	−35			volts
D-c grid voltage (grid No. 2) etc.	200	200	250	400	400	volts
D-c plate current	60	60	60	60	60	milliamperes
Plate input				75	90	watts
Screen input				6.7	6.7	watts
Plate dissipation				50	60	watts
Peak r-f grid input voltage	50	50	56			volts
Driving power*, approx.	0.65	0.65	0.85			watts
Plate power output, approx.	20	25	30			watts

*At the crest of audio-frequency cycle.

CLASS C RADIO-FREQUENCY POWER AMPLIFIER, GRID MODULATED

Carrier conditions per tube for use with a maximum modulation factor of 1.0

D-c plate voltage	1000	1250	1500	1250	1500	volts
D-c grid voltage (grid No. 1)	−100	−100	−120	−250	−250	volts
D-c grid voltage (grid No. 2)	200	200	250	400	400	volts
Beam forming plate voltage	0	0	0			volts
D-c plate current	60	60	60	60	60	milliamperes
D-c grid current, approx.	3	2.8	2.5			milliamperes
D-c screen current	2	1.4	3			watts
Plate input				75	90	watts
Screen input				6.7	6.7	watts
Plate dissipation				50	60	watts
Peak r-f grid input voltage	129	129	150			volts
Peak a-f grid voltage	64	64	90			volts
Driving power, approx.	2.5	2.3	4.2			watts
Plate power output	25	29	35			watts

CLASS C RADIO-FREQUENCY POWER AMPLIFIER AND OSCILLATOR, PLATE MODULATED

Carrier conditions per tube for use with a maximum modulation factor of 1.0

	CCS		ICAS	CCS	ICAS	
D-c plate voltage	900	1000	1250	1000	1250	volts
D-c grid voltage (grid No. 1)	−150	−150	−105	−300	−300	volts
D-c grid voltage (grid No. 2)	300	300	300	400	400	volts
D-c plate current	120	120	144	120	150	milliamperes
D-c grid current, approx.	10	10	10	15	15	milliamperes
Plate input				120	180	watts
Screen input				6.7	6.7	watts
Plate dissipation				34	50	watts
Peak r-f grid input voltage	215	222	222			volts
Driving power	2	2	3.2			watts
Plate power output	76	87	130			watts

CLASS C RADIO-FREQUENCY POWER AMPLIFIER AND OSCILLATOR

Key-down conditions per tube without modulation†

	Typical Operation			Maximum Ratings		
D-c plate voltage	1000	1250	1500	1250	1500	volts
D-c grid voltage (grid No. 1)	—70	—80	—90	—300	—300	volts
D-c grid voltage (grid No. 2)	300	300	300	400	400	volts
Beam forming plate voltage	0	0	0			volts
D-c plate current	150	144	150	150	150	milliamperes
D-c grid current, approx.	10	10	10	15	15	milliamperes
Plate input				180	225	watts
Screen input				10	10	watts
Plate dissipation				50	65	watts
Peak r-f grid input voltage, approx.	150	165	170			volts
Driving power output, approx.	1.35	1.5	1.5			watts
Plate power output, approx	100	130	160			watts

†Modulation, essentially negative, may be used if the positive peak of the audio-frequency envelope does not exceed 115 per cent of the carrier conditions.

APPLICATION NOTES

The GL-814 can be operated at frequencies as high as 30 megacycles. The tube may be operated at higher frequencies provided the maximum values of plate voltage and power input are reduced as the frequency is raised (other maximum ratings are the same as shown above). The tabulation below shows the highest percentage of maximum plate voltage and power input that can be used up to 75 megacycles for the various classes of service. Special attention should be given to adequate ventilation of the bulb at these frequencies.

Frequency	30	50	75	megacycles
Percentage of maximum rated plate voltage and plate input				
Class B	100	90	85	per cent
Class C plate modulated	100	80	64	per cent
Class C unmodulated	100	80	64	per cent
Class C grid modulated	100	90	85	per cent

GL-814 AVERAGE PLATE CHARACTERISTICS

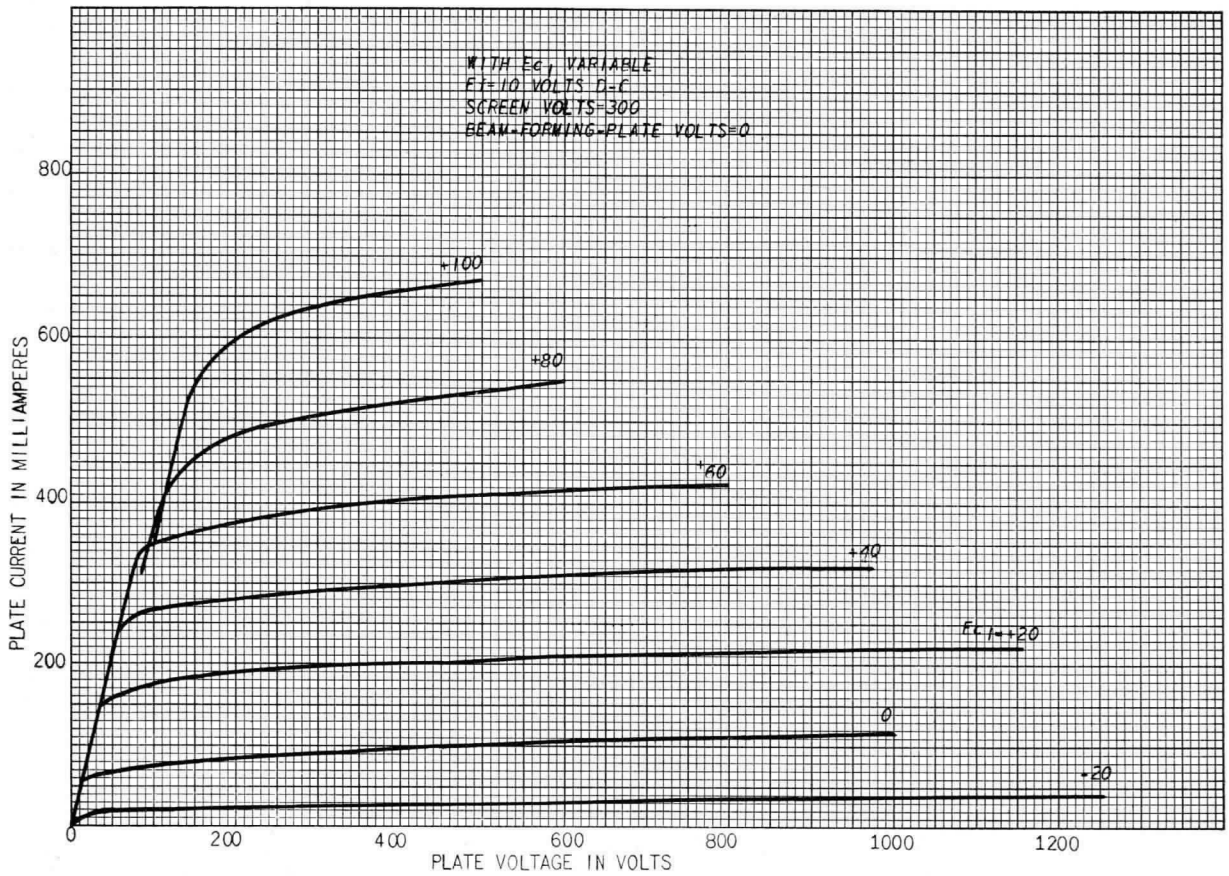

K-6917440

1-9-46

GL-814 AVERAGE CHARACTERISTICS

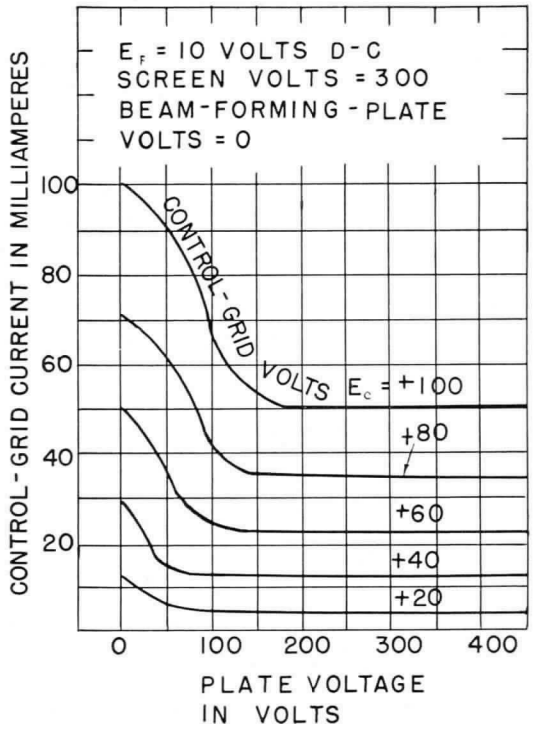

K-8639349 11-4-43

GL-814 AVERAGE CHARACTERISTICS

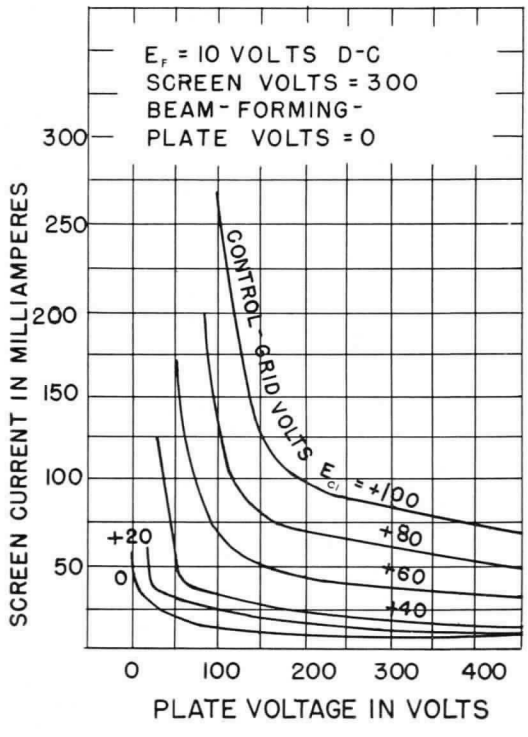

K-8639600 11-4-43

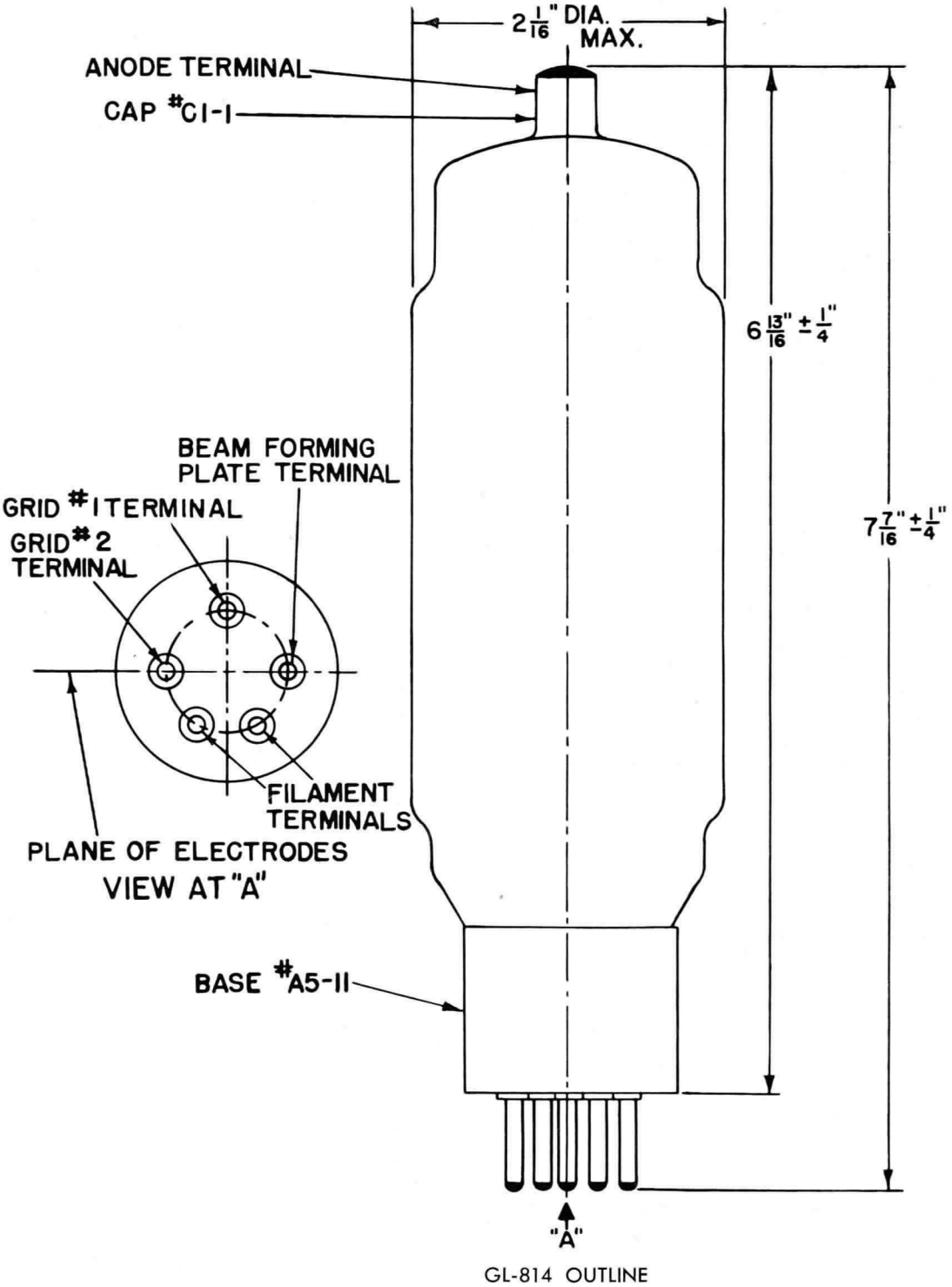

GL-814 OUTLINE

K-5965391

1-17-45

Electronics Department
GENERAL ELECTRIC
Schenectady, N. Y.

5-46 (7M)
Filing No. 8850

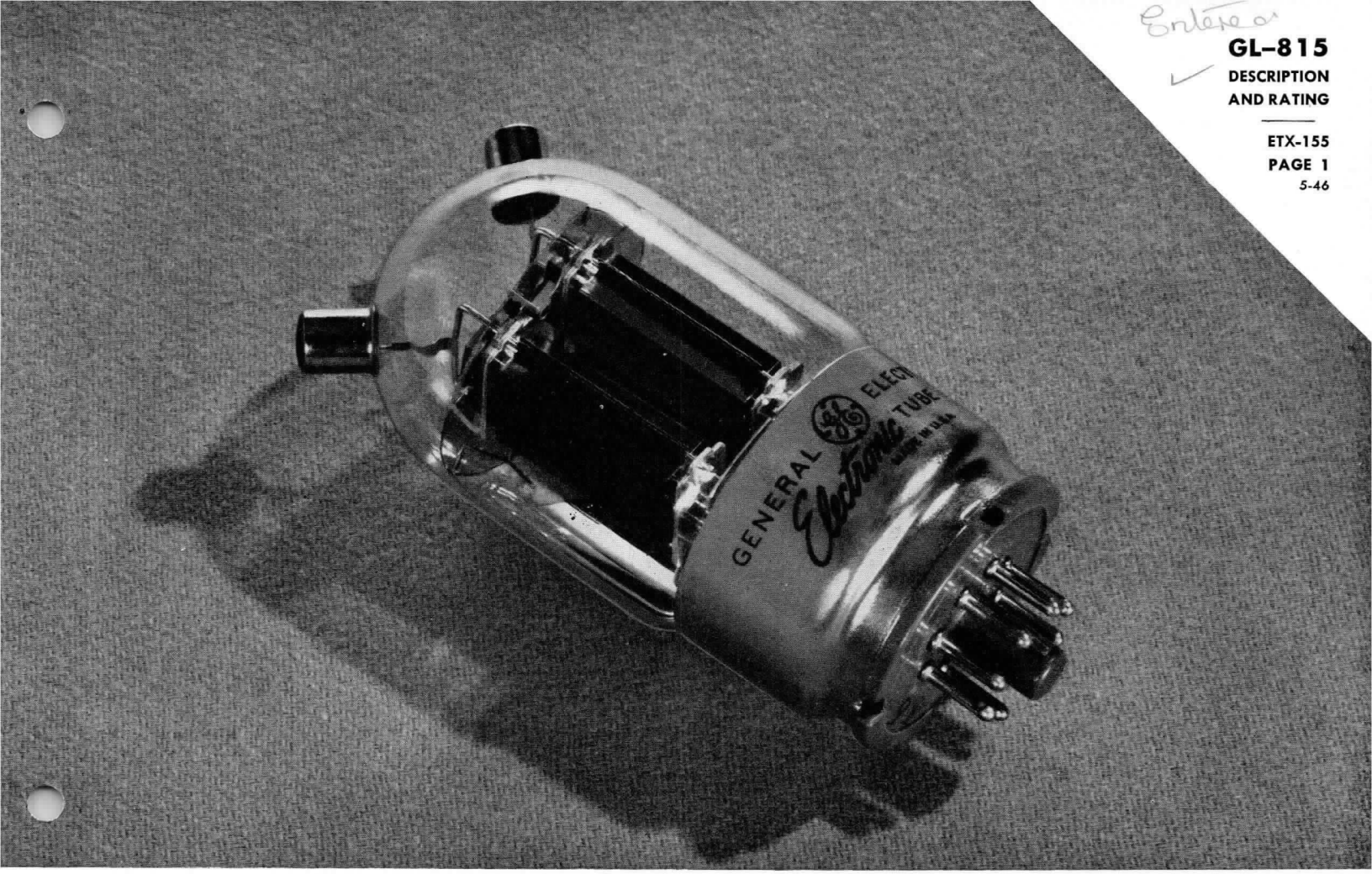

BEAM POWER TUBE

DESCRIPTION

The GL-815 is a push-pull beam tube designed for use in amateur bands from 160 meters to 2½ meters. Neutralization is generally unnecessary in properly shielded circuits. The 815 contains in one envelope two beam power units whose total maximum plate dissipation is 25 watts. The high efficiency and exceptional power sensitivity of the 815 permit operation at rated maximum input with very low driving power. A single 815 operated in push-pull Class C telegraph service is capable of handling a power input of 75 watts (ICAS) with less than 0.2 watt of driving power.

The two units of the 815 may be used in push-pull as a modulator, oscillator, or radio-frequency amplifier, or separately, as single-ended amplifiers. Thus, the tube is well suited for use as a frequency multiplier and driver for another 815.

Exceptional efficiency at the ultra-high frequencies is made possible by the compact structure of the beam units, excellent internal shielding, and close electrode spacing. Short internal leads minimize lead inductance and resistance. The heaters are arranged to allow operation from either a 12.6- or 6.3-volt supply.

TECHNICAL INFORMATION

These data are for reference only. For design information refer to specifications.

GENERAL CHARACTERISTICS

Number of electrodes		4	
Electrical			
Cathode—Indirectly-heated	Series	Parallel	
Filament voltage	12.6	6.3	volts
Filament current	0.8	1.6	amperes
Grid-screen amplication factor		6.5	
Grid-plate transconductance, for anode current of 25 ma		4000	micromhos
Frequency for maximum ratings		150	megacycles

GE Electronic TUBE

GENERAL ELECTRIC

TECHNICAL INFORMATION (CONT'D)

Direct interelectrode capacitances, each unit		
Grid-plate, with external shielding	0.2	micromicrofarad
Input	14	micromicrofarads
Output	8.5	micromicrofarads

Mechanical

Base or terminal description	large wafer octal 8-pin, sleeve	
Net weight, approximate	3	ounces
Shipping weight, approximate	3	pounds
Mounting position	any	

MAXIMUM RATINGS AND TYPICAL OPERATING CONDITIONS

CLASS AB_2 AUDIO-FREQUENCY POWER AMPLIFIER AND MODULATOR

	Typical Operation		Maximum Ratings		
Filament voltage			6.3		volts
	CCS	ICAS	CCS	ICAS	
D-c plate voltage	400	500	400	500	volts
Maximum signal plate current*			150	150	milliamperes
D-c maximum signal plate input*			60	75	watts
Maximum signal screen input*			4.5	4.5	watts
Plate dissipation*			20	25	watts
D-c grid voltage	−15	−15			volts
D-c screen voltage	125	125	225	225	volts
Peak a-f grid-to-grid voltage	60	60			volts
Zero signal plate current	20	22			milliamperes
Maximum signal plate current	150	150			milliamperes
Maximum signal screen current	32	32			milliamperes
Maximum signal driving power†, approximate	0.36	0.36			watts
Load resistance, per plate	1550	2000			ohms
Effective load, plate-to-plate	6200	8000			ohms
Maximum signal plate power output	42	54			watts

CLASS B RADIO-FREQUENCY POWER AMPLIFIER

Carrier conditions per tube for use with a maximum modulation factor of 1.0

Filament voltage			6.3		volts
D-c plate voltage	400	500	400	500	volts
D-c grid voltage	−25	−25			volts
D-c screen voltage	125‡	125‡	225	225	volts
D-c plate current	75	75	75	75	milliamperes
D-c screen current	4	3			milliamperes
Plate input			30	37.5	watts
Screen input			4.0	4.0	watts
Plate dissipation			20	25	watts
Peak r-f grid-to-grid voltage	50	50			volts
Driving power§, approximate	0.8	0.7			watts
Plate power output	10.5	13			watts

CLASS C RADIO-FREQUENCY POWER AMPLIFIER AND OSCILLATOR—GRID-MODULATED

Carrier conditions per tube for use with a maximum modulation factor of 1.0

Filament voltage			6.3		volts
D-c plate voltage	400	500	400	500	volts
D-c grid voltage	−40	−40	−175	−175	volts
D-c screen voltage	125‡	125‡	225	225	volts
D-c plate current	75	75	75	75	milliamperes
D-c grid current, approximate	0.4	0.4			milliamperes
D-c screen current	3	3			milliamperes
Plate input			30	37.5	watts
Screen input			4.0	4.0	watts
Plate dissipation			20	25	watts
Peak r-f grid-to-grid voltage, approximate	80	80			volts
Peak a-f grid voltage	19	17			volts
Driving power§, approximate	0.32	0.28			watts
Plate power output	10.5	13			watts

CLASS C RADIO-FREQUENCY POWER AMPLIFIER AND OSCILLATOR—PLATE-MODULATED

Carrier conditions per tube for use with a maximum modulation factor of 1.0

	CCS	ICAS	CCS	ICAS	
Filament voltage			6.3		volts
D-c plate voltage	325	400	325	400	volts
D-c grid voltage of	−45	−45	−175	−175	volts
From a grid resistor of ◆	11250	15000			ohms
D-c screen voltage			225	225	volts
From a fixed supply of ‡	165	175			volts
From a series resistor of	10000	15000			ohms
D-c plate current	123	150	125	150	milliamperes
D-c grid current, approximate	4	3	7	7	milliamperes
D-c screen current	16	15			milliamperes
Plate input			40	60	watts
Screen input			4.0	4.0	watts
Plate dissipation			13.5	20	watts
Peak r-f grid-to-grid voltage, approximate	112	116			volts
Driving power, approximate	0.2	0.16			watts
Plate power output	30	45			watts

CLASS C RADIO-FREQUENCY POWER AMPLIFIER AND OSCILLATOR

Key-down conditions per tube without modulation π

Filament voltage			6.3		volts
D-c plate voltage	400	500	400	500	volts
D-c grid voltage			−175	−175	volts
From a fixed supply of	−45	−45			volts
From a cathode resistor of	260	265			ohms
From a grid resistor of ◆	10000	13000			ohms
D-c screen voltage △			225	225	volts
From a fixed supply of	145	200			volts
From a series resistor of	15000	17500			ohms
D-c plate current	150	150	150	150	milliamperes
D-c grid current, approximate	4.5	3.5	7	7	milliamperes
D-c screen current	17	17			milliamperes
Plate input			60	75	watts
Plate dissipation			20	25	watts
Screen input			4.5	4.5	watts
Peak r-f grid-to-grid voltage, approximate	116	112			volts
Driving power, approximate	0.23	0.18			watts
Plate power output	44	56			watts

* Averaged over any audio-frequency cycle of sine-wave form.

† Driver stage should be capable of supplying the grids of the AB_2 stage with the specified driving power at low distortion. The effective resistance per grid circuit of the Class AB_2 stage should be kept below 500 ohms and the effective impedance at the highest desired response frequency should not exceed 700 ohms.

‡ In applications requiring the use of screen voltages above 135 volts, provision should be made for the adjustment of control-grid bias for each unit separately. The necessity for this adjustment at the lower screen voltages depends on the distortion requirements and on whether the plate-dissipation rating is exceeded at zero-signal plate current.

§ At crest of audio-frequency cycle with modulation factor of 1.0.

◆ The grid-circuit resistance should never exceed 15000 ohms total per tube, or 30000 ohms per unit. Any additional bias required must be supplied by a cathode resistor or a fixed supply.

π Modulation, essentially negative, may be used if the positive peak of the audio-frequency envelope does not exceed 115 per cent of the carrier conditions.

△ The screen voltage must not exceed 600 volts under key-up conditions.

APPLICATION NOTES

The GL-815 can be operated at frequencies as high as 150 megacycles. The tube may be operated at higher frequencies provided the maximum values of plate voltage and power input are reduced as the frequency is raised (other maximum ratings are the same as shown above). The tabulation below shows the highest percentage of maximum plate voltage and power input that can be used up to 225 megacycles for the various classes of service. Special attention should be given to shielding, radio-frequency by-passing, and adequate ventilation of the bulb at these frequencies.

Frequency	150	200	225	megacycles
Maximum permissible percentage of maximum rated plate voltage and plate input				
Class B, r-f	100	85	75	per cent
Class C, grid-modulated	100	85	75	per cent
Class C, plate-modulated	100	80	70	per cent
Class C, telegraphy	100	80	70	per cent

GL-815 AVERAGE PLATE CHARACTERISTICS

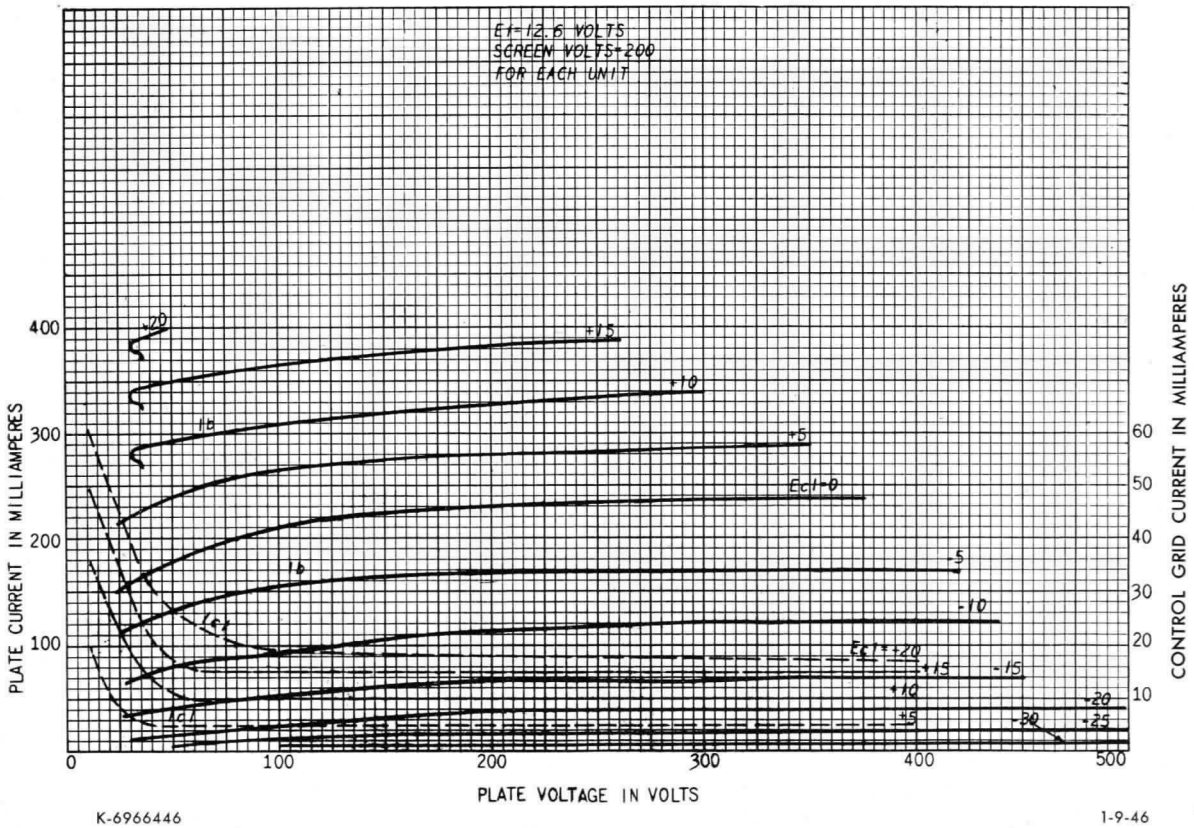

K-6966446

1-9-46

GL-815 AVERAGE PLATE CHARACTERISTICS

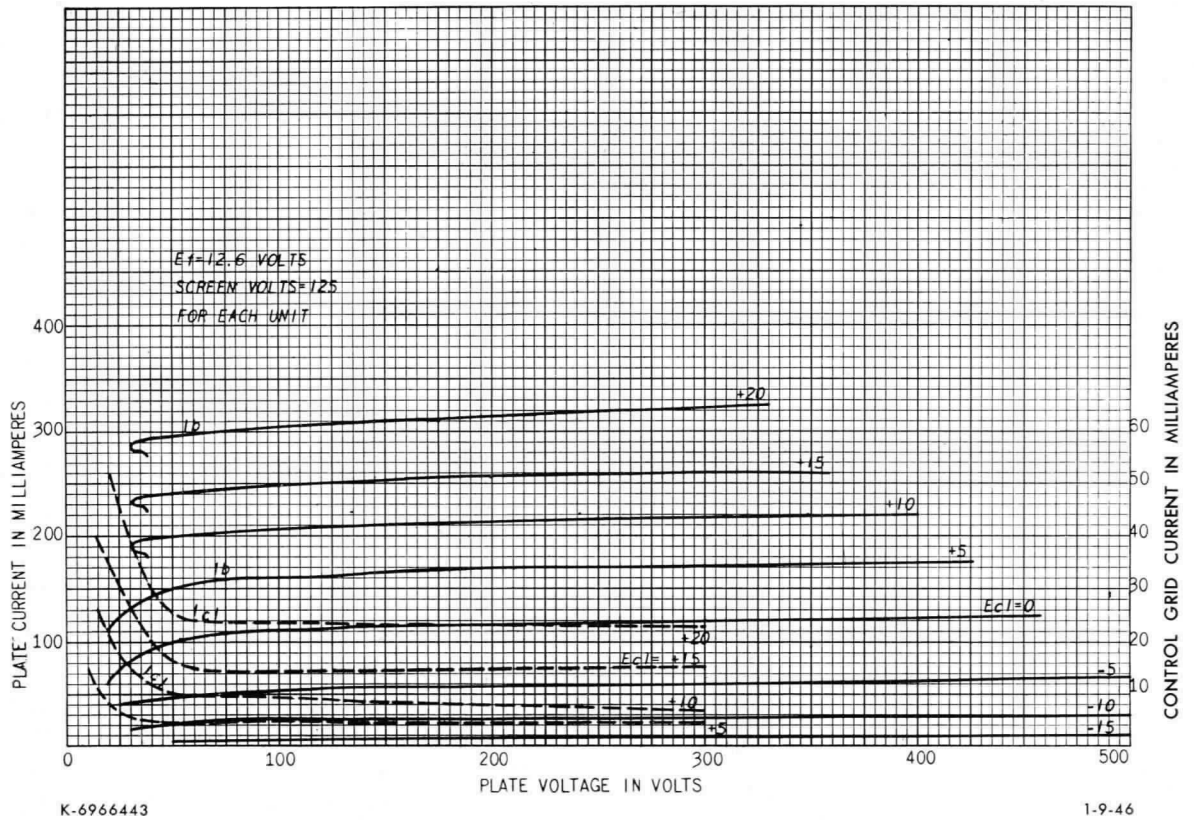

K-6966443

1-9-46

GL-815 AVERAGE CHARACTERISTICS FOR EACH UNIT

(E_f = 12.6 VOLTS, SCREEN VOLTS = 125)

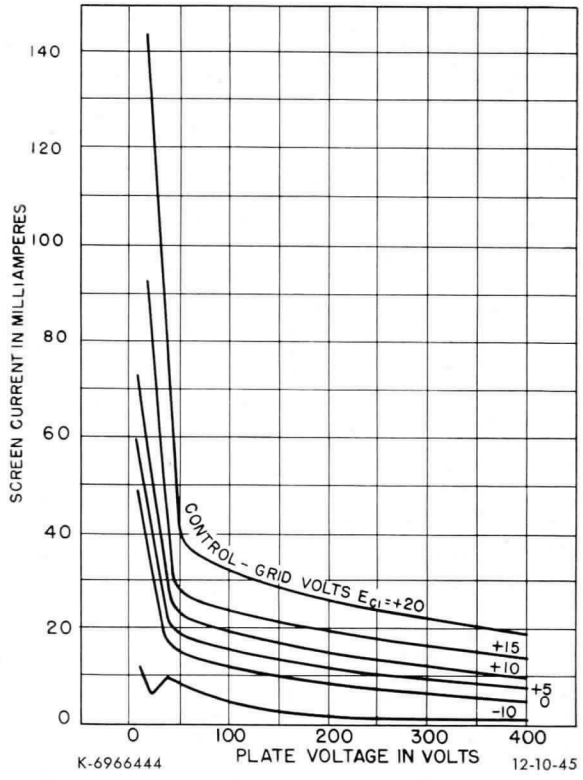

GL-815 AVERAGE CHARACTERISTICS FOR EACH UNIT

(E_f = 12.6 VOLTS, SCREEN VOLTS = 200)

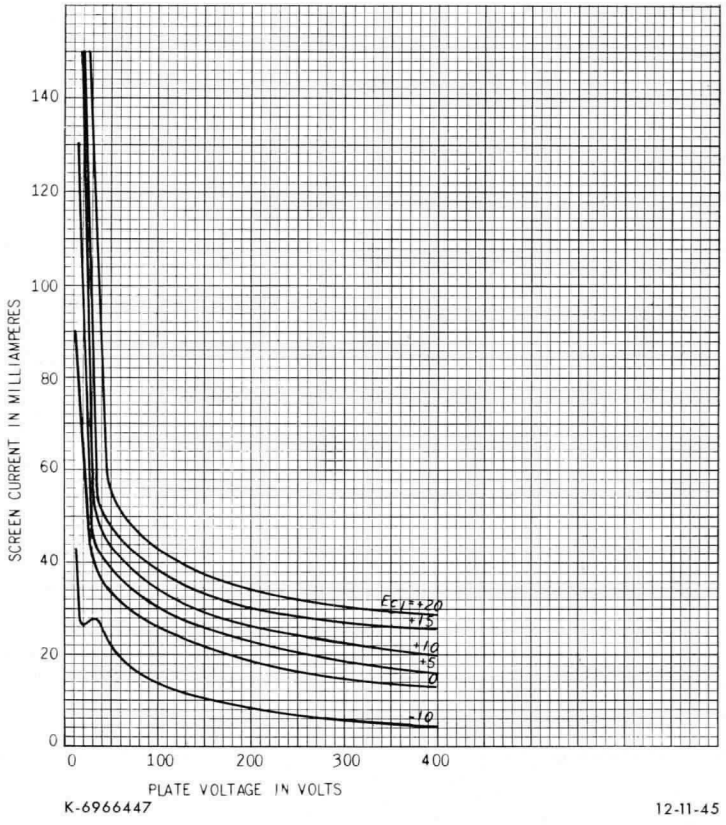

GL-815 OUTLINE

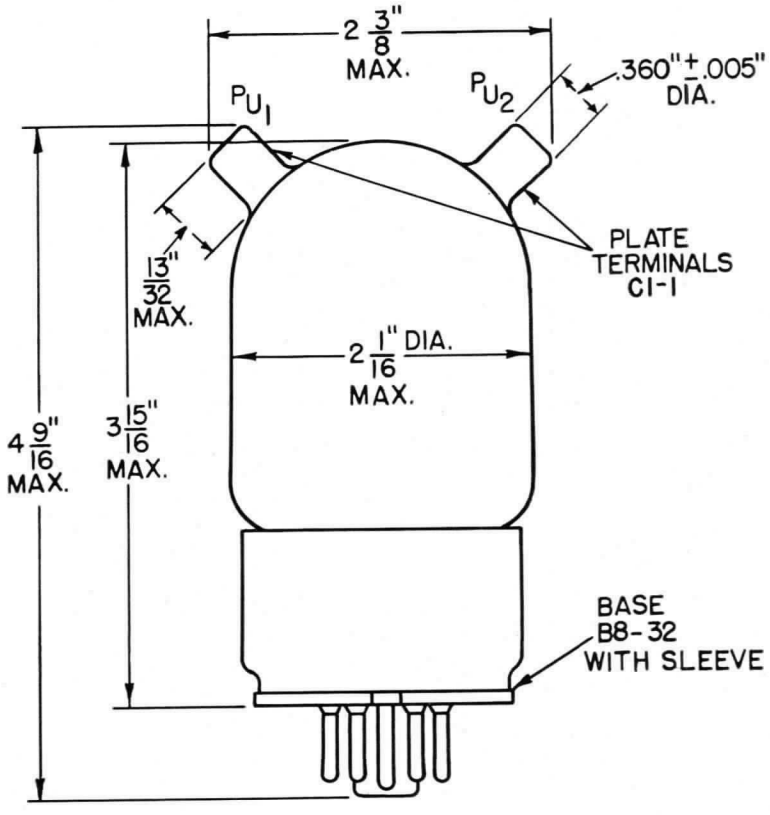

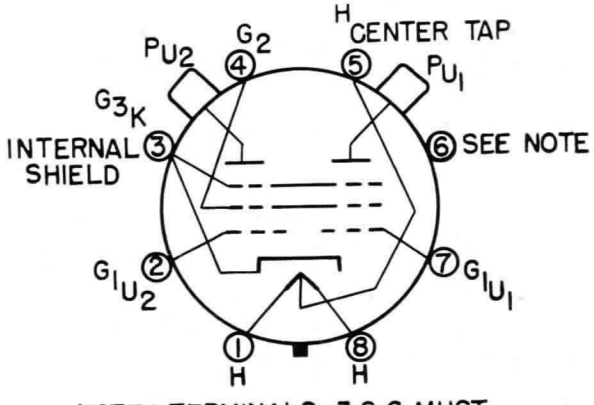

NOTE: TERMINALS 3 & 6 MUST BE CONNECTED TOGETHER.

BASING DIAGRAM

GL-815 OUTLINE

K-6979116

1-9-46

Electronics Department

GENERAL ELECTRIC

Schenectady, N. Y.

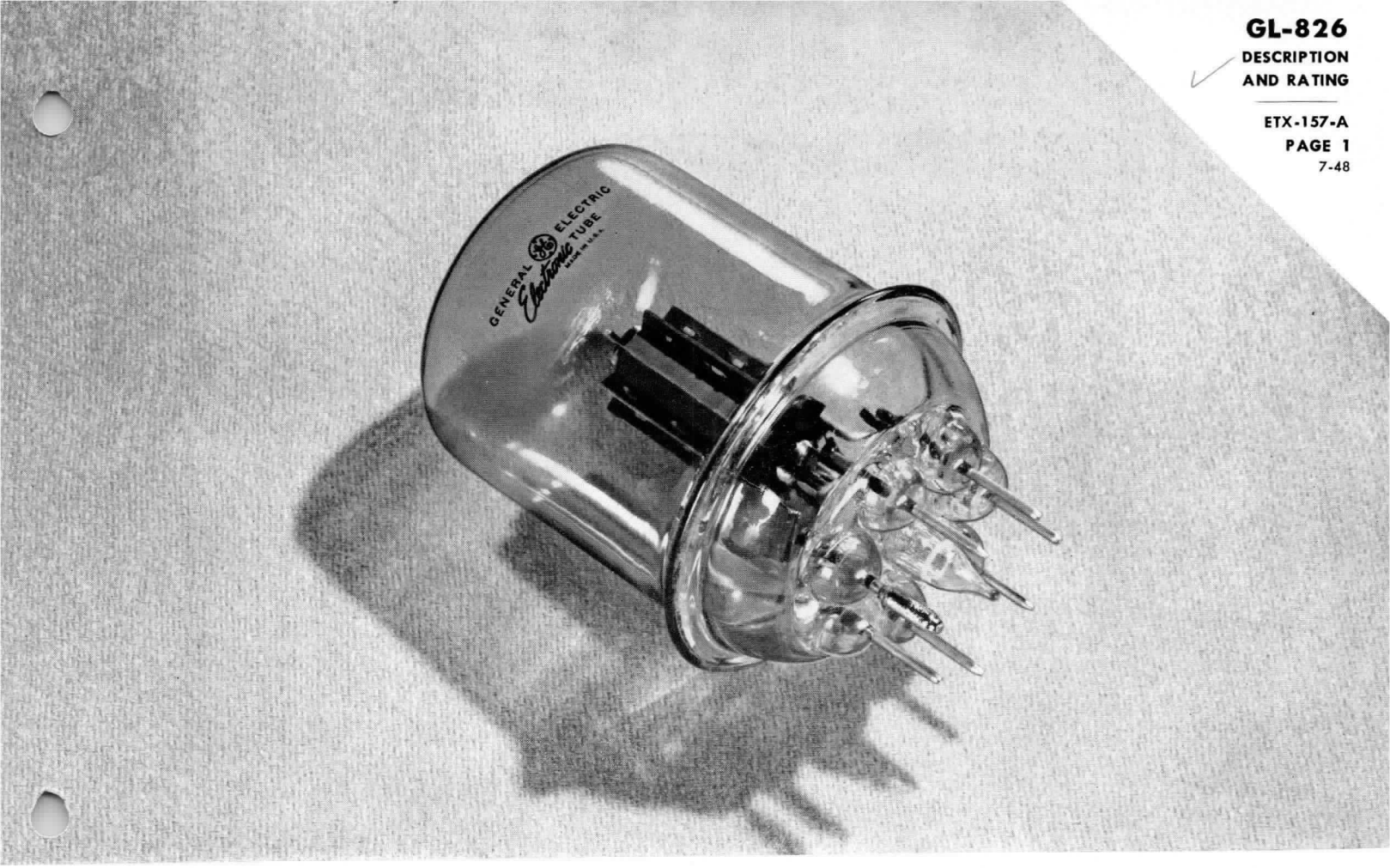

TRIODE

DESCRIPTION

The GL-826 is a three electrode tube designed for use as an oscillator, radio-frequency power amplifier, and frequency multiplier at the ultrahigh frequencies. The tube may be operated at maximum ratings at frequencies up to 250 megacycles and at reduced ratings at frequencies as high as 300 megacycles.

TECHNICAL INFORMATION

These data are for reference only. For design information see the specifications.

GENERAL

Electrical Data

Filament voltage*	7.5	volts
Filament current	4	amperes
Amplification factor	31	
Interelectrode capacitances		
Grid-plate	3	uuf
Grid-filament	3	uuf
Plate-filament	1.1	uuf

Mechanical Data

Mounting position	vertical only, base up or down	
Net weight, approximate	4	ounces

GE Electronic TUBE

GENERAL ELECTRIC

Supersedes ETX-157 dated 5-46

TECHNICAL INFORMATION (CONT'D)

MAXIMUM RATINGS AND TYPICAL OPERATING CONDITIONS

PLATE-MODULATED RADIO-FREQUENCY POWER AMPLIFIER—CLASS C TELEPHONY

Carrier conditions per tube for use with a maximum modulation factor of 1.0

	Natural Cooling		Forced-air Cooling		
Maximum Ratings, Absolute Values	**CCS****	**ICAS†**	**CCS****	**ICAS†**	
D-c plate voltage	800 max	1000 max	800 max	1000 max	volts
D-c grid voltage	−600 max	−600 max	−600 max	−600 max	volts
D-c plate current	95 max	125 max	95 max	125 max	milliamperes
D-c grid current	40 max	40 max	40 max	40 max	milliamperes
Plate input	60 max	95 max	75 max	125 max	watts
Plate dissipation	30 max	45 max	40 max	60 max	watts
Typical Operation	**CCS****	**ICAS†**	**CCS****	**ICAS†**	
D-c plate voltage		1000	800	1000	volts
D-c grid voltage§ #		−160	−100	−100	volts
		4000	2800	2800	ohms
Peak R-F grid voltage		320	198	210	volts
D-c plate current		95	94	125	milliamperes
D-c grid current		40	35	35	milliamperes
Driving power, approximate		11.5	6.3	6.6	watts
Power output, approximate		70	53	90	watts

RADIO-FREQUENCY POWER AMPLIFIER AND OSCILLATOR—CLASS C TELEGRAPHY

Key-down conditions per tube without modulation¶

	Natural Cooling		Forced-air Cooling		
Maximum Ratings, Absolute Values	**CCS****	**ICAS†**	**CCS****	**ICAS†**	
D-c plate voltage	1000 max	1000 max	1000 max	1250 max	volts
D-c grid voltage	−600 max	−600 max	−600 max	−600 max	volts
D-c plate current	125 max	140 max	125 max	140 max	milliamperes
D-c grid current	40 max	40 max	40 max	40 max	milliamperes
Plate input	95 max	130 max	125 max	175 max	watts
Plate dissipation	45 max	55 max	60 max	75 max	watts
Typical Operation	**CCS****	**ICAS†**	**CCS****	**ICAS†**	
D-c plate voltage		1000	1000	1250	volts
D-c grid voltage # ●		−70	−70	−125	volts
		2000	2000	3600	ohms
		425	440	780	ohms
Peak R-F grid voltage		183	183	245	volts
D-c plate current		130	125	125	milliamperes
D-c grid current		35	35	35	milliamperes
Driving power, approximate		5.8	5.8	7.7	watts
Power output, approximate		90	86	120	watts

* The filament is center-tapped and the center lead is brought out of the tube. With this design, it is possible to minimize the effect of filament-lead inductance by connecting all three filament leads in parallel through r-f by-pass capacitors. The center lead of this parallel connection should not be returned directly to the center-tap of the filament-transformer winding or to ground, although it may be by-passed to either of these points if desired. R-F by-passing of the grid- and plate-return circuits should be made to the center lead of the filament.

** Continuous commercial service.

† Intermittent commercial and amateur service.

Grid voltages are given with respect to the mid-point of filament operated on a-c. If d-c is used, each stated value of grid voltage should be decreased by one-half the filament voltage and the circuit returns made to the negative end of the filament.

¶ Modulation essentially negative may be used if the positive peak of the audio-frequency envelope does not exceed 115 per cent of the carrier conditions.

●Obtained from fixed supply, by grid resistor (2000, 2000, 3600) or by cathode resistor (425, 440, 780).

§ Obtained by grid resistor of value shown. Fixed supply not recommended for linear modulation.

NOTE: When the 826 is used in the final amplifier or a preceding stage of a transmitter designed for break-in operation and oscillator keying, a small amount of fixed bias must be used to maintain the plate current at a safe value. With plate voltage of 1250 volts, a fixed bias of at least −22.5 volts should be used.

APPLICATION NOTES

Maximum ratings apply up to 250 megacycles. The tube may be operated at higher frequencies provided the maximum values of plate voltage and power input are reduced according to the tabulation below (other maximum ratings are the same as shown above). Special attention should be given to adequate ventilation of the bulb at these frequencies.

Frequency	250	300	megacycles
Percentage of Maximum Rated Plate Voltage and Plate Input			
Class B	100	90	per cent
Class C plate modulated	100	80	per cent
Class C unmodulated	100	80	per cent

GL-826
AVERAGE PLATE CHARACTERISTICS

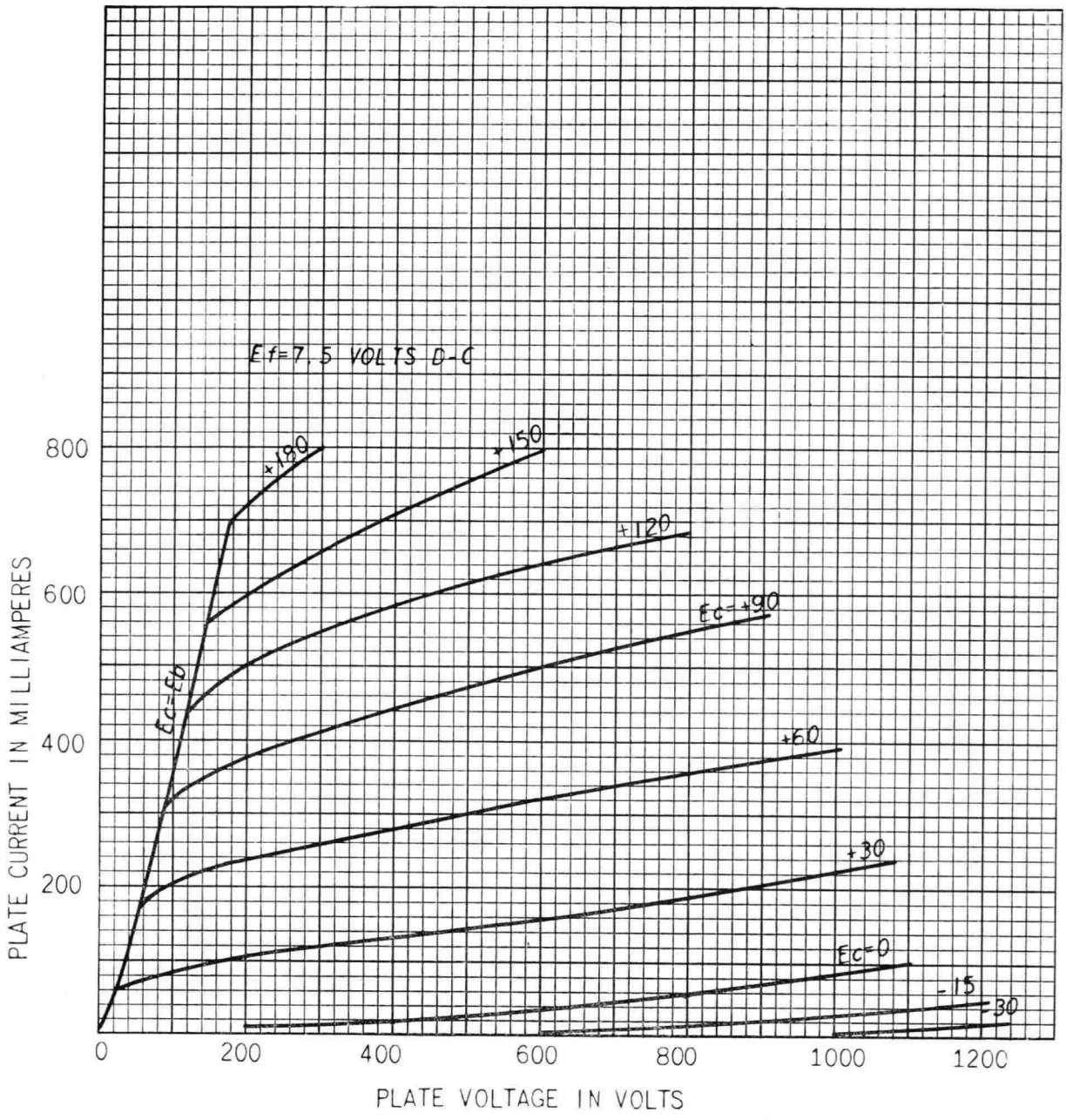

K-9186161

10-13-47

GL-826
TYPICAL CHARACTERISTICS
(E_f = 7.5 VOLTS D-C)

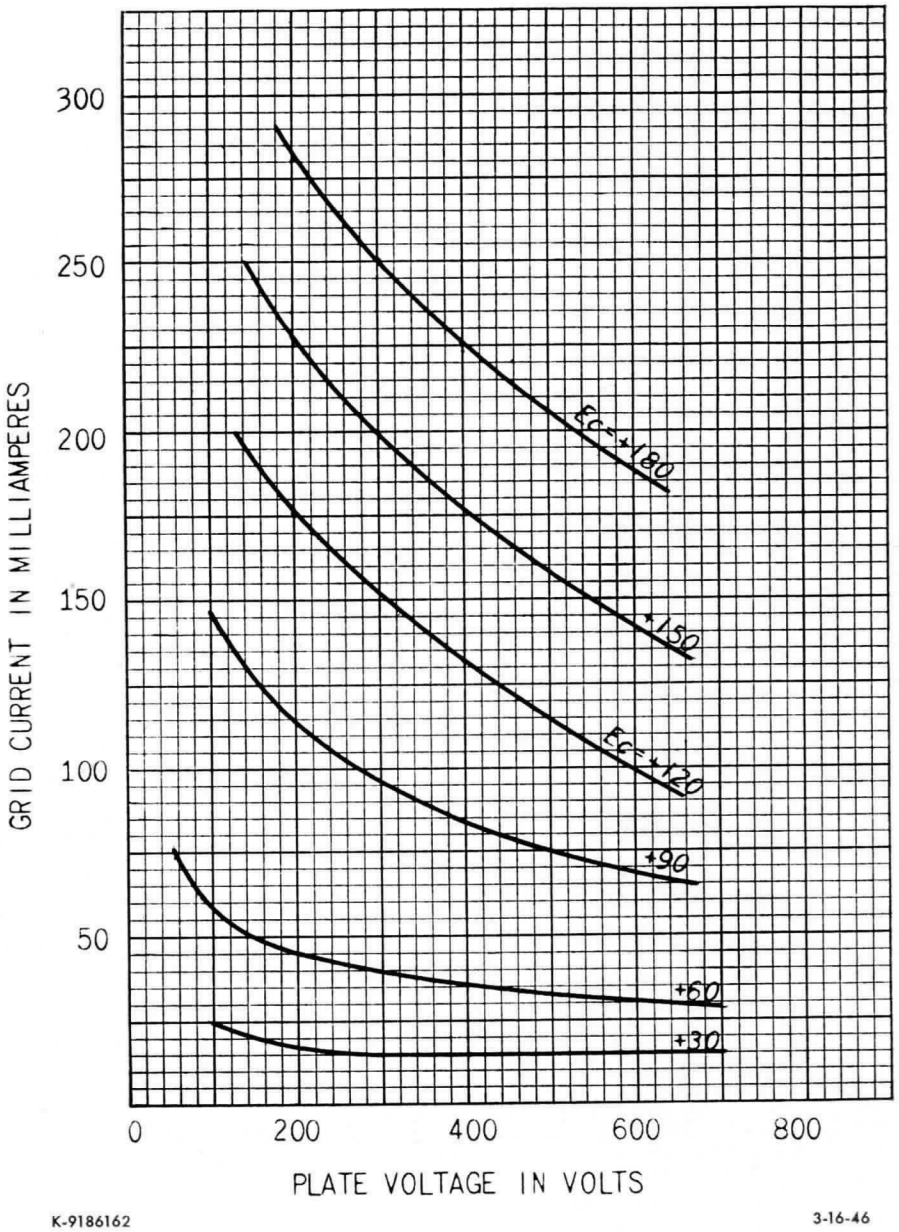

K-9186162

3-16-46

DIMENSIONAL OUTLINE

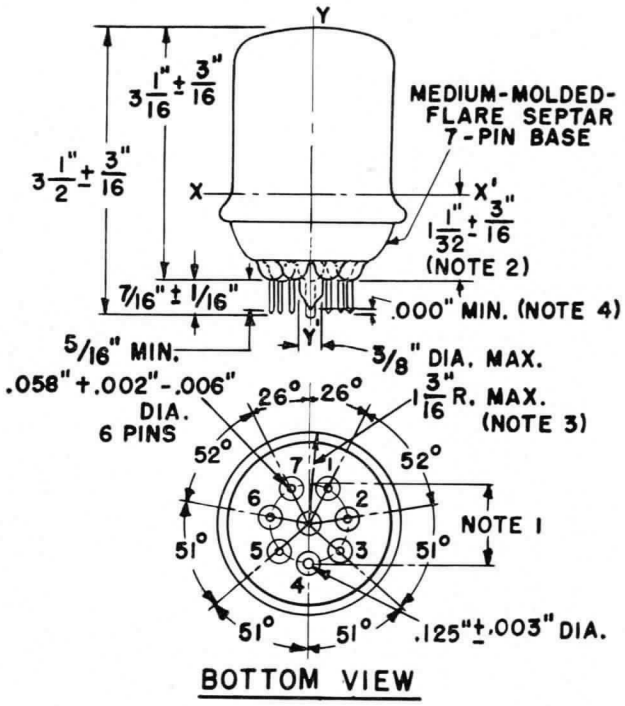

BOTTOM VIEW

SOCKET CONNECTIONS

BOTTOM VIEW

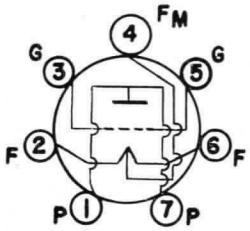

7BO

PIN 1 - PLATE
PIN 2 - FILAMENT
PIN 3 - GRID
PIN 4 - FILAMENT MID-TAP
PIN 5 - GRID
PIN 6 - FILAMENT
PIN 7 - PLATE

THE REFERENCE AXIS YY' IS DEFINED AS THE AXIS OF THE BASE-PIN GAGE DESCRIBED IN NOTE 1.

NOTE 1: ANGULAR VARIATIONS BETWEEN PINS AND VARIATION IN PIN-CIRCLE DIAMETER ARE HELD TO TOLERANCES SUCH THAT PINS WILL ENTER TO A DISTANCE OF 0.375" A FLAT-PLATE BASE-PIN GAGE HAVING SIX HOLES 0.0800" ± 0.0005" AND ONE HOLE 0.1450" ± 0.0005" ARRANGED ON A 1.0000" ± 0.0005" CIRCLE AT SPECIFIED ANGLES WITH TOLERANCE OF ± 5° FOR EACH ANGLE, GAGE IS ALSO PROVIDED WITH A HOLE 0.500" ± 0.010" CONCENTRIC WITH PIN CIRCLE WHOSE CENTER IS ON THE AXIS YY'.

NOTE 2: A FLAT-PLATE FLANGE GAGE WITH HOLE 2.063" − .0.000" + 0.003" IS LOWERED OVER TUBE SEATED IN BASE-PIN GAGE SO THAT THE HOLE AXIS IS COINCIDENT WITH AXIS YY' WITHIN 0.150" AND SO THAT THE BOTTOM SURFACE OF THE FLANGE GAGE IS PARALLEL TO THE TOP SURFACE OF THE BASE-PIN GAGE, AND UNTIL THE FLANGE GAGE RESTS ON THE TUBE FLANGE SEAL AT POSITION XX'. THE PERPENDICULAR DISTANCE BETWEEN THE TWO GAGES WILL BE AS SHOWN.

NOTE 3: MINIMUM DIAMETER OF TUBE-SEAL FLANGE WILL BE SUCH THAT A RING GAGE HAVING I.D. OF 2.125" − 0.000" + 0.003" AND THICKNESS OF 0.125" ± 0.010" WILL NOT PASS THE FLANGE WHEN TRIED AT ANY ANGLE.

NOTE 4: EXHAUST TIP WILL NOT EXTEND BEYOND THE PLANE WHICH PASSES THROUGH THE ENDS OF THE THREE LONGEST PINS.

K-9186158 GL-826 OUTLINE 10-15-47

Electronics Department
GENERAL ELECTRIC
Schenectady, N. Y.

7-48 (8M)
Filing No. 8850

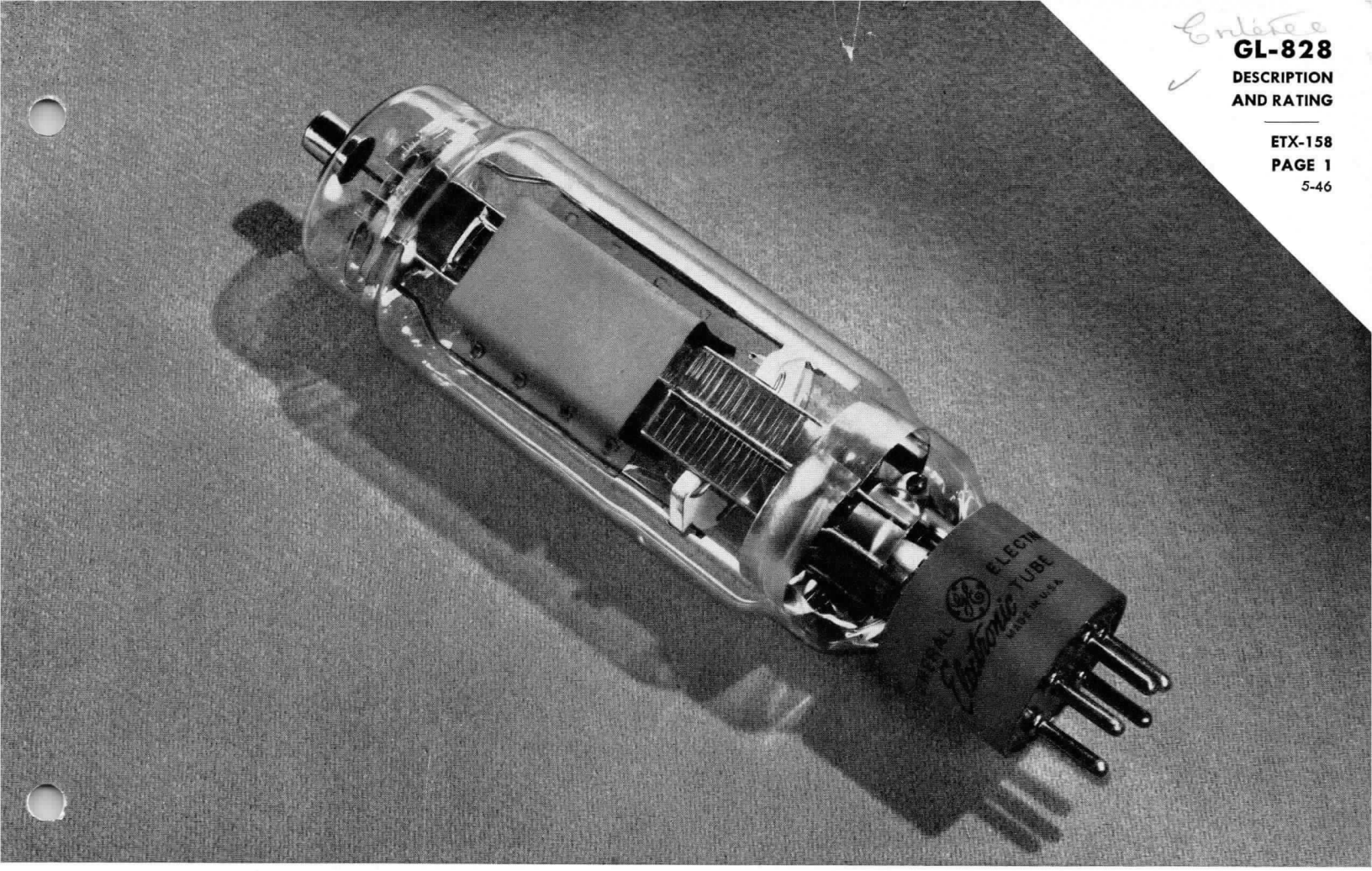

BEAM POWER TUBE

DESCRIPTION

The GL-828 is a beam power amplifier tube designed particularly for use as a Class AB_1 audio-frequency amplifier. The high power sensitivity of the 828 allows it to be used in radio-frequency services with very little driving power. Neutralization is generally unnecessary in properly shielded circuits. This tube can be operated at maximum ratings at frequencies as high as 30 megacycles.

TECHNICAL INFORMATION

These data are for reference only. For design information refer to specifications.

GENERAL CHARACTERISTICS

Number of electrodes	5	
Electrical		
Cathode-Filamentary		
Filament voltage	10	volts
Filament current	3.25	amperes
Grid-plate transconductance, for anode current of 43 ma	4500	micromhos
Direct interelectrode capacitances		
Grid-plate, with external shielding	0.05	micromicrofarad
Input	13.5	micromicrofarads
Output	14.5	micromicrofarads
Mechanical		
Base or terminal description	medium 5-pin	
Net weight, approximate	3	ounces
Shipping weight, approximate	3	pounds
Mounting position	vertical, base down—horizontal, plane of electrodes vertical	

GE Electronic TUBE

GENERAL ELECTRIC

TECHNICAL INFORMATION (CONT'D)

MAXIMUM RATINGS AND TYPICAL OPERATING CONDITIONS

CLASS AB_1 AUDIO-FREQUENCY POWER AMPLIFIER AND MODULATOR

	Typical Operation		Maximum Ratings △		
	CCS	ICAS	CCS	ICAS	
D-c plate voltage	1700	2000	1750	2000	volts
D-c suppressor voltage	60	60	100	100	volts
Maximum signal plate current*			150	150	milliamperes
D-c maximum signal plate input*			225	270	watts
Screen input*			16	23	watts
Plate dissipation*			70	80	watts
D-c grid voltage†	−120	−120			volts
D-c screen voltage‡	750	750	750	750	volts
Peak a-f grid-to-grid voltage	240	240			volts
Zero signal plate current	50	50			milliamperes
Maximum signal plate current	248	270			milliamperes
D-c suppressor current	9	9			milliamperes
Zero signal screen current	4	2			milliamperes
Maximum signal screen current	43	60			milliamperes
Load resistance, per plate	4050	4625			ohms
Effective load, plate-to-plate	16200	18500			ohms
Maximum signal plate power output	300**	385			watts

CLASS B RADIO-FREQUENCY POWER AMPLIFIER

Carrier conditions per tube for use with a maximum modulation factor of 1.0

D-c plate voltage	1250	1500	1250	1500	volts
D-c grid voltage†	75	75	100	100	volts
D-c grid voltage†	−50	−50			volts
D-c screen voltage	400	400	400	400	volts
D-c plate current	84	80	100	100	milliamperes
D-c suppressor current	4	4			milliamperes
D-c screen current	5	5			milliamperes
Plate input			105	120	watts
Suppressor input			5	5	watts
Screen input			11	11	watts
Plate dissipation			70	80	watts
Peak r-f grid-to-grid voltage	52	50			volts
Driving power, approximate§	0.5	0.4			watt
Plate power output	36	41			watts

CLASS C RADIO-FREQUENCY POWER AMPLIFIER AND OSCILLATOR—GRID-MODULATED

Carrier conditions per tube for use with a maximum modulation factor of 1.0

D-c plate voltage	1250	1500	1250	1500	volts
D-c suppressor voltage	75	75	100	100	volts
D-c grid voltage	−150	−150	−300	−300	volts
D-c screen voltage	400	400	400	400	volts
D-c plate current	84	80	100	100	milliamperes
D-c suppressor current	4	3.5			milliamperes
D-c grid current, approximate	1.6	1.3			milliamperes
D-c screen current	5	4			milliamperes
Plate input			105	120	watts
Suppressor input			5	5	watts
Screen input			11	11	watts
Plate dissipation			70	80	watts
Peak r-f grid-to-grid voltage, approximate	165	165			volts
Peak a-f grid voltage	94	94			volts
Driving power, approximate§	2.5	2.5			watts
Plate power output	36	41			watts

TECHNICAL INFORMATION (CONT'D)

CLASS C RADIO-FREQUENCY POWER AMPLIFIER AND OSCILLATOR—PLATE-MODULATED

Carrier conditions per tube for use with a maximum modulation factor of 1.0

	Typical Operation		Maximum Ratings		
	CCS	ICAS	CCS	ICAS	
D-c plate voltage	1000	1250	1000	1250	volts
D-c suppressor voltage	75	75	100	100	volts
D-c grid voltage of	−140	−140	−300	−300	volts
From a grid resistor of	14000	11700			ohms
D-c screen voltage	400	400	400	400	volts
From a series resistor of ◆	26000	30000			ohms
D-c plate current	135	160	135	160	milliamperes
D-c suppressor current	13	15			milliamperes
D-c grid current, approximate	10	12	15	15	milliamperes
D-c screen current	23	28			milliamperes
Plate input			135	200	watts
Suppressor input			5	5	watts
Screen input			11	11	watts
Plate dissipation			47	70	watts
Peak r-f grid-to-grid voltage, approximate	230	250			volts
Driving power, approximate	2.1	2.7			watts
Plate power output	100	150			watts

CLASS C RADIO-FREQUENCY POWER AMPLIFIER AND OSCILLATOR

Key-down conditions per tube without modulation π

D-c plate voltage	1250	1500	1250	1500	volts
D-c suppressor voltage	75	75	100	100	volts
D-c grid voltage			−300	−300	volts
From a fixed supply of	−95	−100			volts
From a cathode resistor of	415	430			ohms
From a grid resistor of	7900	8300			ohms
D-c screen voltage	400	400	400	400	volts
D-c plate current	160	180	160	180	milliamperes
D-c suppressor current	22	14			milliamperes
D-c grid current, approximate	12	12	15	15	milliamperes
D-c screen current	35	28			milliamperes
Plate input			200	270	watts
Suppressor input			5	5	watts
Plate dissipation			70	80	watts
Screen input			16	16	watts
Peak r-f grid-to-grid voltage, approximate	195	205			volts
Driving power, approximate	2.1	2.2			watts
Plate power output	150	200			watts

*Averaged over any a-f cycle of sine-wave form.

**Distortion only 1 per cent with 20 db of feedback to grid of driver.

†Grid voltages are given with respect to the midpoint of filament operated on a-c. If d-c is used, each stated value of grid voltage should be decreased by one-half the filament voltage and the circuit returns made to the negative end of the filament.

‡Zero-signal screen voltage must not exceed 775 volts.

§At crest of audio-frequency cycle with modulation factor of 1.0.

◆Connected to modulated plate voltage supply.

π Modulation, essentially negative, may be used if the positive peak of the audio-frequency envelope does not exceed 115 per cent of the carrier conditions.

APPLICATION NOTES

△The GL-828 can be operated at frequencies as high as 30 megacycles. The tube may be operated at higher frequencies provided the maximum values of plate voltage and power input are reduced as the frequency is raised (other maximum ratings are the same as shown above). The tabulation below shows the highest percentage of maximum plate voltage and power input that can be used up to 75 megacycles for the various classes of service. Special attention should be given to shielding, radio-frequency by-passing, and adequate ventilation of the bulb at these frequencies.

Frequency	30	50	75	megacycles
Maximum permissible percentage of maximum rated plate voltage and plate input				
Class B, r-f	100	90	80	per cent
Class C, grid-modulated	100	90	80	per cent
Class C, plate-modulated	100	80	65	per cent
Class C, telegraphy	100	80	65	per cent

GL-828 AVERAGE PLATE CHARACTERISTICS

(E_f = 10 VOLTS D-C, SCREEN VOLTS = 300, SUPPRESSOR VOLTS (Ec_3) = 75)

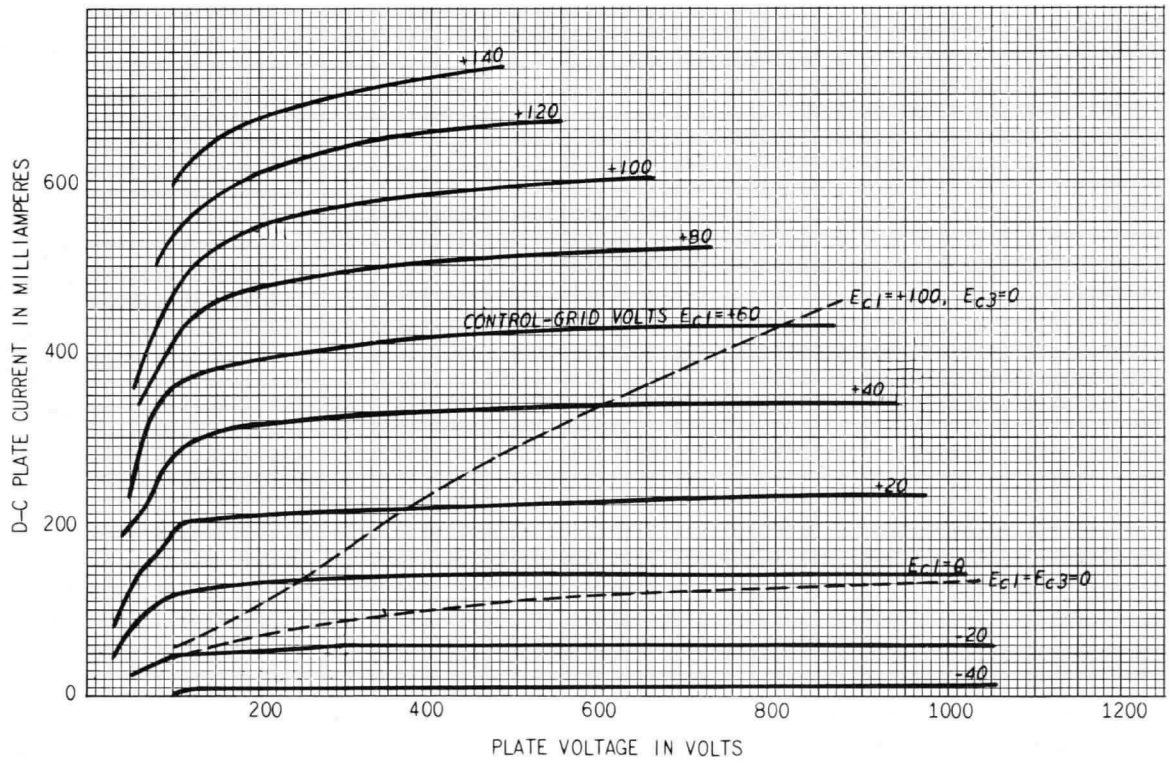

K-9186059 1-9-46

GL-828 AVERAGE PLATE CHARACTERISTICS

(E_f = 10 VOLTS D-C, SCREEN VOLTS = 400, SUPPRESSOR VOLTS (Ec_3) = 75)

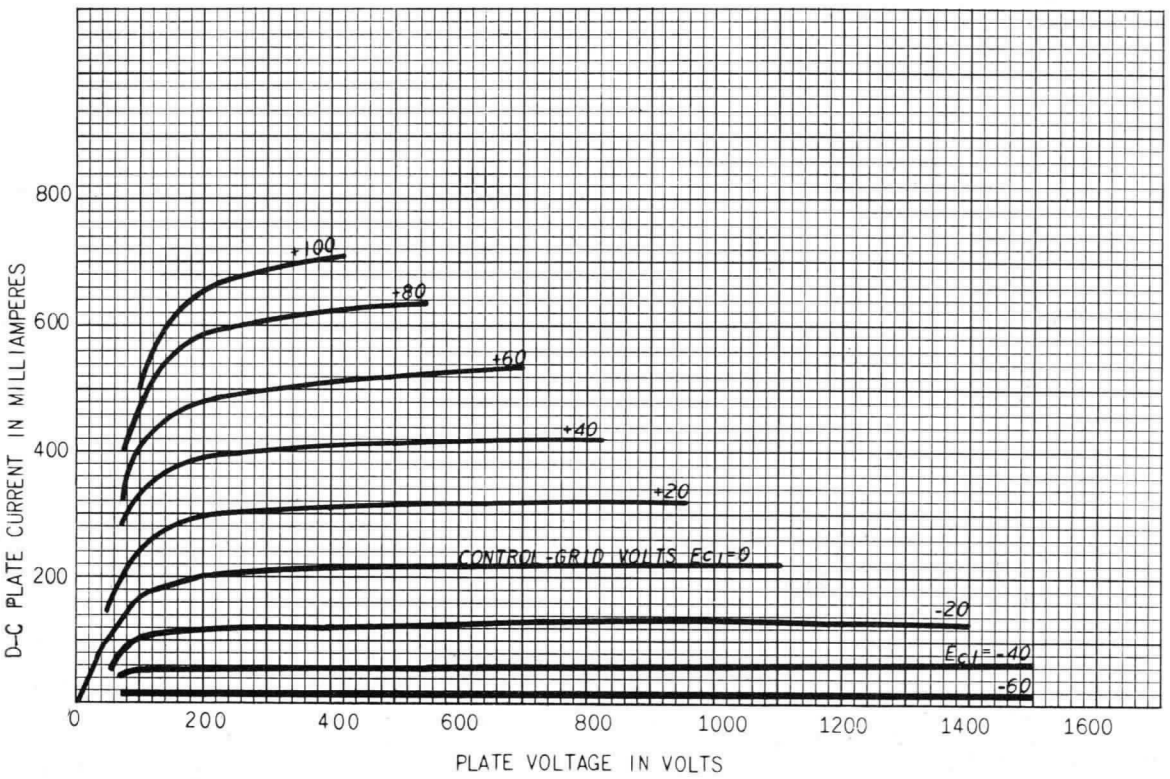

K-9186061 1-9-46

GL-828 TYPICAL CHARACTERISTICS

(E_f = 10 VOLTS D-C, SCREEN VOLTS = 300——, SCREEN VOLTS = 400- - - -, SUPPRESSOR VOLTS = 75)

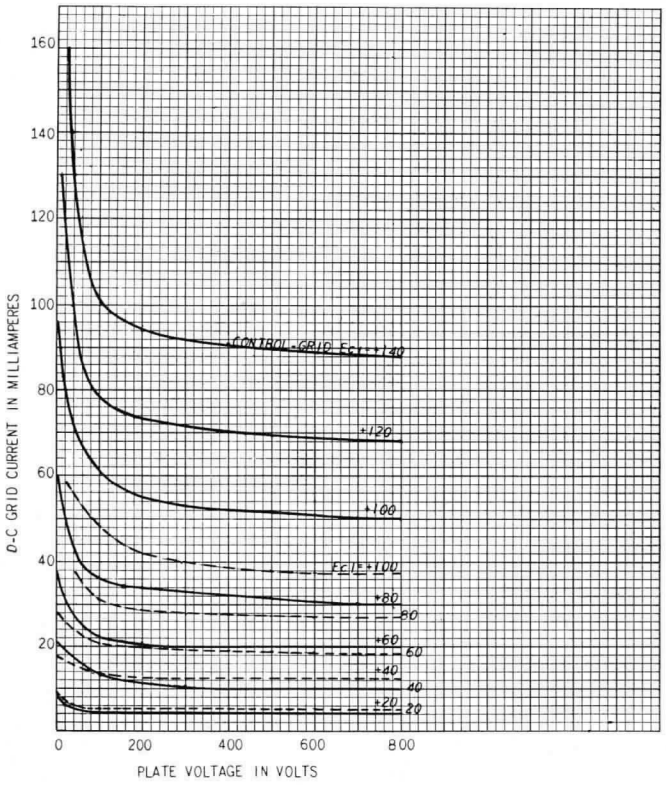

K-9033930

1-9-46

GL-828 AVERAGE PLATE CHARACTERISTICS

(E_f = 10 VOLTS D-C, SCREEN VOLTS = 750, SUPPRESSOR VOLTS (Ec_3) = 60)

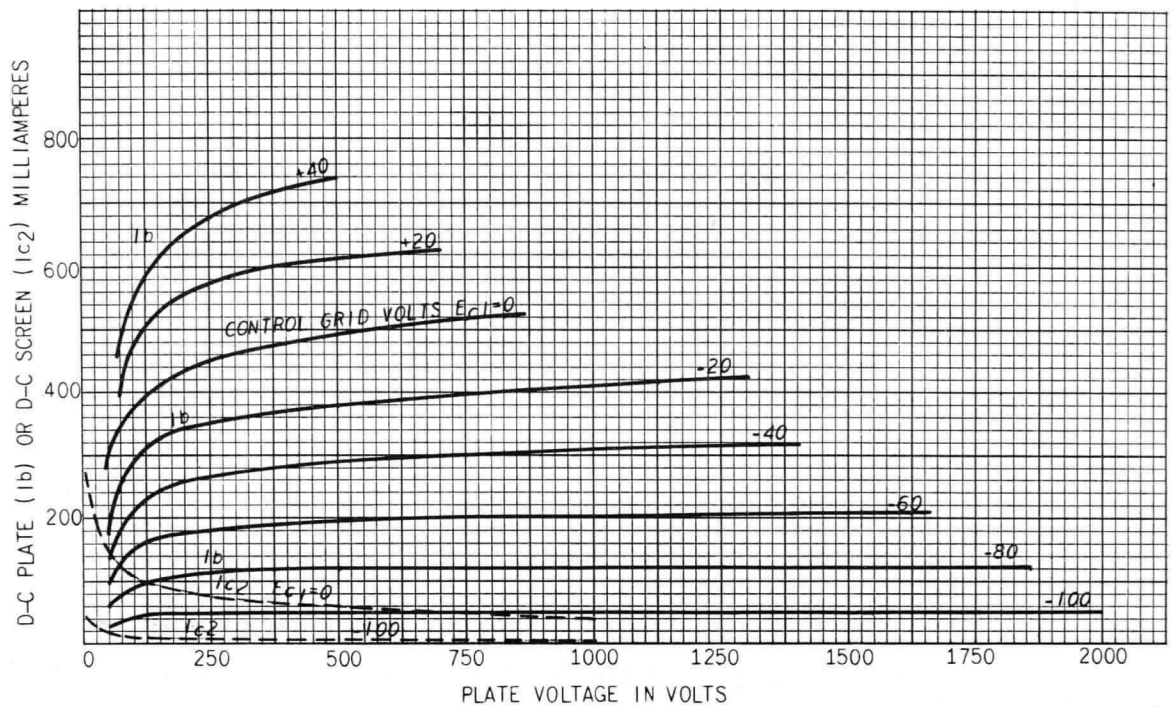

K-9186060

1-9-46

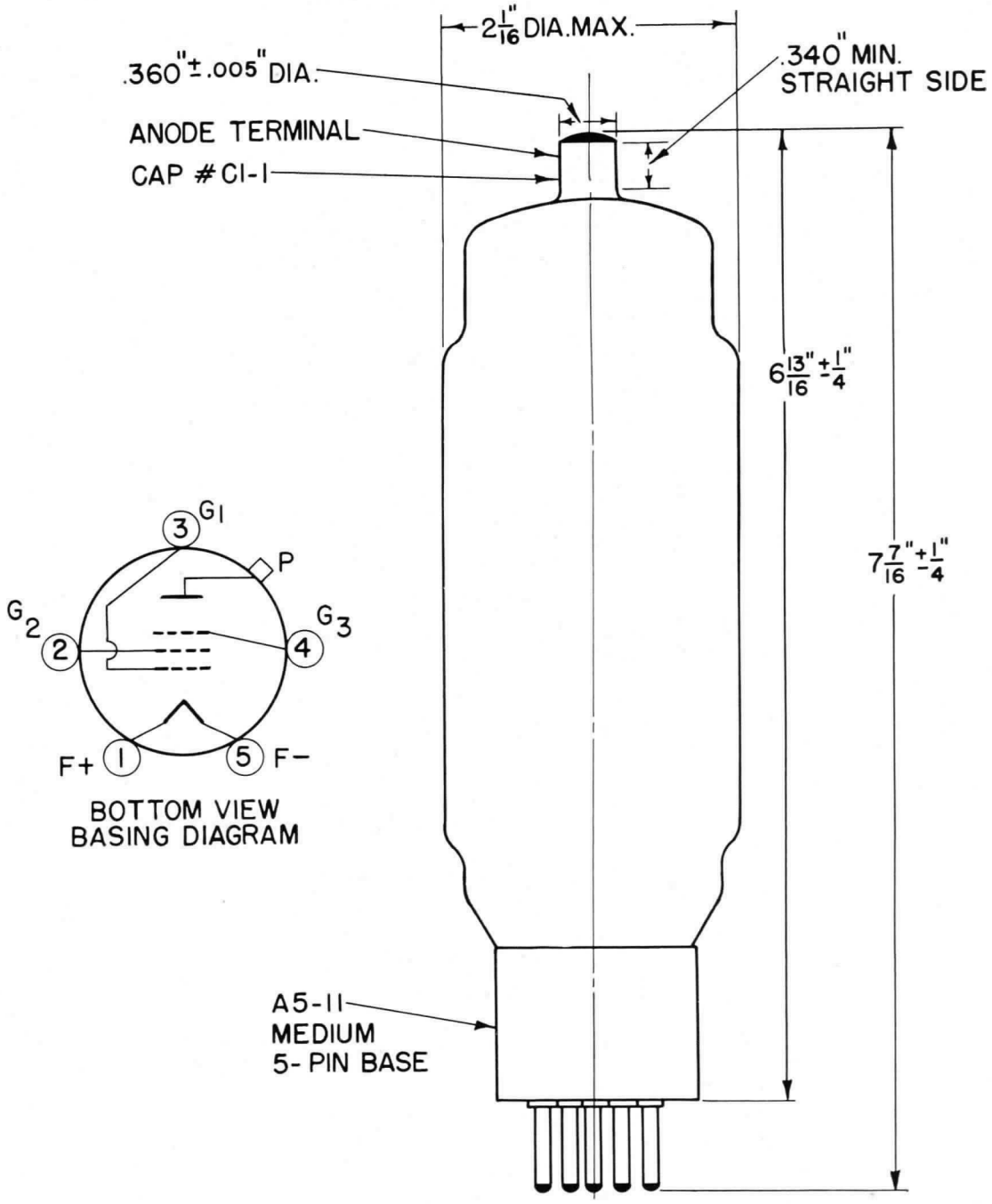

GL-828 OUTLINE

K-9033897

7-12-45

Electronics Department
GENERAL ELECTRIC
Schenectady, N. Y.

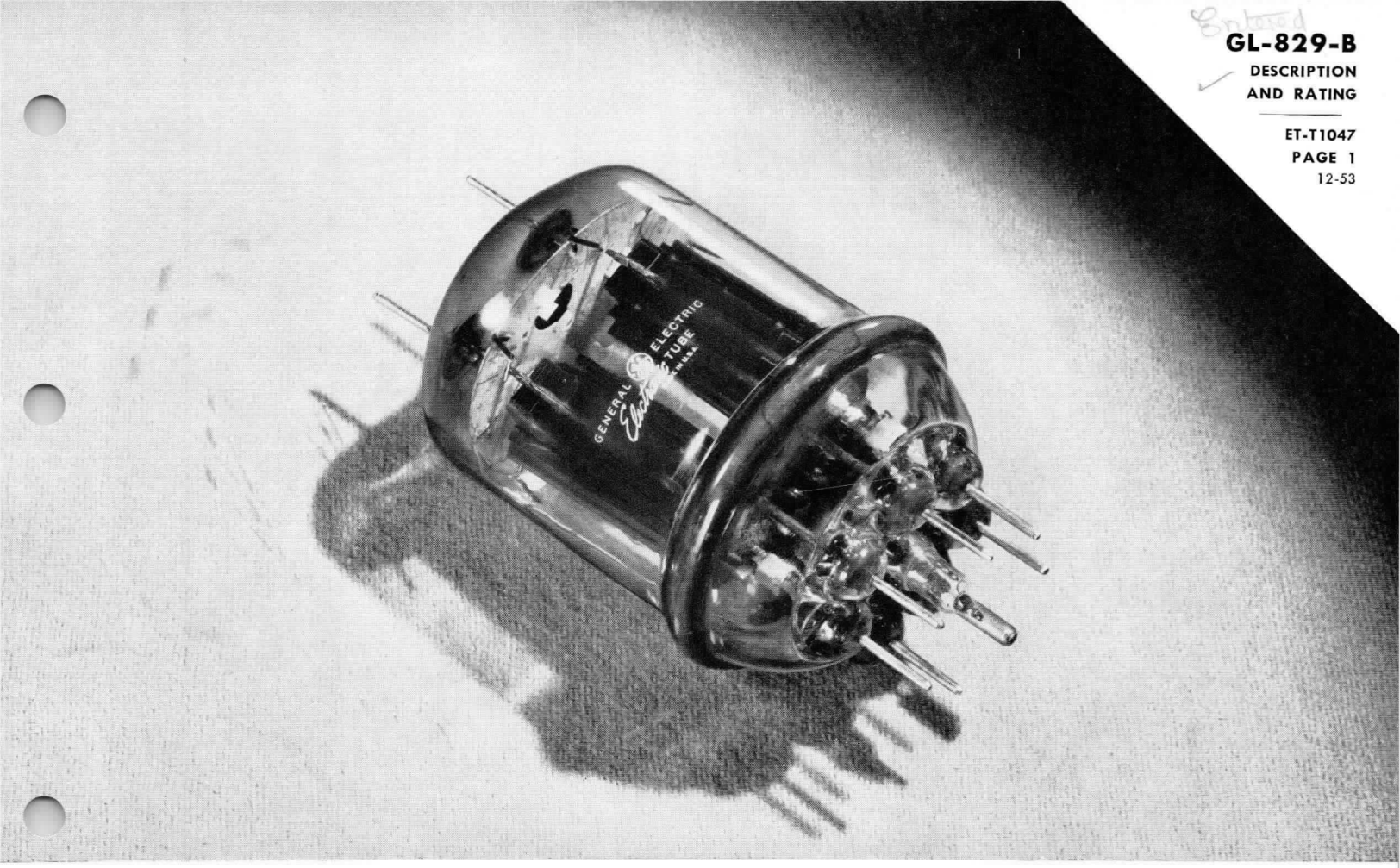

BEAM POWER TUBE

The GL-829-B is a five-electrode transmitting tube for use as an amplifier, modulator, and oscillator. The anode can dissipate 30 watts, and cooling is accomplished by radiation. The cathode is the indirectly heated type. Maximum ratings apply up to 200 megacycles.

TECHNICAL INFORMATION

GENERAL

	Series	Parallel	
Electrical			
Heater Voltage	12.6	6.3	±10% Volts
Heater Current at Bogey Voltage	1.125	2.25	Amperes
Transconductance, each unit, E_b = 250 vdc, E_c2 = 175 vdc, I_b = 60 ma. dc	8500		Micromhos
Amplification Factor, each unit, G2-G1, E_b = 225 vdc, E_c2 = 225 vdc, I_b = 60 ma. dc	9		
Direct Interelectrode Capacitances, each unit			
Grid-No. 1 to Plate (With External Shield up to Flange Seal)	0.12		uuf
Input	14.5		uuf
Output	7.0		uuf
Grid-No. 2 to Cathode Capacitance, including internal Grid-No. 2 bypass capacitor, approximate	65		uuf
Mechanical			
Mounting Position			
Vertical, base up or down			
Horizontal, plane of each plate vertical			
Net Weight, approximate	2.5		Ounces

GE Electronic TUBE

GENERAL ELECTRIC

Supersedes ETX-159, dated 5-46

TECHNICAL INFORMATION (CONT'D)

MAXIMUM RATINGS AND TYPICAL OPERATING CONDITIONS

AUDIO-FREQUENCY POWER AMPLIFIER AND MODULATOR—CLASS AB_1

	CCS• Natural Cooling	
Maximum Ratings, Absolute Values		
DC Plate Voltage	600 Max	Volts
DC Grid-No. 2 Voltage	225 Max	Volts
Maximum-Signal DC Plate Current*	250 Max	Milliamperes
Maximum-Signal Plate Input*	100 Max	Watts
Maximum-Signal Grid-No. 2 Input*	7 Max	Watts
Plate Dissipation*	30 Max	Watts
Peak Heater-Cathode Voltage		
Heater Negative with Respect to Cathode	100 Max	Volts
Heater Positive with Respect to Cathode	100 Max	Volts
Bulb Temperature	235 Max	C
Typical Operation		
DC Plate Voltage	600	Volts
DC Grid-No. 2 Voltage†	200	Volts
DC Grid-No. 1 Voltage‡	−18	Volts
Peak AF Grid-No. 1 to Grid-No. 1 Voltage	36	Volts
Zero-Signal DC Plate Current	40	Milliamperes
Maximum-Signal DC Plate Current	100	Milliamperes
Zero-Signal DC Grid-No. 2 Current	4	Milliamperes
Maximum-Signal DC Grid-No. 2 Current	18	Milliamperes
Effective Load Resistance, Plate to Plate	13750	Ohms
Maximum-Signal Driving Power	0	Watts
Maximum-Signal Power Output	44	Watts

PLATE-MODULATED PUSH-PULL RADIO-FREQUENCY POWER AMPLIFIER—CLASS C TELEPHONY

Carrier conditions per tube for use with a maximum modulation factor of 1.0

	CCS•	ICAS••		CCS•	ICAS••	
Maximum Ratings, Absolute Values	Natural Cooling			Forced-Air Cooling		
DC Plate Voltage	600 Max	600 Max		600 Max	600 Max	Volts
DC Grid-No. 2 Voltage	225 Max	225 Max		225 Max	250 Max	Volts
DC Grid-No. 1 Voltage	−175 Max	−175 Max		−175 Max	−175 Max	Volts
DC Plate Current	212 Max	212 Max		212 Max	240 Max	Milliamperes
DC Grid-No. 1 Current	15 Max	15 Max		15 Max	20 Max	Milliamperes
Plate Input	67.5 Max	90 Max		90 Max	120 Max	Watts
Grid-No. 2 Input	7 Max	7 Max		7 Max	**8 Max	Watts
Plate Dissipation	21 Max	28 Max		28 Max	40 Max	Watts
Peak Heater-Cathode Voltage						
Heater Negative with Respect to Cathode	100 Max	100 Max		100 Max	100 Max	Volts
Heater Positive with Respect to Cathode	100 Max	100 Max		100 Max	100 Max	Volts
Bulb Temperature	235 Max	235 Max		235 Max	235 Max	C
Typical Operation						
DC Plate Voltage	600	425	600	425	600	600	Volts
DC Grid-No. 2 Voltage#	200	200	200	200	200	200	Volts
	15500	6400	13300	6400	13300	13300	Ohms
DC Grid-No. 1 Voltage*** ⊕	−70	−60	−70	−60	−70	−80	Volts
	8700	5500	5800	5500	5800	5300	Ohms
Peak RF Grid-No. 1 to Grid-No. 1 Voltage	160	154	172	154	172	210	Volts
DC Plate Current	112	212	150	212	150	200	Milliamperes
DC Grid-No. 2 Current	26	35	30	35	30	30	Milliamperes
DC Grid-No. 1 Current, approximate	8	11	12	11	12	15	Milliamperes
Driving Power, approximate	0.6	0.8	0.9	0.8	0.9	1.4	Watts
Power Output, approximate	50	63	70	63	70	85	Watts

TECHNICAL INFORMATION (CONT'D)

PUSH-PULL RADIO-FREQUENCY POWER AMPLIFIER AND OSCILLATOR—CLASS C TELEGRAPHY

Key-down conditions per tube without modulation♦

	CCS•	ICAS••		CCS•	ICAS••		
Maximum Ratings, Absolute Values	**Natural Cooling**			**Forced-air Cooling**			
DC Plate Voltage	750 Max	750 Max		750 Max	750 Max		Volts
DC Grid-No. 2 Voltage	225 Max	225 Max		225 Max	250 Max		Volts
DC Grid-No. 1 Voltage	−175 Max	−175 Max		−175 Max	−175 Max		Volts
DC Plate Current	240 Max	240 Max		240 Max	240 Max		Milliamperes
DC Grid-No. 1 Current	15 Max	15 Max		15 Max	20 Max		Milliamperes
Plate Input	90 Max	120 Max		120 Max	150 Max		Watts
Grid-No. 2 Input	7 Max	7 Max		7 Max	8 Max		Watts
Plate Dissipation	30 Max	40 Max		40 Max	45 Max		Watts
Peak Heater-Cathode Voltage							
Heater Negative with Respect to Cathode	100 Max	100 Max		100 Max	100 Max		Volts
Heater Positive with Respect to Cathode	100 Max	100 Max		100 Max	100 Max		Volts
Bulb Temperature	265 Max	265 Max		235 Max	235 Max		C
Typical Operation							
DC Plate Voltage	750	500	750	500	750	750	Volts
DC Grid-No. 2 Voltage△	200	200	200	200	200	200	Volts
	16200	9300	18300	9300	18300	16200	Ohms
DC Grid-No. 1 Voltage¶ ⊕	−50	−45	−55	−45	−55	−50	Volts
	6300	3750	4600	3750	4600	3100	Ohms
	310	160	270	160	270	200	Ohms
Peak RF Grid-No. 1 to Grid-No. 1 Voltage	120	124	140	124	140	150	Volts
DC Plate Current	120	240	160	240	160	200	Milliamperes
DC Grid-No. 2 Current	34	32	30	32	30	34	Milliamperes
DC Grid-No. 1 Current, approximate	8	12	12	12	12	16	Milliamperes
Driving Power, approximate	0.45	0.7	0.8	0.7	0.8	1.1	Watts
Power Output, approximate	65	83	87	83	87	110	Watts

The GL-829-B can be operated at frequencies as high as 200 megacycles. The tube may be operated at higher frequencies provided the maximum values of plate voltage and power input are reduced as the frequency is raised. (Other maximum ratings are the same as shown above.) The tabulation below shows the highest percentage of maximum plate voltage and power input that can be used up to 250 megacycles for the various classes of service. Special attention should be given to shielding, cooling and radio-frequency by-passing at these frequencies.

Frequency	200	250	Megacycles
Maximum permissible percentage of maximum rated plate voltage and plate input			
Class C Telephony, plate modulated	100	89	Percent
Class C Telegraphy	100	89	Percent

*Averaged over any audio-frequency cycle of sine-wave form.
†Preferably obtained from a separate source, or from the plate-voltage supply with a voltage divider.
‡The type of input-coupling network used should not introduce too much resistance in the grid-No. 1 circuit. Transformer or impedance coupling devices are recommended. When grid-No. 1 is operated in the negative region with fixed bias, the d-c grid-No. 1 circuit resistance should not exceed 100,000 ohms. Cathode-bias is not recommended.
**In ICAS applications at frequencies less than 20 megacycles where duty-factor does not exceed 0.2, maximum "on" period does not exceed 30 seconds, and average modulation factor does not exceed 0.25, maximum grid-No. 2 input of 12 watts is permitted.
Obtained from a separate source modulated with the plate supply, or from the modulated plate supply through a series resistor of the value shown.
***Obtained from a grid resistor of value shown (per tube) or by partial self-bias methods.
♦ Modulation essentially negative may be used if the positive peak of the audio-frequency envelope does not exceed 115% of the carrier conditions.
• Continuous Commercial Service.
••Intermittent Commercial and Amateur Service.
⊕The grid-circuit resistance should never exceed 15,000 ohms (total) per tube; or 30,000 ohms per unit. Any additional bias required must be supplied by a cathode resistor or a fixed supply.
△Obtained from a separate source, or from the plate-voltage supply with a voltage divider, or through a series resistor of value shown. The grid-No. 2 voltage must not exceed 600 volts under key-up conditions.
¶ Obtained from a fixed supply or a grid resistor (3750, 4600, 3100) or cathode resistor (160, 270, 200) or by combination methods.

Shielding of the GL-829-B in an rf amplifier is required for stable operation. A convenient method of shielding is to mount the tube with one end through a hole in a metal plate so that the edge of the hole is close to the internal shield of the tube. Due to the importance, at the very-high-frequencies, of obtaining the shortest leads possible, rf bypassing must be accomplished close to the tube terminals. Ribbon leads acting as plates of the bypass capacitors are effective. All circuit returns should be made to the common cathode connection. RF chokes may be advisable in the voltage-supply leads.

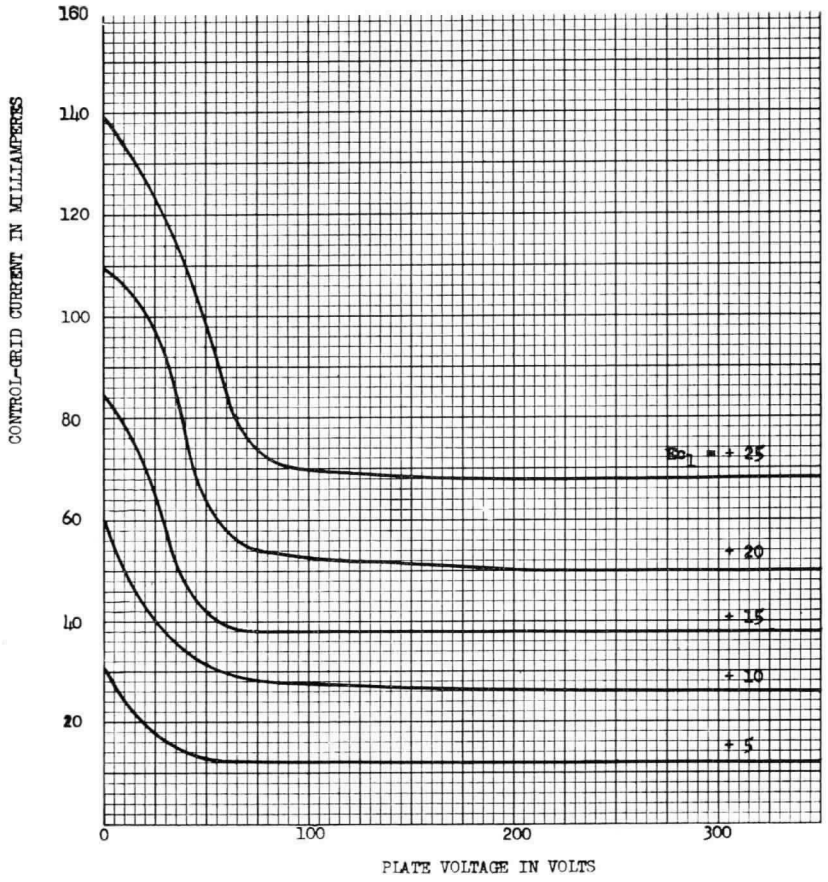

TYPICAL CHARACTERISTICS EACH UNIT
E_f = 12.6 VOLTS SCREEN VOLTAGE = 200 VOLTS
SERIES-HEATER ARRANGEMENT

K-6966429

10-27-53

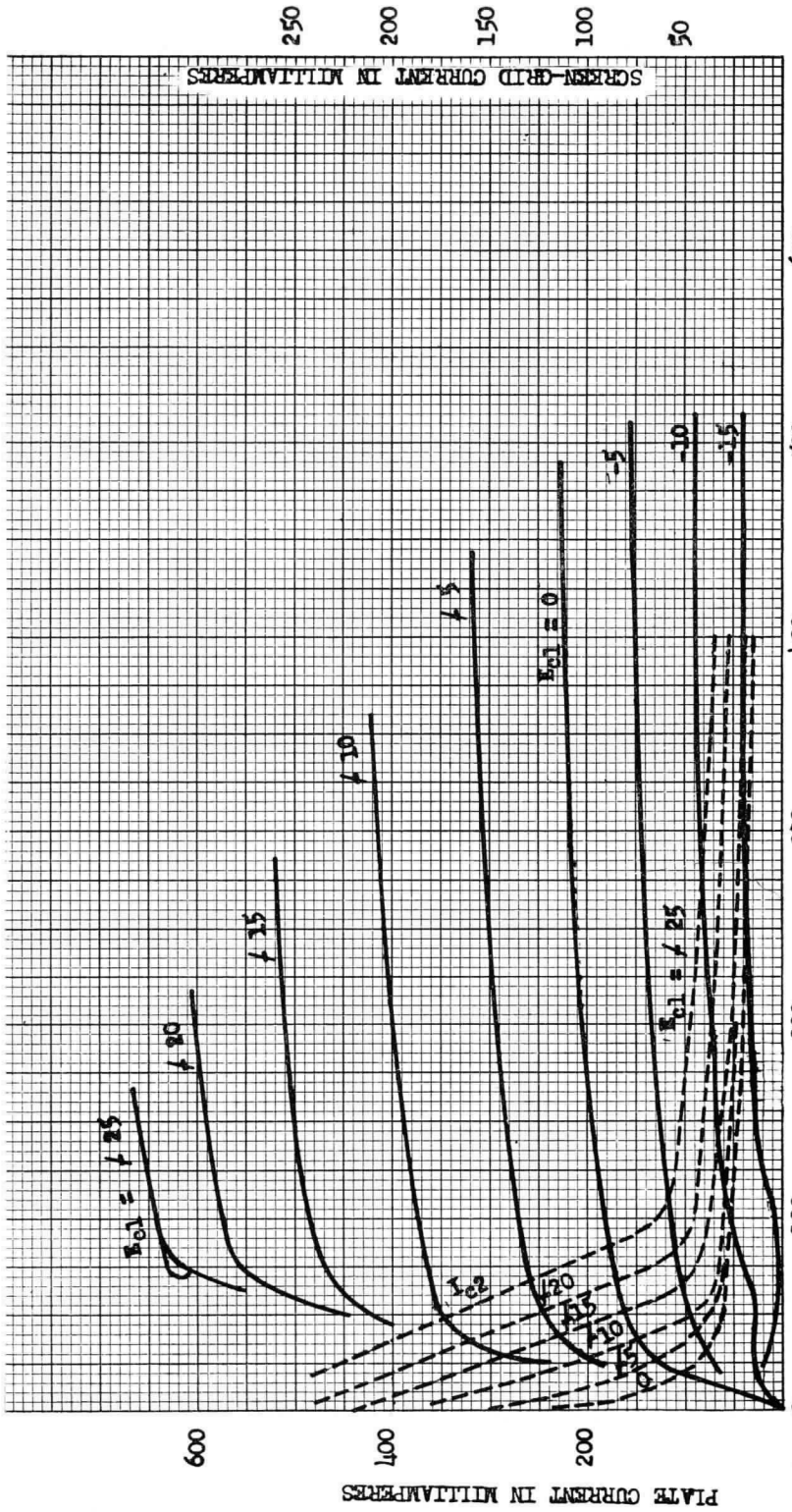

AVERAGE PLATE CHARACTERISTICS EACH UNIT
E_f = 12.6 VOLTS SCREEN VOLTAGE = 200 VOLTS
SERIES-HEATER ARRANGEMENT

11-10-53

K-6966430

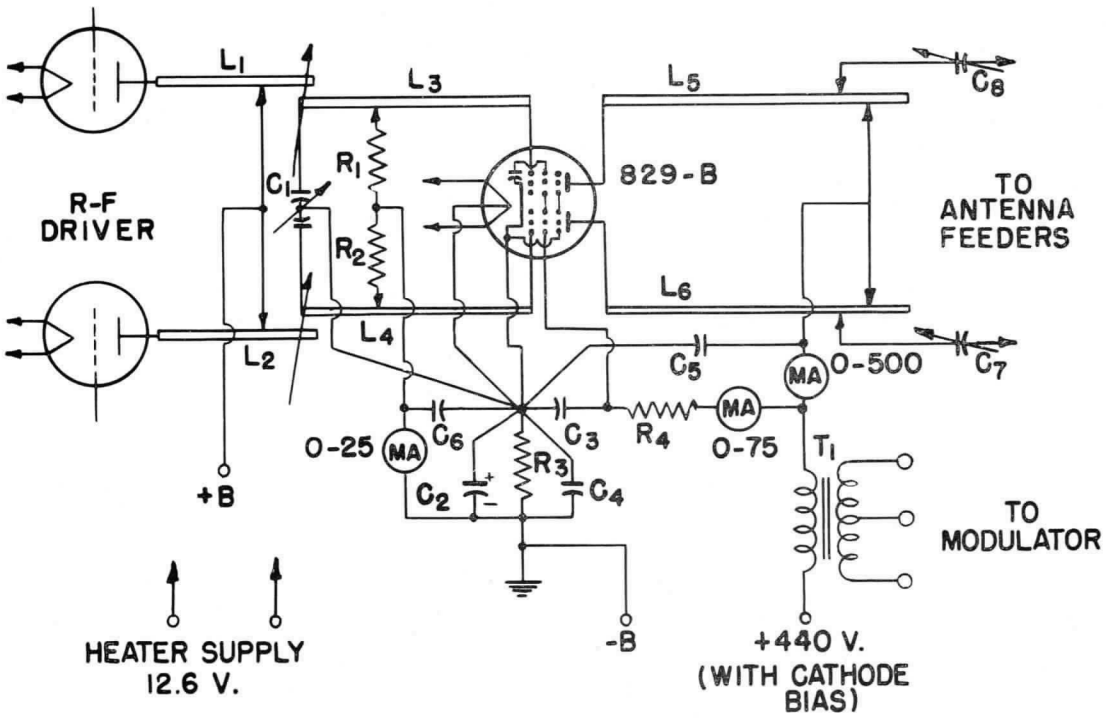

C_1 = 1.2 TO 10 μμf PER SECTION

C_2 = 25 μf, 200 VOLTS

C_3 C_4 C_5 C_6 = 500 μμf, MICA

C_7 C_8 = 3 TO 35 μμf

R_1 R_2 = 7500 TO 15000 OHMS, 1 WATT

R_3 = 60 OHMS, 10 WATTS

R_4 = 6400 OHMS, 15 WATTS

T_1 = MODULATION TRANSFORMER

L_1 L_2 = DIMENSIONS DEPENDENT ON TYPE OF DRIVER TUBE; APPROX. SAME AS L_5 L_6

L_3 L_4 = 1/4" DIA. COPPER TUBING, APPROX. 10" LONG AND SPACED APPROX. 7/8" BETWEEN CENTERS.

L_5 L_6 = 3/8" DIA. COPPER TUBING, APPROX. 7" LONG AND SPACED APPROX. 7/8" BETWEEN CENTERS.

NOTE 1: ADJUST COUPLING OF L_1 L_2 AND L_3 L_4 FOR OPTIMUM GRID EXCITATION.

NOTE 2: GRID RESISTORS SHOULD BE ADJUSTED ON L_3 L_4 AT VOLTAGE NODE.

VHF PLATE-MODULATED
PUSH-PULL RF POWER AMPLIFIER
(OPERATING FREQUENCY APPROX. 200 MC)

K-9033993

11-10-53

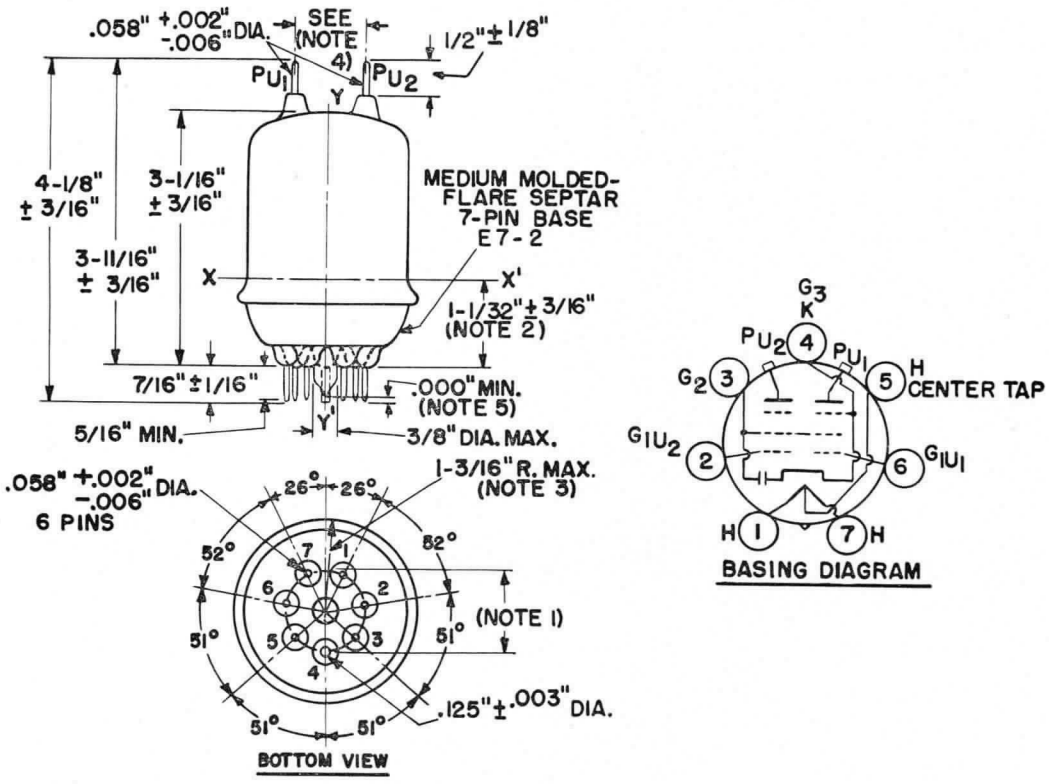

THE REFERENCE AXIS YY' IS DEFINED AS THE AXIS OF THE BASE-PIN GAGE DESCRIBED IN NOTE 1.

NOTE 1: ANGULAR VARIATIONS BETWEEN PINS AND VARIATION IN PIN-CIRCLE DIAMETER ARE HELD TO TOLERANCES SUCH THAT PINS WILL ENTER TO A DISTANCE OF 0.375" A FLAT-PLATE BASE-PIN GAGE HAVING SIX HOLES 0.0800" ± 0.0005" AND ONE HOLE 0.1450" ± 0.0005" ARRANGED ON A 1.0000" ± 0.0005" CIRCLE AT SPECIFIED ANGLES WITH TOLERANCE OF ± 5' FOR EACH ANGLE. GAGE IS ALSO PROVIDED WITH A HOLE 0.500" ± 0.010" CONCENTRIC WITH PIN CIRCLE WHOSE CENTER IS ON THE AXIS YY'.

NOTE 2: A FLAT-PLATE FLANGE GAGE WITH HOLE 2.063" - 0.000" + 0.003" IS LOWERED OVER TUBE SEATED IN BASE-PIN GAGE SO THAT THE HOLE AXIS IS COINCIDENT WITH AXIS YY' WITHIN 0.150", AND SO THAT THE BOTTOM SURFACE OF THE FLANGE GAGE IS PARALLEL TO THE TOP SURFACE OF THE BASE-PIN GAGE AND UNTIL THE FLANGE GAGE RESTS ON THE TUBE-FLANGE SEAL AT POSITION XX'. THE PERPENDICULAR DISTANCE BETWEEN THE TWO GAGES WILL BE AS SHOWN.

NOTE 3: MINIMUM DIAMETER OF TUBE-SEAL FLANGE WILL BE SUCH THAT A RING GAGE HAVING ID OF 2.125" - 0.000" + 0.003" AND THICKNESS OF 0.125" ± 0.010" WILL NOT PASS THE FLANGE WHEN TRIED AT ANY ANGLE.

NOTE 4: THE PLATE LEADS WILL ENTER A FLAT-PLATE, PLATE-LEAD GAGE HAVING MINIMUM THICKNESS OF 0.375" AND HAVING TWO HOLES 0.1200" ± 0.0005" WHOSE CENTERS ARE LOCATED AT A DISTANCE OF 0.424" ± 0.001" FROM THE AXIS YY' AND WHOSE AXES ARE PARALLEL TO YY'. THE PLANE THROUGH THESE AXES WILL BE 90° ± 5' FROM THE PLANE THROUGH YY' AND PIN NO. 4.

NOTE 5: EXHAUST TIP WILL NOT EXTEND BEYOND THE PLANE WHICH PASSES THROUGH THE ENDS OF THE THREE LONGEST PINS.

OUTLINE
GL-829-B

N-15154AZ

10-27-53

TUBE DEPARTMENT

GENERAL ELECTRIC

Schenectady 5, N. Y.

12-53 (10M)

PRINTED IN U.S.A.

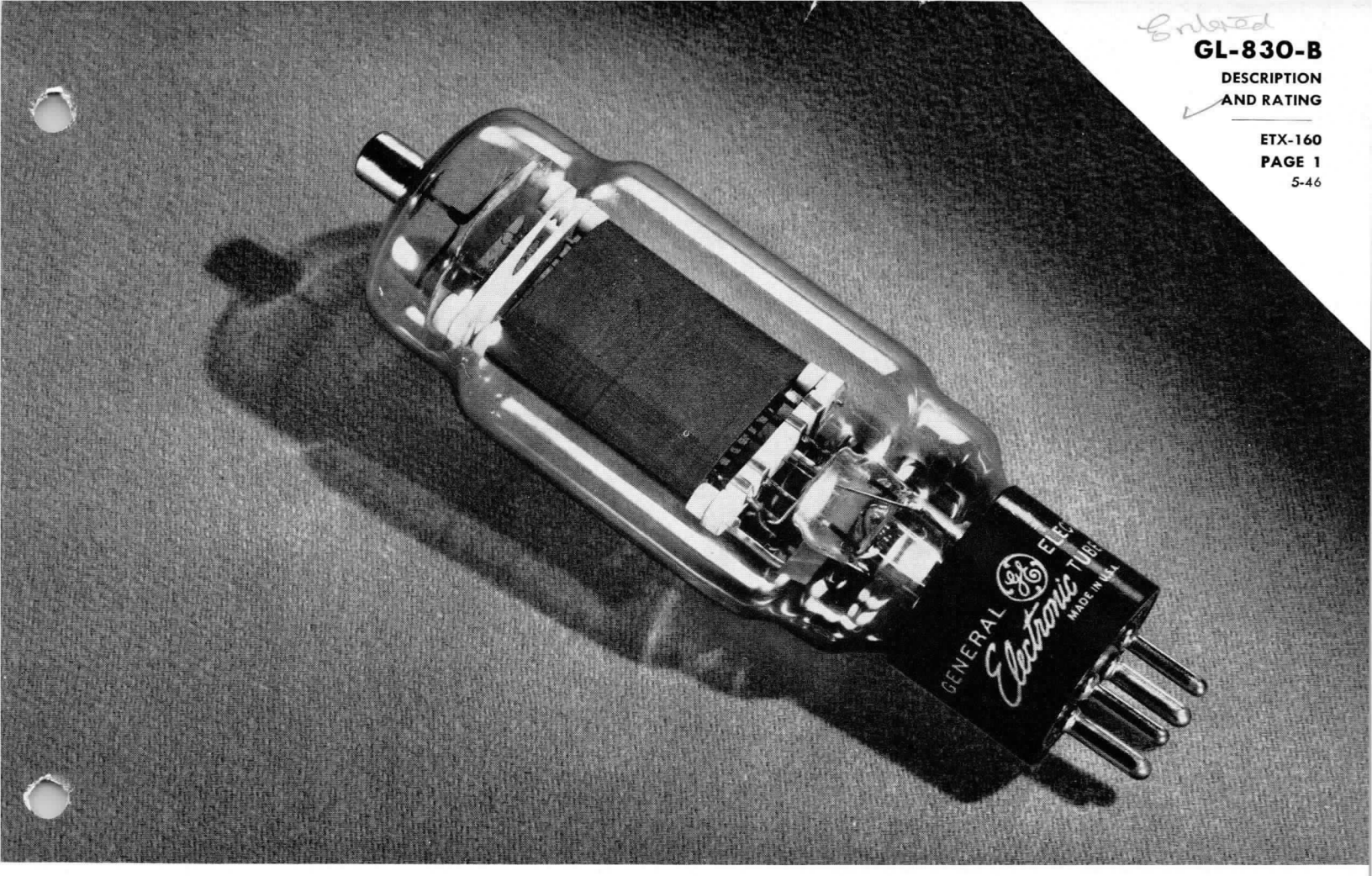

TRIODE

DESCRIPTION

GL-830-B, a three-electrode transmitting tube, is used as a Class B modulator, radio-frequency amplifier, and oscillator. This tube, as an r-f amplifier or oscillator, can be operated at maximum ratings at frequencies up to 15 megacycles. For Class C telegraph and Class B services the plate dissipation is 60 watts. Two tubes of this type can deliver an output of 175 watts in Class B audio service.

TECHNICAL INFORMATION

These data are for reference only. For design information refer to specifications.

GENERAL CHARACTERISTICS

Electrical

Cathode—Filamentary		
Filament voltage	10	volts
Filament current	2	amperes
Amplification factor	25	
Direct interelectrode capacitances, approx		
Grid-plate	11	micromicrofarads
Grid-filament	5	micromicrofarads
Plate-filament	1.8	micromicrofarad
Frequency for maximum ratings	15	megacycles

GE Electronic TUBE

GENERAL ELECTRIC

TECHNICAL INFORMATION (CONT'D)

Mechanical

Cap	Small metal
Base or terminal description	Medium 4-pin bayonet
Net weight, approx	.3 ounces
Shipping weight, approx	.3 pounds
Mounting position	vertical, base down

MAXIMUM RATINGS AND TYPICAL OPERATING CONDITIONS

CLASS B AUDIO-FREQUENCY POWER AMPLIFIER (TWO TUBES)

	Typical Operation		Maximum Ratings	
D-c plate voltage	800	1000	1000π	volts
Maximum signal plate current*			150π	milliamperes
D-c maximum signal plate input*			150π	watts
Plate dissipation*			60π	watts
D-c grid voltage	−27	−35		volts
Peak a-f grid-to-grid voltage	250	270		volts
Zero signal plate current	20	20		milliamperes
Maximum signal plate current	280	280		milliamperes
Maximum signal driving power, approx	5	6		watts
Effective load, plate-to-plate	6000	7600		ohms
Maximum signal plate power output	135	175		watts

CLASS B RADIO-FREQUENCY POWER AMPLIFIER

Carrier conditions per tube for use with a max modulation factor of 1.0

Filament voltage, a-c	10	10		volts
D-c grid voltage△	−27	−35		volts
D-c plate voltage	800	1000	1000π	volts
D-c plate current	95	85	100π	milliamperes
Plate input			90π	watts
Plate dissipation			60π	watts
Peak r-f grid input voltage	85	85		volts
D-c grid current, approx§	7	6		milliamperes
Driving power, approx§†	9	6		watts
Plate power output, approx	23	26		watts

CLASS C RADIO-FREQUENCY POWER AMPLIFIER AND OSCILLATOR—PLATE MODULATED

Carrier conditions per tube for use with a max modulation factor of 1.0

Filament voltage, a-c	10	10		volts
D-c plate voltage	600	800	800π	volts
D-c grid voltage	−140	−150	−300π	volts
D-c plate current	95	95	100π	milliamperes
D-c grid current, approx§	30	20	30π	milliamperes
Plate input			80π	watts
Plate dissipation			40π	watts
Peak r-f grid input voltage, approx	255	265		volts
Driving power, approx§	7	5		watts
Plate power output	38	50		watts

CLASS C RADIO-FREQUENCY POWER AMPLIFIER AND OSCILLATOR

Key-down conditions per tube without modulation‡

Filament voltage, a-c	10	10	10		volts
D-c plate voltage	600	800	1000	1000π	volts
D-c grid voltage	−95	−105	−110	−300π	volts
D-c plate current	140	140	140	150π	milliamperes
D-c grid current, approx§	30	30	30	30π	milliamperes
Plate input				150π	milliamperes
Plate dissipation				60π	watts
Peak r-f grid input voltage, approx	235	245	250		volts
Driving power, approx§	7	7	7		watts
Plate power output, approx	45	70	90		watts

π Per tube.

*Averaged over any audio-frequency cycle.

△Grid voltages are given with respect to the mid-point of filament operated on alternating current. If direct current is used, each stated value of grid voltage should be decreased by 5.0 volts and the circuit returns connected to the negative end of the filament.

§Subject to wide variations depending on the impedance of the load circuit. High-impedance load circuits require more grid current and driving power to obtain the desired output. Low-impedance circuits need less grid current and driving power, but plate-circuit efficiency is sacrificed. The driving stage should be capable of delivering considerably more than the required driving power.

†At crest of audio-frequency cycle.

‡Modulation, essentially negative, may be used if the positive peak of the audio-frequency envelope does not exceed 115 per cent of the carrier conditions.

APPLICATION NOTES

Frequency	15	30	60 megacycles
Percentage of maximum rated plate voltage and plate input			
Class B	100	87	74 per cent
Class C, plate modulated	100	77	54 per cent
Class C, telegraphy	100	77	54 per cent

GL-830-B AVERAGE PLATE CHARACTERISTICS

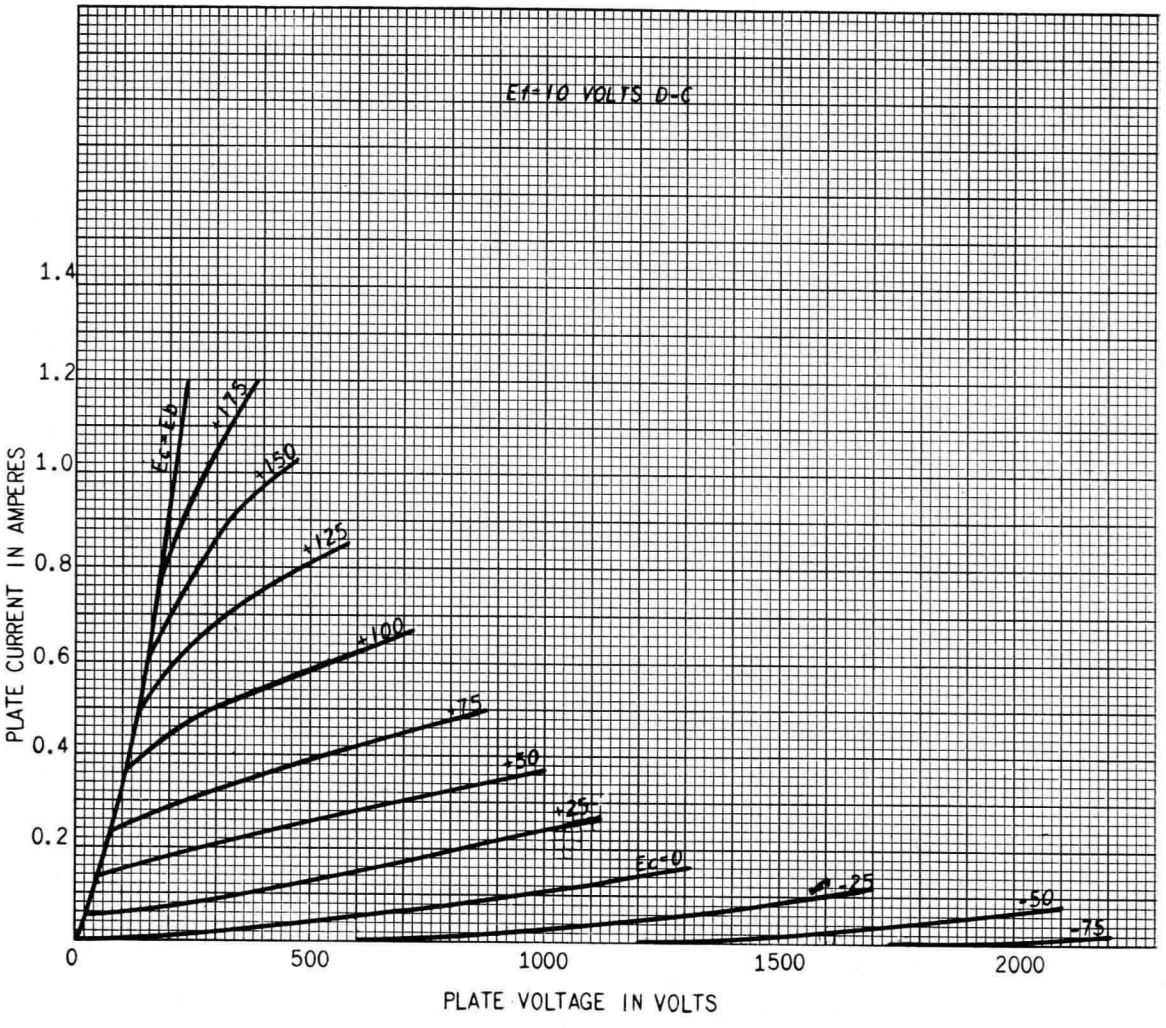

K-9186062

1-6-46

GL-830-B AVERAGE CHARACTERISTICS

$E_f = 10$ VOLTS D-C

GRID VOLTS $= E_c$

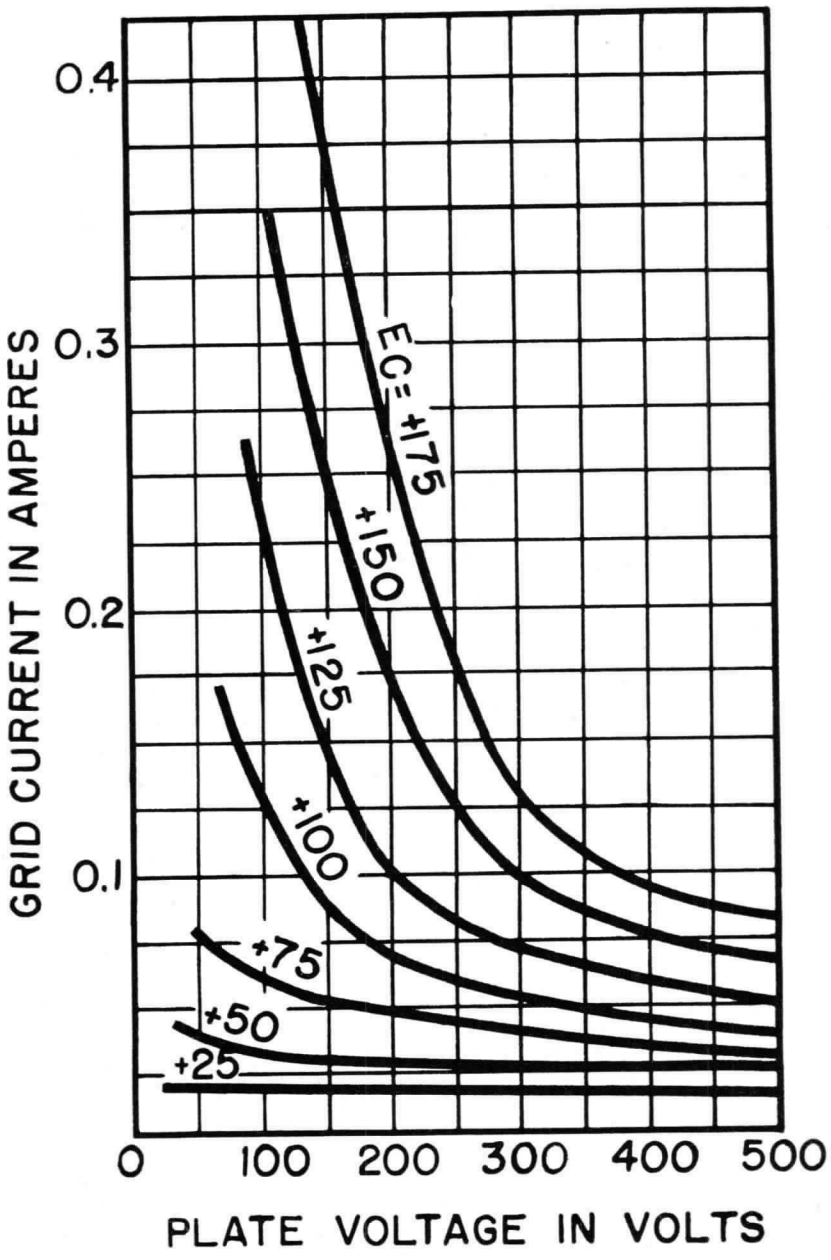

K-9033932

8-22-45

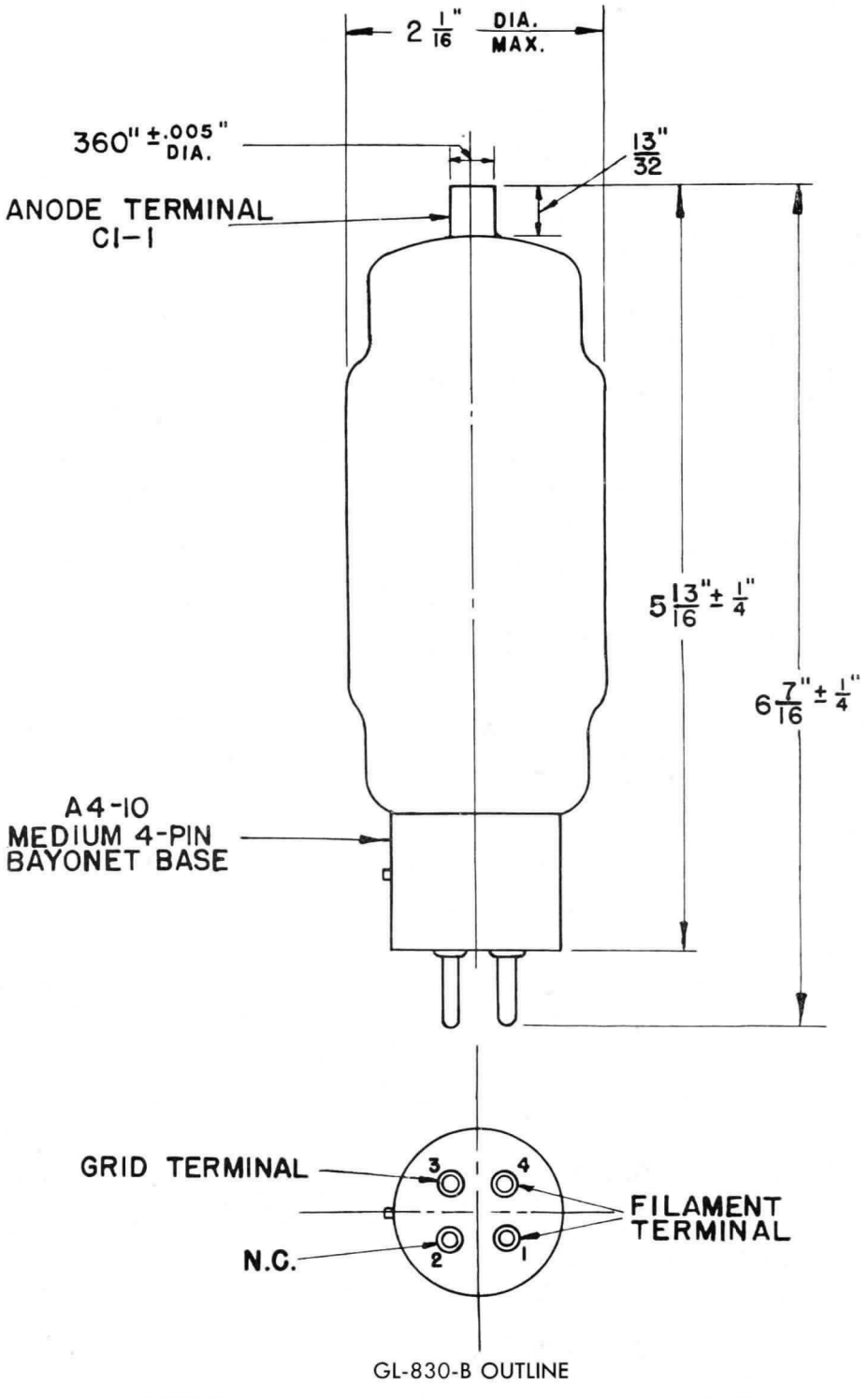

GL-830-B OUTLINE

K-9033906

8-4-45

Electronics Department
GENERAL ELECTRIC
Schenectady, N. Y.

5-46 (7M)
Filing No. 8850

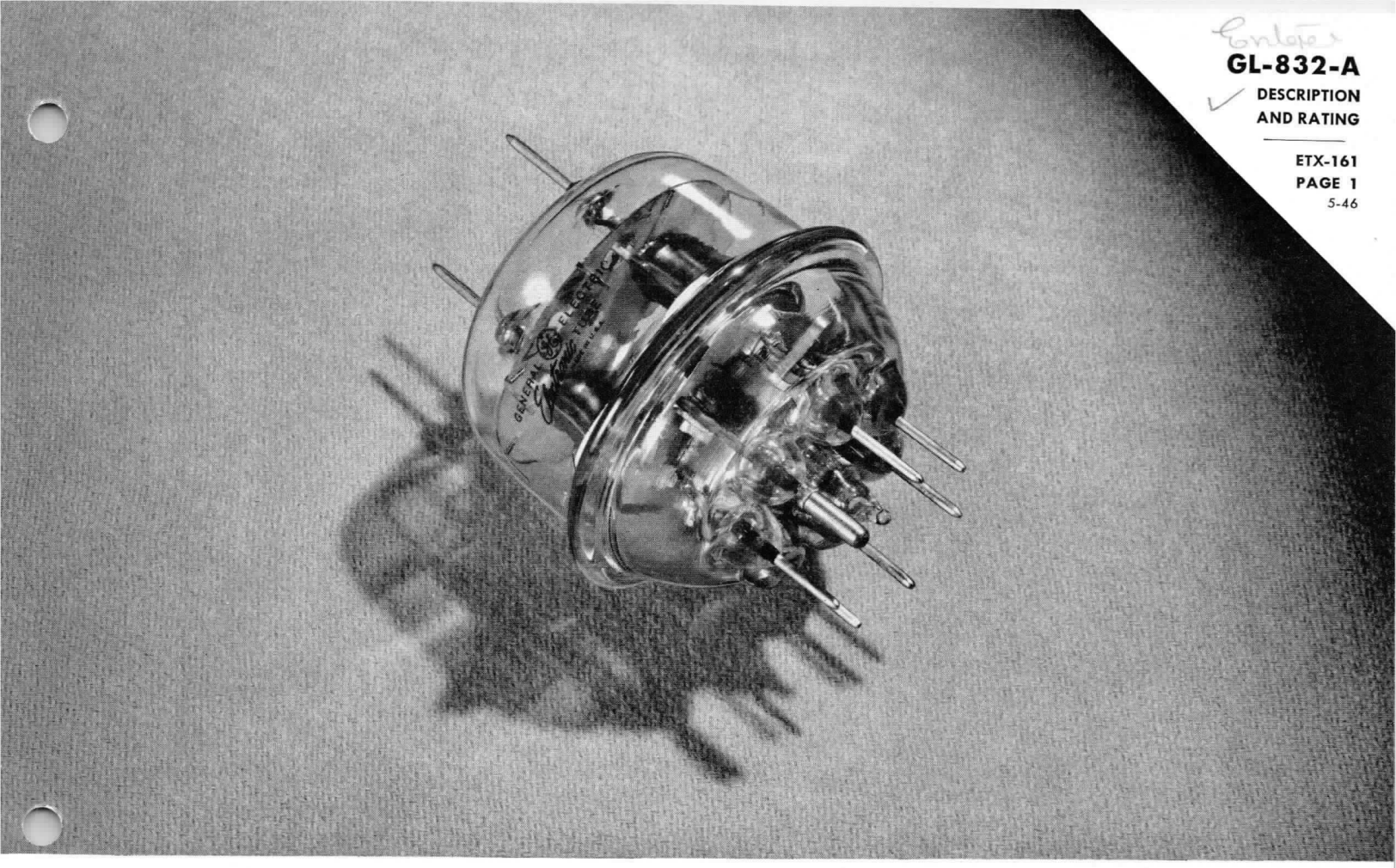

BEAM POWER TUBE

DESCRIPTION

The GL-832-A is a push-pull, beam power transmitting tube of the heater-cathode type which contains two beam power units in one envelope. The tube is designed primarily for use as an r-f power amplifier with maximum ratings at frequencies as high as 200 megacycles, with reduced ratings at frequencies as high as 250 megacycles. Total plate dissipation of the tube is 15 watts for Class C telegraph service. When adequately shielded circuits are used neutralization is unnecessary.

The exceptional efficiency of the 832-A at the ultrahigh frequencies is due to excellent internal shielding, balance and compact structure of the beam power units, and close electrode spacing. Internal leads are short and heavy to minimize internal lead inductance. The terminal arrangement both provides excellent insulation and facilitates symmetry of the circuit layout.

The heaters are arranged to allow operation from either a 12.6- or a 6.3-volt supply.

TECHNICAL INFORMATION

These data are for reference only. For design information refer to specifications.

GENERAL CHARACTERISTICS

Number of electrodes		3
Electrical		
Cathode—Heater type	Series	Parallel
Heater voltage*	12.6	6.3 volts
Heater current	0.8	1.6 amperes
Grid-plate transconductance, I_b = 30 milliamperes		3500 micromhos
Grid-screen amplification factor		7

Electronic TUBE

GENERAL ELECTRIC

TECHNICAL INFORMATION (CONT'D)

Direct interelectrode capacitances, each unit		
Grid-plate (with external shielding)	0.05	micromicrofarad
Input	7.5	micromicrofarads
Output	3.8	micromicrofarads
Screen-cathode capacitance, approximate (including screen by-pass condenser)	.65	micromicrofarads

Mechanical

Type of cooling	convection	
Net weight, approx	4	ounces
Shipping weight, approx	3	pounds
Mounting position	any	

MAXIMUM RATING AND TYPICAL OPERATING CONDITIONS

CLASS C PUSH-PULL RADIO-FREQUENCY POWER AMPLIFIER—GRID-MODULATED

Carrier conditions per tube for use with a maximum modulation factor of 1.0

	Typical Operation		Maximum Ratings	
Filament voltage	0.8	0.9	1.0	
D-c plate voltage	500	750	750	volts
D-c grid voltage†	−55	−60	−100	volts
D-c screen voltage	200	200	250	volts
D-c plate current	44	29	55	milliamperes
D-c grid current, approx	0	0		milliamperes
D-c screen current	3.0	2.0		milliamperes
Plate input			22	watts
Screen input			3.4	watts
Plate dissipation			15	watts
Peak r-f grid input voltage, approx	100	100		volts
Peak a-f grid voltage	14	16		volts
Driving power, approx§	0.1	0.1		watt
Plate power output	8.0	8.5		watts

CLASS C RADIO-FREQUENCY AMPLIFIER AND OSCILLATOR—PLATE-MODULATED

Carrier conditions per tube for use with a maximum modulation factor of 1.0

D-c plate voltage	425	600	600	volts
D-c grid voltage‖ π	−60	−65	−100	volts
From a grid resistor of	25000	25000		ohms
D-c screen voltage¶	200	200	250	volts
	14000	25000	2	ohms
D-c plate current	52	36	68	milliamperes
D-c grid current, approx	2.4	2.6	6	milliamperes
D-c screen current	16	16		milliamperes
Plate input			22	watts
Screen input			3.4	watts
Plate dissipation			10	watts
Peak r-f grid input voltage, approx	140	150		volts
Driving power, approx	0.15	0.16		watt
Plate power output	16	17		watt

TECHNICAL INFORMATION (CONT'D)

CLASS C PUSH-PULL RADIO-FREQUENCY POWER AMPLIFIER AND OSCILLATOR

Key-down conditions per tube without modulation#

D-c plate voltage	500	750	750	volts
D-c grid voltageπ	−65	−65	−100	volts
From grid resistor	25000	25000		ohms
From cathode resistor	730	1000		ohms
D-c screen voltages△	200	200	250	volts
	21000	37000		ohms
D-c plate current	73	48	90	milliamperes
D-c grid current, approx	2.6	2.8	6	milliamperes
D-c screen current	14	15		milliamperes
Plate input			36	watts
Plate dissipation			15	watts
Screen input			5	watts
Peak r-f grid input voltage, approx	150	150		volts
Driving power, approx	0.18	0.19		watt
Plate power output	26	26		watts

* Should not deviate more than ±10 per cent from rated value.

π The grid-circuit resistor should never exceed 25000 ohms (total) per tube, or 50000 ohms per unit. Any additional bias required must be supplied by a cathode resistor or a fixed supply.

‡ Preferably obtained from a fixed supply; or may also be obtained from an unbypassed (for audio frequencies) cathode resistor.

§ At crest of a-f cycle with modulation factor specified.

‖ Obtained by grid resistor of value shown (per tube) or by partial self-bias methods.

¶ Preferably obtained from a separate source modulated with the plate supply, or obtained from the modulated plate-voltage supply through resistor of value shown.

\# Modulation essentially negative may be used if the positive peak of the audio-frequency envelope does not exceed 115 per cent of the carrier conditions.

△Obtained from a separate source, or from the plate-voltage supply with a voltage divider, or through a series resistor of the value shown. The screen voltage must not exceed 600 volts under key-up conditions.

APPLICATION NOTES

The GL-832-A may be operated at maximum rating in all classes of service at frequencies as high as 200 megacycles. The tube may be operated at higher frequencies provided the maximum values of plate voltage and power input are reduced as the frequency is raised. (Other maximum ratings are the same as shown above.) The tabulation below shows the highest percentage of maximum plate voltage and power input that can be used at frequencies up to 250 megacycles.

Frequency		200	250	megacycles
Maximum permissible percentage of maximum rated plate voltage and plate input				
Class C	grid-modulated	100	94	per cent
	plate-modulated	100	89	per cent
	telegraphy	100	89	per cent

GL-832-A
AVERAGE PLATE CHARACTERISTICS (FOR EACH UNIT)
(E_f = 12.6 VOLTS, SCREEN VOLTS = 250)
(SERIES—HEATER ARRANGEMENT)

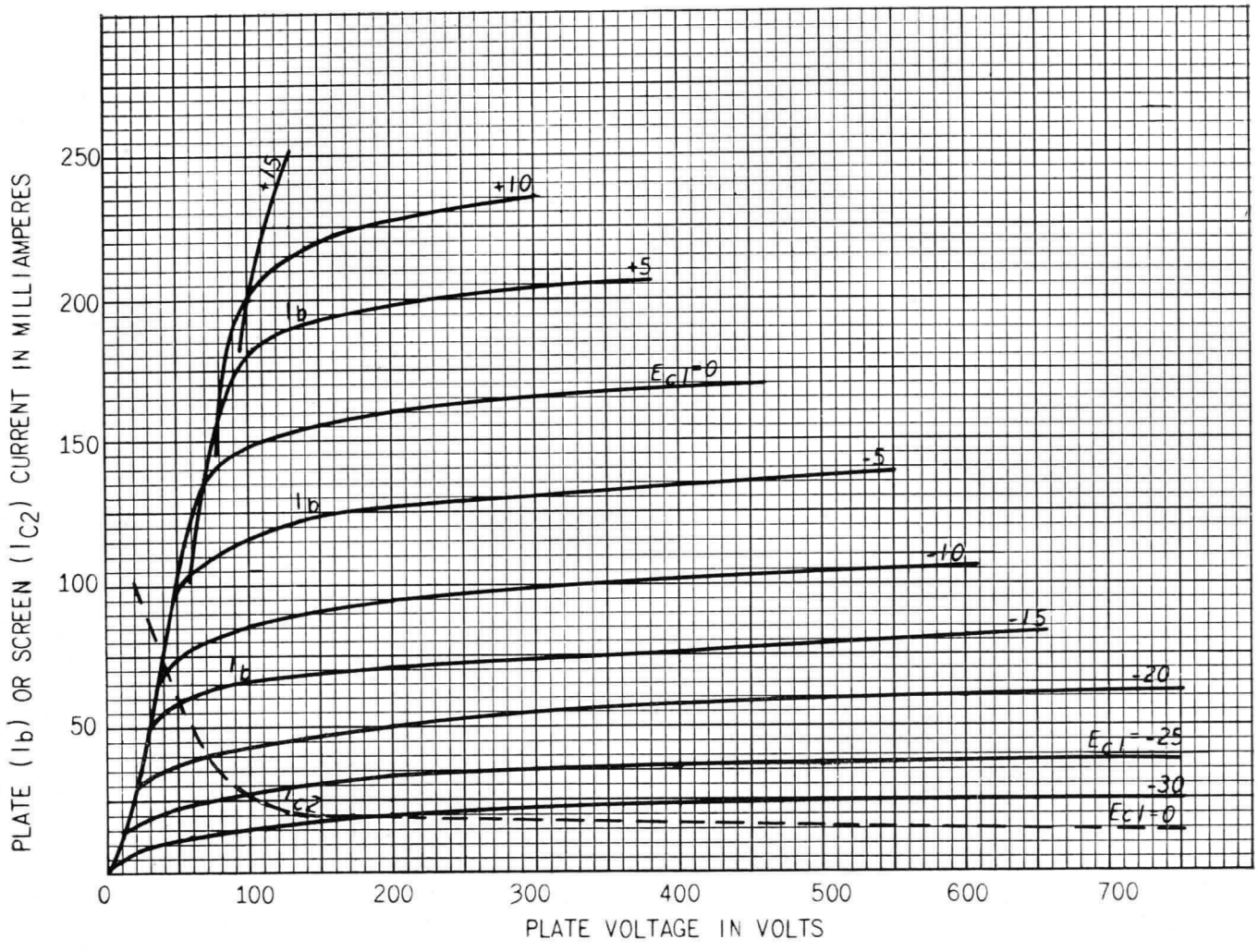

K-9186163

3-19-46

GL-832-A
TYPICAL CHARACTERISTICS (FOR EACH UNIT)
(E_f = 12.6 VOLTS, SCREEN VOLTS = 250)

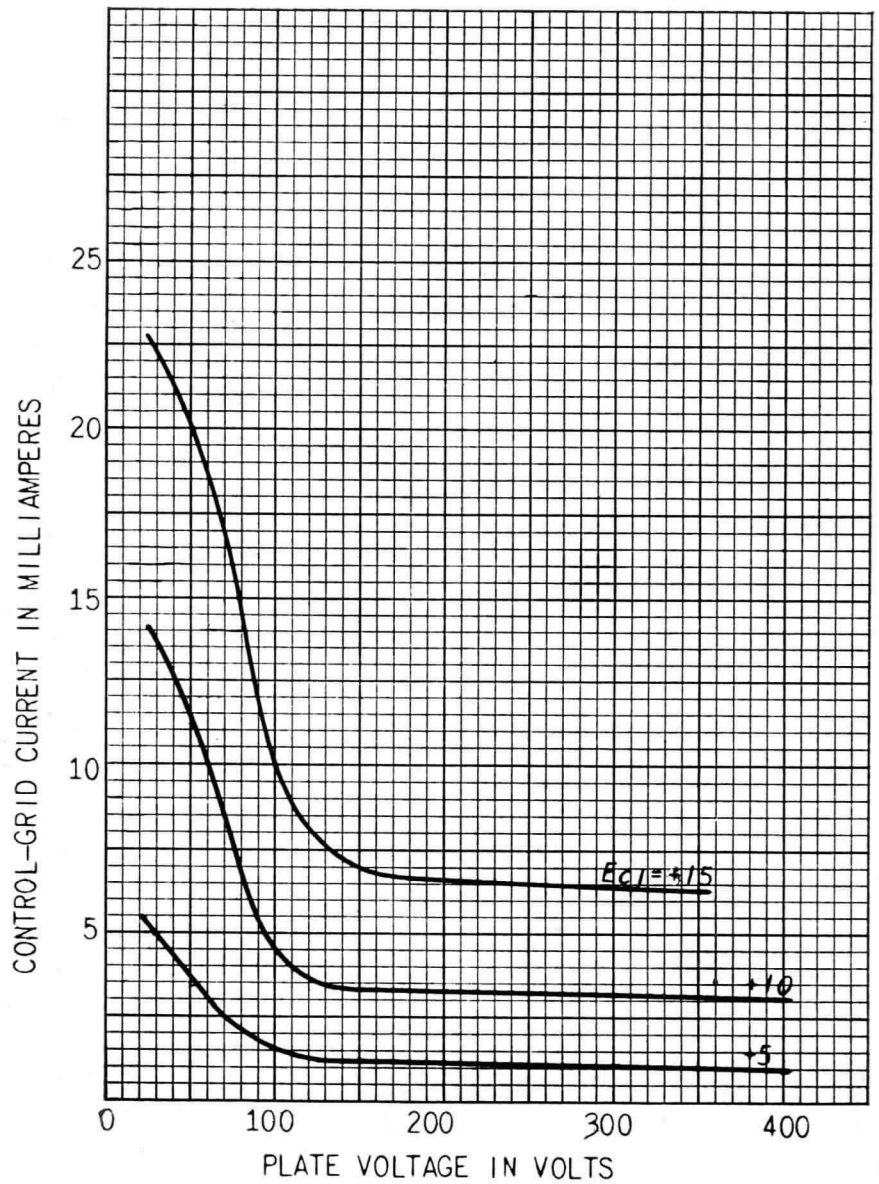

K-9186160

3-19-46

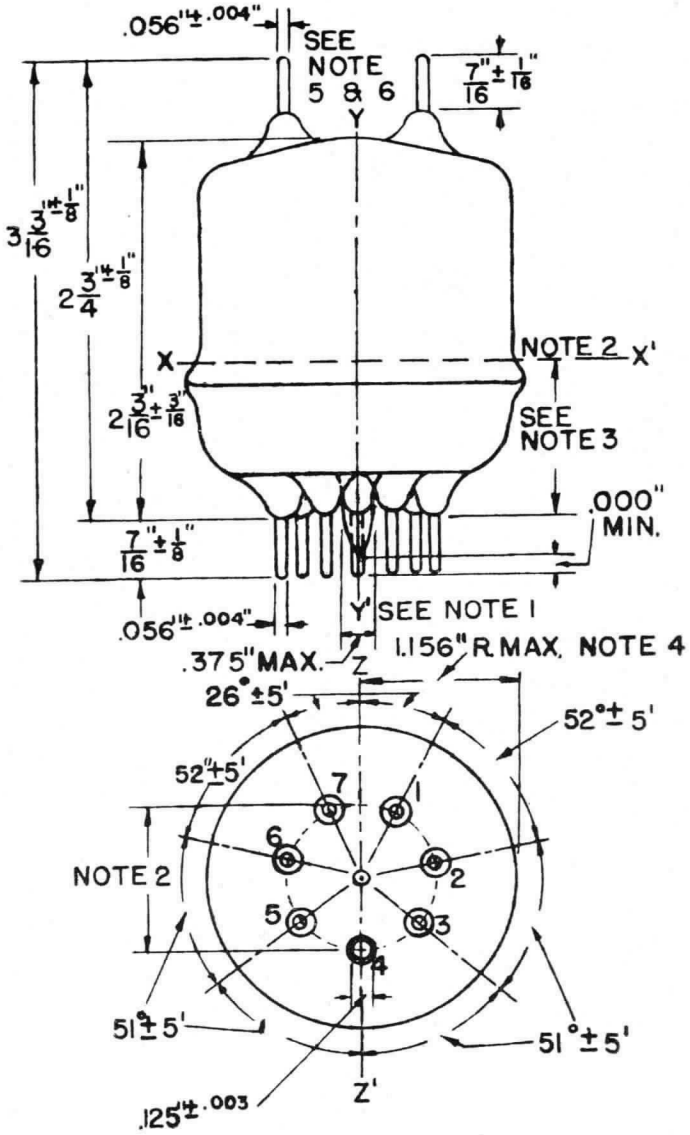

GL-832-A OUTLINE

K-9033907

8-7-45

NOTES:

1. THE AXIS YY′ IS DEFINED AS THE AXIS OF THE BASE PIN GAGE DESCRIBED IN NOTE 3.

2. THE TUBE BASE SHALL BE CAPABLE OF ENTERING TO A DISTANCE OF .375″ A FLAT-PLATE GAGE HAVING SIX HOLES .0800″±.0005″ AND ONE HOLE .1450″±.0005″ ALL ARRANGED ON A 1.000″±.0005″ DIA. CIRCLE AT SPECIFIED ANGLES. 51°±5′; 52°±5′; 26°±5′. A .500″±.010″ HOLE AT THE CENTER OF THE PIN CIRCLE IS ALSO REQUIRED. THE AXIS YY′ IS DEFINED BY THE CENTER OF THIS HOLE.

3. THIS DIMENSION IS MEASURED BY INSERTING THE TUBE IN THE BASE-PIN GAGE DESCRIBED IN NOTE 2 AND THEN LOWERING A GAGE PLATE HAVING A HOLE 2.063″ $^{+.003″}_{-.000″}$ IN DIAMETER UNTIL THE PLATE RESTS ON THE SEAL FLANGE AT POSITION XX′. THE CENTER LINE OF THE HOLE SHALL BE COINCIDENT WITH THE AXIS YY′ WITHIN .150″ WITH THE GAGE PLATE PARALLEL TO THE TOP SURFACE OF THE BASE PIN GAGE. THE DIMENSION IS MEASURED BETWEEN THE BOTTOM SURFACE OF THE GAGE PLATE AND THE TOP SURFACE OF THE BASE PIN GAGE THIS DISTANCE SHALL BE .844″ MIN. AND 1.219″ MAX.

4. MINIMUM DIAMETER OF TUBE-SEAL FLANGE WILL BE SUCH THAT A RING GAGE HAVING ID OF 2.125″ $^{+.003″}_{-.000″}$ AND THICKNESS OF .125″±.010″ WILL NOT PASS THE FLANGE WHEN TRIED AT ANY ANGLE.

5. THE PLATE LEADS SHALL BE CAPABLE OF ENTERING A FLAT PLATE GAGE OF .375″ MIN. THICKNESS HAVING TWO HOLES .200″±.0005″ IN DIAMETER ARRANGED .424″±.001″ FROM A POINT COINCIDENT WITH THE AXIS YY′. THE AXES OF THE HOLES SHALL BE PARALLEL TO YY′ AND THE PLANE OF THESE AXES SHALL BE 90°±5′ FROM THE PLANE THRU YY′ AND PIN NO. 4.

6. THE PLATE LEADS SHALL BE CAPABLE OF ENTERING A FLAT PLATE GAGE OF .375″ MIN. THICKNESS HAVING 2 HOLES .120″±.0005″ IN DIAMETER ARRANGED .848″±.001″ CENTER TO CENTER.

PIN 1—HEATER
PIN 2—GRID No. 1 OF UNIT No. 2
PIN 3—SCREEN
PIN 4—CATHODE
PIN 5—HEATER CENTER TAP
PIN 6—GRID No. 1 OF UNIT No. 1
PIN 7—HEATER
TOP PINS—PLATE TERMINALS OF UNITS No. 1 AND No. 2, RESPECTIVELY.

Electronics Department
GENERAL ELECTRIC
Schenectady, N. Y.



PLIOTRON

DESCRIPTION

The GL-833-A is a three-electrode tube designed for use as a modulator, amplifier, and oscillator. The anode is capable of dissipating 450 watts. Forced-air cooling of the envelope is required at maximum ratings. The tube may be operated at reduced ratings without forced-air cooling. The cathode is a thoriated-tungsten filament. Maximum ratings apply up to 20 megacycles.

TECHNICAL INFORMATION

These data are for reference only. For design information refer to specifications.

GENERAL

Electrical Data	Minimum	Bogey	Maximum	
Filament Voltage	9.5	10	10.5	volts
Filament Current at Bogey Voltage	9.4	10	10.6	amperes
Amplification Factor, $E_c = -20$ v, $I_b = 200$ ma	31.5	35	38.5	
Interelectrode Capacitances				
Grid—Plate	5.5	6.3	7.1	uuf
Grid—Filament	10.1	12.3	14.5	uuf
Plate—Filament	6.4	8.5	10.6	uuf

Mechanical Data

Mounting Position—Vertical, or horizontal with the plane of the electrodes vertical		
Required Air Flow to Envelope	40	cubic feet per min
Maximum Glass Temperature	145	C
Net Weight, approximate	1.025	pounds

Electronic TUBE

GENERAL ELECTRIC

Supersedes ETI-167 dated 4-45

TECHNICAL INFORMATION (CONT'D)

MAXIMUM RATINGS AND TYPICAL OPERATING CONDITIONS

AUDIO-FREQUENCY POWER AMPLIFIER AND MODULATOR—CLASS B

Maximum Ratings, Absolute Values	Natural Cooling		Forced-air Cooling		
	CCS	ICAS	CCS	ICAS	
D-c plate voltage	3000 max	3300 max	4000 max	4000 max	volts
Maximum signal d-c plate current*	500 max	500 max	500 max	500 max	milliamperes
Maximum signal plate input*	1125 max	1300 max	1600 max	1800 max	watts
Plate dissipation*	300 max	350 max	400 max	450 max	watts

Typical Operation	Natural Cooling		Forced-air Cooling		
	CCS	ICAS	CCS	ICAS	
Unless otherwise specified, values are for two tubes					
D-c plate voltage	3000	3300	4000	4000	volts
D-c grid voltage	—70	—80	—100	—100	volts
Peak a-f grid-to-grid voltage	400	440	480	510	volts
Zero-signal d-c plate current	100	100	100	100	milliamperes
Maximum signal d-c plate current	750	780	800	900	milliamperes
Effective load resistance, plate to plate	9500	10500	12000	11000	ohms
Maximum signal driving power, approximate	20	30	29	38	watts
Maximum signal power output, approximate	1650	1900	2400	2700	watts

* Averaged over any audio-frequency cycle of sine-wave form.

RADIO-FREQUENCY POWER AMPLIFIER—CLASS B

Carrier conditions per tube for use with a maximum modulation factor of 1.0

Maximum Ratings, Absolute Values	Natural Cooling		Force-air Cooling		
	CCS	ICAS	CCS	ICAS	
D-c plate voltage	3000 max	3300 max	4000 max	4000 max	volts
D-c plate current	300 max	300 max	300 max	300 max	milliamperes
Plate input	450 max	525 max	600 max	675 max	watts
Plate dissipation	300 max	350 max	400 max	450 max	watts

Typical Operation	CCS	ICAS	CCS	ICAS	
D-c plate voltage	3000	3300	4000	4000	volts
D-c grid voltage	—70	—100	—120	—120	volts
Peak r-f grid voltage	90	110	120	130	volts
D-c plate current	150	150	150	150	milliamperes
D-c grid current, approximate	2	2	2	3	milliamperes
Driving power, approximate**	10	11	14	21	watts
Power output, approximate	150	200	225	250	watts

**At the crest of the audio-frequency cycle with a modulation factor of 1.0.

PLATE-MODULATED RADIO-FREQUENCY POWER AMPLIFIER—CLASS C TELEPHONY

Carrier conditions per tube for use with a maximum modulation factor of 1.0

Maximum Ratings, Absolute Values	Natural Cooling		Forced-air Cooling		
	CCS	ICAS	CCS	ICAS	
D-c plate voltage	2500 max	3000 max	3000 max	4000 max	volts
D-c grid voltage	—500 max	—500 max	—500 max	—500 max	volts
D-c plate current	400 max	400 max	450 max	450 max	milliamperes
D-c grid current	100 max	100 max	100 max	100 max	milliamperes
Plate input	835 max	1000 max	1250 max	1800 max	watts
Plate dissipation	200 max	250 max	270 max	350 max	watts

Typical Operation	Natural Cooling		Forced-air Cooling		
	CCS	ICAS	CCS	ICAS	
D-c plate voltage	2500	3000	3000	4000	volts
D-c grid voltage	—300	—240	—300	—325	volts
Peak r-f grid voltage	460	410	490	520	volts
D-c plate current	335	335	415	450	milliamperes
D-c grid current, approximate	75	70	85	90	milliamperes
Driving power, approximate	30	26	37	42	watts
Power output, approximate	635	800	1000	1500	watts

RADIO-FREQUENCY POWER AMPLIFIER AND OSCILLATOR—CLASS C TELEGRAPHY

Key-down conditions per tube without amplitude modulation ¶

Maximum Ratings, Asbolute Values	Natural Cooling		Forced-air Cooling		
	CCS	ICAS	CCS	ICAS	
D-c plate voltage	3000 max	3300 max	4000 max	4000 max	volts
D-c grid voltage	—500 max	—500 max	—500 max	—500 max	volts
D-c plate current	500 max	500 max	500 max	500 max	milliamperes
D-c grid current	100 max	100 max	100 max	100 max	milliamperes
Plate input	1250 max	1500 max	1800 max	2000 max	watts
Plate dissipation	300 max	350 max	400 max	450 max	watts

Typical Operation	CCS	ICAS	CCS	ICAS	
D-c plate voltage	3000	3000	4000	4000	volts
D-c grid voltage	—200	—160	—200	—225	volts
Peak r-f grid voltage	360	310	375	415	volts
D-c plate current	415	335	450	500	milliamperes
D-c grid current, approximate	55	70	75	95	milliamperes
Driving power, approximate	20	20	26	35	watts
Power output, approximate	1000	800	1440	1600	watts

¶ Modulation essentially negative may be used if the positive peak of the envelope does not exceed 115 per cent of carrier conditions.

APPLICATION NOTES

Maximum ratings apply up to 20 megacycles. The tube may be operated at higher frequencies provided the maximum values of plate voltage and plate input are reduced according to the tabulation below (other maximum ratings are the same as shown above). Special attention should be given to adequate ventilation of the bulb at these frequencies.

	Natural Cooling			Forced Air Cooling		
Frequency	30	50	75	20	50	75 megacycles
Percentage of maximum rated plate Voltage and plate input						
Class B	100	98	94	100	97	93 per cent
Class C plate modulated	100	90	72	100	83	65 per cent
Class C unmodulated	100	90	72	100	83	65 per cent

GL-833-A AVERAGE PLATE CHARACTERISTICS ($E_f = 10$ VOLTS A-C)

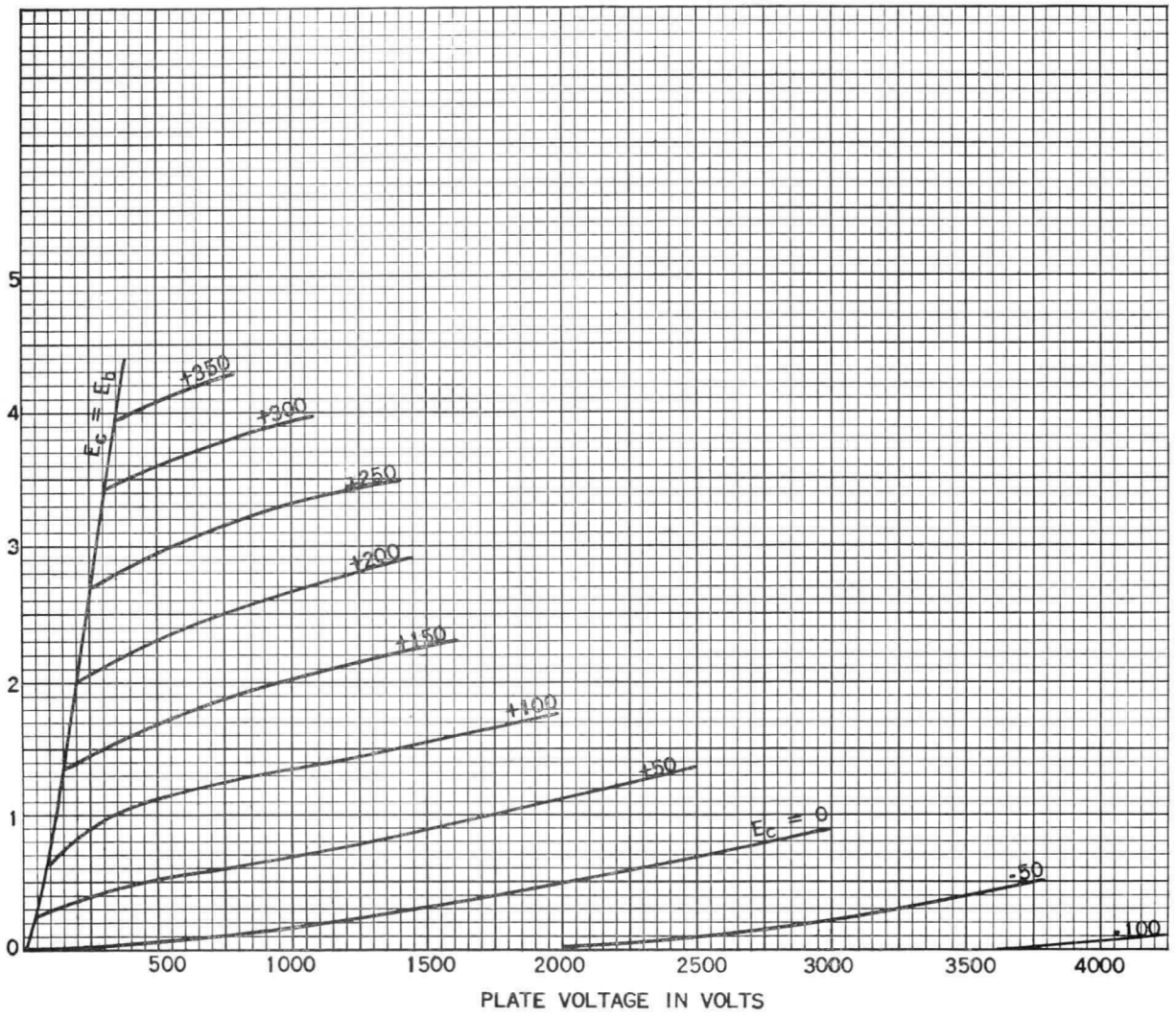

K-69087-72A109

2-6-47

GL-833-A
TYPICAL CHARACTERISTICS
$E_f = 10$ VOLTS A-C

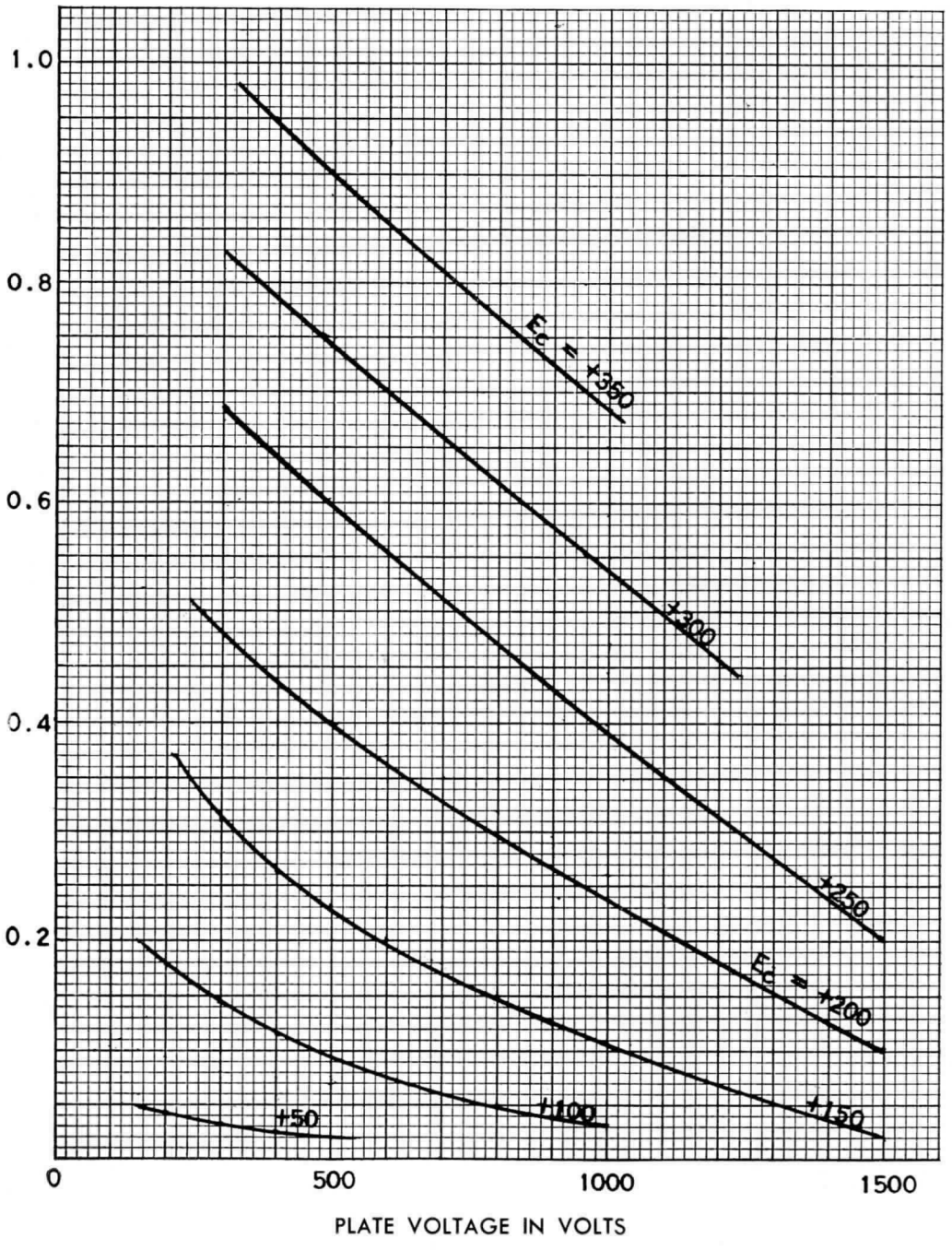

K-69087-72A107

2-6-47

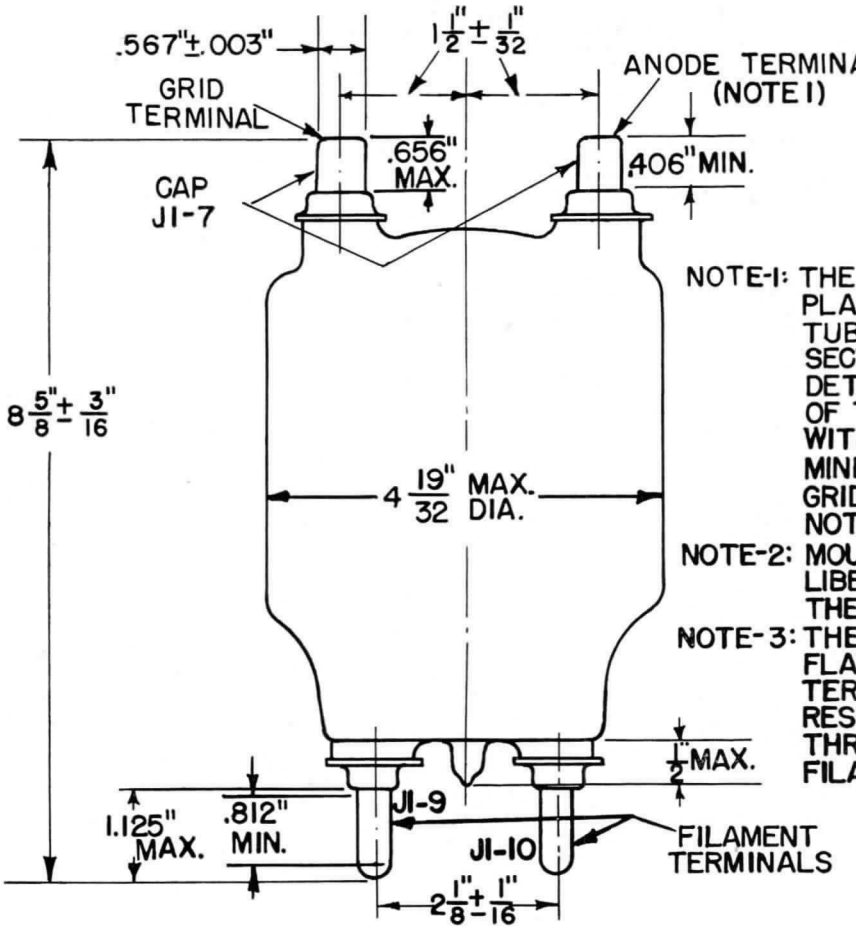

NOTE-1: THE ANGLE FORMED ON A PLANE NORMAL TO THE TUBE AXIS BY THE INTERSECTION OF THE PLANE DETERMINED BY THE AXES OF THE FILAMENT TERMINALS WITH THE PLANE DETERMINED BY THE AXES OF THE GRID AND PLATE CAPS IS NOT MORE THAN 5°.

NOTE-2: MOUNTING SHOULD PROVIDE LIBERAL CLEARANCE FOR THE SEAL-OFF TIP.

NOTE-3: THE PLANE THROUGH THE FLAT SIDE OF THE FILAMENT TERMINAL IS 90°±7° WITH RESPECT TO THE PLANE THROUGH THE AXES OF THE FILAMENT TERMINALS.

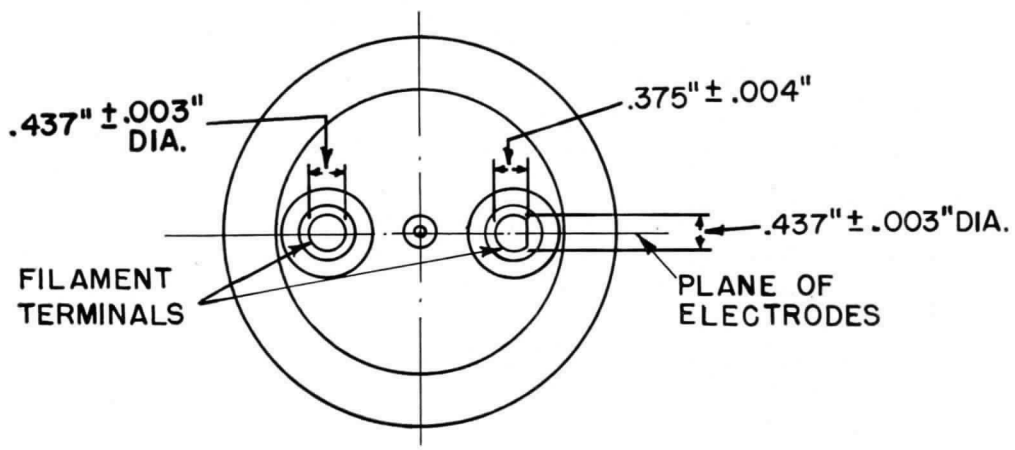

K-6966950

9-3-48

GL-833-A OUTLINE

Electronics Department

GENERAL ELECTRIC

Schenectady, N. Y.

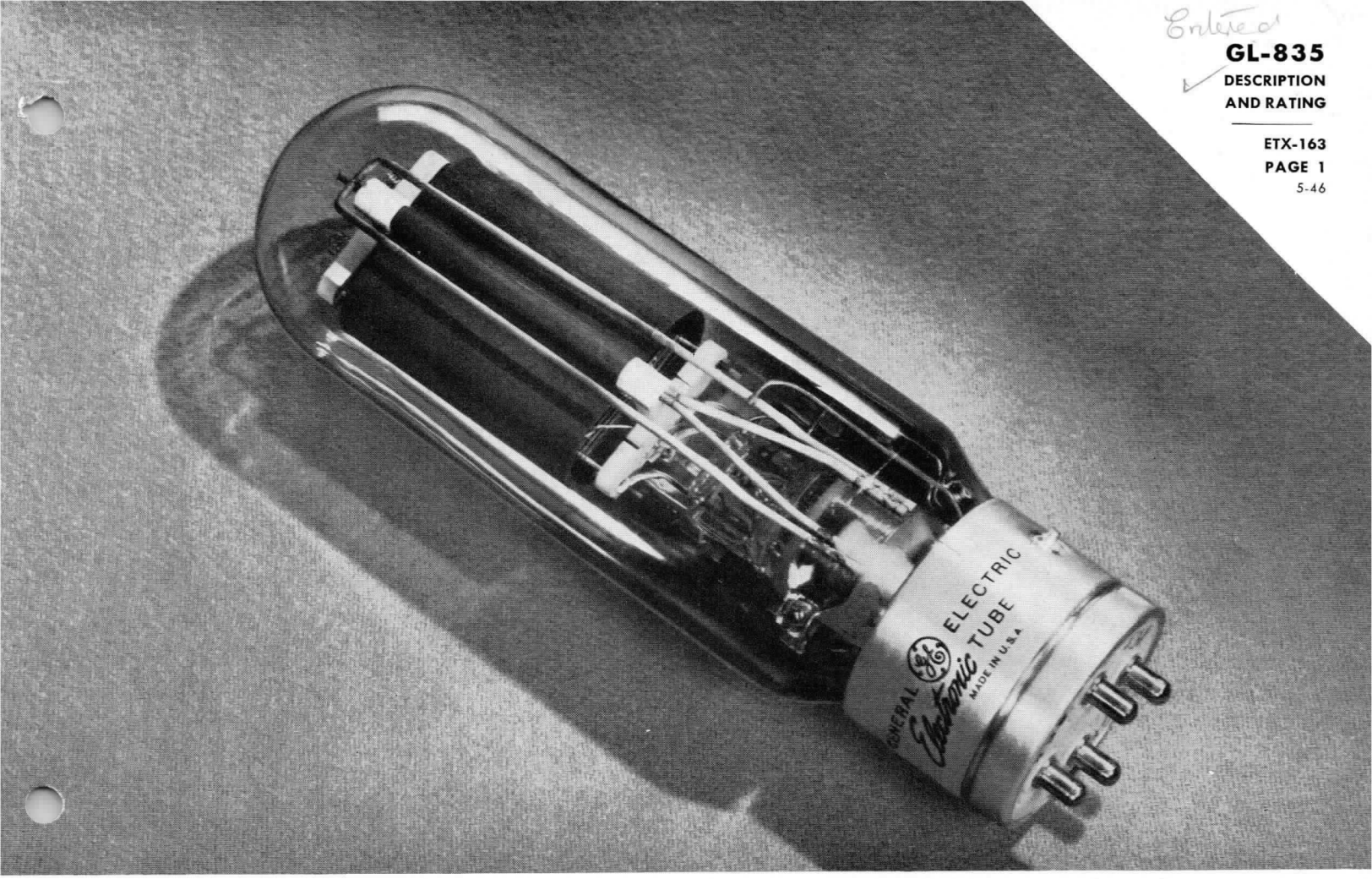

TRIODE

DESCRIPTION

The 835 is a three-electronic transmitting tube for use as a Class B and C frequency power amplifier and Class C oscillator. It also serves as an audio-frequency amplifier or modulator (Class A or B). The GL-835 can be operated at maximum ratings at frequencies as high as 20 megacycles.

TECHNICAL INFORMATION

These data for are reference only. For design information refer to specifications.

GENERAL CHARACTERISTICS

Number of electrodes	3	
Electrical		
Cathode—Filamentary		
Filament voltage	10.0	volts
Filament current	3.25	amperes
Amplification factor	12	
Grid-plate transconductance (I_b = 60 ma)	3600	micromhos
Direct interelectrode capacitances:		
Grid-plate	9.25	micromicrofarads
Input	6	micromicrofarads
Output	5	micromicrofarads
Frequency for maximum ratings	20	megacycles
Mechanical		
Base or terminal description		jumbo 4—large pin
Net weight, approx	8	ounces
Shipping weight, approx	3	pounds
Mounting position		vertical, base up or down—horizontal, plate in vertical plane

GE Electronic TUBE

GENERAL ELECTRIC

TECHNICAL INFORMATION (CONT'D)

MAXIMUM RATINGS AND TYPICAL OPERATING CONDITIONS

CLASS A AUDIO-FREQUENCY AMPLIFIER AND MODULATOR

D-c plate voltage	750	1000	1250	1250	max volts
Plate dissipation				75	max watts
D-c grid voltage	—41	—56	—75		volts
Peak grid swing, approx	41	57	75		volts
D-c plate current	.034	.053	.060		ampere
Plate resistance	4400	3800	3600		ohms
Load resistance	8800	7600	9200		ohms
Plate power output (5 per cent second harmonic)	5.6	12	19.7		watts

CLASS B AUDIO-FREQUENCY POWER AMPLIFIER (TWO TUBES):

D-c plate voltage	1000	1250	1250	max volts
Max signal plate current (per tube)*			0.175	ampere
D-c maximum signal plate input (per tube)*			220	max watts
Plate dissipation (per tube)*			100	max watts
D-c grid voltage	—72	—95		volts
Peak a-f grid input voltage	380	410		volts
Zero signal plate current	.020	.020		ampere
Maximum signal plate current	.320	.320		ampere
Maximum signal driving power, approx	7.5	8		watts
Effective load (plate-to-plate)	6900	9000		ohms
Maximum signal plate power output	200	260		watts

CLASS B RADIO-FREQUENCY POWER AMPLIFIER

Carrier conditions per tube for use with a maximum modulation factor of 1.0

D-c plate voltage	1000	1250	1250	max volts
D-c grid voltage	—72	—95		volts
D-c plate current	0.130	0.106	0.150	max ampere
Plate input			150	max watts
Plate dissipation			100	max watts
Peak r-f grid voltage	125	125		volts
D-c grid current, approx	5	1		milliamperes
Driving power, approx**	10	7.5		watts
Plate power output	40	42.5		watts

CLASS C RADIO-FREQUENCY POWER AMPLIFIER AND OSCILLATOR—PLATE MODULATED

Carrier conditions per tube for use with a maximum modulation factor of 1.0

D-c plate voltage	750	1000	1000	max volts
D-c grid voltage	—200	—260	—400	max volts
D-c plate current	0.150	0.150	0.175	max ampere
D-c grid current, approx	0.035	0.035	0.050	max ampere
Plate input			175	max watts
Plate dissipation			67	max watts
Peak r-f grid input voltage, approx	350	410		volts
Driving power, approx	12	14		watts
Plate power output	65	100		

CLASS C RADIO-FREQUENCY POWER AMPLIFIER AND OSCILLATOR

Key-down conditions per tube with modulation†

D-c plate voltage	750	1000	1250	1250	max volts
D-c grid voltage	—135	—175	—225	—400	max volts
D-c plate current	0.150	0.150	0.150	0.175	max ampere
D-c grid current, approx	0.018	0.018	0.018	0.050	max ampere
Plate input				220	max watts
Plate dissipation				100	max watts
Peak r-f grid input voltage, approx	275	315	375		volts
Driving power, approx	5	6	7		watts
Plate power output	65	100	130		watts

* Averaged over an audio-frequency cycle.
**At crest of audio-frequency cycle.
† Modulation, essentially negative, may be used if the positive peak of the audio-frequency envelope does not exceed 115 per cent of the carrier conditions.

APPLICATION NOTES

GL-835 can be operated at maximum ratings in all classes of service at frequencies as high as 20 megacycles. The tube may be operated at higher frequencies provided the maximum values of plate voltage and power input are reduced as the frequency is raised. (Other maximum ratings are the same as shown under TECHNICAL INFORMATION.) The tabulation below shows the highest percentage of maximum plate voltage and power input that can be used up to 100 megacycles for the various classes of service. Special attention should be given to adequate ventilation of the bulb at these frequencies.

Frequency	20	40	100 megacycles
Maximum permissible percentage of maximum rated plate voltage and plate input:			
Class B telephony	100	85	70 per cent
Class C telephony, plate-modulated	100	80	50 per cent
Class C telegraphy	100	80	50 per cent

GL-835 AVERAGE PLATE CHARACTERISTICS

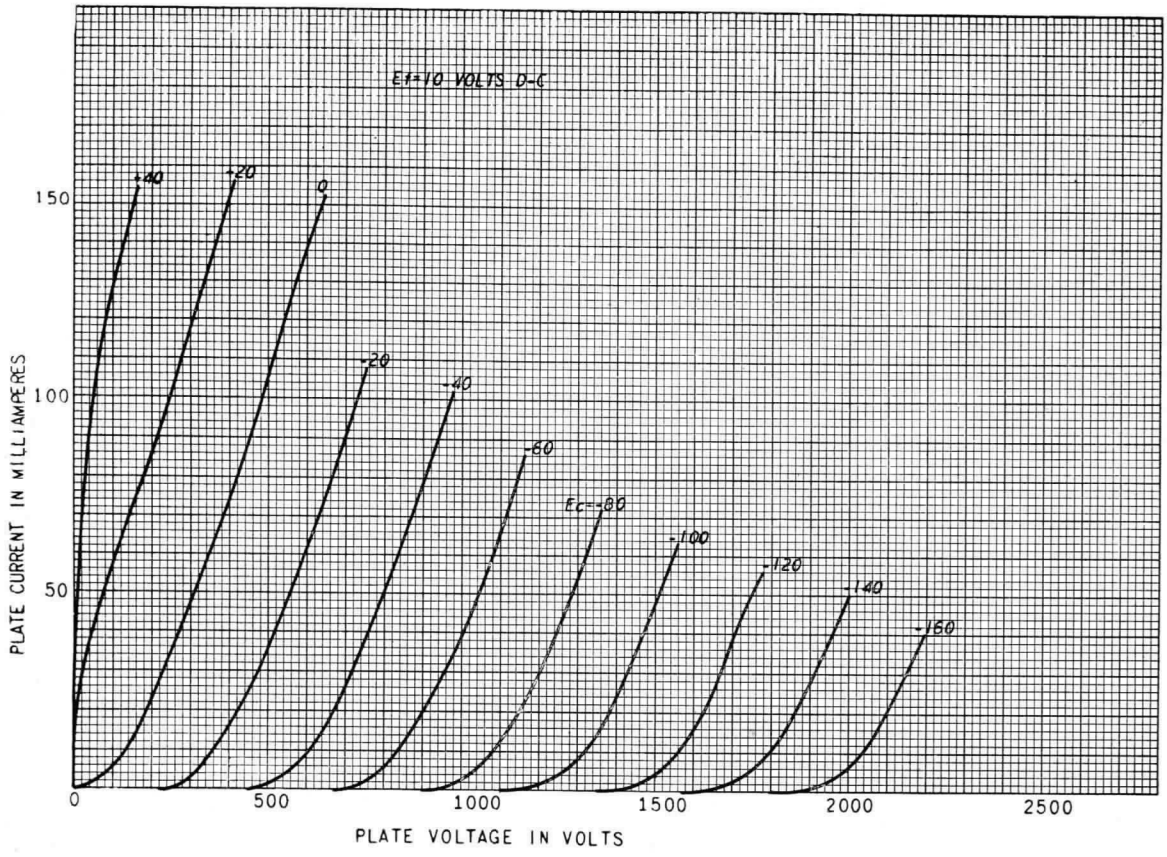

K-6917423

12-10-45

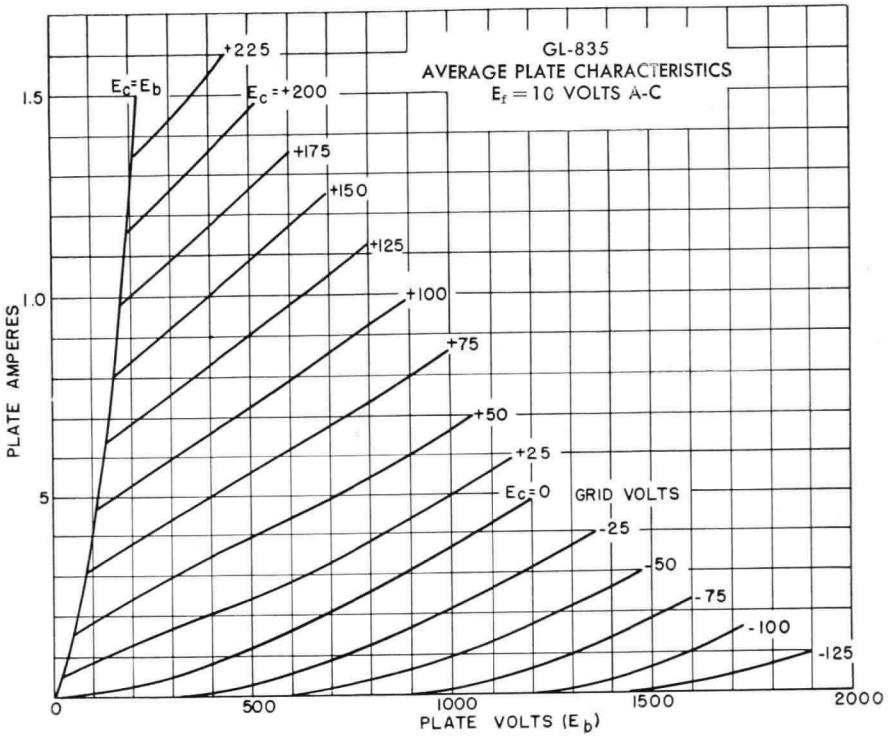

K-6917437

9-26-44

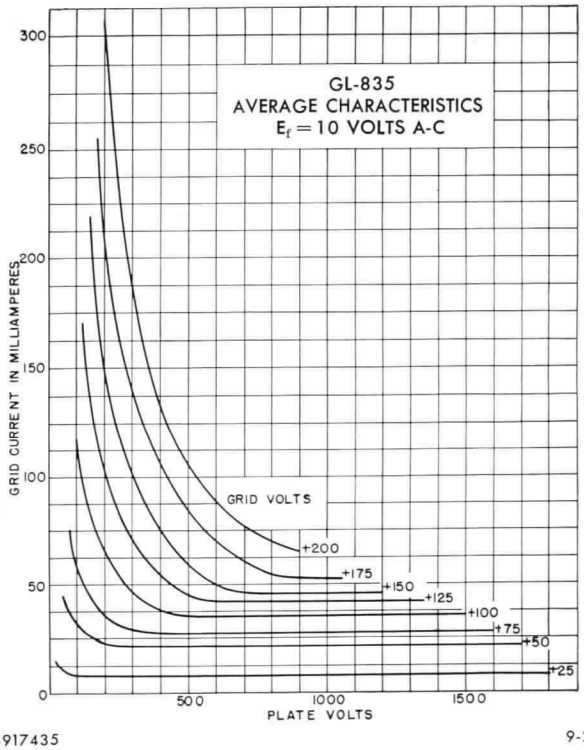

K-6917435

9-26-44

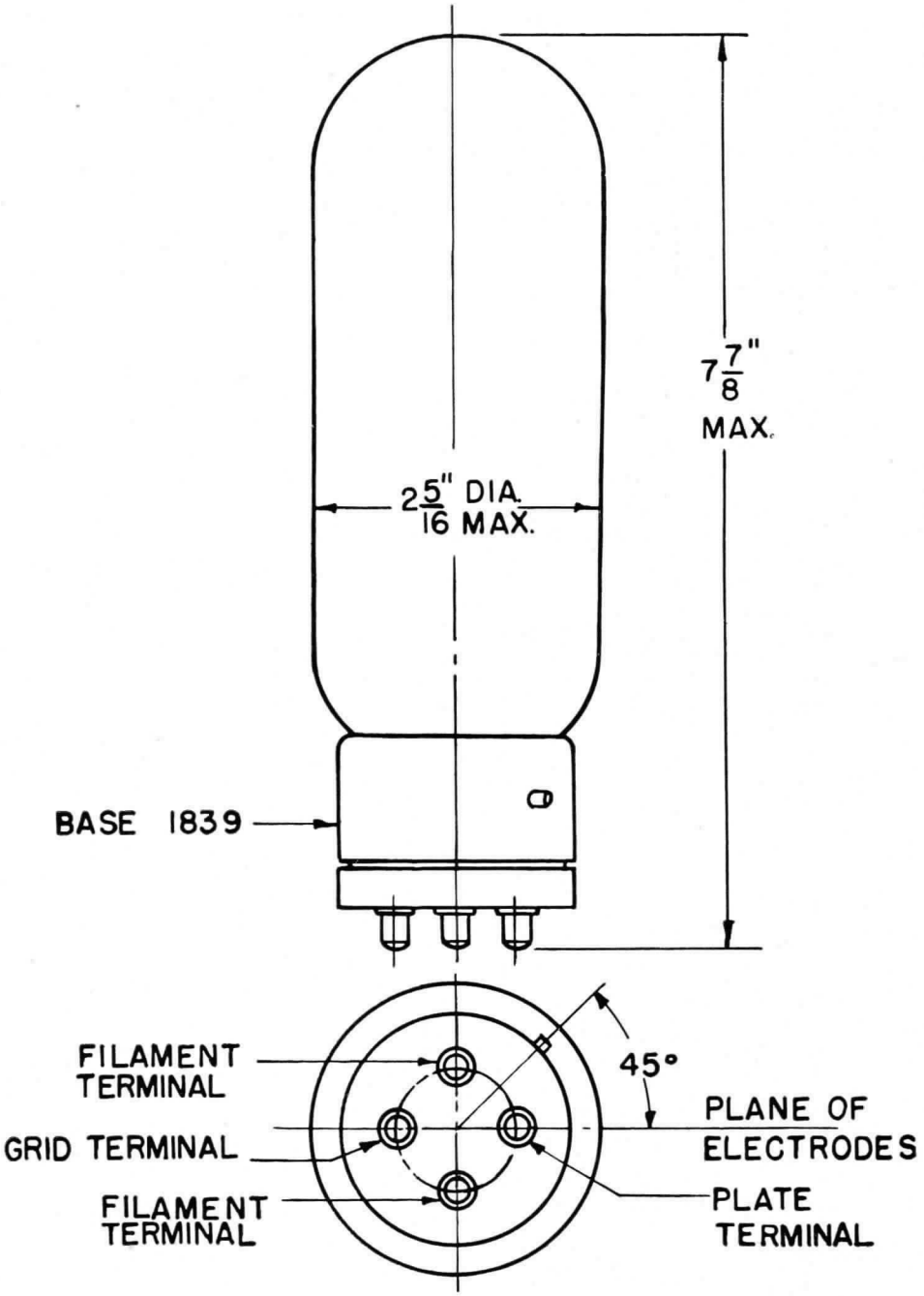

GL-835 OUTLINE

K-4909036

12-11-44

Electronics Department
GENERAL ELECTRIC
Schenectady, N. Y.

5-46 (7M)
Filing No. 8850

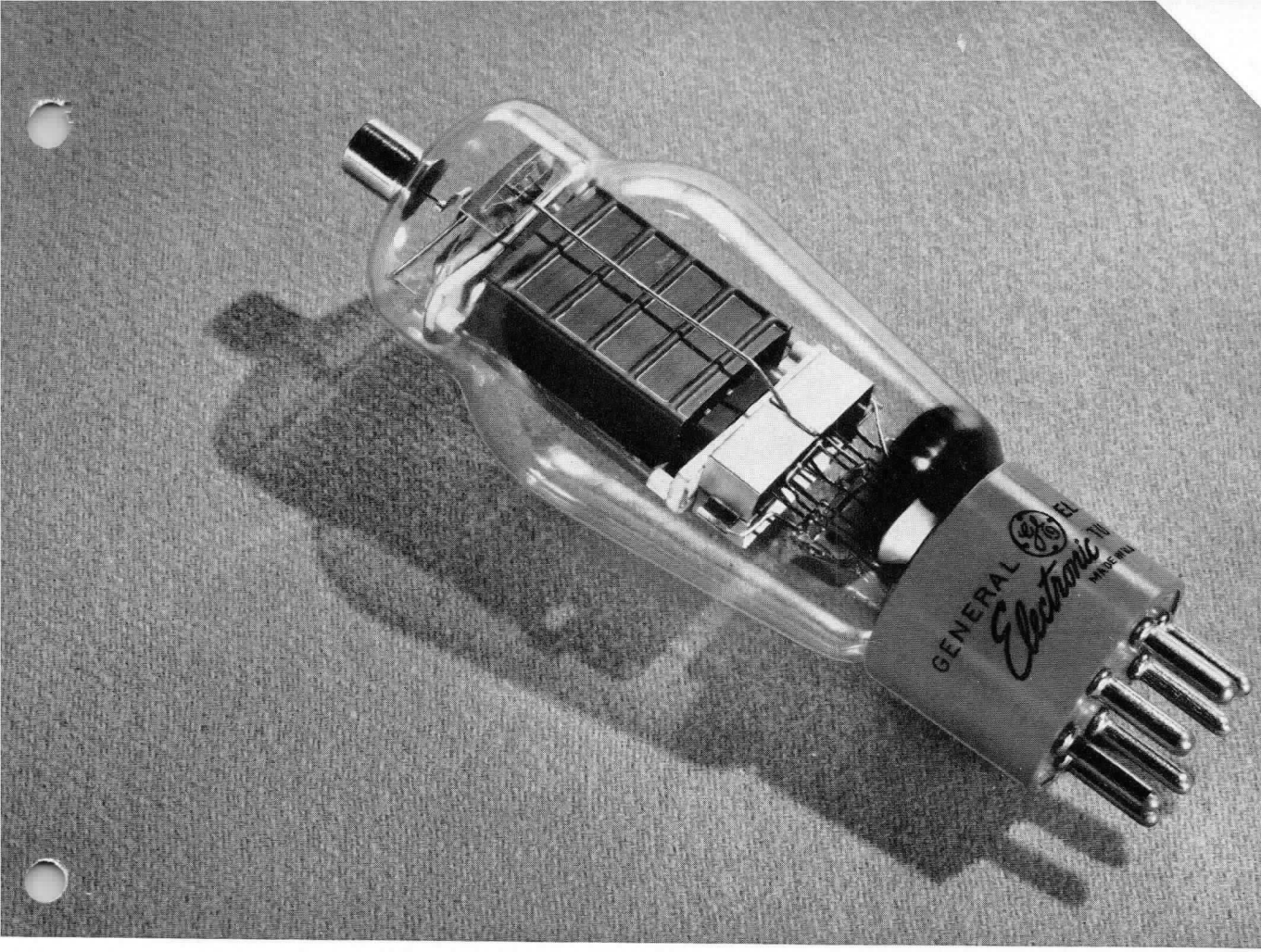

PENTODE

DESCRIPTION

The GL-837 is a pentode transmitting tube for use as a radio-frequency amplifier, frequency-multiplier, oscillator, and suppressor-, grid-, or plate-modulated amplifier. The plate connection is brought out through a separate seal at the top of the bulb to maintain low grid-plate capacitance. Neutralization is generally unnecessary in adequately shielded circuits. The suppressor and the special internal shield are connected to individual base pins. The 837 may be operated at maximum ratings at frequencies as high as 20 megacycles. The maximum plate dissipation is 12 watts.

TECHNICAL INFORMATION

These data are for reference only. For design information refer to specifications.

GENERAL CHARACTERISTICS

Number of electrodes	5	
Electrical		
Cathode-Heater type		
Heater voltage, a-c or d-c	12.6	volts
Heater current	0.7	ampere
Transconductance, for plate current of 24 ma	3400	micromhos
Direct interelectrode capacitances		
Grid-plate, with external shielding	0.20	micromicrofarad
Input	16	micromicrofarads
Output	10	micromicrofarads
Frequency for maximum ratings	20	megacycles

Electronic TUBE

GENERAL ELECTRIC

TECHNICAL INFORMATION (CONT'D)

Mechanical

Cap	small metal
Base	medium 7-pin bayonet
Net weight, approximate	5 ounces
Shipping weight	3 pounds
Mounting position	vertical or horizontal

MAXIMUM RATINGS AND TYPICAL OPERATING CONDITIONS

	Typical Operation		Maximum Ratings		
AS RADIO-FREQUENCY POWER AMPLIFIER PENTODE—CLASS B TELEPHONY					
Carrier conditions per tube for use with a maximum modulation factor of 1.0					
D-c plate voltage	400	500	500	500	volts
D-c suppressor voltage, Grid No. 3	0	0	40	200	volts
D-c screen voltage, Grid No. 2	200	200	200	200	volts
D-c grid voltage, Grid No. 1	−25	−25	−25		volts
D-c plate current	35	30	30	40	milliamperes
D-c screen current	10	15	12		milliamperes
D-c grid current, approximate	1	0	0		milliamperes
Peak r-f grid voltage	28	25	24		volts
Internal shield	connected to cathode at socket				
Plate input				16	watts
Suppressor input				5	watts
Screen input				5	watts
Plate dissipation				12	watts
Driving power, approximate*	0.4	0.2	0.1		watt
Power output, approximate	4	5	5.5		watts
AS SUPPRESSOR-MODULATED RADIO-FREQUENCY POWER AMPLIFIER—CLASS C TELEPHONY					
Carrier conditions per tube for use with a maximum modulation factor of 1.0					
D-c plate voltage	400	500	500	500	volts
D-c suppressor voltage, Grid No. 3	−55	−65			volts
D-c grid voltage**	−20	−20	−200		volts
D-c screen voltage, Grid No. 2				200	volts
Peak r-f grid voltage	45	32			volts
Peak a-f suppressor voltage	55	65			volts
Internal shield	connected to cathode at socket				
D-c plate current	35	30		40	milliamperes
D-c screen current	37	23			milliamperes
D-c grid current, approximate	8	3.5		8	milliamperes
Plate input				16	watts
Screen input				8	watts
Plate dissipation				12	watts
Screen resistor	6500	14000			ohms
Grid resistor	2500	5700			ohms
Driving power, approximate	0.4	0.1			watt
Power output, approximate	4	5			watts
AS GRID-MODULATED RADIO-FREQUENCY POWER AMPLIFIER PENTODE—CLASS C TELEPHONY					
Carrier conditions per tube for use with a maximum modulation factor of 1.0					
D-c plate voltage	400	500	500	500	volts
D-c suppressor voltage	0	0	40	200	volts
D-c screen voltage	200	200	200	200	volts
D-c grid voltage**	−50	−45	−43	−200	volts
Peak r-f grid voltage	58	48	44		volts
Peak a-f grid voltage	25	20	18		volts
Internal shield	connected to cathode at socket				
D-c plate current	35	30	30	40	milliamperes
D-c screen current	9	7	6		milliamperes
D-c grid current, approximate	1	0	0		milliampere
Plate input				16	watts
Suppressor input				5	watts
Screen input				5	watts
Plate dissipation				12	watts
Driving power, approximate*	0.5	0.2	0.15		watt
Power output, approximate	4	5	5.5		watts

TECHNICAL INFORMATION (CONT'D)

AS PLATE-MODULATED RADIO-FREQUENCY POWER AMPLIFIER PENTODE—CLASS C TELEPHONY

Carrier conditions per tube for use with a maximum modulation factor of 1.0

D-c plate voltage	400	400	volts
D-c suppressor voltage	40	200	volts
D-c screen voltage	140	200	volts
D-c grid voltage**	−40	−200	volts
Peak r-f grid voltage	60		volts
Internal shield	connected to cathode at socket		
D-c plate current	45	50	milliamperes
D-c screen current	20		milliamperes
D-c grid current, approximate	5	8	milliamperes
Plate input		20	watts
Suppressor input		5	watts
Screen input		5	watts
Plate dissipation		8	watts
Screen resistor #	13000		ohms
Grid resistor	8000		ohms
Driving power, approximate	0.3		watt
Power output, approximate	11		watts

AS PLATE-MODULATED RADIO-FREQUENCY POWER AMPLIFIER TETRODE—CLASS C TELEPHONY (Grids No. 2 and 3 connected together)

Carrier conditions per tube for use with a maximum modulation factor of 1.0

D-c plate voltage	400	400	volts
D-c screen voltage	100	200	volts
D-c grid voltage**	−70	−200	volts
Peak r-f grid voltage	100		volts
Internal shield	connected to cathode at socket		
D-c plate current	45	50	milliamperes
D-c screen current	30		milliamperes
D-c grid current, approximate	7	8	milliamperes
Plate input		20	watts
Screen input, Grids No. 2 and 3		7.5	watts
Plate dissipation		8	watts
Screen resistor ##	10000		ohms
Grid resistor	10000		ohms
Driving power, approximate	0.7		watt
Power output, approximate	11		watts

AS RADIO-FREQUENCY POWER AMPLIFIER AND OSCILLATOR PENTODE—CLASS C TELEGRAPHY

Key-down conditions per tube without modulation‡

D-c plate voltage	400	500	500	500	volts
D-c suppressor voltage	0	0	40	200	volts
D-c screen voltage	200	200	200	200	volts
D-c grid voltage**	−40	−85	−75	−200	volts
Peak r-f grid voltage	70	120	100		volts
Internal shield	connected to cathode at socket				
D-c plate current	70	60	60	80	milliamperes
D-c screen current	32	30	15		milliamperes
D-c grid current, approximate	8	8	4	8	milliamperes
Plate input				32	watts
Suppressor input				5	watts
Screen input				8	watts
Plate dissipation				12	watts
Screen resistor	6300	10000	20000		ohms
Grid resistor	5000	10600	18700		ohms
Driving power, approximate	0.5	0.8	0.4		watt
Power output, approximate	16	20	22		watts

TECHNICAL INFORMATION (CONT'D)

AS RADIO-FREQUENCY POWER AMPLIFIER AND OSCILLATOR TETRODE—CLASS C TELEGRAPHY
(Grids No. 2 and 3 connected together)

D-c plate voltage	400	500	500	volts
D-c screen voltage	110	80	200	volts
D-c grid voltage**	−70	−70	−200	volts
Peak r-f grid voltage	115	110		volts
Internal shield	connected to cathode at socket			
D-c plate current	70	60	80	milliamperes
D-c screen current	25	15		milliamperes
D-c grid current, approximate	8	8	8	milliamperes
Plate input			32	watts
Screen input, Grids No. 2 and 3			8	watts
Plate dissipation			12	watts
Screen resistor	11600	28000		ohms
Grid resistor	8700	8700		ohms
Driving power, approximate	0.75	0.7		watt
Power output, approximate	18	20		watts

* At crest of audio-frequency cycle with modulation factor of 1.0.
** The total effective grid-circuit resistance should not exceed 25000 ohms.
‡ Modulation, essentially negative, may be used if the positive peak of the audio-frequency envelope does not exceed 115 per cent of the carrier conditions.
#Connected to modulated plate-voltage supply.
##Connected to unmodulated plate-voltage supply.

APPLICATION NOTES

The maximum ratings apply only at frequencies below 20 megacycles. For operation at higher frequencies, adequate ventilation and normal ambient temperatures must be maintained, and the plate voltage must be reduced as indicated.

Frequency	20	40	60	megacycles
Percentage of maximum rated plate voltage and plate input				
Class B, Class C grid- or suppressor-modulated	100	90	84	per cent
Class C, plate-modulated	100	76	62	per cent
Class C, telegraphy	100	76	62	per cent

GL-837 AVERAGE CHARACTERISTICS

(E_f = 12.6 VOLTS, SCREEN VOLTS = 200, SUPPRESSOR VOLTS = +40)

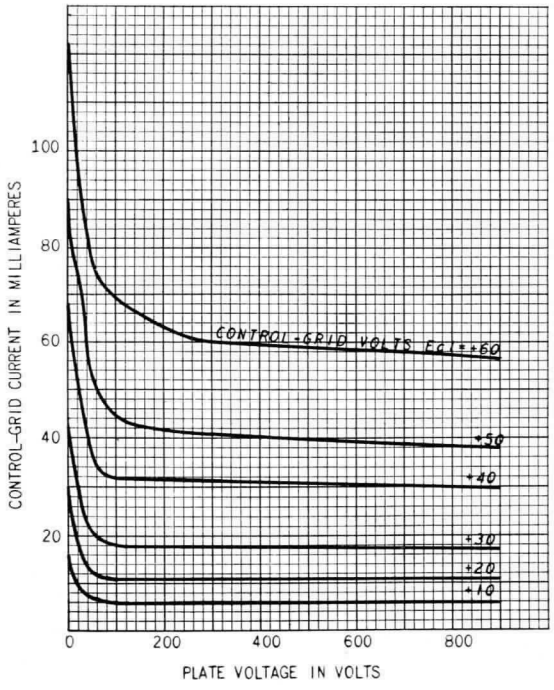

K-9186063 1-9-46

GL-837 AVERAGE PLATE CHARACTERISTICS

(E_f = 12.6 VOLTS, D-C SUPPRESSOR VOLTS = +40, D-C SCREEN VOLTS = 200)

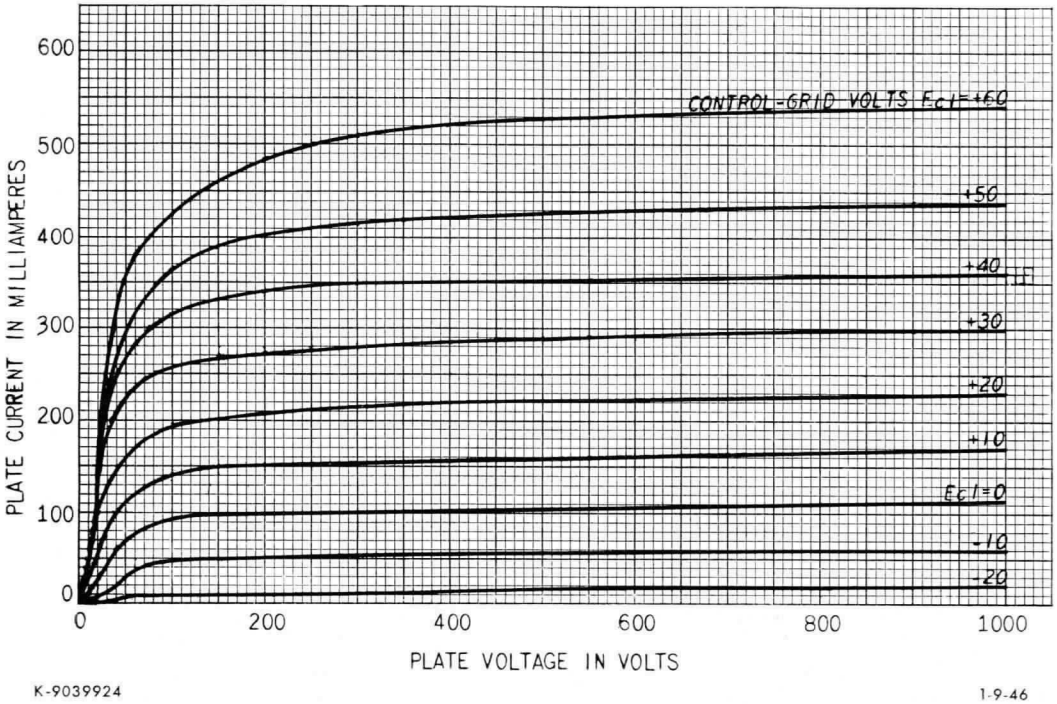

K-9039924 1-9-46

GL-837 AVERAGE CHARACTERISTICS

(E_f = 12.6 VOLTS, SCREEN VOLTS = 200, SUPPRESSOR VOLTS = +40)

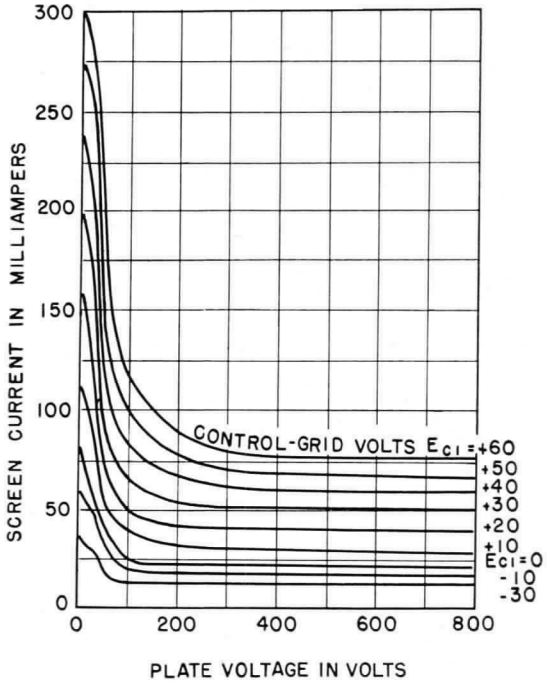

K-9033961 10-8-45

GL-837
OPERATION CHARACTERISTICS
CLASS B R-F AMPLIFIER

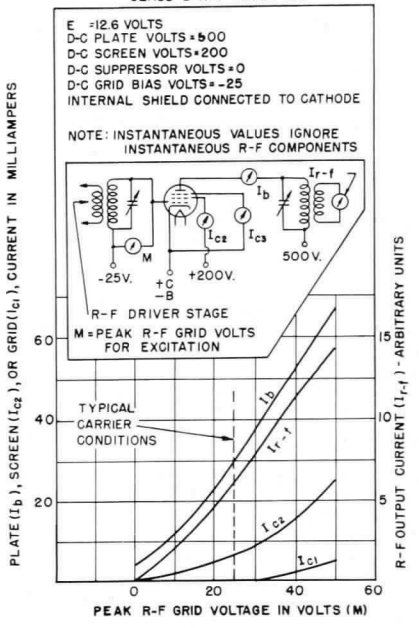

K-9033957 10-8-45

GL-837 GRID MODULATION CHARACTERISTICS

(E_f = 12.6 VOLTS, D-C PLATE VOLTS = 500, D-C SCREEN VOLTS = 200, D-C SUPPRESSOR VOLTS = 0)
(D-C GRID BIAS VOLTS = −45, PEAK R-F GRID VOLTS = 50, INTERNAL SHIELD CONNECTOR TO CATHODE)

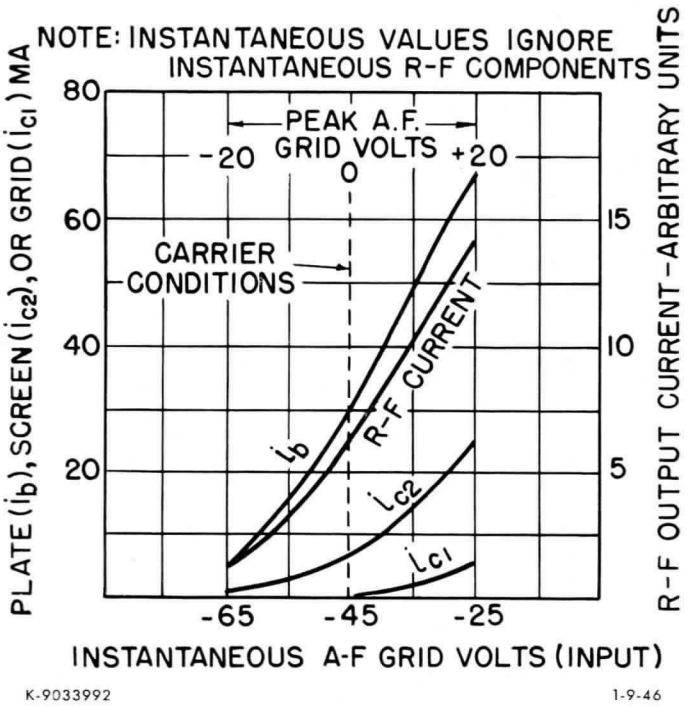

K-9033992 1-9-46

GL-837 SUPPRESSOR MODULATION CHARACTERISTICS

(E_f = 12.6 VOLTS, D-C PLATE VOLTS = 500, D-C SCREEN VOLTS = 500 MINUS DROP IN SERIES SCREEN RESISTOR OF 1400 OHMS)
(D-C SUPPRESSOR VOLTS = −64, D-C GRID BIAS VOLTS = −20, PEAK R-F GRID VOLTS = 140)
INTERNAL SHIELD CONNECTED TO CATHODE

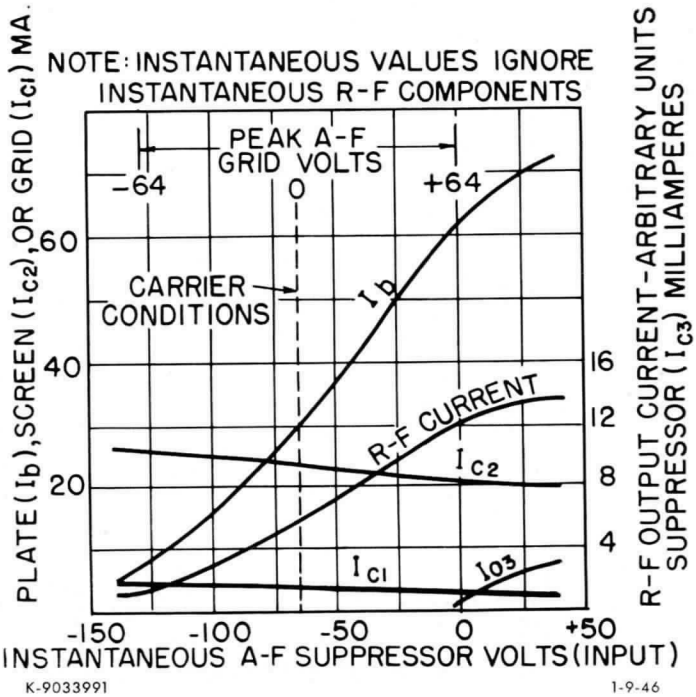

K-9033991 1-9-46

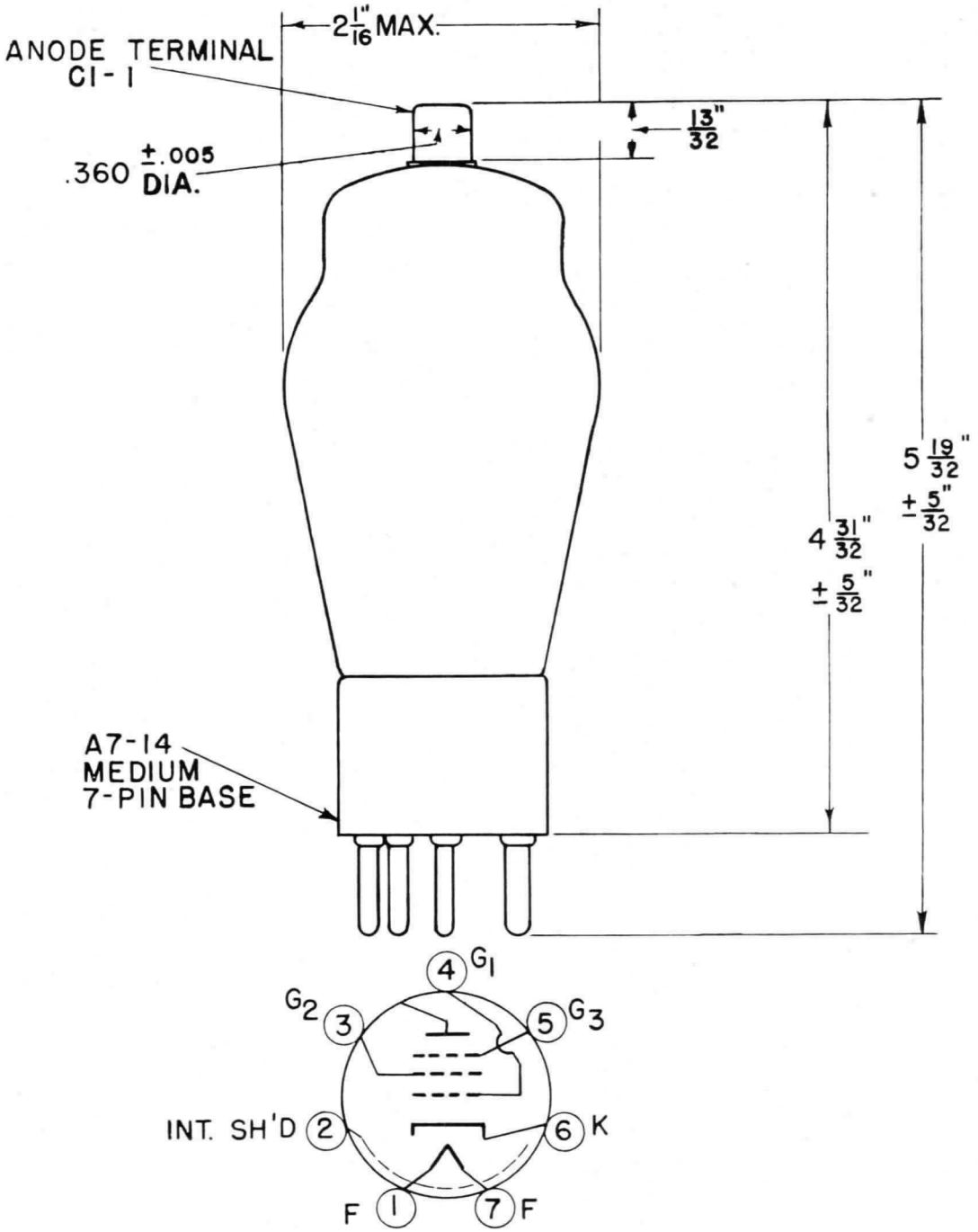

BOTTOM VIEW
BASING DIAGRAM

GL-837 OUTLINE

K-9033896

7-26-45

Electronics Department

GENERAL ELECTRIC

Schenectady, N. Y.

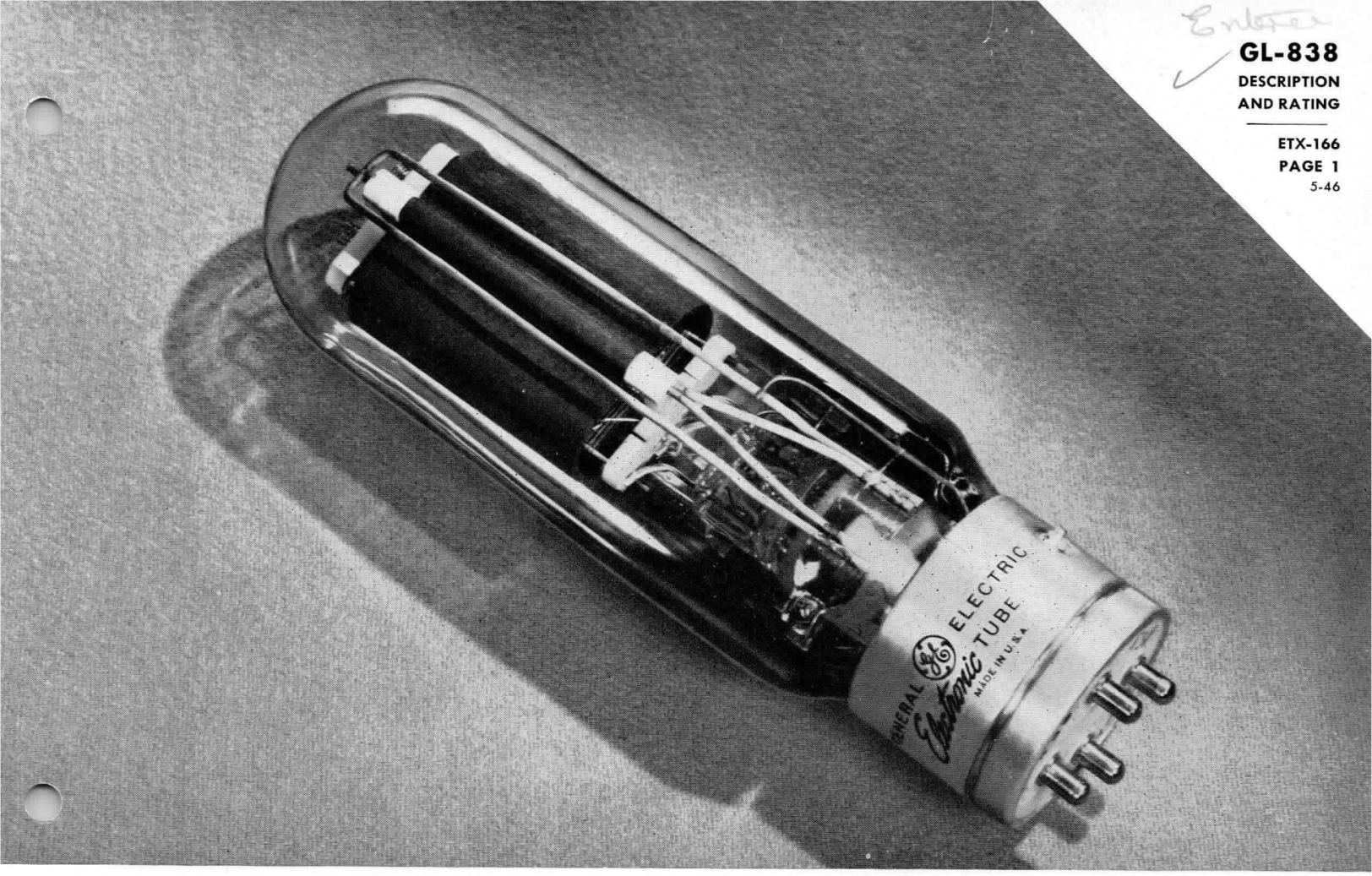

TRIODE

DESCRIPTION

The GL-838, a high-mu, three-electrode tube, is especially designed for use as a zero-bias Class B audio-frequency power amplifier. The grid is designed so that the amplification factor of the tube varies with the amplitude of the input signal. This feature is valuable in the design of Class B amplifiers since it facilitates their ability to give high output with low distortion. The GL-838 may be used at maximum ratings at frequencies as high as 30 megacycles.

TECHNICAL INFORMATION

These data are for reference only. For design information refer to specifications.

GENERAL CHARACTERISTICS

Number of electrodes	3	
Electrical		
Cathode—Filamentary		
Filament voltage	10.0	volts
Filament current	3.25	amperes
Direct interelectrode capacitances:		
Grid-plate	8	micromicrofarads
Input	6.5	micromicrofarads
Output	5	micromicrofarads
Frequency for maximum ratings	30	megacycles

GE Electronic TUBE

GENERAL ELECTRIC

TECHNICAL INFORMATION (CONT'D)

Mechanical

Base description	jumbo 4-large pin
Net weight, approx	8 ounces
Shipping weight, approx	7 pounds
Mounting position	vertical, base up or down—horizontal, plate in vertical plane

CLASS B AUDIO-FREQUENCY POWER AMPLIFIER (TWO TUBES)

	Typical Operation	Maximum Ratings		
D-c plate voltage	1000	1250	1250	volts
Maximum signal plate current, per tube*			175	milliamperes
D-c maximum signal plate input, per tube*			220	watts
Plate dissipation, per tube*			100	watts
D-c grid voltage	0	0		volts
Peak a-f grid input voltage	200	200		volts
Zero signal plate current	106	148		milliamperes
Maximum signal plate current	320	320		milliamperes
Maximum signal plate input*	320	400		watts
Maximum signal driving power, approx	7	7.5		watts
Effective load, plate-to-plate	6900	9000		ohms
Maximum signal plate power output	200	260		watts

CLASS B RADIO-FREQUENCY POWER AMPLIFIER

Carrier conditions per tube for use with a max modulation factor of 1.0

D-c plate voltage	1000	1250	1250	volts
D-c grid voltage	0	0		volts
D-c plate current	130	106	150	milliamperes
Plate input			150	watts
Plate dissipation			100	watts
Peak r-f grid input voltage	70	60		volts
D-c grid current, approx	15	15		milliamperes
Driving power, approx**	8	6		watts
Plate power output	40	42.5		watts

CLASS C RADIO-FREQUENCY POWER AMPLIFIER AND OSCILLATOR—PLATE MODULATED

Carrier conditions per tube for use with a max modulation factor of 1.0

D-c plate voltage	750	1000	1000	volts
D-c grid voltage	—100	—135	—400	volts
D-c plate current	150	150	175	milliamperes
D-c grid current, approx	60	60	70	milliamperes
Plate input			175	watts
Plate dissipation			67	watts
Peak r-f grid input voltage, approx	220	255		volts
Driving power, approx	14	16		watts
Plate power output	65	100		watts

CLASS C RADIO-FREQUENCY POWER AMPLIFIER AND OSCILLATOR

Key down conditions per tube without modulation†

D-c plate voltage	750	1000	1250	1250	volts
D-c grid voltage	—80	—85	—90	—400	volts
D-c plate current	150	150	150	175	milliamperes
D-c grid current, approx	30	30	30	70	milliamperes
Plate input				220	watts
Plate dissipation				100	watts
Peak r-f grid input voltage, approx	190	195	200		volts
Driving power, approx	6	6	6		watts
Plate power output	65	100	130		watts

* Averaged over any audio-frequency cycle.

** At crest of audio-frequency cycle.

† Modulation, essentially negative, may be used if the positive peak of the audio-frequency envelope does not exceed 115 per cent of the carrier conditions.

APPLICATION NOTES

GL-838 can be operated at maximum ratings in all classes of service at frequencies as high as 30 megacycles. The tube may be operated at higher frequencies provided the maximum values of plate voltage and power input are reduced as the frequency is raised (other maximum ratings are the same as shown under CHARACTERISTICS). The tabulation below shows the highest percentage of maximum plate voltage and power input that can be used up to 120 megacycles for the various classes of service. Special attention should be given to adequate ventilation of the bulb at these frequencies.

Frequency	30	60	120 megacycles
Maximum permissible percentage of maximum rated plate voltage and plate input			
Class B telephony	100	85	70 per cent
Class C telephony	100	75	per cent
Class C telegraphy			

GL-838

AVERAGE PLATE CHARACTERISTICS

$E_f = 10$ VOLTS A-C

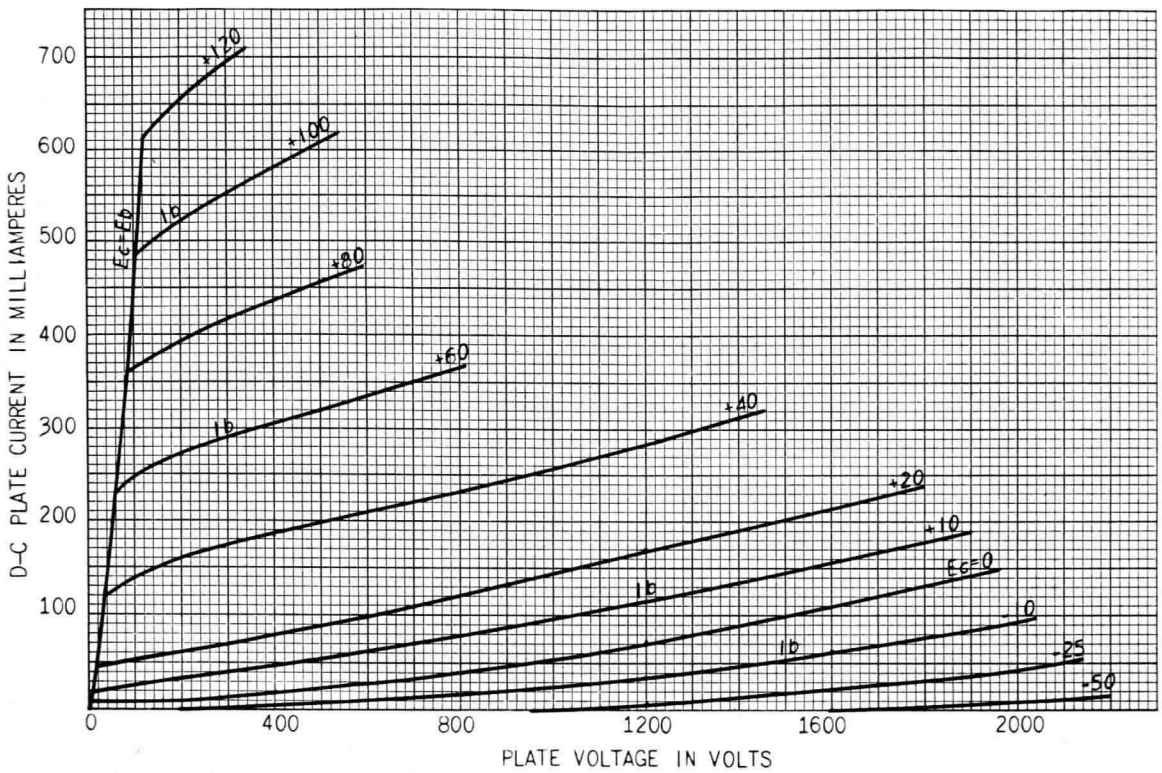

K-6917478

1-9-46

GL-838 AVERAGE PLATE CHARACTERISTICS

$E_f = 10$ VOLTS A-C

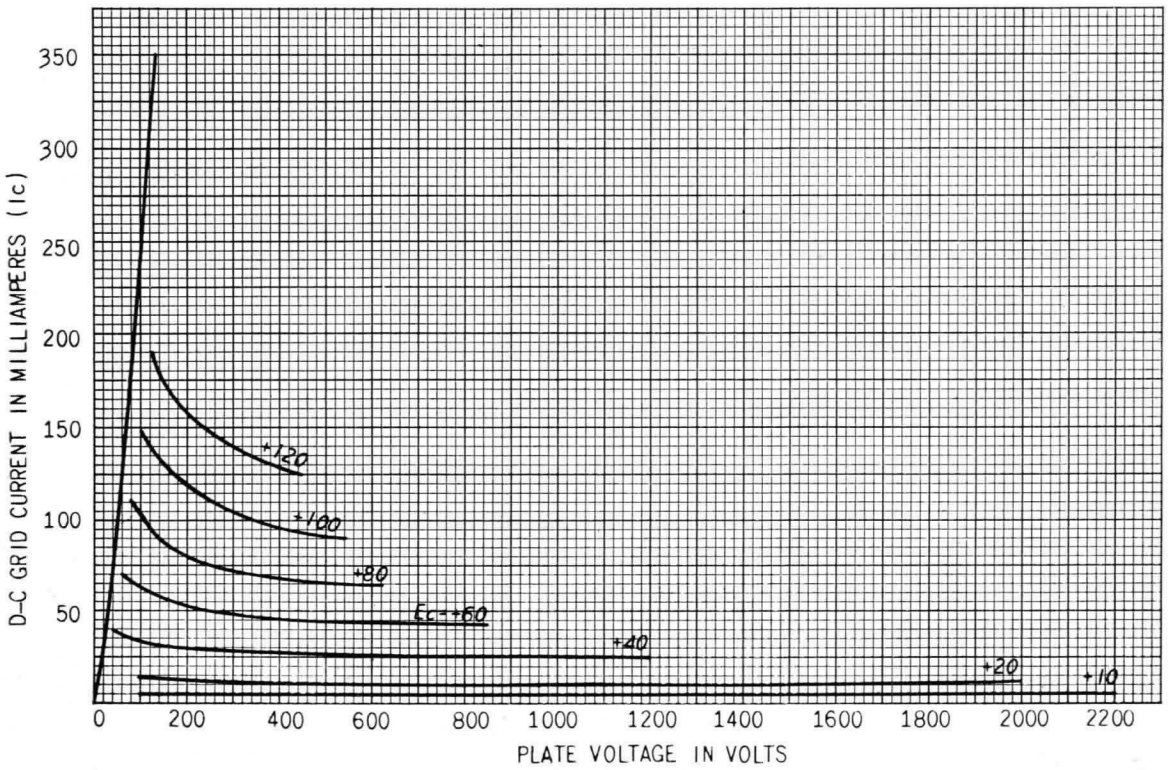

K-6917436 1-9-46

GL-838 DYNAMIC TRANSFER CHARACTERISTICS

$E_f = 10$ VOLTS A-C, PLATE VOLTS = 1250, D-C GRID BIAS VOLTS = 0

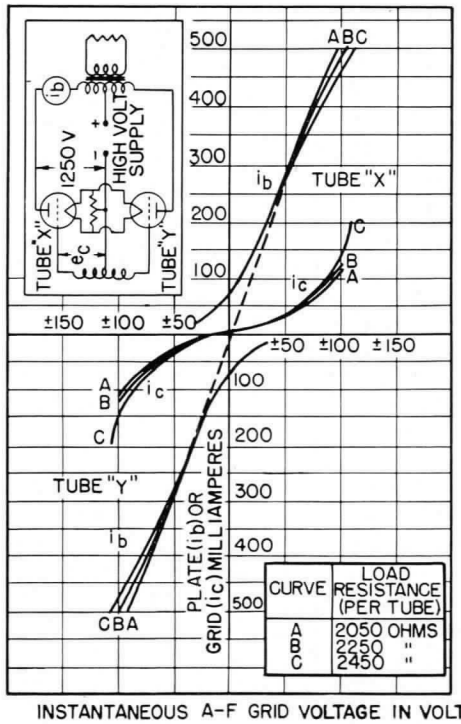

K-9186124 12-7-45

GL-838

OPERATION CHARACTERISTICS

Ef = { 10 VOLTS AC FOR 838'S,
2.5 VOLTS AC FOR 2A3'S

INPUT: CLASS A-TWO TYPE 2A3'S PUSH PULL
PLATE VOLTS=250, GRID VOLTS=-45
OUTPUT: CLASS B-TWO TYPE 838'S
PLATE VOLTS=1250, GRID VOLTS=0
INTERSTAGE TRANSFORMER:
VOLTAGE RATIO $\frac{\text{PRIM}}{1/2\ \text{SEC}}$ = 3.2
PEAK POWER EFFICIENCY = 90%

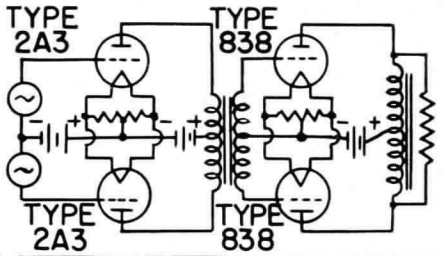

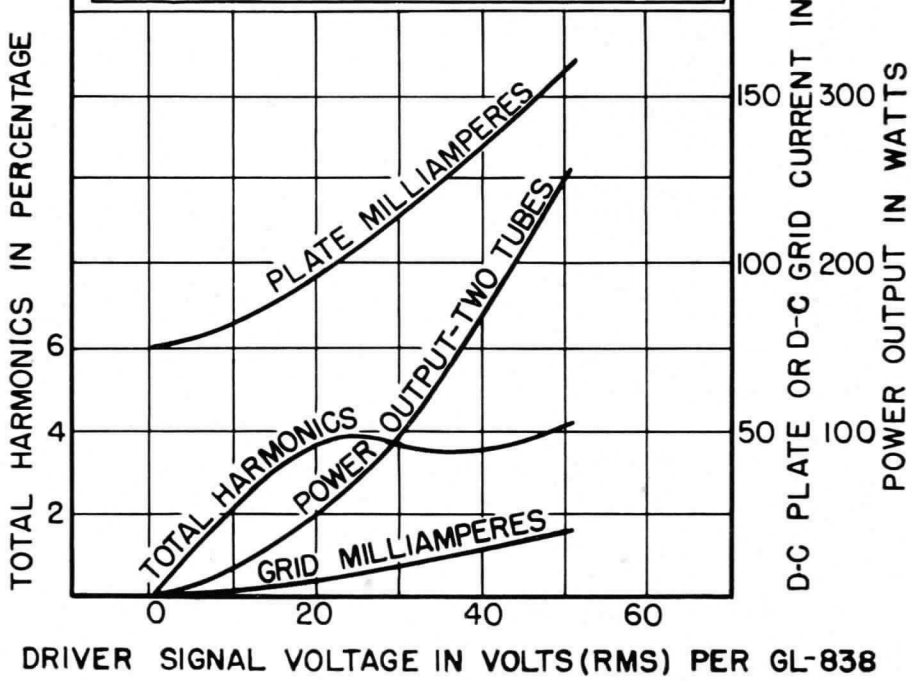

K-9186125

12-7-45

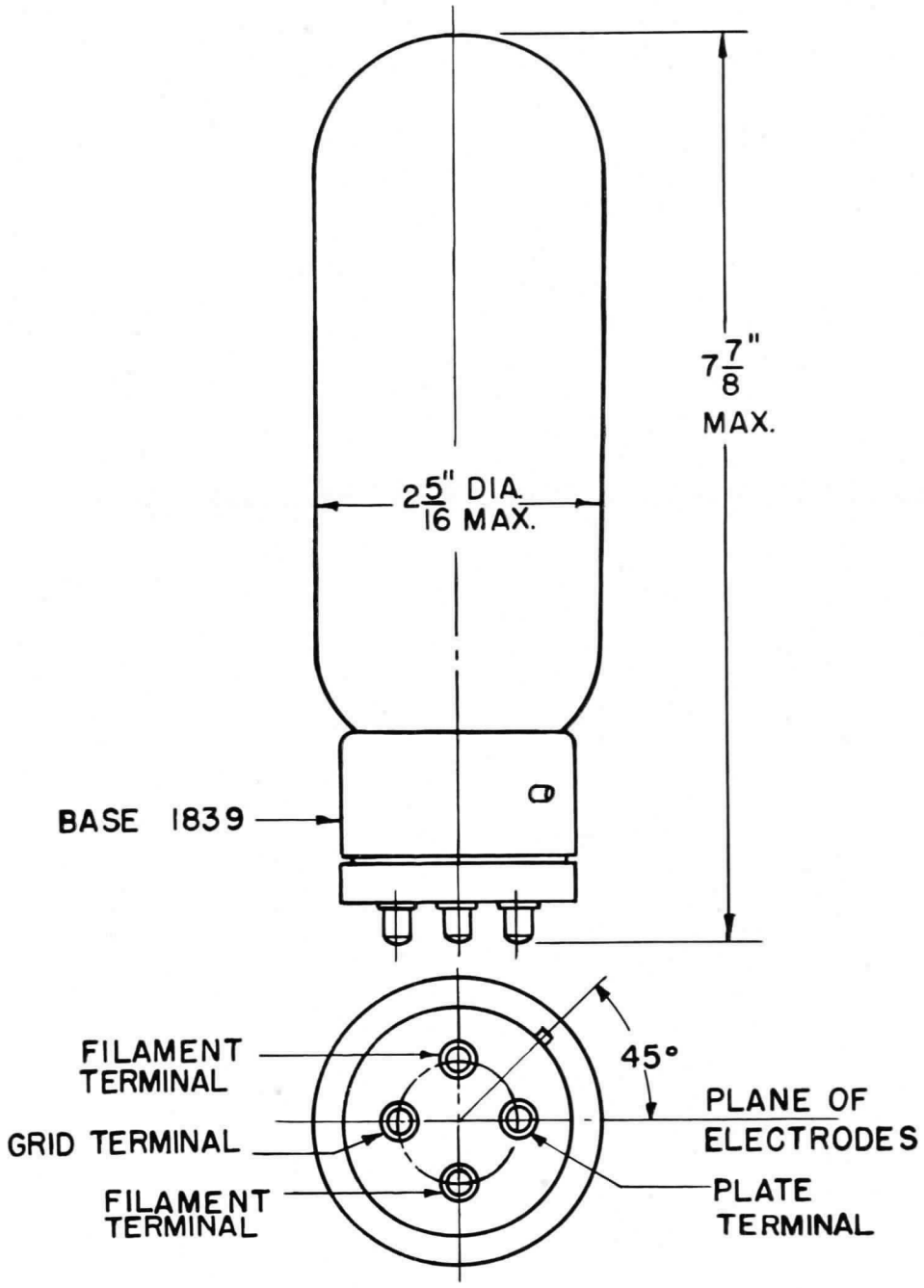

GL-838 OUTLINE

K-4909036

12-11-44

Electronics Department

GENERAL ELECTRIC

Schenectady, N. Y.

GL-842
AVERAGE CHARACTERISTIC
E_f = 7.5 VOLTS D.C.
PLATE VOLTS = 425

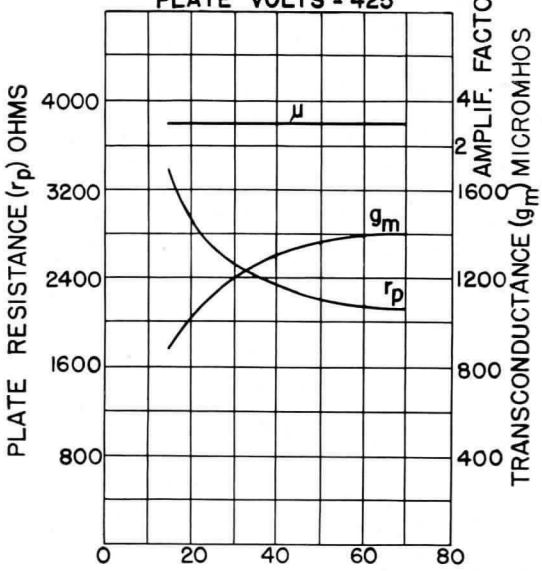

K-9033915 8-14-45

GL-842
AVERAGE CHARACTERISTICS
Ef = 7.5 VOLTS D.C.

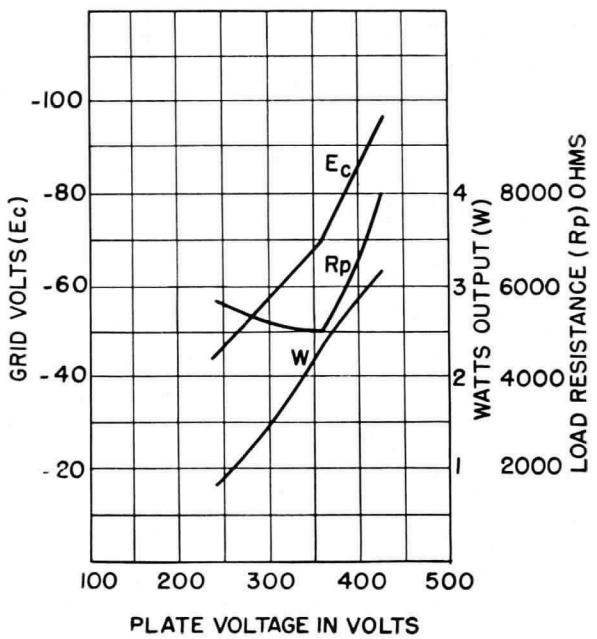

K-9033928 8-22-45

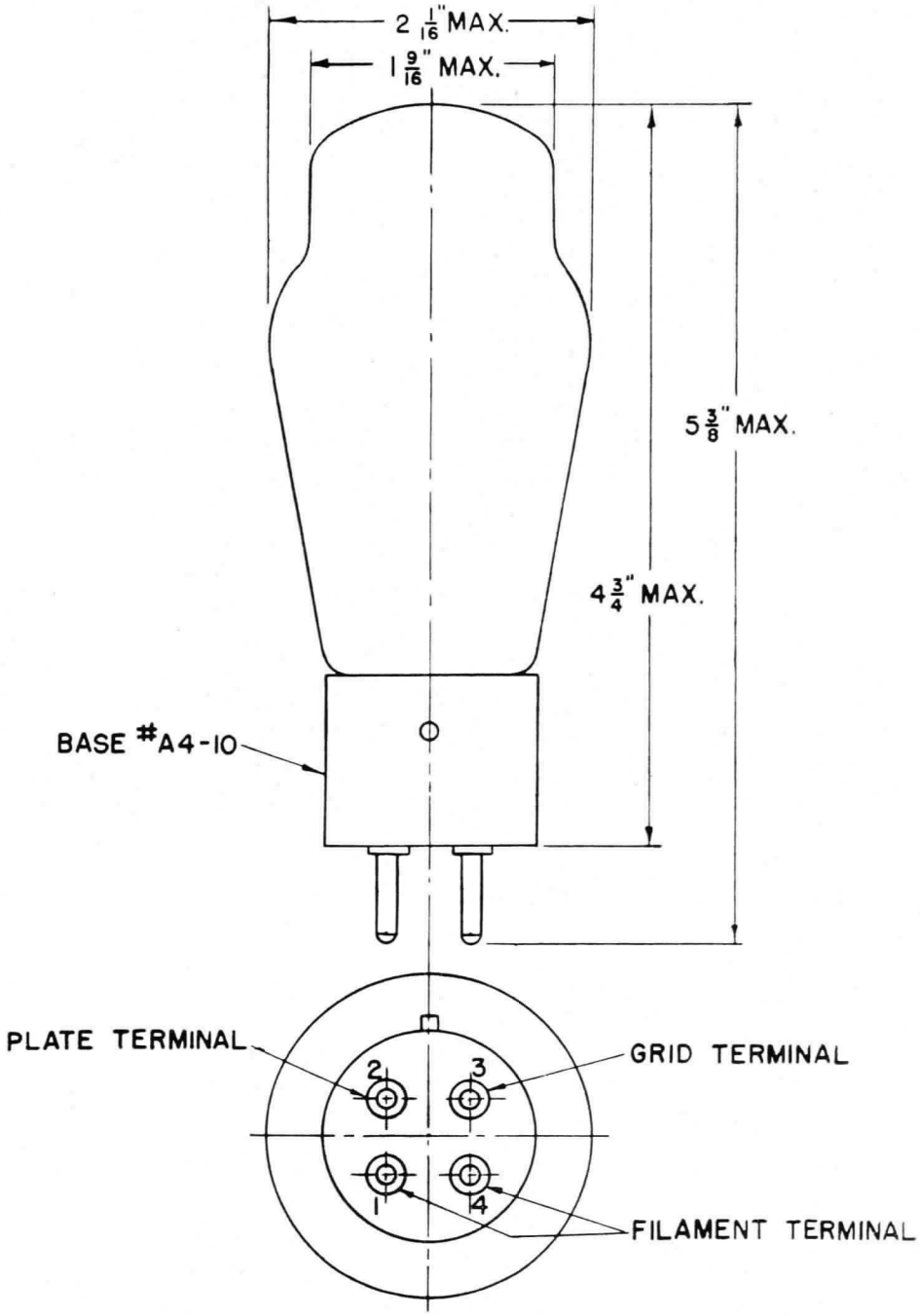

GL-842 OUTLINE

K-3846099

4-16-45

Electronics Department

GENERAL ELECTRIC

Schenectady, N. Y.

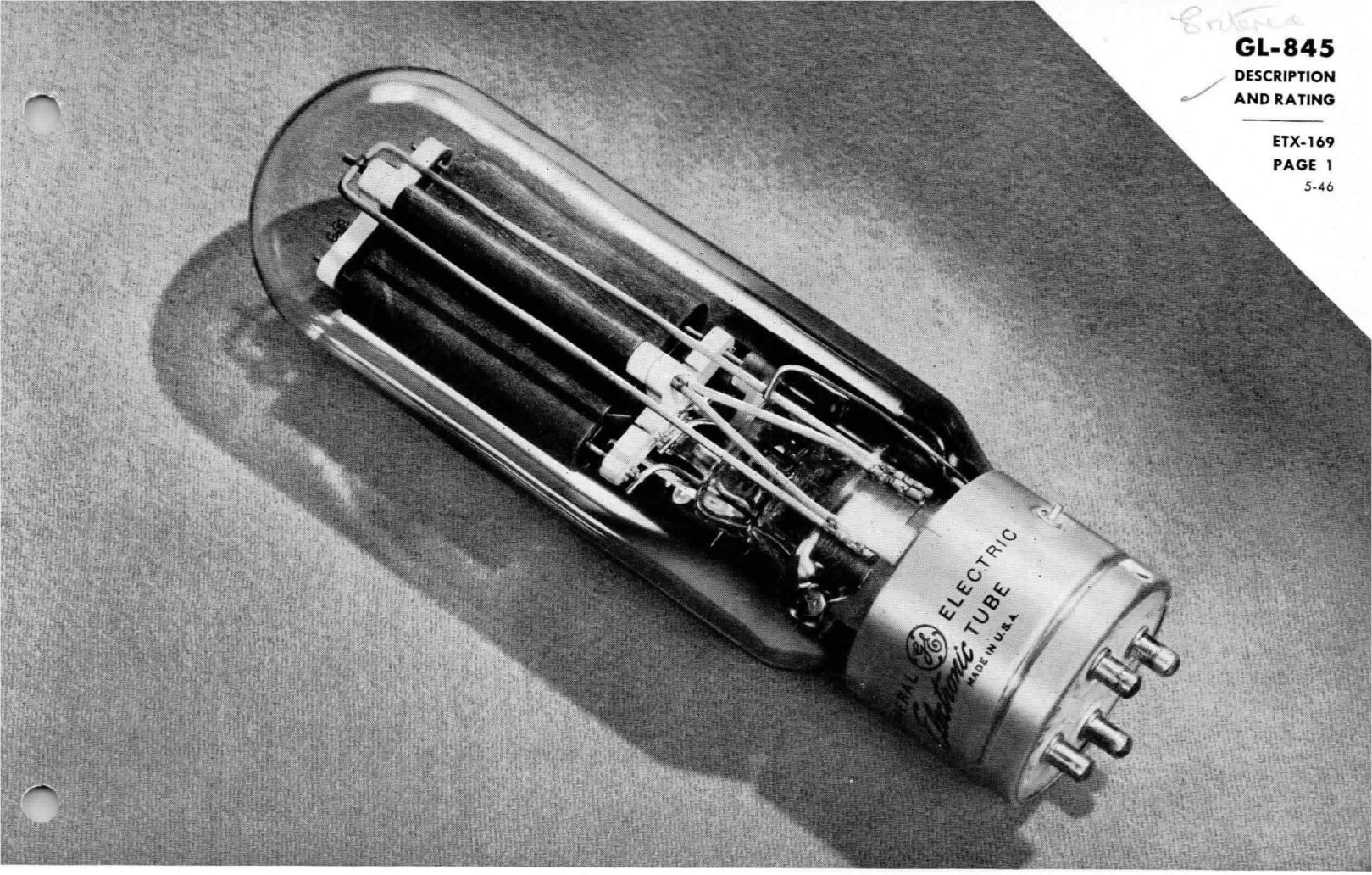

TRIODE

DESCRIPTION

The GL-845 is a three-electrode vacuum tube especially adapted to use as a Class A and AB_1 power amplifier or modulator. This triode has a maximum plate dissipation rating of 100 watts.

TECHNICAL INFORMATION

These data are for reference only. For design information refer to specifications.

GENERAL CHARACTERISTICS

Number of electrodes	3	
Electrical		
Cathode—Filamentary		
Filament voltage	10	volts
Filament current	3.25	amperes
Amplification factor	5.3	
Grid-plate transconductance, $I_b = 65$	2800	micromhos
Direct interelectrode capacitances		
Grid-plate	13.5	micromicrofarads
Input	6.0	micromicrofarads
Output	6.5	micromicrofarads
Mechanical		
Base of terminal description	jumbo, 4-large pin	
Net weight, approx	8	ounces
Shipping weight, approx	7	pounds
Mounting position	vertical, base up or down—horizontal, filament in vertical plane	

Electronic TUBE

GENERAL ELECTRIC

TECHNICAL INFORMATION (CONT'D)

MAXIMUM RATINGS AND TYPICAL OPERATING CONDITIONS

CLASS A AUDIO-FREQUENCY AMPLIFIER AND MODULATOR

	Typical Operation		Maximum Ratings	
D-c plate voltage	750	1000	1250	1250 volts
Plate dissipation	....	....	....	100 watts
D-c grid voltage	—98	—145	—195	volts
Peak grid swing, approx.	93	140	190	volts
D-c plate current	95	90	80	milliamperes
Plate resistance	1700	1700	1700	ohms
Load resistance	3400	6000	11000	ohms
Plate power output (5% second harmonic)	15	24	30	watts

CLASS AB_1 AUDIO-FREQUENCY AMPLIFIER AND MODULATOR

D-c plate voltage	1000	1250	1250 volts
Plate dissipation	....	....	100 watts
D-c grid voltage	—175	—225	—400 volts
D-c plate current	....	....	120 milliamperes
Peak a-f grid-to-grid voltage	340	440	volts
Zero signal d-c plate current	40	40	milliamperes
Max signal d-c plate current	230	240	milliamperes
Load resistance	1150	1650	ohms
Effective load resistance, plate-to-plate	4600	6600	ohms
Plate power output, approx.	75	115	watts

GL-845 AVERAGE PLATE CHARACTERISTICS

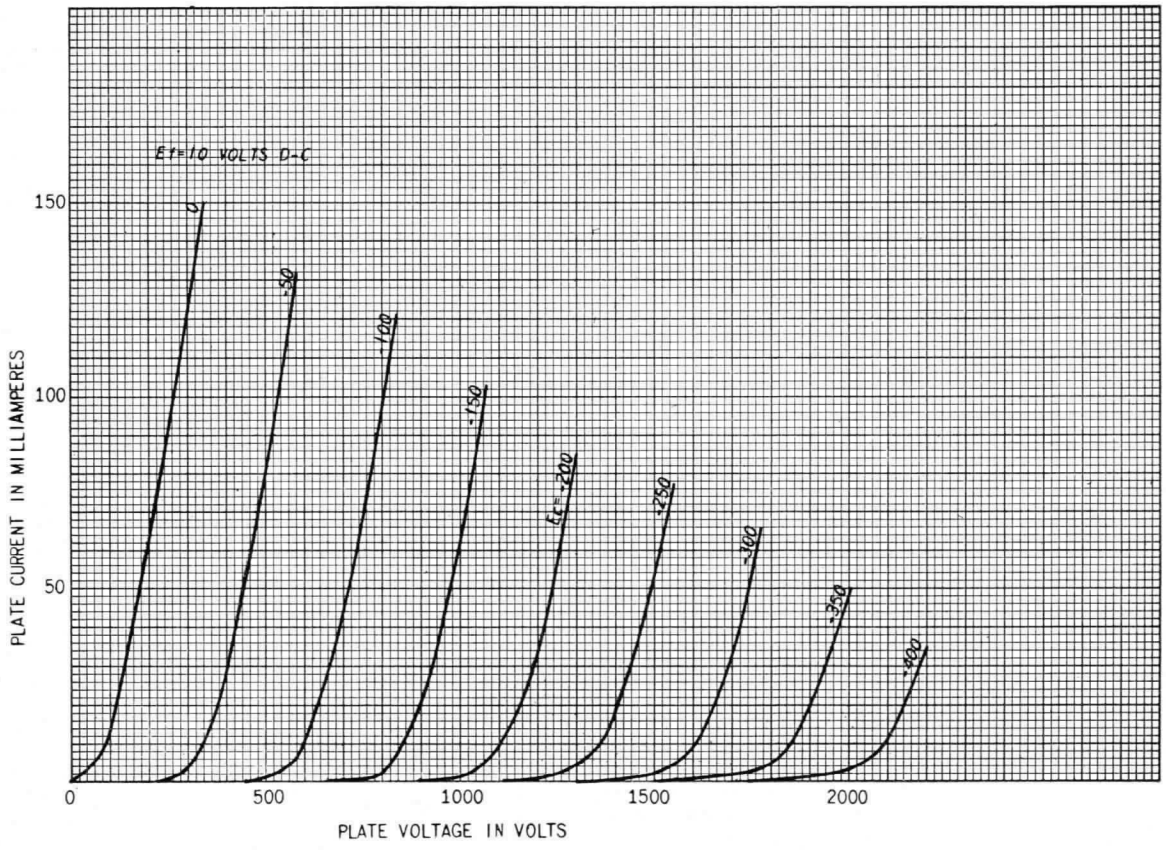

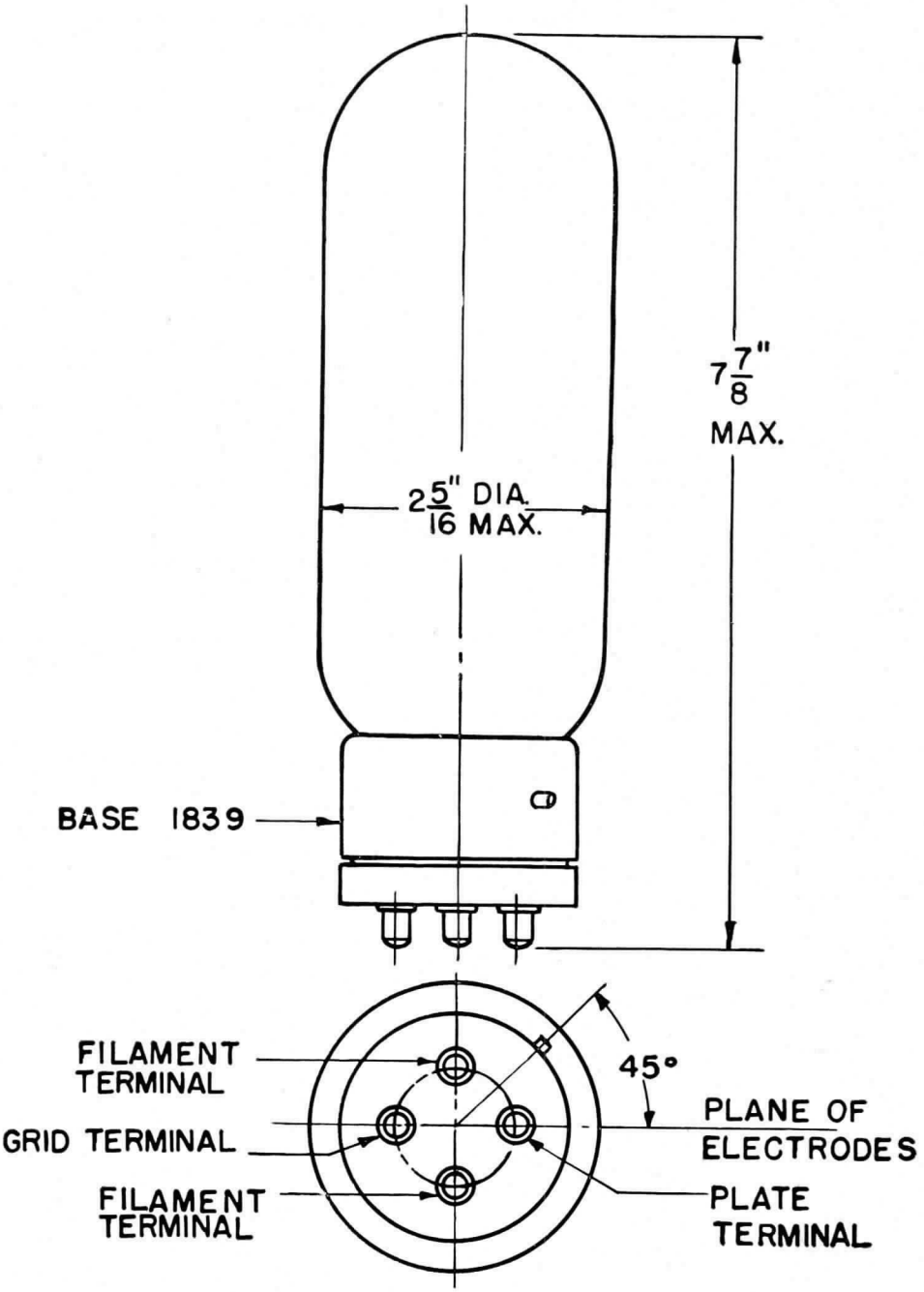

GL-845 OUTLINE

K-4909035

12-11-44

Electronics Department
GENERAL ELECTRIC
Schenectady, N. Y.

5-46 (7M)
Filing No. 8850



TRIODE

DESCRIPTION

The GL-849 is a three-electrode, general purpose power amplifier or modulator. The plate of this tube designed for use as a Class A audio-frequency tube is capable of dissipating 300 to 400 watts.

TECHNICAL INFORMATION

These data are for reference only. For design information refer to specifications.

GENERAL CHARACTERISTICS

Number of electrodes	3	
Electrical		
Cathode—Filamentary		
Filament voltage	11	volts
Filament current	5	amperes
Amplification factor ($I_b = 0.1$)	19	
Grid-plate transconductance	6000	micromhos
Direct interelectrode capacitances		
Grid-plate	34	micromicrofarads
Input	17	micromicrofarads
Output	3	micromicrofarads
Frequency for maximum ratings	3	megacycles
Mechanical		
Base	3503	
Net weight, approximate	3	pounds
Mounting position	vertical, filament base up—horizontal, filament in vertical plane	

GE Electronic TUBE

GENERAL ELECTRIC

TECHNICAL INFORMATION (CONT'D)

MAXIMUM RATINGS AND TYPICAL OPERATING CONDITIONS

CLASS A AUDIO-FREQUENCY AMPLIFIER AND MODULATOR

	Typical Operation		Maximum Ratings		
D-c plate voltage	2000	2500	3000	3000	volts
Plate dissipation				300	watts
D-c grid voltage	−74	−104	−132		volts
Peak grid swing, approximate	68	98	126		volts
D-c plate current	0.135	0.110	0.100		ampere
Plate resistance	2950	3150	3250		ohms
Load resistance	6000	12000	18000		ohms
Plate power output (5 per cent second harmonic)	58	81	100		watts

CLASS B AUDIO-FREQUENCY POWER AMPLIFIER (TWO TUBES)

D-c plate voltage	2000	2500	3000	3000	volts
Maximum signal plate current (per tube)*				0.35	ampere
D-c maximum signal plate input (per tube)*				825	watts
Plate dissipation (per tube)*				300	watts
D-c grid voltage	−105	−130	−155		volts
Peak a-f grid input voltage	450	480	500		volts
Zero signal plate current	0.014	0.02	0.024		ampere
Maximum signal plate current	0.65	0.56	0.52		watts
Maximum signal plate input*	1300	1400	1560		watts
Maximum signal driving power, approximate	16	14	12		watts
Effective load resistance (plate-to-plate)	6400	10400	12800		ohms
Maximum signal plate power output	900	1000	1100		watts

CLASS B RADIO-FREQUENCY POWER AMPLIFIER

Carrier conditions per tube for use with a maximum modulation factor of 1.0

D-c plate voltage	1500	2000	2500	2500	volts
D-c grid voltage	−70	−95	−125		volts
D-c plate current	0.320	0.265	0.216	0.35	ampere
Plate input				600	watts
Plate dissipation				400	watts
Peak r-f grid input voltage	140	140	140		volts
Driving power, approximate**	18	15	12		watts
Plate power output	150	170	180		watts

CLASS C RADIO-FREQUENCY AMPLIFIER AND OSCILLATOR—PLATE-MODULATED

Carrier conditions per tube for use with a maximum modulation factor of 1.0

D-c plate voltage	1500	2000	2000	volts
D-c grid voltage	−250	−300	−500	volts
D-c plate current	0.3	0.3	0.35	ampere
D-c grid current, approximate	0.035	0.03	0.125	ampere
Plate input			700	watts
Plate dissipation			270	watts
Peak r-f grid input voltage, approximate	400	450		volts
Driving power, approximate	14	14		watts
Plate power	300	425		watts

CLASS C RADIO-FREQUENCY POWER AMPLIFIER AND OSCILLATOR

Key-down conditions per tube without modulation#

D-c plate voltage	1500	2000	2500	2500	volts
D-c grid voltage	−175	−200	−250	−500	volts
D-c plate current	0.3	0.3	0.3	0.35	ampere
D-c grid current, approximate	0.035	0.025	0.02	0.125	ampere
Plate input				875	watts
Plate dissipation				400	watts
Peak r-f grid input voltage, approximate	310	325	360		volts
Driving power, approximate	11	9	8		watts
Plate power output	300	425	560		watts

* Averaged over any audio-frequency cycle.
** At crest of audio-frequency cycle.
#Modulation, essentially negative, may be used if the positive peak of the audio-frequency envelope does not exceed 115 per cent of the carrier conditions.

APPLICATION NOTES

GL-849 can be operated at maximum ratings in all classes of service at frequencies as high as 3 megacycles. The tube may be operated at higher frequencies provided the maximum values of plate voltage and power input are reduced as the frequency is raised. (Other maximum ratings are the same as shown under TECHNICAL INFORMATION.) The tabulation below shows the highest percentage of maximum plate voltage and power input that can be used up to 30 megacycles for the various classes of service. Special attention should be given to adequate ventilation of the bulb at these frequencies.

Frequency	3	10	30 megacycles
Maximum permissible percentage of maximum rated plate voltage and plate input:			
Class B, telephony	100	84	69 per cent
Class C { telephony, plate-modulated / telegraphy }	100	75	50 per cent

GL-849

AVERAGE PLATE CHARACTERISTICS

(E_f = 11 VOLTS A-C)

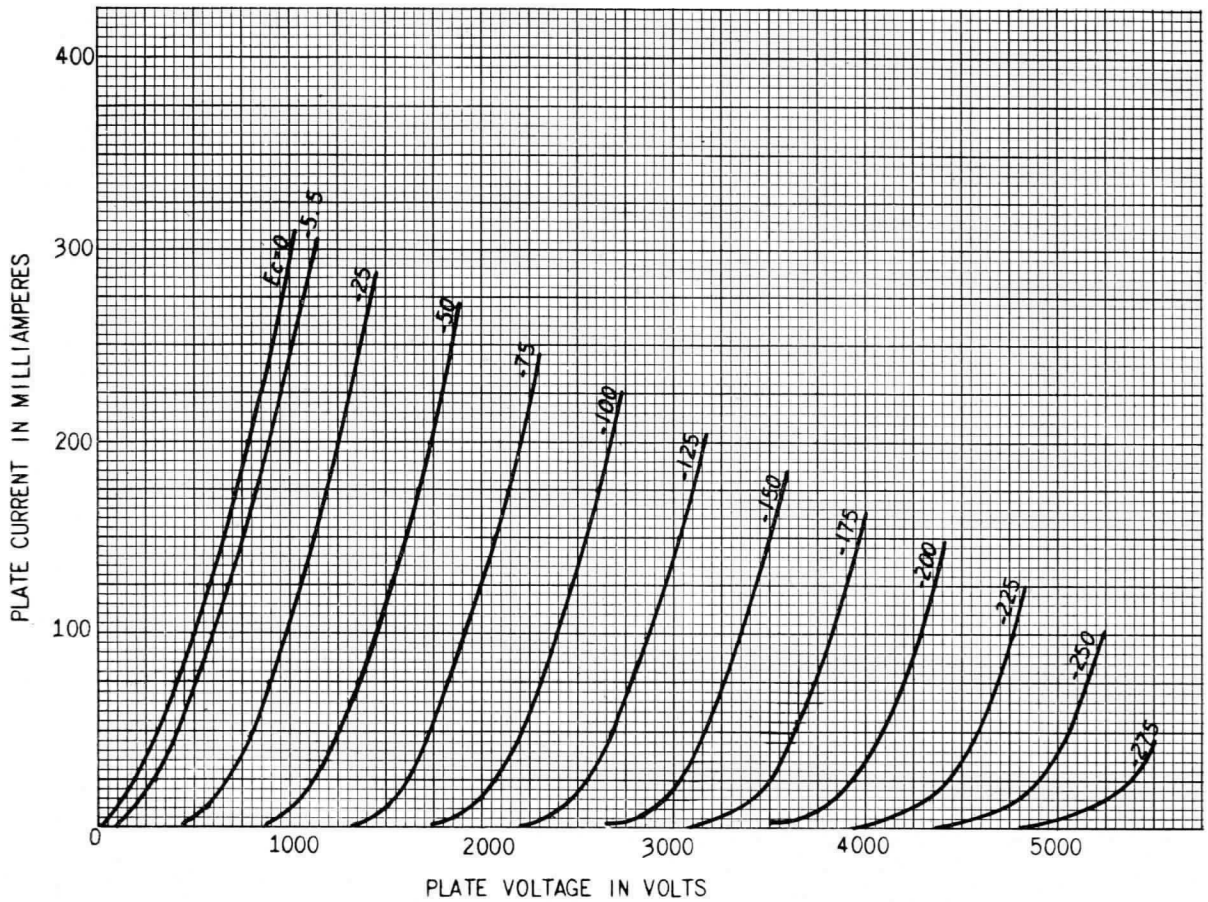

K-9033962

1-9-46

GL-849
AVERAGE PLATE CHARACTERISTICS
(E_f=11 VOLTS A-C)

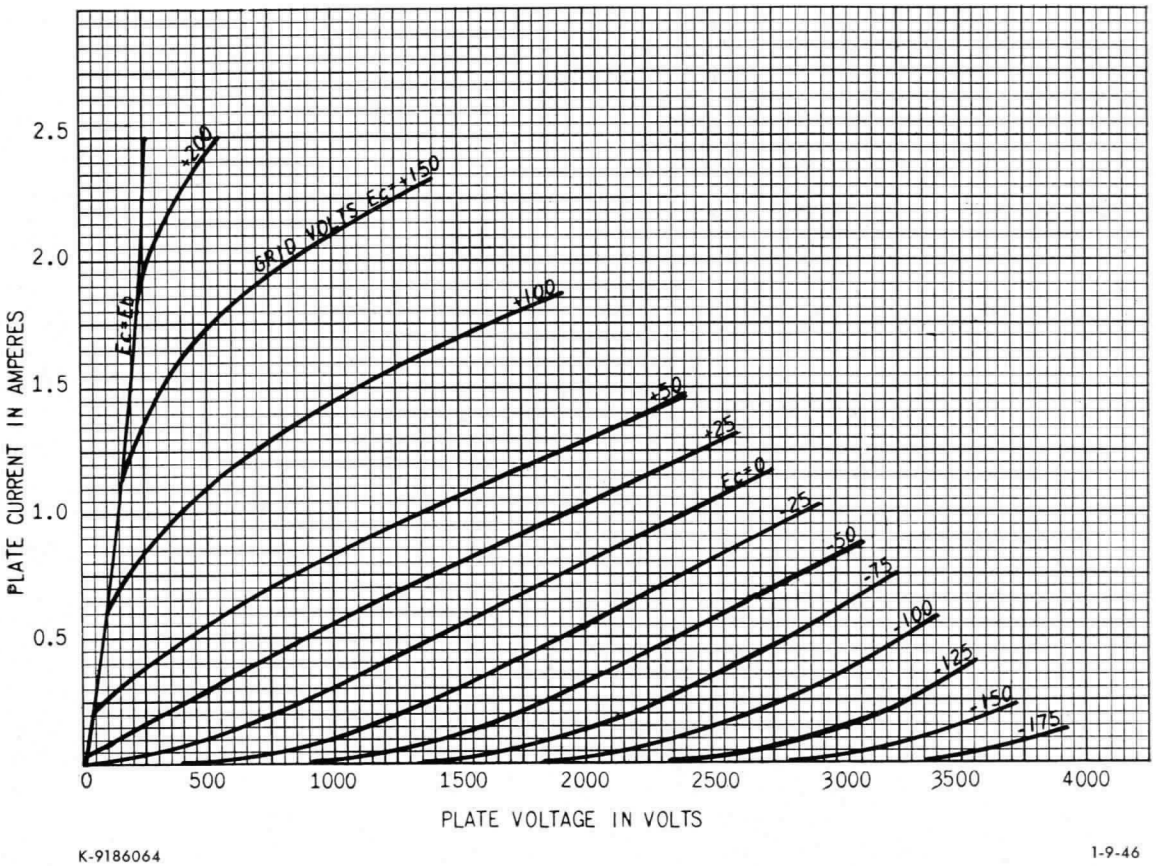

K-9186064

1-9-46

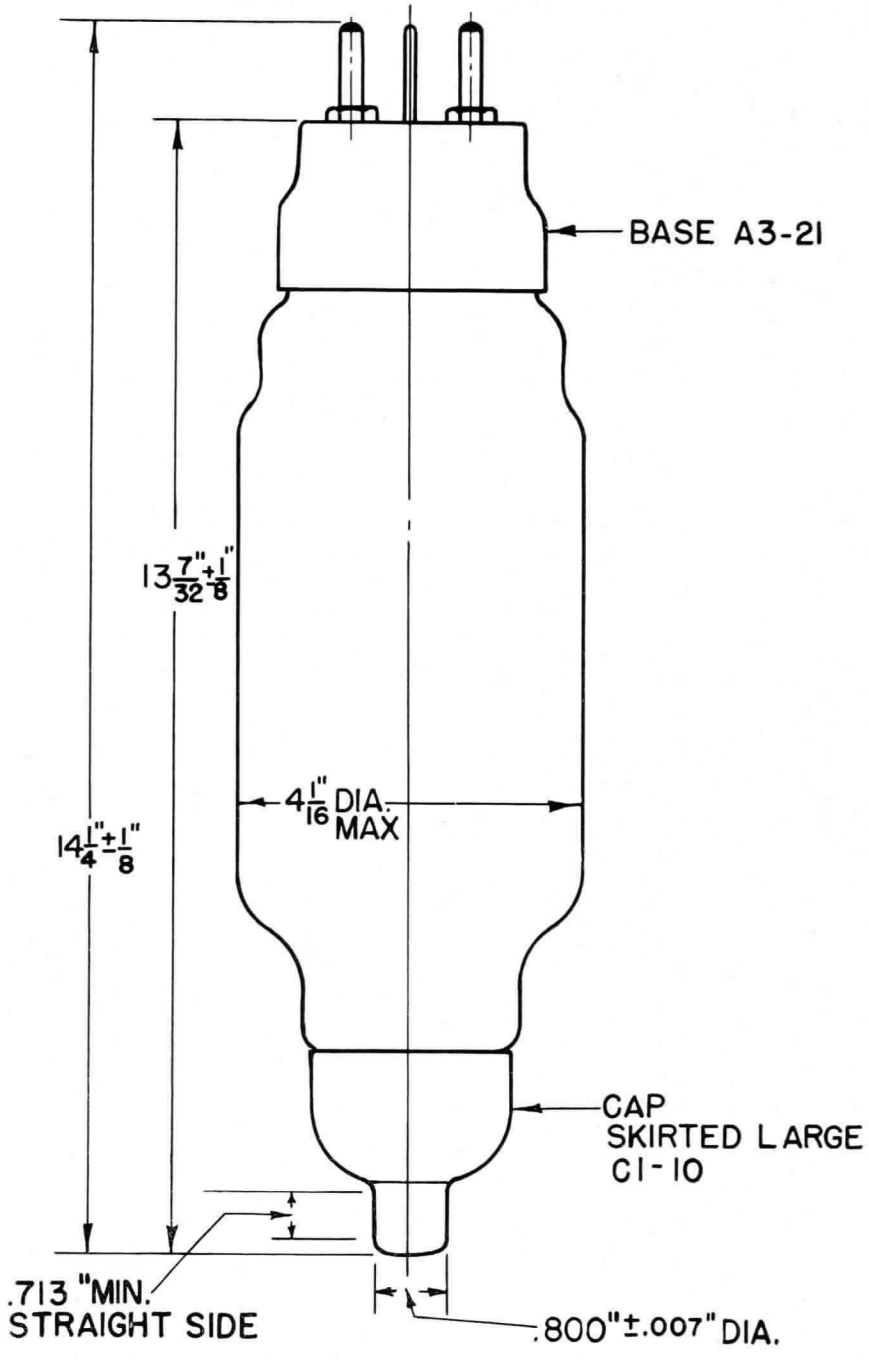

GL-849 OUTLINE

K-3846004

7-23-45

Electronics Department
GENERAL ELECTRIC
Schenectady, N. Y.

5-46 (7M)
Filing No. 8850



PLIOTRON

DESCRIPTION

The GL-851 is a three-electrode, general purpose tube designed for use as a radio-frequency amplifier, oscillator, or Class B modulator. The plate of this tube is capable of dissipating 500 to 750 watts.

TECHNICAL INFORMATION

These data are for reference only. For design information refer to specifications.

GENERAL CHARACTERISTICS

Number of electrodes	3	
Electrical		
Filament voltage	11	volts
Filament current	15.5	amperes
Average characteristics		
Amplification factor, $I_b = 300$ ma	20.5	
Grid-plate transconductance	15000	micromhos
Direct interelectrode capacitances		
Grid plate	47	micromicrofarads
Input	25.5	micromicrofarads
Output	4.5	micromicrofarads
Frequency for maximum ratings	3	megacycles
Mechanical		
Type of cooling		convection
Maximum ambient temperature	60	centigrade
Net weight, approx.	3	pounds
Mounting position	vertical, filament base (large) up or horizontal, filament in vertical plane (on edge)	
Shipping weight, approx.	9	pounds

GE Electronic TUBE

GENERAL ELECTRIC

Supersedes ETI-168 dated 4-45

TECHNICAL INFORMATION (CONT'D)

MAXIMUM RATINGS AND TYPICAL OPERATING CONDITIONS

	Typical Operation			Maximum Ratings	
CLASS A AUDIO-FREQUENCY AMPLIFIER AND MODULATOR					
D-c plate voltage	1500	2000	2500	2500	volts
Plate dissipation				600	watts
D-c grid voltage	−49	−65	−92		volts
Peak grid swing, approx.	44	60	87		volts
D-c plate current	0.175	0.270	0.240		ampere
Plate resistance	1800	1500	1600		ohms
Load resistance	3700	3100	5000		ohms
Plate power output, 5 per cent second harmonic	46	100	160		watts
CLASS B AUDIO-FREQUENCY POWER AMPLIFIER (TWO TUBES)					
D-c plate voltage	2000	2500	3000	3000	volts
Max signal plate current, per tube*				1	ampere
D-c max signal plate input, per tube*				2250	watts
Plate dissipation, per tube*				750	watts
D-c grid voltage	−85	−111	−135		volts
Peak a-f grid input voltage	250	245	245		volts
Zero signal plate current	0.12	0.12	0.11		ampere
Max signal plate current	1.7	1.4	1.2		amperes
Max signal plate input*	3400	3500	3600		watts
Max signal driving power, approx.	20	12	6		watts
Effective load resistance, plate-to-plate	2600	4000	5600		ohms
Max signal plate power output	2200	2300	2400		watts
CLASS B RADIO-FREQUENCY POWER AMPLIFIER					
Carrier conditions per tube for use with a max modulation factor of 1.0					
D-c plate voltage	1500	2000	2500	2500	volts
D-c grid voltage	−60	−85	−110		volts
D-c plate current	0.62	0.475	0.39	0.750	ampere
Plate input				1100	watts
Plate dissipation				750	watts
Peak r-f grid input voltage	300	280	270		volts
Driving power, approx†	40	25	20		watts
Plate power output	275	300	325		watts
CLASS C RADIO-FREQUENCY POWER AMPLIFIER AND OSCILLATOR—PLATE-MODULATED					
Carrier conditions per tube for use with a max modulation factor of 1.0					
D-c plate voltage		1500	2000	2000	volts
D-c grid voltage		−250	−300	−500	volts
D-c plate current		0.9	0.85	1	ampere
D-c grid current, approx.		0.15	0.125	0.200	ampere
Plate input				1800	watts
Plate dissipation				500	watts
Peak r-f grid input voltage, approx.		475	525		volts
Driving power, approx.		75	65		volts
Plate power output		900	1250		watts
CLASS C RADIO-FREQUENCY POWER AMPLIFIER AND OSCILLATOR					
Key-down conditions per tube without modulation‡					
D-c plate voltage	1500	2000	2500	2500	volts
D-c grid voltage	−150	−200	−250	−500	volts
D-c plate current	0.9	0.9	0.9	1	ampere
D-c grid current, approx.	0.15	0.12	0.1	0.200	ampere
Plate input				2500	watts
Plate dissipation				750	watts
Peak r-f grid input voltage, approx.	375	425	450		volts
Driving power, approx.	55	50	45		watts
Plate power output	900	1250	1700		watts

* Averaged over any audio-frequency cycle.
† At crest of audio-frequency cycle.
‡ Modulation, essentially negative, may be used if the positive peak of the audio-frequency envelope does not exceed 115 per cent of the carrier conditions.

APPLICATION NOTES

GL-851 can be operated at maximum ratings in all classes of service at frequencies as high as 3 megacycles. The tube may be operated at higher frequencies provided the maximum values of plate voltage and power input are reduced as the frequency is raised. (Other maximum ratings are the same as shown under TECHNICAL INFORMATION.) The tabulation below shows the highest percentage of maximum plate voltage and power input that can be used up to 15 mc for the various classes of service. Special attention should be given to adequate ventilation of the bulb at these frequencies.

Frequency	3	7	15 megacycles
Maximum permissible percentage of maximum rated plate voltage and plate input:			
Class B telephony	100	88	76 per cent
Class C telephony, plate-modulated	100	75	50 per cent
Class C telegraphy, plate-modulated	100	75	50 per cent

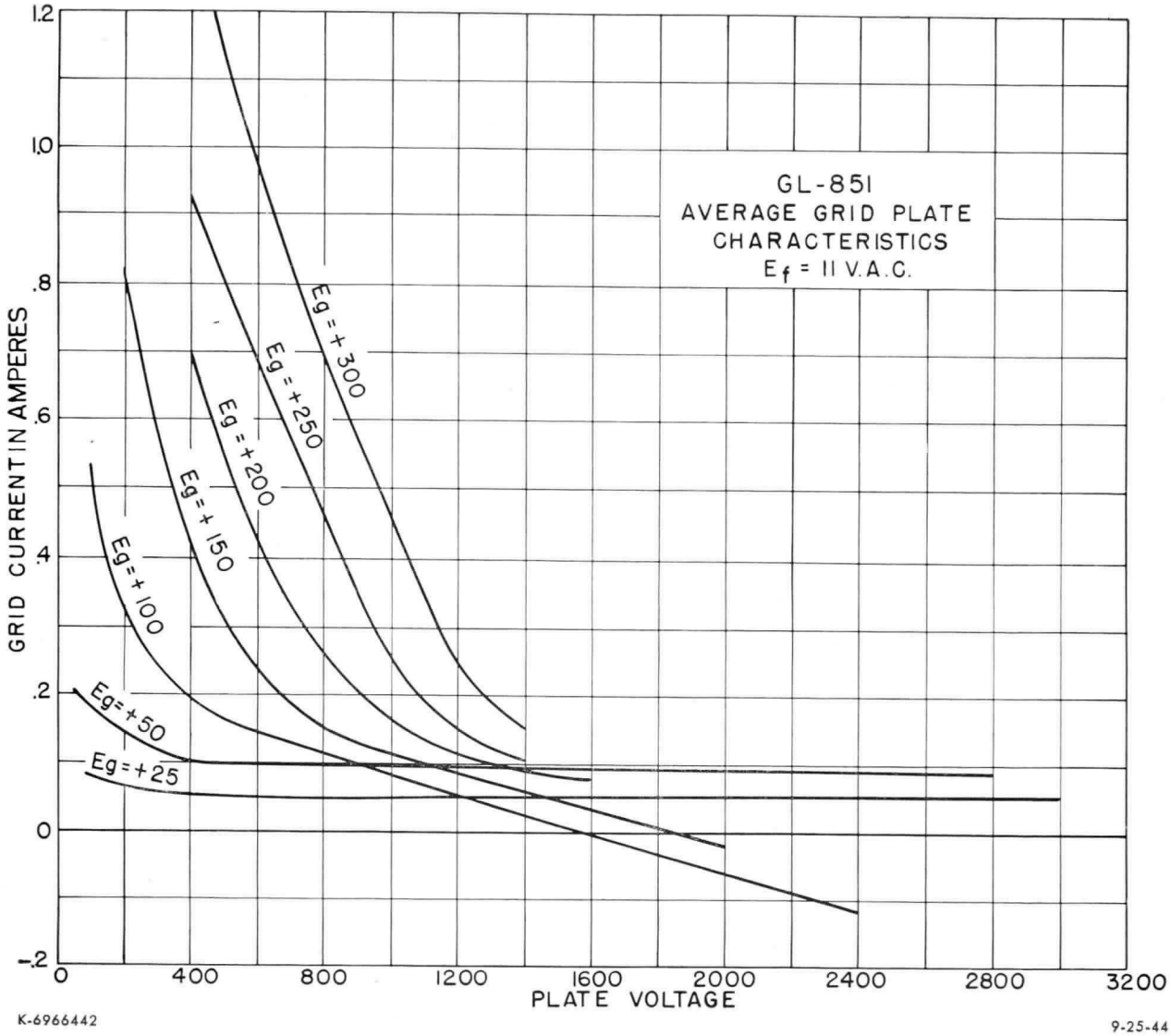

K-6966442

9-25-44

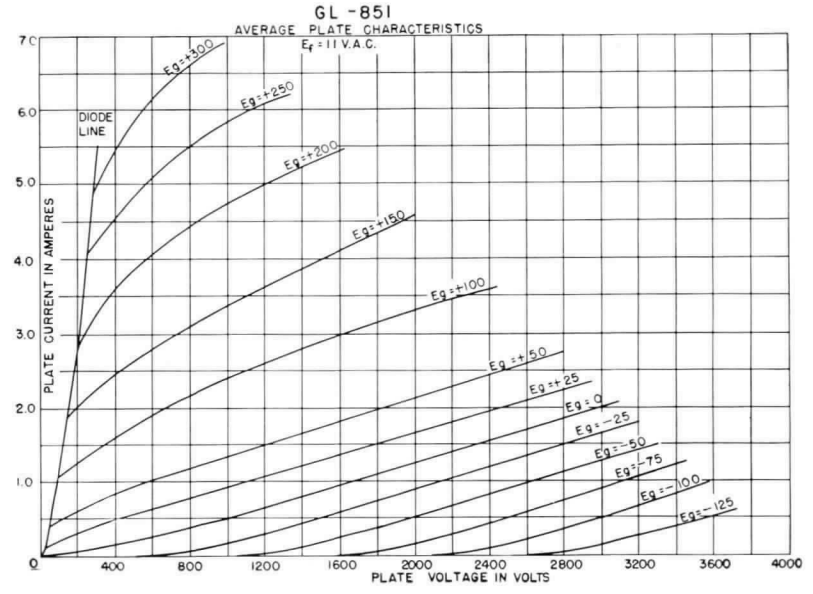

K-6966441 11-2-44

GL-851
AVERAGE PLATE CHARACTERISTICS

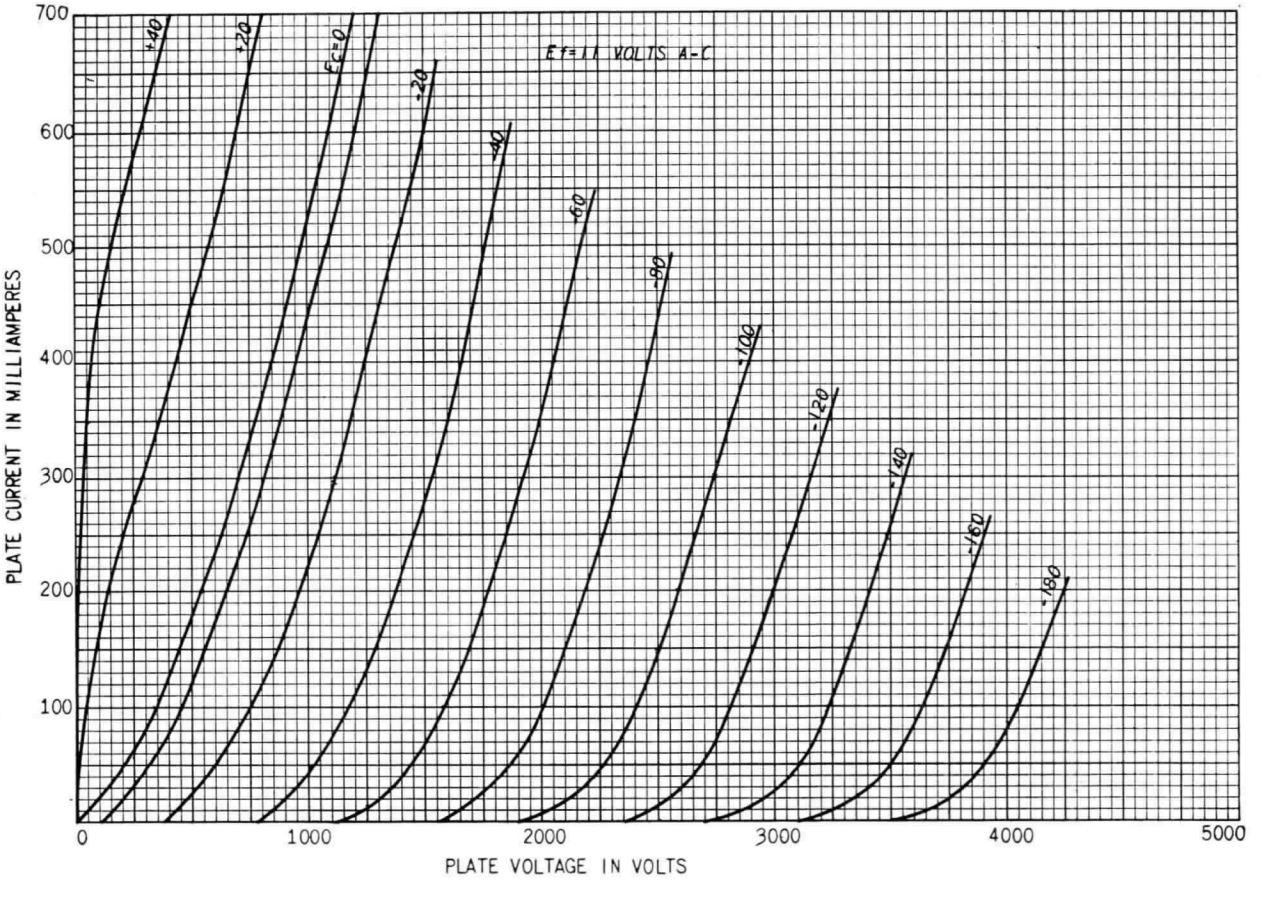

K-9186105 12-10-45

◆ GL-851
CONSTANT-CURRENT CHARACTERISTICS

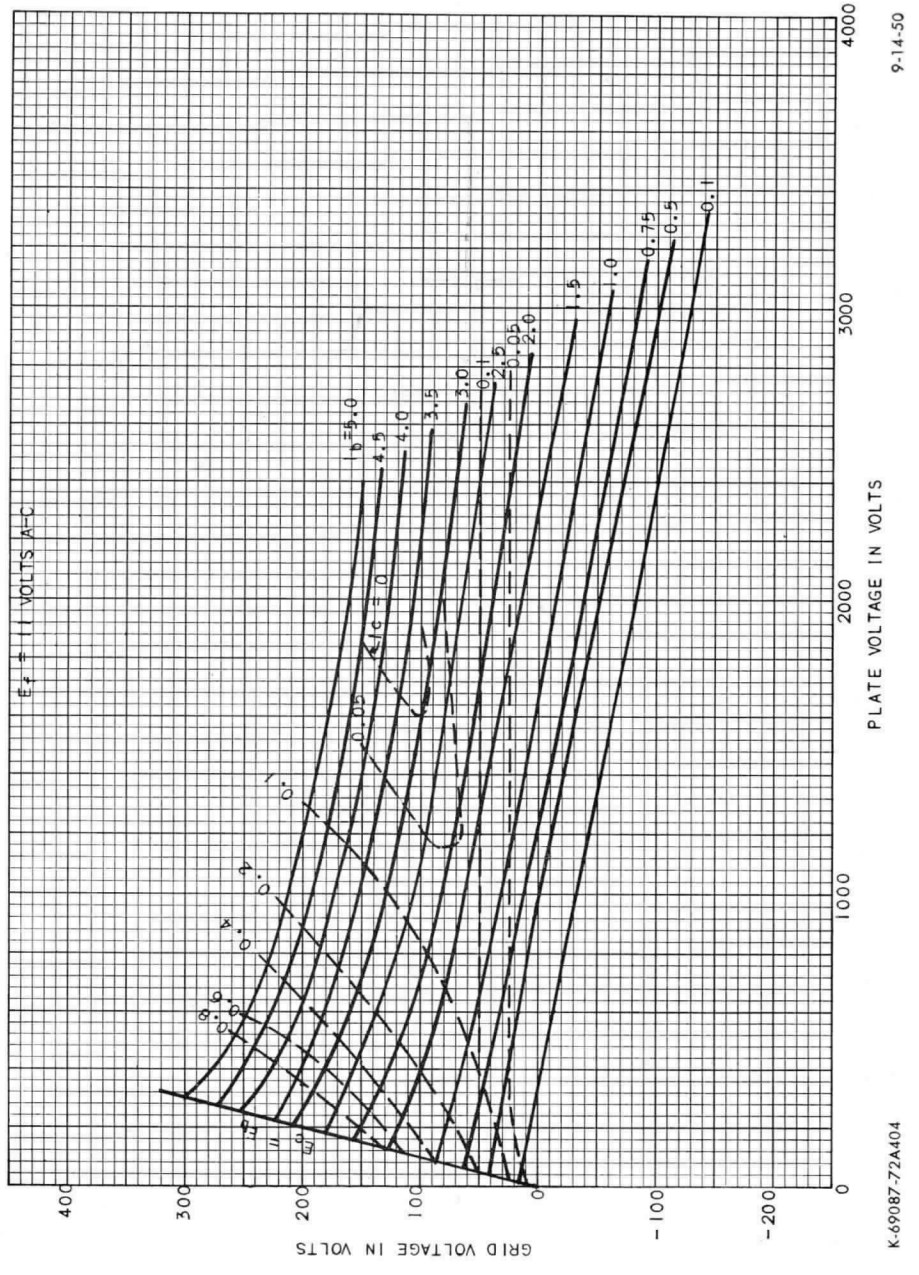

9-14-50

K-69087-72A404

◆New drawing.

OUTLINE
GL-851 PLIOTRON

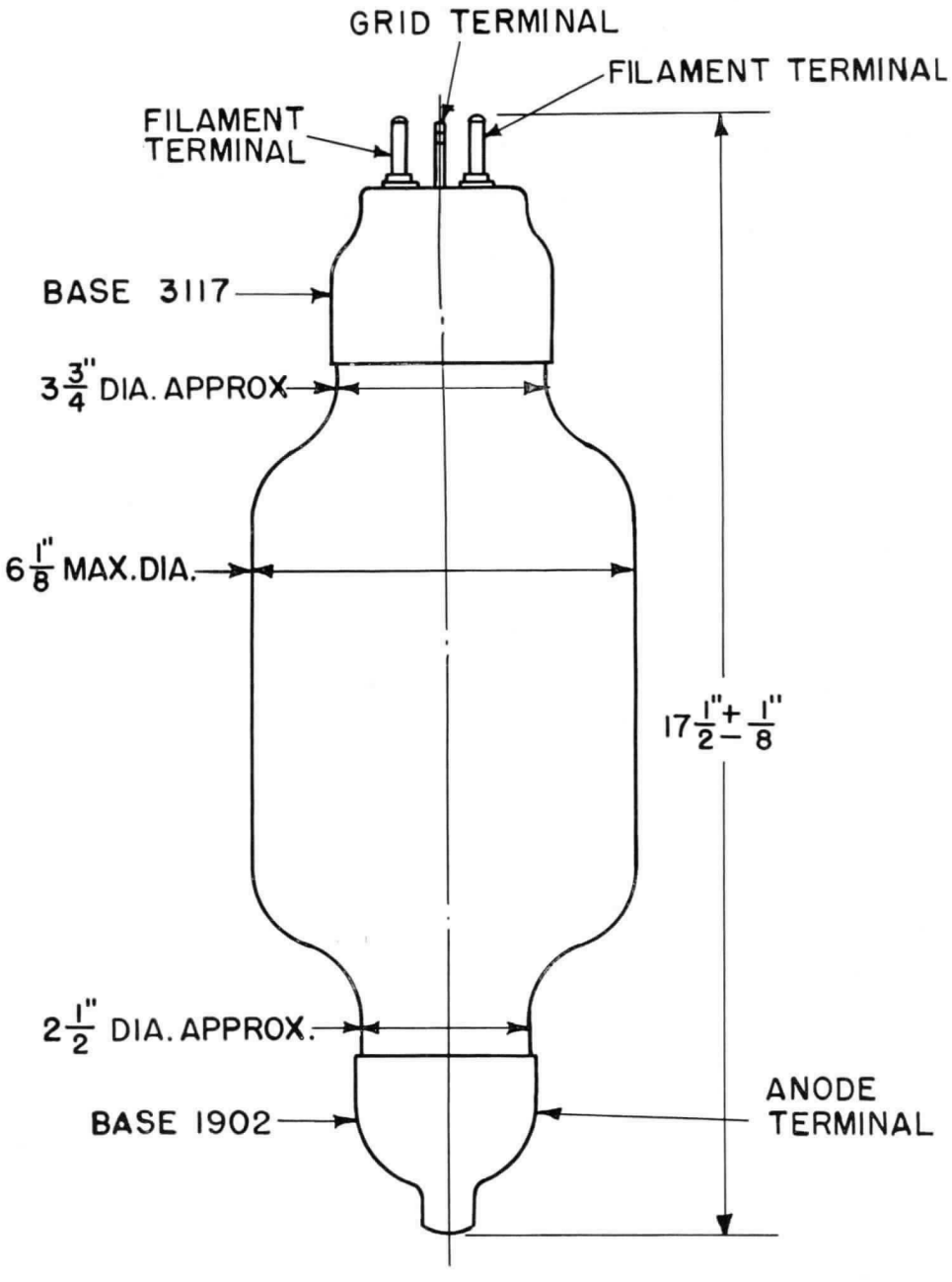

K-2636625

9-23-44

Tube Divisions, Electronics Department

GENERAL ELECTRIC

Schenectady, N. Y.

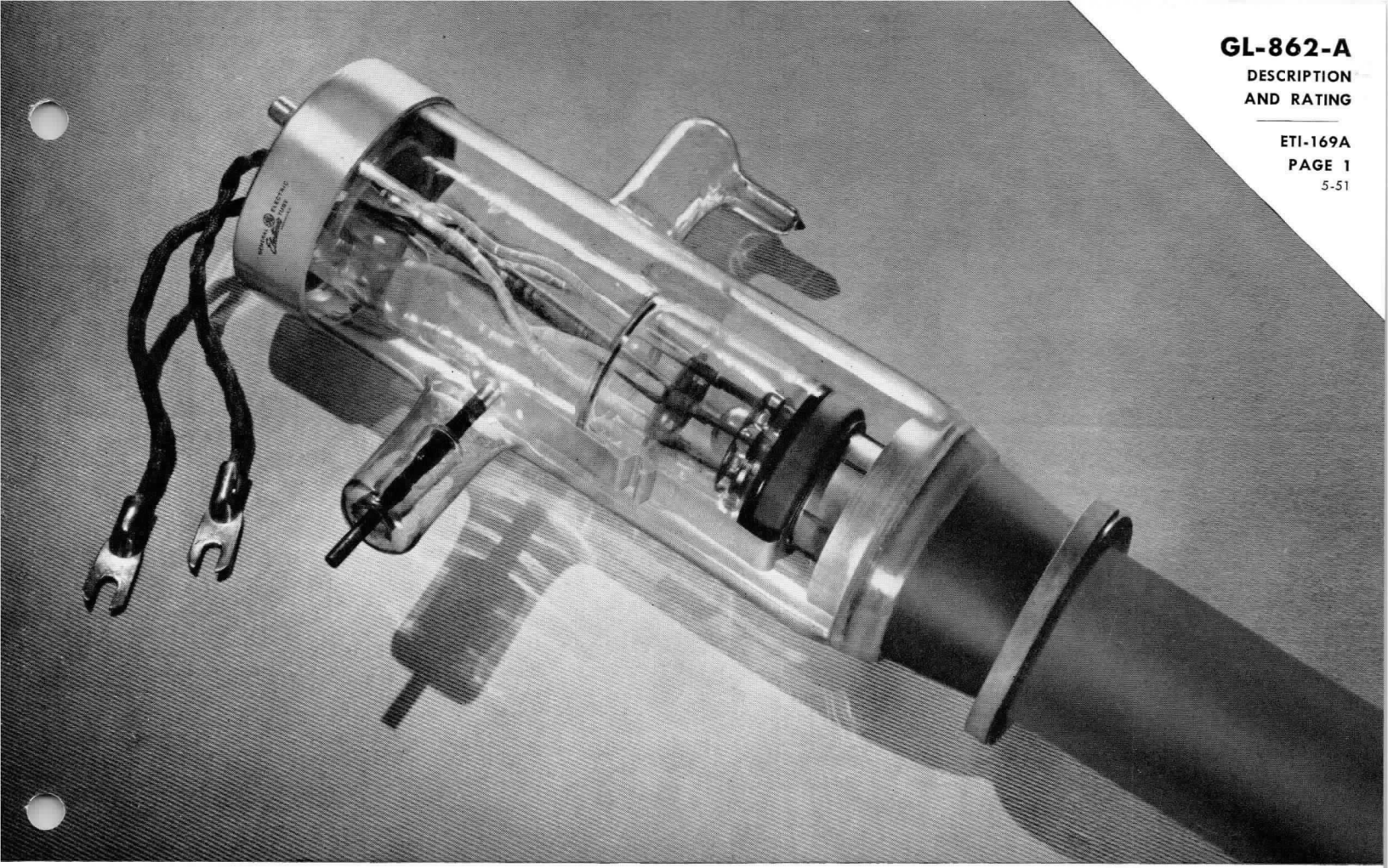

PLIOTRON

DESCRIPTION

The GL-862-A is a three-electrode power tube designed for use as a radio-frequency amplifier, oscillator, or Class B modulator. The plate is water-cooled and is capable of dissipating 50 to 100 kilowatts, depending upon the class of service in which the tube is used.

♦TECHNICAL INFORMATION

These data are for reference only. For design information refer to specifications.

GENERAL

Electrical Data	Minimum	Bogey	Maximum	
Filament voltage		33	34.6	volts
Filament current at bogey voltage	199	207	215	amperes
Filament starting current			360	amperes
Filament cold resistant		0.018		ohms
Amplification factor, $I_b = 3$ amperes, $E_c = -50$ volts d-c		45		
Interelectrode capacitances				
Grid-plate	54	69.5	85	uuf
Grid-filament	43	53	63	uuf
Plate-filament	3.0	4.5	6.0	uuf

♦Completely revised.

GE Electronic TUBE

GENERAL ELECTRIC

Supersedes ETI-169 dated 4-45

TECHNICAL INFORMATION (CONT'D)

Mechanical Data

Mounting position—vertical, anode down
Type of cooling—water and forced air

Water flow on anode	15–25	GPM
Maximum outgoing water temperature	70	C
Air flow		
To bulb	15	CFM
To stem	3	CFM
Gasket—Cat. No. 5182028P1		
Net weight, approximate	30	pounds

MAXIMUM RATINGS AND TYPICAL OPERATING CONDITIONS

AUDIO-FREQUENCY POWER AMPLIFIER—CLASS B

Maximum ratings, absolute values

D-c plate voltage	15,000 max	volts
Maximum signal d-c plate current*	7.5 max	amperes
Maximum signal plate input*	100 max	kilowatts
Plate dissipation*	50 max	kilowatts

Typical operation
Unless otherwise specified, values are for two tubes

D-c plate voltage	12,000	volts
D-c grid voltage	0	volts
Peak a-f grid-to-grid voltage	2000	volts
Zero-signal d-c plate current	3	amperes
Maximum signal d-c plate current	13	amperes
Effective load resistance, plate to plate	1800	ohms
Maximum signal driving power, approximate	450	watts
Maximum signal power output, approximate	90	kilowatts

RADIO-FREQUENCY POWER AMPLIFIER—CLASS B

Carrier conditions per tube for use with a maximum modulation factor of 1.0

Maximum ratings, absolute values

D-c plate voltage	20,000 max	volts
D-c plate current	5 max	amperes
Plate input	100 max	kilowatts
Plate dissipation	75 max	kilowatts

Typical operation

D-c plate voltage	12,000	15,000	18,000	volts
D-c grid voltage	−100	−150	−200	volts
D-c plate current	2.8	3.5	4.2	amperes
Peak r-f grid voltage	500	625	750	volts
Driving power, approximate†	0.5	0.75	1.1	kilowatts
Power output, approximate	11	17.5	25	kilowatts

PLATE-MODULATED RADIO-FREQUENCY POWER AMPLIFIER AND OSCILLATOR—CLASS C TELEPHONY

Carrier conditions per tube for use with a maximum modulation factor of 1.0

Maximum ratings, absolute values

D-c plate voltage	12,000 max	volts
D-c grid voltage	−3000 max	volts
D-c plate current	5 max	amperes
D-c grid current, approximate	1.25 max	amperes
Plate input	60 max	kilowatts
Plate dissipation	50 max	kilowatts

Typical operation

D-c plate voltage	8000	10,000	12,000	volts
D-c grid voltage	−700	−750	−800	volts
D-c plate current	4	4.5	5	amperes
D-c grid current, approximate	1	1	1	amperes
Peak r-f grid voltage, approximate	1700	1850	2000	volts
Driving power, approximate	1.7	1.85	2	kilowatts
Power output, approximate	24	34	45	kilowatts

TECHNICAL INFORMATION (CONT'D)

RADIO-FREQUENCY POWER AMPLIFIER AND OSCILLATOR— CLASS C TELEGRAPHY

Key-down conditions per tube without modulation¶

Maximum ratings, absolute values				
D-c plate voltage	20,000 max			volts
D-c grid voltage	−3000 max			volts
D-c plate current	10 max			amperes
D-c grid current, approximate	1 max			ampere
Plate input	200 max			kilowatts
Plate dissipation	100 max			kilowatts
Typical operation				
D-c plate voltage	12,000	15,000	18,000	volts
D-c grid voltage	−800	−900	−1000	volts
D-c plate current	6.25	7.5	8.33	amperes
D-c grid current, approximate	0.8	0.85	0.9	amperes
Peak r-f grid voltage, approximate	2050	2300	2550	volts
Driving power, approximate	1.6	2	2.4	kilowatts
Power output, approximate	50	75	100	kilowatts

* Averaged over any audio-frequency cycle.
† At crest of audio-frequency cycle.
¶Modulation essentially negative may be used if the positive peak of the audio-frequency envelope does not exceed 115 er cent of the carrier conditions.

APPLICATION NOTES

Plate Series Protective Resistors (see paragraph describing plate circuit under Installation in the Instructions.)

Series resistor	10	20	40	50	ohms
Maximum power output of rectifier	100	250	640	1600	kilowatts

♦ GL-862-A CHARACTERISTICS (E_f = 33 VOLTS A-C)

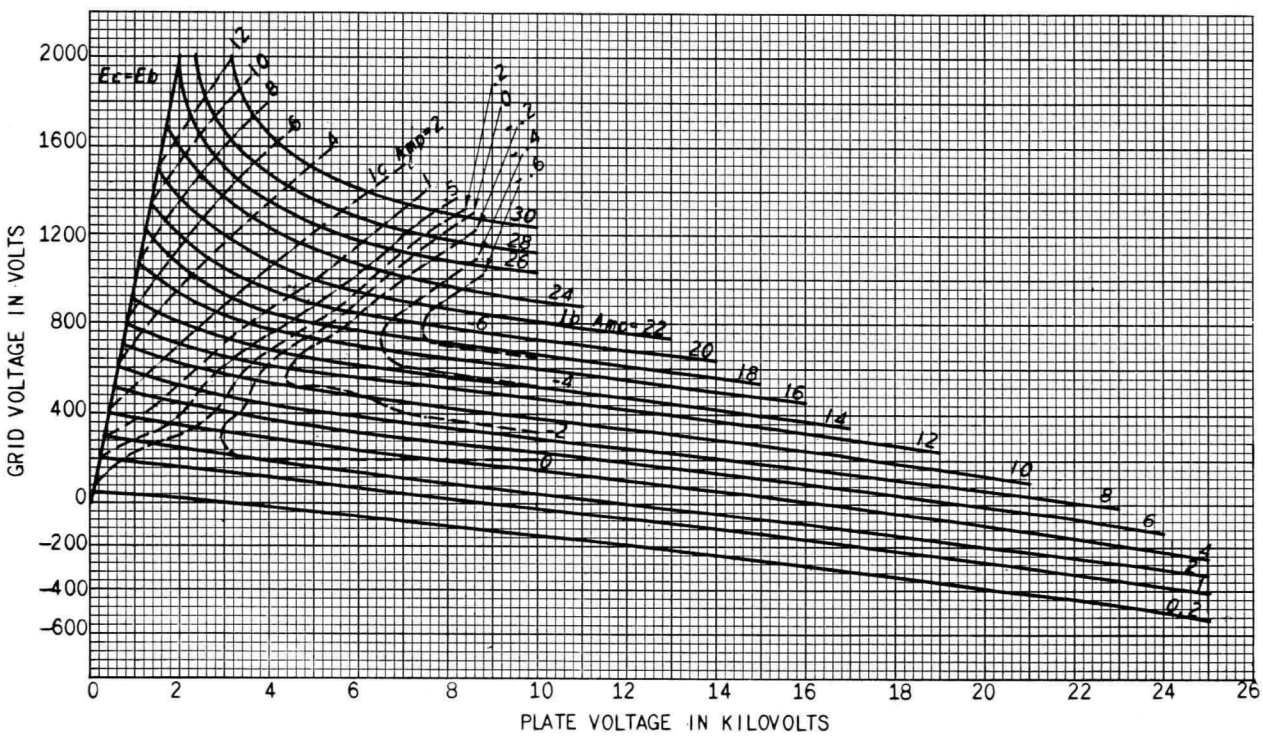

K-6966424
♦Revised.

12-10-45

GL-862-A
FILAMENT CHARACTERISTICS

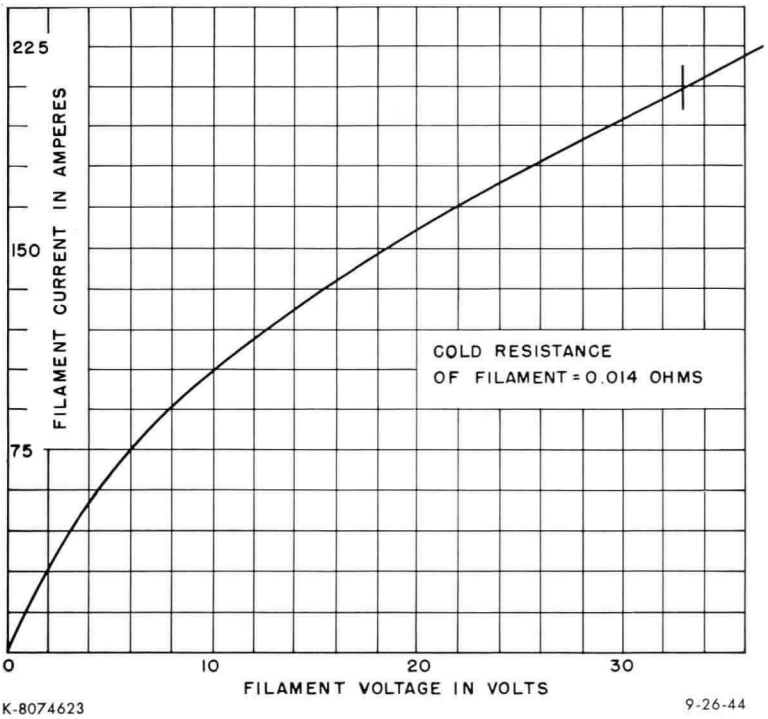

K-8074623 9-26-44

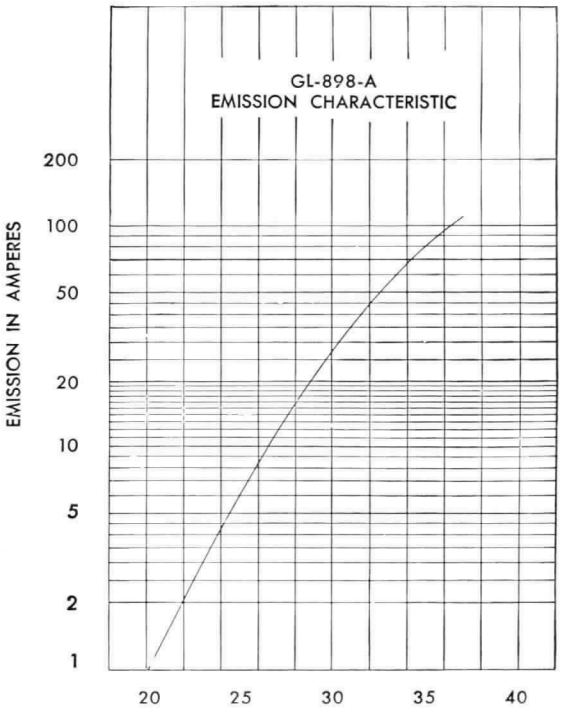

K-8074655 1-9-46

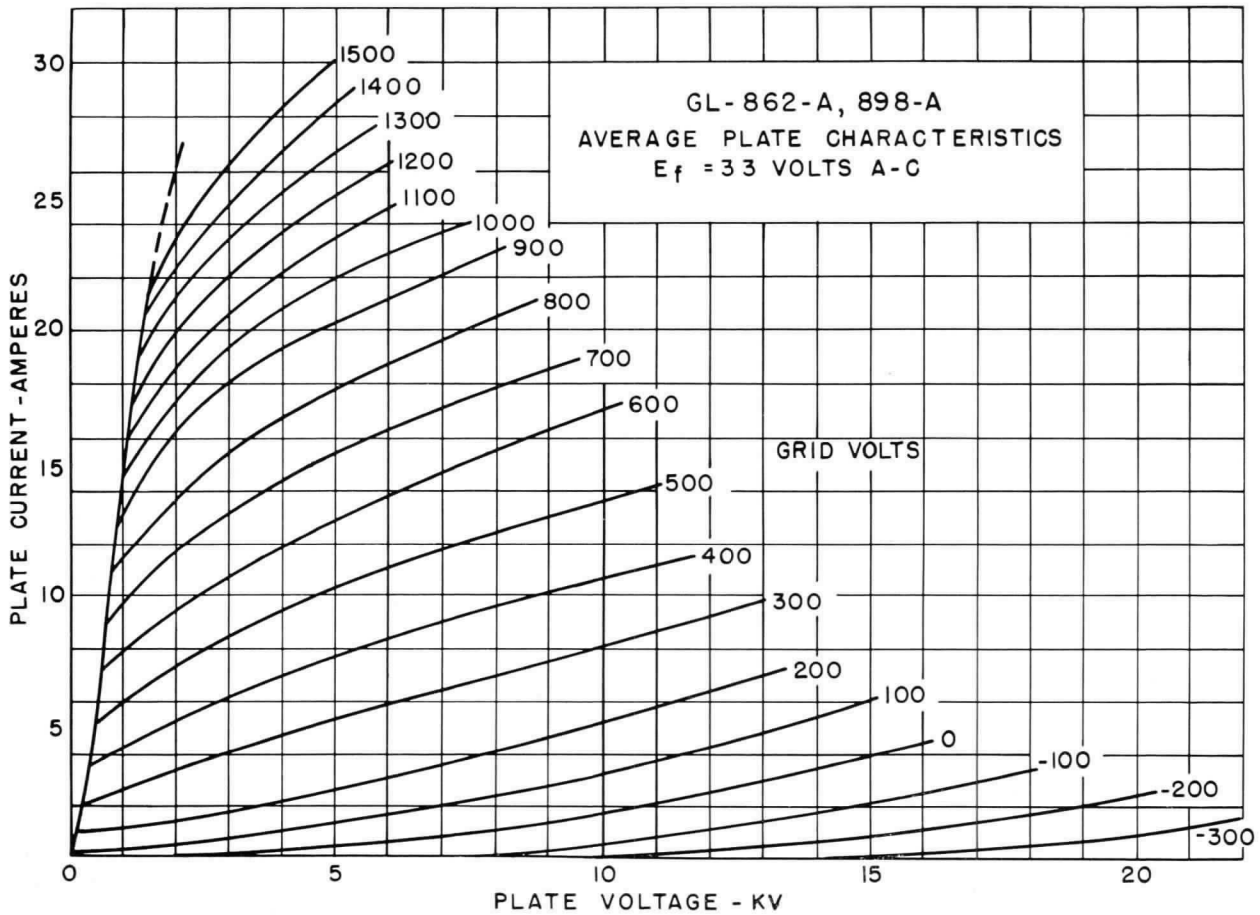

K-6966423 1-9-46

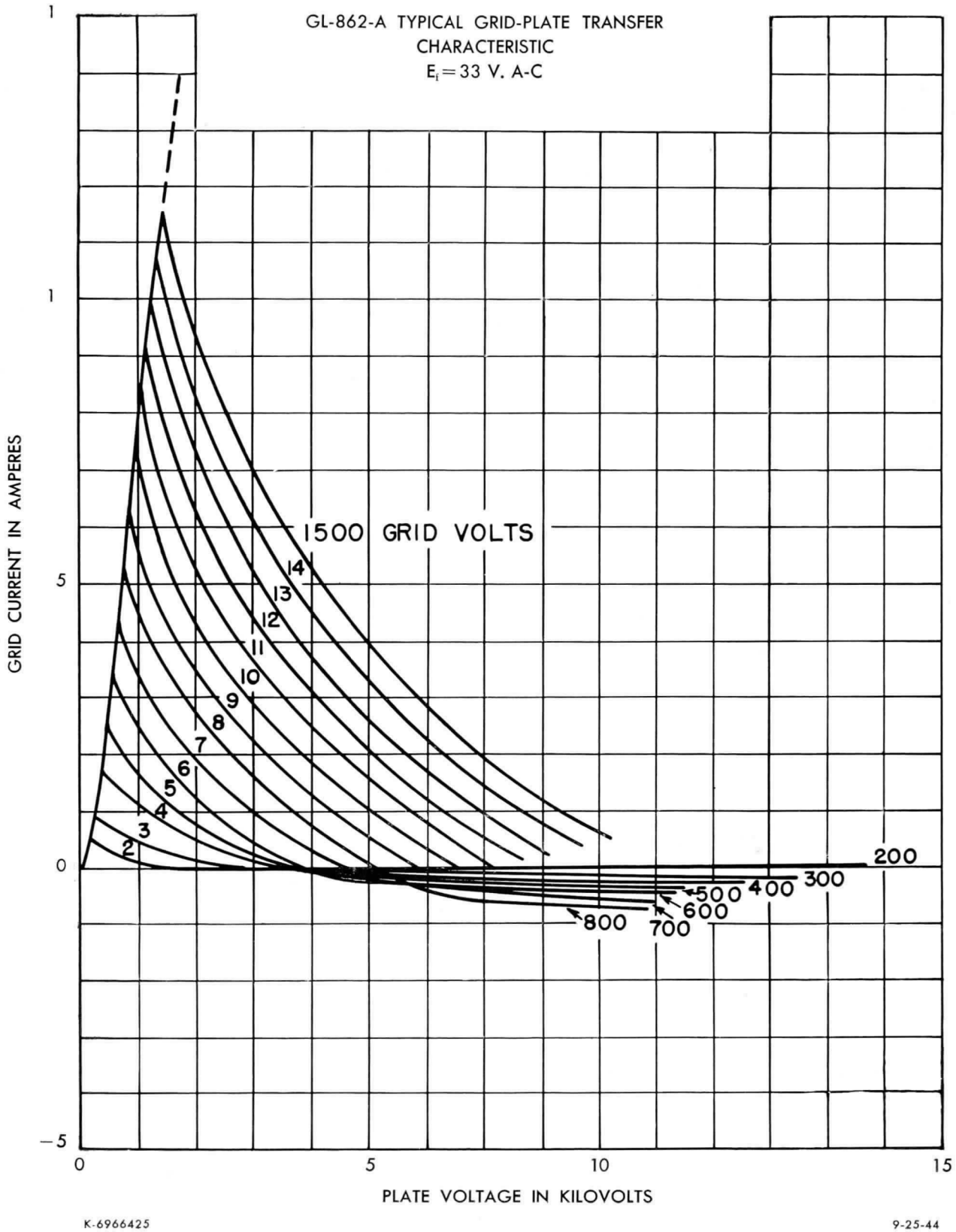

K-6966425

9-25-44

♦ OUTLINE GL-862-A PLIOTRON

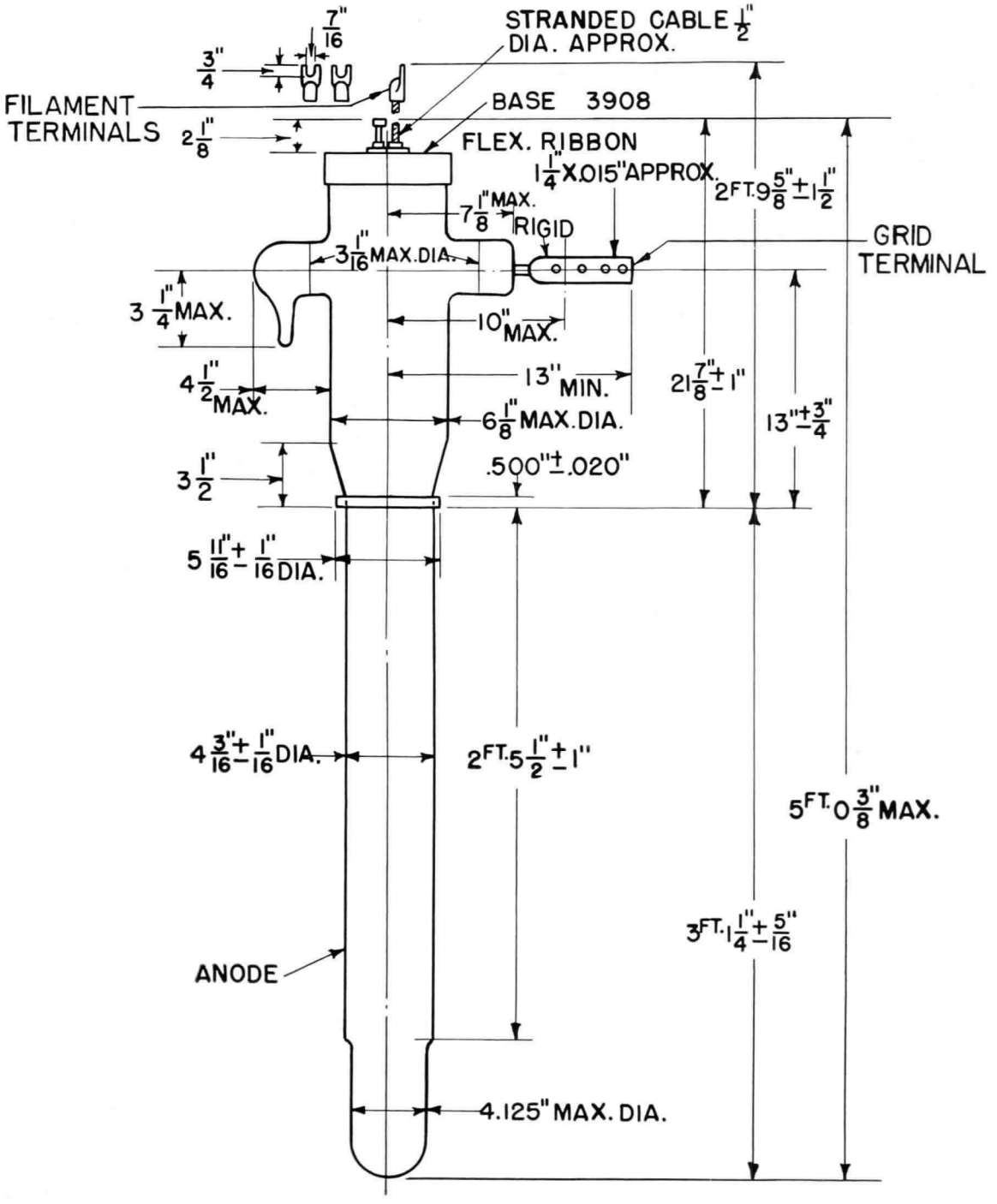

K-3846052
♦Revised.

6-7-45

Tube Divisions, Electronics Department

GENERAL ELECTRIC

Schenectady, N. Y.



TRIODE

The GL-880 is a three-electrode tube designed for use as a radio-frequency amplifier, oscillator, or Class B modulator. The anode is water-cooled and capable of dissipating 20 kilowatts. The cathode is a pure-tungsten filament. Maximum ratings apply up to 25 megacycles.

TECHNICAL INFORMATION

GENERAL

Electrical	Minimum	Bogey	Maximum	
Filament Voltage	....	12.6	13.2	volts
Filament Current	300	320	330	amperes
Filament Starting Current	....	....	480	amperes
Filament Cold Resistance	....	0.003	....	ohms
Amplification Factor, I_b = 2.0 amp, E_c = −100 v	17	20	23	
Interelectrode Capacitances				
Grid to Plate	21	24	27	$\mu\mu$f
Grid to Filament	28.8	35	41.2	$\mu\mu$f
Plate to Filament	1.0	2.0	3.0	$\mu\mu$f

GENERAL ELECTRIC

Supersedes ETX-179A

TECHNICAL INFORMATION (CONT'D)

Mechanical

Mounting Position—Vertical, anode down
Type of Cooling—Water and Forced Air

Water Flow on Anode	20	Gallons, per Minute
Maximum Outgoing Water Temperature	70	C
Air Flow (to bulb and seals)*	20	cfm
Maximum Glass Temperature	150	C
Gasket Type No. JTC-11		
Net Weight, approximate	7	Pounds

MAXIMUM RATINGS AND TYPICAL OPERATING CONDITIONS

AUDIO-FREQUENCY POWER AMPLIFIER AND MODULATOR—CLASS B

Maximum Ratings, Absolute Values	CCS†	
DC Plate Voltage	10,500 Max	Volts
Maximum Signal DC Plate Current‡	5 Max	Amperes
Maximum Signal Plate Input‡	40 Max	Kilowatts
Plate Dissipation‡	15 Max	Kilowatts

Typical Operation	CCS†	CCS†	
Unless otherwise specified, values are for two tubes			
DC Plate Voltage	7500	10,000	Volts
DC Grid Voltage	−340	−450	Volts
Peak AF Grid-to-Grid Voltage	1450	1680	Volts
Zero Signal DC Plate Current	1.0	1.0	Amperes
Maximum Signal DC Plate Current	6.7	7.0	Amperes
Effective Load Resistance, plate to plate	2300	3100	Ohms
Maximum Signal Driving Power, approximate	490	540	Watts
Maximum Signal Power Output, approximate	31.5	46	Kilowatts

*From a 3-inch diameter nozzle.
†Continuous Commercial Service.
‡Averaged over any audio-frequency cycle of sine-wave form.

RADIO-FREQUENCY POWER AMPLIFIER—CLASS B

Carrier conditions per tube for use with a maximum modulation factor of 1.0

Maximum Ratings, Absolute Values	CCS†	
DC Plate Voltage	10,500 Max	Volts
DC Plate Current	4.0 Max	Amperes
Plate Input	32.0 Max	Kilowatts
Plate Dissipation	20.0 Max	Kilowatts

Typical Operation	CCS†	CCS†	
DC Plate Voltage	7500	10,000	Volts
DC Grid Voltage	−340	−460	Volts
Peak RF Grid Voltage	570	595	Volts
DC Plate Current	3.3	2.75	Amperes
DC Grid Current, approximate	0.013	0.009	Amperes
Driving Power, approximate§	1250	900	Watts
Power Output, approximate	8	9	Kilowatts

PLATE-MODULATED RADIO-FREQUENCY POWER AMPLIFIER—CLASS C TELEPHONY

Carrier conditions per tube for use with a maximum modulation factor of 1.0

Maximum Ratings, Absolute Values	CCS†	
DC Plate Voltage	10,500 Max	Volts
DC Grid Voltage	−1200 Max	Volts
DC Plate Current	3.6 Max	Amperes
DC Grid Current	0.8 Max	Amperes
Plate Input	36 Max	Kilowatts
Plate Dissipation	12 Max	Kilowatts

Typical Operation	CCS†	CCS†	
DC Plate Voltage	7500	10,000	Volts
DC Grid Voltage	−1000	−1200	Volts
Peak RF Grid Voltage	1560	1840	Volts
DC Plate Current	3.0	3.6	Amperes
DC Grid Current, approximate	0.57	0.64	Amperes
Driving Power, approximate	850	1100	Watts
Power Output, approximate	16.0	27.0	Kilowatts

TECHNICAL INFORMATION (CONT'D)

RADIO-FREQUENCY POWER AMPLIFIER AND OSCILLATOR—CLASS C TELEGRAPHY

Key-down conditions per tube without amplitude modulation π

Maximum Ratings, Absolute Values	CCS†	CCS†	
DC Plate Voltage	10,500	15,000□ Max	Volts
DC Grid Voltage	−1200	−1600□ Max	Volts
DC Plate Current	6.0	4.5□ Max	Amperes
DC Grid Current	0.8	1.0□ Max	Amperes
Plate Input	60	67.5□ Max	Kilowatts
Plate Dissipation	20	20.0□ Max	Kilowatts

Typical Operation	CCS†	CCS†	CCS†	
DC Plate Voltage	7500	10,000	10,000	Volts
DC Grid Voltage	−600	−800	−1000	Volts
Peak RF Grid Voltage	1250	1460	1830	Volts
DC Plate Current	4.8	4.5	6.0	Amperes
DC Grid Current, approximate	0.79	0.78	0.8	Amperes
Driving Power, approximate	920	1000	1500	Watts
Power Output, approximate	24.0	33.0	40.00	Kilowatts

†Continuous Commercial Service.

§At crest of audio-frequency cycle with modulation factor of 1.0.

πModulation essentially negative may be used if the positive peak of the envelope does not exceed 115 per cent of the carrier conditions.

□These ratings apply only at a frequency of 1500 kilocycles or less.

Maximum ratings apply up to 25 megacycles. The tube may be operated at higher frequencies provided the maximum values of plate voltage and power input are reduced according to the tabulation below (other maximum ratings are the same as shown above). Special attention should be given to adequate ventilation of the bulb at these frequencies.

Frequency	25	50	100	Megacycles
Percentage of Maximum Rated Plate Voltage and Plate Input				
Class B—Maximum Plate Voltage	100	80	60	Percent
Maximum Plate Input	100	94	75	Percent
Class C—Plate Modulated	100	72	45	Percent
Class C—Unmodulated	100	75	50	Percent

CONSTANT CURRENT CHARACTERISTICS
$E_f = 12.6$ Volts A-c

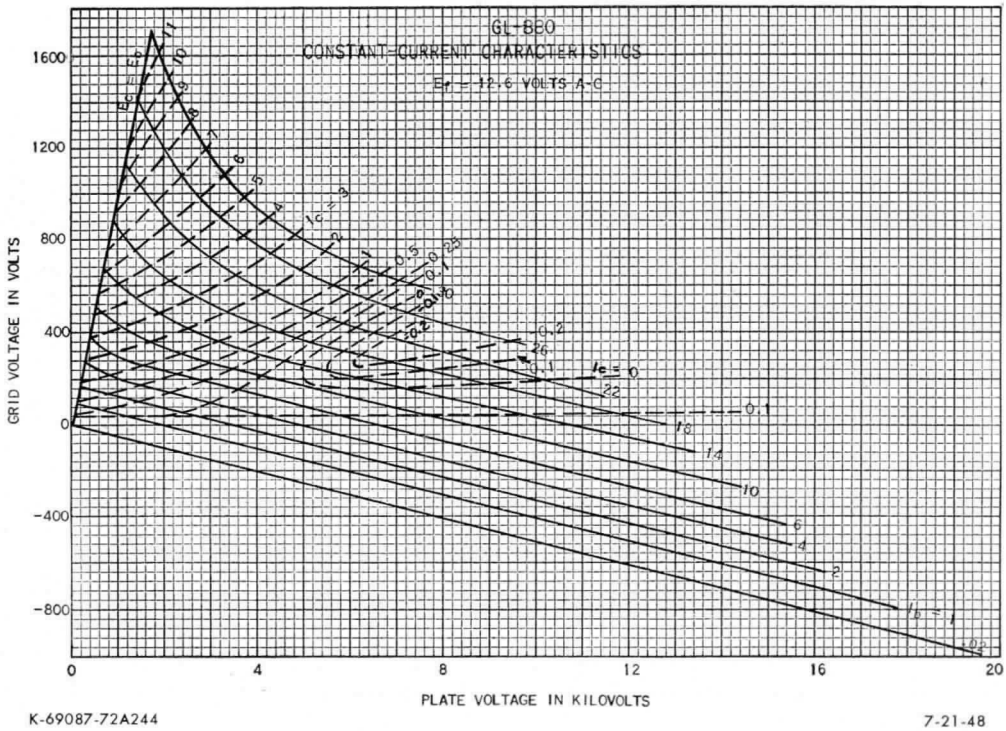

K-69087-72A244

7-21-48

GRID CHARACTERISTICS
$E_f = 12.6$ Volts A-c

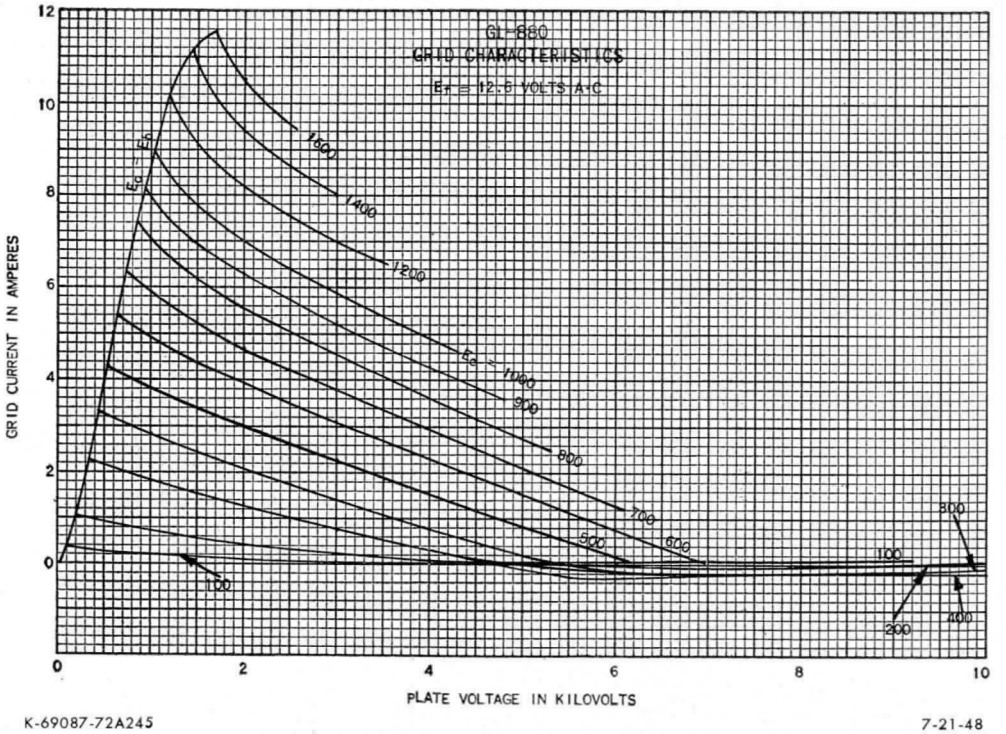

K-69087-72A245

7-21-48

PLATE CHARACTERISTICS

$E_f = 12.6$ Volts A-c

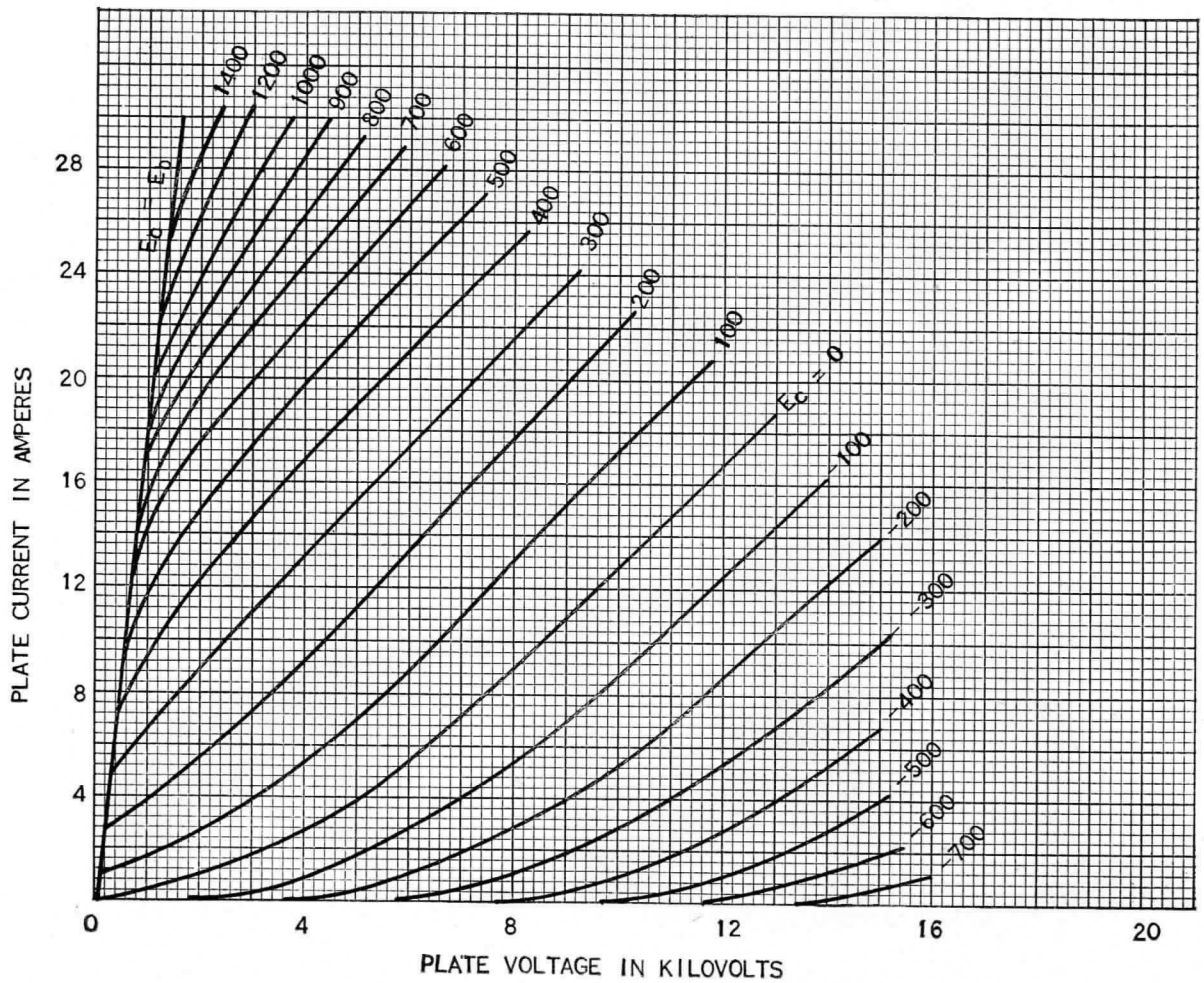

K-69087-72A243

7-21-48

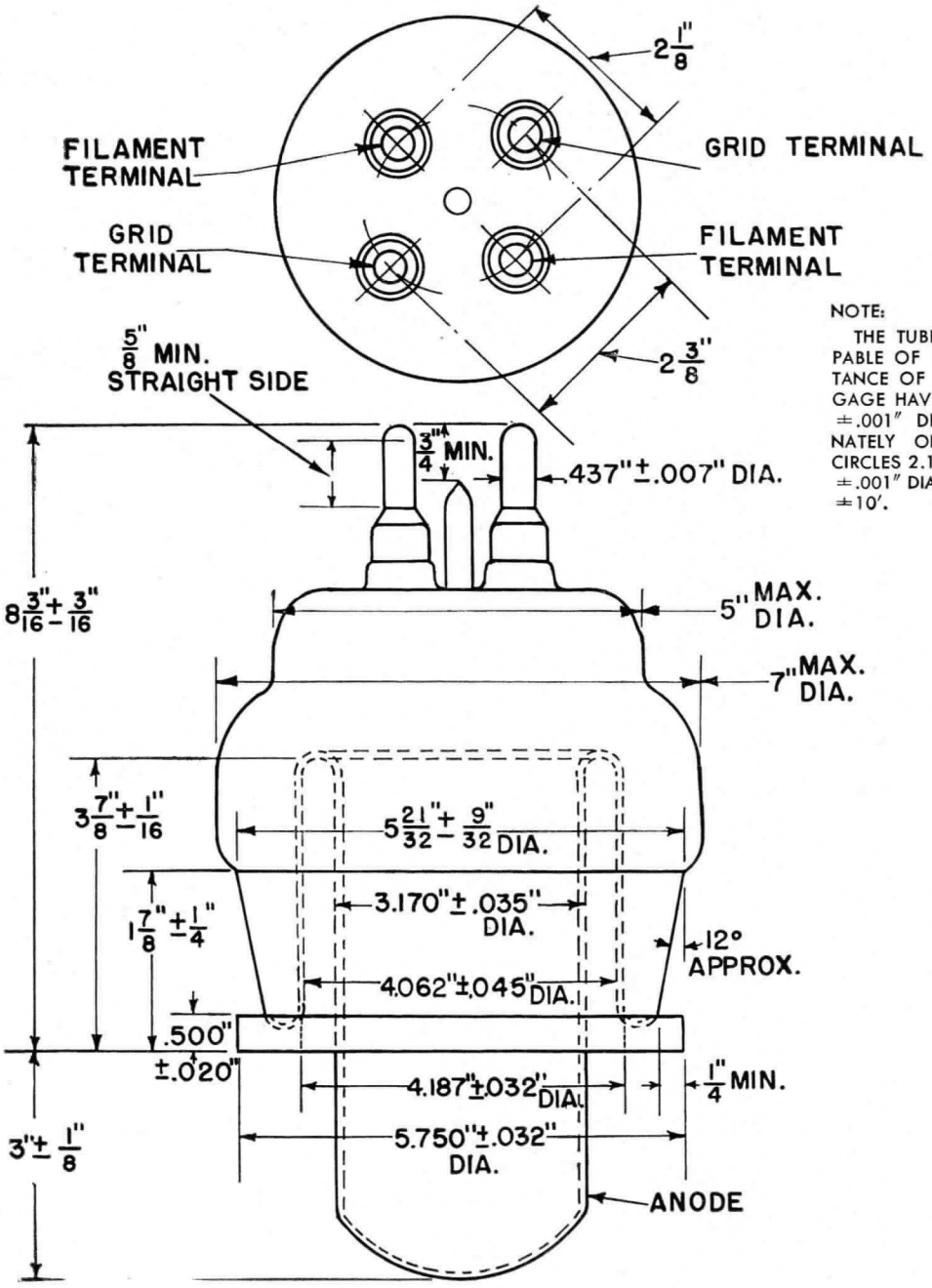

NOTE:

THE TUBE BASE SHALL BE CAPABLE OF ENTERING TO A DISTANCE OF 5/8" IN A FLAT PLATE GAGE HAVING FOUR HOLES .536" ±.001" DIA. ARRANGED ALTERNATELY ON TWO CONCENTRIC CIRCLES 2.125" ± .001" AND 2.375" ±.001" DIA. AT ANGLES OF 90° ±10'.

K-5965320

8-18-45

ELECTRONIC COMPONENTS DIVISION

GENERAL ELECTRIC

Schenectady 5, N. Y.

PRINTED IN U.S.A.

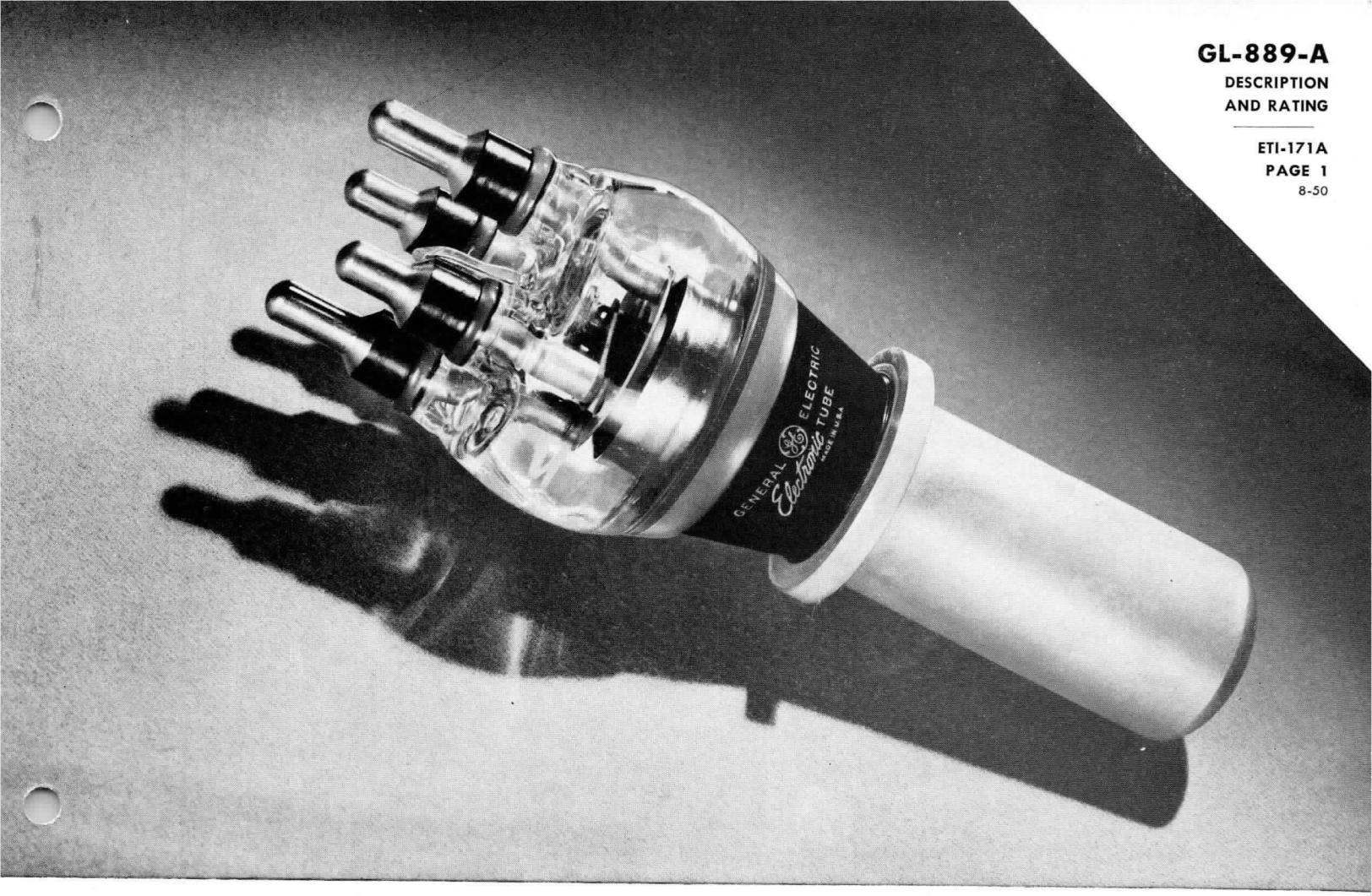

PLIOTRON

DESCRIPTION

The GL-889-A is a three-electrode power tube designed for use as a radio-frequency, amplifier, oscillator, or Class B modulator. The plate is water-cooled and is capable of dissipating 5 kilowatts, depending upon the class of service. The design of the mount and terminal connections minimizes lead inductance and makes the tube particularly suitable for high-frequency applications.

♦TECHNICAL INFORMATION

These data are for reference only. For design information refer to specifications.

GENERAL

Electrical Data	Minimum	Bogey	Maximum	
Filament voltage	—	11.0	11.5	volts
Filament current at bogey voltage	110	120	128	amperes
Filament starting current	—	—	180	amperes
Filament cold resistance	—	0.008	—	ohm
Amplification factor, at $I_b = 1.0$ amp.				
$E_c = -100$ volts	17	21	25	
Interelectrode capacitance				
Grid-plate	15	17.5	20	micromicrofarads
Grid-filament	19.2	23.3	27.4	micromicrofarads
Plate-filament	1.8	2.7	3.6	micromicrofarads

♦ Completely revised

GE Electronic TUBE

GENERAL ELECTRIC

Supersedes ETI-171 dated 4-45

TECHNICAL INFORMATION (CONT'D)

Mechanical Data

Mounting position	vertical, anode down
Type of cooling	water and forced air
Water flow on anode	6 gallons per minute
Maximum outgoing water temperature	70 centigrade
Air flow* (to bulb)	15 cubic feet per minute
Maximum glass temperature	150 centigrade
Net weight, approximate	2 pounds

*Air to be directed at the top of tube from a 3-inch-diameter nozzle.

MAXIMUM RATINGS AND TYPICAL OPERATING CONDITIONS

AUDIO-FREQUENCY POWER AMPLIFIER AND MODULATOR—CLASS B

	CCS*	
Maximum ratings, absolute values		
D-c plate voltage	8500	maximum volts
Maximum signal d-c plate current‡	2	maximum amperes
Maximum signal plate input‡	12	maximum kilowatts
Plate dissipation‡	5	maximum kilowatts

Typical operation	CCS*			
Unless otherwise specified, values are for two tubes				
D-c plate voltage	5000	6000	7500	volts
D-c grid voltage	−180	−230	−300	volts
Peak a-f grid-to-grid voltage	1460	1680	1700	volts
Zero signal d-c plate current	0.4	0.4	0.4	ampere
Maximum signal d-c plate current	3.2	3.6	3.2	amperes
Effective load resistance, plate-to-plate	2520	3680	5000	ohms
Maximum signal driving power, approximate	170	180	150	watts
Maximum signal power output, approximate	8.8	12	15	kilowatts

‡Averaged over any audio-frequency cycle of sine-wave form.

RADIO-FREQUENCY POWER AMPLIFIER—CLASS B

Carrier conditions per tube for use with a maximum modulation factor of 1.0

	CCS*	
Maximum ratings, absolute values		
D-c plate voltage	8500	maximum volts
D-c plate current	1.0	maximum ampere
Plate input	7.5	maximum kilowatts
Plate dissipation	5	maximum kilowatts

Typical operation	CCS*		
D-c plate voltage	6000	7500	volts
D-c grid voltage	−250	−300	volts
Peak r-f grid voltage	460	500	volts
D-c plate current	0.9	0.9	ampere
D-c grid current, approximate	0.003	0.005	ampere
Driving power, approximate‖	95	80	watts
Power output, approximate	1.5	2	kilowatts

‖ At crest of audio-frequency cycle with modulation factor of 1.0.

PLATE-MODULATED RADIO-FREQUENCY POWER AMPLIFIER—CLASS C TELEPHONY

Carrier conditions per tube for use with a maximum modulation factor of 1.0

	CCS**	
Maximum ratings, absolute values		
D-c plate voltage	6000	maximum volts
D-c grid voltage	1000	maximum volts
D-c plate current	1.0	maximum ampere
D-c grid current	0.25	maximum ampere
Plate input	6	maximum kilowatts
Plate dissipation	3	maximum kilowatts

TECHNICAL INFORMATION (CONT'D)

Typical operation	CCS*		
D-c plate voltage	5000	6000	volts
D-c grid voltage	−800	−900	volts
Peak r-f grid voltage	1300	1420	volts
D-c plate current	0.9	1.0	ampere
D-c grid current, approximate	0.12	0.1	ampere
Driving power, approximate	155	140	watts
Power output, approximate	2.75	4	kilowatts

RADIO-FREQUENCY POWER AMPLIFIER AND OSCILLATOR—CLASS C TELEGRAPHY

Key-down Conditions Per Tube Without Amplitude Modulation

Maximum ratings, absolute values	CCS*	
D-c plate voltage	8500	maximum volts
D-c grid voltage	−1000	maximum volts
D-c plate current	2	maximum amperes
D-c grid current	0.25	maximum ampere
Plate input	16	maximum kilowatts
Plate dissipation	5	maximum kilowatts

Typical operation		CCS*		
D-c plate voltage	5000	6000	7500	volts
D-c grid voltage	−500	−600	−800	volts
Peak r-f grid voltage	1200	1460	1830	volts
D-c plate current	1.5	1.8	2	amperes
D-c grid current, approximate	0.19	0.21	0.24	ampere
Driving power, approximate	220	290	400	watts
Power output, approximate	5	7	10	kilowatts

Modulation essentially negative may be used if the positive peak of the envelope does not exceed 115 per cent of the carrier conditions.

**CCS—Continuous commercial service.

APPLICATION NOTES

*GL-889-A can be operated at maximum ratings in all classes of service at frequencies as high as 50 megacycles. The tube may be operated at higher frequencies provided the maximum values of plate voltage and power input are reduced as the frequency is raised. (Other maximum ratings are the same as shown under TECHNICAL INFORMATION.)

The tabulation below shows the highest percentage of maximum plate voltage and power input that can be used up to 150 megacycles for the various classes of service. Special attention should be given to adequate ventilation of the bulb at these frequencies.

Frequency	50	100	150	megacycles
Percentage of maximum rated plate voltage and plate input				
Class B	100	83	72	per cent
Class C plate modulated	100	75	60	per cent
Class C unmodulated—maximum plate voltage	100	78	65	per cent
Class C unmodulated—maximum plate input	100	70	50	per cent

♦GL-889-A TYPICAL GRID-PLATE TRANSFER CHARACTERISTIC $E_f = 11$ VOLTS A-C

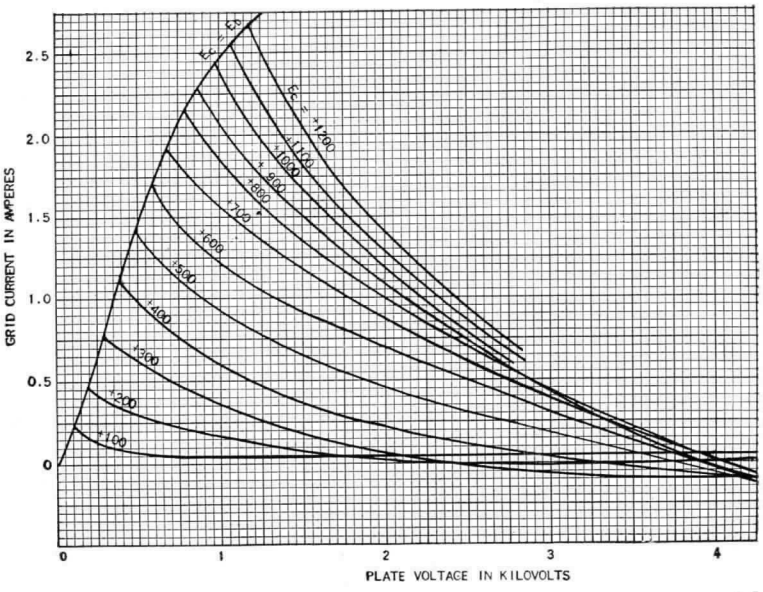

K-8074636
♦Revised

3-5-48

■GL-889-A EMISSION CHARACTERISTICS

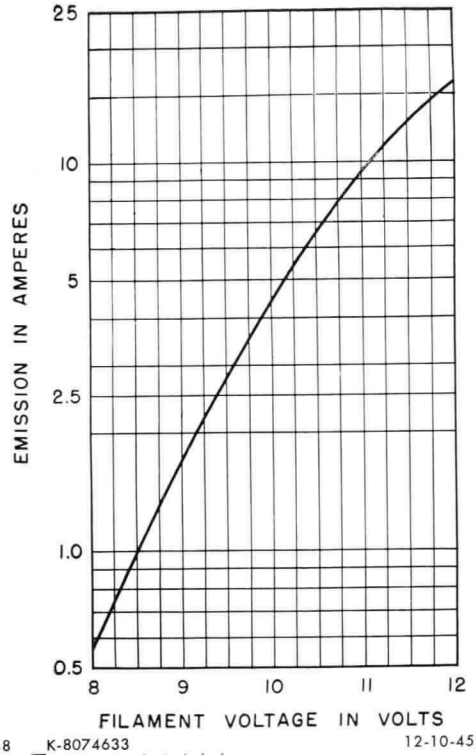

K-8074633
■Not previously included.

12-10-45

♦GL-889-A AVERAGE PLATE CHARACTERISTIC

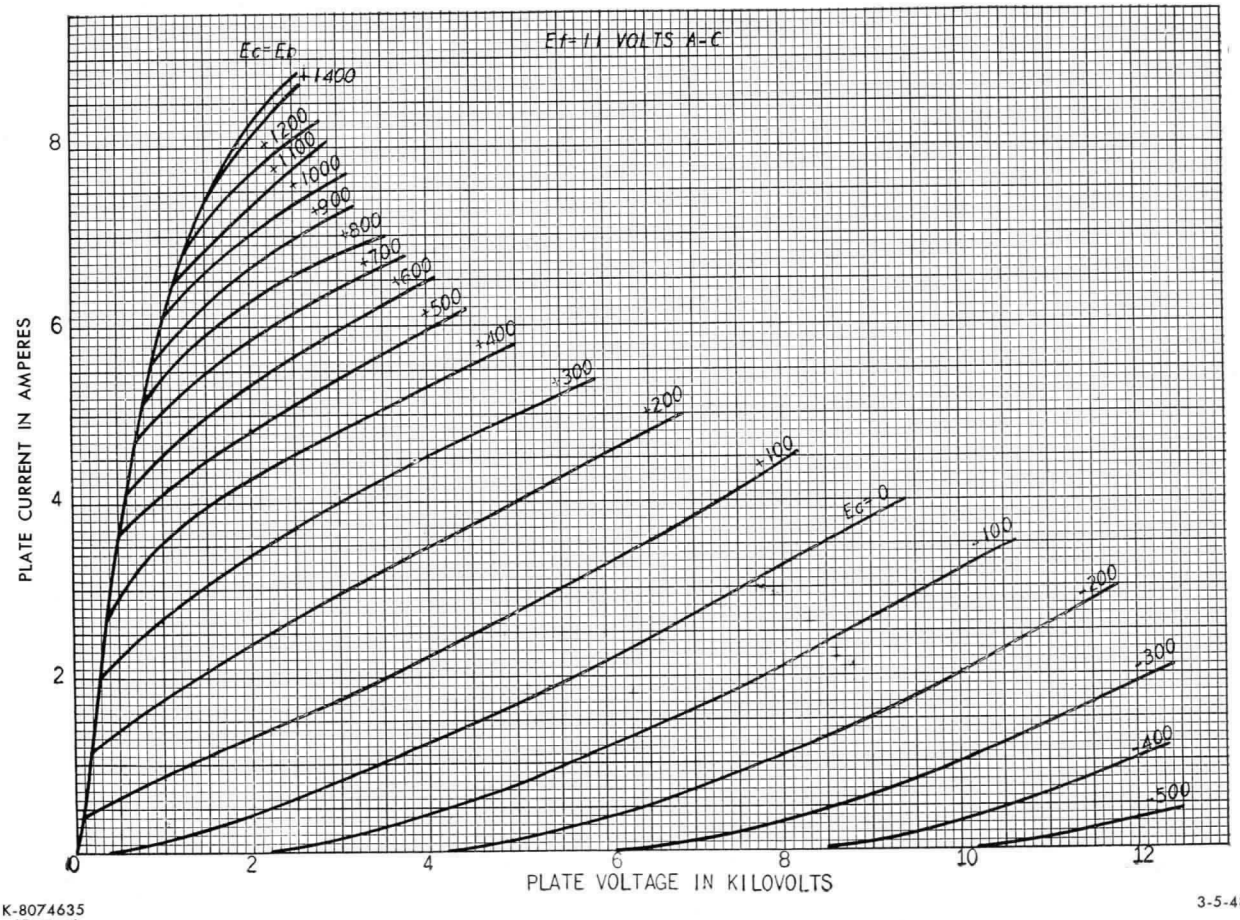

K-8074635
♦Revised

3-5-48

■ GL-889-A AVERAGE FILAMENT CHARACTERISTICS

COLD RESISTANCE = 0.008 OHM

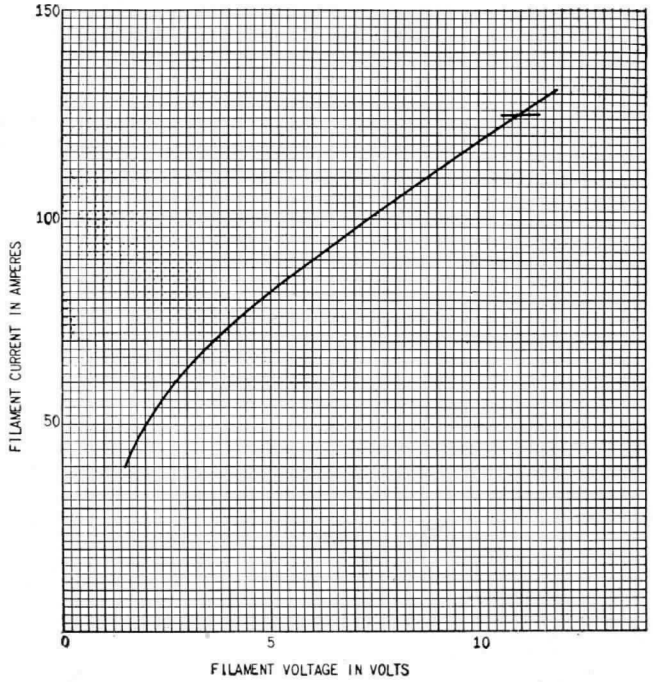

K-8074634
■ Not previously included

1-9-46

♦ GL-889-A CHARACTERISTIC

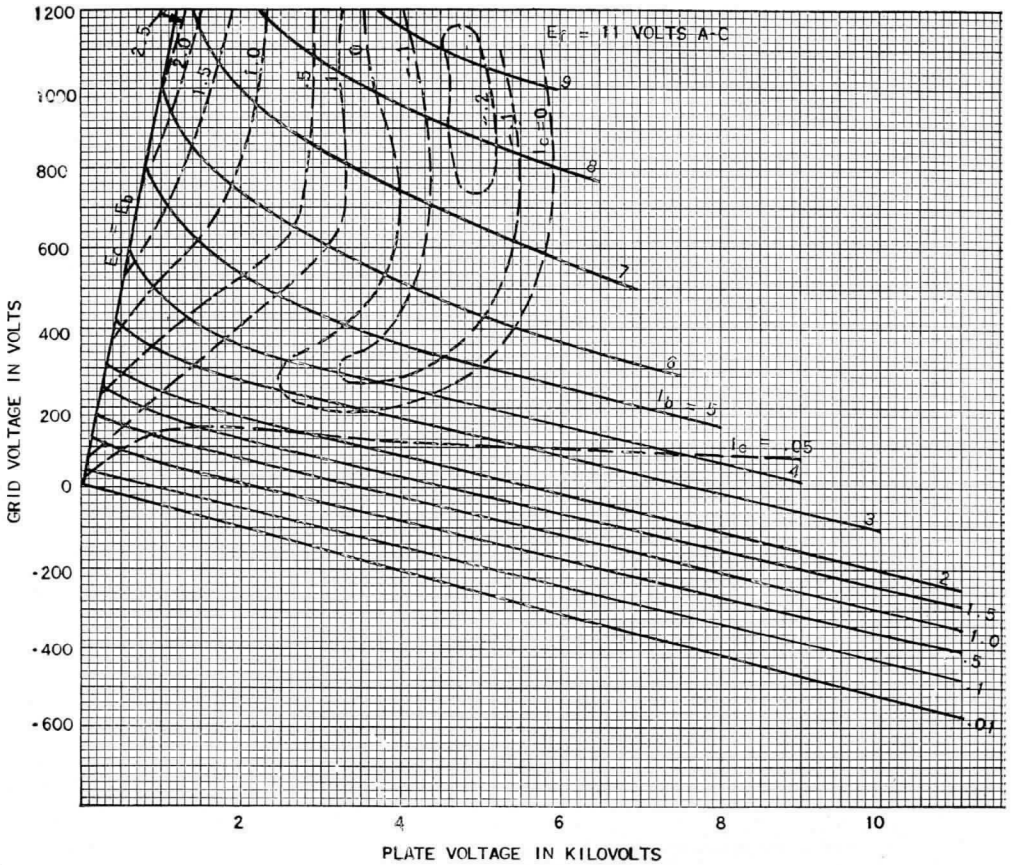

K-8074637
♦ Revised

3-5-48

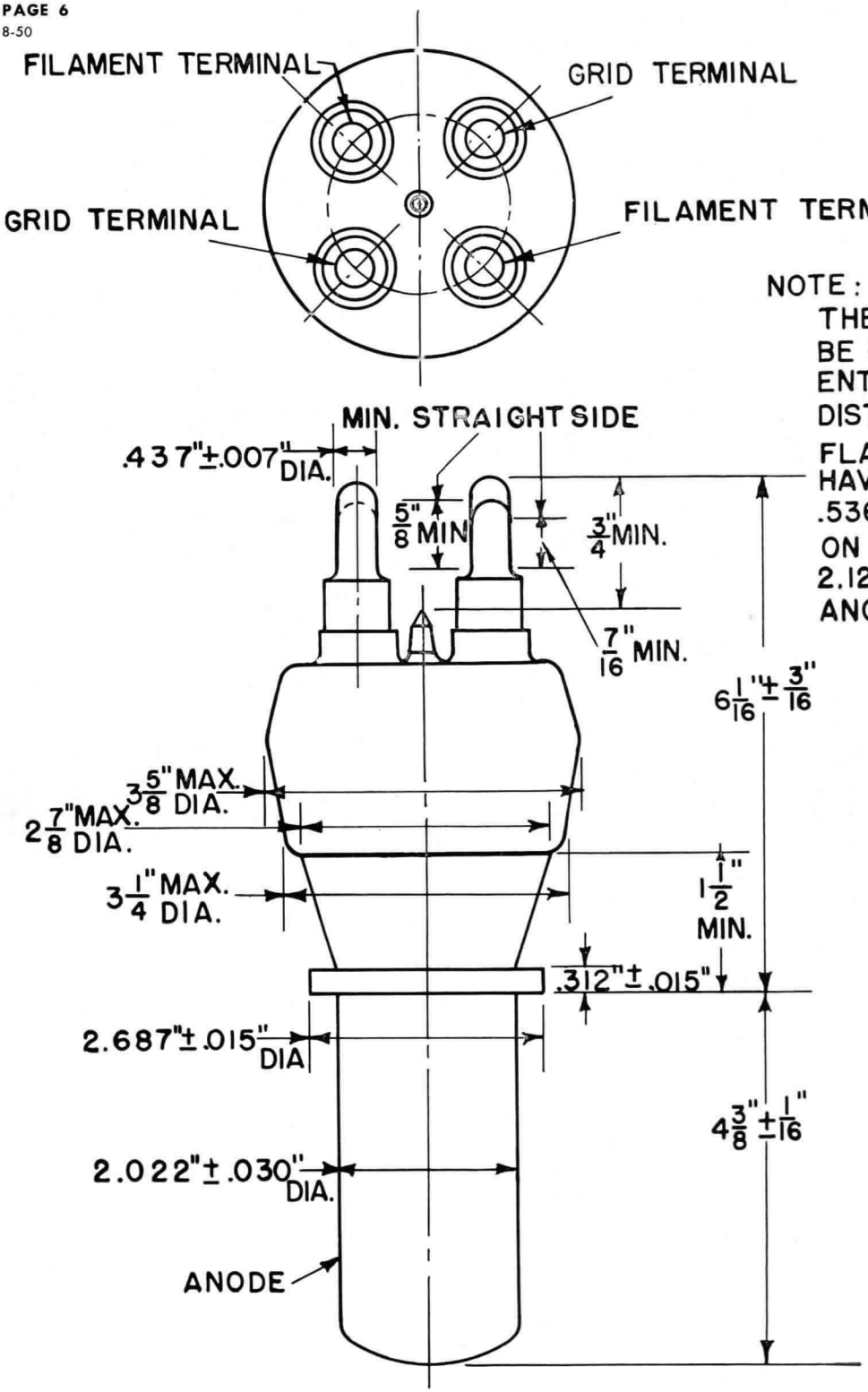

NOTE:
THE TUBE BASE SHALL BE CAPABLE OF ENTERING TO A DISTANCE OF $\frac{5}{8}$" IN A FLAT PLATE GAUGE HAVING FOUR HOLES .536" ± .001" DIA. ARRANGED ON A CIRCLE OF 2.125" ± .001" DIA. AT ANGLES OF 90° ± 10'

K-5344713

GL-889-A OUTLINE

3-16-45

Electronics Department

GENERAL ELECTRIC

Schenectady, N. Y.

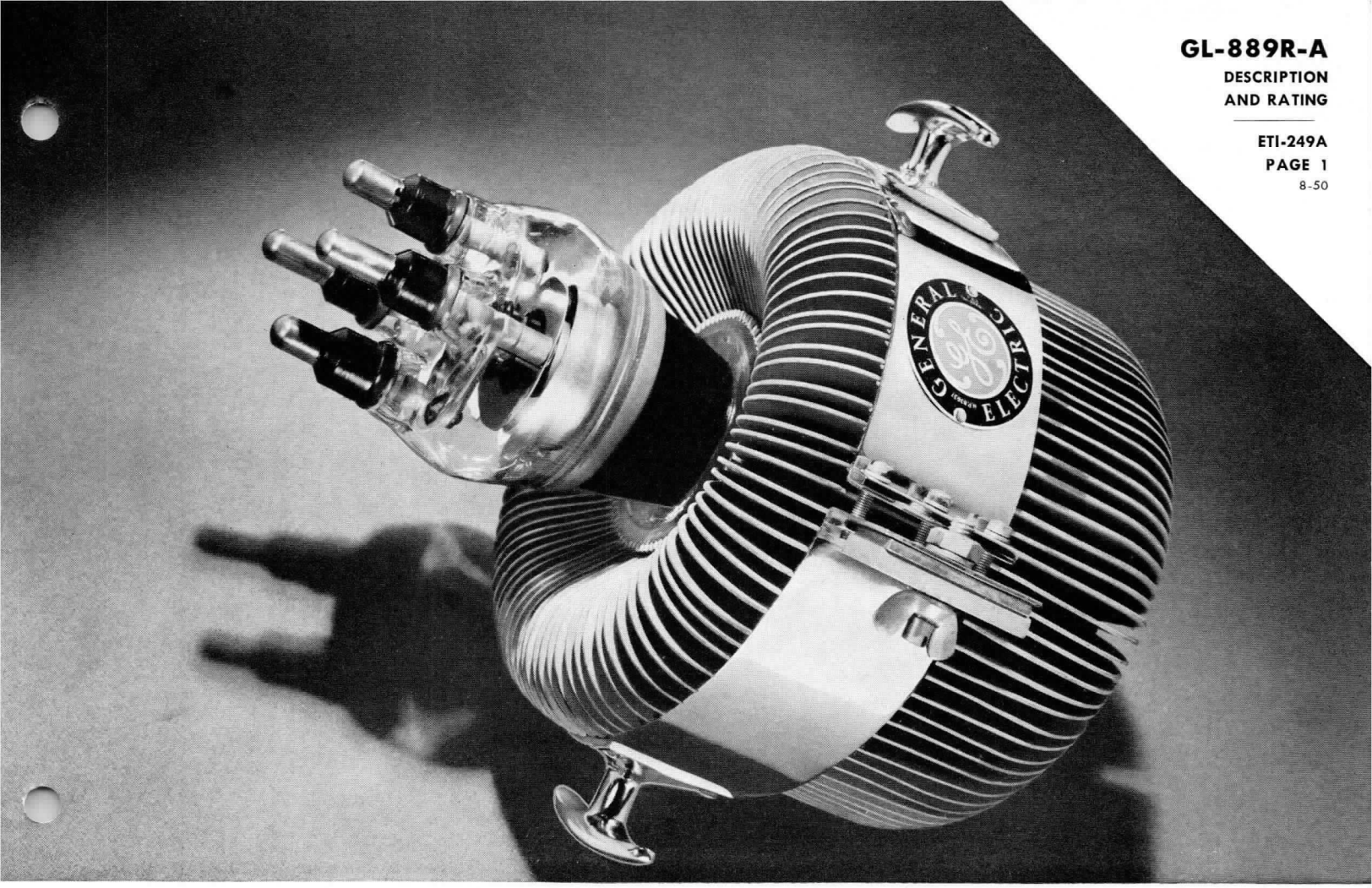

PLIOTRON

DESCRIPTION

The GL-889R-A is a three-electrode power tube designed for use as a radio-frequency amplifier, oscillator, or Class B modulator. The plate is fitted with a special radiator and cooling is obtained by forced air. The design of the mount and terminal connections minimizes lead inductance and makes the tube particularly suitable for high-frequency applications. The GL-889R-A can be operated at maximum ratings at frequencies as high as 40 megacycles and up to 100 megacycles at reduced ratings.

♦ TECHNICAL INFORMATION

These data are for reference only. For design information refer to specifications.

GENERAL

Electrical Data	Minimum	Bogey	Maximum	
Filament voltage	—	11.0	11.5	volts
Filament current at bogey voltage	110	120	128	amperes
Filament starting current	—	—	180	amperes
Filament cold resistance	—	0.008	—	ohm
Amplification factor, at $E_b = 1.0$ amp.				
$E_c = -100$ volts	17	21	25	
Interelectrode capacitance				
Grid-plate	15.8	18.5	21.2	micromicrofarads
Grid-filament	19.2	23.3	27.4	micromicrofarads
Plate-filament	2.0	3.0	4.0	micromicrofarads

♦ Completely revised.

Electronic TUBE

GENERAL ELECTRIC

TECHNICAL INFORMATION (CONT'D)

Mechanical Data

Mounting position				vertical, anode down
Type of cooling				forced air
Maximum incoming air temperature				45 centigrade
Required air flow on anode				
Plate dissipation—kilowatts	5.0	4.0	3.0	
Air flow—cubic feet per minute	500	390	300	
Static pressure—inches water	0.7	0.5	0.35	
Required air flow to bulb*				15 cubic feet per minute
Maximum glass temperature				150 centigrade
Net weight, approximate				35 pounds

*Air to be directed at the top of tube from a 3-inch-diameter nozzle. Cooling air may be obtained by directing the required air flow at the top of the glass envelope through a 3-inch-diameter nozzle, or by deflecting air at the top of the bulb from the radiator-cooling-air stream.

MAXIMUM RATINGS AND TYPICAL OPERATING CONDITIONS

AUDIO-FREQUENCY POWER AMPLIFIER AND MODULATOR—CLASS B

Maximum ratings, absolute values			CCS**	
D-c plate voltage			8500	maximum volts
Maximum signal d-c plate current‡			2	maximum amperes
Maximum signal plate input‡			12	maximum kilowatts
Plate dissipation†			5	maximum kilowatts
Typical operation		CCS*		
Unless otherwise specified, values are for two tubes				
D-c plate voltage	5000	6000	7500	volts
D-c grid voltage	−180	−230	−300	volts
Peak a-f grid-to-grid voltage	1460	1680	1700	volts
Zero signal d-c plate current	0.4	0.4	0.4	amperes
Maximum signal d-c plate current	3.2	3.6	3.2	amperes
Effective load resistance, plate-to-plate	2520	3680	5000	ohms
Maximum signal driving power, approximate	170	180	150	watts
Maximum signal power output, approximate	8.8	12	15	kilowatts

†Averaged over any audio-frequency cycle of sine-wave form.

RADIO-FREQUENCY POWER AMPLIFIER—CLASS B

Carrier conditions per tube for use with a maximum modulation factor of 1.0

Maximum ratings, absolute values		CCS**	
D-c plate voltage		8500	maximum volts
D-c plate current		1.0	maximum ampere
Plate input		7.5	maximum kilowatts
Plate dissipation		5	maximum kilowatts
Typical operation		CCS**	
D-c plate voltage	6000	7500	volts
D-c grid voltage	−250	−300	volts
Peak r-f grid voltage	460	500	volts
D-c plate current	0.9	0.9	ampere
D-c grid current, approximate	0.003	0.005	ampere
Driving power, approximate‖	95	80	watts
Power output, approximate	1.5	2	kilowatts

‖At crest of audio-frequency cycle with modulation factor of 1.0.

PLATE-MODULATED RADIO-FREQUENCY POWER AMPLIFIER—CLASS C TELEPHONY

Carrier conditions per tube for use with a maximum modulation factor of 1.0

Maximum ratings, absolute values	CCS**	
D-c plate voltage	6000	maximum volts
D-c grid voltage	−1000	maximum volts
D-c plate voltage	1.0	maximum ampere
D-c grid current	0.25	maximum ampere
Plate input	6	maximum kilowatts
Plate dissipation	3	maximum kilowatts

TECHNICAL INFORMATION (CONT'D)

Typical operation	CCS**		
D-c plate voltage	5000	6000	volts
D-c grid voltage	−800	−900	volts
Peak r-f grid voltage	1300	1420	volts
D-c plate current	0.9	1.0	ampere
D-c grid current, approximate	0.12	0.1	ampere
Driving power, approximate	155	140	watts
Power output, approximate	2.75	4	kilowatts

RADIO-FREQUENCY POWER AMPLIFIER AND OSCILLATOR—CLASS C TELEGRAPHY

Key-down conditions per tube without amplitude modulation

Maximum ratings, absolute values	CCS**	
D-c plate voltage	8500	maximum volts
D-c grid voltage	−1000	maximum volts
D-c plate current	2	maximum amperes
D-c grid current	0.25	maximum ampere
Plate input	16	maximum kilowatts
Plate dissipation	5	maximum kilowatts

Typical operation	CCS**			
D-c plate voltage	5000	6000	7500	volts
D-c grid voltage	−500	−600	−800	volts
Peak r-f grid voltage	1200	1460	1830	volts
D-c plate current	1.5	1.8	2	amperes
D-c grid current, approximate	0.19	1.21	0.24	amperes
Driving power, approximate	220	290	400	watts
Power output, approximate	5	7	10	kilowatts

Modulation essentially negative may be used if the positive peak of the envelope does not exceed 115 per cent of the carrier conditions.

**CCS—Continuous Commercial Service.

APPLICATION NOTES

*The GL-889R-A can be operated at maximum ratings in all classes of service at frequencies as high as 40 megacycles. The tube may be operated at higher frequencies provided the maximum values of plate voltage and power input are reduced as the frequency is raised. (Other maximum ratings are the same as shown under TECHNICAL INFORMATION.) The tabulation below shows the highest percentage of maximum plate voltage and power input that can be used up to 100 megacycles for the various classes of service. Special attention should be given to adequate ventilation of the bulb at these frequencies.

Frequency	40	65	100	megacycles
Percentage of maximum rated plate voltage and plate input				
Class B	100	85	72	per cent
Class C plate modulated	100	78	60	per cent
Class C unmodulated—maximum plate voltage	100	87	65	per cent
Class C unmodulated—maximum plate input	100	73	50	per cent

■ GL-889R-A
TYPICAL GRID-PLATE TRANSFER CHARACTERISTIC
$E = 11_f$ VOLTS A-C

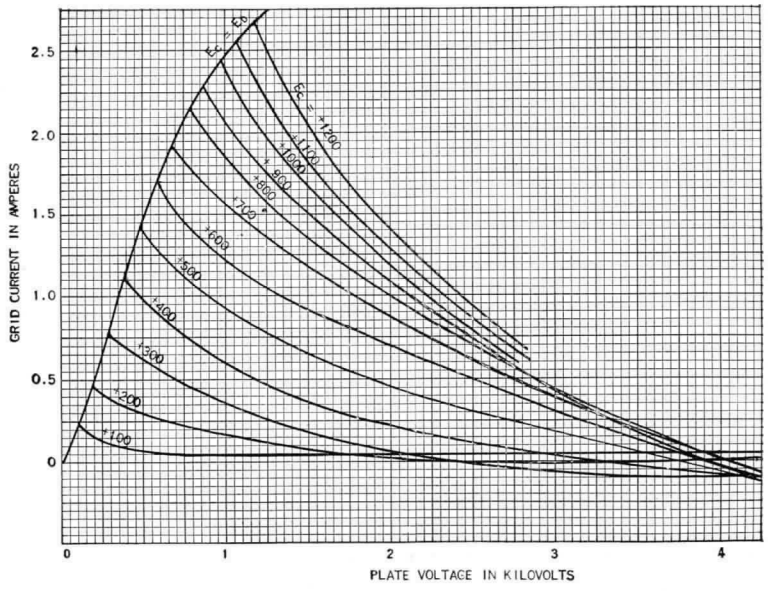

K-8074636
■ Revised

GL-889R-A EMISSION CHARACTERISTICS

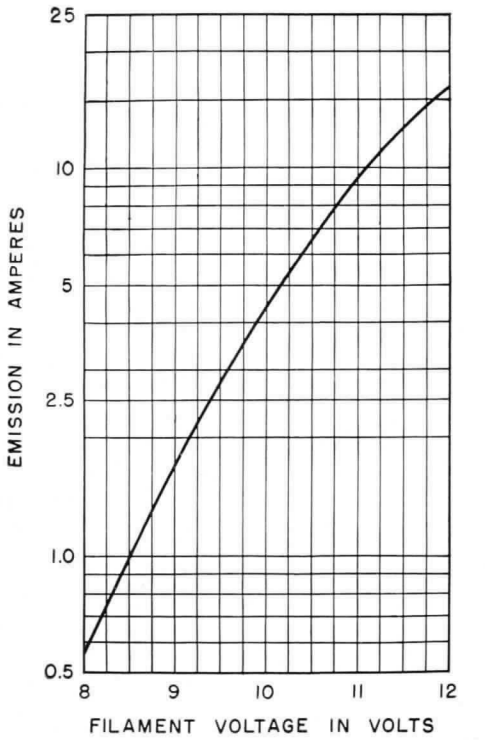

3-5-48 K-8074633 12-10-45

■ GL-889R-A
AVERAGE PLATE CHARACTERISTIC

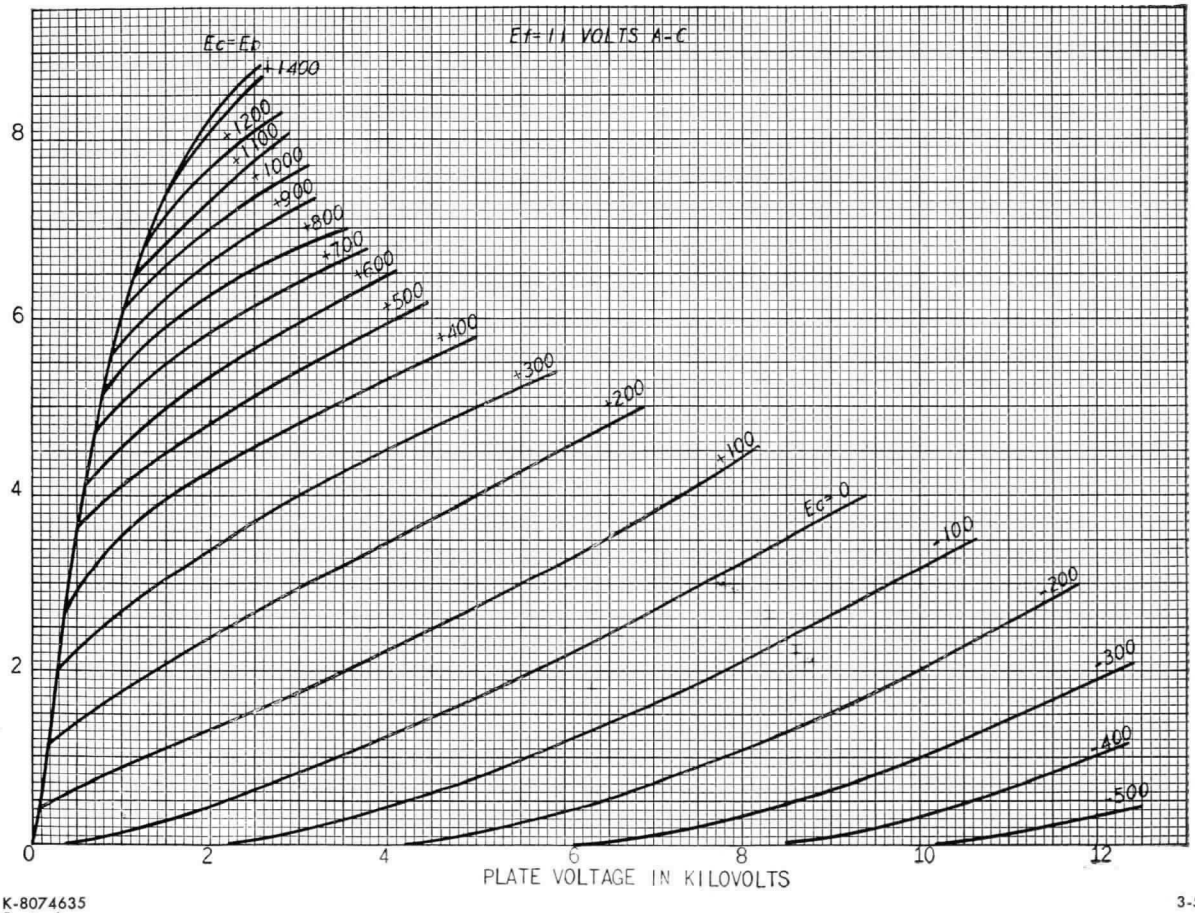

K-8074635
■ Revised

3-5-48

GL-889R-A AVERAGE FILAMENT CHARACTERISTICS
COLD RESISTANCE = 0.008 OHM

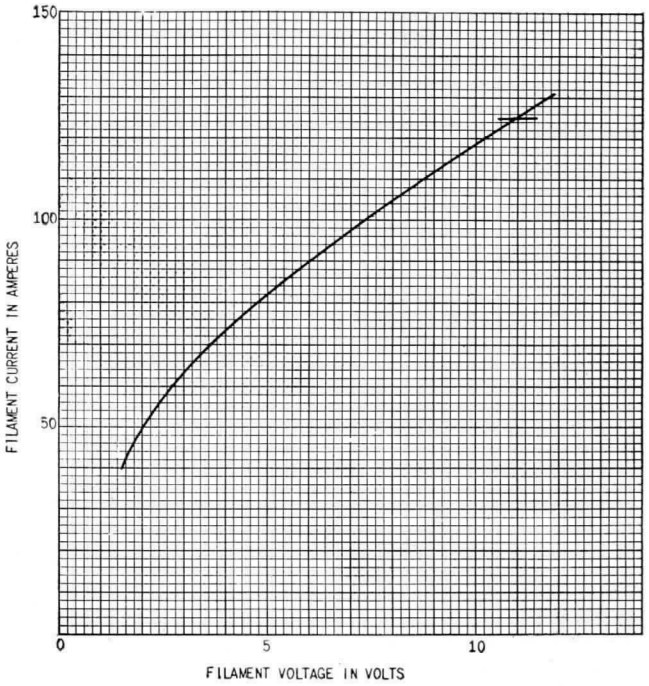

K-8074634

1-9-46

■ GL-889R-A CHARACTERISTIC

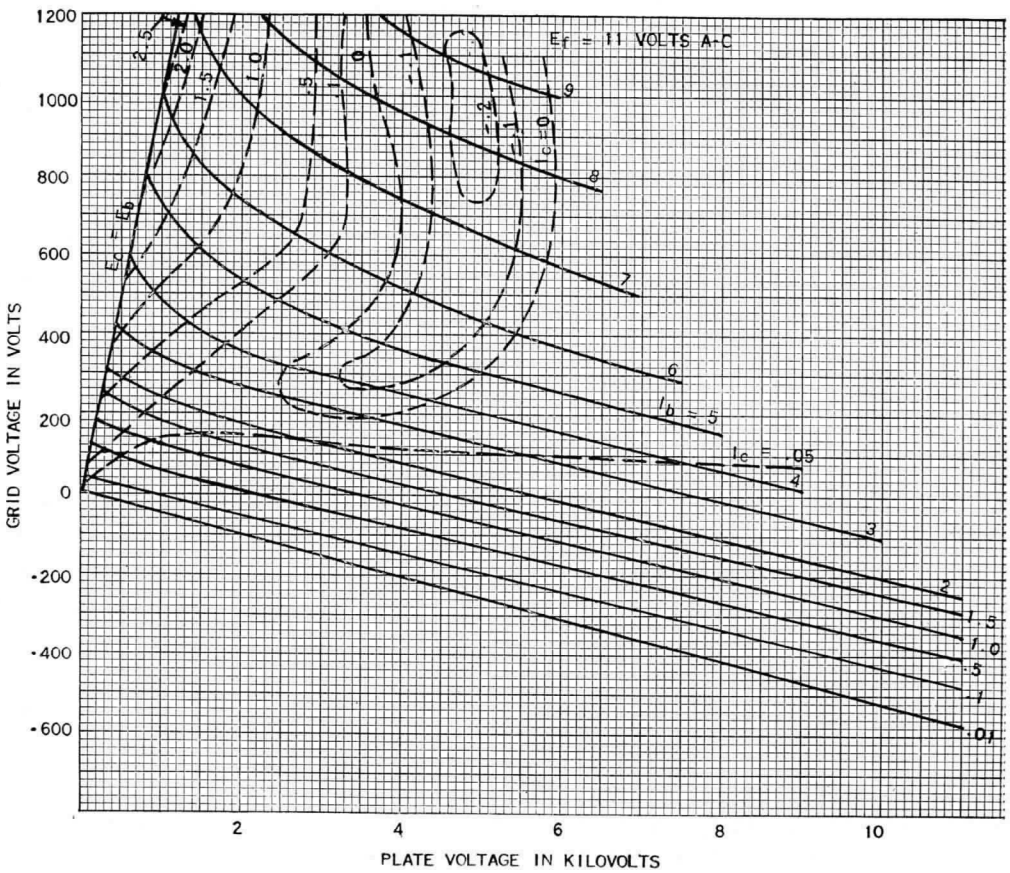

K-8074637
■Revised

3-5-48

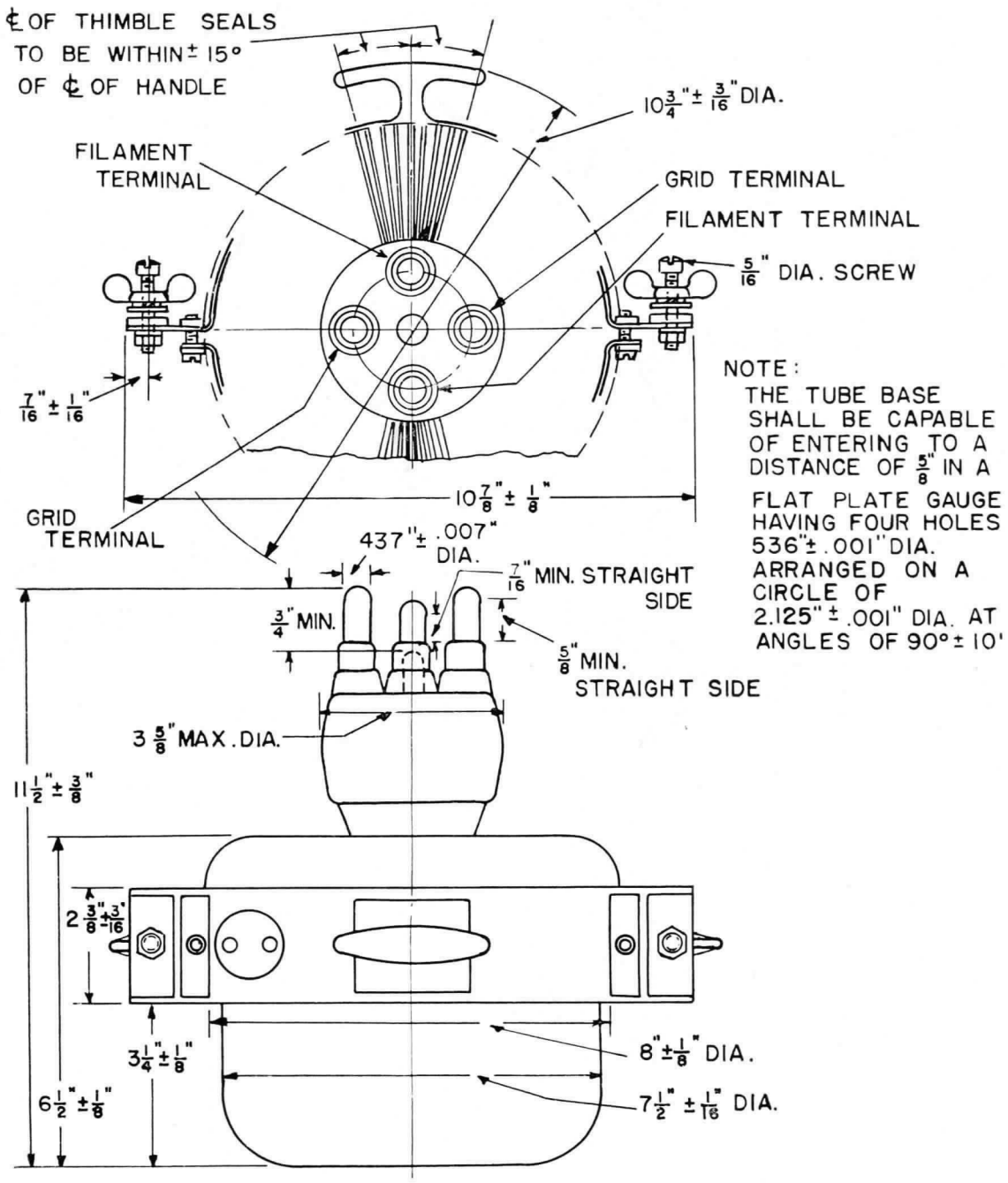

OUTLINE
GL-889R-A PLIOTRON

K-6966908

3-16-45

Electronics Department

GENERAL ELECTRIC

Schenectady, N. Y.

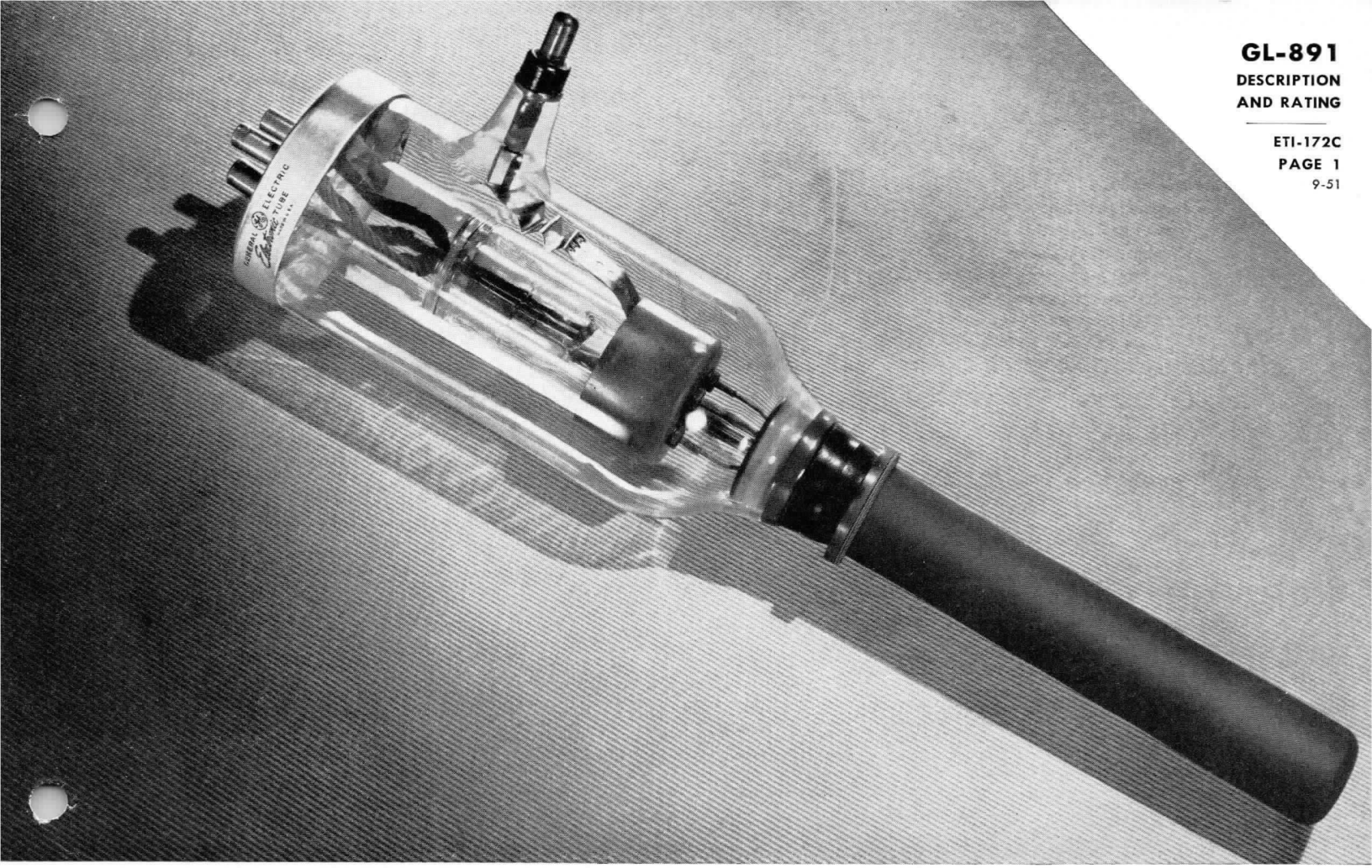

PLIOTRON

DESCRIPTION

The GL-891 is a three-electrode transmitting tube of the double-filament type for use as a radio-frequency power amplifier, oscillator, Class A modulator and Class B modulator. The construction of the filament permits operation from two-phase or single-phase alternating-current as well as from direct current, for all classes of service. The plate is water-cooled and is capable of dissipating 6 kilowatts, depending on the service in which the tube is used. The GL-891 can be operated at maximum ratings at frequencies as high as 1.6 megacycles and up to 20 megacycles at reduced ratings.

TECHNICAL INFORMATION

These data are for reference only. For design information refer to specifications.

GENERAL

Electrical Data	Minimum	Bogey	Maximum	
Filament voltage	—	22	23	volts
Filament current at bogey voltage	57	60	62	amperes
Filament starting current	—	—	120	amperes
Filament cold resistance	—	0.031	—	ohm
Amplification factor				
$E_c = -500$ volts, $I_b = 0.75$ ampere	7.6	8.5	9.4	
Interelectrode capacitances:				
Grid-plate	24	27	31	micromicrofarads
Grid-filament	15	19	23	micromicrofarads
Plate-filament	1	2	3	micromicrofarads

Electronic TUBE

GENERAL ELECTRIC

Supersedes ETI-172B dated 8-50

TECHNICAL INFORMATION (CONT'D)

Mechanical Data

Mounting position				vertical, anode down
Type of cooling				water
Water flow on anode	3	—	8	gallons per minute
Maximum outgoing water temperature	—	—	70	°centigrade
Maximum glass temperature	—	—	150	°centigrade
Net weight, approximate	—	—	3½	pounds

MAXIMUM RATINGS AND TYPICAL OPERATING CONDITIONS

AUDIO FREQUENCY POWER AMPLIFIER AND MODULATOR—CLASS B

Maximum ratings, absolute values	CCS*	
D-c plate voltage	15,000	volts maximum
Maximum signal d-c plate current‡	2.0	amperes maximum
Maximum signal plate input‡	20,000	watts maximum
Plate dissipation‡	5,000	watts maximum

Typical operation (unless otherwise specified, values are for two tubes).	CCS*			
D-c plate voltage	6,000	10,000	12,500	volts
D-c grid voltage	−630	−1,100	−1,450	volts
Peak a-f grid-to-grid voltage	2,060	3,060	3,760	volts
Zero signal d-c plate current	0.5	0.5	0.4	ampere
Maximum signal d-c plate current	2.5	2.4	2.5	amperes
Effective load resistance, plate-to-plate	5,000	10,000	12,000	ohms
Maximum signal driving power, approximate	110	225	245	watts
Maximum signal power output, approximate	8,000	16,000	22,000	watts

*Continuous Commercial Service.
‡Averaged over any audio-frequency cycle of sine-wave form.

RADIO-FREQUENCY POWER AMPLIFIER AND OSCILLATOR—CLASS C TELEGRAPHY

(Key-down Conditions Per Tube Without Amplitude Modulation)‖

Maximum ratings, absolute values	CCS*	
D-c plate voltage	12,000	volts maximum
D-c grid voltage	−3,000	volts maximum
D-c plate current	2.0	amperes maximum
D-c grid current	0.15	ampere maximum
Plate input	18,000	watts maximum
Plate dissipation	6,000	watts maximum

Typical operation	CCS*		
D-c plate voltage	8,000	10,000	volts
D-c grid voltage	−1,800	−2,000	volts
Peak r-f grid voltage	2,400	2,700	volts
D-c plate current	1.15	1.33	amperes
D-c grid current, approximate	0.09	0.14	ampere
Driving power, approximate	215	375	watts
Power output, approximate	6,500	10,000	watts

*Continuous Commercial Service.
‖Modulation essentially negative may be used if the positive peak of the envelope does not exceed 115% of the carrier conditions.

APPLICATION NOTES

GL-891 can be operated at maximum ratings in all classes of service at frequencies as high as 1.6 megacycles. The tube may be operated at higher frequencies provided the maximum values of plate voltage and power input are reduced as the frequency is raised. (Other maximum ratings are the same as shown under MAXIMUM RATINGS and TYPICAL OPERATING CONDITIONS.) The tabulation shows the highest percentage of maximum plate voltage and power input that can be used up to 20 mc for the various classes of service. Special attention should be given to adequate ventilation of the bulb at these frequencies.

Frequency	1.6	7.5	20	megacycles
Percentage of maximum rated plate voltage and plate input, Class C, unmodulated	100	75	50	per cent

♦ GL-891

AVERAGE PLATE CHARACTERISTICS

$E_f = 22$ VOLTS A-C

SINGLE-PHASE EXCITATION

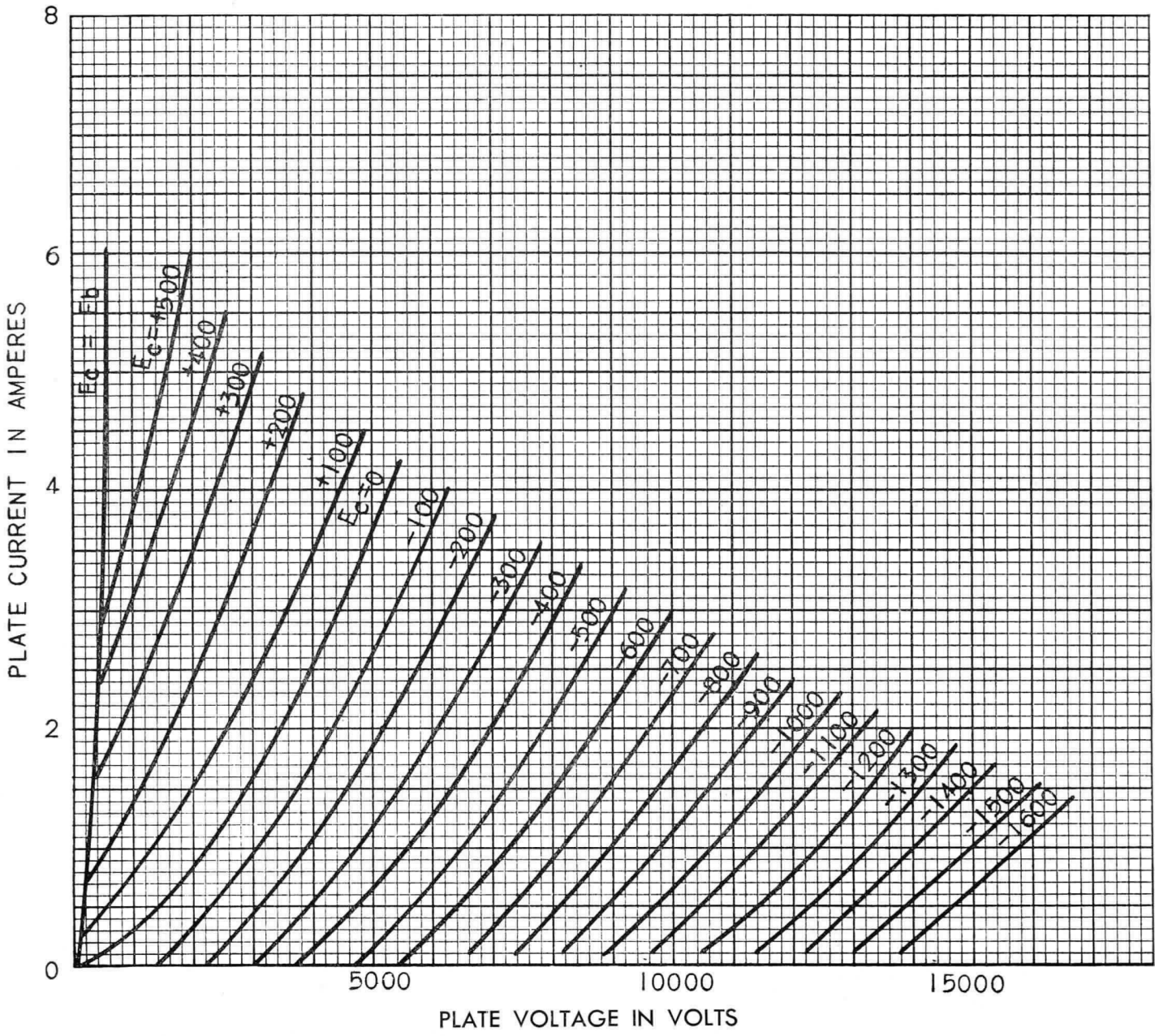

K-69087-72A104
♦Revised drawing.

1-11-51

♦ GL-891
AVERAGE GRID-PLATE TRANSFER CHARACTERISTICS
$E_f = 22$ VOLTS A-C
SINGLE-PHASE EXCITATION

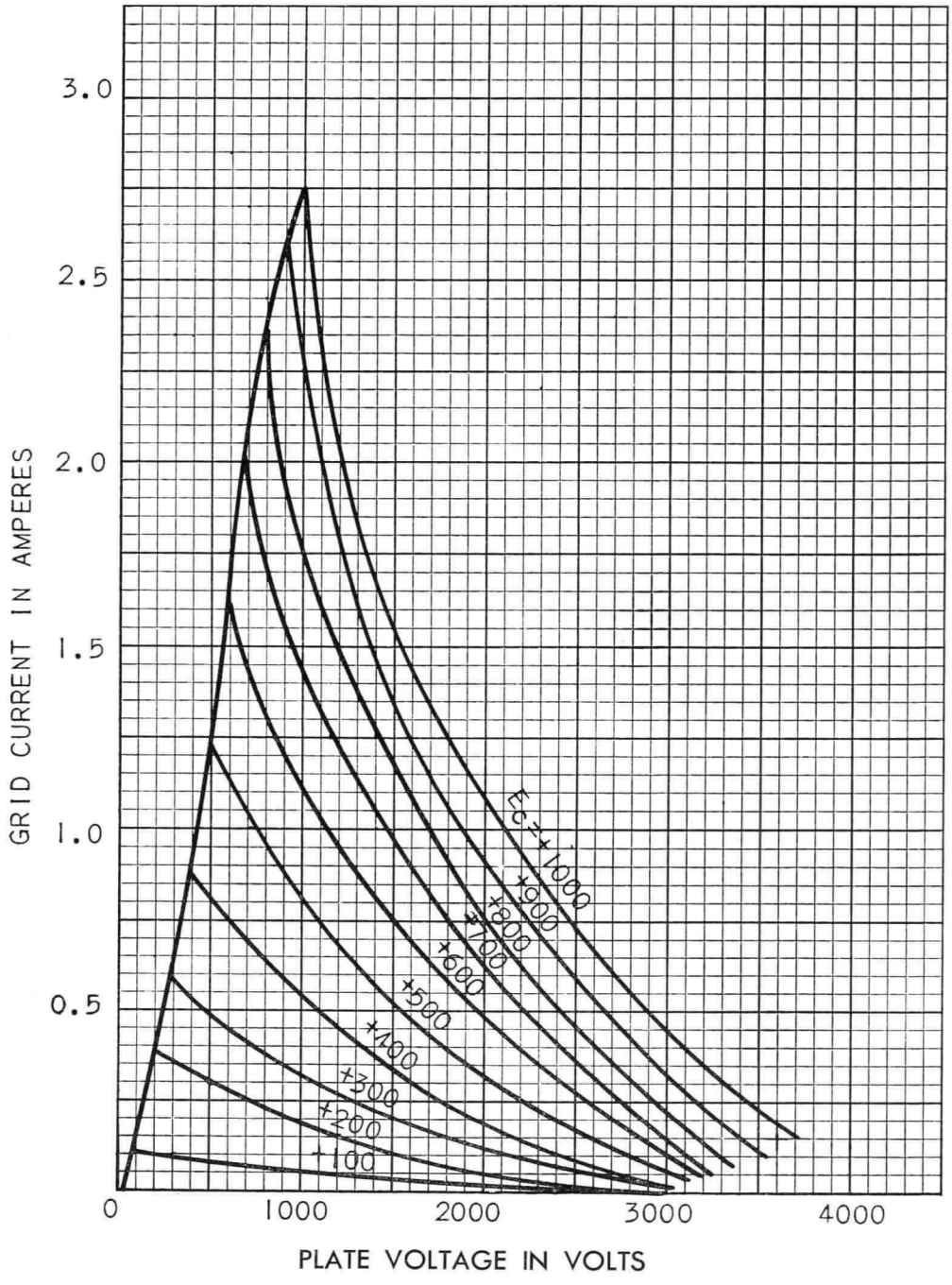

K-69087-72A445
♦Revised drawing.

1-11-51

◆ GL-891
AVERAGE CONSTANT-CURRENT CHARACTERISTICS
$E_f = 22$ VOLTS A-C
SINGLE-PHASE EXCITATION

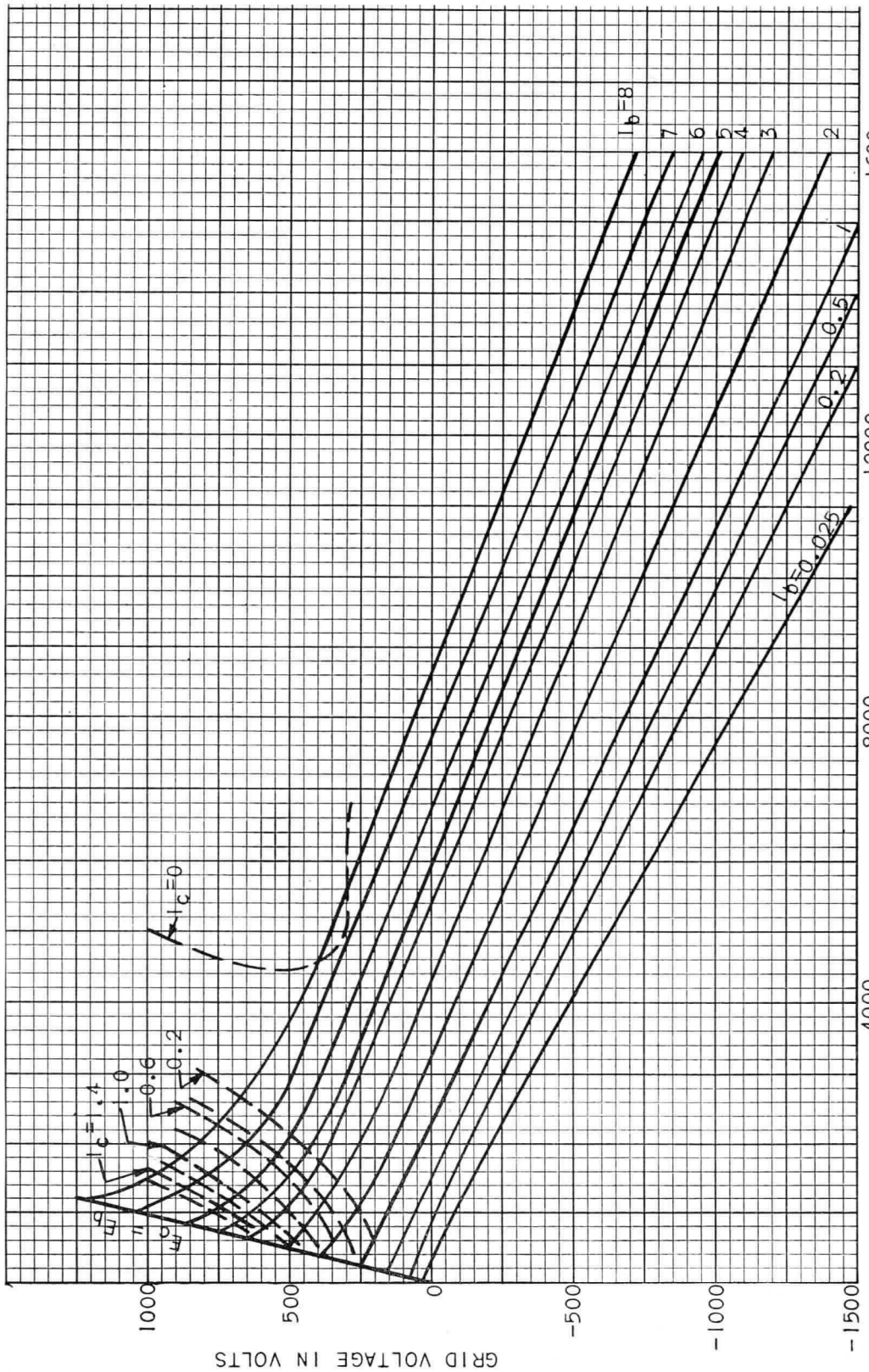

1-11-51

K-69087-72A447
◆Revised drawing.

♦ GL-891 AVERAGE FILAMENT EMISSION CHARACTERISTIC

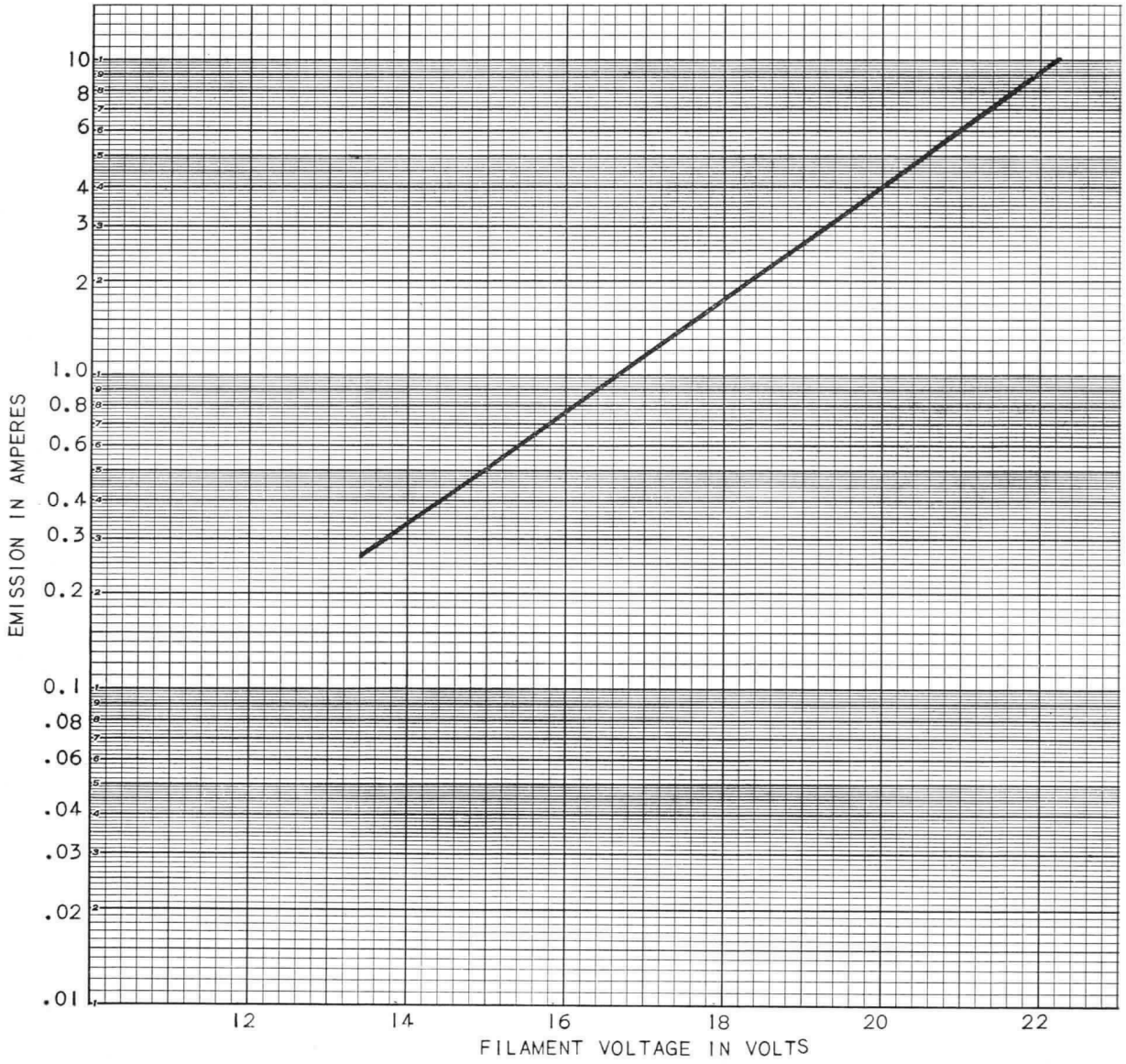

K-59087-72A448
♦Revised drawing.

1-11-51

♦ GL-891 AVERAGE FILAMENT CHARACTERISTIC

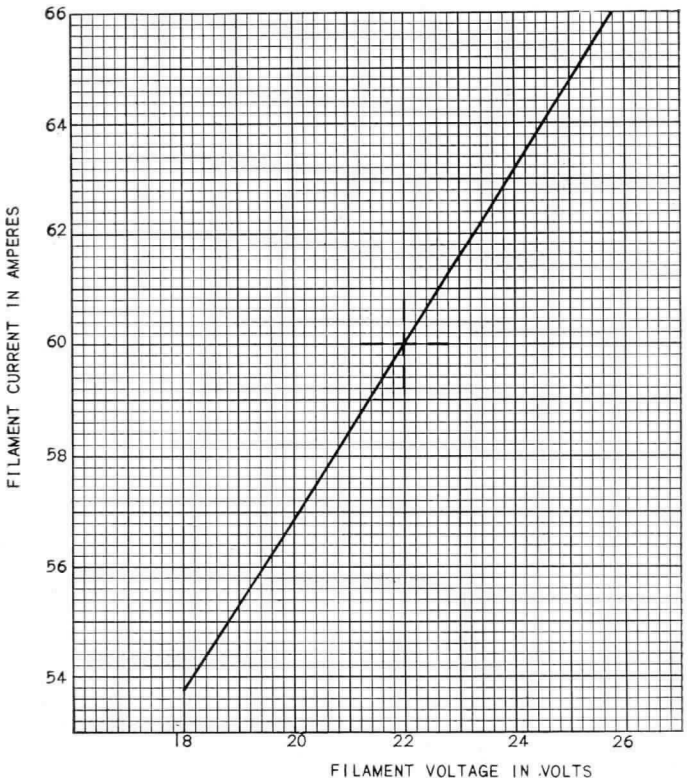

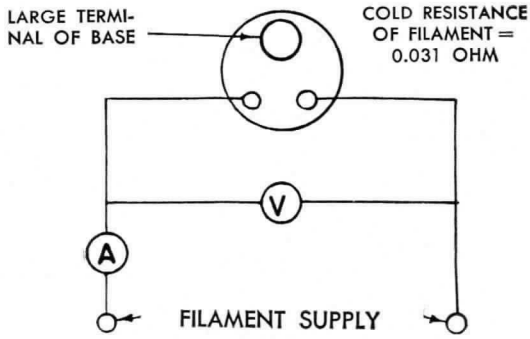

K-69087-72A441
♦Revised drawing.

1-11-51

GL-891 FILAMENT CONNECTIONS

WITH D-C EXCITATION

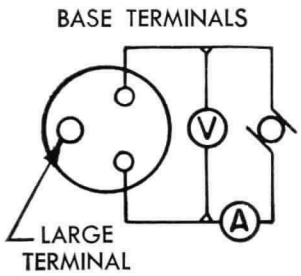

V = 22 VOLTS
A = 60 AMPERES

WITH SINGLE-PHASE A-C EXCITATION

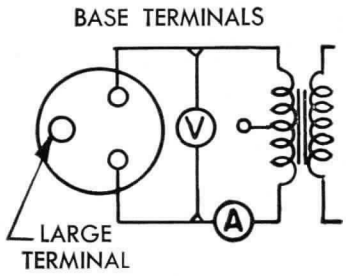

V = 22 VOLTS
A = 60 AMPERES

WITH TWO-PHASE A-C EXCITATION

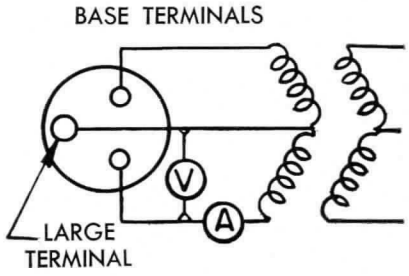

V = 11 VOLTS
A = 60 AMPERES

K-9033547

12-1-44

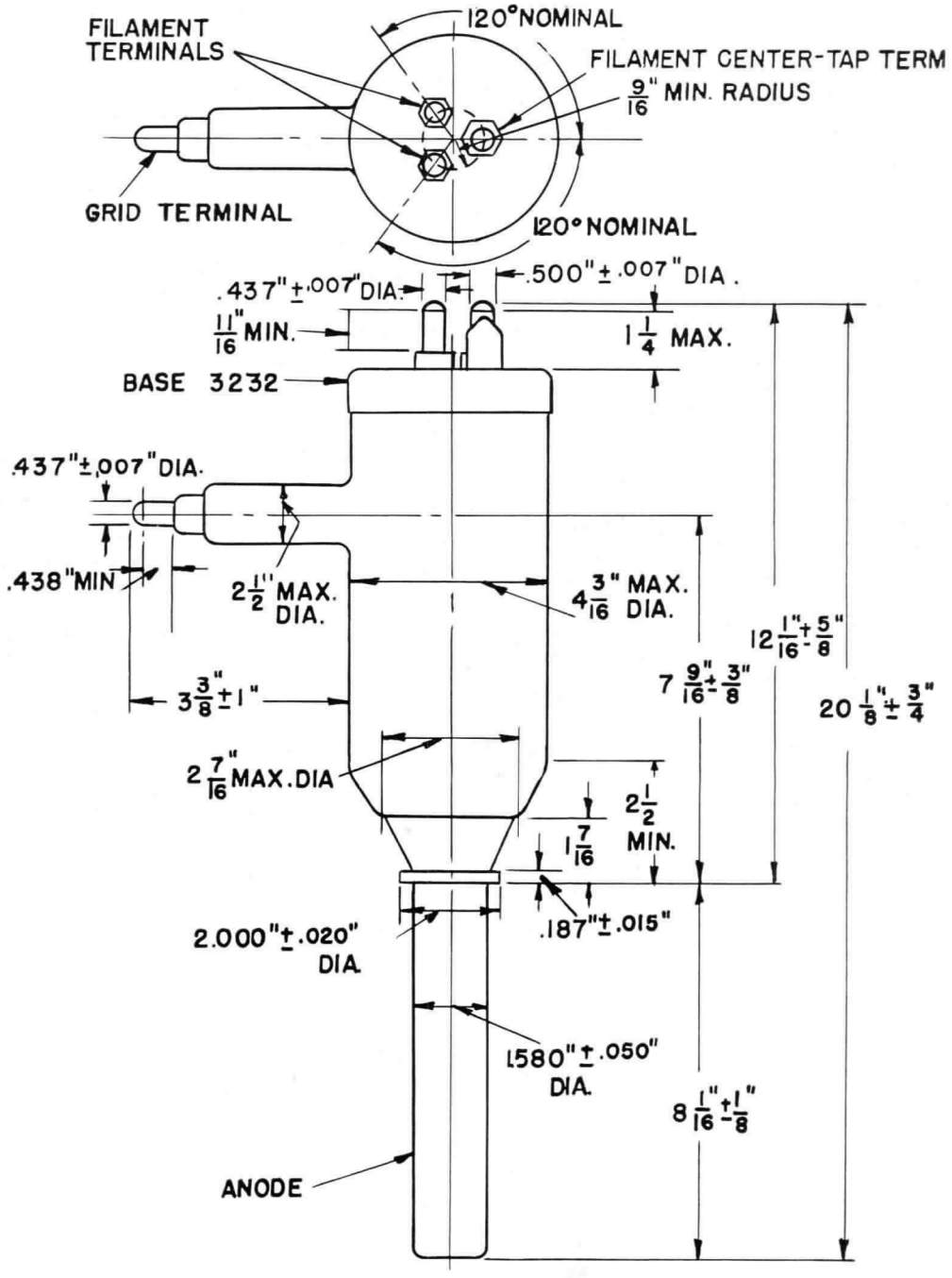

OUTLINE GL-891 PLIOTRON

K-6966979

3-11-47

Tube Department, Electronics Division

GENERAL ELECTRIC

Schenectady, N. Y.

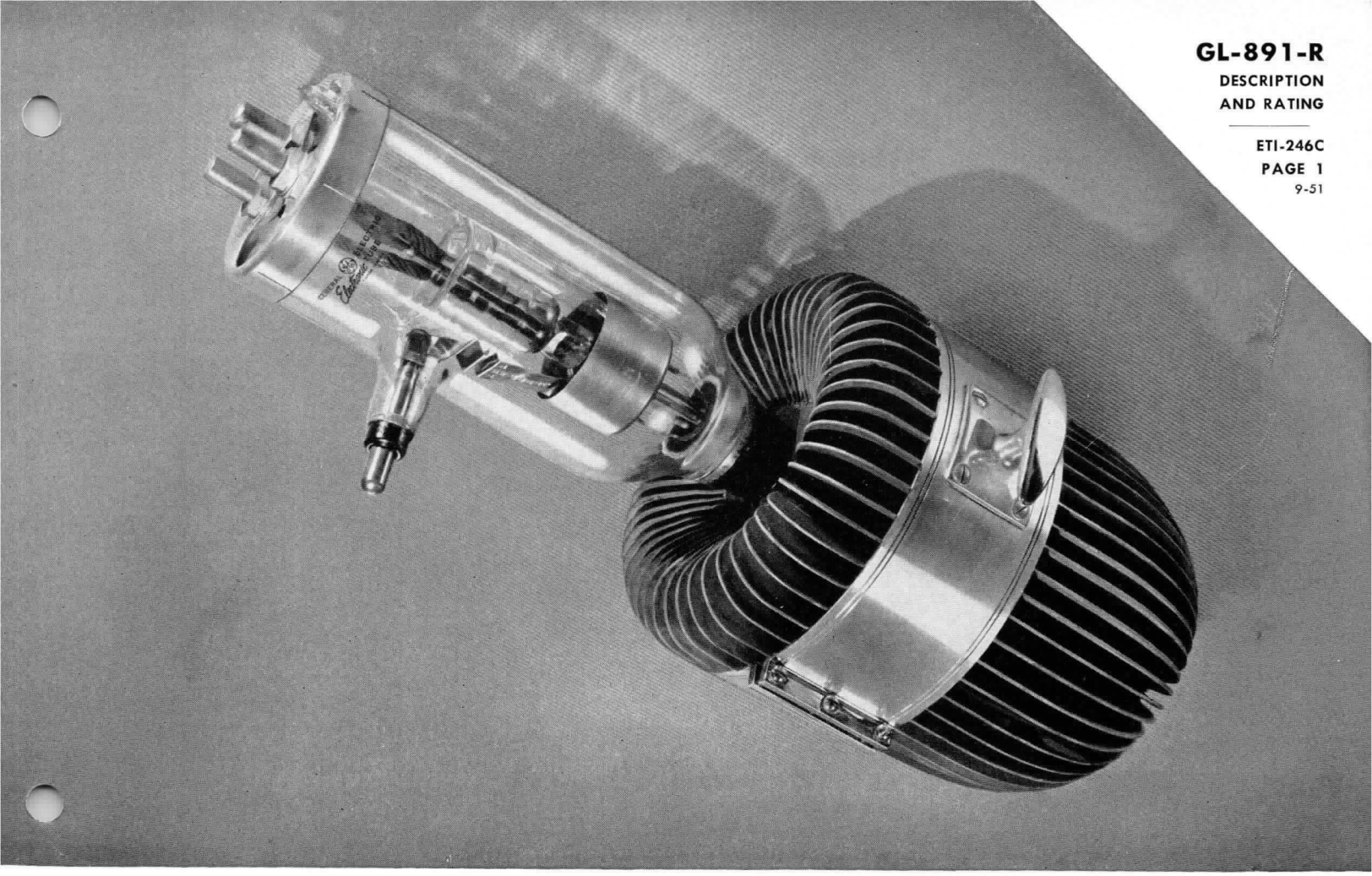

PLIOTRON

DESCRIPTION

The GL-891-R is a three-electrode tube for use as a radio-frequency power amplifier, oscillator, Class A modulator, and Class B modulator. The construction of the filament permits operation from two-phase or single-phase alternating current, as well as from direct current, for all classes of service. The plate of the GL-891-R is air-cooled by means of a special radiator which is fitted to the tube by the manufacturer. The plate is capable of dissipating 4 kilowatts of power, depending on the service in which the tube is used. The GL-891-R pliotron can be operated at maximum ratings at frequencies as high as 1.6 megacycles and up to 20 megacycles at reduced ratings.

♦ TECHNICAL INFORMATION

These data are for reference only. For design information refer to specifications.

GENERAL

Electrical Data	Minimum	Bogey	Maximum	
Filament voltage	—	22	23	volts
Filament current at bogey voltage	57	60	62	amperes
Filament starting current	—	—	120	amperes
Filament cold resistance	—	0.031	—	ohm
Amplification factor				
$E_c = -500$ volts, $I_b = 0.45$ amperes	7.6	8.5	9.4	
Interelectrode capacitances:				
Grid-plate	25	28	32	micromicrofarads
Grid-filament	15	19	23	micromicrofarads
Plate-filament	1.5	2.5	3.5	micromicrofarads

♦ Completely revised.

GE Electronic TUBE

GENERAL ELECTRIC

Supersedes ETI-246B dated 8-50

TECHNICAL INFORMATION (CONT'D)

Mechanical Data

Mounting position				vertical, anode down
Type of cooling				forced-air
Maximum incoming air temperature				45 C
Required air flow on anode				
Plate dissipation—kilowatts	100% rating	80% rating	60% rating	
Air flow—cubic feet per minute	450	380	300	
Static Pressure—inches water	0.5	0.36	0.20	
Maximum glass temperature				150 C
Net weight, approximate				46 pounds

MAXIMUM RATINGS AND TYPICAL OPERATING CONDITIONS

AUDIO-FREQUENCY POWER AMPLIFIER AND MODULATOR—CLASS B

Maximum ratings, absolute values	CCS*		
D-c plate voltage	10,000		volts maximum
Maximum signal d-c plate current‡	2.0		amperes maximum
Maximum signal plate input‡	10,500		watts maximum
Plate dissipation‡	3,500		watts maximum
Temperature of air cooler	180		C maximum
Typical operation (unless otherwise specified, values are for two tubes)	CCS*		
D-c plate voltage	6,000	8,000	volts
D-c grid voltage	−630	−860	volts
Peak a-f grid-to-grid voltage	2,060	2,260	volts
Zero signal d-c plate current	0.5	0.5	ampere
Maximum signal d-c plate current	2.5	2.10	amperes
Effective load resistance, plate-to-plate	5,000	8,000	ohms
Maximum signal driving power, approximate	110	50	watts
Maximum signal power output, approximate	8,000	10,000	watts

*Continuous Commercial Service.
‡Averaged over any audio-frequency cycle of sine-wave form.

RADIO FREQUENCY POWER AMPLIFIER AND OSCILLATOR—CLASS C TELEGRAPHY

(Key-down Conditions Per Tube Without Amplitude Modulation)‖

Maximum ratings, absolute values	CCS*		
D-c plate voltage	10,000		volts maximum
D-c grid voltage	−3,000		volts maximum
D-c plate current	2.0		amperes maximum
D-c grid current	0.15		ampere maximum
Plate input	15,000		watts maximum
Plate dissipation	4,000		watts maximum
Temperature of air cooler	180		C maximum
Typical operation	CCS*		
D-c plate voltage	8,000	10,000	volts
D-c grid voltage	−1,800	−2,000	volts
Peak r-f grid voltage	2,400	2,700	volts
D-c plate current	1.14	1.33	amperes
D-c grid current, approximate	0.09	0.140	ampere
Driving power, approximate	215	375	watts
Power output, approximate	6,500	10,000	watts

*Continuous Commercial Service.
‖Modulation essentially negative may be used if the positive peak of the envelope does not exceed 115% of the carrier conditions.

APPLICATION NOTES

GL-891-R can be operated at maximum ratings in all classes of service at frequencies as high as 1.6 megacycles. The tube may be operated at higher frequencies provided the maximum values of plate voltage and power input are reduced as the frequency is raised. (Other maximum ratings are the same as shown under MAXIMUM RATINGS and TYPICAL OPERATING CONDITIONS.) The tabulation below shows the highest percentage of maximum plate voltage and power input that can be used up to 20 mc for the various classes of service. Special attention should be given to adequate ventilation of the bulb at these frequencies.

Frequency	1.6	7.5	20.0	megacycles
Percentage of maximum rated plate voltage and plate input, Class C unmodulated	100	75	50	percent

♦ GL-891-R
AVERAGE PLATE CHARACTERISTICS
$E_f = 22$ VOLTS A-C
SINGLE-PHASE EXCITATION

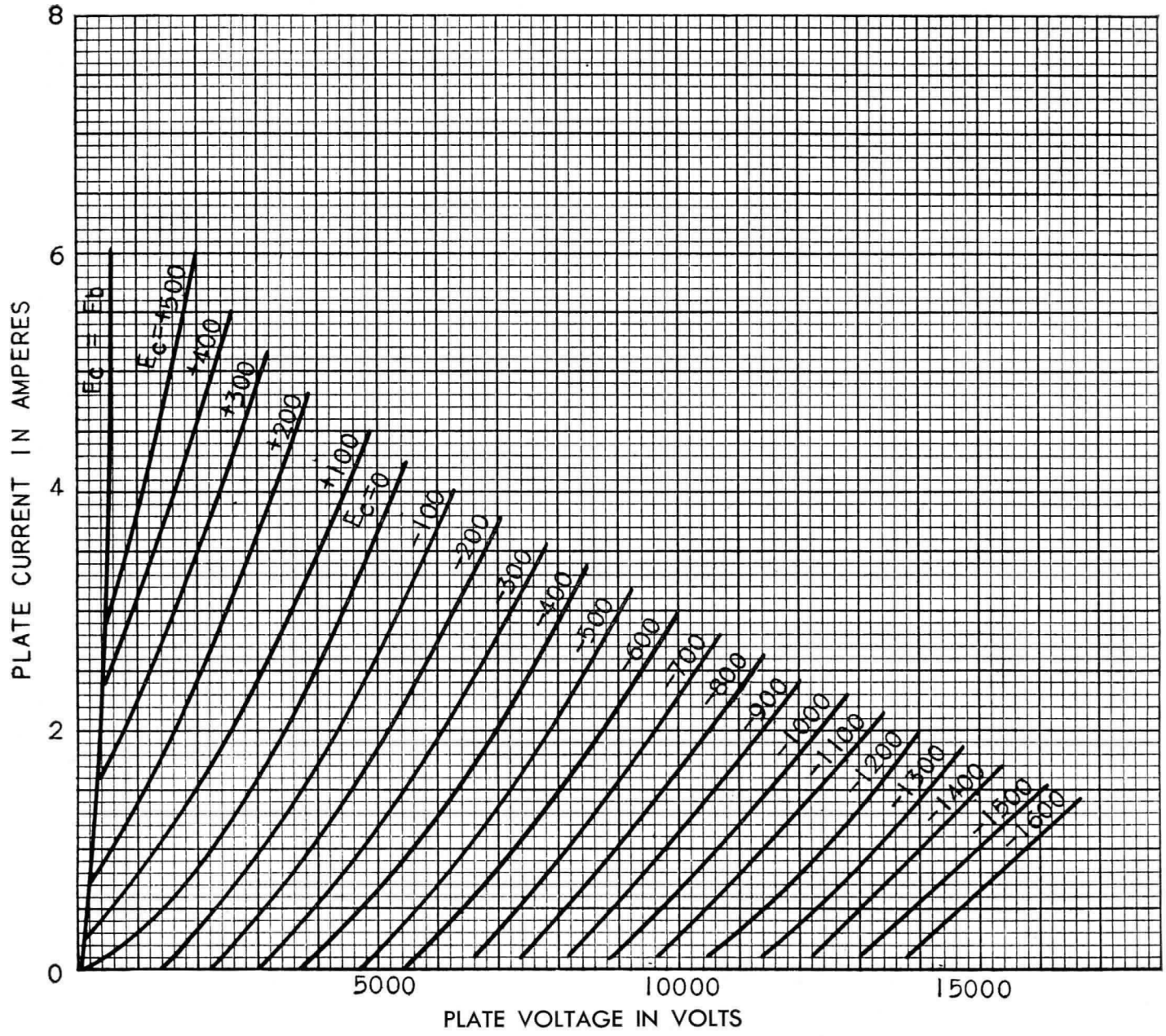

K-69087-72A104

1-11-51

♦ Revised Drawing.

♦ GL-891-R
AVERAGE GRID-PLATE TRANSFER CHARACTERISTICS
E_f = 22 VOLTS A-C
SINGLE PHASE EXCITATION

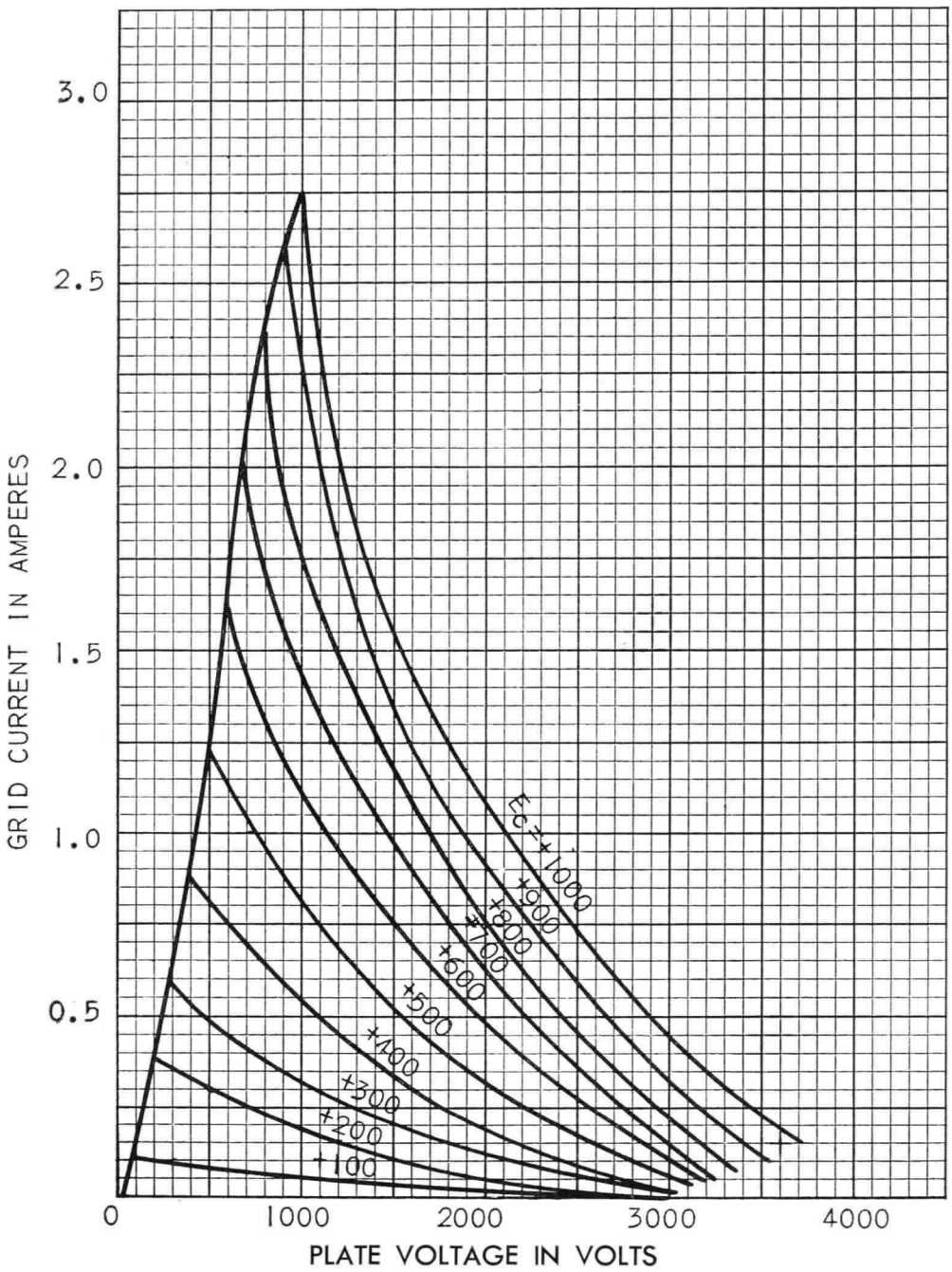

K-69087-72A445

1-11-51

♦Revised Drawing.

♦ GL-891-R
AVERAGE CONSTANT-CURRENT CHARACTERISTICS
$E_f = 22$ VOLTS A-C
SINGLE-PHASE EXCITATION

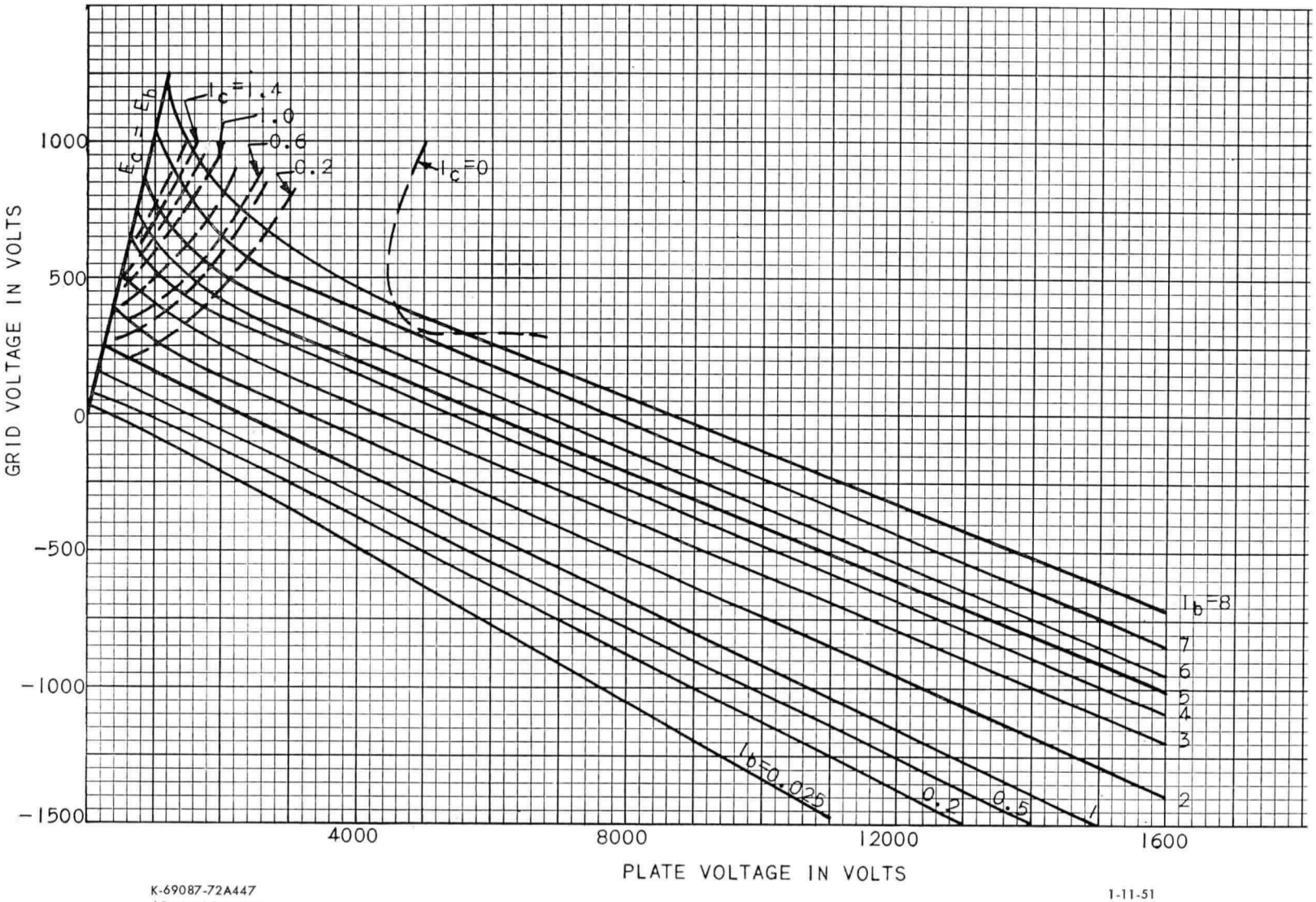

K-69087-72A447
♦ Revised Drawing.

1-11-51

♦ GL-891-R AVERAGE FILAMENT EMISSION CHARACTERISTIC

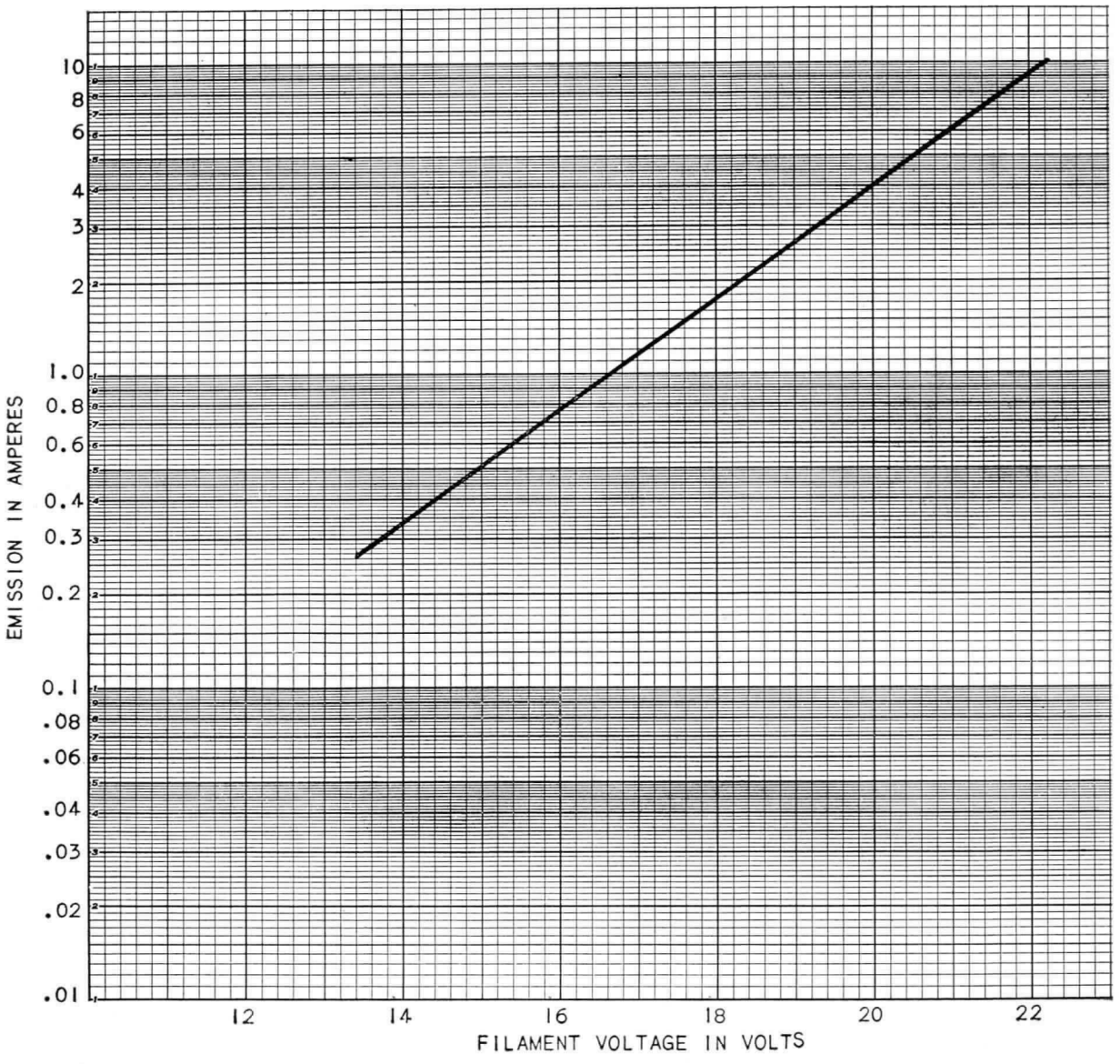

K-69087-72A448

1-11-51

♦Revised Drawing

♦GL-891-R AVERAGE FILAMENT CHARACTERISTIC

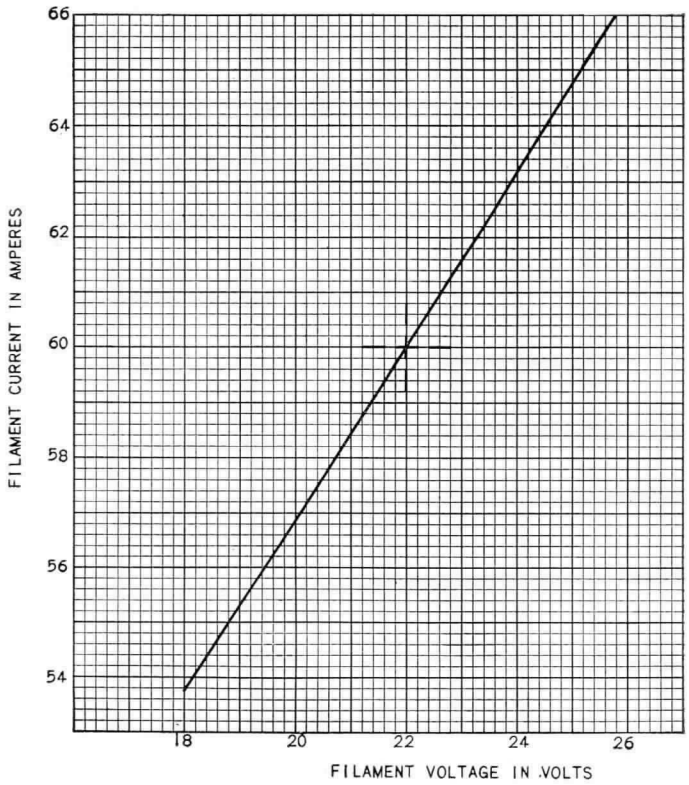

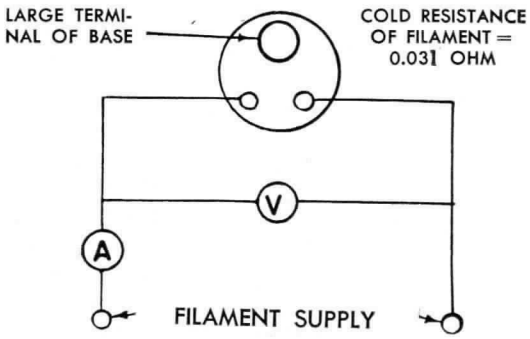

K-69087-72A441
♦Revised drawing

1-11-51

WITH D-C EXCITATION

BASE TERMINALS

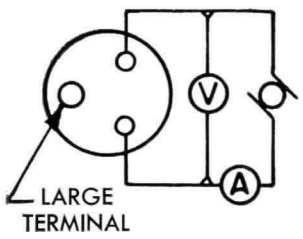

V = 22 VOLTS
A = 60 AMPERES

WITH SINGLE-PHASE A-C EXCITATION

BASE TERMINALS

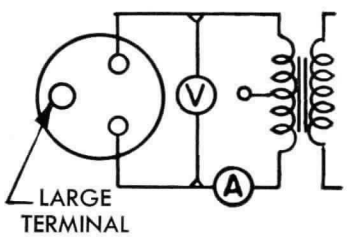

V = 22 VOLTS
A = 60 AMPERES

WITH TWO-PHASE A-C EXCITATION

BASE TERMINALS

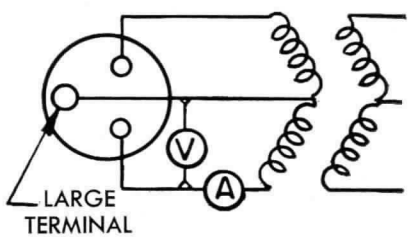

V = 11 VOLTS
A = 60 AMPERES

GL-891-R FILAMENT CONNECTIONS

K-9033547

12-1-44

OUTLINE GL-891-R♦

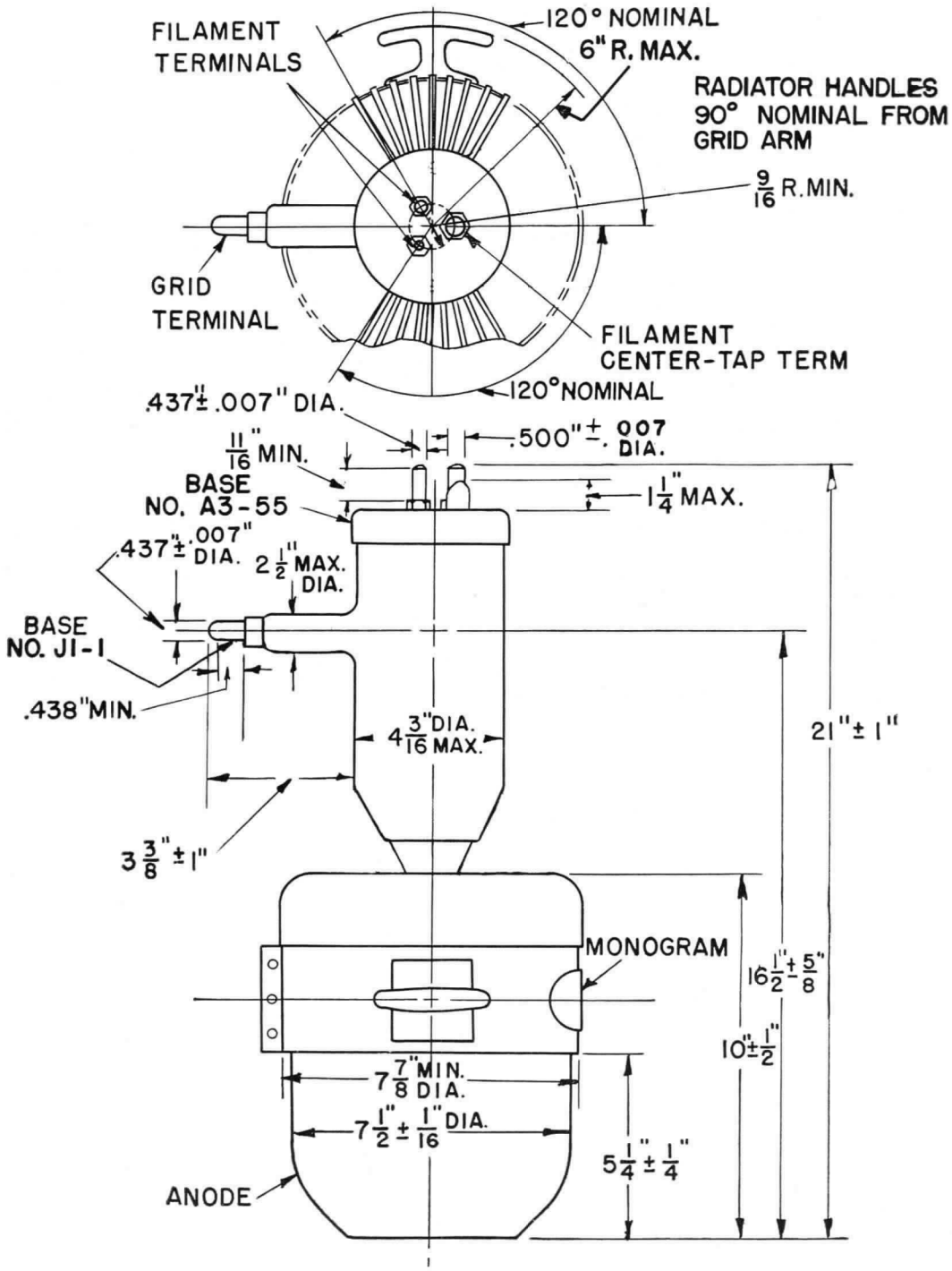

K-6966980
♦ Revised.

11-11-48

Tube Department, Electronics Division

GENERAL ELECTRIC

Schenectady, N. Y.

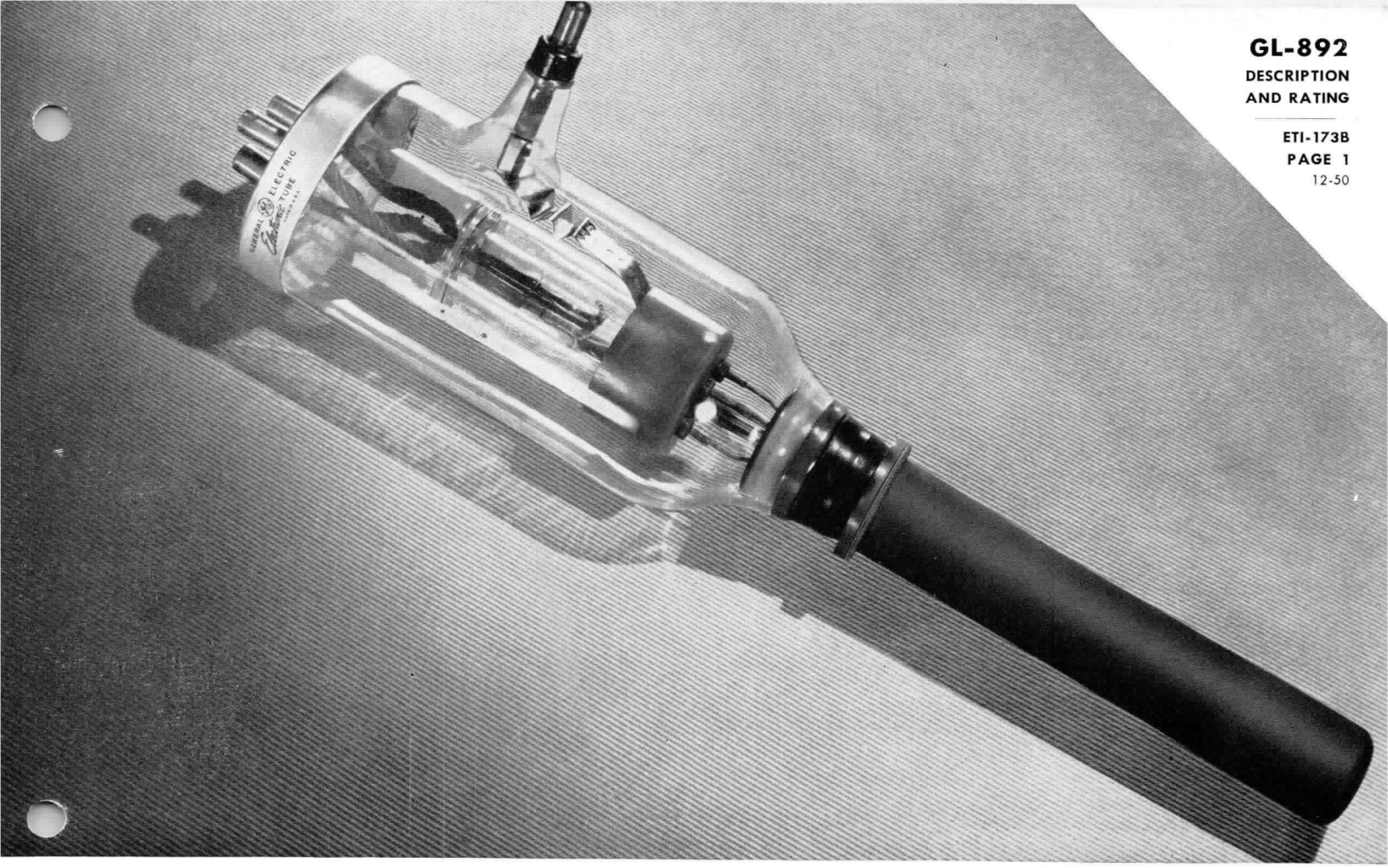

PLIOTRON

DESCRIPTION

The GL-892 is a three-electrode pliotron of the double-filament type for use as a radio-frequency power amplifier, oscillator, and Class B modulator. The construction of the filament permits operation from two-phase or single-phase alternating current as well as from direct current, for all classes of service. The plate is water-cooled and is capable of dissipating 6.6 to 10 kilowatts.

♦ TECHNICAL INFORMATION

These data are for reference only. For design information refer to specifications.

GENERAL

Electrical Data	Minimum	Bogey	Maximum	
Filament voltage		22	23	volts
Filament current at bogey voltage	57	60	62	amperes
Filament starting current			120	amperes
Filament cold resistance		0.031		ohms
Amplification factor, $E_c = -50$ V, $I_b = 0.75$ A	42.5	50.0	57.5	
Interelectrode capacitances				
Grid-plate	27	30	33	uuf
Grid-filament	15	20	24	uuf
Plate-filament	0.5	1.5	2.5	uuf

♦ Completely revised.

GE Electronic TUBE

GENERAL ELECTRIC

Supersedes ETI-173A dated 6-47

TECHNICAL INFORMATION (CONT'D)

	Minimum	Bogey	Maximum	
Mechanical Data				
Mounting position—vertical, anode down				
Type of cooling—water				
Water flow on anode	3		8	gpm
Maximum outgoing temperature			70	C
Maximum glass temperature			150	C
Gasket—JTC gasket—1				
Net weight, approximate			3½	pounds

MAXIMUM RATINGS AND TYPICAL OPERATING CONDITIONS

AUDIO-FREQUENCY POWER AMPLIFIER MODULATOR—CLASS B

Maximum Ratings, Absolute Values

D-c plate voltage	15,000 max	volts
Maximum signal d-c plate current†	2.0 max	amperes
Maximum signal plate input†	20,000 max	watts
Plate dissipation†	7,500 max	watts

Typical Operation

Unless otherwise specified, values are for two tubes

D-c plate voltage	6,000	10,000	12,500	volts
D-c grid voltage	0.0	−90	−170	volts
Peak a-f grid-to-grid voltage	1,000	1,380	1,370	volts
Zero signal d-c plate current	0.5	0.5	0.4	amperes
Maximum signal d-c plate current	2.6	3.3	2.8	amperes
Effective load resistance, plate to plate	4,200	6,400	10,000	ohms
Maximum signal driving power, approximate	135	240	160	watts
Maximum signal power output, approximate	8,000	20,000	22,000	watts

RADIO-FREQUENCY POWER AMPLIFIER—CLASS B

Carrier conditions per tube for use with a maximum modulation factor of 1.0

Maximum Ratings, Absolute Values

D-c plate voltage	15,000 max	volts
D-c plate current	1.0 max	ampere
Plate input	15,000 max	watts
Plate dissipation	10,000 max	watts

Typical Operation

D-c plate voltage	6,000	10,000	14,000	volts
D-c grid voltage		−100	−190	volts
Peak r-f grid voltage	230	370	440	volts
D-c plate current	0.640	0.77	0.82	amperes
D-c grid current, approximate	0.030	0.060	0.03	amperes
Driving power, approximate//	77	133	106	watts
Power output, approximate	1,000	2,500	4,000	watts

PLATE-MODULATED RADIO-FREQUENCY POWER AMPLIFIER—CLASS C TELEPHONY

Carrier conditions per tube for use with a maximum modulation factor of 1.0

Maximum Ratings, Absolute Values

D-c plate voltage	10,000 max	volts
D-c grid voltage	−3,000 max	volts
D-c plate current	1.0 max	ampere
D-c grid current	0.3 max	ampere
Plate input	10,000 max	watts
Plate dissipation	6,600 max	watts

Typical Operation

D-c plate voltage	6,000	8,000	10,000	volts
D-c grid voltage	−1,000	−1,300	−1,600	volts
Peak r-f grid voltage	1,650	1,950	2,250	volts
D-c plate current	0.83	0.82	0.78	amperes
D-c grid current, approximate	0.28	0.24	0.23	amperes
Driving power, approximate	420	430	460	watts
Power output, approximate	3,500	5,000	6,000	watts

TECHNICAL INFORMATION (CONT'D)

RADIO-FREQUENCY POWER AMPLIFIER AND OSCILLATOR—CLASS C TELEGRAPHY

Key-down conditions per tube without amplitude modulation¶

Maximum Ratings, Absolute Values				
D-c plate voltage			15,000 max	volts
D-c grid voltage			−3,000 max	volts
D-c plate current			2.0 max	amperes
D-c grid current			0.4 max	ampere
Plate input			30,000 max	watts
Plate dissipation			10,000 max	watts
Typical Operation				
D-c plate voltage	8,000	10,000	12,000	volts
D-c grid voltage	−1,000	−1,300	−1,600	volts
Peak r-f grid voltage	1,700	2,150	2,550	volts
D-c plate current	1.17	1.4	1.55	amperes
D-c grid current, approximate	0.22	0.24	0.23	amperes
Driving power, approximate	330	495	565	watts
Power output, approximate	6,500	10,000	14,000	watts

†Averaged over any audio-frequency cycle of sine-wave form.
//At crest of audio-frequency cycle with modulation factor of 1.0.
¶ Modulation essentially negative may be used if the positive peak of the envelope does not exceed 115 percent of the carrier conditions.

Maximum ratings apply up to 1.6 megacycles. The tube may be operated at higher frequencies provided the maximum values of plate voltage and power input are reduced according to the tabulation below (other maximum ratings are the same as shown above). Special attention should be given to adequate ventilation of the bulb at these frequencies.

Frequency	1.6	7.5	20.0	megacycles
Percentage of Maximum Rated Plate Voltage and Plate Input				
Class B	100	85	76	percent
Class C plate modulated	100	85	75	percent
Class C unmodulated	100	75	50	percent

♦ GL-892 AVERAGE PLATE CHARACTERISTICS (E_f = 22 VOLTS A-C)

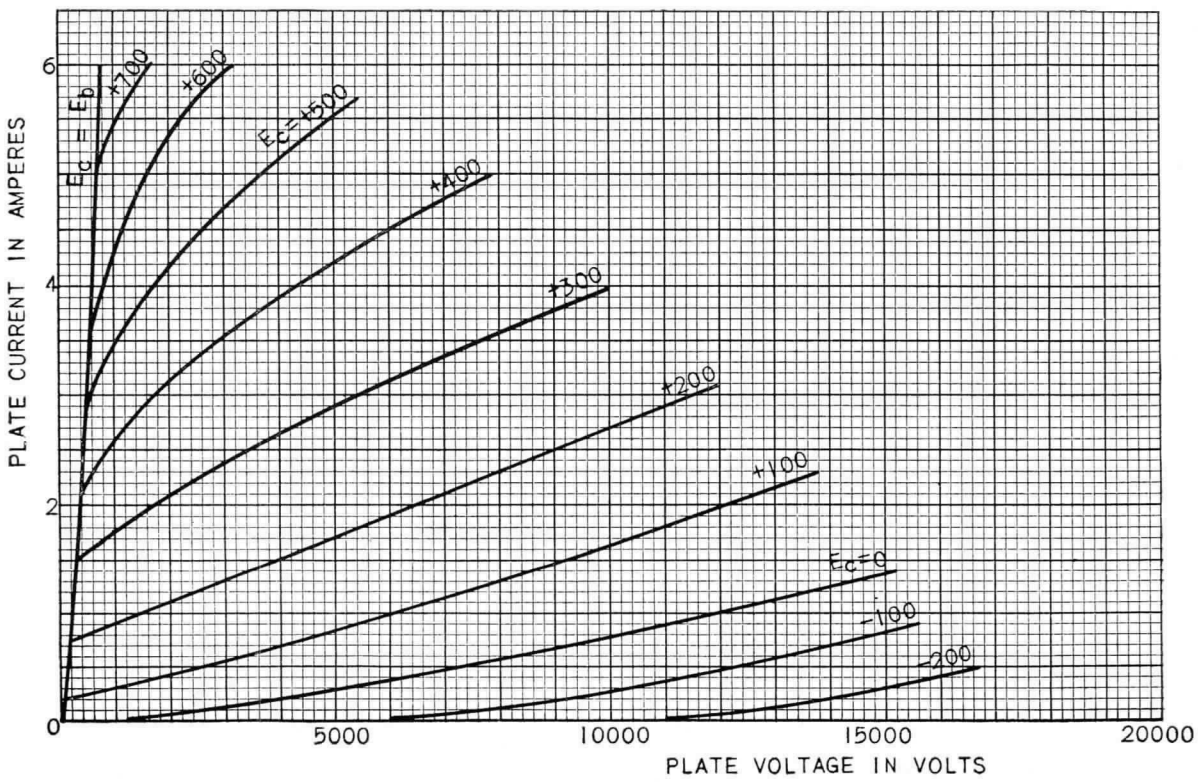

K-69087-72A108
♦ Revised.

1-11-51

♦ GL-892

AVERAGE GRID-PLATE TRANSFER CHARACTERISTICS

$E_f = 22$ VOLTS, A-C, SINGLE-PHASE EXCITATION

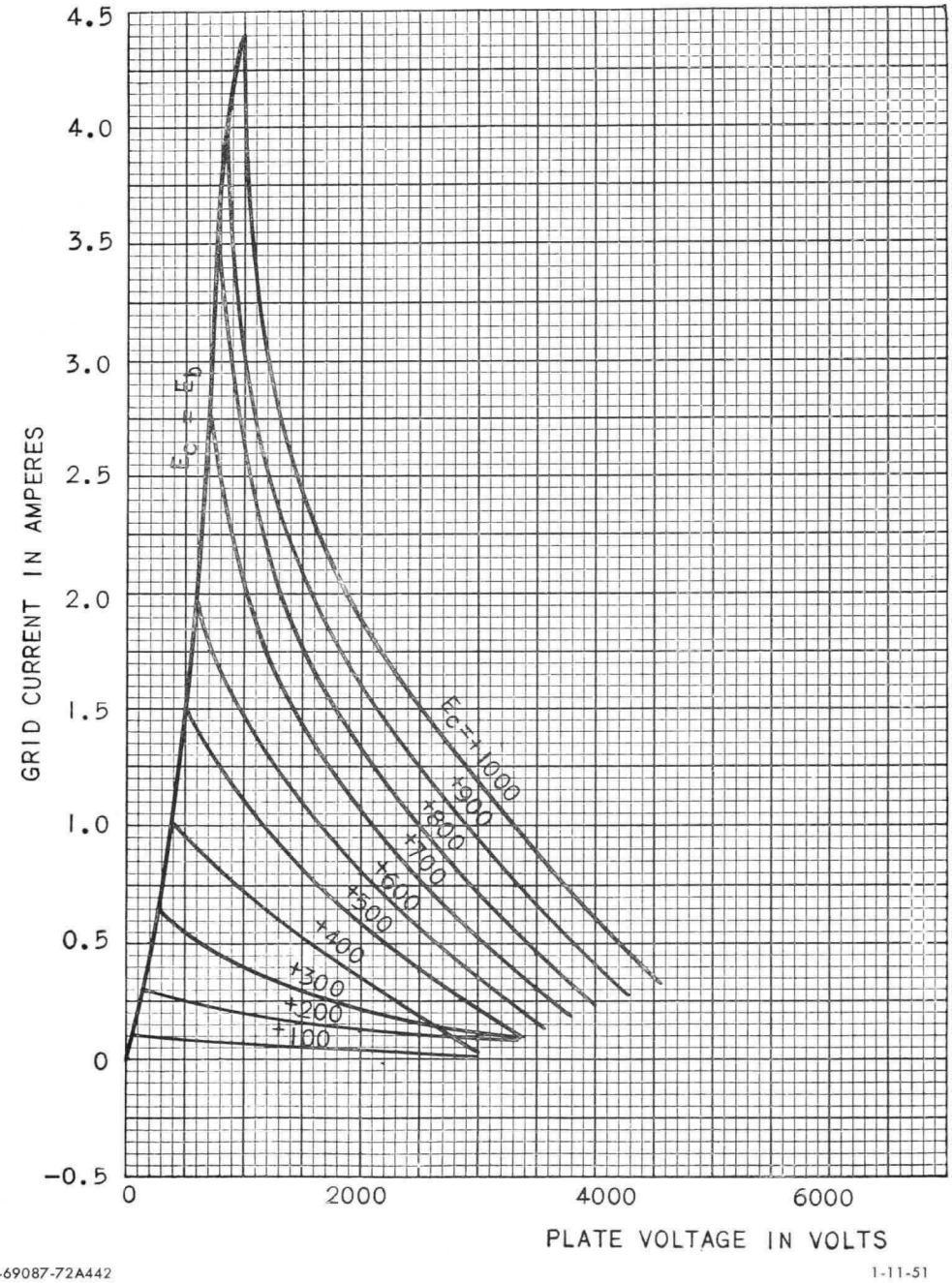

K-69087-72A442

♦ New drawing.

1-11-51

♦ GL-892

AVERAGE CONSTANT-CURRENT CHARACTERISTICS
$E_f = 22$ VOLTS A-C, SINGLE-PHASE EXCITATION

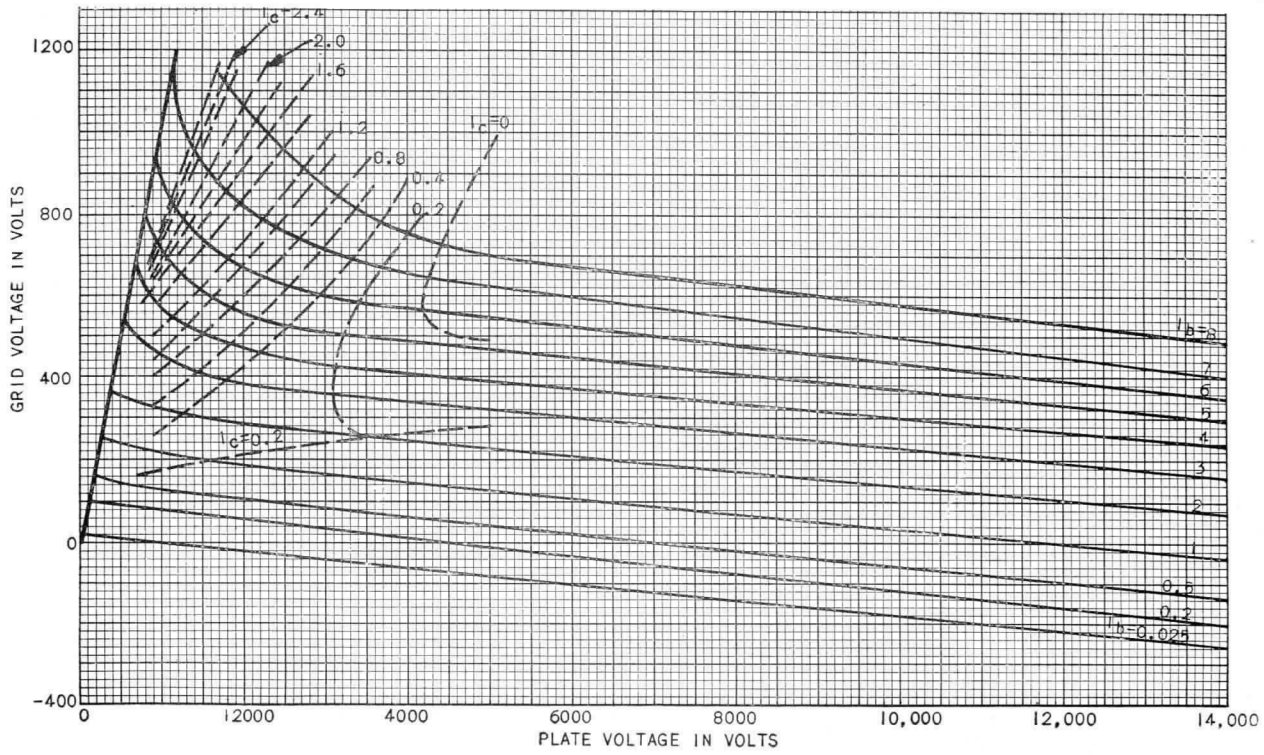

K-69087-72A443
♦ New drawing.

1-11-51

♦ GL-892 AVERAGE FILAMENT EMISSION CHARACTERISTIC

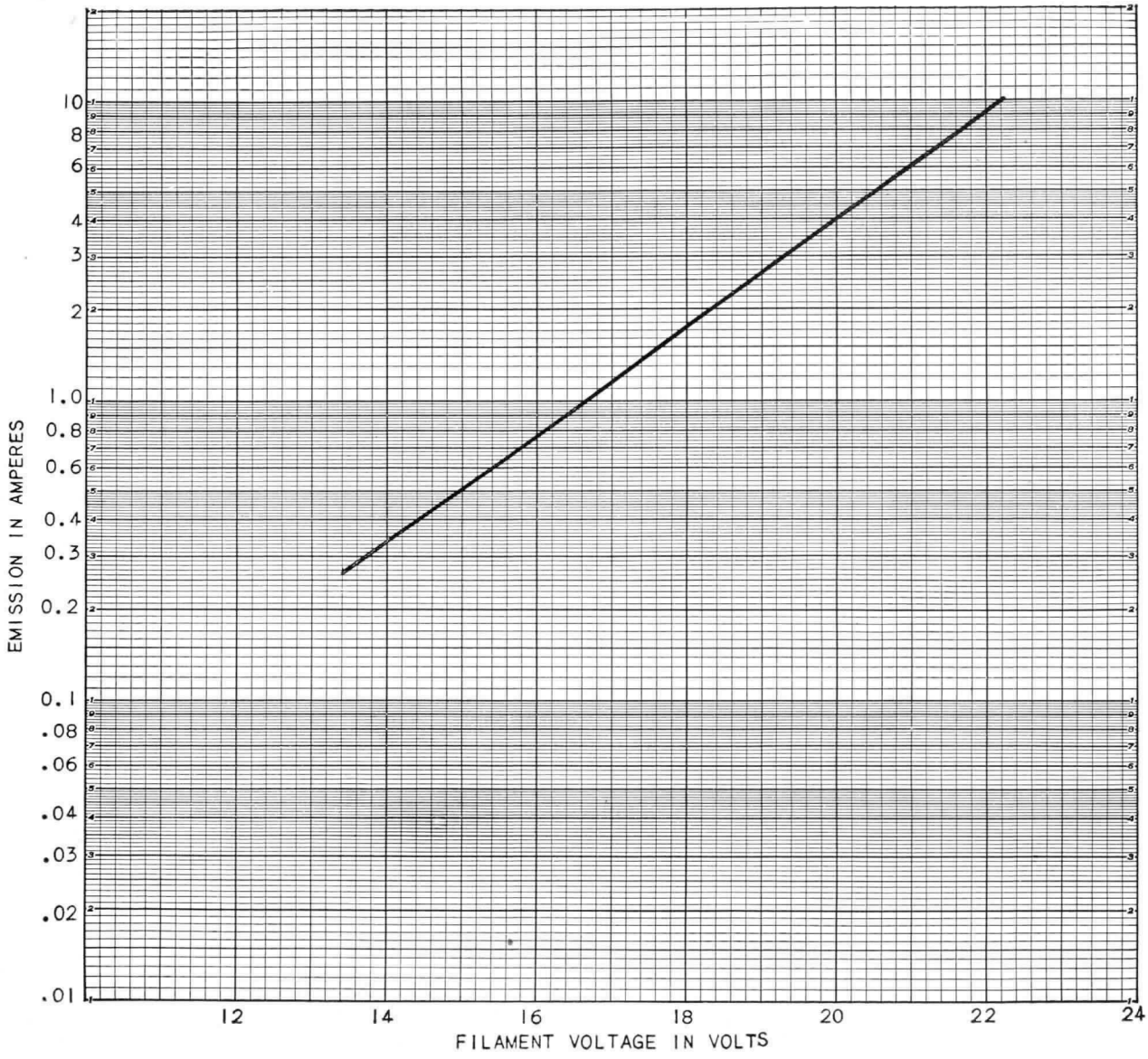

K-69087-72A448
♦ New drawing

1-11-51

♦ GL-892 AVERAGE FILAMENT CHARACTERISTICS

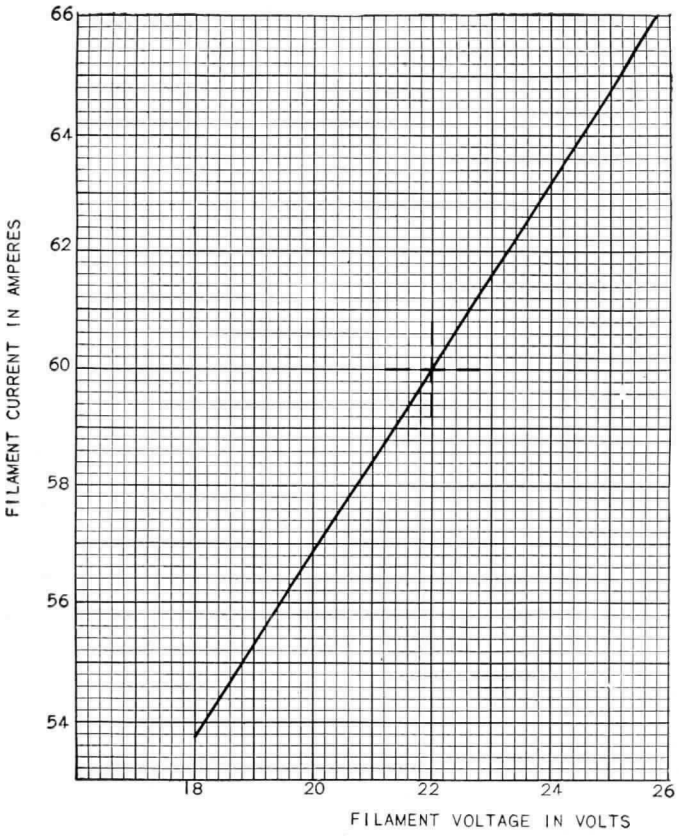

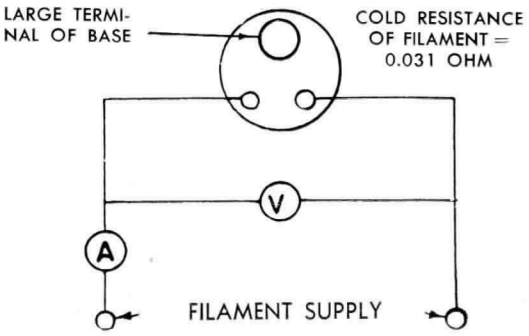

K-69087-72A441
♦ New drawing.

1-11-51

GL-892 FILAMENT CONNECTIONS

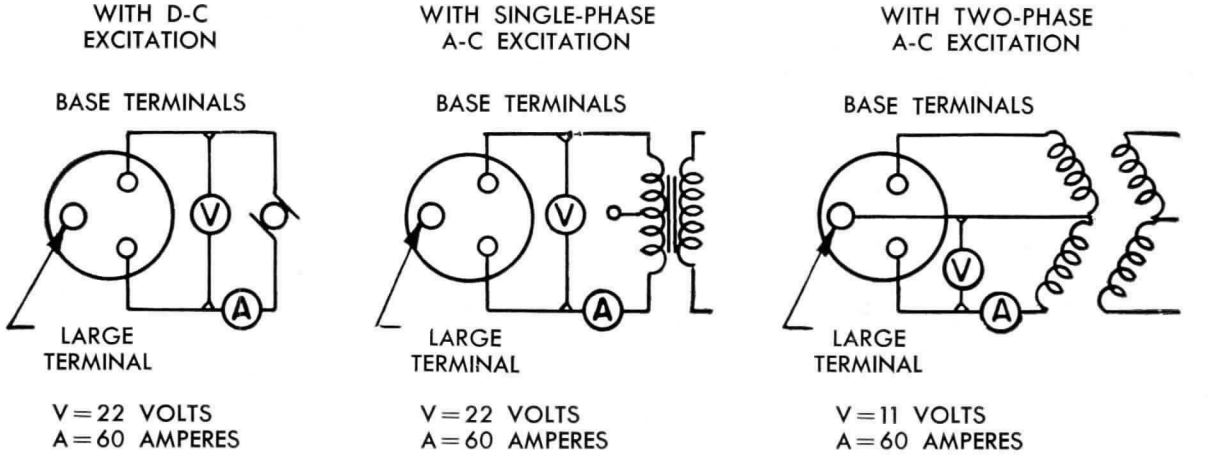

K-9033547

12-1-44

OUTLINE GL-892 PLIOTRON

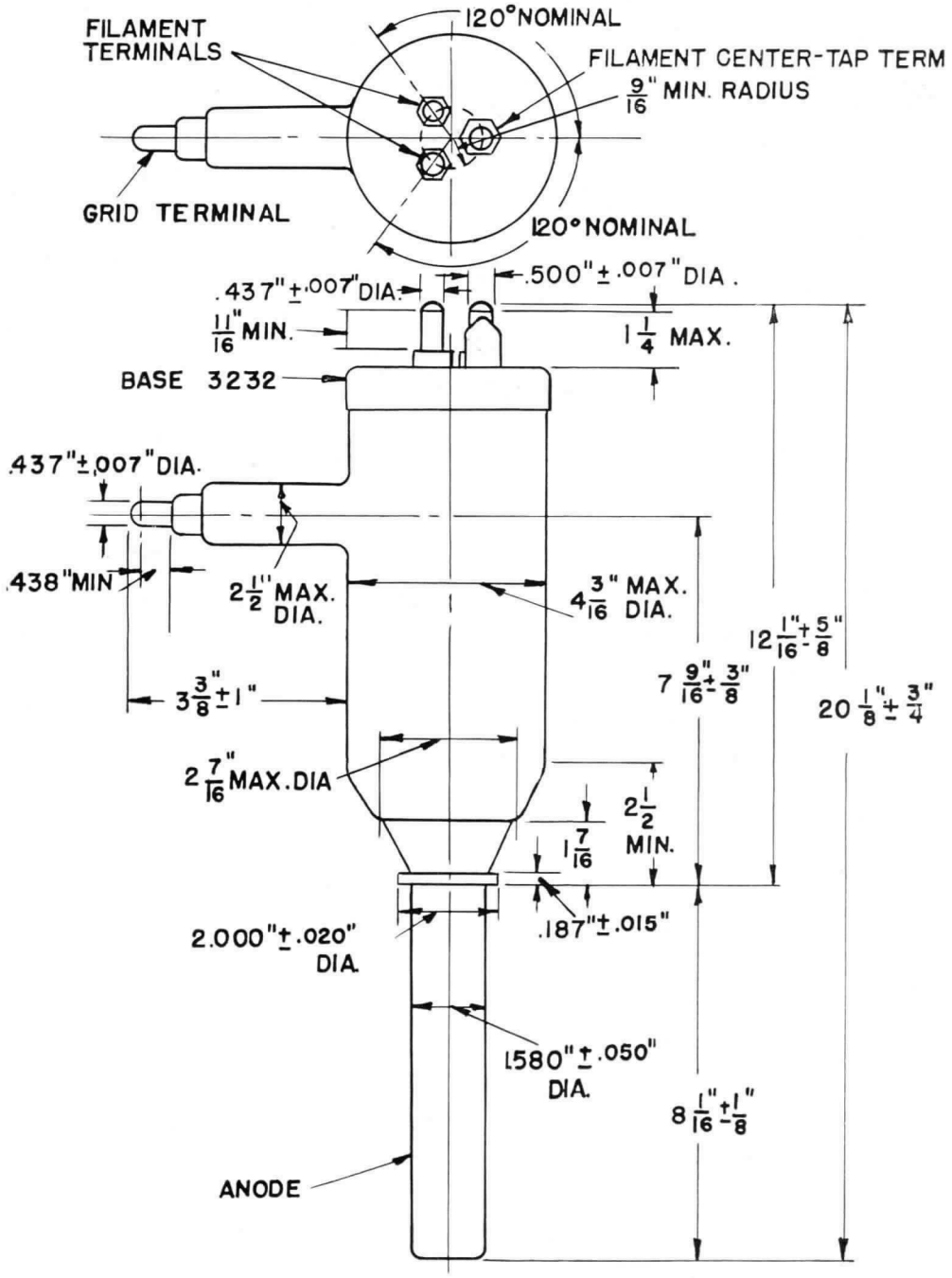

K-6966979 3-11-47

Tube Divisions, Electronics Department

GENERAL ELECTRIC

Schenectady, N. Y.

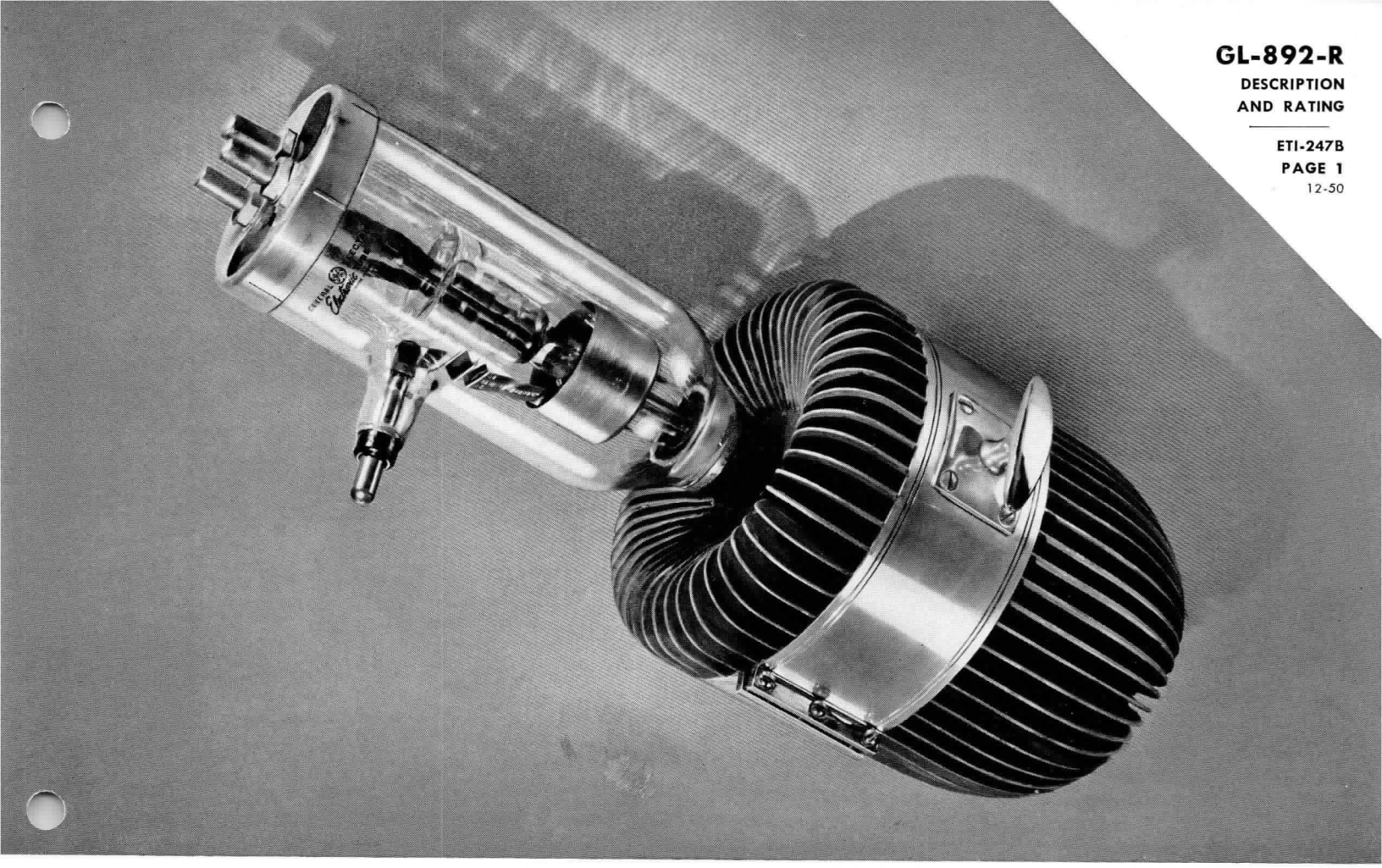

PLIOTRON

DESCRIPTION

The 892-R is a three-electrode tube for use as a radio-frequency power amplifier, oscillator, and Class B modulator. The construction of the filament permits operation from two-phase or single-phase alternating current, as well as from direct current, for all classes of service. The plate of the 892-R is air-cooled by means of a special radiator which is fitted to the tube by the manufacturer. The plate is capable of dissipating 2 to 5 kilowatts of power, depending on the service in which the tube is used. The GL-892-R pliotron can be operated at maximum ratings at frequencies as high as 1.6 megacycles and at frequencies up to 20 megacycles at reduced ratings.

♦ TECHNICAL INFORMATION

These data are for reference only. For design information refer to specifications.

GENERAL

Electrical Data	Minimum	Bogey	Maximum	
Filament voltage		22	23	volts
Filament current at bogey voltage	57	60	62	amperes
Filament starting current			120	amperes
Filament cold resistance		0.031		ohms
Amplification factor, $E_c = -50$ V, $I_b = 0.42$ A	42.5	50.0	57.5	
Interelectrode capacitances				
Grid-plate	28	31	34	uuf
Grid-filament	15	20	24	uuf
Plate-filament	1.0	2.0	3.0	uuf

♦Completely revised.

Electronic TUBE

GENERAL ELECTRIC

Supersedes ETI-247A dated 6-47

TECHNICAL INFORMATION (CONT'D)

Mechanical Data

Mounting position—vertical, anode down			
Type of cooling—forced-air			
Maximum incoming air temperature		45	C
Required air flow on anode			
Plate dissipation—watts	2400	3200	4000
Air flow—cubic feet per minute	300	380	450
Pressure—inches water	0.20	0.36	0.5
Maximum glass temperature		150	C
Net weight, approximate		46	pounds

MAXIMUM RATINGS AND TYPICAL OPERATING CONDITIONS

AUDIO-FREQUENCY POWER AMPLIFIER AND MODULATOR—CLASS B

Maximum Ratings, Absolute Values			
D-c plate voltage	12,500 max		volts
Maximum signal d-c plate current*	2.0 max		amperes
Maximum signal plate input*	12,000 max		watts
Plate dissipation*	4,000 max		watts
Temperature of air cooler	180 max		C
Typical Operation			
Unless otherwise specified, values are for two tubes			
D-c plate voltage	6,000	8,000	volts
D-c grid voltage		−60	volts
Peak a-f grid-to-grid voltage	1,000	1,000	volts
Zero signal d-c plate current	0.5	0.5	amperes
Maximum signal d-c plate current	2.6	2.3	amperes
Effective load resistance, plate to plate	4,200	6,800	ohms
Maximum signal driving power, approximate	135	84	watts
Maximum signal power output, approximate	8,000	10,500	watts

RADIO-FREQUENCY POWER AMPLIFIER—CLASS B

Carrier conditions per tube for use with a maximum modulation factor of 1.0

Maximum Ratings, Absolute Values			
D-c plate voltage	12,500 max		volts
D-c plate current	1.0 max		ampere
Plate input	6,000 max		watts
Plate dissipation	4,000 max		watts
Temperature of air cooler	180 max		C
Typical Operation			
D-c plate voltage	6,000	8,000	volts
D-c grid voltage		−60	volts
Peak r-f grid voltage	230	320	volts
D-c plate current	0.64	0.67	ampere
D-c grid current, approximate	0.03	0.04	ampere
Driving power, approximate//	77	150	watts
Power output, approximate	1,000	1,800	watts

PLATE-MODULATED RADIO-FREQUENCY POWER AMPLIFIER—CLASS C TELEPHONY

Carrier conditions per tube for use with a maximum modulation factor of 1.0

Maximum Ratings, Absolute Values			
D-c plate voltage	10,000 max		volts
D-c grid voltage	−3,000 max		volts
D-c plate current	1.0 max		ampere
D-c grid current	0.3 max		ampere
Plate input	10,000 max		watts
Plate dissipation	2,500 max		watts
Temperature of air cooler	180 max		C
Typical Operation			
D-c plate voltage	6,000	8,000	volts
D-c grid voltage	−1,000	−1,300	volts
Peak r-f grid voltage	1,650	1,950	volts
D-c plate current	0.83	0.82	amperes
D-c grid current, approximate	0.28	0.24	amperes
Driving power, approximate	420	430	watts
Power output, approximate	3,500	5,000	watts

TECHNICAL OPERATION (CONT'D)

RADIO-FREQUENCY POWER AMPLIFIER AND OSCILLATOR—CLASS C TELEGRAPHY

Key-down conditions per tube without amplitude modulation¶

Maximum Ratings, Absolute Values			
D-c plate voltage		12,500 max	volts
D-c grid voltage		−3,000 max	volts
D-c plate current		2.0 max	ampere
D-c grid current		0.4 max	ampere
Plate input		18,000 max	watts
Plate dissipation		4,000 max	watts
Temperature of air cooler		180 max	C
Typical Operation			
D-c plate voltage	8,000	10,000	volts
D-c grid voltage	−1,000	−1,300	volts
Peak r-f grid voltage	1,700	2,150	volts
D-c plate current	1.17	1.40	amperes
D-c grid current, approximate	0.22	0.24	amperes
Driving power, approximate	330	495	watts
Power output, approximate	6,500	10,000	watts

* Averaged over any cycle of sine-wave form.
//At crest of audio-frequency cycle with modulation factor of 1.0.
Modulation essentially negative may be used if the positive peak of the envelope does not exceed 115 percent of the carrier conditions.

Maximum ratings apply up to 1.16 megacycles. The tube may be operated at higher frequencies provided the maximum values of plate voltage and power input are reduced according to the tabulation below (other maximum ratings are the same as shown above). Special attention should be given to adequate ventilation of the bulb at these frequencies.

Frequency	1.6	7.5	20.0	megacycles
Percentage of Maximum Rated Plate Voltage and Plate Input				
Class B	100	85	76	percent
Class C plate modulated	100	75	50	percent
Class C unmodulated	100	75	50	percent

♦GL-892-R AVERAGE PLATE CHARACTERISTICS (E_f = 22 VOLTS A-C)

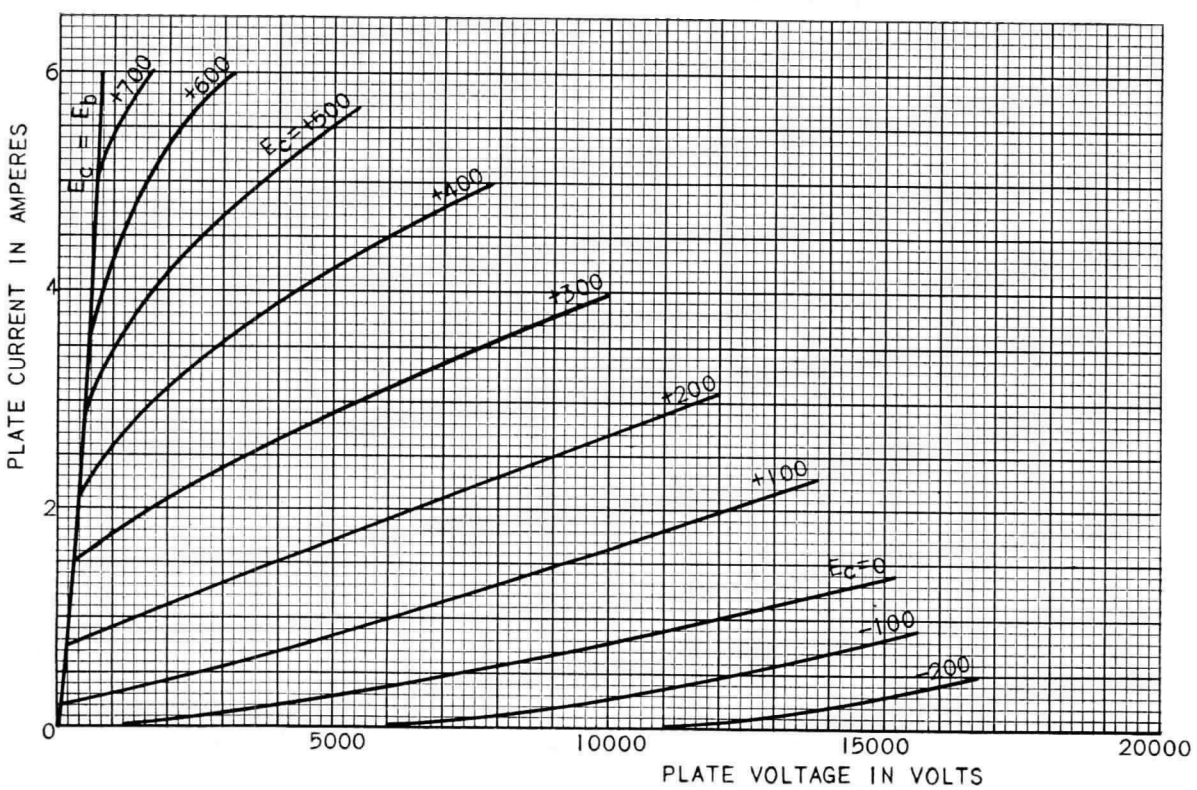

K-69087-72A108
♦Revised

1-11-51

♦GL-892-R

AVERAGE GRID-PLATE TRANSFER CHARACTERISTIC

$E_f = 22$ VOLTS A-C, SINGLE-PHASE EXCITATION

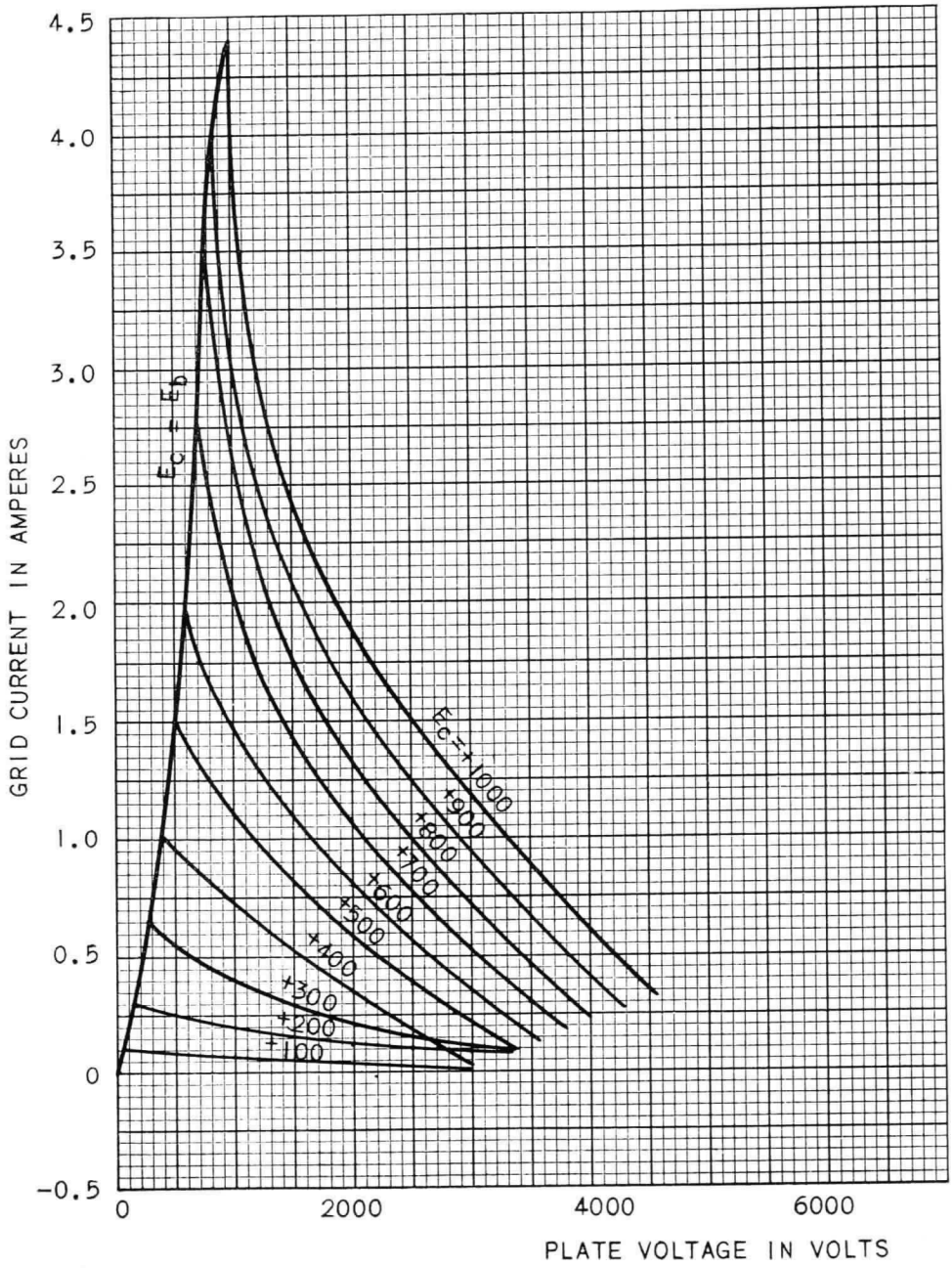

K-69087-72A442
♦New drawing.

1-11-51

♦GL-892-R

AVERAGE CONSTANT-CURRENT CHARACTERISTICS

$E_f = 22$ VOLTS A-C, SINGLE-PHASE EXCITATION

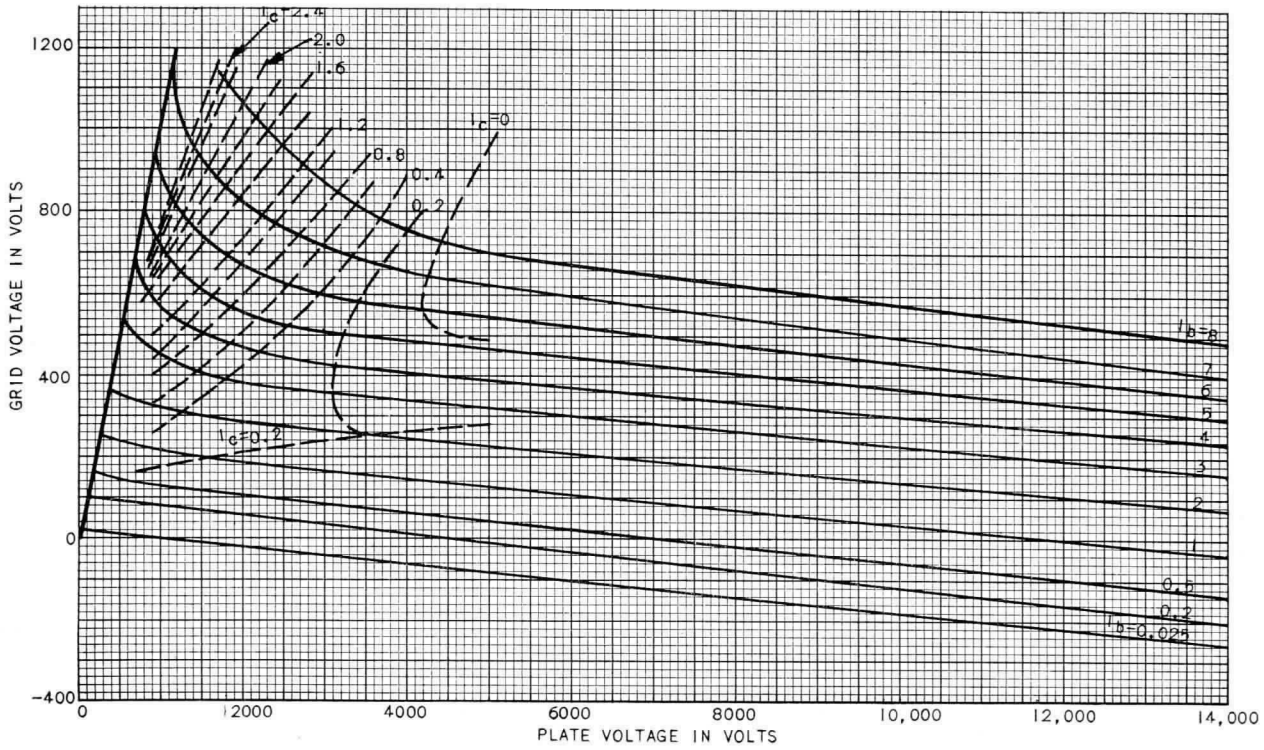

K-69087-72A443
♦New drawing.

1-11-51

♦GL-892-R AVERAGE FILAMENT EMISSION CHARACTERISTIC

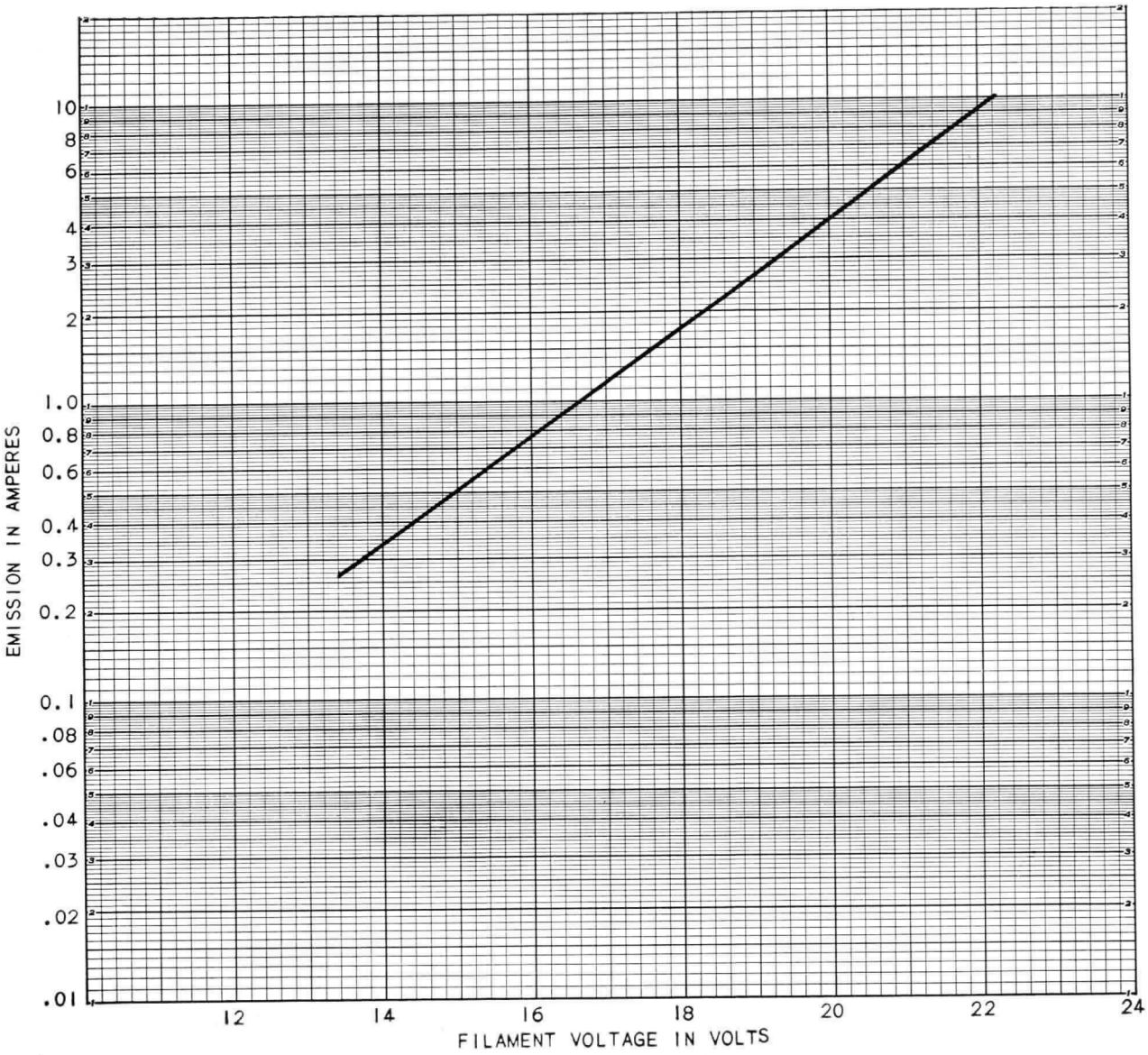

1-11-51

K-69087-72A448
♦New drawing.

♦ GL-892-R AVERAGE FILAMENT CHARACTERISTICS

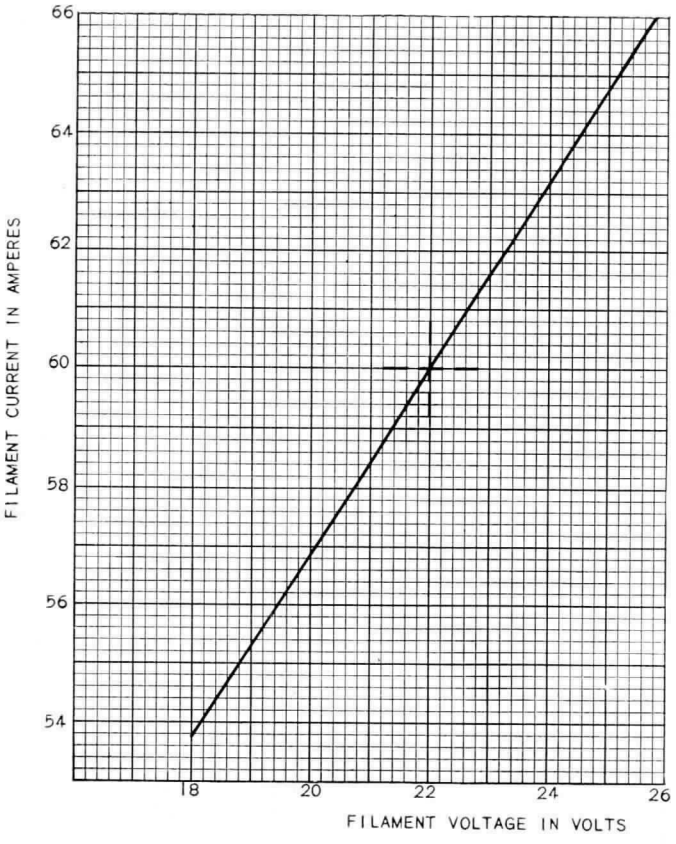

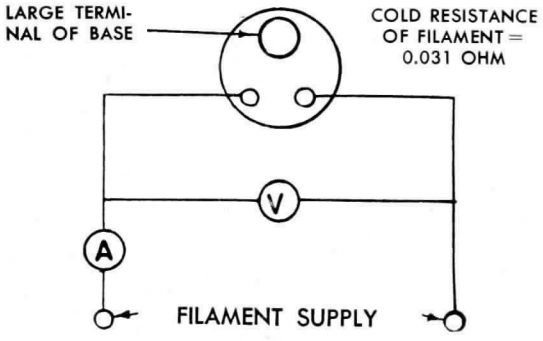

K-69087-72A441
♦ New drawing.

1-11-51

GL-892-R FILAMENT CONNECTIONS

WITH D-C EXCITATION

BASE TERMINALS

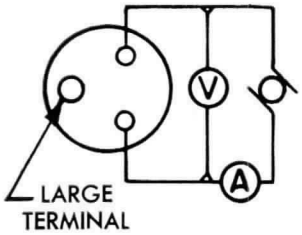

V = 22 VOLTS
A = 60 AMPERES

WITH SINGLE-PHASE A-C EXCITATION

BASE TERMINALS

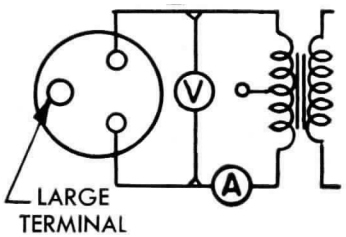

V = 22 VOLTS
A = 60 AMPERES

WITH TWO-PHASE A-C EXCITATION

BASE TERMINALS

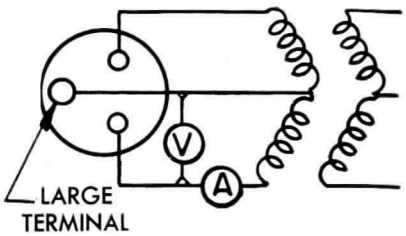

V = 11 VOLTS
A = 60 AMPERES

K-9033547

12-1-44

♦ OUTLINE GL-892-R PLIOTRON

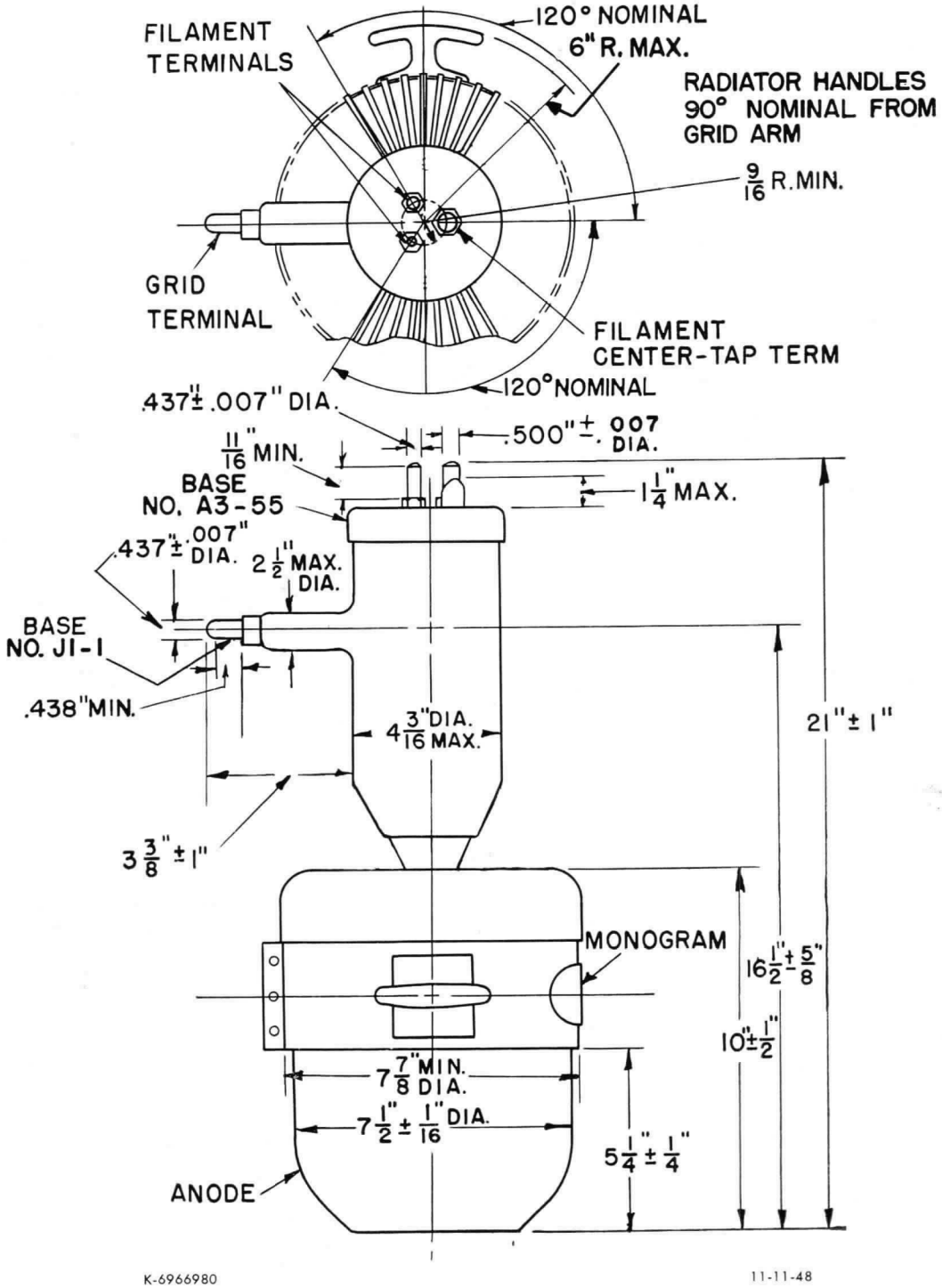

K-6966980
♦ Revised.

11-11-48

Tube Divisions, Electronics Department

GENERAL ELECTRIC

Schenectady, N. Y.

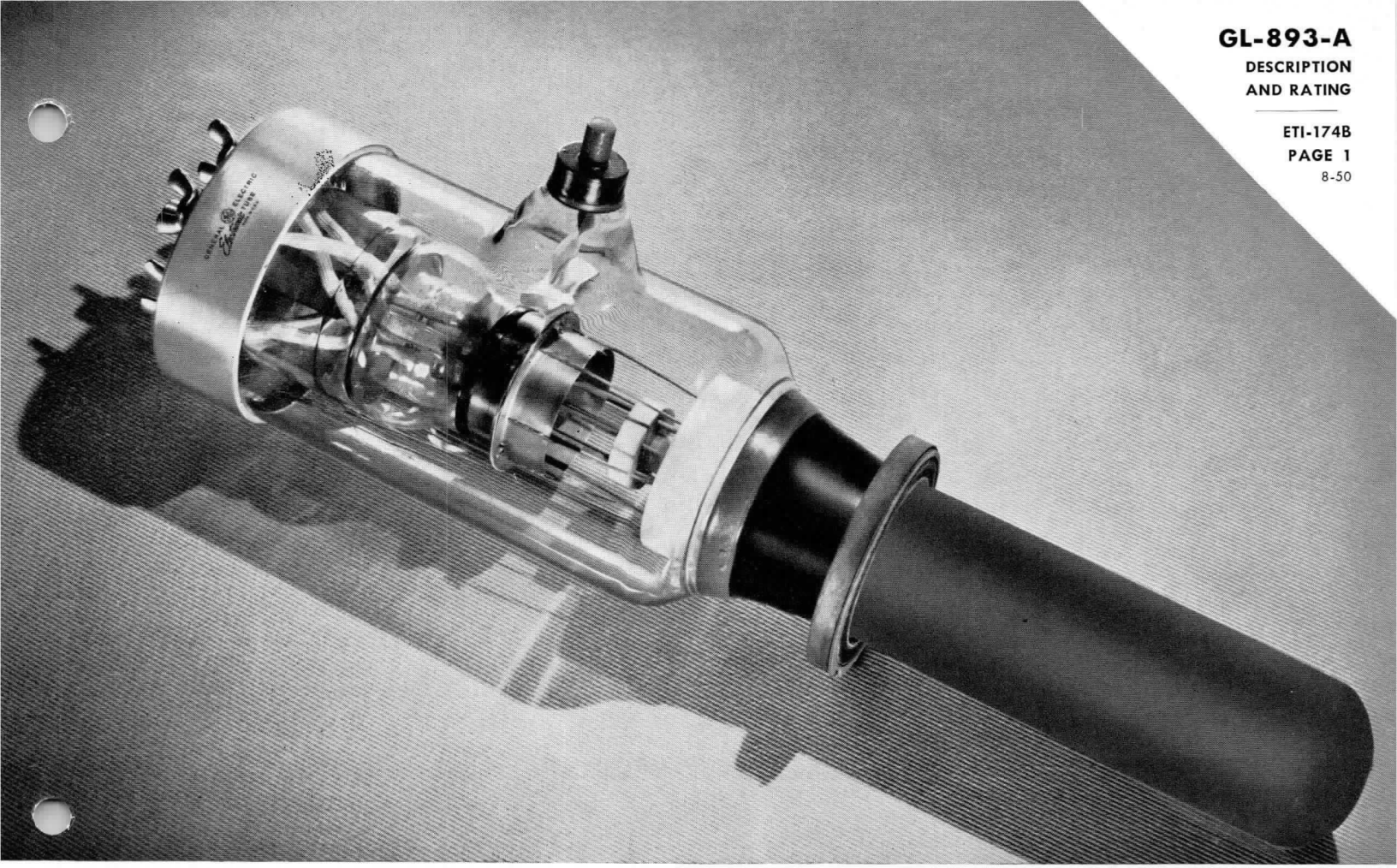

PLIOTRON

DESCRIPTION

The GL-893-A is a three-electrode tube designed for use as a radio-frequency amplifier, oscillator, or Class B modulator. The anode is water-cooled and capable of dissipating 20 kilowatts. The cathode is a pure-tungsten filament. Maximum ratings apply up to 5 megacycles.

♦TECHNICAL INFORMATION

These data are for reference only. For design information refer to specifications.

GENERAL

Electrical Data	Minimum	Bogey	Maximum	
Filament voltage (single-phase excitation)* ◉	...	20	21	volts
Filament current at bogey voltage (Single-phase excitation)* ◉	175	183	190	amperes
Filament starting current (Single-phase excitation)	...	...	275	amperes
Filament cold resistance (Single-phase excitation)	...	.0093	...	ohm
Amplification factor, $I_b = 1.0$ amp, $E_c = -100$ v.	28	34.5	41	
Interelectrode capacitances				
Grid-plate	28.5	33	37.5	uuf
Grid-filament	39.5	48	56.5	uuf
Plate-filament	2.0	3.0	4.0	uuf

♦Technical information completely revised.

GE Electronic TUBE

GENERAL ELECTRIC

Supersedes ETI-174A dated 12-45

TECHNICAL INFORMATION (CONT'D)

Mechanical Data

Mounting position	vertical, anode down
Type of cooling	water and forced air
Water flow on anode	15 GPM
Maximum outgoing water temperature	70 C
Required air flow to stem*	2 CFM
Maximum glass temperature	150 C
Net weight, approximate	12 pounds

MAXIMUM RATINGS AND TYPICAL OPERATING CONDITIONS

AUDIO-FREQUENCY POWER AMPLIFIER AND MODULATOR—CLASS B

Maximum ratings, absolute values	CCS†	
D-c plate voltage	20000 max	volts
Maximum signal d-c plate current‡	4.0 max	amperes
Maximum signal plate input‡	60 max	kilowatts
Plate dissipation‡	20 max	kilowatts

Typical operation	CCS†			
Unless otherwise specified, values are for 2 tubes				
D-c plate voltage	12000	15000	18000	volts
D-c grid voltage	−260	−350	−450	volts
Peak a-f grid-to-grid voltage	1480	1560	1720	volts
Zero signal d-c plate current	0.8	0.8	0.8	ampere
Maximum signal d-c plate current	7.0	6.0	5.5	amperes
Effective load resistance, plate to plate	4000	6000	8000	ohms
Maximum signal driving power, approximate	220	190	140	watts
Maximum signal power output, approximate	52	60	70	kilowatts

RADIO-FREQUENCY POWER AMPLIFIER—CLASS B

Carrier conditions per tube for use with a maximum modulation factor of 1.0

Maximum ratings, absolute values	CCS†	
D-c plate voltage	20000 max	volts
D-c plate current	2.0 max	amperes
Plate input	32 max	kilowatts
Plate dissipation	20 max	kilowatts

Typical operation	CCS†			
D-c plate voltage	12000	15000	15000	volts
D-c grid voltage	−250	−340	−340	volts
Peak r-f grid voltage	350	395	450	volts
D-c plate current	1.5	1.5	2.0	amperes
D-c grid current, approximate	35	30	50	milliamperes
Driving power, approximate△	130	150	200	watts
Power output, approximate	6	7.5	10	kilowatts

PLATE-MODULATED RADIO-FREQUENCY POWER AMPLIFIER—CLASS C TELEPHONY

Carrier conditions per tube for use with a maximum modulation factor of 1.0

Maximum ratings, absolute	CCS†	
D-c plate voltage	12000 max	volts
D-c grid voltage	−3000 max	volts
D-c plate current	2.0 max	amperes
D-c grid current	0.4 max	ampere
Plate input	24 max	kilowatts
Plate dissipation	12 max	kilowatts

Typical operation	CCS†			
D-c plate voltage	10000	10000	12000	volts
D-c grid voltage	−800	−800	−1000	volts
Peak r-f grid voltage	1200	1280	1500	volts
D-c plate current	1.5	2.0	2.0	amperes
D-c grid current, approximate	0.10	0.16	0.14	ampere
Driving power, approximate	120	210	210	watts
Power output, approximate	11	15	18	kilowatts

TECHNICAL INFORMATION (CONT'D)

RADIO-FREQUENCY POWER AMPLIFIER AND OSCILLATOR—CLASS C TELEGRAPHY

Key-down conditions per tube without amplitude modulation¶

Maximum ratings, absolute values			CCS†	
D-c plate voltage			20,000 max	volts
D-c grid voltage			−3000 max	volts
D-c plate current			4.0 max	amperes
D-c grid current			0.4 max	amperes
Plate input			70 max	kilowatts
Plate dissipation			20 max	kilowatts
Typical operation		CCS†		
D-c plate voltage	12,000	15,000	18,000	volts
D-c grid voltage	−800	−900	−1000	volts
Peak r-f grid voltage	1430	1520	1630	volts
D-c plate current	3.5	3.6	3.6	amperes
D-c grid current, approximate	0.26	0.25	0.21	amperes
Driving power, approximate	360	370	340	watts
Power output, approximate	30	40	50	kilowatts

*Air flow to be directed into stem through tubing in center of base. The flow of stem cooling air must continue 5 minutes after removal of filament and plate power.

◉See drawing filament connections and excitation circuits, K-8639686.

†CCS = Continuous commercial service.

‡Averaged over any audio-frequency cycle of sine-wave form.

△At crest of audio-frequency cycle with modulation factor of 1.0.

¶Modulation essentially negative may be used if the positive peak of the envelope does not exceed 115 per cent of the carrier conditions.

Maximum ratings apply up to 5 megacycles. The tube may be operated at higher frequencies provided the maximum values of plate voltage and power input are reduced according to the tabulation below (other maximum ratings are the same as shown above). Special attention should be given to adequate ventilation of the bulb at these frequencies.

Frequency	5	20	40	megacycles
Class B r-f				
Percentage of maximum rated plate voltage	100	85	65	per cent
Percentage of maximum rated plate input	100	82	73	per cent
Class C plate modulated				
Percentage of maximum rated plate voltage	100	80	64	per cent
Percentage of maximum rated plate input	100	75	64	per cent
Class C				
Percentage of maximum rated plate voltage	100	80	60	per cent
Percentage of maximum rated plate input	100	66	50	per cent

GL-893-A AVERAGE PLATE CHARACTERISTIC
$E_f = 20$ VOLTS A-C

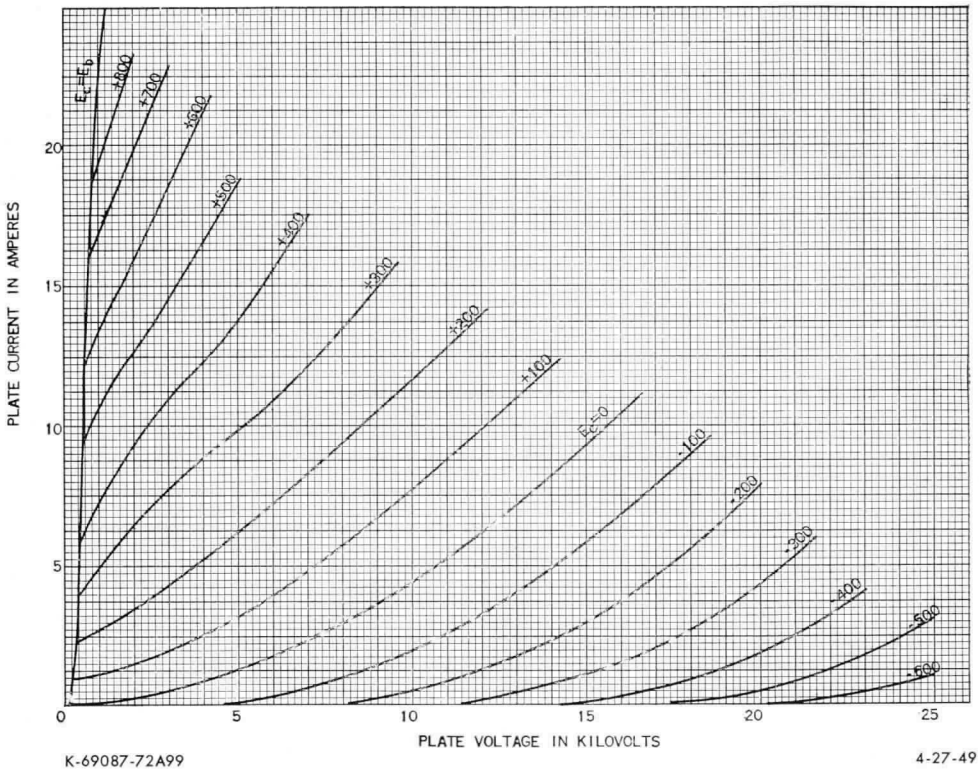

K-69087-72A99

4-27-49

■ GL-893-A TYPICAL GRID-PLATE TRANSFER CHARACTERISTIC
$E_f = 20$ VOLTS A-C

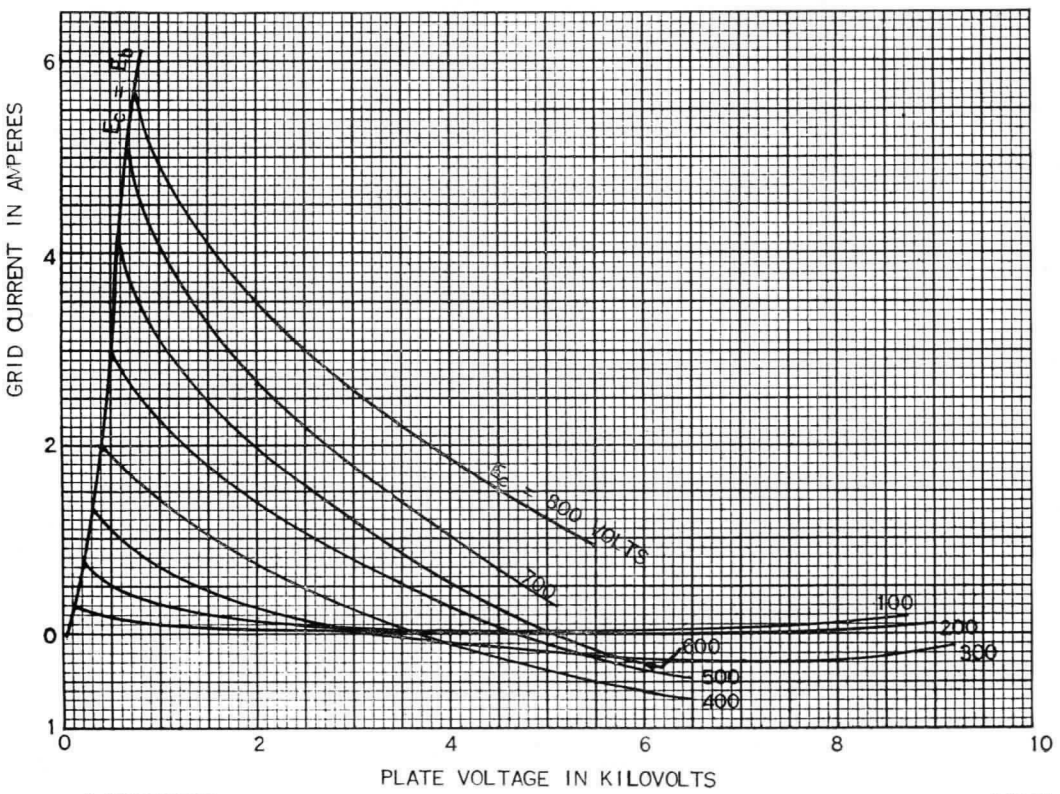

K-69087-72A288
■Drawing revised

4-27-49

■ GL-893-A AVERAGE FILAMENT CHARACTERISTIC
SINGLE-PHASE CONNECTION
COLD RESISTANCE = 0.0093 OHM

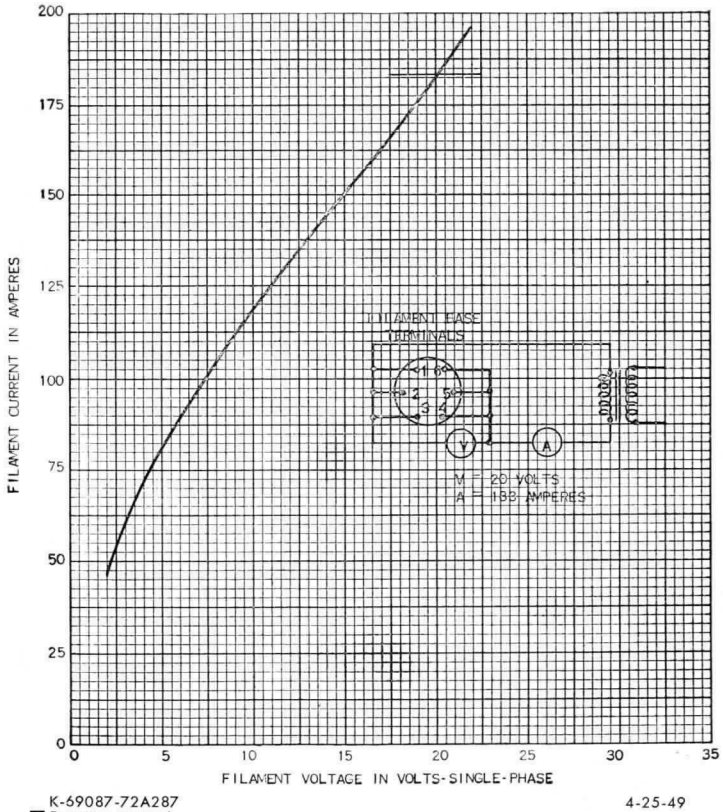

K-69087-72A287
■ Drawing revised

4-25-49

GL-893-A FILAMENT CONNECTIONS

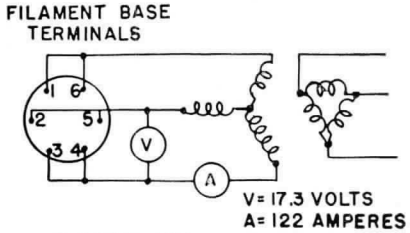

V = 17.3 VOLTS
A = 122 AMPERES

THREE-PHASE A-C FILAMENT EXCITATION

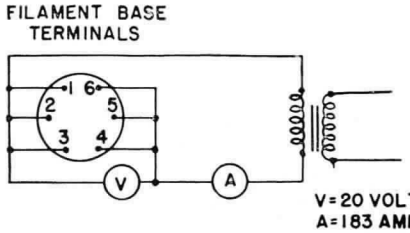

V = 20 VOLTS
A = 183 AMPERES

SINGLE-PHASE A-C FILAMENT EXCITATION

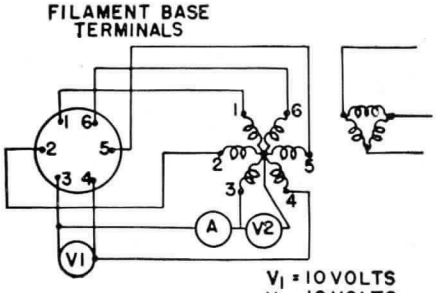

V_1 = 10 VOLTS
V_2 = 10 VOLTS
A = 61 AMPERES

SIX-PHASE A-C FILAMENT EXCITATION

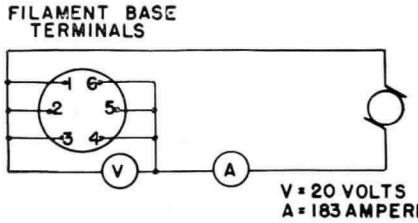

V = 20 VOLTS
A = 183 AMPERES

D-C FILAMENT EXCITATION

NOTE: TERMINALS MUST BE CONNECTED IN CORRECT PHASE RELATION AS SHOWN

K-8639686

4-27-49

■ GL-893-A
AVERAGE FILAMENT EMISSION CHARACTERISTIC
SINGLE-PHASE FILAMENT CONNECTION

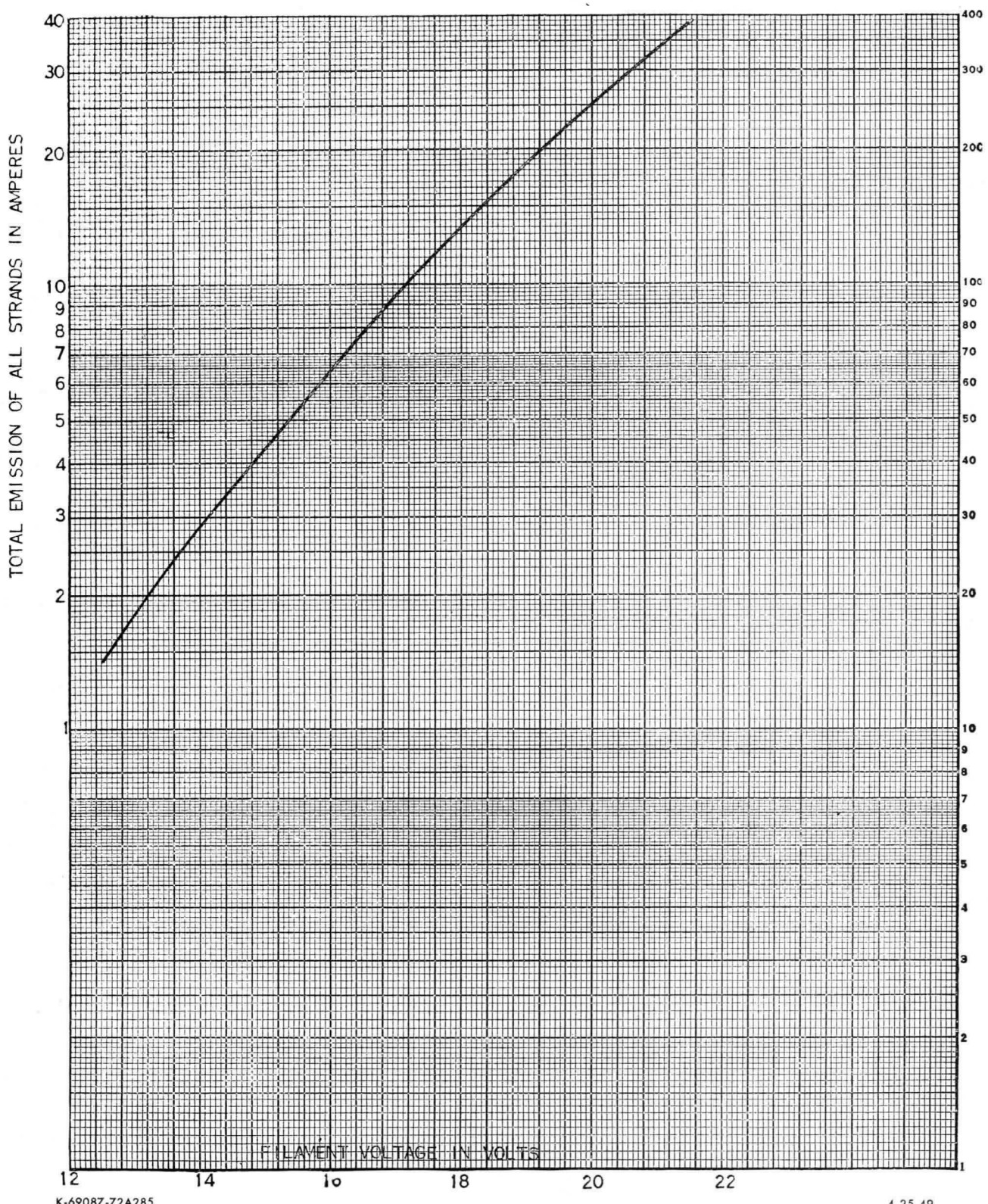

K-69087-72A285
■ Drawing revised

4-25-49

■ GL-893-A
CHARACTERISTICS
$E_f = 20$ VOLTS A-C

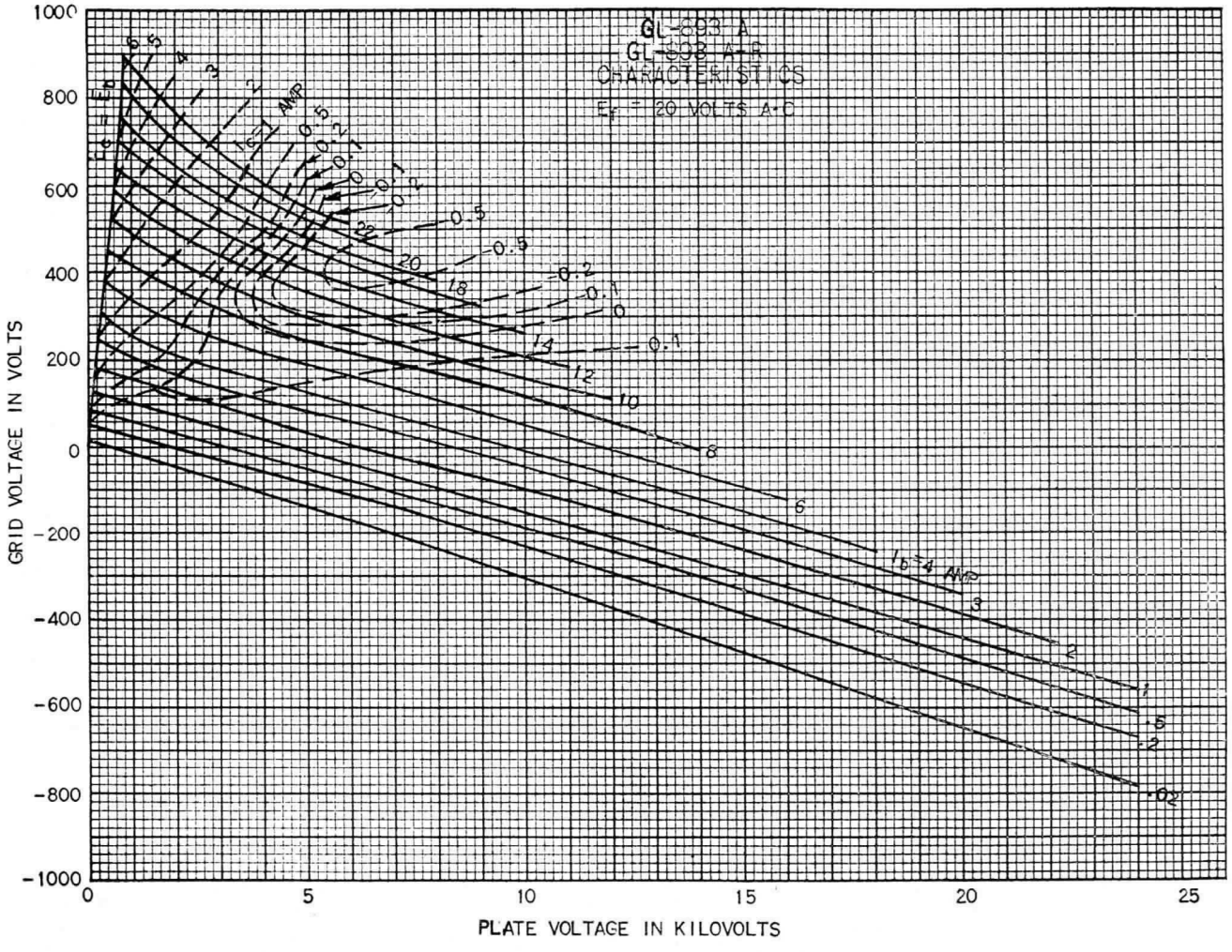

K-69087-72A286
■ Drawing revised

4-25-49

■GL-893-A OUTLINE

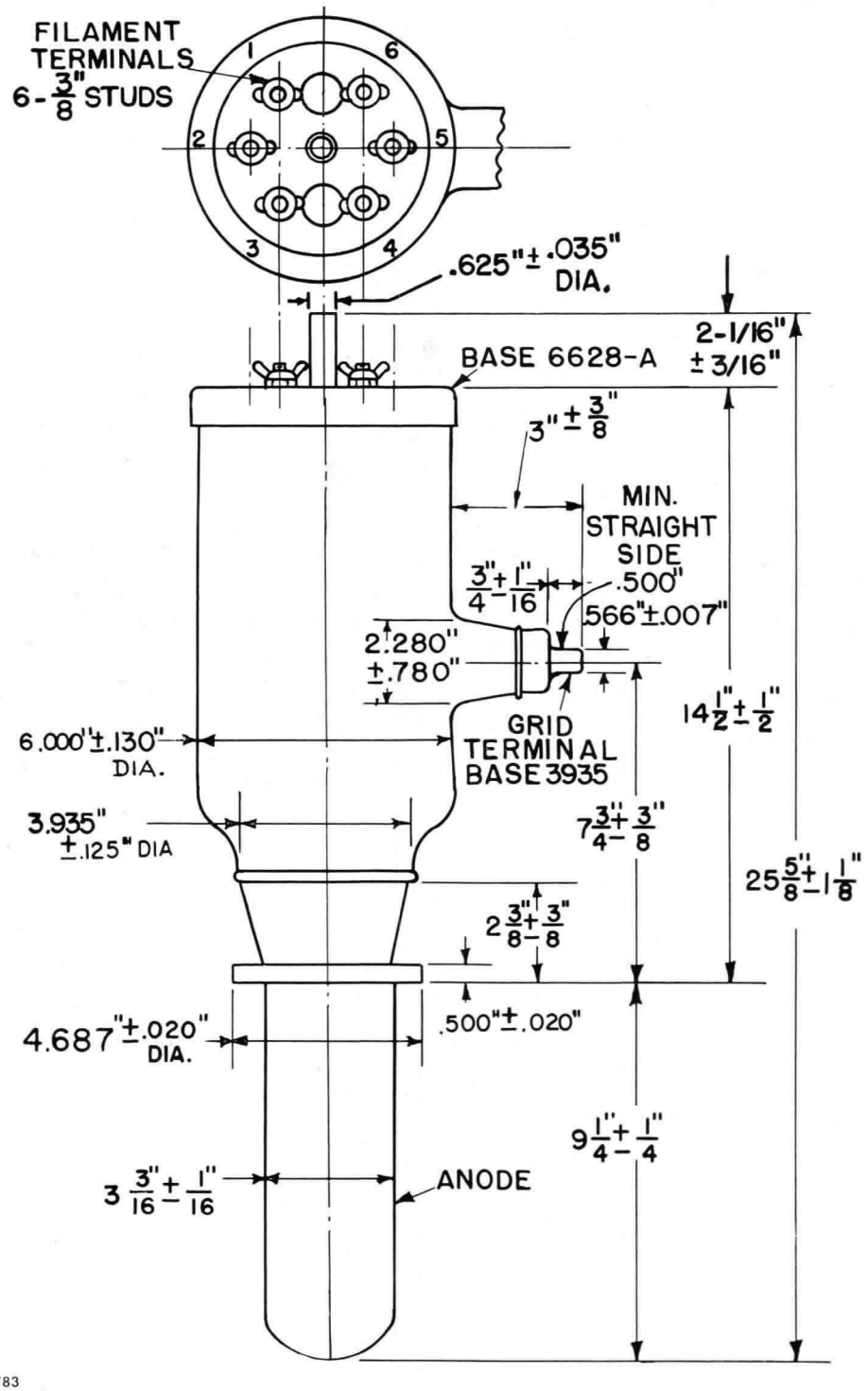

K-5344783
■Drawing revised

12-8-49

Tube Divisions, Electronics Department

GENERAL ELECTRIC

Schenectady, N. Y.

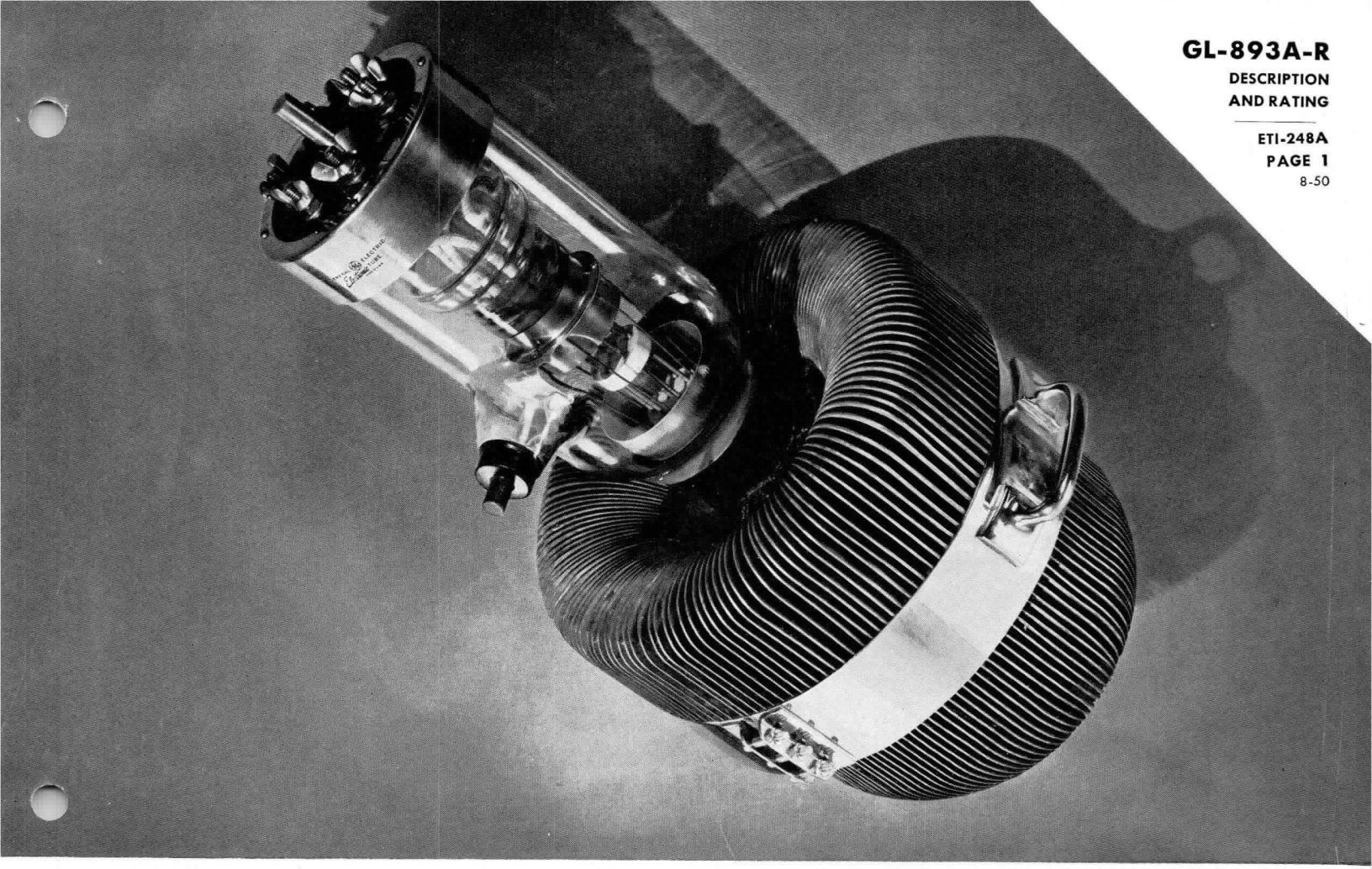

PLIOTRON

DESCRIPTION

The GL-893A-R is a three-electrode tube designed for use as a radio-frequency amplifier, oscillator, or class B modulator. The anode is forced-air cooled and is capable of dissipating 20 kilowatts. The cathode is a pure-tungsten filament. Maximum ratings apply up to 5 megacycles.

♦TECHNICAL INFORMATION

These data are for reference only. For design information refer to specifications.

GENERAL

Electrical Data	Minimum	Bogey	Maximum	
Filament voltage (single-phase excitation)*§	...	20	21	volts
Filament current at bogey voltage (Single-phase excitation)*§	175	183	190	amperes
Filament starting current (Single-phase excitation)	...	...	275	amperes
Filament cold resistance (Single-phase excitation)	...	.0093	...	ohm
Amplification factor, $I_b = 1.0$ amp, $E_c = -100$ v	28	34.5	41	
Interelectrode capacitances				
Grid-plate	29.8	34	38.8	uuf
Grid-filament	39.5	48	56.5	uuf
Plate-filament	2.6	3.5	4.4	uuf

♦ Technical information completely revised.

Electronic TUBE

GENERAL ELECTRIC

Supersedes ETI-248 dated 8-46

TECHNICAL INFORMATION (CONT'D)

Mechanical Data

Mounting position				vertical
Type of cooling				forced-air
Maximum incoming air temperature				45 C
Required air flow on anode				
Plate dissipation—percent of rating	100	80	60	
Air flow—cubic feet per minute	1800	1250	1000	
Static pressure—inches water	1.05	0.56	0.38	
Required air flow to stem*				2 CFM†
Maximum glass temperature				150 C
Net weight, approximate				230 pounds

MAXIMUM RATINGS AND TYPICAL OPERATING CONDITIONS

AUDIO-FREQUENCY POWER AMPLIFIER AND MODULATOR—CLASS B

Maximum ratings, absolute values	CCS†	
D-c plate voltage	20,000 max	volts
Maximum signal d-c plate current‡	4.0 max	amperes
Maximum signal plate input‡	60 max	kilowatts
Plate dissipation	20 max	kilowatts

Typical operation Unless otherwise specified, values are for 2 tubes	CCS†			
D-c plate voltage	12,000	15,000	18,000	volts
D-c grid voltage	−260	−350	−450	volts
Peak a-f grid-to-grid voltage	1480	1560	1720	volts
Zero signal d-c plate current	0.8	0.8	0.8	amperes
Maximum signal d-c plate current	7.0	6.0	5.5	amperes
Effective load resistance, plate to plate	4000	6000	8000	ohms
Maximum signal driving power, approximate	220	190	140	watts
Maximum signal power output, approximate	52	60	70	kilowatts

RADIO-FREQUENCY POWER AMPLIFIER—CLASS B

Carrier conditions per tube for use with a maximum modulation factor of 1.0

Maximum ratings, absolute values	CCS†	
D-c plate voltage	20,000 max	volts
D-c plate current	2.0 max	amperes
Plate input	32 max	kilowatts
Plate dissipation	20 max	kilowatts

Typical operation	CCS†			
D-c plate voltage	12,000	15,000	15,000	volts
D-c grid voltage	−250	−340	−340	volts
Peak r-f grid voltage	350	395	450	volts
D-c plate current	1.5	1.5	2.0	amperes
D-c grid current, approximate	35	30	50	milliamperes
Driving power, approximateπ	130	150	200	watts
Power output, approximate	6	7.5	10	kilowatts

PLATE-MODULATED RADIO-FREQUENCY POWER AMPLIFIER—CLASS C TELEPHONY

Carrier conditions per tube for use with a maximum modulation factor of 1.0

Maximum ratings, absolute values	CCS†	
D-c plate voltage	12,000 max	volts
D-c grid voltage	−3000 max	volts
D-c plate current	2.0 max	amperes
D-c grid current	0.4 max	amperes
Plate input	24 max	kilowatts
Plate dissipation	12 max	kilowatts

Typical operation	CCS†			
D-c plate voltage	10,000	10,000	12,000	volts
D-c grid voltage	−800	−800	−1000	volts
Peak r-f grid voltage	1200	1280	1500	volts
D-c plate current	1.5	2.0	2.0	amperes
D-c grid current, approximate	0.10	0.16	0.14	amperes
Driving power, approximate	120	210	210	watts
Power output, approximate	11	15	18	kilowatts

TECHNICAL INFORMATION (CONT'D)

RADIO-FREQUENCY POWER AMPLIFIER AND OSCILLATOR—CLASS C TELEGRAPHY

Key-down conditions per tube without amplitude modulation

Maximum ratings, absolute values		CCS†		
D-c plate voltage		20,000 max		volts
D-c grid voltage		−3000 max		volts
D-c plate current		4.0 max		amperes
D-c grid current		0.4 max		amperes
Plate input		70 max		kilowatts
Plate dissipation		20 max		kilowatts
Typical operation		CCS†		
D-c plate voltage	12,000	15,000	18,000	volts
D-c grid voltage	−800	−900	−1000	volts
Peak r-f grid voltage	1430	1520	1630	volts
D-c plate current	3.5	3.6	3.6	amperes
D-c grid current, approximate	0.26	0.25	0.21	amperes
Driving power, approximate	360	370	340	watts
Power output, approximate	30	40	50	kilowatts

*Air flow to be directed into stem through tubing in center of base. The flow stem-cooling air must continue for 5 minutes after removal of filament and plate power.

§See drawing Filament Connections and Excitation Circuits, K-8639686.

†CCS = Continuous Commercial Service.

‡Averaged over any audio-frequency cycle of sine-wave form.

πAt crest of audio-frequency cycle with modulation factor of 1.0.

¶Modulation essentially negative may be used if the positive peak of the envelope does not exceed 115 percent of the carrier conditions.

Maximum ratings apply up to 5 megacycles. The tube may be operated at higher frequencies provided the maximum values of plate voltage and power input are reduced according to the tabulation below (other maximum ratings are the same as shown above). Special attention should be given to adequate ventilation of the bulb at these frequencies.

Frequency	5	12	25	megacycles
Percentage of maximum rated plate Voltage and plate input				
Class B r-f	100	86	74	percent
Class C plate modulated	100	81	65	percent
Class C unmodulated				
Percentage of maximum rated plate voltage	100	81	65	percent
Percentage of maximum rated plate input	100	75	50	percent

■GL-893A-R AVERAGE PLATE CHARACTERISTIC
$E_f = 20$ VOLTS A-C

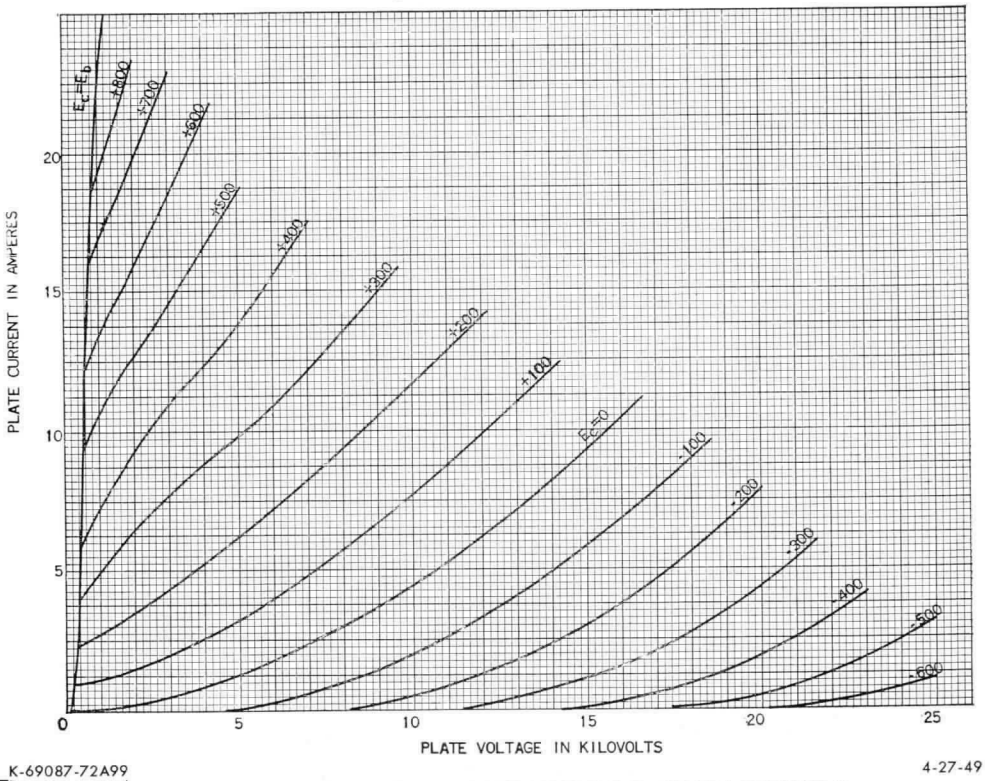

K-69087-72A99
■Drawing revised

4-27-49

■GL-893A-R GRID-PLATE TRANSFER CHARACTERISTIC
$E_f = 20$ VOLTS A-C

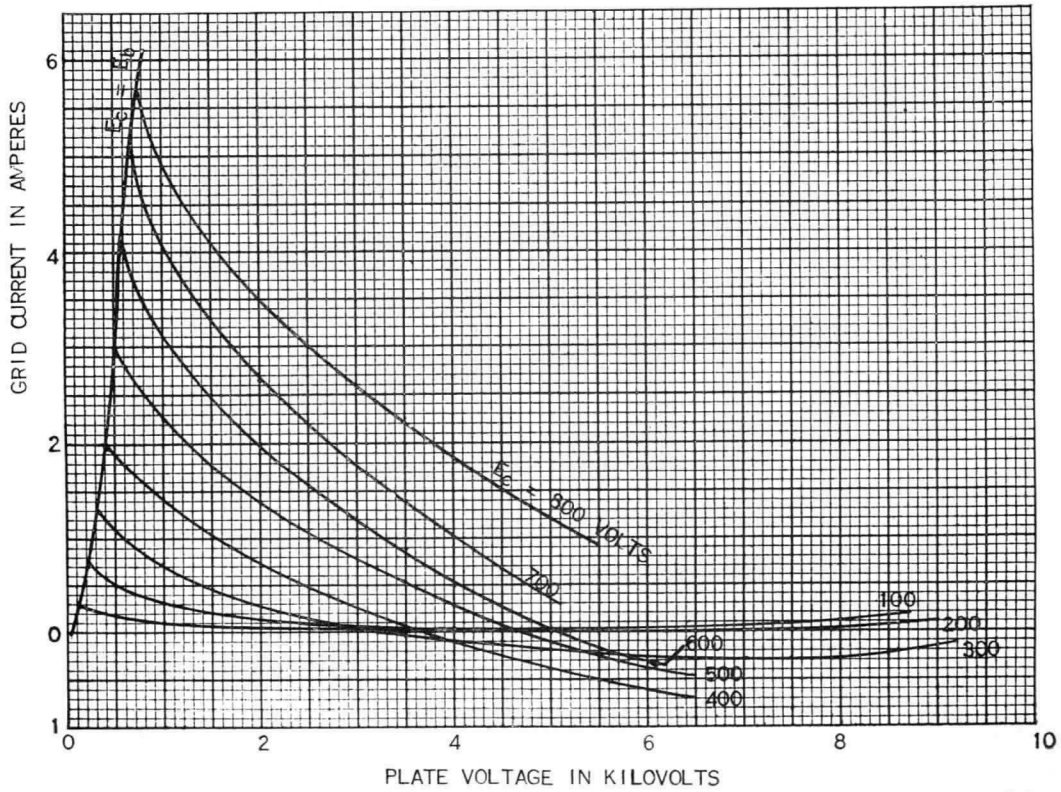

K-69087-72A288
■Drawing revised

4-25-49

■GL-893A-R AVERAGE FILAMENT CHARACTERISTIC
SINGLE-PHASE CONNECTION
COLD RESISTANCE = 0.0093 OHM

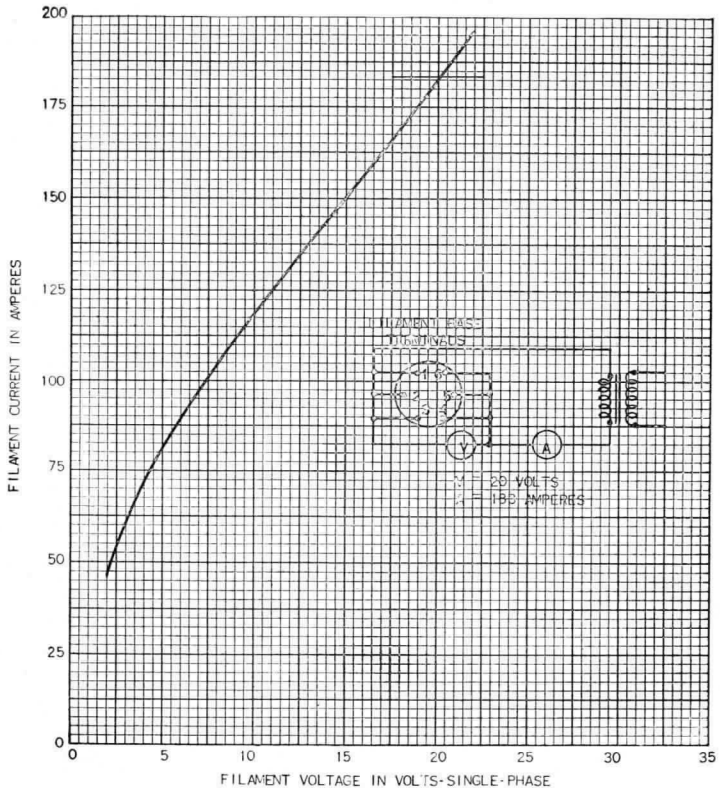

K-69087-72A287
■Drawing revised

4-25-49

GL-893A-R FILAMENT CONNECTIONS

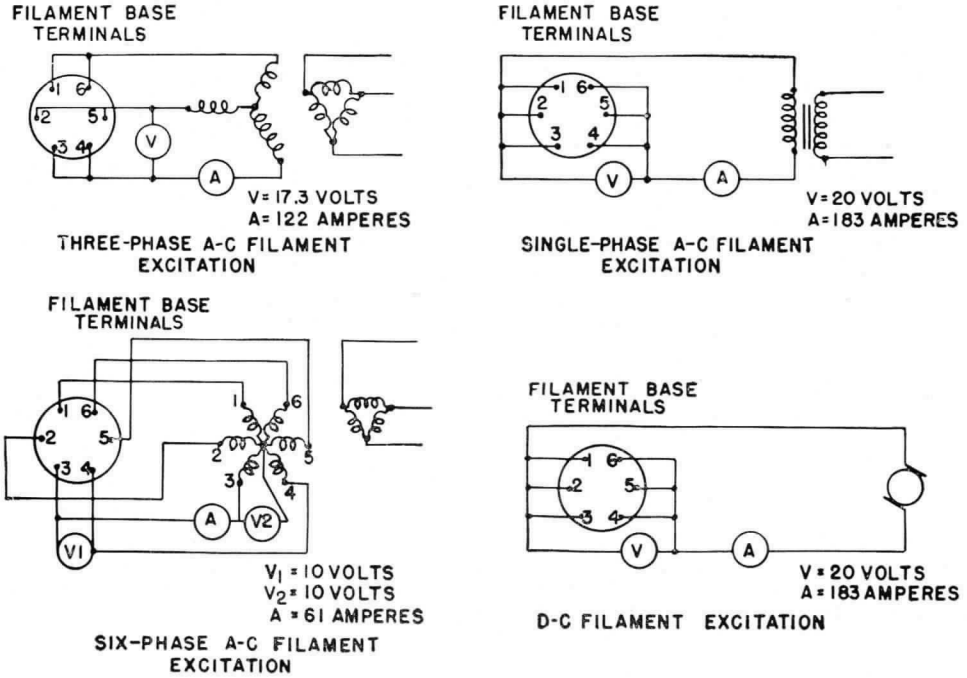

NOTE: TERMINALS MUST BE CONNECTED IN CORRECT PHASE RELATION AS SHOWN

K-8639686

4-27-49

■GL-893A-R
AVERAGE FILAMENT EMISSION CHARACTERISTIC
SINGLE-PHASE FILAMENT CONNECTION

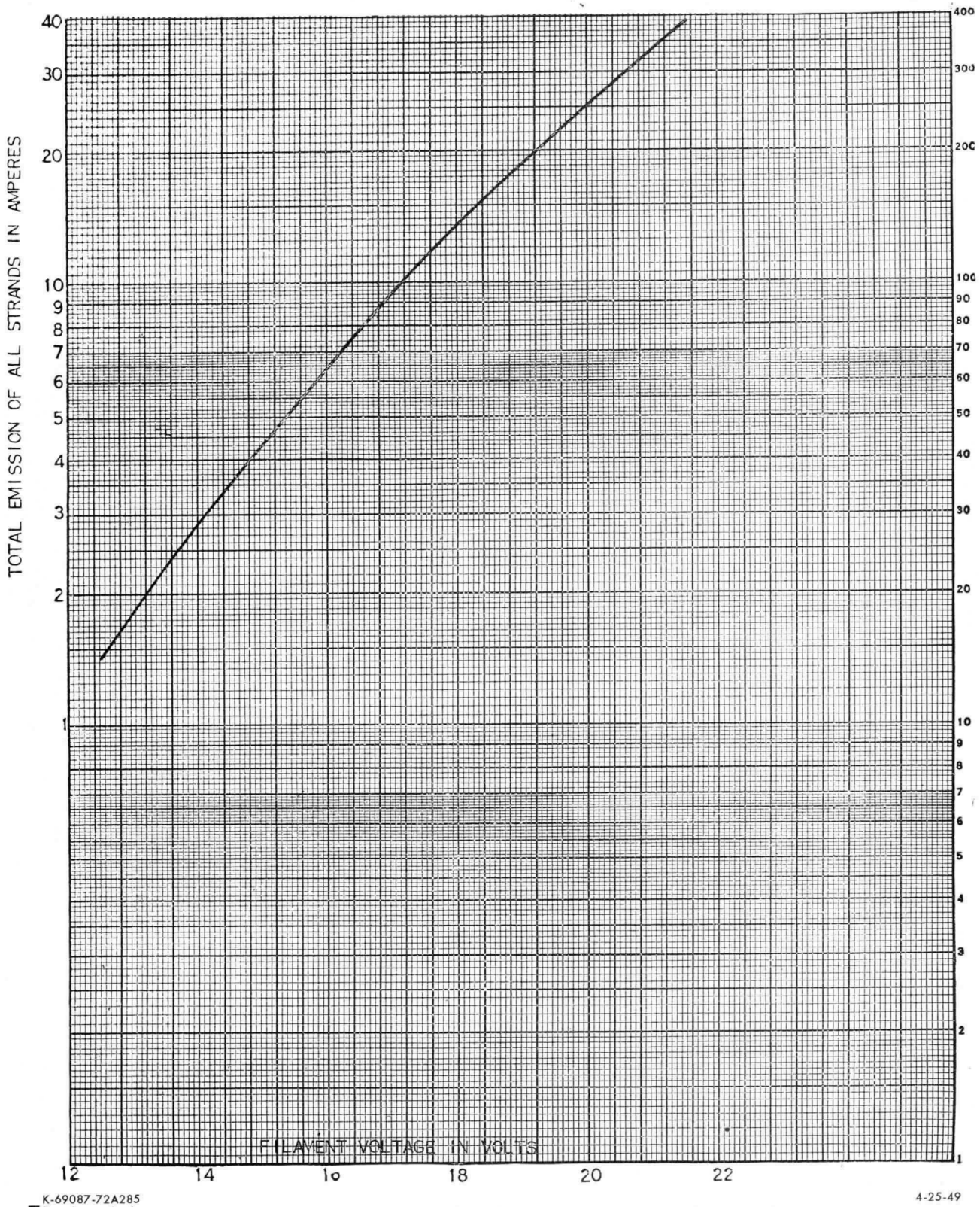

K-69087-72A285
■Drawing revised

4-25-49

■ GL-893A-R
CHARACTERISTICS
$E_f = 20$ VOLTS A-C

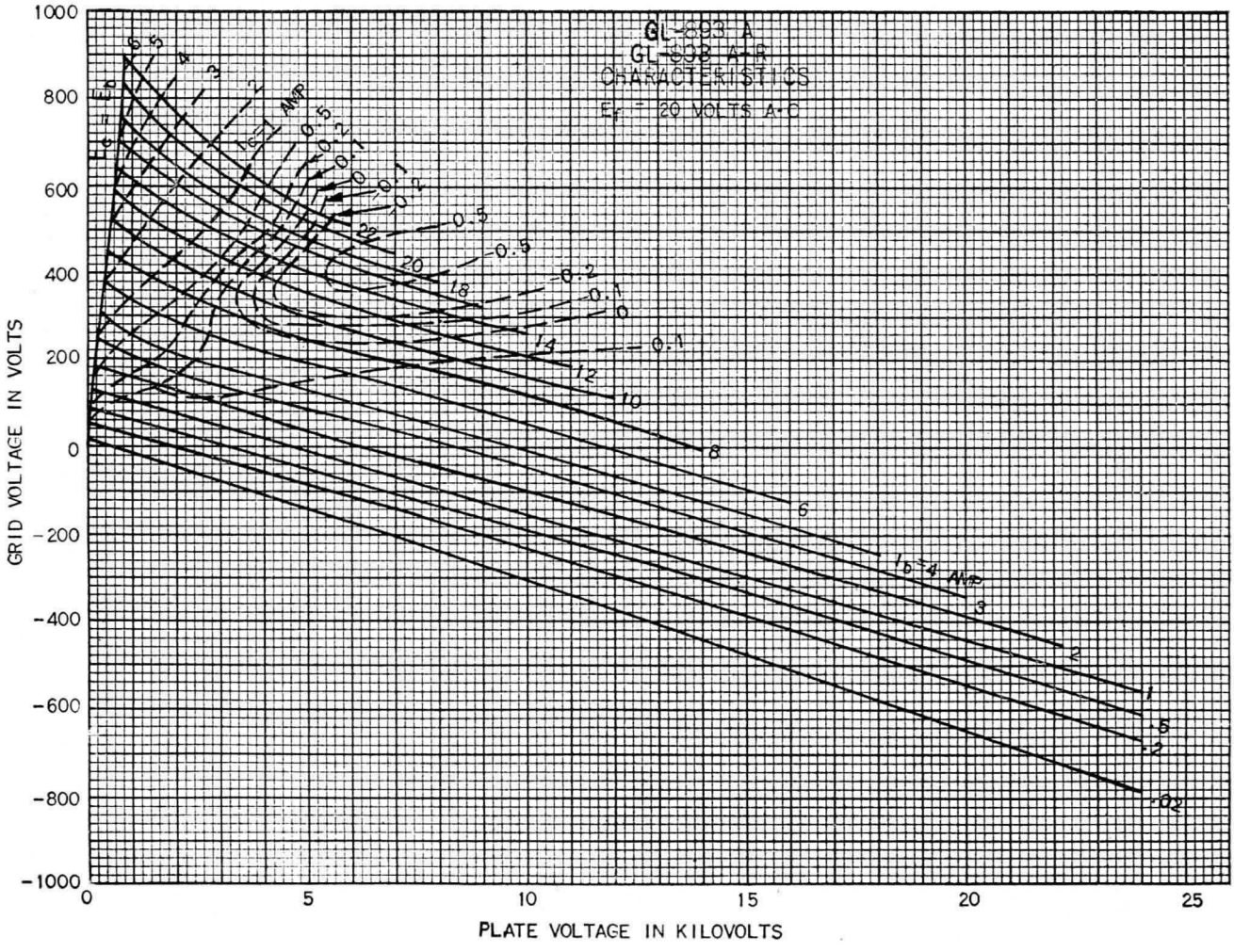

K-69087-72A286
■ Drawing revised

4-25-49

■GL-893A-R OUTLINE

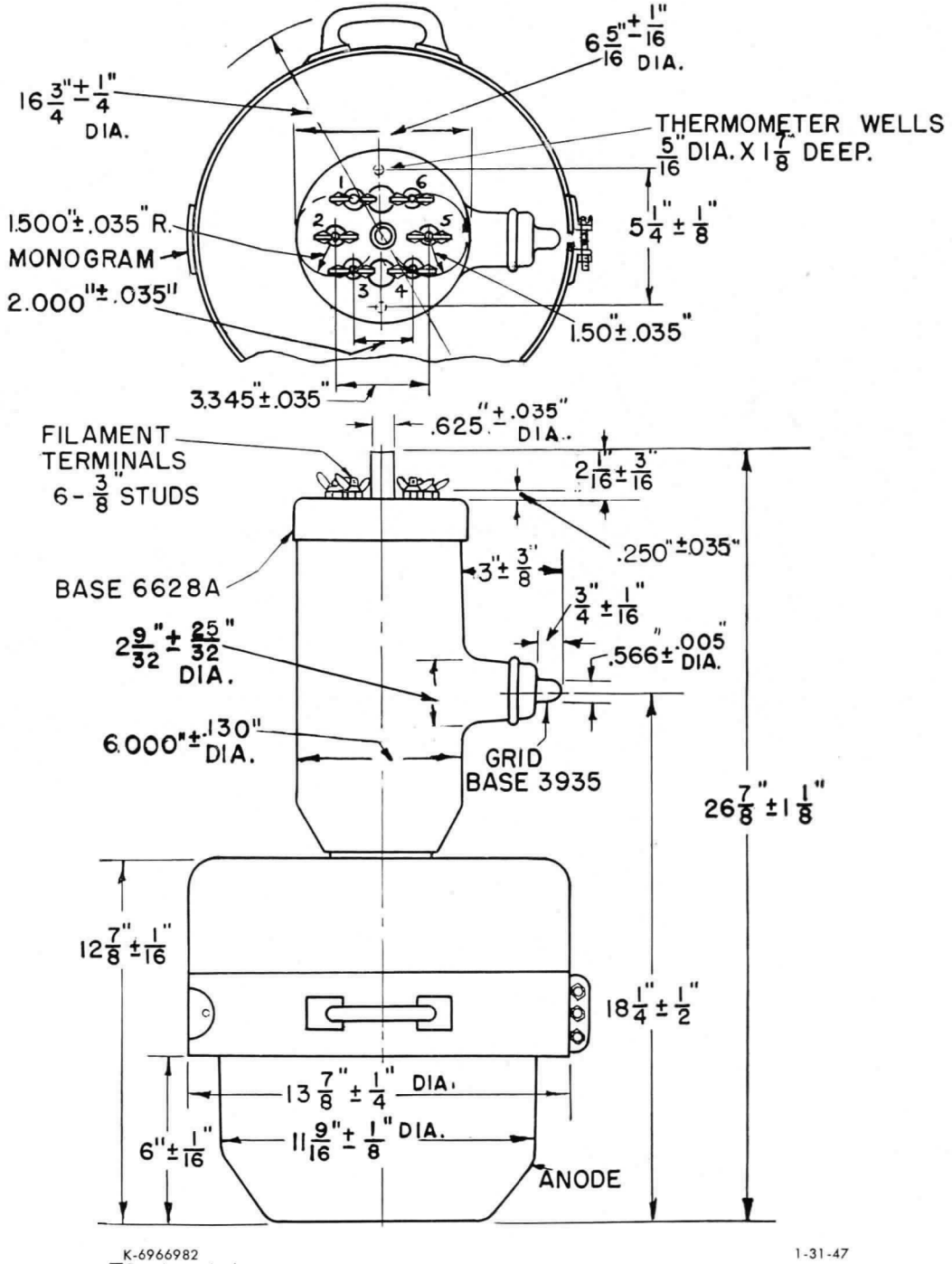

K-6966982
■ Drawing revised

1-31-47

Tube Divisions, Electronics Department

GENERAL ELECTRIC

Schenectady, N. Y.

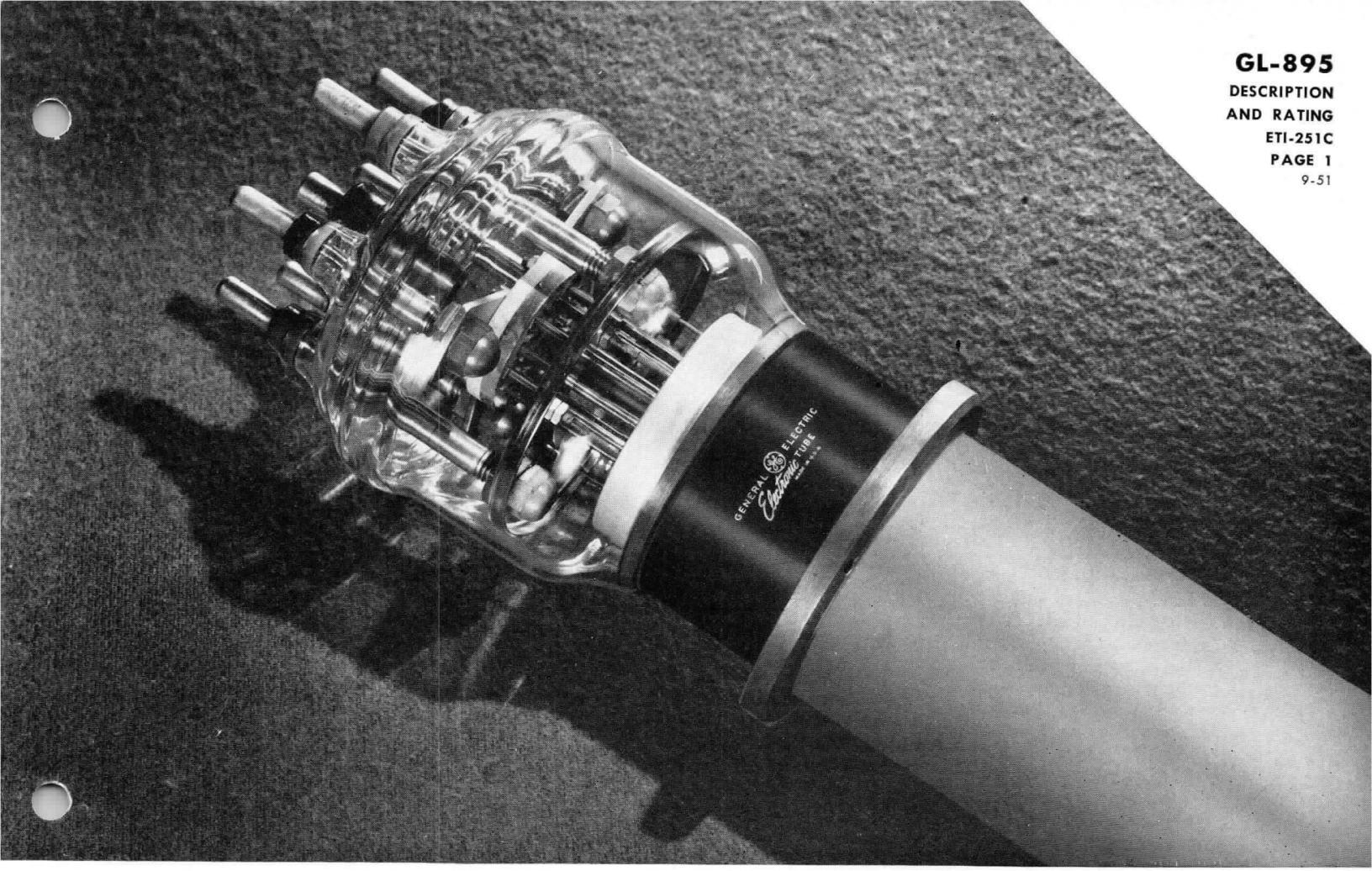

TRIODE

DESCRIPTION

The GL-895 is a water-cooled transmitting tube for use as a Class B modulator, radio-frequency power amplifier, or oscillator. The plate is capable of dissipating up to 40 kilowatts.

TECHNICAL INFORMATION

GENERAL

Electrical Data	Minimum	Bogey	Maximum	
Filament voltage, to neutral*	...	19	20	volts
Filament current, per phase	128	138	146	amperes
Filament starting current**	...	...	210	amperes
Filament cold resistance (per phase to Y center)	...	0.013	...	ohm
Amplification factor, $E_c = -100$ volts, $I_b = 1$ amp	30	37	43	
Interelectrode capacitances				
Grid-plate	32	40	48	uuf
Grid-filament	64	80	96	uuf
Plate-filament	5	8	11	uuf

*When the load conditions are lower than maximum, the tube may usually be operated with reduced filament voltage.
**Starting current must never exceed, even momentarily, a value of 210 amperes.

Electronic TUBE

GENERAL ELECTRIC

Supersedes ETI-251B dated 4-48

TECHNICAL INFORMATION (CONT'D)

Mechanical Data

Mounting position	vertical, glass-end up	
Type of cooling	water and forced air***	
Water flow on anode	20–25	GPM
Maximum outgoing water temperature	70	C
Air flow to filament and grid thimbles	5	CFM
Maximum glass temperature	150	C
Net weight, approximate	25	pounds

***Water flow of 20 to 25 gallons per minute must start before application of any voltage and continue for at least 5 minutes after removal of voltage. Water temperature must not exceed 70 C under any conditions of operation. Air flow of 5 cubic feet per minute directed on filament and grid thimbles is required before application of any voltage, and for 5 minutes after all voltage is switched off, to limit temperature of grid and filament seals to a maximum of 150 C.

AUDIO-FREQUENCY POWER AMPLIFIER AND MODULATOR—CLASS B

Maximum ratings, absolute values				
D-c plate voltage		17,000 max		volts
Maximum signal d-c plate current†		9 max		amperes
Maximum signal plate input†		100,000 max		watts
Plate dissipation†		40,000 max		watts
Typical operation				
Unless otherwise specified, values are for two tubes				
D-c plate voltage	12,500	10,000	10,000	volts
Zero signal d-c plate current	1.50	2.00	2.00	amperes
Maximum signal d-c plate current	10.80	10.80	5.10	amperes
D-c grid voltage	−250	−200	−200	volts
Peak a-f grid-to-grid voltage	1300	1200	800	volts
Effective load resistance, plate to plate	2700	2100	3600	ohms
Maximum signal driving power, approximate	700	600	75	watts
Maximum signal power output, approximate	90,000	70,000	30,000	watts

† Averaged over any audio-frequency cycle of sine-wave form.

PLATE-MODULATED RADIO-FREQUENCY POWER AMPLIFIER—CLASS C TELEPHONY

CARRIER CONDITIONS PER TUBE FOR USE WITH A MAXIMUM MODULATION FACTOR OF 1.0

Maximum ratings, absolute values				
D-c plate voltage		12,500 max		volts
D-c plate current		5 max		amperes
Plate input		62,500 max		watts
Plate dissipation		27,000 max		watts
D-c grid voltage		−3000 max		volts
D-c grid current		1.5 max		amperes
Typical operation				
D-c plate voltage	12,500	12,500	10,000	volts
D-c plate current	2.5	4.40	3.35	amperes
D-c grid voltage	−1400	−1500	−1500	volts
Peak r-f grid voltage	1810	2080	2000	volts
Driving power, approximate	780	1700	1300	watts
Power output, approximate	25,000	45,000	25,000	watts

RADIO-FREQUENCY POWER AMPLIFIER AND OSCILLATOR—CLASS C TELEGRAPHY

*KEY-DOWN CONDITIONS PER TUBE WITHOUT MODULATION*****

Maximum ratings, absolute values		
D-c plate voltage	17,000 max	volts
D-c plate current	9 max	amperes
Plate input	140,000 max	watts
Plate dissipation	40,000 max	watts
D-c grid voltage	−3000 max	volts
D-c grid current	1.5 max	amperes

****Modulation, essentially negative, may be used if the positive peak of the audio envelope does not exceed 115 per cent of carrier conditions.

TECHNICAL INFORMATION (CONT'D)

Typical operation					
D-c plate voltage	17,000	15,000	12,000	10,000	volts
D-c plate current	7.50	8.60	7.20	7.15	amperes
D-c grid voltage	−1000	−700	−1000	−1000	volts
Peak r-f grid voltage	1700	1400	1700	1700	volts
D-c grid current, approximate	1.00	1.15	1.15	1.15	amperes
Driving power, approximate	1700	1500	1900	1900	watts
Power output, approximate	100,000	95,000	60,000	50,000	watts

APPLICATION NOTES

Maximum ratings apply up to 6 megacycles. The tube may be operated at higher frequencies provided the maximum values of plate voltage and power input are reduced according to the tabulation below (other maximum ratings are the same as shown above). Special attention should be given to adequate ventilation of the bulb at these frequencies.

Frequency	6	12	25	megacycles
Percentage of maximum rated plate voltage and plate input				
Class C plate modulated	100	90	81	per cent
Class C unmodulated	100	85	70	per cent

GL-895 AVERAGE PLATE CHARACTERISTICS

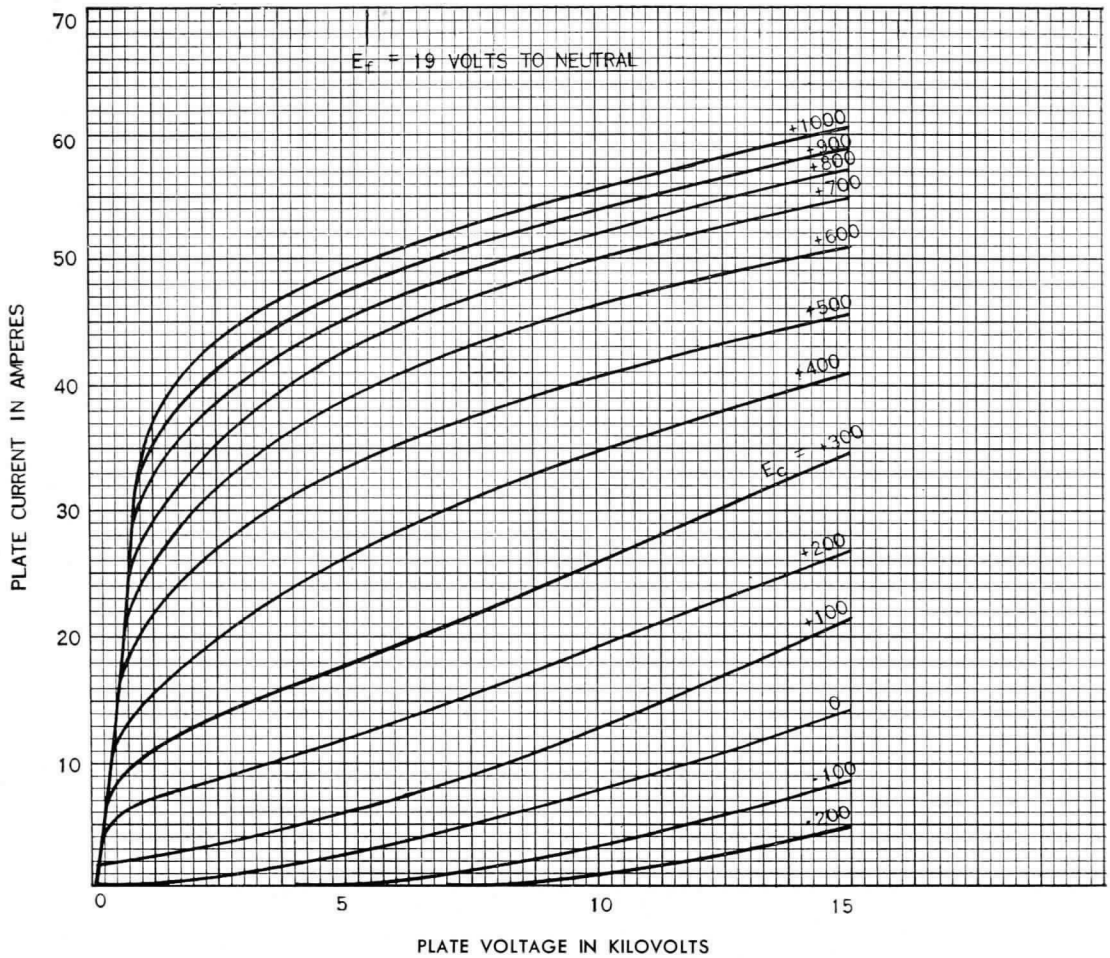

K-9186087

6-18-47

GL-895 CHARACTERISTICS

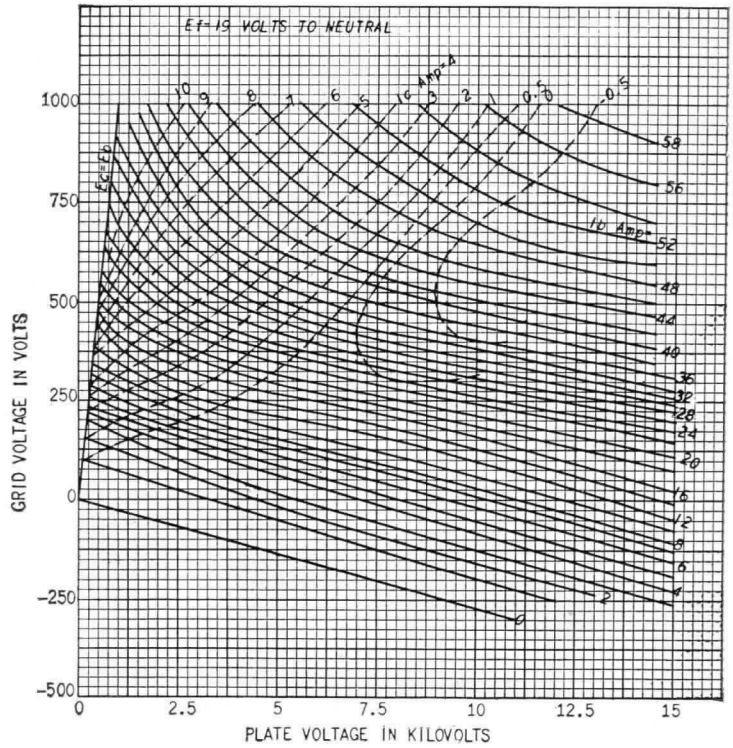

K-9186074 12-10-45

GL-895
TYPICAL GRID-PLATE TRANSFER CHARACTERISTICS

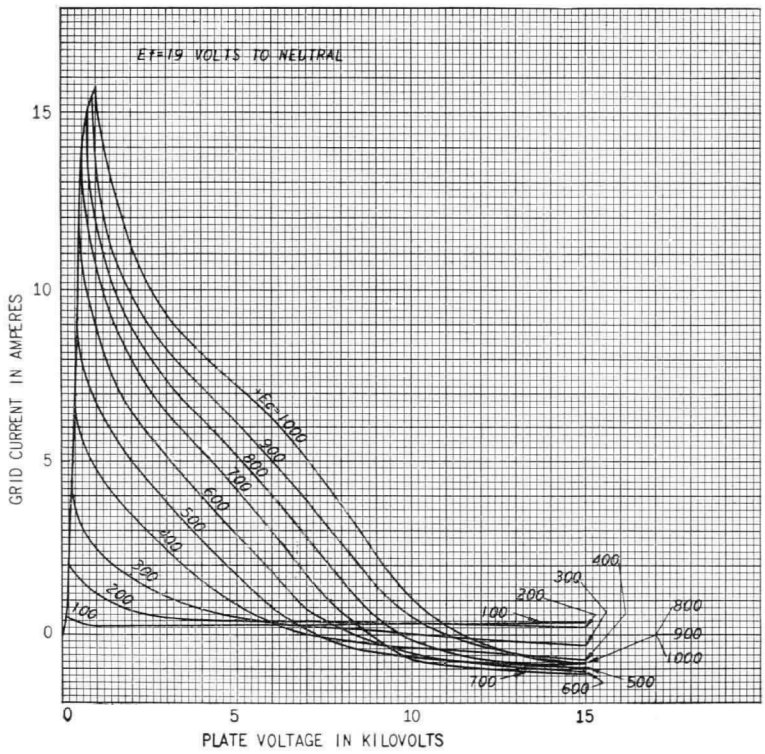

K-9186088 12-10-45

GL-895 FILAMENT CHARACTERISTICS

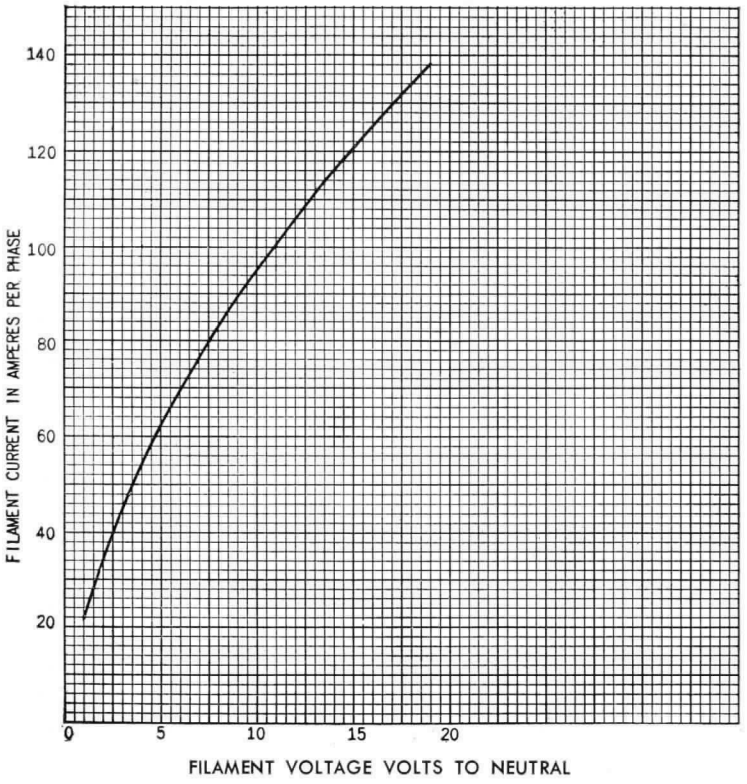

K-9186073 12-10-45

GL-895 AVERAGE FILAMENT EMISSION

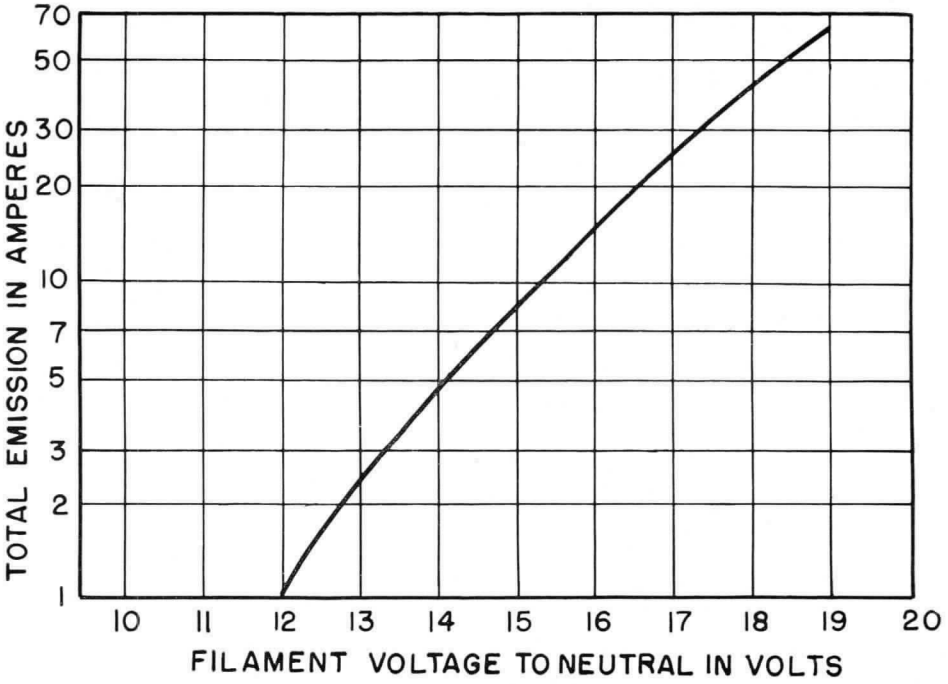

K-9186072 1-9-46

GL-895 FILAMENT CONNECTIONS

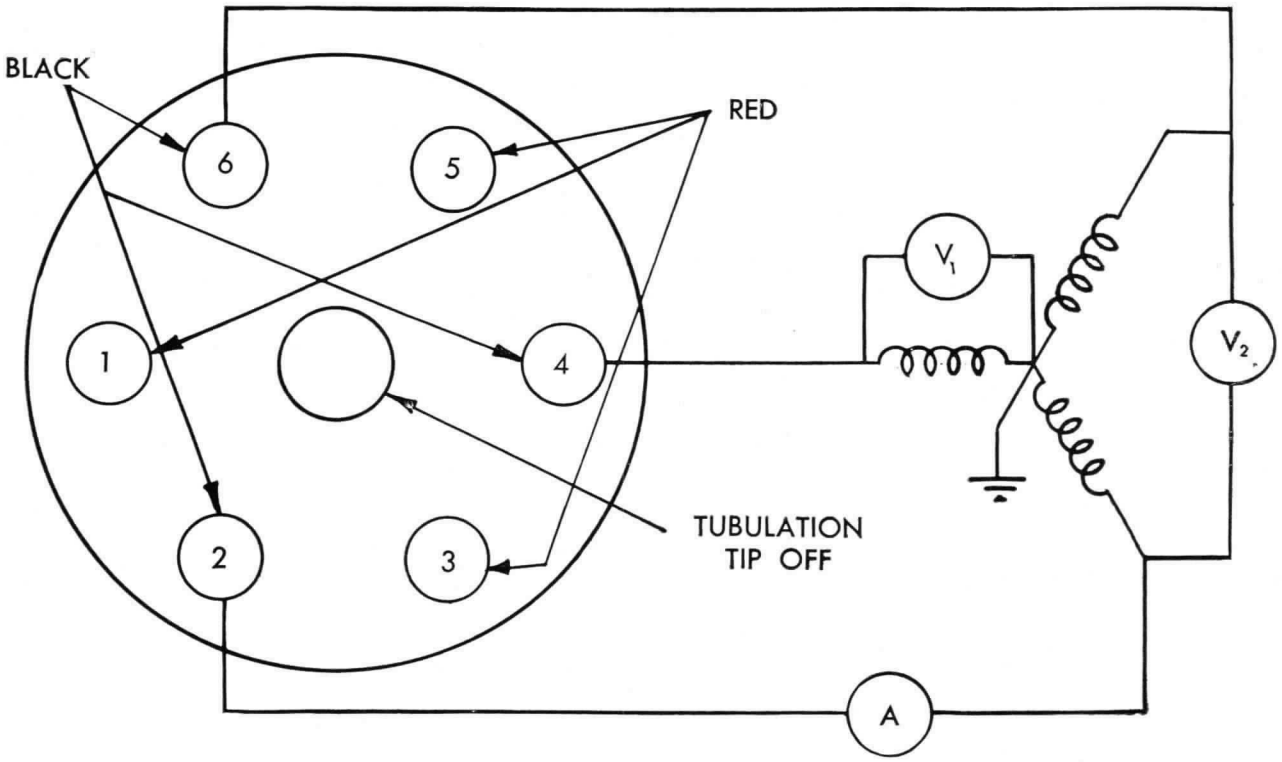

V1 = 19 VOLTS
V2 = 33 VOLTS
A = 139 AMPERES

BLACK 2, 4, 6—FILAMENT TERMINALS
RED 1, 3, 5—GRID TERMINALS

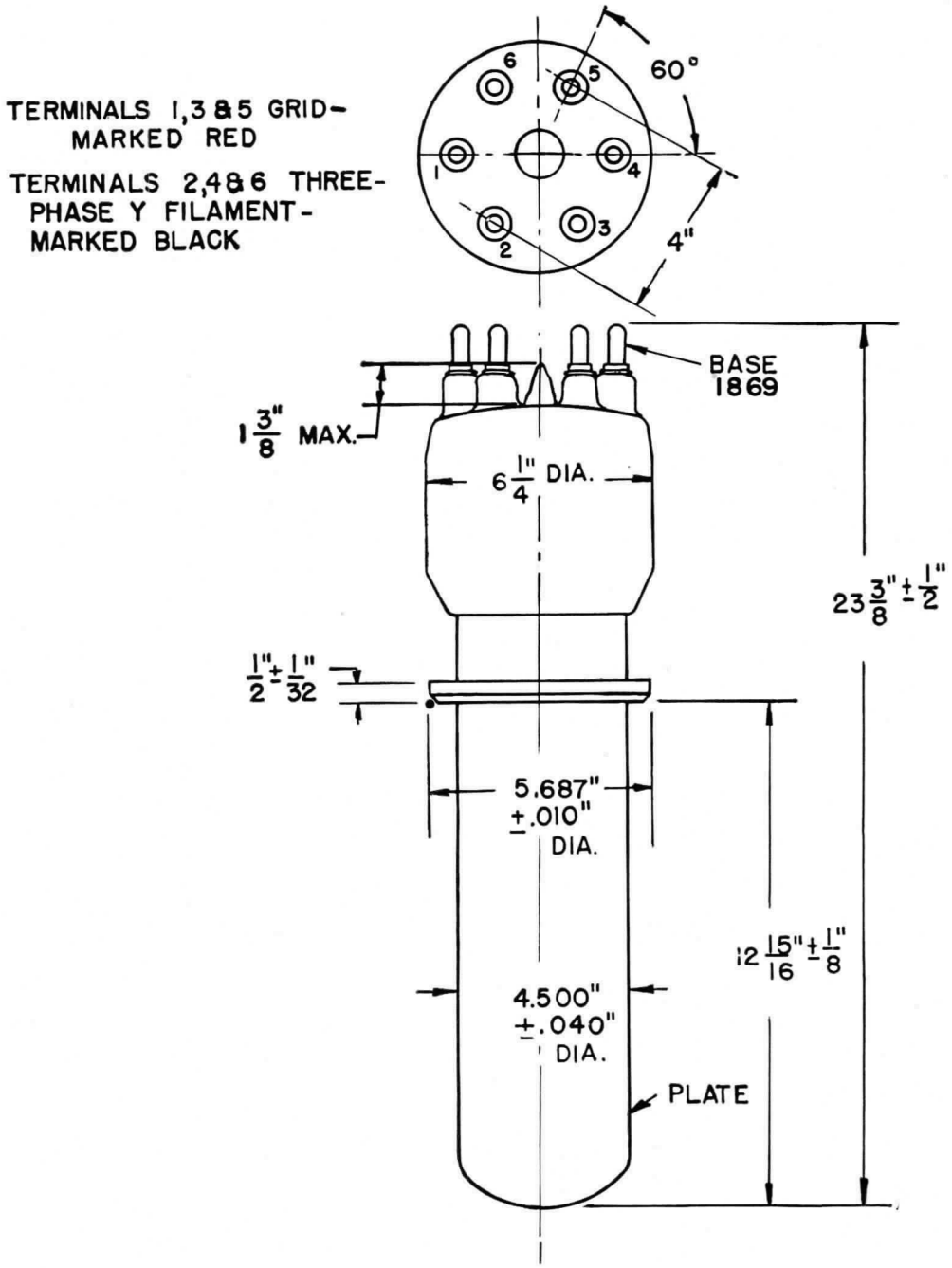

OUTLINE
GL-895 PLIOTRON

K-9186157

12-12-47

Tube Department, Electronics Division

GENERAL ELECTRIC

Schenectady, N. Y.

9-51 (11M)

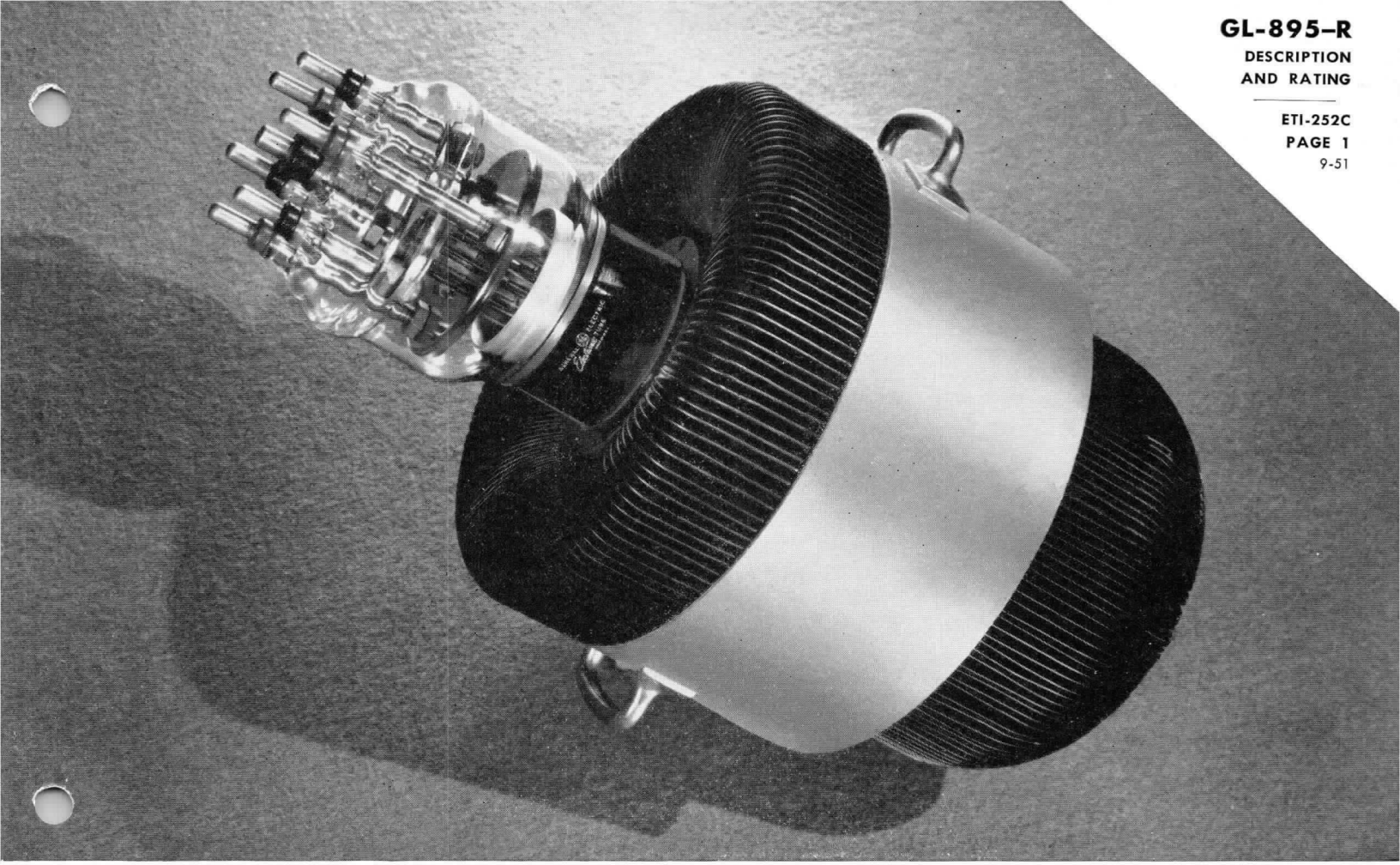

TRIODE

DESCRIPTION

The GL-895-R is a forced-air cooled transmitting tube for use as a Class B modulator, radio-frequency power amplifier, or oscillator. The plate is capable of dissipating up to 20 kilowatts.

TECHNICAL INFORMATION

GENERAL

Electrical Data	Minimum	Bogey	Maximum	
Filament voltage, to neutral*	...	19	20	volts
Filament current, per phase	128	138	146	amperes
Filament starting current	...	...	210	amperes
Filament cold resistance (per phase to Y center)	...	0.013	...	ohm
Amplification factor, $E_c = -100$ volts, $I_b = 1$ amp	30	37	43	
Interelectrode capacitances				
Grid-plate	32	40	48	uuf
Grid-filament	64	80	96	uuf
Plate-filament	5	8	11	uuf

GE Electronic TUBE

GENERAL ELECTRIC

Supersedes ETI-252B dated 9-48

TECHNICAL INFORMATION (CONT'D)

Mechanical Data

Mounting position				vertical, radiator down
Type of cooling				forced air
Maximum incoming air temperature			45	C
Required air flow on anode†				
Plate dissipation—kilowatts	20	16	12	
Air flow—cubic feet per minute	1800	1550	1300	
Pressure—inches water	1.5	1.1	0.8	
Required air flow on filament and grid thimbles			5	CFM
Maximum temperature of filament seals			150	C
Net weight, approximate			225	pounds

*When the load conditions are lower than maximum, the tube may usually be operated with reduced filament voltage.
†Temperature of anode seal must not exceed 180 C.

MAXIMUM RATINGS AND TYPICAL OPERATING CONDITIONS

AUDIO-FREQUENCY POWER AMPLIFIER AND MODULATOR—CLASS B

Maximum ratings, absolute values

D-c plate voltage	17,000 max	volts
Maximum signal d-c plate current‡	9 max	amperes
Maximum signal plate input‡	50,000 max	watts
Plate dissipation‡	20,000 max	watts
Temperature of air cooler**	180 max	C

Typical operation
Unless otherwise specified, values are for 2 tubes

D-c plate voltage	10,000	10,000	volts
Zero signal d-c plate current	2.00	2.00	amperes
Maximum signal d-c plate current	10.80	5.10	amperes
D-c grid voltage	−200	−200	volts
Peak a-f grid-to-grid voltage	1200	800	volts
Effective load resistance, plate to plate	2100	3600	ohms
Maximum signal driving power, approximate	600	75	watts
Maximum signal power output, approximate	70,000	30,000	watts

‡Averaged over any audio-frequency cycle of sine-wave form.

PLATE-MODULATED RADIO-FREQUENCY POWER AMPLIFIER—CLASS C TELEPHONY

CARRIER CONDITIONS PER TUBE FOR USE WITH A MAXIMUM MODULATION FACTOR OF 1.0

Maximum ratings, absolute values

D-c plate voltage	12,500 max	volts
D-c plate current	5 max	amperes
Plate input	62,500 max	watts
Plate dissipation	13,500 max	watts
D-c grid voltage	−3000 max	volts
D-c grid current	1.5 max	amperes
Temperature of air cooler**	180 max	C

Typical operation

D-c plate voltage	12,500	12,500	10,000	volts
D-c plate current	2.50	4.40	3.35	amperes
D-c grid voltage	−1400	−1500	−1500	volts
Peak r-f grid voltage	1810	2080	2000	volts
Driving power, approximate	780	1700	1300	watts
Power output, approximate	25,000	45,000	25,000	watts

TECHNICAL INFORMATION (CONT'D)

RADIO-FREQUENCY POWER AMPLIFIER AND OSCILLATOR—CLASS C TELEGRAPHY

*KEY-DOWN CONDITIONS PER TUBE WITHOUT MODULATION****

Maximum ratings, absolute values					
D-c plate voltage				17,000 max	volts
D-c plate current				9 max	amperes
Plate input				110,000 max	watts
Plate dissipation				20,000 max	watts
D-c grid voltage				−3000 max	volts
Grid current				1.5 max	amperes
Temperature of air cooler**				180 max	C
Typical operation					
D-c plate voltage	17,000	15,000	12,000	10,000	volts
D-c plate current	6.0	6.4	7.20	7.15	amperes
D-c grid voltage	−1800	−1500	−1000	−1000	volts
D-c grid current, approximate	0.9	1.0	1.15	1.15	amperes
Driving power, approximate	2200	2100	1900	1900	watts
Power output, approximate	84,000	75,000	60,000	50,000	watts
Peak r-f grid voltage	2500	2200	1700	1700	volts

**Temperature is measured in thermometer well. The normal forced air of 1800 cubic feet per minute requires a static pressure of 1.5 inches of water and must be started before application of any voltage and continue for at least 5 minutes after removal of voltages. Temperature or anode seal must not exceed 180 C. An air flow of at least 5 cubic feet per minute through a nozzle directed at filament bases is required before and during application of any voltages to limit temperature of filament seals to 150 C.

***Modulation, essentially negative, may be used if the positive peak of the audio frequency envelope does not exceed 115 per cent of the carrier conditions.

APPLICATION NOTES

Maximum ratings apply up to 6 megacycles. The tube may be operated at higher frequencies provided the maximum values of plate voltage and power input are reduced according to the tabulation below (other maximum ratings are the same as shown above). Special attention should be given to adequate ventilation of the bulb at these frequencies.

Frequency	6	12	25	megacycles
Percentage of maximum rated plate voltage and plate input				
Class C plate modulated	100	90	81	per cent
Class C unmodulated	100	85	70	per cent

GL-895-R AVERAGE PLATE CHARACTERISTICS

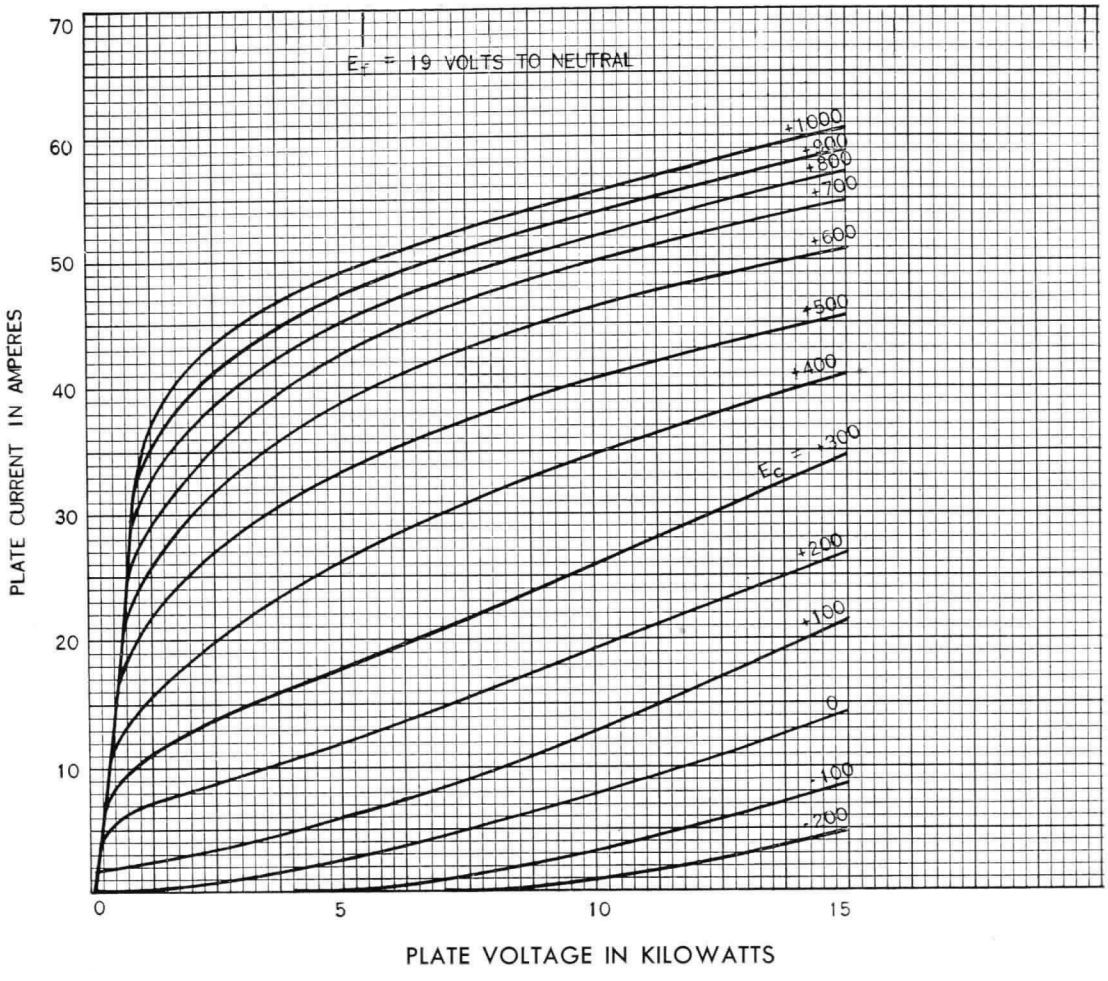

K-9186087

6-18-47

GL-895-R CHARACTERISTICS

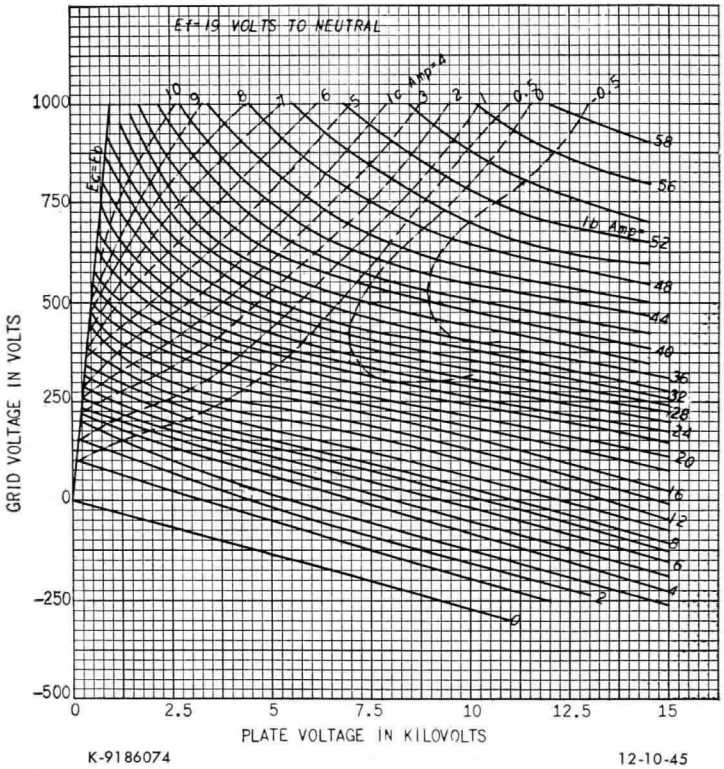

K-9186074 12-10-45

GL-895-R TYPICAL GRID-PLATE TRANSFER CHARACTERISTICS

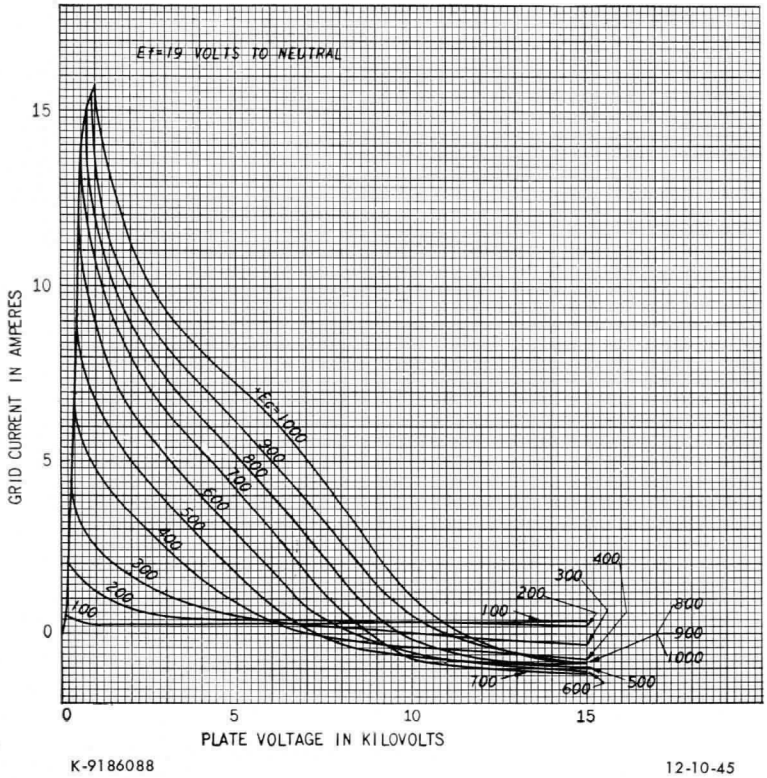

K-9186088 12-10-45

GL-895-R FILAMENT CHARACTERISTICS

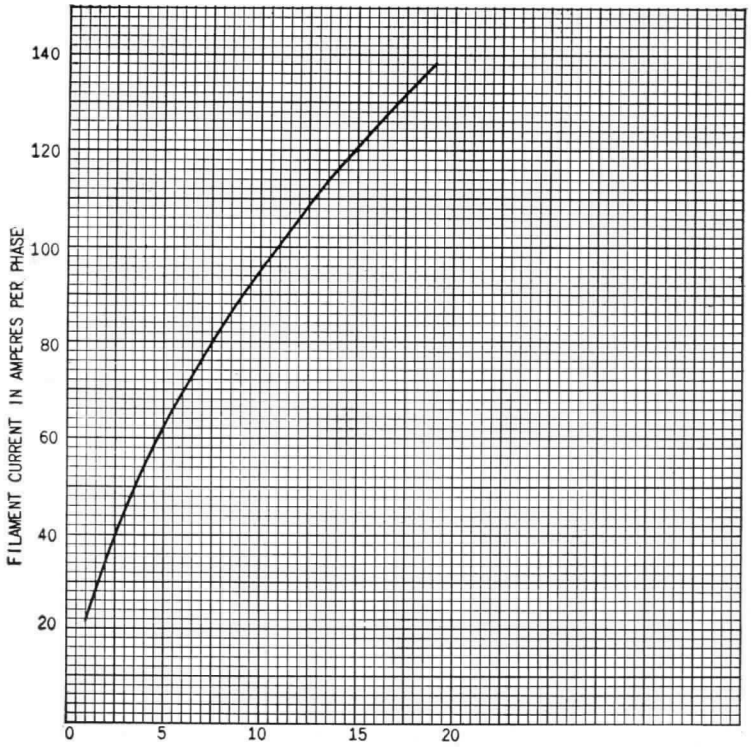

K-9186073 12-10-45

GL-895-R AVERAGE FILAMENT EMISSION

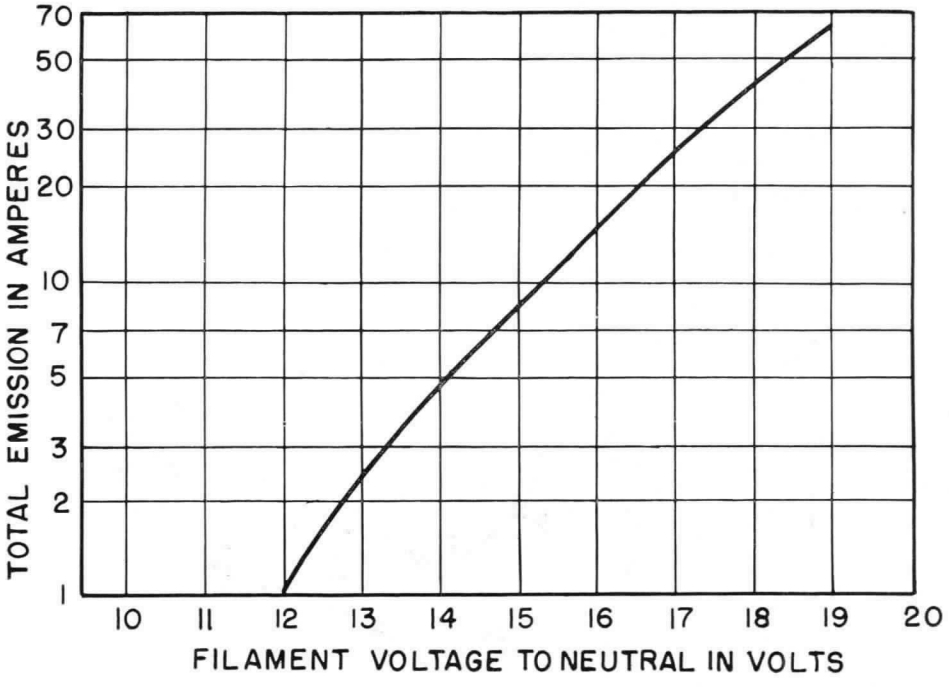

K-9186072 1-9-46

OUTLINE
GL-895-R PLIOTRON

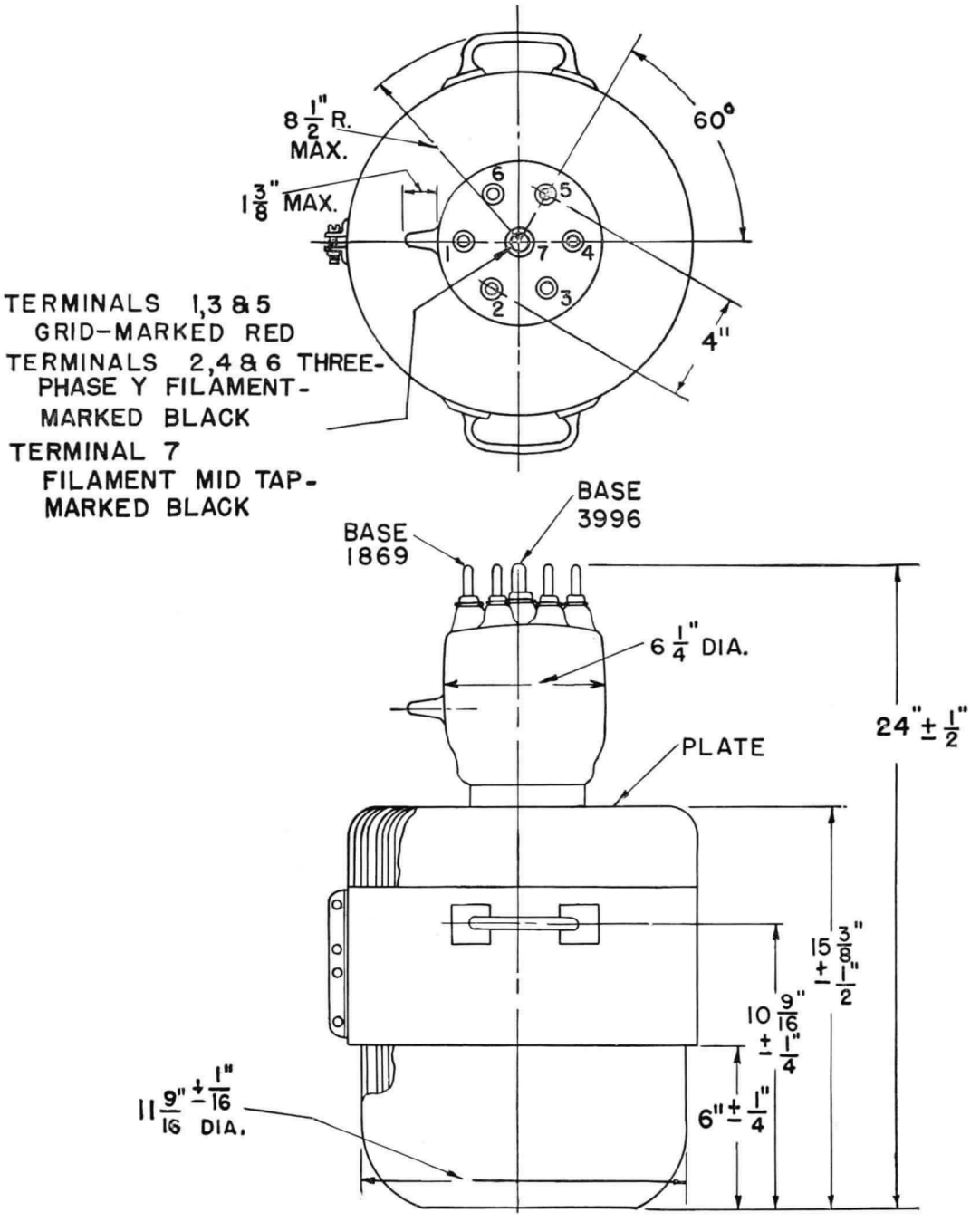

K-9033945

12-12-47

Tube Department, Electronics Division

GENERAL ELECTRIC

Schenectady, N. Y.

9-51 (11M)

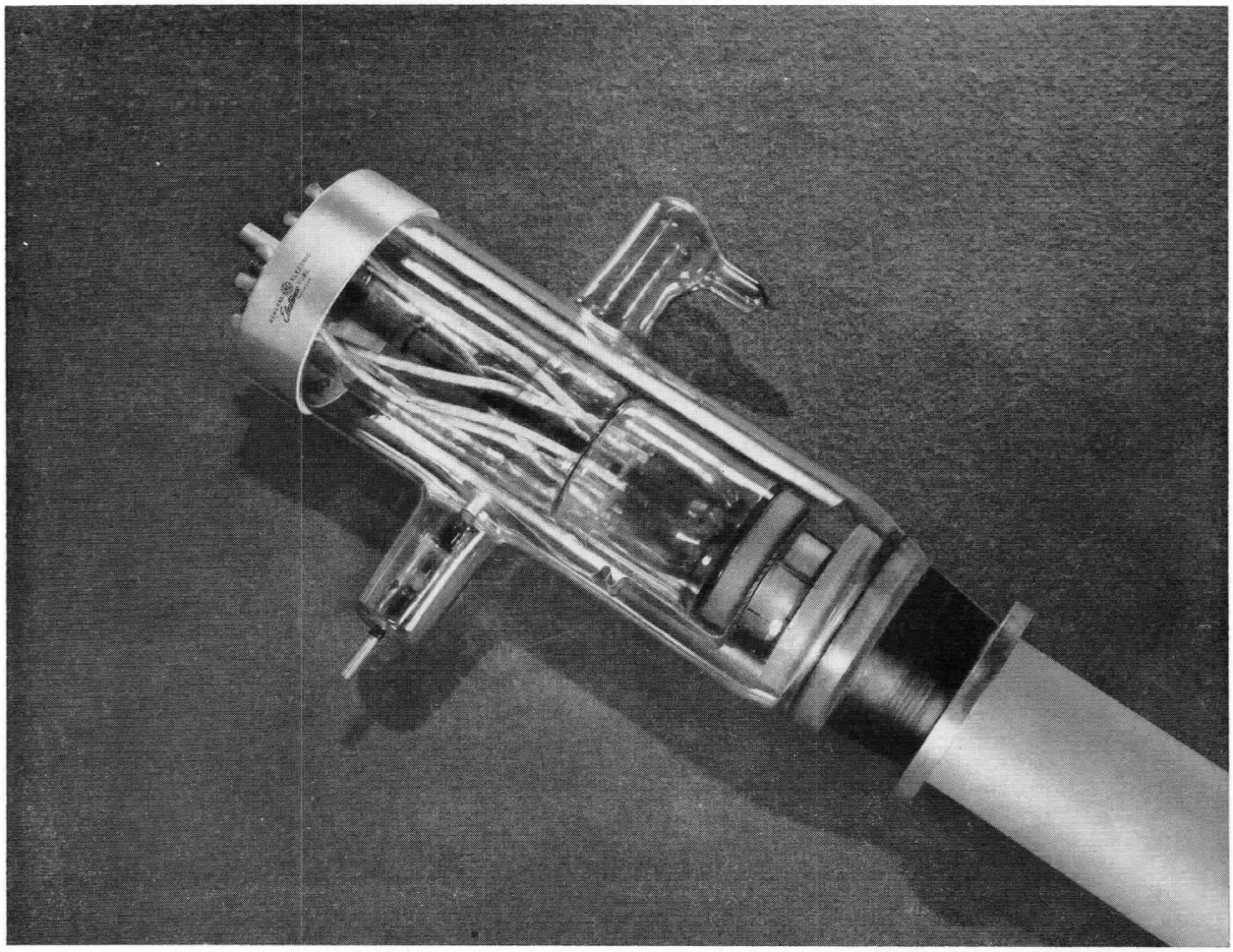

TRIODE

The GL-898-A is a three-electrode power tube designed for use as a radio-frequency amplifier, oscillator, or Class B modulator. The filament consists of three sections and can be operated on d-c, single-phase, or three-phase filament excitation. The plate is capable of dissipating 50 to 100 kilowatts.

TECHNICAL INFORMATION

GENERAL

Number of Electrodes	3	
Electrical		
Cathode—Filamentary		
Filament Voltage, per section	33	Volts
Filament Current, per section	70	Amperes
Average Characteristics, $E_b = 20.5$ kv, $I_b = 3.0$ amperes, $E_f = 33$ volts		
Grid Voltage	−100	Volts
Amplification Factor	45	
Grid-Plate Transconductance, $I_b = 3.0$ amperes	17,500	Micromhos
Direct Interelectrode Capacitances		
Grid to Plate	62	$\mu\mu$f
Grid to Filament	52	$\mu\mu$f
Plate to Filament	4.2	$\mu\mu$f
Frequency for Maximum Ratings	1.6	Megacycles

GENERAL ELECTRIC

§Supersedes pages 1 and 2 dated 5-46.

TECHNICAL INFORMATION (CONT'D)

Mechanical

Mounting Position—Vertical, anode down		
Net Weight, approximate	30	Pounds
Shipping Weight, appropriate	175	Pounds

Thermal

Type of Cooling—Water and Forced Air		
Maximum Outlet Temperature	70	C
Water Flow	15 to 25	Gallons per Minute
Jacket Type	7651927	
Maximum Incoming Air Temperature	50	C
Flow		
To Bulb	15	Cubic Feet per Minute
To Stem	3	Cubic Feet per Minute
Gasket	Cat. No. 5182028P1	

MAXIMUM RATINGS AND TYPICAL OPERATING CONDITIONS

CLASS B AUDIO-FREQUENCY POWER AMPLIFIER (TWO TUBES)

	Typical Operation	Maximum Ratings	
DC Plate Voltage	12,000	15,000	Volts
Maximum Signal Plate Current*, per tube	....	7.5	Amperes
DC Maximum Signal Plate Input*, per tube	....	100	Kilowatts
Plate Dissipation*, per tube	....	50	Kilowatts
DC Grid Voltage	−100	....	Volts
Peak AF Grid Input Voltage	2200	....	Volts
Zero Signal Plate Current	2	....	Amperes
Maximum Signal Plate Current	13	....	Amperes
Maximum Signal Driving Power, approximate	6	....	Kilowatts
Effective Load, plate-to-plate	2000	....	Ohms
Maximum Signal Plate Power Output, approximate	90	....	Kilowatts

CLASS B RADIO-FREQUENCY POWER AMPLIFIER

Carrier Conditions per Tube for Use with a Maximum Modulation Factor of 1.0

DC Plate Voltage	12,000	15,000	18,000	20,000	Volts
DC Grid Voltage	−100	−175	−250	....	Volts
⊕ DC Plate Current	2.8	3.5	4.2	5	Amperes
Plate Input	....	....	....	100	Kilowatts
Plate Dissipation	....	....	....	75	Kilowatts
Peak RF Grid Input Voltage	525	650	775	....	Volts
Driving Power†, approximate	0.5	0.75	1.1	....	Kilowatts
Plate Power Output, approximate	11	17.5	25	....	Kilowatts

CLASS C RADIO-FREQUENCY POWER AMPLIFIER AND OSCILLATOR—PLATE-MODULATED

Carrier Conditions per Tube for Use with a Maximum Modulation Factor of 1.0

DC Plate Voltage	12,000	12,000	Volts
DC Grid Voltage	−800	−3000	Volts
DC Plate Current	5	5	Amperes
DC Grid Current, approximate	1	1.25	Amperes
Plate Input	....	60	Kilowatts
Plate Dissipation	....	50	Kilowatts
Peak RF Grid Input Voltage	2000	....	Volts
Driving Power	2	....	Kilowatts
Plate Power Output	45	....	Kilowatts

CLASS C RADIO-FREQUENCY POWER AMPLIFIER AND OSCILLATOR

Key-Down Conditions per Tube Without Modulation

DC Plate Voltage	12,000	15,000	18,000	20,000	Volts
DC Grid Voltage	−800	−900	−1000	−3000	Volts
DC Plate Current	6.25	7.5	8.33	10	Amperes
DC Grid Current, approximate	0.8	0.85	0.9	1	Amperes
Plate Input	....	....	....	200	Kilowatts
Plate Dissipation	....	....	....	100	Kilowatts
Peak RF Grid Input Voltage, approximate	2050	2300	2550	....	Volts
Driving Power, approximate	1.6	2	2.4	....	Kilowatts
Plate Power Output, approximate	50	75	100	....	Kilowatts

* Averaged over any audio-frequency cycle.
† At crest of audio-frequency cycle.
Modulation, essentially negative, may be used if the positive peak of the audio-frequency envelope does not exceed 115 per cent of the carrier conditions.
⊕ Denotes a change.

APPLICATION NOTES

Plate series protective resistors (see paragraph describing plate circuit under Installation in the Instructions)

Series resistor	10	20	40	50	ohms
Maximum power output of rectifier	100	250	640	1600	kilowatts

GL-898-A CHARACTERISTICS
(E_f = 33 VOLTS A-C)

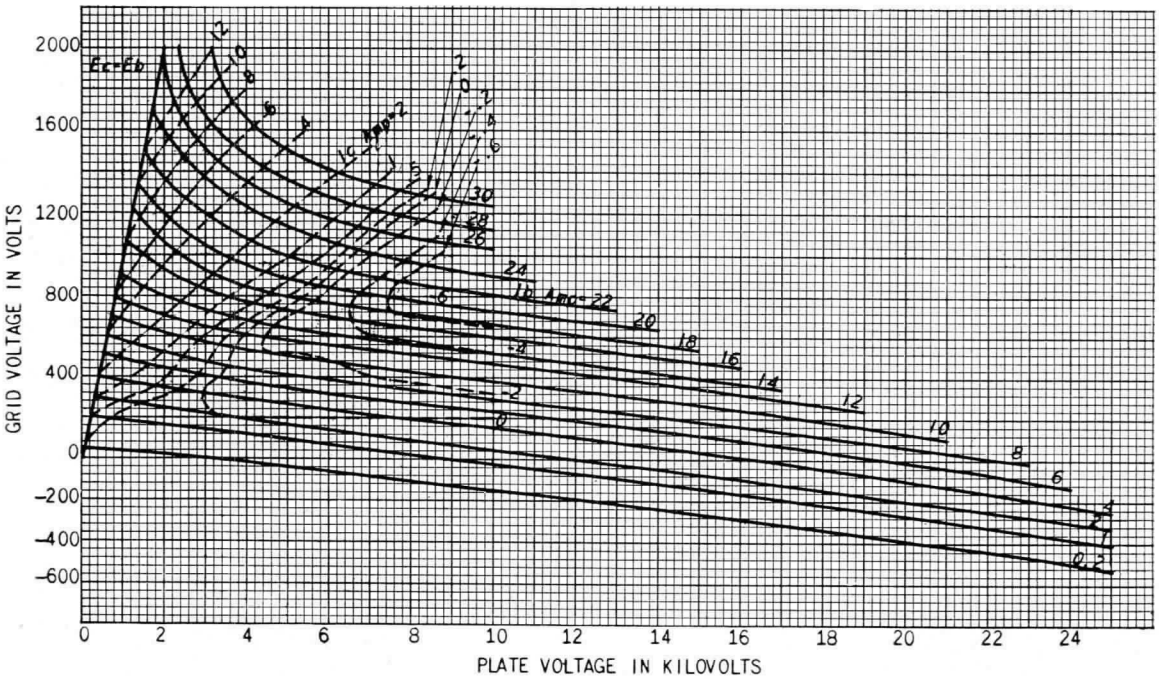

K-6966424

12-10-45

GL-898-A
EMISSION CHARACTERISTIC

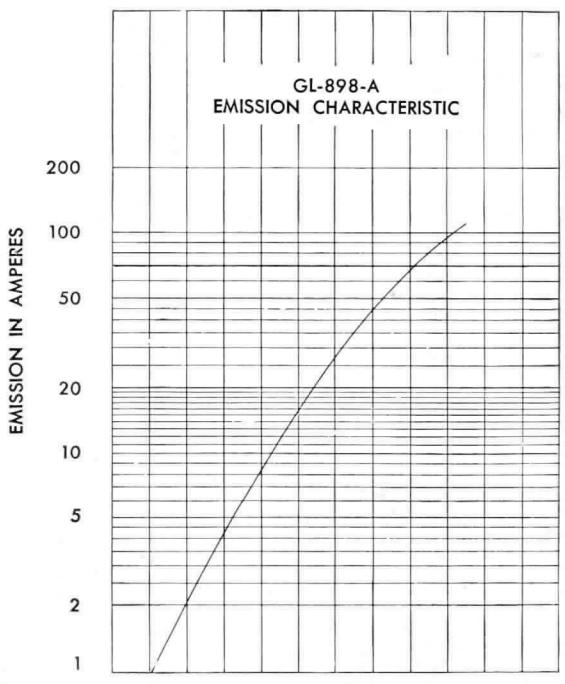

K-8074655

1-9-46

GL-898-A FILAMENT CHARACTERISTIC
(COLD RESISTANCE OF EACH SECTION OF FILAMENT = 0.042 OHMS)

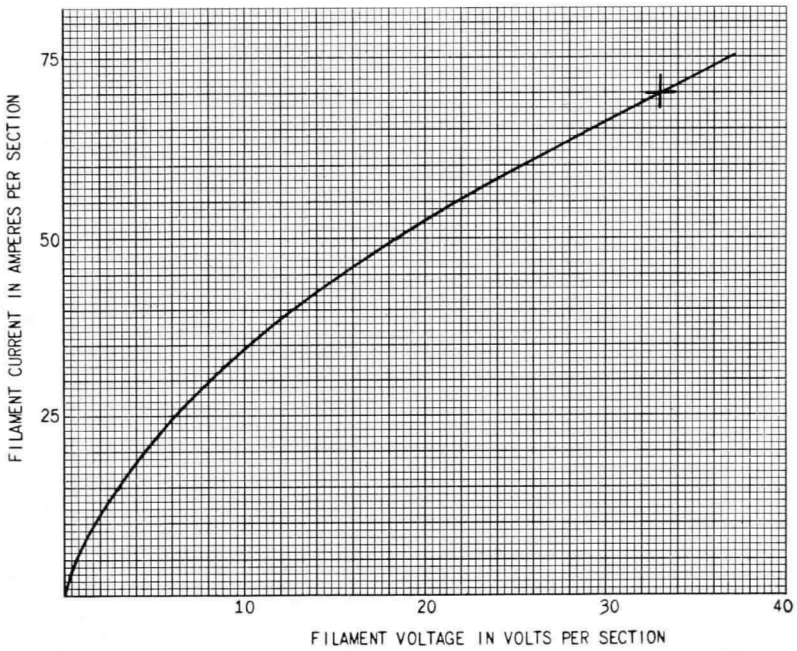

K-6966422 1-9-46

GL-898-A
AVERAGE PLATE CHARACTERISTICS

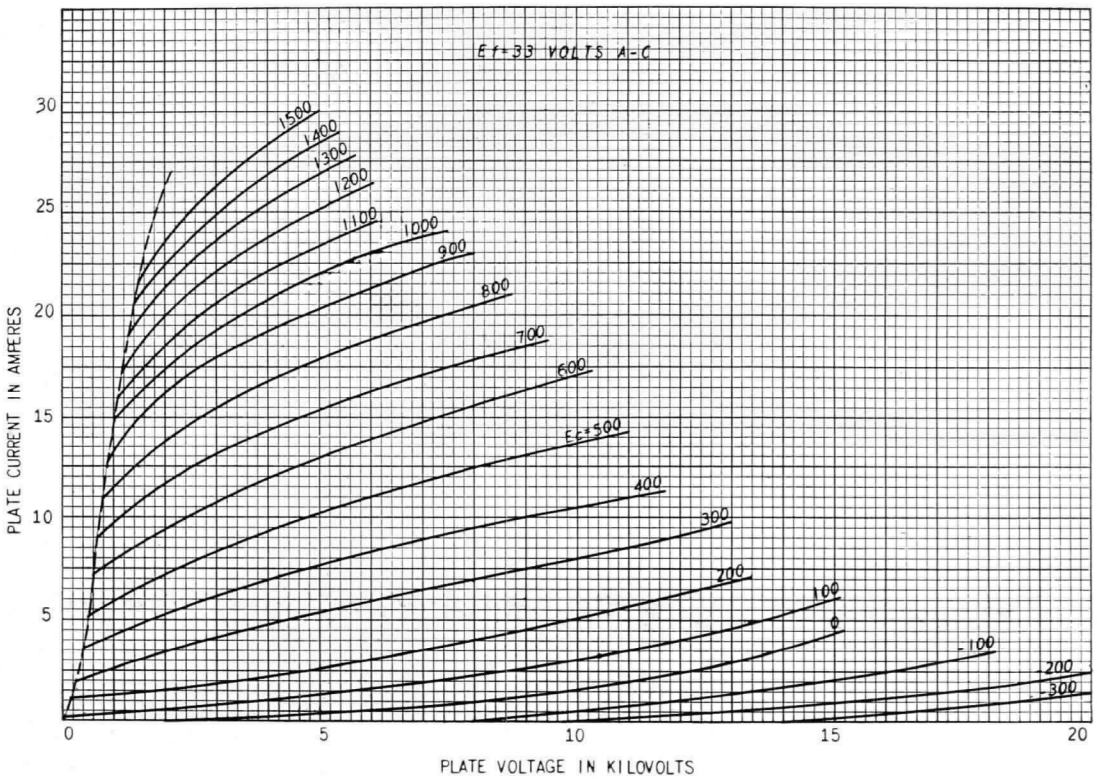

K-6966423 1-9-46

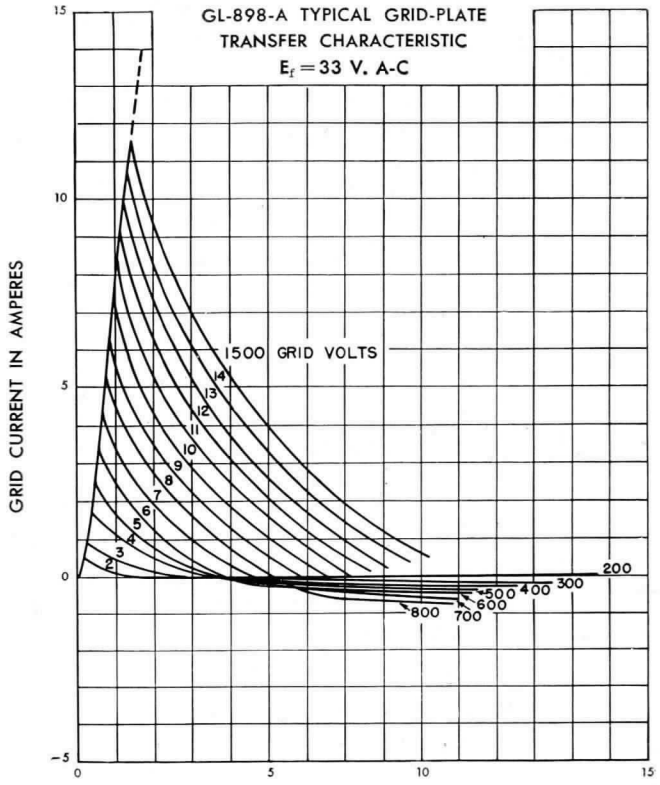

K-6966425 9-25-44

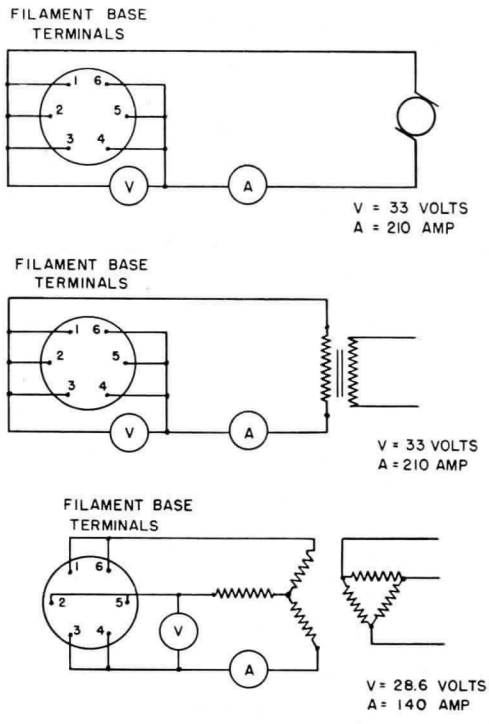

FILAMENT CONNECTIONS AND EXCITATION CIRCUITS

K-9033994 1-9-46

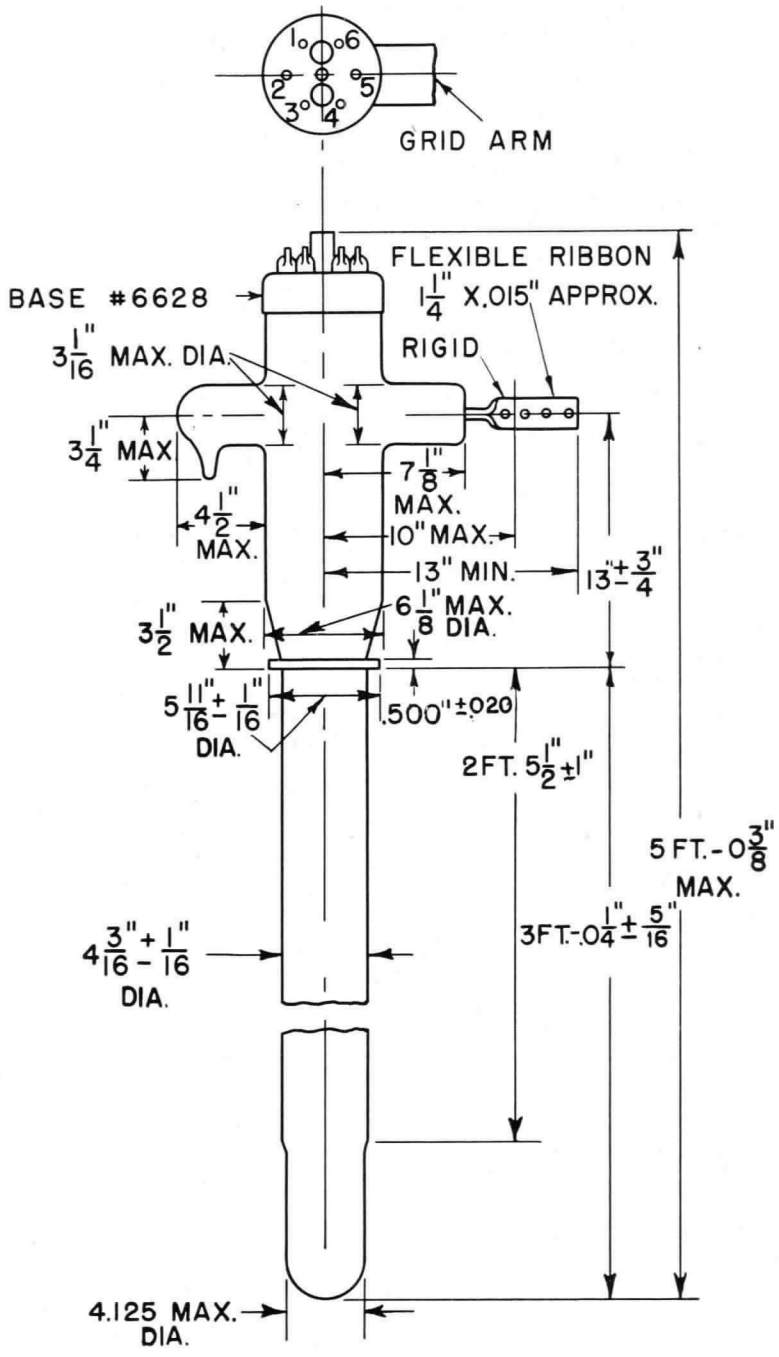

GL-898-A OUTLINE

K-5185285 1-9-46

Electronics Department
GENERAL ELECTRIC
Schenectady, N. Y.

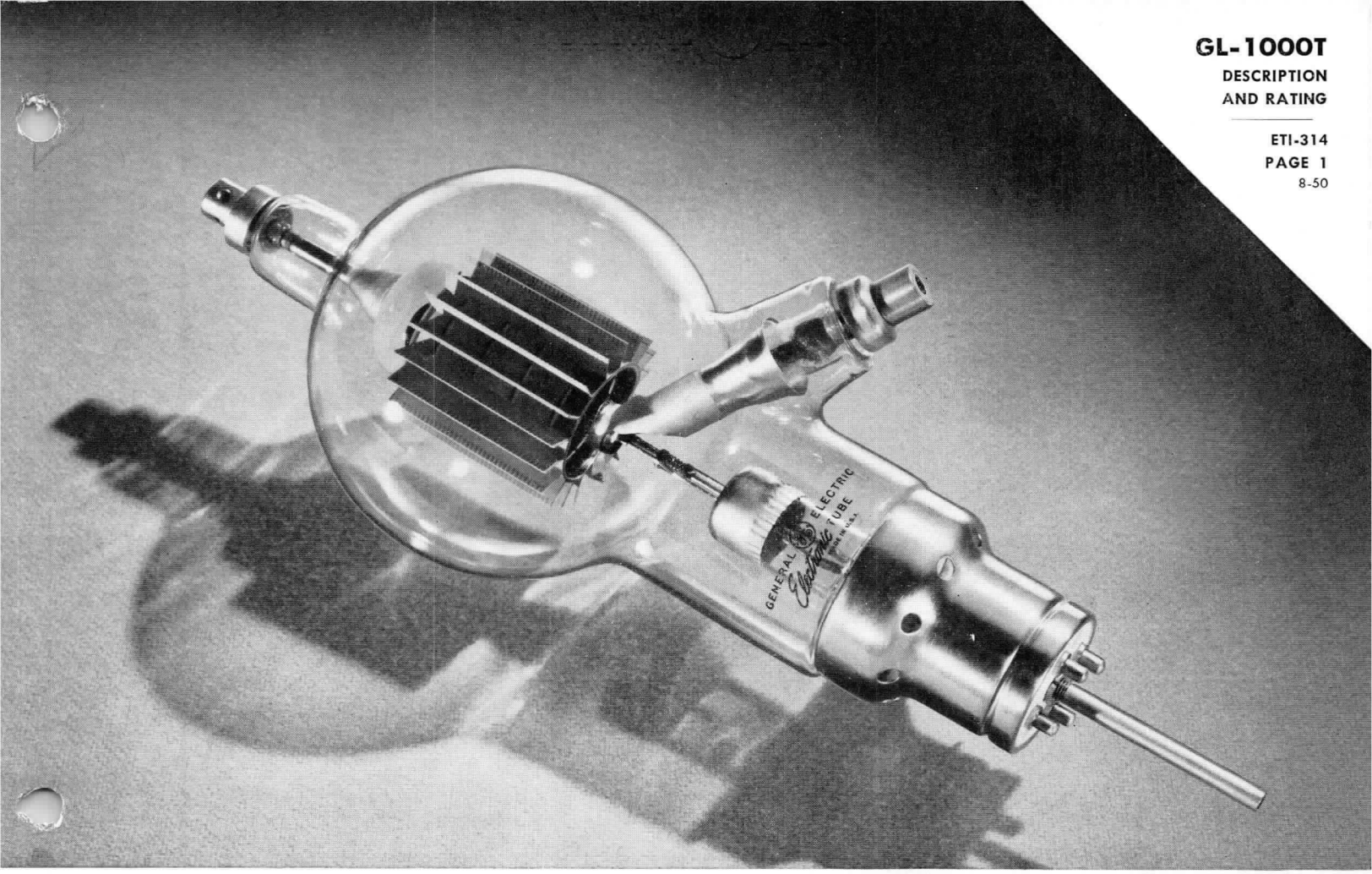

PLIOTRON

DESCRIPTION

The GL-1000T is a three-electrode tube designed for use as a Class B audio-frequency power amplifier and modulator or as a Class C radio-frequency power amplifier and oscillator. The anode is capable of dissipating 1000 watts. Forced-air cooling of the envelope is required under all conditions of operation and forced-air cooling of the seals, through the tube in the base, is necessary when the GL-1000T is operated at maximum conditions. The cathode is a thoriated-tungsten filament. Maximum ratings apply up to a frequency of 50 megacycles.

TECHNICAL INFORMATION

These data are for reference only. For design information refer to specifications.

GENERAL

Electrical Data

Filament voltage	7.5	volts
Filament current	17.0	amperes
Amplification factor	35	
Direct interelectrode capacitances		
Grid-plate	5.1	uuf
Grid-filament	9.3	uuf
Plate-filament	0.5	uuf
Transconductance, $I_b = 750$ ma, $E_b = 6000$, $E_c = -62$	9050	micromhos

Mechanical Data

Mounting position	vertical, base down	
Type of cooling	forced air	
Forced-air cooling of the seals is necessary under maximum conditions of operation. Each seal requires approximately 2 cubic feet per minute. The bulb must be cooled with air equivalent to that supplied by an 8-inch electric fan 12 inches from the bulb.		
Net weight, approximate	1.25	pounds

GE Electronic TUBE

GENERAL ELECTRIC

TECHNICAL INFORMATION (CONT'D)

MAXIMUM RATINGS AND TYPICAL OPERATION CONDITIONS

AUDIO-FREQUENCY POWER AMPLIFIER AND MODULATOR—CLASS B

Maximum ratings, absolute values				
D-c plate voltage			7500 max	volts
Maximum signal d-c plate current			750 max	milliamperes
Plate dissipation*			1000 max	watts
Typical Operation				
Unless otherwise specified, values are for two tubes				
D-c plate voltage	4000	5000	6000	volts
D-c grid voltage, approximate	−70	−105	−135	volts
Peak a-f grid input voltage	490	530	600	volts
Zero Signal d-c plate current	.300	.240	.200	amperes
Maximum signal d-c plate current	1.25	1.14	1.11	amperes
Maximum signal driving power, approximate	28	31	35	watts
Effective load resistance, plate to plate	6350	9250	12200	ohms
Maximum signal power output, approximate	3000	3700	4600	watts

RADIO-FREQUENCY POWER AMPLIFIER AND OSCILLATOR—CLASS C TELEGRAPHY

*Key-down conditions per tube without modulation***

Maximum ratings, absolute values					
D-c plate voltage				7500 max	volts
D-c plate current				750 max	milliamperes
D-c grid current				125 max	milliamperes
Plate dissipation				1000 max	watts
Typical operation					
D-c plate voltage	3000	4000	5000	6000	volts
D-c grid voltage	−150	−150	−225	−350	volts
Peak r-f grid input voltage, approximate	350	365	420	610	volts
D-c plate current	750	713	667	667	milliamperes
D-c grid current	90	100	87	110	milliamperes
Plate dissipation	900	1000	1000	1000	watts
Driving power, approximate	30	33	33	60	watts
Plate input	2250	2850	3333	4000	watts
Power output, approximate	1350	1850	2333	3000	watts

*Averaged over any audio-frequency cycle of sine-wave form.
**Modulation essentially negative may be used if the positive peak of the envelope does not exceed 115 per cent of the carrier conditions.

GL-1000T
DRIVING POWER VS POWER OUTPUT
PLATE VOLTAGE = 4000

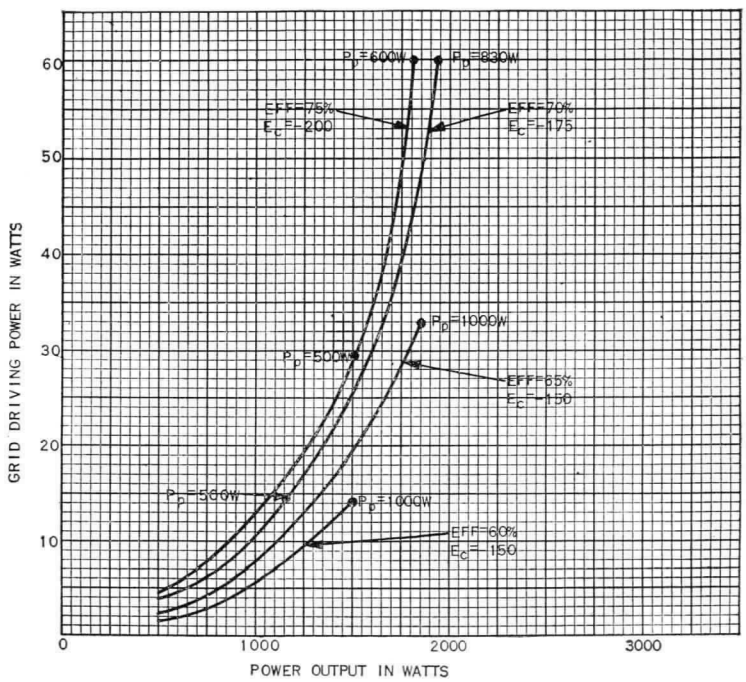

K-69087-72A336

1-5-50

GL-1000T
DRIVING POWER VS POWER OUTPUT
PLATE VOLTAGE = 5000

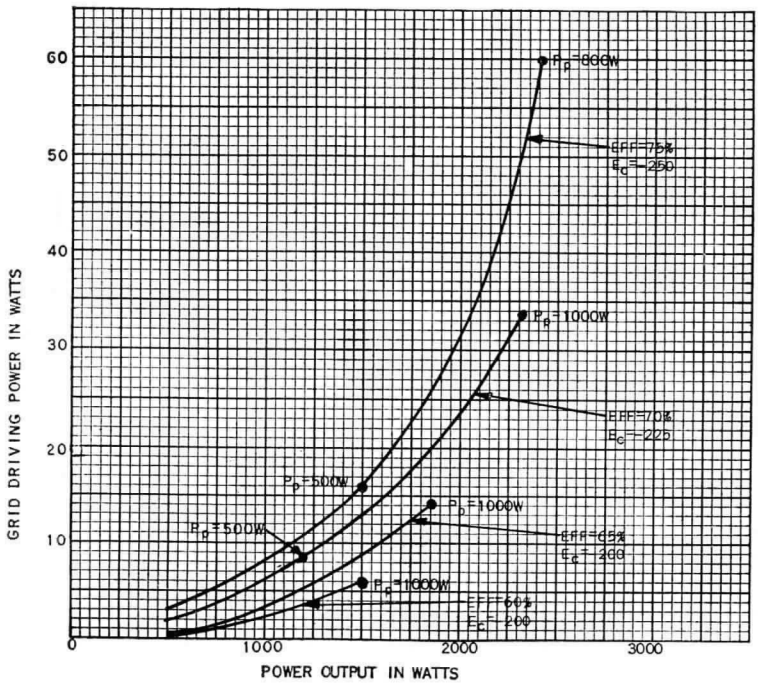

K-69087-72A337 1-5-50

GL-1000T
DRIVING POWER VS POWER OUTPUT
PLATE VOLTAGE = 6000

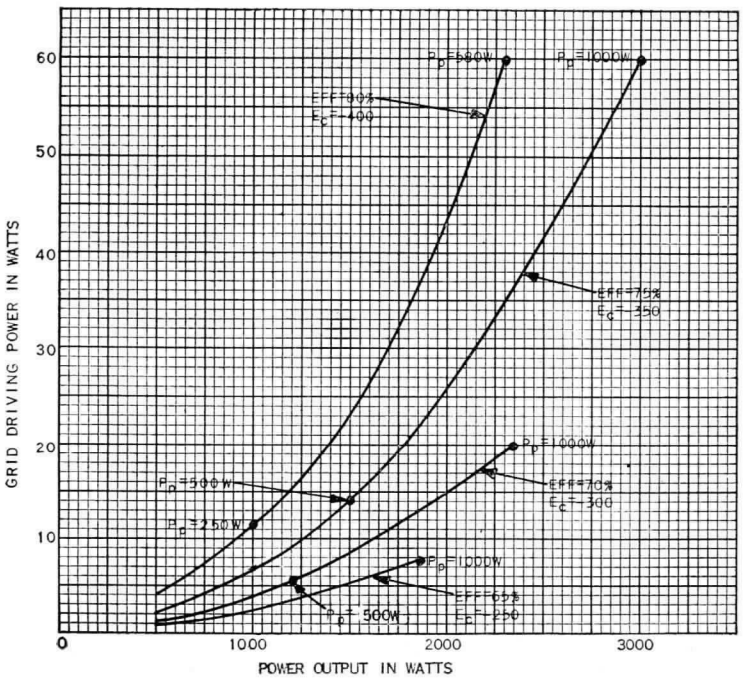

K-69087-72A338 1-5-50

GL-1000T
CHARACTERISTIC

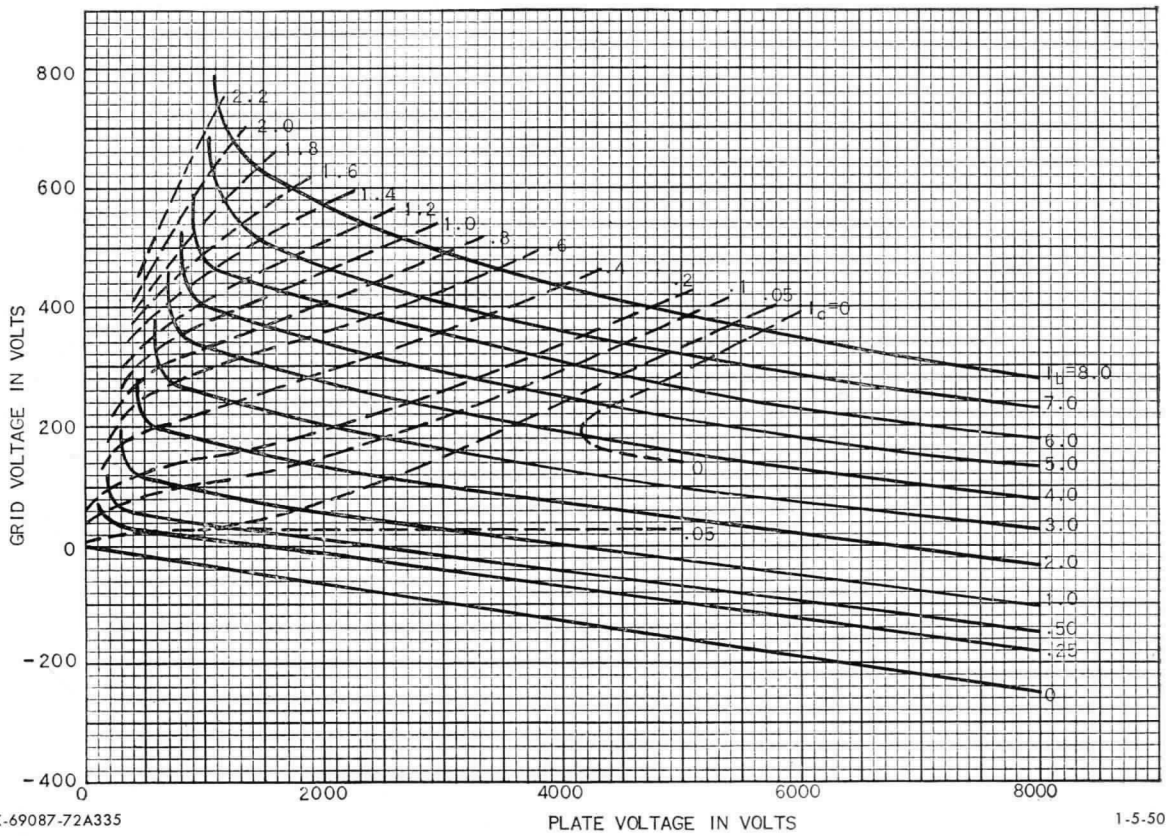

K-69087-72A335

1-5-50

OUTLINE
GL-1000T

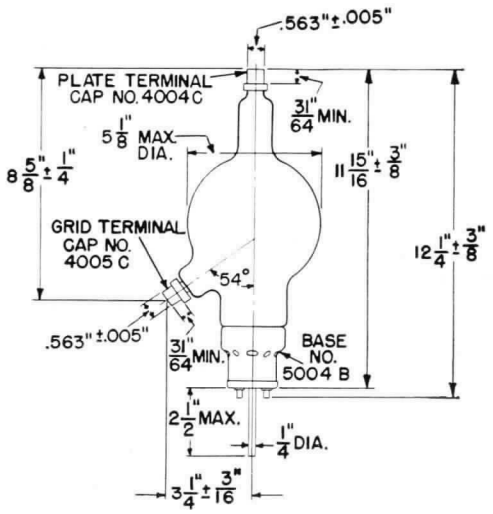

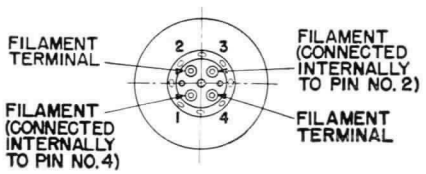

N15163AZ

1-5-50

Tube Divisions, Electronics Department

GENERAL ELECTRIC

Schenectady, N. Y.

GENERAL ELECTRIC
POWER TUBE DEPARTMENT
Schenectady 5, N. Y.

PRELIMINARY
TECHNICAL INFORMATION

These ratings represent those of current samples of this type. Refer to the Objective Technical Information sheet for design-objective ratings.

DEVELOPMENTAL TYPE

This technical information is proprietary and is furnished only as a service to customers.

ZP-1016-B

TRIODE

High Voltage Series-Regulator Service — Metal and Ceramic

The ZP-1016-B is a metal-ceramic triode for high voltage series regulator service. Its features make this tube very desirable for use in regulation of DC voltages up to 10,000 volts. An average power handling capability of 300 watts helps fill a void in the power spectrum of tubes available for this type of service.

ELECTRICAL	Minimum	Bogey	Maximum	
Heater Voltage	–	6.3	–	Volts
Heater Current	–	3.8	–	Amperes
Cathode Heating Time	1	–	–	Minute
Direct Interelectrode Capacitances				
Output	–	6.7	–	$\mu\mu$f
Input	–	8	–	
Plate to Cathode	–	–	.35	$\mu\mu$f
Amplification Factor	–	10	–	
Plate Current @ $E_g = 0$; $E_b = 600$ volts	–	0.300	–	Ampere
Grid Voltage @ $E_b = 10{,}000$ volts; $I_b = 0.001$ ampere	–	1300	–	Volts

MECHANICAL

Mounting Position – Any

Net Weight, approximate	1.0	Pound

THERMAL

Cooling – Forced Air

Anode Temperature, maximum	180	C
Seals and Tube Temperature at Any Point, maximum	200	C

HIGH VOLTAGE SERIES REGULATOR

Maximum Ratings

DC Plate Holdoff Voltage*	10	Kilovolts
DC Grid Voltage**	-4	Kilovolts
Plate Dissipation	300	Watts
DC Plate Current	250	Milliamperes

* Minimum circuit impedance in combined cathode and anode circuits equals 4000 ohms.
** Equivalent series $R_g = 0.25$ to 1.0 megohms.

The specifications of this type are subject to change. Delivery of samples and the existence of these data do not imply continued availability of types with the same characteristics or dimensions. For the most recent information concerning the status of this device, please consult your local Power Tube Department Regional Sales Office.

NOTES

1. NON-CONNECTED TERMINAL MUST ALLOW ENTRY OF A PLUG GAGE 1 3/16" O.D. - 3/8" I.D. FOR A DEPTH OF 7/32" MINIMUM.

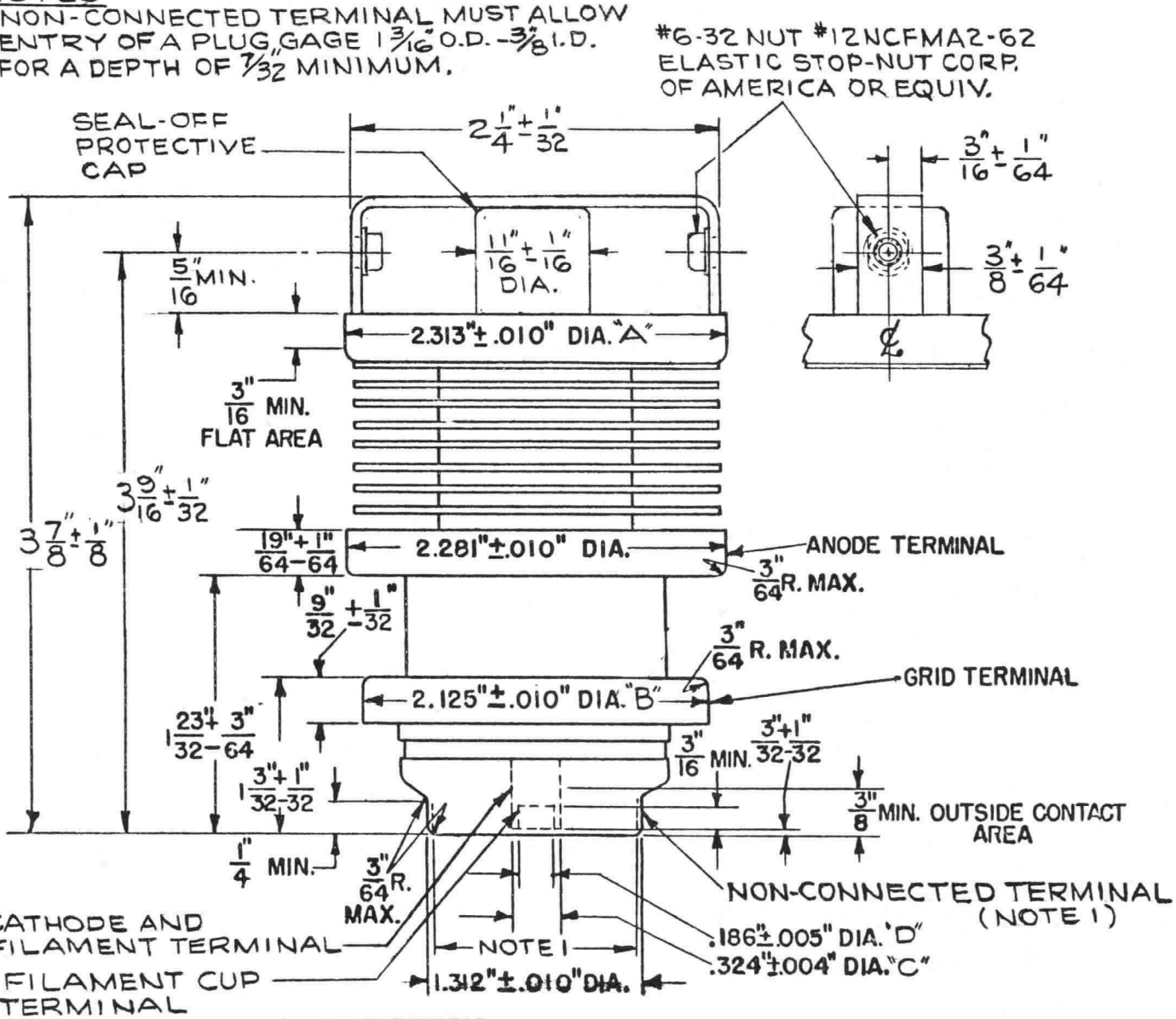

CONCENTRICITIES:

The following total indicator readings are measured with respect to a centerline determined by the centers of the anode terminal and non-connected terminal.

Diameter A - 0.030 inches
Diameter B - 0.016 inches
Diameter C - 0.036 inches
Diameter D - 0.042 inches

Total indicator reading of filament cup terminal diameter (D) measured with respect to center of cathode and filament terminal diameter (C) 0.016 inches.

GENERAL ELECTRIC
POWER TUBE DEPARTMENT
Schenectady 5, N. Y.

OBJECTIVE
TECHNICAL INFORMATION

These ratings represent the design objective for this product. Refer to the Preliminary Technical Information sheet for ratings currently achieved in the progression towards design objectives. If PTI sheets do not exist, consult your local Power Tube Department Regional Sales Office.

This technical information is proprietary and is furnished only as a service to customers.

ZP-1024

TRIODE

Internal Feedback for Oscillator Service
Grounded-Grid Operation

Heat-Sink and Forced-Air Cooled
Metal and Ceramic

The ZP-1024 is a heat-sink-cooled triode especially designed for pulsed-oscillator service in L-band, providing useful output at frequencies up to approximately 1700 megacycles.

The tube features internal feedback which eliminates the need for the complicated external circuit arrangements normally required in oscillator service.

Other features of the ZP-1024 are long life and reliability, long pulse width and high power output capability.

ELECTRICAL	Minimum	Bogey	Maximum	
Heater Voltage	–	6.3	–	Volts
Heater Current	–	3.8	–	Amperes
Cathode Heating Time	1	–	–	Minute
Direct Interelectrode Capacitances				
Cathode to Plate †	–	0.5	–	μμf
Input	–	20	–	μμf
Output	–	7.8	–	μμf

MECHANICAL

Mounting Position – Any

Net Weight, approximately	9	Ounces

THERMAL

Cooling – Heat-sink and Forced-Air ‡

Anode Temperature §, maximum	250	C
Seals		
Screen and Control Grid, approximate	1	Cubic Foot per Minute
Heater and Cathode, approximate	1	Cubic Foot per Minute
Ceramic Temperature at Any Point, maximum	200	C

PLATE-PULSED OSCILLATOR – CLASS C

Maximum Ratings

DC Plate Voltage, during pulse	6.5	Kilovolts
DC Plate Current, during pulse	6.5	Amperes
DC Grid Voltage, during pulse	-400	Volts
Plate Dissipation	150	Watts
Pulse Width◊	1	Microsecond
Duty Factor♥ ϕ	.001	

The specifications of this type are subject to change. This device is now under development and is made available for experimental purposes only. For the most recent information concerning the status of this development, please consult your local Power Tube Department Regional Sales Office, or current Preliminary Technical Information for the same catalog number.

PLATE-PULSED OSCILLATOR – CLASS C (Cont'd)

Typical Operation

Grounded-Grid Service at 1100 Megacycles, 3/4 λ Output Circuit

DC Plate Voltage, during pulse	6.0	Kilovolts
DC Plate Current, during pulse	6.25	Amperes
DC Grid Current, during pulse	2.5	Amperes
Power Output, during pulse (useful)	15	Kilowatts
Pulse Width	1	Microsecond
Duty Factor	.001	

† Complete external shielding between cathode and plate.
‡ Forced-air cooling should be applied during the application of any voltages.
§ A suitable heat-sink clamping arrangement must be provided to limit the anode hub temperature to the value specified; the temperature is measured at the point indicated on the outline drawing.
∇ For applications that require longer pulses or higher duty refer to the tube manufacturer for recommendations.
◊ Pulse duration is measured between points at 70 percent of the peak value. The peak value is defined as the maximum value of a smooth curve through the average of the fluctuations over the top portion of the pulse.
ϕ Maximum ratio of on-time to elapsed time during any 1-millisecond period.

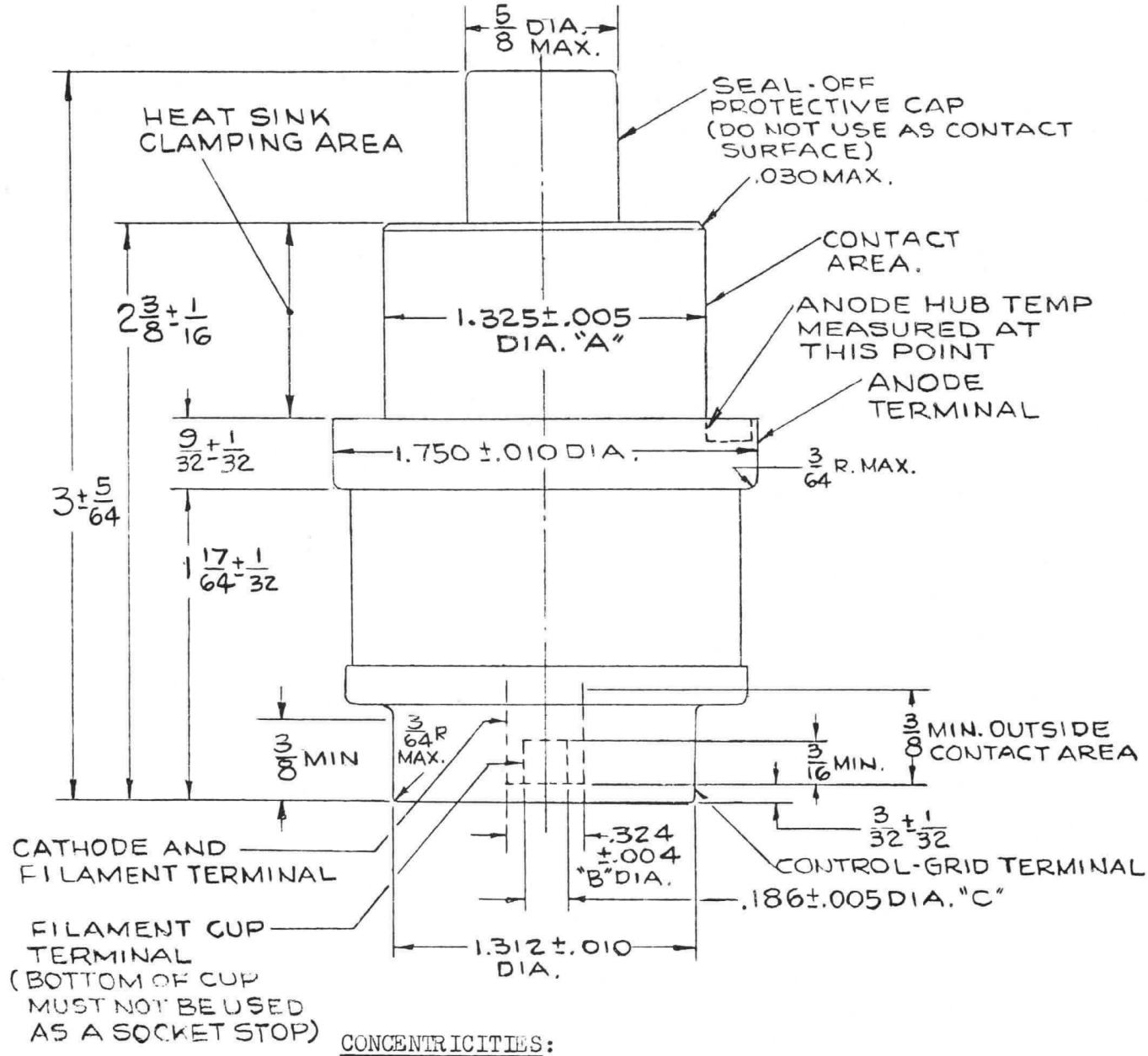

CONCENTRICITIES:

The following total indicator readings are measured with respect to a centerline determined by the centers of the anode terminal and control grid terminal.

Diameter A - 0.030 inches
Diameter B - 0.036 inches
Diameter C - 0.042 inches

Total indicator reading of filament cup terminal diameter (C) measured with respect to center of cathode and filament terminal diameter (B) - 0.016 inches.

ELECTRONIC INNOVATIONS IN ACTION

TUBES

PRELIMINARY
TECHNICAL INFORMATION

These ratings represent those of current samples of this type. Refer to the Objective Technical Information sheet for design-objective ratings.

DEVELOPMENTAL TYPE

ZP-1025
PTI-80C

9-67

This technical information is proprietary and is furnished only as a service to customers

ZP-1025

TRIODE

Internal Feedback for Oscillator Service
Grounded-Grid Operation

Heat-Sink and Forced-Air Cooled
Metal and Ceramic

The ZP-1025 is a heat-sink-cooled triode especially designed for pulsed oscillator service in L-band. This tube is particularly well suited for use in airborne or ground-based radar equipment.

The tube features internal feedback which eliminates the need for the complicated external circuit arrangements normally required in oscillator service.

Other features include small size, high peak power, long-pulse-width capability, long life and reliability.

	Minimum	Bogey	Maximum	
ELECTRICAL				
Heater Voltage*	-	6.3	-	Volts
Heater Current	3.5	3.8	4.0	Amperes
Cathode Heating Time	1	-	-	Minute
Direct Interelectrode Capacitances				
Cathode to Plate	-	0.45	-	μμf
Input	-	15.5	-	μμf
Output	-	5.9	-	μμf
MECHANICAL				
Mounting Position – Any				
Net Weight, approximate			3 1/4	Ounces
THERMAL				
Cooling – Heat-Sink and Forced Air				
Anode Temperature§			250	C
Ceramic Temperature at Any Point, maximum			200	C
PLATE-PULSED OSCILLATOR – CLASS C				
Maximum Ratings				
DC Plate Voltage, During Pulse			8.0	Kilovolts
DC Plate Current, During Pulse			10.0	Amperes
DC Grid Voltage, During Pulse			-400	Volts
DC Grid Current, During Pulse			5.0	Amperes
Plate Dissipation §			110	Watts
Grid Dissipation			3.5	Watts
Pulse Width ◇			10	Microseconds
Duty Factor ø			0.003	

The specifications of this type are subject to change. Delivery of samples and the existence of these data do not imply continued availability of types with the same characteristics or dimensions. For the most recent information concerning the status of this device, please consult your local Tube Department Regional Sales Office.

TYPICAL OPERATION

Grounded-Grid Service at 1300 Megacycles, 3/4 λ Output Circuit

DC Plate Voltage, During Pulse	8.0	6.0	Kilovolts
DC Plate Current, During Pulse	9.0	7.0	Amperes
DC Grid Current, During Pulse (Grid Resistor = 50 Ohms)	4.0	4.3	Amperes
Power Output, During Pulse (useful)	40.0	24.0	Kilowatts
Pulse Width	10	10	Microseconds
Duty Factor	0.003	0.001	

GRID-PULSED OSCILLATOR – CLASS C

Maximum Ratings

DC Plate Voltage	2.5	Kilovolts
DC Plate Current, During Pulse	3.0	Amperes
DC Grid Voltage	-200	Volts
Plate Dissipation	100	Watts
Pulse Width ◇	15	Microseconds
Duty Factor øø	0.02	

Typical Operation

Grounded-Grid Circuit at 1100 Megacycles, 1/4 λ Output

DC Plate Voltage	1750	1950	2200	Volts
DC Plate Current, During Pulse	2.2	2.6	2.7	Amperes
DC Grid Voltage Supply**	-97	-104	-104	Volts
DC Grid Current, During Pulse	1.05	1.2	1.25	Amperes
Power Output, During Pulse (useful)	1.5	2.0	2.4	Kilowatts
Pulse Width	10	10	10	Microseconds
Duty Factor	0.02	0.02	0.02	

*Because of back-heating due to transit time effects, it may be necessary to reduce the heater voltage. For the 1100 mcs, 2 kw, 0.02 duty condition, the typical heater voltage is 5.5 volts. The optimum heater voltage for any application should be determined by RF performance testing.

§ A suitable clamp-on radiator or heat-sink clamping arrangement must be provided to limit the anode hub temperature to the value specified. Higher plate dissipation is allowable with provision for proper cooling.

◇ Pulse duration is measured between points at 70 percent of the peak value. The peak value is defined as the maximum value of a smooth curve through the average of the fluctuations over the top portion of the pulse. For applications requiring longer pulses, refer to the tube manufacturer.

ø Maximum ratio of on-time to elapsed time during any 3.3-millisecond period.

øø Maximum ratio of on-time to elapsed time during any 75-millisecond period.

** With a series grid resistance of 50 ohms.

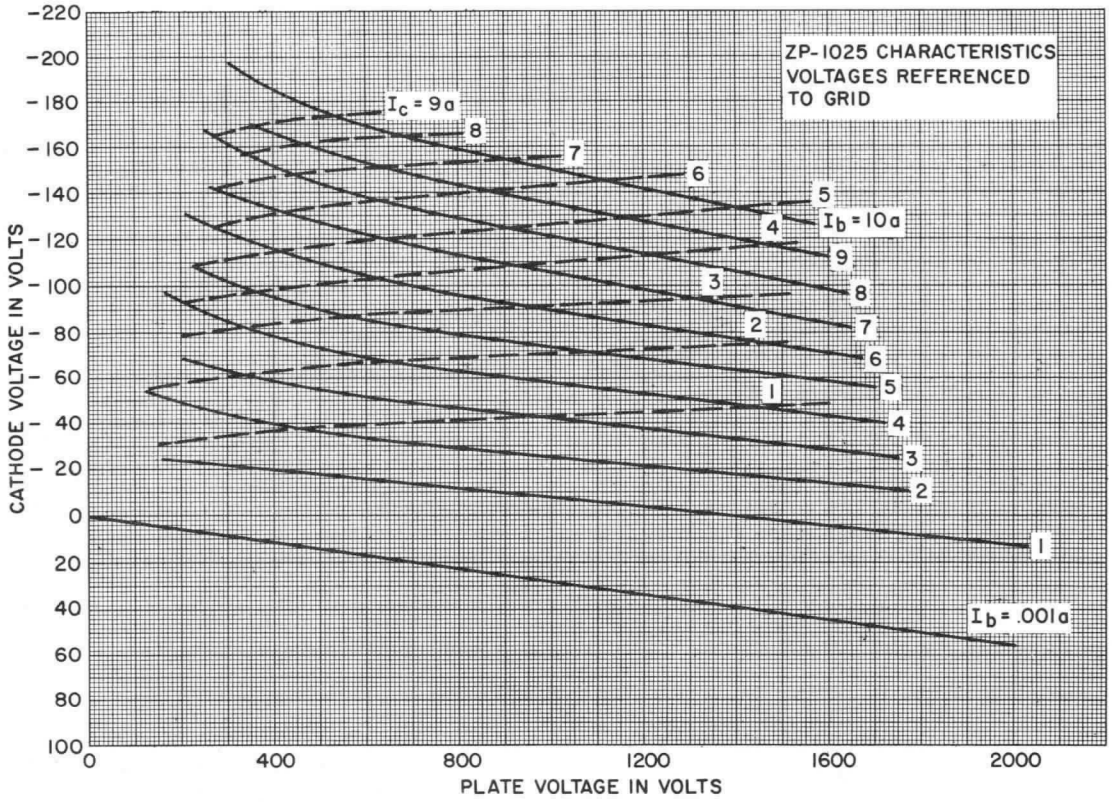
ZP-1025 CHARACTERISTICS
VOLTAGES REFERENCED
TO GRID
I_c = 9a
8
7
6
5
4
I_b = 10a
9
8
7
6
5
4
3
2
1
I_b = .001a
CATHODE VOLTAGE IN VOLTS
-220
-200
-180
-160
-140
-120
-100
-80
-60
-40
-20
0
20
40
60
80
100
0
400
800
1200
1600
2000
PLATE VOLTAGE IN VOLTS

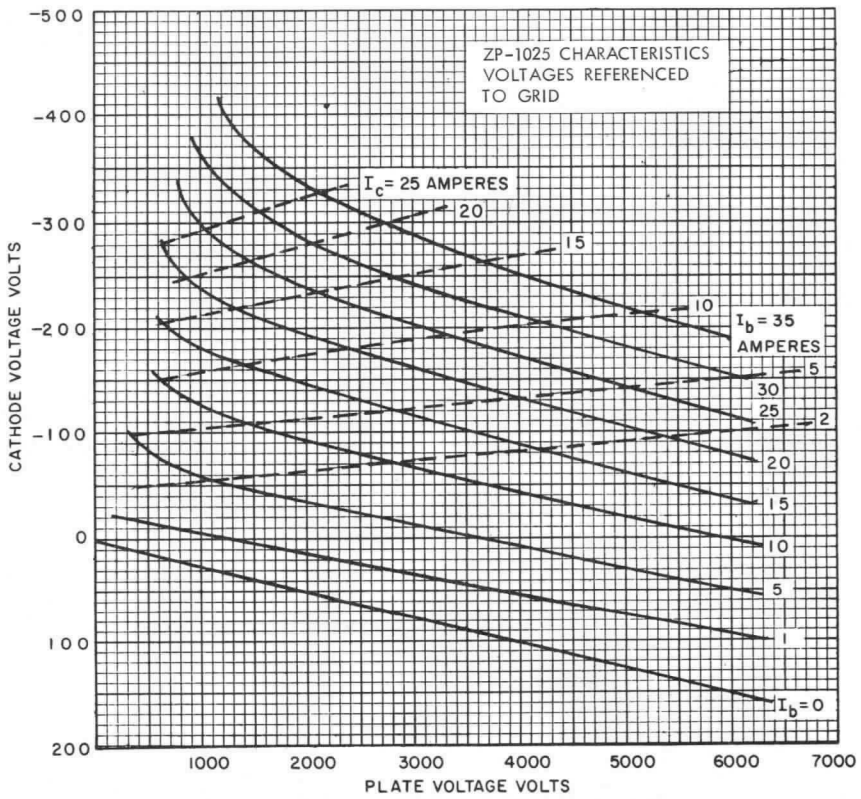
ZP-1025 CHARACTERISTICS
VOLTAGES REFERENCED
TO GRID
I_c = 25 AMPERES
20
15
10
I_b = 35
AMPERES
5
30
25
2
20
15
10
5
1
I_b = 0
CATHODE VOLTAGE VOLTS
-500
-400
-300
-200
-100
0
100
200
1000
2000
3000
4000
5000
6000
7000
PLATE VOLTAGE VOLTS

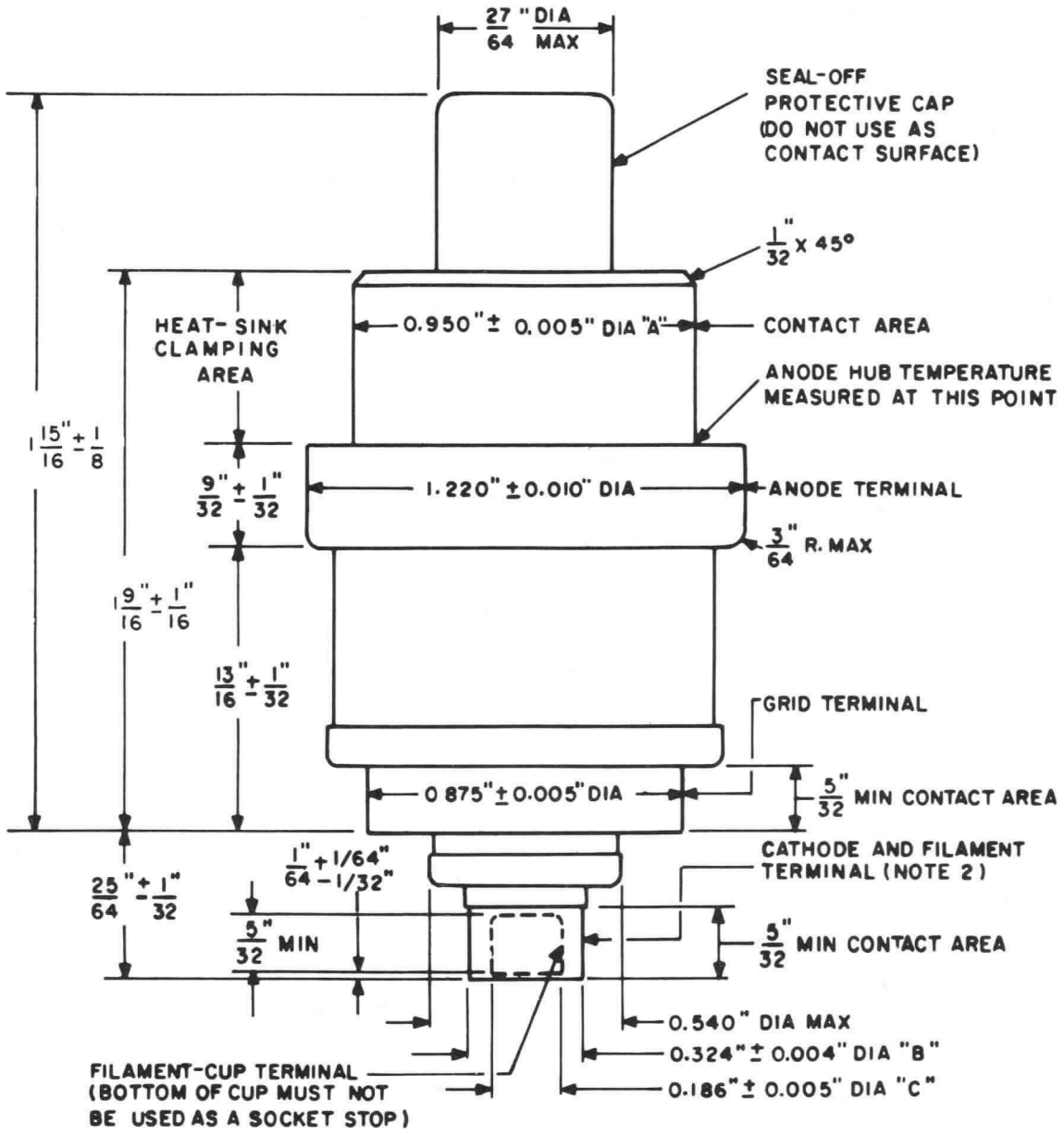

CONCENTRICITIES:

THE FOLLOWING TOTAL INDICATOR READINGS ARE MEASURED WITH RESPECT TO A CENTERLINE DETERMINED BY THE CENTERS OF THE ANODE TERMINAL AND CONTROL-GRID TERMINAL.

DIAMETER A-0.030 INCHES
DIAMETER B-0.036 INCHES
DIAMETER C-0.042 INCHES

TOTAL INDICATOR READING OF FILAMENT-CUP TERMINAL DIAMETER (C) MEASURED WITH RESPECT TO CENTER OF CATHODE AND FILAMENT-TERMINAL DIAMETER (B)-0.016 INCHES.

TUBE DEPARTMENT
GENERAL ELECTRIC
Schenectady, N. Y. 12305

ELECTRONIC INNOVATIONS IN ACTION

TUBES

PRELIMINARY
TECHNICAL INFORMATION

These ratings represent those of current samples of this type. Refer to the Objective Technical Information sheet for design-objective ratings.

DEVELOPMENTAL TYPE

ZP-1038
PTI-162A
Page 1
9-67

This technical information is proprietary and is furnished only as a service to customers.

ZP-1038

TETRODE

Pulsed Service
Grounded-Grid Operation

Forced-Air Cooled
Metal and Ceramic

Integral Radiator

The ZP-1038 is a small-size, four-electrode transmitting tube especially designed for RF grid-pulsed or plate-and-screen pulsed amplifier service at L-band frequencies. This tetrode is particularly well suited for use in airborne or ground-based radar equipment.

The tube is capable of providing useful output at frequencies up to approximately 1500 megacycles.

Features of the ZP-1038 include long life and reliability, long pulse width, high peak power and high gain, broad-banding capability, and resistance to shock and vibration.

These together with such design factors as an oxide-coated cathode, coaxial elements, and metal-ceramic construction make the tube well adapted to application in modern systems where high performance and reliability are important.

ELECTRICAL	Minimum	Bogey	Maximum	
Heater Voltage (See Note 1)	–	6.3	6.8	Volts
Heater Current	–	5.6	–	Amperes
Cathode Heating Time	1	–	–	Minute
Direct Interelectrode Capacitances*				
Input	–	24	–	$\mu\mu$f
Output	–	9	–	$\mu\mu$f

MECHANICAL				
Mounting Position – Any				
Net Weight			0.8	Pounds

THERMAL				
Cooling – Forced Air‡				
Radiator§				
Plate Dissipation	600	400	–	Watts
Air Flow, 45 C incoming air temperature, at sea level	9	4.5	–	Min Cubic Feet per Minute
Static Pressure, approximate	0.5	0.2	–	Inches-Water
Anode Hub Temperature △			250	Max C
Seals				
Screen and Control Grid, approximate			1	Cubic Foot per Minute
Heater and Cathode, approximate			1	Cubic Foot per Minute
Ceramic Temperature at any Point			200	Max C

Note 1: Because the temperature of the cathode is increased by back bombardment of electrons at UHF, required heater voltage for optimum life decreases with increasing frequency. The amount of heater-voltage reduction is dependent on operating conditions. However, this voltage should not be less than 5.5 volts.

The specifications of this type are subject to change. This device is now under development and is made available for experimental purposes only. For the most recent information concerning the status of this development, please consult your local Power Tube Department Regional Sales Office, or current Preliminary Technical Information for the same catalog number.

RADIO-FREQUENCY POWER AMPLIFIER – CLASS B

Maximum Ratings
Plate- and Screen-Grid Pulsed, 500 Megacycles

DC Plate Voltage, during pulse	10	Kilovolts
DC Plate Current, during pulse	10	Amperes
DC Grid-No. 2 Voltage, during pulse	2000	Volts
DC Grid-No. 2 Input♣	15	Watts
Plate Dissipation♣	500	Watts
DC Grid-No. 1 Voltage, not pulsed	-175	Volts
DC Grid-No. 1 Current, during pulse	2.5	Amperes
Pulse Width♥ ◊	15	Microseconds
Duty Factor♥ ø	0.0012	

Typical Operation
Grounded-grid Circuit, 500 Megacycles, 1/4 λ Output Circuit

DC Plate Voltage, during pulse	9	Kilovolts
DC Grid-No. 2 Voltage, during pulse	1400	Volts
DC Grid-No. 1 Voltage, not pulsed	-125	Volts
Peak RF Plate Voltage	7000	Volts
Peak RF Grid Voltage	300	Volts
DC Plate Current, during pulse	9.2	Amperes
DC Grid-No. 1 Current, during pulse	1.1	Amperes
DC Grid-No. 2 Current, during pulse	0.47	Amperes
Driving Power at Tube, during pulse	2.6	Kilowatts
Power Output, during pulse (useful)	52	Kilowatts
Pulse Width◊	15	Microseconds
Duty Factor	0.001	

RADIO-FREQUENCY POWER AMPLIFIER – CLASS C

Maximum Ratings
Pulsed Drive, 1250 Megacycles

DC Plate Voltage	5	Kilovolts
DC Plate Current, during pulse	6	Amperes
DC Grid-No. 2 Voltage	1.1	Kilovolts
DC Grid-No. 2 Input	5	Watts
DC Grid-No. 1 Voltage	-225	Volts
DC Grid-No. 1 Current	1.5	Amperes
Plate Dissipation	500	Watts
Pulse Width♥ ◊	15	Microseconds
Duty Factor♥ øø	0.01	

Typical Operation

Grounded-grid Circuit at 1100 Megacycles, 3/4λ Output Circuit

DC Plate Voltage**	4.8	Kilovolts
DC Plate Current, during pulse	4.2	Amperes
DC Grid-No. 2 Voltage	1	Kilovolt
DC Grid-No. 2 Current, during pulse	100	Milliamperes
DC Grid-No. 1 Voltage	-200	Volts
DC Grid-No. 1 Current, during pulse	200	Milliamperes
Driving Power at Tube, during pulse	1.5	Kilowatts
Power Output, during pulse (useful)	11	Kilowatts
Pulse Width◊	15	Microseconds
Duty Factor	0.01	

* Control grid connected directly to screen grid.
‡ Forced air cooling should be applied during the application of any voltages.
§ Provision must be made for unobstructed passage of cooling air through the radiator fins, and between the anode terminal and adjacent portion of the radiator.
△ Measured at the base of the radiator and adjacent to the plate terminal.
♣ Maximum average value.
♥ For applications that require longer pulses or higher duty refer to the tube manufacturer for recommendations.
◊ Pulse duration measured between points at 70 percent of peak value. The peak value is defined as the maximum value of a smooth curve through the average of the fluctuations over the top portion of the pulse.
ø Maximum ratio of on-time to elapsed time during any 12.5-millisecond period.
øø Maximum ratio of on-time to elapsed time during any 1.5-millisecond period.
** A minimum surge-limiting resistance of 50 ohms must be placed between the plate of the tube and the B+ power supply at steady-state voltages greater than 3.5 kilovolts.

CONSTANT CURRENT CHARACTERISTIC
SCREEN VOLTAGE = 1000 VOLTS
ALL VOLTAGES REFERENCED TO CONTROL GRID

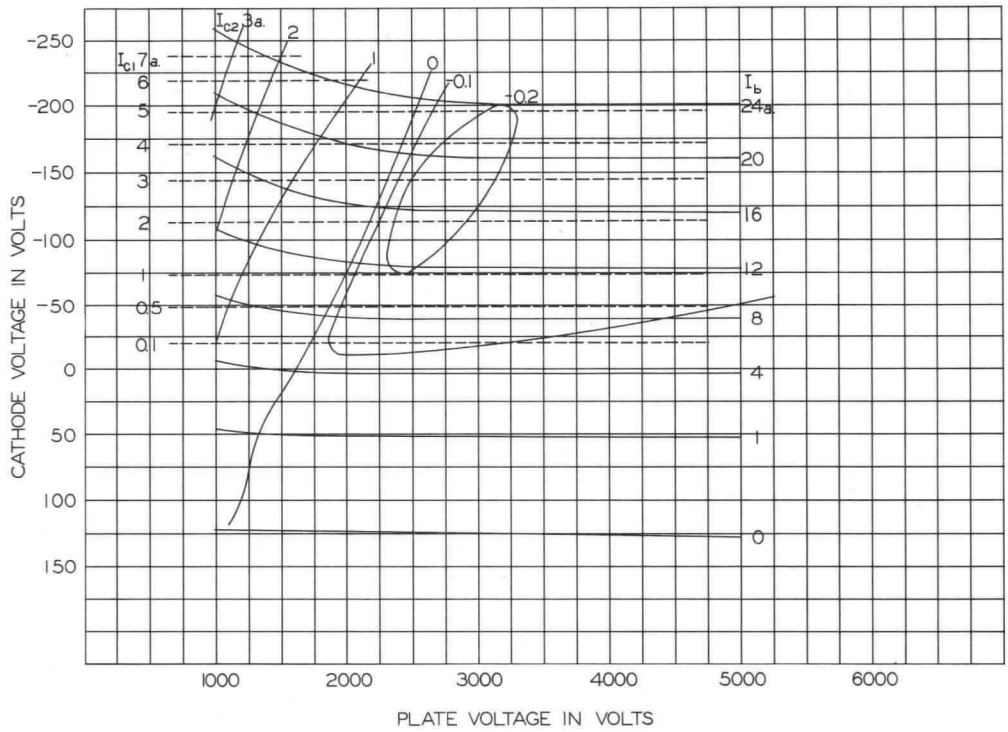

CONSTANT CURRENT CHARACTERISTIC
SCREEN VOLTAGE = 2000 VOLTS
ALL VOLTAGES REFERENCED TO CONTROL GRID

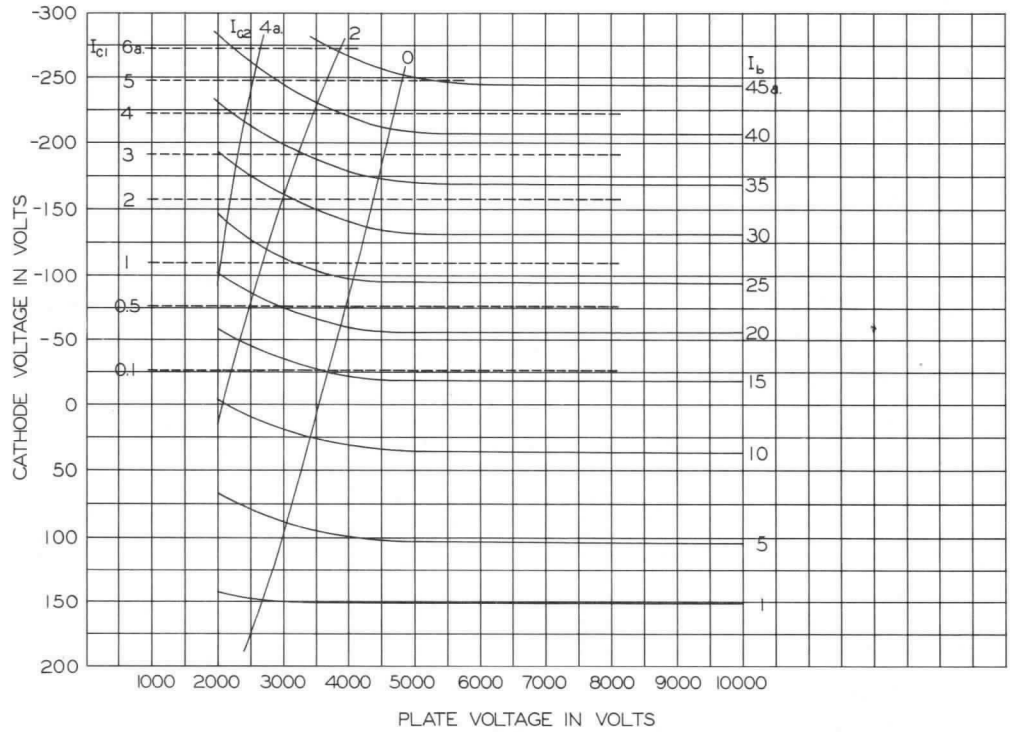

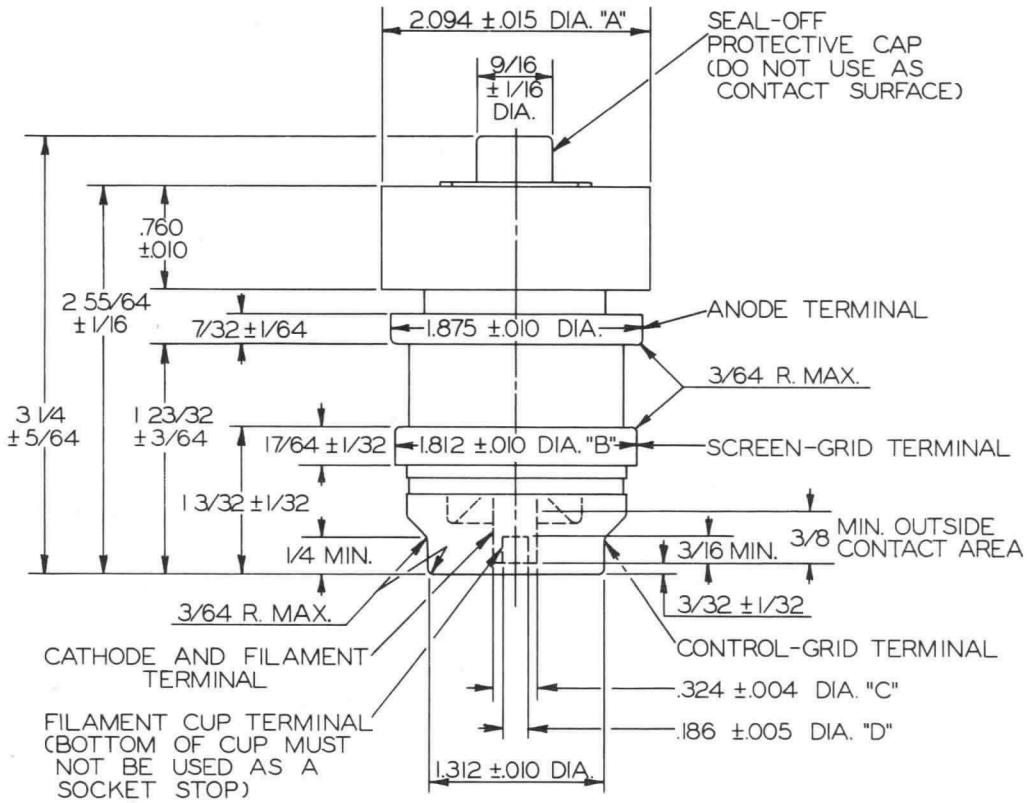

CONCENTRICITIES:

The following total indicator readings are measured with respect to a centerline determined by the centers of the anode terminal and control grid terminal.

Diameter A – 0.030 inches
Diameter B – 0.016 inches
Diameter C – 0.036 inches
Diameter D – 0.042 inches

Total indicator reading of filament cup terminal diameter (D) measured with respect to center of cathode and filament terminal diameter (C) – 0.016 inches.

TUBE DEPARTMENT

GENERAL ELECTRIC

Schenectady, N. Y. 12305

GENERAL ELECTRIC
TUBE DEPARTMENT
Schenectady 5, N. Y.

OBJECTIVE
TECHNICAL INFORMATION

These ratings represent the design objective for this product. Refer to the Preliminary Technical Information sheet for ratings currently achieved in the progression towards design objectives. If PTI sheets do not exist, consult your local Tube Department Regional Sales Office.

DEVELOPMENTAL TYPE

This technical information is proprietary and is furnished only as a service to customers

ZP-1043

TRIODE

Grid-Pulsed Amplifier Service
Grounded-Grid Operation

Heat-Sink and Forced-Air Cooled
Metal and Ceramic

The ZP-1043 is a heat-sink-cooled triode especially designed for grid-pulsed amplifier service in L-band. This tube is particularly well suited for use in navigational aid application. Features include small size, long pulse width and high duty capability, long life and reliability.

ELECTRICAL

Heater Voltage*	5.0	Volts
Heater Current	2.4	Amperes
Cathode Heating Time, minimum	1	Minute
Direct Interelectrode Capacitances		
Input	16.5	μμf
Output	4.0	μμf
Plate-Cathode	0.1	μμf

MECHANICAL

Mounting Position – Any		
Net Weight, approximately	2-1/2	Ounces

THERMAL

Cooling – Heat-sink or Forced air		
Maximum Anode Temperature §	250	C
Maximum Ceramic Temperature at Any Point	200	C

GRID-PULSED AMPLIFIER – CLASS C

Maximum Ratings		
DC Plate Voltage	2.5	Kilovolts
DC Plate Current, during pulse	3.0	Amperes
DC Grid Voltage	-200	Volts
Plate Dissipation	50	Watts
Pulse Width ¶	10	Microseconds
Duty Factor ø¶	0.01	

Typical Operation
Grounded-Grid Circuit at 1150 mcs, 1/4 λ Output

DC Plate Voltage	2000	2000	Volts
DC Plate Current, during pulse	1.1	2.25	Amperes
DC Grid Voltage	-80	-80	Volts
DC Grid Current, during pulse	0.35	0.75	Amperes
Power Output, during pulse (useful)	1000	2000	Watts
Drive Power, during pulse	200	350	Watts
Pulse Width ◊	10	10	Microseconds
Duty Factor	0.01	0.004	

* Because of back-heating due to transit time effects, it may be necessary to reduce the heater voltage.
§ A suitable heat-sink clamping arrangement must be provided to limit the anode hub temperature to the value specified.
ø Maximum ratio of on-time to elapsed time during any 250 microsecond period.
◊ Pulse duration is measured between points at 70 percent of the peak value. The peak value is defined as the maximum value of a smooth curve through the average of the fluctuations over the top portion of the pulse.
¶ For recommendations on longer pulse width and higher duty factor refer to the manufacturer.

The specifications of this type are subject to change. This device is now under development and is made available for experimental purposes only. For the most recent information concerning the status of this development, please consult your local Tube Department Regional Sales Office, or current Preliminary Technical Information for the same catalog number.

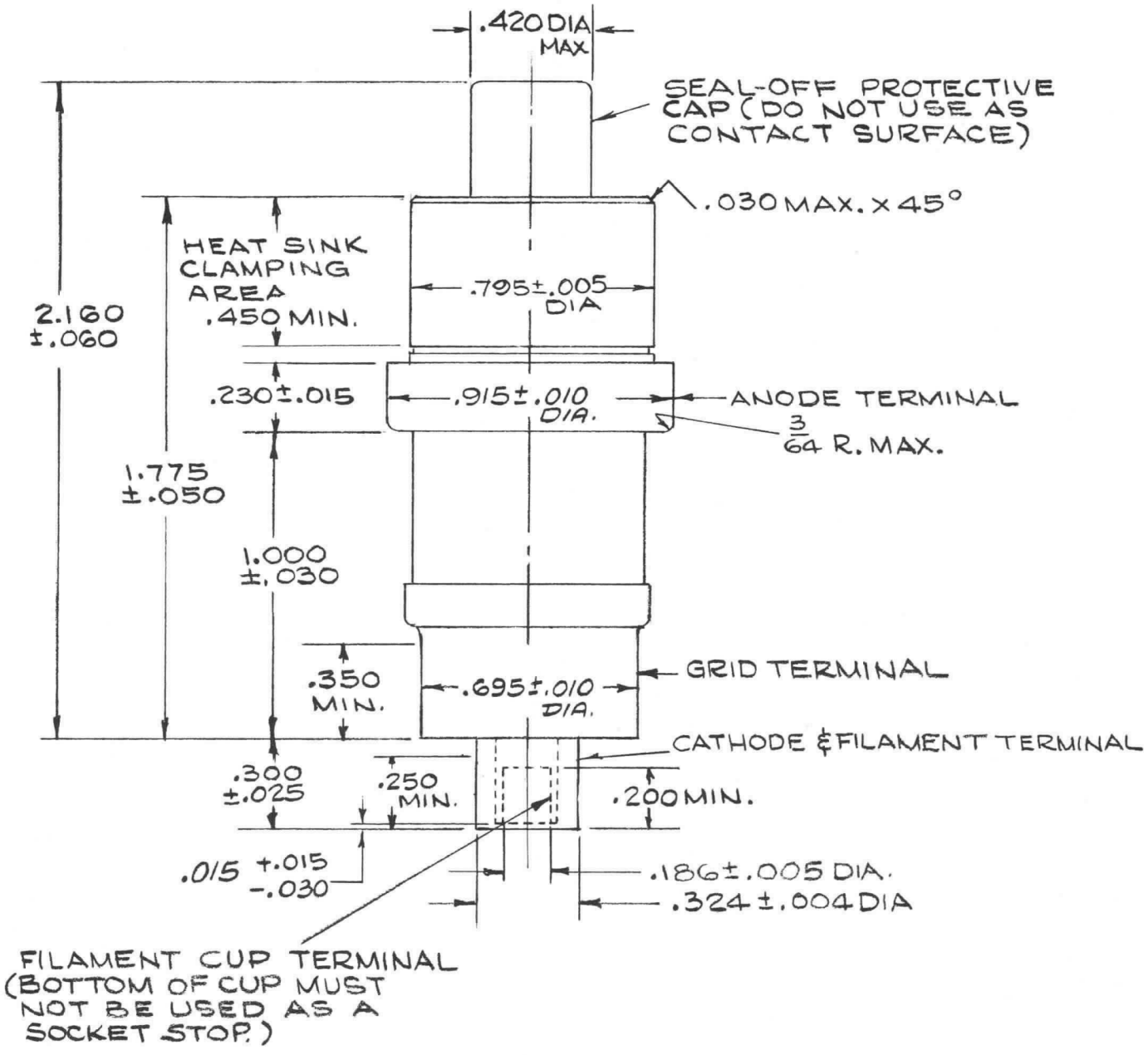
.420 DIA MAX
SEAL-OFF PROTECTIVE CAP (DO NOT USE AS CONTACT SURFACE)
.030 MAX. x 45°
HEAT SINK CLAMPING AREA .450 MIN.
2.160 ±.060
.795±.005 DIA
.230±.015
.915±.010 DIA.
ANODE TERMINAL
3/64 R. MAX.
1.775 ±.050
1.000 ±.030
.350 MIN.
.695±.010 DIA.
GRID TERMINAL
CATHODE & FILAMENT TERMINAL
.300 ±.025
.250 MIN.
.200 MIN.
.015 +.015 -.030
.186±.005 DIA.
.324±.004 DIA
FILAMENT CUP TERMINAL (BOTTOM OF CUP MUST NOT BE USED AS A SOCKET STOP.)

ELECTRONIC INNOVATIONS IN ACTION

TUBES

PRELIMINARY
TECHNICAL INFORMATION

These ratings represent those of current samples of this type. Refer to the Objective Technical Information sheet for design-objective ratings.

DEVELOPMENTAL TYPE

ZP-1044
PTI-149B

9-67

This technical information is proprietary and is furnished only as a service to customers.

ZP-1044

TETRODE

Internal Feedback for CW Oscillator Service
Grounded-Grid Operation

Forced-Air Cooled
Metal and Ceramic

The ZP-1044 is a forced-air cooled power tetrode especially designed for CW oscillator service through approximately 1250 megacycles. This tube is particularly well suited for use in special applications such as a high level RF power source operating over the range of 200 to 1000 megacycles.

The tube features internal feedback which eliminates the need for the complicated external circuit arrangements normally required in oscillator service. This special feature greatly simplifies cavity design, construction, and operation, particularly where very broad frequency coverage is required.

Other features include metal and ceramic construction, an integral radiator capable of dissipating 1500 watts and an indirectly heated thoriated tungsten cathode.

ELECTRICAL	Minimum	Bogey	Maximum	
Heater Voltage*	–	5.7	6.0	Volts
Heater Current at 5.7 Volts	22	24	26	Amperes
Heater Starting Current	–	–	36	Amperes
Heater Cold Resistance	–	0.02	–	Ohms
Cathode Heating Time	1	–	–	Minutes
Direct Interelectrode Capacitances				
Input, G_2 tied to G_1	–	17.0	–	$\mu\mu$f
Output, G_2 tied to G_1 §	–	5.5	–	$\mu\mu$f

MECHANICAL		
Mounting Position		Any
Net Weight, approximate	3.6	Pounds

THERMAL		
Air Flow¶		
Through Radiator, at Sea Level		
Plate Dissipation	1.5	Kilowatts
Air Flow, 45 C Incoming Air Temperature, Minimum	60 Min	Cubic Feet per Minute
Static Pressure	1.5	Inches-Water
Heater-to-Cathode Seals	8 Min	Cubic Feet per Minute
Screen-Grid to Control-Grid Seals	4 Min	Cubic Feet per Minute
Anode to Screen-Grid Ceramic Insulator	6 Min	Cubic Feet per Minute
Radiator Hub Temperature at Fin Adjacent to Anode Seal	180 Max	C
Ceramic Temperature at Any Point	200 Max	C

CW RADIO-FREQUENCY OSCILLATOR – CLASS C

Maximum Ratings, Absolute Values

DC Plate Voltage	4000 Max	Volts
DC Grid-No 2 Voltage	600 Max	Volts
DC Grid-No. 1 Voltage	-150 Max	Volts

The specifications of this type are subject to change. This device is now under development and is made available for experimental purposes only. For the most recent information concerning the status of this development, please consult your local Power Tube Department Regional Sales Office, or current Preliminary Technical Information for the same catalog number.

CW RADIO-FREQUENCY OSCILLATOR - CLASS C (CONT'D)

Maximum Ratings, Absolute Values (Cont'd)

DC Plate Current	0.7 Max	Amperes
DC Grid-No. 1 Current	0.10 Max	Amperes
Plate Input	2.5 Max	Kilowatts
Grid-No. 2 Input	25 Max	Watts
Plate Dissipation	1.5 Max	Kilowatts

Typical Operation - Grounded-Grid Circuit up to 1000 Megacycles

DC Plate Voltage	3800	Volts
DC Grid-No. 2 Voltage	500	Volts
DC Grid-No. 1 Voltage	-120	Volts
DC Plate Current	0.500	Amperes
DC Grid-No. 2 Current	0.022	Amperes
DC Grid-No. 1 Current, approximate	0.075	Amperes
Power Output, approximate (useful)	1100	Watts

* Because the temperature of the cathode is increased by back bombardment of electrons at UHF, required heater voltage for optimum life decreases with increasing frequency. The amount of heater voltage reduction is dependent on operating conditions.

§ Output capacitance measured between anode and screen grid. Control grid connected directly to screen grid.

¶ The volume of cooling air indicated for the various seals is approximate only. Distribution of cooling air will vary with the cavity configuration about the tube. For most satisfactory operation the maximum temperature of any point on the tube should be below 200 C. Cooling is to be provided before and during the application of any voltages.

CONSTANT CURRENT CHARACTERISTIC
SCREEN VOLTAGE = 500 VOLTS
ALL VOLTAGES REFERENCED TO CONTROL GRID

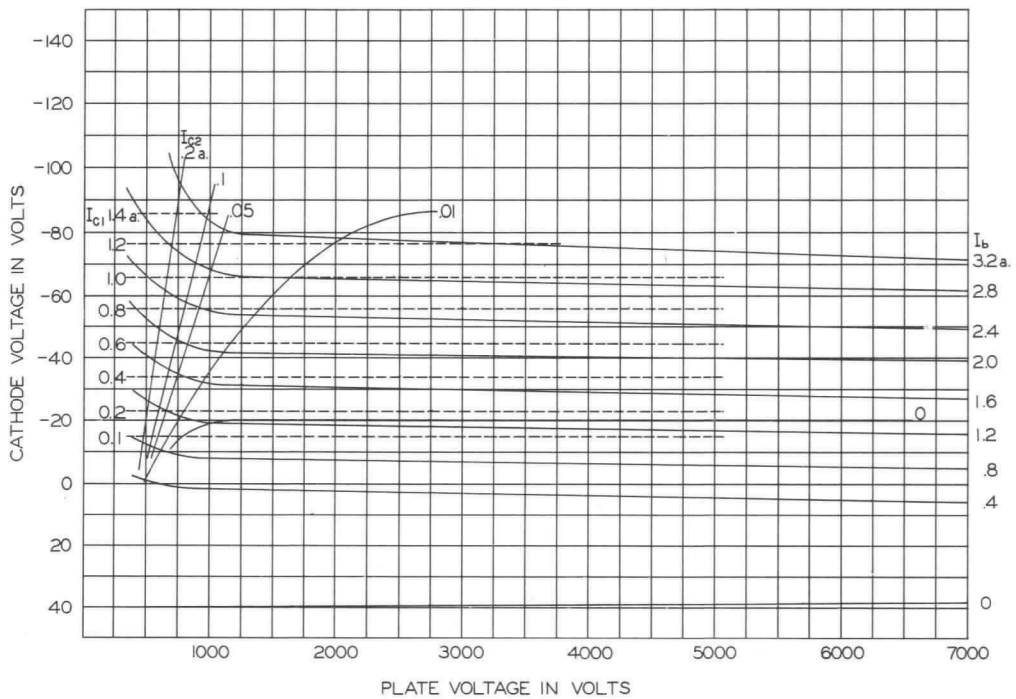

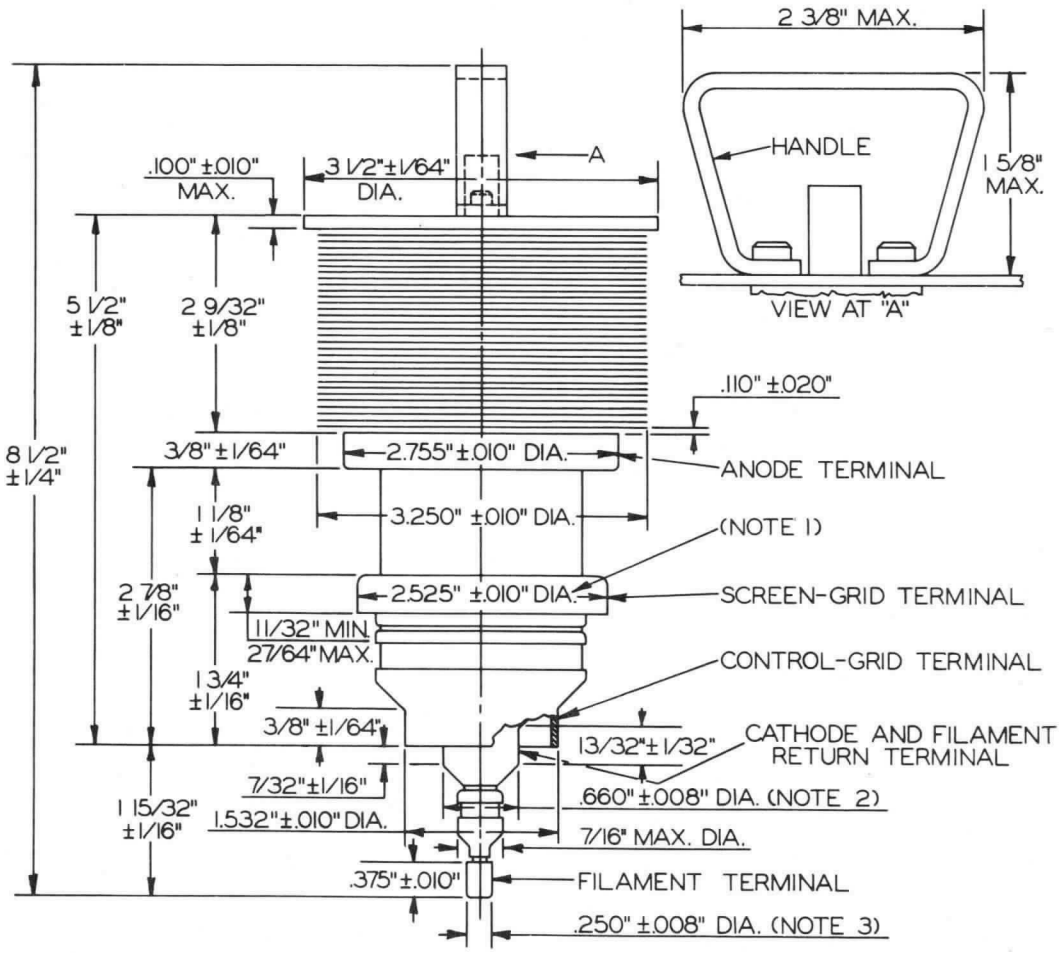

Total Indicator Readings

Note 1: 0.020 in.
Note 2: 0.030 in.
Note 3: 0.060 in.

The above readings are measured with respect to a centerline determined by the centers of the anode terminal and control-grid terminal.

GENERAL ELECTRIC
TUBE DEPARTMENT
Schenectady 5, N. Y.

PRELIMINARY
TECHNICAL INFORMATION

These ratings represent those of current samples of this type. Refer to the Objective Technical Information sheet for design-objective ratings.

DEVELOPMENTAL TYPE

This technical information is proprietary and is furnished only as a service to customers.

ZP-1061
TRIODE

Internal Feedback for Oscillator Service
Grid-Pulsed or Plate-Pulsed Operation

Heat-Sink and Forced-Air Cooled
Metal and Ceramic

The ZP-1061 is a heat-sink-cooled triode especially designed for grid-pulsed oscillator service in L-band. The tube is particularly well suited for use in navigational aid applications.

The ZP-1061 features all necessary feedback within the tube envelope, which eliminates the need for the complicated external-circuit arrangements normally required in oscillator service.

Other features include small size, long pulse width, high duty capability, and long life and reliability.

ELECTRICAL

Heater Voltage*	5.0	Volts
Heater Current	2.5	Amperes
Cathode Heating Time, minimum	1	Minute
Direct Interelectrode Capacitances		
Input	17.0	uuf
Output	4.0	uuf

MECHANICAL

Mounting Position - Any		
Net Weight, approximate	2-1/2	Ounces

THERMAL

Cooling - Heat-sink or Forced Air		
Maximum Anode Temperature#	250	C
Maximum Ceramic Temperature at Any Point	200	C

GRID-PULSED OSCILLATOR - CLASS C **

Maximum Ratings		
DC Plate Voltage	2.5	Kilovolts
DC Plate Current, during pulse	2.0	Amperes
DC Grid Voltage	-200	Volts
Plate Dissipation	50	Watts
Pulse Width&	10	Microseconds
Duty Factorϕ&	0.01	
Typical Operation		
Grounded-Grid Circuit at 1090 mcs, 1/4λ Output		
DC Plate Voltage	1800	Volts
DC Plate Current, during pulse	1.75	Amperes
DC Grid Voltage	-90	Volts
DC Grid Current, during pulse	1.0	Amperes
Power Output, during pulse (useful)	1000	Watts
Pulse Widthϕ	0.5	Microseconds
Duty Factor	0.01	

The specifications of this type are subject to change. Delivery of samples and the existence of these data do not imply continued availability of types with the same characteristics or dimensions. For the most recent information concerning the status of this device, please consult your local Tube Department Regional Sales Office.

* Because of back-heating due to transit time effects, it may be necessary to reduce the heater voltage.

A suitable heat-sink clamping arrangement must be provided to limit the anode hub temperature to the value specified.

ϕ Maximum ratio of on-time to elapsed time during any 250 microsecond period.

¢ Pulse duration is measured between points at 70 percent of the peak value. The peak value is defined at the maximum value of a smooth curve through the average of the fluctuations over the top portion of the pulse.

& For recommendations on longer pulse width and higher duty factor refer to the manufacturer.

** Plate-pulsed oscillator operation may be used for considerably higher peak power output than that indicated under typical operation. For recommendations refer to the manufacturer.

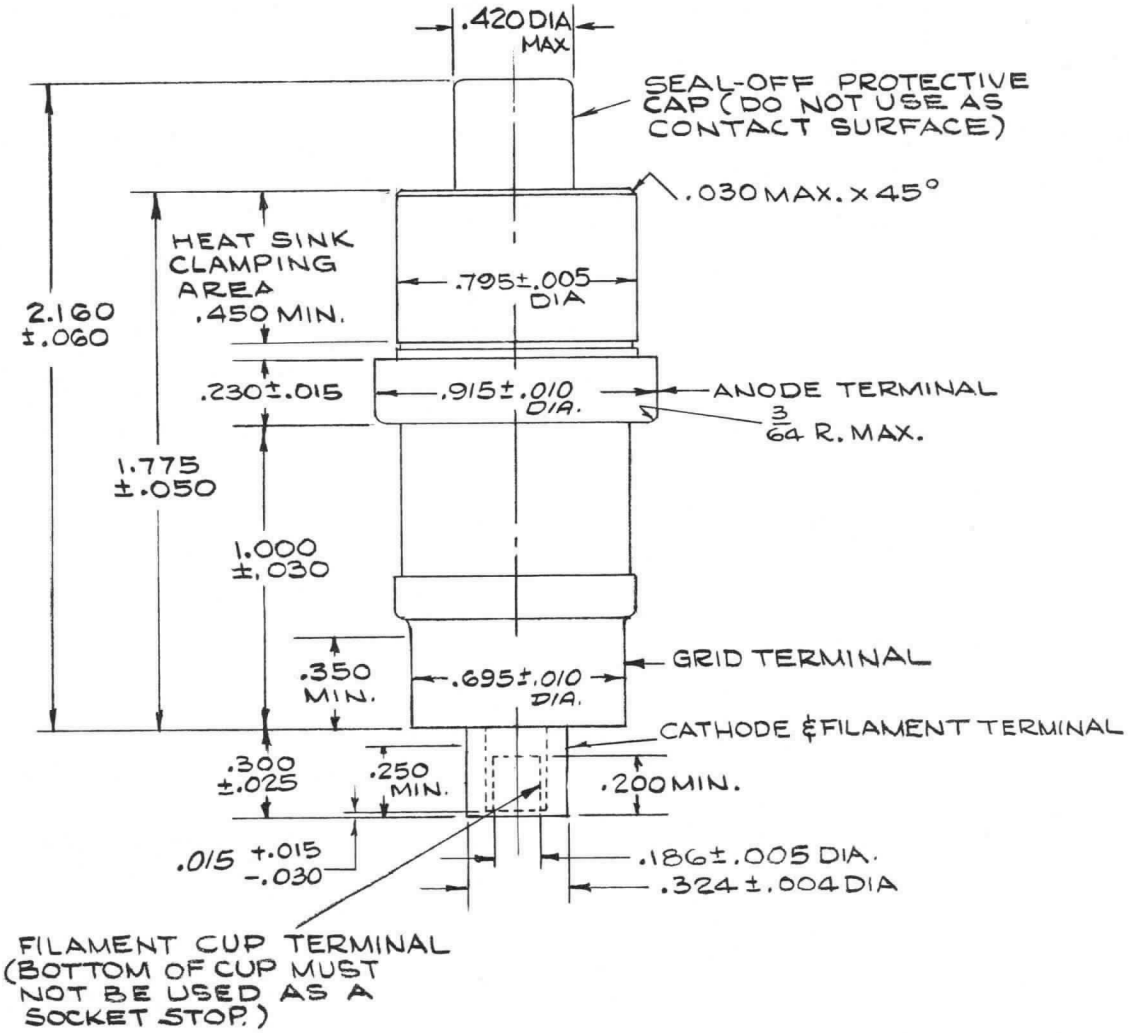

ELECTRONIC INNOVATIONS IN ACTION

TUBES

PRELIMINARY
TECHNICAL INFORMATION

These ratings represent those of current samples of this type. Refer to the Objective Technical Information sheet for design-objective ratings.

DEVELOPMENTAL TYPE

ZP-1064
PTI-171

9-67

This technical information is proprietary and is furnished only as a service to customers.

ZP-1064
TETRODE

VHF-UHF Metal Ceramic Tetrode
4 Kilowatts Useful CW Output
750 Watts Class B Linear Output
Forced Air Cooled
Integral Radiator
Thoriated-Tungsten Cathode

The ZP-1064 is a forced-air cooled power tetrode that delivers useful output to approximately 1250 megacycles. This tube is particularly suitable for application as an AM or FM power amplifier in the final output or driver stage of VHF-UHF military communications systems.

The tube features high power gain, as much as 14 db, while delivering up to 4000 watts of useful CW power as a grounded-grid Class C amplifier at 400 megacycles. An output capacitance of only 6.0 $\mu\mu$f, which is significantly low for a tube of its power handling capability, makes the ZP-1064 well suited for application in equipments requiring broad electronic bandwidth.

Other features include metal-ceramic construction, a high efficiency axial flow radiator capable of dissipating 2750 watts, and an indirectly heated thoriated tungsten cathode.

GENERAL

Electrical

	Minimum	Bogey	Maximum	
Heater Voltage *	...	5.7	...	Volts
Heater Current at 5.7 Volts	22	24	26	Amperes
Heater Starting Current	...	...	36	Amperes
Heater Cold Resistance	...	0.02	...	Ohms
Cathode Heating Time	1	...	...	Minute
Amplification Factor, G_2 to G_1 Eb = 2000 Volts, I_b = 0.200 Ampere, E_c2 = 475 Volts	12	17	22	
Direct Interelectrode Capacitances				
Cathode to Plate ‡	...	...	0.006	$\mu\mu$f
Input, G_2 tied to G_1	15.5	17.0	18.5	$\mu\mu$f
Output, G_2 tied to G_1 §	...	6.0	...	$\mu\mu$f

Mechanical

Mounting Position		Vertical
Net Weight, approximate	5.0	Pounds

Thermal

Cooling-Forced Air ¶
Through Radiator, at Sea Level

Plate Dissipation	Air Flow	Static Pressure
2.75 Kilowatts	140 Min CFM	1.9 Inches Water
2.0 Kilowatts	90 Min CFM	0.8 Inches Water
1.5 Kilowatts	55 Min CFM	0.4 Inches Water

Seals

Screen-Grid to Control-Grid	4 Min CFM
Heater-to-Cathode	8 Min CFM
Anode to Screen-Grid Ceramic Insulator	6 Min CFM
Incoming Air Temperature	25 Max C
Radiator Hub Temperature (Adjacent to Anode Seal)	180 Max C
Temperature at Any Other Point	200 Max C

Forced-air cooling to be applied before and during the application of any voltages. Forced-air cooling must be maintained for one minute after the removal of all voltages.

The specifications of this type are subject to change. This device is now under development and is made available for experimental purposes only. For the most recent information concerning the status of this development, please consult your local Power Tube Department Regional Sales Office, or current Preliminary Technical Information for the same catalog number.

MAXIMUM RATINGS AND TYPICAL OPERATING CONDITIONS
RADIO-FREQUENCY POWER AMPLIFIER AND OSCILLATOR - CLASS C

Maximum Ratings, Absolute Values	420 mcs	1000 mcs	
DC Plate Voltage	8000	6000	Max Volts
DC Grid-No. 2 Voltage	650	650	Max Volts
DC Grid-No. 1 Voltage	-175	-175	Max Volts
DC Plate Current	0.700	0.700	Max Amperes
DC Grid-No. 1 Current	0.175	0.175	Max Amperes
Plate Input	5.6	4.2	Max Kilowatts
Grid-No. 2 Input	25	25	Max Watts
Plate Dissipation	2.75	2.75	Max Kilowatts

Typical Operation - Grounded-Grid Circuit @ 400 mcs

DC Plate Voltage	5500	7500	Volts
DC Grid-No. 2 Voltage	600	600	Volts
DC Grid-No. 1 Voltage	-100	-100	Volts
DC Plate Current	0.450	0.650	Amperes
DC Grid-No. 2 Current	0.012	0.016	Amperes
DC Grid-No. 1 Current	0.085	0.155	Amperes
Driving Power, approx	90	150	Watts
Power Output, useful ø	2000	4000	Watts
Power Gain, approx	13.5	14.3	db

RADIO FREQUENCY POWER AMPLIFIER - CLASS B LINEAR SERVICE

Maximum Ratings at 420 Megacycles, Absolute Values

DC Plate Voltage	8000	Max Volts
DC Grid-No. 2 Voltage	650	Max Volts
DC Plate Current	585	Max Milliamperes
Plate Input	4150	Max Watts
Grid-No. 2 Input	16	Max Watts
Plate Dissipation	2750	Max Watts

Typical Operation at 400 Mcs, Carrier Conditions for Maximum Modulation Factor of 1.0

DC Plate Voltage	7500	Volts
DC Grid-No. 2 Voltage	600	Volts
DC Grid-No. 1 Voltage, approx	-50	Volts
DC Plate Current	330	Milliamperes
DC Grid-No. 2 Current	5	Milliamperes
DC Grid-No. 1 Current	30	Milliamperes
Driving Power, approx	17.5	Watts
Power Output, useful ø	750	Watts
Power Gain, approx	16	db

* Because the temperature of the cathode is increased by back bombardment of electrons at UHF, required heater voltage for optimum life decreases with increasing frequency. The amount of heater voltage reduction is dependent on operating conditions.

‡ Measured with complete external shielding between cathode and anode.
§ Output capacitance measured between anode and screen grid. Control grid connected directly to screen grid.
¶ The volume of cooling air indicated for the various seals is for sea-level conditions and approximate only. Distribution of cooling air will vary with the cavity configuration about the tube. For most satisfactory operation the maximum temperature of any point on the tube should be below specified limits.
ø Useful power output including power transferred from driver stage.

CONSTANT CURRENT CHARACTERISTIC
SCREEN VOLTAGE = 500 VOLTS
ALL VOLTAGES REFERENCED TO CONTROL GRID

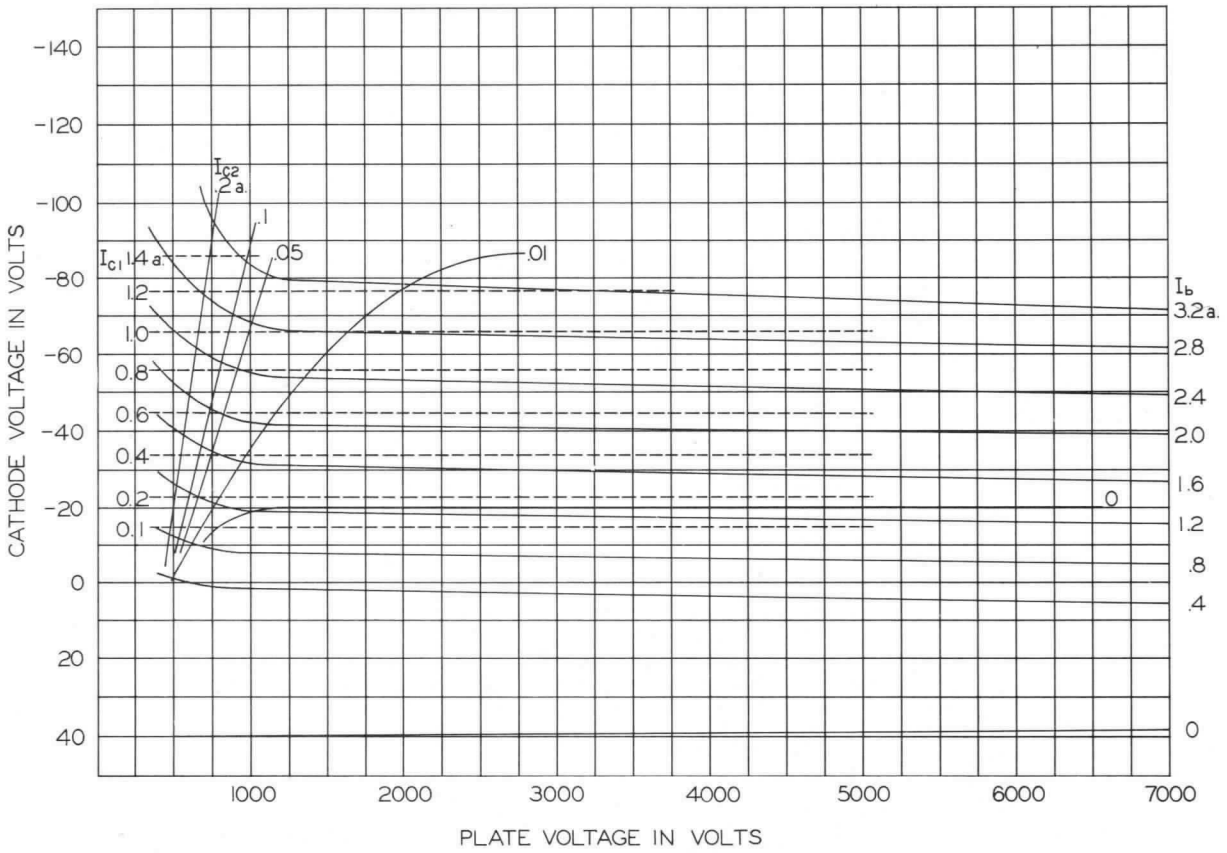

CONSTANT CURRENT CHARACTERISTIC
SCREEN VOLTAGE = 650 VOLTS
ALL VOLTAGES REFERENCED TO CONTROL GRID

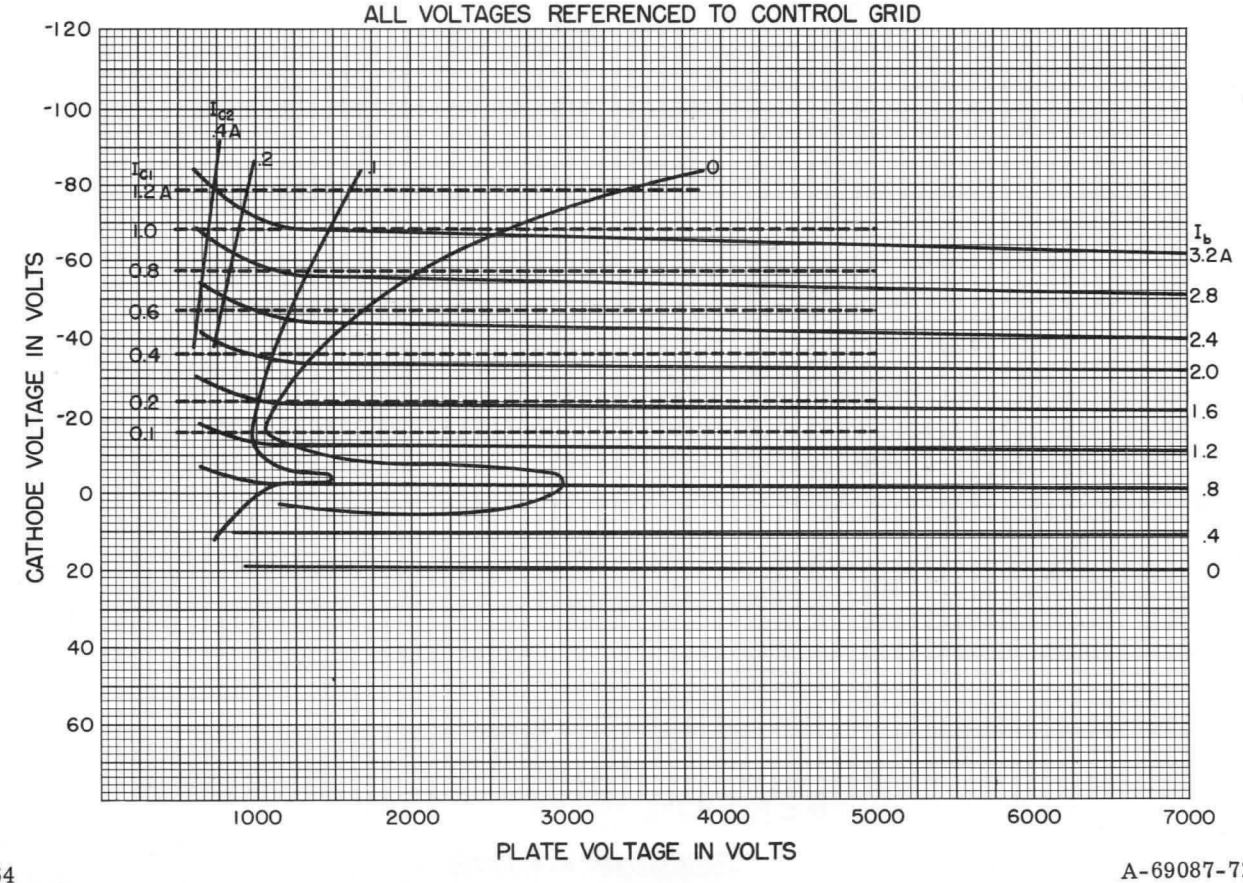

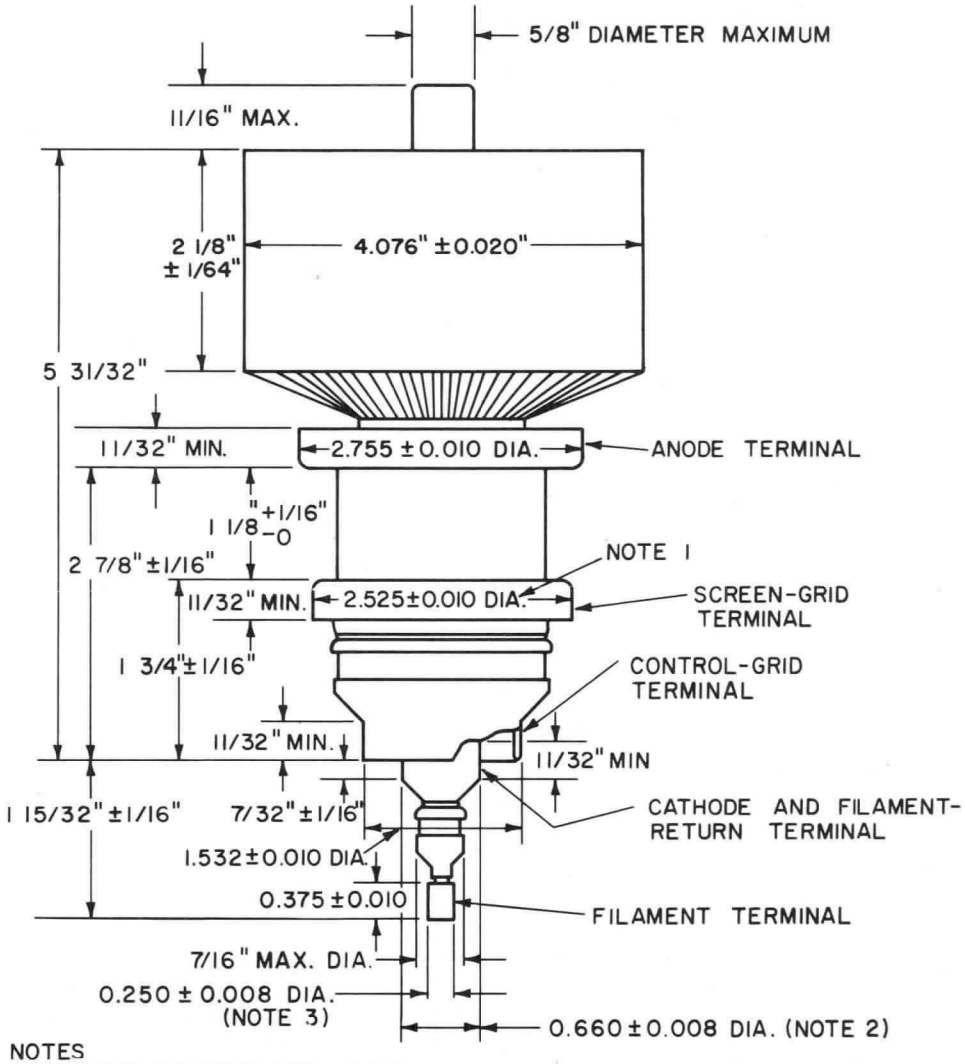

NOTES
1. MAXIMUM ECCENTRICITY 0.010
2. MAXIMUM ECCENTRICITY 0.015
3. MAXIMUM ECCENTRICITY 0.030
WITH RESPECT TO CENTERLINE DETERMINED BY CENTERS OF ANODE TERMINAL AND CONTROL-GRID TERMINAL

ELECTRONIC INNOVATIONS IN ACTION

TUBES

PRELIMINARY
TECHNICAL INFORMATION

These ratings represent those of current samples of this type. Refer to the Objective Technical Information sheet for design-objective ratings.

DEVELOPMENTAL TYPE

ZP-1065
PTI-165A
Page 1
9-67

This technical information is proprietary and is furnished only as a service to customers.

ZP-1065

Grid-Pulsed Service
Grounded-Grid Operation

TETRODE

Forced-Air Cooled
Metal and Ceramic

The ZP-1065 is a high-performance, forced-air cooled, metal-ceramic tetrode especially designed for grid-pulsed amplifier service (pulsed RF drive only) at L-band frequencies. This tetrode is particularly well suited for use in radar equipment such as advanced ground-based, ship-board or airborne IFF interrogators. It is capable of providing useful output at frequencies up to approximately 1500 megacycles.

Features of the ZP-1065 include long life and reliability, high gain with pulsed RF drive only, long pulse width, and high-duty capability.

ELECTRICAL	Minimum	Bogey	Maximum	
Heater Voltage*	-	6.3	-	Volts
Heater Current	-	3.8	-	Amperes
Cathode Heating Time	1	-	-	Minute
Direct Interelectrode Capacitances**				
Cathode to Plate †	-	0.006	-	uuf
Input	-	20	-	uuf
Output	-	7.5	-	uuf

MECHANICAL		
Mounting Position		Any
Net Weight, approximate	13	Ounces

THERMAL			
Cooling - Forced-Air‡			
Through Radiator, at Sea Level			
Plate Dissipation	600	400	Watts
Air Flow, 45 C Incoming Air Temperature, minimum	9	4.5	Cubic Feet per Minute
Static Pressure, approximate	0.5	0.2	Inches Water
Radiator Hub Temperature at Point Adjacent to Anode Seal, maximum§		250	C
Seals			
Screen and Control Grid, approximate		1	Cubic Feet per Minute
Heater and Cathode, approximate		1	Cubic Feet per Minute
Ceramic Temperature at Any Point, maximum		200	C

RADIO-FREQUENCY POWER AMPLIFIER

Maximum Ratings

Pulsed Drive, 1250 Megacycles		
DC Plate Voltage	5	Kilovolts
DC Plate Current, during pulse	6	Amperes
DC Grid-No. 2 Voltage	1	Kilovolt
DC Grid-No. 2 Input	5	Watts
DC Grid-No. 1 Voltage	-200	Volts
Plate Dissipation	600	Watts
Pulse Width ◊	10	Microseconds
Duty Factor ø	0.01	

The specifications of this type are subject to change. This device is now under development and is made available for experimental purposes only. For the most recent information concerning the status of this development, please consult your local Power Tube Department Regional Sales Office, or current Preliminary Technical Information for the same catalog number.

RADIO-FREQUENCY POWER AMPLIFIER (CONT'D)

Typical Operation

Grounded-Grid Service at 1030 Megacycles, 1/4λ Output Circuit

DC Plate Voltage øø	4.5	3.5	Kilovolts
DC Plate Current, during pulse	5.3	3.0	Amperes
DC Grid-No. 2 Voltage	750	750	Volts
DC Grid-No. 2 Current, during pulse	0.110	0.065	Amperes
DC Grid-No. 1 Voltage, approximate	-115	-75	Volts
DC Grid-No. 1 Current, during pulse	0.850	0.400	Amperes
Driving Power at the Tube, during pulse	1.5	0.5	Kilowatts
Power Output, during pulse (useful)	11.0	4.5	Kilowatts
Pulse Width	10	10	Microseconds
Duty Factor	0.01	0.03	

* Under the typical operating conditions shown the filament voltage should be reduced to approximately 6.0 volts because of back-heating resulting from transit time effects.
** Control grid connected directly to screen grid.
† Complete external shielding between cathode and plate.
‡ Forced-air cooling should be applied during the application of any voltages.
§ Provision must be made for unobstructed passage of cooling air to limit the anode hub temperature to the value specified.
◊ Pulse duration is measured between points at 70 percent of the peak value. The peak value is defined as the maximum value of a smooth curve through the average of the fluctuations over the top portion of the pulse.
ø Maximum ratio of on-time to elapsed time during any 1-millisecond period. Higher duty may be allowed with lower tube input as indicated under typical operation at 0.03 duty. For applications that require longer pulses or higher duty refer to the tube manufacturer for recommendations.
øø A minimum surge-limiting resistance of 50 ohms must be placed between the plate of the tube and the B+ power supply at steady-state voltages greater than 3.5 kilovolts.

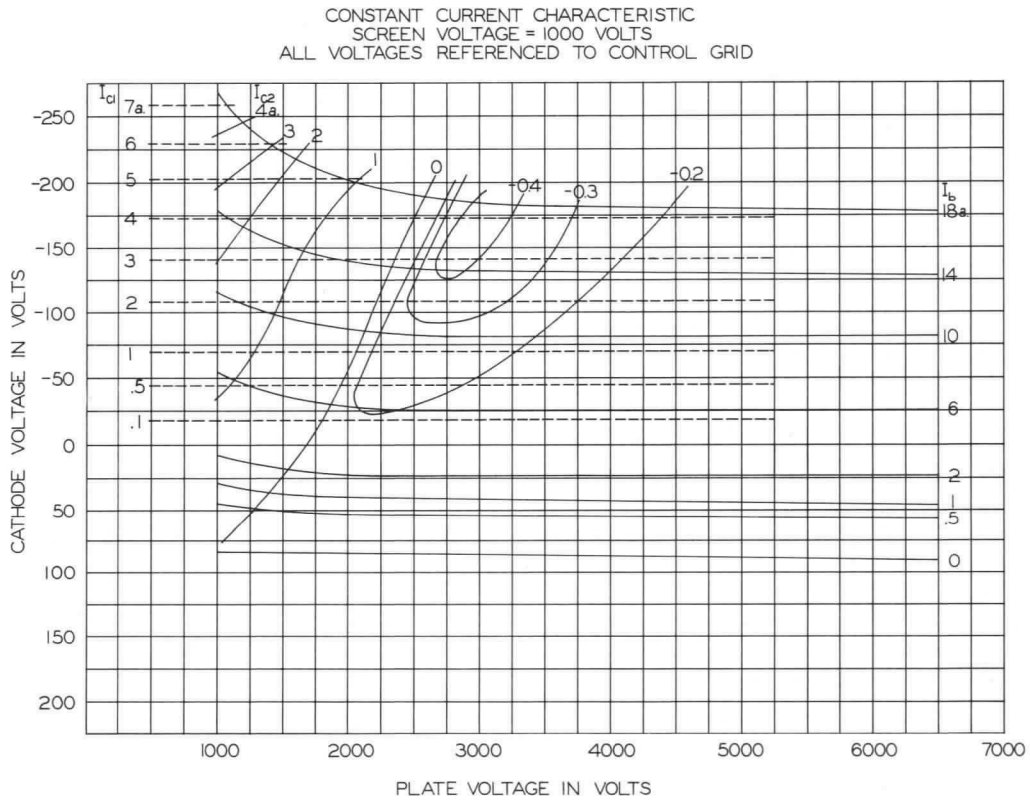

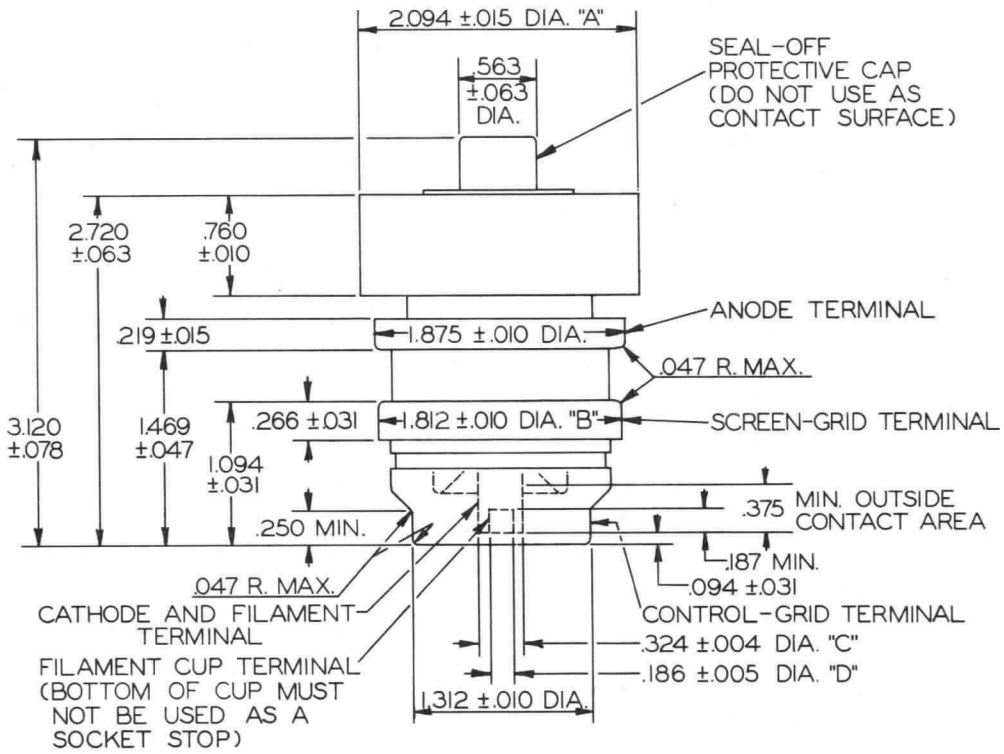

CONCENTRICITIES:
The following total indicator readings are measured with respect to a centerline determined by the centers of the anode terminal and control grid terminal.

Diameter A - 0.030 inches
Diameter B - 0.016 inches
Diameter C - 0.036 inches
Diameter D - 0.042 inches

Total indicator reading of filament cup terminal diameter (D) measured with respect to center of cathode and filament terminal diameter (C) - 0.016 inches.

TUBE DEPARTMENT
GENERAL ELECTRIC
Schenectady, N. Y. 12305

GENERAL ELECTRIC
TUBE DEPARTMENT
Schenectady 5, N. Y.

PRELIMINARY
TECHNICAL INFORMATION

These ratings represent those of current samples of this type. Refer to the Objective Technical Information sheet for design-objective ratings.

DEVELOPMENTAL TYPE

This technical information is proprietary and is furnished only as a service to customers.

ZP-1070

Radio-Frequency Amplifier
CW Service
Grounded-Grid Operation

TETRODE

Forced-Air Cooled
Metal and Ceramic
Integral Radiator

The ZP-1070 is a reliable power tetrode that delivers useful output to 1250 megacycles or higher. This tube is particularly suitable for application in the final output or driver stage of military-communications systems.

As a Class B linear amplifier in the 225-400-megacycle range, the tube will deliver 110 watts of carrier power modulated up to 100 percent. Since a power gain of 20 may be realized, drive requirements are low – approximately 5 watts at carrier level.

Operating as a Class C CW amplifier at 900 megacycles, the gain is approximately 15 at the 200-watt level.

Features of the ZP-1070 include long life and reliability, high gain, high linearity, and resistance to shock and vibration.

These together with such design factors as an oxide-coated cathode, coaxial elements, and metal-ceramic construction make the tube well adapted to application in modern systems where performance and reliability are important.

ELECTRICAL	Minimum	Bogey	Maximum	
Heater Voltage *	–	6.3	6.8	Volts
Heater Current	–	3.8	–	Amperes
Cathode Heating Time	1	–	–	Minutes
Amplification Factor, G_2 to G_1, E_b = 1000 Volts DC; E_g2=275 Volts DC; I_b = 0.2 A DC	–	14	–	
Direct Interelectrode Capacitances				
Cathode to Plate ‡	–	0.006	–	μμf
Input, G_2 tied to G_1	–	20	–	μμf
Output, G_2 tied to G_1 ◊	–	7.5	–	μμf

MECHANICAL				
Mounting Position – Any				
Net Weight, approximate			13	Ounces

THERMAL				
Cooling – Forced Air §				
Through Radiator, at Sea Level **				
Plate Dissipation	600	400		Watts
Air Flow, 45 C Incoming Air Temperature, minimum	9	4.5		Cubic Feet per Minute
Static Pressure, approximate	0.5	0.2		Inches-Water
Radiator Hub Temperature at Point Adjacent to Anode Seal	–	–	250	C

The specifications of this type are subject to change. Delivery of samples and the existence of these data do not imply continued availability of types with the same characteristics or dimensions. For the most recent information concerning the status of this device, please consult your local Tube Department Regional Sales Office.

THERMAL (CONT'D)

Seals				
Screen-Grid to Control-Grid, approximate	–	–	1	Cubic Foot per Minute
Heater to Cathode, approximate	–	–	1	Cubic Foot per Minute
Ceramic Temperature at Any Point, maximum	–	–	200	C

RADIO-FREQUENCY POWER AMPLIFIER – CLASS B LINEAR

Carrier conditions per tube for use with a maximum modulation factor of 1.0

Maximum Ratings

DC Plate Voltage	2000	Volts
DC Grid-No. 2 Voltage	320	Volts
DC Plate Current	0.250	Ampere
Plate Input	500	Watts
Grid-No. 2 Input	5	Watts
Plate Dissipation	600	Watts

Typical Operation

Grounded-Grid Circuit at 225-400 Megacycles

DC Plate Voltage	1750	Volts
DC Grid-No. 2 Voltage	250	Volts
DC Grid-No. 1 Voltage, approximate	-20	Volts
Peak RF Plate Voltage #, approximate	1250	Volts
Peak RF Grid-No. 1 Voltage #, approximate	40	Volts
DC Plate Current	0.200	Ampere
Zero Signal DC Plate Current (E_{c1} adjusted)	0.020	Ampere
DC Grid-No. 2 Current	0.005	Ampere
DC Grid-No. 1 Current	0.010	Ampere
Driving Power, approximate	5	Watts
Power Output♥	110	Watts

RADIO-FREQUENCY POWER AMPLIFIER AND OSCILLATOR – CLASS C TELEGRAPHY

Key-down conditions per tube without amplitude modulation△

Maximum Ratings	900 Megacycles	400 Megacycles	
DC Plate Voltage	1600	2000	Volts
DC Grid-No. 2 Voltage	320	320	Volts
DC Grid-No. 1 Voltage	-100	-100	Volts
DC Plate Current	0.300	0.300	Ampere
DC Grid-No. 1 Current	0.050	0.050	Ampere
Plate Input	480	600	Watts
Grid-No. 2 Input	15	15	Watts
Plate Dissipation	600	600	Watts
Grid-No. 1 Dissipation	2	2	Watts

Typical Operation

Grounded-Grid Circuit at 900 Megacycles			
DC Plate Voltage	1500	2000	Volts
DC Grid-No. 2 Voltage	210	225	Volts
DC Grid-No. 1 Voltage	-40	-40	Volts
DC Plate Current	0.300	0.250	Ampere
DC Grid-No. 2 Current, approximate	0.010	0.010	Ampere
DC Grid-No. 1 Current, approximate	0.020	0.020	Ampere
Driving Power, approximate	14	15	Watts
Power Output, approximate ¶	205	300	Watts

* Because the temperature of the cathode is increased by back bombardment of electrons at UHF, required heater voltage for optimum life decreases with increasing frequency. The amount of heater-voltage reduction is dependent on operating conditions. However, this voltage should not be less than 5.5 volts.

‡ Measured with a 6-inch minimum diameter flat metal disk attached to the screen-grid ring. Control grid connected to the screen grid.

◊ Output capacitances measured between anode and screen grid. Control grid connected directly to screen grid.

§ Forced-air cooling to be applied before and during the application of any voltages.

** Provision must be made for unobstructed passage of cooling air between radiator fins and between the anode terminal and adjacent radiator fin.

♥ Useful power output as measured in output-circuit load.

¶ Useful power output including power transferred from driver stage. Output circuit efficiency approximately 80 percent.

Δ Modulation essentially negative may be used if the positive peak of the envelope does not exceed 115 percent of the carrier conditions.

Measured at the crest of the audio-frequency cycle with a modulation factor of 1.0.

CONSTANT CURRENT CHARACTERISTIC
SCREEN VOLTAGE = 250 VOLTS
ALL VOLTAGES REFERENCED TO CONTROL GRID

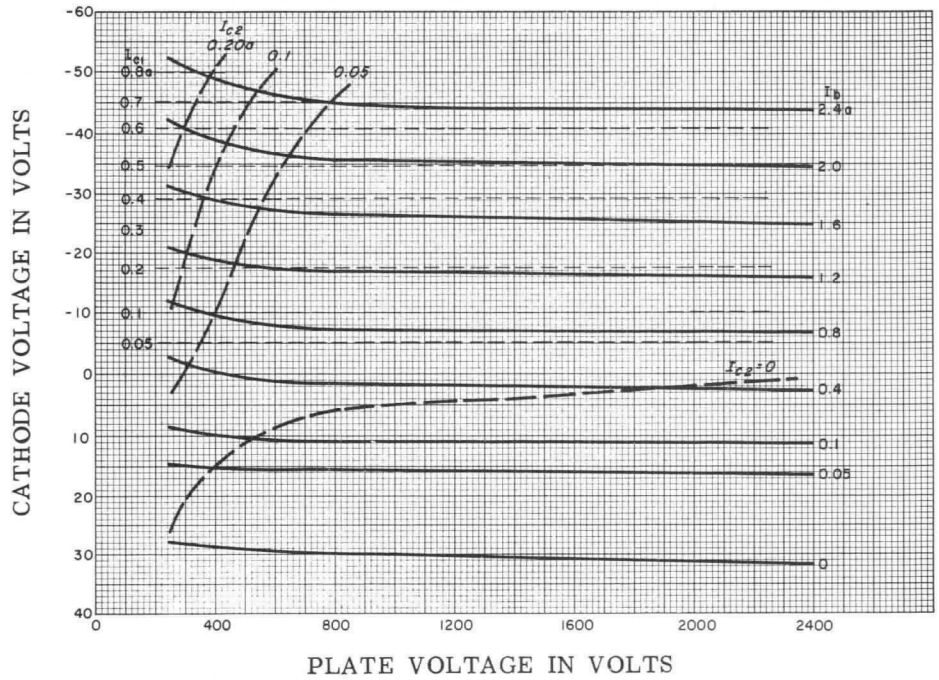

A69087 – 72B67 (1-30-62)

CONSTANT CURRENT CHARACTERISTIC
SCREEN VOLTAGE = 350 VOLTS
ALL VOLTAGES REFERENCED TO CONTROL GRID

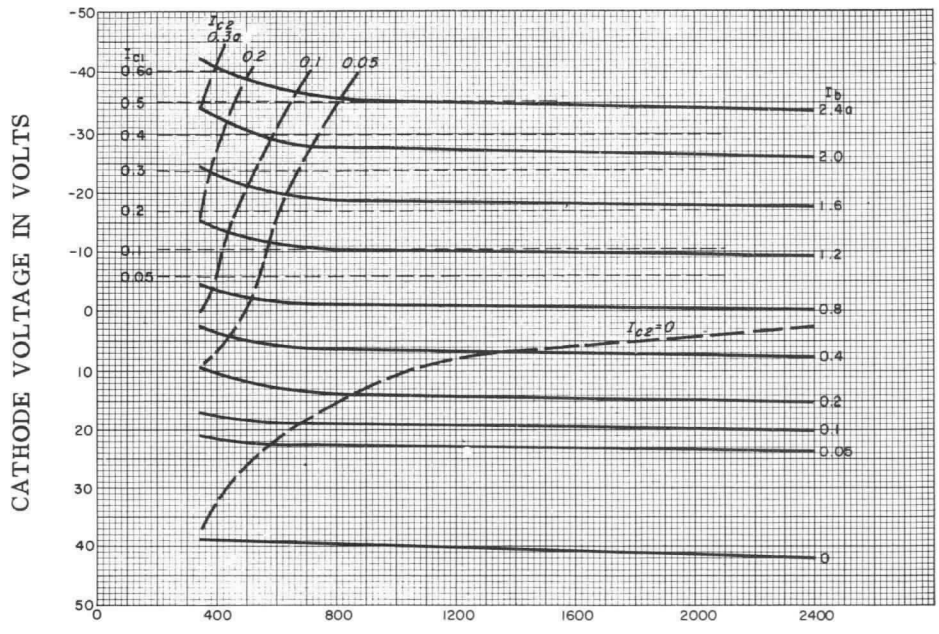

A69087 – 72B68 (1-30-63)

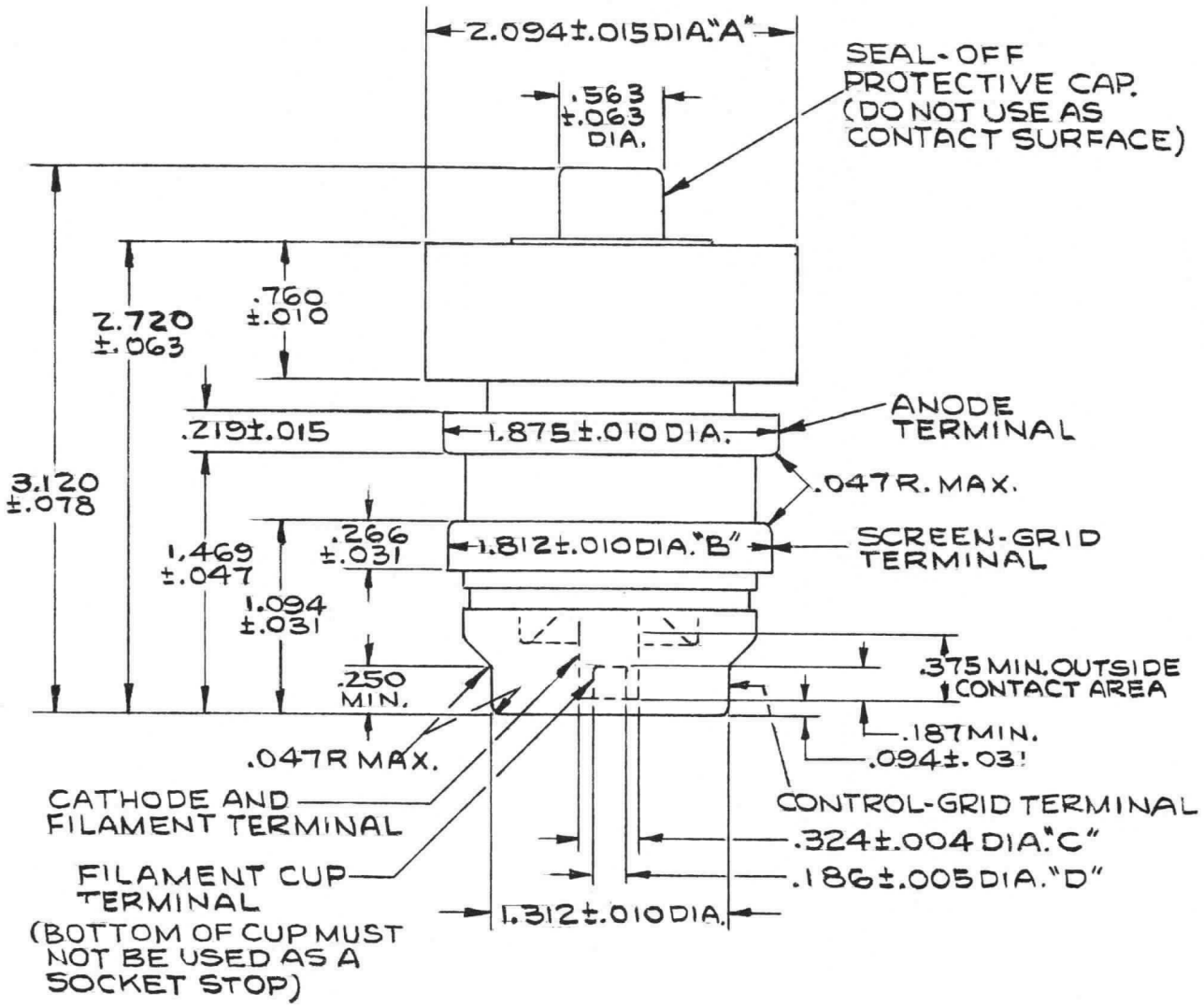

CONCENTRICITIES:
The following total indicator readings are measured with respect to a centerline determined by the centers of the anode terminal and control grid terminal.

Diameter A - 0.030 inches
Diameter B - 0.016 inches
Diameter C - 0.036 inches
Diameter D - 0.042 inches

Total indicator reading of filament cup terminal diameter (D) measured with respect to center of cathode and filament terminal diameter (C) - 0.016 inches.

ELECTRONIC INNOVATIONS IN ACTION

TUBES

PRELIMINARY
TECHNICAL INFORMATION

These ratings represent those of current samples of this type. Refer to the Objective Technical Information sheet for design-objective ratings.

DEVELOPMENTAL TYPE

ZP-1074
PTI-170A
Page 1
9-67

This technical information is proprietary and is furnished only as a service to customers.

ZP-1074

TRIODE

Internal Feedback for Oscillator Service
Grounded-Grid Operation

Heat-Sink and Forced-Air Cooled
Metal and Ceramic

The ZP-1074 is a heat-sink-cooled triode that features internal feedback. It is especially designed for pulsed oscillator service in L-band. Applications for which it is particularly well suited include airborne or ground-based radar, and high level signal generators.

The ZP-1074 is a higher-voltage version of the ZP-1025. Ratings include a DC plate voltage of 3500 volts under grid-pulsed-oscillator service for 5 kilowatts of peak power output at 0.005 duty.

Other features include small size, high peak power as a plate-pulsed oscillator, long-pulse-width capability, long life and reliability.

	Minimum	Bogey	Maximum	
ELECTRICAL				
Heater Voltage*	-	6.3	-	Volts
Heater Current	3.5	3.8	4.0	Amperes
Cathode Heating Time	1	-	-	Minute
Direct Interelectrode Capacitances				
Cathode to Plate	-	0.5	-	μμf
Input	-	15.5	-	μμf
Output	-	5.9	-	μμf

MECHANICAL		
Mounting Position – Any		
Net Weight, approximate	3 1/4	Ounces
THERMAL		
Cooling – Heat-Sink and Forced Air		
Anode Temperature§	250	C
Ceramic Temperature at Any Point, maximum	200	C
PLATE-PULSED OSCILLATOR – CLASS C		
Maximum Ratings		
DC Plate Voltage, During Pulse	8.0	Kilovolts
DC Plate Current, During Pulse	10.0	Amperes
DC Grid Voltage, During Pulse	-400	Volts
DC Grid Current, During Pulse	5.0	Amperes
Plate Dissipation§	110	Watts
Grid Dissipation	3.5	Watts
Pulse Width ◇	10	Microseconds
Duty Factor ø	0.003	

The specifications of this type are subject to change. Delivery of samples and the existence of these data do not imply continued availability of types with the same characteristics or dimensions. For the most recent information concerning the status of this device, please consult your local Tube Department Regional Sales Office.

TYPICAL OPERATION

Grounded-Grid Service at 1300 Megacycles, 3/4λ Output Circuit

DC Plate Voltage, During Pulse	8.0	6.0	Kilovolts
DC Plate Current, During Pulse	9.0	7.0	Amperes
DC Grid Current, During Pulse (Grid Resistor = 50 Ohms)	4.0	4.3	Amperes
Power Output, During Pulse (useful)	40.0	24.0	Kilowatts
Pulse Width	10	10	Microseconds
Duty Factor	0.003	0.001	

GRID-PULSED OSCILLATOR - CLASS C

Maximum Ratings

DC Plate Voltage	3.75	Kilovolts
DC Plate Current, During Pulse	3.7	Amperes
DC Grid Voltage	-200	Volts
Plate Dissipation	110	Watts
Pulse Width ◇	15	Microseconds
Duty Factor øø	0.02	

Typical Operation

Grounded-Grid Circuit at 1100 Megacycles, 1/4 λ Output

DC Plate Voltage	3500	2200	Volts
DC Plate Current, During Pulse	3.5	2.7	Amperes
DC Grid Voltage Supply**	-110	-104	Volts
DC Grid Current, During Pulse	1.7	1.25	Amperes
Power Output, During Pulse (useful)	5.0	2.4	Kilowatts
Pulse Width	10	10	Microseconds
Duty Factor	0.005	0.02	

* Because of back-heating due to transit-time effects, it may be necessary to reduce the heater voltage. For the 1100 mcs, 2 kw, 0.02 duty condition, the typical heater voltage is 5.5 volts. The optimum heater voltage for any application should be determined by RF performance testing.

§ A suitable clamp-on radiator or heat-sink clamping arrangement must be provided to limit the anode hub temperature to the value specified. Higher plate dissipation is allowable with provision for proper cooling.

◇ Pulse duration is measured between points at 70 percent of the peak value. The peak value is defined as the maximum value of a smooth curve through the average of the fluctuations over the top portion of the pulse. For applications requiring longer pulses, refer to the tube manufacturer.

ø Maximum ratio of on-time to elapsed time during any 3.3-millisecond period.

øø Maximum ratio of on-time to elapsed time during any 75-millisecond period.

** With a series grid resistance of 50 ohms.

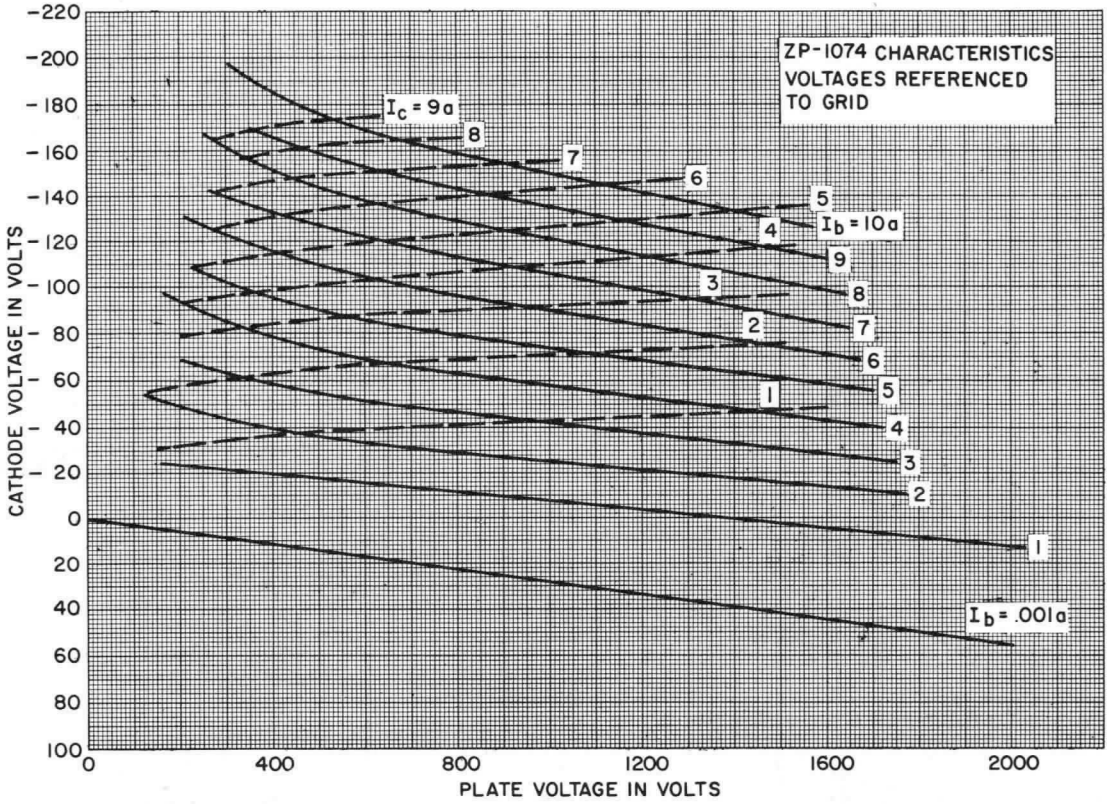
ZP-1074 CHARACTERISTICS
VOLTAGES REFERENCED
TO GRID
I_c = 9a
8
7
6
5
I_b = 10a
4
9
8
3
7
2
6
1
5
4
3
2
1
I_b = .001a
CATHODE VOLTAGE IN VOLTS
-220
-200
-180
-160
-140
-120
-100
-80
-60
-40
-20
0
20
40
60
80
100
0
400
800
1200
1600
2000
PLATE VOLTAGE IN VOLTS

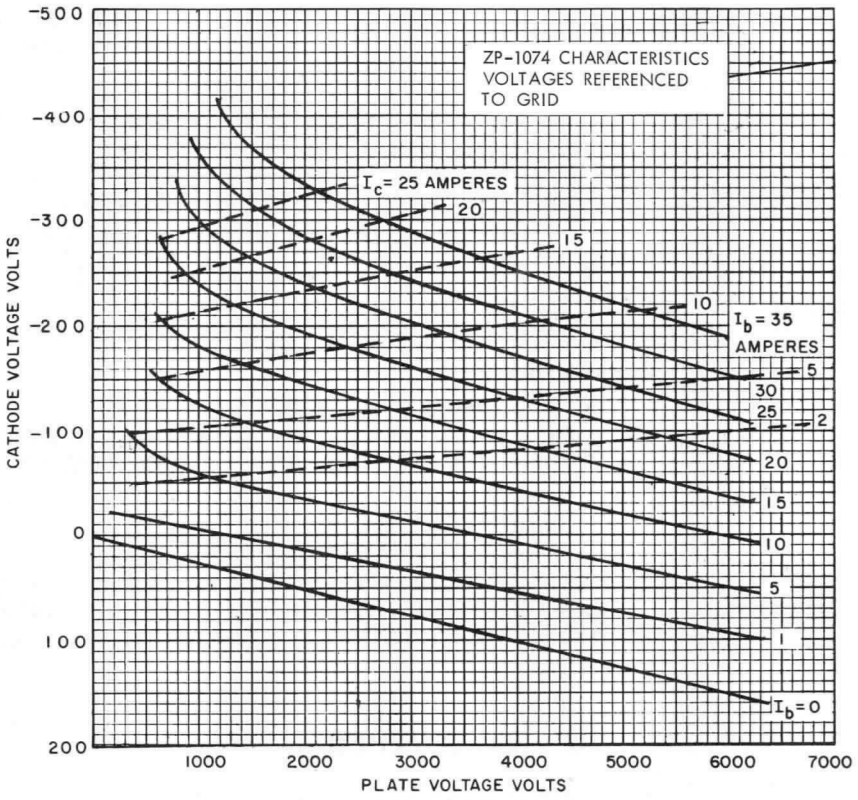
ZP-1074 CHARACTERISTICS
VOLTAGES REFERENCED
TO GRID
I_c = 25 AMPERES
20
15
10
I_b = 35
AMPERES
5
30
25
2
20
15
10
5
1
I_b = 0
CATHODE VOLTAGE VOLTS
-500
-400
-300
-200
-100
0
100
200
1000
2000
3000
4000
5000
6000
7000
PLATE VOLTAGE VOLTS

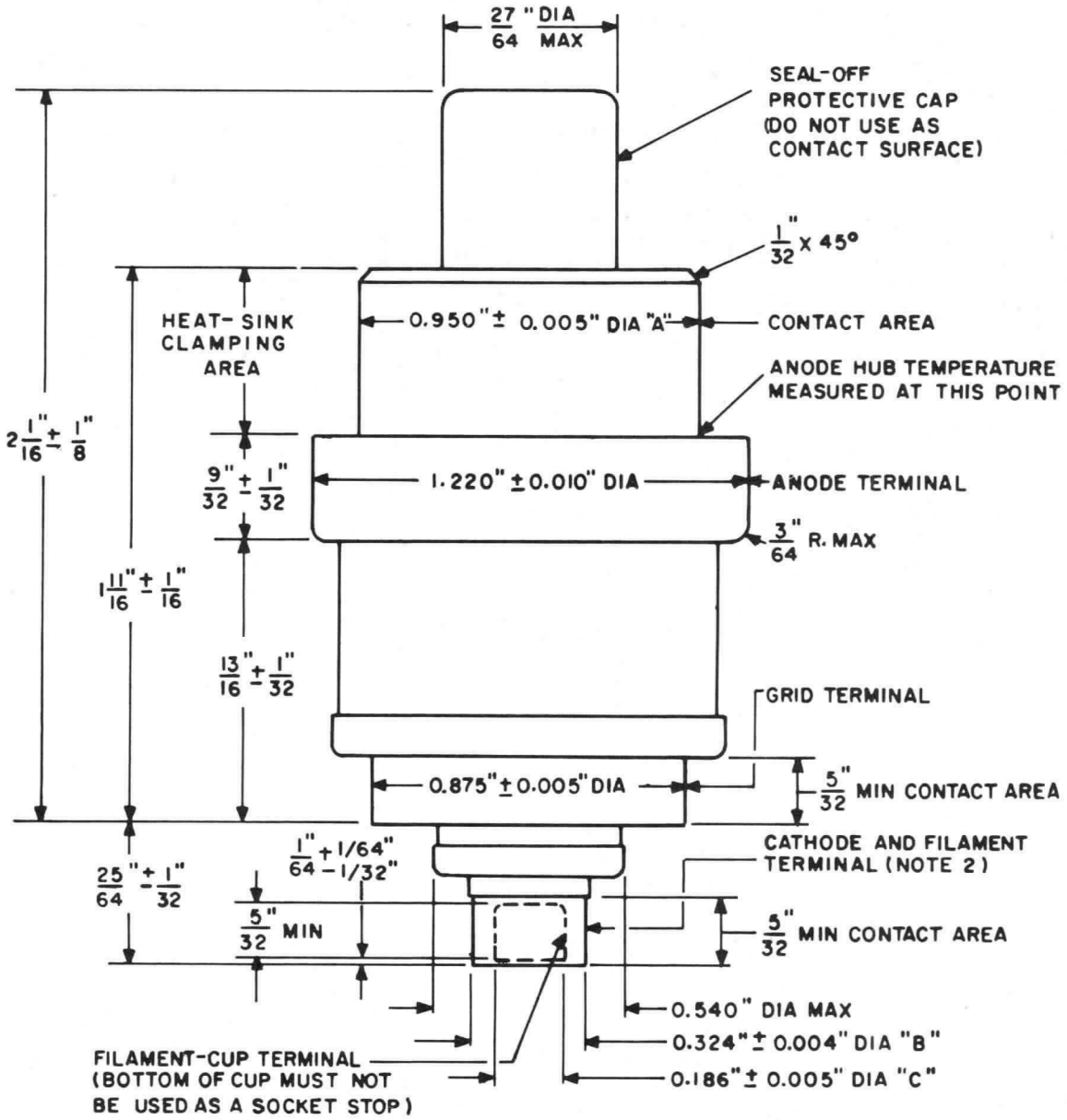

CONCENTRICITIES:

THE FOLLOWING TOTAL INDICATOR READINGS ARE MEASURED WITH RESPECT TO A CENTERLINE DETERMINED BY THE CENTERS OF THE ANODE TERMINAL AND CONTROL-GRID TERMINAL.

DIAMETER A-0.030 INCHES
DIAMETER B-0.036 INCHES
DIAMETER C-0.042 INCHES

TOTAL INDICATOR READING OF FILAMENT-CUP TERMINAL DIAMETER (C) MEASURED WITH RESPECT TO CENTER OF CATHODE AND FILAMENT-TERMINAL DIAMETER (B)-0.016 INCHES.

TUBE DEPARTMENT
GENERAL ELECTRIC
Schenectady, N. Y. 12305



PENTODE

DESCRIPTION

The GL-1613 is a transmitting tube designed for use as a Class C radio-frequency power amplifier and oscillator. This tube may be operated at maximum ratings at frequencies as high as 45 megacycles and at frequencies up to 90 megacycles at reduced ratings.

TECHNICAL INFORMATION

These data are for reference only. For design information refer to specifications.

GENERAL CHARACTERISTICS

Number of electrodes	5	
Electrical		
Filament—indirectly heated		
Voltage, a-c or d-c	6.3	volts
Current	0.7	amperes
Grid-plate transconductance, $I_b = -31$ ma	2500	micromhos
Direct interelectrode capacitances*		
Grid-plate	0.26	micromicrofarads
Input	6.5	micromicrofarads
Output	13.5	micromicrofarads
Frequency for maximum ratings	45	megacycles

GE Electronic TUBE

GENERAL ELECTRIC

TECHNICAL INFORMATION (CONT'D)

Mechanical

Base description	small wafer octal 7-pin
Net weight, approximate	3 ounces
Shipping weight, approximate	1 pound
Mounting position	vertical or horizontal

MAXIMUM RATINGS AND TYPICAL OPERATING CONDITIONS

CLASS C RADIO-FREQUENCY POWER AMPLIFIER AND OSCILLATOR—PLATE-MODULATED

Carrier conditions per tube for use with a maximum modulation factor of 1.0

	Typical Operation	Maximum Ratings	
D-c plate voltage	275	275	volts
D-c grid voltage (grid 1)‡	−35	−100	volts
	12500		ohms
D-c grid voltage (grid 2)†	200	275	volts
	7500		ohms
D-c plate current	42	50	milliamperes
D-c grid current, approximately	2.8	5	milliamperes
D-c screen current	10		milliamperes
Plate input		11.5	watts
Screen input		2	watts
Plate dissipation		7	watts
Peak r-f grid input voltage	65		volts
Driving power	0.16		watts
Plate power output	6		watts
D-c heater-cathode potential		100	volts

CLASS C RADIO-FREQUENCY POWER AMPLIFIER AND OSCILLATOR

Key-down conditions per tube without modulation #

D-c plate voltage	350	350	volts
D-c grid voltage (grid 1) ▲	−35	−100	
	10000		ohms
D-c grid voltage (grid 2) ■	200	275	volts
	15000		ohms
D-c plate current	50	50	milliamperes
D-c grid current, approximate	3.5	5	milliamperes
D-c screen current	10		milliamperes
Plate input		17.5	watts
Screen input		2.5	watts
Plate dissipation		10	watts
Peak r-f grid input voltage, approximate	70		volts
Driving power, approximate	0.22		watts
Plate power output, approximate	9		watts
D-c heater-cathode potential		100	volts

* With shell connected to cathode.
† From modulated fixed supply or modulated plate-voltage supply through resistor of value shown.
‡ Obtained by grid leak or by partial self-bias methods.
# Modulation, essentially negative, may be used if the positive peak of the audio-frequency envelope does not exceed 115 per cent of the carrier conditions.
■ Separate source, or from the plate-voltage supply with a voltage divider, or through a series resistor of the value shown.
▲ Obtained by grid resistor or other self- or fixed-bias method.

APPLICATION NOTES

The 1613 can be operated at frequencies as high as 45 megacycles. The tube may be operated at higher frequencies, provided the maximum values of plate voltage and power input are reduced as the frequency is raised (other maximum ratings are the same as shown above). The tabulation below shows the highest percentage of maximum plate voltage and power input that can be used up to 90 megacycles for the various classes of service. Special attention should be given to adequate ventilation of the bulb at these frequencies.

Frequency				
Percentage of maximum rated plate voltage and plate input	45	60	90	megacycles
Class C, plate-modulated	100	90	85	per cent
Class C, unmodulated	100	90	85	per cent

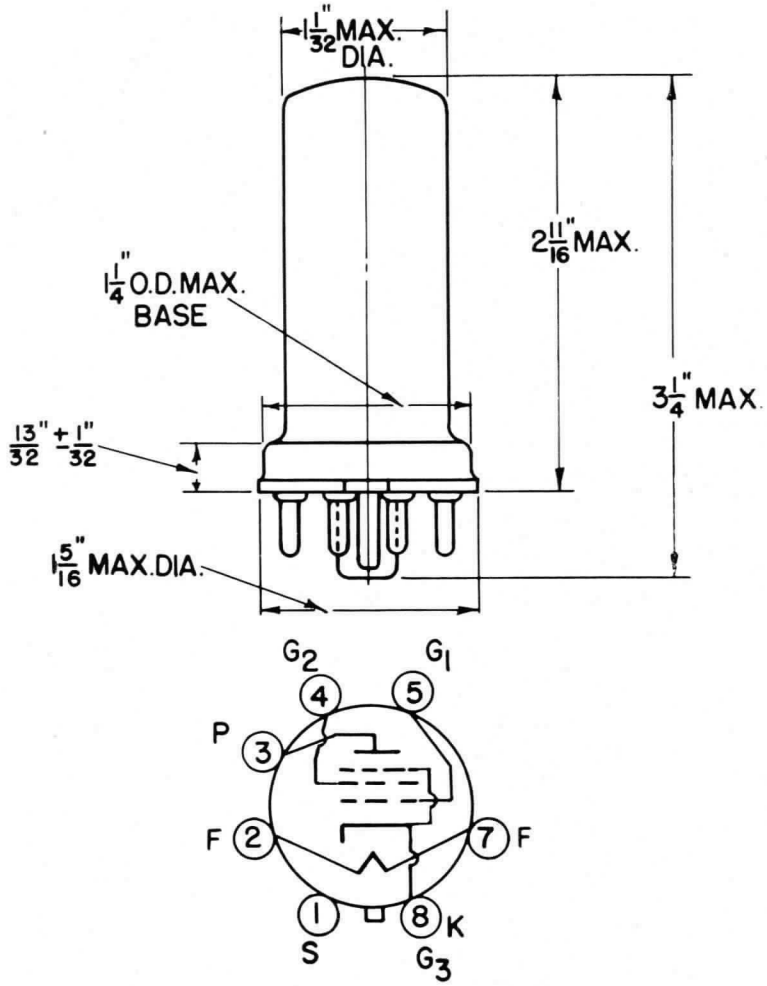

BOTTOM VIEW
BASING DIAGRAM

GL-1613 OUTLINE

K-9033894

7-10-45

Electronics Department
GENERAL ELECTRIC
Schenectady, N. Y.

5-46 (7M)
Filing No. 8850



BEAM POWER TUBE

DESCRIPTION

The GL-1619 is a beam power transmitting tube of the metal type utilizing a coated filament to provide fast heating. The high power sensitivity and the quick-heating feature of this tube make it especially suited as an a-f or r-f amplifier, modulator, frequency multiplier, or oscillator in equipment where quick off-on operation is essential.

Operation of the 1619 at maximum ratings is practical at frequencies up to 45 megacycles. Neutralization of the tube is generally unnecessary in adequately shielded circuits. In push-pull class AB_2 amplifier service, the 1619 will deliver over 35 watts of audio power with low distortion. Its maximum plate dissipation is 15 watts.

TECHNICAL INFORMATION

These data are for reference only. For design information refer to specifications.

GENERAL CHARACTERISTICS

Number of electrodes	5	
Electrical		
Cathode—Filamentary		
Filament voltage (a-c or d-c)	2.5	volts
Filament current	2	amperes
Transconductance, for plate current of 50 ma	4500	approx micromhos
Direct interelectrode capacitances:*		
Grid-plate	0.29	micromicrofarads
Input	9.6	micromicrofarads
Output	12.5	micromicrofarads
Frequency for maximum ratings	45	megacycles

*With shell connected to cathode

GE Electronic TUBE

GENERAL ELECTRIC

Supersedes ETI-194 dated 5-46

TECHNICAL INFORMATION (CONT'D)

Mechanical

Base	small wafer octal, 7-pin
Net weight, approx.	3 ounces
Shipping weight, approx.	1 pound
Mounting position	vertical or horizontal

MAXIMUM RATINGS AND TYPICAL OPERATING CONDITIONS

AS SINGLE-TUBE CLASS A_1 AMPLIFIER

D-c plate voltage	400 max	volts
D-c screen voltage (grid No. 2)	300 max	volts
Screen input	3.5 max	watts
Plate dissipation	15 max	watts
Typical operation with fixed bias:		
D-c plate voltage	300	volts
D-c screen voltage	250	volts
D-c grid voltage (grid No. 1)††°	—10	volts
Peak a-f grid voltage	10	volts
Zero-signal d-c plate current	44	milliamperes
Max-signal d-c plate current	46	milliamperes
Zero-signal d-c screen current	4	milliamperes
Max-signal d-c screen current	6	milliamperes
Load resistance	8800	ohms
Total harmonic distortion	7	per cent
Max-signal power output, approx.	3	watts

AS PUSH-PULL CLASS AB_1 AMPLIFIER

D-c plate voltage	400 max	volts
D-c screen voltage (grid No. 2)	300 max	volts
Screen input*	3.5 max	watts
Plate dissipation*	15 max	watts
Typical operation with fixed bias:		
Unless otherwise specified, values are for 2 tubes.		
D-c plate voltage	400	volts
D-c screen voltage	300	volts
D-c grid voltage (grid No. 1)†°	—20	volts
Peak a-f grid-to-grid voltage	40	volts
Zero-signal d-c plate current	52	milliamperes
Max-signal d-c plate current	80	milliamperes
Zero-signal d-c screen current	3.5	milliamperes
Max-signal d-c screen current	10	milliamperes
Load resistance (per tube)	3500	ohms
Effective load resistance (plate-to-plate)	14000	ohms
Total harmonic distortion	3	per cent
Max-signal power output, approx.	17.5	watts

AS PUSH-PULL CLASS AB_2 AMPLIFIER

D-c plate voltage	400 max	volts
D-c screen voltage (grid No. 2)	300 max	volts
Max-signal d-c plate current*	75 max	milliamperes
Max-signal plate input*	30 max	watts
Screen input*	3.5 max	watts
Plate dissipation*	15 max	watts

TECHNICAL INFORMATION (CONT'D)

AS PUSH-PULL CLASS AB_2 AMPLIFIER

Typical operation with fixed bias:

Unless otherwise specified, values are for 2 tubes

D-c plate voltage	400	volts
D-c screen voltage	300	volts
D-c grid voltage (grid No. 1)°	—16.5	volts
Peak a-f grid-to-grid voltage***	77	volts
Zero-signal d-c plate current	75	milliamperes
Max-signal d-c plate current	150	milliamperes
Zero-signal d-c screen current	6.5	milliamperes
Max-signal d-c screen current	11.5	milliamperes
Load resistance (per tube)	1500	ohms
Effective load resistance (plate-to-plate)	6000	ohms
Peak grid input power°°	0.4	watt
Total harmonic distortion	2.5	per cent
Max-signal power output, approx§	36	watts

AS GRID-MODULATED RADIO-FREQUENCY POWER AMPLIFIER—CLASS C TELEPHONY

Carrier conditions per tube for use with a maximum modulation factor of 1.0

D-c plate voltage	400 max	volts
D-c screen voltage (grid No. 2)	300 max	volts
D-c grid voltage (grid No. 1)	—125 max	volts
D-c plate current	37.5	milliamperes
Plate input	15 max	watts
Screen input	2.5 max	watts
Plate dissipation	15 max	watts
Typical operation:		
D-c plate voltage	400	volts
D-c screen voltage	250	volts
D-c grid voltage◆	—50	volts
Peak r-f grid voltage	58	volts
Peak a-f grid voltage	30	volts
D-c plate current	31	milliamperes
D-c screen current	1.5	milliamperes
D-c grid current, approx.	1.2	milliamperes
Cathode resistor	1500	ohms
Driving power, approx°°	0.25	watt
Power output, approx.	3.8	watts

AS PLATE-MODULATED RADIO-FREQUENCY POWER AMPLIFIER—CLASS C TELEPHONY

Carrier conditions per tube for use with a maximum modulation factor of 1.0

D-c plate voltage	325 max	volts
D-c screen voltage (grid No. 2)	300 max	volts
D-c grid voltage (grid No. 1)	—125 max	volts
D-c plate current	62 max	milliamperes
D-c grid current	5 max	milliamperes
Plate input	20 max	watts
Screen input	2.5 max	watts
Plate dissipation	10 max	watts
Typical operation:		
D-c plate voltage	325	volts
D-c screen voltage	285	volts
D-c grid voltage◆	—50	volts
Peak r-f grid voltage	70	volts
D-c plate current	62	milliamperes
D-c screen current	7.5	milliamperes
D-c grid current, approx.	2.8	milliamperes
Screen resistor x	5000	ohms
Grid resistor	18000	ohms
Driving power, approx	0.18	watt
Power output, approx.	13	watts

TECHNICAL INFORMATION (CONT'D)

AS RADIO-FREQUENCY POWER AMPLIFIER AND OSCILLATOR—CLASS C TELEGRAPHY

Key-down conditions per tube without modulation △

D-c plate voltage	400 max	volts
D-c screen voltage (grid No. 2)	300 max	volts
D-c grid voltage (grid No. 1)	—125 max	volts
D-c plate current	75 max	milliamperes
D-c grid current	5 max	milliamperes
Plate input	30 max	watts
Screen input	3.5 max	watts
Plate dissipation	15 max	watts
Typical operation:		
D-c plate voltage	400	volts
D-c screen voltage	300	volts
D-c grid voltage ◆	—55	volts
Peak r-f grid voltage	80	volts
D-c plate current	75	milliamperes
D-c screen current	10.5	milliamperes
D-c grid current, approx.	5	milliamperes
Screen resistor	9500	ohms
Grid resistor	11000	ohms
Driving power, approx.	0.36	watt
Power output, approx.	19.5	watts

*Averaged over any audio-frequency cycle of sine-wave form.

***The driver stage should be capable of supplying the grids of the class AB_2 stage with the specified peak grid voltage at low distortion. The effective resistance per grid circuit should not exceed 500 ohms and the effective impedance at the highest desired response frequency should not exceed 700 ohms.

°Grid voltages are given with respect to the mid-point of the filament operated on a-c. If d-c is used, each stated value of grid voltage should be decreased by 1.75 volts.

°°At crest of a-f cycle with a modulation factor of 1.0.

†The total effective grid-circuit resistance should not exceed 50,000 ohms.

◆ The effective grid-circuit resistance should not exceed 25,000 ohms.

§With zero-impedance driver and perfect regulation, plate-circuit distortion does not exceed 2 per cent. In practice, plate-voltage regulation, screen-voltage regulation, and grid-bias regulation, should not be greater than 5 per cent, 5 per cent, and 3 per cent respectively.

xConnected to ***modulated*** plate-voltage supply.

△Modulation essentially negative may be used if the positive peak of the audio-frequency envelope does not exceed 115 per cent of the carrier condition.

APPLICATION NOTES

The maximum ratings apply only at frequencies below 45 megacycles. For operation at higher frequencies adequate ventilation and normal ambient temperatures must be maintained, and the plate voltage must be reduced as indicated.

Frequency	45	60	90	megacycles
Percentage of maximum rated plate voltage and plate input:				
Class C, grid-modulated	100	93	85	per cent
Class C, plate-modulated	100	90	77	per cent
Class C, unmodulated	100	90	77	per cent

GL-1619 AVERAGE PLATE CHARACTERISTICS
$E_f = 2.5$ VOLTS, SCREEN VOLTS = 300

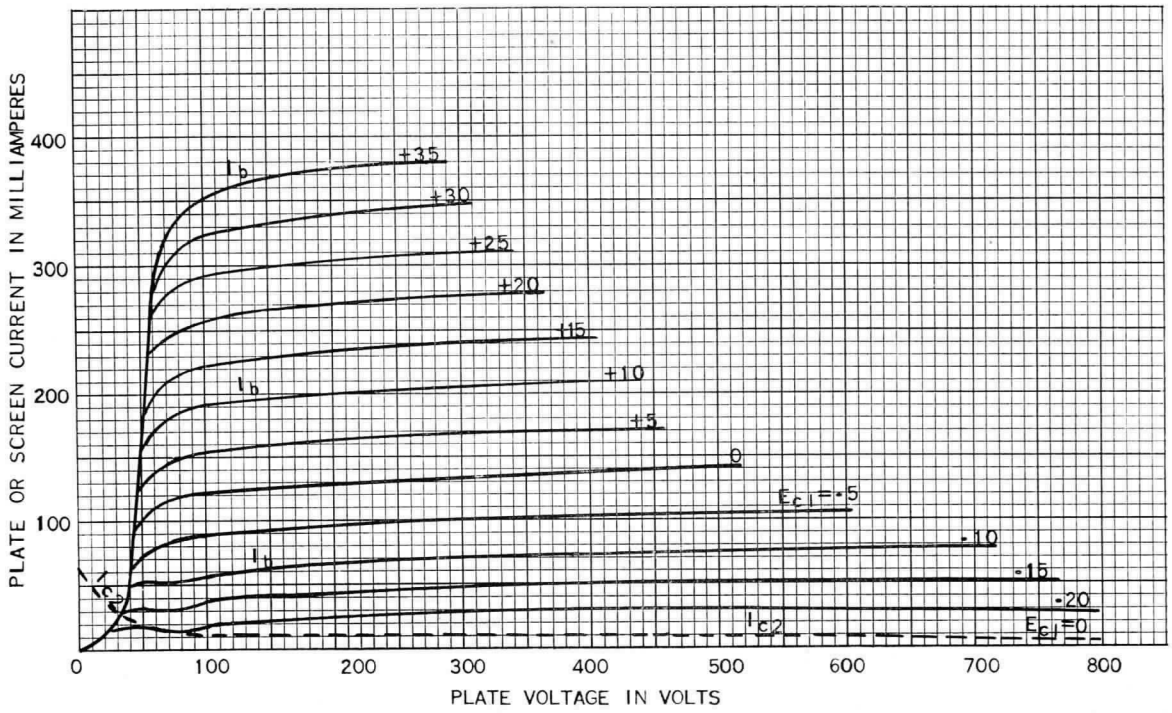

K-69087-72A102

2-5-47

GL-1619 AVERAGE PLATE CHARACTERISTICS
$E_f = 2.5$ VOLTS, SCREEN VOLTS = 250

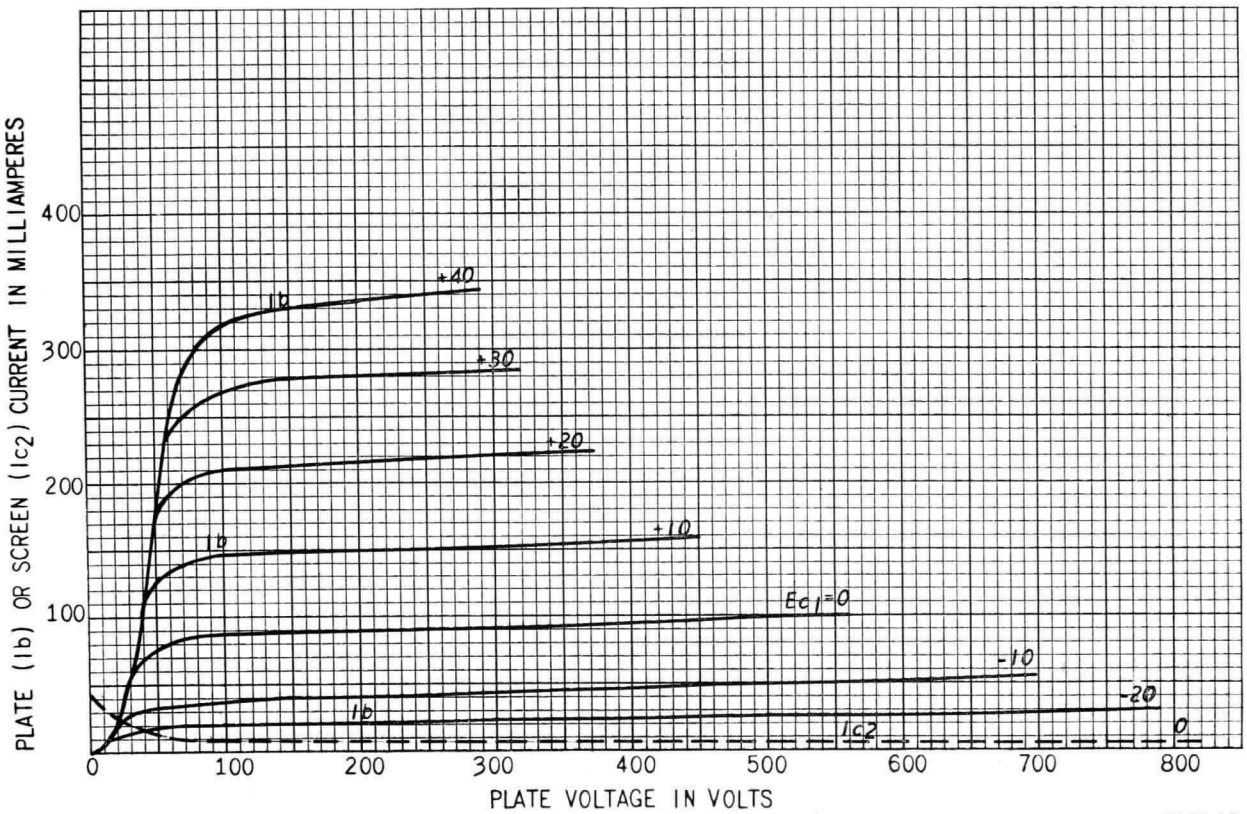

K-9033911

12-11-45

GL-1619 TYPICAL CHARACTERISTICS
$E_f = 2.5$ VOLTS, SCREEN VOLTS = 250

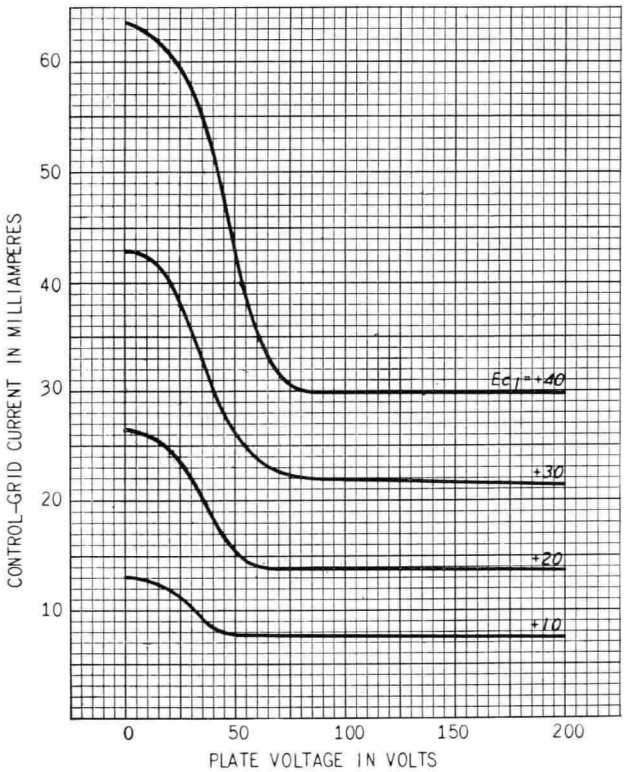

K-9033908 12-10-45

GL-1619 TYPICAL CHARACTERISTICS
$E_f = 2.5$ VOLTS, SCREEN VOLTS = 300

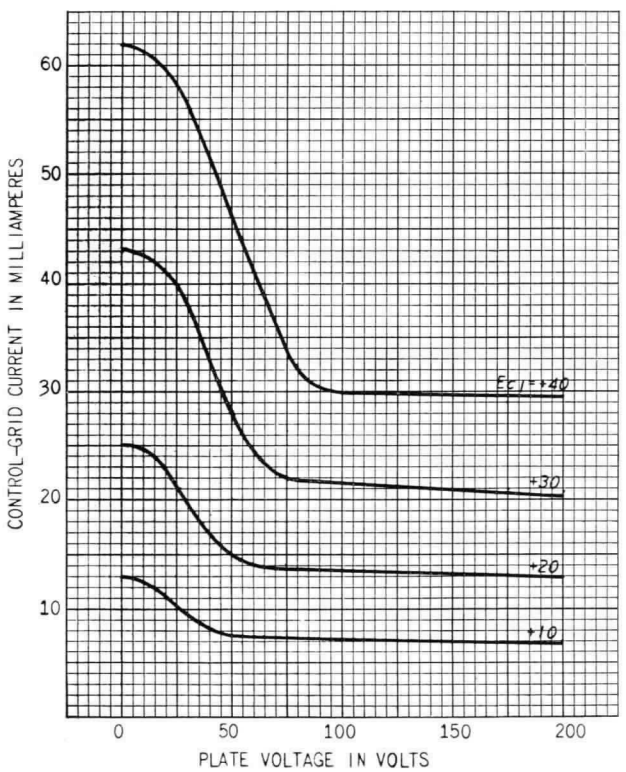

K-9033909 12-10-45

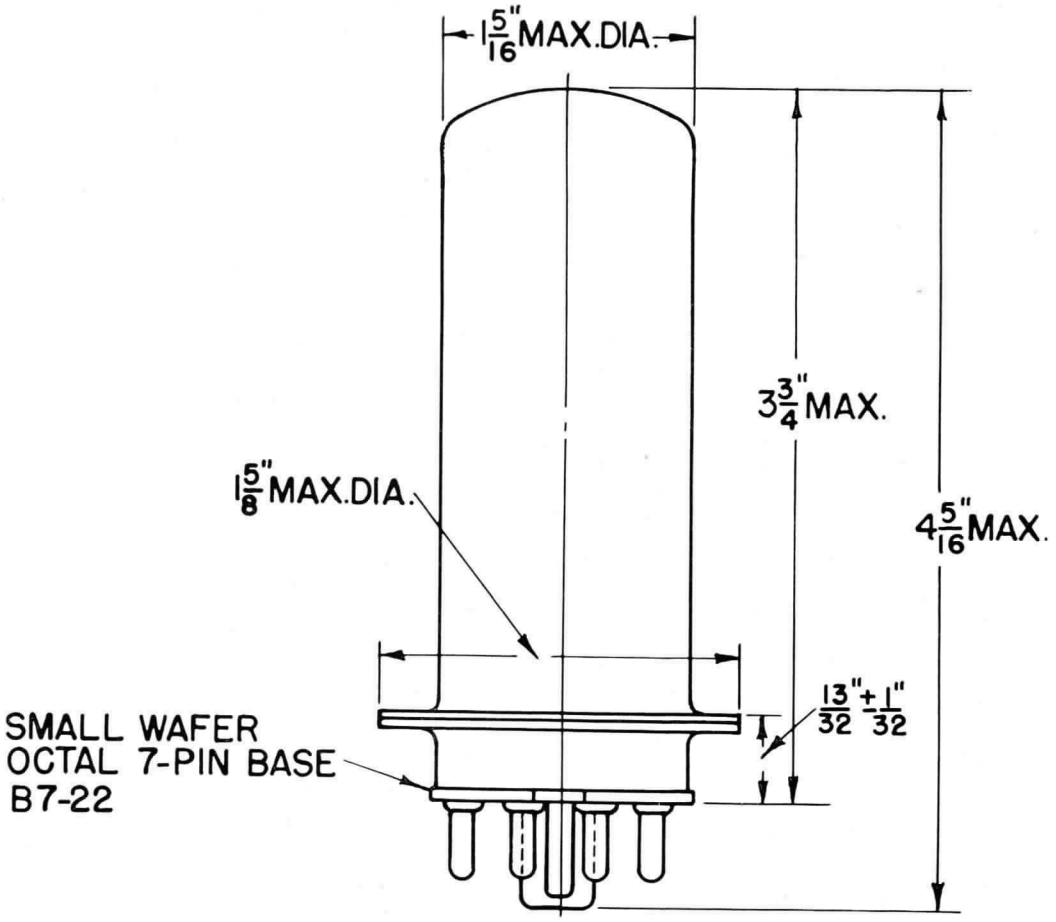

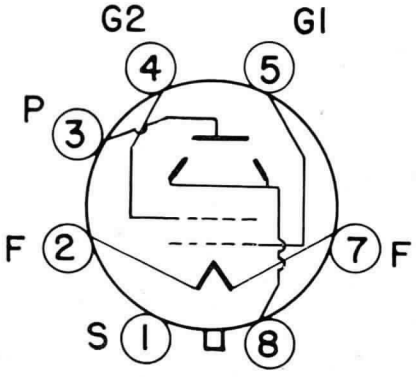

BOTTOM VIEW
BASING DIAGRAM

GL-1619 OUTLINE

K-9033892

7-10-45

Electronics Department
GENERAL ELECTRIC
Schenectady, N. Y.

2-47 (8M)
Filing No. 8850

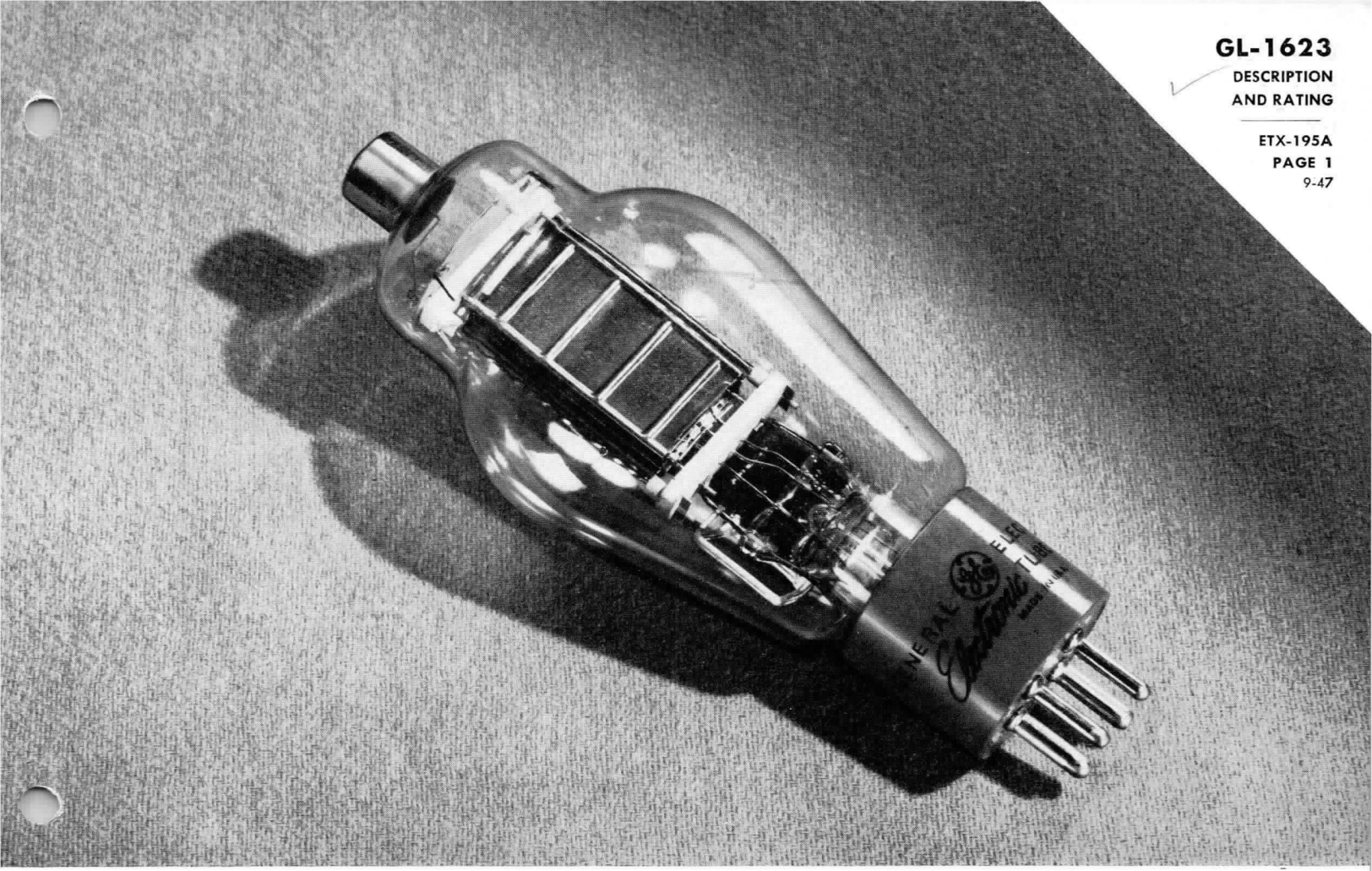

TRIODE

DESCRIPTION

The GL-1623 is a three-electrode transmitting tube for use as an oscillator, radio-frequency amplifier, and Class B modulator. This tube is particularly useful as a self-excited oscillator in circuits which are subject to unusual conditions of wide plate-load variations because it is not critical to changes in grid excitation voltage.

TECHNICAL INFORMATION

These data are for reference only. For design information refer to specifications.

GENERAL CHARACTERISTICS

Number of electrodes	3	
Electrical		
Cathode—Filamentary		
Filament voltage	6.3	volts
Filament current	2.5	amperes
Amplification factor	20	
Direct interelectrode capacitances:		
Grid-plate	6.7	micromicrofarads
Grid-filament	5.2	micromicrofarads
Plate-filament	0.9	micromicrofarad
Mechanical		
Mounting position—vertical, base down; Horizontal, plane of electrodes vertical		
Net weight, approximate	3	ounces
Shipping weight, approximate	7	pounds

GE Electronic TUBE

GENERAL ELECTRIC

Supersedes ETX-195 dated 5-46

TECHNICAL INFORMATION (CONT'D)

MAXIMUM RATINGS AND TYPICAL OPERATING CONDITIONS

CLASS B AUDIO-FREQUENCY POWER AMPLIFIER AND MODULATOR

Maximum ratings, absolute values	CCS	ICAS	
D-c plate voltage	750 max	1000 max	volts
Maximum signal d-c plate current, per tube‡	100 max	100 max	milliamperes
Maximum signal plate input, per tube‡	75 max	100 max	watts
Plate dissipation, per tube‡	25 max	30 max	watts

Typical operation Unless otherwise specified, values are for two tubes	CCS		ICAS	
D-c plate voltage	500	750	1000	volts
D-c grid voltage*	−10	−25	−40	volts
Peak a-f grid-to-grid voltage	170	200	230	volts
Zero signal d-c plate current	40	35	30	milliamperes
Maximum signal d-c plate current	200	200	200	milliamperes
Load resistance, per tube	1300	2100	3000	ohms
Effective load resistance, plate to plate	5200	8400	12000	ohms
Maximum signal driving power, approximate	3.5	4	4.2	watts
Maximum signal power output, approximate	60	100	145	watts

CLASS B RADIO-FREQUENCY POWER AMPLIFIER

Carrier conditions per tube for use with a maximum modulation factor of 1.0

Maximum ratings, absolute values	CCS	ICAS	
D-c plate voltage	750 max	1000 max	volts
D-c plate current	50 max	50 max	milliamperes
Plate input	37.5 max	45 max	watts
Plate dissipation	25 max	30 max	watts

Typical operation	CCS		ICAS	
D-c plate voltage	500	750	1000	volts
D-c grid voltage*	−25	−40	−50	volts
D-c plate current	50	50	45	milliamperes
D-c grid current, approximate	2	1.5	0.5	milliamperes
Peak r-f grid voltage	50	60	62	volts
Driving power, approximate‖	1.8	1.4	1.7	watts
Power output, approximate	7.5	12.5	16	watts

CLASS C TELEPHONY PLATE-MODULATED RADIO-FREQUENCY POWER AMPLIFIER

Carrier conditions per tube for use with a maximum modulation factor of 1.0

Maximum ratings, absolute values	CCS	ICAS	
D-c plate voltage	600 max	750 max	volts
D-c grid voltage	−200 max	−200 max	volts
D-c plate current	83 max	100 max	milliamperes
D-c grid current	25 max	25 max	milliamperes
Plate input	50 max	75 max	watts
Plate dissipation	17.5 max	25 max	watts

Typical operation	CCS		ICAS	
D-c plate voltage	500	600	750	volts
D-c grid voltage§*	−125	−125	−125	volts
	5000	5000	6250	ohms
D-c plate current	83	83	100	milliamperes
D-c grid current, approximate	25	25	20	milliamperes
Peak r-f grid voltage	200	200	215	volts
Driving power, approximate	5	5	4	watts
Power output, approximate	30	38	55	watts

TECHNICAL INFORMATION (CONT'D)

CLASS C TELEGRAPHY RADIO-FREQUENCY POWER AMPLIFIER AND OSCILLATOR

Key-down conditions per tube without modulation ¶

	CCS		ICAS		
Maximum ratings, absolute values					
D-c plate voltage	750	max	1000	max	volts
D-c grid voltage	−200	max	−200	max	volts
D-c plate current	100	max	100	max	milliamperes
D-c grid current	25	max	25	max	milliamperes
Plate input	75	max	100	max	watts
Plate dissipation	25	max	30	max	watts
Typical operation	CCS		ICAS		
D-c plate voltage	500	750	1000		volts
D-c grid voltage* △					
From a grid resistor of	4100	5000	4500		ohms
From a cathode resistor of	600	730	750		ohms
From a fixed supply of	−70	−85	−90		volts
D-c plate current	100	100	100		milliamperes
D-c grid current, approximate	17	17	20		milliamperes
Peak r-f grid voltage	140	160	172		volts
Driving power, approximate	2.2	2.5	3.1		watts
Power output, approximate	33	55	75		watts

* With a-c filament supply.

‖ At crest of audio-frequency cycle with modulation factor of 1.0.

§ Obtained by grid resistor of value shown or by partial self-bias methods.

¶ Modulation essentially negative may be used if the positive peak of the envelope does not exceed 115 per cent of the carrier conditions.

△ When the 1623 is used in the final amplifier or a preceding stage of a transmitter designed for break-in operation and oscillator keying, a small amount of fixed bias must be used to maintain the plate current at a safe value. With plate voltage of 1000 volts, a fixed bias of at least −35 volts should be used.

‡ Averaged over any audio-frequency cycle of sine-wave form.

APPLICATION NOTES

Maximum ratings apply up to 60 megacycles. The tube may be operated at higher frequencies provided the maximum values of plate voltage and power input are reduced according to the tabulation below (other maximum ratings are the same as shown above). Special attention should be given to adequate ventilation of the bulb at these frequencies.

Frequency	60	70	100	megacycles
Percentage of maximum rated plate voltage and plate input				
Class B	100	93	80	per cent
Class C plate modulated	100	88	60	per cent
Class C unmodulated	100	88	60	per cent

GL-1623 TYPICAL CHARACTERISTICS

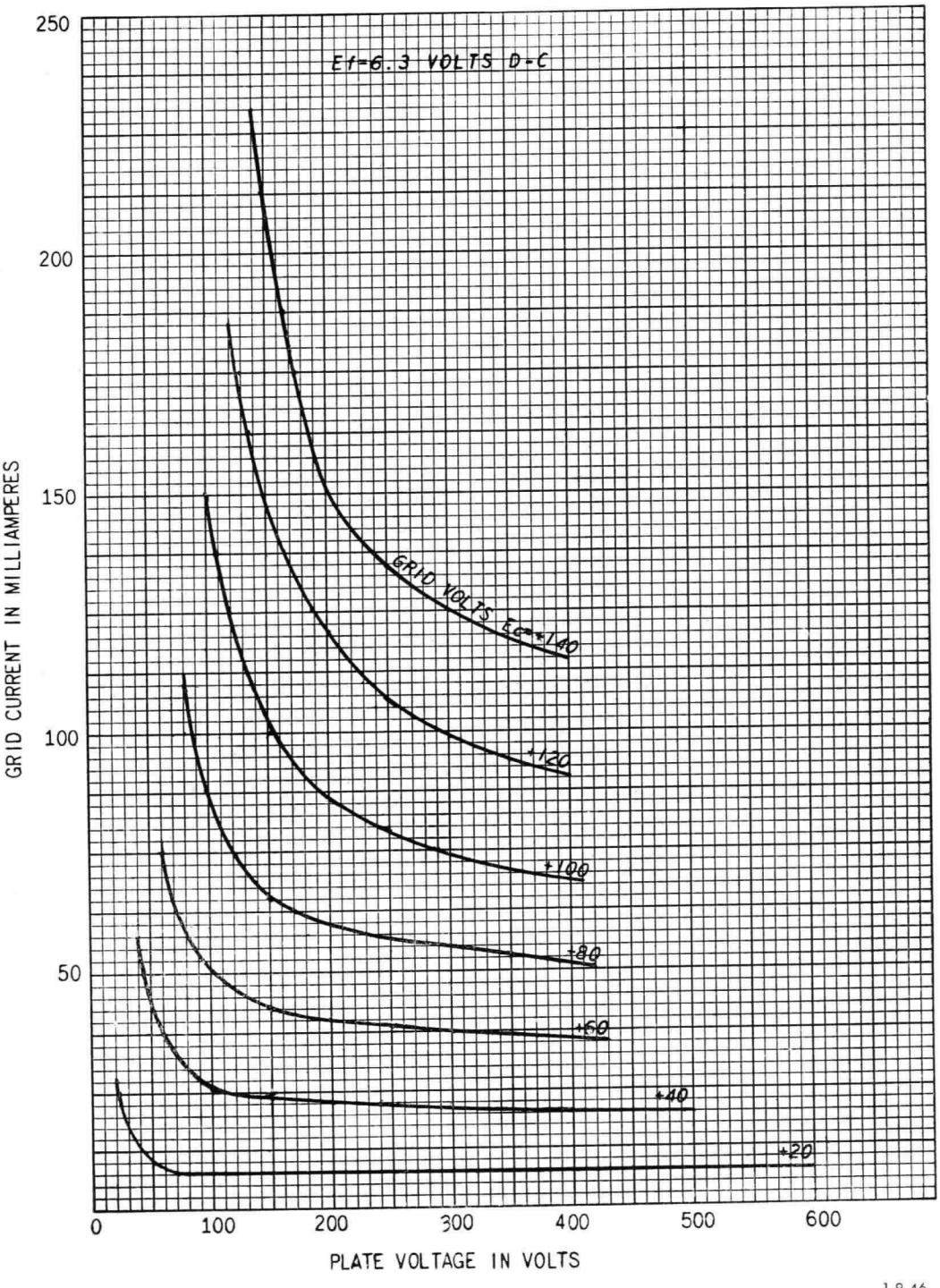

K-9033925

1-9-46

GL-1623 AVERAGE PLATE CHARACTERISTICS

$E_f = 6.3$ VOLTS D-C

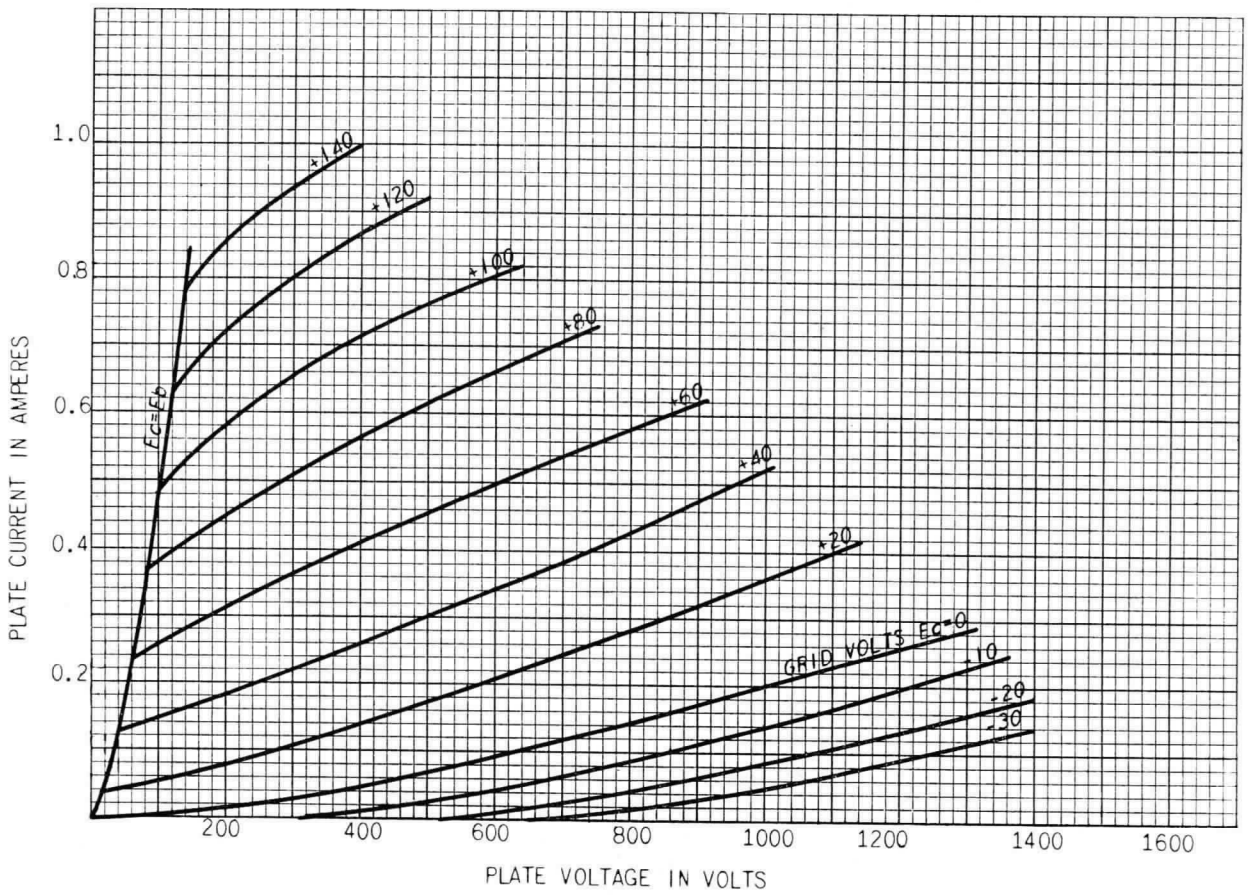

K-9186066

1-9-46

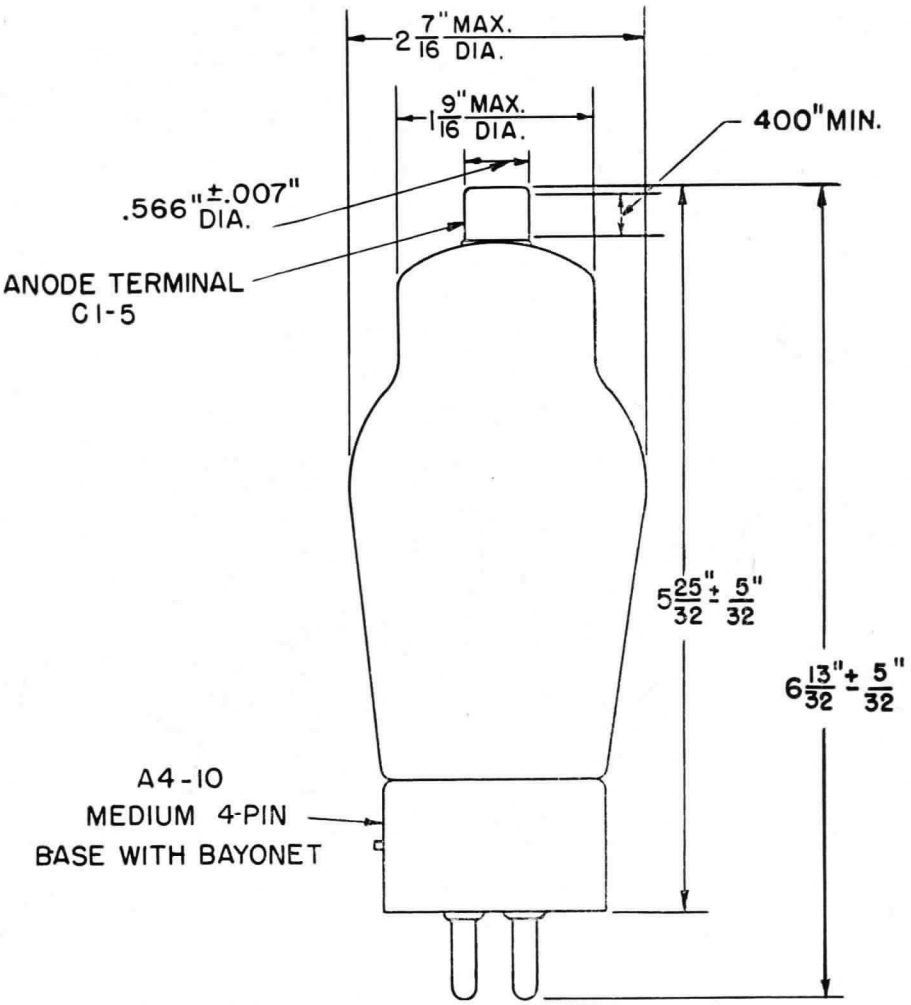

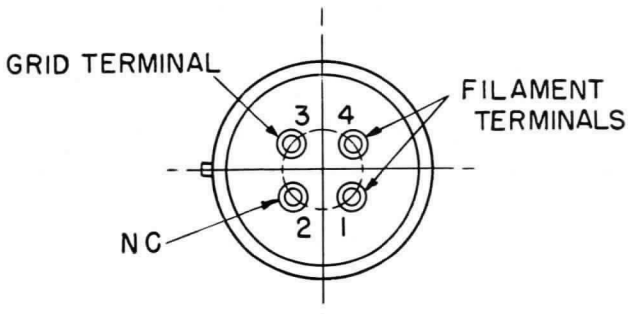

GL-1623 OUTLINE

K-9186112

11-18-46

Electronics Department
GENERAL ELECTRIC
Schenectady, N. Y.

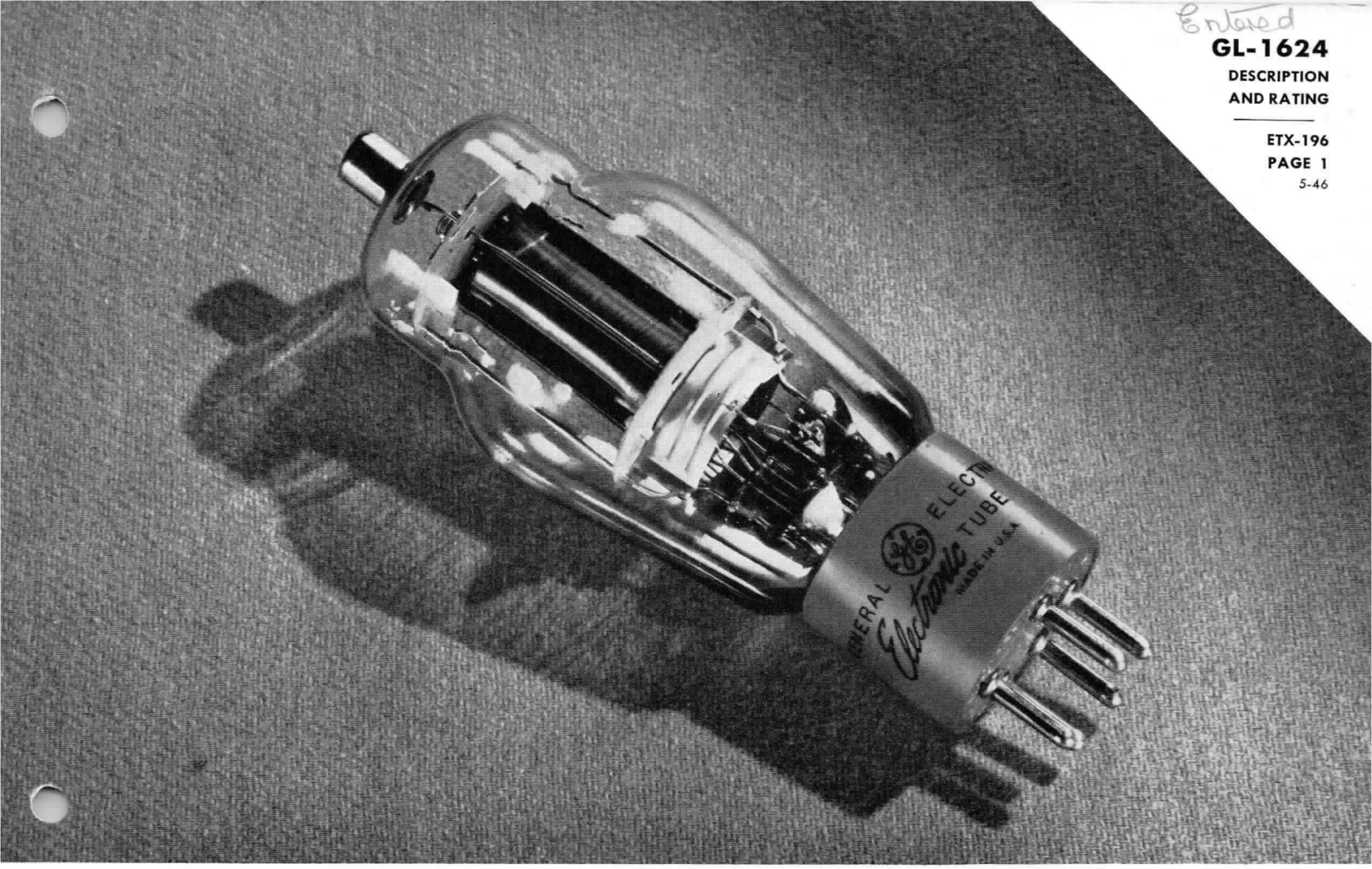

BEAM POWER TUBE

DESCRIPTION

The GL-1624 is a beam-power transmitting tube which can be operated at maximum ratings in all classes of service at frequencies as high as sixty megacycles. Since the cathode is the quick-heating filamentary type, and since the tube has high power sensitivity it is particularly suited as a radio-frequency or audio-frequency amplifier in applications requiring rapid on-and-off operation.

TECHNICAL INFORMATION

These data are for reference only. For design information see the specifications.

GENERAL CHARACTERISTICS

Number of electrodes	5	
Electrical		
Cathode—filamentary		
Voltage	2.5	volts
Current	2.0	amperes
Transconductance, approximate, Ib = 50 milliamperes	4000	
Direct interelectrode capacitances		
Grid-plate, with external shielding	0.25	micromicrofarads
Input	11	micromicrofarads
Output	7.5	micromicrofarads
Frequency for maximum ratings	60	megacycles

GE Electronic TUBE

GENERAL ELECTRIC

TECHNICAL INFORMATION (CONT'D)

Mechanical

Type of cooling—convection
Net weight, approximate . . . . . 4 ounces
Shipping weight, approximate . . . . . 3 pounds
Mounting position . . . . . vertical or horizontal

MAXIMUM RATINGS AND TYPICAL OPERATING CONDITIONS

	Typical Operation	Maximum Ratings		
CLASS $AB_{2\phi}$ PUSH-PULL AMPLIFIER (TWO TUBES)				
D-c plate voltage	400	600	600	volts
Max signal plate current, per tube*			90	milliamperes
D-c max signal plate, input, per tube*			54	watts
Plate dissipation, per tube*			25	watts
D-c grid voltageϕ†	—16.5	—25		volts
D-c screen voltage	300	300	300	volts
Positive d-c grid voltage	300	300	300	volts
Peak a-f grid-to-grid voltage	77	106		volts
Zero signal plate current	75	42		milliamperes
Max signal plate current	150	180		milliamperes
Zero signal screen current	6.5	5.0		milliamperes
Max signal screen grid current	11.5	15		milliamperes
Screen grid input, per tube*			3.5	watts
Peak grid input power	0.4	1.2		watts
Load resistance, per tube	1500	1870		ohms
Effective load, plate to plate	6000	7500		ohms
Max signal plate power output, approximate‡	36	72		watts
CLASS C GRID-MODULATED R-F POWER AMPLIFIER				
Carrier conditions per tube for use with a max modulation factor of 1.0				
D-c plate voltage	400	600	600	volts
D-c grid voltage	—50π	—60π	—200	volts
D-c screen grid voltage	250§	300§	300	volts
D-c grid current, approximate	1.2	0		milliamperes
D-c plate current	31	40	75	milliamperes
D-c screen grid current	1.5	2.5		milliamperes
Plate input			37.5	watts
Screen grid input			2.5	watts
Plate dissipation			25	watts
Peak r-f grid input voltage	58	58		volts
Peak a-f grid voltage	30	30		volts
Driving power, approximate Z	0.25	0.4		watts
Plate power output, approximate	3.8	8		watts
CLASS C PLATE-MODULATED R-F POWER AMPLIFIER AND OSCILLATOR				
Carrier conditions per tube for use with a max modulation factor of 1.0				
D-c plate voltage	325	500	500	volts
D-c grid voltage	—50	—50	—200	volts
From a grid resistor of π	18000	15000		ohms
D-c screen voltage	¶285	¶275	300	volts
D-c plate current	62	75	75	milliamperes
D-c grid current, approximate	2.8	3.3	5	milliamperes
D-c screen grid current	7.5	9		milliamperes
Plate input			37.5	watts
Screen grid input			2.5	watts
Plate dissipation			16.5	watts
Peak r-f grid input voltage, approximate	70	80		volts
Driving power, approximate	0.18	0.25		watts
Plate power output, approximate	13	24		watts

TECHNICAL INFORMATION (CONT'D)

CLASS C R-F POWER AMPLIFIER AND OSCILLATOR

Key down conditions per tube without modulation ◆

D-c plate voltage	400	600	600	volts
D-c grid voltage π			—200	volts
From a fixed supply of	—55	—60		volts
From a cathode resistor of	610	570		ohms
From a grid resistor of	11000	12000		ohms
D-c screen grid voltage △	300	300	300	volts
D-c plate current	75	90	90	milliamperes
D-c grid current, approximate	5	5	5	milliamperes
D-c screen grid current	10.5	10		milliamperes
Plate input			54	watts
Plate dissipation			25	watts
Screen grid input			3.5	watts
Peak r-f grid input voltage	80	95		volts
Driving power, approximate	0.36	0.43		watts
Plate power output, approximate	19.5	35		watts

*Averaged over any audio-frequency cycle of sine-wave form.

ϕDriver stage should be capable of supplying the grids of the Class AB_2 stage with the specified peak grid voltage at low distortion. The effective resistance per grid circuit should be kept below 500 ohms and the effective impedance at the highest desired response frequency should not exceed 700 ohms.

†With zero-impedance driver and perfect regulation, plate-circuit distortion does not exceed 2 per cent. In practice, plate-voltage regulation, screen-voltage regulation, and grid-bias regulation should not be greater than 5 per cent, 5 per cent, and 3 per cent, respectively.

πThe total effective grid-cirucit resistance should not exceed 25,000 ohms.

§Obtained from a fixed supply or from a separate source.

ℨAt crest of audio-frequency cycle with modulation factor of 1.0.

¶Obtained preferably from a modulated fixed supply.

◆Modulation essentially negative may be used if the postitive peak of the audio-frequency envelope does not exceed 115 per cent of the carrier conditions.

△Obtained preferably from a fixed supply of value shown.

APPLICATION NOTES

The GL-1624 can be operated at frequencies as high as 60 megacycles. The tube may be operated at higher frequencies provided the maximum values of plate voltage and power input are reduced as the frequency is raised. (Other maximum ratings are the same as shown above.) The tabulation below shows the highest percentage of maximum plate voltage and power input that can be used up to 125 megacycles for the various classes of services. Special attention should be given to adequate ventilation of the bulb at these frequencies.

Frequency	60	80	125	megacycles
Max Permissible Percentage of Maximum Rated Plate Voltage and Plate Input				
Class B	100	90	75	per cent
Class C Grid modulated	100	90	75	per cent
Plate modulated	100	80	55	per cent
Unmodulated	100	80	55	per cent

GL-1624 AVERAGE PLATE CHARACTERISTICS

$E_f = 2.5$ VOLTS, SCREEN VOLTS = 250

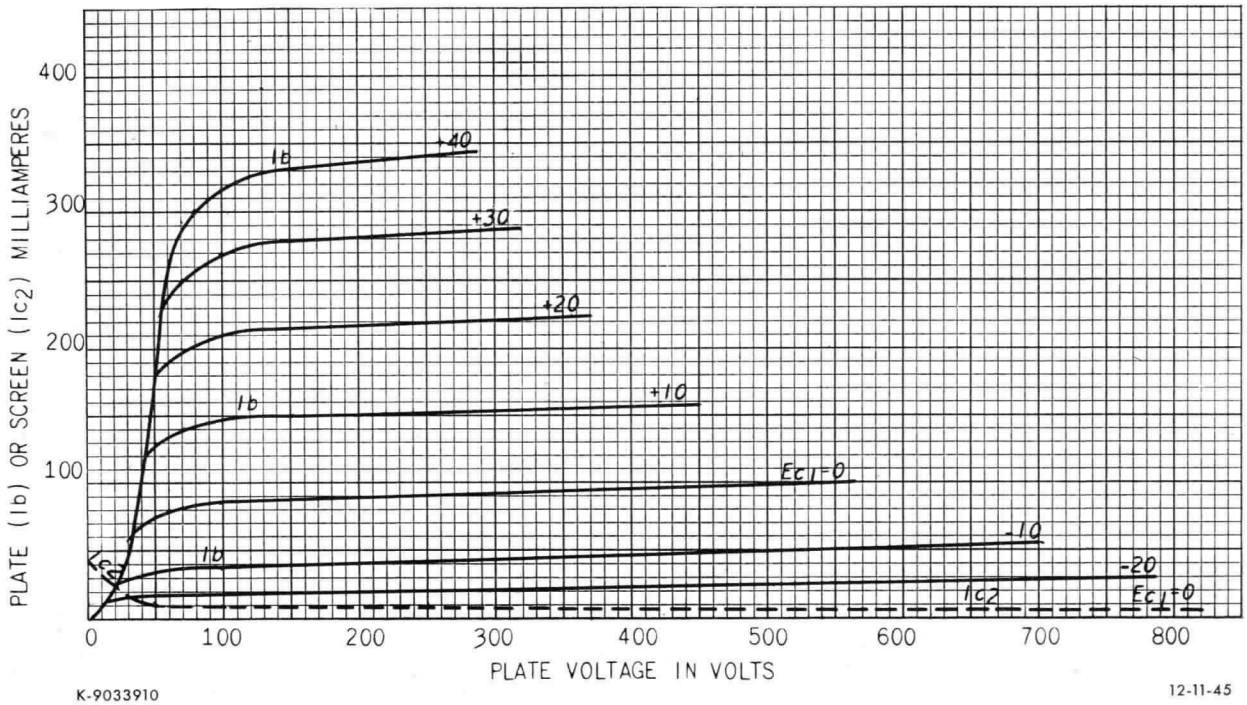

K-9033910

12-11-45

GL-1624 AVERAGE PLATE CHARACTERISTICS

$E_f = 2.5$ VOLTS, SCREEN VOLTS = 300

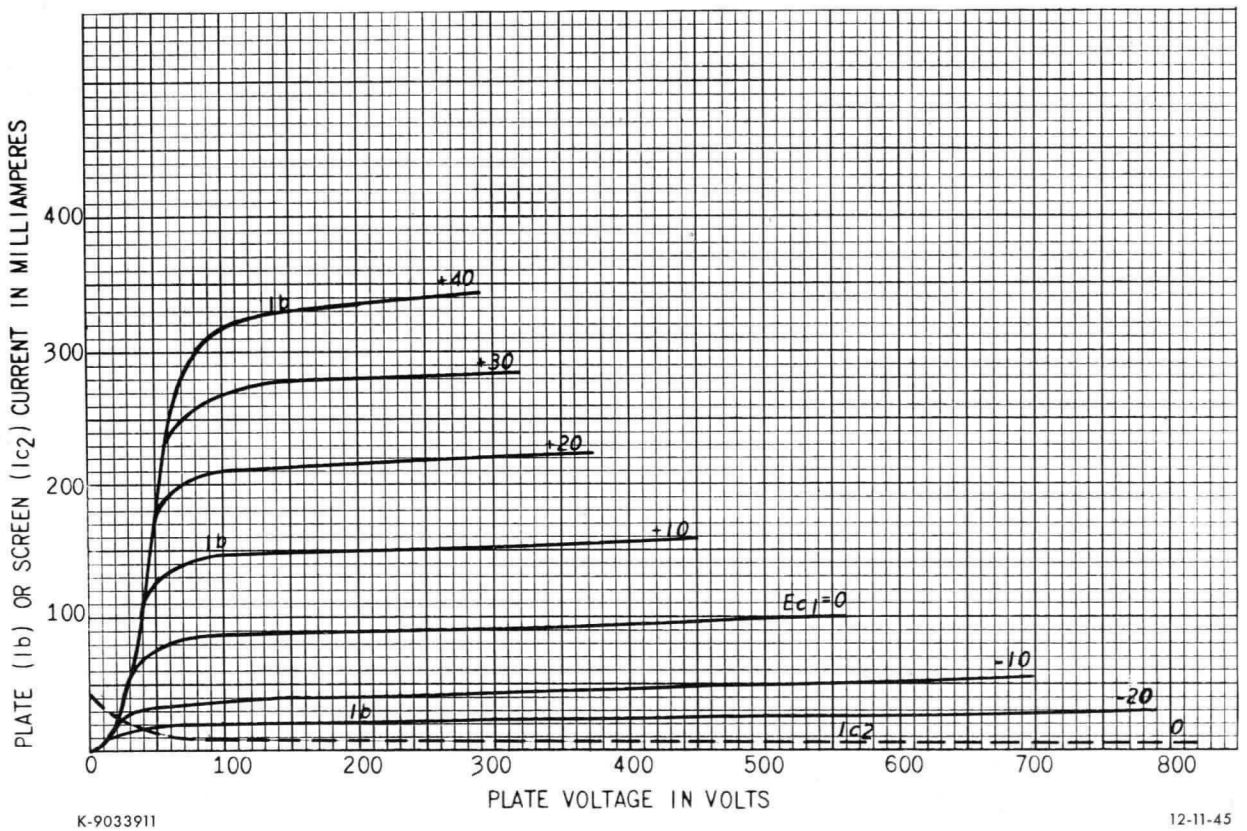

K-9033911

12-11-45

GL-1624 TYPICAL CHARACTERISTICS

$E_f = 2.5$ VOLTS, SCREEN VOLTS = 250

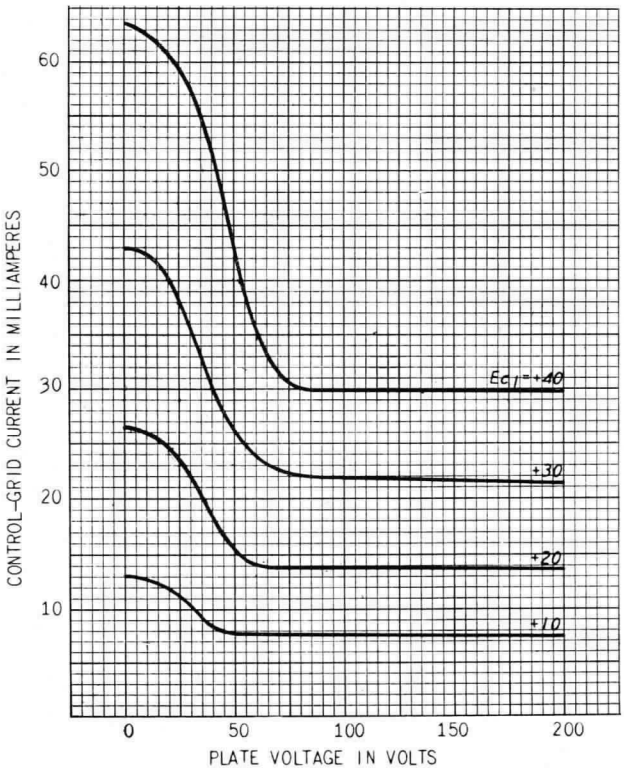

K-9033908 12-10-45

GL-1624 TYPICAL CHARACTERISTICS

$E_f = 2.5$ VOLTS, SCREEN VOLTS = 300

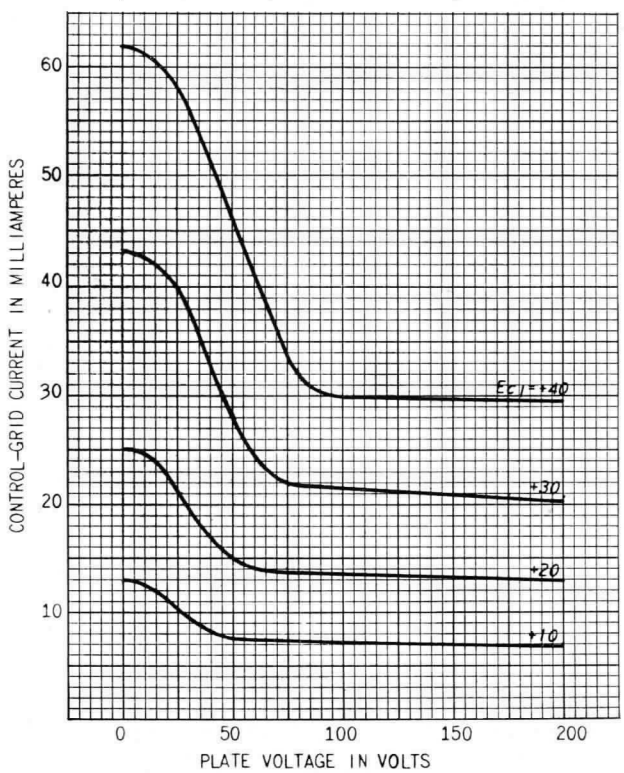

K-9033909 12-10-45

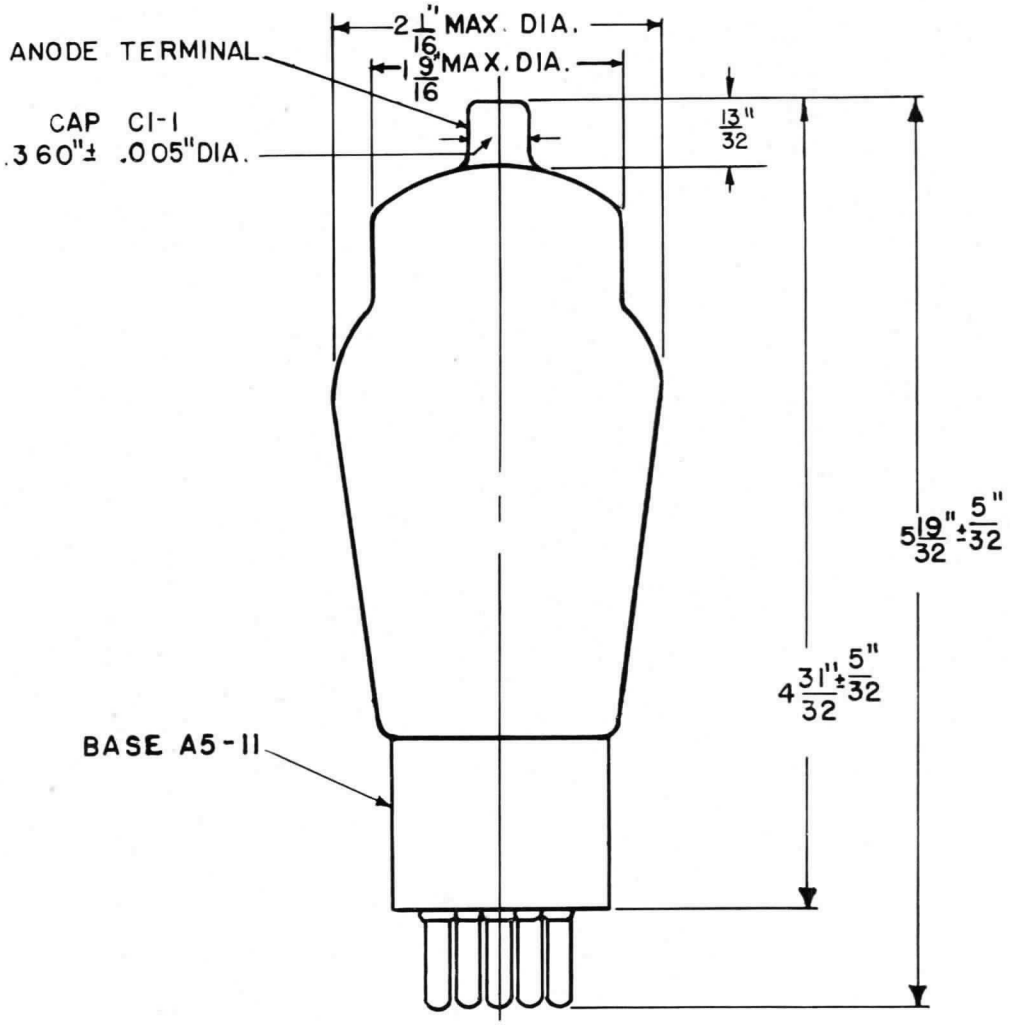

BOTTOM VIEW OF BASING DIAGRAM

GL-1624 OUTLINE

K-9033939

9-10-45

Electronics Department

GENERAL ELECTRIC

Schenectady, N. Y.

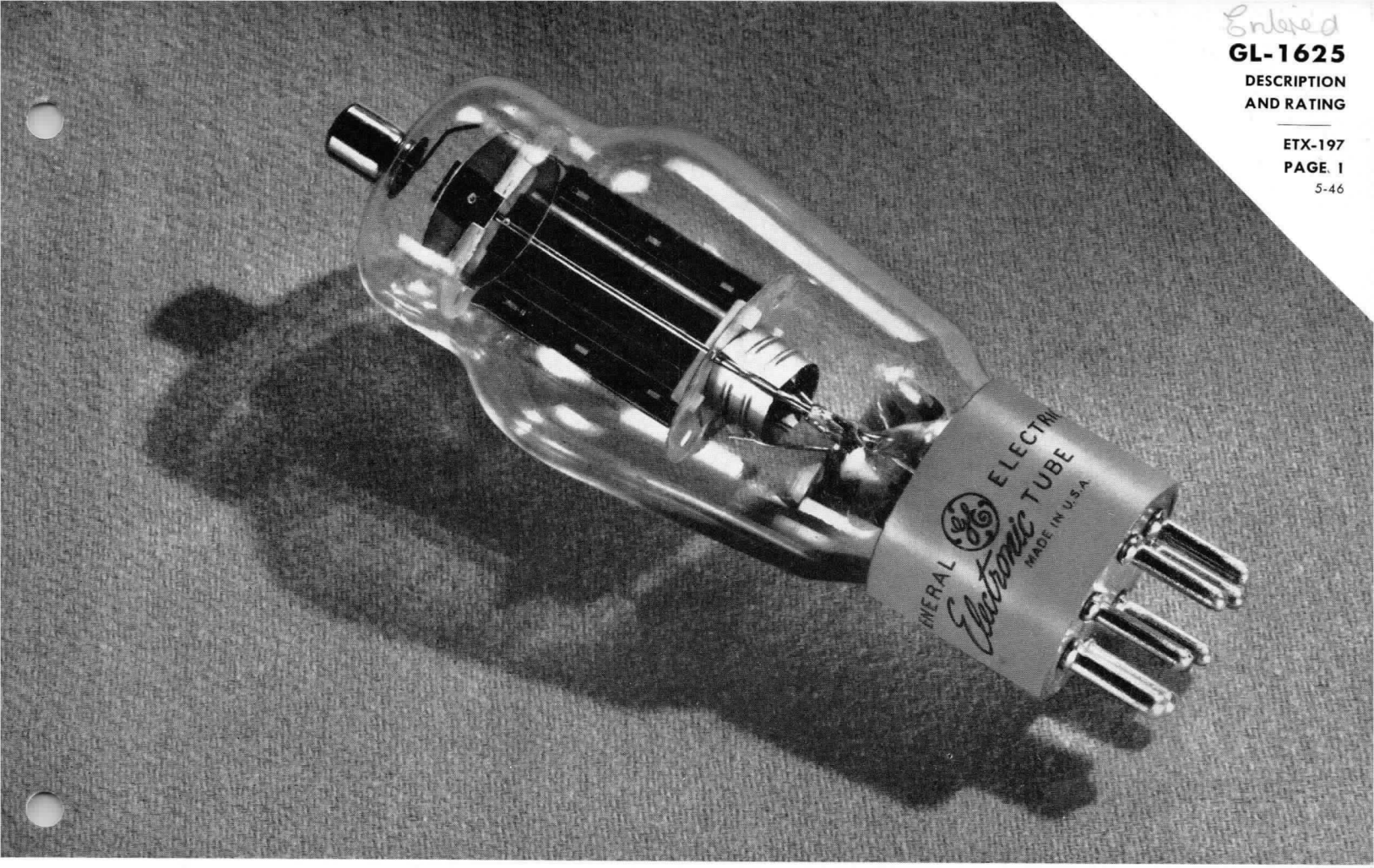

BEAM POWER TUBE

DESCRIPTION

The GL-1625 is a beam power transmitting tube of the heater-cathode type having a maximum plate dissipation rating of 30 watts (ICAS). The high power sensitivity of this tube makes it especially useful in frequency-multiplier service where high harmonic output is essential. The 1625 may also be used as a crystal oscillator and buffer amplifier in medium-power transmitters using up to a half-kilowatt input. Neutralization is generally unnecessary in adequately shielded circuits.

TECHNICAL INFORMATION

These data are for reference only. For design information refer to specifications.

GENERAL CHARACTERISTICS

Number of electrodes	5	
Electrical		
Cathode—Indirectly heated		
Voltage	12.6	volts
Current	0.45	ampere
Grid-screen amplification factor	8	
Direct interelectrode capacitances		
Grid-plate, with external shielding	0.2	micromicrofarad
Input	11	micromicrofarads
Output	7	micromicrofarads
Frequency for maximum ratings	60	megacycles

GE Electronic TUBE

GENERAL ELECTRIC

TECHNICAL INFORMATION (CONT'D)

Mechanical

Type of cooling	convection
Net weight, approximate	4 ounces
Shipping weight, approximate	3 pounds
Mounting position	any

MAXIMUM RATINGS AND TYPICAL OPERATING CONDITIONS

CLASS $AB_2\phi$ AUDIO-FREQUENCY POWER AMPLIFIER (TWO TUBES)

	Typical Operation				Maximum Ratings		
	CCS		ICAS		CCS	ICAS	
D-c plate voltage	400	500	600	750	600	750	volts
Maximum signal plate current, per tube†					120	120	milliamperes
D-c maximum signal plate input, per tube†					60	90	watts
Plate dissipation, per tube†					25	30	watts
D-c grid voltage	−25	−25	−30	−32			volts
Positive d-c grid voltage	300	300	300	300	300	300	volts
Peak a-f grid input voltage, grid-to-grid	78	78	78	92			volts
Zero signal plate current	100	100	60	60			milliamperes
Maximum signal plate current	240	240	200	240			milliamperes
Maximum signal screen grid current	10	10	10	10			milliamperes
Screen grid input†					3.5	3.5	watts
Peak grid input power‡	0.35	0.6	0.4	0.5			watts
Load resistance, per tube	800	1060	1600	1740			ohms
Effective load, plate-to-plate	3200	4240	6400	6960			ohms
Maximum signal plate power output§	55	75	80	120			watts

CLASS B RADIO-FREQUENCY POWER AMPLIFIER

Carrier conditions per tube for use with a maximum modulation factor of 1.0

	CCS		ICAS		CCS	ICAS	
D-c plate voltage	400	500	600	750	600	750	volts
D-c grid voltage	−25	−25	−25	−35			volts
D-c screen grid voltage	250	250	250	300	300	300	volts
D-c grid current	0	0	0	0			milliamperes
D-c plate current	75	75	62.5	60	80	90	milliamperes
D-c screen grid current	4	4	3	3			milliamperes
Plate input					37.5	45	watts
Screen grid input					2.5	2.5	watts
Plate dissipation					25	30	watts
Peak r-f grid input voltage	30	30	20	27			volts
Driving power ◆, approximate	0.25	0.25	0.2	0.12			watt
Plate power output	9	12.5	12.5	15			watts

CLASS C RADIO-FREQUENCY POWER AMPLIFIER AND OSCILLATOR—PLATE-MODULATED

Carrier conditions per tube for use with a maximum modulation factor of 1.0

	CCS		ICAS		CCS	ICAS	
D-c plate voltage	325	400	475	600	475	600	volts
D-c grid voltage	−75	−80	−85	−90	−200	−200	volts
From a grid resistor of	25000	22800	21300	22500			ohms
D-c screen voltage	225	225	225	275	300	300	volts
From a series resistor of △	20000	30000	50000	50000			ohms
D-c plate current	80	80	83	100	83	100	milliamperes
D-c grid current, approximate	3	3.5	4	4	5	5	milliamperes
D-c screen grid current	5	5.75	5	6.5			milliamperes
Plate input					40	60	watts
Screen grid input					2.5	2.5	watts
Plate dissipation					16.5	25	watts
Peak r-f grid input voltage, approximate	90	95	110	115			volts
Driving power, approximate	0.25	0.3	0.4	0.4			watts
Plate power output	17.5	22.5	27.5	42.5			watts

TECHNICAL INFORMATION (CONT'D)

CLASS C RADIO-FREQUENCY AMPLIFIER AND OSCILLATOR

Key-down conditions per tube without modulation +

	CCS			ICAS	CCS	ICAS	
D-c plate voltage	400	500	600	750	600	750	volts
D-c grid voltage					−200	−200	volts
From a fixed supply of	−45	−45	−45	−45			volts
From a cathode resistor of	410	410	410	410			ohms
From a grid resistor of	12800	12800	12800	12800			ohms
D-c screen grid voltage					300	300	volts
From a fixed supply of	250	250	250	250			volts
From a series resistor of	20000	42000	50000	85000			ohms
D-c plate current	100	100	100	100	100	100	milliamperes
D-c grid current, approximate	3.5	3.5	3.5	3.5	5	5	milliamperes
D-c screen grid current	7.5	6	7	6			milliamperes
Plate input					60	75	watts
Plate dissipation					25	30	watts
Screen grid input					3.5	3.5	watts
Peak r-f grid input voltage, approximate	65	65	65	65			volts
Driving power, approximate	0.2	0.2	0.2	0.2			watt
Plate power output	25	30	40	50			watts

ϕ Subscript (2) indicates that grid current flows during some part of input cycle.

† Averaged over any audio-frequency cycle of sine-wave form.

‡ Driver stage should be capable of supplying the grids of the Class AB_2 stage with the specified peak values at low distortion. The effective resistance per grid circuit of the Class AB_2 stage should be kept below 500 ohms and the effective impedance of the highest desired response frequency should not exceed 700 ohms.

§ With zero-impedance driver and perfect regulation, plate circuit distortion does not exceed 2 per cent. In practice, plate-voltage regulation, positive grid voltage regulation, and grid bias regulation should not be greater than 5 per cent, 5 per cent, and 3 per cent, respectively.

◆At crest of audio-frequency cycle with modulation factor of 1.0.

△Connected to modulated plate-voltage supply.

+Modulation, essentially negative, may be used if the positive peak of the audio-frequency envelope does not exceed 115 per cent of the carrier conditions.

APPLICATION NOTES

The GL-1625 can be operated at frequencies as high as 60 megacycles. The tube may be operated at higher frequencies provided the maximum values of plate voltage and power input are reduced as the frequency is raised (other maximum ratings are the same as shown above). The tabulation below shows the highest percentage of maximum plate voltage and power input that can be used up to 125 megacycles for the various classes of service. Special attention should be given to adequate ventilation of the bulb at these frequencies.

Frequency	60	80	125	megacycles
Maximum permissible percentage of maximum rated plate voltage and plate input				
Class B	100	90	75	per cent
Class C, plate-modulated	100	80	55	per cent
Class C, telegraphy	100	80	55	per cent

GL-1625 AVERAGE PLATE CHARACTERISTICS

(Ec_1 AS VARIABLE, E_f = 6.3 VOLTS, SCREEN VOLTS = 300

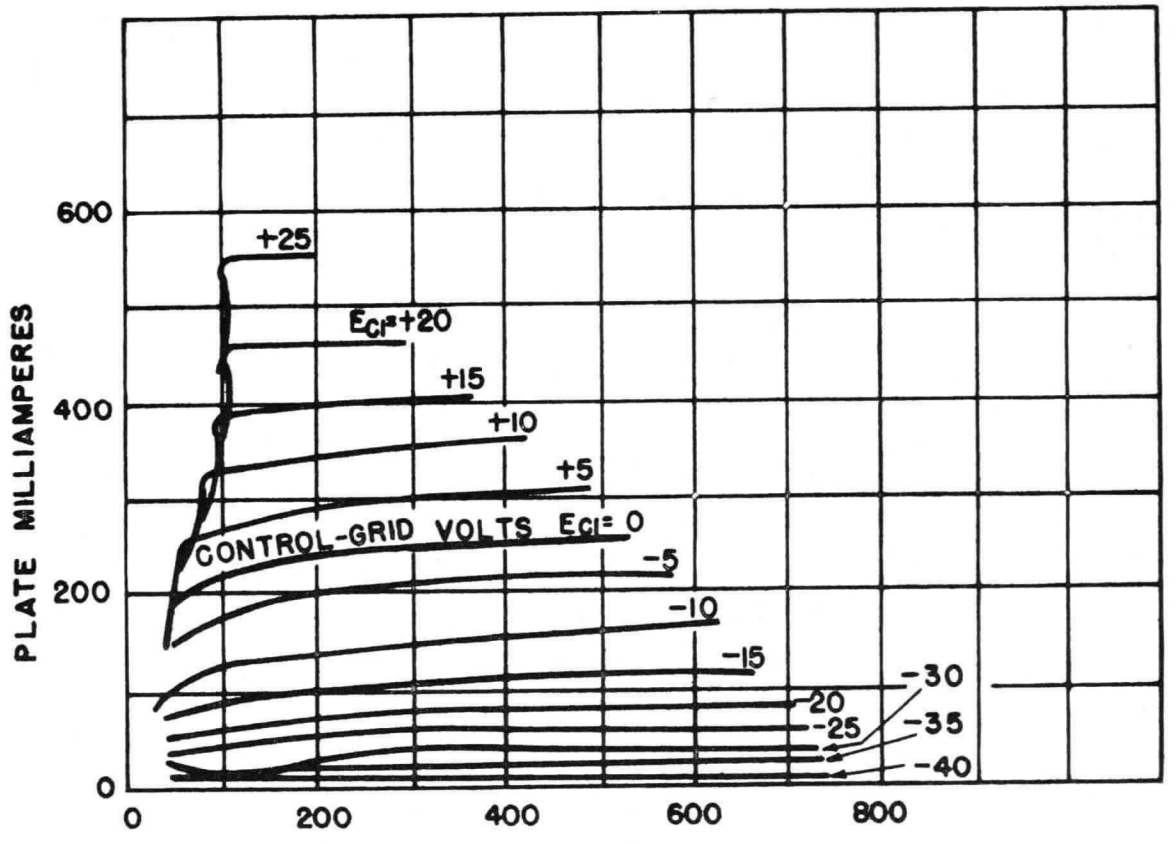

K-8639689

7-23-45

GL-1625 AVERAGE CHARACTERISTICS

(E_f = 6.3 VOLTS, SCREEN VOLTS = 300)

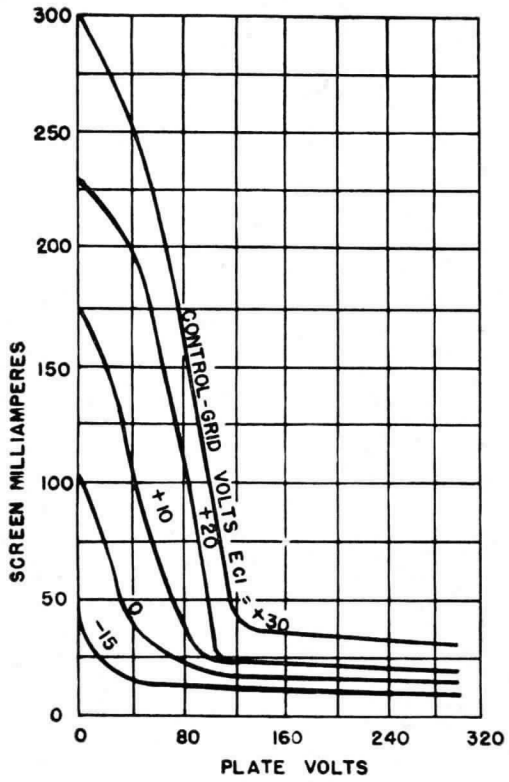

K-8639690

7-23-45

GL-1625 TYPICAL CHARACTERISTICS

E_f = 6.3 VOLTS, SCREEN VOLTS = 300)

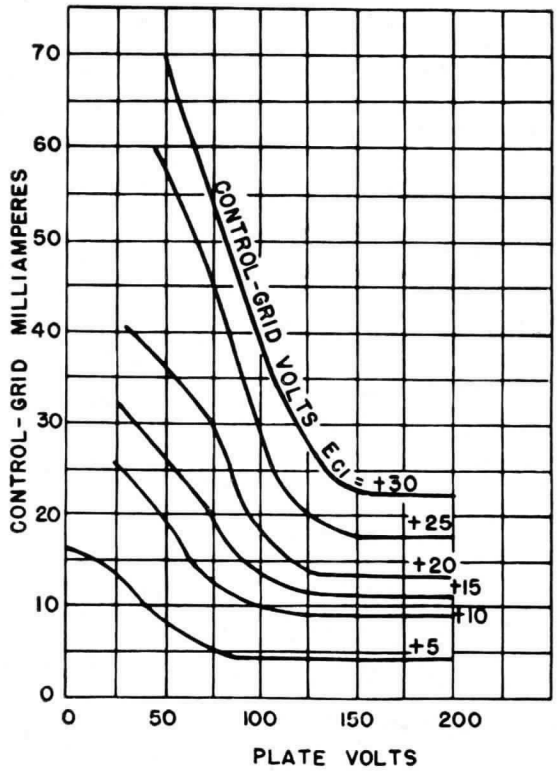

K-8639688

7-23-45

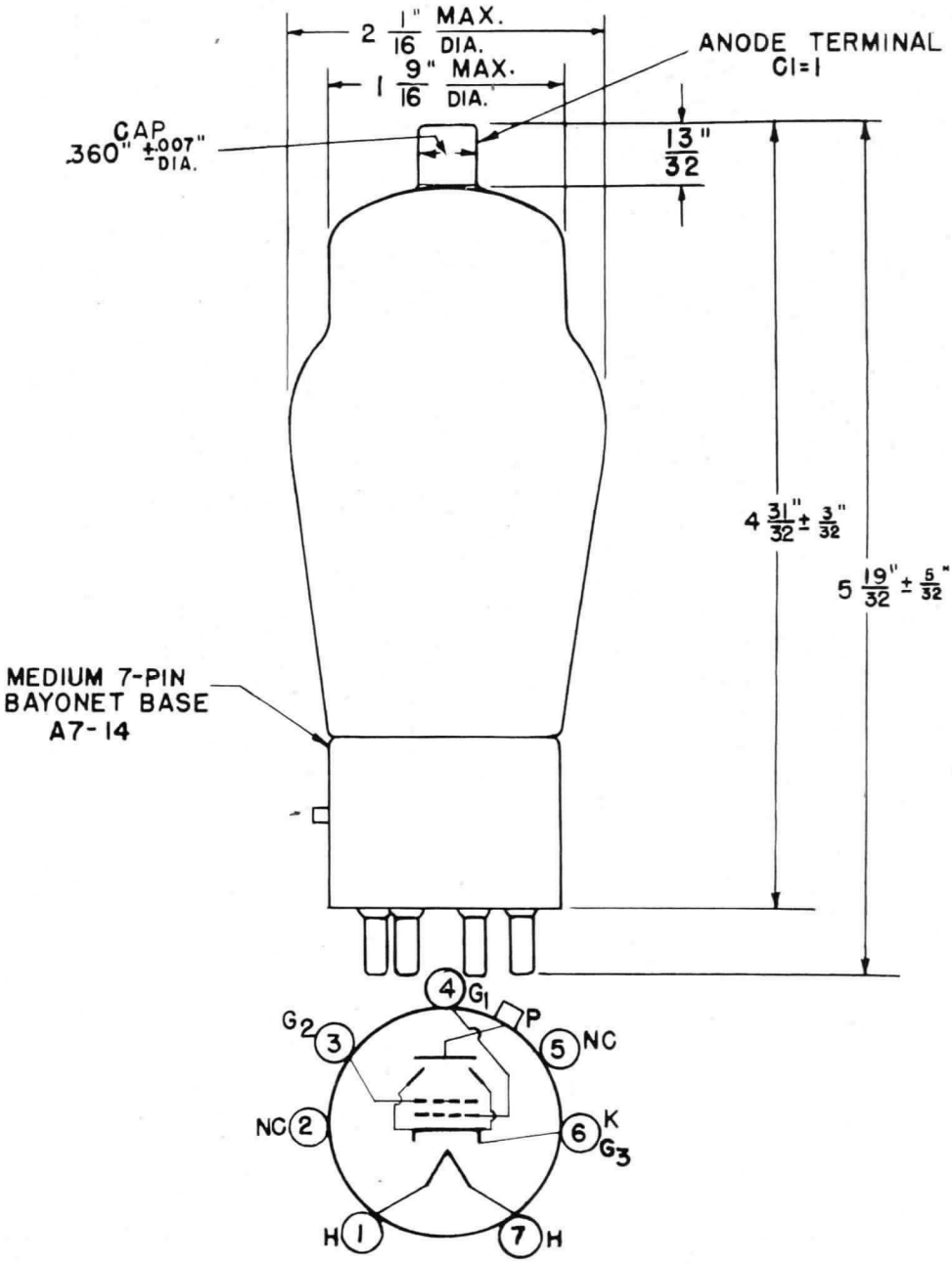

BOTTOM VIEW OF BASING DIAGRAM

GL-1625 OUTLINE

K-9033905

7-24-45

Electronics Department

GENERAL ELECTRIC

Schenectady, N. Y.

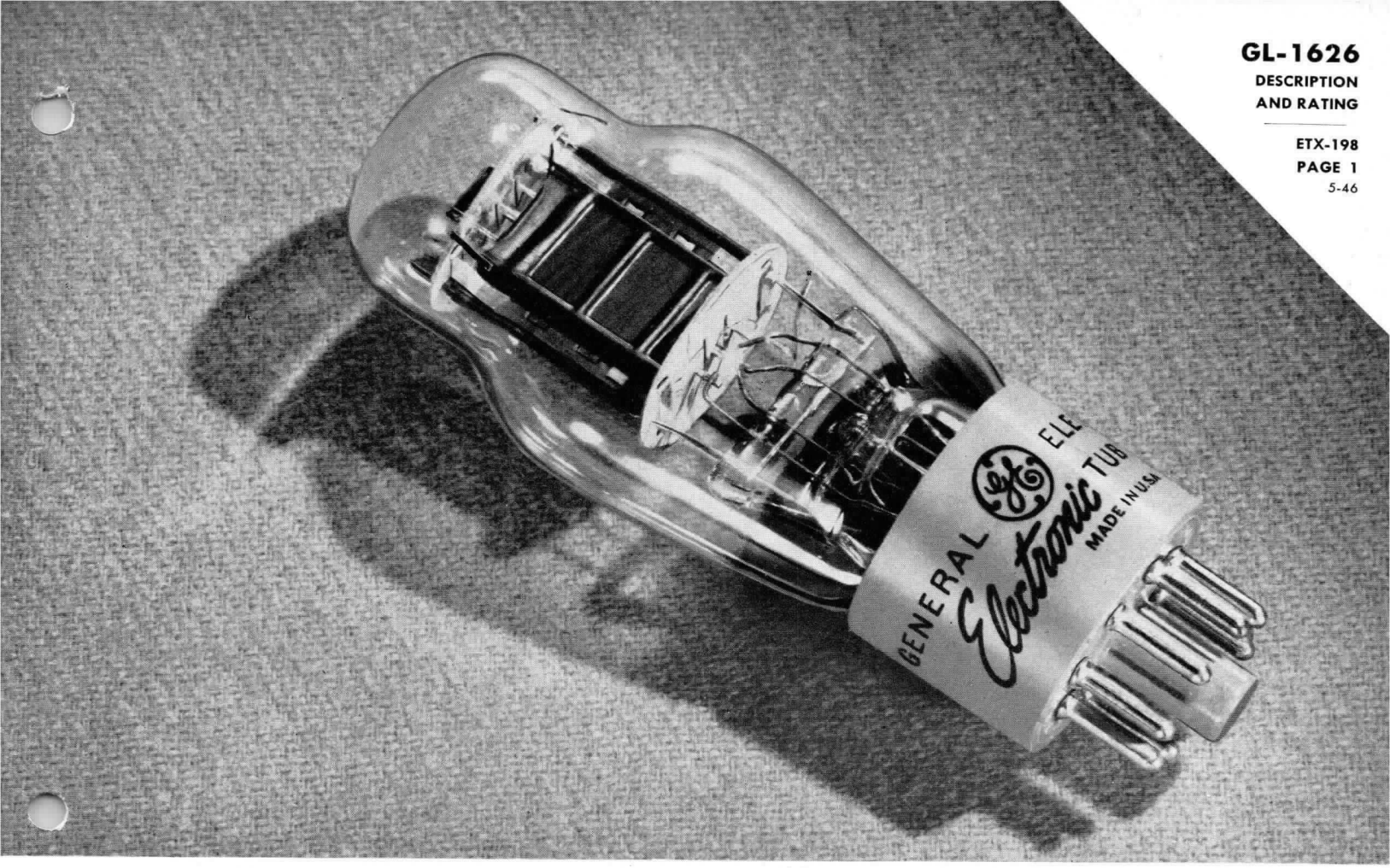

TRIODE

DESCRIPTION

The GL-1626 is an indirectly heated cathode transmitting triode with a 12.6-volt heater. Designed especially for r-f oscillator service, it is useful in applications requiring unusual stability of characteristics. The GL-1626 may be operated at frequencies as high as 30 megacycles at maximum ratings, and at frequencies as high as 90 megacycles at reduced ratings.

TECHNICAL INFORMATION

These data are for reference only. For design information see the specifications.

GENERAL CHARACTERISTICS

Number of electrodes	3	
Electrical		
Cathode—Indirectly heated		
Voltage	12.6	volts
Current	0.25	ampere
Amplification factor	5	
Direct interelectrode capacitances		
Grid-plate	4.4	micromicrofarads
Input	3.2	micromicrofarads
Output	3.4	micromicrofarads
Frequency for maximum ratings	30	megacycles

GE Electronic TUBE

GENERAL ELECTRIC

TECHNICAL INFORMATION (CONT'D)

Mechanical

Type of cooling—convection		
Ambient temperature	60	centigrade
Net weight, approximate	4	ounces
Shipping weight, approximate	3	pounds

CLASS C RADIO-FREQUENCY POWER AMPLIFIER AND OSCILLATOR

Key-down conditions per tube without modulation‡

	Typical Operation	Maximum Ratings	
D-c plate voltage	250	250	volts
D-c grid voltage*			
From a fixed supply of	−70	−150	volts
From a grid resistor of	14000		ohms
From a cathode resistor of	2300		ohms
D-c plate current	25	25	milliamperes
D-c grid current, approximate △	5	8	milliamperes
Plate input		6.25	watts
Plate dissipation		5	watts
Peak r-f grid voltage	105		volts
Driving power, approximate △	0.5		watts
Power output, approximate	4		watts

‡Modulation, essentially negative, may be used if the positive peak of the audio-frequency envelope does not exceed 115 per cent of the carrier conditions.

*When the tube is used in the final amplifier or a preceding stage of a transmitter designed for break-in operation and oscillator keying, a small amount of fixed bias must be used to maintain the plate current at a low value. A fixed bias of at least −35 volts must be used with plate voltage of 250 volts.

△Subject to wide variations.

APPLICATION NOTES

The GL-1626 can be operated at frequencies as high as 30 megacycles. The tube may be operated at higher frequencies provided the maximum values of plate voltage and power input are reduced as the frequency is raised (other maximum ratings are the same as shown above). The tabulation below shows the highest percentage of maximum plate voltage and power input that can be used up to 90 megacycles for the various classes of service. Special attention should be given to adequate ventilation of the bulb at these frequencies.

Frequency	30	60	90	megacycles
Percentage of maximum rated plate voltage and plate input				
Class C unmodulated	100	96	93	per cent

GL-1626 TYPICAL CHARACTERISTICS
$E_f = 12.6$ VOLTS

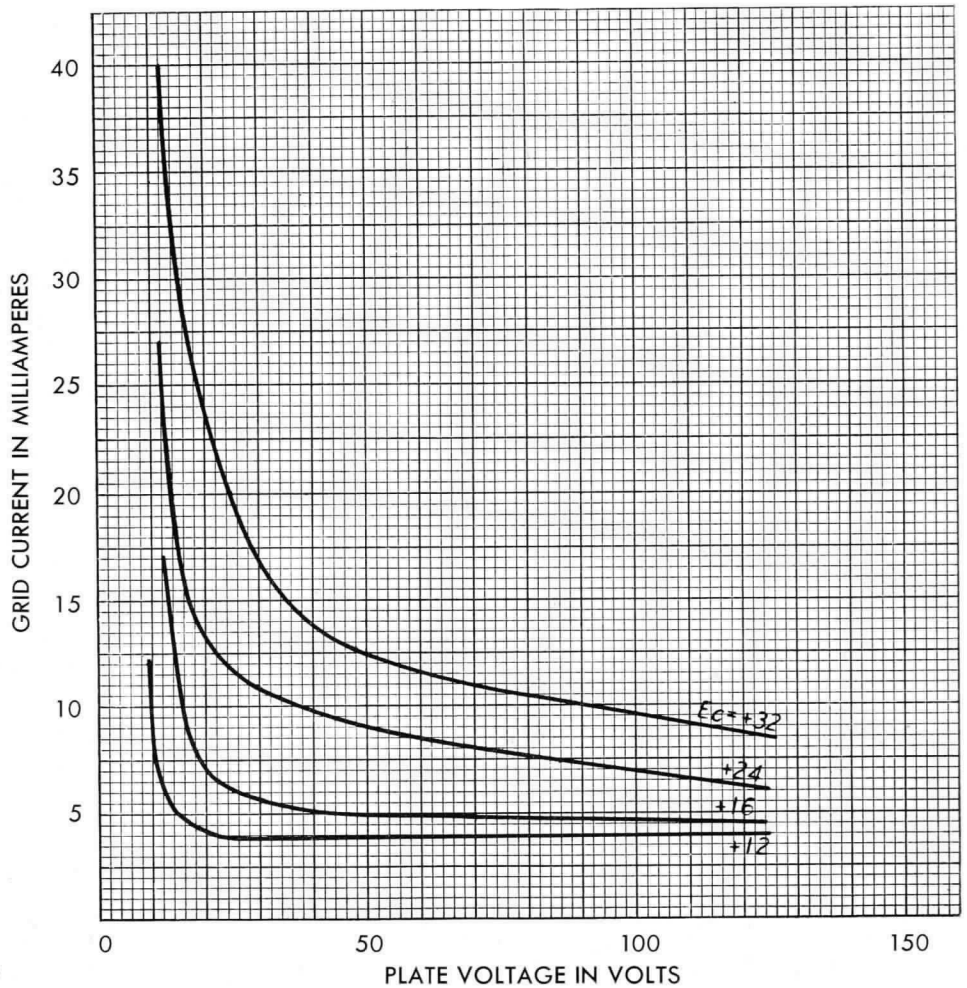

K-9186102

12-10-45

GL-1626 AVERAGE PLATE CHARACTERISTICS

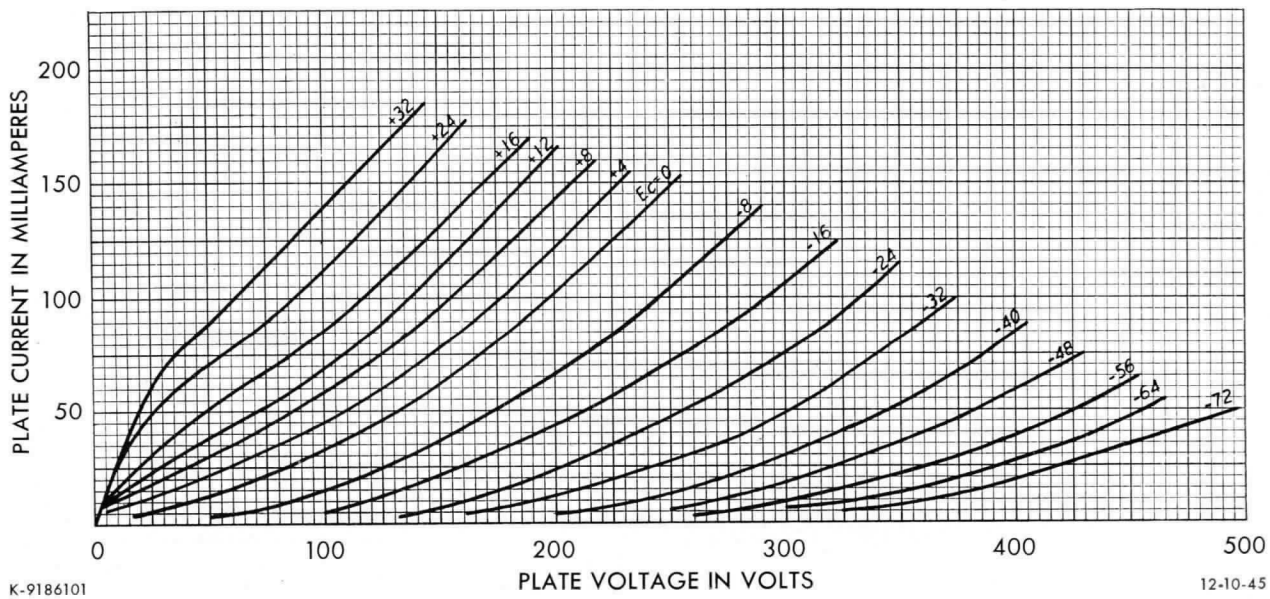

K-9186101

12-10-45

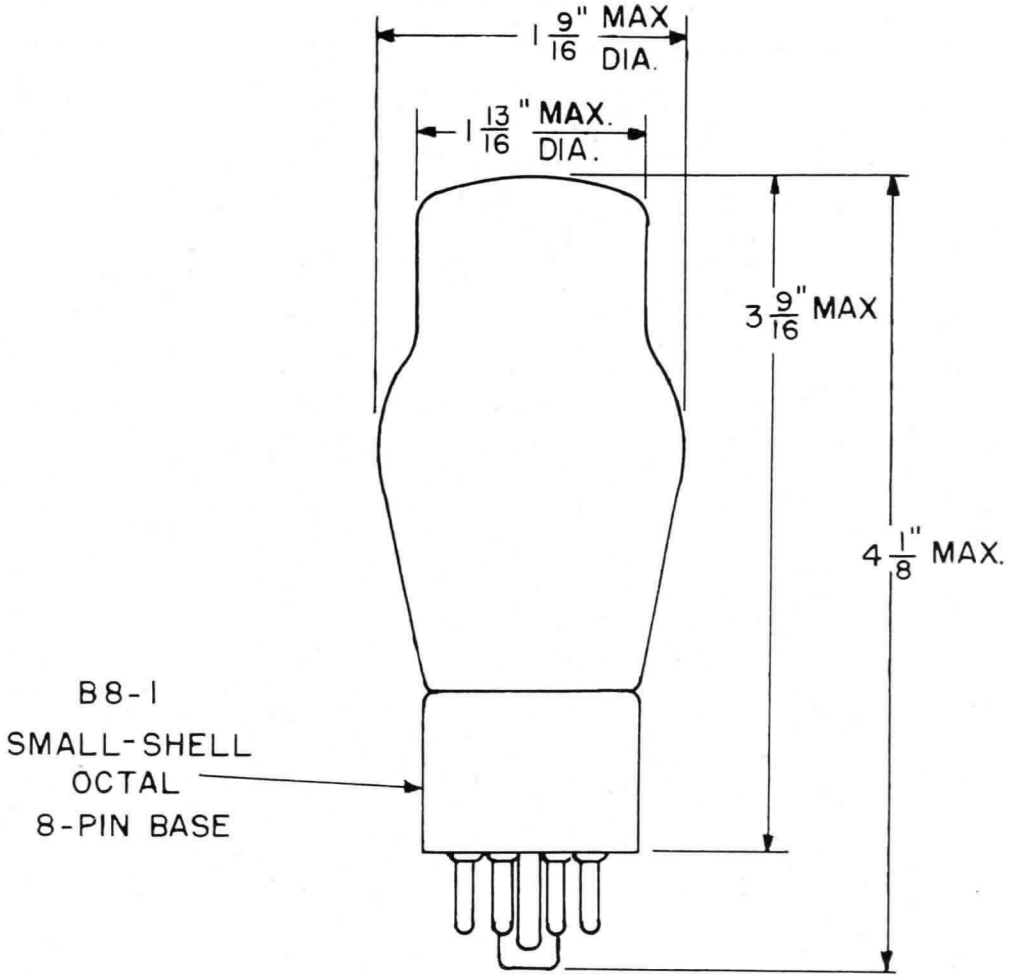

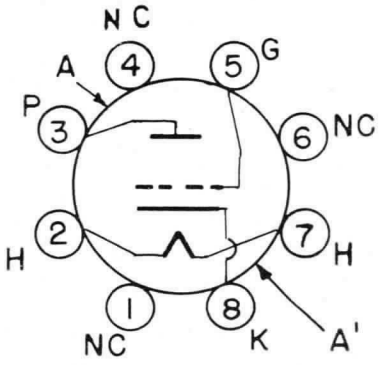

AA' = PLANE OF ELECTRODES

GL-1626 OUTLINE

K-9186113

12-10-45

Electronics Department

GENERAL ELECTRIC

Schenectady, N. Y.

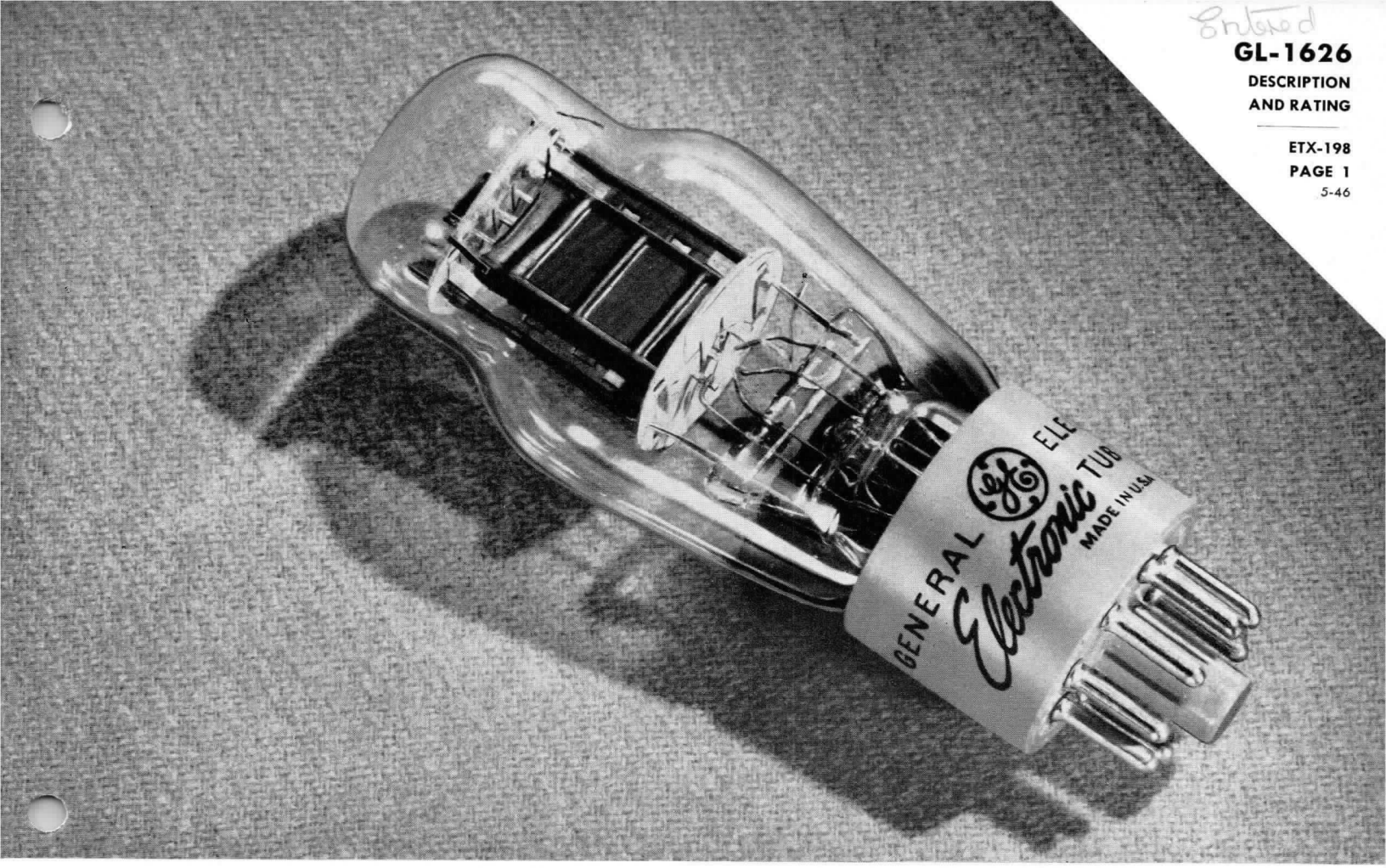

TRIODE

DESCRIPTION

The GL-1626 is an indirectly heated cathode transmitting triode with a 12.6-volt heater. Designed especially for r-f oscillator service, it is useful in applications requiring unusual stability of characteristics. The GL-1626 may be operated at frequencies as high as 30 megacycles at maximum ratings, and at frequencies as high as 90 megacycles at reduced ratings.

TECHNICAL INFORMATION

These data are for reference only. For design information see the specifications.

GENERAL CHARACTERISTICS

Number of electrodes	3	
Electrical		
Cathode—Indirectly heated		
Voltage	12.6	volts
Current	0.25	ampere
Amplification factor	5	
Direct interelectrode capacitances		
Grid-plate	4.4	micromicrofarads
Input	3.2	micromicrofarads
Output	3.4	micromicrofarads
Frequency for maximum ratings	30	megacycles

Electronic TUBE

GENERAL ELECTRIC

TECHNICAL INFORMATION (CONT'D)

Mechanical

Type of cooling—convection		
Ambient temperature	60	centigrade
Net weight, approximate	4	ounces
Shipping weight, approximate	3	pounds

CLASS C RADIO-FREQUENCY POWER AMPLIFIER AND OSCILLATOR

Key-down conditions per tube without modulation‡

	Typical Operation	Maximum Ratings	
D-c plate voltage	250	250	volts
D-c grid voltage*			
From a fixed supply of	−70	−150	volts
From a grid resistor of	14000		ohms
From a cathode resistor of	2300		ohms
D-c plate current	25	25	milliamperes
D-c grid current, approximate △	5	8	milliamperes
Plate input		6.25	watts
Plate dissipation		5	watts
Peak r-f grid voltage	105		volts
Driving power, approximate △	0.5		watts
Power output, approximate	4		watts

‡Modulation, essentially negative, may be used if the positive peak of the audio-frequency envelope does not exceed 115 per cent of the carrier conditions.

*When the tube is used in the final amplifier or a preceding stage of a transmitter designed for break-in operation and oscillator keying, a small amount of fixed bias must be used to maintain the plate current at a low value. A fixed bias of at least −35 volts must be used with plate voltage of 250 volts.

△Subject to wide variations.

APPLICATION NOTES

The GL-1626 can be operated at frequencies as high as 30 megacycles. The tube may be operated at higher frequencies provided the maximum values of plate voltage and power input are reduced as the frequency is raised (other maximum ratings are the same as shown above). The tabulation below shows the highest percentage of maximum plate voltage and power input that can be used up to 90 megacycles for the various classes of service. Special attention should be given to adequate ventilation of the bulb at these frequencies.

Frequency	30	60	90	megacycles
Percentage of maximum rated plate voltage and plate input				
Class C unmodulated	100	96	93	per cent

GENERAL ELECTRIC
TUBE DEPARTMENT
Schenectady 5, N. Y.

OBJECTIVE
TECHNICAL INFORMATION

These ratings represent the design objective for this product. Refer to the Preliminary Technical Information sheet for ratings currently achieved in the progression towards design objectives. If PTI sheets do not exist, consult your local Tube Department Regional Sales Office.

DEVELOPMENTAL TYPE

This technical information is proprietary and is furnished only as a service to customers

Z-5278

INTEGRATED DISTRIBUTED AMPLIFIER

Extreme Electronic Bandwidth — Metal and Ceramic
Frequency Pass Band: 50 to 600 mcs, approximate — Forced-Air Cooled

The Z-5278 represents a completely new approach in the development of distributed amplification. In order to extend the performance significantly in power output and gain and especially to increase the upper limit of electronic bandwidth, the distributed amplifier has been developed as an integrated tube-circuitry package inside a single evacuated envelope. This single envelope includes all the necessary RF components and circuitry. Only RF connectors and the application of d-c voltages are necessary to provide a complete distributed-amplifier package. This new approach results in a most significant reduction in size, weight and complexity of these components.

ELECTRICAL

Heater Voltage*	12	Volts
Heater Current	15	Amperes
Cathode Heating Time, minimum	5	Minutes
RF Line Impedances		
Grid-Line Input Impedance, nominal	30	Ohms
Grid-Line Terminating Impedance, nominal	30	Ohms
Anode-Line Output Impedance, nominal	200	Ohms
Anode-Line Terminating Impedance, nominal	200	Ohms

MECHANICAL

Mounting Position – Any		
Net Weight, approximate	7 1/2	Pounds
Envelope Dimensions, exclusive of terminals and vacuum connections, approximate †	4 $\frac{1}{4}$ x 7 $\frac{1}{4}$ x 4 $\frac{3}{4}$	Inches

THERMAL

Cooling – Forced Air		
Temperature at any point on the envelope, seals and connectors, maximum **	175	C

Depending on mounting and environment, it may be necessary to provide some ventilation to maintain proper seal temperatures.

BROAD-BAND CW RF AMPLIFIER

Maximum Ratings		
Frequency Band-Pass for Input Driving Signal ‡	50-500	Megacycles
Heater Voltage Regulation	± 5	Percent
DC Plate Voltage *	350	Volts
DC Plate Current *		
Each half	1.75	Amperes
Total	3.50	Amperes

The specifications of this type are subject to change. This device is now under development and is made available for experimental purposes only. For the most recent information concerning the status of this development, please consult your local Tube Department Regional Sales Office, or current Preliminary Technical Information for the same catalog number.

BROAD-BAND CW RF AMPLIFIER (Cont'd)

Maximum Ratings (Cont'd)

Frequency Band-Pass for Input Driving Signal ‡ (Cont'd)

DC Screen Voltage *	125	Volts
DC Screen Current *		
Each half	100	Milliamperes
Total	200	Milliamperes
DC Grid Voltage *	0 to -7.5	Volts
DC Grid Current *		
Each half	60	Milliamperes
Total	120	Milliamperes
RF Grid Driving Power, peak or average	4	Watts
Anode Dissipation		
Each half	600	Watts
Total	1200	Watts

Typical Operation

CW RF Amplifier, 50-500 Megacycles, Tube Halves Connected in Series §

DC Plate Voltage	330	Volts
DC Plate Current, each half	1.5	Amperes
DC Screen Voltage	120	Volts
DC Screen Current, each half, approximate	90	Milliamperes
DC Grid Voltage, adjustable, approximate	-3.5	Volts
DC Grid Current, each half, approximate	50	Milliamperes
Grid-Line RF Driving Power	3.5	Watts
Grid-Line Terminating Impedance	30	Ohms
Anode-Line RF Output Power	125	Watts
Over the band of 50-500 Megacycles	75-150	Watts
Anode-Line Terminating Impedance	200	Ohms
Power Gain	15	Decibels
Over the band of 50-500 Megacycles	13-16	Decibels

* Recommended exact value will be supplied for each unit.

† Developmental units may be furnished with an integral electronic vacuum pump.

‡ For applications at frequencies above or below the range indicated, refer to the manufacturer for recommendations. For operation with input frequencies below 100 megacycles external capacitance by-passing may be required between the screen terminal and the amplifier envelope.

§ The two RF grid lines are connected in series and the two RF anode lines are connected in series.

NOTE

This is a four-terminal space-charge device, and the usual application precautions as practiced with conventional RF tetrode circuitry must be observed. For example, it is necessary to use sensitive overload circuits to protect the grid, screen, and anode elements.

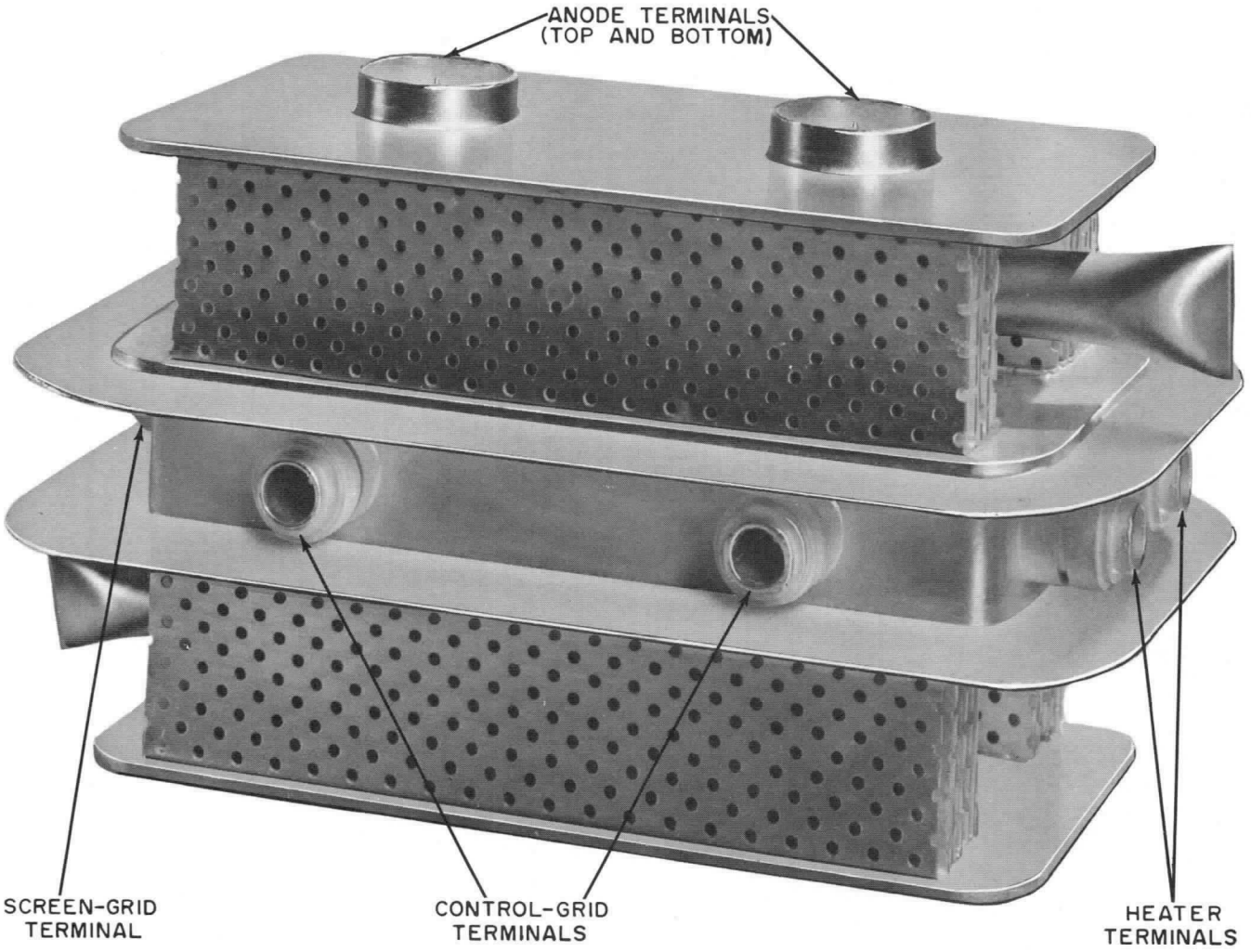
ANODE TERMINALS
(TOP AND BOTTOM)
SCREEN-GRID
TERMINAL
CONTROL-GRID
TERMINALS
HEATER
TERMINALS

TUBE DEPARTMENT

GENERAL ELECTRIC

Owensboro, Kentucky



TRIODE

The GL-5513 is a three-electrode tube designed for use as a grounded-grid Class B radio-frequency amplifier and Class C amplifier and oscillator. The anode is forced-air cooled and is capable of dissipating 1200 watts. The cathode is a thoriated-tungsten filament. Maximum ratings apply up to 220 megacycles.

TECHNICAL INFORMATION

GENERAL

Electrical	Minimum	Bogey	Maximum	
Filament Voltage	6.0	6.3	6.6	Volts
Filament Current at Bogey Voltage	—	⊕30	—	Amperes
Filament Starting Current	—	—	□55	Amperes
Filament Cold Resistance	—	□0.026	—	Ohms
Filament Heating Time	□30	—	—	Seconds
Amplification Factor, $I_b = 0.4$ amperes, $E_c = +10$ volts	—	⊕49	—	
Peak Cathode Current*	—	—	□5	Amperes
Direct-Interelectrode Capacitances				
Grid-Plate	—	⊕10.5	—	μμf
Grid-Filament	—	⊕14.4	—	μμf
Plate-Filament**	—	⊕0.09	—	μμf

*Represents maximum useable cathode current (plate current plus current to each grid) for any condition of operation.

**Measured with a 10-inch outside diameter metal disk placed on the grid seal.

GE Electronic TUBE

GENERAL ELECTRIC

Supersedes ETX-220A dated 4-49

TECHNICAL INFORMATION (CONT'D)

Mechanical

Mounting Position—Vertical, Anode Down
Air Flow
Through Radiator

Plate Dissipation	700	1000	1200 Max	Watts
Air Flow	40	47	55 Min	Cubic Feet per Minute
Static Pressure	1.0	1.3	1.5	Inches Water
Filament—Terminal Seals			5 Min	Cubic Feet per Minute
Incoming Air Temperature			45 Max	C
Radiator Hub Temperature			□180 Max	C
Glass Temperature at Any Point			150 Max	C
Net Weight, approximate			3¾	Pounds

Forced-air cooling to be maintained through radiator and on filament seals for one minute minimum after removal of all voltages. Forced-air cooling to be applied to filament terminal seals and through radiator before any voltages are applied.

MAXIMUM RATINGS AND TYPICAL OPERATING CONDITIONS

RADIO-FREQUENCY POWER AMPLIFIER—CLASS B

Carrier Conditions per Tube for Use with a Maximum Modulation Factor of 1.0

Maximum Ratings, Absolute Values

DC Plate Voltage	4000 Max	Volts
DC Plate Current	⊕0.83 Max	Amperes
Plate Input	1800 Max	Watts
Plate Dissipation	1200 Max	Watts

Typical Operation	**Grounded-Cathode Circuit**		**Grounded-Grid Circuit**		
DC Plate Voltage	□2500	3000	□2500	3000	Volts
DC Grid Voltage	□−20	⊕−25	□−20	⊕−25	Volts
Peak RF Grid Voltage	□95	⊕115	□95	⊕115	Volts
Peak RF Plate Voltage	□950	□1200	□950	□1200	Volts
DC Plate Current	□0.375	⊕0.470	□0.375	⊕0.470	Amperes
DC Grid Current, approximate	□0.040	⊕0.042	□0.040	⊕0.042	Amperes
Driving Power, approximate†	□25	⊕34	—	—	Watts
Carrier	—	—	□31.5	□47	Watts
Crest†	—	—	□132	□187	Watts
Power Output	□277	⊕437	□305‡	⊕480‡	Watts

RADIO-FREQUENCY AMPLIFIER—CLASS B TELEVISION SERVICE

Synchronizing-Level Conditions per Tube unless Otherwise Specified

Maximum Ratings, Absolute Values

DC Plate Voltage	3000 Max	Volts
DC Plate Current	1.2 Max	Amperes
Plate Input	3300 Max	Watts
Plate Dissipation	1200 Max	Watts

Typical Operation—Grounded-Grid Circuit up to 220 Megacycles
Bandwidth 5 Megacycles

DC Plate Voltage	⊕2000	Volts
DC Grid Voltage	⊕−20	Volts
Peak RF Driving Voltage		
Synchronizing Level	□240	Volts
Pedestal Level	□180	Volts
Peak RF Plate Voltage		
Synchronizing Level	□1260	Volts
Pedestal Level	□955	Volts
DC Plate Current		
Synchronizing Level	□0.967	Amperes
Pedestal Level	□0.680	Amperes

TECHNICAL INFORMATION (CONT'D)

DC Grid Current		
Synchronizing Level	□0.180	Amperes
Pedestal Level	□0.105	Amperes
Driving Power at Tube, approximate		
Synchronizing Level	□223	Watts
Pedestal Level	□183	Watts
Power Output, approximate		
Synchronizing Level‡	□1125	Watts
Pedestal Level‡	□662	Watts

PLATE-MODULATED RADIO-FREQUENCY POWER AMPLIFIER—CLASS C TELEPHONY

Carrier Conditions per Tube for use with a Maximum Modulation Factor of 1.0

Maximum Ratings, Absolute Values

DC Plate Voltage	⊕3200 Max	Volts
DC Grid Voltage	⊕−250 Max	Volts
DC Plate Current	⊕0.83 Max	Amperes
DC Grid Current	⊕0.250 Max	Amperes
Plate Input	2100 Max	Watts
Plate Dissipation	800 Max	Watts

Typical Operation	Grounded-Cathode Circuit	Grounded-Grid Circuit	
DC Plate Voltage	⊕2800	⊕2800	Volts
DC Grid Voltage	⊕−150	⊕−150	Volts
Peak RF Grid Voltage	⊕332	⊕332	Volts
Peak RF Plate Voltage	□2100	□2100	Volts
DC Plate Current	⊕0.60	⊕0.60	Amperes
DC Grid Current, approximate	⊕0.104	⊕0.104	Amperes
Driving Power, approximate	⊕31	⊕202‡	Watts
Power Output, approximate	⊕1080	⊕1250π	Watts

RADIO-FREQUENCY POWER AMPLIFIER AND OSCILLATOR—CLASS C TELEGRAPHY

Key-Down Conditions per Tube Without Amplitude Modulation§

Maximum Ratings, Absolute Values

DC Plate Voltage	4000 Max	Volts
DC Grid-No. 1 Voltage	⊕−250 Max	Volts
DC Plate Current	1.0 Max	Amperes
DC Grid Current	⊕0.250 Max	Amperes
Plate Input	3600 Max	Watts
Plate Dissipation	1200 Max	Watts

Typical Operation	Grounded-Cathode Circuit		Grounded-Grid Circuit		
DC Plate Voltage	3000	3750	3000	3750	Volts
DC Grid-No. 1 Voltage	⊕−100	⊕−150	⊕−100	⊕−150	Volts
Peak RF Grid-No. 1 Voltage	⊕245	⊕250	⊕245	⊕250	Volts
Peak RF Plate Voltage	□2140	□2950	□2140	□2950	Volts
DC Plate Current	⊕0.98	⊕0.94	⊕0.98	⊕0.94	Amperes
DC Grid-No. 1 Current, approximate	⊕0.164	⊕0.159	⊕0.164	⊕0.159	Amperes
Driving Power, approximate	⊕56	⊕64	⊕340	⊕377	Watts
Power Output, approximate	⊕1760	⊕2370	⊕2040	⊕2690	Watts

† At crest of audio-frequency cycle with modulation factor of 1.0.
‡ Includes power transferred from driver stage.
π The carrier of the driver modulated 100 percent.
§ Modulation essentially negative may be used if the positive peak of the envelope does not exceed 115 percent of the carrier conditions.
⊕Denotes change.
□Denotes addition.

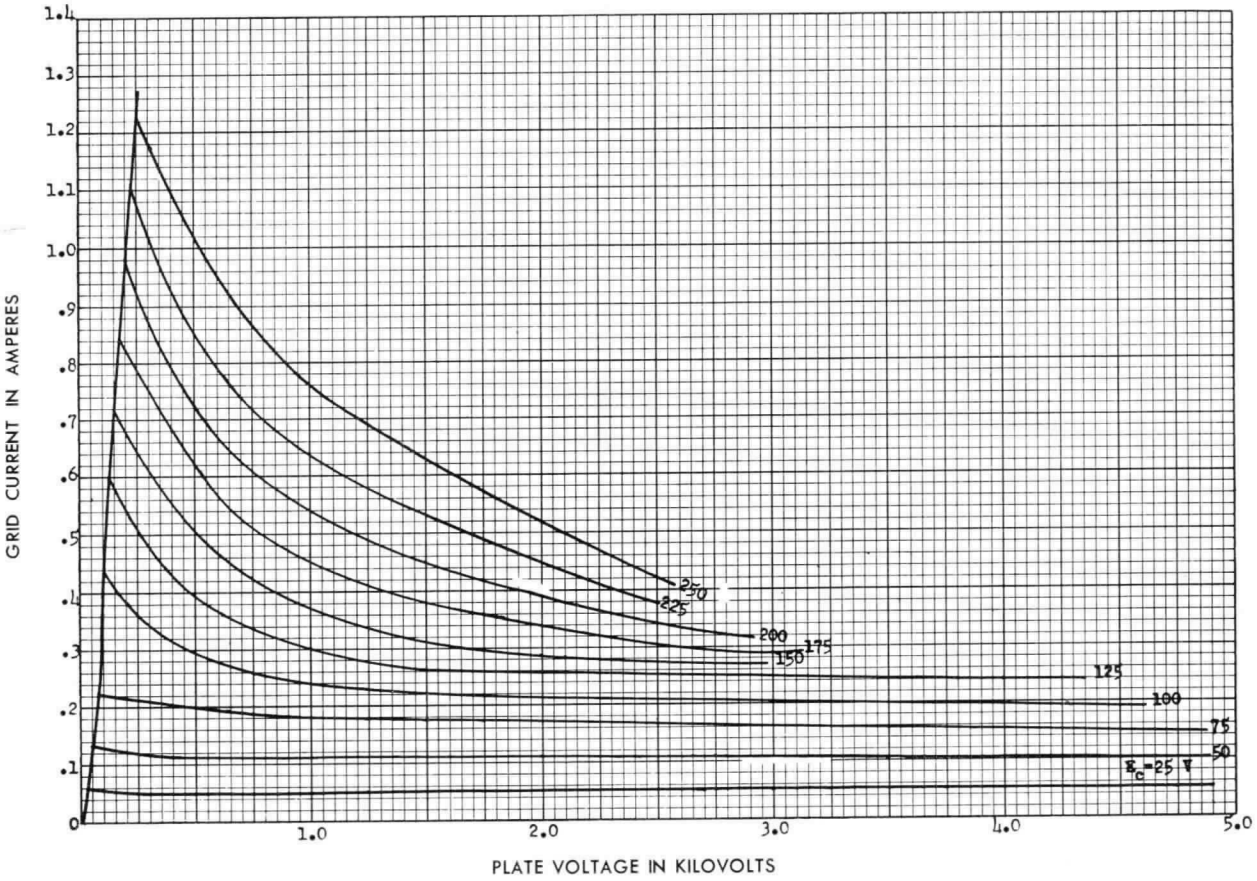

GRID CHARACTERISTICS
$E_f = 6.3$ VOLTS

K-69087-72A639

2-11-54

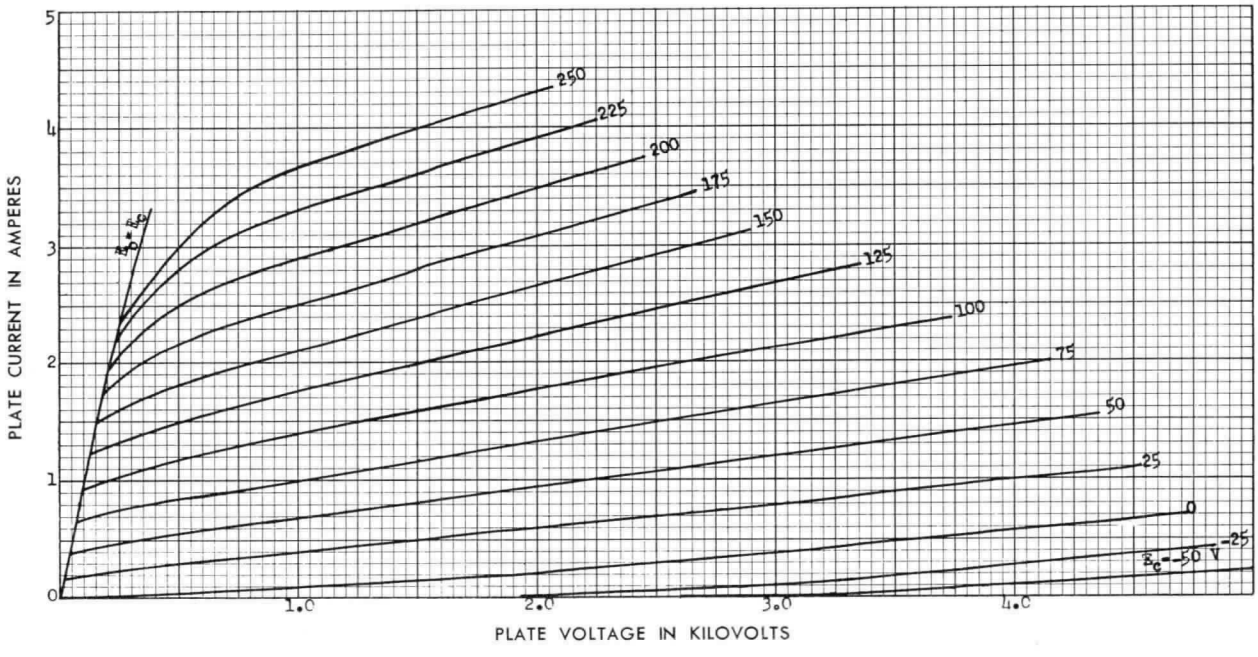

PLATE CHARACTERISTICS
$E_f = 6.3$ VOLTS

K-69087-72A640

2-11-54

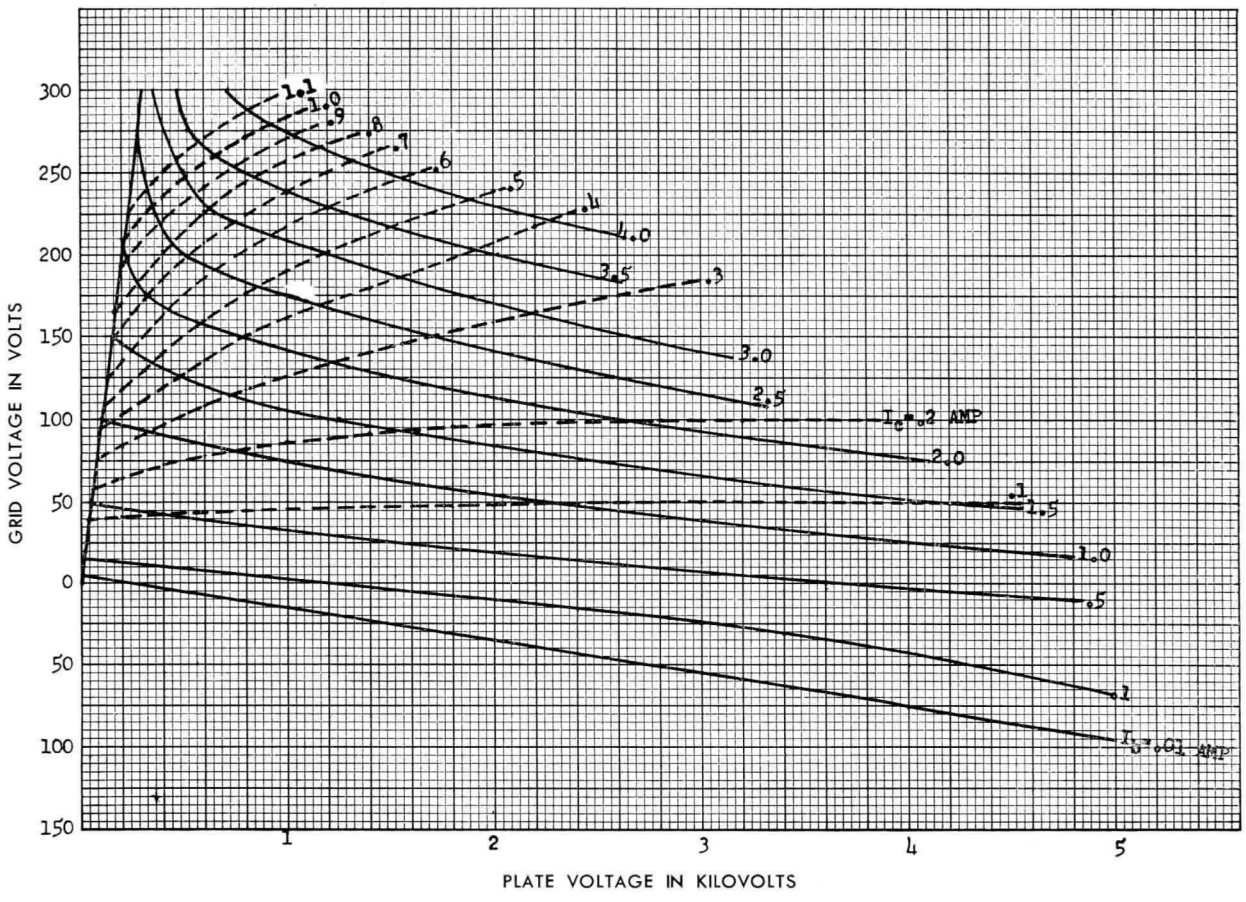

CONSTANT CURRENT CURVES
$E_f = 6.3$ VOLTS

K-69087-72A638

2-11-54

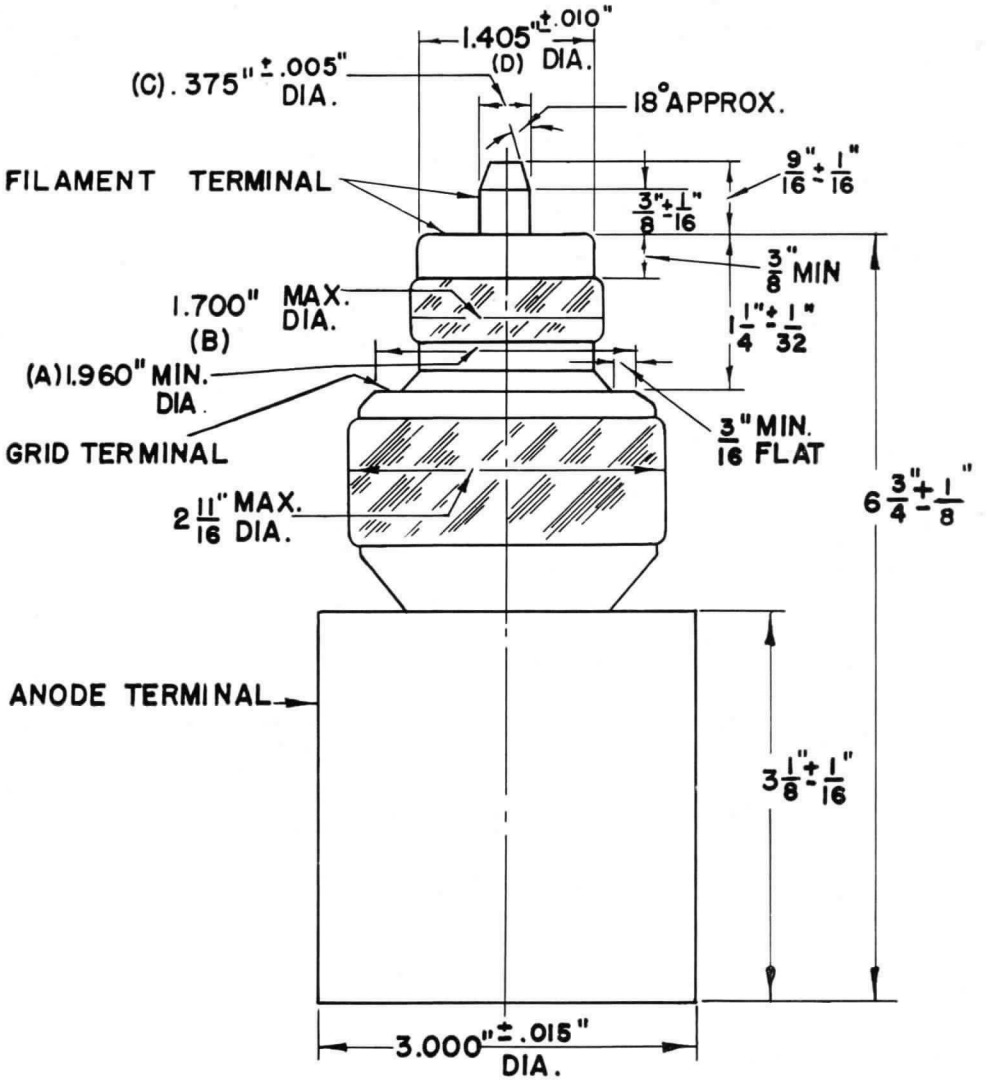

DIMENSIONS "A" AND "B" ARE MAXIMUM AND MINIMUM DIMENSIONS OF ANY POINT ON THE CIRCUMFERENCE OF THE REFERENCED PART OF THE TUBE. THESE CIRCUMFERENCES SHALL BE CONCENTRIC WITH A ℄ ESTABLISHED THRU THE CENTER OF THE BOTTOM OF THE RADIATOR AND CENTER OF THE "D" DIAMETER. DIMENSION "C" TO BE HELD TO A MAXIMUM ECCENTRICITY OF .020" WITH THIS ℄. DIMENSION "D" TO BE HELD TO A MAXIMUM ECCENTRICITY OF .050" WITH RESPECT TO CENTER LINE ESTABLISHED BY THE RADIATOR ALONE.

N-21210AZ

2-19-47

TUBE DEPARTMENT
GENERAL ELECTRIC
Schenectady 5, N. Y.

PRINTED IN U.S.A.



TRIODE

The GL-5518 is a three-electrode transmitting tube designed for use as a Class C radio-frequency amplifier. This tube is particularly well adapted to use in a grounded-grid circuit. The anode is forced-air-cooled, and capable of dissipating 4000 watts. The cathode is a pure-tungsten filament. Maximum ratings apply up to 110 megacycles.

TECHNICAL INFORMATION

GENERAL

Electrical	Minimum	Bogey	Maximum	
Filament Voltage	—	6.3	6.6	Volts
Filament Current at Bogey Voltage	227	235	243	Amperes
Filament Starting Current	—	—	355	Amperes
Filament Cold Resistance	—	0.0023	—	Ohms
Amplification Factor, $I_b = 1.0$ amp, $E_c = 50$ v	17	21	25	
Interelectrode Capacitances				
Grid-Plate	16	18.5	21	μμf
Grid-Filament	26	29	32	μμf
Plate-Filament†	—	—	0.6	μμf
Mechanical				
Mounting Position—Vertical, Anode Down				
Type of Cooling—Forced Air				
Maximum Incoming Air Temperature	—	—	45	C

GENERAL ELECTRIC

Supersedes ETX-221A

TECHNICAL INFORMATION (CONT'D)

Required Air Flow on Anode*				
Plate Dissipation—Percent of Rating	100	80	60	
Air Flow—Cubic Feet per Minute	350	250	200	
Pressure—Inches Water	1.85	1.15	0.80	
Required Air Flow on Filament and Grid Seals				
Around circumference of Filament Seals			15	Cubic Feet per Minute
Around Circumference of Grid Seal			55	Cubic Feet per Minute
Maximum Glass Temperature			175	C
Net Weight, approximate			17	Pounds

MAXIMUM RATINGS AND TYPICAL OPERATING CONDITIONS

RADIO-FREQUENCY POWER AMPLIFIER—CLASS C TELEGRAPHY

Key-down conditions per tube without amplitude modulation¶

Maximum Ratings, Absolute Values	CCS‡	
DC Plate Voltage	7,000	Max Volts
DC Grid Voltage	−850	Max Volts
DC Plate Current	1.8	Max Amperes
DC Grid Current	0.25	Max Amperes
Plate Input	12	Max Kilowatts
Plate Dissipation	4	Max Kilowatts
Typical Operation, Grounded-Filament Circuit	CCS‡	
DC Plate Voltage	6,600	Volts
DC Grid Voltage	−520	Volts
Peak RF Grid Voltage	940	Volts
DC Plate Current	1.3	Amperes
DC Grid Current, approximate	0.20	Amperes
Driving Power, approximate	180	Watts
Power Output, approximate	6.5	Kilowatts
Typical Operation, Grounded-Grid Circuit		
Same Values as for Grounded-Filament Circuit with the Following Exceptions:		
	CCS‡	
Driving Power, approximate	1,220	Watts
Power Output #, approximate	7.5	Kilowatts

† Measured with a 12-inch outer diameter and 3-inch inner diameter flat shield on grid terminal.
* Direction of air flow must be downward through radiator.
¶ Modulation essentially negative may be used if the positive peak of the envelope does not exceed 115 per cent of the carrier conditions.
‡ Continuous Commercial Service.
# This value includes power transferred from driver to output.

AVERAGE PLATE CHARACTERISTICS
$E_f = 6.3$ Volts

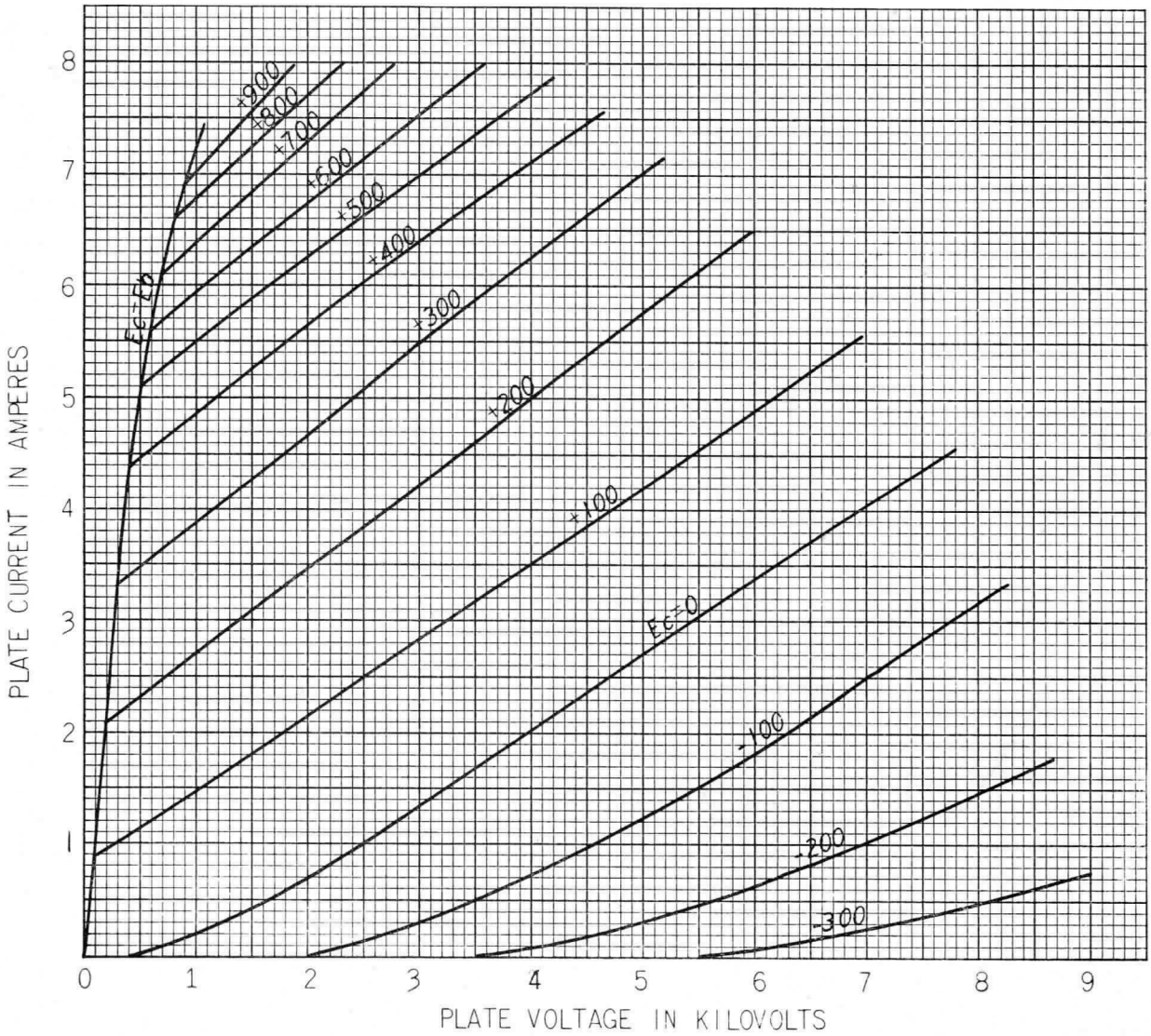

K-69087-47A33

2-19-47

CHARACTERISTICS
$E_f = 6.3$ Volts

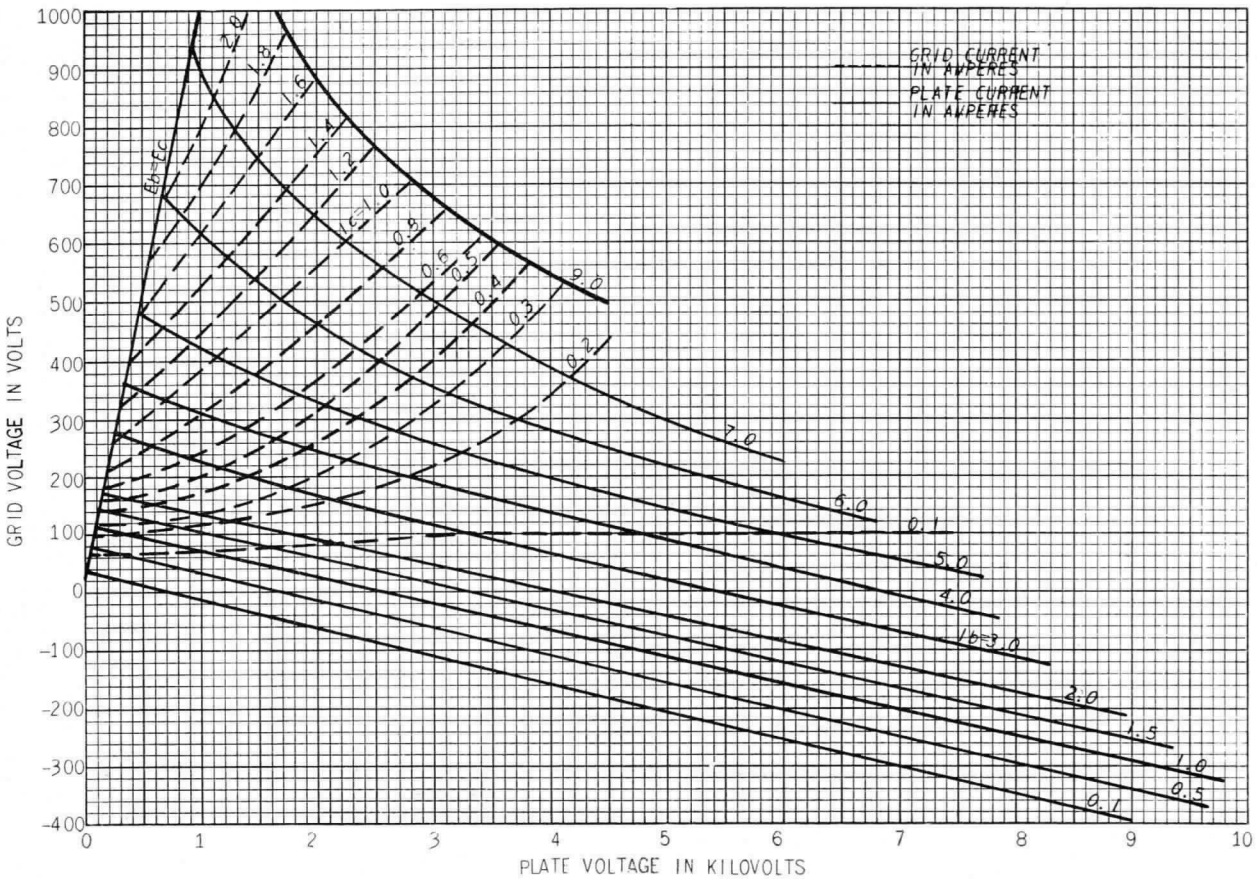

K-69087-47A34

2-19-47

AVERAGE GRID CHARACTERISTICS
$E_f = 6.3$ Volts

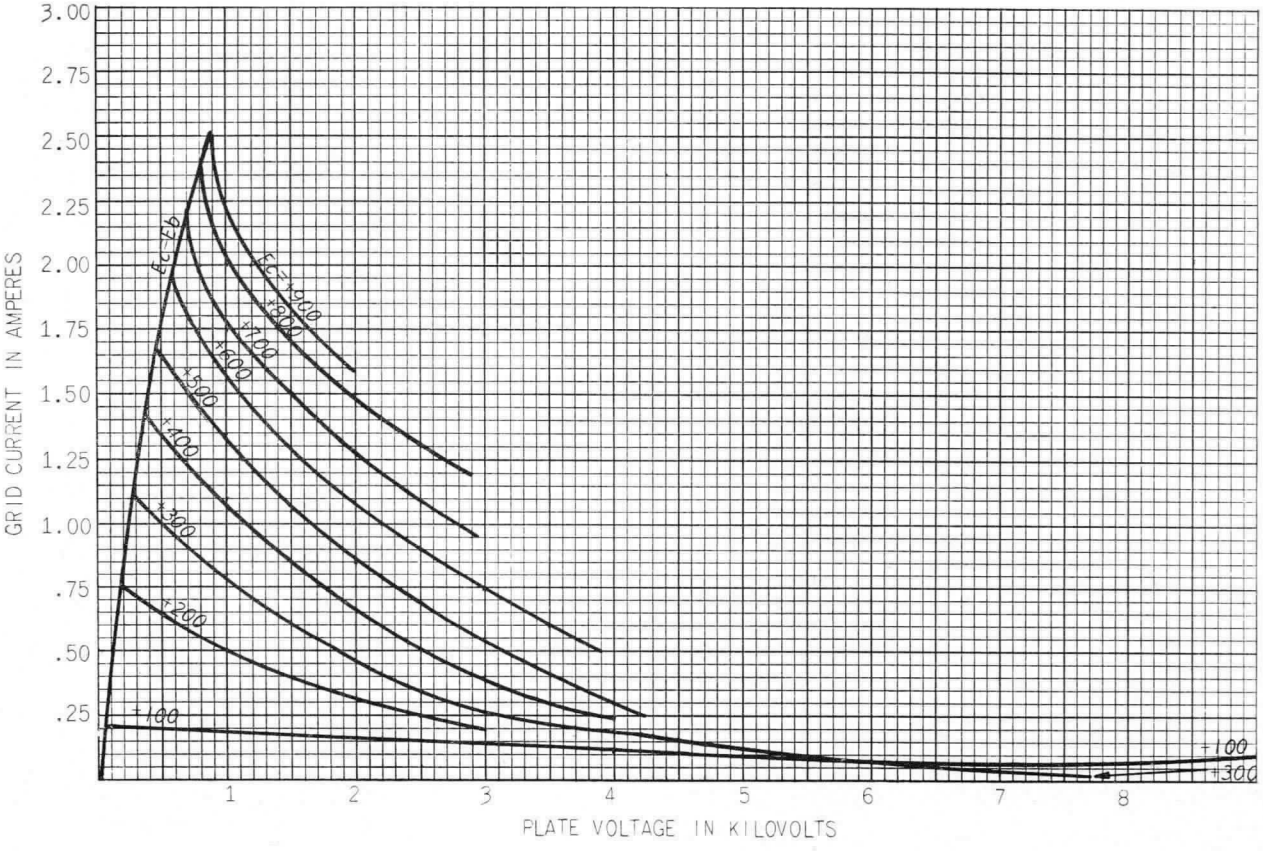

K-69087-47A32

2-19-47

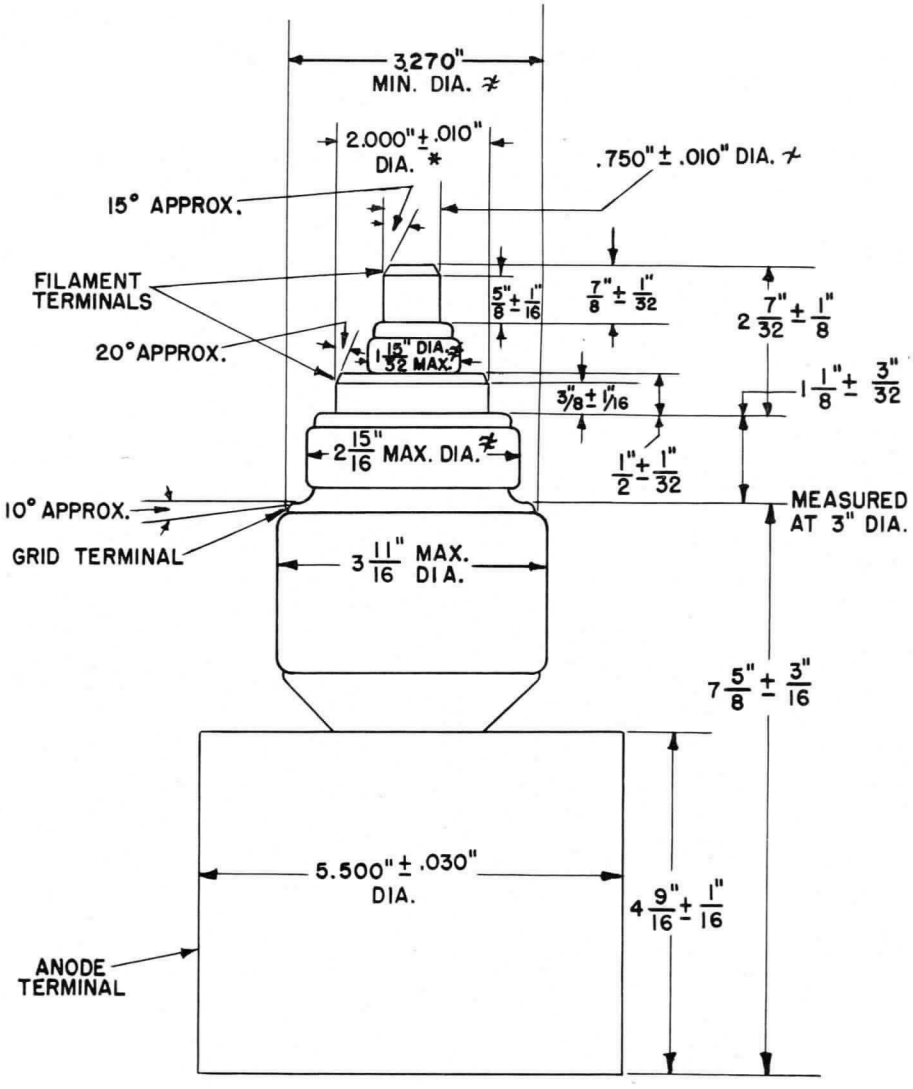

* MAXIMUM ECCENTRICITY OF LARGER-DIAMETER FILAMENT TERMINAL IS 0.060" WITH RESPECT TO THE AXIS OF RADIATOR.

≠ MAXIMUM ECCENTRICITY OF SMALLER-DIAMETER FILAMENT TERMINAL IS 0.050" WITH RESPECT TO A CENTER LINE ESTABLISHED BY THE CENTER OF THE BOTTOM OF RADIATOR AND CENTER OF LARGER-DIAMETER FILAMENT TERMINAL.

≠ MAXIMUM OR MINIMUM DIMENSIONS OF ANY POINT ON CIRCUMFERENCE OF PART. CIRCUMFERENCES CONCENTRIC WITH A CENTER LINE ESTABLISHED BY THE CENTER OF THE BOTTOM OF RADIATOR AND CENTER OF LARGER-DIAMETER FILAMENT TERMINAL.

N-20710AZ 4-27-48

ELECTRONIC COMPONENTS DIVISION
GENERAL ELECTRIC
Schenectady 5, N. Y.

PRINTED IN U.S.A.

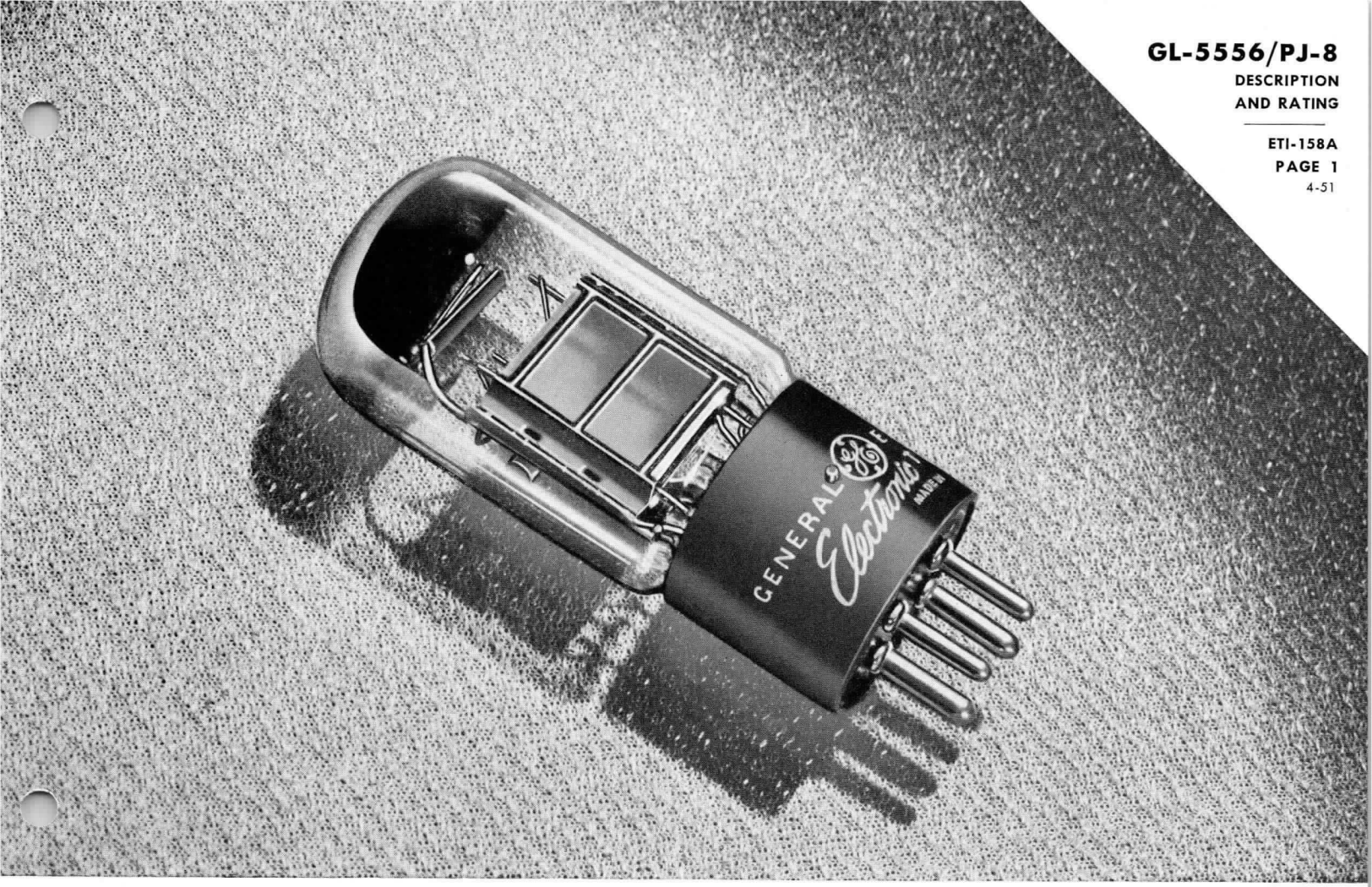

PLIOTRON

DESCRIPTION

The GL-5556/PJ-8 is a high-vacuum tube designed for use in amplification and relay applications. The low grid power and uniformity of characteristics are particularly valuable in many control applications.

♦ TECHNICAL INFORMATION

These data are for reference only. For design information refer to specifications.

GENERAL CHARACTERISTICS

Number of electrodes	3	
Electrical		
Filament voltage	4.5	volts
Filament current	1.1	amperes
Amplification factor, $E_b = 350$ v, $I_b = 19$ ma, $E_c = -20$ v, $E_f = 4.5$ v	8.5	
Grid-plate transconductance	1330	micromhos
Direct interelectrode capacitance		
♦ Grid-plate	6.7	micromicrofarads
♦ Grid-cathode	2.3	micromicrofarads
♦ Plate-cathode	2.2	micromicrofarads

♦ Revised.

GE Electronic TUBE

GENERAL ELECTRIC

Supersedes ETI-158 dated 4-45

TECHNICAL INFORMATION (CONT'D)

MAXIMUM RATINGS AND TYPICAL OPERATING CONDITIONS

CLASS A AUDIO-FREQUENCY AMPLIFIER AND MODULATOR

Maximum ratings, absolute values		
D-c plate voltage	350	volts
Plate dissipation	7.5	watts
Typical operation		
D-c plate voltage	350	volts
D-c grid voltage	−30	volts
Peak grid swing, approx	30	volts
D-c plate current	9	milliamperes
Plate resistance	8700	ohms
Load resistance	18,000	ohms
Plate power output, 5% second harmonic	0.6	watts

CLASS B RADIO-FREQUENCY POWER AMPLIFIER

Carrier conditions per tube for use with a maximum modulation factor of 1.0

Maximum ratings, absolute values		
D-c plate voltage	350	volts
D-c plate current	40	milliamperes
Plate input	14	watts
Plate dissipation	10	watts
Typical operation		
D-c plate voltage	350	volts
D-c grid voltage	−40	volts
D-c plate current	32	milliamperes
Peak r-f grid input	90	volts
†Driving power, approx	0.1	watt
Plate power output	2	watts

CLASS C RADIO-FREQUENCY POWER AMPLIFIER AND OSCILLATOR, PLATE MODULATED

Carrier conditions per tube for use with a maximum modulation factor of 1.0

Maximum ratings, absolute values		
D-c plate voltage	350	volts
D-c grid voltage	−150	volts
D-c plate current	40	milliamperes
D-c grid current, approx	10	milliamperes
Plate input	14	watts
Plate dissipation	7	watts
Typical operation		
D-c plate voltage	300	volts
D-c grid voltage	−100	volts
D-c plate current	30	milliamperes
D-c grid current, approx	2	milliamperes
Peak r-f grid input voltage, approx	140	volts
Driving power, approx	0.3	watts
Plate power output	4	watts

CLASS C RADIO-FREQUENCY POWER AMPLIFIER AND OSCILLATOR

*Key-down conditions per tube without modulation**

Maximum ratings, absolute values		
D-c plate voltage	350	volts
D-c grid voltage	−150	volts
D-c plate current	40	milliamperes
D-c grid current, approx	10	milliamperes
Plate input	14	watts
Plate dissipation	10	watts
Typical operation		
D-c plate voltage	350	volts
D-c grid voltage	−80	volts
D-c plate current	35	milliamperes
D-c grid current, approx	2	milliamperes
Peak r-f grid input voltage, approx	130	volts
Driving power, approx	0.25	watts
Plate power output, approx	6	watts

† At crest of audio-frequency cycle.
* Modulation, essentially negative, may be used if the positive peak of the audio-frequency envelope does not exceed 115 per cent of the carrier conditions.

APPLICATION NOTES

The GL-5556/PJ-8 can be operated at frequencies as high as six megacycles, and may be operated at higher frequencies provided the maximum values of plate voltage and power input are reduced as the frequency is raised (other maximum ratings are the same as shown under TECHNICAL INFORMATION). The tabulation below shows highest percentage of maximum plate voltage and power input that can be used up to thirty megacycles for the various classes of service. Special attention should be given to adequate ventilation of the bulb at these frequencies.

Frequency	6	15	30 megacycles
Max permissible percentage of max. rated plate voltage and plate input			
Class B, r-f	100	85	70 per cent
Class C, plate modulated or unmodulated	100	75	50 per cent

The normal value of grid leak, when the GL-5556/PJ-8 is used as an oscillator or r-f power amplifier (Class C), is in the neighborhood of 10,000 ohms, although this may be replaced by a suitable fixed bias. If self-bias is used, the cathode should be approximately 2000 ohms.

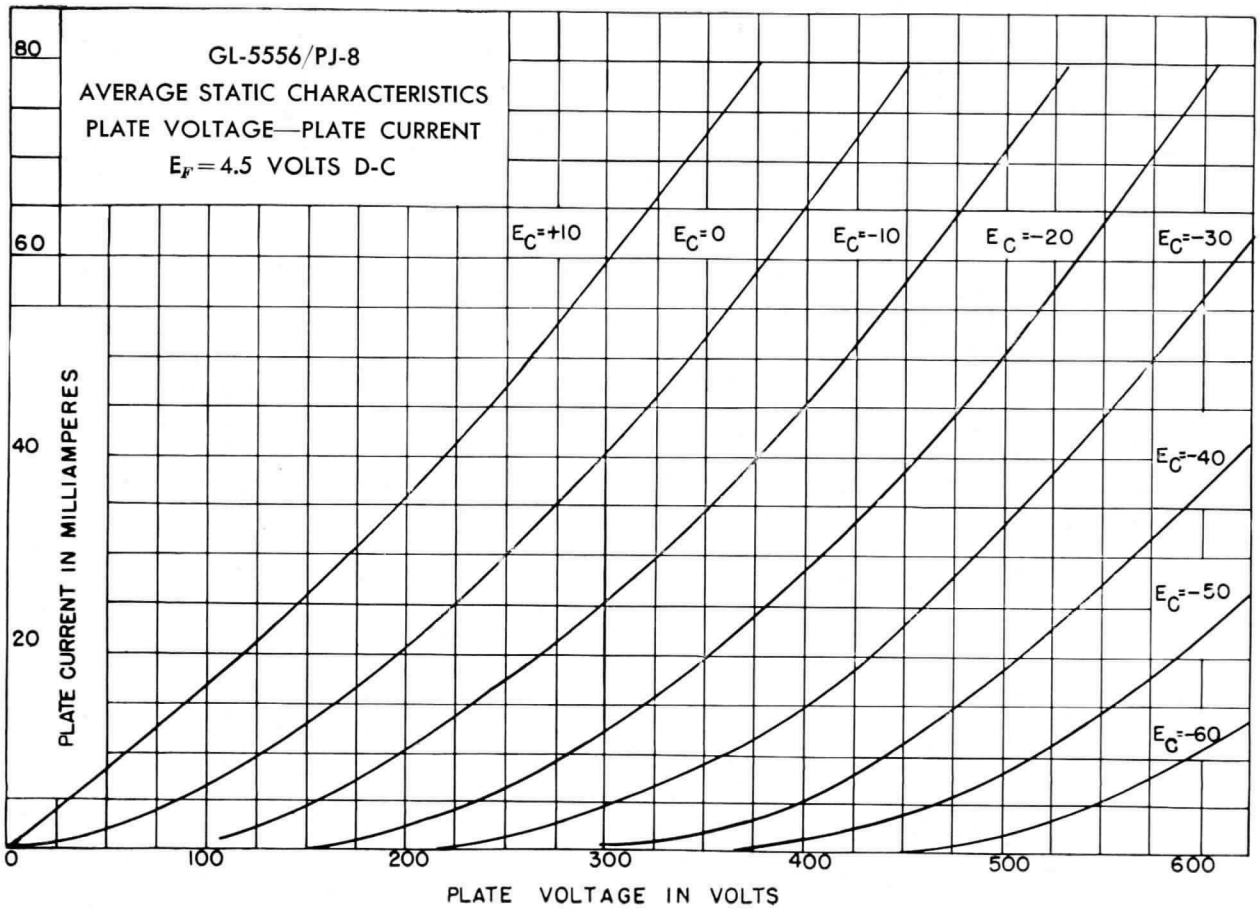

K-9033567

12-22-44

OUTLINE GL-5556/PJ-8 PLIOTRON

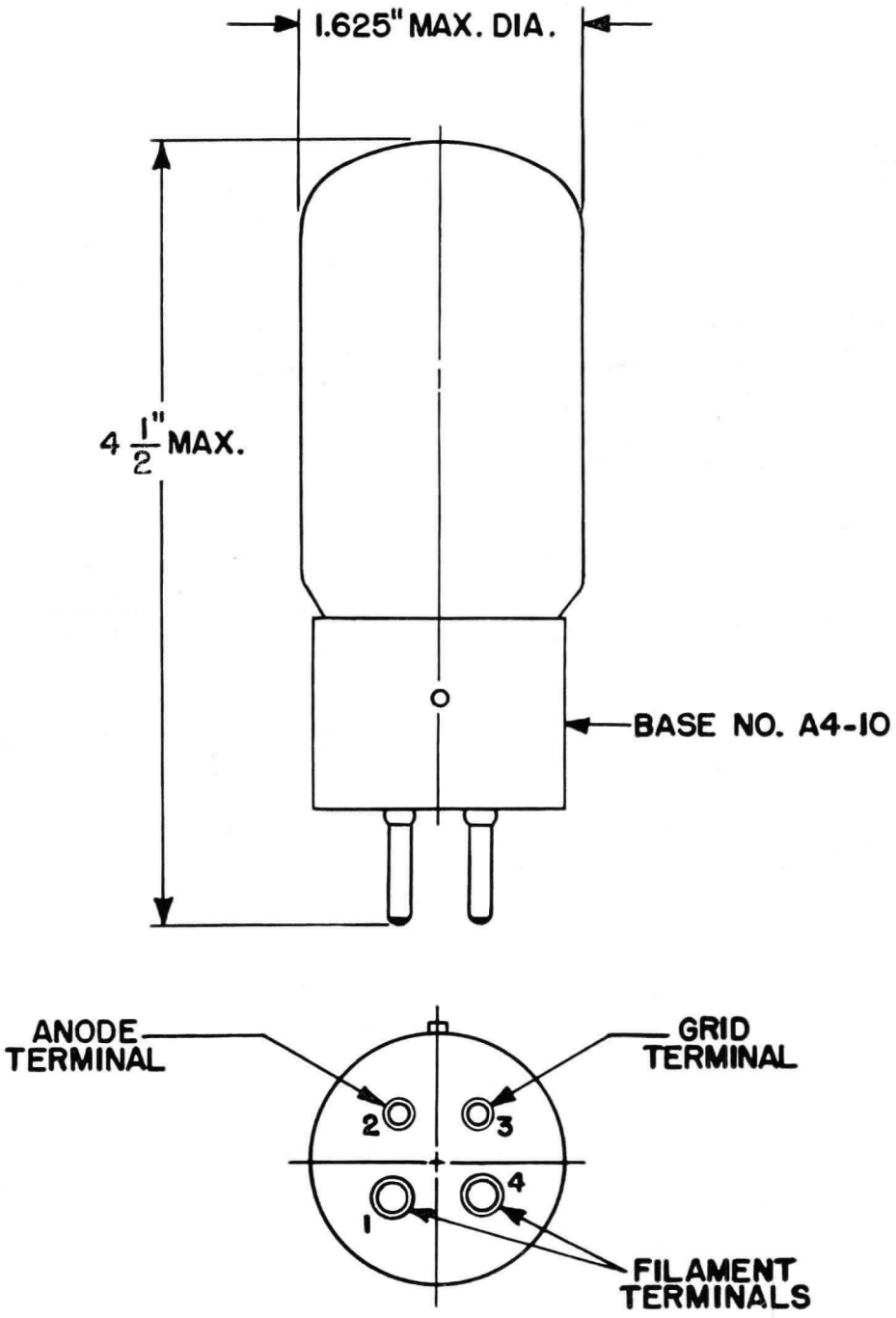

N-21216AZ
♦Revised

11-19-49

Tube Divisions, Electronics Department

GENERAL ELECTRIC

Schenectady, N. Y.

Entered



TRIODE

DESCRIPTION

The GL-5588 is a very compact three-electrode tube designed for use in ultra-high-frequency service. The anode is forced-air cooled and is capable of dissipating 200 watts. The cathode is indirectly heated. Maximum ratings apply up to 1200 megacycles.

The GL-5588 is particularly suitable for grounded-grid circuits since the design of the tube is such as effectively to isolate the plate from the cathode. This construction, a coaxial-electrode structure designed especially for use with circuits of the radially spaced, coaxial-cylinder type, also provides low-inductance large-area radio-frequency electrode terminals for insertion into the cylinders.

TECHNICAL INFORMATION

These data are for reference only. For design information refer to specifications.

GENERAL

Electrical Data

Heater Voltage	6.3 Volts
Heater Current	2.5 Amperes
Minimum Heating Time*	1.0 Minute
Amplification Factor	16
Direct Interelectrode Capacitances	
Grid-Plate	6.0 uuf
Grid-Cathode	13 uuf
Plate-Cathode (With External Shield Connected to Grid)	0.32 max uuf

TECHNICAL INFORMATION (CONT'D)

Mechanical Data

Mounting Position—Vertical, With Radiator Up or Down

Type of Cooling—Forced-Air

Maximum Incoming Air Temperature	45 max	C

Air Flow

Plate Dissipation—Per Cent of Rating	100	
Air Flow—Cubic Feet Per Minute	10	
Pressure—Inches Water	0.5	

The specified air flow should be delivered by a blower through the radiator toward the bulb and onto the grid terminal before and during the application of any voltages. Operation of tube at less than maximum rated dissipation will require less cooling as shown by curve of cooling requirements.

Radiator Temperature	180 max	C
Grid-Terminal Temperature	140 max	C

MAXIMUM RATINGS AND TYPICAL OPERATING CONDITIONS

PLATE-MODULATED RADIO-FREQUENCY POWER AMPLIFIER—CLASS C TELEPHONY

Carrier conditions per tube for use with a maximum modulation factor of 1.0

Maximum Ratings, Absolute Values

D-c Plate Voltage	800 max	Volts
D-c Grid Voltage	−200 max	Volts
D-c Plate Current	250 max	Milliamperes
D-c Grid Current	80 max	Milliamperes
Plate Input	170 max	Watts
Plate Dissipation	130 max	Watts

Typical Operation in Grounded-Grid Circuit at 1000 Megacycles

Heater Voltage*	5	Volts
D-c Plate Voltage	650	Volts
D-c Grid Voltage	−70	Volts
D-c Plate Current	250	Milliamperes
D-c Grid Current, approximate	30	Milliamperes
Driving Power (Required by tube and input circuit)†	32	Watts
Power Output, approximate	65	Watts

RADIO-FREQUENCY POWER AMPLIFIER AND OSCILLATOR—CLASS C TELEGRAPHY

Key-down conditions per tube without amplitude modulation¶

Maximum Ratings, Absolute Values

D-c Plate Voltage	1000 max	Volts
D-c Grid Voltage	−200 max	Volts
D-c Plate Current	300 max	Milliamperes
D-c Grid Current	100 max	Milliamperes
Plate Input	250 max	Watts
Plate Dissipation	200 max	Watts

Typical Operation as Grounded-Grid Amplifier at 1000 Megacycles

Heater Voltage*	4.5	Volts
D-c Plate Voltage	835	Volts
D-c Grid Voltage	−70	Volts
D-c Plate Current	300	Milliamperes
D-c Grid Current, approximate	40	Milliamperes
Driving Power (Required by tube and input circuit)‡	32	Watts
Power Output, approximate	100	Watts

Typical Operation as Grounded-Grid Oscillator at 1000 Megacycles

Heater Voltage*	3	Volts
D-c Plate Voltage	835	Volts
D-c Grid Voltage	−70	Volts
From Cathode-Bias Resistor of	205	Ohms
D-c Plate Current	300	Milliamperes
D-c Grid Current, approximate	40	Milliamperes
Power Output, approximate	75	Watts

* Rated heater voltage must be applied for a minimum time of 1 minute before voltages are applied to the other electrodes. Heater voltage may then be reduced to the indicated typical operating value.

† Approximate. A portion of this power appears in the load circuit. In grounded-grid plate-modulated class C r-f power amplifier service, the GL-5588 can be modulated 100 per cent if the r-f driver stage is also modulated 100 per cent simultaneously. Care should be taken to insure that the driver-modulation and the amplifier-modulation voltages are exactly in phase.

‡ Approximate. A portion of this power appears in the load circuit.

¶ Modulation essentially negative may be used if the positive peak of the audio-frequency envelope does not exceed 115 per cent of the carrier conditions.

TECHNICAL INFORMATION (CONT'D)

Maximum ratings apply up to 1200 megacycles. The tube may be operated at higher frequencies provided the maximum values of plate voltage and power input are reduced according to the tabulation below (other maximum ratings are the same as shown above.) Special attention should be given to adequate ventilation of the bulb at these frequencies.

Frequency	1200	1350	1500	2000	Megacycles
Percentage of Maximum Rated Plate Voltage and Plate Input					
Class C Telephony	100	90	80	80	Per Cent
Class C Telegraphy	100	90	80	80	Per Cent

♦ GL-5588
TYPICAL CHARACTERISTICS
$E_f = 6.3$ VOLTS

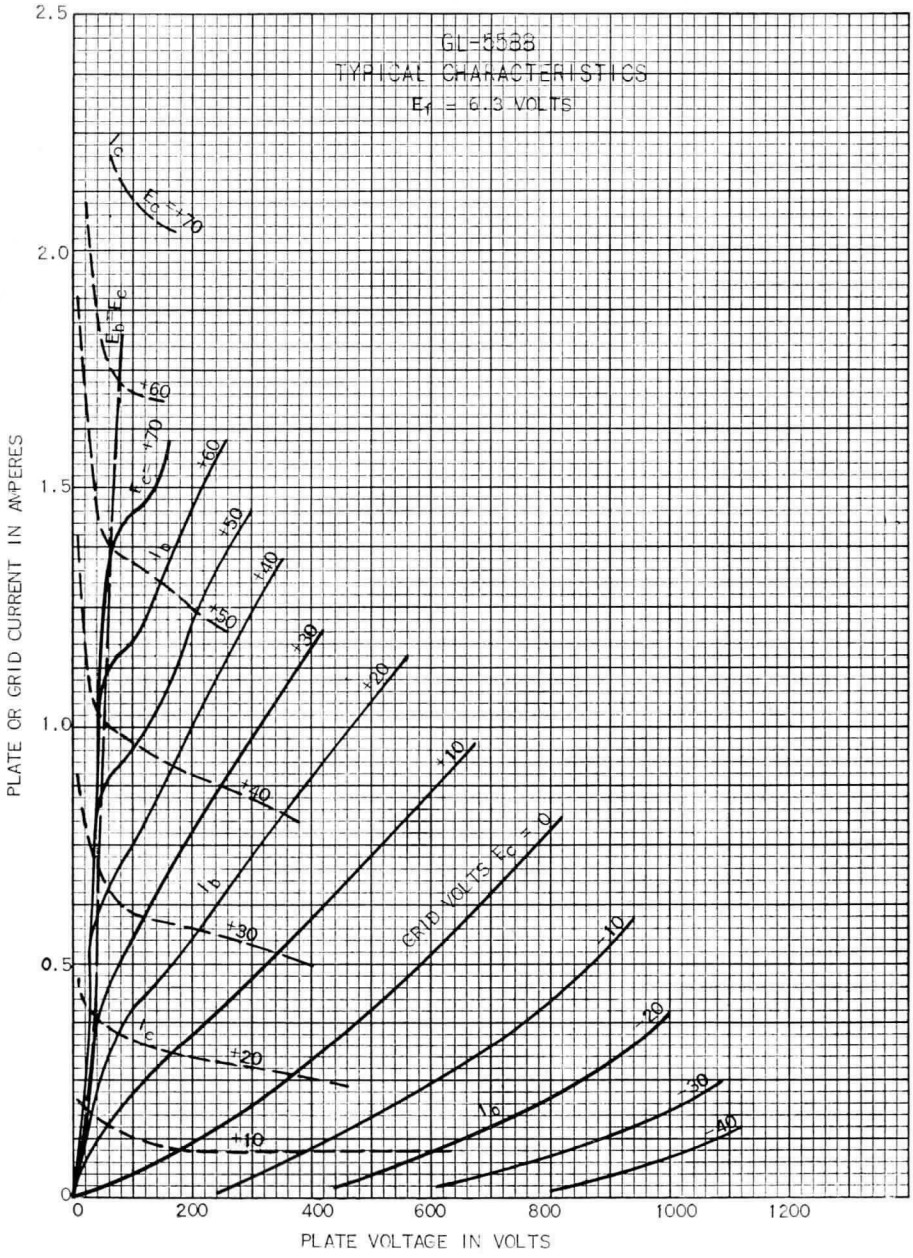

K-69087-72A277
♦Revised drawing

11-9-49

GL-5588
RECOMMENDED HEATER VOLTAGES
FOR OPERATION IN AMPLIFIER SERVICE

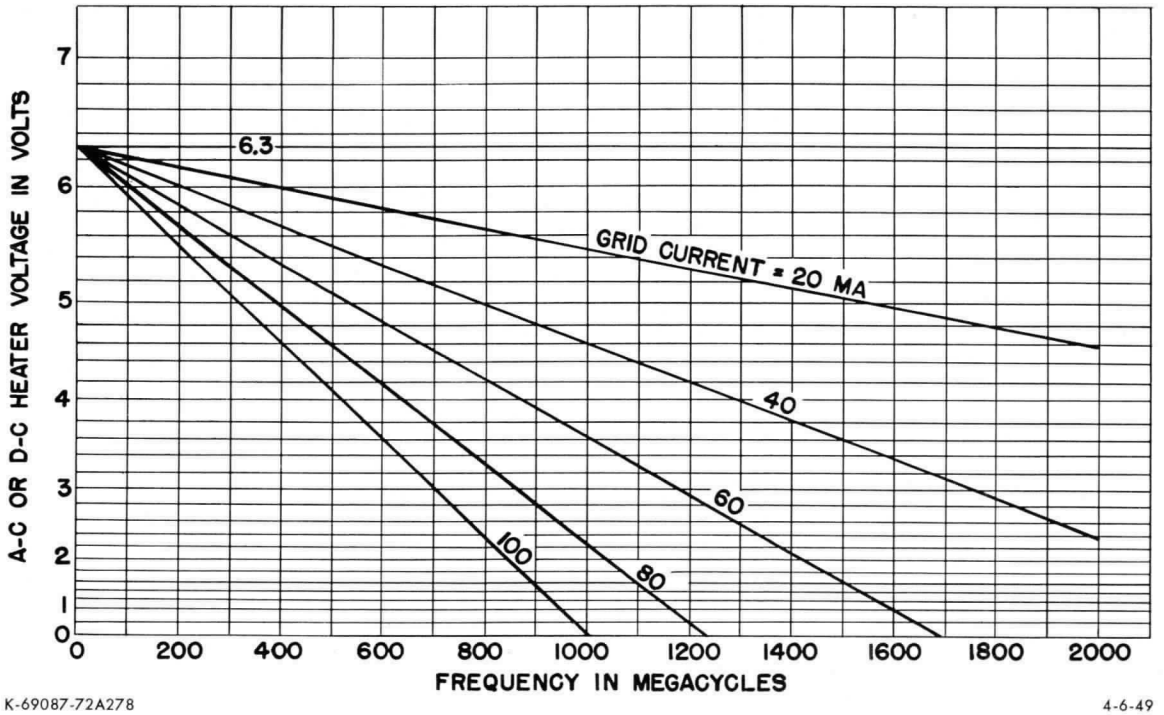

K-69087-72A278

4-6-49

GL-5588
RECOMMENDED HEATER VOLTAGES
FOR OPERATION IN OSCILLATOR SERVICE

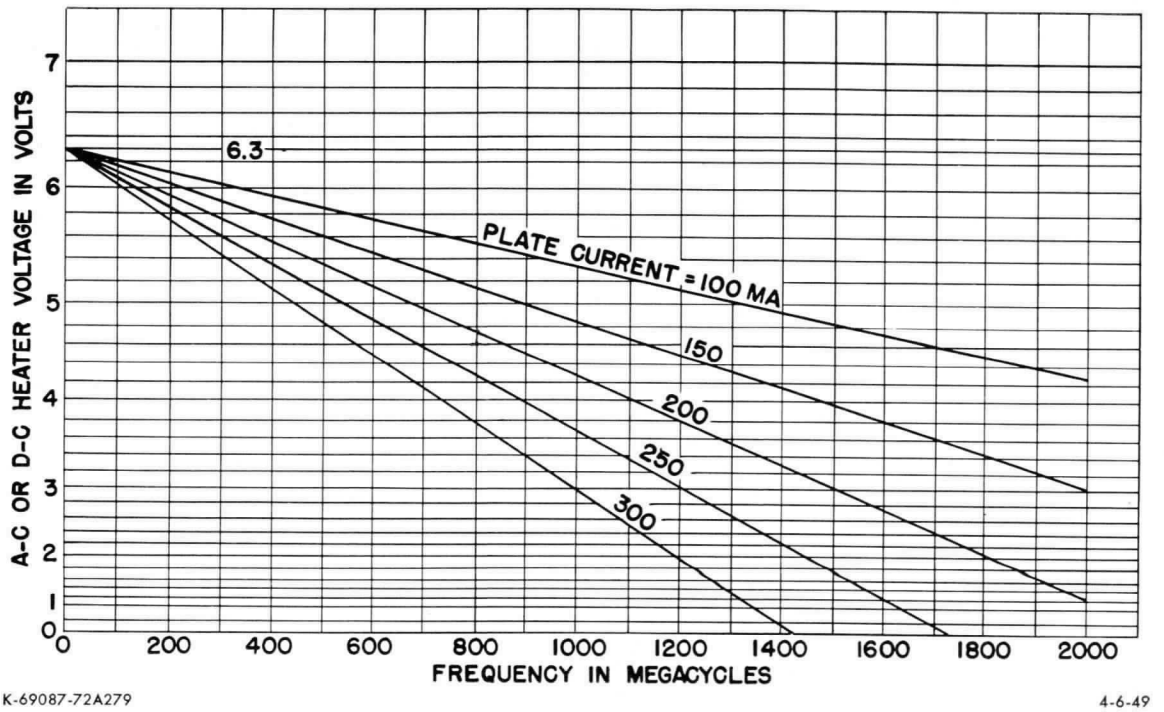

K-69087-72A279

4-6-49

GL-5588
AIR-FLOW REQUIREMENTS
MAXIMUM RADIATOR TEMPERATURE = 180 C
RADIATOR TEMPERATURE RISE = 135 C

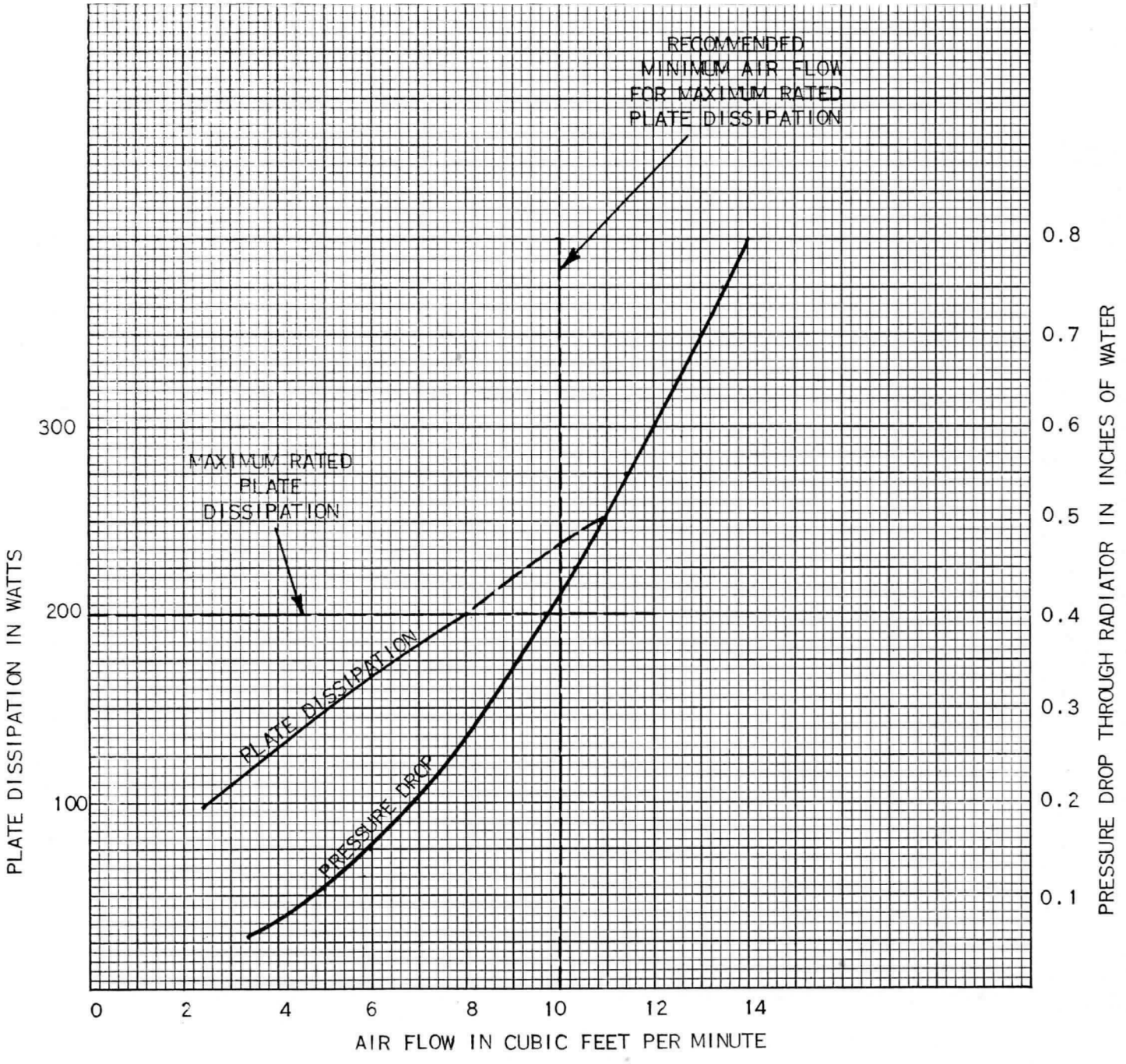

K-69087-72A276

4-6-49

GL-5588
MOUNTING ARRANGEMENT FOR USE
WITH COAXIAL-LINE OR CAVITY CIRCUITS

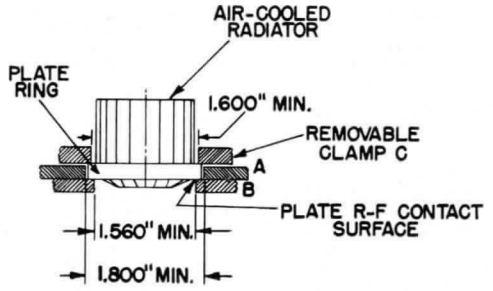

N-15148AZ 4-6-49

OUTLINE
TRANSMITTING TUBE
GL-5588

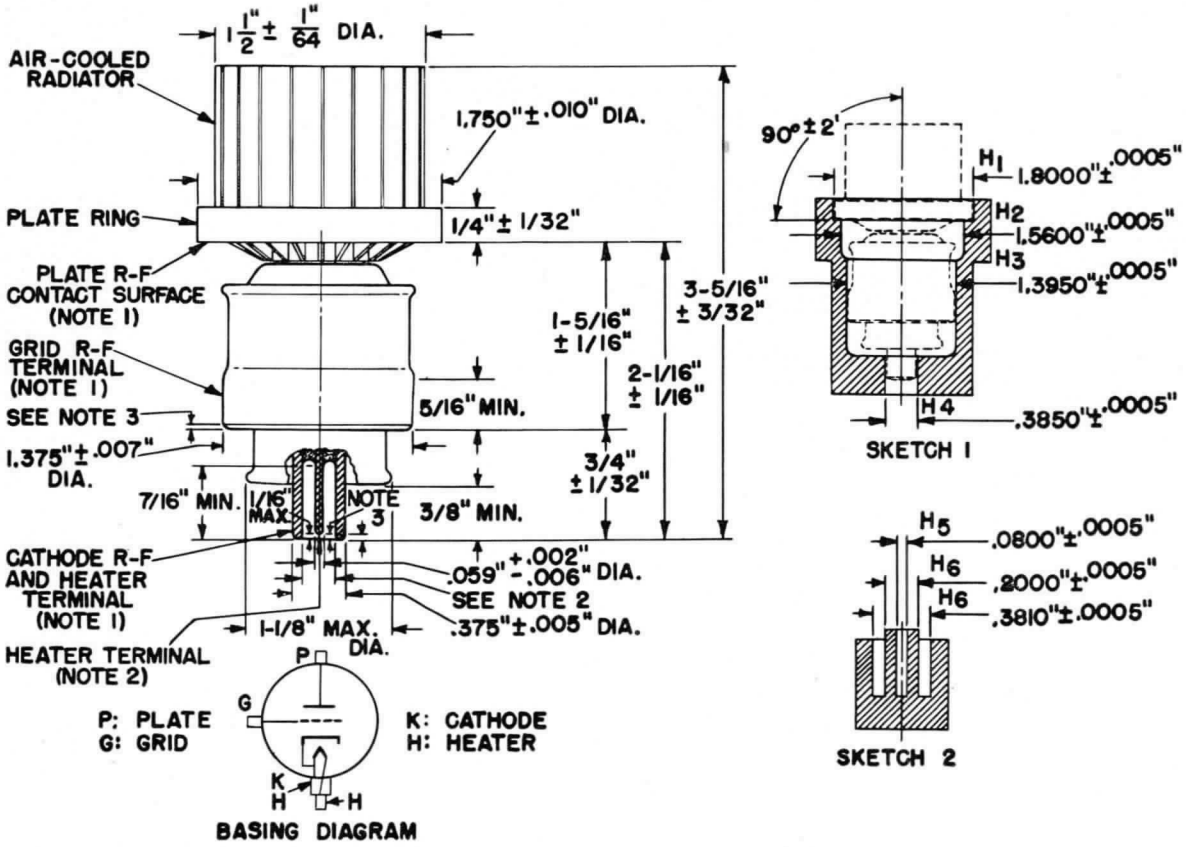

NOTE 1: With cylindrical surfaces of its grid and cathode terminals clean, smooth, and free from burrs, the tube will enter a gage as shown in Sketch 1. The four cylindrical holes H , H_2, H_3 and H_4 have axes coincident within 0.0005 in., lengths determined from the outline drawing, and successively smaller diameters as shown in the sketch. The plate ring will be entirely engaged by hole H, and the r-f contact surface of the plate ring will seat on the shoulder between holes H_1 and H_2. The plane surface of this shoulder is 90° ±2′ to the axes of the holes. Seating is determined by failure of a 0.005 in. thickness gage, 1/8 in. wide, to enter more than 1/16 in. between the shoulder surface and the r-f contact surface. With the tube properly seated as described above, the grid terminal will be entirely engaged by hole H_3, and the cathode terminal will be engaged by Hole H_4 to a depth of at least 1/4 in.

NOTE 2: Concentricity of the heater terminal with respect to the cathode terminal is determined by a gage as shown in Sketch 2. The cylindrical hole H_5 and the annular hole H_6 have axes coincident within 0.0005 in., lengths determined from the outline drawing, and diameters as shown in the sketch. The cathode terminal and the heater terminal will enter this gage to a depth of 3/8 in.

NOTE 3: Rounded or beveled not to exeed 1/16 in.

N-15147A7 4-6-49

Tube Divisions, Electronics Department

GENERAL ELECTRIC

Schenectady, N. Y.

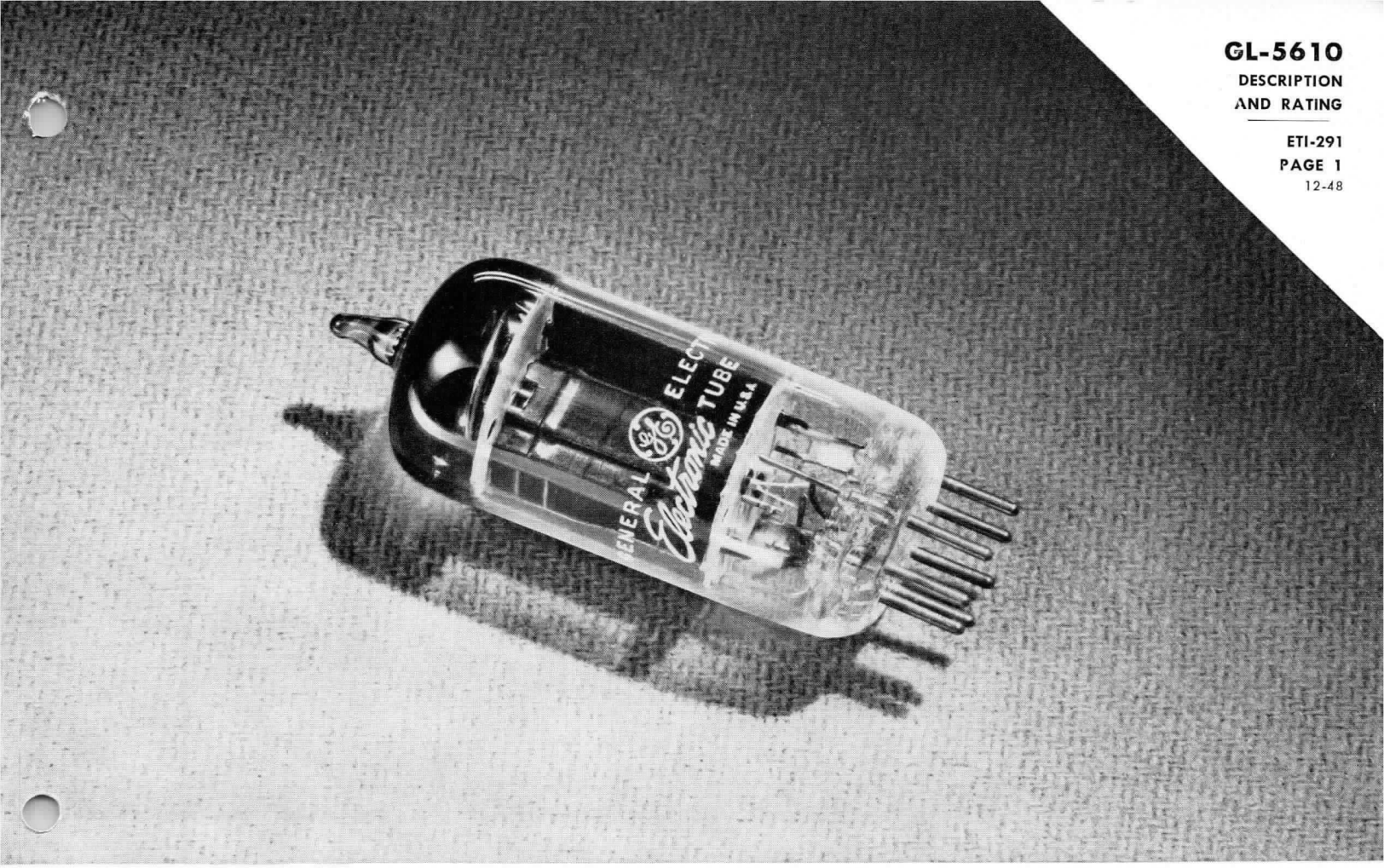

PLIOTRON

DESCRIPTION

The GL-5610 is a 7-pin miniature triode amplifier for industrial application where small size is a factor.

TECHNICAL INFORMATION

These data are for reference only. For design information refer to specifications.

GENERAL CHARACTERISTICS

Number of electrodes	4	
Electrical		
Cathode—coated unipotential		
Heater voltage	6.3	volts
Heater current	0.15	ampere
Mechanical		
Mounting position—any		
Envelope—T-5½ glass		
Base—Miniature glass button 7-pin		
Maximum diameter	¾	inch
Maximum over-all length	2⅛	inches
Maximum seated height	1⅞	inches

GE Electronic TUBE

GENERAL ELECTRIC

TECHNICAL INFORMATION (CONT'D)

MAXIMUM RATINGS AND TYPICAL OPERATING CONDITIONS

Maximum ratings, design center		
Plate voltage	300	volts
A-c heater-cathode voltage	117	volts
Plate dissipation	3.0	watts
Typical operation		
Class A amplifier		
Heater voltage	6.3	volts
Plate voltage	90	volts
Grid bias voltage	−1.5	volts
Grid voltage for plate current = 10 microamperes, approximate	−15	volts
Plate current	17	milliamperes
Transconductance	4000	micromhos
Plate resistance	3500	ohms
Amplification factor	14	

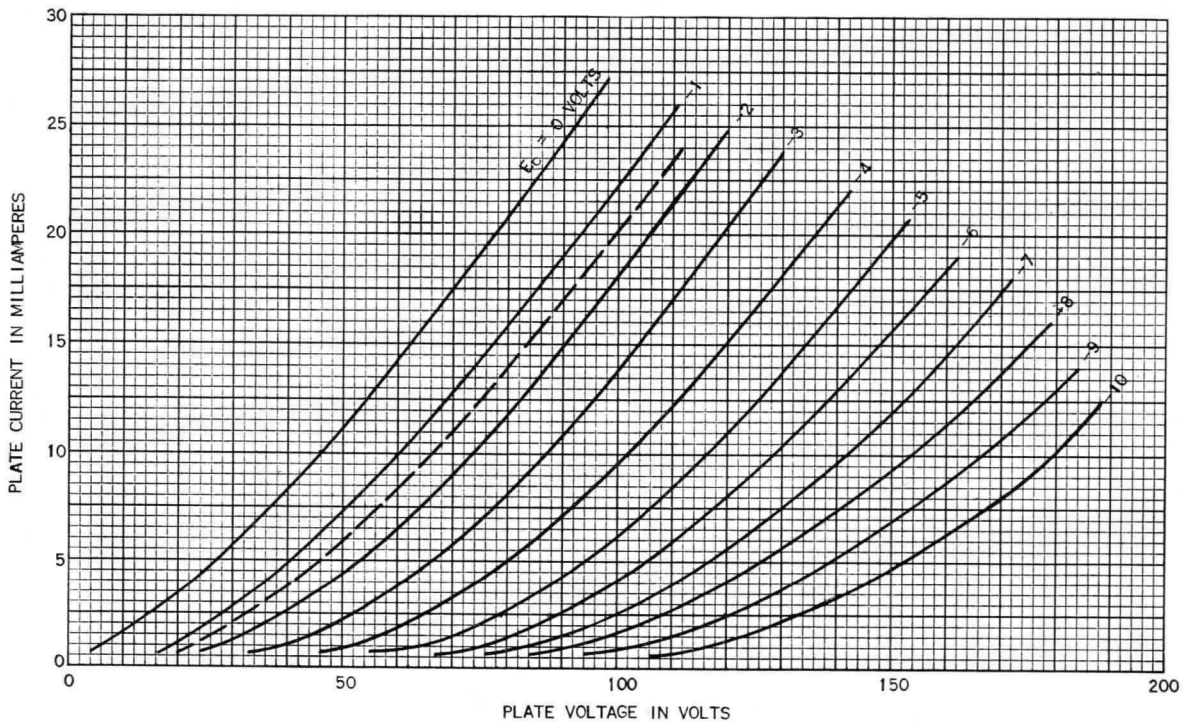

K-69087-72A247

7-22-48

GL-5610
PLATE CHARACTERISTICS

TERMINAL CONNECTIONS

PIN 1—PLATE
PIN 2—CATHODE
PIN 3—HEATER
PIN 4—HEATER
PIN 5—PLATE
PIN 6—GRID
PIN 7—NO CONNECTION

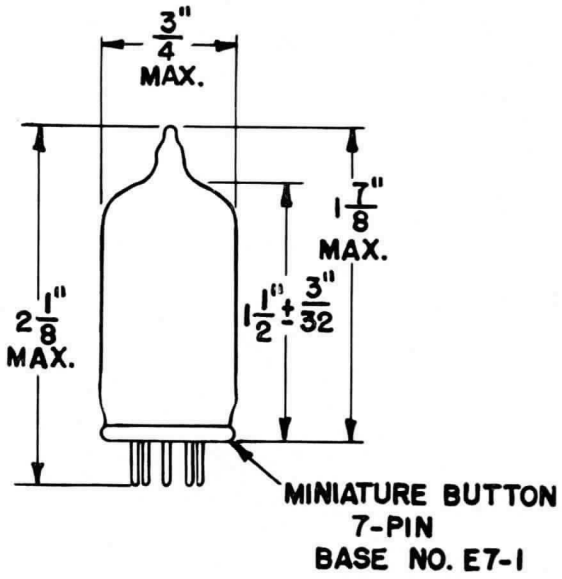

BASING DIAGRAM

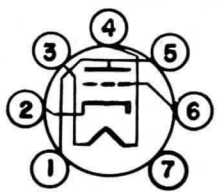

6CG

OUTLINE
PLIOTRON GL-5610

N-15123AZ

6-7-48

Electronics Department
GENERAL ELECTRIC
Schenectady, N. Y.

12-48 (9M)
Filing No. 8850



PLIOTRON

DESCRIPTION

The GL-5691 is a high-mu twin triode, high-vacuum tube for industrial use. It is designed particularly for use as a voltage amplifier in industrial applications where uniformity and stability of characteristic and resistance to shock and vibration are required. In addition to these features the 5691 has its heaters for the two triode units connected in series with the result that failure of either heater in bridge circuits makes both units inoperative.

TECHNICAL INFORMATION

These data are for reference only. For design information refer to specifications.

GENERAL

Electrical Data

Cathode—Indirectly heated				
Heater voltage (A-C or D-C)			6.3 ±5%*	volts
Heater current			0.6	ampere
Direct interelectrode capacitances with no external shield				
	Minimum	**Average**	**Maximum**	
Triode Unit No. 1—				
Grid to plate	3.1	3.6	4.1	uuf
Grid to cathode	1.9	2.4	2.9	uuf
Plate to cathode	1.8	2.3	2.8	uuf
Triode Unit No. 2—				
Grid to plate	3.1	3.6	4.1	uuf
Grid to cathode	2.2	2.7	3.2	uuf
Plate to cathode	2.1	2.6	3.1	uuf
Plate of Triode Unit No. 1 to Plate of Triode Unit No. 2—	2.7	3.2	3.7	uuf

GE Electronic TUBE

GENERAL ELECTRIC

TECHNICAL INFORMATION (CONT'D)

Mechanical Data

Mounting position—any
Net weight, approximate ..... 3 ounces

MAXIMUM RATINGS AND TYPICAL OPERATING CONDITIONS

Values are for each Unit

Maximum ratings, absolute values

D-c plate voltage	275 max	volts
D-c plate supply voltage	330 max	volts
Grid voltage		
Negative bias range	−1** min to −100 max	volts
Negative peak value	−200 max	volts
D-c grid current	2 max	milliamperes
D-c cathode current	10 max	milliamperes
Plate dissipation	1 max	watt
Peak heater—Cathode voltage		
Heater negative with respect to cathode	100 max	volts
Heater positive with respect to cathode	100 max	volts
Ambient temperature range	55− to +90	C

Maximum circuit value (for any operating condition)

Grid-circuit resistance	2 max	megohms

Characteristics and range values

Heater voltage	6.3	volts
Plate voltage	250	volts
Grid voltage	−2	volts

	Minimum	Average	Maximum	
Heater current	0.55	0.6	0.65	amperes
Heater-cathode current with heater-cathode voltage of ±100 volts	....	.....	5	microamperes
Plate current	1.7	2.3	2.9	milliamperes
Plate current for grid voltage of −5.5 volts	....	.....	15	microamperes
Difference in plate current between triode units	....	.....	0.9	milliampere
Reverse grid current	....	.....	0.2	microampere
Amplification factor	60	70	80	
Plate resistance	....	44000	....	ohms
Transconductance	1300	1600	1900	micromhos

Typical operation—resistance-coupled amplifier (each triode unit)

Plate-supply voltage	90			180			300			volts
Plate load resistor	0.1	0.22	0.47	0.1	0.22	0.47	0.1	0.22	0.47	megohms
Grid resistor (of following stage)	0.22	0.47	1.0	0.22	0.47	1.0	0.22	0.47	1.0	megohms
Cathode resistor	4700	7400	14400	2600	4600	9000	2180	3970	7550	ohms
Cathode bypass capacitor***	2.1	1.3	0.7	2.8	1.6	0.9	3.1	1.8	1	uf
Blocking capacitor***	0.014	0.0065	0.0035	0.014	0.0065	0.0035	0.014	0.0065	0.0035	uf
Peak output voltage****	9	13	17	30	37	44	59	76	88	volts
Voltage gain	27†	35‡	40‡	33¶	42¶	46¶	36¶	45¶	50¶	

*May deviate ±10 per cent from rated value provided such deviation occurs for less than 2 per cent of the operating time.
**For resistance-coupled amplifier applications, the negative bias may be as low as −0.5 volt.
***The cathode by-pass capacitors and blocking capacitors have been chosen to give output voltages at 100 cycles per second (f_1) which are equal to 0.8 of the mid-frequency value. For any other value of (f_1), multiply the values of cathode by-pass and blocking capacitors by $100/f_1$.
****This peak output voltage is obtained across the grid resistor of the following stage at any frequency within the flat region of the output vs frequency curve, and is for the condition where the signal level is adequate to swiing the grid of the resistance-coupled amplifier tube to the point where its grid starts to draw current.
†At an output voltage of 3 volts rms.
‡At an output voltage of 4 volts rms.
¶At an output voltage of 5 volts rms.

GL-5691
AVERAGE CHARACTERISTICS

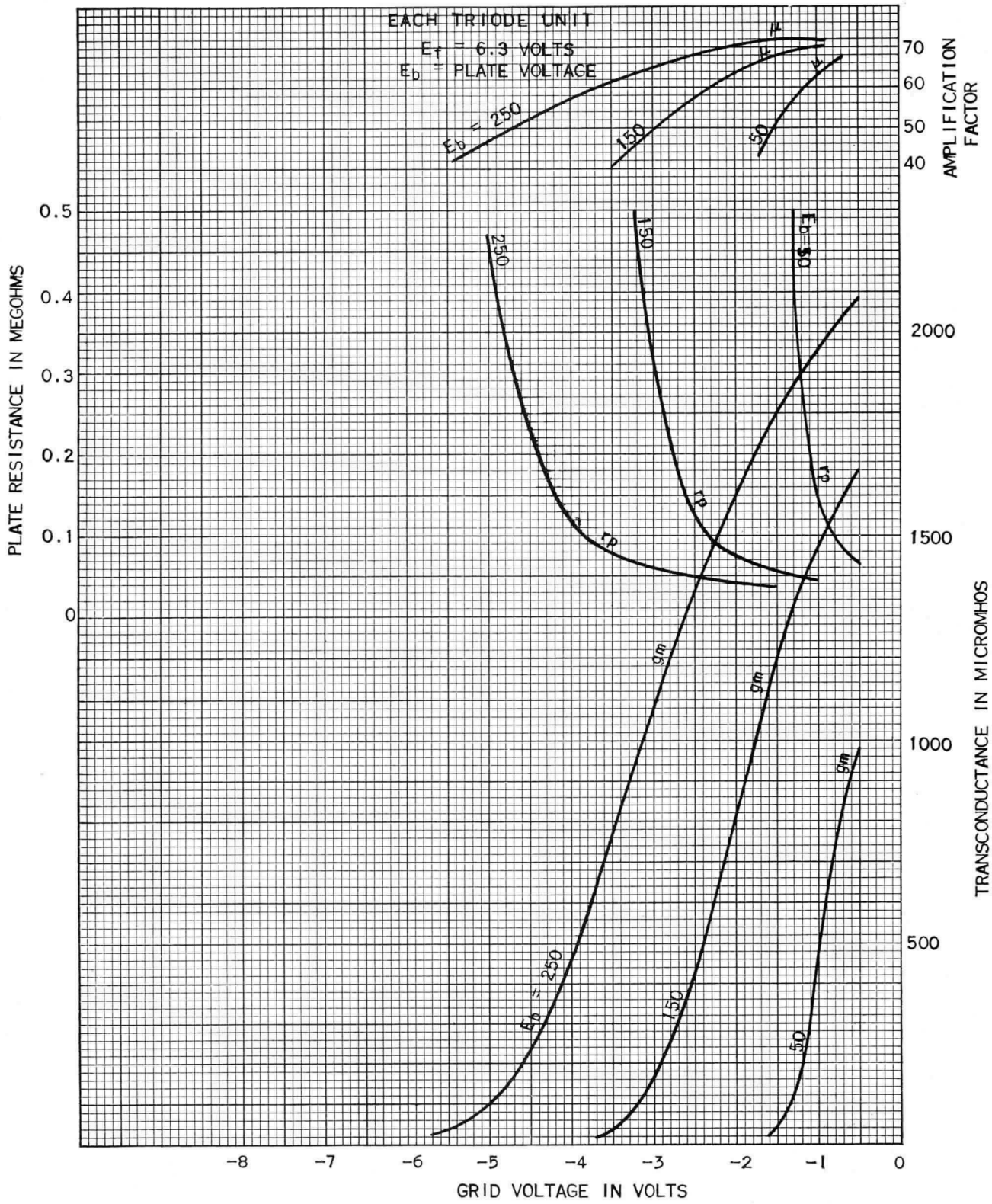

K-69087-72A226

5-17-48

GL-5691 AVERAGE PLATE CHARACTERISTICS
EACH TRIODE UNIT $E_f = 6.3$ VOLTS

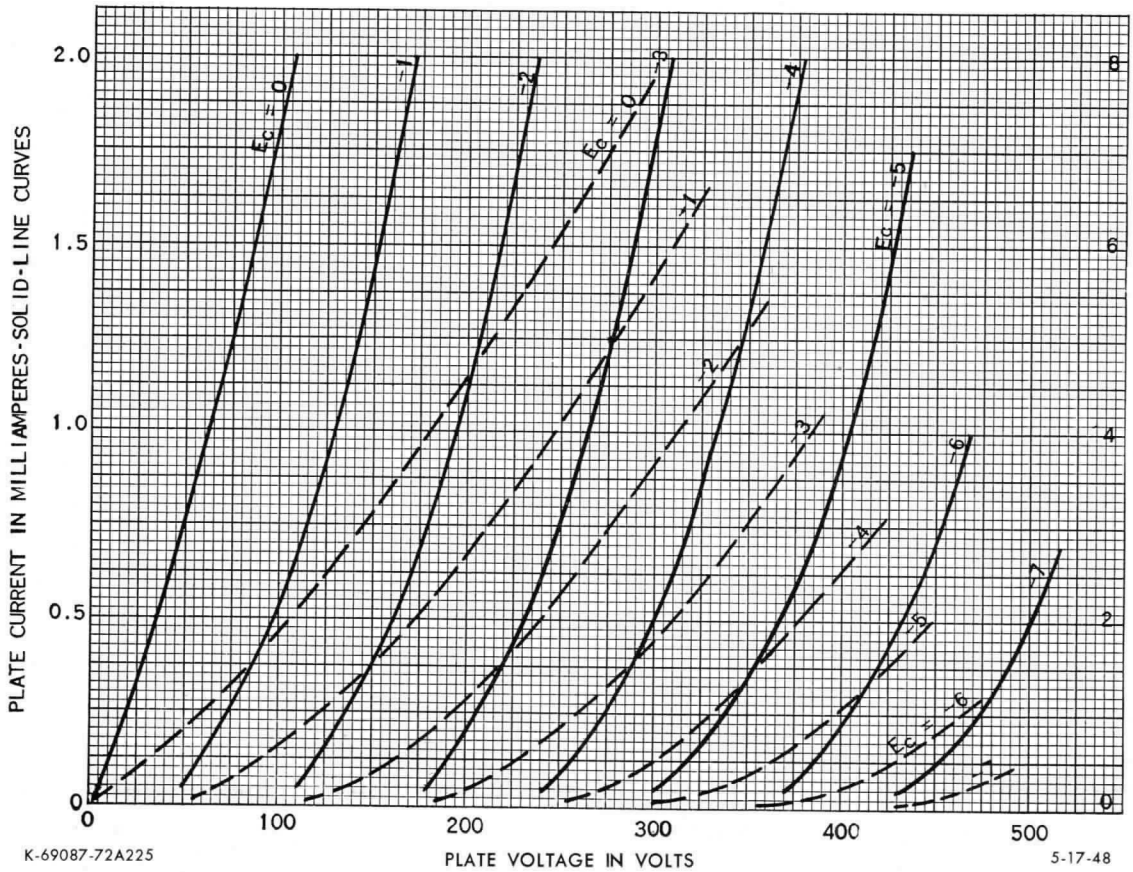

OUTLINE GL-5691 PLIOTRON

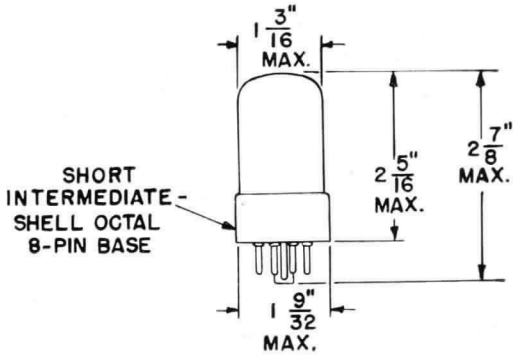

BASING DIAGRAM

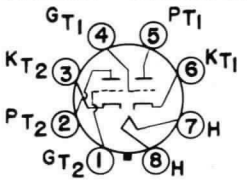

8BD

PIN 1: GRID OF TRIODE UNIT NO. 2
PIN 2: PLATE OF TRIODE UNIT NO. 2
PIN 3: CATHODE OF TRIODE UNIT NO. 2
PIN 4: GRID OF TRIODE UNIT NO. 1
PIN 5: PLATE OF TRIODE UNIT NO. 1
PIN 6: CATHODE OF TRIODE UNIT NO. 1
PIN 7: HEATER
PIN 8: HEATER

N-15120AZ 5-17-48

Electronics Department

GENERAL ELECTRIC

Schenectady, N. Y.



PLIOTRON

DESCRIPTION

The GL-5692 is a medium-mu twin triode, high-vacuum tube designed particularly for use in industrial applications as a balanced d-c amplifier, multivibrator, blocking oscillator, and resistance-coupled amplifier.

The heaters for the two triode units of the 5692 are connected in series so that failure of either heater in bridge circuits makes both units inoperative. Other features of this tube are stability and uniformity of characteristics, resistance to shock and vibration, and long life.

TECHNICAL INFORMATION

These data are for reference only. For design information refer to specifications.

GENERAL

Electrical Data

Cathode—Indirectly heated				
Heater voltage (a-c or d-c)			6.3 ± 5%*	volts
Heater current			0.6	ampere
Direct interelectrode capacitances, with no external shield				
Triode Unit No. 1—	**Minimum**	**Average**	**Maximum**	
Grid to plate	3.0	3.5	4.0	uuf
Grid to cathode	1.8	2.3	2.8	uuf
Plate to cathode	2.0	2.5	3.0	uuf
Triode Unit No. 2—				
Grid to plate	2.8	3.3	3.8	uuf
Grid to cathode	2.1	2.6	3.1	uuf
Plate to cathode	2.2	2.7	3.2	uuf
Plate of Triode Unit No. 1 to Plate of Triode Unit No. 2	2.7	3.2	3.7	uuf

GE Electronic TUBE

GENERAL ELECTRIC

TECHNICAL INFORMATION (CONT'D)

Mechanical Data

Mounting position—any

Net weight, approximate	3	ounces

MAXIMUM RATINGS AND TYPICAL OPERATING CONDITIONS

Values are for each Unit

Maximum ratings, absolute values

D-c plate voltage	275 max	volts
D-c plate supply voltage	330 max	volts
Grid voltage		
Negative bias value	−1** min to −100 max	volts
Negative peak value	−200 max	volts
D-c grid current	2 max	milliamperes
D-c cathode current	15 max	milliamperes
Plate dissipation	1.75 max	watts
Peak heater-cathode voltage		
Heater negative with respect to cathode	100 max	volts
Heater positive with respect to cathode	100 max	volts
Ambient temperature range	−55 to +90	C

Maximum circuit value (for any operating condition)

Grid-circuit resistance	2 max	megohms

Characteristics and range values

Heater voltage	6.3	volts
Plate voltage	250	volts
Grid voltage	−9	volts

	Minimum	Average	Maximum	
Heater current	0.55	0.6	0.65	amperes
Heater-cathode current with heater-cathode voltage of ±100 volts	....	....	5	microamperes
Plate current	4.8	6.5	8.2	milliamperes
Plate current for grid voltage of −24 volts	....	....	15	microamperes
Difference in plate current between triode units	....	....	2.0	milliamperes
Reverse grid current	....	....	0.2	microampere
Amplification factor	18	20	22	
Plate resistance	....	9100	....	ohms
Transconductance	1825	2200	2575	micromhos

Typical operation—resistance-coupled amplifier (each triode unit)

Plate-supply voltage	90			180			300			volts
Plate load resistor	0.05	0.1	0.25	0.05	0.1	0.25	0.05	0.1	0.25	megohms
Grid resistor (of following stage)	0.1	0.25	0.5	0.1	0.25	0.5	0.1	0.25	0.5	megohms
Cathode resistor	2070	3940	9760	1490	2830	7000	1270	2440	5770	ohms
Cathode by-pass capacitor†	2.66	1.29	0.55	2.86	1.35	0.62	2.96	1.42	0.64	uf
Blocking capacitor†	0.029	0.012	0.007	0.032	0.012	0.007	0.034	0.0125	0.0075	uf
Peak output voltage‡	14	17	18	30	34	36	51	56	57	volts
Voltage gain△	12	13	13	13	14	14	14	14	14	

*May deviate ±10 per cent from rated value provided such deviation occurs for less than 2 per cent of the operating time.
**For resistance-coupled amplifier applications, the negative bias may be as low as −0.5 volt.
†The cathode by-pass capacitors and blocking capacitors have been chosen to give output voltages at 100 cycles per second (f_1) which are equal to 0.8 of the mid-frequency value. For any other value of (f_1), multiply the values of cathode by-pass and blocking capacitors by $100/f_1$.
‡This peak output voltage is obtained across the grid resistor of the following stage at any frequency within the flat region the output vs frequency curve, and is for the condition where the signal level is adequate to swing the grid of the resistance-coupled amplifier tube to the point where its grid starts to draw current.
△At an output voltage of 5 volts rms.

GL-5692

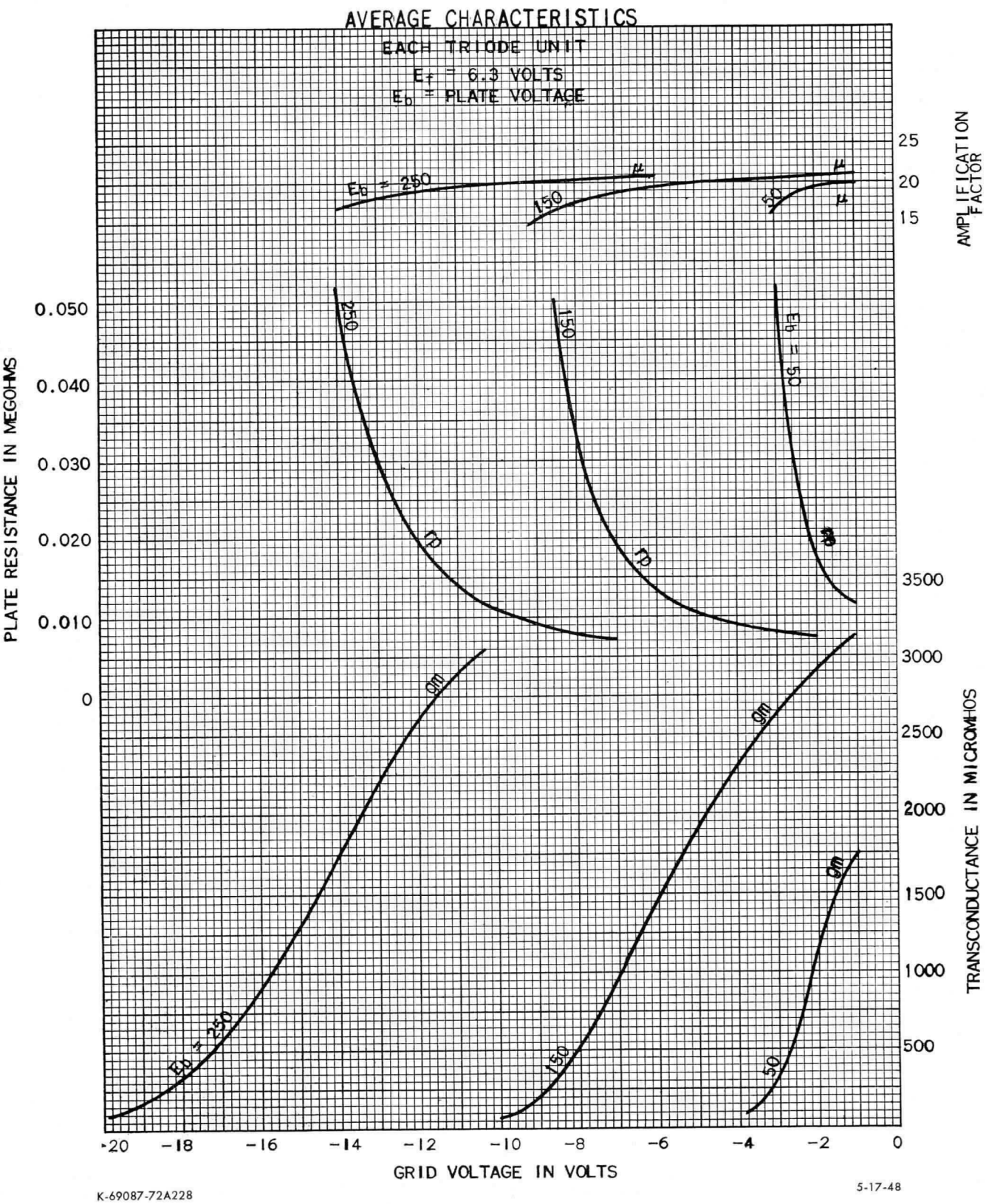

K-69087-72A228

5-17-48

GL-5692
AVERAGE PLATE CHARACTERISTICS
EACH TRIODE UNIT $E_f = 6.3$ VOLTS

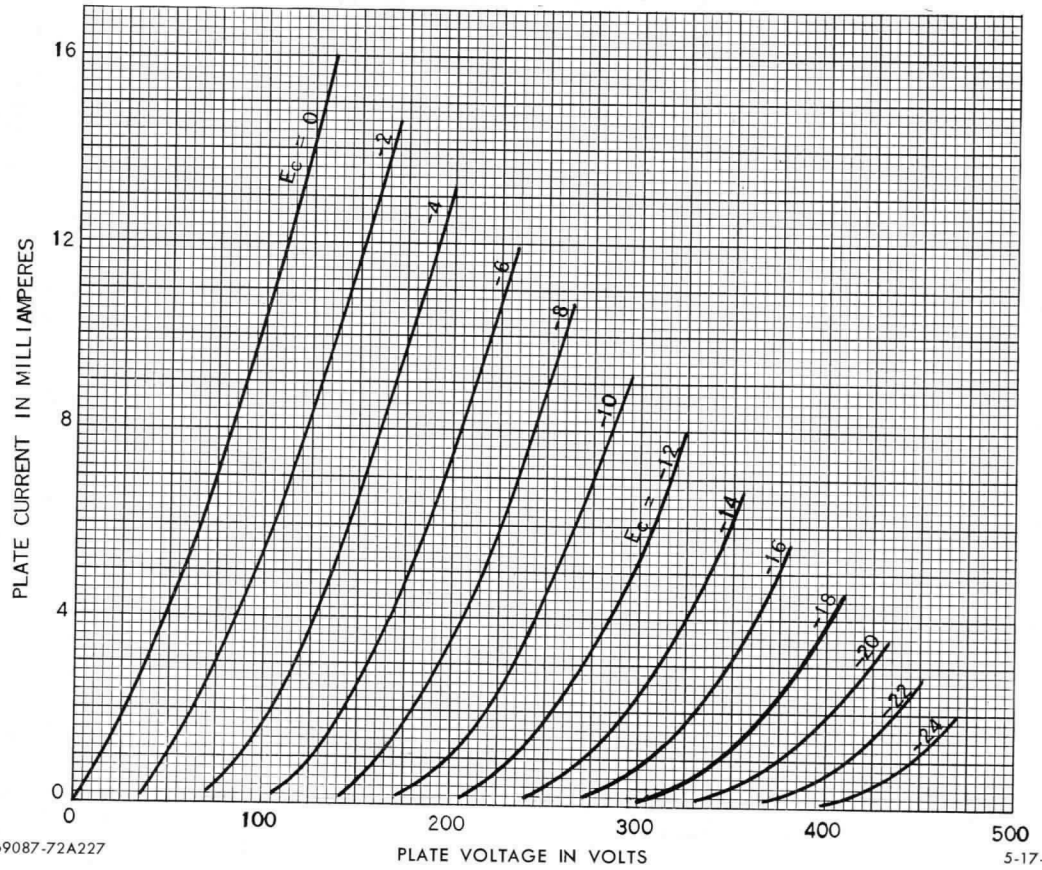

K-69087-72A227

5-17-48

OUTLINE GL-5692 PLIOTRON

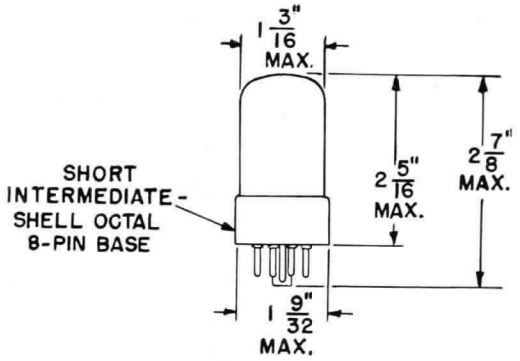

BASING DIAGRAM

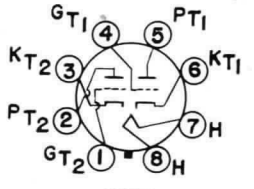

8BD

PIN 1: GRID OF TRIODE UNIT NO. 2
PIN 2: PLATE OF TRIODE UNIT NO. 2
PIN 3: CATHODE OF TRIODE UNIT NO. 2
PIN 4: GRID OF TRIODE UNIT NO. 1
PIN 5: PLATE OF TRIODE UNIT NO. 1
PIN 6: CATHODE OF TRIODE UNIT NO. 1
PIN 7: HEATER
PIN 8: HEATER

N-15120AZ

5-17-48

Electronics Department

GENERAL ELECTRIC

Schenectady, N. Y.



PLIOTRON

DESCRIPTION

The GL-5693 is a sharp cut-off five-electrode, high vacuum tube for use as a high-gain, resistance-coupled amplifier in industrial applications.

A grid No. 1 resistor with a value as high as 40 megohms can be used with this tube depending upon the operating conditions as given on the curve "Operational Characteristics." In addition, the 5693 is characterized by uniformity and stability of characteristic, resistance to shock and vibration, and long life features especially desirable in industrial service.

TECHNICAL INFORMATION

These data are for reference only. For design information refer to specifications.

Electrical Data

Cathode—Indirectly heated				
Heater voltage (a-c or d-c)			6.3 ± 5%*	volts
Heater current			0.3	ampere
Direct interelectrode capacitances, with shell connected to cathode	**Minimum**	**Average**	**Maximum**	
Grid to plate	....	....	0.005	uuf
Input	4.8	5.3	5.8	uuf
Output	5.6	6.2	6.8	uuf

Mechanical Data

Mounting position—Any		
Net weight, approximate	3	ounces

GE Electronic TUBE

GENERAL ELECTRIC

TECHNICAL INFORMATION (CONT'D)

MAXIMUM RATINGS AND TYPICAL OPERATING CONDITIONS

Maximum ratings, absolute values

D-c plate voltage	300 max	volts
D-c plate supply voltage	330 max	volts
D-c grid No. 3 (suppressor) voltage		
Negative bias value	0 min −100 max	volts
D-c grid No. 2 (screen) voltage	125** max	volts
D-c grid No. 2 supply voltage	330 max	volts
Grid No. 1 (control-grid) voltage		
Negative bias range	1*** min to −50 max	volts
Negative peak value	−50 max	volts
D-c cathode current	10 max	milliamperes
Plate dissipation	2 max	watts
Grid No. 2 dissipation	0.3 max	watt
Peak heater-cathode voltage		
Heater negative with respect to cathode	100 max	volts
Heater positive with respect to cathode	100 max	volts
Ambient temperature range	−55 to +90	C

*May deviate ±10 per cent from rated value provided such deviation occurs for less than 2 per cent of the operating time.

**The 5693 may be operated at a grid No. 2 voltage as high as the maximum rated grid No. 2 supply voltage (330 volts) when the grid No. 2 dissipation is not exceeded for any signal conditions and when a resistor is used in series with the grid No. 2 and its supply voltage.

***For resistance-coupled amplifier applications, the negative grid No. 1 bias may be as low as −0.5 volt.

Maximum circuit value (see curve K-69087-72A224)

Characteristics and range values

Heater voltage, 6.3; plate voltage, 250; grid No. 3 voltage, 0; grid No. 2 voltage, 100; grid No. 1 voltage, −3

	Minimum	Average	Maximum	
Heater current	0.275	0.3	0.325	amperes
Heater-cathode current with heater-cathode voltage of ±100 volts	....	....	5	microamperes
Plate current	2.3	3.0	3.7	milliamperes
Plate current for grid No. 1 voltage of −7.5 volts	2	30	80	microamperes
Plate current for grid No. 3 voltage of −70 volts	150	450	750	microamperes
Grid No. 2 current	0.60	0.85	1.10	milliamperes
Reverse grid No. 1 current	....	....	0.1	microamperes
Plate resistance	1.0	....	....	megohms
Transconductance	1400	1650	1900	micromhos

Typical operation—resistance-coupled amplifier

Plate and grid No. 2 supply voltage	90			180			300			volts
Plate load resistor	0.1	0.25	0.5	0.1	0.25	0.5	0.1	0.25	0.5	megohms
Grid No. 1 resistor	0.25	0.5	1	0.25	0.5	1	0.25	0.5	1	megohms
Grid No. 2 resistor	0.29	0.92	1.7	0.31	0.94	2.2	0.37	1.10	2.2	megohms
Cathode resistor	880	1700	3800	800	1060	2180	530	860	1410	ohms
Grid No. 2 bypass capacitor†	0.085	0.045	0.03	0.09	0.06	0.04	0.09	0.06	0.05	uf
Cathode bypass capacitor†	7.4	4.5	2.4	8	6.6	3.8	10.9	7.4	5.8	uf
Blocking capacitor†	0.016	0.005	0.002	0.015	0.004	0.002	0.016	0.004	0.002	uf
Peak output voltage‡	23	18	22	60	47	44	96	88	79	volts
Voltage gain △	68	93	119	82	131	192	98	167	238	

†The cathode and grid No. 2 bypass capacitors and blocking capacitors have been chosen to give output voltages at 100 cycles per second (f_1) which are equal to 0.7 of the mid-frequency value. For any other value of (f_1), multiply the values of cathode bypass, grid No. 2 bypass, and blocking capacitors by $100/f_1$.

‡This peak output voltage is obtained across the grid resistor of the following stage at any frequency within the flat region of the output vs frequency curve, and is for the condition where the signal level is adequate to swing the grid of the resistance-coupled amplifier tube to the point where its grid starts to draw current.

△At an output voltage of 5 volts rms.

GL-5693 OPERATIONAL CHARACTERISTICS
E_f = 6.3 VOLTS PLATE VOLTAGE = 300
GRID NO. 3 VOLTAGE = 0

CURVE	GRID-NO.2 RESISTOR	GRID-NO.2 SUPPLY VOLTAGE
1	0 MEG.	100
2	0.25 MEG.	300
3	0.5 MEG.	300
4	0.75 MEG.	300

CURVES BASED ON FOLLOWING VALUES:
ΔI_K = 300μAMP. ΔI_{g1} = 0.1μAMP

EXPRESSING THESE VALUES AS A RATIO:

$$\frac{\Delta I_K}{\Delta I_{g1}} = \frac{300}{0.1} \text{ OR } 3000$$

FOR APPLICATIONS PERMITTING OTHER VALUES OF ΔI_K, A NEW RATIO OF $\Delta I_K/\Delta I_{g1}$ CAN BE CALCULATED. THE VALUES OF R_{g1} AS READ FROM THE CURVE MUST BE MULTIPLIED BY A FACTOR WHICH IS THE QUOTIENT OF THE NEW RATIO DIVIDED BY THE OLD RATIO. FOR EXAMPLE, IF THE NEW RATIO IS 6000 THE MULTIPLYING FACTOR IS 6000/3000, OR 2. AND VALUES OF R_{g1} AS READ FROM THE CURVE ARE THEREFORE MULTIPLIED BY 2.

NOTE: TRANSCONDUCTANCE CURVES WERE OBTAINED WITH GRID-NO.2 RESISTOR AND CATHODE RESISTOR SUITABLY BYPASSED.

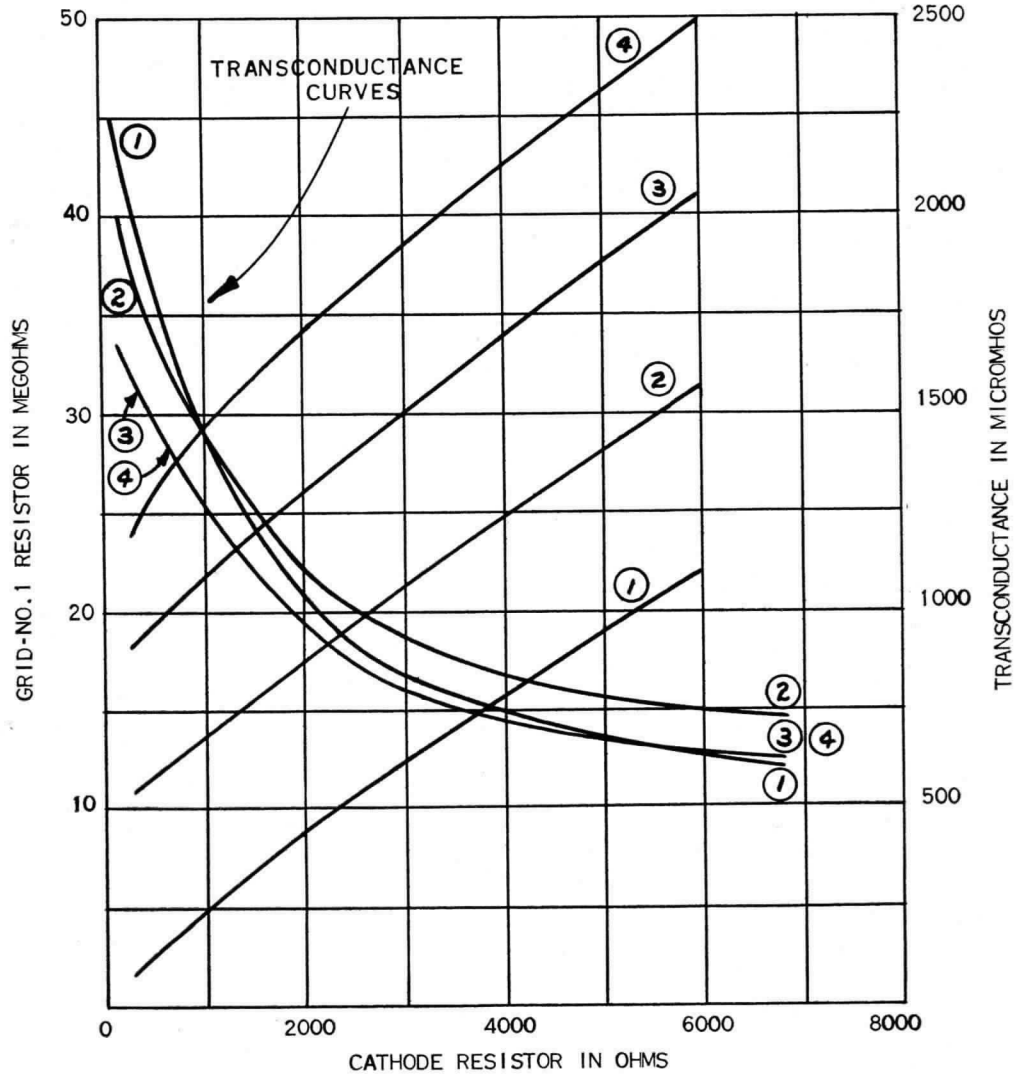

K-69087-72A224

8-26-48

GL-5693
AVERAGE SUPPRESSOR CHARACTERISTICS
$E_f = 6.3$ VOLTS
PLATE VOLTAGE = 250
GRID NO. 1 VOLTAGE = −3

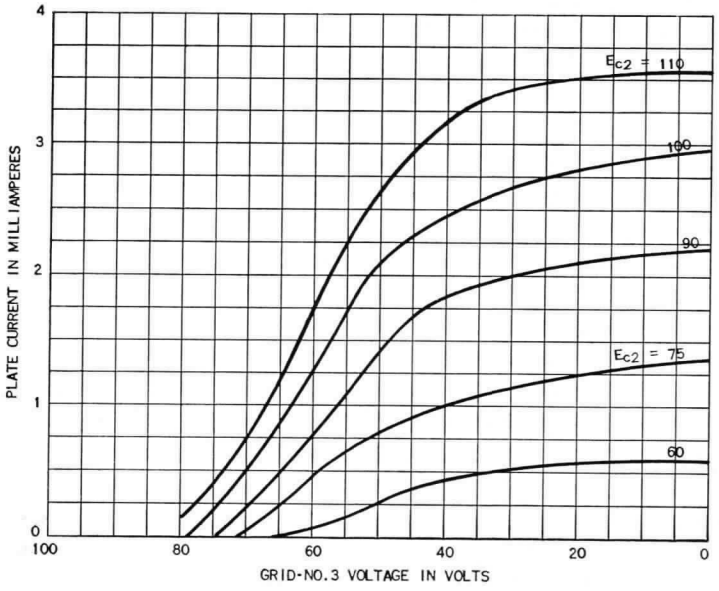

K-69087-72A229 8-26-48

GL-5693
AVERAGE SUPPRESSOR CHARACTERISTICS
$E_f = 6.3$ VOLTS
PLATE VOLTAGE = 250
GRID NO. 1 VOLTAGE = −3

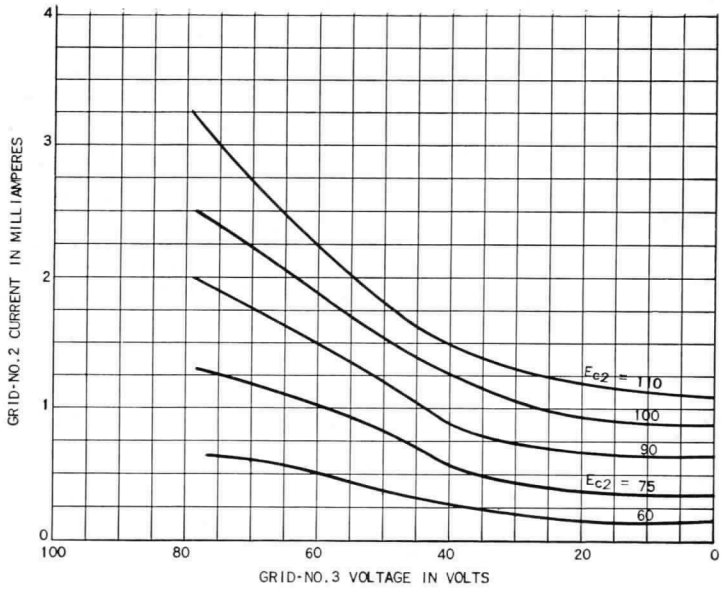

K-69087-72A230 8-26-48

GL-5693
AVERAGE PLATE CHARACTERISTICS
PENTODE CONNECTION
$E_f = 6.3$ VOLTS
GRID NO. 2 VOLTAGE = 100
GRID NO. 3 VOLTAGE = 0

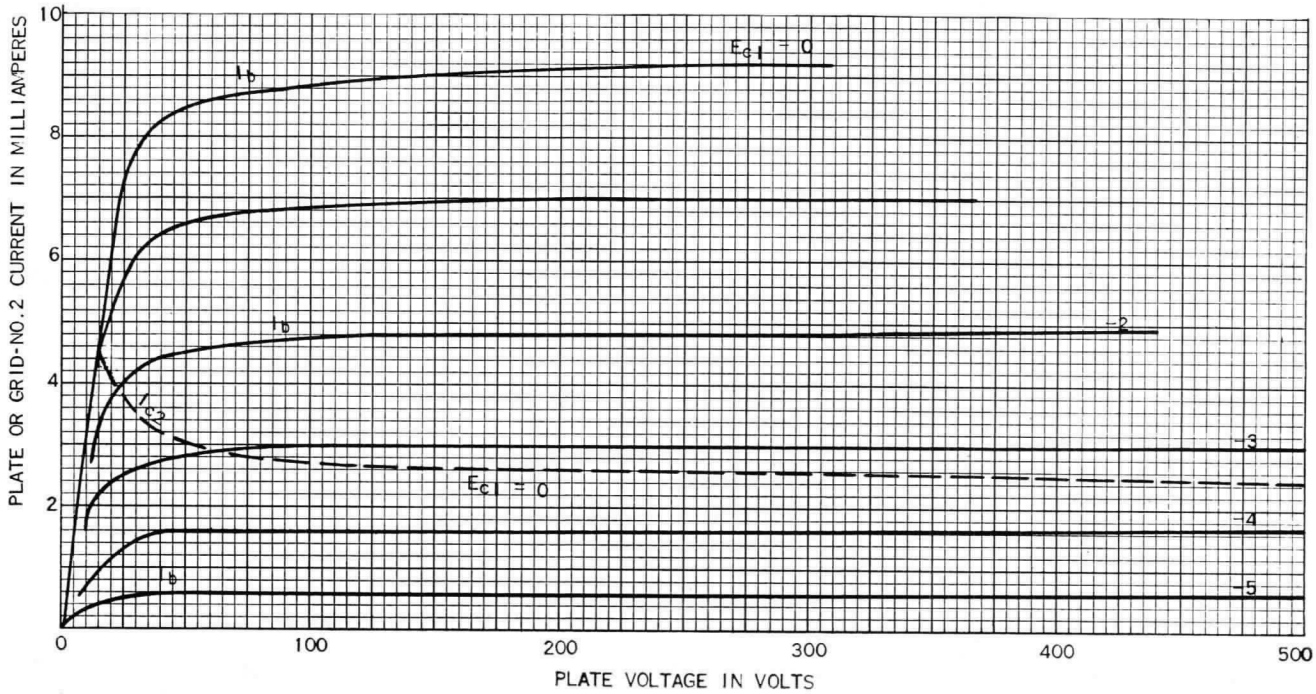

K-69087-72A231 5-17-48

GL-5693 AVERAGE CHARACTERISTICS

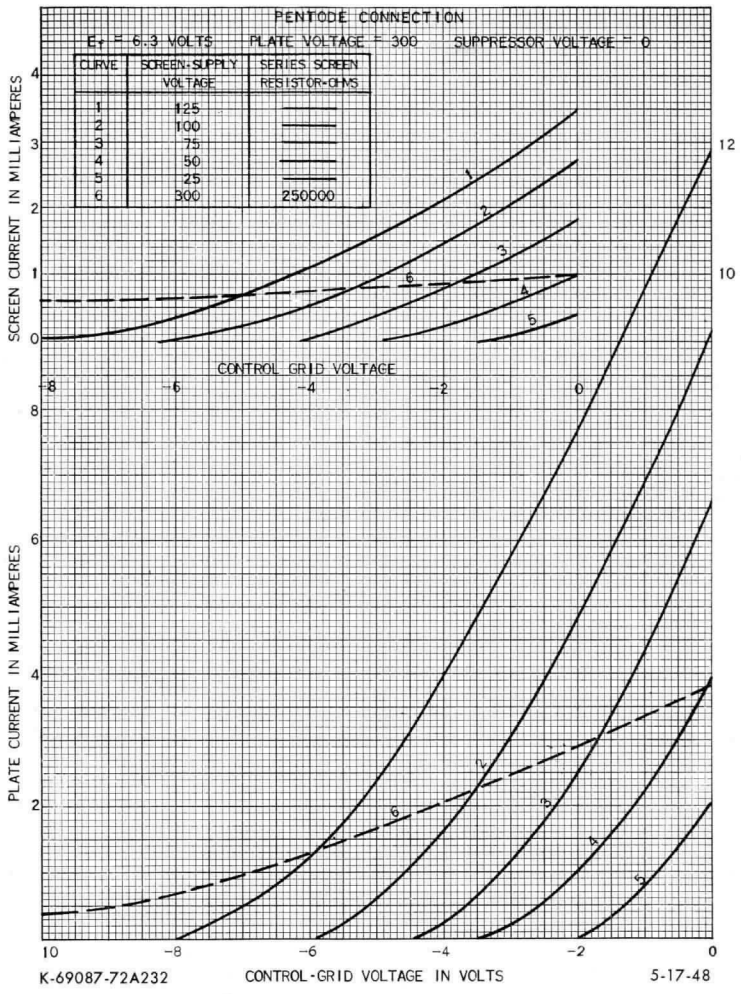

GL-5693 AVERAGE CHARACTERISTICS
PENTODE CONNECTION E_f = 6.3 VOLTS PLATE VOLTAGE = 250
SUPPRESSOR VOLTAGE = 0 SCREEN VOLTAGE = 100

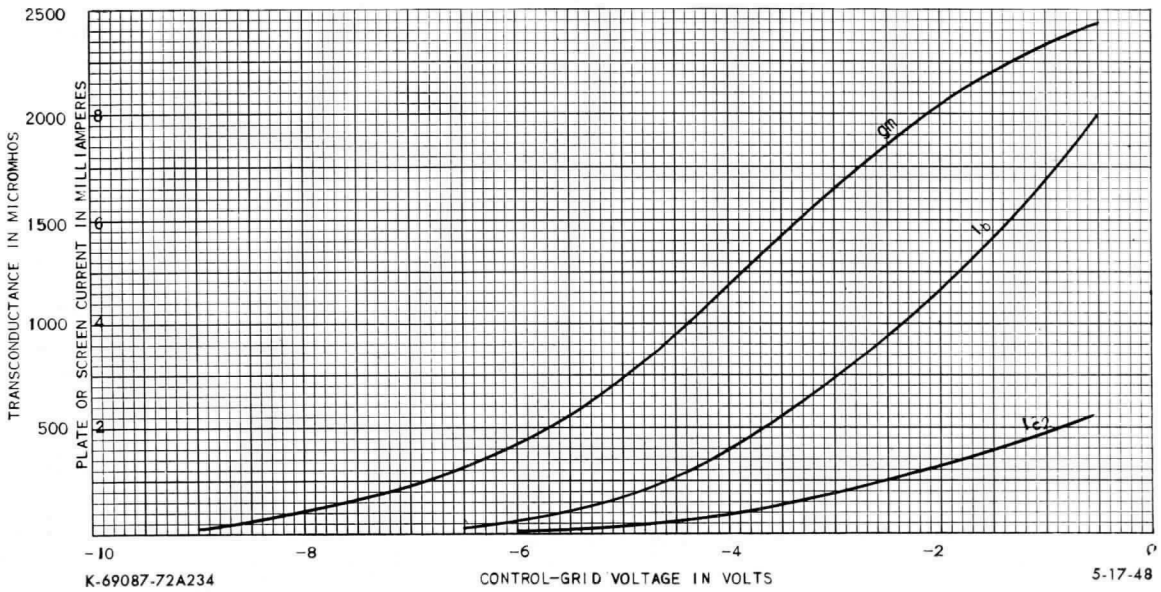

GL-5693 AVERAGE CHARACTERISTICS

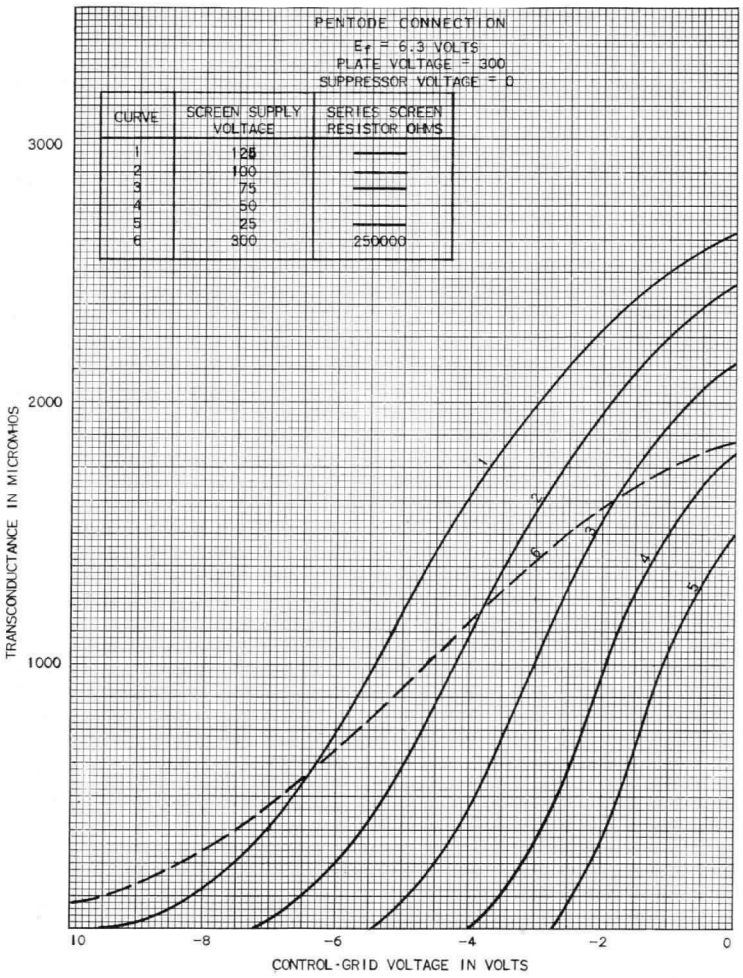

K-69087-72A233

5-17-48

OUTLINE
GL-5693 PLIOTRON

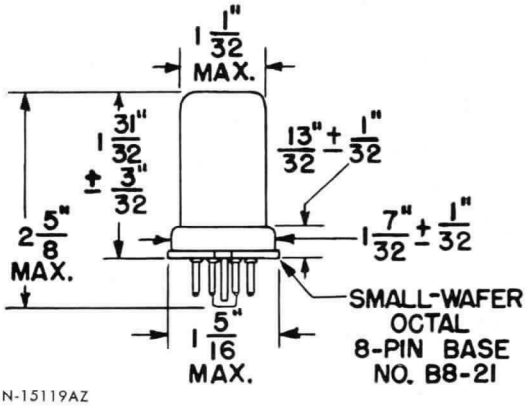

N-15119AZ

BASING DIAGRAM

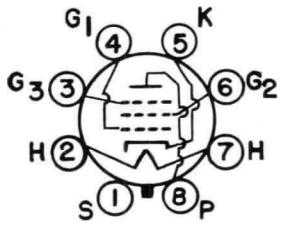

8N

PIN 1:	SHELL	PIN 5:	CATHODE
PIN 2:	HEATER	PIN 6:	GRID NO. 2
PIN 3:	GRID NO. 3	PIN 7:	HEATER
PIN 4:	GRID NO. 1	PIN 8:	PLATE

5-17-48

Electronics Department

GENERAL ELECTRIC

Schenectady, N. Y.

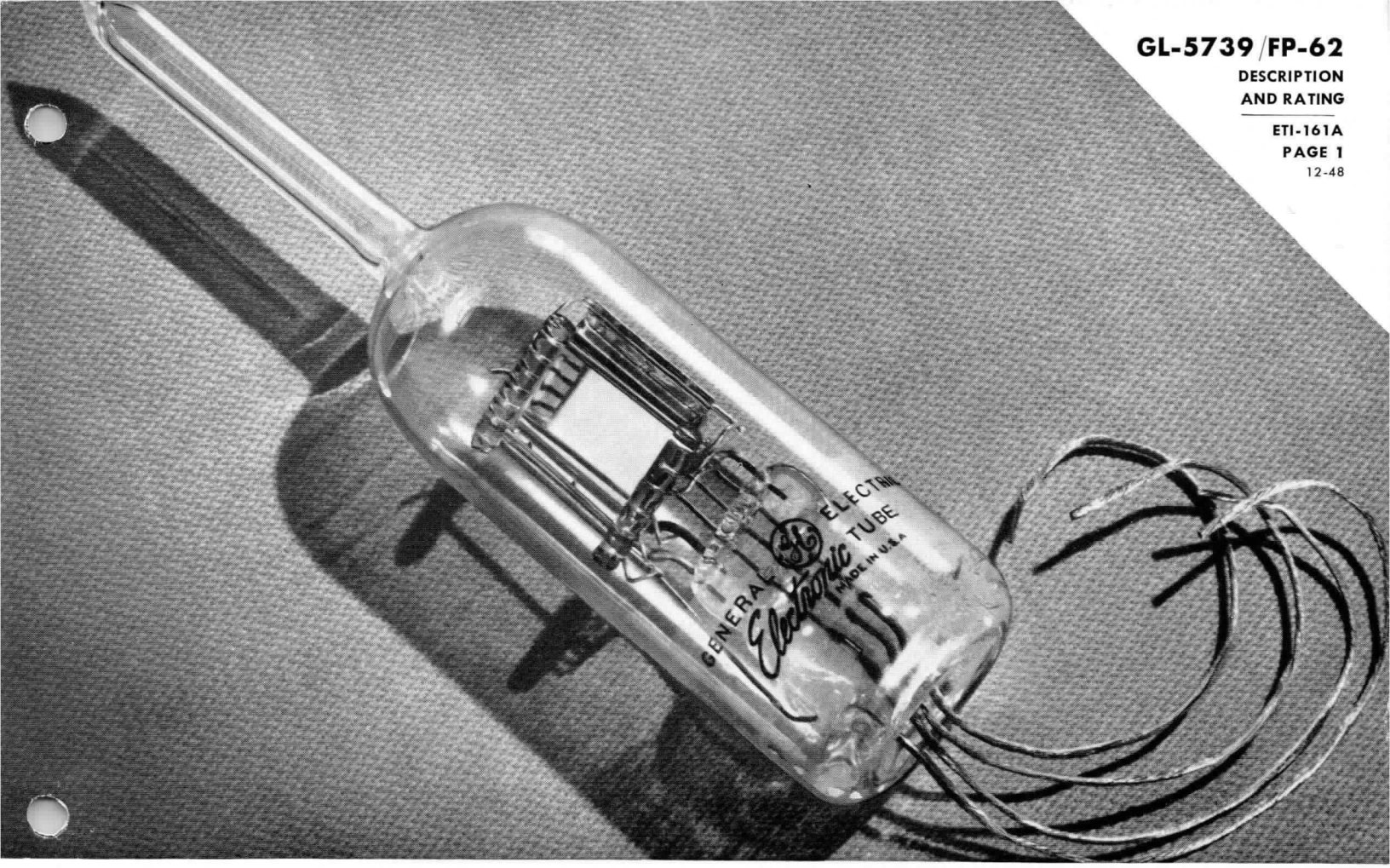

PLIOTRON

DESCRIPTION

The GL-5739/FP-62 is an ionization gage which will accurately and conveniently measure gas pressures over a range of from 100 microns to as low as 0.001 micron. This pliotron is not only sufficiently sturdy for general use but is designed to be sufficiently sensitive for the most delicate measurements. Leakage in the collector circuit, the limiting feature in some gages, has been entirely eliminated by special construction.

This gage has a high sensitivity characteristic and, since the parts are rigidly mounted, it will hold its calibration to a very close degree.

TECHNICAL INFORMATION

GENERAL CHARACTERISTICS

Number of electrodes	3	
Electrical		
Filament—pure tungsten		
Normal voltage, approx.	4.5	volts
Normal current, approx.	1.48	amperes
Maximum current	1.68	amperes
Normal operating conditions		
Collector voltage	−22.5	volts
Grid voltage	112.5	volts
Grid current	10	milliamperes
Average sensitivity, collector current per micron of pressure of dry air at normal operating conditions, approximate	40	microamperes

Electronic TUBE

GENERAL ELECTRIC

Supersedes ETI-161 dated 4-45

TECHNICAL INFORMATION (CONT'D)

Mechanical

Bulb material	hard glass
Maximum "bake-out" temperature	500 centigrade

TYPICAL CALIBRATION

Grid voltage	112½ volts
Collector or plate voltage	−22½ volts
Grid current	10 milliamperes

Gas	Collector Current in Microamperes per Micron Pressure
Helium	5.6
Neon	9.0
*Nitrogen	39.5
Argon	54.0

* The value given for nitrogen is correct for dry air since the oxygen cleans up when the filament is lighted.

INSTALLATION AND OPERATION

INSTALLATION: The GL-5739/FP-62 is of hard glass and may be used on either hard- or soft-glass systems. When it is sealed to a soft-glass system a graded seal must be used. The gage is furnished exhausted and sealed off and with a tubulation for sealing it into the system. The gage should be kept in this form until it is ready to be used. The end of the tubulation is then cut off and the gage sealed into the system, care being taken that no constriction is formed between the bulb and the system. For accurate results, the gage should be placed as near as possible to the point at which the pressure is to be measured. The gage should be mounted with its axis vertical. The stem may be either up or down, whichever is more convenient. Since, in sealing the gage into the system, the end of the tubulation is cut off and air is let in, it is necessary to exhaust and degas the gage before it can be used. For this reason the gage is furnished unbased to permit its being baked out.

Where high voltages are used in the system and where there is a possibility of a gaseous discharge to the electrodes of the gage, a wire or guard ring should be inserted in the seal when sealing to the system. This wire or guard ring should then be well grounded.

Care should be taken against shorting the leads while anyone is working around the system. The entire collector circuit should be well insulated to prevent the introduction of external sources of leakage. The glass around the collector lead should be clean so that there will be no leakage at that point.

For working at low pressures it is necessary to degas the gage thoroughly. At these low pressures the gas occluded from the metal parts and from the glass may cause the gage to read higher than the actual pressure in the system. Before the gage is used, it should be degassed as follows:

1. Bake out with the rest of the system (do not exceed 500 C).
2. Connect the grid and plate leads to the positive 500-volt d-c supply.
3. Bombard at 1000 C plate temperature for 20 minutes. This is accomplished by regulating the filament voltage to give approximately 40 to 80 milliamperes total current.

Note: Only a d-c voltage supply should be used in this operation.

OPERATION: Measurements are taken with the gage by placing a positive voltage on the grid and a negative voltage on the collector. The filament voltage is increased until the grid current reaches the desired value. The negative current to the collector is then a measure of the gas pressure.

The calibration curve of the gage is nearly a straight line, especially at pressures below one micron. By checking a few points of collector current and gas pressure against a McLeod gage, the curve can be plotted and extrapolated down to zero current at zero pressure. Typical calibrations for various gases are shown on page 2.

It can reasonably be expected that, as long as the arrangement of the electrodes of the gage remains unchanged, the calibration will also remain constant. Excessive overheating during degassing or rough handling may warp or change the relative positions of the electrodes. Leakage arising in the collector circuit can also cause a change in the calibration. This, however, can be detected by looking for a residual leakage current with the filament cold.

OPERATING NOTES

The filament should not be lighted until the pressure has been reduced to a low value. Care should be taken during bombardment that the gas evolved does not cause the current to increase steadily until the filament burns out or the electrodes are warped. A series resistor will be found satisfactory for avoiding such trouble. As a further precaution, bombardment should not begin until the pressure is below one micron.

In taking readings at extremely low pressures, there are two sources of inaccuracy which may be present. The gage will clean up the gas slowly and give too low a reading. Furthermore, the rate of flow, or rather drift of gas, at low pressure is slow and the gage may read high or low depending on which way the pressure is changing. For best results it is recommended that the filament be turned off and the system allowed to equalize for several minutes. Following this period of equalization the filament should again be lighted and a reading taken as soon as possible.

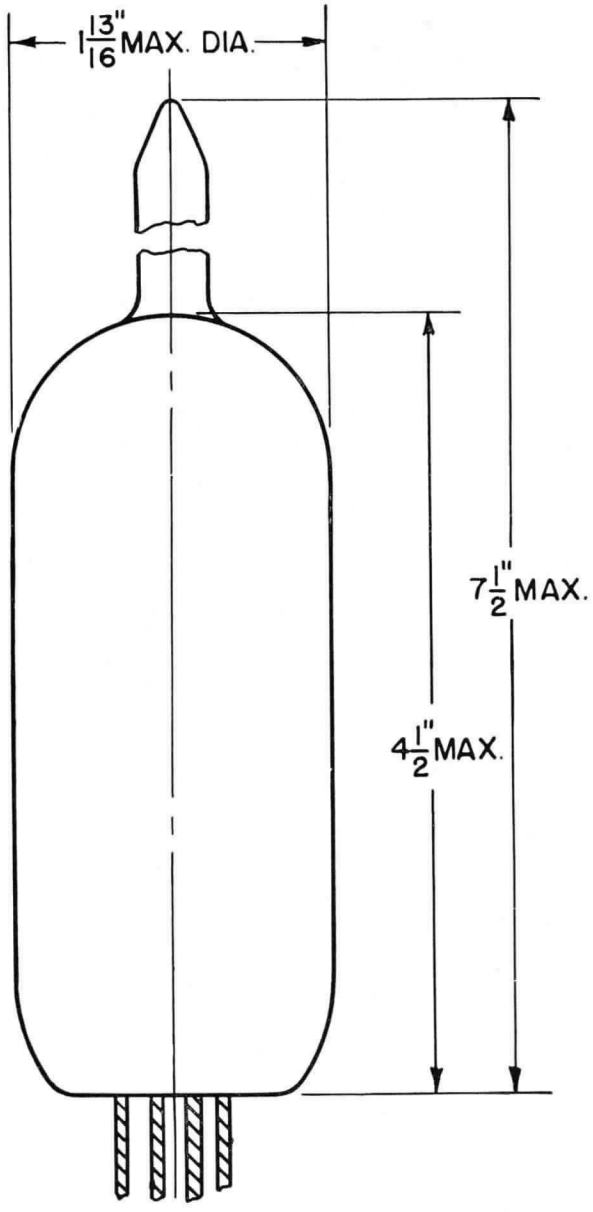

OUTLINE
GL-5739/FP-62 PLIOTRON

K-4903555

6-9-44

Electronics Department
GENERAL ELECTRIC
Schenectady, N. Y.

12-48 (9M)
Filing No. 8850

Electronic TUBES

5881

BEAM PENTODE

FOR AF POWER AMPLIFIER APPLICATIONS

DESCRIPTION AND RATING

The 5881 is a beam pentode designed primarily for use in audio-frequency power amplifier applications where relatively large power outputs are required. In addition to high power output capabilities, the tube features high power sensitivity, high efficiency, and low third and higher-order harmonic distortion. Except for increased maximum ratings, the 5881 is electrically equivalent to the 6L6-G.

GENERAL

ELECTRICAL

Cathode—Coated Unipotential

Heater Voltage, AC or DC	6.3 ± 10%	Volts
Heater Current	0.9	Amperes

MECHANICAL

Mounting Position—Any
Envelope—T-11, Glass
Base—B7-59, Short Intermediate Shell Octal 7-Pin

MAXIMUM RATINGS

DESIGN-CENTER VALUES

Plate Voltage	360	Volts
Screen Voltage	270	Volts
Plate Dissipation	23	Watts
Screen Dissipation	3.0	Watts
Heater-Cathode Voltage		
Heater Positive with Respect to Cathode	200	Volts
Heater Negative with Respect to Cathode	200	Volts

GENERAL ELECTRIC

BASING DIAGRAM

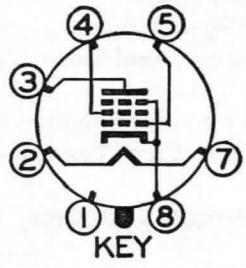

RETMA 7AC

TERMINAL CONNECTIONS

Pin 1—No Connection
Pin 2—Heater
Pin 3—Plate
Pin 4—Grid Number 2 (Screen)
Pin 5—Grid Number 1
Pin 7—Heater
Pin 8—Cathode and Beam Plates

PHYSICAL DIMENSIONS

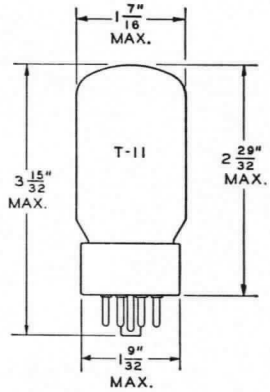

5881

CHARACTERISTICS AND TYPICAL OPERATION

CLASS A_1 AMPLIFIER

Plate Voltage	250	300	350	Volts
Screen Voltage	250	200	250	Volts
Grid-Number 1 Voltage	−14	−12.5	−18	Volts
Peak AF Grid-Number 1 Voltage	14	12.5	18	Volts
Plate Resistance, approximate	30,000	35,000	48,000	Ohms
Transconductance	6100	5300	5200	Micromhos
Zero-Signal Plate Current	75	48	53	Milliamperes
Maximum-Signal Plate Current	80	55	65	Milliamperes
Zero-Signal Screen Current	4.3	2.5	2.5	Milliamperes
Maximum-Signal Screen Current	7.6	4.7	8.5	Milliamperes
Load Resistance	2500	4500	4200	Ohms
Total Harmonic Distortion, approximate	10	11	13	Percent
Maximum-Signal Power Output	6.7	6.5	11.3	Watts

PUSH-PULL AMPLIFIER, Values For Two Tubes

	Class A_1		Class AB_1		Class AB_2		
Plate Voltage	250	270	360	360	360	360	Volts
Screen Voltage	250	270	270	270	225	270	Volts
Grid-Number 1 Voltage	−16	−17.5	−22.5	−22.5	−18	−22.5	Volts
Peak AF Grid-to-Grid Voltage	32	35	45	45	52	72	Volts
Zero-Signal Plate Current	120	134	88	88	78	88	Milliamperes
Maximum-Signal Plate Current	140	155	132	140	142	205	Milliamperes
Zero-Signal Screen Current	10	11	5.0	5.0	3.5	5.0	Milliamperes
Maximum-Signal Screen Current	16	17	15	11	11	16	Milliamperes
Effective Load Resistance	5000	5000	6600	3800	6000	3800	Ohms
Total Harmonic Distortion, approximate	2	2	2	2	2	2	Percent
Maximum-Signal Power Output	14.5	17.5	26.5	18	31	47	Watts

AVERAGE PLATE CHARACTERISTICS

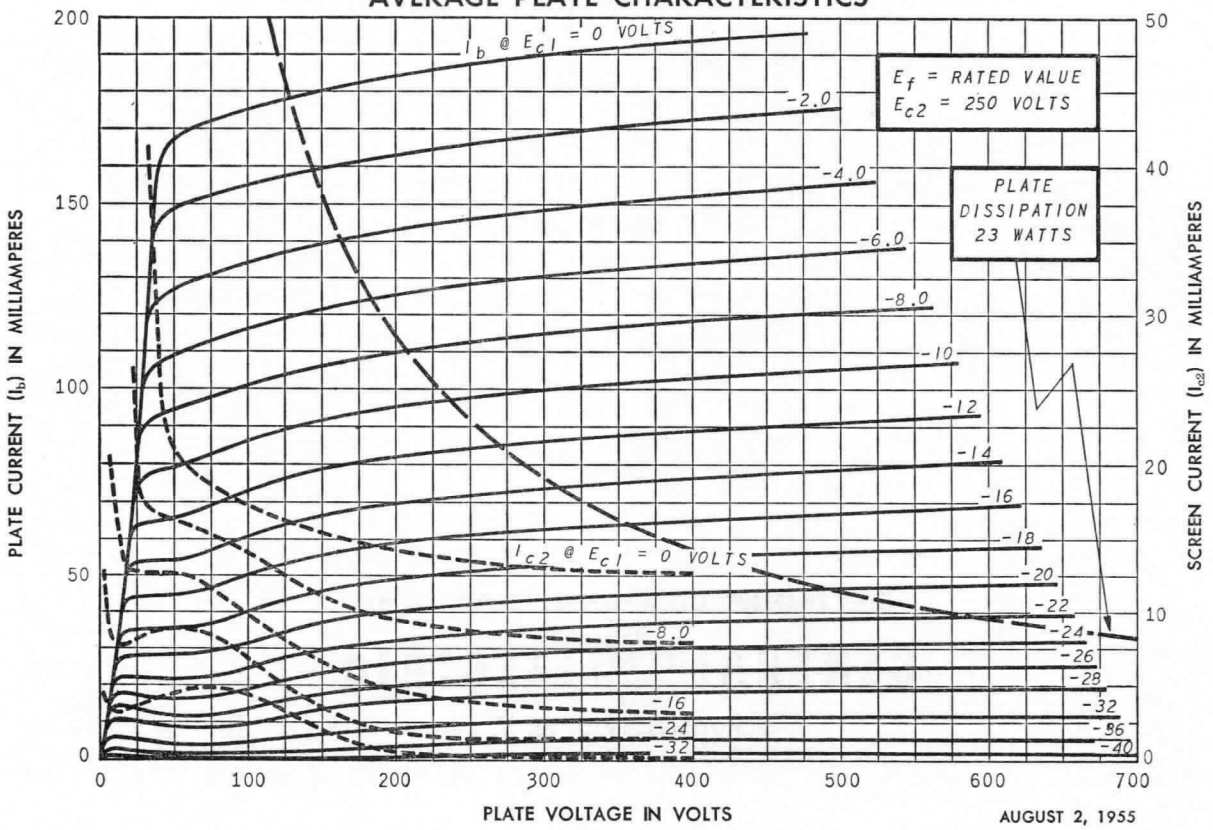

AVERAGE PLATE CHARACTERISTICS

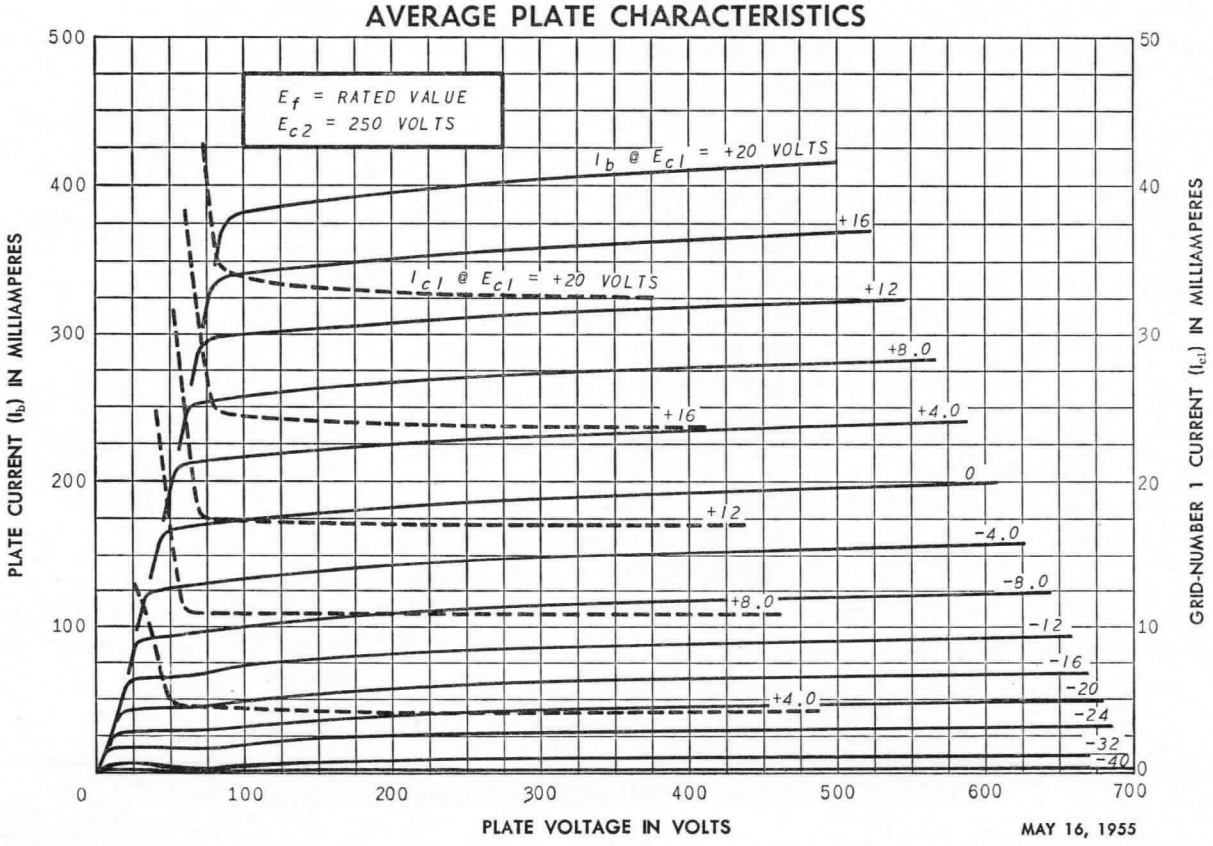

ELECTRONIC COMPONENTS DIVISION
GENERAL ELECTRIC
Schenectady 5, N. Y.

PRINTED IN U.S.A.

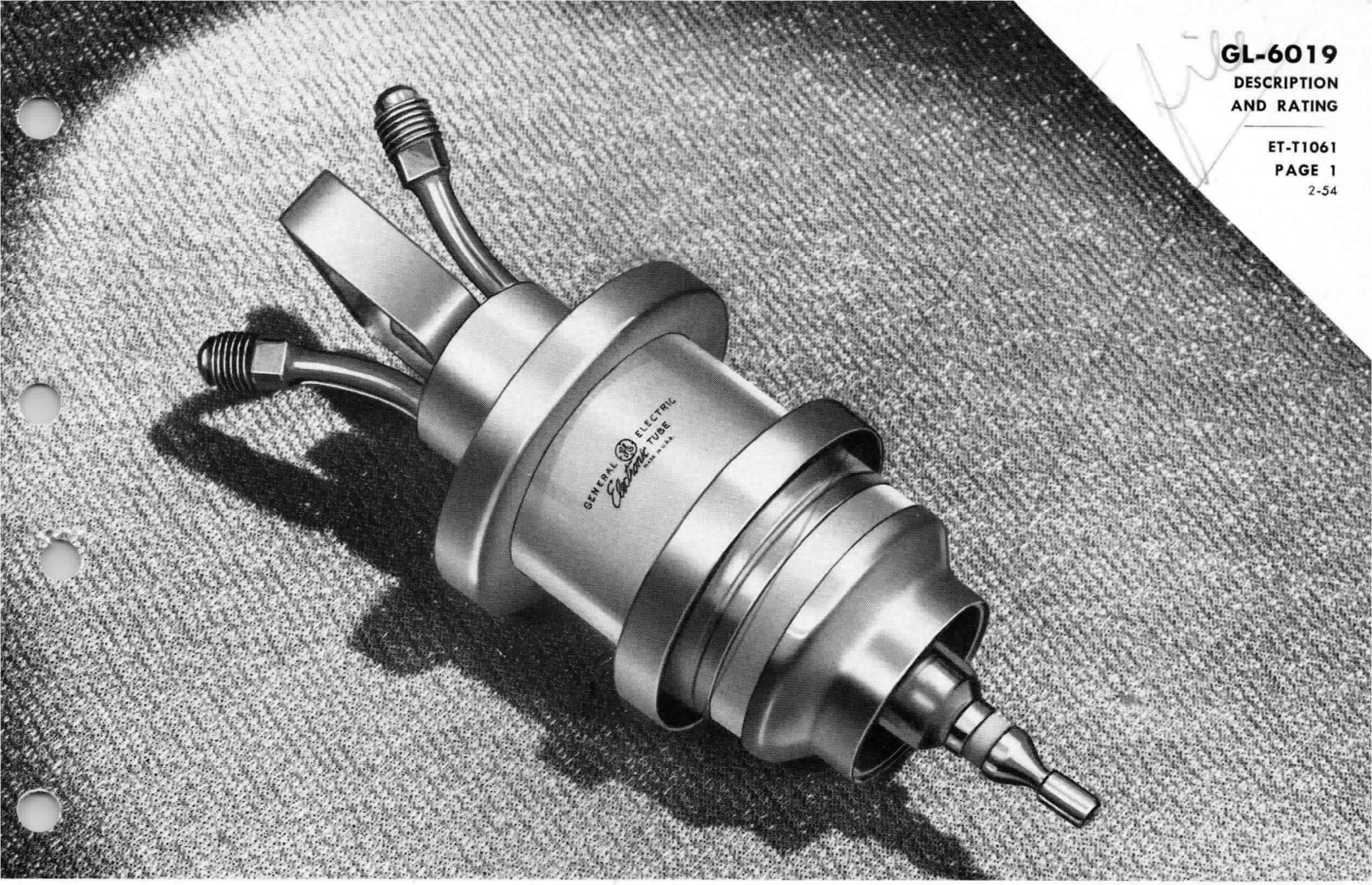

TETRODE

ONE KILOWATT UHF TELEVISION OUTPUT
UHF TETRODE
GROUNDED-GRID CIRCUITS

WATER COOLED
METAL AND CERAMIC
INTEGRAL WATER JACKET

The GL-6019 is a four-electrode transmitting tube featuring a metal-and-ceramic envelope designed for use as a power amplifier or oscillator in grounded-grid circuits with both grids maintained at radio-frequency ground potential. The output circuit is connected between the anode and the screen grid. The anode is capable of dissipating two kilowatts. Cooling is accomplished by water and forced air with the water jacket an integral part of the anode. The cathode is indirectly heated and thoria coated. Maximum ratings apply up to 900 megacycles.

When used as a Class B grounded-grid broadband television amplifier this tube has a useful synchronizing peak-power output of one kilowatt at 900 megacycles; in narrowband Class C service the output is one kilowatt of continuous power as an amplifier or oscillator. Because of its ratings, the GL-6019 is also well adapted to use in dielectric heating equipment.

The small size and close spacing of electrodes in the design of the tube combine with the ring-seal construction and the low-loss factor due to the gold-over-silver-plated external parts and the ceramic permit high operating efficiency. In addition, the grounded-grid construction eliminates the necessity for neutralization in a properly designed circuit. The small size of the GL-6019 permits compact mounting, and the integral water jacket and ring-seal construction allow quick plug-in installation.

TECHNICAL INFORMATION

GENERAL

Electrical	Minimum	Bogey	Maximum	
Heater Voltage*		6.3	6.8	Volts
Heater Current at Bogey Voltage		24		Amperes
Heater Starting Current			36	Amperes
Heater Cold Resistance		0.022		Ohm
Cathode Heating Time	1			Minutes
Amplification Factor, G_2 to G_1				
E_b = 500 Volts, I_b = 0.250 Ampere		10		
Peak Cathode Current†			4	Amperes
Direct Interelectrode Capacitances				
Cathode—Plate‡		0.03		uuf
Input, G_2 tied to G_1		16.0		uuf
Output G_2 tied to G_1♦		4.6		uuf

Mechanical			
Mounting Position—Vertical			
Water Flow			
Anode	0.6	Min	Gallon per Minute
Pressure Drop at Rated Flow	3.5		Pounds per Square Inch
Water Pressure	80	Max	Pounds per Square Inch
Outlet Water Temperature	70	Max	C
Air Flow¶			
Heater to Cathode Seals	12	Min	Cubic Feet per Minute
Screen-Grid to Control-Grid Seals	6	Min	Cubic Feet per Minute
Anode to Screen-Grid Ceramic Insulator	6	Min	Cubic Feet per Minute
Ceramic Temperature at any Point	200		C
Net Weight, approximate	1.25		Pounds

Water and air cooling to be applied before and during the application of any voltages. Water cooling may be discontinued with removal of all voltages. Air flow on heater-to-cathode seal must be maintained for one minute after removal of heater voltage.

MAXIMUM RATINGS AND TYPICAL OPERATING CONDITIONS

RADIO-FREQUENCY AMPLIFIER—CLASS B TELEVISION SERVICE

Synchronizing-Level Conditions per Tube Unless Otherwise Specified

Maximum Ratings, Absolute Values			
DC Plate Voltage	4000	Max	Volts
DC Grid-No. 2 Voltage	600	Max	Volts
DC Plate Current	0.7	Max	Ampere
Plate Input	2.5	Max	Kilowatts
Grid-No. 2 Input	25	Max	Watts
Plate Dissipation	2.0	Max	Kilowatts
Grid-No. 1 Dissipation	16	Max	Watts

Typical Operation—Grounded-Grid Circuit up to 900 Megacycles		
Bandwidth 6 megacycles		
DC Plate Voltage	3500	Volts
DC Grid-No. 2 Voltage	500	Volts
DC Grid-No. 1 Voltage	—40	Volts
Peak RF Plate Voltage		
Synchronizing Level	2500	Volts
Pedestal Level	1875	Volts
Peak RF Driving Voltage		
Synchronizing Level	110	Volts
Pedestal Level	70	Volts
DC Plate Current		
Synchronizing Level	0.520	Ampere
Pedestal Level	0.360	Ampere
DC Grid-No. 2 Current (Pedestal Level)	0.035	Ampere
DC Grid-No. 1 Current		
Synchronizing Level	0.110	Ampere
Pedestal Level	0.035	Ampere

TECHNICAL INFORMATION (CONT'D)

Driving Power at Tube, approximate		
Synchronizing Level	100	Watts
Pedestal Level	25	Watts
Power Output, approximate		
Synchronizing Level π	1000	Watts
Pedestal Level π	560	Watts

PLATE-MODULATED RADIO-FREQUENCY POWER AMPLIFIER—CLASS C TELEPHONY

Carrier Conditions with a Maximum Modulation Factor of 1.0

Maximum Ratings, Absolute Values

DC Plate Voltage	3200 Max	Volts
DC Grid-No. 2 Voltage	600 Max	Volts
DC Grid-No. 1 Voltage	—120 Max	Volts
DC Plate Current	0.35 Max	Ampere
DC Grid-No. 1 Current	0.10 Max	Ampere
Plate Input	1.12 Max	Kilowatts
Grid-No. 2 Input	10 Max	Watts
Plate Dissipation	1200 Max	Watts

Typical Operation—Grounded-Grid Circuit

DC Plate Voltage	3000	Volts
DC Grid-No. 2 Voltage	500	Volts
DC Grid-No. 1 Voltage	—100	Volts
Peak RF Plate Voltage	2300	Volts
Peak RF Driving Voltage	137	Volts
DC Plate Current	0.25	Ampere
DC Grid-No. 2 Current	0.01	Ampere
DC Grid-No. 1 Current, approximate	0.047	Ampere
Driving Power, approximate ψ	38	Watts
Power Output#	565	Watts

RADIO-FREQUENCY POWER AMPLIFIER AND OSCILLATOR—CLASS C TELEGRAPHY

Key-Down Conditions per Tube Without Amplitude Modulation Δ

Maximum Ratings, Absolute Values

DC Plate Voltage	4000 Max	Volts
DC Grid-No. 2 Voltage	600 Max	Volts
DC Grid-No. 1 Voltage	—150 Max	Volts
DC Plate Current	0.7 Max	Ampere
DC Grid-No. 1 Current	0.10 Max	Ampere
Plate Input	2.8 Max	Kilowatts
Grid-No. 2 Input	25 Max	Watts
Plate Dissipation	2 Max	Kilowatts
Grid-No. 1 Dissipation	16 Max	Watts

Typical Operation

DC Plate Voltage	4000	Volts
DC Grid-No. 2 Voltage	600	Volts
DC Grid-No. 1 Voltage	—120	Volts
Peak RF Plate Voltage, approximate	2750	Volts
Peak RF Grid-No. 1 Voltage	195	Volts
DC Plate Current	0.550	Ampere
DC Grid-No. 2 Current	0.035	Ampere
DC Grid-No. 1 Current, approximate	0.065	Ampere
Driving Power, approximate	150	Watts
Power Output, approximate#	1200	Watts

*The cathode of the GL-6019, because of transit-time effects which raise the temperature of the cathode, is subjected to considerable back bombardment in ultra-high-frequency service. The amount of heating due to bombardment is a function of the operating conditions and frequency, and must be compensated for by a reduction of the heater input to prevent overheating of the cathode with resulting short life. For long life, the GL-6019 should be put in operation with rated heater voltage. After the circuit has been adjusted for proper tube operation the heater voltage should be reduced to a value slightly above that at which circuit performance is affected. At a frequency of 900 megacycles and with typical operating conditions the heater voltage can be reduced to approximately 5 volts. At lower frequencies, the reduction will be less. Minor circuit readjustment may be necessary after this adjustment.

TECHNICAL INFORMATION (CONT'D)

†Represents maximum usable cathode current (plate current plus current to each grid) for any condition of operation.
‡Measured with a 6-inch diameter flat metal disk attached to the screen-grid ring. Control grid connected to the screen grid.
♦Output capacitance measured between anode and screen grid. Control grid connected directly to screen grid.
¶The volume of cooling air indicated for the various seals is approximate only. Distribution of cooling air will vary with the cavity configuration about the tube. For most satisfactory operation the maximum temperature of any point on the tube shall be below 200 C.
πUseful power output including power transferred from driver stage.
ΔModulation essentially negative may be used if the positive peak of the envelope does not exceed 115 percent of the carrier conditions.
#Total anode power output including power transferred from driver stage.
ψThe carrier of the driver modulated 100 percent.

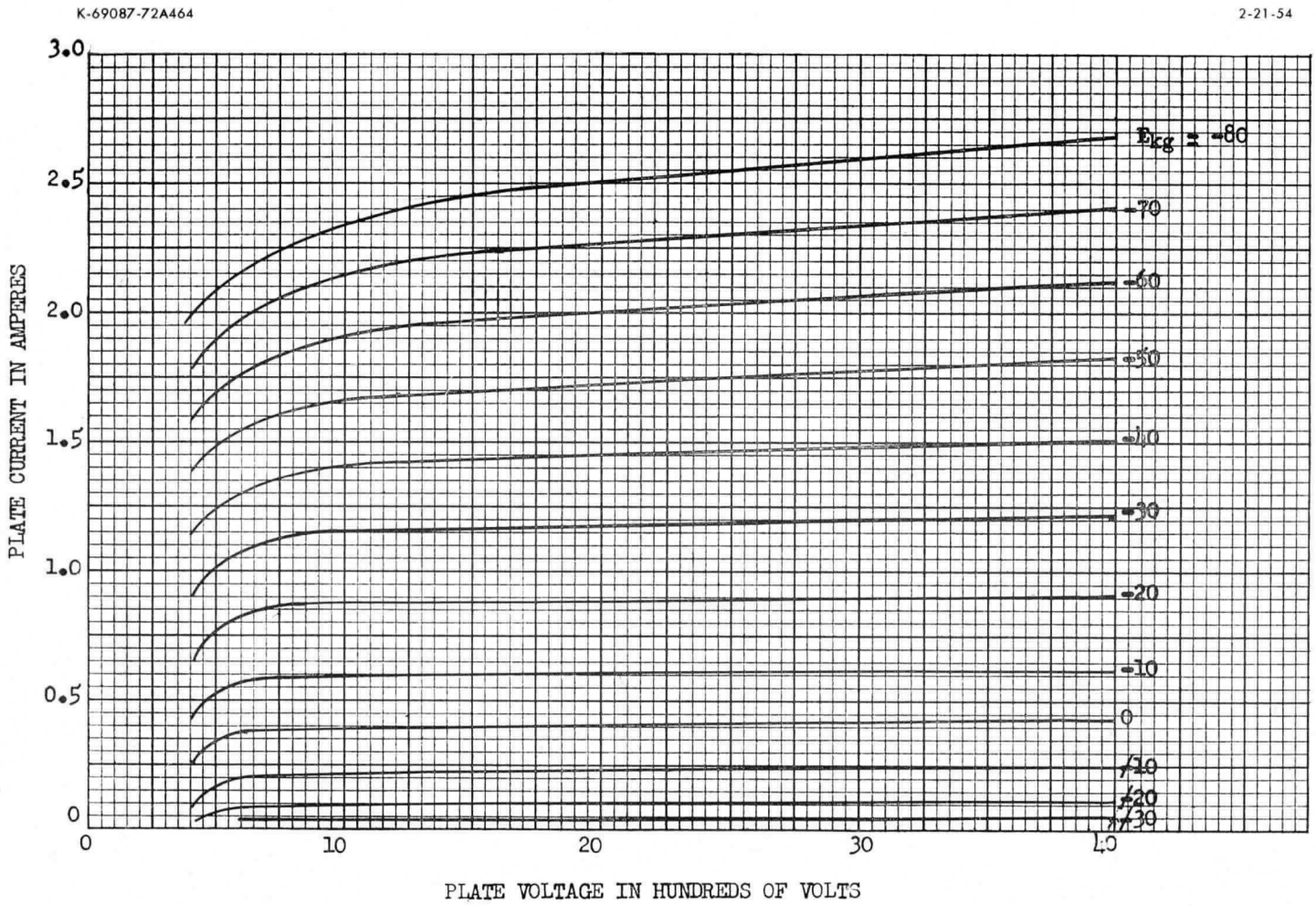

GL-6019

AVERAGE PLATE CHARACTERISTICS

$E_f = 6.3$ VOLTS SCREEN VOLTAGE = 500 VOLTS

CONTROL-GRID GROUNDED ELECTRODE VOLTAGES MEASURED TO GROUND

GL-6019

CONSTANT-CURRENT CHARACTERISTICS

$E_f = 6.3$ VOLTS SCREEN VOLTAGE = 500 VOLTS

CONTROL-GRID GROUNDED ELECTRODE VOLTAGES MEASURED TO GROUND

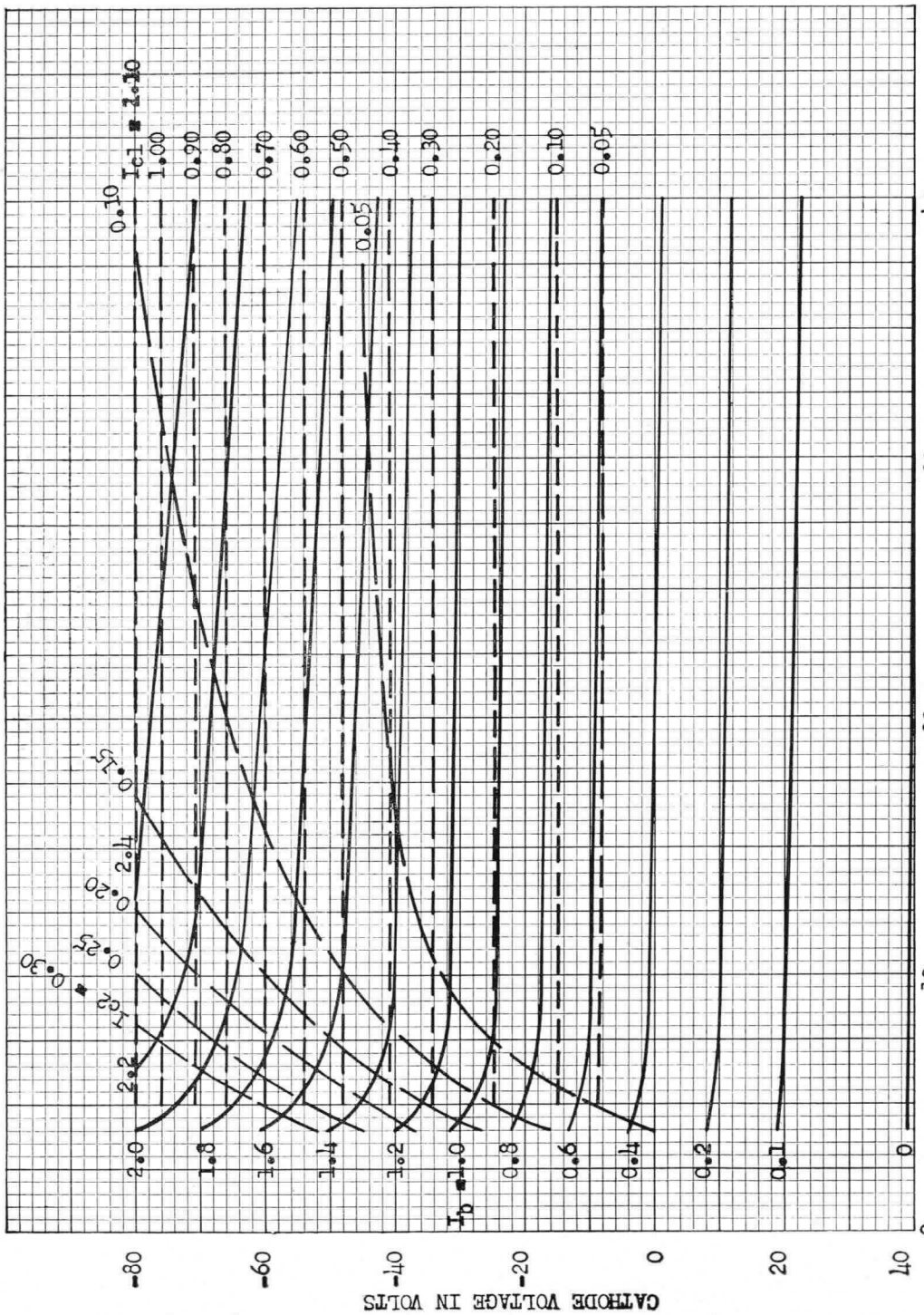

PLATE VOLTAGE IN HUNDREDS OF VOLTS

K-69087-72A458

2-21 52

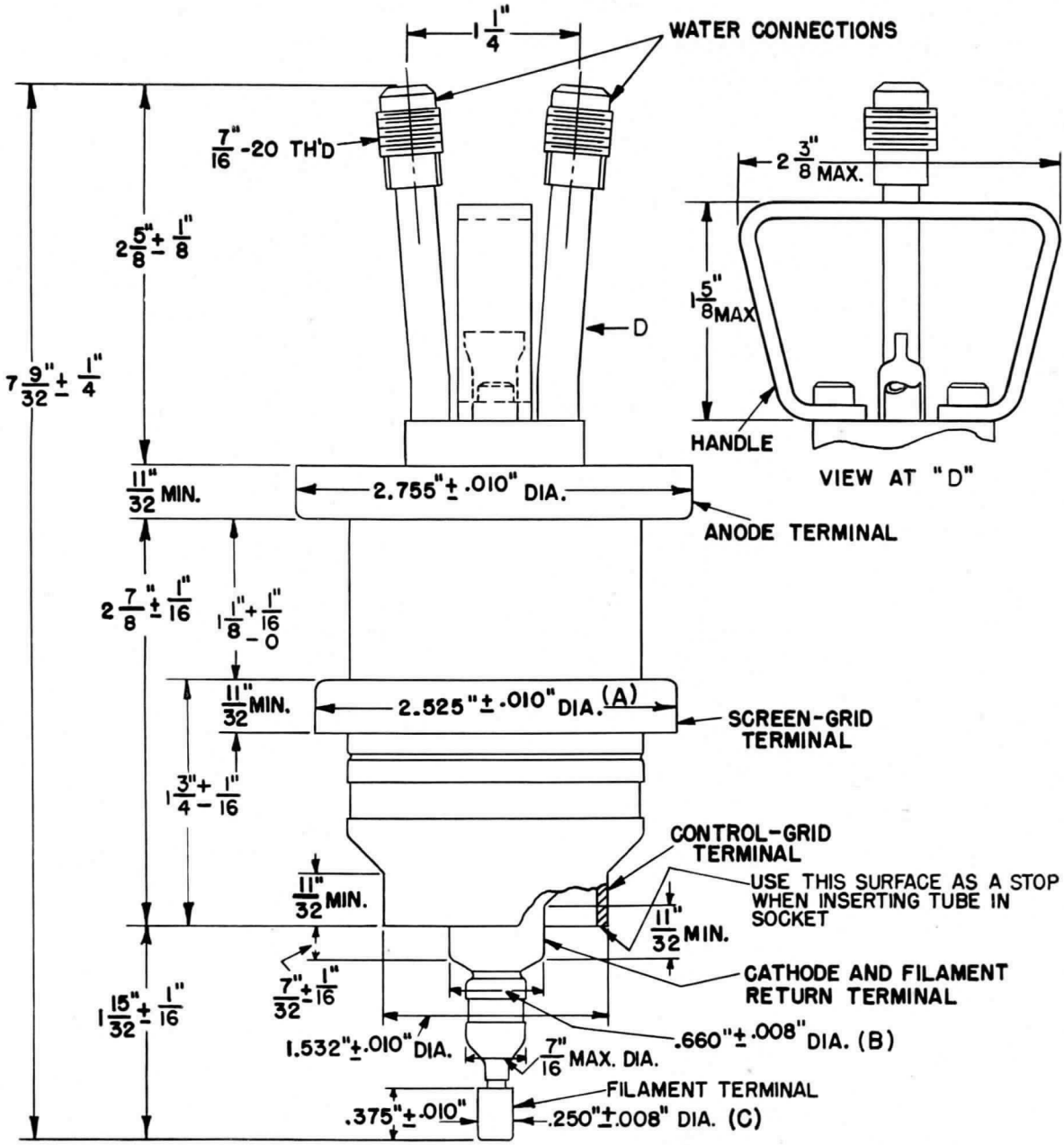

(A) MAXIMUM ECCENTRICITY 0.010"
(B) MAXIMUM ECCENTRICITY 0.015"
(C) MAXIMUM ECCENTRICITY 0.030"
WITH RESPECT TO CENTERLINE DETERMINED BY CENTERS OF ANODE TERMINAL AND CONTROL-GRID TERMINAL.

OUTLINE
GL-6019

ELECTRONIC COMPONENTS DIVISION

GENERAL ELECTRIC

Schenectady 5, N. Y.

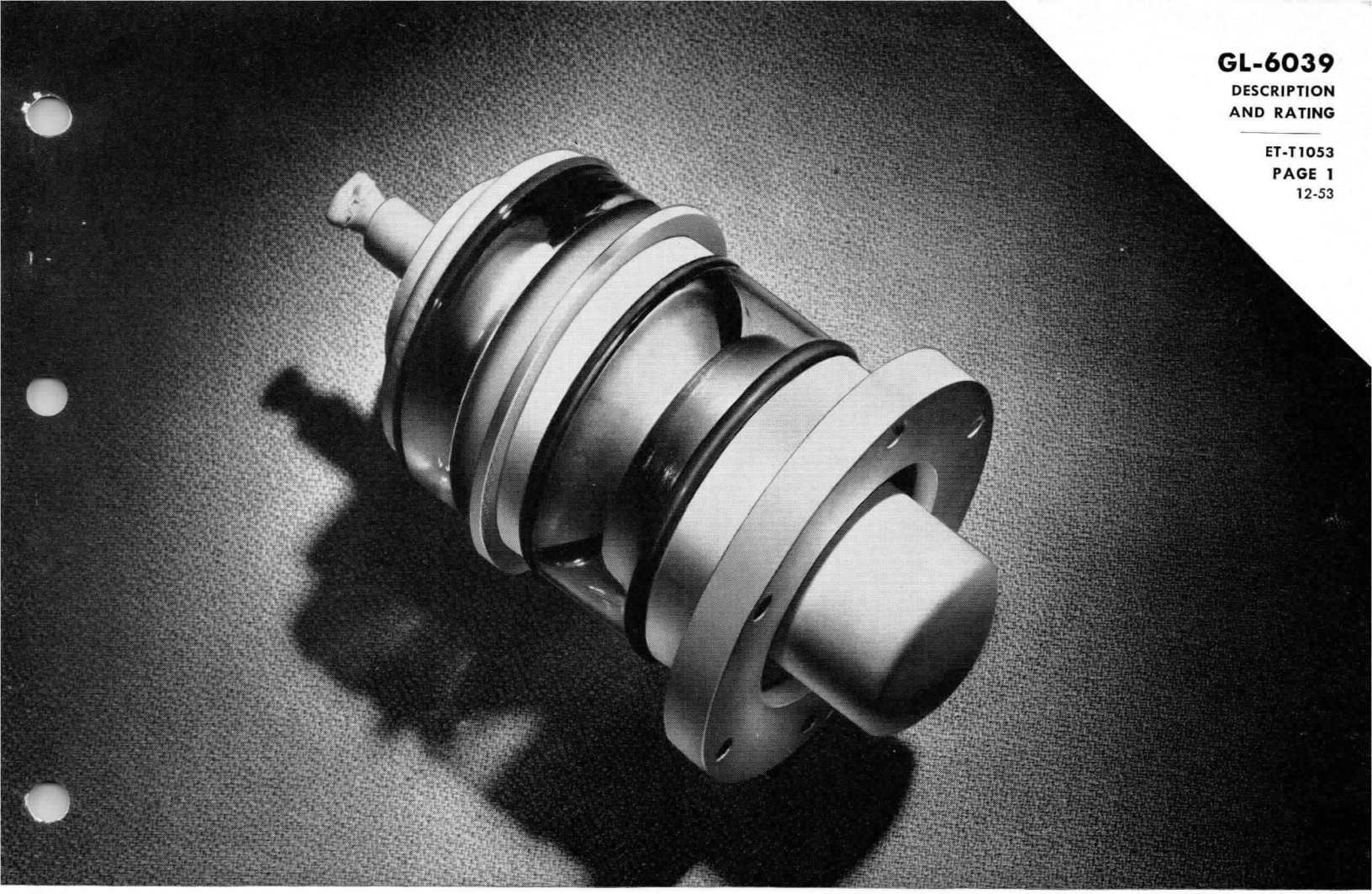

TRIODE

VHF TELEVISION
FM
GROUNDED-GRID CIRCUIT

WATER COOLED
THORIATED-TUNGSTEN FILAMENT
LOW LEAD INDUCTANCE

The GL-6039 is a three-electrode tube designed for use as a grounded-grid class B radio-frequency amplifier and class C radio-frequency amplifier and oscillator in television and FM services. The anode is water-cooled and capable of dissipating 7 kilowatts. The cathode is a thoriated-tungsten filament. Maximum ratings apply up to 220 megacycles.

Utilizing the same general design principles that have proved so successful in the operation of the GL-9C24, this tube's predecessor, the GL-6039 has several features that enable it to give improved service over the older tube in both the television and FM bands. A material reduction in power cost results from use of a thoriated-tungsten filament which requires only 25.8 percent of the amount of power required. Higher output can be obtained—a pair of GL-6039's are capable of 10 kilowatts output in television service and 25 kilowatts in FM. Other features of the tube are low lead inductance, large terminal-contact areas, and silver-plated metal parts to reduce radio-frequency losses. In addition, neutralization is unnecessary in a properly designed circuit, and the problem of filament starting is eliminated since special precautions to limit the filament starting current are not required.

The GL-6039 can be substituted for the GL-9C24 with a saving of 74.2 percent in filament power providing modification of the filament circuit and minor mechanical changes are made.

TECHNICAL INFORMATION

GENERAL

Electrical	Minimum	Bogey	Maximum	
Filament Voltage	4.8	5.0	5.2	Volts

TECHNICAL INFORMATION (CONT'D)

Filament Current at 5 Volts	74	78	82	Amperes
Amplification Factor, $I_b = 1.0$ amp, $E_c = -50V$	17	21	25	
Interelectrode Capacitances				
Grid-Plate	13.8	15.7	17.6	uuf
Grid-Filament	20	24	28	uuf
Plate-Filament*	0.34	0.47	0.60	uuf

Mechanical

Mounting Position—Vertical, Anode Down				
Type of Cooling—Water and Forced Air				
Water Flow on Anode	....	....	11	GPM
Maximum Outgoing Water Temperature	....	....	70	C
Air Flow to Center Filament Terminal	....	....	7	CFM
Maximum Glass Temperature§	....	....	150	C
Gasket—JETEC Type No. 19				
Net Weight, approximate	....	....	3.5	Pounds

MAXIMUM RATINGS AND TYPICAL OPERATING CONDITIONS

RADIO-FREQUENCY POWER AMPLIFIER—CLASS B VIDEO SERVICE

Synchronizing peak conditions per tube in a grounded-grid circuit—5 megacycles bandwidth

Maximum Ratings, Absolute Values

D-C Plate Voltage	6000 Max	Volts
D-C Plate Current	2.25 Max	Amperes
Plate Input	13.5 Max	Kilowatts
Plate Dissipation	7 Max	Kilowatts

Typical Operation

D-C Plate Voltage	5000	5000	Volts
D-C Grid-No. 1 Voltage	270	300	Volts
Peak R-f Grid-No. 1 Voltage	700	580	Volts
D-C Plate Current	2.2	2.1	Amperes
D-C Grid-No. 1 Current, approximate	0.21	0.17	Ampere
Driving Power, approximate†	1300	1060	Watts
Power Output, approximate†	5.6	4.9	Kilowatts

RADIO-FREQUENCY POWER AMPLIFIER AND OSCILLATOR—CLASS C TELEGRAPHY

Key-down conditions per tube without amplitude modulation‡

Maximum Ratings, Absolute Values

D-C Plate Voltage	7500 Max	Volts
D-C Grid-No. 1 Voltage	1000 Max	Volts
D-C Plate Current	2.25 Max	Amperes
D-C Grid-No. 1 Current	0.400 Max	Ampere
Plate Input	16 Max	Kilowatts
Plate Dissipation	7 Max	Kilowatts

Typical Operation, Grounded-Filament Circuit

D-C Plate Voltage	7000	Volts
D-C Grid-No. 1 Voltage	900	Volts
Peak R-f Grid-No. 1 Voltage	1540	Volts
D-C Plate Current	2.08	Amperes
D-C Grid-No. 1 Current, approximate	0.40	Ampere
Driving Power, approximate	620	Watts
Power Output, approximate	10	Kilowatts

Typical Operation, Grounded-grid Circuit

D-C Plate Voltage	7000	Volts
D-C Grid-No. 1 Voltage	900	Volts
Peak R-f Grid-No. 1 Voltage	1540	Volts
D-C Plate Current	2.08	Amperes

MAXIMUM RATINGS AND TYPICAL OPERATING CONDITIONS (CONT'D)

RADIO-FREQUENCY POWER AMPLIFIER AND OSCILLATOR—CLASS C TELEGRAPHY (CONT'D)

D-C Grid-No. 1 Current, approximate	0.40	Ampere
Driving Power, approximate†	3.4	Kilowatts
Power Output, approximate†	12.8	Kilowatts

* Measured with a 10-inch outer diameter and 3⅝-inch inner diameter flat shield on grid terminal.
§ Sufficient air flow must be applied to the grid-anode and grid-cathode seals to limit the temperature to this value.
† This value includes power transferred from driver to output.
‡ Modulation essentially negative may be used if the positive peak of the envelope does not exceed 115 percent of the carrier conditions.

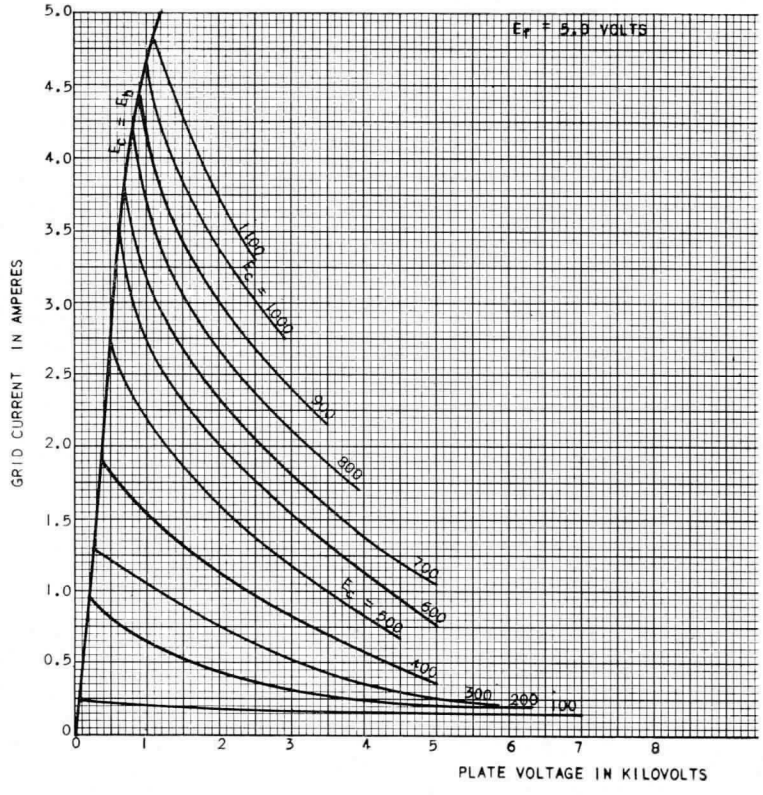

AVERAGE GRID CHARACTERISTICS

K-69087-72A416

4-3-52

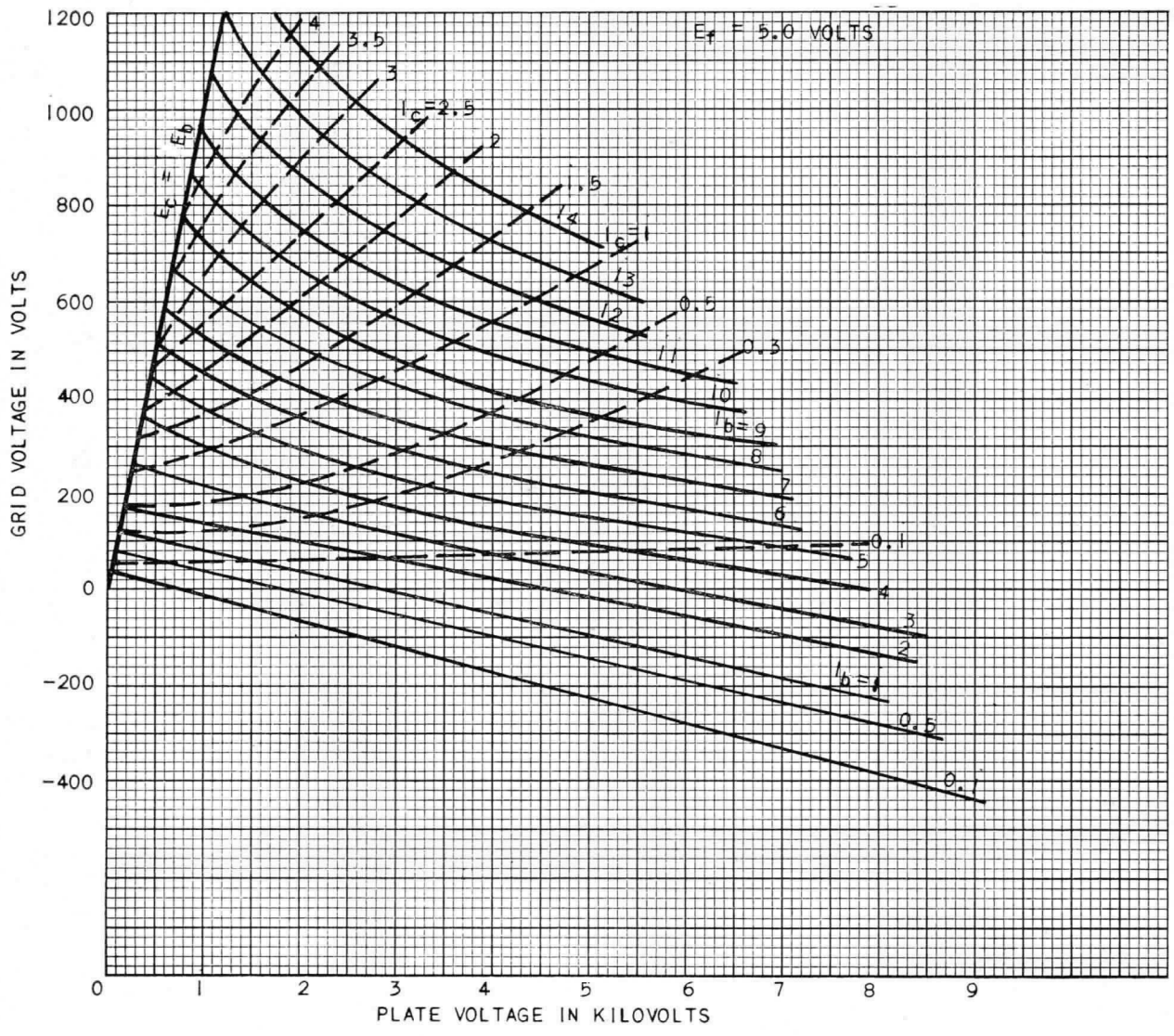

K-69087-72A368

4-3-52

CHARACTERISTICS

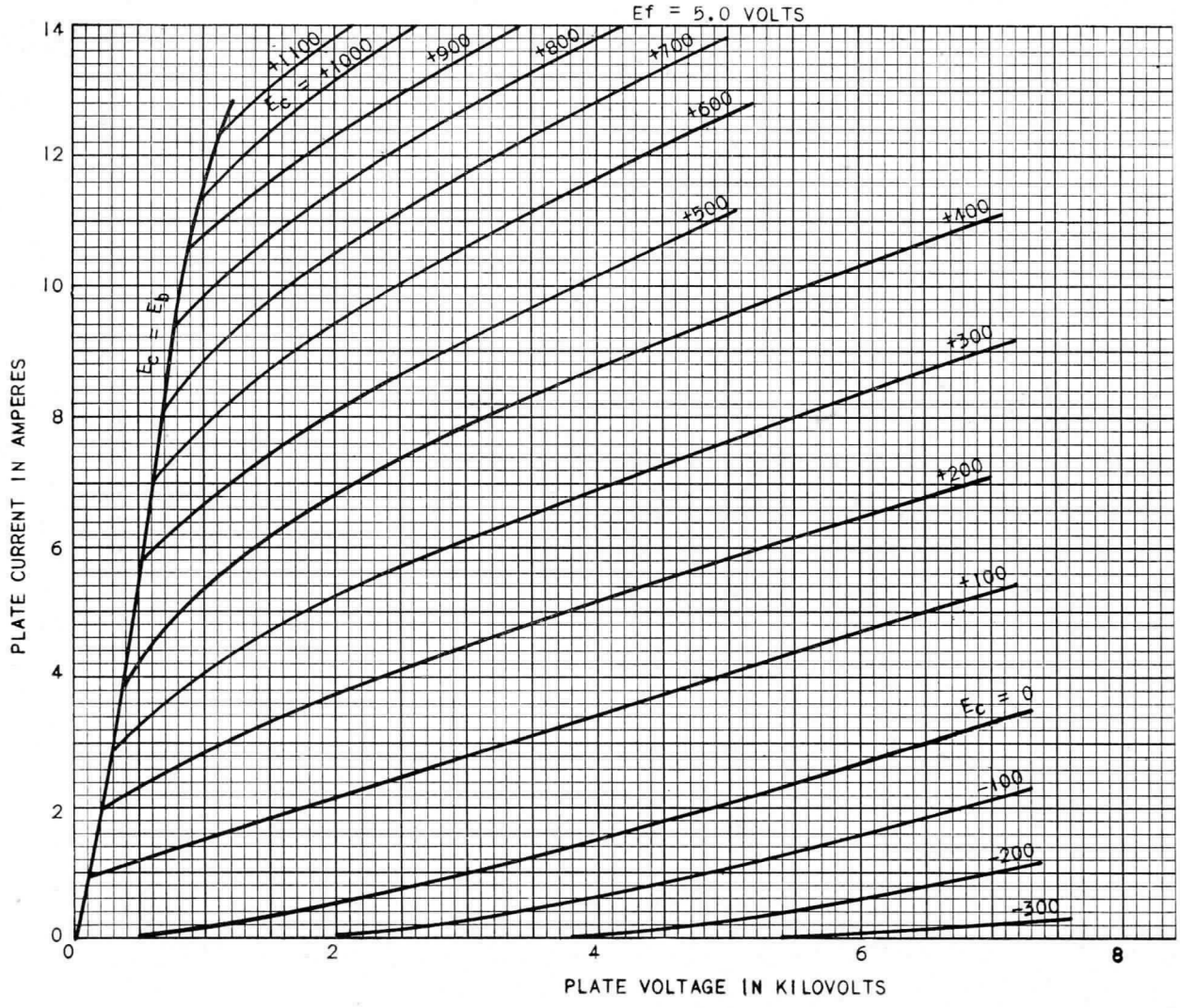

K-69087-72A415

3-24-52

AVERAGE PLATE CHARACTERISTICS

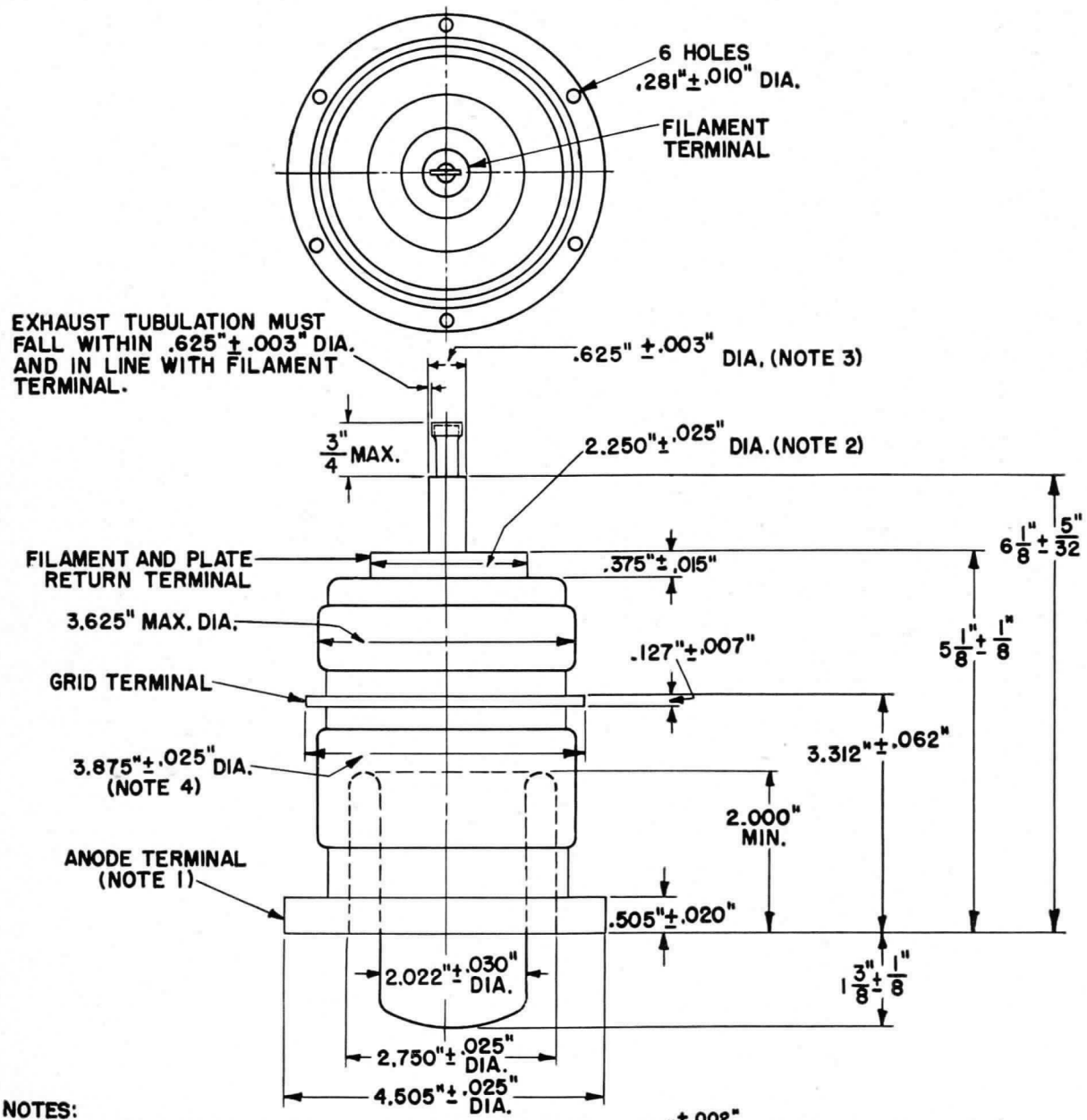

NOTES:

1. HOLES IN ANODE TERMINAL POSITIONED TO FIT SIX .250"$^{+.002"}_{-.000"}$ DIA. PINS INSERTED TO DEPTH OF FLANGE AND LOCATED ON A CIRCLE 4.000"±.003" DIA. AT ANGLES OF 60±0 DEG. 10'.
2. ECCENTRICITY .060" FROM CENTER LINE OF OUTSIDE CIRCUMFERENCE OF ANODE TERMINAL.
3. ECCENTRICITY .060" FROM CENTER LINE OF OUTSIDE CIRCUMFERENCE OF PLATE-RETURN TERM.
4. ECCENTRICITY .030" FROM CENTER LINE OF OUTSIDE CIRCUMFERENCE OF ANODE TERMINAL.

OUTLINE
GL-6039

N-15176AZ

6-17-53

ELECTRONIC COMPONENTS DIVISION

GENERAL ELECTRIC

Schenectady 5, N. Y.

PRINTED IN U.S.A.

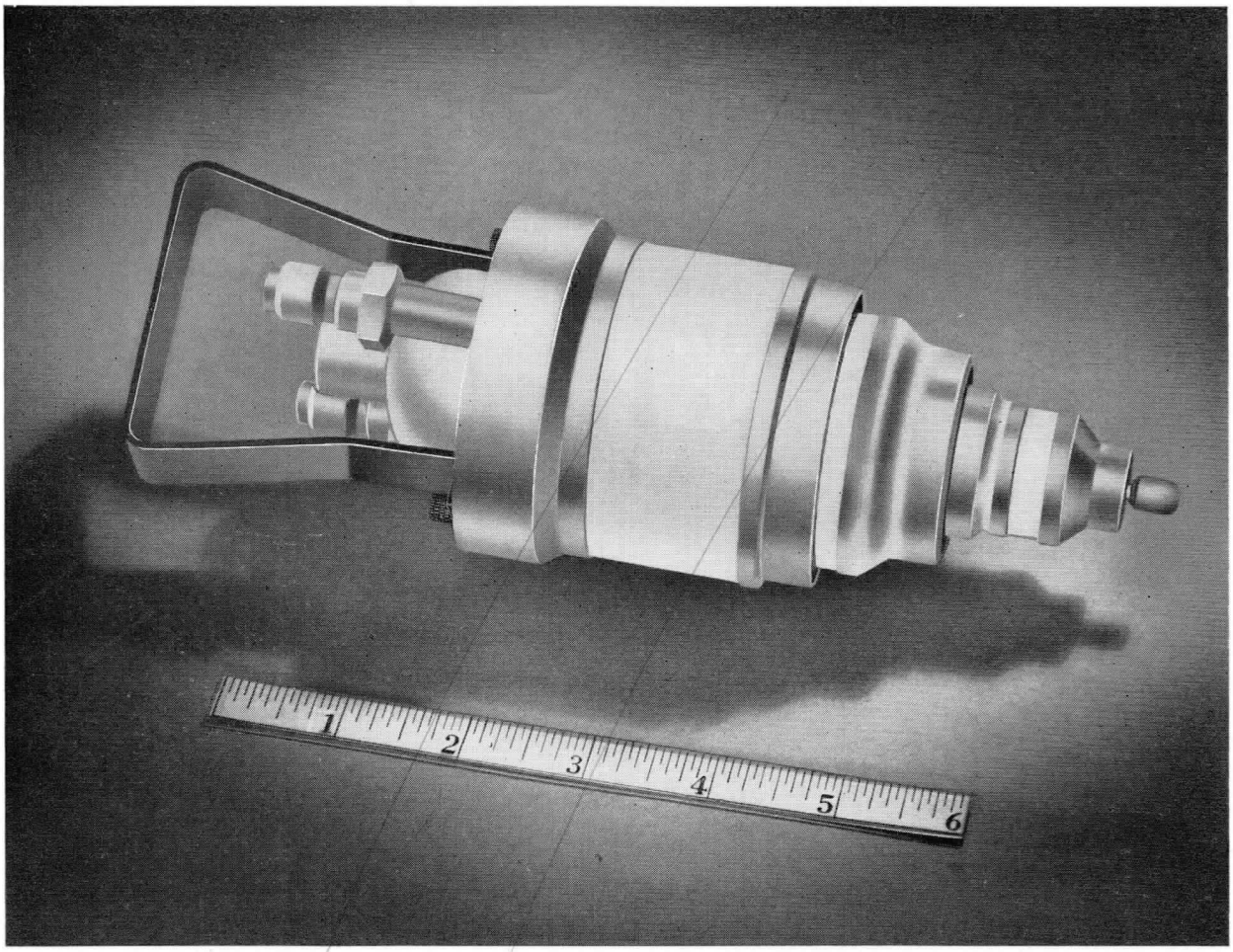

TETRODE

WATER COOLED **METAL AND CERAMIC**

GROUNDED-GRID CIRCUIT **INTEGRAL WATER JACKET**

UHF TETRODE, RING SEAL CONSTRUCTION

The GL-6182 is a four-electrode transmitting tube featuring a metal-and-ceramic envelope designed for use as a power amplifier or oscillator in grounded-grid circuits with both grids maintained at radio-frequency ground potential. The output circuit is connected between the anode and the screen grid. The anode is capable of dissipating three kilowatts. Cooling is accomplished by water and forced air with the water jacket an integral part of the anode. The cathode is indirectly heated and thoria coated. Maximum ratings apply up to 900 megacycles.

In narrow band Class C, grounded-grid, amplitude-modulated service this tube has a useful carrier power output in excess of one kilowatt. In Class C telegraphy, the useful output is 1.5 kilowatts of continuous power as an amplifier or oscillator.

High operating efficiency is assured because of the small size and close spacing of the tube electrodes, the ring-seal construction, and the ceramic insulator. In addition, the grounded-grid construction eliminates the necessity for neutralization in a properly designed circuit. The small size of the GL-6182 permits compact mounting, and the integral water jacket and ring-seal construction allow quick plug-in installation.

GENERAL ELECTRIC

#Supersedes pages 1 and 2 dated 9-57

TECHNICAL INFORMATION

GENERAL

Electrical	**Minimum**	**Bogey**	**Maximum**	
Heater Voltage	....	6.7	7.0	Volts
Heater Current at 7.0 Volts				
Without Cathode Bombing	....	15	....	Amperes
With Cathode Bombing	....	14	....	Amperes
Heater Starting Current	....	....	25	Amperes
Heater Cold Resistance	....	0.041	....	Ohms
Cathode Bombarding Power*	....	115	180	Watts
Cathode Bombarding Voltage, DC	....	....	700	Volts
Cathode Bombarding Current, DC	....	....	0.3	Amperes
Cathode Heating Time	1	....	....	Minutes
Amplification Factor, G_2 to G_1				
⊕E_b = 4000 Volts, I_b = 0.500 Amperes, E_c2 = 500 Volts	....	20	....	
Peak Cathode Current†	....	....	9	Amperes
Direct Interelectrode Capacitances				
⊕Cathode to Plate‡	....	0.01	....	μμf
Input, G_2 tied to G_1	....	29.0	....	μμf
Output, G_2 tied to G_1§	....	6.6	....	μμf

Mechanical

⊕Mounting Position—Vertical, Anode-End Up

Net Weight, approximate ..... 2 Pounds

Thermal

Water Flow		
Anode	3.0 Min	Gallons per Minute
Pressure Drop at Rated Flow♦	20 Max	Pounds per Square Inch
Water Pressure	80 Max	Pounds per Square Inch
Outlet Water Temperature	70 Max	C
Air Flow		
Screen-Grid to Control-Grid Seals	15 Min	Cubic Feet per Minute
Heater-to-Cathode Seals	7.5 Min	Cubic Feet per Minute
Anode Ceramic	10 Min	Cubic Feet per Minute
Ceramic Temperature at any Point	200 Max	C

Water and forced-air cooling to be applied before and during the application of any voltages. Water cooling may be discontinued with removal of all voltages. Air flow on heater-to-cathode seals must be maintained for one minute after removal of heater voltage.

MAXIMUM RATINGS AND TYPICAL OPERATION

PLATE-MODULATED RADIO-FREQUENCY POWER AMPLIFIER—CLASS C TELEPHONY

Carrier Conditions with a Maximum Modulation Factor of 1.0

Screen Modulation Required

Maximum Ratings, Absolute Values

DC Plate Voltage	4500 Max	Volts
DC Grid-No. 2 Voltage	600 Max	Volts
DC Grid-No. 1 Voltage	−120 Max	Volts
DC Plate Current	0.80 Max	Amperes
DC Grid-No. 1 Current	0.120 Max	Amperes
Plate Input	3.60 Max	Kilowatts
Grid-No. 2 Input	25 Max	Watts
Plate Dissipation	3000 Max	Watts

Typical Operation, Grounded-Grid Circuit

DC Plate Voltage	4000	Volts
DC Grid-No. 2 Voltage	500	Volts
DC Grid-No. 1 Voltage	−80	Volts
Peak RF Plate Voltage	2500	Volts
Peak RF Grid-No. 1 Voltage	100	Volts
DC Plate Current	0.570	Amperes
DC Grid-No. 2 Current	0.020	Amperes
DC Grid-No. 1 Current, approximate	0.110	Amperes
Driving Power at the Tube, approximate	100	Watts
Power Output¶	1250	Watts
Cathode Bombarding Voltage	540	Volts
Cathode Bombarding Current	0.220	Amperes

TECHNICAL INFORMATION (CONT'D)

RADIO-FREQUENCY POWER AMPLIFIER AND OSCILLATOR—CLASS C TELEGRAPHY

Key-Down Conditions Per Tube Without Amplitude Modulation

Maximum Ratings, Absolute Values

DC Plate Voltage	6000 Max	Volts
DC Grid-No. 2 Voltage	600 Max	Volts
DC Plate Current	1.0 Max	Amperes
Plate Input	.5 Max	Kilowatts
Grid-No. 2 Input	40 Max	Watts
Plate Dissipation	3.0 Max	Kilowatts
DC Grid-No. 1 Voltage	120 Max	Volts
DC Grid-No. 1 Current	0.120 Max	Amperes

Typical Operation—Grounded-Grid Circuit up to 900 Megacycles

DC Plate Voltage	4500	Volts
DC Grid-No. 2 Voltage	550	Volts
DC Grid-No. 1 Voltage	−120	Volts
Peak RF Plate Voltage, approximate	3000	Volts
Peak RF Grid-No. 1 Voltage	140	Volts
DC Plate Current	0.6	Amperes
DC Grid-No. 2 Current	0.015	Amperes
DC Grid-No. 1 Current	0.060	Amperes
Driving Power at Tube, approximate	90	Watts
Power Output, approximate¶	1500	Watts

* The cathode of the GL6182, because of transit-time effects which raise the temperature of the cathode, is subjected to considerable back bombardment in ultra-high-frequency service. The amount of heating due to bombardment is a function of the operating conditions and frequency, and must be compensated for by a reduction of the cathode power input to prevent over-heating of the cathode with resulting short life. In any case it is important from a tube life standpoint to keep the bombarder power at as low a level as possible consistent with required performance. Bombarder power should be monitored by suitable wattmeter or d-c voltmeter and milliammeter arrangement. For long life, the GL-6182 should be put in operation with about 150 watts bombarding power. After the circuit has been adjusted for proper tube operation, bombarding voltage should be reduced to a value slightly above that at which circuit performance is affected. At a frequency of 900 megacycles and with typical operating conditions the bombarding power can be reduced to approximately 115 watts. At lower frequencies, the reduction will be less. Minor circuit readjustment may be necessary after the above adjustment. The procedure for determining proper bombarder power should be repeated periodically.

† Represents maximum usable cathode current (plate current plus current to each grid) for any condition of operation.

‡ Measured with complete external shielding between cathode and anode.

§ Output capacitance measured between anode and screen grid. Control grid connected directly to screen grid.

¶ Useful power output including power transferred from driver stage. Output circuit efficiency approximately 80 percent.

♦ Pressure drop excludes drop through external connections.

□ Denotes an addition.

⊕ Denotes a change.

CONSTANT CURRENT CHARACTERISTICS

SCREEN VOLTAGE = 500 VOLTS

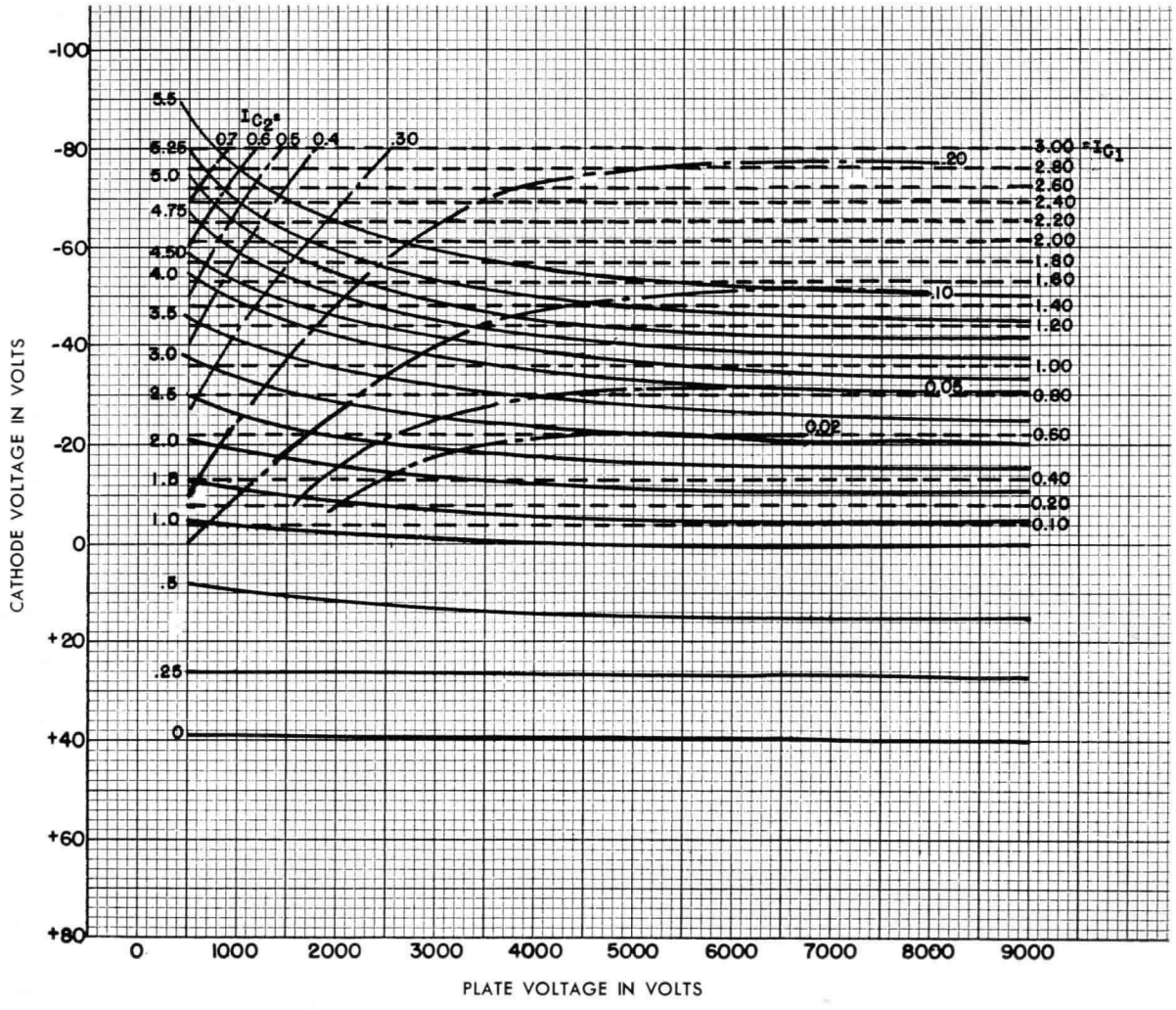

K-69087-225A9

2-28-57

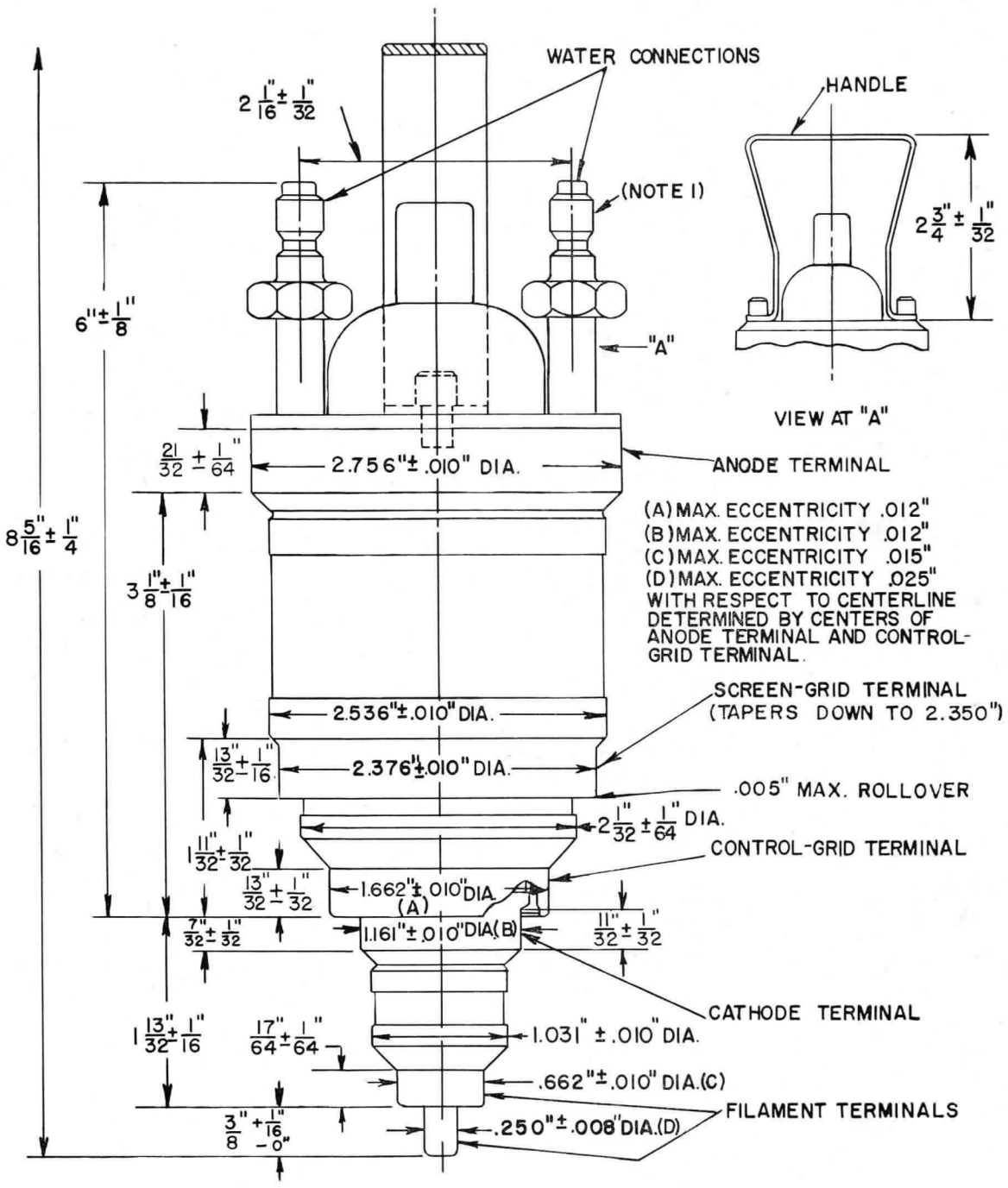

NOTE 1. TOP PORTION SAME AS TOP PORTION OF HANSEN B2T16. MATES WITH HANSEN 2-S17 SOCKET OR EQUIVALENT. HANSEN MANUFACTURING COMPANY CLEVELAND, OHIO

N20723AZ—Outline Revised
▲*Supersedes page 5 dated 9-57*

1-2-59

ELECTRONIC COMPONENTS DIVISION

GENERAL ELECTRIC

Schenectady 5, N. Y.

PRINTED IN U.S.A.

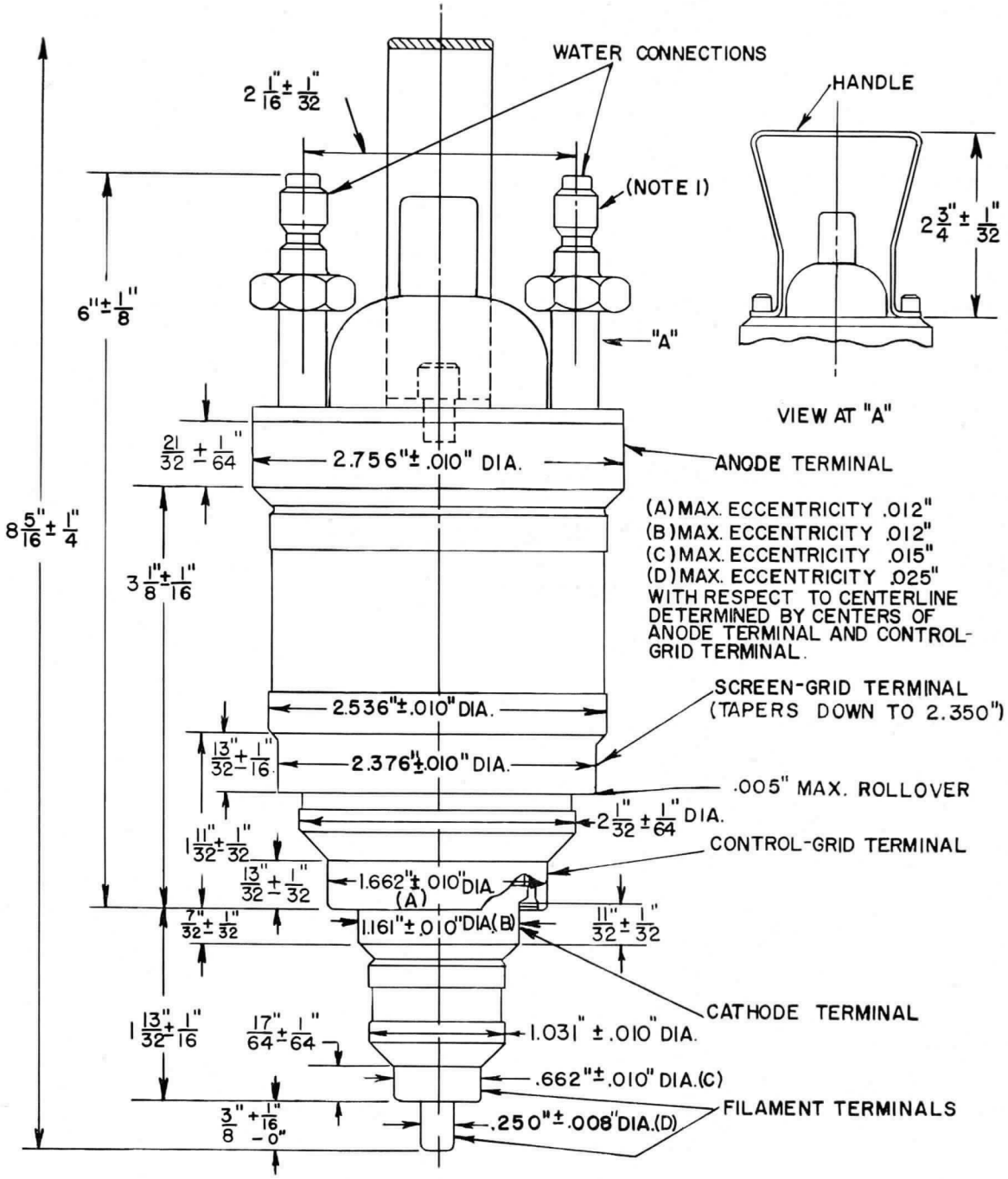

NOTE 1. TOP PORTION SAME AS TOP PORTION OF HANSEN B2T16. MATES WITH HANSEN 2-S17 SOCKET OR EQUIVALENT. HANSEN MANUFACTURING COMPANY CLEVELAND, OHIO

ELECTRONIC COMPONENTS DIVISION

GENERAL ELECTRIC

Schenectady 5, N. Y.

PRINTED IN U.S.A.

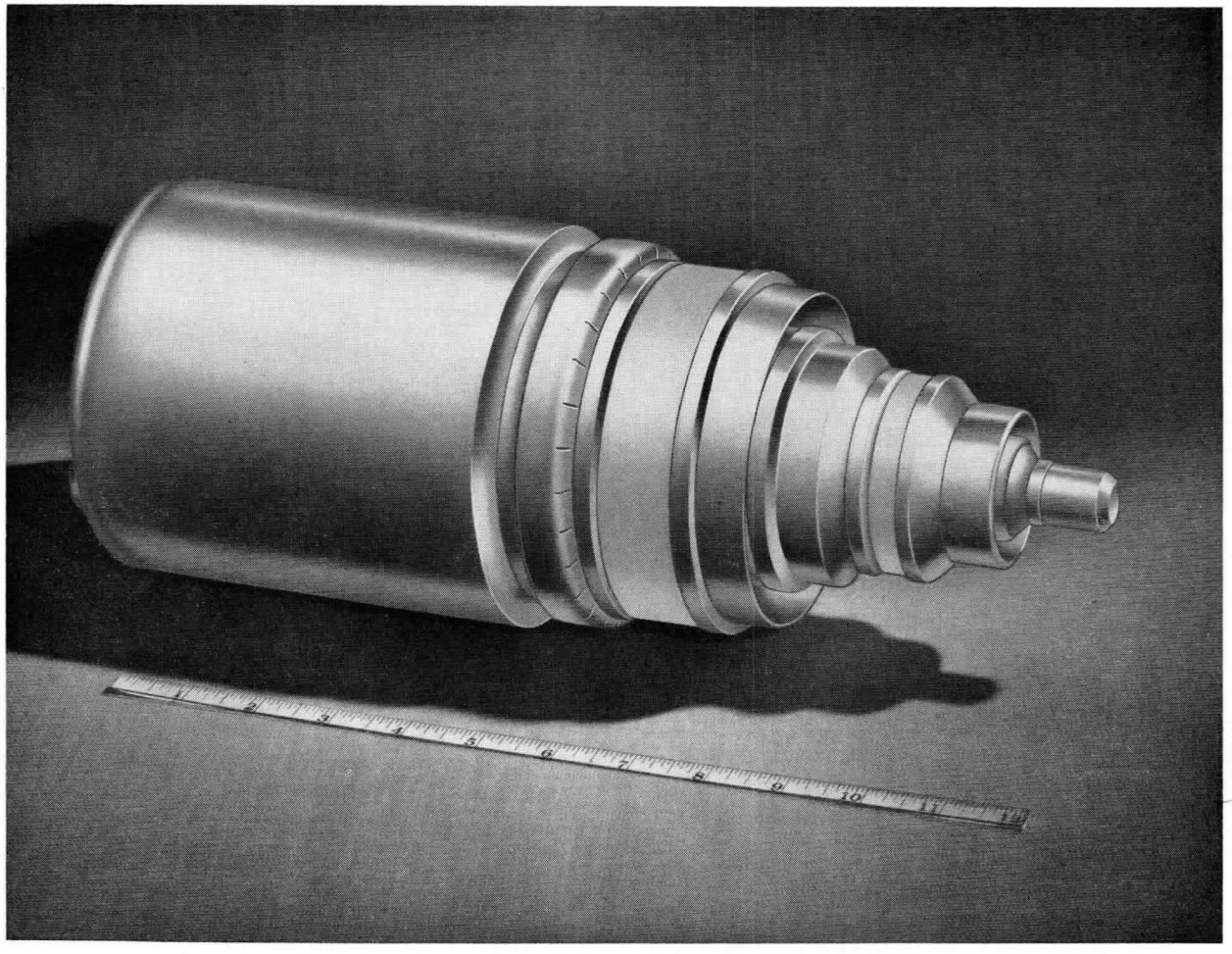

TETRODE

25-KILOWATTS VHF TELEVISION OUTPUT
VHF TETRODE
GROUNDED-GRID CIRCUITS

WATER COOLED
METAL AND CERAMIC
GAIN IN EXCESS OF 10

The GL-6251 is a four-electrode, water-and-forced-air-cooled transmitting tube for use as a power amplifier or oscillator in grounded-grid circuits with both grids maintained at radio-frequency ground potential. The output circuit is connected between the anode and the screen grid. The anode is capable of dissipating twenty-five kilowatts. The cathode is a thoriated-tungsten filament. Maximum ratings apply up to 220 megacycles.

In Class B grounded-grid broadband television amplifier service this tube has a useful synchronizing peak-power output of twenty-five kilowatts at 220 megacycles. Because of its ratings, the tube is also well adapted to use in dielectric-heating equipment.

High operating efficiency is assured because of the close spacing of the tube electrodes, the ring-seal construction, and the low-loss factor due to the silver-plated external parts and the ceramic insulator. The ring-seal design permits quick plug-in installation. In addition, the grounded-grid construction eliminates the necessity for neutralization in a properly designed circuit.

TECHNICAL INFORMATION

GENERAL

Electrical	Minimum	Bogey	Maximum	
⊕ Filament Voltage	5.1	5.5	5.75	Volts
Filament Current at 5.5 Volts	....	190	....	Amperes
Filament Starting Current	....	....	360	Amperes
Filament Cold Resistance	....	0.004	....	Ohms
Filament Heating Time	30	....	....	Seconds
Amplification Factor, G_2 to G_1				
E_b = 1000 Volts, I_b = 0.1 Amperes	....	20	...	
Peak Cathode Current*	....	....	30	Amperes
Direct Interelectrode Capacitances§				
Grounded-Grid Circuit				
Cathode-Plate†	....	0.06	....	μμf
Input	....	75	....	μμf
Output	....	27	....	μμf

Mechanical

Mounting Position—Vertical, anode down		
Net Weight, approximate	15	Pounds

Thermal

Type of Cooling—Water and Forced Air		
Water Cooling		
Water Flow		
Anode	12 Min	Gallons per Minute
Water Pressure	80 Max	Pounds per Square Inch
Pressure Drop at Rated Flow, approximate	13	Pounds per Square Inch
Outlet Water Temperature	70 Max	C
Air Cooling		
Air Flow		
Anode Seal	30 Min	Cubic Feet per Minute
Filament Seal	15 Min	Cubic Feet per Minute
Grid-to-Grid Seal	10 Min	Cubic Feet per Minute
Ceramic Temperature	200 Max	C
□ Seal and Terminal Temperature	180 Max	C

MAXIMUM RATINGS AND TYPICAL OPERATION

RADIO-FREQUENCY AMPLIFIER—CLASS B TELEVISION SERVICE

Synchronizing-Level Conditions Per Tube Unless Otherwise Specified

Maximum Ratings, Absolute Values

DC Plate Voltage	7000 Max	Volts
⊕ DC Grid-No. 2 Voltage	700 Max	Volts
DC Plate Current	8 Max	Amperes
Plate Input	50 Max	Kilowatts
Grid-No. 2 Input‡	350 Max	Watts
⊕ DC Grid-No. 2 Current		
Pedestal Level	0.200 Max	Amperes
Plate Dissipation	25 Max	Kilowatts
Grid-No. 1 Dissipation	150 Max	Watts
⊕ DC Grid-No. 1 Current	1.0 Max	Amperes

Typical Operation—Grounded-Grid Circuit up to 216 Megacycles

Bandwidth 7 Megacycles, 1 Decibel Voltage		
DC Plate Voltage	6800	Volts
⊕ DC Grid-No. 2 Voltage//	600	Volts
DC Grid-No. 1 Voltage	−20	Volts
Peak RF Plate Voltage		
Synchronizing Level	4800	Volts
Pedestal Level	3600	Volts
Peak RF Driving Voltage		
Synchronizing Level	350	Volts
Pedestal Level	250	Volts

TECHNICAL INFORMATION (CONT'D)

Typical Operation (Cont'd)

DC Plate Current		
Synchronizing Level	7.5	Amperes
Pedestal Level	5.8	Amperes
DC Grid-No. 2 Current//		
Pedestal Level	0.05	Amperes
DC Grid-No. 1 Current		
Synchronizing Level	0.90	Amperes
Pedestal Level	0.55	Amperes
Driving Power at Tube, approximate		
Synchronizing Level	2.3	Kilowatts
Pedestal Level	1.3	Kilowatts
Power Output, approximate¶		
Synchronizing Level	25	Kilowatts
Pedestal Level	15	Kilowatts

* Maximum usable cathode current (plate current plus current to each grid) for any condition of operation.

§ Control grid and screened grid are connected together.

† Measured with 12-inch diameter flat metal disk attached to the screen-grid terminal and grounded.

‡ Calculated from characteristic curve only. This value includes dissipation transferred from driving power. Maximum allowable screen input as indicated by measured d-c current and voltage is much lower because of secondary screen emission.

//DC Grid-No. 2 voltage and current should be held at the minimum values consistent with proper circuit operation. Negative values of screen current are frequently encountered but are not detrimental.

¶ Useful power output including power transferred from driver stage.

⊕ Denotes a change.

□Denotes an addition.

CONSTANT CURRENT CHARACTERISTICS
SCREEN VOLTAGE=700 VOLTS, CONTROL-GRID GROUNDED
ELECTRODE VOLTAGES MEASURED TO GROUND

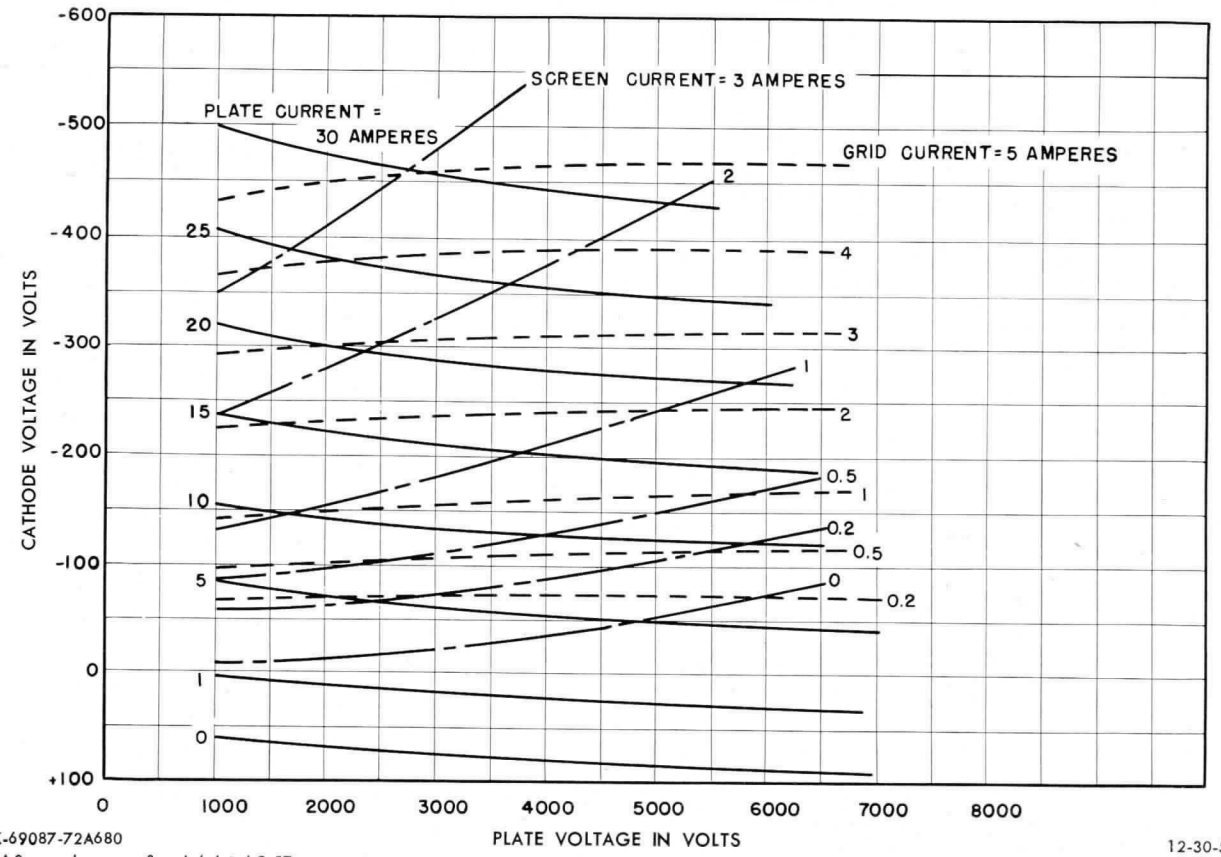

K-69087-72A680

12-30-54

▲Supersedes pages 3 and 4 dated 9-57

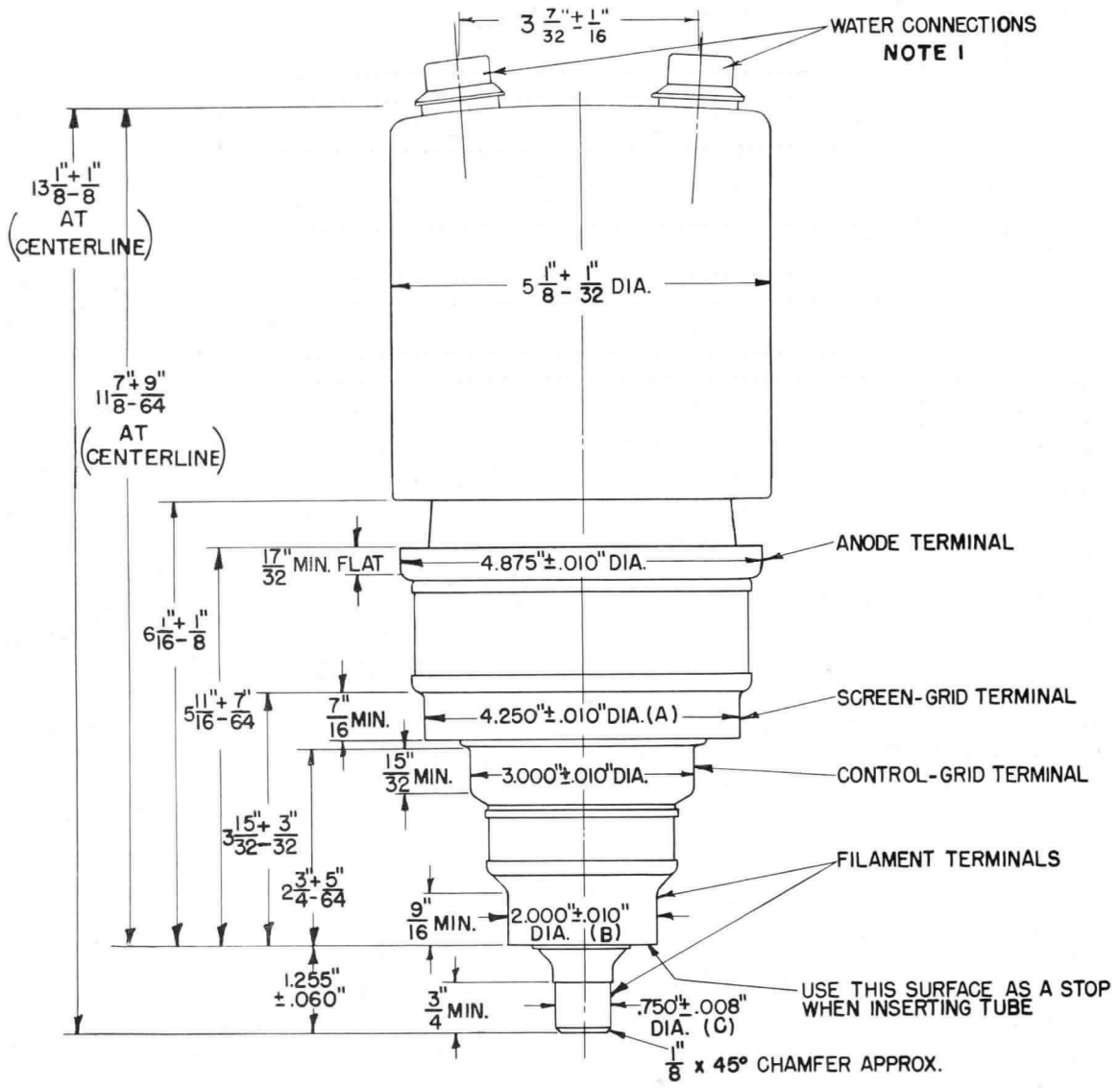

(A) MAX. ECCENTRICITY .040"
(B) MAX. ECCENTRICITY .040"
(C) MAX. ECCENTRICITY .050"
WITH RESPECT TO CENTERLINE DETERMINED BY CENTERS OF ANODE TERMINAL & CONTROL-GRID TERMINAL.

NOTE 1: MATES WITH WIGGINS SOCKET NO. BC-323B OR EQUIVALENT.
E. B. WIGGINS OIL TOOL COMPANY, INC., LOS ANGELES, CALIFORNIA

N-20726AZ—Outline Revised

1-6-59

ELECTRONIC COMPONENTS DIVISION

GENERAL ELECTRIC

Schenectady 5, N. Y.

PRINTED IN U.S.A.

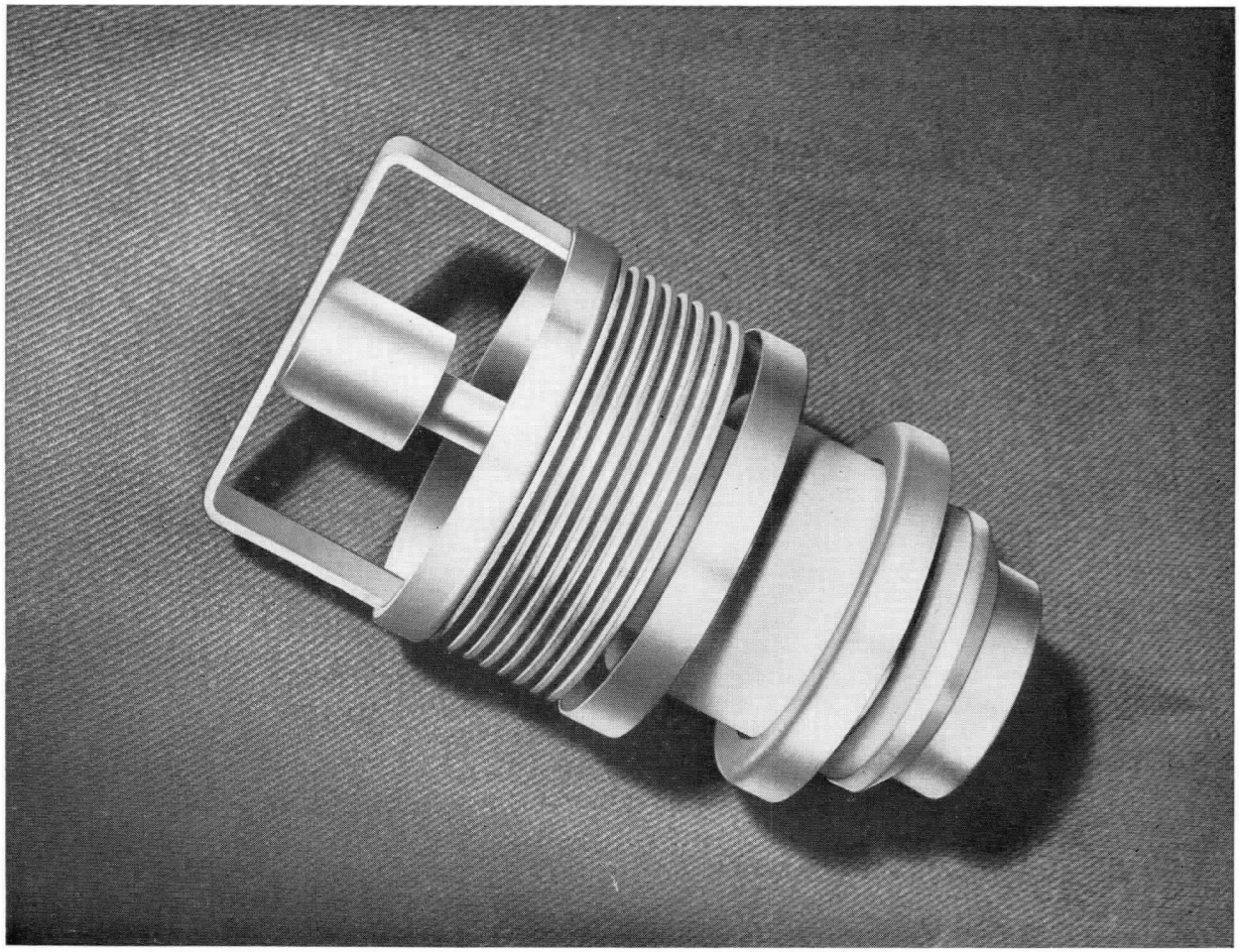

TETRODE

250-WATT UHF TELEVISION OUTPUT TETRODE
GROUNDED-GRID CIRCUIT

FORCED-AIR COOLED METAL AND CERAMIC INTEGRAL RADIATOR

The GL-6283 four-electrode transmitting tube with a metal-and-ceramic envelope is a power amplifier or oscillator designed particularly for use in grounded-grid circuits where both grids are maintained at radio-frequency ground potential. Under such conditions in a tetrode the output circuit is connected between the anode and the screen grid.

The tube has an indirectly heated oxide-coated cathode, a plate dissipation rating of 300 watts, and is forced-air cooled. Maximum ratings apply at frequencies up to 900 megacycles.

In Class B, grounded-grid, broadband, television-amplifier service the GL-6283 can deliver a useful synchronizing peak power output of 250 watts at the maximum frequency of 900 megacycles. When the tube is used as an amplifier or oscillator in Class C telegraphy narrowband service 150 watts of useful continuous power can be obtained.

TECHNICAL INFORMATION

GENERAL

Electrical	Minimum	Bogey	Maximum	
Heater Voltage*	—	6.3	6.8	Volts
Heater Current at Bogey Voltage	—	3.6	—	Amperes
Cathode Heating Time	1	—	—	Minutes

GENERAL ELECTRIC

#Supersedes pages 1 and 2 dated 12-53

TECHNICAL INFORMATION (CONT'D)

Amplification Factor, G_2 to G_1			
$E_g2 = 250$ Volts, $I_g2 = 0.050$ Ampere, Plate Floating		10	
Peak Cathode Current†			1.75 Amperes
Direct Interelectrode Capacitances			
Cathode-Plate‡		0.006	μμf
Input, G_2 tied to G_1	....	17.4	μμf
Output, G_2 tied to G_1♦	....	6.4	μμf
Mechanical			
Mounting Position—Any			
Air Flow			
Through Radiator**			
Plate Dissipation	300	240	180 Watts
Air Flow	20.5	14	7.5 Min Cubic Feet per Minute
Static Pressure	0.65	0.38	0.16 Inches Water
Screen-Grid to Control-Grid Seals			1 Min Cubic Feet per Minute
Heater to Cathode Seals			1 Min Cubic Feet per Minute
Incoming Air Temperature			45 Max C
Radiator Hub Temperature at Point Adjacent to Anode Seal			180 Max C
Ceramic Temperature at any Point			200 Max C
Net Weight, approximate			1.0 Pound

Forced-air cooling to be applied before and during the application of any voltages.

**Provision must be made for unobstructed passage of cooling air between radiator fins and between the anode terminal and adjacent radiator fin.

MAXIMUM RATINGS AND TYPICAL OPERATING CONDITIONS

RADIO-FREQUENCY AMPLIFIER—CLASS B TELEVISION SERVICE

Synchronizing-Level Conditions Per Tube Unless Otherwise Specified

Maximum Ratings, Absolute Values

DC Plate Voltage	1600 Max Volts
DC Grid-No. 2 Voltage	320 Max Volts
DC Plate Current	0.400 Max Amperes
Plate Input	600 Max Watts
Grid-No. 2 Input	15 Max Watts
Plate Dissipation	300 Max Watts
Grid-No. 1 Dissipation	2 Max Watts

Typical Operation—Grounded-Grid Circuit up to 900 Megacycles

Bandwidth 6 Megacycles		
DC Plate Voltage	1500	Volts
DC Grid-No. 2 Voltage	250	Volts
DC Grid-No. 1 Voltage	−25	Volts
Peak RF Plate Voltage		
Synchronizing Level	1100	Volts
Pedestal Level	825	Volts
Peak RF Driving Voltage		
Synchronizing Level	35	Volts
Pedestal Level	27	Volts
DC Plate Current		
⊕Synchronizing Level	0.400	Amperes
⊕Pedestal Level	0.295	Amperes
DC Grid-No. 2 Current (Pedestal Level)	0.007	Amperes
DC Grid-No. 1 Current		
Synchronizing Level	0.036	Amperes
Pedestal Level	0.016	Amperes
Driving Power at Tube, approximate		
Synchronizing Level	25	Watts
Pedestal Level	15	Watts
Power Output, approximate		
Synchronizing Level π	260	Watts
Pedestal Level π	145	Watts

TECHNICAL INFORMATION (CONT'D)

RADIO-FREQUENCY POWER AMPLIFIER AND OSCILLATOR—CLASS C TELEGRAPHY

Key-Down Conditions Per Tube Without Amplitude Modulation△

Maximum Ratings, Absolute Values

DC Plate Voltage	1600 Max	Volts
DC Grid-No. 2 Voltage	320 Max	Volts
DC Grid-No. 1 Voltage	−100 Max	Volts
DC Plate Current	0.300 Max	Amperes
DC Grid-No. 1 Current	0.050 Max	Amperes
Plate Input	450 Max	Watts
Grid-No. 2 Input	15 Max	Watts
Plate Dissipation	300 Max	Watts
Grid-No. 1 Dissipation	2 Max	Watts

Typical Operation—Grounded-Grid Circuit at 900 Megacycles

⊕ DC Plate Voltage	1500	Volts
DC Grid-No. 2 Voltage	250	Volts
⊕ DC Grid-No. 1 Voltage	−40	Volts
Peak RF Plate Voltage, approximate	1000	Volts
⊕ Peak RF Grid-No. 1 Voltage, approximate	55	Volts
⊕ DC Plate Current	0.290	Amperes
DC Grid-No. 2 Current, approximate	0.010	Amperes
⊕ DC Grid-No. 1 Current, approximate	−0.020	Amperes
Driving Power, approximate	12	Watts
Power Output, approximate π	154	Watts

* The cathode of the GL-6283, because of transit-time effects which raise the temperature of the cathode, is subjected to considerable back bombardment in ultra-high-frequency service. The amount of heating due to bombardment is a function of the operating conditions and frequency and must be compensated for by a reduction of the heater input to prevent overheating of the cathode with resulting short life. For long life, the GL-6283 should be put in operation with rated heater voltage. After the circuit has been adjusted for proper tube operation the heater voltage should be reduced to a value about one-half volt above that at which circuit performance is affected. In any case it is important from a tube life standpoint to keep the GL-6283 filament voltage at as low a level as possible consistent with required performance. However, the filament voltage should not be reduced below 5.5 volts. At a frequency of 900 megacycles with typical operating conditions the heater voltage can be reduced to approximately 5.5 volts. Minor circuit readjustment may be necessary after the above adjustment.

† Represents maximum usable cathode current (plate current plus current to each grid) for any condition of operation.

‡ Measured with a 6-inch minimum diameter flat metal disk attached to the screen-grid ring. Control grid connected to the screen grid.

♦ Output capacitances measured between anode and screen grid. Control grid connected directly to screen grid.

π Useful power output including power transferred from driver stage. Output circuit efficiency approximately 80 percent.

△Modulation essentially negative may be used if the positive peak of the envelope does not exceed 115 percent of the carrier conditions.

⊕ Denotes a change.

§ Supersedes pages 3 and 4 dated 12-53.

CONSTANT-CURRENT CHARACTERISTIC

SCREEN VOLTAGE = 250 VOLTS, CONTROL GRID GROUNDED
ELECTRODE VOLTAGES MEASURED TO GROUND

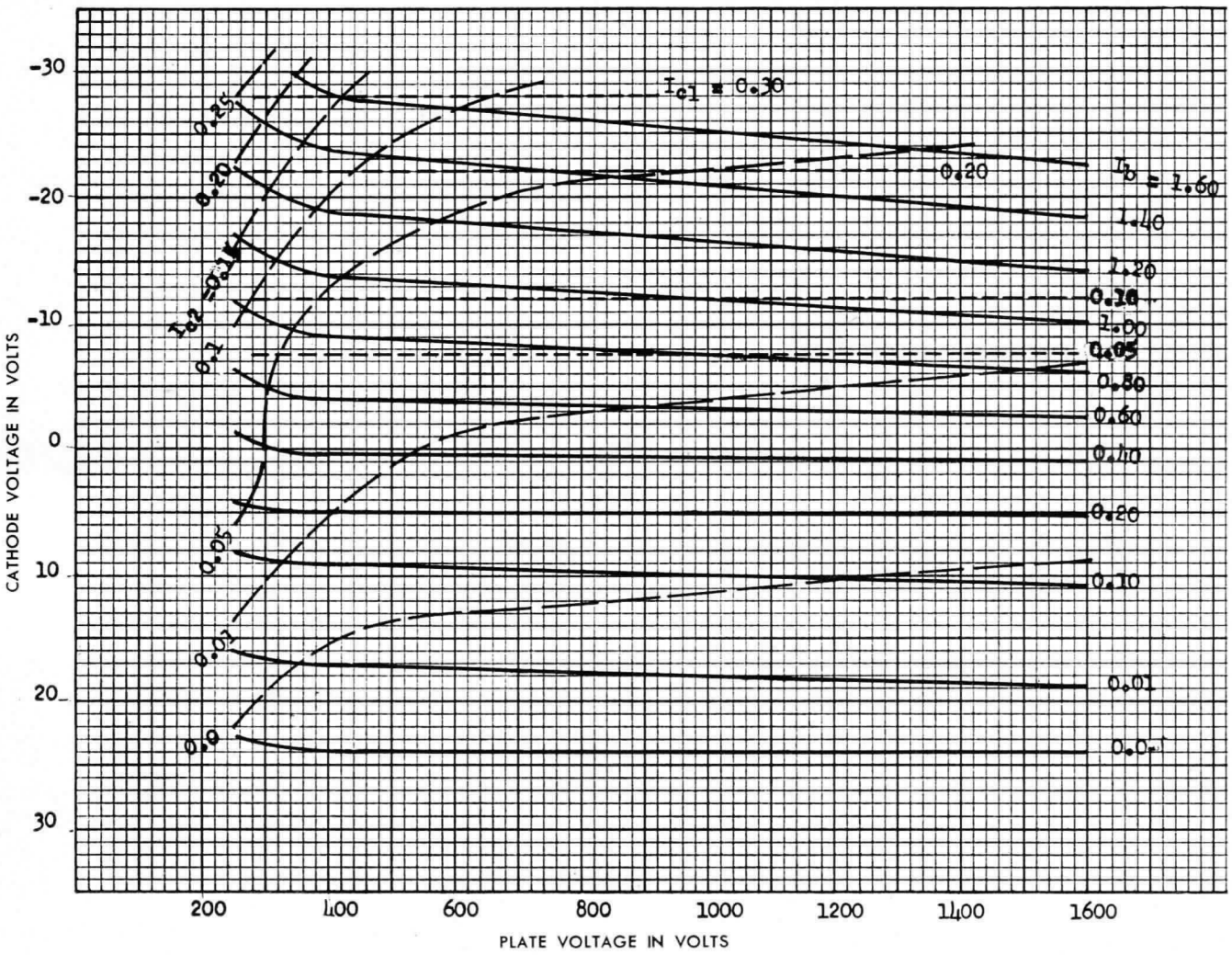

K-69087-72A577

6-11-56

GL-6299
TRIODE

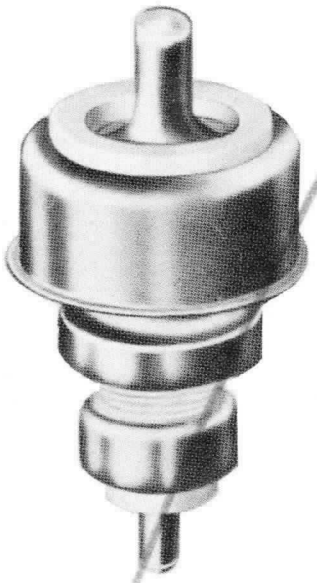

LOW NOISE
UHF-SHF TRIODE
GROUNDED-GRID CIRCUIT

METAL AND CERAMIC
CONDUCTION COOLED
VERY SMALL SIZE

The GL-6299 is designed for use in the radio-frequency stages of receivers operating at frequencies as high as 3000 megacycles. A receiver noise figure of less than 8.5 decibels at 1200 megacycles when the tube is used in a grounded-grid coaxial type circuit is an especially significant advantage of this type. Another advantage is the small size, only one inch long by one-half inch diameter, which makes the tube particularly well adapted to applications where space and weight are at a premium.

The planar electrode construction with very close spacings reduces transit-time effects. The rigidity inherent in the tube design reduces microphonics and enables the tube to withstand shock and vibration. The envelope construction results in low losses, provides convenient electrode contact surfaces, and enables the tube to fit easily into coaxial circuits.

The cathode is the indirectly heated oxide-coated type with one end of the heater connected internally to the cathode. Cooling is accomplished by thermal contacts to the electrode terminals.

Electrical

	Min.	Bogey	Max.	
Heater Voltage	6.0	6.3	6.6	Volts
Heater Current at 6.3 volts	280	300	320	Milliamperes
Direct Interelectrode Capacitances, approximate				
Grid to Anode	1.4	1.7	2.0	μμf
Grid to Cathode	2.5	3.5	5.0	μμf
Cathode to Anode	——	0.015	0.025	μμf
Characteristics, E_b=175 v d-c, I_b=10 ma d-c, E_g adjusted				
Transconductance	11,500	15,000	——	Micromhos
Amplification Factor	85	115	140	
Plate Resistance	——	9600	——	Ohms
□Anode Voltage, I_b=10 ma, E_c=0	75	125	175	Volts

Mechanical

Mounting Position—Any
Net Weight, approximate . . . . . 1/6 Ounce

Thermal

Cooling—Conduction*
Envelope Temperature, maximum . . . . . 150 C

MAXIMUM RATINGS—ABSOLUTE VALUES

DC Plate Voltage	200	Volts
DC Plate Current	12	Milliamperes
Plate Dissipation	2	Watts
Positive Grid Voltage	0	Volts
Negative Grid Voltage	−15	Volts
Grid Current, except for initial-emission-velocity current†	0	Milliamperes

TYPICAL OPERATION

Class A_1 RF Amplifier
Grounded-Grid Coaxial-Type Circuit

Heater Voltage	6.3	6.3	6.3	6.3	6.3	Volts
Frequency	450	1200	1200	1200	3000	Megacycles
Bandwidth	10	10	10	10	10	Megacycles
Gain	17.5	17	17	17	11	Decibels

Noise Figure Power Matched	4.5	8.2	8.2	8.5	13.2	Decibels
Plate Voltage	‡	‡	§	175	§	Volts
Grid Voltage¶	0	0	0	**	0	Volts
Plate Current	10	10	10	10	10	Milliamperes

GENERAL ELECTRIC

Supersedes ET-T1166B dated 11-58

* Good thermal contact to the anode and cathode must be provided to conduct heat from these elements. The anode contact must be sufficiently flexible to keep lateral force on the anode terminal at a minimum.

† Not rated for oscillator service.

‡ Recommended operation with regulated 300-volt plate-supply voltage through 17,500-ohm series anode resistor.

§ Adjust to give 10 milliamperes anode current (range must be variable from 75 to 200 volts.)

¶ For operation above 1000 megacycles the minimum noise figure will generally be obtained by operation at zero bias. For operation below 1000 megacycles the use of a cathode resistor or grid bias should be evaluated for the particular application.

**Adjust to give listed anode current: 200-ohm variable cathode resistor recommended.

AVERAGE PLATE CHARACTERISTIC

$E_f = 6.3$ Volts

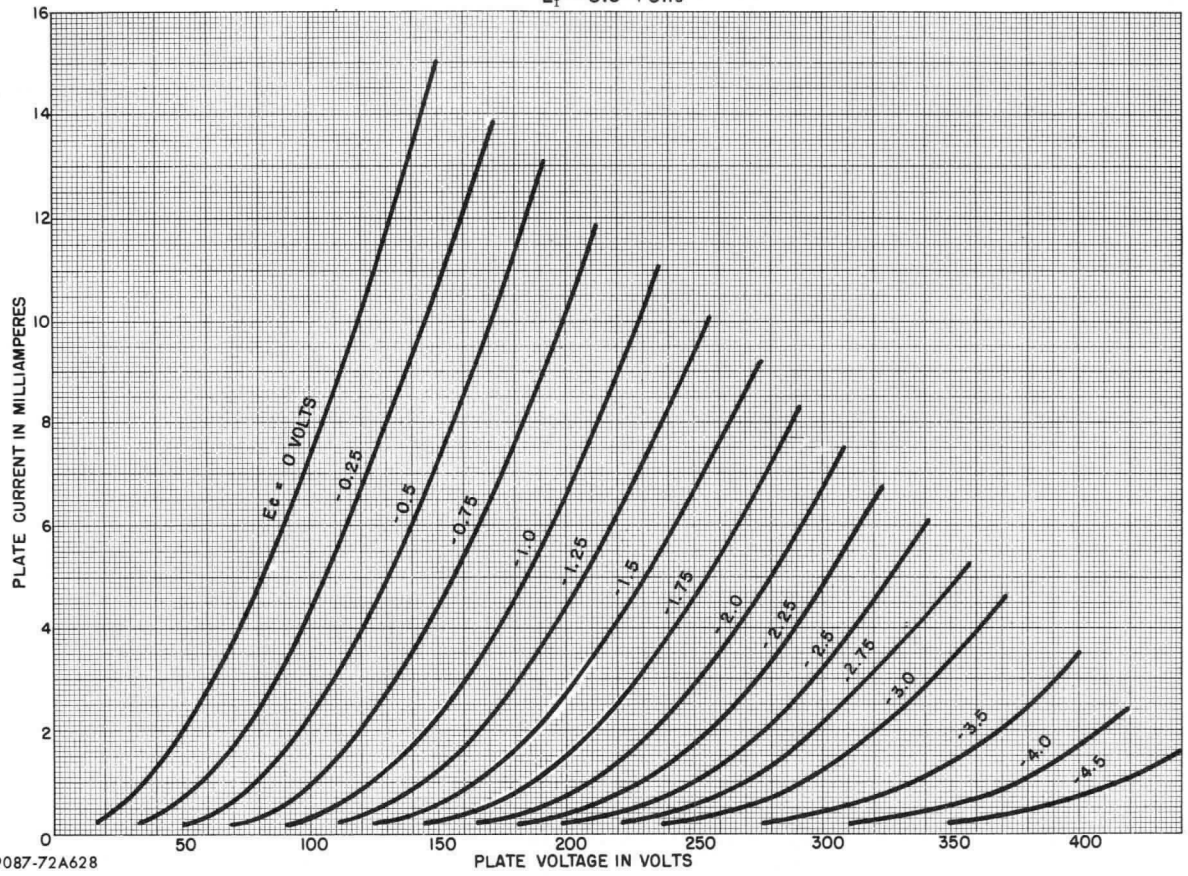

K-69087-72A628

3-60

HEATING TIME

$E_f = 6.3$ Volts

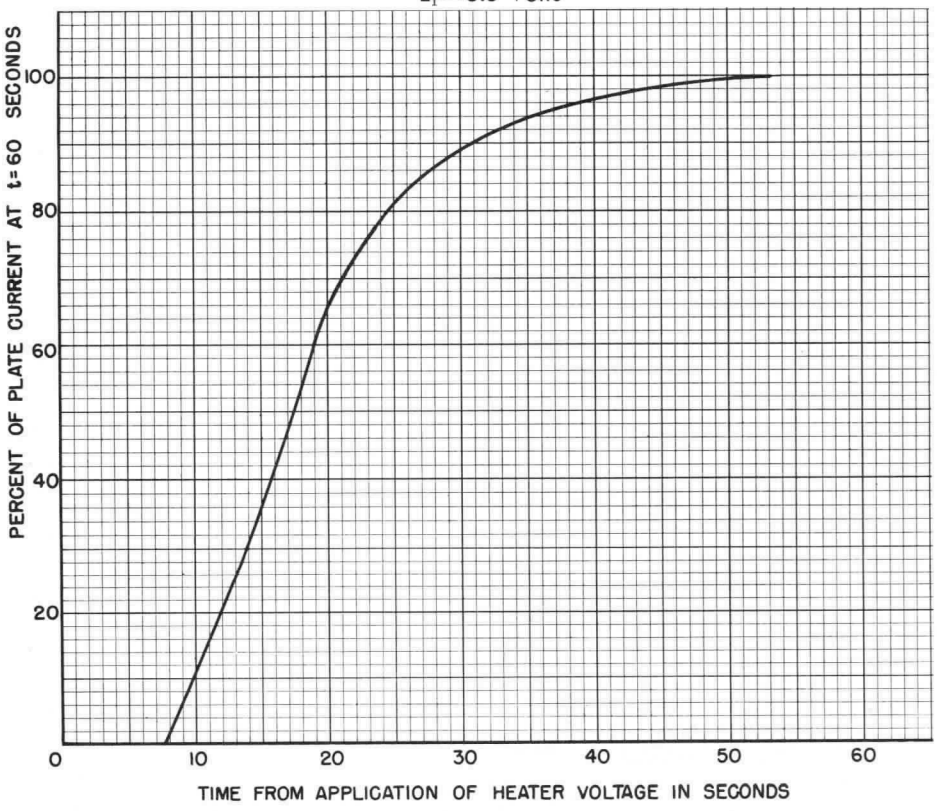

K-69087-72A692

3-55

PREDICTED NOISE PERFORMANCE FOR NOISE-MATCHED, GRID-RETURN CIRCUIT OPERATION. INPUT CIRCUIT LOSSES NEGLECTED

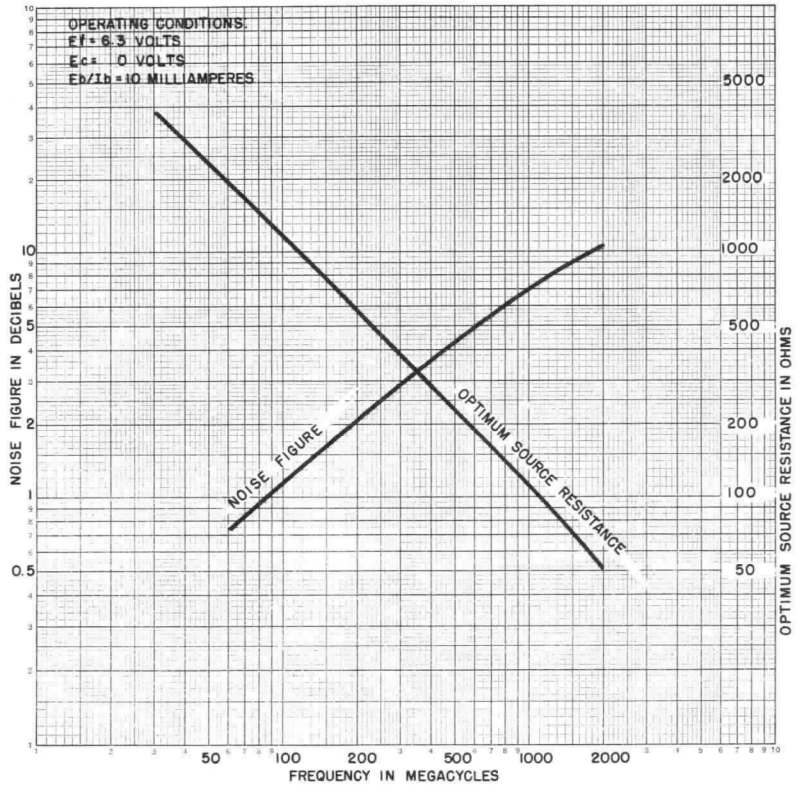

K-69087-72A933

3-60

AVERAGE TRANSFER CHARACTERISTICS
$E_f = 6.3$ Volts

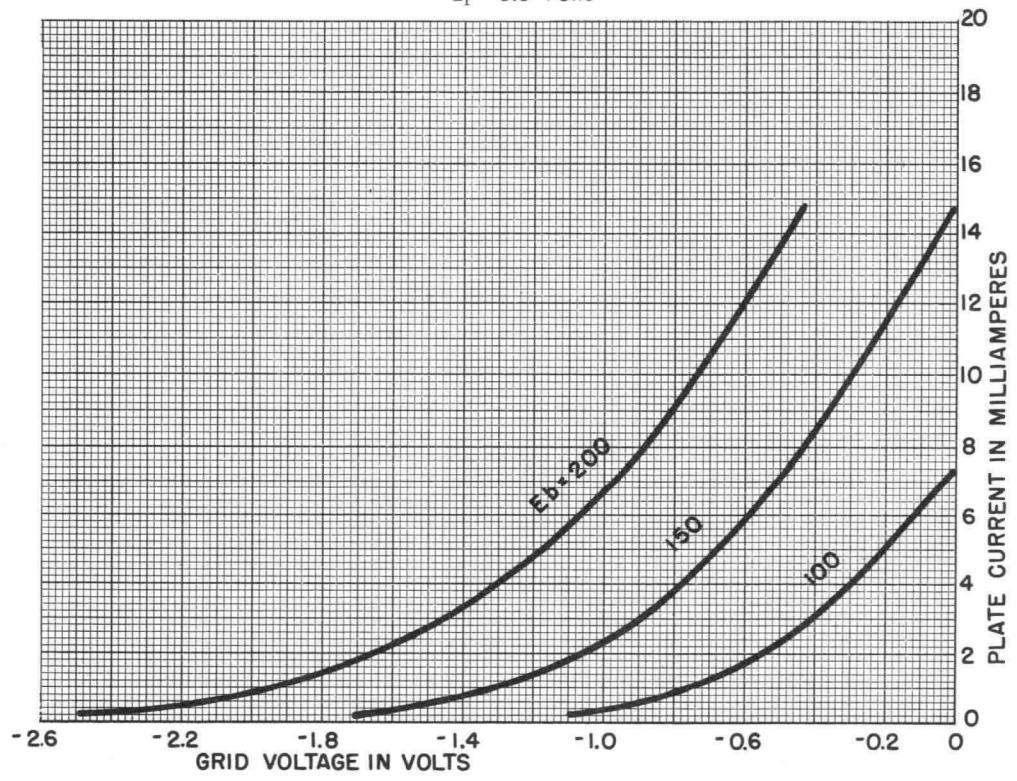

K-69087-72A934

3-60

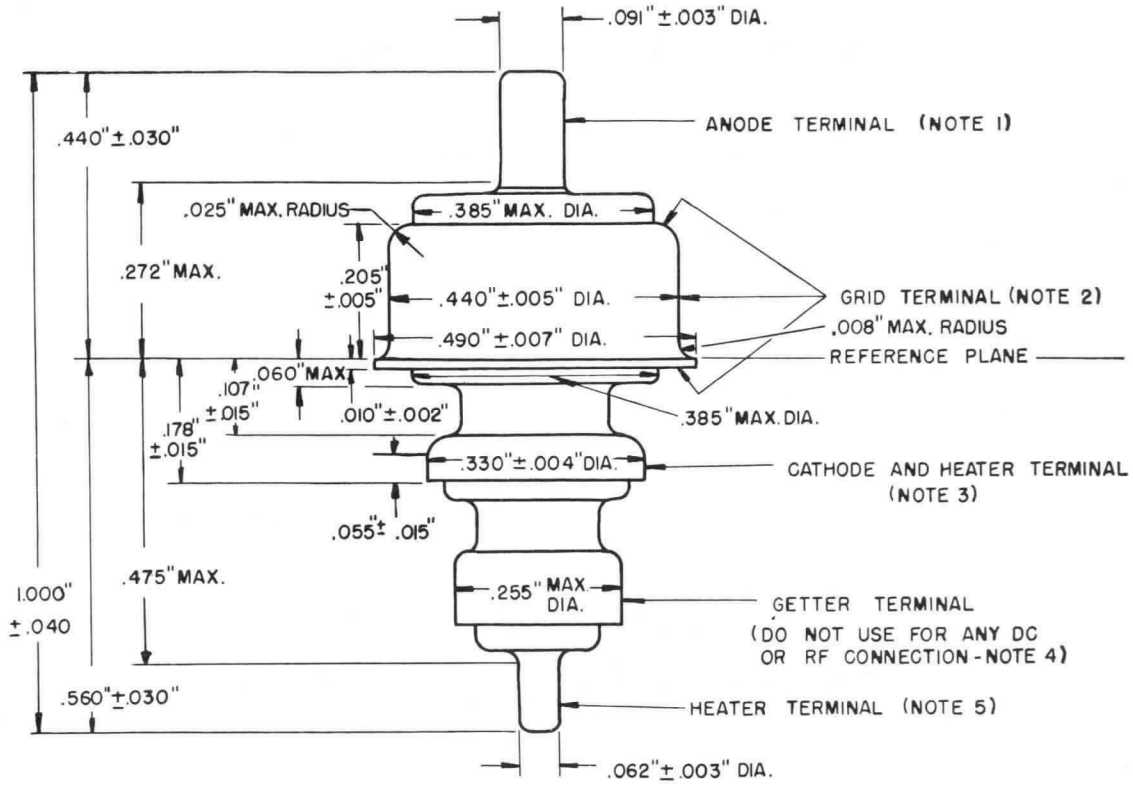

GAGE

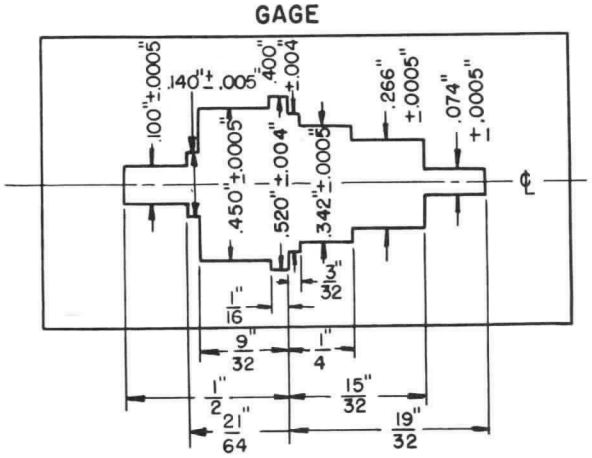

FRACTIONAL TOLERANCES
1/4" OR LESS ± .008" OVER 1/4" ± .015"

NOTES:

1. MAXIMUM ECCENTRICITY 0.007" (RUNOUT 0.014")
2. MAXIMUM ECCENTRICITY 0.008" (RUNOUT 0.016")
3. MAXIMUM ECCENTRICITY 0.010" (RUNOUT 0.020")
4. MAXIMUM ECCENTRICITY 0.015" (RUNOUT 0.030")
5. MAXIMUM ECCENTRICITY 0.010" (RUNOUT 0.020")

ECCENTRICITIES MEASURED WITH RESPECT TO CENTER LINE THROUGH GAGE. TUBE SHALL BE ROTATED 360° IN GAGE WITHOUT BINDING.

ELECTRONIC COMPONENTS DIVISION

GENERAL ELECTRIC

Schenectady 5, N. Y.

PRINTED IN U.S.A.

Electronic TUBES

7077

TRIODE

FOR UHF AMPLIFIER APPLICATIONS

DESCRIPTION AND RATING

The 7077 is a high-mu triode of ceramic and metal planar construction primarily intended for use as an r-f amplifier in the 30 to 1200 megacycle frequency range. It features an extremely low noise figure throughout its frequency range. The 7077 is especially suited for use where unfavorable conditions of temperature, mechanical shock, and mechanical vibration are encountered.

GENERAL

ELECTRICAL

Cathode—Coated Unipotential		
Heater Voltage, AC or DC	6.3 ± 5%	Volts
Heater Current	0.24	Amperes
Direct Interelectrode Capacitances*		
Plate to Cathode and Heater	0.01	μμf
Cathode and Heater to Grid	1.7	μμf
Plate to Grid	1.0	μμf
Heater to Cathode	1.1	μμf

MECHANICAL

Mounting Position—Any

MAXIMUM RATINGS

DESIGN-MAXIMUM VALUES

Plate Voltage	250	Volts
Positive Peak and DC Grid Voltage	0	Volts
Negative Peak and DC Grid Voltage	50	Volts
Plate Dissipation	1.0	Watts
DC Cathode Current	10.0	Milliamperes
Heater-Cathode Voltage		
Heater Positive with Respect to Cathode	100	Volts
Heater Negative with Respect to Cathode	100	Volts
Envelope Temperature†	250	C
Grid-Circuit Resistance	0.01	Megohms

Design-Maximum ratings are limiting values of operating and environmental conditions applicable to a bogey tube of a specified type as defined by its published data, and should not be exceeded under the worst probable conditions.

The tube manufacturer chooses these values to provide acceptable serviceability of the tube, taking responsibility for the effects of changes in operating conditions due to variations in tube characteristics.

The equipment manufacturer should design so that initially and throughout life no design-maximum value for the intended service is exceeded with a bogey tube under the worst probable operating conditions with respect to supply-voltage variation, equipment component variation, equipment control adjustment, load variation, signal variation, and environmental conditions.

The tubes and arrangements disclosed herein may be covered by patents of General Electric Company or others. Neither the disclosure of any information herein nor the sale of tubes by General Electric Company conveys any license under patent claims covering combinations of tubes with other devices or elements. In the absence of an express written agreement to the contrary, General Electric Company assumes no liability for patent infringement arising out of any use of the tubes with other devices or elements by any purchaser of tubes or others.

PHYSICAL DIMENSIONS

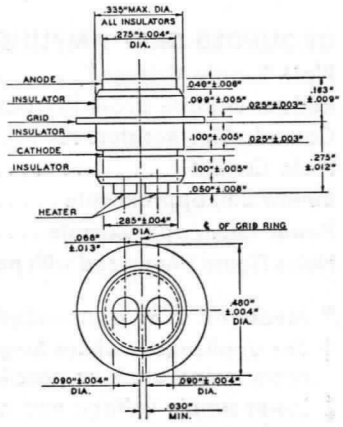

1—Maximum eccentricity of anode, grid, and cathode 0.005″ from center line.

2—Maximum eccentricity of insulators 0.010″ from center line.

3—Center line of grid ring used as reference line for horizontal tolerances.

4—Bottom surface of grid ring used as reference line for vertical tolerances.

GENERAL ELECTRIC

Supersedes ET-T1488 dated 3-58

AVERAGE CHARACTERISTICS

Plate Supply Voltage	250	Volts
Resistor in plate circuit (by-passed)	18000	Ohms
Cathode-Bias Resistor	82	Ohms
Amplification Factor	90	
Plate Resistance, approximate	9000	Ohms
Transconductance	10000	Micromhos
Plate Current	6.5	Milliamperes
Grid Voltage, approximate $G_m = 50$ Micromhos	−5	Volts

TYPICAL OPERATION

GROUNDED-GRID AMPLIFIER—450 MEGACYCLES

Plate Supply Voltage‡	250	Volts
Resistor in plate circuit (by-passed)‡	18000	Ohms
Cathode-Bias Resistor	82	Ohms
Plate Current	6.5	Milliamperes
Bandwidth, approximate	7.5	Megacycles
Power Gain, approximate	14.5	Decibels
Noise Figure (Measured with power-matched input, using argon lamp noise source), approximate	5.5	Decibels

* Measured using a grounded adapter that provides shielding between external terminals of tube.

† For applications where long life is a primary consideration, envelope temperature should be maintained as close to room temperature as practical.

‡ Lower supply voltage and a lower value of resistor may be used in the plate circuit with some sacrifice in uniformity of performance.

TYPICAL GROUNDED-GRID AMPLIFIER CIRCUIT USING THE 7077

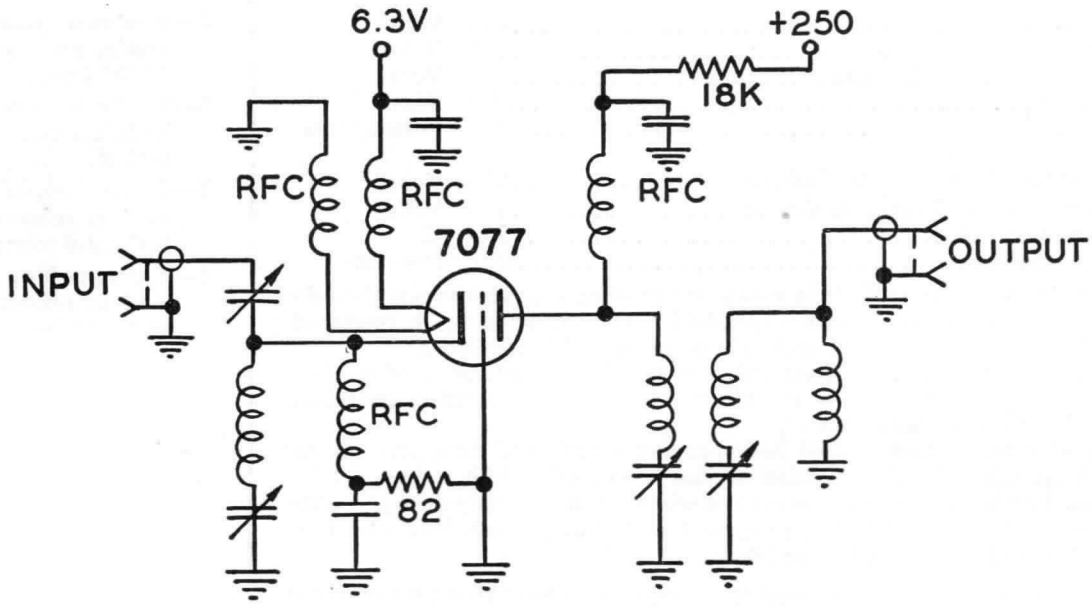

The circuit shown above is an example of a possible tube application. Its description and illustration does not convey to the purchaser of tubes any license under patent claims of General Electric Company.

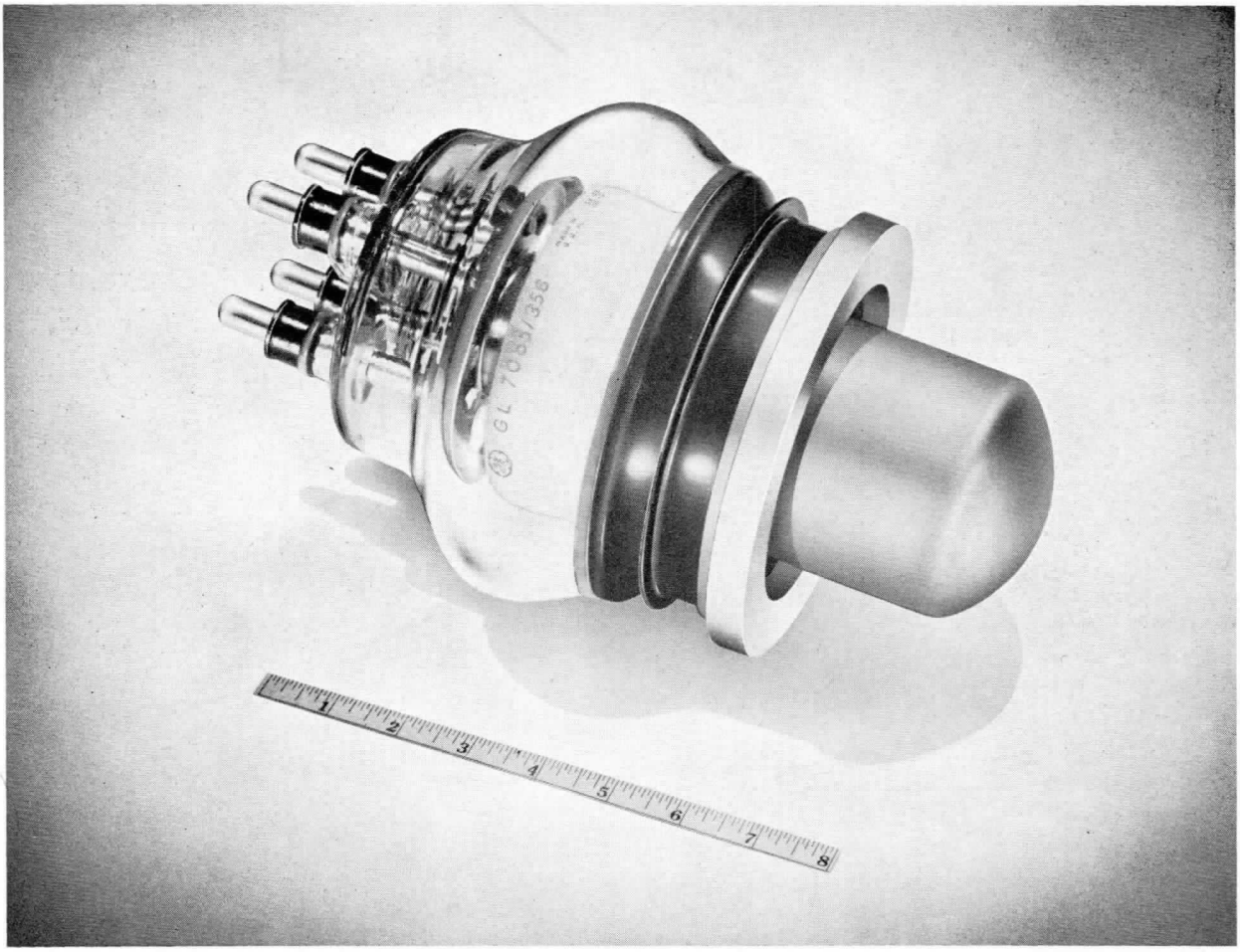

TRIODE

THORIATED-TUNGSTEN FILAMENT **WATER AND FORCED-AIR COOLING**
MAXIMUM RATINGS UP TO 25 MEGACYCLES

The GL-7085/356 is a three-electrode tube designed for induction and dielectric heating as well as broadcast use. A thoriated-tungsten-filament version of the GL-880, the tube features a free-hung or self-supporting filament and a glass envelope incorporating rugged fernico-to-glass seals throughout. The anode is water cooled and is capable of dissipating 22.5 kilowatts with a water flow of approximately 12 gallons per minute. Maximum ratings of 12.5 kilovolts d-c plate voltage and 60 kilowatts plate input apply at frequencies up to 25 megacycles; operation at 50 megacycles is permissible with voltage and input reduced to three-quarters maximum ratings.

TECHNICAL INFORMATION

GENERAL

Electrical

Filament Voltage	7.5 ±5%	Volts
Filament Current at 7.5 Volts	170	Amperes
Filament Starting Current, maximum	800	Amperes
Filament Cold Resistance	0.0056	Ohms
Amplification Factor	20	
Interelectrode Capacitances		
Grid-to-Plate	24.5	μμf
Grid-to-Filament	35	μμf
Plate-to-Filament	2.5	μμf

Mechanical

Mounting Position—Vertical, Anode Down		
Net Weight, approximate	7	Pounds

GENERAL ELECTRIC

TECHNICAL INFORMATION (CONT'D)

Thermal

Type of Cooling—Water and Forced Air

Water Flow on Anode		
Minimum for 22.5 Kilowatts Dissipation	12	Gallons per Minute*
Maximum Outgoing Water Temperature	70	C
Air Flow on Dish from 3-Inch-Diameter Nozzle	50	Cubic Feet per Minute†

Air flow should be directed vertically downward to provide uniform distribution over the dish with nozzle as close as free air circulation permits.

Maximum Glass Temperature	165	C

Air and water cooling should continue for a minimum of 5 minutes after removal of power.

MAXIMUM RATINGS AND TYPICAL OPERATING CONDITIONS

AUDIO-FREQUENCY POWER AMPLIFIER AND MODULATOR—CLASS B

Maximum Ratings, Absolute Values

DC Plate Voltage	12,500	Volts
Maximum Signal DC Plate Current‡	5	Amperes
Maximum Signal Plate Input‡	45	Kilowatts
Plate Dissipation	22.5	Kilowatts

Typical Operation, values are for two tubes

DC Plate Voltage	12,500	Volts
DC Grid Voltage	−600	Volts
Peak AF Grid-to-Grid Voltage	1900	Volts
Zero-Signal DC Plate Current	1	Amperes
Maximum Signal DC Plate Current	6.4	Amperes
Effective Load Resistance, plate to plate	4400	Ohms
Maximum Signal Driving Power, approximate§	430	Watts
Maximum Signal Power Output, approximate	55	Kilowatts

RADIO-FREQUENCY POWER AMPLIFIER—CLASS B TELEPHONY

Carrier Conditions per Tube for Use With a Maximum Modulation Factor of 1.0

Maximum Ratings, Absolute Values

DC Plate Voltage	12,500	Volts
DC Plate Current	4	Amperes
Plate Input	33	Kilowatts
Plate Dissipation	22.5	Kilowatts

Typical Operation

DC Plate Voltage	12,500	Volts
DC Grid Voltage	−625	Volts
Peak RF Grid Voltage	625	Volts
DC Plate Current	2.4	Amperes
DC Grid Currentϕ	0	Amperes
Driving Power, approximate$\triangle\phi$	1070	Watts
Power Output, approximate	12	Kilowatts

PLATE MODULATED RADIO-FREQUENCY POWER AMPLIFIER—CLASS C TELEPHONY

Carrier Conditions per Tube for Use With a Maximum Modulation Factor of 1.0

Maximum Ratings, Absolute Values

DC Plate Voltage	10,000	Volts
DC Grid Voltage	−2000	Volts
DC Plate Current	4	Amperes
DC Grid Current	0.8	Amperes
Plate Input	40	Kilowatts
Plate Dissipation	15	Kilowatts

Typical Operation

DC Plate Voltage	10,000	Volts
DC Grid Voltage**	−840	Volts
Peak RF Grid Voltage	1440	Volts
DC Plate Current	3.8	Amperes
DC Grid Current, approximateϕ	0.78	Amperes
Driving Power, approximateϕ	1010	Watts
Power Output, approximate	29	Kilowatts

TECHNICAL INFORMATION (CONT'D)

RADIO-FREQUENCY POWER AMPLIFIER AND OSCILLATOR—CLASS C TELEGRAPHY

*Key-Down Conditions per Tube Without Modulation****

	Frequency 25 Megacycles		Frequency 2 Megacycles	
Maximum Ratings, Absolute Values				
DC Plate Voltage	12,500		15,000	Volts
DC Grid Voltage	−2000		−2000	Volts
DC Plate Current	6		6	Amperes
DC Grid Current	0.8		0.8	Amperes
Plate Input	60		67.5	Kilowatts
Plate Dissipation	22.5		22.5	Kilowatts
Typical Operation				
DC Plate Voltage	10,000	12,500	15,000	Volts
DC Grid Voltage	−1150	−1400	−1500	Volts
Peak RF Grid Voltage	1810	2060	2130	Volts
Peak RF Plate Voltage	7900	9900	12,500	Volts
DC Plate Current	4.5	4.7	4.4	Amperes
DC Grid Current, approximateϕ	0.55	0.42	0.37	Amperes
Driving Power, approximateϕ	960	850	770	Watts
Power Output, approximate	32	42	51	Kilowatts

* This flow for jackets with spiral water deflector. Older straight-wall jackets will require 16.2 gallons per minute at 22.5 kilowatts.

† At frequencies above 10 megacycles special attention should be given to adequate ventilation of the dish and seals to keep the temperature at the hottest point below 165 C. Heat-radiating connectors for grid and filament posts are recommended when tube operation is at frequencies greater than 10 megacycles.

‡ Averaged over any audio-frequency cycle of sine-wave form.

§ The driving stage should have good regulation and should be capable of supplying considerably more than the specified driving power.

ϕ Subject to wide variations depending on the impedance of the load circuit. High-impedance load circuits require more grid current and driving power to obtain the desired output. Low-impedance circuits require less grid current and driving power but sacrifice plate-circuit efficiency. The driving stage should have a tank circuit with good regulation and should be capable of supplying considerably more than the required driving power.

△ At crest of audio-frequency cycle with modulation factor of 1.0.

** Obtained by grid resistor of 1075 ohms or by partial self-bias methods.

*** Modulation essentially negative may be used if the positive peak of the audio-frequency envelope does not exceed 115 percent of the carrier conditions.

MAXIMUM FREQUENCY VS RATINGS

The GL-7085/356 will operate at maximum ratings in all classes of service at frequencies as high as 25 megacycles. The tube will operate at higher frequencies provided the maximum values of plate voltage and plate input are reduced according to the tabulation below. In Class C Telegraphy service at frequencies below 2 megacycles, the plate voltage and input can be increased as indicated over the maximum values permissible at 25 megacycles.

Frequency Megacycles	Class of Service	Percentage of Maximum Rated Plate Voltage and Plate Input	
		Plate Voltage	Plate Input
25	B, C—Telephony, C—Telegraphy	100	100
50	B	80	94
	C—Telephony	75	75
	C—Telegraphy	75	75
2	C—Telegraphy	120	112.5

CHARACTERISTIC RANGE VALUES FOR EQUIPMENT DESIGN

Characteristics	Conditions		Limits Minimum	Limits Bogey	Limits Maximum	
Grid Voltage	ib = 28 Amp; eb = 1800 Volts	ec:	...	...	1100	Volts
Grid Current	ib = 28 Amp; eb = 1800 Volts	ic:	...	...	10.0	Amperes
Plate Voltage	Ib = 2.0 Amp d-c; Ec = 0	Eb:	2.5	3.2	3.6	KV d-c
Plate Voltage	Ib = 2.0 Amp d-c; Ec = −200 Volts d-c	Eb:	6.2	7.2	8.2	KV d-c
Grid Voltage	Eb = 10 KV d-c; Ib = 0.020 Amp d-c	Ec:	−460	−530	−600	Volts d-c
Plate Power Output	Eb = 12.5 KV d-c; Ib = 4.8 Amp d-c Ic = 0.8 Amp d-c; Ec = −1440 Volts d-c; F = 25 Mc	Po:	34	...	...	KW

TYPICAL CONSTANT-CURRENT CHARACTERISTICS

$E_f = 7.5$ VOLTS
---- GRID CURRENT IN AMPERES
——— PLATE CURRENT IN AMPERES

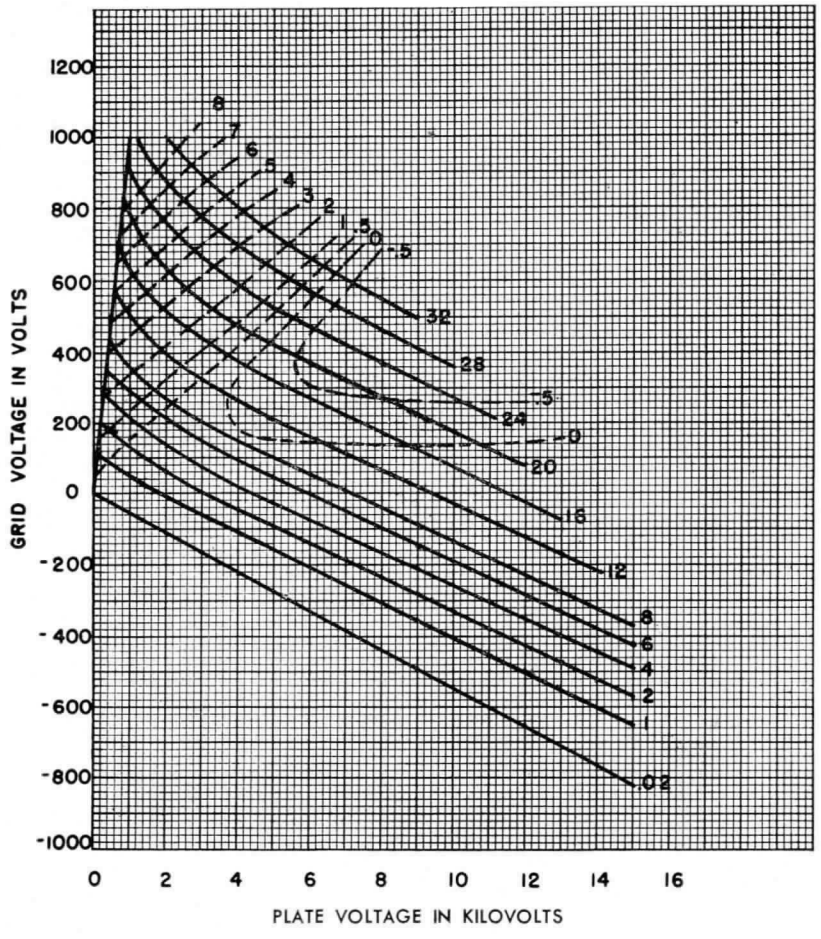

K-69087-72A822

1-29-58

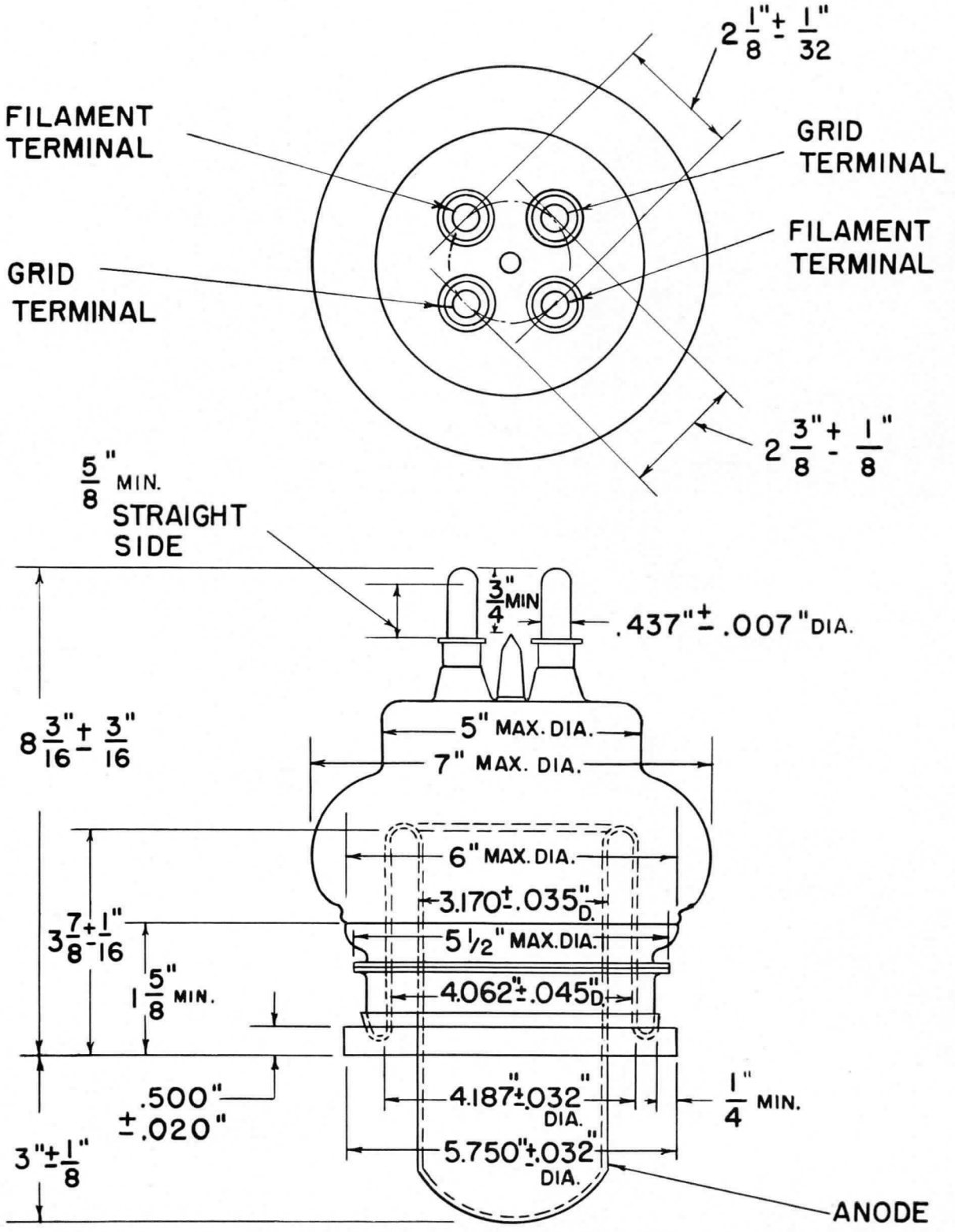

K-69087-72A794

11-19-57

ELECTRONIC COMPONENTS DIVISION

GENERAL ELECTRIC

Schenectady 5, N. Y.

PRINTED IN U.S.A.



GL-7399

TETRODE

PULSED SERVICE
GROUNDED-GRID OPERATION

FORCED-AIR COOLED
METAL AND CERAMIC

INTEGRAL RADIATOR

The GL-7399 is a small-size, four-electrode transmitting tube especially designed for pulsed-amplifier or -oscillator service at L-band frequencies. This tetrode is particularly well suited for use in airborne or ground-based radar equipment.

The tube is capable of providing useful output at frequencies up to approximately 1500 megacycles.

Features of the GL-7399 include long life and reliability, long pulse width, high peak power and high gain, broad-banding capability, and resistance to shock and vibration.

These together with such design factors as an oxide-coated cathode, coaxial elements, and metal-ceramic construction make the tube well adapted to application in modern systems where performance and reliability are important.

Electrical

	Minimum	Bogey	Maximum	
Heater Voltage	6.0	6.3	6.8	Volts
Heater Current		5.6		Amperes
Amplification				
Factor, G_2 to G_1		10.5		
E_{g2}=275 Volts DC, E_b=1000 Volts DC, I_b=200 Milliamperes DC				
Cathode Heating Time	1			Minute
Direct Interelectrode Capacitances*				
Cathode to Plate†		0.012		$\mu\mu f$
Input		21.5		$\mu\mu f$
Output		9.3		$\mu\mu f$

Mechanical

Mounting Position—Any

Net Weight	1.0	Pounds

Thermal

Cooling— Forced Air‡

Radiator§

Plate Dissipation	300	240	180	Watts
Air Flow, 45 C incoming air temperature	15	10	5	Min Cubic Feet per Minute
Static Pressure, anode at room temperature¶	0.60	0.30	0.10	Inches-Water
Radiator Hub Temperature▲			180	Max C

Seals

Screen and Control Grid, approximate	1	Cubic Foot per Minute
Heater and Cathode, approximate	1	Cubic Foot per Minute
Ceramic Temperature at any Point	200	Max C

MAXIMUM RATINGS AT 500 MEGACYCLES

Radio-Frequency Power Amplifier—Plate and Screen Grid Pulsed

DC Plate Voltage, during pulse	10	Kilovolts	
DC Plate Current, during pulse	10	Amperes	
DC Screen Voltage, during pulse	2000	Volts	
DC Screen Input♣	15	Watts	
Plate Dissipation♣	300	Watts	
DC Grid-No. 1 Voltage, not pulsed	−175	Volts	
DC Grid-No. 1 Current, during pulse	2.5	Amperes	
Pulse Width♥♦	15	Microseconds	
Duty Factor♥ϕ	0.0012		

TYPICAL OPERATION AT 500 MEGACYCLES

Class B, Grounded-Grid Service

DC Plate Voltage, during pulse	9	Kilovolts	
DC Grid-No. 2 Voltage, during pulse	1400	Volts	
DC Grid-No. 1 Voltage, not pulsed	−125	Volts	
Peak RF Plate Voltage	7000	Volts	
Peak RF Grid Voltage	300	Volts	
DC Plate Current, during pulse	9.2	Amperes	
DC Grid-No. 1 Current, during pulse	1.1	Amperes	
DC Grid-No. 2 Current, during pulse	0.47	Amperes	
Driving Power at Tube, during pulse	2.6	Kilowatts	
Power Output, during pulse	52	Kilowatts	
Pulse Width♦	15	Microseconds	
Duty Factorϕ	0.001		

* Control grid connected directly to screen grid.
† Complete external shielding between cathode and plate.
‡ Forced air cooling should be applied during the application of any voltages.
§ Provision must be made for unobstructed passage of cooling air between radiator fins, and the anode terminal and adjacent fins.
¶ With anode temperature at 180 C a 10-percent increase in back pressure occurs for the specified air flow.
▲Measured at the base of the fin adjacent to the plate terminal. See outline drawing on page 3.
♣Maximum average value.
♥For applications that require longer pulses or higher duty refer to the tube manufacturer for recommendations.
♦ Pulse duration measured between points at 70 percent of peak value. The peak value is defined as the maximum value of a smooth curve through the average of the fluctuations over the top portion of the pulse.
ϕ Maximum ratio of on time to elapsed time during any one millisecond period.

CONSTANT CURRENT CHARACTERISTIC
GROUNDED-GRID OPERATION
VOLTAGES MEASURED TO GROUND
SCREEN VOLTAGE = 1400 VOLTS

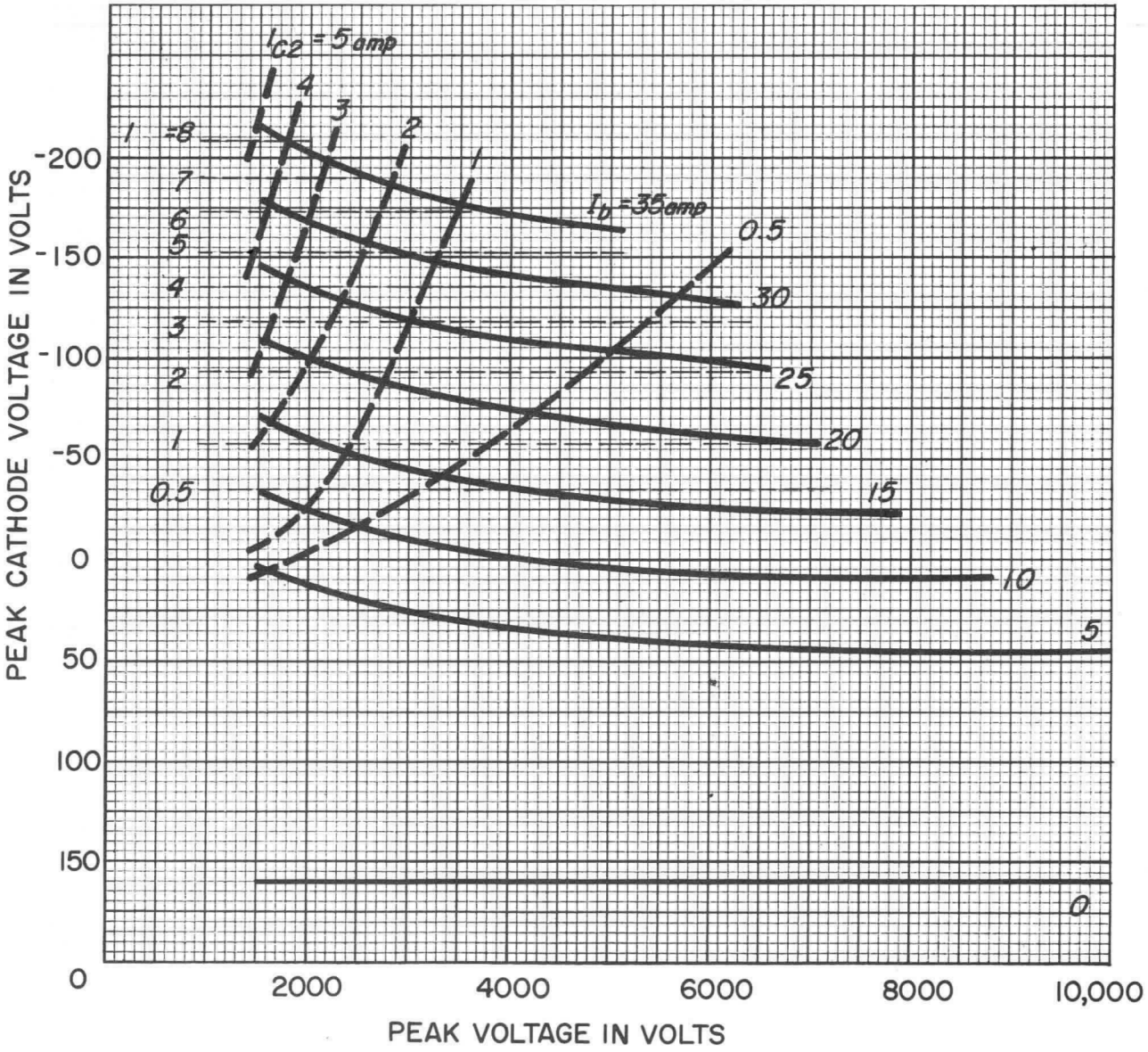

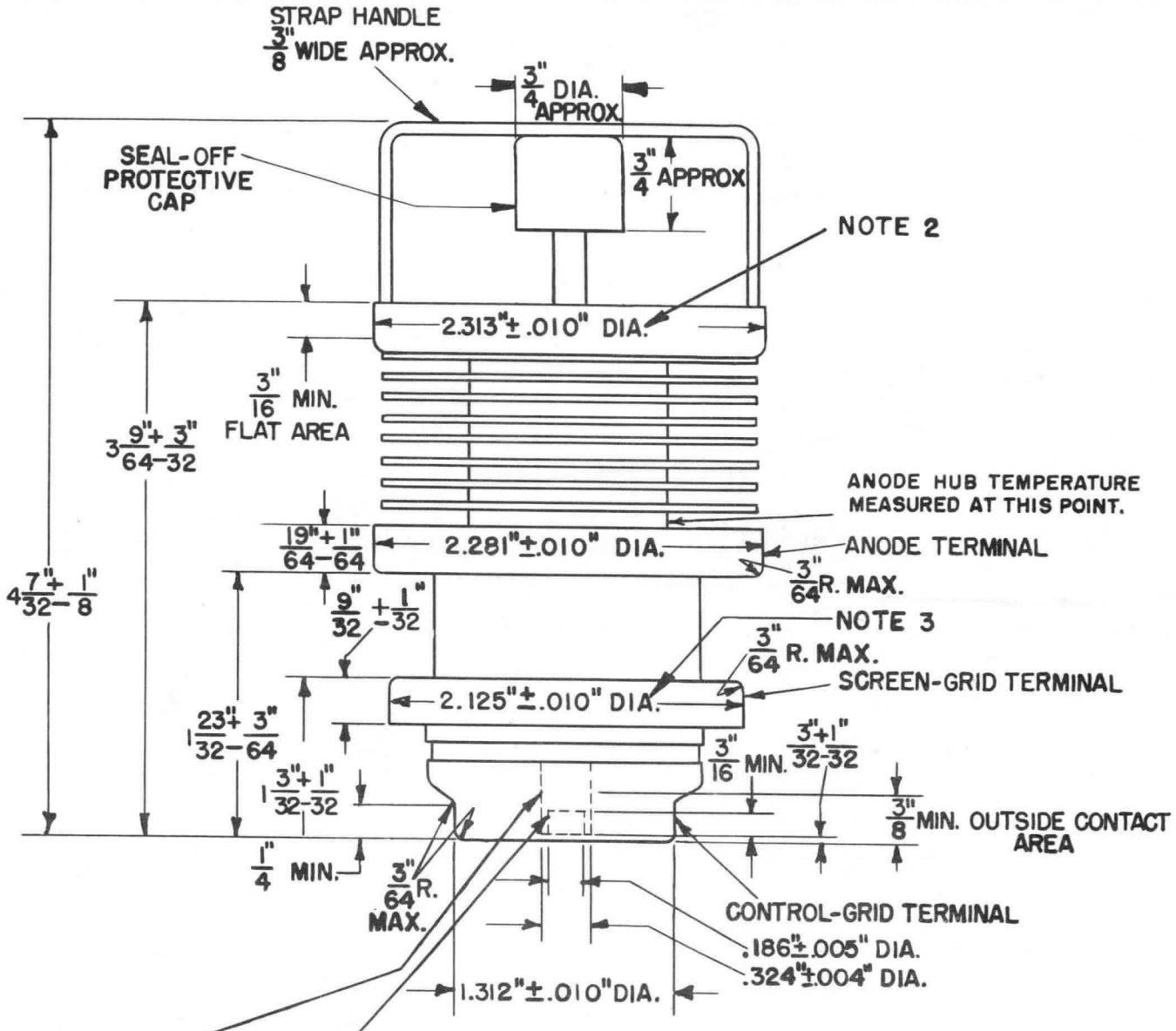

NOTES:

1. BOTTOM OF CUP MUST NOT BE USED AS A SOCKET STOP.
2. MAX. ECCENTRICITY 0.015 INCHES
3. MAX. ECCENTRICITY 0.008 INCHES
4. MAX. ECCENTRICITY 0.018 INCHES
5. MAX. ECCENTRICITY 0.021 INCHES WITH RESPECT TO CENTERLINE DETERMINED BY CENTERS OF ANODE & CONTROL GRID TERMINALS.
6. MAX. ECCENTRICITY 0.008 INCHES WITH RESPECT TO CATHODE TERMINAL.

ELECTRONIC COMPONENTS DIVISION

GENERAL ELECTRIC

Schenectady 5, N. Y.

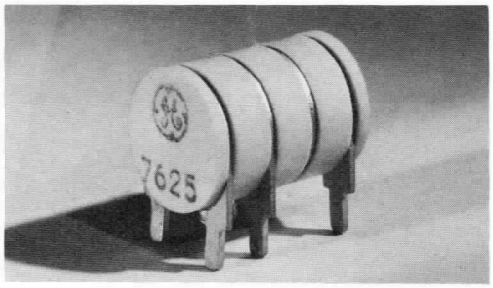

METAL-CERAMIC TRIODE

DESCRIPTION AND RATING

The 7625 is a high-mu triode of ceramic-and-metal planar construction primarily intended for low-level audio-frequency amplification.

GENERAL

ELECTRICAL

Cathode—Coated Unipotential

Heater Characteristics and Ratings

Heater Voltage, AC or DC*	6.3 ± 0.3	Volts
Heater Current†	0.215	Amperes

Direct Interelectrode Capacitances‡

Grid to Plate: (g to p)	1.3	pf
Input: g to (h+k)	1.5	pf
Output: p to (h+k)	0.03	pf
Heater to Cathode: (h to k)	1.5	pf

MECHANICAL

Mounting Position—Any

See Outline Drawing on page 3 for dimensions and electrical connections

MAXIMUM RATINGS

ABSOLUTE-MAXIMUM VALUES

DC Plate Voltage	275	Volts
Peak Plate Voltage	400	Volts
Positive Peak and DC Grid Voltage	0	Volts
Negative Peak and DC Grid Voltage	50	Volts
Plate Dissipation	0.85	Watts
DC Cathode Current	3.8	Milliamperes
Heater-Cathode Voltage		
Heater Positive with Respect to Cathode	50	Volts
Heater Negative with Respect to Cathode	50	Volts
Grid Circuit Resistance, with Fixed Bias§	0.2	Megohms
Envelope Temperature at Hottest Point¶	250	C

Absolute-Maximum ratings are limiting values of operating and environmental conditions applicable to any electron tube of a specified type as defined by its published data and should not be exceeded under the worst probable conditions.

The tube manufacturer chooses these values to provide acceptable serviceability of the tube, making no allowance for equipment variations, environmental variations, and the effects of changes in operating conditions due to variations in the characteristics of the tube under consideration and of all other electron devices in the equipment.

The equipment manufacturer should design so that initially and throughout life no absolute-maximum value for the intended service is exceeded with any tube under the worst probable operating conditions with respect to supply-voltage variation, equipment component variation, equipment control adjustment, load variation, signal variation, environmental conditions, and variations in the characteristics of the tube under consideration and of all other electron devices in the equipment.

CHARACTERISTICS AND TYPICAL OPERATION

AVERAGE CHARACTERISTICS

Plate Voltage	150	Volts
Cathode-Bias Resistor	1000	Ohms
Amplification Factor	80	
Plate Resistance, approximate	57000	Ohms
Transconductance	1400	Micromhos
Plate Current	0.95	Milliamperes
Grid Voltage, approximate Ib = 10 Microamperes, Eb = 250 Volts	−4.6	Volts

FOOTNOTES

* The equipment designer should design the equipment so that heater voltage is centered at the specified bogey value, with heater supply variations restricted to maintain heater voltage within the specified tolerance.

† Heater current of a bogey tube at Ef = 6.3 volts.

‡ Without external shield.

§ If resistance is used in the cathode or plate circuits, the grid-circuit resistance may be high as (200,000 + 500 RK + 10 RL) ohms, where RK is the cathode-bias resistance in ohms, and RL is the DC plate load resistance in ohms.

¶ Operation below the rated maximum envelope temperature is recommended for applications requiring the longest possible tube life. The 7625 is also capable of operation at envelope temperatures much higher than the rated maximum values. For specific recommendations concerning higher temperature operation, contact your General Electric tube sales representative.

SPECIAL PERFORMANCE TESTS

	Maximum	
Variable-Frequency Vibration Ef = 6.3 volts, Ebb = 150 volts, Ec = 0 volts d-c, Rk = 1000 ohms (bypassed), R_L = 10000 ohms; Note 1	15	Millivolts peak to peak
Low-Frequency Vibration Ef = 6.3 volts, Ebb = 150 volts, Ec = 0 volts d-c, Rk = 1000 ohms (bypassed), R_L = 10000 ohms, G = 15, F = 40 cps; Note 2	0.75	Millivolts RMS

Low Pressure Voltage Breakdown Test

Statistical sample tested for voltage breakdown at a pressure of 8mm Hg, to simulate an altitude of 100,000 feet. Tubes shall not give visual evidence of flashover or corona when 300 volts RMS, 60 cps, is applied between the plate and grid terminals.

Note 1: The variable-frequency vibration test shall be performed as follows:

a. The frequency shall be increased from 100 to 2000 cps with approximately logarithmic progression in 3 ± 1 minutes. The return sweep (2000 to 100 cps) is not required.
b. The tube shall be vibrated with simple harmonic motion in each of two planes; first, parallel to the cylindrical axis; second, perpendicular to the cylindrical axis and parallel to a line through the major axis of a terminal lug.
c. The peak acceleration shall be maintained at 10 ± 1 G throughout the test.
d. The vibrational output produced across R_L as a result of the vibration shall be coupled to a low-pass filter that has the following characteristics:
   (1) A response within ±1 db of the response at 1000 cps over the frequency range of 100 to 17000 cps.
   (2) The response shall be down at least 1.5 db at 20000 cps and have a cut-off rate of at least 18 db per octave above 20000 cps.

Note 2: The tube shall be vibrated with harmonic motion in each of two planes, (1) parallel to the cylindrical axis and (2) perpendicular to the cyclindrical axis and perpendicular to a line through the major axis of a terminal lug.

DEGRADATION RATE TESTS

Fatigue

Statistical sample vibrated for a total of six hours, three hours in each of two planes, at a peak acceleration of 10 G. Frequency is continuously varied from 30 cps to 2000 cps and back to 30 cps, with a period of ten minutes. Tubes are operated during the test with Ef = 6.3 volts, Eb = 150 volts, and Rk = 82 ohms. Following the test, tubes are evaluated for low frequency vibrational output, heater-cathode leakage, transconductance, and negative grid current.

Shock

Statistical sample subjected to 5 impact accelerations of approximately 450 G in each of four positions. The accelerating forces are applied by the Navy-type, High Impact (flyweight) Shock Machine using a 30° hammer angle. Tubes are operated during the test with Ef = 6.3 volts, Eb = 150 volts, Ehk = +100 volts, Rg = 0.1 Meg, and Rk = 82 ohms. Following the test, tubes are evaluated for low frequency vibrational output, heater-cathode leakage, transconductance, and negative grid current.

Stability Life Test

The statistical sample subjected to the Intermittent Life Test is evaluated for percent change in transconductance of individual tubes, from the initial readings to readings following 2 hours and 20 hours of the life test.

Survival Rate Life Test

The statistical sample subjected to the Intermittent Life Test is evaluated for shorted and open elements and transconductance following approximately 100 hours of life test.

Intermittent Life Test

Statistical sample operated for 1000 hours under the following conditions: Ef = 6.3 volts (cycled—on 1¾ hours, off ¼ hour), Ebb = 300 volts, Ehk = +70 volts d-c, Rk = 82 ohms, R_L = 18000 ohms, and Rg = 0.1 meg. Tubes are evaluated, following 500 and 1000 hours of life test, for shorted or open elements, heater current, grid current, transconductance, heater-cathode leakage, and interelectrode leakage resistance.

DEGRADATION RATE TESTS (Continued)

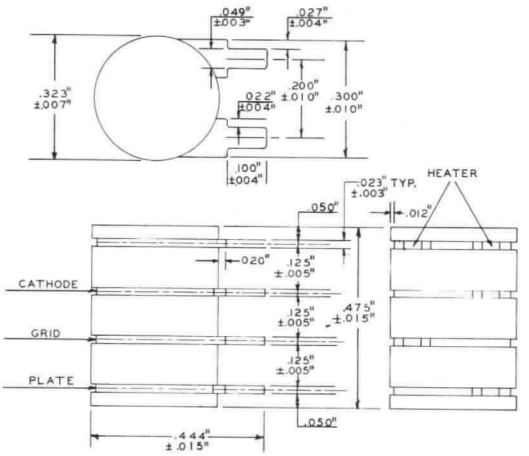

Maximum eccentricity of insulators 0.010 in. from center line.

Interface Life Test

Statistical sample operated for 1000 hours with Ef = 6.6 volts, no other voltages applied, and evaluated for cathode interface resistance following the life test.

Heater-Cycling Life Test

Statistical sample operated for 2000 cycles minimum to evaluate and control heater-cathode defects. Conditions of test include Ef = 7.0 volts cycled for one minute on and one minute off, Eb = Ec = 0 volts, and Ehk = 70 volts with heater positive with respect to cathode. Following this test, tubes are evaluated for open heaters, heater-cathode shorts, and heater-cathode leakage current.

Note: The conditions for some of the indicated tests have deliberately been selected to aggravate tube failures for test and evaluation purposes. In no sense should these conditions be interpreted as suitable circuit operating conditions.

The tubes and arrangements disclosed herein may be covered by patents of General Electric Company or others. Neither the disclosure of any information herein nor the sale of tubes by General Electric Company conveys any license under patent claims covering combinations of tubes with other devices or elements. In the absence of an express written agreement to the contrary, General Electric Company assumes no liability for patent infringement arising out of any use of the tubes with other devices or elements by any purchaser of tubes or others.

AVERAGE PLATE CHARACTERISTICS

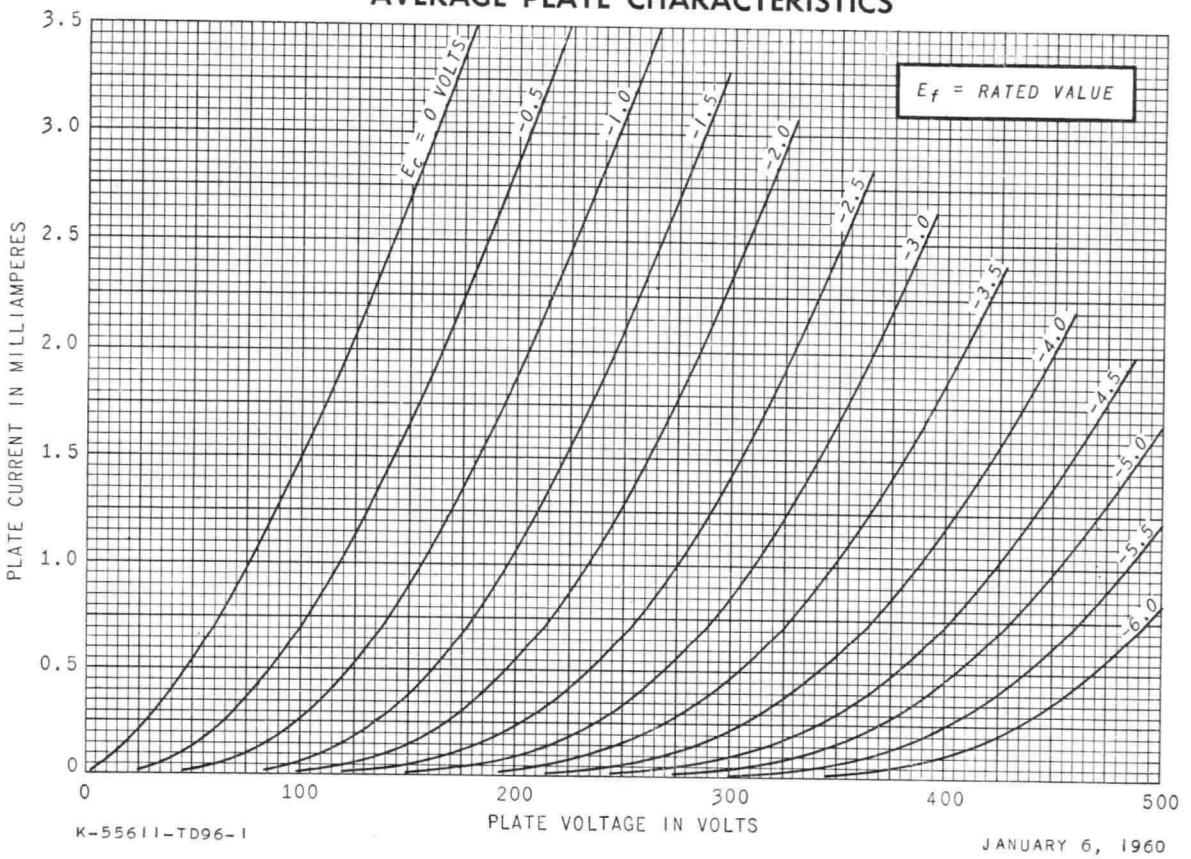

K-55611-TD96-1

JANUARY 6, 1960

AVERAGE TRANSFER CHARACTERISTICS

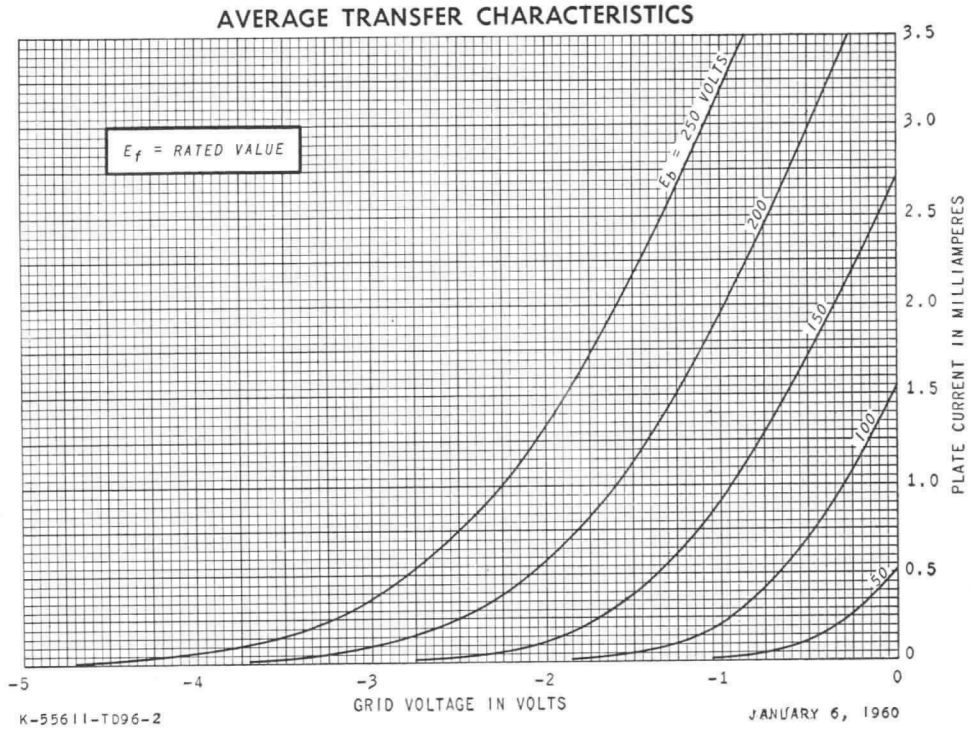

K-55611-TD96-2

JANUARY 6, 1960

AVERAGE CHARACTERISTICS

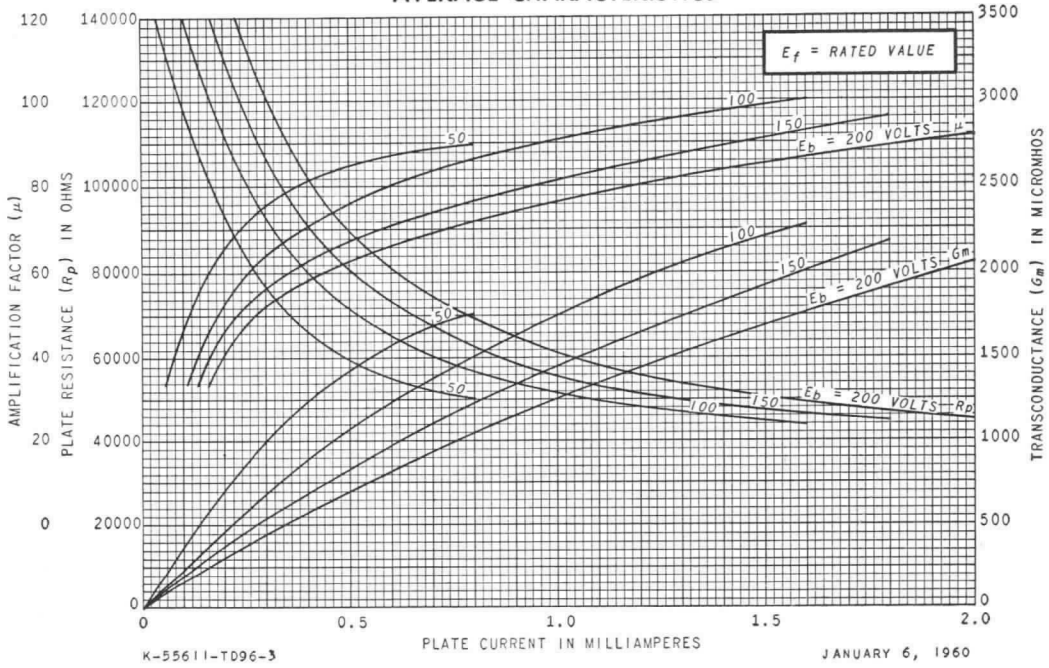

K-55611-TD96-3

JANUARY 6, 1960

RECEIVING TUBE DEPARTMENT

GENERAL ELECTRIC

Owensboro, Kentucky

Planar Triode

7644

FOR GROUNDED-GRID CLASS A UHF AMPLIFIER APPLICATIONS

The 7644 is a high-mu, metal-and-ceramic triode intended for operation as a grounded-grid, Class A radio-frequency amplifier at frequencies as high as 3000 megacycles.

Features of the tube include small size, planar electrode construction with close spacing, inherent rigidity, and an envelope structure convenient for coaxial circuit applications.

Within the limitations of its ratings, the 7644 may be used in radar receivers, or similar applications, where the grid of the tube may be driven positive by leakage pulses. The physical appearance and dimensions of the 7644 are identical to those of the 6299, and the electrical characteristics are nearly identical.

GENERAL

ELECTRICAL

Cathode - Coated Unipotential

Heater Characteristics and Ratings

Heater Voltage, AC or DC*	6.3±0.13	Volts
Heater Current‡	0.3	Amperes

Direct Interelectrode Capacitances§

Grid to Plate: (g to p)	1.75	pf
Grid to Cathode and Heater:		
g to (h + k)	3.65	pf
Plate to Cathode and Heater:		
p to (h + k)	0.015	pf

MECHANICAL

Operating Position - Any

Net Weight, approximate	1/6	Ounce

Cooling - Conduction¶

MAXIMUM RATINGS

ABSOLUTE-MAXIMUM VALUES

Plate Voltage	200	Volts
Negative DC Grid Voltage	15	Volts
Plate Dissipation	2.0	Watts
DC Plate Current	12	Milliamperes
Leakage Pulse		
Duty Cycle	0.0011	
Pulse Width	15	Microseconds
Peak RF Grid Voltage#	7.0	Volts
Envelope Temperature at Hottest Point	150	C

Absolute-Maximum ratings are limiting values of operating and environmental conditions applicable to any electron tube of a specified type as defined by its published data and should not be exceeded under the worst probable conditions.

The tube manufacturer chooses these values to provide acceptable serviceability of the tube, making no allowance for equipment variations, environmental variations, and the effects of changes in operating conditions due to variations in the characteristics of the tube under consideration and of all other electron devices in the equipment.

The equipment manufacturer should design so that initially and throughout life no absolute-maximum value for the intended service is exceeded with any tube under the worst probable operating conditions with respect to supply-voltage variation, equipment component variation, equipment control adjustment, load variation, signal variation, environmental conditions, and variations in the characteristics of the tube under consideration and of all other electron devices in the equipment.

The tubes and arrangements disclosed herein may be covered by patents of General Electric Company or others. Neither the disclosure of any information herein nor the sale of tubes by General Electric Company conveys any license under patent claims covering combinations of tubes with other devices or elements. In the absence of an express written agreement to the contrary, General Electric Company assumes no liability for patent infringement arising out of any use of the tubes with other devices or elements by any purchaser of tubes or others.

CHARACTERISTICS AND TYPICAL OPERATION

AVERAGE CHARACTERISTICS

Plate Voltage	175	Volts
Grid Voltage△	---	Volts
Amplification Factor	110	
Plate Resistance, approximate	7300	Ohms
Transconductance	15000	Micromhos
Plate Current	10	Milliamperes
Plate Voltage, approximate Ib = 10 Milliamperes, Ec = 0 volts	125	Volts

CLASS A, RF AMPLIFIER—GROUNDED-GRID, COAXIAL-TYPE CIRCUIT

Frequency	450	1200	3000	Megacycles
Plate Supply Voltage¢	300	300	300	Volts
Resistor in Plate Circuit (bypassed)	17500	17500	17500	Ohms
Grid Voltage**	0	0	0	Volts
Plate Current	10	10	10	Milliamperes
Bandwidth, min	10	10	10	Megacycles
Gain	17.5	17	11	Decibels
Noise Figure, Power-Matched	4.5	8.2	13.2	Decibels

NOTES

* The equipment designer should design the equipment so that heater voltage is centered at the specified bogey value, with heater supply variations restricted to maintain heater voltage within the specified tolerance.

‡ Heater current of a bogey tube at Ef = 6.3 volts.

§ Without external shield.

¶ Good thermal contact to the anode and cathode must be provided to conduct heat from the elements. The anode contact must be sufficiently flexible to keep lateral force on the anode at a minimum.

The 7644 is rated only for Class A amplifier service.

△ Adjusted for Ib = 10 milliamperes.

¢ Supply should be regulated.

** For operation above 1000 megacycles, the minimum noise figure will generally be obtained by operation at zero bias. For operation below 1000 megacycles, the use of a cathode resistor or grid bias should be evaluated for the particular application.

INITIAL CHARACTERISTICS LIMITS

	Min.	Bogey	Max.	
Heater Current				
Ef = 6.3 volts	280	300	320	Milliamperes
Plate Voltage				
Ef = 6.3 volts, Ec = 0 volts, Eb adjusted for Ib = 10 ma	75	125	175	Volts
Transconductance				
Ef = 6.3 volts, Eb = 175 volts, Ec adjusted for Ib = 10 ma.	11500	15000	20000	Micromhos
Amplification Factor				
Ef = 6.3 volts, Eb = 175 volts, Ec adjusted for Ib = 10 ma.	85	110	140	
Interelectrode Leakage Resistance				
Ef = 6.3 volts, Polarity of applied d-c interelectrode voltage is such that no cathode emission results				
Grid to Cathode and Heater at 45 volts d-c	2.5	---	---	Megohms
Grid to Plate at 500 volts d-c	25	---	---	Megohms
Interelectrode Capacitances				
Grid to Plate: (g to p)	1.5	1.75	2.0	Picofarads
Grid to Cathode and Heater: g to (h + k)	3.0	3.65	5.0	Picofarads
Plate to Cathode and Heater: p to (h + k)	---	0.015	0.025	Picofarads

SPECIAL PERFORMANCE TESTS

	Min.	Max.	
Noise Figure - 450 MC			
Ef = 6.3 volts, Ec = 0 volts, Eb adjusted for Ib = 10 ma, F = 450±5 MC	---	5.0	Decibels
Noise Figure - 1200 MC			
Ef = 6.3 volts, Ec = 0 volts, Eb adjusted for Ib = 10 ma, F = 1200±5 MC	---	8.5	Decibels
Power Gain - 450 MC			
Ef = 6.3 volts, Ec = 0 volts, Eb adjusted for Ib = 10 ma, F = 450±5 MC, Bandwidth = 9 MC, min	15	---	Decibels
Power Gain - 1200 MC			
Ef = 6.3 volts, Ec = 0 volts, Eb adjusted for Ib = 10 ma, F = 1200±5 MC, Bandwidth = 10 MC, min.	15	---	Decibels

DEGRADATION RATE TESTS

1000-Hour Life

Statistical sample operated for 1000 hours to evaluate changes in transconductance and noise figure with life.

PHYSICAL DIMENSIONS

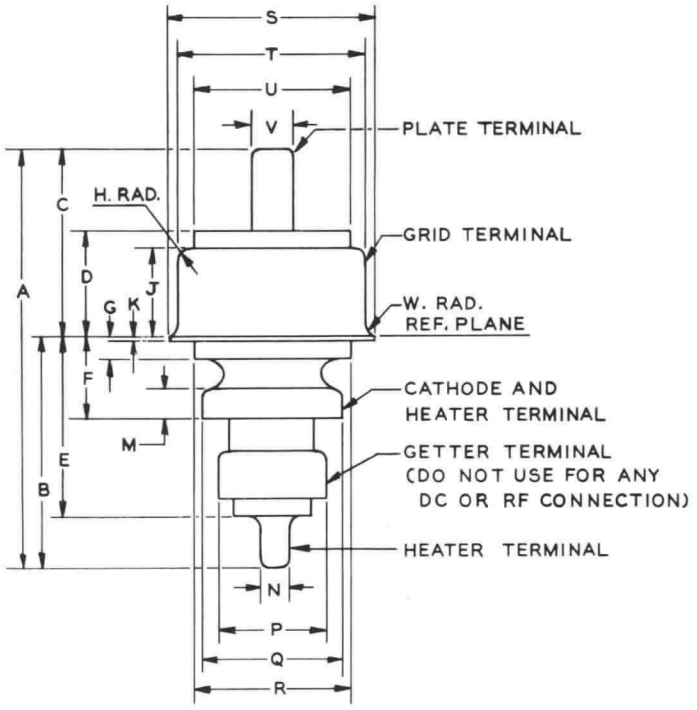

ALIGNMENT GAUGE

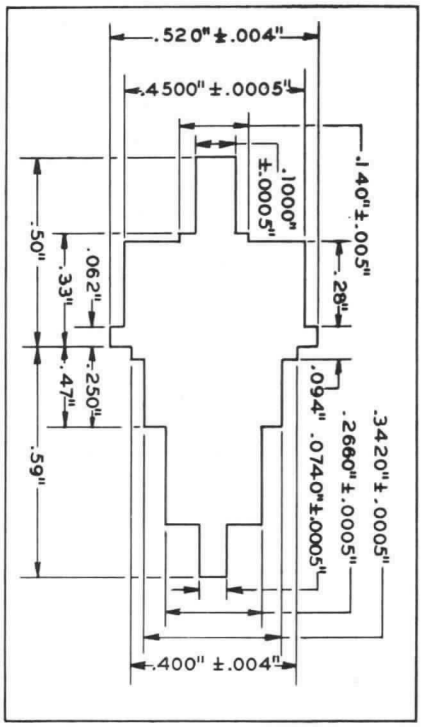

Ref.	INCHES		MILLIMETERS	
	Minimum	Maximum	Minimum	Maximum
A	0.960	1.040	24.38	26.42
B	0.530	0.590	13.46	14.99
C	0.410	0.470	10.41	11.94
D	---	0.272	---	6.91
E	---	0.475	---	12.07
F	0.163	0.193	4.14	4.90
G	---	0.060	---	1.52
H	---	• 0.030	---	0.76
J	0.190	0.210	4.83	5.33
K	0.009	0.015	0.23	0.38
M	0.040	0.070	1.02	1.78
N	0.059	0.065	1.50	1.65
P	---	0.257	---	6.53
Q	0.326	0.334	8.28	8.48
R	---	0.385	---	9.78
S	0.483	0.497	12.27	12.62
T	0.435	0.445	11.05	11.30
U	---	0.385	---	9.78
V	0.088	0.094	2.24	2.39
W	---	0.008	---	0.20

AVERAGE PLATE CHARACTERISTICS

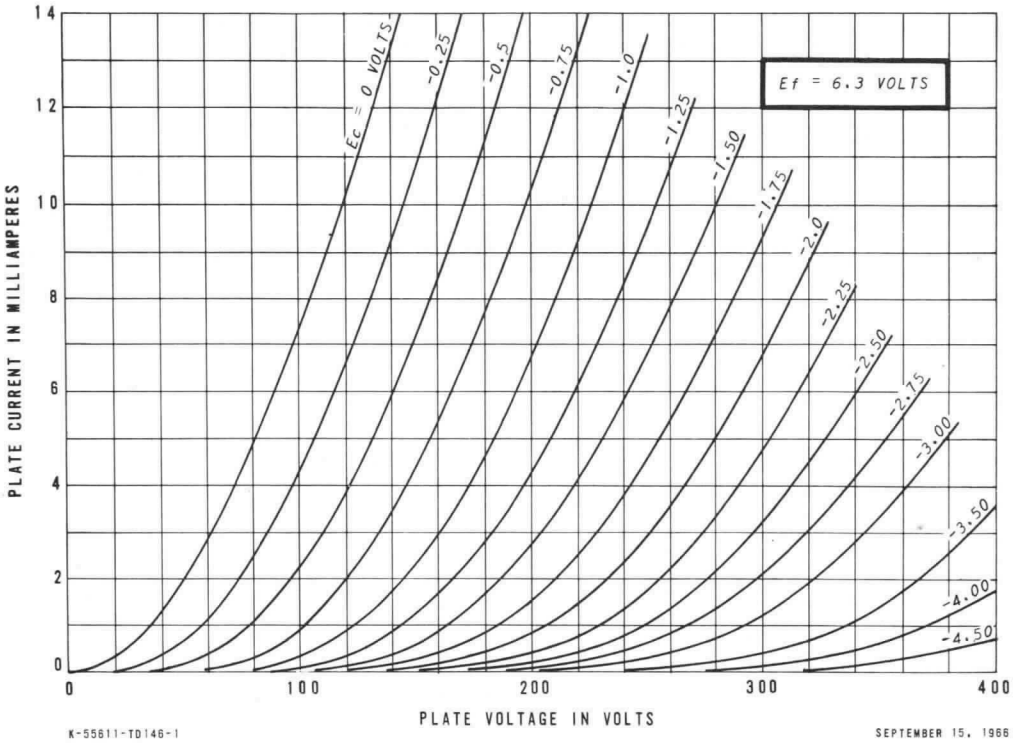

K-55611-TD146-1

SEPTEMBER 15, 1966

AVERAGE TRANSFER CHARACTERISTICS

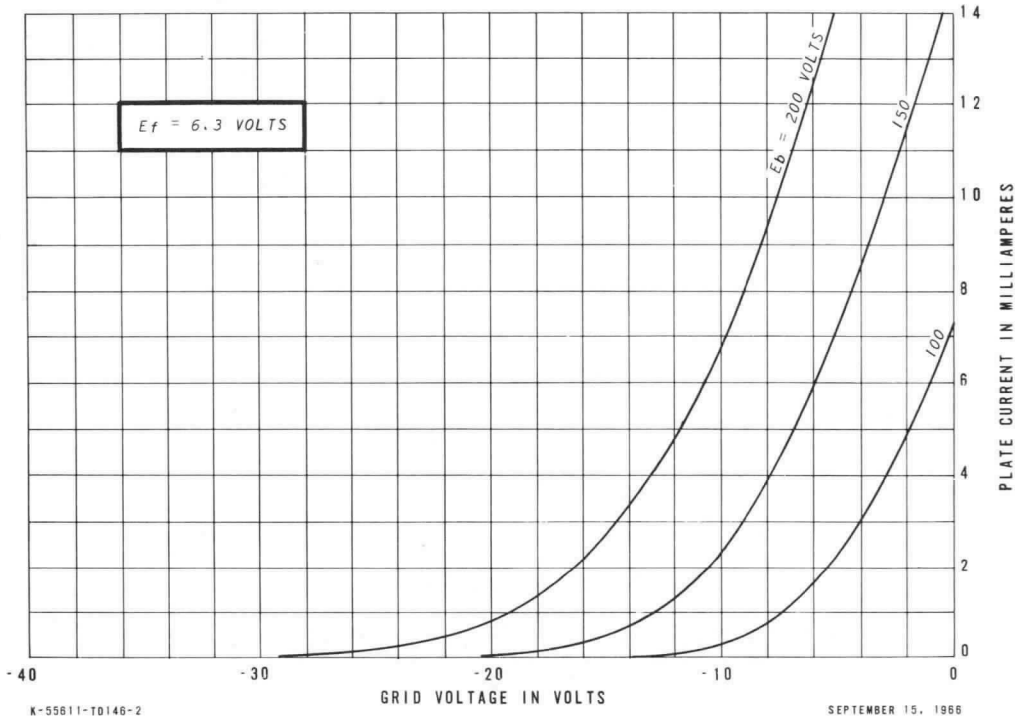

K-55611-TD146-2

SEPTEMBER 15, 1966

PREDICATED NOISE PERFORMANCE

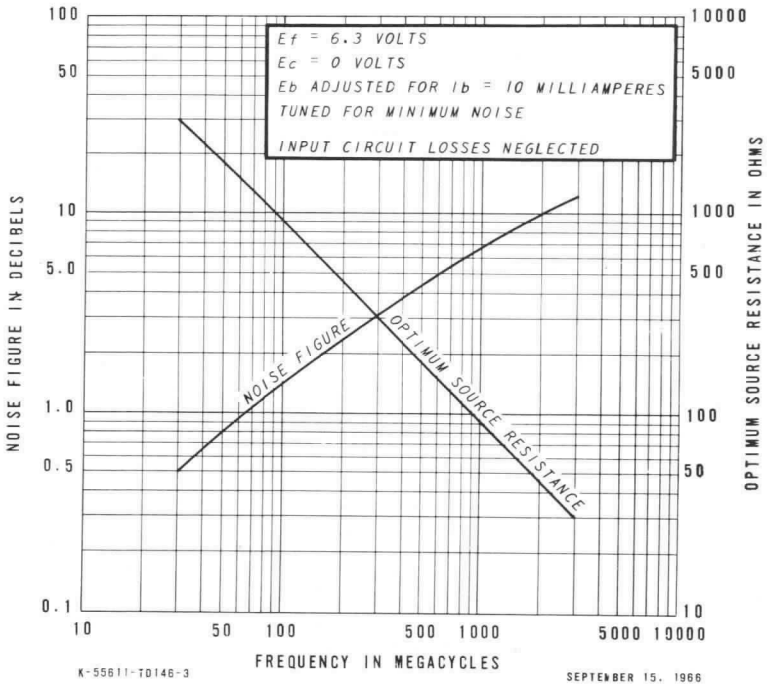

TUBE DEPARTMENT

GENERAL ELECTRIC

Owensboro, Kentucky

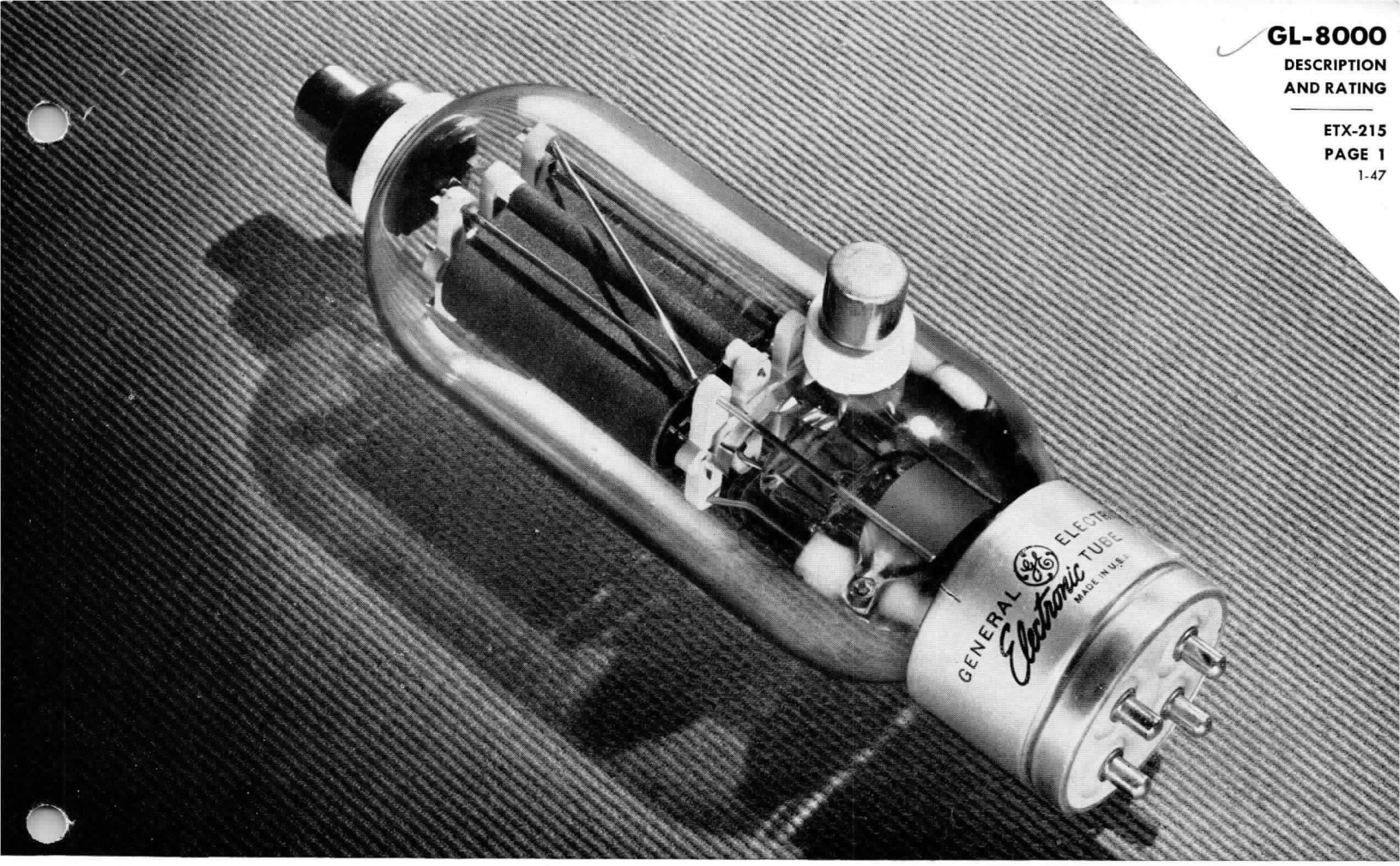

TRIODE

DESCRIPTION

The GL-8000 is a three-electrode tube designed for use as a power amplifier, modulator, and oscillator. The anode is capable of dissipating 175 watts, and cooling is accomplished by radiation. The cathode is a thoriated-tungsten filament. Maximum ratings apply up to 30 megacycles.

TECHNICAL INFORMATION

These data are for reference only. For design information refer to specifications.

GENERAL CHARACTERISTICS

Electrical

Filament voltage (a-c or d-c)	10	volts
Filament current	4.5	amperes
Amplification factor	16.5	
Direct interelectrode capacitances, approximate		
Grid-plate	6.4	micromicrofarads
Grid-filament	5.0	micromicrofarads
Plate-filament	3.3	micromicrofarads
Frequency for maximum ratings	30	megacycles

Mechanical

Mounting position	vertical, base down*	
Net weight, approximate	8	ounces
Shipping weight	1	pound

GE Electronic TUBE

GENERAL ELECTRIC

TECHNICAL INFORMATION (CONT'D)

MAXIMUM RATINGS AND TYPICAL OPERATING CONDITIONS

AUDIO-FREQUENCY POWER AMPLIFIER AND MODULATOR—CLASS B

Maximum Ratings, Absolute Values	CCS†	ICAS†	
D-c plate voltage	2500 max	2750 max	volts
Maximum signal d-c plate current‡	250 max	250 max	milliamperes
Maximum signal plate input‡	425 max	510 max	watts
Plate dissipation‡	125 max	175 max	watts

Typical Operation	CCS†	ICAS†	
Unless otherwise specified, values are for two tubes			
D-c plate voltage	2000	2250	volts
D-c grid voltage π	−120	−130	volts
Peak a-f grid-to-grid voltage	520	560	volts
Zero signal d-c plate current	60	65	milliamperes
Maximum signal d-c plate current	425	450	milliamperes
Effective load resistance, plate to plate	10800	12000	ohms
Maximum signal driving power, approximate	6.5	7.9	watts
Maximum signal power output, approximate	600	725	watts

RADIO-FREQUENCY POWER AMPLIFIER—CLASS B

Carrier conditions per tube for use with a maximum modulation factor of 1.0

Maximum Ratings, Absolute Values	CCS†	ICAS†	
D-c plate voltage	2000 max	2500 max	volts
D-c plate current	185 max	185 max	milliamperes
Plate input	190 max	225 max	watts
Plate dissipation	125 max	175 max	watts

Typical Operation	CCS†	ICAS†	
D-c plate voltage	2000	2250	volts
D-c grid voltage π	−130	−145	volts
Peak r-f grid voltage	140	150	volts
D-c plate current	95	100	milliamperes
D-c grid current, approximate§	0.5	0	milliampere
Driving power, approximate△	4.8	5.4	watts
Power output, approximate	65	75	watts

GRID-MODULATED RADIO-FREQUENCY POWER AMPLIFIER—CLASS C TELEPHONY

Carrier conditions per tube for use with a maximum modulation factor of 1.0

Maximum Ratings, Absolute Values	CCS†	ICAS†	
D-c plate voltage	2000 max	2500 max	volts
D-c grid voltage	−500 max	−500 max	volts
D-c plate current	185 max	185 max	milliamperes
Plate input	190 max	225 max	watts
Plate dissipation	125 max	175 max	watts

Typical Operation	CCS†	ICAS†	
D-c plate voltage	2000	2250	volts
D-c grid voltage	−250	−265	volts
Peak r-f grid voltage	265	270	volts
Peak a-f grid voltage	120	115	volts
D-c plate current	95	100	milliamperes
D-c grid current, approximate§	0	0	milliampere
Driving power, approximate§△	4.3	2.5	watts
Power output, approximate	65	75	watts

PLATE-MODULATED RADIO-FREQUENCY POWER AMPLIFIER—CLASS C TELEPHONY

Carrier conditions per tube for use with a maximum modulation factor of 1.0

Maximum Ratings, Absolute Values	**CCS†**	**ICAS†**	
D-c plate voltage	1600 max	2000 max	volts
D-c grid voltage	−500 max	−500 max	volts
D-c plate current	210 max	250 max	milliamperes
D-c grid current	40 max	45 max	milliamperes
Plate input	335 max	500 max	watts
Plate dissipation	85 max	125 max	watts
Typical Operation	**CCS†**	**ICAS†**	
D-c plate voltage	1600	2000	volts
D-c grid voltage			
From a fixed supply of	−300	−370	volts
From a grid resistor of	15000	10000	ohms
Peak r-f grid voltage	470	630	volts
D-c plate current	210	250	milliamperes
D-c grid current, approximate§	20	37	milliamperes
Driving power, approximate§	8.5	20	watts
Power output, approximate	250	380	watts

RADIO-FREQUENCY POWER AMPLIFIER AND OSCILLATOR—CLASS C TELEGRAPHY

Key-down conditions per tube without modulation ◆

Maximum Ratings, Absolute Values	**CCS†**	**ICAS†**	
D-c plate voltage	2000 max	2500 max	volts
D-c grid voltage	−500 max	−500 max	volts
D-c plate current	250 max	300 max	milliamperes
D-c grid current	40 max	45 max	milliamperes
Plate input	500 max	750 max	watts
Plate dissipation	125 max	175 max	watts
Typical Operation	**CCS†**	**ICAS†**	
D-c plate voltage	2000	2500	volts
D-c grid voltage			
From a fixed supply of	−195	240	volts
From a grid resistor of	8100	6000	ohms
From a cathode resistor of	710	700	ohms
Peak r-f grid voltage	370	480	volts
D-c plate current	250	300	milliamperes
D-c grid current, approximate§	24	40	milliamperes
Driving power, approximate§	8	18	watts
Power output, approximate	375	575	watts

OSCILLATOR—WITH UNFILTERED PLATE-VOLTAGE SUPPLY

Maximum Ratings, Absolute Values	**Supply 1**	**Supply 2**	
Plate voltage	2500 max	1800 max	volts
D-c grid voltage	−200 max	−300 max	volts
D-c plate current	160 max	225 max	milliamperes
D-c grid current	25 max	35 max	milliamperes
Plate input	450 max	500 max	watts
Plate dissipation	125 max	125 max	watts
Typical Operation in Push-pull Circuit at 30 Megacycles	**Supply 1**	**Supply 2**	
Unless otherwise specified, values are for 2 tubes			
Plate voltage	2500 RMS	1800	volts
Grid resistor	3500	5000	ohms
D-c plate current	320	450	milliamperes
D-c grid current	30	35	milliamperes
Power output, approximate	650	700	watts
Circuit power output (85% circuit efficiency), approximate	550	600	watts

Supply 1: Self-rectified a-c supply (plate voltages are rms values).
Supply 2: Separately rectified (no filter) single-phase full-wave plate supply.

* The tube may also be mounted in a horizontal position with the plane of the electrodes vertical.
† CCS = Continuous Commercial Service; ICAS = Intermittent Commercial and Amateur Service.
‡ Averaged over any a-f cycle of sine-wave form.
π With a-c filament supply. Grid voltages are given with respect to the midpoint of filament operated on a-c. If d-c is used, each stated value of grid voltage should be decreased by one-half the filament voltage and the circuit returns made to the negative end of the filament.

TECHNICAL INFORMATION (CONT'D)

§ Subject to wide variations depending on the impedance of the load circuit. High-impedance load circuits require more grid current and driving power to obtain the desired output. Low-impedance circuits need less grid current and driving power, but plate-circuit efficiency is sacrificed. The driving stage should be capable of delivering considerably more than the required driving power.

◆Modulation essentially negative may be used if the positive peak of the a-f envelope does not exceed 115 per cent of the carrier conditions.

△At crest of a-f cycle with modulation factor of 1.0.

APPLICATION NOTES

Maximum ratings apply up to 30 megacycles. The tube may be operated at higher frequencies provided the maximum values of plate voltage and power input are reduced according to the tabulation below (other maximum ratings are the same as shown above). Special attention should be given to adequate ventilation of the bulb at these frequencies.

Frequency	30	60	100	megacycles
Percentage of Maximum Rated Plate Voltage and Plate Input				
Class B telephony	100	88	80	per cent
Class C grid-modulated telephony	100	88	80	per cent
Class C plate-modulated telephony	100	70	50	per cent
Class C telegraphy	100	70	50	per cent
Oscillator, unfiltered supply	100	70	50	per cent

GL-8000 TYPICAL CHARACTERISTICS
E_f=10 VOLTS D-C

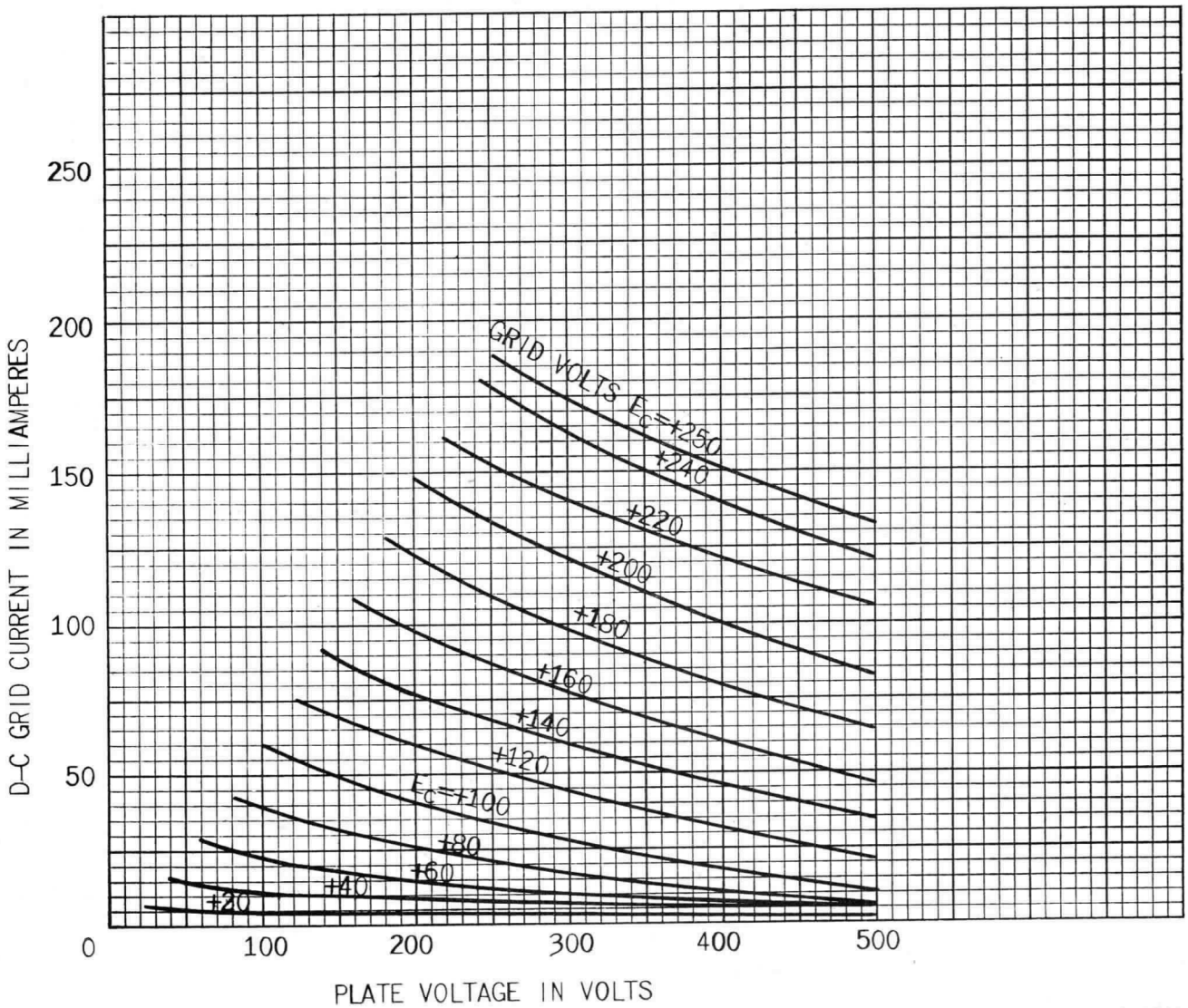

K-69087-72A60

10-25-46

GL-8000
AVERAGE PLATE CHARACTERISTICS
Ef=10 VOLTS D-C

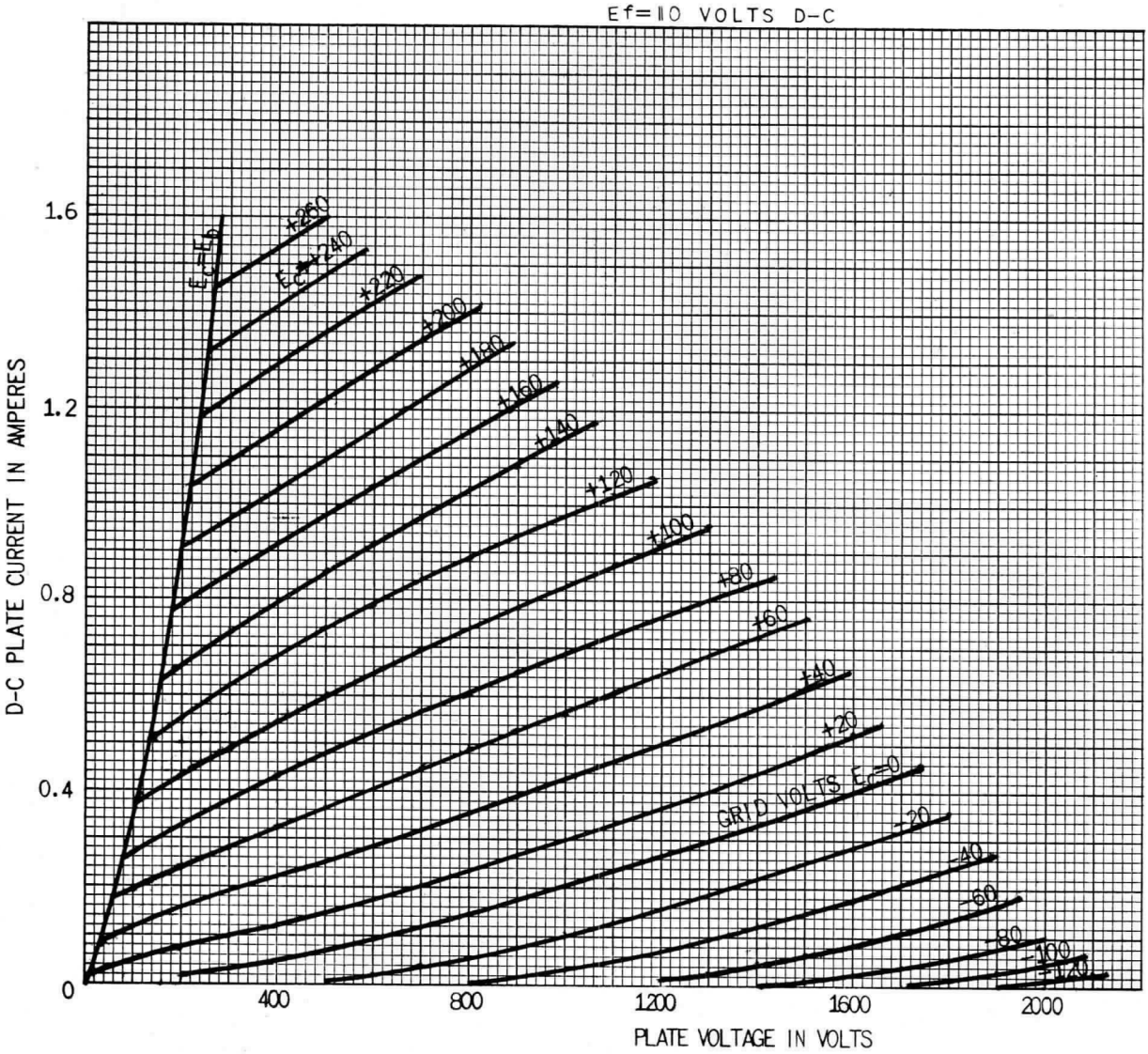

K-69087-72A57

10-21-46

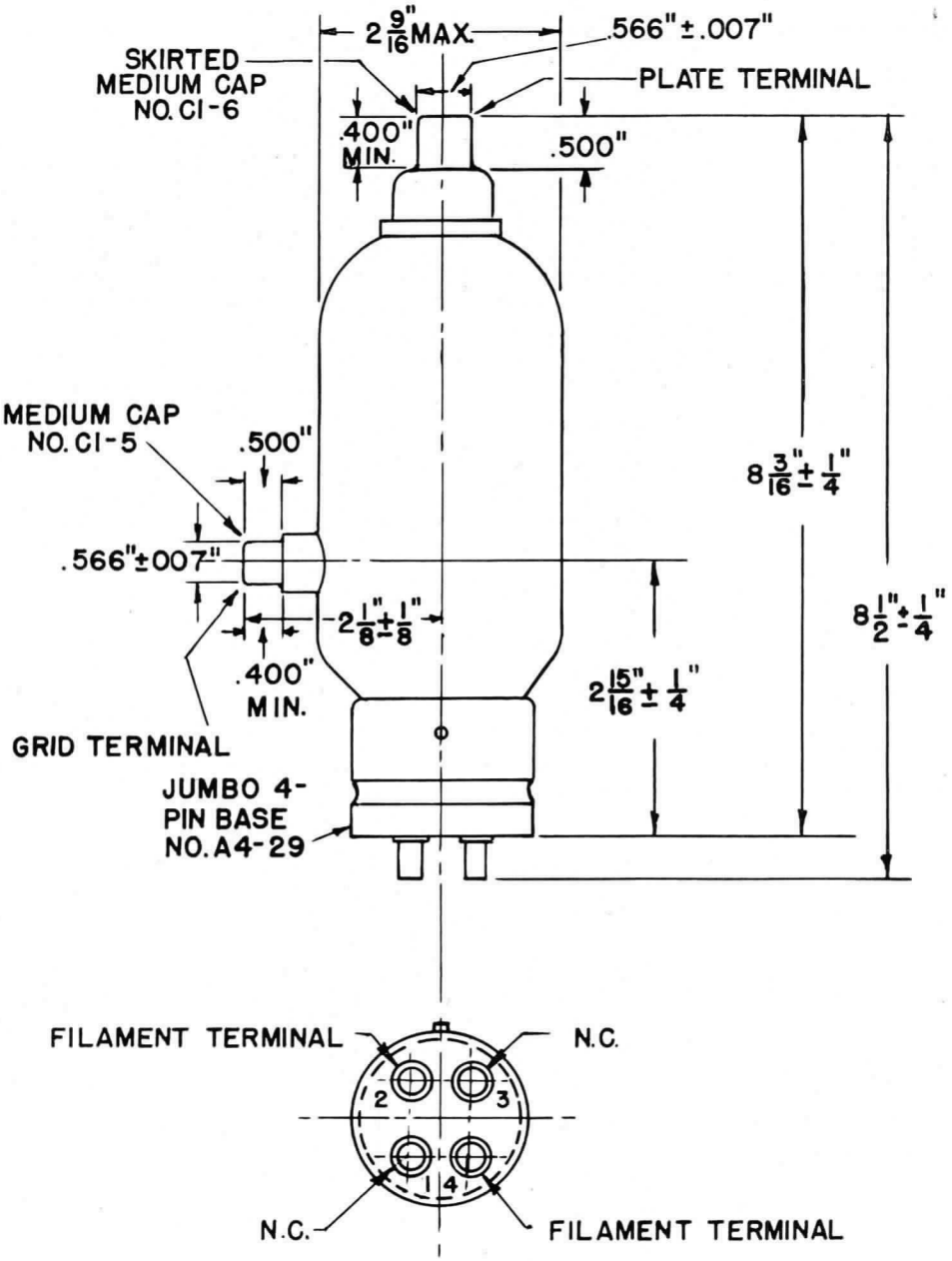

GL-8000 OUTLINE

N-15091AZ 11-1-46

Electronics Department

GENERAL ELECTRIC

Schenectady, N. Y.

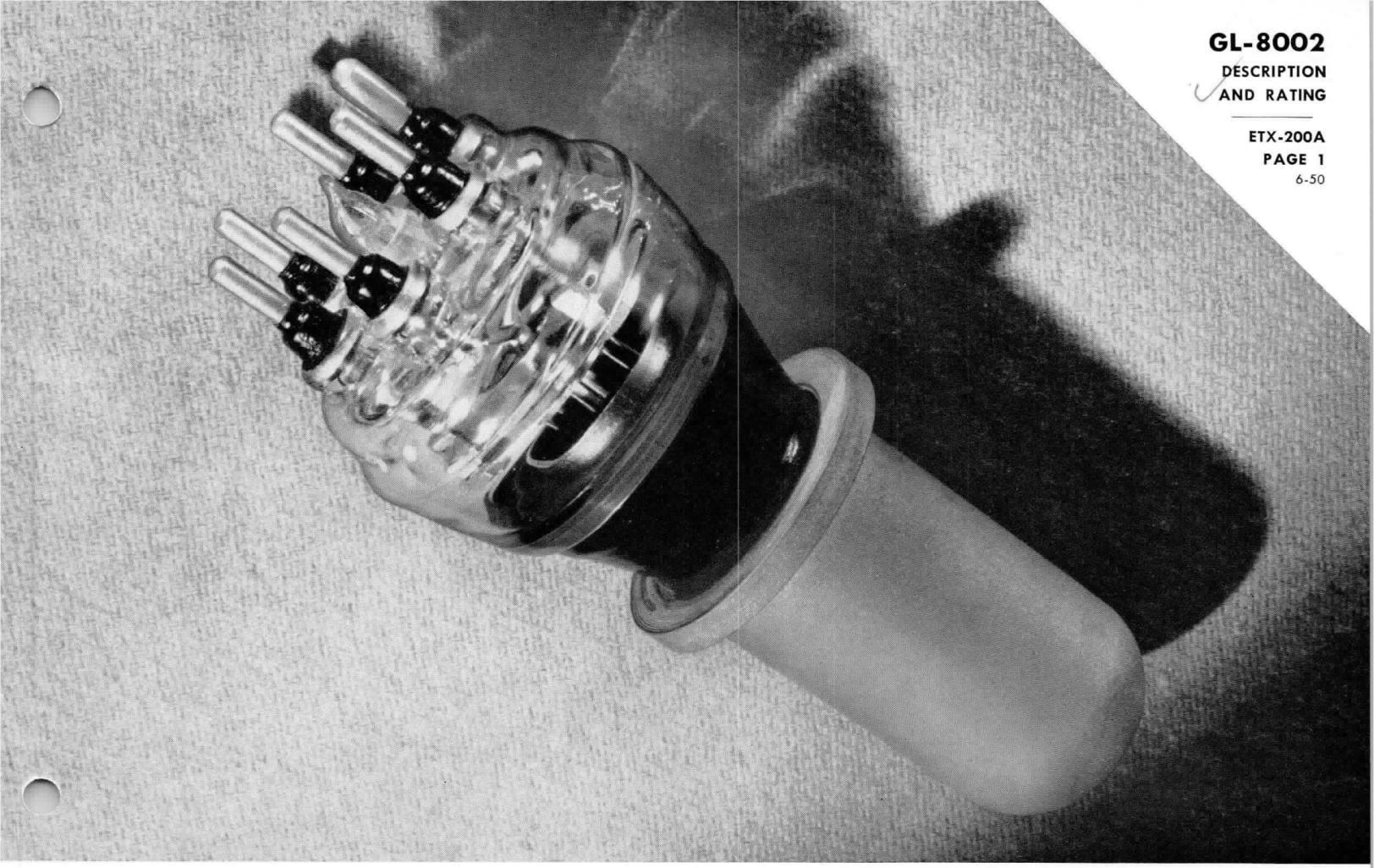

TRIODE

♦DESCRIPTION

The GL-8002 is a three-electrode transmitting tube designed for use as a radio-frequency power amplifier at high frequencies. Multiple leads for both the filament and grid connectors minimize the inductance to these electrodes. Maximum ratings may be used up to a frequency of 150 megacycles and reduced ratings up to 300 megacycles.

TECHNICAL INFORMATION

These data are for reference only. For design information refer to specifications.

GENERAL CHARACTERISTICS

Number of electrodes	3	
Electrical		
Cathode—Filamentary, tungsten		
Filament voltage	16	volts
Filament current	38	amperes
Average characteristics, $E_b = 2.4$ kilovolts $I_b = 0.5$ ampere $E_f = 16$ volts		
Grid voltage	−50	volts
Amplification factor	21.5	
Direct interelectrode capacitances		
Grid-plate	8.7	micromicrofarads
Grid-filament	10.2	micromicrofarads
Plate-filament	0.90	micromicrofarad
Frequency for maximum ratings	150	megacycles

♦ Revised.

Supersedes ETX-200 dated 5-46

GE Electronic TUBE

GENERAL ELECTRIC

TECHNICAL INFORMATION (CONT'D)

Mechanical

Type of cooling	water and forced air	
Maximum outlet temperature	70	centigrade
■Water flow	0.5 1.0 1.5	gal per min
▲Pressure drop through jacket	1.0 2.5 4.0	pounds per sq in.
Maximum incoming air temperature	50	centigrade
Air flow to bulb from a 1-inch diameter nozzle	8	cu ft per min
Gasket catalog number	5182028P10	
Net weight, approximate	1	pound
Shipping weight, approximate	5	pounds
Mounting position	vertical, anode down	

MAXIMUM RATINGS AND TYPICAL OPERATING CONDITIONS

CLASS B RADIO-FREQUENCY POWER AMPLIFIER

Carrier conditions per tube for use with a maximum modulation factor of 1.0

D-c plate voltage	3500	volts
D-c plate current	0.6	ampere
Plate input	1800	watts
Plate dissipation	1200	watts

CLASS C RADIO-FREQUENCY POWER AMPLIFIER AND OSCILLATOR, PLATE MODULATED

Carrier conditions per tube for use with a maximum modulation factor of 1.0

D-c plate voltage	2500	volts
D-c grid voltage	−500	volts
D-c plate current	0.5	ampere
D-c grid current	0.1	ampere
Plate input	1250	watts
Plate dissipation	750	watts

CLASS C RADIO-FREQUENCY AMPLIFIER AND OSCILLATOR, TELEGRAPHY

Key-down conditions per tube without modulation. Essentially negative modulation may be used if the positive peak of the a-f envelope does not exceed 115 per cent of the carrier conditions.

D-c plate voltage	3500	volts
D-c grid voltage	−500	volts
D-c plate current	1.0	ampere
D-c grid current	0.1	ampere
Plate input	3000	watts
Plate dissipation	1200	watts

■Revised.
▲New.

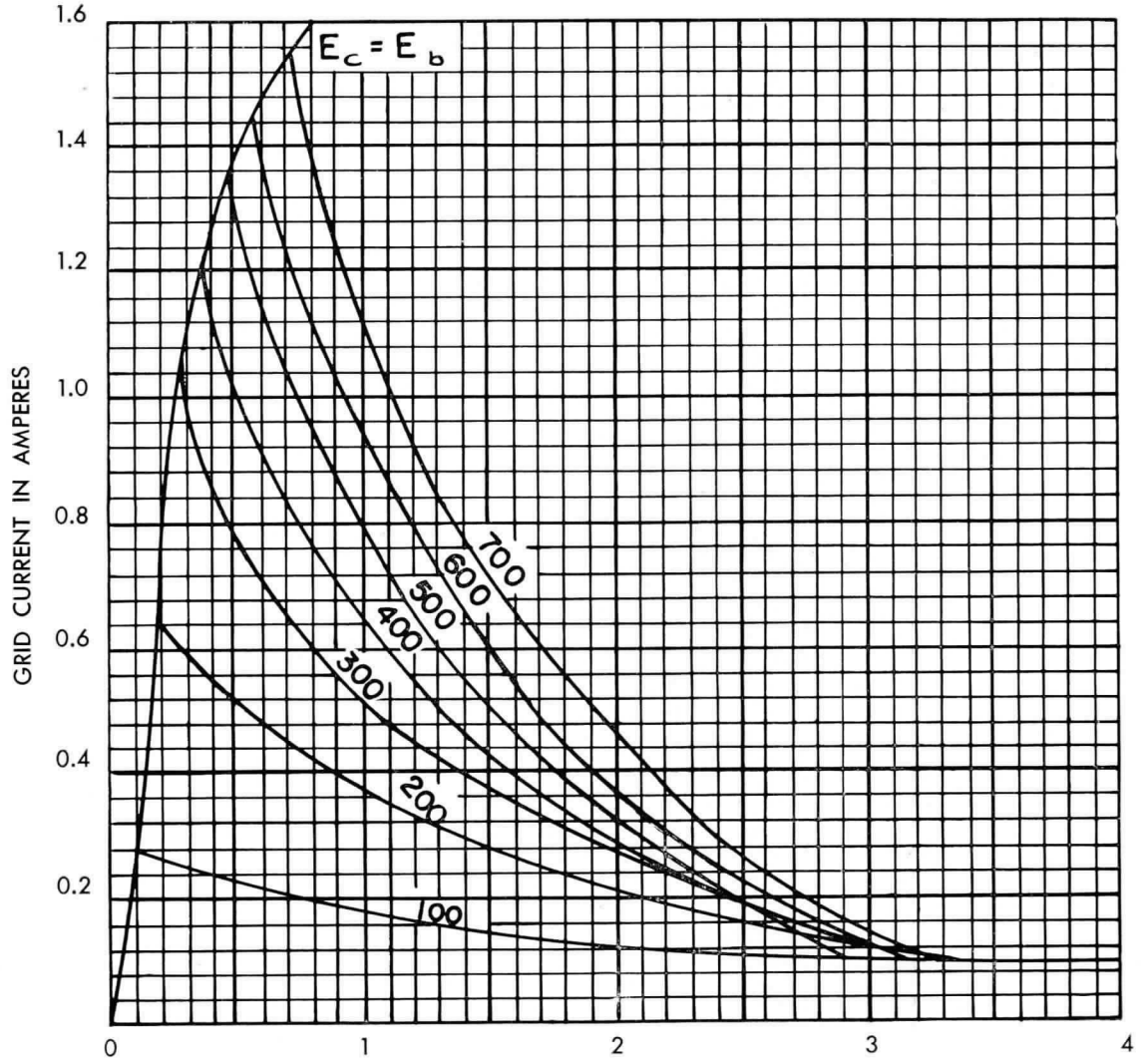

GL-8002 TYPICAL GRID-PLATE TRANSFER CHARACTERISTICS
(E_f = 16.0 VOLTS A-C)

K-9033821

2-28-45

GL-8002 CHARACTERISTICS $E_f = 16$ VOLTS A-C

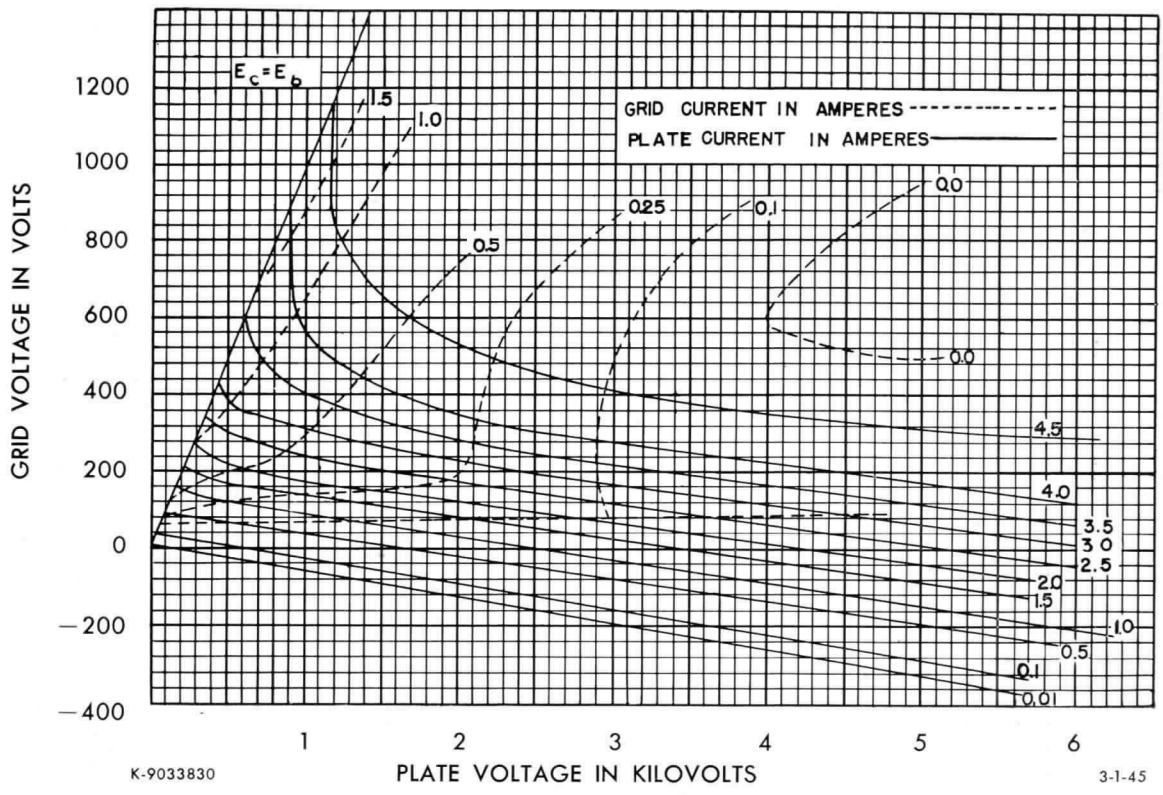

GL-8002 AVERAGE FILAMENT CHARACTERISTIC (COLD RESISTANCE OF FILAMENT = .036 OHM)

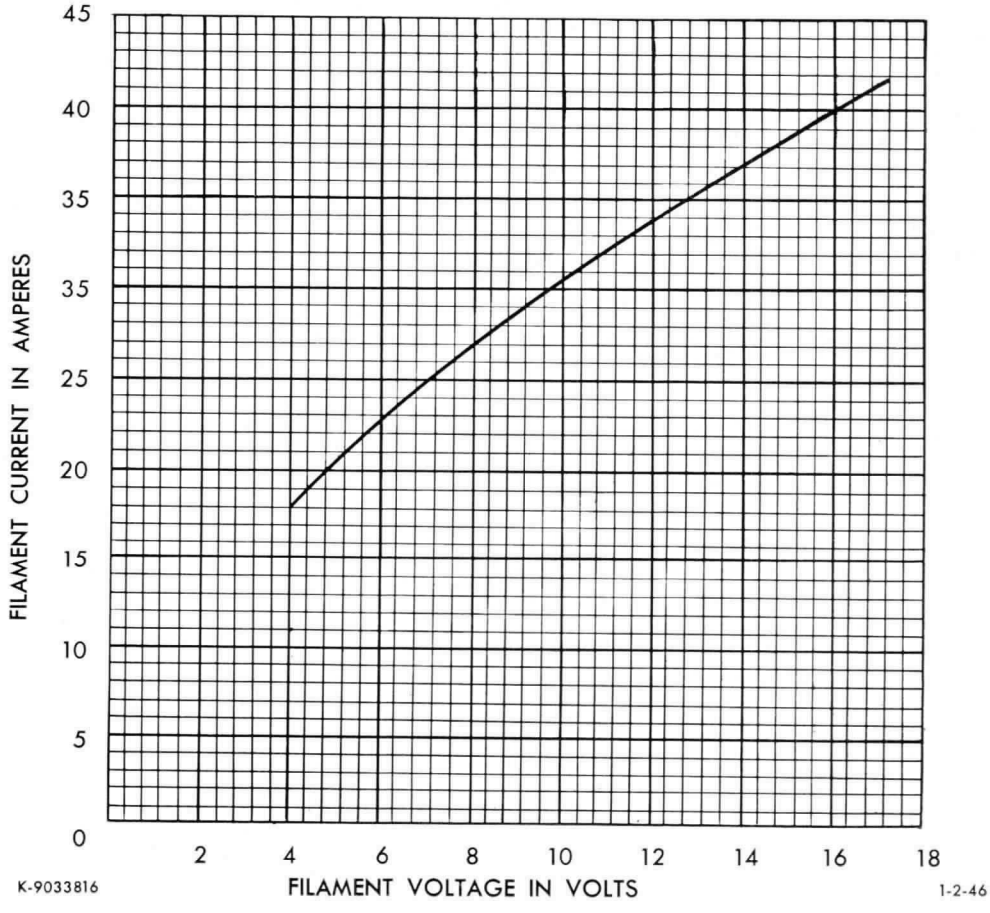

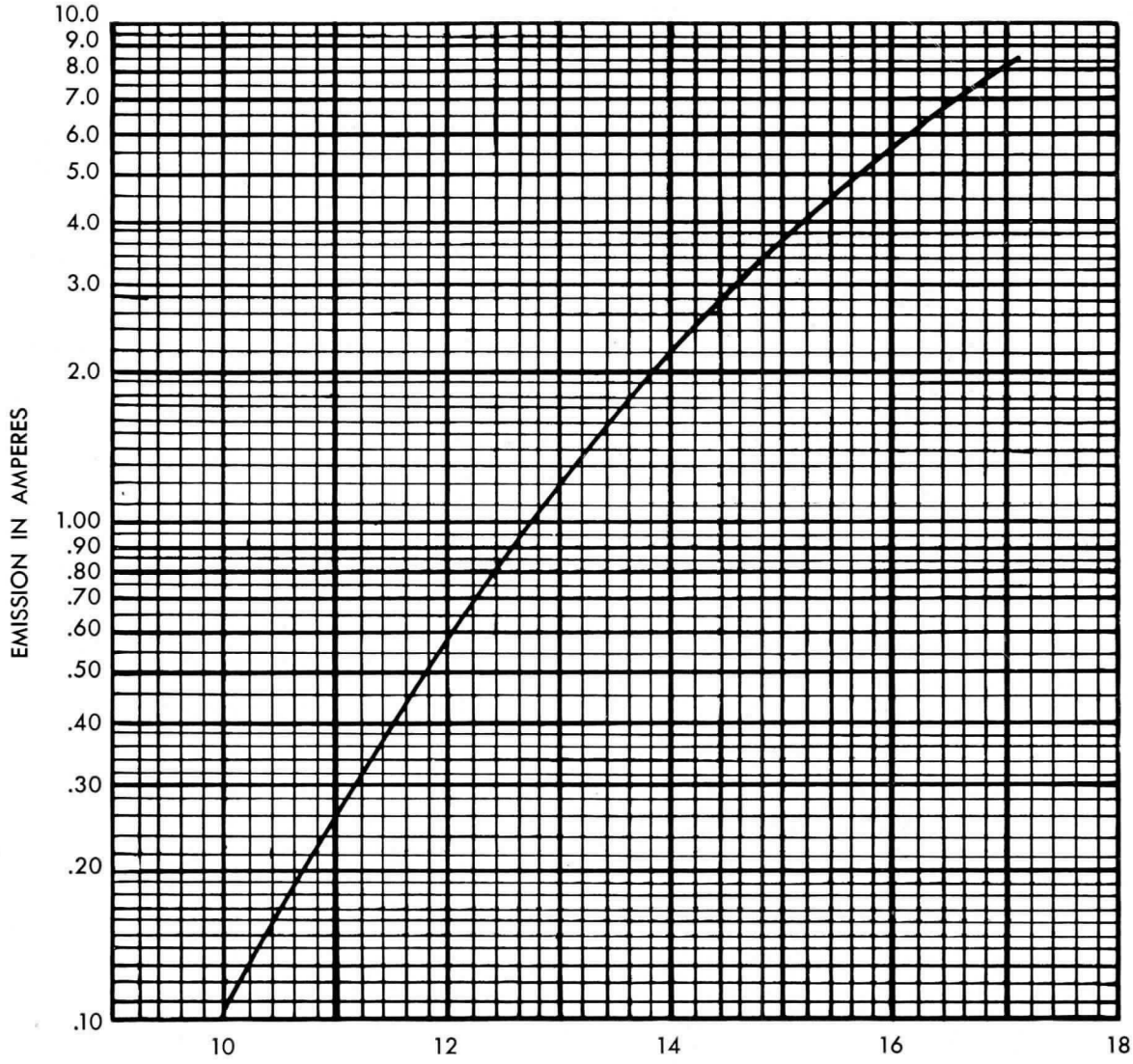

GL-8002 AVERAGE EMISSION CHARACTERISTIC

K-9033817

2-22-45

GL-8002

■AVERAGE PLATE CHARACTERISTICS

(E_f = 16.0 VOLTS A-C)

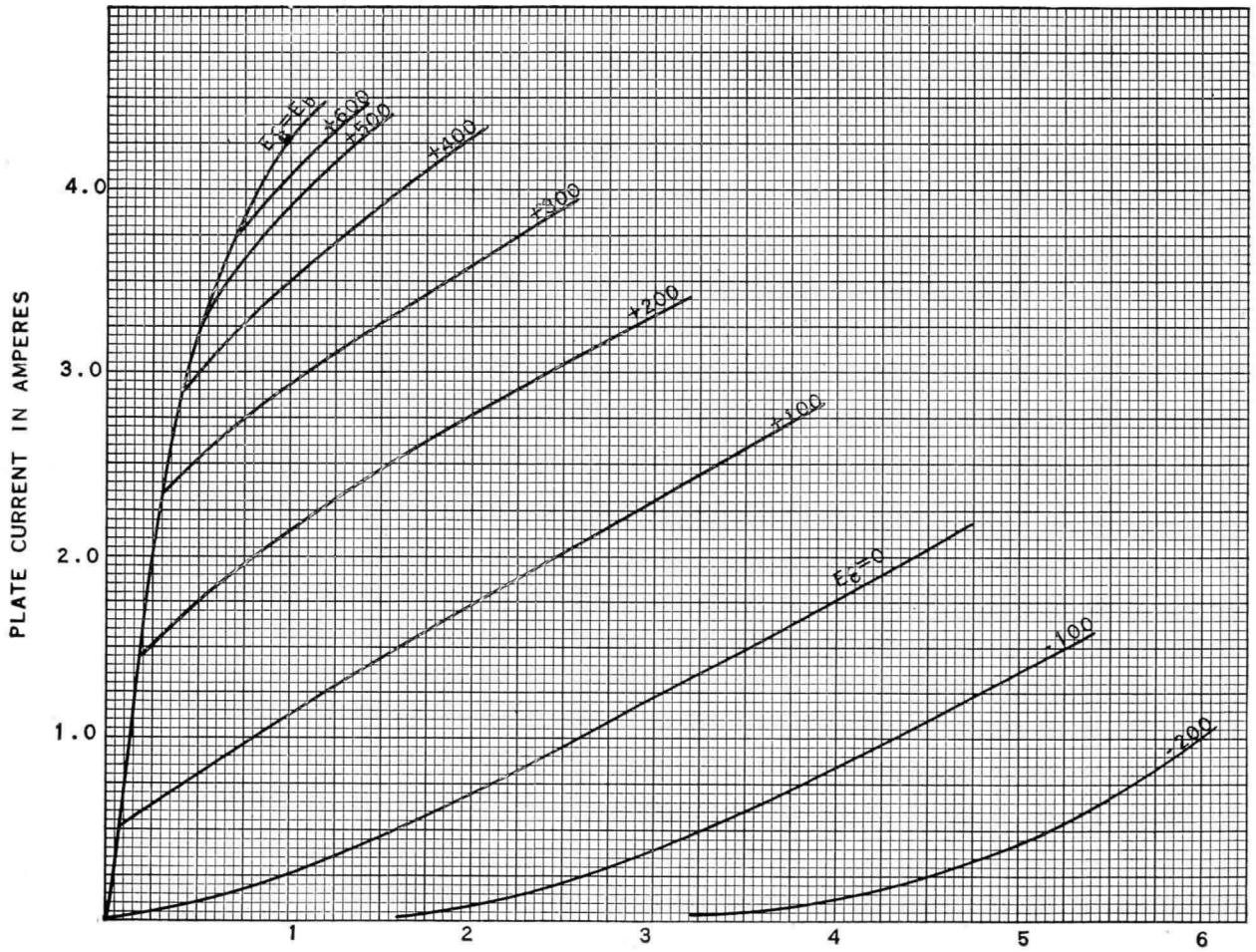

K-69087-72A101

2-6-47

■Drawing revised

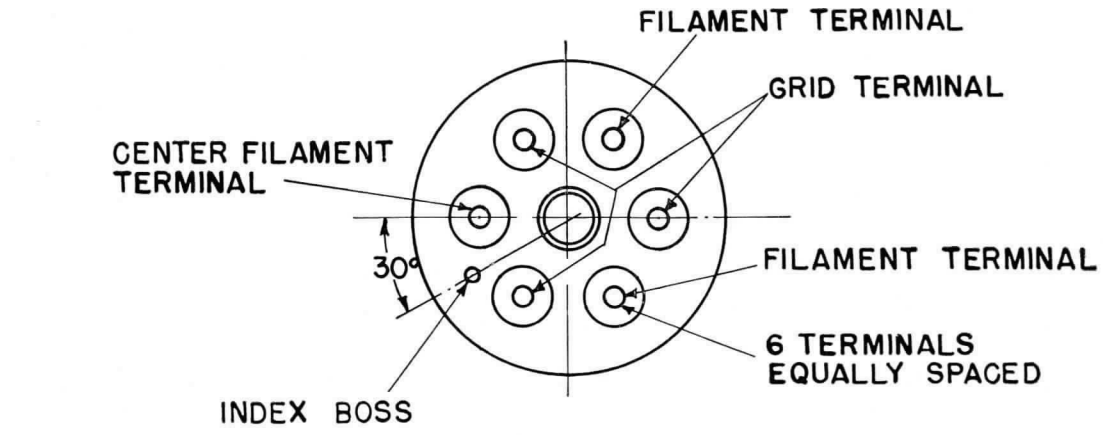

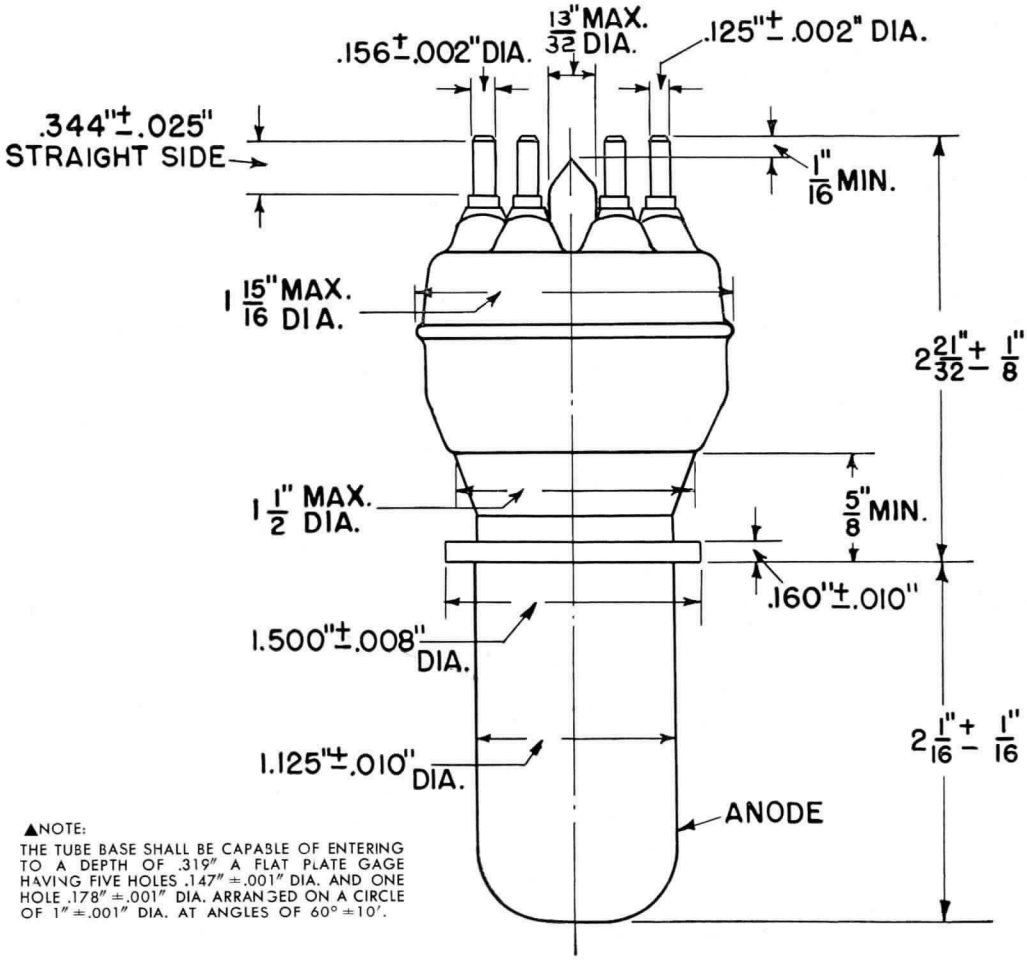

▲NOTE:
THE TUBE BASE SHALL BE CAPABLE OF ENTERING TO A DEPTH OF .319" A FLAT PLATE GAGE HAVING FIVE HOLES .147" ±.001" DIA. AND ONE HOLE .178" ±.001" DIA. ARRANGED ON A CIRCLE OF 1" ±.001" DIA. AT ANGLES OF 60° ±10'.

OUTLINE
GL-8002 PLIOTRON

K-6912329

8-18-45

▲Note added. Drawing not changed otherwise.

Electronics Department
GENERAL ELECTRIC
Schenectady, N. Y.

6-50 (10M)

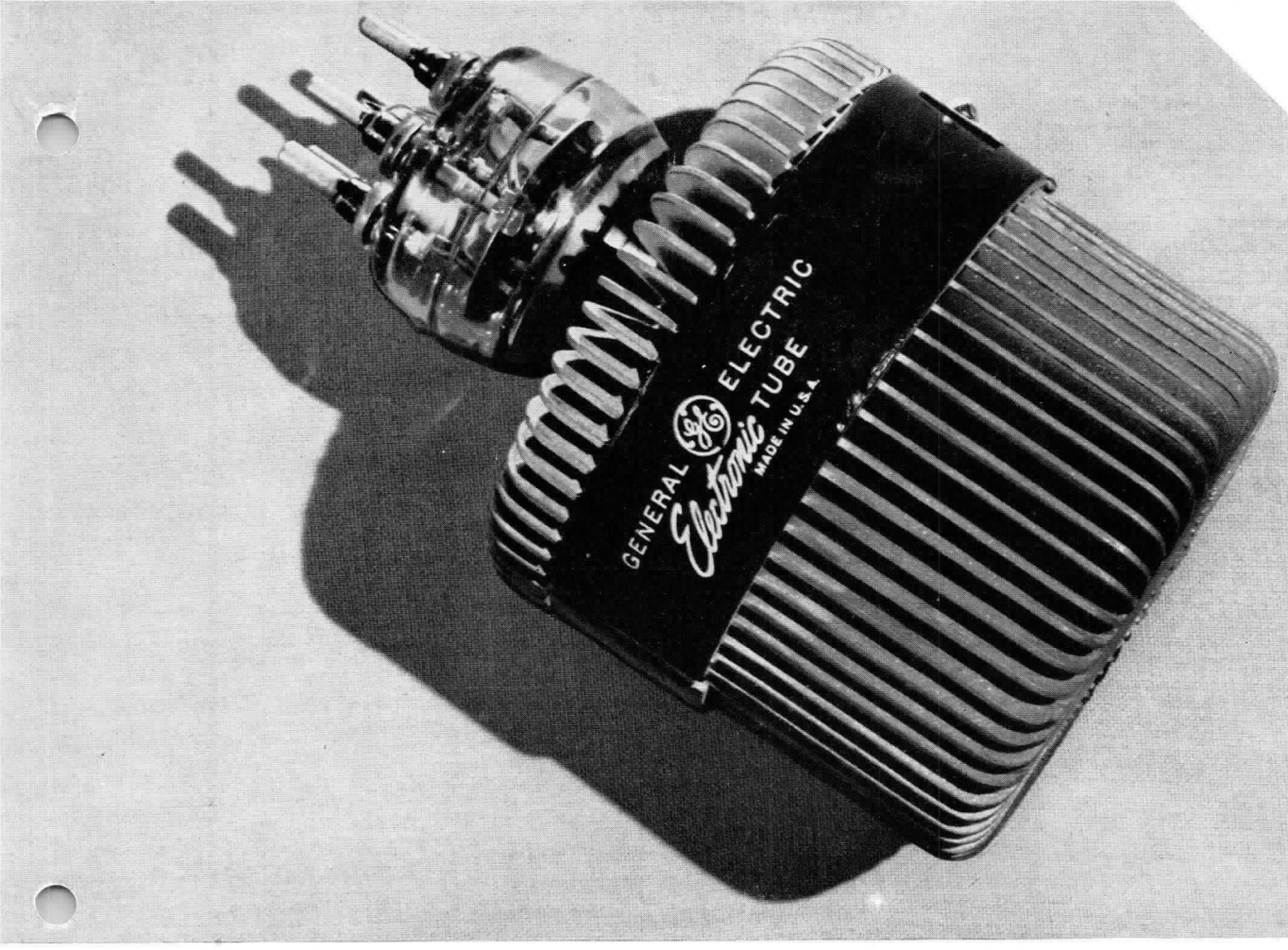

TRIODE

DESCRIPTION

The GL-8002-R is a three-electrode transmitting tube designed for use as a radio-frequency power amplifier at high frequencies. Multiple leads for both the filament and grid connectors minimize the inductance to these electrodes. The anode is fitted with a special hub and cooling is obtained by forced air. Maximum ratings may be used up to a frequency of 120 megacycles and reduced ratings up to 200 megacycles. The GL-8002-R plate is capable of dissipating 750 to 1200 watts.

TECHNICAL INFORMATION

These data are for reference only. For design information refer to specifications

GENERAL CHARACTERISTICS

Number of Electrodes	3
Electrical	
Cathode—Filamentary, tungsten	
Filament voltage	16 volts
Filament current	38 amperes
Average characteristics, $E_b = 2.4$ kilovolts, $I_b = 0.5$ ampere, $E_f = 16$ volts	
Grid voltage	−50 volts
Amplification factor	21.5
Direct interelectrode capacitances, approximate	
Plate to grid	8.9 micromicrofarads
Grid to filament	10.2 micromicrofarads
Plate to filament	1.0 micromicrofarads
Frequency for maximum ratings	120 megacycles

GE Electronic TUBE

GENERAL ELECTRIC

Supersedes ETX-201 dated 5-46

TECHNICAL INFORMATION (CONT'D)

Mechanical

Type of cooling			forced air
Maximum incoming air temperature*			45 centigrade
Maximum glass temperature			150 centigrade
Air flow to radiator			100 cu ft per min
Required Air Flow on Anode			
Plate Dissipation	800	1000	1200 watts
Air Flow	72	88	100 cu ft per min
Pressure	0.35	0.45	0.60 inches water
Net weight, approximate			7 pounds
Shipping weight, approximate			15 pounds
Mounting position			vertical, anode down

* Ordinarily, deflecting vanes diverting the outgoing air toward the terminal seals provide sufficient cooling.

MAXIMUM RATINGS

CLASS B RADIO-FREQUENCY POWER AMPLIFIER

Carrier conditions per tube for use with a maximum modulation factor of 1.0

Plate voltage, d-c	3500 volts
Plate current, d-c	0.6 ampere
Plate input	1800 watts
Plate dissipation	1200 watts

CLASS C RADIO-FREQUENCY POWER AMPLIFIER AND OSCILLATOR, PLATE MODULATED

Carrier conditions per tube for use with a maximum modulation factor of 1.0

Plate voltage, d-c	2500 volts
Grid voltage, d-c	−500 volts
Plate current, d-c	0.5 ampere
Grid current, d-c	0.1 ampere
Plate input	1250 watts
Plate dissipation	750 watts

CLASS C RADIO-FREQUENCY POWER AMPLIFIER AND OSCILLATOR, TELEGRAPHY

Key-down conditions per tube without modulation. Essentially negative modulation may be used if the positive peak of the audio-frequency envelope does not exceed 115 per cent of the carrier conditions.

Plate voltage, d-c	3500 volts
Grid voltage, d-c	−500 volts
Plate current, d-c	1.0 ampere
Grid current, d-c	0.1 ampere
Plate input	3000 watts
Plate dissipation	1200 watts

GL-8002-R
AVERAGE PLATE CHARACTERISTICS
(E_f = 16.0 VOLTS A-C)

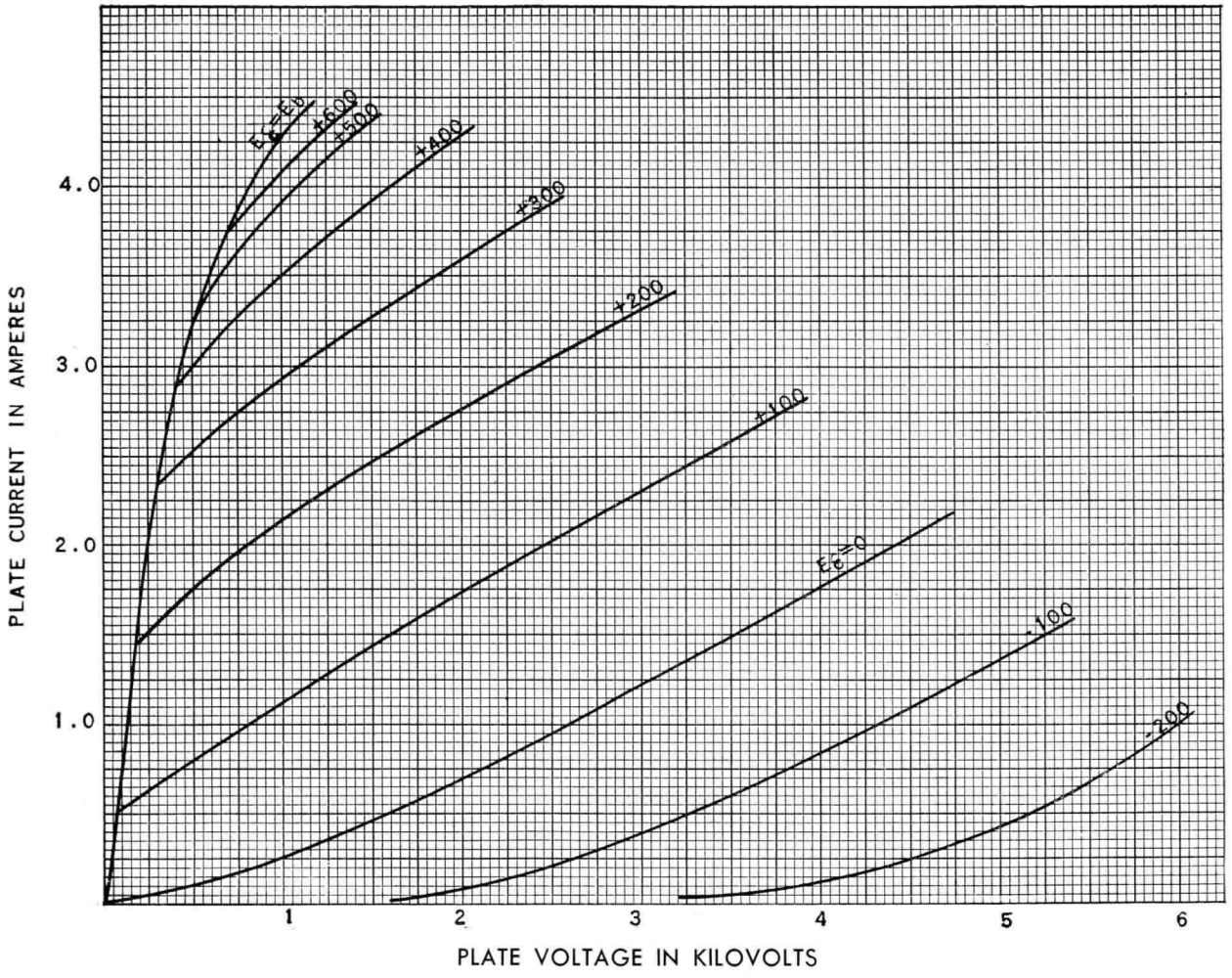

K-69087-72A101

2-6-47

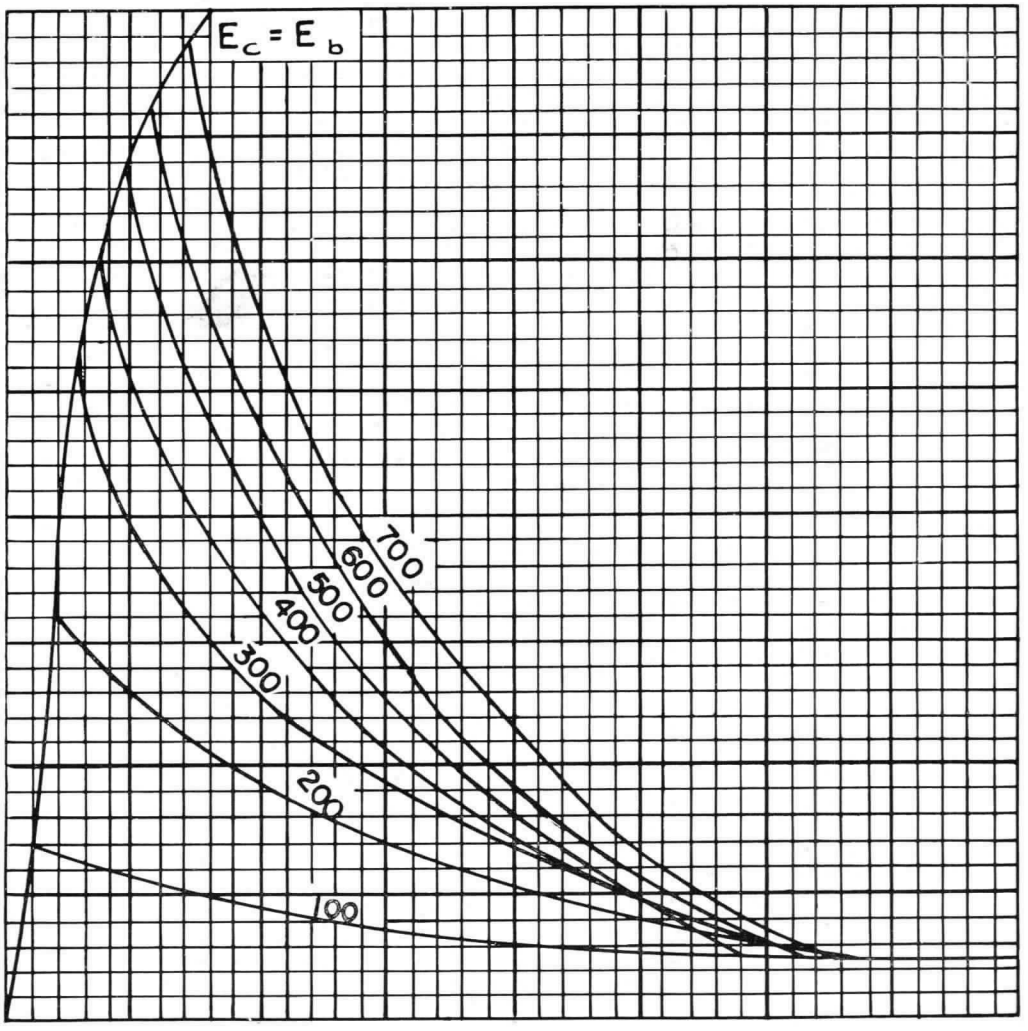

PLATE VOLTAGE IN KILOVOLTS

GL-8002-R TYPICAL GRID-PLATE TRANSFER CHARACTERISTICS
($E_f = 16.0$ VOLTS A-C)

K-9033821

2-28-45

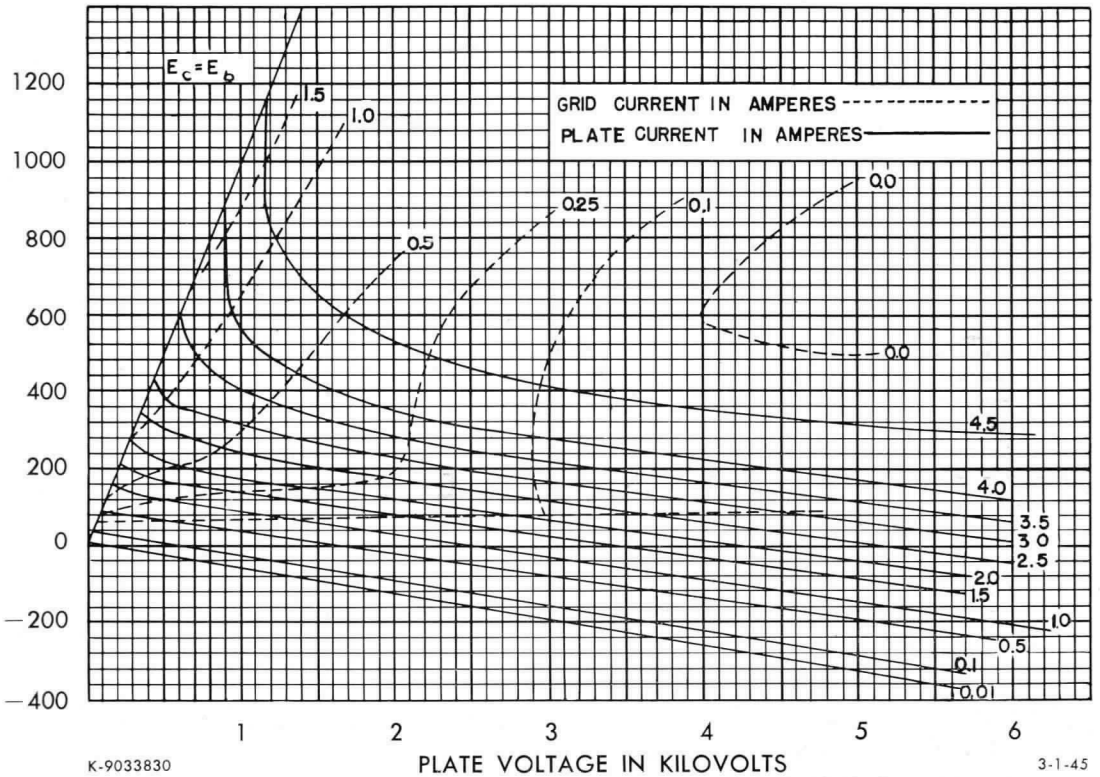

GL-8002-R CHARACTERISTICS $E_f = 16$ VOLTS A-C

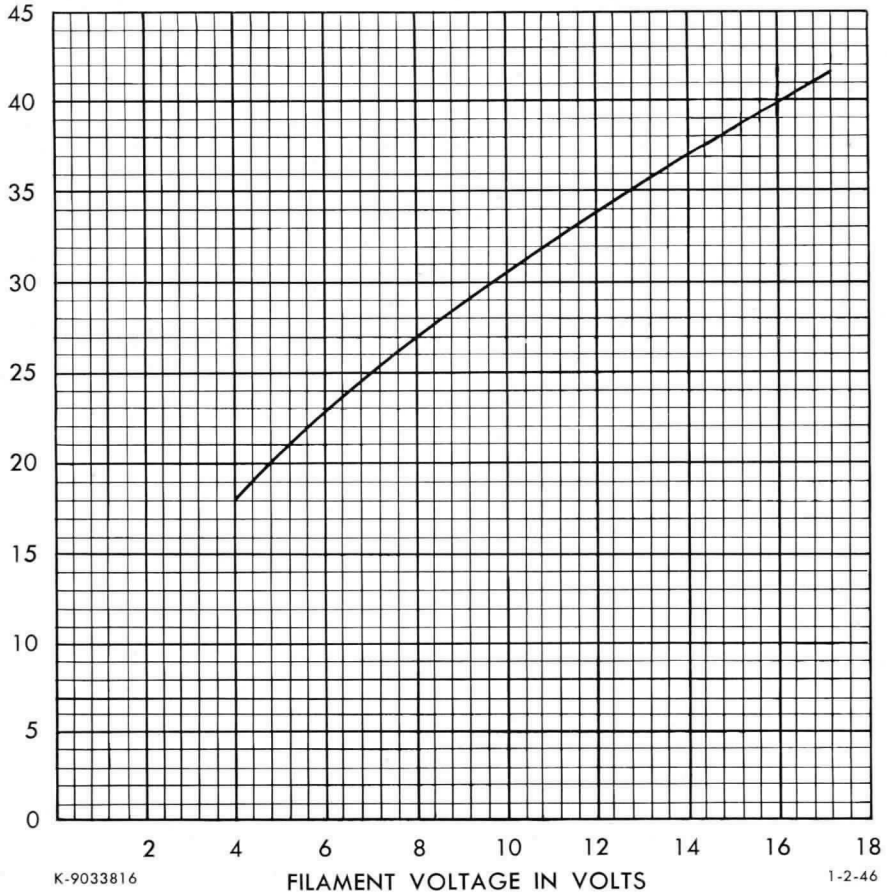

GL-8002-R AVERAGE FILAMENT CHARACTERISTIC (COLD RESISTANCE OF FILAMENT = .036 OHM)

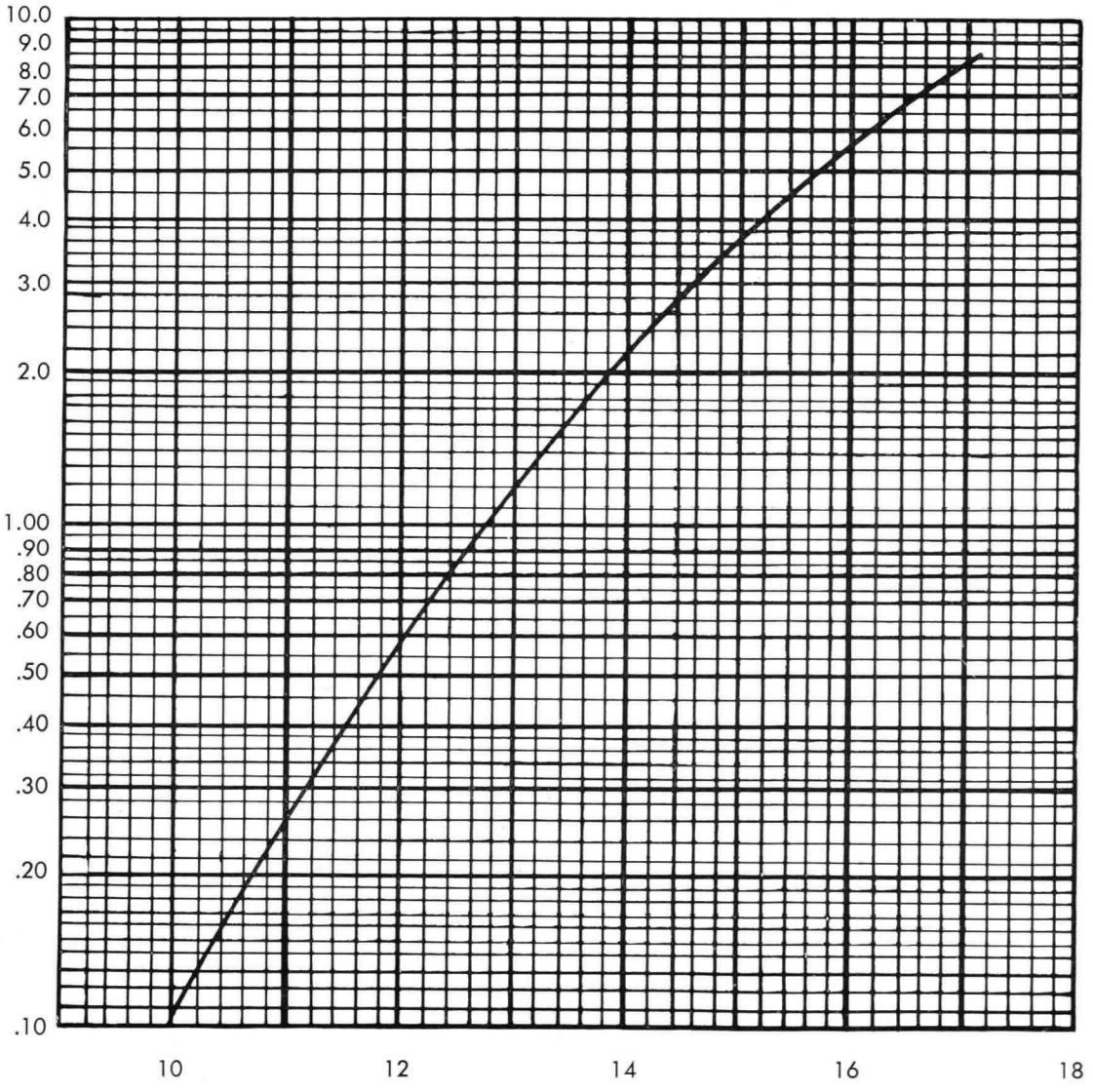

A-C FILAMENT VOLTAGE IN VOLTS

GL-8002-R AVERAGE EMISSION CHARACTERISTIC

K-9033817

2-22-45

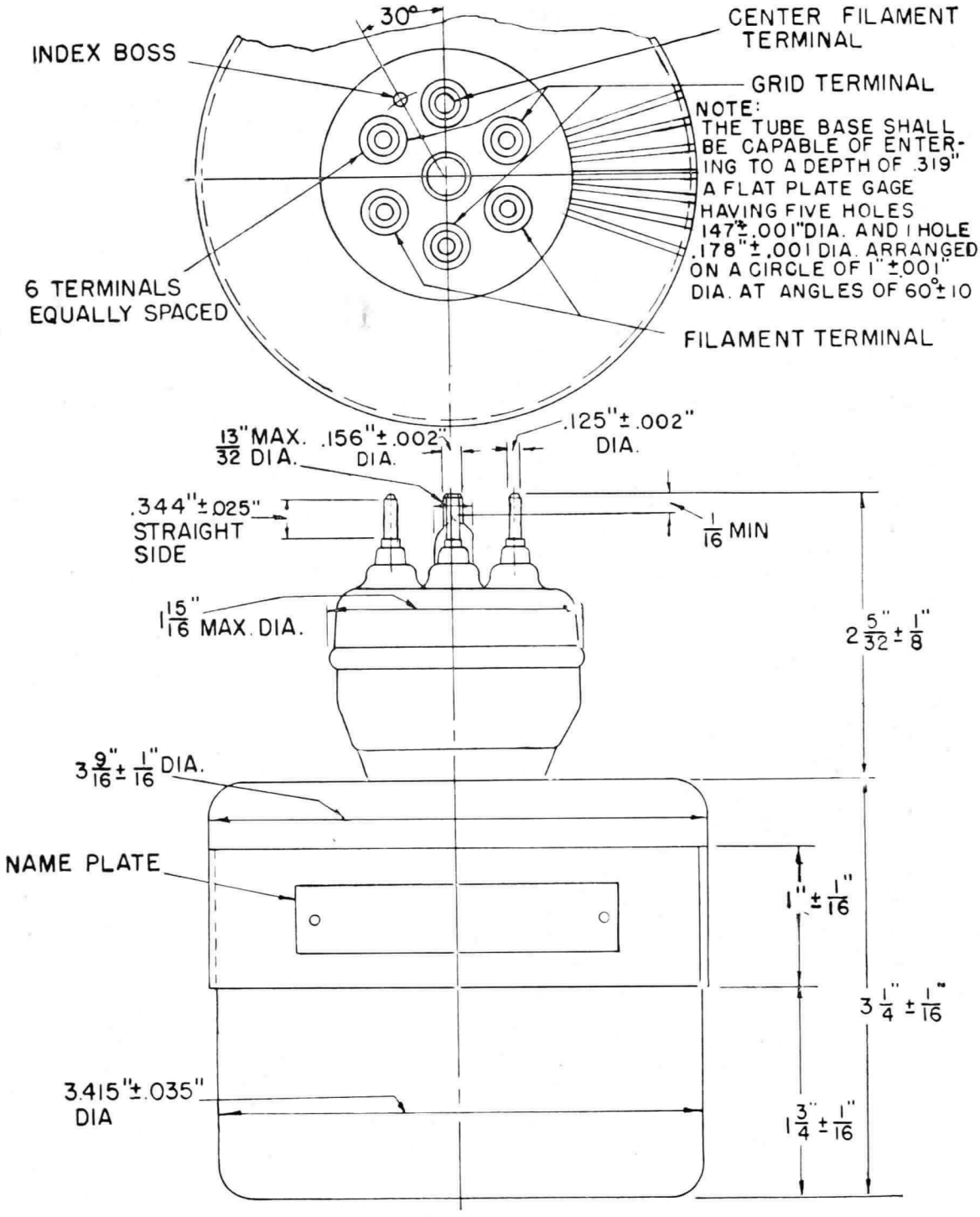

OUTLINE GL-8002-R

K-6912385

10-9-45

Electronics Department
GENERAL ELECTRIC
Schenectady, N. Y.

3-48 (8M)
Filing No. 8850

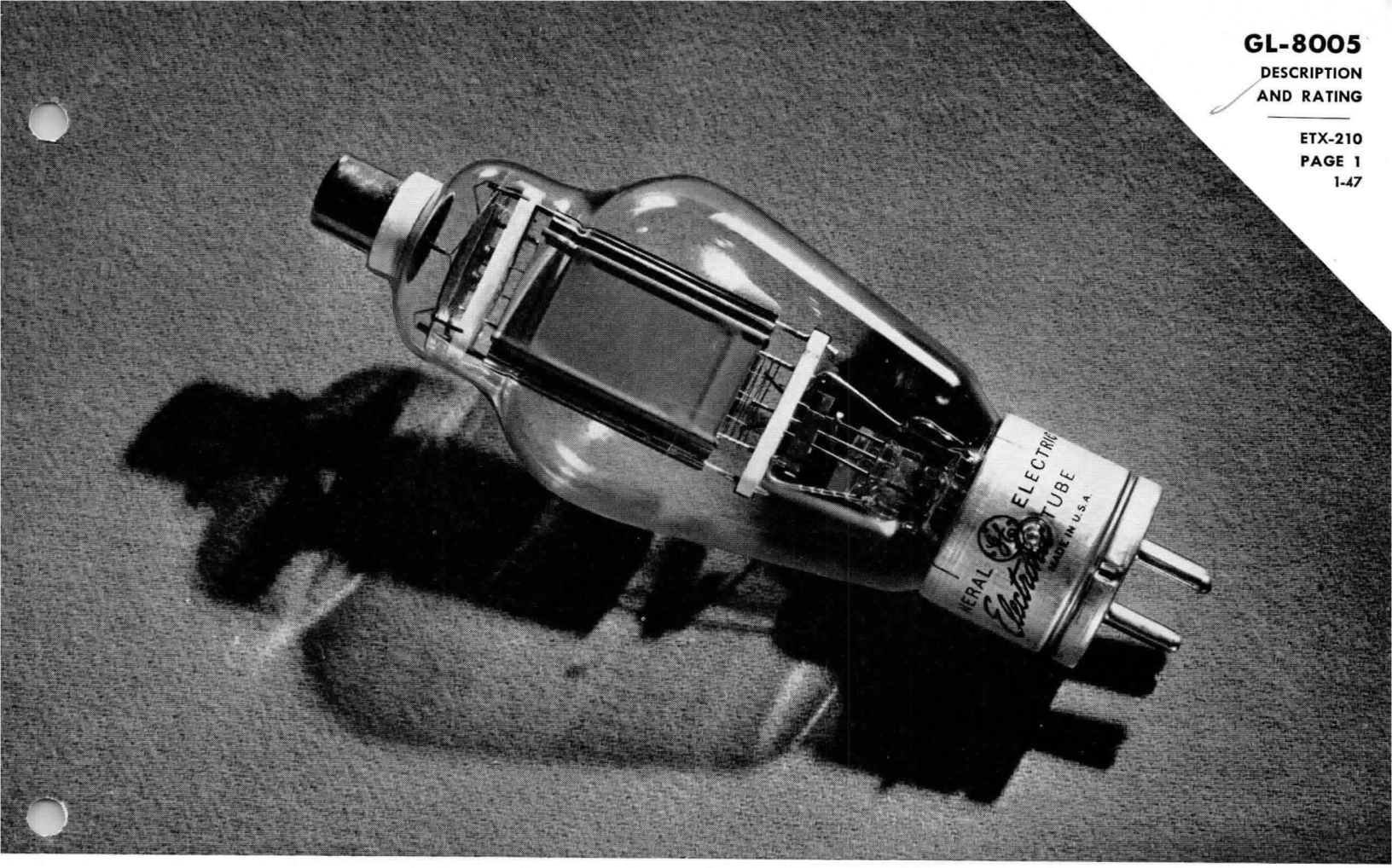

TRIODE

DESCRIPTION

The GL-8005 is a three-electrode tube designed for use as an audio- or radio-frequency amplifier. The anode is capable of dissipating 85 watts, and cooling is accomplished by radiation. The cathode is a thoriated-tungsten filament. Maximum ratings apply up to a frequency of 60 megacycles.

TECHNICAL INFORMATION

These data are for reference only. For design information see the specifications.

GENERAL CHARACTERISTICS

Number of electrodes	3	
Electrical		
Filament voltage	10	volts
Filament current	3.25	amperes
Amplification factor	20	
Interelectrode capacitances		
Grid-plate	5	micromicrofarads
Grid-filament	6.4	micromicrofarads
Plate-filament	1	micromicrofarad
Frequency for maximum ratings	60	megacycles
Mechanical		
Mounting position		vertical, base down; horizontal with plane of electrodes vertical
Shipping weight, approximate		3 pounds
Net weight, approximate		4 ounces

GE Electronic TUBE

GENERAL ELECTRIC

TECHNICAL INFORMATION (CONT'D)

MAXIMUM RATINGS AND TYPICAL OPERATING CONDITIONS

AUDIO-FREQUENCY POWER AMPLIFIER AND MODULATOR—CLASS B

Maximum Ratings, Absolute Values

	CCS*	ICAS†	
D-c plate voltage	1250 max	1500 max	volts
Maximum signal d-c plate current‡	200 max	200 max	milliamperes
Maximum signal plate input‡	225 max	250 max	watts
Plate dissipation‡	75 max	85 max	watts

Typical Operation

	CCS*	ICAS†	
Unless otherwise specified, values are for two tubes			
D-c plate voltage	1250	1500	volts
D-c grid voltage	−55	−70	volts
Peak a-f grid-to-grid voltage	290	310	volts
Zero signal d-c plate current	40	40	milliamperes
Maximum signal d-c plate current	320	310	milliamperes
Effective load resistance, plate to plate	8000	10000	ohms
Maximum signal driving power, approximate	4	4	watts
Maximum signal power output, approximate	250	300	watts

RADIO-FREQUENCY POWER AMPLIFIER—CLASS B

Carrier conditions per tube for use with a maximum modulation factor of 1.0

Maximum Ratings, Absolute Values

	CCS*	ICAS†	
D-c plate voltage	1250 max	1500 max	volts
D-c plate current	100 max	100 max	milliamperes
Plate input	110 max	125 max	watts
Plate dissipation	75 max	85 max	watts

Typical Operation

	CCS*	ICAS†	
D-c plate voltage	1250	1500	volts
D-c grid voltage	−65	−80	volts
Peak r-f grid voltage	85	90	volts
D-c plate current	85	83	milliamperes
D-c grid current, approximate	2	1	milliamperes
Driving power, approximateπ	5.5	5	watts
Power output, approximate	40	45	watts

PLATE-MODULATED RADIO-FREQUENCY POWER AMPLIFIER—CLASS C TELEPHONY

Carrier conditions per tube for use with a maximum modulation factor of 1.0

Maximum Ratings, Absolute Values

	CCS*	ICAS†	
D-c plate voltage	1000 max	1250 max	
D-c grid voltage	−200 max	−200 max	
D-c plate current	160 max	200 max	milliamperes
D-c grid current	45 max	45 max	milliamperes
Plate input	160 max	240 max	watts
Plate dissipation	50 max	75 max	watts

Typical Operation

	CCS*	ICAS†	
D-c plate voltage	1000	1250	volts
D-c grid voltage	−195	−195	volts
Peak r-f grid voltage	350	350	volts
D-c plate current	160	190	milliamperes
D-c grid current, approximate	28	28	milliamperes
Driving power, approximate	9	9	watts
Power output, approximate	115	170	watts

* Continuous commercial service.
† Intermittent commercial and amateur service.
‡ Averaged over any audio-frequency cycle of sine-wave form.
π At crest of audio-frequency cycle with modulation factor of 1.0.

TECHNICAL INFORMATION (CONT'D)

RADIO-FREQUENCY POWER AMPLIFIER AND OSCILLATOR—CLASS C TELEGRAPHY

Key-down conditions per tube without modulation △

Maximum Ratings, Absolute Values

	CCS*	ICAS†	
D-c plate voltage	1250 max	1500 max	volts
D-c grid voltage	−200 max	−200 max	volts
D-c plate current	200 max	200 max	milliamperes
D-c grid current	45 max	45 max	milliamperes
Plate input	240 max	300 max	watts
Plate dissipation	75 max	85 max	watts

Typical Operation

	CCS*	ICAS†	
D-c plate voltage	1250	1500	volts
D-c grid voltage	−115	−130	volts
Peak r-f grid voltage	240	255	volts
D-c plate current	190	200	milliamperes
D-c grid current, approximate	30	32	milliamperes
Driving power, approximate	6.5	7.5	watts
Power output, approximate	170	220	watts

When the 8005 is used in the final amplifier or a preceding stage of a transmitter designed for break-in operation and oscillator keying, a small amount of fixed bias must be used to maintain the plate current at a safe value. With a plate voltage of 1500 volts, a fixed bias of at least −50 volts should be used.

OSCILLATOR OPERATION WITH UNFILTERED PLATE SUPPLY

	A	B	
Plate voltage	1750 max	1125 max	volts
D-c grid voltage	−125 max	−125 max	volts
D-c plate current	125 max	180 max	milliamperes
D-c grid current	25 max	40 max	milliamperes
Plate input	240 max	240 max	watts
Plate dissipation	75 max	75 max	watts

Typical Operation in Push-pull Circuit at 50 Megacycles

Plate voltage	1750 rms	1100	volts
Grid resistor	2000	2000	ohms
D-c plate current	250	360	milliamperes
D-c grid current	35	40	milliamperes
Power output, approximate	330	330	watts
Circuit power output, approximate 85 per cent circuit efficiency	280	280	watts

A—Self-rectified a-c supply. Plate voltages are rms values.
B—Separate rectified (no filter) single-phase, full-wave plate supply.

For applications where grid current and grid voltage may vary widely because of fluctuating loads. It is important to design equipment so that the maximum grid-current and grid-voltage ratings are never exceeded for any load. An approximate rule is to adjust the grid-current and grid-voltage values at full-load to one-half the corresponding maximum values. This operating condition permits grid-current and grid-voltage values to rise for zero-load to twice their full-load values, and usually provides adequate leeway.

* Continuous commercial service.
† Intermittent commercial and amateur service.
△ Modulation essentially negative may be used if the positive peak of the envelope does not exceed 115 per cent of the carrier conditions.

APPLICATION NOTES

Maximum ratings apply up to 60 megacycles. The tube may be operated at higher frequencies provided the maximum values of plate voltage and power input are reduced according to the tabulation below (other maximum ratings are the same as shown above). Special attention should be given to adequate ventilation of the bulb at these frequencies.

Frequency	60	80	100	megacycles
Percentage of maximum Rated Plate Voltage and Plate Input				
Class B	100	90	83	per cent
Class C plate modulated	100	75	60	per cent
Class C unmodulated	100	75	60	per cent

GL-8005
AVERAGE PLATE CHARACTERISTICS
$E_f = 10$ VOLTS D-C

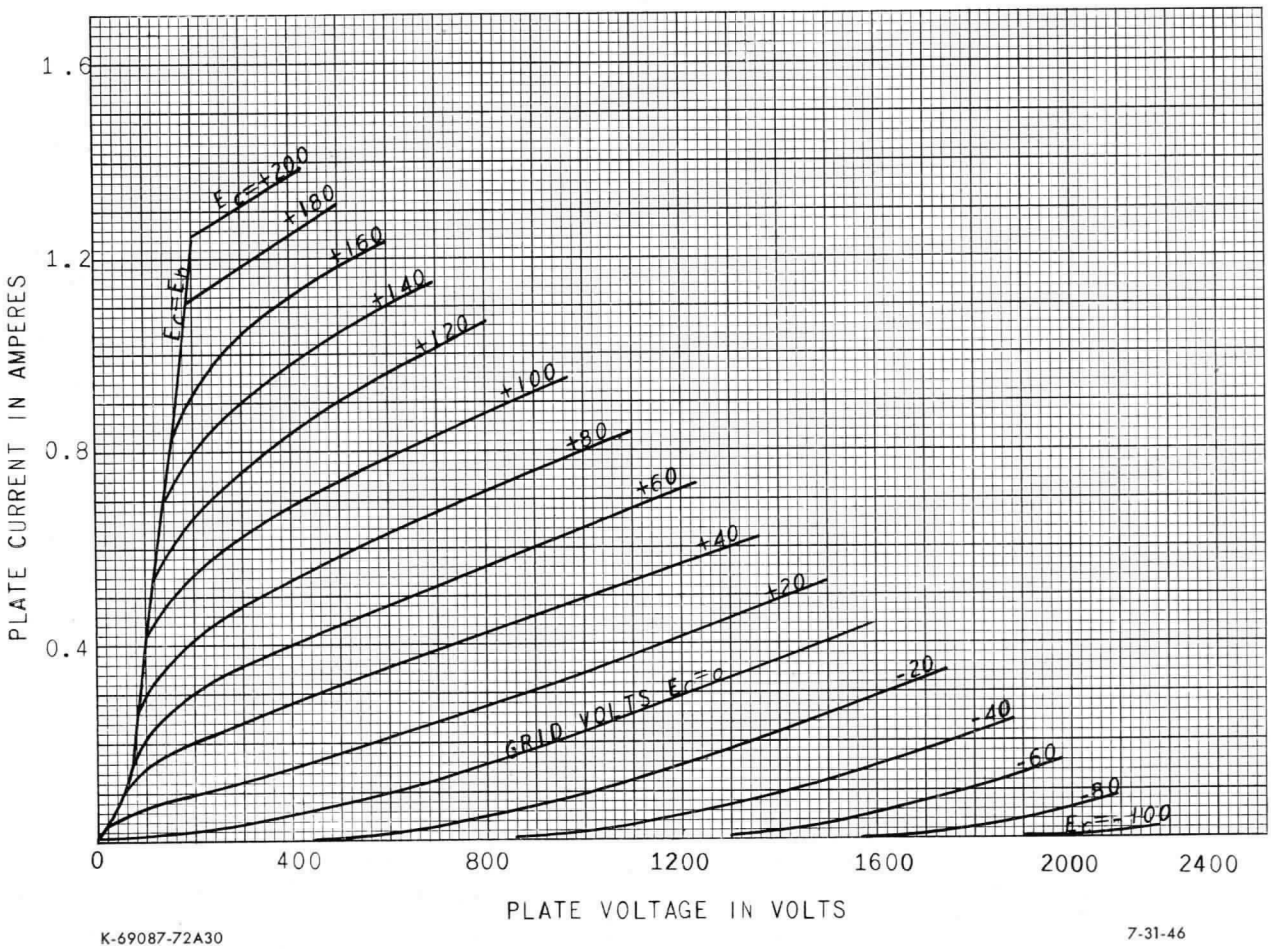

K-69087-72A30

7-31-46

GL-8005
TYPICAL CHARACTERISTICS
$E_f = 10$ VOLTS D-C

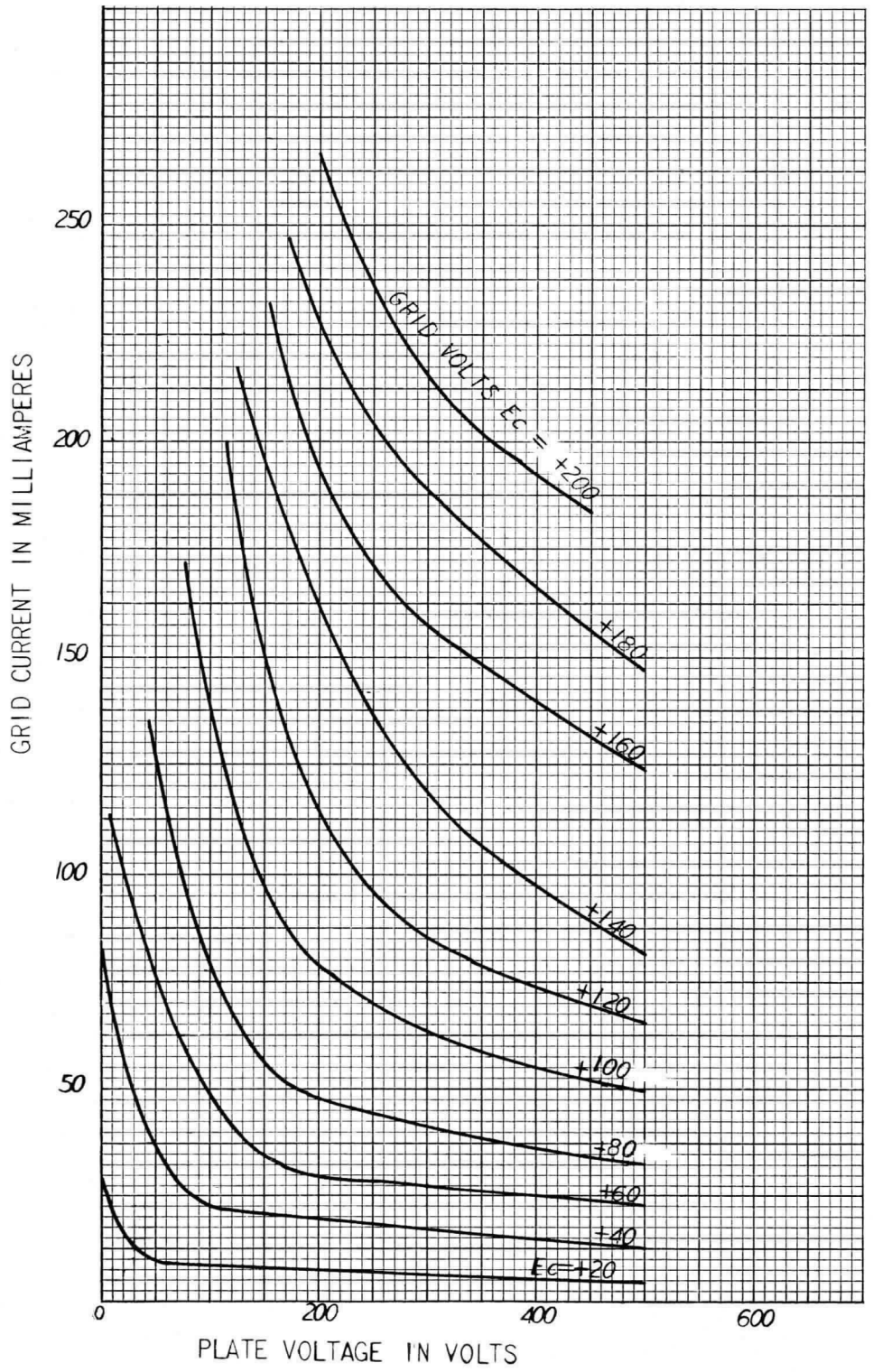

K-69087-72A29

7-31-46

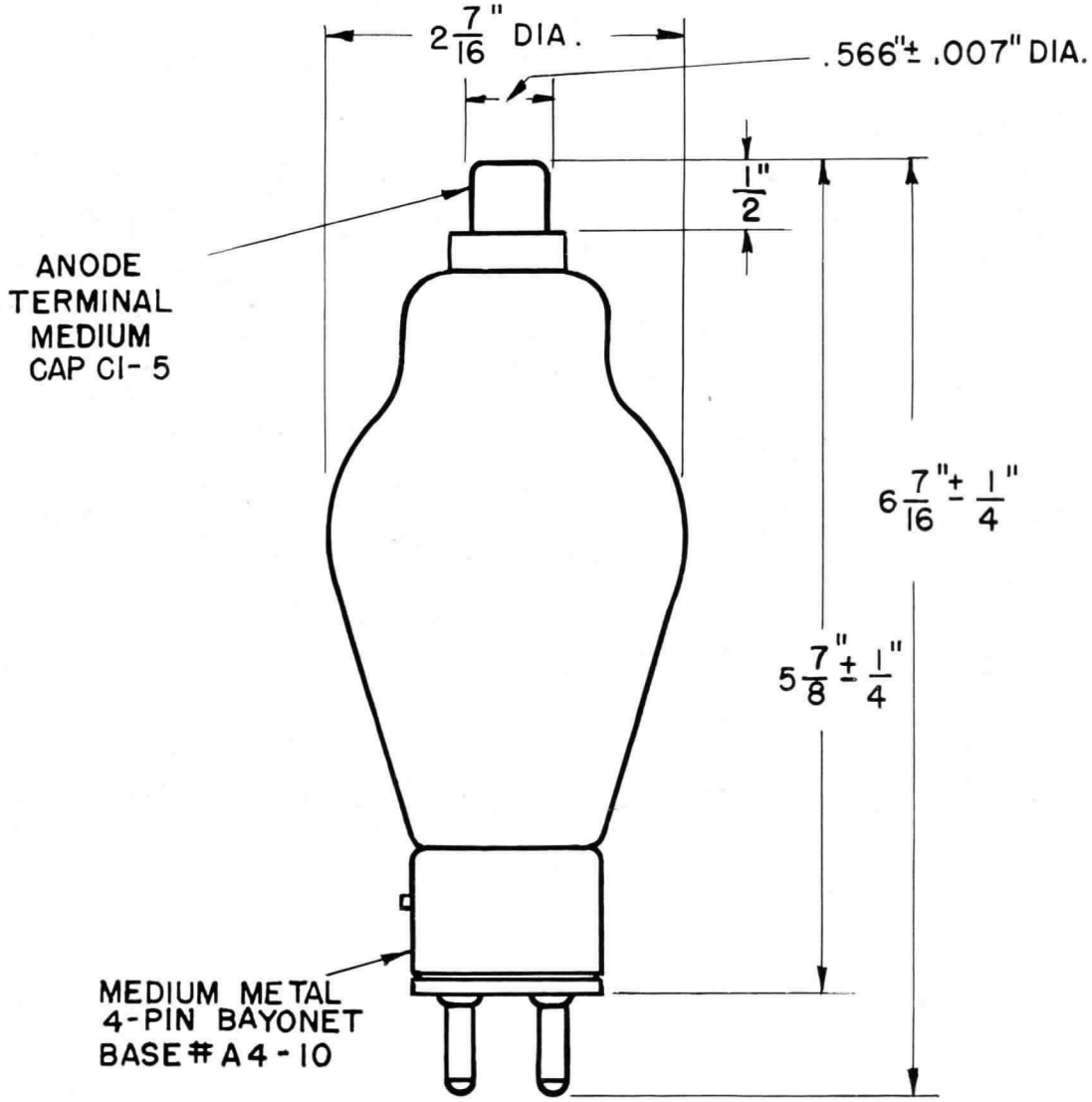

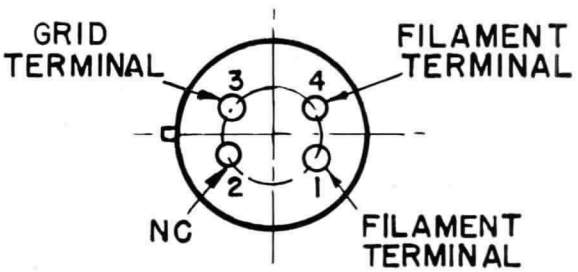

GL-8005 OUTLINE

N-15077AZ

7-26-46

Electronics Department

GENERAL ELECTRIC

Schenectady, N. Y.

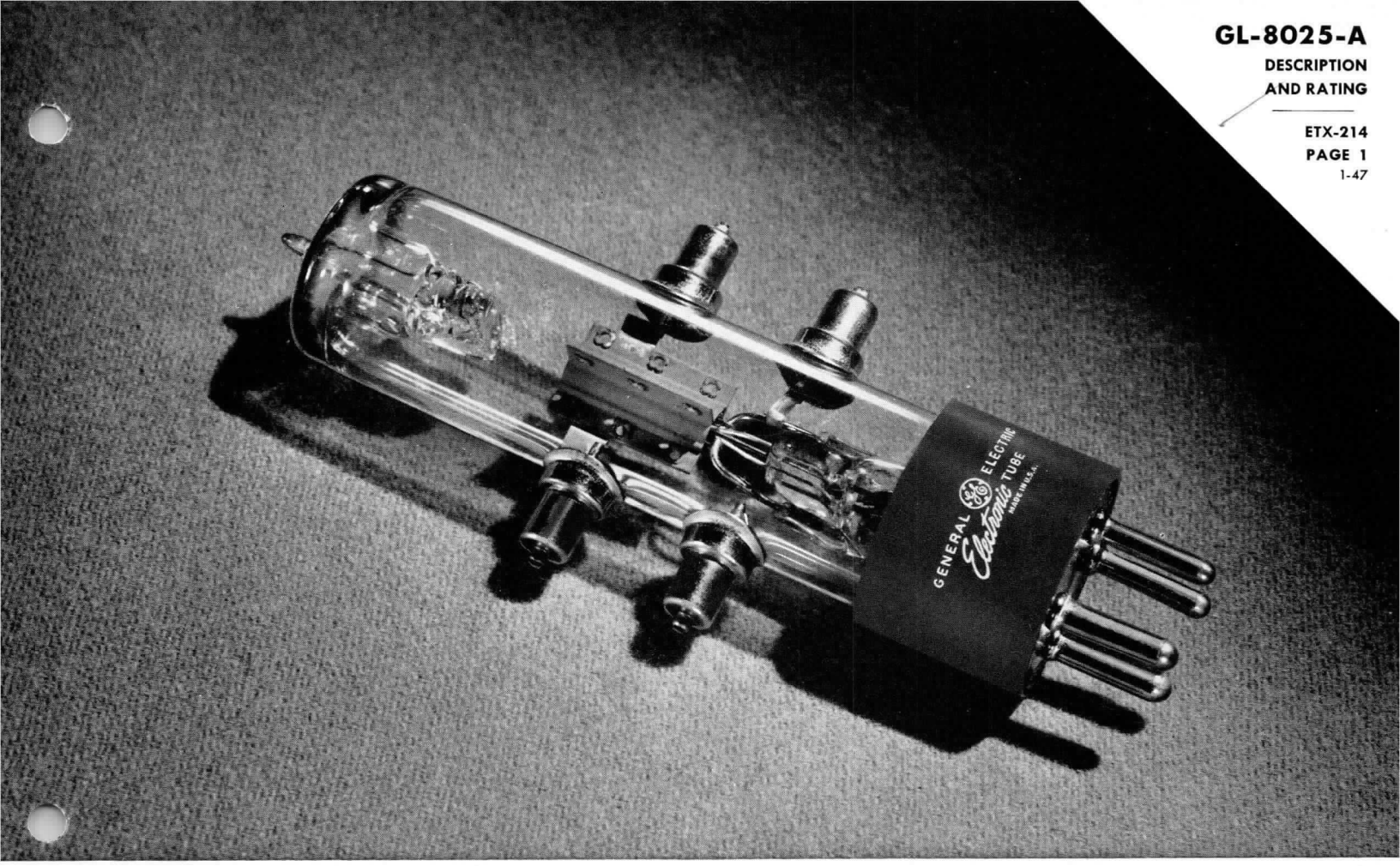

TRIODE

DESCRIPTION

The GL-8025-A is a three-electrode tube designed for use as a Class C amplifier and oscillator at the ultrahigh frequencies. The anode is capable of dissipating 40 watts with forced-air cooling. The cathode is a thoriated-tungsten filament. Maximum ratings apply up to 500 megacycles.

TECHNICAL INFORMATION

These data are for reference only. For design information see the specifications.

GENERAL CHARACTERISTICS

Number of electrodes	3	
Electrical		
Filament* voltage	6.3	volts
Filament current	1.92	ampere
Amplification factor	18	
Interelectrode capacitances		
Grid-plate	3.0	micromicrofarads
Grid-filament	2.7	micromicrofarads
Plate-filament	0.4	micromicrofarad
Frequency for maximum ratings	500	megacycles

GE Electronic TUBE

GENERAL ELECTRIC

TECHNICAL INFORMATION (CONT'D)

Mechanical

Cooling	see footnote (†)
Mounting position	vertical only, base up or down
Net weight, approx	3 ounces
Shipping weight, approx	1 pound
Base	small 4-pin, micanol

MAXIMUM RATINGS AND TYPICAL OPERATING CONDITIONS

PLATE-MODULATED RADIO-FREQUENCY POWER AMPLIFIER—CLASS C TELEPHONY

Carrier conditions per tube for use with a maximum modulation factor of 1.0

Maximum Ratings, Absolute Values	Forced-air Cooling CCS△	Natural Cooling ICAS△	
D-c plate voltage	800 max	800 max	volts
D-c grid	−200 max	−200 max	volts
D-c plate current	65 max	65 max	milliamperes
D-c grid current	20 max	20 max	milliamperes
Plate input	50 max	33 max	watts
Plate dissipation	27 max	20 max	watts

Typical Operation		
D-c plate voltage	800	volts
D-c grid voltage		
From a fixed supply of	−105	volts
From a cathode resistor of	10000	ohms
Peak r-f grid voltage	145	volts
D-c plate current	40	milliamperes
D-c grid current†, approximate	10.5	milliamperes
Driving power†, approximate	1.4	watt
Power output, approximate	22	watts

GRID-MODULATED RADIO-FREQUENCY POWER AMPLIFIER—CLASS C TELEPHONY

Carrier conditions per tube for use with a maximum modulation factor of 1.0

Maximum Ratings, Absolute Values	Forced-air Cooling CCS△	Natural Cooling ICAS△	
D-c plate voltage	1000 max	1000 max	volts
D-c grid voltage	−200 max	−200 max	volts
D-c plate current	65 max	65 max	milliamperes
Plate input	60 max	50 max	watts
Plate dissipation	40 max	30 max	watts

Typical Operation		
D-c plate voltage	1000	volts
D-c grid voltage		
From a fixed supply of	−135	volts
From a cathode resistor of	2500	ohms
Peak r-f grid voltage	155	volts
Peak a-f grid voltage	65	volts
D-c plate current	50	milliamperes
D-c grid current†, approximate	4	milliamperes
Driving power††, approximate	3.5	watts
Power output, approximate	20	watts

† Requirements are indicated under MAXIMUM RATINGS for each class of service. *Natural cooling* means that adequate free circulation of air around the tube is necessary. When *forced-air cooling* is required, an air flow from a fan should be directed on the bulb.

TECHNICAL INFORMATION (CONT'D)

RADIO-FREQUENCY POWER AMPLIFIER AND OSCILLATOR—CLASS C TELEGRAPHY

Key-down conditions per tube without modulation¶

Maximum Ratings, Absolute Values	Forced-air Cooling CCS△	Natural Cooling ICAS△	
D-c plate voltage	1000 max	1000 max	volts
D-c grid voltage	−200 max	−200 max	volts
D-c plate current	80 max	80 max	milliamperes
D-c grid current	20 max	20 max	milliamperes
Plate input	75 max	50 max	watts
Plate dissipation	40 max	30 max	watts

Typical Operation		
D-c plate voltage	1000	volts
D-c grid voltage		
From a fixed supply of	−90	volts
From a grid resistor of	6400	ohms
From a cathode resistor of	1400	ohms
Peak r-f grid voltage	130	volts
D-c plate current	50	milliamperes
D-c grid current†, approximate	14	milliamperes
Driving power†, approximate	1.6	watt
Power output, approximate	35	watts

* The filament is center-tapped and the center lead is brought out to the No. 3 pin. With this design, it is possible to minimize the effect of filament lead inductance by connecting all three filament leads in parallel through r-f by-pass capacitors. The center-lead of this parallel connection should not be returned directly to the center-tap of the filament-transformer winding or to ground, although it may be by-passed to either of these points if desired.

△CCS = Continuous Commercial Service. ICAS = Intermitted Commercial and Amateur Service.

† Subject to wide variations depending on the impedance of the load circuit. High-impedance load circuits require more grid current and driving power to obtain the desired output. Low-impedance circuits need less grid current and driving power, but plate circuit efficiency is sacrificed. The driving stage should be capable of supplying considerably more than the required driving power.

‡ At crest of audio-frequency cycle with modulation factor of 1.0.

¶ Modulation essentially negative may be used if the positive peak of the envelope does not exceed 115 per cent of the carrier conditions.

APPLICATION NOTES

Maximum ratings apply up to 500 megacycles. The tube may be operated at higher frequencies provided the maximum values of plate voltage and plate input are reduced according to the tabulation below (other maximum ratings are the same as shown on the preceding page). Special attention should be given to adequate ventilation of the bulb at these frequencies.

Frequency	500	600	megacycles
Percentage of Maximum Rated Plate Voltage			
Class C plate-modulated	100	70	per cent
Class C grid-modulated	100	80	per cent
Class C unmodulated	100	70	per cent

The percentages for 600 megacycles refer only to maximum plate voltage. The maximum input may be 100 per cent of its rated value.

GL-8025-A AVERAGE PLATE CHARACTERISTICS

$E_f = 6.3$ VOLTS

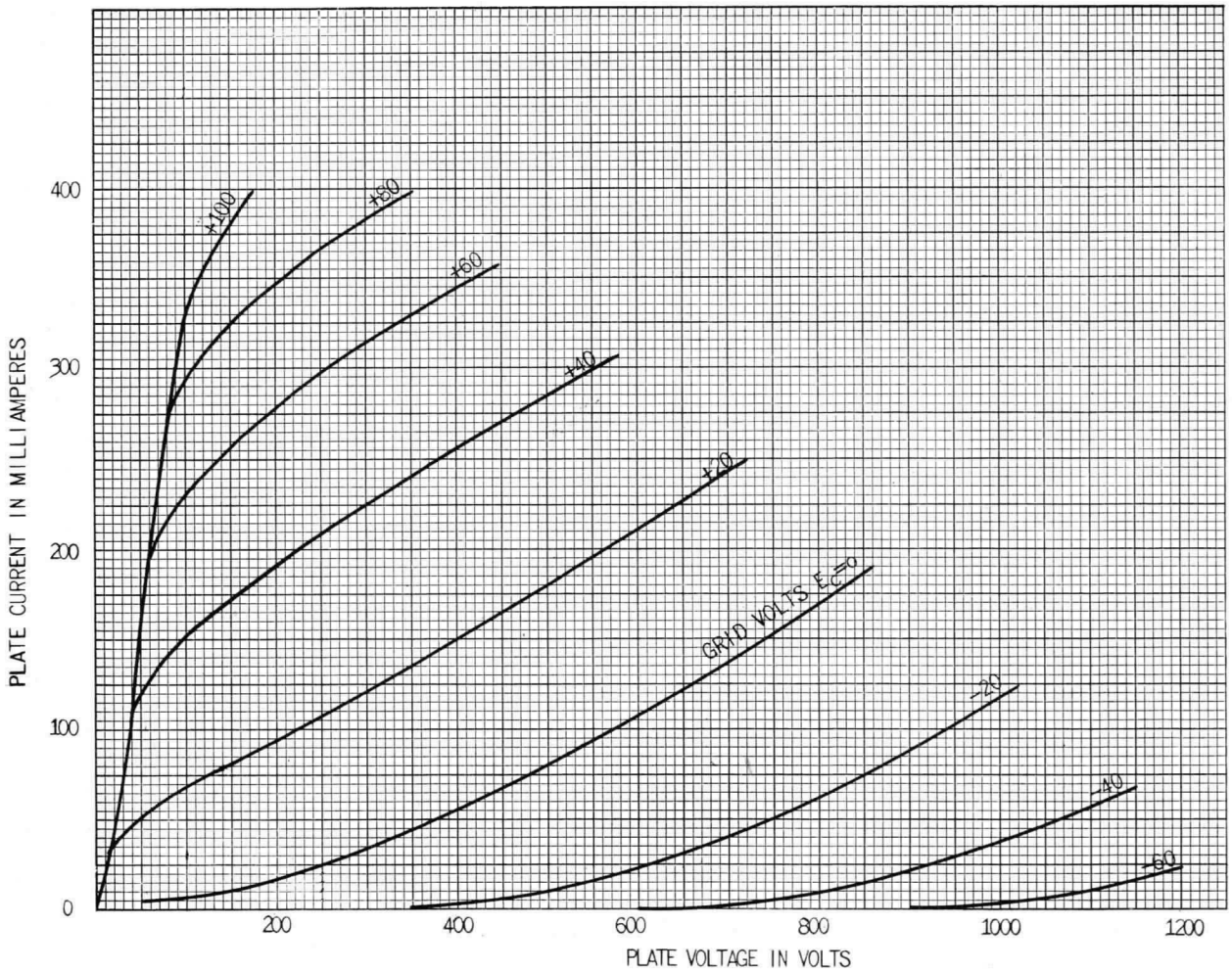

K-69087-72A58

10-24-46

GL-8025-A TYPICAL CHARACTERISTICS
$E_f = 6.3$ VOLTS

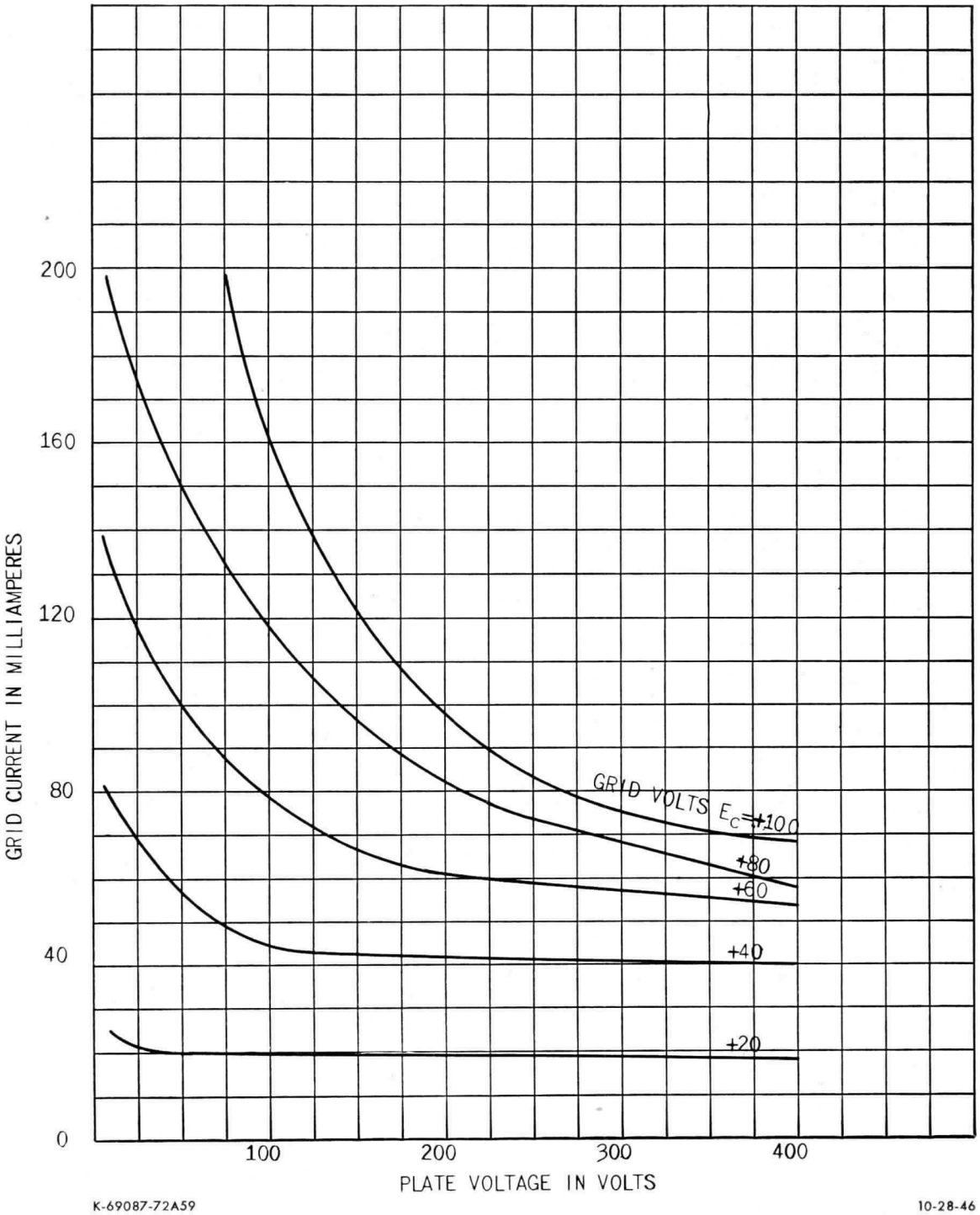

K-69087-72A59

10-28-46

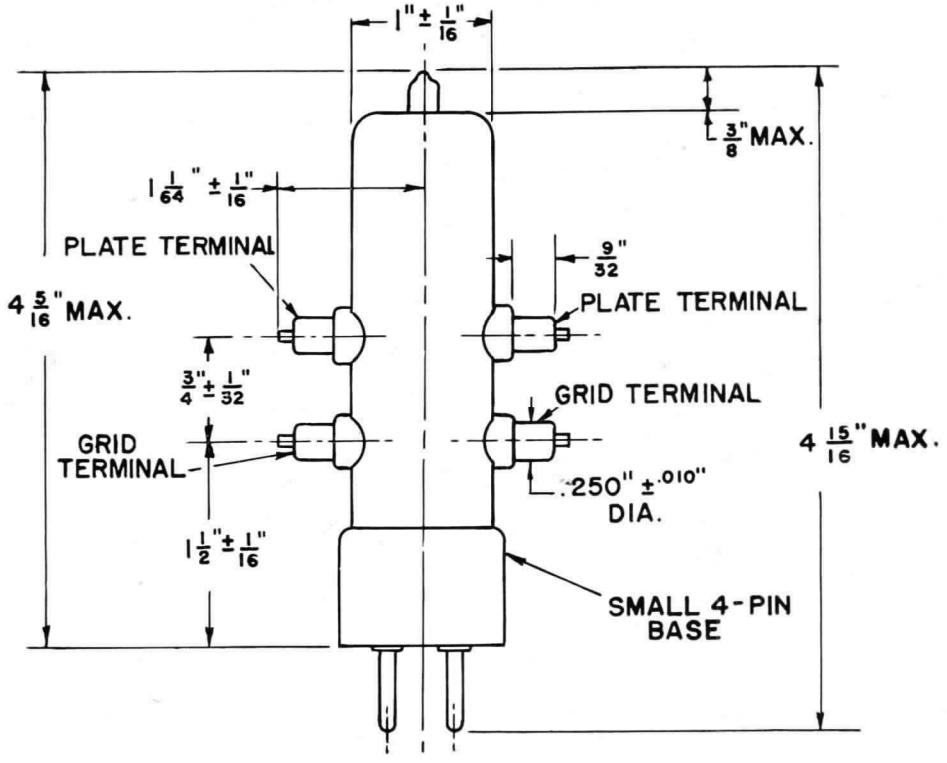

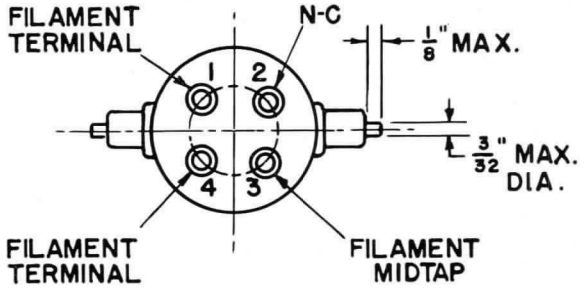

BOTTOM VIEW

℄ OF EACH CAP SHALL NOT DEVIATE MORE THAN 3° FROM PLANE NORMAL TO THE PLANE OF PINS NO.1 & NO.4 & PASSING THROUGH CENTER OF BOTTOM OF BASE.

℄ OF BULB SHALL NOT DEVIATE MORE THAN 2° IN ANY DIREOTION FROM THE PERPENDICULAR ERECTED AT CENTER OF BOTTOM OF BASE.

GL-8025-A OUTLINE

N-15092AZ 10-18-46

Electronics Department
GENERAL ELECTRIC
Schenectady, N. Y.

8081

METAL-CERAMIC TRIODE

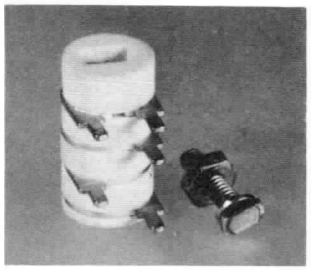

DESCRIPTION AND RATING

The 8081 is a high-mu triode of ceramic-and-metal planar construction primarily intended for low-level audio-frequency amplification.

GENERAL

ELECTRICAL

Cathode—Coated Unipotential		
Heater Characteristics and Ratings		
Heater Voltage, AC or DC†	6.3 ± 0.3	Volts
Heater Current‡	0.215	Amperes
Direct Interelectrode Capacitances§		
Grid to Plate: (g to p)	1.3	pf
Input: g to (h+k)	1.5	pf
Output: p to (h+k)	0.03	pf
Heater to Cathode: (h to k)	1.5	pf

MECHANICAL

Mounting Position—Any¶

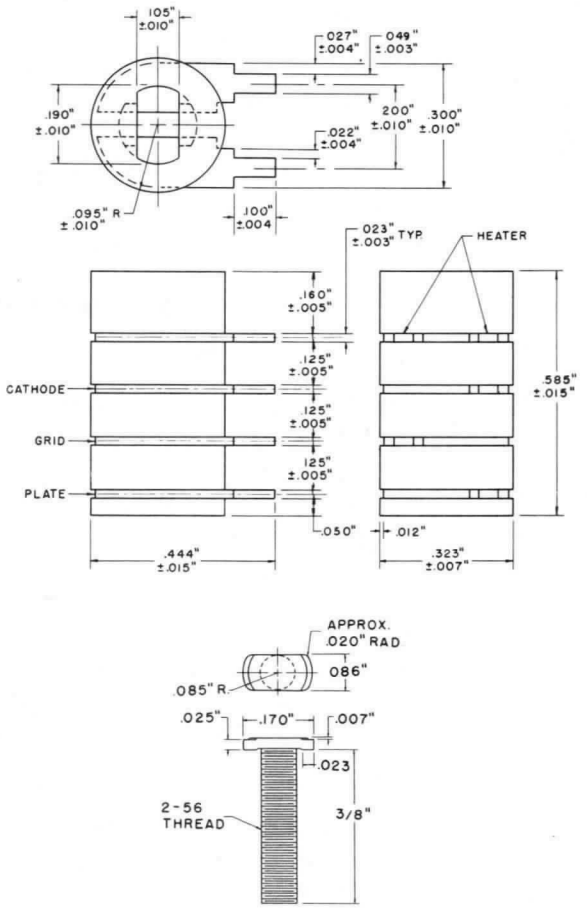

MAXIMUM RATINGS

ABSOLUTE-MAXIMUM VALUES

DC Plate Voltage	275	Volts
Peak Plate Voltage	400	Volts
Positive Peak and DC Grid Voltage	0	Volts
Negative Peak and DC Grid Voltage	50	Volts
Plate Dissipation	0.85	Watts
DC Cathode Current	3.8	Milliamperes
Heater-Cathode Voltage		
Heater Positive with Respect to Cathode	50	Volts
Heater Negative with Respect to Cathode	50	Volts
Grid Circuit Resistance, with Fixed Bias △	0.2	Megohms
Envelope Temperature at Hottest point#	250	C

Absolute-Maximum ratings are limiting values of operating and environmental conditions applicable to any electron tube of a specified type as defined by its published data and should not be exceeded under the worst probable conditions.

The tube manufacturer chooses these values to provide acceptable serviceability of the tube, making no allowance for equipment variations, environmental variations, and the effects of changes in operating conditions due to variations in the characteristics of the tube under consideration and of all other electron devices in the equipment.

The equipment manufacturer should design so that initially and throughout life no absolute-maximum value for the intended service is exceeded with any tube under the worst probable operating conditions with respect to supply-voltage variation, equipment component variation, equipment control adjustment, load variation, signal variation, environmental conditions, and variations in the characteristics of the tube under consideration and of all other electron devices in the equipment.

CHARACTERISTICS AND TYPICAL OPERATION

AVERAGE CHARACTERISTICS

Plate Voltage	150	Volts
Cathode-Bias Resistor	1000	Ohms
Amplification Factor	80	
Plate Resistance, approximate	57000	Ohms
Transconductance	1400	Micromhos
Plate Current	0.95	Milliamperes
Grid Voltage, approximate Ib = 10 Microamperes, Eb = 250 Volts	−4.6	Volts

FOOTNOTES

† The equipment designer should design the equipment so that heater voltage is centered at the specified bogey value, with heater supply variations restricted to maintain heater voltage within the specified tolerance.

‡ Heater current of a bogey tube at Ef = 6.3 volts.

§ Without external shield.

¶ One method of mounting the 8081 is to use a stainless-steel "T" bolt (see drawing) to attach the mounting base of the tube to a chassis or circuit board. The "T" bolt should be inserted in the slot in the base of the tube, turned 90 degrees, and attached to the chassis or circuit board with a 2-56 nut and lock washer. Torque used to tighten the nut should not exceed 3 inch-pounds.

△ If resistance is used in the cathode or plate circuits, the grid-circuit resistance may be as high as (200,000 + 500 RK + 10RL) ohms, where RK is the cathode-bias resistance in ohms, and RL is the DC plate load resistance in ohms.

Operation below the rated maximum envelope temperature is recommended for applications requiring the longest possible tube life. The 8081 is also capable of operation at envelope temperatures much higher than the rated maximum value. For specific recommendations concerning higher temperature operation, contact your General Electric tube sales representative.

SPECIAL PERFORMANCE TESTS

	Maximum	
Variable-Frequency Vibration Ef = 6.3 volts, Ebb = 150 volts, Ec = 0 volts d-c, Rk = 1000 ohms (by-passed), R_L = 10000 ohms; Note 1	15	Millivolts peak to peak
Low-Frequency Vibration Ef = 6.3 volts, Ebb = 150 volts, Ec = 0 volts d-c, Rk = 1000 ohms (by-passed), R_L = 10000 ohms, G = 15, F = 40 cps; Note 2	0.75	Millivolts RMS

Note 1: The variable-frequency vibration test shall be performed as follows:

a. The frequency shall be increased from 100 to 2000 cps with approximately logarithmic progression in 3 ± 1 minutes. The return sweep (2000 to 100 cps) is not required.

b. The tube shall be vibrated with simple harmonic motion in each of two planes; first, parallel to the cylindrical axis; second, perpendicular to the cylindrical axis and parallel to a line through the major axis of a terminal lug.

c. The peak acceleration shall be maintained at 10 ± 1 G throughout the test.

d. The vibrational output produced across R_L as a result of the vibration shall be coupled to a low-pass filter that has the following characteristics:

(1) A response within ± 1 db of the response at 1000 cps over the frequency range of 100 to 17000 cps.

(2) The response shall be down at least 1.5 db at 20000 cps and have a cut-off rate of at least 18 db per octave above 20000 cps.

Note 2: The tube shall be vibrated with simple harmonic motion in each of two planes, (1) parallel to the cylindrical axis and (2) perpendicular to the cylindrical axis and perpendicular to a line through the major axis of a terminal lug.

Low Pressure Voltage Breakdown Test

Statistical sample tested for voltage breakdown at a pressure of 8mm Hg, to simulate an altitude of 100,000 feet. Tubes shall not give visual evidence of flashover or corona when 300 volts RMS, 60 cps, is applied between the plate and grid terminals.

DEGRADATION RATE TESTS

Fatigue

Statistical sample vibrated for a total of six hours, three hours in each of two planes, at a peak acceleration of 10G. Frequency is continuously varied from 30 cps to 2000 cps and back to 30 cps, with a period of ten minutes. Tubes are operated during the test with Ef = 6.3 volts, Eb = 150 volts, and Rk = 82 ohms. Following the test, tubes are evaluated for low frequency vibrational output, heater-cathode leakage, transconductance, and negative grid current.

Shock

Statistical sample subjected to 5 impact accelerations of approximately 450G in each of four positions. The accelerating forces are applied by the Navy-type, High Impact (flyweight) Shock Machine using a 30° hammer angle. Tubes are mounted by T-bolt with 3 inch-pounds torque, and operated during the test with Ef = 6.3 volts, Eb = 150 volts, Ehk = +100 volts, Rg = 0.1 Meg, and Rk = 82 ohms. Following the test, tubes are evaluated for low frequency vibrational output, heater-cathode leakage, transconductance, and negative grid current.

DEGRADATION RATE TESTS (Continued)

Stability Life Test

The statistical sample subjected to the Intermittent Life Test is evaluated for percent change in transconductance of individual tubes, from the initial readings to readings following 2 hours and 20 hours of the life test.

Survival Rate Life Test

The statistical sample subjected to the Intermittent Life Test is evaluated for shorted and open elements and transconductance following approximately 100 hours of life test.

Intermittent Life Test

Statistical sample operated for 1000 hours under the following conditions: Ef = 6.3 volts (cycled—on 1¾ hours, off ¼ hour), Ebb = 300 volts, Ehk = +70 volts d-c, Rk = 82 ohms, R_L = 18000 ohms, and Rg = 0.1 meg. Tubes are evaluated, following 500 and 1000 hours of life test, for shorted or open elements, heater current, grid current, transconductance, heater-cathode leakage, and interelectrode leakage resistance.

Interface Life Test

Statistical sample operated for 1000 hours with Ef = 6.6 volts, no other voltages applied, and evaluated for cathode interface resistance following the life test.

Heater-Cycling Life Test

Statistical sample operated for 2000 cycles minimum to evaluate and control heater-cathode defects. Conditions of test include Ef = 7.0 volts cycled for one minute on and one minute off, Eb = Ec = 0 volts, and Ehk = 70 volts with heater positive with respect to cathode. Following this test, tubes are evaluated for open heaters, heater-cathode shorts, and heater-cathode leakage current.

Note: The conditions for some of the indicated tests have deliberately been selected to aggravate tube failures for test and evaluation purposes. In no sense should these conditions be interpreted as suitable circuit operating conditions.

The tubes and arrangements disclosed herein may be covered by patents of General Electric Company or others. Neither the disclosure of any information herein nor the sale of tubes by General Electric Company conveys any license under patent claims covering combinations of tubes with other devices or elements. In the absence of an express written agreement to the contrary, General Electric Company assumes no liability for patent infringement arising out of any use of the tubes with other devices or elements by any purchaser of tubes or others.

AVERAGE PLATE CHARACTERISTICS

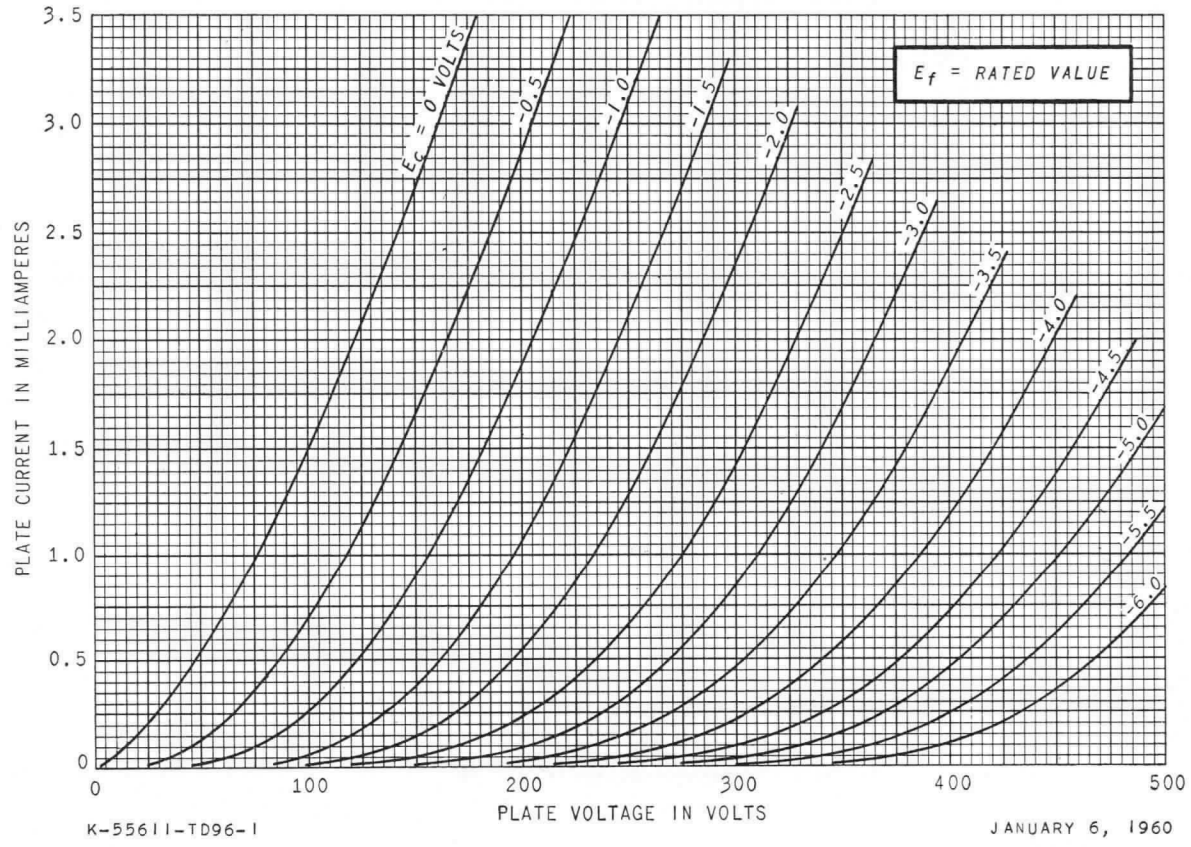

K-55611-TD96-1

JANUARY 6, 1960

AVERAGE TRANSFER CHARACTERISTICS

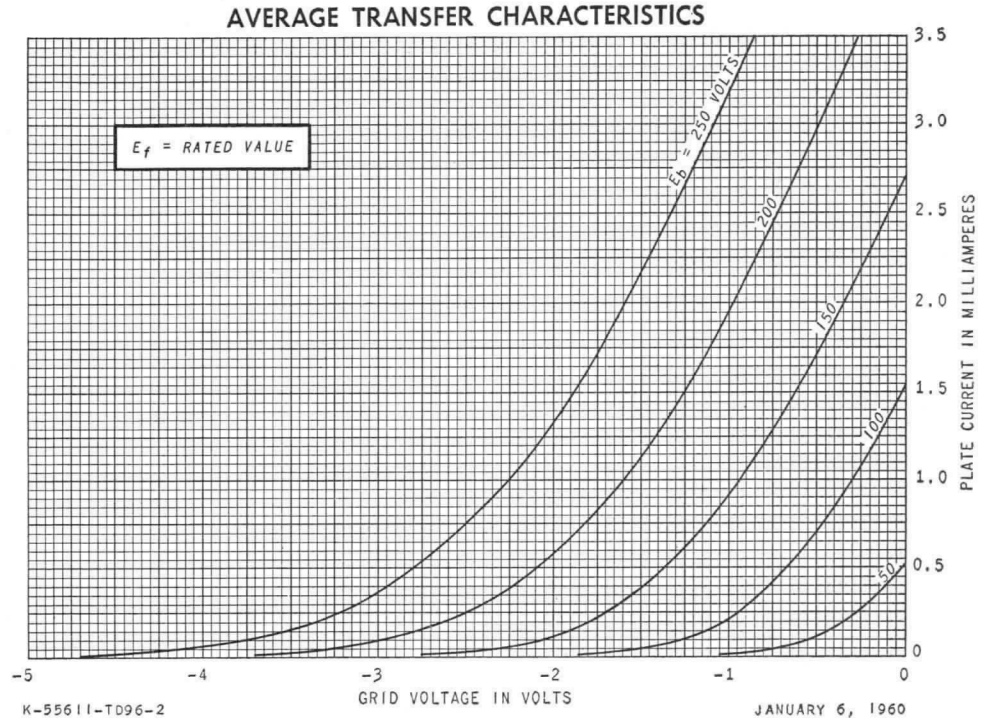

K-5561I-TD96-2

JANUARY 6, 1960

AVERAGE CHARACTERISTICS

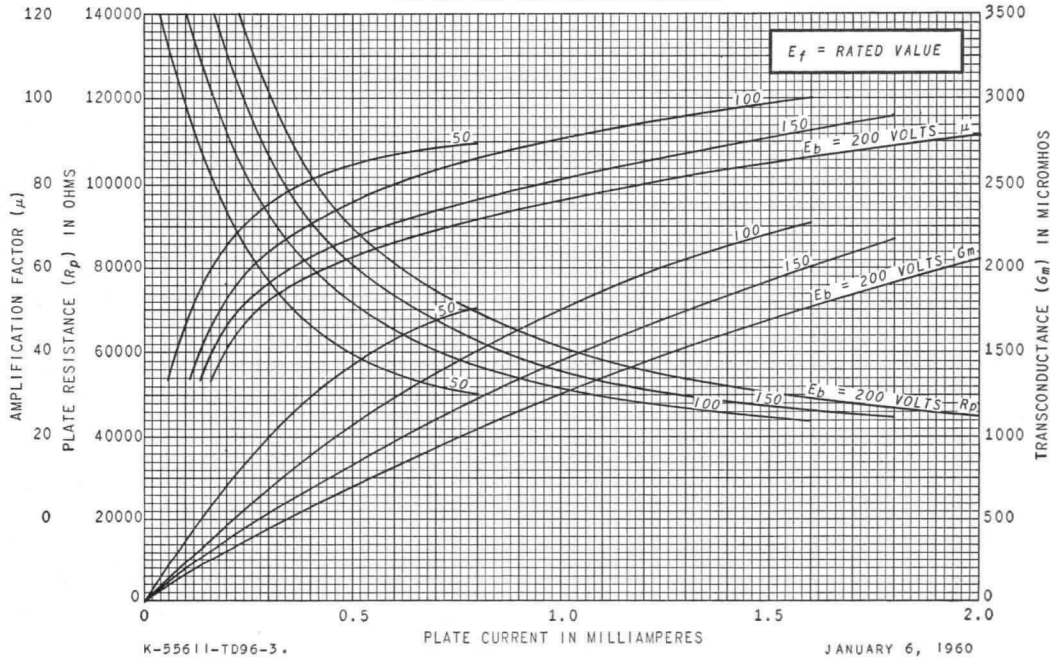

K-5561I-TD96-3.

JANUARY 6, 1960

RECEIVING TUBE DEPARTMENT

GENERAL ELECTRIC

Owensboro, Kentucky

METAL–CERAMIC TRIODE

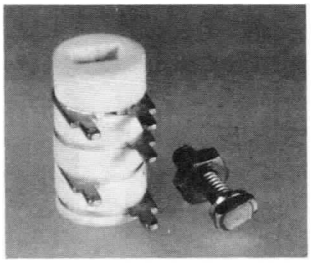

DESCRIPTION AND RATING

The 8082 is a high-mu triode of ceramic-and-metal planar construction primarily intended for use as an oscillator in the ultra-high-frequency range.

GENERAL

ELECTRICAL

Cathode—Coated Unipotential
Heater Characteristics and Ratings

Heater Voltage, AC or DC†	6.3 ±0.3	Volts
Heater Current‡	0.24	Amperes
Direct Interelectrode Capacitances§		
Grid to Plate: (g to p)	1.3	pf
Input: g to (h+k)	1.8	pf
Output: p to (h+k)	0.032	pf
Heater to Cathode: (h to k)	1.5	pf

MECHANICAL

Mounting Position—Any¶

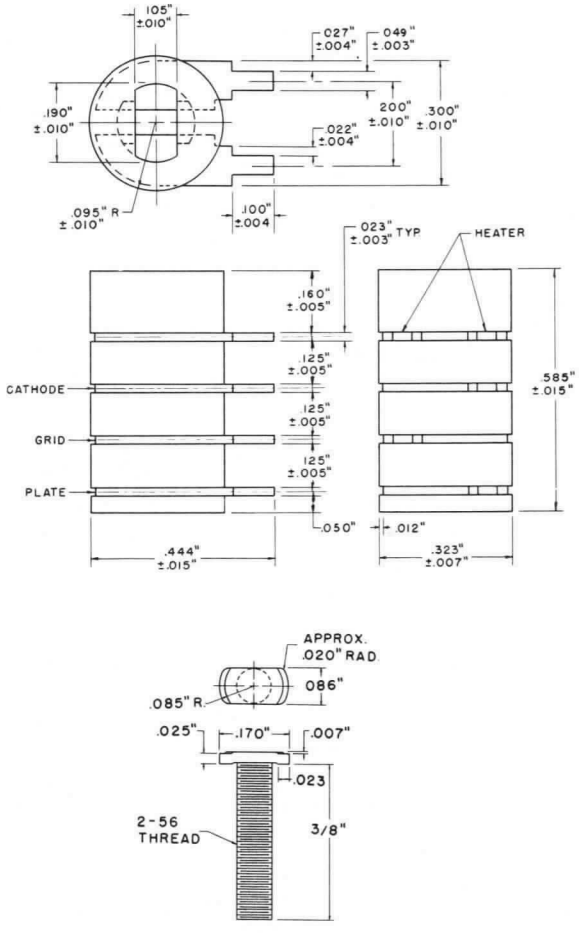

MAXIMUM RATINGS

ABSOLUTE-MAXIMUM VALUES

Plate Voltage	250	Volts
Positive DC Grid Voltage	0	Volts
Negative DC Grid Voltage	50	Volts
Peak Negative Grid Voltage	50	Volts
Plate Dissipation	1.0	Watt
DC Grid Current	2.2	Milliamperes
DC Cathode Current	11	Milliamperes
Peak Cathode Current	40	Milliamperes
Heater-Cathode Voltage		
Heater Positive with Respect to Cathode	50	Volts
Heater Negative with Respect to Cathode	50	Volts
Grid-Circuit Resistance	10000	Ohms
Envelope Temperature at Hottest Point#	250	C

Absolute-Maximum ratings are limiting values of operating and environmental conditions applicable to any electron tube of a specified type as defined by its published data and should not be exceeded under the worst probable conditions.

The tube manufacturer chooses these values to provide acceptable serviceability of the tube, making no allowance for equipment variations, environmental variations, and the effects of changes in operating conditions due to variations in the characteristics of the tube under consideration and of all other electron devices in the equipment.

The equipment manufacturer should design so that initially and throughout life no absolute-maximum value for the intended service is exceeded with any tube under the worst probable operating conditions with respect to supply-voltage variation, equipment component variation, equipment control adjustment, load variation, signal variation, environmental conditions, and variations in the characteristics of the tube under consideration and of all other electron devices in the equipment.

The tubes and arrangements disclosed herein may be covered by patents of General Electric Company or others. Neither the disclosure of any information herein nor the sale of tubes by General Electric Company conveys any license under patent claims covering combinations of tubes with other devices or elements. In the absence of an express written agreement to the contrary, General Electric Company assumes no liability for patent infringement arising out of any use of the tubes with other devices or elements by any purchaser of tubes or others.

CHARACTERISTICS AND TYPICAL OPERATION

AVERAGE CHARACTERISTICS

Plate Voltage	100	150	Volts
Grid Voltage	0		Volts
Cathode-Bias Resistor	....	82	Ohms
Amplification Factor	....	90	
Transconductance	11500	10500	Micromhos
Plate Current	9.0	7.5	Milliamperes

UHF OSCILLATOR SERVICE

Plate Voltage	150	Volts
Grid Resistor	7000	Ohms
Plate Current	4.0	Milliamperes
Frequency	450	Megacycles
Grid Current	0.5	Milliamperes
Power Output, approximate	100	Milliwatts

FOOTNOTES

† The equipment designer should design the equipment so that heater voltage is centered at the specified bogey value, with heater supply variations restricted to maintain heater voltage within the specified tolerance.

‡ Heater current of a bogey tube at Ef = 6.3 volts.

§ Without external shield.

¶ One method of mounting the 8082 is to use a stainless-steel "T" bolt (see drawing) to attach the mounting base of the tube to a chassis or circuit board. The "T" bolt should be inserted in the slot in the base of the tube, turned 90 degrees, and attached to the chassis or circuit board with a 2-56 nut and lock washer. Torque used to tighten the nut should not exceed 3 inch-pounds.

Operation below the rated maximum envelope temperature is recommended for applications requiring the longest possible tube life. The 8082 is also capable of operation at envelope temperatures much higher than the rated maximum value. For specific recommendations concerning higher temperature operation, contact your General Electric tube sales representative.

SPECIAL PERFORMANCE TESTS

	Min.	Bogey	Max.	
Grid Recovery				
Change in Average Plate Current	....	....	0.6	Milliamperes
Peak Plate Current Backswing	....	....	1.0	Milliamperes

Tubes with poor grid recovery affect circuit operation when the grid is driven positive by a pulse of signal or noise, somewhat as if a parallel RC circuit were in series with the grid. This effect may occur in tubes of any type, but is unimportant in many applications. In the majority of 8082 tubes the effect is negligible, but to eliminate the few in which it may be excessive, tubes are tested under the following conditions: Ef = 6.3 volts, Ebb = 250 volts, R_L = 0.01 meg, Ec adjusted for Ib = 3.0 ma.

Upon application to the grid of a 5-volt positive pulse (prr = 60 pps, duty factor = 0.0012) the change in average plate current is noted, and the peak plate current backswing is measured. The following diagram shows qualitatively the plate current-time relationship for a tube (with poor grid recovery) subjected to this test.

PLATE CURRENT VS. TIME —GRID-RECOVERY TEST

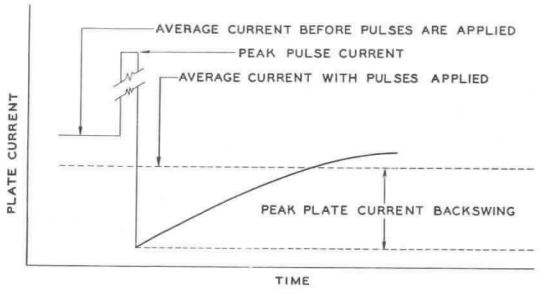

	Min.	Bogey	Max.	
Pulse Cathode Current				
Ef = 6.3 volts, Eb = 150 volts, Ec = −10 volts. Grid is driven 7 volts positive with a pulse having a prr of 1000 pps and a duty factor of 0.01	90	....	....	Milliamperes

Low Pressure Voltage Breakdown Test

Statistical sample tested for voltage breakdown at a pressure of 8mm Hg, to simulate an altitude of 100,000 feet. Tubes shall not give visual evidence of flashover or corona when 300 volts RMS, 60 cps, is applied between the plate and grid terminals.

DEGRADATION RATE TESTS

Fatigue

Statistical sample vibrated for a total of six hours, three hours in each of two planes, at a peak acceleration of 10G. Frequency is continuously varied from 30 cps to 2000 cps and back to 30 cps, with a period of ten minutes. Tubes are mounted by T-bolt with 3 inch-pounds torque, and operated during the test with Ef = 6.3 volts, Eb = 150 volts, and Rk = 82 ohms. Following the test, tubes are evaluated for low frequency vibrational output, heater-cathode leakage, and heater current.

Shock

Statistical sample subjected to 5 impact accelerations of approximately 450G in each of four positions. The accelerating forces are applied by the Navy-type, High Impact (flyweight) Shock Machine using a 30° hammer angle. Tubes are operated during the test with Ef = 6.3 volts, Eb = 150 volts, Ehk = +100 volts, and Rk = 82 ohms. Following the test, tubes are evaluated for low frequency vibrational output, heater-cathode leakage, and heater current.

Stability Life Test

The statistical sample subjected to the Dynamic Life Test is evaluated for percent change in zero-bias transconductance of individual tubes, from the initial reading to readings following 2 hours and 20 hours of the life test.

Survival Rate Life Test

The combined statistical samples subjected to the Dynamic and Pulse Life Tests are evaluated for shorted and open elements following approximately 100 hours of life test.

Dynamic Life Test

Statistical sample operated, with a 60 cps grid signal, at maximum rated DC grid current and cathode current for a period of 1000 hours. Heater voltage is cycled (on 1¾ hours, off ¼ hour). Tubes are evaluated, following 500 and 1000 hours of life test, for shorted or open elements, heater current, zero-bias transconductance, heater-cathode leakage, and interelectrode leakage resistance.

Pulse Life Test

Statistical sample operated with 120 ma peak cathode current, 0.01 duty factor, for 1000 hours. Heater voltage is cycled (on 1¾ hours, off ¼ hour). Tubes are evaluated, following 500 and 1000 hours of life test, for shorted or open elements, heater current, pulse emission, heater-cathode leakage, and interelectrode leakage resistance.

Interface Life Test

Statistical sample operated for 1000 hours with Ef = 6.6 volts, no other voltages applied, and evaluated for cathode interface resistance following the life test.

Heater-Cycling Life Test

Statistical sample operated for 2000 cycles minimum to evaluate and control heater-cathode defects. Conditions of test include Ef = 7.0 volts cycled for one minute on and one minute off, Eb = Ec = 0 volts, and Ehk = 70 volts with heater positive with respect to cathode. Following this test tubes are evaluated for open heaters, heater-cathode shorts, and heater-cathode leakage current.

Note: The conditions for some of the indicated tests have deliberately been selected to aggravate tube failures for test and evaluation purposes. In no sense should these conditions be interpreted as suitable circuit operating conditions.

AVERAGE PLATE CHARACTERISTICS

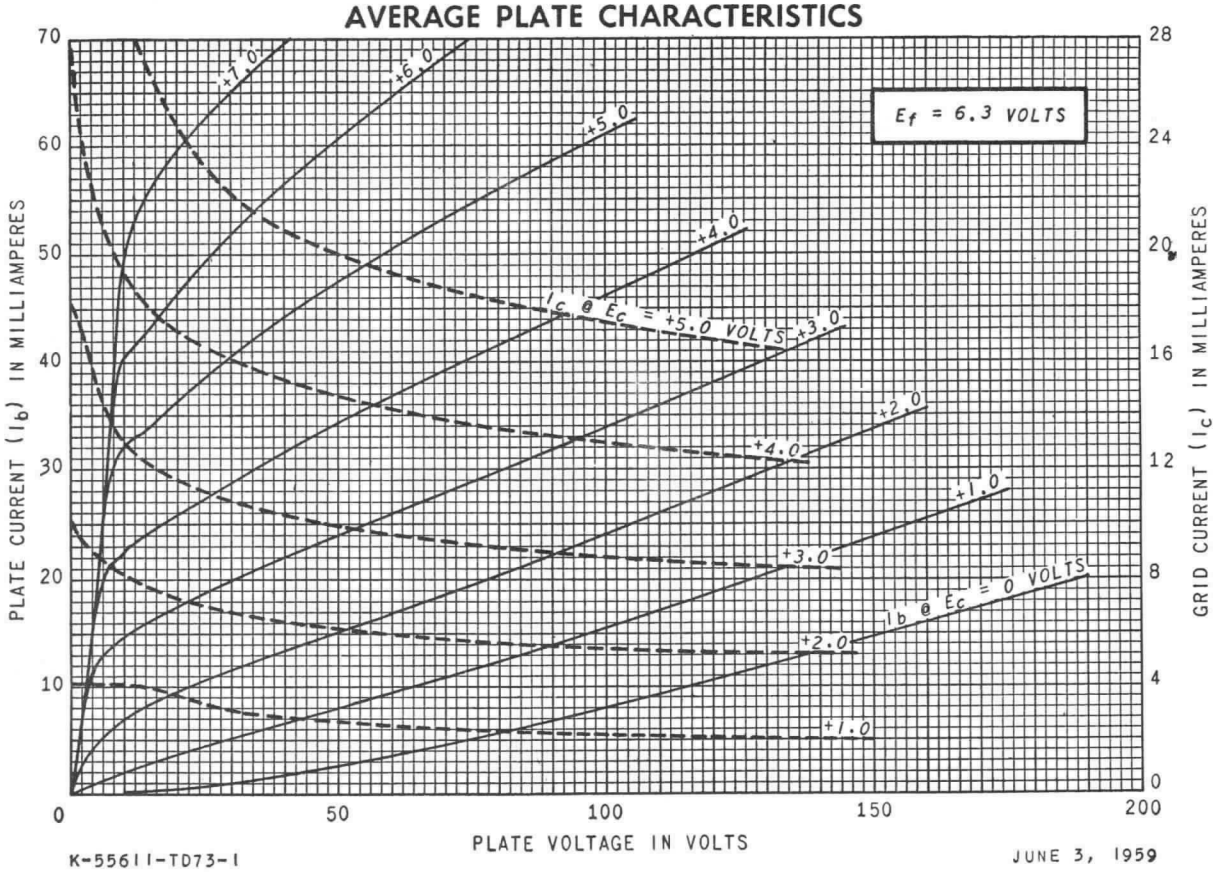

K-55611-TD73-1

JUNE 3, 1959

AVERAGE PLATE CHARACTERISTICS

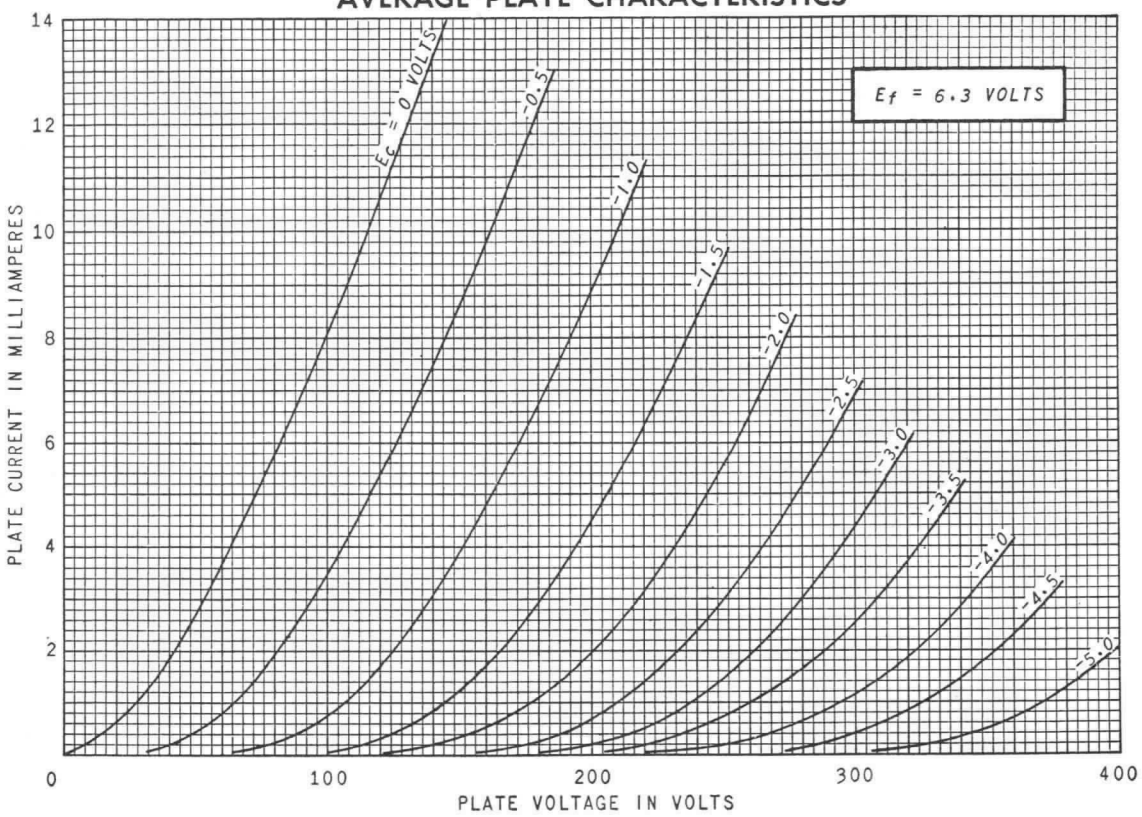

K-55611-TD73-2

JUNE 3, 1959

AVERAGE TRANSFER CHARACTERISTICS

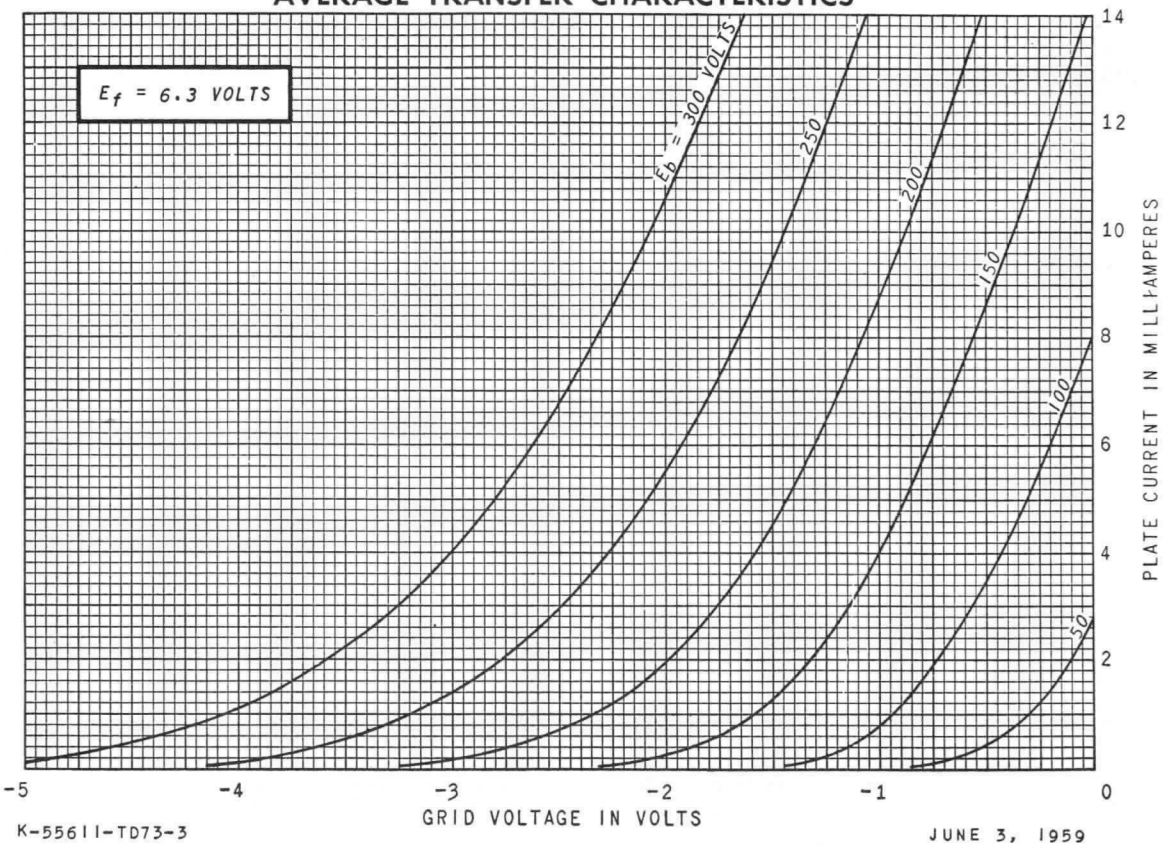

K-55611-TD73-3

JUNE 3, 1959

AVERAGE CONSTANT-CURRENT CHARACTERISTICS

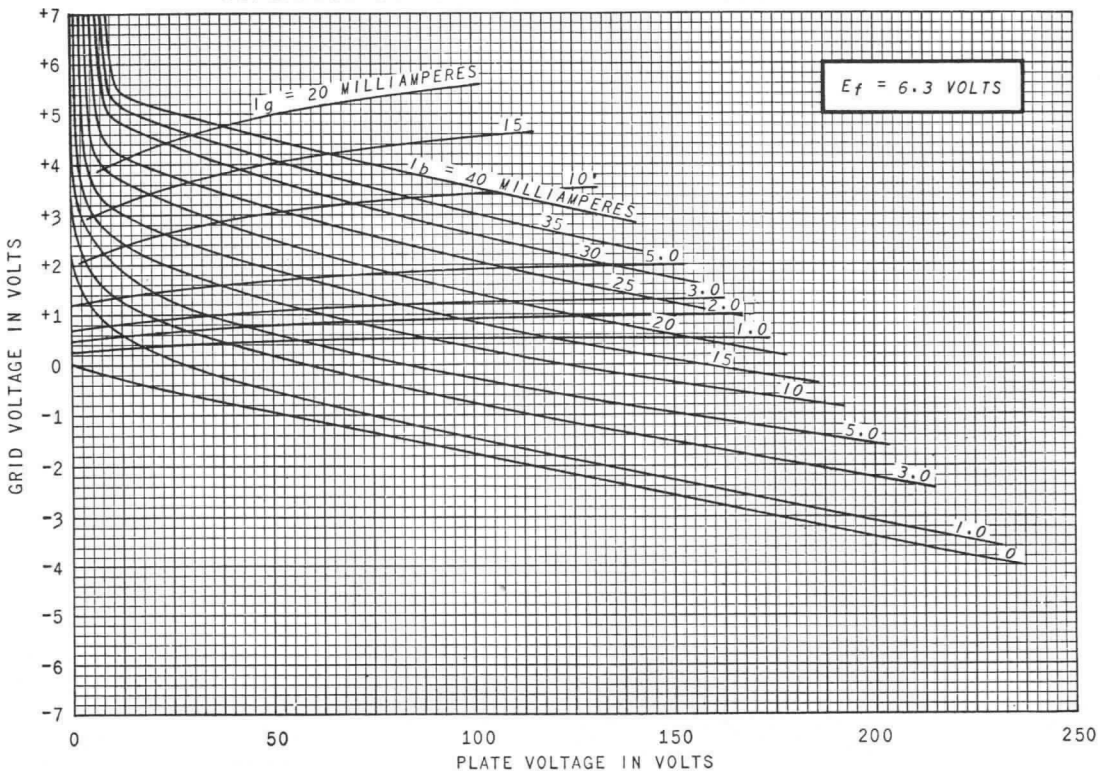

CONSTANT-CURRENT CURVES

K-55611-TD73-4

JUNE 3, 1959

RECEIVING TUBE DEPARTMENT

GENERAL ELECTRIC

Owensboro, Kentucky

PRINTED IN U.S.A.

8083

METAL-CERAMIC TRIODE

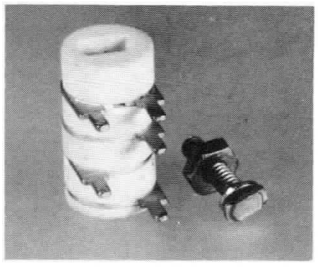

DESCRIPTION AND RATING

The 8083 is a high-mu triode of ceramic-and-metal planar construction primarily intended for radio-frequency amplifier service from low frequencies into the ultra-high frequency range.

GENERAL

ELECTRICAL

Cathode—Coated Unipotential		
Heater Characteristics and Ratings		
Heater Voltage, AC or DC†	6.3 ± 0.3	Volts
Heater Current‡	0.24	Amperes
Direct Interelectrode Capacitances§		
Grid to Plate: (g to p)	1.2	pf
Input: g to (h+k)	1.8	pf
Output: p to (h+k)	0.032	pf
Heater to Cathode: (h to k)	1.5	pf

MECHANICAL

Mounting Position—Any¶

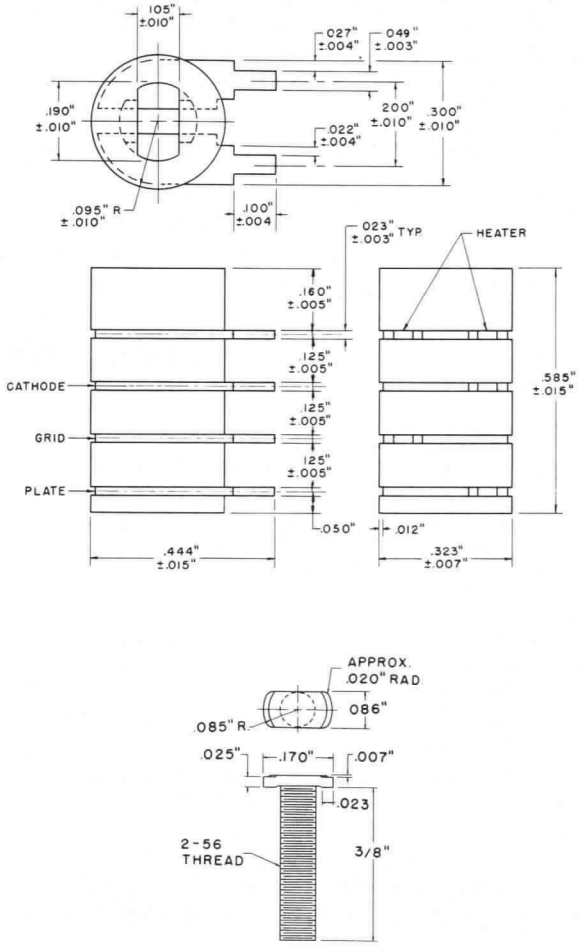

MAXIMUM RATINGS

ABSOLUTE-MAXIMUM VALUES

Plate Voltage	250	Volts
Peak Plate Voltage	400	Volts
Positive Peak and DC Grid-to-Cathode Voltage	0	Volts
Negative Peak and DC Grid-to-Cathode Voltage	50	Volts
Plate Dissipation	1.1	Watts
DC Cathode Current	11	Milliamperes
Heater-Cathode Voltage		
Heater Positive with Respect to Cathode	50	Volts
Heater Negative with Respect to Cathode	50	Volts
Grid-Circuit Resistance, with Fixed Bias△	0.01	Megohms
Envelope Temperature at Hottest Point#	250	C

Absolute-Maximum ratings are limiting values of operating and environmental conditions applicable to any electron tube of a specified type as defined by its published data and should not be exceeded under the worst probable conditions.

The tube manufacturer chooses these values to provide acceptable serviceability of the tube, making no allowance for equipment variations, environmental variations, and the effects of changes in operating conditions due to variations in the characteristics of the tube under consideration and of all other electron devices in the equipment.

The equipment manufacturer should design so that initially and throughout life no absolute-maximum value for the intended service is exceeded with any tube under the worst probable operating conditions with respect to supply-voltage variation, equipment component variation, equipment control adjustment, load variation, signal variation, environmental conditions, and variations in the characteristics of the tube under consideration and of all other electron devices in the equipment.

CHARACTERISTICS AND TYPICAL OPERATION

AVERAGE CHARACTERISTICS

Plate Voltage	150	Volts
Grid Voltage	+6.0	Volts
Cathode-Bias Resistor	910	Ohms
Amplification Factor	94	
Plate Resistance, approximate	9000	Ohms
Transconductance	10500	Micromhos
Plate Current	7.2	Milliamperes
Grid Voltage, approximate Ib = 100 Microamperes	−2.2	Volts

FOOTNOTES

† The equipment designer should design the equipment so that heater voltage is centered at the specified bogey value, with heater supply variations restricted to maintain heater voltage within the specified tolerance.

‡ Heater current of a bogey tube at Ef = 6.3 volts.

§ Without external shield.

¶ One method of mounting the 8083 is to use a stainless-steel "T" bolt (see drawing) to attach the mounting base of the tube to a chassis or circuit board. The "T" bolt should be inserted in the slot in the base of the tube, turned 90 degrees, and attached to the chassis or circuit board with a 2-56 nut and lock washer. Torque used to tighten the nut should not exceed 3 inch-pounds.

△ If resistance is used in the cathode or plate circuits, the grid-circuit resistance may be as high as (10000 + 100 RK + 10RL) ohms, where RK is the cathode-bias resistance in ohms, and RL is the DC plate load resistance in ohms.

Operation below the rated maximum envelope temperature is recommended for applications requiring the longest possible tube life. The 8083 is also capable of operation at envelope temperatures much higher than the rated maximum value. For specific recommendations concerning higher temperature operation, contact your General Electric tube sales representative.

SPECIAL PERFORMANCE TESTS

	Maximum	
Noise Figure		
Ef = 6.3 volts, Ebb = 250 volts, Rk = 82 ohms, R_L = 18000 ohms, F = 200 mc	5.5	Decibels
Grid Recovery		
Change in Average Plate Current	0.6	Milliamperes
Peak Plate Current Backswing	1.0	Milliamperes

Tubes with poor grid recovery affect circuit operation, when the grid is driven positive by a pulse of signal or noise, somewhat as if a parallel RC circuit were in series with the grid. This effect may occur in tubes of any type, but is unimportant in many applications. In the majority of 8083 tubes the effect is negligible, but to eliminate the few in which it may be excessive, tubes are tested under the following conditions: Ef = 6.3 volts, Ebb = 250 volts, R_L = 0.01 meg, Ec adjusted for Ib = 3.0 ma.

Upon application to the grid of a 5 volt positive pulse (prr = 60 pps, duty factor = 0.0012) the change in average plate current is noted, and the peak plate current backswing is measured. The following diagram shows qualitatively the plate current-time relationship for a tube (with poor grid recovery) subjected to this test.

PLATE CURRENT VS. TIME —GRID RECOVERY TEST

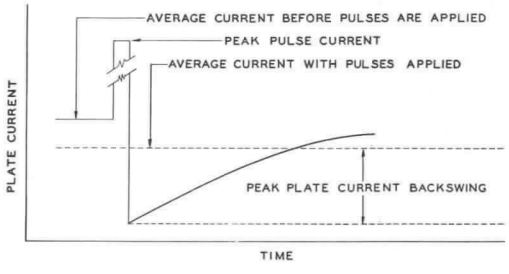

SPECIAL PERFORMANCE TESTS (Continued)

Low Pressure Voltage Breakdown Test

Statistical sample tested for voltage breakdown at a pressure of 8mm Hg, to simulated an altitude of 100,000 feet. Tubes shall not give visual evidence of flashover or corona when 300 volts RMS, 60 cps, is applied between the plate and grid terminals.

DEGRADATION RATE TESTS

Fatigue

Statistical sample vibrated for a total of six hours, three hours in each of two planes, at a peak acceleration of 10G. Frequency is continuously varied from 30 cps to 2000 cps and back to 30 cps, with a period of ten minutes. Tubes are operated during the test with Ef = 6.3 volts, Eb = 150 volts, and Rk = 82 ohms. Following the test, tubes are evaluated for low frequency vibrational output, heater-cathode leakage, heater current, and transconductance.

Shock

Statistical sample subjected to 5 impact accelerations of approximately 450G in each of four positions. The accelerating forces are applied by the Navy-type, High Impact (flyweight) Shock Machine using a 30° hammer angle. Tubes are mounted by T-bolt with 3 inch-pounds torque, and operated during the test with Ef = 6.3 volts, Eb = 150 volts, Ehk = +100 volts, Rg = 0.1 Meg, and Rk = 82 ohms. Following the test, tubes are evaluated for low frequency vibrational output, heater-cathode leakage, heater current, and transconductance.

Stability Life Test

The statistical sample subjected to the Intermittent Life Test is evaluated for percent change in transconductance of individual tubes, from the initial reading to readings following 2 hours and 20 hours of the life test.

Survival Rate Life Test

The statistical sample subjected to the Intermittent Life Test is evaluated for shorted and open elements and transconductance following approximately 100 hours of life test.

Intermittent Life Test

Statistical sample operated for 1000 hours under the following conditions: Ef = 6.3 volts (cycled—on 1¾ hours, off ¼ hour), Eb = 150 volts, Ecc = +6.0 volts, Ehk = −70 volts d-c, Rk = 910 ohms, and Rg = 0.1 meg. Tubes are evaluated, following 500 and 1000 hours of life test, for shorted and open elements, heater current, transconductance, heater-cathode leakage, and interelectrode leakage resistance.

Interface Life Test

Statistical sample operated for 1000 hours with Ef = 6.6 volts, no other voltages applied, and evaluated for cathode interface resistance following the life test.

Heater-Cycling Life Test

Statistical sample operated for 2000 cycles minimum to evaluate and control heater-cathode defects. Conditions of test include Ef = 7.0 volts cycled for one minute on and one minute off, Eb = Ec = 0 volts, and Ehk = 70 volts with heater positive with respect to cathode. Following this test, tubes are evaluated for open heaters, heater-cathode shorts, and heater-cathode leakage current.

Note: The conditions for some of the indicated tests have deliberately been selected to aggravate tube failures for test and evaluation purposes. In no sense should these conditions be interpreted as suitable circuit operating conditions.

The tubes and arrangements disclosed herein may be covered by patents of General Electric Company or others. Neither the disclosure of any information herein nor the sale of tubes by General Electric Company conveys any license under patent claims covering combinations of tubes with other devices or elements. In the absence of an express written agreement to the contrary, General Electric Company assumes no liability for patent infringement arising out of any use of the tubes with other devices or elements by any purchaser of tubes or others.

AVERAGE PLATE CHARACTERISTICS

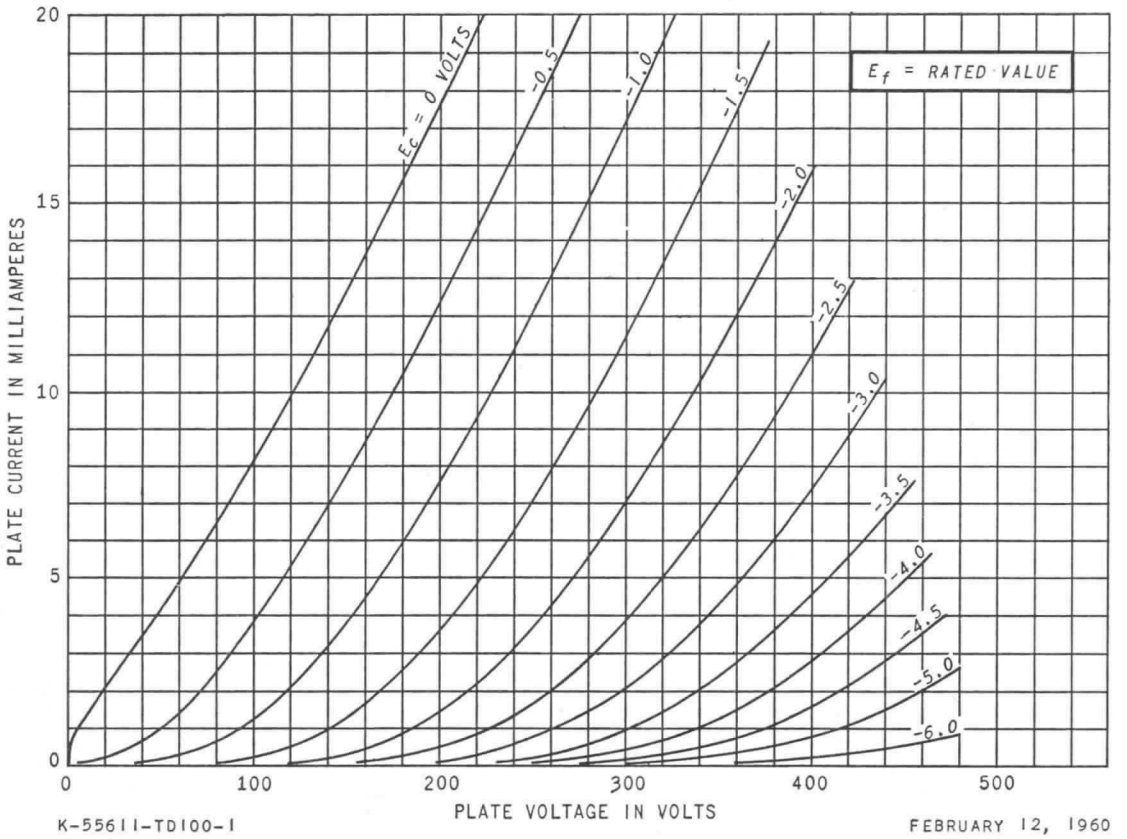

K-55611-TD100-1

FEBRUARY 12, 1960

AVERAGE TRANSFER CHARACTERISTICS

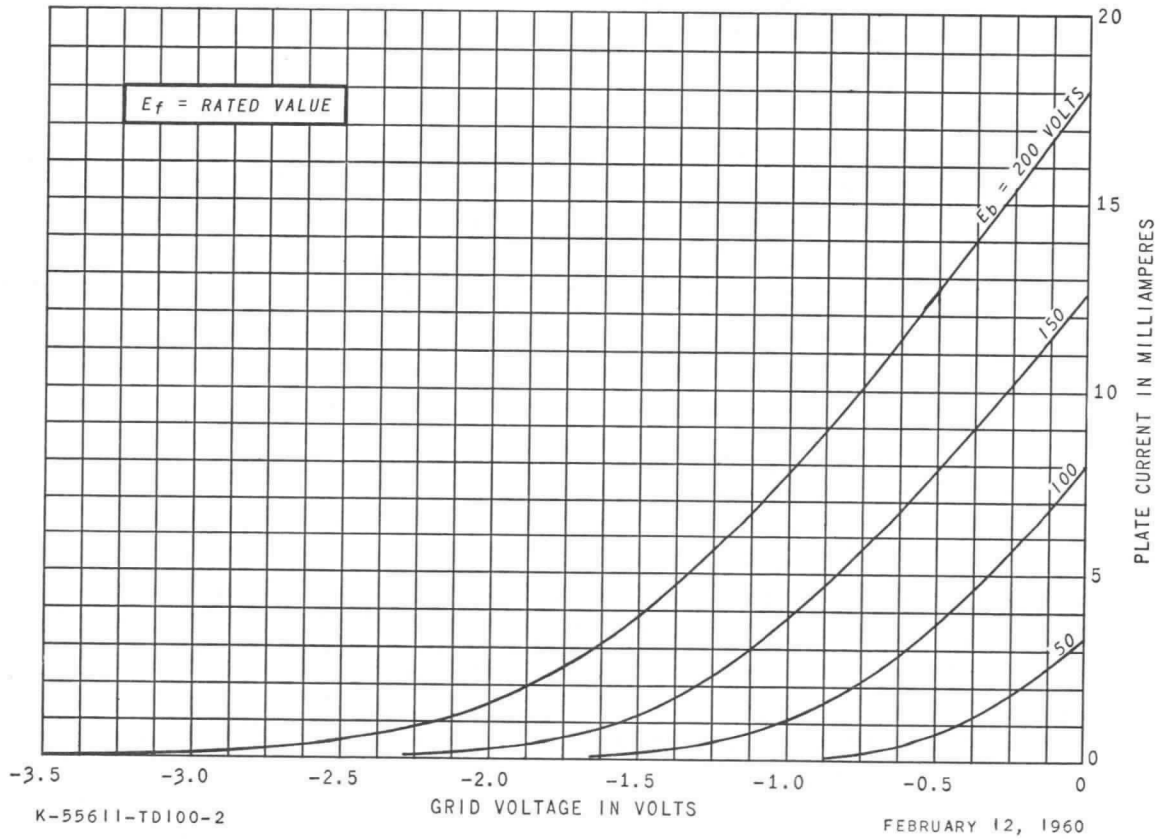

K-55611-TD100-2

FEBRUARY 12, 1960

AVERAGE CHARACTERISTICS

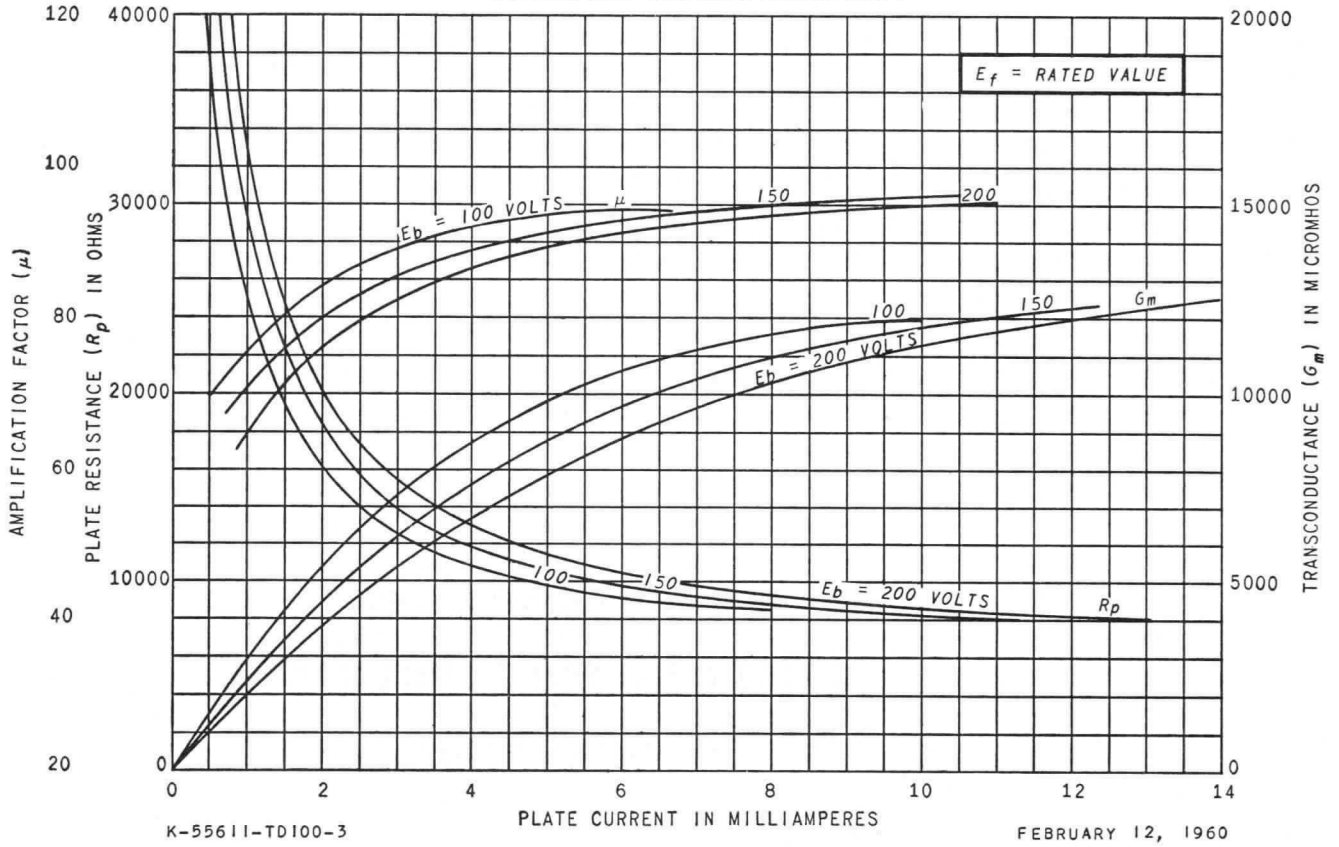

K-55611-TD100-3

FEBRUARY 12, 1960

RECEIVING TUBE DEPARTMENT

GENERAL ELECTRIC

Owensboro, Kentucky

PRINTED IN U.S.A.

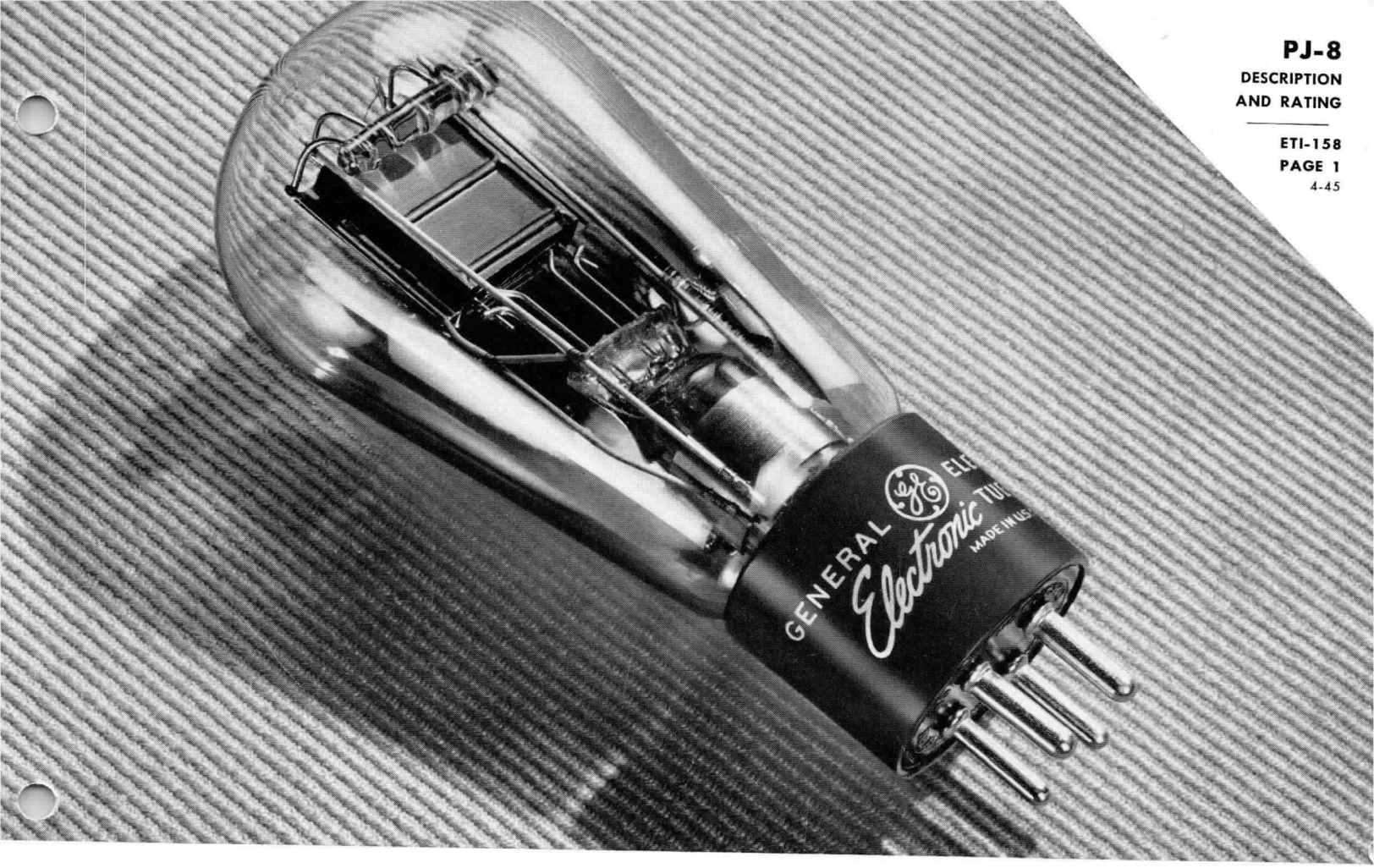

PLIOTRON

DESCRIPTION

The PJ-8 is a high-vacuum tube designed for use in amplification and relay applications. The low grid power and uniformity of characteristics are particularly valuable in many control applications.

TECHNICAL INFORMATION

These data are for reference only. For design information refer to specifications.

GENERAL CHARACTERISTICS

Number of electrodes	3	
Electrical		
Filament voltage	4.5	volts
Filament current	1.1	amperes
Average characteristics when $E_b = 350$ volts, $I_b = 19$ milliamperes, $E_f = 4.5$ volts d-c		
Grid voltage	−20	volts
Amplification factor	8.5	
Grid-plate transconductance	1330	micromhos
Direct interelectrode capacitance		
Grid-plate	8.3	micromicrofarads
Grid-cathode	4.0	micromicrofarads
Plate-cathode	3.0	micromicrofarads

Electronic TUBE

GENERAL ELECTRIC

TECHNICAL INFORMATION (CONT'D)

Mechanical

Base	medium 4-pin bayonet
Net weight, approx.	3 ounces
Shipping weight, approx.	3 pounds
Operating position	vertical or horizontal with plane of electrodes vertical

MAXIMUM RATINGS AND TYPICAL OPERATING CONDITIONS

CLASS A AUDIO-FREQUENCY AMPLIFIER AND MODULATOR

	Typical Operation	Maximum Ratings
D-c plate voltage	350	350 volts
Plate dissipation	....	7.5 watts
D-c grid voltage	−30	.... volts
Peak grid swing, approx.	30	.... volts
D-c plate current	9	.... milliamperes
Plate resistance	8700	.... ohms
Load resistance	18,000	.... ohms
Plate power output, 5% second harmonic	0.6	.... watts

CLASS B RADIO-FREQUENCY POWER AMPLIFIER

Carrier conditions per tube for use with a maximum modulation factor of 1.0

D-c plate voltage	350	350 volts
D-c grid voltage	−40	.... volts
D-c plate current	32	40 milliamperes
Plate input	....	14 watts
Plate dissipation	....	10 watts
Peak r-f grid input	90	.... volts
†Driving power, approx.	0.1	.... watts
Output, approx.	2	.... watts

CLASS C RADIO-FREQUENCY POWER AMPLIFIER AND OSCILLATOR, PLATE MODULATED

Carrier conditions per tube for use with a maximum modulation factor of 1.0

D-c plate voltage	300	350 volts
D-c grid voltage	−100	−150 volts
D-c plate current	30	40 milliamperes
D-c grid current, approx.	2	10 milliamperes
Plate input	....	14 watts
Plate dissipation	....	7 watts
Peak r-f grid input voltage, approx	140	.... volts
Driving power, approx.	0.3	.... watts
Plate power output	4	.... watts

CLASS C RADIO-FREQUENCY POWER AMPLIFIER AND OSCILLATOR

*Key-down conditions per tube without modulation**

D-c plate voltage	350	350 volts
D-c grid voltage	−80	−150 volts
D-c plate current	35	40 milliamperes
D-c grid current, approx.	2	10 milliamperes
Plate input	....	14 watts
Plate dissipation	....	10 watts
Peak r-f grid input voltage, approx	130	.... volts
Driving power, approx.	0.25	.... watts
Plate power output, approx.	6	.... watts

†At crest of audio-frequency cycle.
*Modulation, essentially negative, may be used if the positive peak of the audio-frequency envelope does not exceed 115 per cent of the carrier conditions.

APPLICATION NOTES

The PJ-8 can be operated at frequencies as high as six megacycles, and may be operated at higher frequencies provided the maximum values of plate voltage and power input are reduced as the frequency is raised (other maximum ratings are the same as shown under TECHNICAL INFORMATION). The tabulation below shows highest percentage of maximum plate voltage and power input that can be used up to thirty megacycles for the various classes of service. Special attention should be given to adequate ventilation of the bulb at these frequencies.

Frequency	6	15	30 megacycles
Class B, r-f	100	85	70 per cent
Class C, plate modulated or unmodulated	100	75	50 per cent

The normal value of grid leak, when the PJ-8 is used as an oscillator or r-f power amplifier (Class C), is in the neighborhood of 10,000 ohms, although this may be replaced by a suitable fixed bias. If self-bias is used, the cathode should be approximately 2000 ohms.

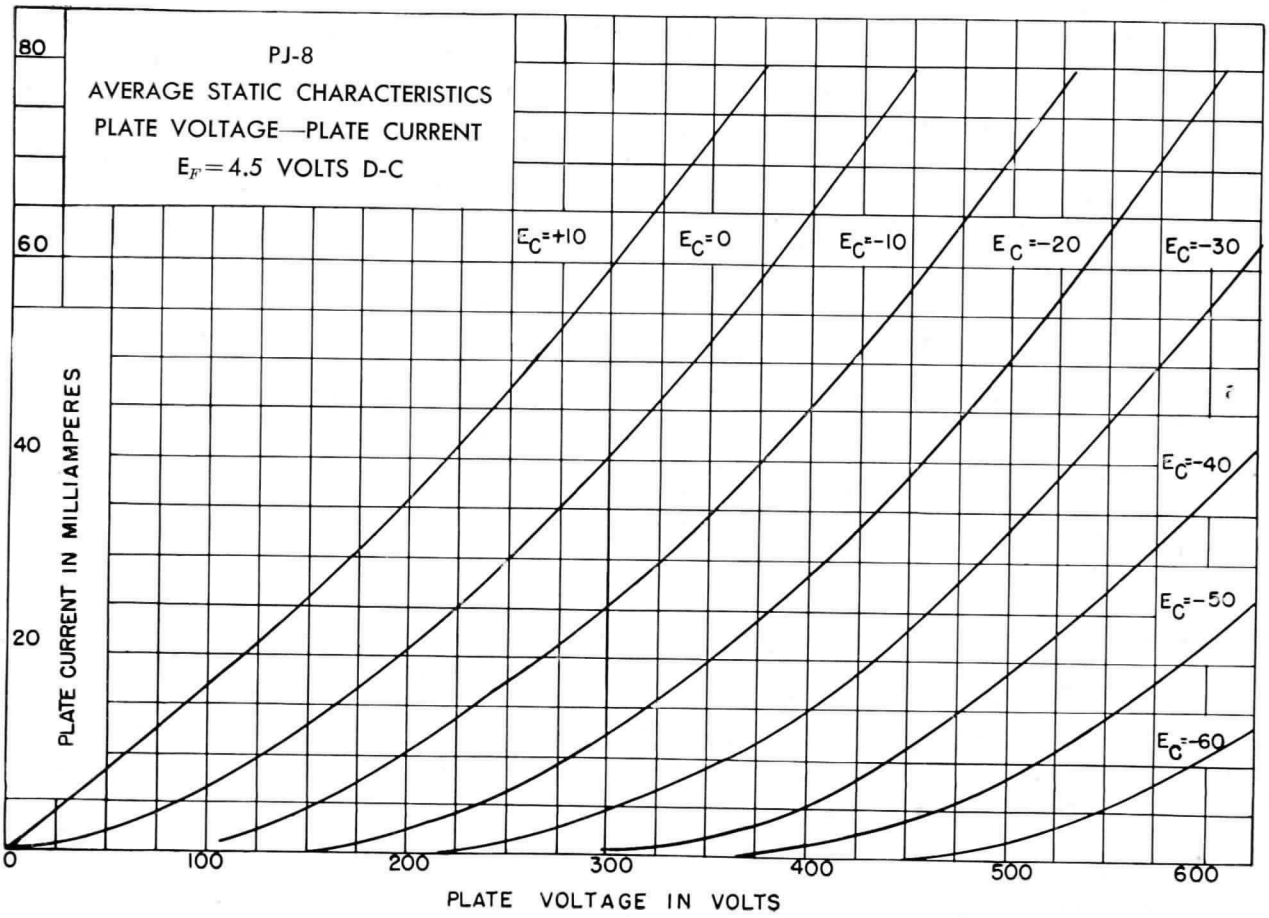

K-9033567

12-18-44

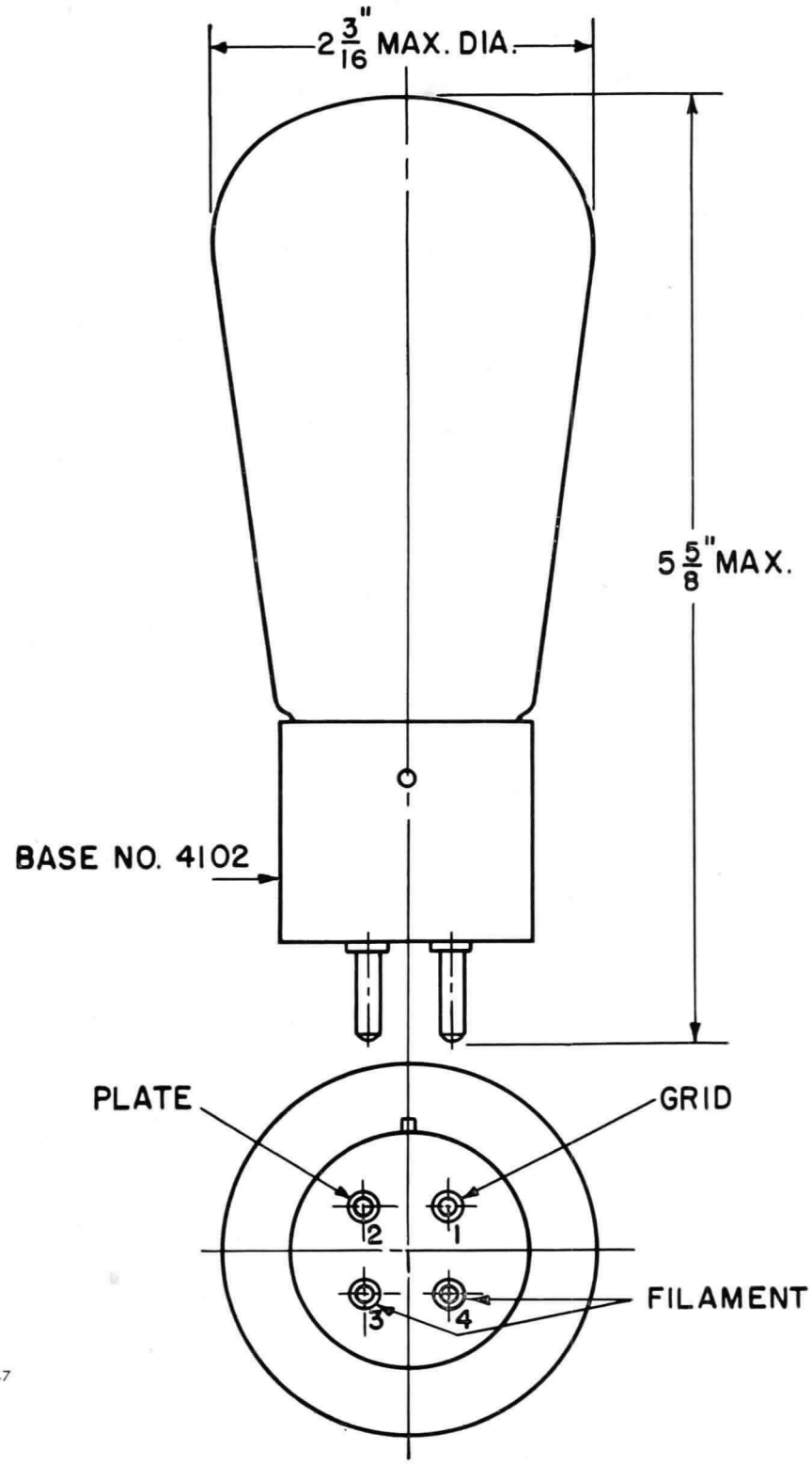

K-3846047

6-9-44

OUTLINE PJ-8 PLIOTRON

Electronics Department

GENERAL ELECTRIC

Schenectady, N. Y.