

TUBE MANUAL

EIMAC division of varian
SAN CARLOS, CALIFORNIA

DIVISION OF VARIAN
301 Industrial Way
San Carlos, California

TABLE OF CONTENTS

9-1-75

 © 1975 Varian Associates Printed in U.S.A.

TABLE OF CONTENTS

GENERAL

Tube Type Numbering System 6-1-73
Table of Contents 9-1-75
Index 9-1-75
EIMAC and JEDEC Cross Reference List 2-15-75
Power Grid Selection Guide 2-15-75
Varian/Eimac Electron Tube and Device Group Sales Offices 1-15-75
Distributor Directory

DIODES - RECTIFIERS

2-01C 1-22-60
2-450A 3-1-66
2-2000A 7-1-52
250R 12-15-65
253 7-1-52
575A & 673 4-1-67
869B & 869BL 3-16-64
6894 & 6895 3-16-64
8020 6-1-67

PLANAR TRIODES

2C39A . . . . . see 7289
3CX100A5 . . . . . see 7289
7211/7698 11-15-70
7289/3CX100A5 11-1-71
7698 . . . . . see 7211
7815/7815R 12-1-71
7815AL/7815RAL 7-1-70
7815R . . . . . see 7815
7815RAL . . . . . see 7815AL
7855/7855K 8-1-71
7855AL/7855KAL 3-1-72
7855K . . . . . see 7855
7855KAL . . . . . see 7855AL
8403 12-1-71
8533 12-1-71
8755/8755A 6-1-71
8755A . . . . . see 8755
8757 3-3-70
8847/8847A 6-1-70
8847A . . . . . see 8847
8892 9-1-70
8893 6-1-70
8906/8907 11-1-71
8906AL/Y572AL 11-1-71
8907 . . . . . see 8906
8911 2-1-71
8912 2-1-71
8933 11-15-72
Y572AL . . . . . see 8906AL

TRIODES

3-400Z/8163 8-15-74
3-500Z 11-1-73
3-1000Z/8164 8-15-74
3C24 11-1-51
3CV1500A7 6-15-71
3CV30,000A3 3-1-67
3CV30,000H3 5-1-68
3CW5000A1/8240 & 3CW5000F1/8241 5-15-71
3CW5000A3/8242 1-11-74
3CW5000F3/8243 . . . . . see 3CW5000A3
3CW5000H3 4-1-66
3CW10,000H3 10-15-70
3CW20,000A1 6-1-67
3CW20,000A3 6-1-66
3CW20,000A7 1-1-63
3CW20,000H3 2-1-65
3CW20,000H7 5-15-74
3CW30,000H3 11-1-68
3CW30,000H7 2-1-75
3CW40,000H3 8-1-67
3CX400U7/8961 8-1-74
3CX1000A7/8283 3-25-75
3CX1500A7/8877 7-1-75
3CX2500A3/8161 3-1-67
3CX2500F3/8251 3-1-67
3CX2500H3 2-1-71
3CX3000A1/8238 11-1-67
3CX3000A7 11-20-70
3CX3000F1/8239 11-1-67
3CX3000F7/8162 5-7-70
3CX5000H3 4-1-66
3CX10,000A1/8158 11-15-68
3CX10,000A3/8159 5-1-68
3CX10,000A7/8160 2-1-73
3CX10,000H3 3-15-66
3CX15,000A3 7-1-69
3CX15,000A7 4-15-71
3CX15,000H3 4-1-66
3CX20,000A3 4-15-71
3CX20,000A7 7-1-73
3CX20,000H3 5-1-71
3W5000F3/8243 10-20-61
35T 2-1-69
35TG 6-1-67
75TH 12-15-65
75TL 4-1-67
100TH 4-1-67
100TL 5-1-52
152TH 11-25-52
152TL 4-1-67
250TH 6-15-66
250TL 1-1-61
304TH 4-1-67
304TL 6-1-67
450TH 12-15-65
450TL 12-15-65
592/3-200A3 6-15-66
1000T 12-15-65
1500T 5-5-70

TRIODES

2000T	10-15-50
5867A	11-15-64
6696A	10-15-64
6697A	10-15-64
7480	11-1-68
8873/8874/8875	6-3-73
8938	5-15-73
8963	4-1-75

TETRODES

4-65A/8165	5-1-62
4-125A/4D21	6-1-67
4-250A/5D22	5-5-70
4-400A/8438	7-20-70
4-400C/6775	4-1-71
4-500A	3-10-72
4-1000A/8166	10-30-66
4CN15A	6-1-68
4CPX250K/8590	4-1-70
4CS250R	9-1-70
4CV8000A	3-15-71
4CV20,000A	6-1-68
4CV35,000A	5-15-66
4CV50,000E	5-1-70
4CV50,000J	7-15-71
4CV100,000C/8351	2-1-68
4CV250,000A	3-1-72
4CW800B/F	11-1-73
4CW2000A/8244	6-15-71
4CW10,000A/8661	4-15-63
4CW25,000A	2-1-72
4CW50,000E	7-1-70
4CW50,000J	7-15-71
4CW100,000D	7-1-67
4CW100,000E	9-1-70
4CW250,000A	3-1-71
4CX125C/F	6-1-67
4CX250B/7203 & 4CX250FG/8621	8-1-74
4CX250BC/8957	1-1-74
4CX250K/8245 & 4CX250M/8246	5-1-68
4CX250R/7580W	6-16-61
4CX300A/8167	8-30-66
4CX300Y/8561	6-15-66
4CX350A/8321 & 4CX350F/8322	6-15-65
4CX350FJ/8904	9-1-71
4CX600B & 4CX600F	3-20-70
4CX600J/8809 & 4CX600JA/8921	8-15-71
4CX1000A/8168	5-1-70
4CX1000K/8352	8-20-66
4CX1500A	12-1-71
4CX1500B/8660	6-1-67
4CX3000A/8169	5-1-67
4CX5000A/8170	4-15-69
4CX5000J/8909	10-1-71
4CX5000R/8170W	4-15-71
4CX10,000D/8171	1-1-72
4CX10,000J	2-1-72
4CX15,000A/8281	12-15-73
4CX15,000J/8910	10-15-71
4CX35,000C/8349	12-1-70
4W300B/8249	11-1-73
4X150A/7034 & 7609	8-1-74
4X150G/8172	10-15-73
4X500A	1-1-64
6816,6884,7843	11-15-71
7609	see 4X150A/7034
8560A	7-15-71
8876	6-15-71
8930	12-1-73
8954	6-1-74
8959	11-1-74
X2159	7-1-73

PENTODES

5-125B/4E27A	8-15-52
5-500A	5-1-68
5CX1500A	6-6-70
5CX3000A	8-1-67
264/8576	6-5-70
290	5-5-70
8295A	1-15-73

PULSE MODULATORS

4PR60C/8252W	6-30-71
4PR65A/8187	2-15-63
4PR125A/8247	3-15-64
4PR250C/8248	9-1-70
4PR400A/8188	9-15-65
4PR1000A/8189	12-15-65
6C21	12-15-65

OTHER PRODUCTS

VS-2, 4, 5 & 6	4-4-70
Preformed Contact Finger Stock	6-15-71
HR Heat Dissipating Connectors	12-1-65
SK-300A	4-15-69
SK-306, SK-316	8-15-66
SK-400	4-1-56
SK-406, SK-416, SK-426	12-1-73
SK-410	12-1-73
SK-500	3-15-67
SK-506, SK-516	4-15-69
SK-510	3-15-75
SK-600A, SK-610A	11-1-74
SK-606, SK-626, SK-636B, SK-646	11-1-74
SK-607	8-15-71

(Cont'd)

OTHER PRODUCTS

SK-620, SK-620A	7-1-75
SK-630, SK-630A	3-15-67
SK-640	7-1-75
SK-650, SK-655	1-15-66
SK-700, SK-710	10-15-66
SK-711A, SK-712A	3-15-71
SK-740	8-15-66
SK-760, SK-770	7-15-75
SK-800B, SK-806	4-9-64
SK-810B, SK-806	6-1-67
SK-816, SK-860, SK-870	3-25-75
SK-890B, SK-806	6-1-67
SK-900, SK-906	8-15-66
SK-1300, SK-1310, SK-1320	3-1-72
SK-1306, SK-1406	8-15-66
SK-1400A, SK-1470A	10-15-66
SK-2200, SK-2210	8-15-72



DIVISION OF VARIAN
301 Industrial Way
San Carlos, California
94070

INDEX

9-1-75

Printed in U.S.A.

100TH	T
100TL	T
152TH	T
152TL	T
1000T	T
1500T	T
250R	R
250TH	T
250TL	T
253	R
264/8576	PE
290	PE
2000T	T
2-01C	D
2-450A	R
2-2000A	R
2C39A see 7289	PL
35T	T
35TG	T
304TH	T
304TL	T
3-200A3 see 592	T
3-400Z/8163	T
3-500Z	T
3-1000Z/8164	T
3C24	T
3CV1500A7	T
3CV30,000A3	T
3CV30,000H3	T
3CW5000A1/8240	T
3CW5000A3/8242	T
3CW5000F1/8241	T
3CW5000F3/8243	T
3CW5000H3	T
3CW10,000H3	T
3CW20,000A1	T
3CW20,000A3	T
3CW20,000A7	T
3CW20,000H3	T
3CW20,000H7	T
3CW30,000H3	T
3CW30,000H7	T
3CW40,000H3	T
3CX100A5 see 7289	PL
3CX400U7	T
3CX1000A7/8283	T
3CX1500A7/8877	T
3CX2500A3/8161	T
3CX2500F3/8251	T
3CX2500H3	T
3CX3000A1/8238	T
3CX3000A7	T
3CX3000F1/8239	T
3CX3000F7/8162	T
3CX5000H3	T
3CX10,000A1/8158	T
3CX10,000A3/8159	T
3CX10,000A7/8160	T
3CX10,000H3	T
3CX15,000A3	T
3CX15,000A7	T
3CX15,000H3	T
3CX20,000A3	T
3CX20,000A7	T
3CX20,000H3	T
3W5000F3/8243	T
450TH	T
450TL	T
4-65A/8165	TET
4-125A/4D21	TET
4-250A/5D22	TET
4-400A/8438	TET
4-400C/6775	TET
4-500A	TET
4-1000A/8166	TET
4CN15A	TET
4CPX250K/8590	TET
4CS250R	TET
4CV800A	TET
4CV20,000A	TET
4CV35,000A	TET
4CV50,000E	TET
4CV50,000J	TET
4CV100,000C/8351	TET
4CV250,000A	TET
4CW800B	TET
4CW800F see 4CW800B	TET
4CW2000A/8244	TET
4CW10,000A	TET
4CW25,000A	TET
4CW50,000E	TET
4CW50,000J	TET
4CW100,000D	TET
4CW100,000E	TET
4CW250,000A	TET
4CX125C	TET
4CX125F see 4CX125C	TET
4CX250B/7203 & 4CX250FG/8621	TET
4CX250BC/8957	TET
4CX250K/8245	TET
4CX250M/8246	TET
4CX250R/7580W	TET
4CX300A/8167	TET
4CX300Y/8561	TET
4CX350A/8321	TET
4CX350F/8322	TET
4CX350FJ/8904	TET
4CX600B	TET
4CX600F see 4CX600B	TET
4CX600J/8809	TET
4CX600JA/8921 see 4CX600J	TET
4CX1000A/8168	TET
4CX1000K/8352	TET
4CX1500A	TET
4CX1500B/8660	TET
4CX3000A/8169	TET
4CX5000A/8170	TET
4CX5000J/8909	TET
4CX5000R/8170W	TET
4CX10,000D/8171	TET
4CX10,000J	TET
4CX15,000A/8281	TET
4CX15,000J/8910	TET
4CX35,000C/8349	TET
4D21 see 4-125A	TET
4E27A see 5-125B	PE
4PR60C/8252W	PM
4PR65A/8187	PM
4PR125A/8247	PM
4PR250C/8248	PM
4PR400A/8188	PM
4PR1000A/8189	PM
4W300B/8249	TET
4X150A/7034 see 7609	TET
4X150G/8172	TET
4X500A	TET
575A	R
592/3-200A3	T
5867A	T
5-125B/4E27A	PE
5-500A	PE
5CX1500A	PE
5CX3000A	PE
5D22 see 4-250A	TET
673 see 575A	R
6696A	T
6697A	T
6775 see 4-400C	TET
6816	TET
6884 see 6816	TET
6894	R
6895 see 6894	R
6C21	PM
75TH	T
75TL	T
750TL	T
7034 see 4X150A	TET
7035 see 4X150A/D	TET
7203 see 4CX250B	TET
7204 see 4CX250B/F	TET

D - Diode
PE - Pentode
PL - Planar Triode
PM - Pulse Modulator
OP - Other Products
R - Rectifier
T - Triode
TET - Tetrode

7211	PL
7289/3CX100A5	PL
7480	T
7580W see 4CX250R	TET
7609 see 4X150A/7034	TET
7698	PL
7815/7815R	PL
7815AL/7815RAL	PL
7815R see 7815	PL
7815RAL see 7815AL	PL
7843	TET
7855/7855K	PL
7855AL/7855KAL	PL
7855K see 7855	PL
7855KAL see 7855AL	PL
869B	R
869BL see 869B	R
8020	R
8158 see 3CX10,000A1	T
8159 see 3CX10,000A3	T
8160 see 3CX10,000A7	T
8161 see 3CX2500A3	T
8162 see 3CX3000F7	T
8163 see 3-400Z	T
8164 see 3-1000Z	T
8165 see 4-65A	TET
8166 see 4-1000A	TET
8167 see 4CX300A	TET
8168 see 4CX1000A	TET
8169 see 4CX3000A	TET
8170 see 4CX5000A	TET
8170W see 4CX5000R	TET
8171 see 4CX10,000D	TET
8172 see 4X150G	TET
8173 see 4W20,000A	TET
8187 see 4PR65A	PM
8188 see 4PR400A	PM
8189 see 4PR1000A	PM
8238 see 3CX3000A1	T
8239 see 3CX3000F1	T
8240 see 3CW5000A1	T
8241 see 3CW5000A1/F1	T
8242 see 3CW5000A3	T
8244 see 4CW2000A	TET
8245 see 4CX250K	TET
8246 see 4CX250K/M	TET
8247 see 4PR125A	PM
8248 see 4PR250C	PM
8249 see 4W300B	TET
8251 see 3CX2500F3	T
8252W see 4PR60C	PM
8281 see 4CX15,000A	TET
8283 see 3CX1000A7	T
8295A	PE
8321 see 4CX350A	TET
8322 see 4CX350A/F	TET
8349 see 4CX35,000C	TET
8351 see 4CV100,000C	TET
8352 see 4CX1000K	TET
8403	PL
8438 see 4-400A	TET
8533	PL
8560A	TET
8561 see 4CX300Y	TET
8576 see 264	PE
8590 see 4CPX250K	TET
8660 see 4CX1500B	TET
8661 see 4CW10,000A	TET
8755	PL
8755A see 8755	PL
8757	PL
8809 see 4CX600J	TET
8847	PL
8847A see 8847	PL
8873	T
8874 see 8873	T
8875 see 8873	T
8876	TET
8877 see 3CX1500A7	T
8892	PL
8893	PL
8904 see 4CX350FJ	TET
8906	PL
8906AL/Y572AL	PL
8907 see 8906	PL
8909 see 4CX5000J	TET
8910 see 4CX15,000J	TET
8911	PL
8912	PL
8921 see 4CX600J/JA	TET
8930	TET
8933	PL
8938	T
8954	TET
8959	TET
8963	T
Contact Finger Stock (Preformed)	OP
HR Heat Dissipating Connectors	OP
SK-300A	OP
SK-306	OP
SK-316 see SK-306	OP
SK-400	OP
SK-406	OP
SK-410	OP
SK-416 see SK-406	OP
SK-426 see SK-406	OP
SK-500	OP
SK-506	OP
SK-510	OP
SK-516 see SK-506	OP
SK-600A	OP
SK-606	OP
SK-607	OP
SK-610 see SK-600A	OP
SK-620	OP
SK-620A see SK-620	OP
SK-626 see SK-606	OP
SK-630	OP
SK-630A see SK-630	OP
SK-636B see SK-606	OP
SK-640	OP
SK-646 see SK-606	OP
SK-650	OP
SK-655 see SK-650	OP
SK-700	OP
SK-710 see SK-700	OP
SK-711A	OP
SK-712A see SK-711A	OP
SK-740	OP
SK-760	OP
SK-770 see SK-760	OP
SK-800B	OP
SK-806 see SK-800B	OP
SK-810B	OP
SK-816	OP
SK-860 see SK-816	OP
SK-870 see SK-816	OP
SK-890B	OP
SK-900	OP
SK-906 see SK-900	OP
SK-1300	OP
SK-1306	OP
SK-1310 see SK-1300	OP
SK-1320 see SK-1300	OP
SK-1400A	OP
SK-1406 see SK-1306	OP
SK-1470A see SK-1400A	OP
SK-2200	OP
SK-2210 see SK-2200	OP
VS-2, 4, 5 & 6	OP
X-2159	TET
Y572AL see 8906AL	PL

D - Diode
PE - Pentode
PL - Planar Triode
PM - Pulse Modulator
OP - Other Products
R - Rectifier
T - Triode
TET - Tetrode

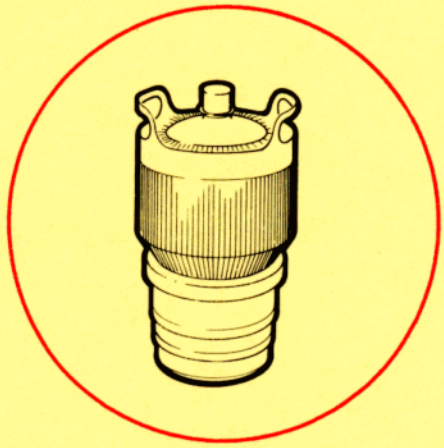

tetrodes

EIMAC division of Varian
Main office: 301 Industrial Way, San Carlos, CA 94070

Look in the general section for–

A quick guide to EIMAC products and services offered in this catalog.

Including . . .

- Your nearest distributor of modern, fully guaranteed EIMAC electron tubes and accessories.
- Your nearest Varian/EIMAC Field Engineer, who stands ready to give you immediate engineering assistance, information on deliveries and prices, or to provide other information not found in this catalog.
- EIMAC tube type numbering system.
- EIMAC/JEDEC cross-reference list.

Important EIMAC extras...

APPLICATION ENGINEERING. The EIMAC Application Engineering Department is available at all times for consultation. New tube operating techniques are continually being explored, tested and proven by EIMAC engineers, whose combined knowledge and experience are at your service. EIMAC Application Bulletins covering various uses of EIMAC products are available upon request.

FIELD ENGINEERING. Serving as an extension of the Varian/EIMAC Application Engineering Department outside the EIMAC Division plant, the Field Engineers cover the United States, and numerous foreign countries, operating out of offices in major cities. They will help you personally with experimental work, circuits, technique, etc. Engineers from the EIMAC plant are available, too, for field consultation. As EIMAC tubes are world renowned, the same services extend to countries overseas through the Varian/EIMAC export operations and overseas offices.

8165
4-65A

RADIAL-BEAM
POWER TETRODE

MODULATOR
OSCILLATOR
AMPLIFIER

TECHNICAL DATA

The Eimac 8165/4-65A is a small radial-beam tetrode with a maximum plate-dissipation rating of 65 watts. In most applications, no forced air is required, normal radiation and convection cooling being adequate. An instant-heating, thoriated tungsten filament is employed, allowing all electrode voltages to be applied simultaneously and permitting the conservation of power during standby periods. The 8165/4-65A is, therefore, a good choice for many mobile applications.

Short, heavy leads and low interelectrode capacities assure stable, efficient operation at high frequencies and permit its use at maximum ratings through 150 megacycles. The 8165/4-65A is equally useful in audio-amplifier or modulator service.



GENERAL CHARACTERISTICS

ELECTRICAL

	Min.	Nom.	Max.	
Filament: Thoriated Tungsten				
Voltage		6.0		volts
Current	3.2		3.8	amperes
Grid-Screen Amplification Factor	5		7	
Direct Interelectrode Capacitances:				
Grid-Plate			0.12	uuf
Input	6.0		8.3	uuf
Output	1.9		2.6	uuf
Frequency for Maximum Ratings			150	mc

MECHANICAL

Base	5-pin—National HX-29 or Johnson 122-101
Maximum Seal Temperature	200° C
Maximum Envelope Temperature	225° C
Recommended Socket Operating Position	Vertical, base down or up
Cooling	Convection and radiation
Recommended Heat Dissipating Connector	Eimac HR-6
Maximum Over-all Dimensions	
Length	4.19 inches
Diameter	2.38 inches
Net Weight	3 ounces
Shipping Weight (Approximate)	1.5 pounds

RADIO-FREQUENCY POWER AMPLIFIER OR OSCILLATOR

Class-C Telegraphy or FM Telephony

MAXIMUM RATINGS (Key-down conditions)

D-C PLATE VOLTAGE	3000 MAX. VOLTS
D-C SCREEN VOLTAGE	400 MAX. VOLTS
D-C GRID VOLTAGE	—500 MAX. VOLTS
D-C PLATE CURRENT	150 MAX. MA
PLATE DISSIPATION	65 MAX. WATTS
SCREEN DISSIPATION	10 MAX. WATTS
GRID DISSIPATION	5 MAX. WATTS

TYPICAL OPERATION (Frequencies up to 150 megacycles)

D-C Plate Voltage	1500	2000	2500	3000 volts
D-C Screen Voltage	250	250	250	250 volts
D-C Grid Voltage	—105	—105	—105	—105 volts
D-C Plate Current	150	137	124	112 ma
D-C Screen Current*	39	32	26	22 ma
D-C Grid Current*	19	15	13	9 ma
Peak R-F Grid Voltage*	205	195	185	175 volts
Driving Power*	3.9	2.9	2.4	1.6 watts
Plate Input Power	225	275	310	335 watts
Plate Output Power	160	210	245	270 watts

*Approximate values

PLATE-MODULATED RADIO-FREQUENCY AMPLIFIER

Class-C Telephony

MAXIMUM RATINGS (Carrier conditions)

D-C PLATE VOLTAGE	2500 MAX. VOLTS
D-C SCREEN VOLTAGE	400 MAX. VOLTS
D-C GRID VOLTAGE	—500 MAX. VOLTS
D-C PLATE CURRENT	120 MAX. MA
PLATE DISSIPATION	45 MAX. WATTS
SCREEN DISSIPATION	10 MAX. WATTS
GRID DISSIPATION	5 MAX. WATTS

TYPICAL OPERATION (Frequencies up to 150 megacycles)

D-C Plate Voltage	1000	1500	2000	2500 volts
D-C Screen Voltage	250	250	250	250 volts
D-C Grid Voltage	—150	—150	—150	—150 volts
D-C Plate Current	120	120	113	102 ma
D-C Screen Current*	40	40	37	26 ma
D-C Grid Current*	20	20	18	13 ma
Peak R-F Voltage*	255	255	250	235 volts
Driving Power*	5.1	5.1	4.8	3.1 watts
Plate Input Power	120	180	226	255 watts
Plate Output Power	85	140	182	210 watts

*Approximate values

(Effective 5-1-62) Copyright 1961 by Eitel-McCullough, Inc.

AUDIO FREQUENCY POWER AMPLIFIER OR MODULATOR

Class-AB_1

MAXIMUM RATINGS

D-C PLATE VOLTAGE	3000 MAX. VOLTS
D-C SCREEN VOLTAGE	600 MAX. VOLTS
D-C PLATE CURRENT	150 MAX. MA
PLATE DISSIPATION	65 MAX. WATTS
SCREEN DISSIPATION	10 MAX. WATTS

RADIO-FREQUENCY SSB POWER AMPLIFIER

Class-AB_1

MAXIMUM RATINGS

D-C PLATE VOLTAGE	3000 MAX. VOLTS
D-C SCREEN VOLTAGE	600 MAX. VOLTS
D-C PLATE CURRENT	150 MAX. MA
PLATE DISSSIPATION	65 MAX. WATTS
SCREEN DISSIPATION	10 MAX. WATTS

TYPICAL OPERATION

Class-AB_1 (Sinusoidal wave, two tubes except where noted)

D-C Plate Voltage	1500	2000	2500	3000 volts
D-C Screen Voltage	500	500	400	400 volts
D-C Grid Voltage[1]	—90	—105	—85	—90 volts
Zero-Signal D-C Plate Current	60	40	30	30 ma
Max.-Signal D-C Plate Current	166	150	132	120 ma
Max.-Signal D-C Screen Current*	10	6	6	6 ma
Peak A-F Grid Voltage (per tube)*	70	80	77	77 volts
Effective Plate-to-Plate Load	13,300	24,000	37,500	50,000 ohms
Max.-Signal Plate Input Power	250	300	330	360 watts
Max.-Signal Plate Output Power	120	170	200	240 watts

[1]Adjust to obtain listed zero-signal d-c plate current.
*Approximate values.

TYPICAL OPERATION

Class-AB1 (Frequencies to 150 megacycles)

D-C Plate Voltage	1500	2000	2500	3000 volts
D-C Screen Voltage	500	500	400	400 volts
D-C Grid Voltage[1]	—90	—105	—85	—90 volts
Zero-Signal D-C Plate Current	30	20	15	15 ma
Max.-Signal D-C Plate Current	83	75	66	60 ma
Max.-Signal D-C Screen Current*	5	3	3	3 ma
Peak R-F Grid Voltage*	70	80	77	77 volts
Max.-Signal Plate Input Power	125	150	165	180 watts
Max.-Signal Plate Output Power	60	85	100	120 watts

[1]Adjust to obtain listed zero-signal d-c plate current.
*Approximate Values.

NOTE: "TYPICAL OPERATION" data are obtained by calculation from published characteristic curves and confirmed by direct tests. No allowance for circuit losses, either input or output, has been made.

In class-C operation, adjustment of the r-f grid drive to obtain listed plate current at the listed grid bias, screen voltage, and plate voltage is assumed. Resultant screen and grid currents will vary from tube to tube, but little change in output power will be noted.

In class-AB_1 linear operation, screen current will also vary from tube to tube but is a useful indicator of relative linearity. In general, less screen current means better linearity, providing other conditions are held constant. The same degree of linearity will be obtained from different tubes if loading and drive are adjusted to give the same plate and screen current, although output power may vary from tube to tube.

APPLICATION

MECHANICAL

Mounting—The 4-65A must be operated vertically, base up or base down. The socket must provide clearance for the glass tip-off which extends from the center of the base. A flexible connecting strap should be provided between the plate terminal and the external plate circuit, and the Eimac HR-6 connector (or equivalent) used on the tube plate lead. The socket must not apply lateral pressure against the base pins. The tube must be protected from severe vibration and shock.

Adequate ventilation must be provided so that the seals and/or envelope under operating conditions do not exceed their rated maximum temperatures. For operation above 50 Mc. the plate voltage should be reduced, or special attention should be given to seal cooling.

When the ambient temperature does not exceed 30° C it will not ordinarily be necessary to provide forced-air cooling of the envelope or plate seal at frequencies below 50 Mc. provided that a heat-radiating plate connector is used and the tube is so located that normal circulation of air past the envelope is not impeded.

ELECTRICAL

Filament Voltage—The filament voltage, as measured at the filament pins, should be 6.0 volts. For long life, excursions from this value should not exceed ± 5 percent.

Bias Voltage—D-C bias voltage for the 4-65A should not exceed —500 volts. If grid-leak bias is used, suitable protective means must be provided to prevent excessive plate or screen dissipation in the event of loss of excitation.

Screen Voltage—The d-c screen voltage for the 4-65A should not exceed 400 volts except in the case of class-AB audio operation and Single-Side-Band r-f amplifier operation where it should not exceed 600 volts.

Screen Dissipation—The power dissipated by the screen of the 4-65A must not exceed 10 watts. Screen dissipation is likely to rise to excessive values when the plate voltage, bias voltage or plate load is removed with filament and screen voltages applied. Suitable protective means must be provided to limit screen dissipation to 10 watts in the event of circuit failure.

Plate Voltage—The plate-supply voltage for the 4-65A should not exceed 3000 volts. Above 50 Mc. it is advisable to use a lower plate voltage than the maximum, since the seal heating due to r-f charging currents in the screen leads increases with plate voltage and frequency. See instructions on seal cooling under "Mechanical" and "Shielding."

Plate Dissipation—Under normal operating conditions, the plate dissipation of the 4-65A should not be allowed to exceed 65 watts in unmodulated applications.

In high-level-modulated amplifier applications, the maximum allowable carrier-condition plate dissipation is 45 watts.

Plate dissipation in excess of the maximum rating is permissable for short periods of time, such as during tuning procedures.

OPERATION

Class-C FM or Telegraphy—The 4-65A may be operated as a class-C FM or telegraphy amplifier without

neutralization up to 110 Mc. if reasonable precautions are taken to prevent coupling between input and output circuits external to the tube. In single-ended circuits, plate, grid, filament, and screen by-pass capacitors should be returned through the shortest possible leads and short, heavy leads should be used to inter-connect the screens and filaments of the two tubes. Care should be taken to prevent leakage of radio-frequency energy to leads entering the amplifier in order to minimize grid-plate coupling between these leads external to the amplifier.

Where shielding is adequate, the feedback at frequencies above 110 Mc. is due principally to screen-lead-inductance effects and it becomes necessary to introduce in-phase voltage from the plate circuit into the grid cricuit. This can be done by adding capacitance between plate and grid external to the tube. Ordinarily, a small metal tab approximately ¾" square and located adjacent to the envelope opposite the plate will suffice for neutralization. Means should be provided for adjusting the spacing between the neutralizing capacitor plate and the envelope. An alternate neutralization scheme for use above 110 Mc. is illustrated in the diagram shown below. In this circuit, feedback is eliminated by series-tuning the screen to ground with a small capacitor. The socket screen terminals should be strapped together as shown on the diagram, by the shortest possible lead, and the lead from the mid point of this screen strap to the capacitor, C, and from the capacitor to ground should be made as short as possible.

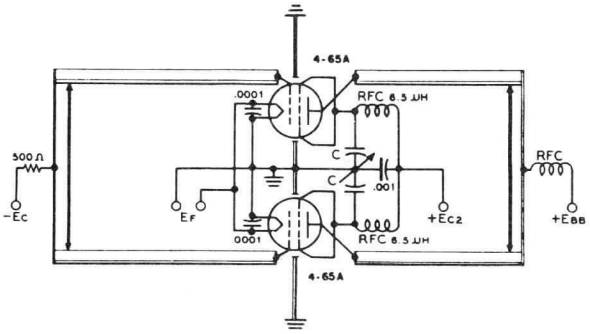

Screen-tuning neutralization circuit for use above 100 Mc. C is a small split-stator capacitor.

$$C(\mu\mu fd) = \frac{640{,}000}{f^2\ (Mc.)}\text{, approx.}$$

Typical driving power and output power versus frequency are shown below. The output power shown is the actual plate power delivered by the tube; the power delivered to the load will depend upon the efficiency of the plate tank and output coupling system. The driving power is likewise the driving power required by the tube (includes bias loss). The driver output should exceed the driving power requirements by a sufficient margin to allow for coupling-circuit losses. The use of silver-plated linear tank-circuit elements is recommended at frequencies above 75 Mc.

Class-C AM Telephony—The r-f circuit considerations discussed above under class-C FM or telegraphy also apply to amplitude-modulated operation of the 4-65A. When the 4-65A is used as a class-C high-level-modulated amplifier, both the plate and screen

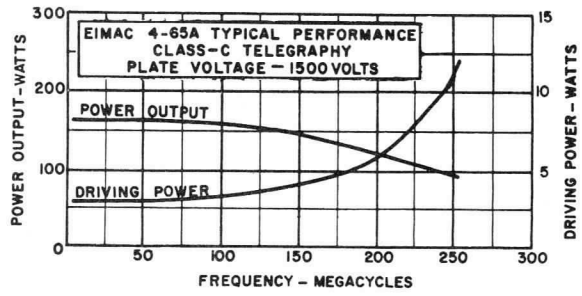

should be modulated. Modulation voltage for the screen may be obtained by supplying the screen voltage through a series dropping resistor from the unmodulated plate supply, or by the use of an audio-frequency reactor in the positive screen-supply lead, or from a separate winding on the modulation transformer. When screen modulation is obtained by either the series-resistor or the audio-reactor methods, the audio-frequency variations in screen current, which result from the variations in plate voltage as the plate is modulated, automatically give the required screen modulation. Where a reactor is used, it should have a rated inductance of not less than 10 henries divided by the number of tubes in the modulated amplifier and a maximum current rating of two to three times the operating d-c screen current. To prevent phase-shift between the screen and plate modulation voltages at high audio frequencies, the screen by-pass capacitor should be no larger than necessary for adequate r-f by-passing.

For high-level modulated service, the use of partial grid-leak bias is recommended. Any by-pass capacitors placed across the grid-leak resistance should have a reactance at the highest modulation frequency equal to at least twice the grid-leak resistance.

Class-AB$_1$ and Class-AB$_2$ Audio—Two 4-65As may be used in a push-pull circuit to give relatively high audio output power at low distortion. Maximum ratings and typical operating conditions for class-AB$_1$ audio operation are given in the tabulated data.

Screen voltage should be obtained from a source having good regulation, to prevent variations in screen voltage from zero-signal to maximum-signal conditions. The use of voltage-regulator tubes in a standard circuit should provide adequate regulation.

Grid-bias voltage for class-AB$_2$ service may be obtained from batteries or from a small fixed-bias supply. When a bias supply is used, the d-c resistance of the bias source should not exceed 250 ohms. Under class-AB$_1$ conditions the effective grid-circuit resistance should not exceed 250,000 ohms.

In some cases the maximum-signal plate dissipation shown under "Typical Operation" is less than the maximum rated plate dissipation of 4-65A. In these cases, with sine-wave modulation, the plate dissipation reaches a maximum value, equal to the maximum rating, at a point somewhat below maximum-signal conditions.

The output-power figures given in the tabulated data refer to the total output power from the amplifier tubes. The useful output power will be from 5 to 15 percent less than the figure shown, due to losses in the output transformer.

Shielding—The internal feedback of the tetrode has been substantially eliminated and in order to fully utilize this advantage, it is essential that the design of the equipment completely eliminate any feedback external to the tube. This means complete shielding of the output cricuit from the input circuit and earlier stages, proper reduction to low values of the inductance of the screen lead to the r-f ground, and elimination of r-f feedback in any common power-supply leads.

Complete shielding is easily achieved by mounting the socket of the tube flush with the deck of the chassis as shown in the sketch shown at the right.

The holes in the socket permit the flow of convection air currents from below the chassis up past the seals in the base of the tube. This flow of air is essential to cool the tube and in cases where the complete under-part of the chassis is enclosed for electrical shielding, screened holes or louvers should be provided to permit air circulation. Note that shielding is completed by aligning the internal screen shield with the chassis deck and by proper r-f by-passing of the screen leads to r-f ground. The plate and output circuits should be kept above deck and the input circuit and circuits of earlier stages should be kept below deck or completely shielded.

Special Applications—If it is desired to operate this tube under conditions widely different from those given here, write to Power Grid Tube Marketing, Eitel-McCullough, Inc., 301 Industrial Way, San Carlos, California, for information and recommendations. Copies of characteristic curves, either constant-grid-voltage or constant-current, for various screen potentials may be obtained from this department on request.

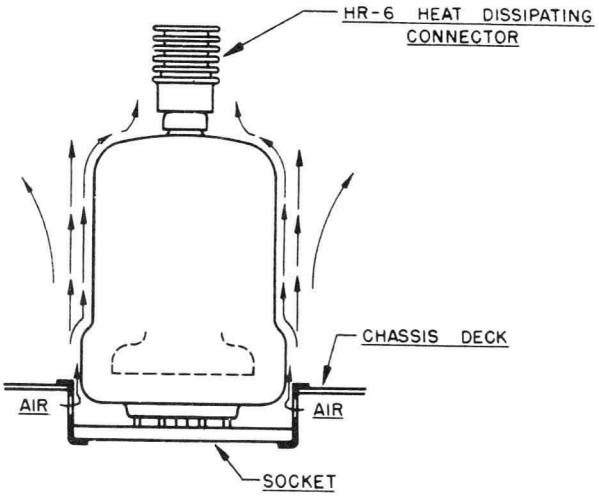

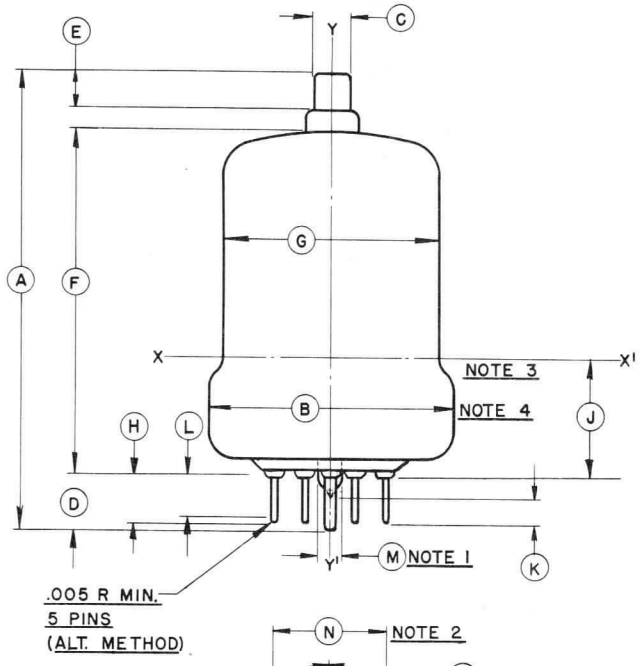

DIMENSION DATA			
REF.	NOM.	MIN.	MAX.
A		4	4 3/16
B			2 3/8
C		.350	.365
D		7/16	9/16
E		21/64	
F		2 15/16	3 5/16
G			2 1/8
H		3/8	1/2
J		.844	1.219
K		.000	
L		5/16	
M			3/8
N	1.000		
P	102°		
R	52°		
S		.122 DIA.	.128 DIA.
T		.055 DIA.	.061 DIA.

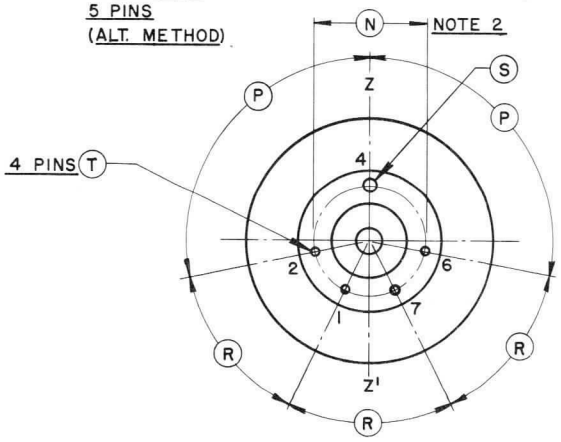

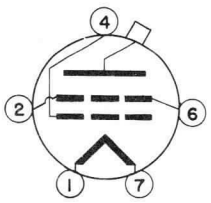

ALL DIMENSIONS IN INCHES.

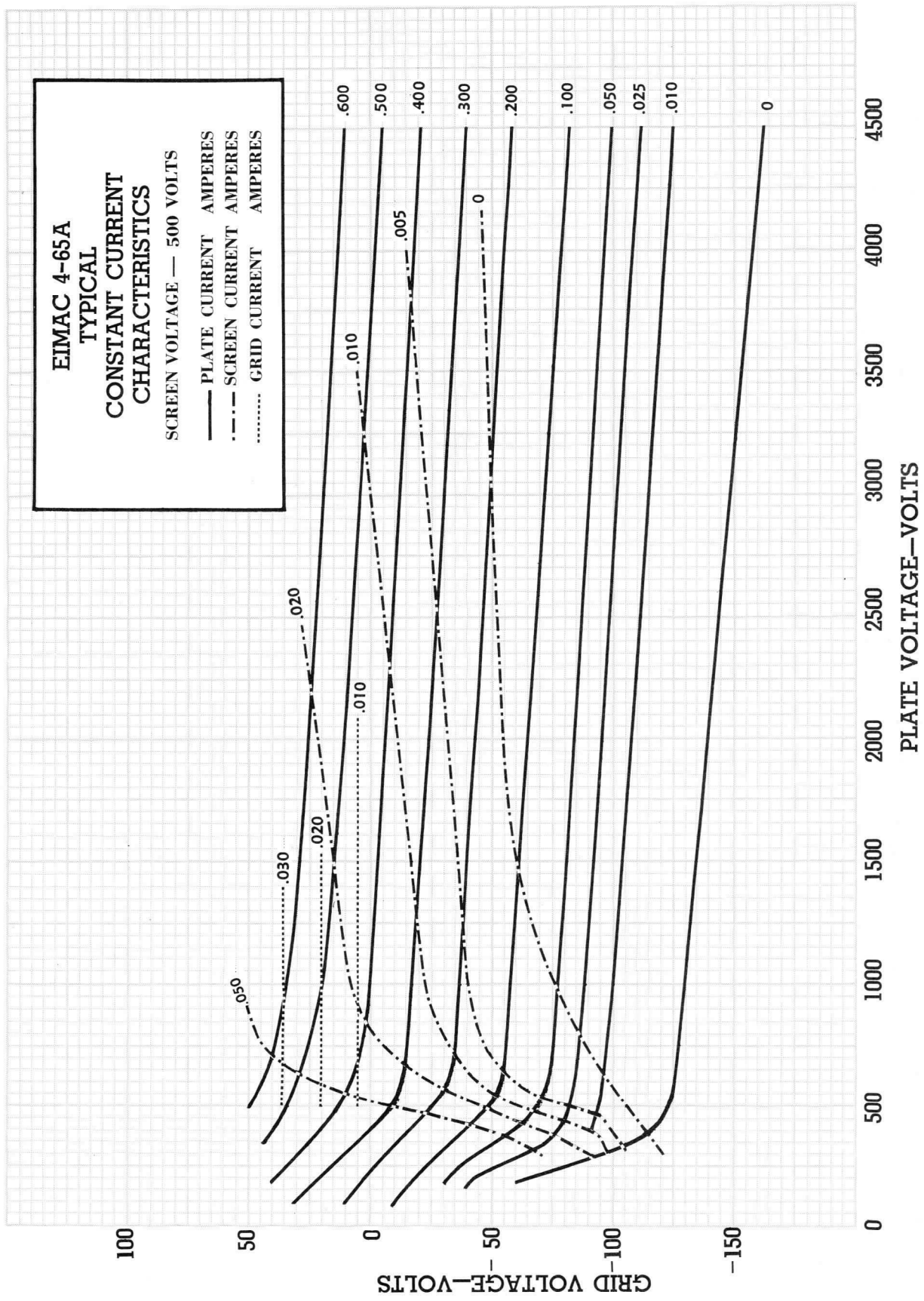
EIMAC 4-65A
TYPICAL
CONSTANT CURRENT
CHARACTERISTICS
SCREEN VOLTAGE — 500 VOLTS
PLATE CURRENT AMPERES
SCREEN CURRENT AMPERES
GRID CURRENT AMPERES
.600
.500
.400
.300
.200
.100
.050
.025
.010
0
.005
.010
.020
.030
.050
.020
.010
0
100
50
0
− 50
−100
−150
GRID VOLTAGE—VOLTS
0
500
1000
1500
2000
2500
3000
3500
4000
4500
PLATE VOLTAGE—VOLTS

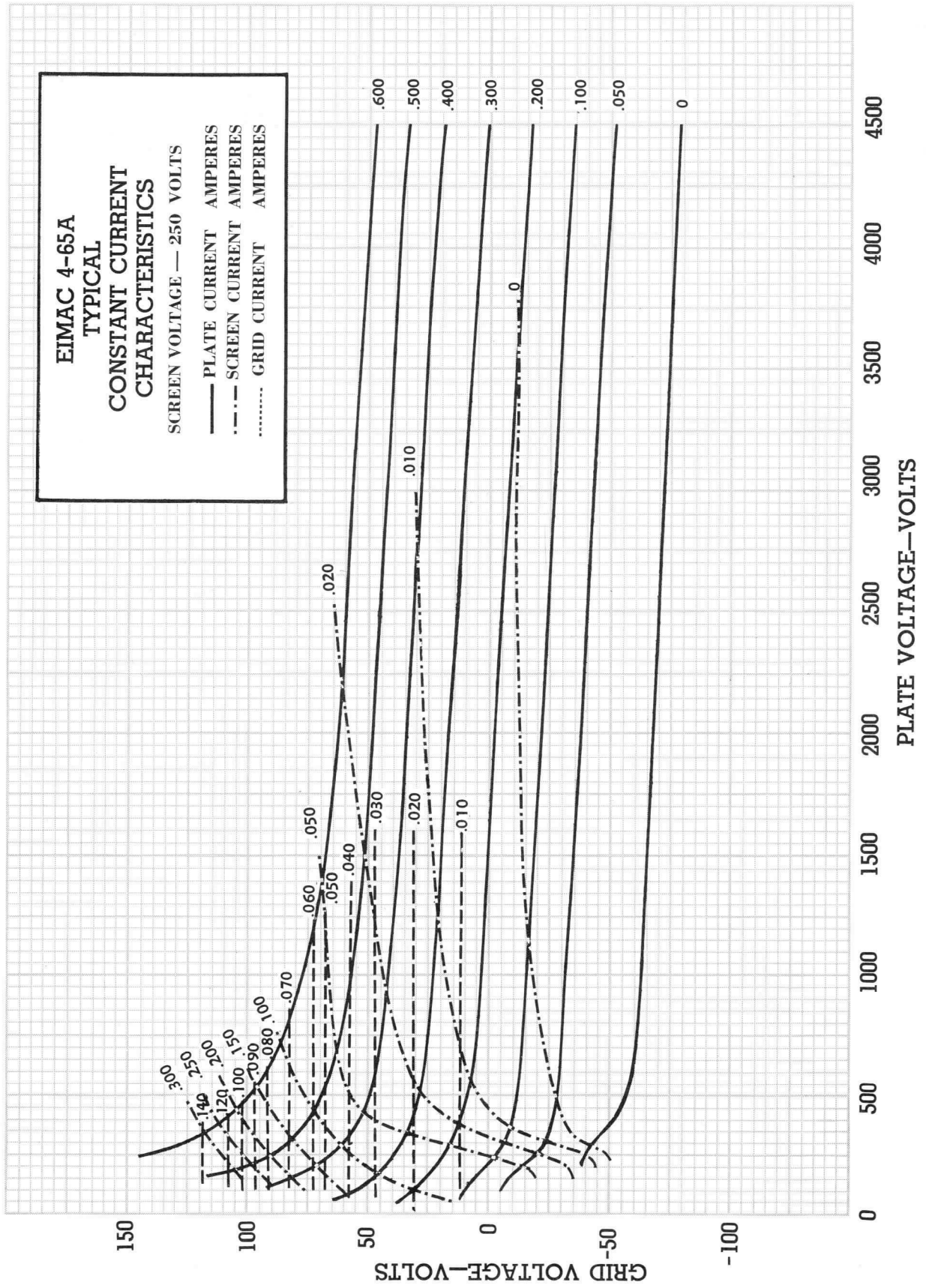

Printed in USA

4-125A

(4D21)
RADIAL-BEAM POWER TETRODE

•

MODULATOR
OSCILLATOR
AMPLIFIER

TECHNICAL DATA

The EIMAC 4-125A is a radial-beam power tetrode intended for use as an amplifier, oscillator, or modulator. It has a maximum plate-dissipation rating of 125 watts and a maximum plate-voltage rating of 3000 volts at frequencies up to 120 MHz.

The low grid-plate capacitance of this tetrode together with its low driving-power requirement allows considerable simplification of the associated circuit and driver stage.

Cooling is by radiation from the plate and by air circulation through the base and around the envelope.

The 4-125A in class-C rf service will deliver up to 375 watts plate power output with 1.2 watts nominal driving power.



GENERAL CHARACTERISTICS

ELECTRICAL

Filament: Thoriated Tungsten		
Voltage	5.0	volts
Current	6.5	amperes
Grid-Screen Amplification Factor (Average)	5.9	
Direct Interelectrode Capacitances (Average)		
Grid-Plate	0.05	pF
Input	10.8	pF
Output	3.1	pF
Transconductance (I_b=50 mA, E_b=2500 V, E_{c2}=400 V)	2450	μmhos
Highest Frequency for Maximum Ratings	120	MHz

MECHANICAL

Base	5-pin metal shell
Basing	See outline drawing
Socket	E. F. Johnson Co. socket No. 122-275, National Co. No.HX-100, or equivalent
Mounting Position	Vertical, base down or up
Cooling	Radiation and forced air
Recommended Heat-Dissipating Plate Connector	EIMAC HR-6
Maximum Over-all Dimensions:	
Length	5.69 inches
Diameter	2.1 inches
Net Weight	6.5 ounces
Shipping Weight	1.5 pounds

(Revised 6-1-67) © 1958, 1967 by Varian

Printed in U.S.A.

RADIO-FREQUENCY POWER AMPLIFIER AND OSCILLATOR

Class-C Telegraphy or FM Telephony
(Key-down condition, 1 tube)

MAXIMUM RATINGS

DC Plate Voltage[1]	3000 volts
DC Screen Voltage	400 volts
DC Grid Voltage	−500 watts
DC Plate Current	225 mA
Plate Dissipation	125 watts
Screen Dissipation	20 watts
Grid Dissipation	5 watts

TYPICAL OPERATION

(Frequencies below 120 MHz)

DC Plate Voltage	2000	2500	3000	volts
DC Screen Voltage	350	350	350	volts
DC Grid Voltage	−100	−150	−150	volts
DC Plate Current	200	200	167	mA
DC Screen Current	50	40	30	mA
DC Grid Current	12	12	9	mA
Screen Dissipation	18	14	10.5	watts
Grid Dissipation	1.6	2	1.2	watts
Peak RF Grid Input Voltage (approx.)	230	320	280	volts
Driving Power (approx.)[3]	2.8	3.8	2.5	watts
Plate Power Input	400	500	500	watts
Plate Dissipation	125	125	125	watts
Plate Power Output	275	375	375	watts

AUDIO-FREQUENCY POWER AMPLIFIER AND MODULATOR

Class-AB_1

MAXIMUM RATINGS

DC Plate Voltage	3000 volts
DC Screen Voltage	600 volts
Max-Signal DC Plate Current, per Tube	225 mA
Plate Dissipation, per Tube	125 watts
Screen Dissipation, per Tube	20 watts

TYPICAL OPERATION

(Sinusoidal wave, two tubes unless otherwise specified)

DC Plate Voltage	1500	2000	2500	volts
DC Screen Voltage	600	600	600	volts
DC Grid Voltage[2]	−90	−94	−96	volts
Zero-Signal DC Plate Current	60	50	50	mA
Max-Signal DC Plate Current	222	240	232	mA
Zero-Signal DC Screen Current	−1.0	−0.5	−0.3	mA
Max-Signal DC Screen Current	17	6.4	8.5	mA
Effective Load, Plate-to-Plate	10,200	13,400	20,300	ohms
Peak, AF Grid Input Voltage (per tube)	90	94	96	volts
Driving Power	0	0	0	watts
Max-Signal Plate Dissipation (per tube)	87.5	125	125	watts
Max-Signal Plate Power Output	158	230	330	watts
Total Harmonic Distortion	5	2	2.6	per ct.

HIGH-LEVEL MODULATED RADIO-FREQUENCY AMPLIFIER

Class-C Telephony
(Carrier conditions unless otherwise specified, 1 tube)

MAXIMUM RATINGS

DC Plate Voltage[1]	2500 volts
DC Screen Voltage	400 volts
DC Grid Voltage	−500 watts
DC Plate Current	200 mA
Plate Dissipation	85 watts
Screen Dissipation	20 watts
Grid Dissipation	5 watts

TYPICAL OPERATION

(Frequencies below 120 MHz)

DC Plate Voltage	2000	2500	volts
DC Screen Voltage	350	350	volts
DC Grid Voltage	−220	−210	volts
DC Plate Current	150	152	mA
DC Screen Current	33	30	mA
DC Grid Current	10	9	mA
Screen Dissipation	11.5	10.5	watts
Grid Dissipation	1.6	1.4	watts
Peak AF Screen Voltage, 100% Modulation	210	210	volts
Peak RF Grid Input Voltage (approx.)	375	360	volts
Driving Power (approx.)[3]	3.8	3.3	watts
Plate Power Input	300	380	watts
Plate Dissipation	75	80	watts
Plate Power Output	225	300	watts

AUDIO-FREQUENCY POWER AMPLIFIER AND MODULATOR

Class-AB_2

MAXIMUM RATINGS

DC Plate Voltage	300 volts
DC Screen Voltage	400 volts
Max-Signal DC Plate Current, per Tube	225 mA
Plate Dissipation, per Tube	125 watts
Screen Dissipation, per Tube	20 watts

TYPICAL OPERATION

(Sinusoidal wave, two tubes unless otherwise specified)

DC Plate Voltage	1500	2000	2500	volts
DC Screen Voltage	350	350	350	volts
DC Grid Voltage	−41	−45	−43	volts
Zero-Signal DC Plate Current	87	72	93	mA
Max-Signal DC Plate Current	400	300	260	mA
Zero-Signal DC Screen Current	0	0	0	mA
Max-Signal DC Screen Current	34	5	6	mA
Effective Load, Plate-to-Plate	7200	13,600	22,200	ohms
Peak AF Grid Input Voltage (per tube)	141	105	89	volts
Max-Signal Avg. Driving Power (approx.)	2.5	1.4	1	watts
Max-Signal Peak Driving Power	5.2	3.1	2.4	watts
Max-Signal Plate Dissipation (per tube)	125	125	122	watts
Max-Signal Plate Power Output	350	350	400	watts
Total Harmonic Distortion	2.5	1	2.2	per ct.

(1) Above 120 MHz the maximum plate voltage rating depends upon frequency. See page 4.

(2) The effective grid circuit resistance for each tube must not exceed 250,000 ohms.

(3) Driving power increases above 70 MHz. See page 4.

IF IT IS DESIRED TO OPERATE THIS TUBE UNDER CONDITIONS WIDELY DIFFERENT FROM THOSE GIVEN UNDER "TYPICAL OPERATION" POSSIBLY EXCEEDING THE MAXIMUM RATINGS GIVEN FOR CW SERVICE, WRITE EIMAC DIVISION OF VARIAN ASSOCIATES, FOR INFORMATION AND RECOMMENDATIONS

APPLICATION

MECHANICAL

Mounting—The 4-125A must be mounted vertically, base down or base up. The socket must be constructed so as to allow an unimpeded flow of air through the holes in the base of the tube and must also provide clearance for the glass tip-off which extends from the center of the base. The tube should be mounted above the chassis deck to allow free circulation of air in the manner shown in the mounting diagram below. The above requirements are met by the E. F. Johnson Co. socket No. 122-275, the National Co. socket No. HX-100, or a similar socket.

A flexible connecting strap should be provided between the HR-6 Heat Dissipating Plate Connector on the plate terminal and the external circuit. The tube must be protected from severe vibration and shock.

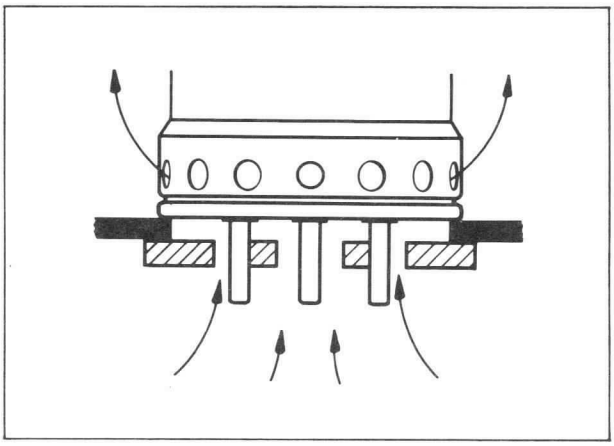

4-125A mounting providing base cooling, shielding and isolation of output and input compartments.

Cooling—Adequate cooling must be provided for the seals and envelope of the 4-125A. In continuous-service applications, the temperature of the plate seal, as measured on the top of the plate cap, should not exceed 170° C. A relatively slow movement of air past the tube is sufficient to prevent seal temperatures in excess of maximum at frequencies below 30 MHz. At frequencies above 30 MHz, radio frequency losses in the leads and envelope contribute to seal and envelope heating, and special attention should be given to cooling. A small fan or centrifugal blower directed toward the upper portion of the envelope will usually provide sufficient circulation for cooling at frequencies above 30 MHz, however.

In intermittent-service applications where the "on" time does not exceed a total of five minutes in any ten-minute period, plate seal temperatures as high as 220° C. are permissible. When the ambient temperature does not exceed 30° C. it will not ordinarily be necessary to provide forced cooling to hold the temperatures below this maximum at frequencies below 30 MHz, provided that a heat-dissipating plate connector is used, and the tube is so located that normal circulation of air past the envelope is not impeded.

Provision must be made for circulation of air through the base of the tube. Where shielding or socket design makes it impossible to allow free circulation of air through the base, it will be necessary to apply forced-air cooling to the stem structure. An air flow of two cubic feet per minute through the base will be sufficient for stem cooling.

ELECTRICAL

Filament Voltage— For maximum tube life the filament voltage, as measured directly at the filament pins, should be the rated value of 5.0 volts. Unavoidable variations in filament voltage must be kept within the range from 4.75 to 5.25 volts.

Bias Voltage— Dc bias voltage for the 4-125A should not exceed 500 volts. If grid-leak bias is used, suitable protective means must be provided to prevent excessive plate or screen dissipation in the event of loss of excitation.

Screen Voltage— The dc screen voltage for the 4-125A should not exceed 400 volts, except for class-AB audio operation.

Plate Voltage—The plate-supply voltage for the 4-125A should not exceed 3000 volts for frequencies below 120 MHz. The maximum permissible plate voltage is less than 3000 volts above 120 MHz, as shown by the graph on page 5.

Grid Dissipation—Grid dissipation for the 4-125A should not be allowed to exceed five watts. Grid dissipation may be calculated from the following expression:

$$P_g = e_{cmp} I_c$$

where P_g = Grid dissipation,
e_{cmp} = Peak positive grid voltage, and
I_c = D-c grid current.

e_{cmp} may be measured by means of a suitable peak voltmeter connected between filament and grid.

Screen Dissipation—The power dissipated by the screen of the 4-125A must not exceed 20 watts. Screen dissipation is likely to rise to excessive values when the plate voltage, bias voltage or plate load are removed with filament and screen voltages applied. Suitable protective means must be provided to limit screen dissipation to 20 watts in the event of circuit failure.

Plate Dissipation—Under normal operating conditions, the plate dissipation of the 4-125A should not be allowed to exceed 125 watts in unmodulated applications.

In high-level-modulated amplifier applications, the maximum allowable carrier-condition plate dissipation is 85 watts. The plate dissipation will rise to 125 watts under 100% sinusoidal modulation.

Plate dissipation in excess of the maximum rating is permissible for short periods of time, such as during tuning procedures.

OPERATION

Class-C Telegraphy or FM Telephony— The 4-125A may be operated as a class-C telegraph or FM telephone amplifier without neutralization up to about 30 MHz if reasonable precautions are taken to prevent coupling between input and output circuits external to the tube. A grounded metallic plate on which the socket may be mounted as shown in the mounting diagram on page three provides an effective isolating shield between grid and plate circuits. In single-ended circuits, plate, grid, filament and screen by-pass capacitors should be returned through the shortest possible leads to a common chassis point. In push-pull applications the filament and screen terminals of each tube should be by-passed to a common chassis point by the shortest possible leads, and short, heavy leads should be used to interconnect the screens and filaments of the two tubes. Care should be taken to prevent leakage of radio-frequency energy to leads entering the amplifier, to prevent grid-plate coupling between these leads external to the amplifier.

Where shielding is adequate, the feed-back at frequencies above 100 MHz is due principally to screen-lead-inductance effects, and it becomes necessary to introduce in-phase voltage from the plate circuit into the grid circuit. This can be done by adding capacitance between plate and grid external to the tube. Ordinarily, a small metal tab approximately ¾-inch square connected to the grid terminal and located adjacent to the envelope opposite the plate will suffice for neutralization. Means should be provided for adjusting the spacing between the neutralizing capacitor plate and the envelope, but care must be taken to prevent the neutralizing plate from touching the envelope. An alternative neutralization scheme is illustrated in the diagram below. In this circuit feed-back is eliminated by series-tuning the screen to ground with a small capacitor. The socket screen terminals should be strapped together, as shown on the diagram, by the shortest possible lead, and the leads from the screen terminal to the capacitor, C, and from the capacitor to ground should be made as short as possible. All connections to the screen terminals should be made to the center of the strap between the terminals, in order to equalize the current in the two screen leads and prevent overheating one of them. The value for C given under the diagram presupposes the use of the shortest possible leads.

At frequencies below 100 MHz ordinary neutralization systems may be used. With reasonably effective shielding, however, neutralization should not be required below about 30 MHz.

The driving power and power output under typical operating conditions, with maximum output and plate voltage, are shown on page 5. The power output shown is the actual plate power delivered by the tube; the power delivered to the load will depend upon the efficiency of the plate tank and output coupling system. The driving power is likewise the driving power required by the tube (includes bias loss). The driver output power should exceed the driving power requirement by a sufficient margin to allow for coupling-circuit losses. These losses will not ordinarily amount to more than 30 or 40 per cent of the driving power, except at frequencies above 150 MHz. The use of silver-plated linear tank-circuit elements is recommended at frequencies above 100 MHz.

Conventional capacitance-shortened quarter-wave linear grid tank circuits having a calculated Z_0 of 160 ohms or less may be used with the 4-125A up to 175 MHz. Above 175 MHz linear grid tank circuits employing a "capacitor"-type shortening bar, as illustrated in the diagram below, may be used. The capacitor, C_1, may consist of two silver-plated brass plates one inch square with a piece of .010 inch mica or polystyrene as insulation.

Class-C AM Telephony— The rf circuit considerations discussed above under Class-C Telegraphy or FM Telephony also apply to amplitude-modulated operation of the 4-125A. When the 4-125A is used as a class-C high-level-modulated amplifier, modulation should be applied to both plate and screen. Modulation voltage for the screen may be obtained from a separate winding on the modulation transformer, by supplying the screen voltage via a series dropping resistor from the unmodulated plate supply, or by the use of an audio-frequency reactor in the positive screen-supply lead. When screen modulation is obtained by either the series-resistor or the audio-reactor method, the audio-frequency variations in screen current which result from variations in plate voltage as the plate is modulated automatically give the required screen modulation. Where a reactor is used, it should have a rated inductance of not less than 10 henries divided by the number of tubes in the modulated amplifier and a maximum current rating of two or three times the operating dc screen current. To prevent phase shift between the screen and plate modulation voltages at high audio frequencies, the screen by-pass capacitor should be no larger than necessary for adequate rf by-passing. Where screen voltage is obtained from a separate winding on the modulation transformer, the screen winding should be designed to deliver the peak screen modulation voltage given in the typical operating data on page 2.

For high-level modulated service, the use of partial grid-leak bias is recommended. Any by-pass capacitors placed across the grid-leak resistance should have a reactance at the highest modulation frequency equal to at least twice the grid-leak resistance.

Class-AB_1 and Class-AB_2 Audio— Two 4-125A's may be used in a push-pull circuit to give relatively high audio output power at low distortion. Maximum ratings and typical operating conditions for class-AB_1 and class-AB_2 audio operation are given in the tabulated data.

When type 4-125A tubes are used as class-AB_1, or class-AB_2 audio amplifiers at 1500 plate volts, under the conditions given under "Typical Operation," the screen voltage must be obtained from a source having reasonably good regulation, to prevent variations in screen voltage from zero-signal to maximum-signal conditions. The use of voltage regulator tubes in a standard circuit will provide adequate regulation. The variation in screen current at plate voltages of 2000 and above is low enough so that any screen power supply having a normal order

of regulation will serve. The driver plate supply makes a convenient source of screen voltage under these conditions.

Grid bias voltage for class-AB_2 service may be obtained from batteries or from a small fixed-bias supply. When a bias supply is used, the dc resistance of the bias source should not exceed 250 ohms. Under class-AB_1 conditions the effective grid-circuit resistance for each tube should not exceed 250,000 ohms.

The peak driving power figures given in the class-AB_2 tabulated data are included to make possible an accurate determination of the required driver output power. The driving amplifier must be capable of supplying the peak driving power without distortion. The driver stage should, therefore, be capable of providing an undistorted average output equal to half the peak driving power requirement. A small amount of additional driver output should be provided to allow for losses in the coupling transformer.

The power output figures given in the tabulated data refer to the total power output from the amplifier tubes. The useful power output will be from 5 to 15 per cent less than the figures shown, due to losses in the output transformer.

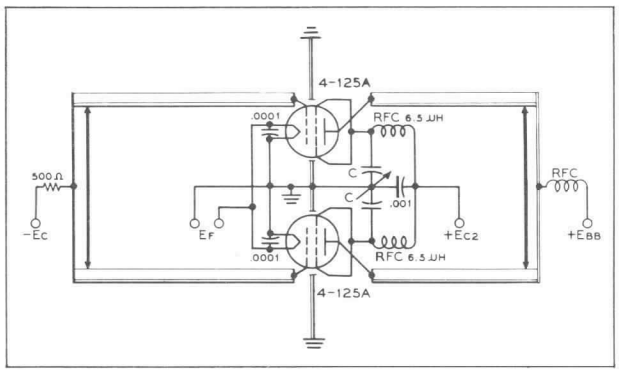

Screen-tuning neutralization circuit for use above 100 Mc. C is a small split-stator capacitor.

$$C(\mu\mu fd) = \frac{640{,}000}{f^2\ (Mc.)}\ ,\ approx.$$

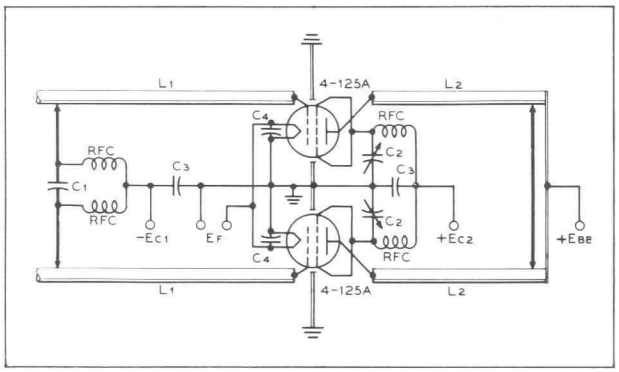

Typical circuit arrangement useful for frequencies above 175 Mc.

C_1—See above.
C_2—Neutralizing capacitor.
C_3—.001 μfd.
C_4—100 $\mu\mu$fd.
L_1—3/8" dia. copper spaced 1" center-to-center, 6" long.
L_2—7/8" dia. brass, silver plated, spaced 1 1/2" center-to-center, 14" long.

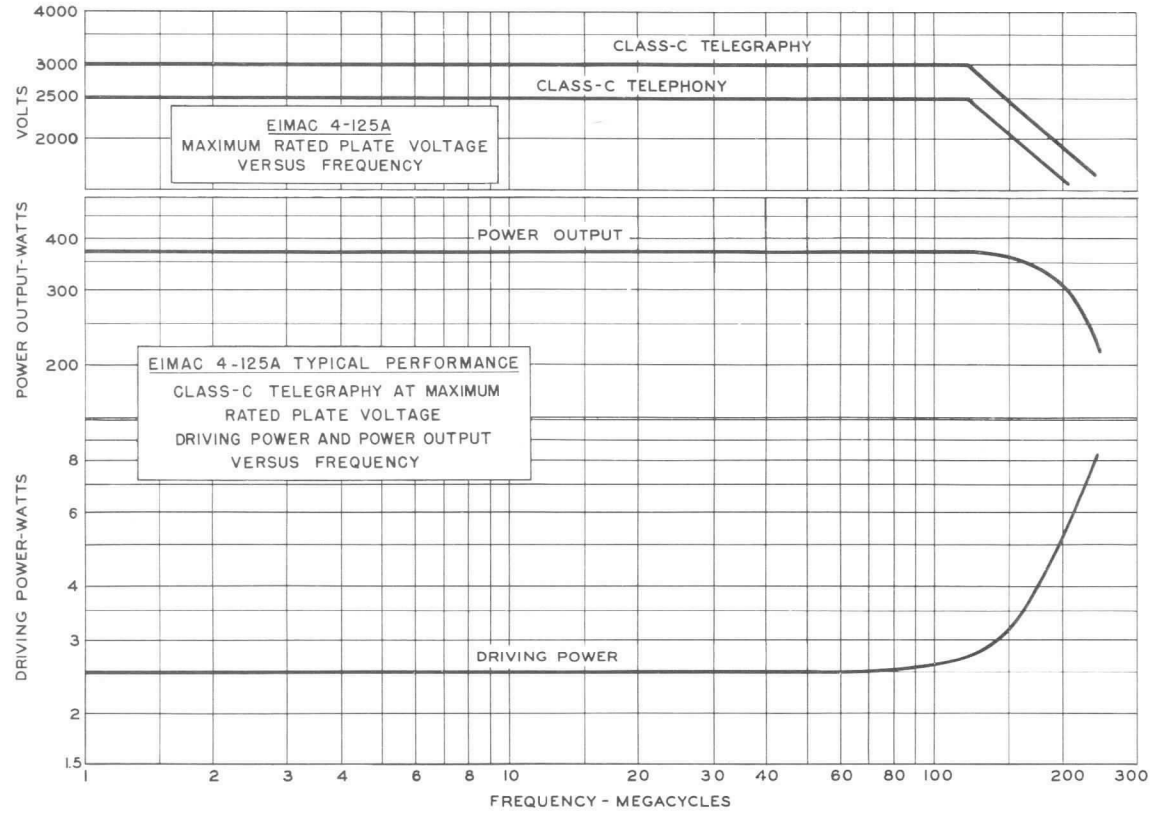

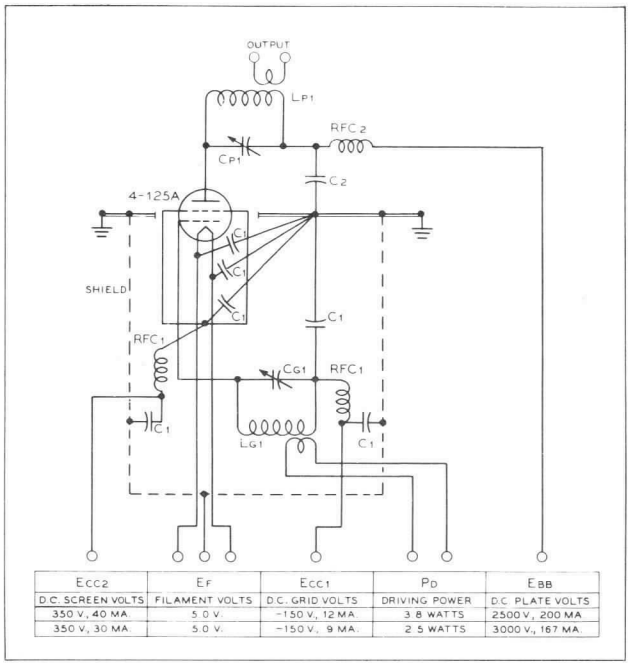

Ecc2	Ef	Ecc1	Pd	Ebb
D.C. SCREEN VOLTS	FILAMENT VOLTS	D.C. GRID VOLTS	DRIVING POWER	D.C. PLATE VOLTS
350 V., 40 MA.	5.0 V.	−150 V., 12 MA.	3.8 WATTS	2500 V., 200 MA.
350 V., 30 MA.	5.0 V.	−150 V., 9 MA.	2.5 WATTS	3000 V., 167 MA.

Typical radio-frequency power amplifier circuit, Class-C telegraphy, 500 watts input.

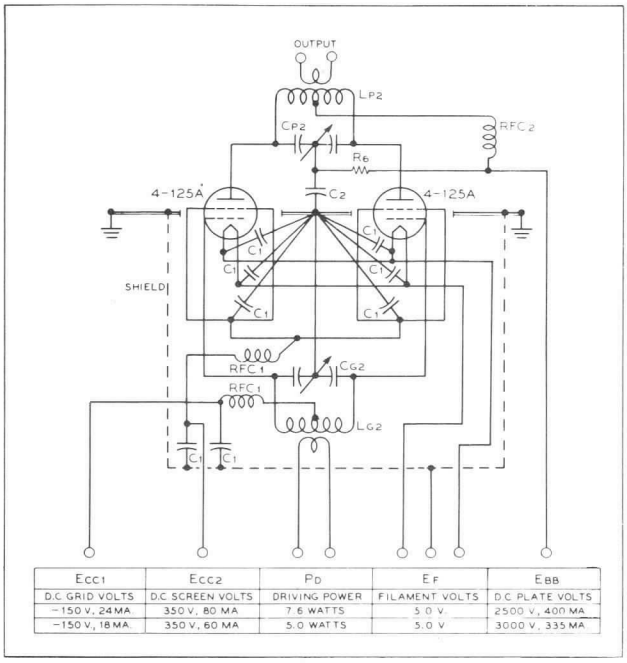

Ecc1	Ecc2	Pd	Ef	Ebb
D.C. GRID VOLTS	D.C. SCREEN VOLTS	DRIVING POWER	FILAMENT VOLTS	D.C. PLATE VOLTS
−150 V., 24 MA.	350 V., 80 MA.	7.6 WATTS	5.0 V.	2500 V., 400 MA.
−150 V., 18 MA.	350 V., 60 MA.	5.0 WATTS	5.0 V.	3000 V., 335 MA.

Typical radio-frequency power amplifier circuit, Class-C telegraphy, 1000 watts input.

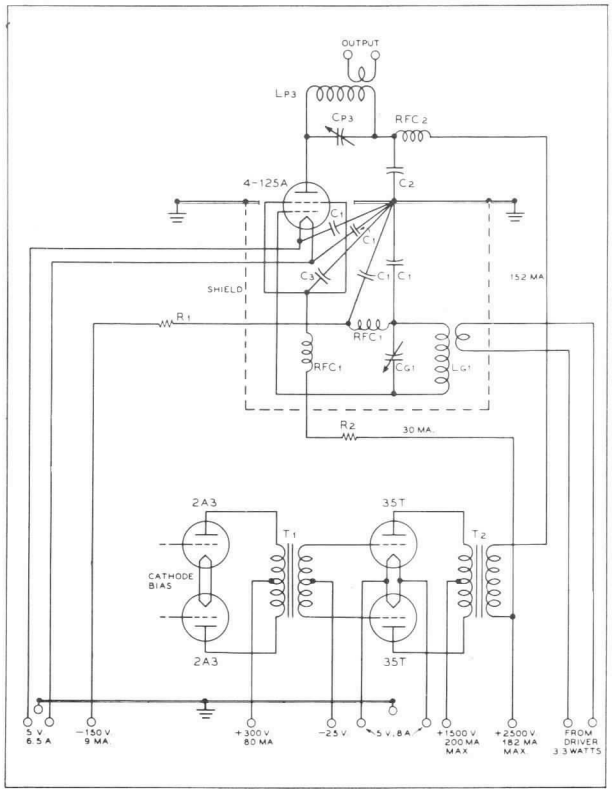

Typical high-level-modulated r-f amplifier circuit, with modulator and driver stages, 380 watts plate input.

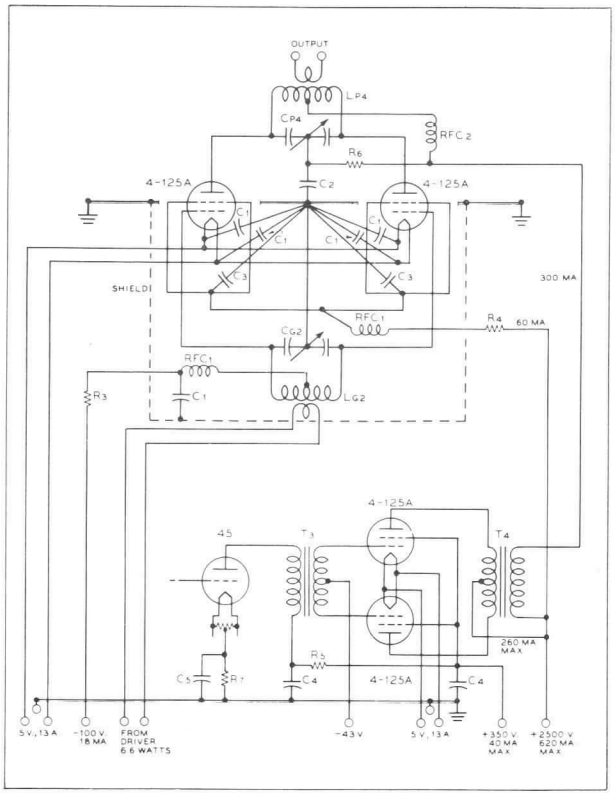

Typical high-level-modulated r-f amplifier circuit, with modulator and driver stages, 750 watts plate input.

See opposite page for list of components.

COMPONENTS FOR TYPICAL CIRCUITS

(Diagrams, Page 6)

L_{p1} - C_{p1} —Tank circuit appropriate for operating frequency; Q = 12. Capacitor plate spacing = .200".

L_{p2} - C_{p2} —Tank circuit appropriate for operating frequency; Q = 12. Capacitor plate spacing = .200".

L_{p3} - C_{p3} —Tank circuit appropriate for operating frequency; Q = 12. Capacitor plate spacing = .375".

L_{p4} - C_{p4} —Tank circuit appropriate for operating frequency; Q = 12. Capacitor plate spacing = .375".

L_{g1} - C_{g1} — Tuned circuit appropriate for operating frequency.

L_{g2} - C_{g2} — Tuned circuit appropriate for operating freqency.

C_1 — .002-ufd., 500-v. mica

C_2 — .002-ufd., 5000-v. mica

C_3 — .001-ufd., 2500-v. mica

C_4 — 16-ufd., 450-v. electrolytic

C_5 — 10-ufd., 25-v. electrolytic

R_1 — 7000 ohms, 5 watts

R_2 — 70,000 ohms, 100 watts

R_3 — 3500 ohms, 5 watts

R_4 — 35,000 ohms, 200 watts

R_5 — 560 ohms, 1 watt

R_6 — 25,000 ohms, 2 watts

R_7 — 1500 ohms, 5 watts

RFC_1 — 2.5-mhy., 125-ma. r-f choke

RFC_2 — 1-mhy., 500-ma. r-f choke

T_1 — 10-watt driver transformer; ratio pri. to ½ sec. approx. 2:1.

T_2 — 200-watt modulation transformer; ratio pri. to sec. approx. 1:1; pri. impedance = 16,200 ohms, sec. impedance = 16,500 ohms.

T_3 — 5-watt driver transformer; ratio pri. to ½ sec. approx. 1.1:1.

T_4 — 400-watt modulation transformer; ratio pri. to sec. approx. 2.7:1; pri. impedance = 22,200 ohms, sec. impedance = 8300 ohms.

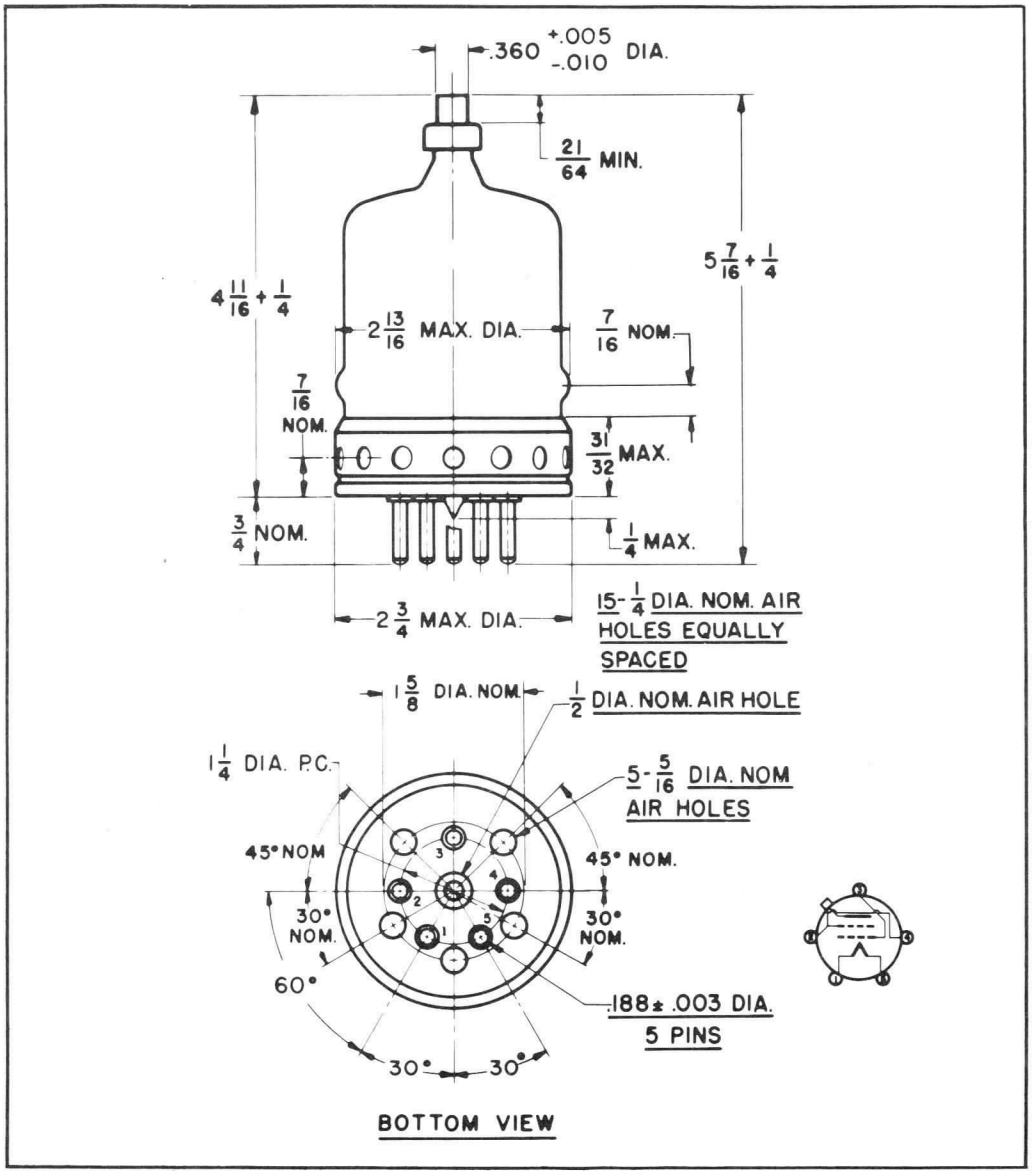

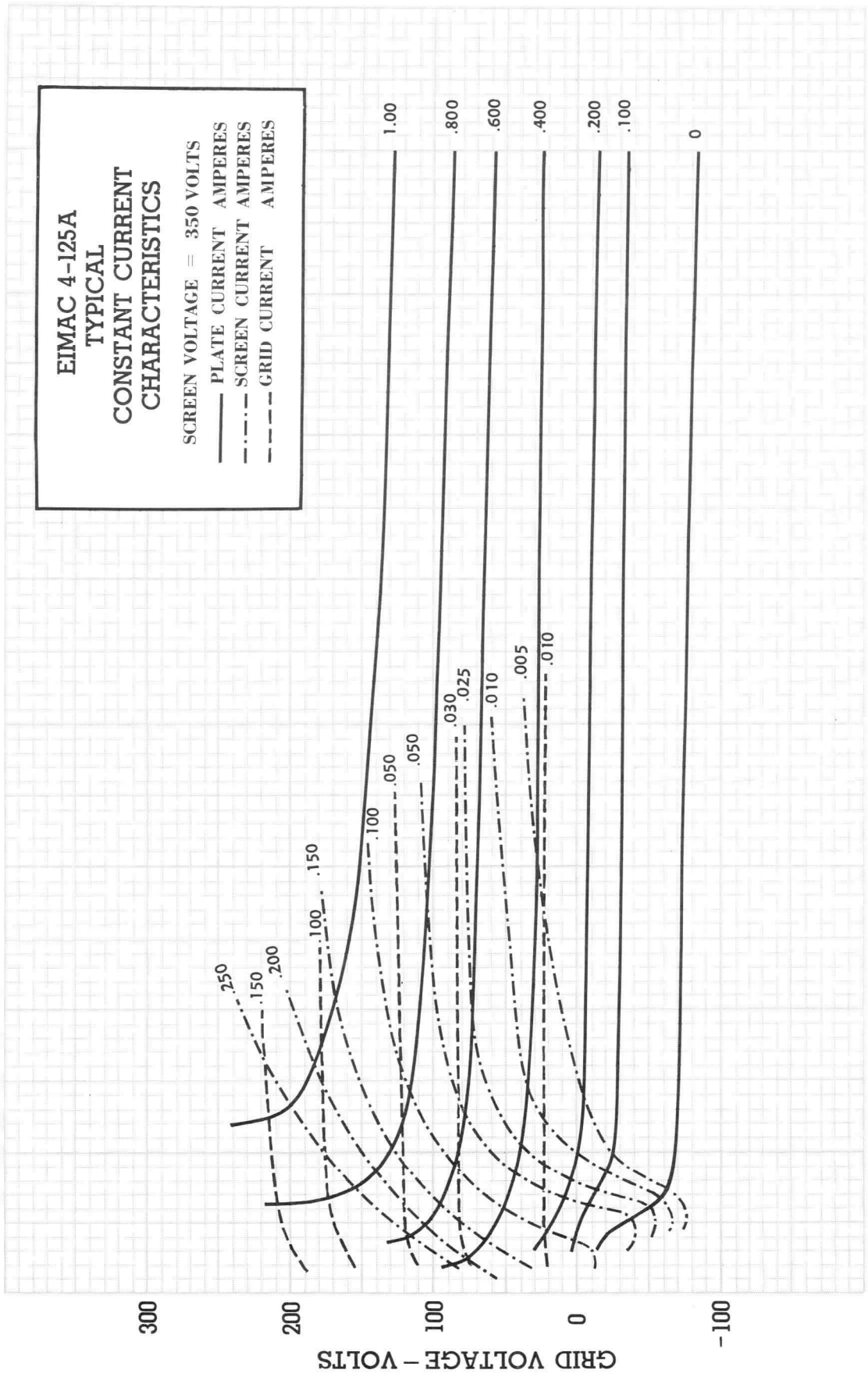
EIMAC 4-125A
TYPICAL
CONSTANT CURRENT
CHARACTERISTICS
SCREEN VOLTAGE = 350 VOLTS
PLATE CURRENT AMPERES
SCREEN CURRENT AMPERES
GRID CURRENT AMPERES
1.00
.800
.600
.400
.200
.100
0
.250
.150
.200
.100
.150
.100
.050
.050
.030
.025
.010
.005
.010
300
200
100
0
-100
GRID VOLTAGE – VOLTS
0
500
1000
1500
2000
2500
3000
3500
4000
PLATE VOLTAGE – VOLTS

TECHNICAL DATA

5D22
4-250A

RADIAL BEAM POWER TETRODE

The EIMAC 5D22/4-250A is a compact, ruggedly constructed power tetrode having a maximum plate dissipation rating of 250 watts. It is intended for use as an amplifier, oscillator or modulator. The low grid-plate capacitance of this tetrode coupled with its low driving-power requirement allows considerable simplification of the associated circuit and driver stage.

The 5D22/4-250A is cooled by radiation from the plate and by circulation of forced-air through the base, around the envelope, and over the plate seal.



GENERAL CHARACTERISTICS[1]

ELECTRICAL

Filament: Thoriated Tungsten		
Voltage	5.0 ± 0.25	V
Current, at 5.0 volts	14.5	A
Transconductance (Average):		
I_b = 100 mA, E_{c2} = 500 Vdc	4000	μmhos
Amplification Factor (Average):		
Grid to Screen	5.1	
Direct Interelectrode Capacitance (grounded filament)[2]		
Input	12.7	pF
Output	4.5	pF
Feedback	0.12	pF
Frequency of Maximum Rating:		
CW	110	MHz

1. Characteristics and operating values are based upon performance tests. These figures may change without notice as the result of additional data or product refinement. EIMAC Division of Varian should be consulted before using this information for final equipment design.

2. Capacitance values are for a cold tube as measured in a special shielded fixture.

MECHANICAL

Maximum Overall Dimensions:	
Length	6.375 in; 161.93 mm
Diameter	3.563 in; 90.50 mm
Net Weight	8 oz; 226.8 gm
Operating Position	Vertical, base down or up
Maximum Operating Temperature:	
Plate Seal	200°C
Base Seals	170°C

(Effective 5-5-70) © 1970, 1952 by Varian Printed in U.S.A.

Cooling	Radiation and forced air
Base	Special 5-pin
Recommended Air System Socket	EIMAC SK-400 Series
Recommended Chimney	EIMAC SK-406
Recommended Heat-Dissipating Connector:	
Plate	HR-6

RADIO FREQUENCY LINEAR AMPLIFIER GRID DRIVEN

Class AB_1

ABSOLUTE MAXIMUM RATINGS

DC PLATE VOLTAGE	4000	VOLTS
DC SCREEN VOLTAGE	600	VOLTS
DC PLATE CURRENT	0.35	AMPERE
PLATE DISSIPATION	250	WATTS
SCREEN DISSIPATION	35	WATTS
GRID DISSIPATION	10	WATTS

TYPICAL OPERATION (Frequencies to 30 MHz)
Class AB_1, Grid Driven, Peak Envelope or Modulation Crest Conditions

Plate Voltage	2500	3000	Vdc
Screen Voltage	600	600	Vdc
Grid Voltage[1]	-110	-116	Vdc
Zero-Signal Plate Current	60	60	mAdc
Single-Tone Plate Current	215	205	mAdc
Zero-Signal Screen Current[2]	-0.10	-0.10	mAdc
Single-Tone Screen Current[2]	7	6	mAdc
Peak rf Grid Voltage[2]	90	93	v
Plate Dissipation	225	250	W
Single-Tone Plate Output Power	312	350	W
Resonant Load Impedance	5800	7300	Ω

1. Adjust to specified zero-signal dc plate current.
2. Approximate value.

RADIO FREQUENCY POWER AMPLIFIER OR OSCILLATOR Class C Telegraphy or FM Telephony (Key-Down Conditions)

ABSOLUTE MAXIMUM RATINGS

DC PLATE VOLTAGE	4000	VOLTS
DC SCREEN VOLTAGE	600	VOLTS
DC GRID VOLTAGE	-500	VOLTS
DC PLATE CURRENT	0.35	AMPERE
PLATE DISSIPATION	250	WATTS
SCREEN DISSIPATION	35	WATTS
GRID DISSIPATION	10	WATTS

TYPICAL OPERATION (Frequencies to 110 MHz)

Plate Voltage	2500	3000	4000	Vdc
Screen Voltage	500	500	500	Vdc
Grid Voltage	-150	-180	-225	Vdc
Plate Current	300	345	312	mAdc
Screen Current[2]	60	60	45	mAdc
Grid Current[2]	9	10	9	mAdc
Peak rf Grid Voltage[2]	220	265	303	v
Calculated Driving Power[2/3]	1.7	2.6	2.5	W
Plate Input Power	750	1035	1250	W
Plate Dissipation	175	235	250	W
Plate Output Power	575	800	1000	W

1. Above 110 MHz, the maximum plate voltage rating depends upon frequency. See Application (Electrical) section.
2. Approximate value.
3. Driving power increases above 40 MHz. See Application (Electrical) section.

PLATE MODULATED RADIO FREQUENCY POWER AMPLIFIER-GRID DRIVEN Class C Telephony (Carrier Conditions)

ABSOLUTE MAXIMUM RATINGS

DC PLATE VOLTAGE[1]	3200	VOLTS
DC SCREEN VOLTAGE	600	VOLTS
DC GRID VOLTAGE	-500	VOLTS
DC PLATE CURRENT	0.275	AMPERE
PLATE DISSIPATION[2]	165	WATTS
SCREEN DISSIPATION[3]	35	WATTS
GRID DISSIPATION[3]	10	WATTS

1. Above 110 MHz, the maximum plate voltage rating depends upon frequency. See Application(Electrical)section.
2. Corresponds to 250 watts at 100% sine-wave modulation.
3. Average, with or without modulation.

TYPICAL OPERATION (Frequencies to 110 MHz)

Plate Voltage	2500	3000	Vdc
Screen Voltage	400	400	Vdc
Grid Voltage	-200	-310	Vdc
Plate Current	200	225	mAdc
Screen Current[4]	30	30	mAdc
Grid Current[4]	9	9	mAdc
Peak af Screen Voltage (100% modulation)[4]	350	350	v
Peak rf Grid Voltage[4]	255	365	v
Calculated Driving Power[4/5]	2.2	3.2	W
Plate Input Power	500	675	W
Plate Dissipation	125	165	W
Plate Output Power	375	510	W

4. Approximate Value.
5. Driving power increases above 110 MHz. See Application (Electrical) section.

AUDIO FREQUENCY POWER AMPLIFIER OR MODULATOR Class AB, Grid Driven

(Sinusoidal Wave)

ABSOLUTE MAXIMUM RATINGS (per tube)

DC PLATE VOLTAGE	4000	VOLTS
DC SCREEN VOLTAGE	600	VOLTS
DC PLATE CURRENT	0.35	AMPERE
PLATE DISSIPATION	250	WATTS
SCREEN DISSIPATION	35	WATTS
GRID DISSIPATION	10	WATTS

TYPICAL OPERATION (Two Tubes), Class AB_1

Plate Voltage	1500	2000	2500	3000	Vdc
Screen Voltage	600	600	600	600	Vdc
Grid Voltage[1/3]	-95	-104	-110	-116	Vdc
Zero-Signal Plate Current	120	110	120	120	mAdc
Max. Signal Plate Current	400	405	430	417	mAdc
Zero-Signal Screen Current[1]	-0.40	-0.30	-0.30	-0.20	mAdc
Max. Signal Screen Current[1]	23	22	13	11	mAdc
Peak af Grid Voltage[2]	64	88	90	93	v
Peak Driving Power	0	0	0	0	w
Max. Signal Plate Dissipation[2]	145	175	225	250	W
Plate Output Power	310	460	625	750	W
Load Resistance (plate to plate)	6250	9170	11,400	15,000	Ω

TYPICAL OPERATION (Two Tubes), Class AB_2

Plate Voltage	1500	2000	2500	3000	Vdc
Screen Voltage	300	300	300	300	Vdc
Grid Voltage[1/3]	-48	-48	-51	-53	Vdc
Zero-Signal Plate Current	100	120	120	125	mAdc
Max. Signal Plate Current	485	510	500	473	mAdc
Zero-Signal Screen Current[1]	0	0	0	0	mAdc
Max. Signal Screen Current[1]	34	26	23	33	mAdc
Peak af Grid Voltage[2]	96	99	100	99	v
Peak Driving Power[4]	4.7	5.5	4.8	4.6	w
Max. Signal Plate Dissipation[2]	150	185	205	190	W
Plate Output Power	428	650	840	1040	W
Load Resistance (plate to plate)	5400	8000	10,900	16,000	Ω

1. Approximate value.
2. Per tube.
3. Adjust to give stated zero-signal plate current.
4. Nominal drive power is one-half peak drive power.

NOTE: TYPICAL OPERATION data are obtained from direct measurement or by calculation from published characteristic curves. Adjustment of the rf grid voltage to obtain the specified plate current at the specified bias, screen and plate voltages is assumed. If this procedure is followed, there will be little variation in output power when the tube is changed, even though there may be some variation in grid and screen current. The grid and screen currents which result when the desired plate current is obtained are incidental and vary from tube to tube. These current variations cause no difficulty so long as the circuit maintains the correct voltage in the presence of the variations in current. In the case of Class C Service, if grid bias is obtained principally by means of a grid resistor, the resistor must be adjustable to obtain the required bias voltage when the correct rf grid voltage is applied.

RANGE VALUES FOR EQUIPMENT DESIGN

	Min.	Max.	
Filament: Current at 5.0 volts	13.5	14.7	A
Interelectrode Capacitances[1] (grounded filament connection)			
Input	10.7	14.5	pF
Output	3.7	5.1	pF
Feedback	---	0.14	pF

1. In Shielded Fixture.

APPLICATION

MECHANICAL

MOUNTING - The 4-250A must be mounted vertically, base up or down. The socket must be constructed so as to allow an unimpeded flow of air through the holes in the base of the tube and must also provide clearance for the glass tip-off which extends from the center of the base. The metal tube-base shell should be grounded by means of suitable spring fingers. The above requirements are met by the EIMAC SK-400 and SK-410 Air-System Sockets. A flexible connecting strap should be provided between the EIMAC HR-6 connector on the plate terminal and the external plate circuit. The tube must be protected from severe vibration and shock.

COOLING - Adequate forced-air cooling must be provided to maintain the base seals at a temperature below 170°C, and the plate seal at a temperature below 200°C.

When the EIMAC SK-400 or SK-410 Air-System Socket is used, a minimum air flow of 5 cubic feet per minute at a static pressure of 0.25 inches of water or less, as measured in the socket or plenum chamber at sea level, is required to provide adequate cooling under all conditions of operation. Seal temperature limitations may require that cooling air be supplied to the tube even when the filament alone is on during stand-by periods.

In the event an Air-System Socket is not used, provision must be made to supply equivalent cooling of the base, the envelope, and the plate lead.

Intermittent-service applications where the "on" time does not exceed a total of five minutes in any ten-minute period, plate-seal temperatures as high as 220°C, are permissible. When the ambient temperature does not exceed 30°C, it will not ordinarily be necessary to provide forced cooling of the bulb and plate seal to hold the temperature below this maximum at frequencies below 30 MHz, provided that a heat-radiating plate connector is used, and the tube is so located that normal circulation of air past the envelope is not impeded. The five cubic feet per minute base-cooling requirement must be observed in intermittent service.

Tube temperatures may be measured with a temperature sensitive paint, spray or crayon, such as manufactured by Tempil Division, Big Three Industrial Gas & Equipment Co., Hamilton Blvd., So. Plainfield, N.J. 07080.

ELECTRICAL

FILAMENT VOLTAGE - For maximum tube life the filament voltage, as measured directly at the filament pins, should be the rated voltage of 5.0 volts. Variations in filament voltage must be kept within the range from 4.75 to 5.25 volts.

BIAS VOLTAGE - The dc bias voltage for the 4-250A should not exceed 500 volts. If grid resistor bias is used, suitable means must be provided to prevent excessive plate or screen dissipation in the event of loss of excitation, and the grid resistor should be made adjustable to facilitate maintaining the bias voltage and plate current at the desired values from tube to tube. In operation above 50 MHz, it is advisable to keep the bias voltage as low as is practicable.

SCREEN VOLTAGE - The dc screen voltage for the 4-250A should not exceed 600 volts. The screen voltages shown under Typical Operation are representative voltages for the type of operation involved.

PLATE VOLTAGE - The plate-supply voltage for the 4-250A should not exceed 4000 volts in CW and audio applications. In plate-modulated telephony service the dc plate supply voltage should not exceed 3200 volts, except below 110 MHz, intermittent service, where 4000 volts may be used.

GRID DISSIPATION - Grid dissipation for the 4-250A should not be allowed to exceed 10 watts. Grid dissipation may be calculated from the following expression:

$$P_g = e_{gk} \times I_c$$

where P_g = Grid dissipation

e_{gk} = Peak positive grid to cathode voltage, and

I_c = dc grid current

e_{gk} may be measured by means of a suitable peak voltmeter connected between filament and grid.

SCREEN DISSIPATION - The power dissipated by the screen of the 4-250A must not exceed 35 watts. Screen dissipation is likely to rise to excessive values when the plate voltage, bias voltage or plate load are removed with filament and screen voltages applied. Suitable protective means must be provided to limit screen dissipation to 35 watts in event of circuit failure.

PLATE DISSIPATION - Under normal operating conditions, the plate dissipation of the 4-250A should not be allowed to exceed 250 watts. The anode of the 4-250A operates at a visibly red color at its maximum rated dissipation of 250 watts.

In plate modulated amplifier applications, the maximum allowable carrier-condition plate dissipation is 165 watts. The plate dissipation will rise to 250 watts under 100% sinusoidal modulation.

Plate dissipation in excess of the maximum rating is permissible for short periods of time, such as during tuning procedures.

PULSE SERVICE - For pulse service, the EIMAC 4PR400A should be used.

MULTIPLE OPERATION - To obtain maximum power output with minimum distortion from tubes operated in multiple, it is desirable to adjust individual screen or grid bias voltages so that the peak plate current for each tube is equal at the crest of the exciting voltage. Under these conditions, individual dc plate currents will be approximately equal for full input signal for class AB_1 operation.

CAUTION-GLASS IMPLOSION - The EIMAC 4-250A is pumped to a very high vacuum, which is contained by a glass envelope. When handling a glass tube, remember that glass is a relatively fragile material, and accidental breakage can result at any time. Breakage will result in flying glass fragments, so safety glasses, heavy clothing, and leather gloves are recommended for protection.

CAUTION-HIGH VOLTAGE - Operating voltage for the 4-250A can be deadly, so the equipment must be designed properly and operation precautions must be followed. Design equipment so that no one can come in contact with high voltages. All equipment must include safety enclosures for high voltage circuits and terminals, with interlock switches to open the primary circuits of the power supply and to discharge high voltage capacitors whenever access doors are opened. Interlock switches must not be bypassed or "cheated" to allow operation with access doors open. Always remember that HIGH VOLTAGE CAN KILL.

SPECIAL APPLICATION - If it is desired to operate this tube under conditions widely different from those listed here, write to Power Grid Tube Division, EIMAC Division of Varian, 301 Industrial Way, San Carlos, California 94070, for information and recommendations.

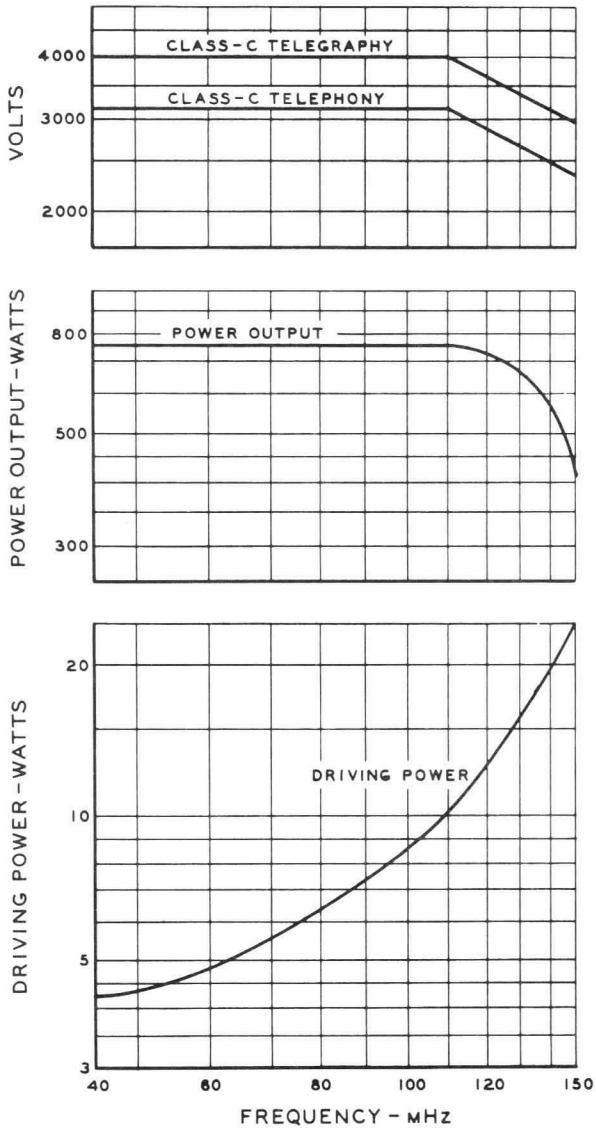

OPERATING CHARACTERISTICS ABOVE 40 MHz

DIMENSIONAL DATA

DIM.	INCHES			MILLIMETERS		
	MIN.	MAX.	REF.	MIN.	MAX.	REF.
A	5.875	6.375	--	149.23	161.93	--
B	--	3.563	--	--	90.50	--
D	5.125	5.625	--	130.18	142.88	--
E	0.350	0.365	--	8.89	9.27	--
F	0.328	--	--	8.33	--	--
H	--	--	0.438	--	--	11.13
J	--	0.969	--	--	24.61	--
K	--	0.250	--	--	6.35	--
L	--	--	0.750	--	--	19.05
M	--	--	0.250	--	--	6.35
N	--	2.750	--	--	69.85	--
P	--	--	0.312	--	--	7.92
Q	--	--	0.500	--	--	12.70
R	--	--	1.625	--	--	41.28
S	--	--	1.250	--	--	31.75
T	0.185	0.191	--	4.70	4.85	--
U	--	--	30°	--	--	30°
V	--	--	60°	--	--	60°
W	--	--	45°	--	--	45°

NOTES:
1. REF. DIMENSIONS ARE FOR INFO. ONLY & ARE NOT REQUIRED FOR INSPECTION PURPOSES.

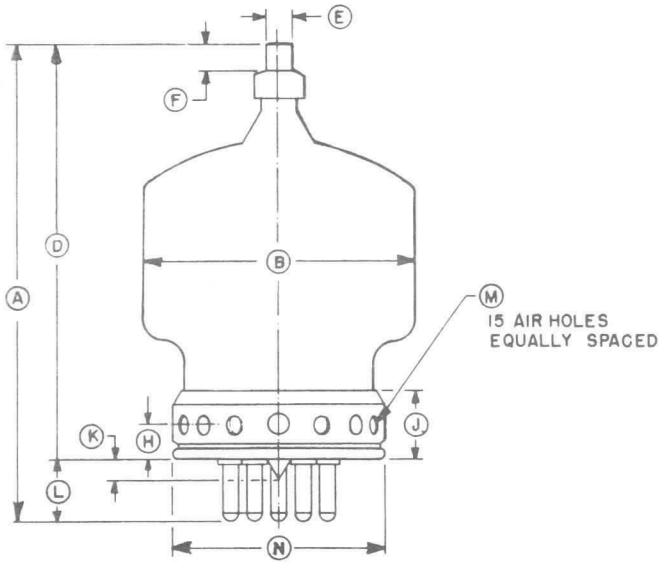

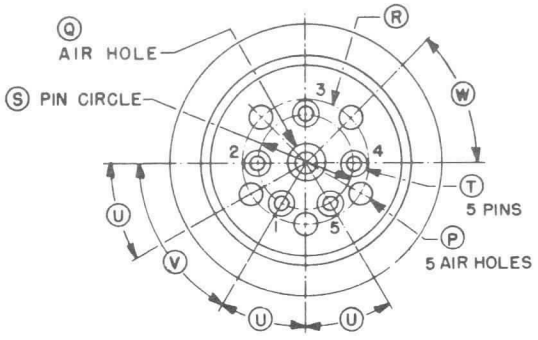

BOTTOM VIEW

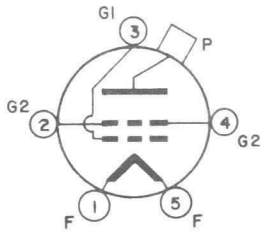

NOTE:

Base pins T and tubulation K are so alined that they can be freely inserted in a gage ¼ inch (6.35 mm) thick with hole diameters of .204 (5.18 mm) and .500 (12.70 mm), respectively, located on the true centers by the given dimensions S, U, V.

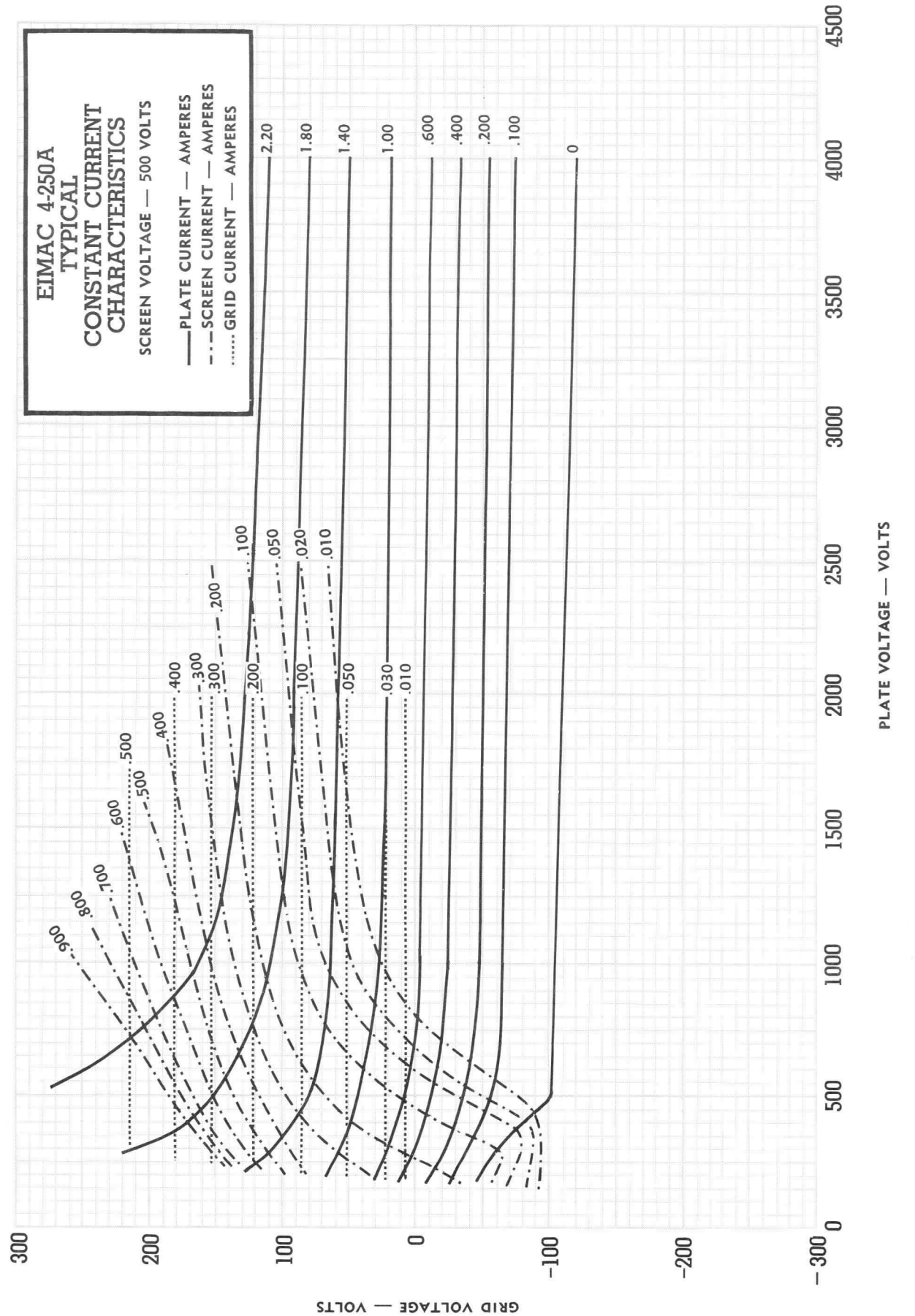
EIMAC 4-250A
TYPICAL
CONSTANT CURRENT
CHARACTERISTICS
SCREEN VOLTAGE — 500 VOLTS
——PLATE CURRENT — AMPERES
- - -SCREEN CURRENT — AMPERES
.....GRID CURRENT — AMPERES
2.20
1.80
1.40
1.00
.600
.400
.200
.100
0
.100
.050
.020
.010
.200
.100
.050
.030
.010
.300
.300
.400
.400
.500
.500
.600
.700
.800
.900
300
200
100
0
-100
-200
-300
0
500
1000
1500
2000
2500
3000
3500
4000
4500
GRID VOLTAGE — VOLTS
PLATE VOLTAGE — VOLTS

TECHNICAL DATA

8438
4-400A

RADIAL BEAM
POWER TETRODE

The EIMAC 8438/4-400A is a compact, ruggedly constructed power tetrode having a maximum plate dissipation rating of 400 watts. It is intended for use as an amplifier, oscillator or modulator. The low grid-plate capacitance of this tetrode coupled with its low driving-power requirement allows considerable simplification of the associated circuit and driver stage.

The 8438/4-400A is cooled by radiation from the plate and by circulation of forced-air through the base, around the envelope, and over the plate seal. Cooling can be greatly simplified by using an EIMAC SK-400 Series Air System Socket and its accompanying glass chimney. This socket is designed to maintain the correct balance of cooling air between the component parts of the tube.[3]



GENERAL CHARACTERISTICS[1]

ELECTRICAL

Filament: Thoriated Tungsten		
Voltage	5.0 ± 0.25	V
Current, at 5.0 volts	14.5	A
Transconductance (Average):		
I_b = 100 mA, E_{c2} = 500 volts	4000	μmhos
Amplification Factor (Average):		
Grid to Screen	5.1	
Direct Interelectrode Capacitances (grounded filament)[2]		
Input	12.5	pF
Output	4.7	pF
Feedback	0.12	pF
Frequency of Maximum Rating:		
CW	110	MHz

1. Characteristics and operating values are based upon performance tests. These figures may change without notice as the result of additional data or product refinement. EIMAC Division of Varian should be consulted before using this information for final equipment design.
2. In Shielded Fixture.
3. Guarantee applies only when the 4-400A is used as specified with adequate air in the SK-400 or SK-410 Air-System Socket and associated chimney or equivalent.

MECHANICAL

Maximum Overall Dimensions:	
Length	6.375 in; 161.93 mm
Diameter	3.563 in; 90.50 mm

(Effective 7-20-70) © by Varian

Printed in U.S.A.

Net Weight	9.0 oz; 255 gm
Operating Position	Vertical, base down or up
Maximum Operating Temperature:	
Plate Seal	225°C
Base Seals	200°C
Cooling	Radiation and forced air
Base	Special 5-pin
Recommended Socket	EIMAC SK-400 Series
Recommended Chimney	EIMAC SK-406
Recommended Heat-Dissipating Connectors:	
Plate	HR-6

RADIO FREQUENCY LINEAR AMPLIFIER
GRID DRIVEN

Class AB_1

ABSOLUTE MAXIMUM RATINGS

DC PLATE VOLTAGE	4000	VOLTS
DC SCREEN VOLTAGE	800	VOLTS
DC PLATE CURRENT	0.350	AMPERE
PLATE DISSIPATION	400	WATTS
SCREEN DISSIPATION	35	WATTS
GRID DISSIPATION	10	WATTS

TYPICAL OPERATION (Frequencies to 75 MHz)
Class AB_1, Grid Driven, Peak Envelope or Modulation Crest Conditions

Plate Voltage	3000	Vdc
Screen Voltage	750	Vdc
Grid Voltage[1]	-130	Vdc
Zero-Signal Plate Current	80	mAdc
Single Tone Plate Current	290	mAdc
Single-Tone Screen Current[2]	13	mAdc
Useful Output Power	470	W
Resonant Load Impedance	5000	Ω

1. Adjust to specified zero-signal dc plate current.
2. Approximate value.

RADIO FREQUENCY POWER AMPLIFIER OR OSCILLATOR

Class C Telegraphy or FM Telephony (Key-Down Conditions)

ABSOLUTE MAXIMUM RATINGS

DC PLATE VOLTAGE	4000	VOLTS
DC SCREEN VOLTAGE	600	VOLTS
DC PLATE CURRENT	0.350	AMPERE
PLATE DISSIPATION	400	WATTS
SCREEN DISSIPATION	35	WATTS
GRID DISSIPATION	10	WATTS

TYPICAL OPERATION (Frequencies to 75 MHz)

Plate Voltage	2500	3000	4000	Vdc
Screen Voltage	500	500	500	Vdc
Grid Voltage	-200	-220	-220	Vdc
Plate Current	350	350	350	mAdc
Screen Current[1]	46	46	40	mAdc
Screen Dissipation	23	23	20	W
Grid Current[1]	18	19	18	mAdc
Peak rf Grid Voltage[1]	300	320	320	v
Grid Dissipation	1.8	1.9	1.8	W
Calculated Driving Power[2]	5.4	6.1	5.8	W
Plate Input Power	875	1050	1400	W
Plate Dissipation	235	250	300	W
Plate Output Power	640	800	1100	W

1. Approximate value.
2. Driving Power increases with frequency. At 75 MHz driving power is approximately 12 watts.

TYPICAL OPERATION (110 MHz, two tubes)

Plate Voltage	3500	4000	Vdc
Screen Voltage	500	500	Vdc
Grid Voltage	-170	-170	Vdc
Plate Current	500	540	mAdc
Screen Current	34	31	mAdc
Grid Current	20	20	mAdc
Driving Power[1]	20	20	W
Plate Output Power[1]	1300	1600	W
Useful Output Power	1160	1440	W

1. Approximate value.

PLATE MODULATED RADIO FREQUENCY POWER AMPLIFIER-GRID DRIVEN Class C Telephony
(Carrier Conditions)

ABSOLUTE MAXIMUM RATINGS

DC PLATE VOLTAGE	3200	VOLTS
DC SCREEN VOLTAGE	600	VOLTS
DC GRID VOLTAGE	-500	VOLTS
DC PLATE CURRENT	0.275	AMPERE
PLATE DISSIPATION[1]	270	WATTS
SCREEN DISSIPATION[2]	35	WATTS
GRID DISSIPATION[2]	10	WATTS

1. Corresponds to 400 watts at 100% sine-wave modulation.
2. Average, with or without modulation.

TYPICAL OPERATION (Frequencies to 75 MHz)

Plate Voltage	2000	2500	3000	Vdc
Screen Voltage	500	500	500	Vdc
Grid Voltage	-220	-220	-220	Vdc
Plate Current	275	275	275	mAdc
Screen Current[1]	30	28	26	mAdc
Screen Dissipation	15	14	13	W
Grid Current[1]	12	12	12	mAdc
Grid Dissipation	1.1	1.1	1.1	W
Peak af Screen Voltage[1] (100% modulation)	350	350	350	v
Peak rf Grid Voltage[1]	290	290	290	v
Calculated Driving Power[1]	3.5	3.5	3.5	W
Plate Input Power	550	688	825	W
Plate Dissipation	170	178	195	W
Plate Output Power	380	510	630	W

1. Approximate value.

MAXIMUM RATINGS (Frequencies to 30 MHz, Intermittent Service

ABSOLUTE MAXIMUM RATINGS

DC PLATE VOLTAGE	4000	VOLTS
DC SCREEN VOLTAGE	600	VOLTS
DC GRID VOLTAGE	-500	VOLTS
DC PLATE CURRENT	0.275	AMPERE
PLATE DISSIPATION[1]	270	WATTS
SCREEN DISSIPATION[2]	35	WATTS
GRID DISSIPATION[2]	10	WATTS

TYPICAL OPERATION (Frequencies to 30 MHz, Intermittent Service)

Plate Voltage	2000	2500	3000	3650	Vdc
Screen Voltage	500	500	500	500	Vdc
Grid Voltage	-220	-220	-220	-225	Vdc
Plate Current	275	275	275	275	mAdc
Screen Current[1]	30	28	26	23	mAdc
Screen Dissipation	15	14	13	12	W
Grid Current[1]	12	12	12	13	mAdc
Grid Dissipation	1.1	1.1	1.1	1.2	W
Peak Screen Voltage (100% modulation)	350	350	350	350	v
Peak rf Grid Voltage[1]	290	290	290	315	v
Calculated Driving Power[1]	3.5	3.5	3.5	4.0	W
Plate Input Power	550	688	825	1000	W
Plate Dissipation	170	178	195	235	W
Plate Output Power	380	510	630	765	W

AUDIO FREQUENCY POWER AMPLIFIER OR MODULATOR Class AB, Grid Driven
(Sinusoidal Wave)

ABSOLUTE MAXIMUM RATINGS (Per Tube)

DC PLATE VOLTAGE	4000	VOLTS
DC SCREEN VOLTAGE	800	VOLTS
DC PLATE CURRENT	0.350	AMPERE
PLATE DISSIPATION	400	WATTS
SCREEN DISSIPATION	35	WATTS
GRID DISSIPATION	10	WATTS

TYPICAL OPERATION (Two Tubes) Class AB_1

Plate Voltage	2500	3000	3500	4000	Vdc
Screen Voltage	750	750	750	750	Vdc
Grid Voltage[1/4]	-130	-137	-145	-150	Vdc
Zero-Signal Plate Current	190	160	140	120	mAdc
Max. Signal Plate Current	635	635	610	585	mAdc
Zero-Signal Screen Current	0	0	0	0	mAdc
Max. Signal Screen Current[1]	28	26	32	40	mAdc
Peak af Grid Voltage[2]	130	137	145	150	v
Peak Driving Power[3]	0	0	0	0	w
Max Signal Plate Dissipation[2]	370	400	400	400	W
Plate Output Power	850	1100	1330	1540	W
Load Resistance (plate to plate)	6800	8900	11,500	14,000	Ω

TYPICAL OPERATION (Two Tubes) Class AB_2

Plate Voltage	2500	3000	3500	4000	Vdc
Screen Voltage	500	500	500	500	Vdc
Grid Voltage[1/4]	-75	-80	-85	-90	Vdc
Zero-Signal Plate Current	190	160	140	120	mAdc
Max. Signal Plate Current	700	700	700	638	mAdc
Zero-Signal Screen Current	0	0	0	0	mAdc
Max. Signal Screen Current	50	40	38	32	mAdc
Peak af Grid Voltage[2]	133	140	145	140	v
Peak Driving Power[3]	8.6	9.0	10.2	7.0	W
Max. Signal Plate Dissipation[2]	320	363	400	400	W
Plate Output Power	1110	1375	1650	1750	W
Load Resistance (plate to plate)	7200	9100	10,800	14,000	Ω

1. Approximate value.
2. Per tube.
3. Nominal drive power is one-half peak power.
4. Adjust to give stated zero-signal plate current.

NOTE: TYPICAL OPERATION data are obtained from direct measurement or by calculation from published characteristic curves. Adjustment of the rf grid voltage to obtain the specified plate current at the specified bias, screen and plate voltages is assumed. If this procedure is followed, there will be little variation in output power when the tube is changed, even though there may be some variation in grid and screen current. The grid and screen currents which result when the desired plate current is obtained are incidental and vary from tube to tube. These current variations cause no difficulty so long as the circuit maintains the correct voltage in the presence of the variations in current. In the case of Class C Service, if grid bias is obtained principally by means of a grid resistor, the resistor must be adjustable to obtain the required bias voltage when the correct rf grid voltage is applied.

RANGE VALUES FOR EQUIPMENT DESIGN

	Min.	Max.	
Filament: Current at 5.0 volts	13.5	14.7	A
Interelectrode Capacitances [1] (grounded filament connection):			
Input	10.7	14.5	pF
Output	4.2	5.6	pF
Feedback	----	0.17	pF

1. In Shielded Fixture.

APPLICATION

MECHANICAL

MOUNTING - The 4-400A must be mounted vertically, base up or down. The socket must be constructed so as to allow an unimpeded flow of air through the holes in the base of the tube and must also provide clearance for the glass tip-off which extends from the center of the base. The metal tube-base shell should be grounded by means of suitable spring fingers. The above requirements are met by the EIMAC SK-400 and SK-410 Air-System Sockets. A flexible connecting strap should be provided between the EIMAC HR-6 cooler on the plate terminal and the external plate circuit. The tube must be protected from severe vibration and shock.

COOLING - Adequate forced-air cooling must be provided to maintain the base seals at a temperature below 200°C, and the plate seal at a temperature below 225°C.

When the EIMAC SK-400 or SK-410 Air-System Socket is used, a minimum air flow of 14 cubic feet per minute at a static pressure of 0.25 inches of water or less, as measured in the socket or plenum chamber at sea level, is required to provide adequate cooling under all conditions of operation. Seal temperature limitations may require that cooling air be supplied to the tube even when the filament alone is on during stand-by periods.

In the event an Air-System Socket is not used, provision must be made to supply equivalent cooling of the base, the envelope, and the plate lead.

Tube temperatures may be measured with a temperature sensitive paint, spray or crayon, such as manufactured by Tempil Division, Big Three Industrial Gas & Equipment Co., Hamilton Blvd., So. Plainfield, N.J. 07080.

ELECTRICAL

FILAMENT VOLTAGE - For maximum tube life the filament voltage, as measured directly at the filament pins, should be the rated voltage of 5.0 volts. Variations in filament voltage must be kept within the range from 4.75 to 5.25 volts.

BIAS VOLTAGE - The dc bias voltage for the 4-400A should not exceed 500 volts. If grid resistor bias is used, suitable means must be provided to prevent excessive plate or screen dissipation in the event of loss of excitation, and the grid resistor should be made adjustable to facilitate maintaining the bias voltage and plate current at the desired values from tube to tube. In operation above 50 MHz, it is advisable to keep the bias voltage as low as is practicable.

SCREEN VOLTAGE - The dc screen voltage for the 4-400A should not exceed 800 volts. The screen voltages shown under Typical Operation are representative voltages for the type of operation involved.

PLATE VOLTAGE - The plate-supply voltage for the 4-400A should not exceed 4000 volts in CW and audio applications. In plate-modulated telephony service the dc plate-supply voltage should not exceed 3200 volts, except below 30 MHz, intermittent service, where 4000 volts may be used.

GRID DISSIPATION - Grid dissipation for the 4-400A should not be allowed to exceed 10 watts. Grid dissipation may be calculated from the following expression:

$$P_g = e_{gk} \times I_c$$

where P_g = Grid dissipation

e_{gk} = Peak positive grid to cathode voltage, and

I_c = dc grid current

e_{cmp} may be measured by means of a suitable peak voltmeter connected between filament and grid.

SCREEN DISSIPATION - The power dissipated by the screen of the 4-400A must not exceed 35 watts. Screen dissipation is likely to rise to excessive values when the plate voltage, bias voltage or plate load are removed with filament and screen voltages applied. Suitable protective means must be provided to limit screen dissipation to 35 watts in event of circuit failure.

PLATE DISSIPATION - Under normal operating conditions, the plate dissipation of the 4-400A should not be allowed to exceed 400 watts. The anode of the 4-400A operates at a visibly red color at its maximum rated dissipation of 400 watts.

In plate modulated amplifier applications, the maximum allowable carrier-condition plate dissipation is 270 watts. The plate dissipation will rise to 400 watts under 100% sinusoidal modulation.

Plate dissipation in excess of the maximum rating is permissible for short periods of time, such as during tuning procedures.

PULSE SERVICE - For pulse service, the EIMAC 4PR400A should be used.

MULTIPLE OPERATION - To obtain maximum power output with minimum distortion from tubes operated in multiple, it is desirable to adjust individual screen or grid bias voltages so that the peak plate current for each tube is equal at the crest of the exciting voltage. Under these conditions, individual dc plate currents will be approximately equal for full input signal for class AB_1 operation.

CAUTION - GLASS IMPLOSION - The EIMAC 4-400A is pumped to a very high vacuum, which is contained by a glass envelope. When handling a glass tube, remember that glass is a relatively fragile material, and accidental breakage can result at any time. Breakage will result in flying glass fragments, so safety glasses, heavy clothing, and leather gloves are recommended for protection.

CAUTION-HIGH VOLTAGE - Operating voltage for the 4-400A can be deadly, so the equipment must be designed properly and operating precautions must be followed. Design equipment so that no one can come in contact with high voltages. All equipment must include safety enclosures for high voltage circuits and terminals, with interlock switches to open the primary circuits of the power supply and to discharge high voltage capacitors whenever access doors are opened. Interlock switches must not be bypassed or "cheated" to allow operation with access doors open. Always remember that HIGH VOLTAGE CAN KILL.

SPECIAL APPLICATION - If it is desired to operate this tube under conditions widely different from those listed here, write to Power Grid Tube Division, EIMAC Division of Varian, 301 Industrial Way, San Carlos, California 94070, for information and recommendations.

DIMENSIONAL DATA

DIM.	INCHES			MILLIMETERS		
	MIN.	MAX.	REF.	MIN.	MAX.	REF.
A	5.875	6.375	--	149.23	161.93	--
B	--	3.563	--	--	90.50	--
D	5.125	5.625	--	130.18	142.88	--
E	0.350	0.365	--	8.89	9.27	--
F	0.328	--	--	8.33	--	--
H	--	--	0.438	--	--	11.13
J	--	0.969	--	--	24.61	--
K	--	0.250	--	--	6.35	--
L	--	--	0.750	--	--	19.05
M	--	--	0.250	--	--	6.35
N	--	2.750	--	--	69.85	--
P	--	--	0.312	--	--	7.92
Q	--	--	0.500	--	--	12.70
R	--	--	1.625	--	--	41.28
S	--	--	1.250	--	--	31.75
T	0.185	0.191	--	4.70	4.85	--
U	--	--	30°	--	--	30°
V	--	--	60°	--	--	60°
W	--	--	45°	--	--	45°

NOTES:
1. REF. DIMENSIONS ARE FOR INFO. ONLY & ARE NOT REQUIRED FOR INSPECTION PURPOSES.

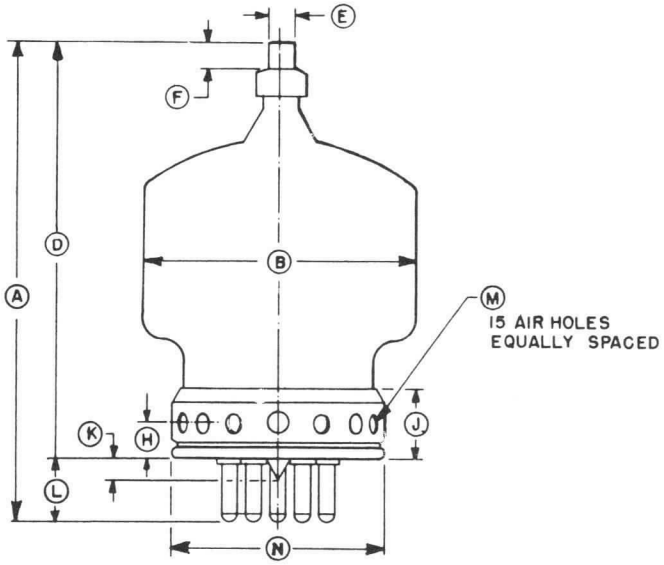

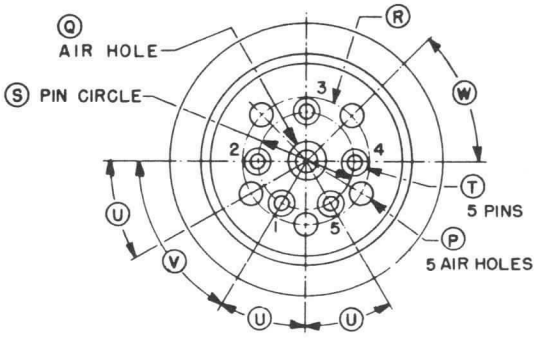

BOTTOM VIEW

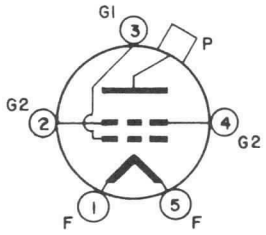

NOTE:

Base pins T and tubulation K are so alined that they can be freely inserted in a gage ¼ inch (6.35 mm) thick with hole diameters of .204 (5.18 mm) and .500 (12.70 mm), respectively, located on the true centers by the given dimensions S, U, V.

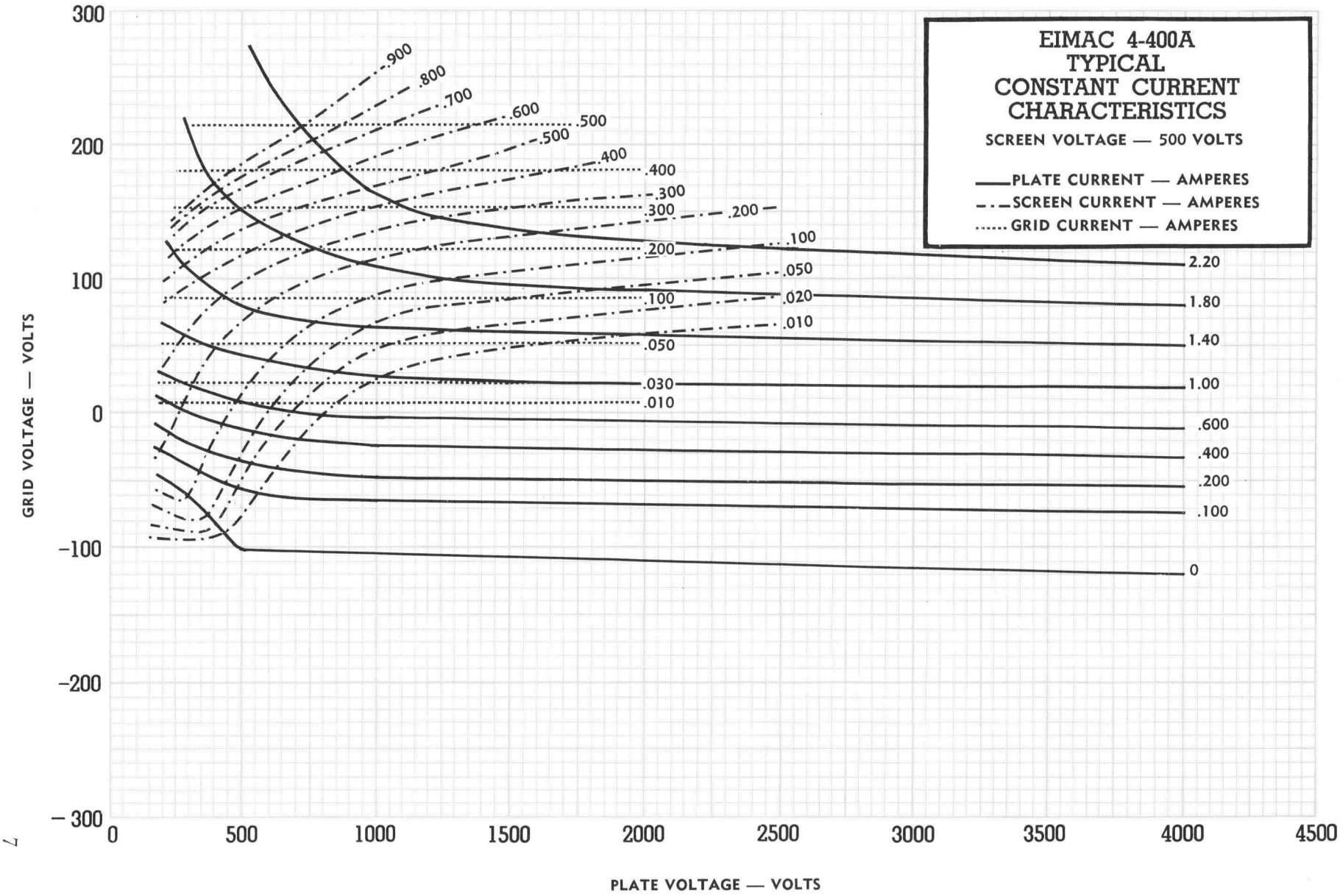
EIMAC 4-400A
TYPICAL
CONSTANT CURRENT
CHARACTERISTICS
SCREEN VOLTAGE — 500 VOLTS
PLATE CURRENT — AMPERES
SCREEN CURRENT — AMPERES
GRID CURRENT — AMPERES
GRID VOLTAGE — VOLTS
PLATE VOLTAGE — VOLTS
300
200
100
0
−100
−200
−300
0
500
1000
1500
2000
2500
3000
3500
4000
4500
.900
.800
.700
.600
.500
.400
.300
.200
.100
.050
.030
.020
.010
2.20
1.80
1.40
1.00
.600
.400
.200
.100
0

TECHNICAL DATA

6775
4-400C

RADIAL BEAM
POWER TETRODE

The EIMAC 6775/4-400C is a compact, ruggedly constructed, broadcast-quality tetrode having a maximum plate dissipation rating of 400 watts. It is intended for use as an amplifier, oscillator, or modulator. The low grid-plate capacitance of this tetrode coupled with its low driving-power requirement allows considerable simplification of the associated circuit and driver stage.

The 6775/4-400C is cooled by radiation from the plate and by circulation of forced-air through the base, around the envelope, and over the plate seal. Cooling can be greatly simplified by using an EIMAC SK-400 Series Air-System Socket, and its accompanying glass chimney. This socket is designed to maintain the correct balance of cooling air between the component parts of the tube.[1]

The 6775/4-400C is especially recommended for applications where long life and consistent performance are of prime consideration.[2]



GENERAL CHARACTERISTICS[3]

ELECTRICAL

Filament: Thoriated Tungsten		
Voltage	5.0 ± 0.25	V
Current, at 5.0 volts	14.7	A
Transconductance (Average):		
I_b = 100 mA, E_{c2} = 500 volts	4000	μmhos
Amplification Factor (Average):		
Grid to Screen	5.1	
Direct Interelectrode Capacitances (grounded filament)[4]		
Cin	12.5	pF
Cout	4.7	pF
Cgp	0.12	pF
Frequency of Maximum Rating:		
CW	110	MHz

1. Guarantee applies only when the 4-400C is used as specified with adequate cooling air in the SK-400 or SK-410 Air-System Socket and associated chimney, or equivalents.
2. See FILAMENT VOLTAGE section for recommended operating conditions when long life and consistent performance are of prime concern.
3. Characteristics and operating values are based on performance tests. These figures may change without notice as the result of additional data or product refinement. EIMAC Division of Varian should be consulted before using this information for final equipment design.
4. Capacitance values are for a cold tube as measured in a special shielded fixture in accordance with Electronic Industries Association Standard RS-191.

(Effective 4-1-71) © by Varian

Printed in U.S.A.

MECHANICAL

Maximum Overall Dimensions:	
Length	6.375 in; 161.93 mm
Diameter	3.563 in; 90.50 mm
Net Weight	9.0 oz; 255 gm
Operating Position	Any
Maximum Operating Temperature:	
Plate Seal	225°C
Base Seals	200°C
Cooling	Radiation and forced air
Base	Special 5-pin
Recommended Socket	EIMAC SK-400 Series
Recommended Chimney	EIMAC SK-406
Recommended Heat-Dissipating Connectors:	
Plate	HR-6

RADIO FREQUENCY LINEAR AMPLIFIER GRID DRIVEN

Class AB_1

ABSOLUTE MAXIMUM RATINGS

DC PLATE VOLTAGE	4000	VOLTS
DC SCREEN VOLTAGE	800	VOLTS
DC PLATE CURRENT	0.350	AMPERE
PLATE DISSIPATION	400	WATTS
SCREEN DISSIPATION	35	WATTS
GRID DISSIPATION	10	WATTS

TYPICAL OPERATION (Frequencies to 75 MHz)
Class AB_1, Grid Driven, Peak Envelope or Modulation Crest Conditions

Plate Voltage	3000	Vdc
Screen Voltage	750	Vdc
Grid Voltage[1]	-130	Vdc
Zero-Signal Plate Current	80	mAdc
Single-Tone Plate Current	290	mAdc
Single-Tone Screen Current[2]	13	mAdc
Useful Output Power	470	w
Resonant Load Impedance	5000	Ω

1. Adjust to specified zero-signal dc plate current.
2. Approximate value.

RADIO FREQUENCY POWER AMPLIFIER OR OSCILLATOR

Class C Telegraphy or FM Telephony (Key-Down Conditions)

ABSOLUTE MAXIMUM RATINGS

DC PLATE VOLTAGE	4000	VOLTS
DC SCREEN VOLTAGE	600	VOLTS
DC PLATE CURRENT	0.350	AMPERE
PLATE DISSIPATION	400	WATTS
SCREEN DISSIPATION	35	WATTS
GRID DISSIPATION	10	WATTS

TYPICAL OPERATION (Frequencies to 75 MHz)

Plate Voltage	2500	3000	4000	Vdc
Screen Voltage	500	500	500	Vdc
Grid Voltage	-200	-220	-220	Vdc
Plate Current	350	350	350	mAdc
Screen Current[1]	46	46	40	mAdc
Screen Dissipation	23	23	20	W
Grid Current[1]	18	19	18	mAdc
Peak rf Grid Voltage[1]	300	320	320	v
Grid Dissipation	1.8	1.9	1.8	W
Calculated Driving Power[2]	5.4	6.1	5.8	W
Plate Input Power	875	1050	1400	W
Plate Dissipation	235	250	300	W
Plate Output Power	640	800	1100	W

1. Approximate value.
2. Driving Power increases with frequency. At 75 MHz driving power is approximately 12 watts.

TYPICAL OPERATION (110 MHz, two tubes)

Plate Voltage	3000	4000	Vdc
Screen Voltage	500	500	Vdc
Grid Voltage	-170	-170	Vdc
Plate Current	500	540	mAdc
Screen Current	34	31	mAdc
Grid Current	20	20	mAdc
Driving Power[1]	20	20	W
Plate Output Power[1]	1300	1600	W
Useful Output Power	1160	1440	W

1. Approximate value

PLATE MODULATED RADIO FREQUENCY POWER AMPLIFIER-GRID DRIVEN Class C Telephony (Carrier Conditions)

ABSOLUTE MAXIMUM RATINGS

DC PLATE VOLTAGE	3200	VOLTS
DC SCREEN VOLTAGE	600	VOLTS
DC GRID VOLTAGE	-500	VOLTS
DC PLATE CURRENT	0.275	AMPERE
PLATE DISSIPATION[1]	270	WATTS
SCREEN DISSIPATION[2]	35	WATTS
GRID DISSIPATION[2]	10	WATTS

1. Corresponds to 400 watts at 100% sine-wave modulation.

TYPICAL OPERATION (Frequencies to 75 MHz, Continuous Service)

Plate Voltage	2000	2500	3000	Vdc
Screen Voltage	500	500	500	Vdc
Grid Voltage	-220	-220	-220	Vdc
Plate Current	275	275	275	mAdc
Screen Current[1]	30	28	26	mAdc
Screen Dissipation	15	14	13	W
Grid Current[1]	12	12	12	mAdc
Grid Dissipation	1.1	1.1	1.1	W
Peak af Screen Voltage[1] (100% modulation)	350	350	350	v
Peak rf Grid Voltage[1]	290	290	290	v
Calculated Driving Power[1]	3.5	3.5	3.5	W
Plate Input Power	550	688	825	W
Plate Dissipation	170	178	195	W
Plate Output Power	380	510	630	W

1. Approximate value.

MAXIMUM RATINGS (Frequencies to 30 MHz, Intermittent Service)

ABSOLUTE MAXIMUM RATINGS

DC PLATE VOLTAGE	4000	VOLTS
DC SCREEN VOLTAGE	600	VOLTS
DC GRID VOLTAGE	-500	VOLTS
DC PLATE CURRENT	0.275	AMPERE
PLATE DISSIPATION[1]	270	WATTS
SCREEN DISSIPATION[2]	35	WATTS
GRID DISSIPATION[2]	10	WATTS

2. Average, with or without modulation.

TYPICAL OPERATION (Frequencies to 30 MHz, Intermittent Service)

Plate Voltage	2000	2500	3000	3650	Vdc
Screen Voltage	500	500	500	500	Vdc
Grid Voltage	-220	-220	-220	-225	Vdc
Plate Current	275	275	275	275	mAdc
Screen Current[1]	30	28	26	23	mAdc
Screen Dissipation	15	14	13	12	W
Grid Current[1]	12	12	12	13	mAdc
Grid Dissipation	1.1	1.1	1.1	1.2	W
Peak Screen Voltage (100% modulation)	350	350	350	350	v
Peak rf Grid Voltage[1]	290	290	290	315	v
Calculated Driving Power[1]	3.5	3.5	3.5	4.0	W
Plate Input Power	550	688	825	1000	W
Plate Dissipation	170	178	195	235	W
Plate Output Power	380	510	630	765	W

AUDIO FREQUENCY POWER AMPLIFIER OR MODULATOR Class AB, Grid Driven (Sinusoidal Wave)

ABSOLUTE MAXIMUM RATINGS (Per Tube)

DC PLATE VOLTAGE	4000	VOLTS
DC SCREEN VOLTAGE	800	VOLTS
DC PLATE CURRENT	0.350	AMPERE
PLATE DISSIPATION	400	WATTS
SCREEN DISSIPATION	35	WATTS
GRID DISSIPATION	10	WATTS

TYPICAL OPERATION (Two Tubes) Class AB_1

Plate Voltage	2500	3000	3500	4000	Vdc
Screen Voltage	750	750	750	750	Vdc
Grid Voltage[1/4]	-130	-137	-145	-150	Vdc
Zero-Signal Plate Current	190	160	140	120	mAdc
Max.Signal Plate Current	635	635	610	585	mAdc
Zero-Signal Screen Current	0	0	0	0	mAdc
Max.Signal Screen Current[1]	28	26	32	40	mAdc
Peak af Grid Voltage[2]	130	137	145	150	v
Peak Driving Power[3]	0	0	0	0	w
Max Signal Plate Dissipation[2]	370	400	400	400	W
Plate Output Power	850	1100	1330	1540	W
Load Resistance (plate to plate)	6800	8900	11,500	14,000	Ω

TYPICAL OPERATION (Two Tubes) Class AB_2

Plate Voltage	2500	3000	3500	4000	Vdc
Screen Voltage	500	500	500	500	Vdc
Grid Voltage[1/4]	-75	-80	-85	-90	Vdc
Zero-Signal Plate Current	190	160	140	120	mAdc
Max.Signal Plate Current	700	700	700	638	mAdc
Zero-Signal Screen Current	0	0	0	0	mAdc
Max.Signal Screen Current	50	40	38	32	mAdc
Peak af Grid Voltage[2]	133	140	145	140	v
Peak Driving Power[3]	8.6	9.0	10.2	7.0	w
Max.Signal Plate Dissipation[2]	320	363	400	400	W
Plate Output Power	1110	1375	1650	1750	W
Load Resistance (plate to plate)	7200	9100	10,800	14,000	Ω

1. Approximate value.
2. Per Tube.
3. Nominal drive power is one-half peak power.
4. Adjust to give stated zero-signal plate current.

NOTE: TYPICAL OPERATION data are obtained from direct measurement or by calculation from published characteristic curves. Adjustment of the rf grid voltage to obtain the specified plate current at the specified bias, screen and plate voltages is assumed. If this procedure is followed, there will be little variation in output power when the tube is changed, even though there may be some variation in grid and screen current. The grid and screen currents which result when the desired plate current is obtained are incidental and vary from tube to tube. These current variations cause no difficulty so long as the circuit maintains the correct voltage in the presence of the variations in current. In the case of Class C Service, if grid bias is obtained principally by means of a grid resistor, the resistor must be adjustable to obtain the required bias voltage when the correct rf grid voltage is applied.

RANGE VALUES FOR EQUIPMENT DESIGN

	Min.	Max.	
Filament: Current at 5.0 volts	14.0	15.3	A
Interelectrode Capacitances [1] (grounded filament connection):			
Cin	10.7	14.5	pF
Cout	4.2	5.6	pF
Cgp	----	0.17	pF

1. In Shielded Fixture, per EIA Standard RS-191.

APPLICATION

MECHANICAL

MOUNTING - The 4-400C may be operated in any position. The socket must be constructed so as to allow an unimpeded flow of air through the holes in the base of the tube and must also provide clearance for the glass tip-off which extends from the center of the base. The metal tube-base shell should be grounded by means of suitable spring fingers. The above requirements are met by the EIMAC SK-400 and SK-410 Air-System Sockets. A flexible connecting strap should be provided between the EIMAC HR-6 cooler on the plate terminal and the external plate circuit. The tube must be protected from severe vibration and shock.

COOLING - Adequate forced-air cooling must be provided to maintain the base seals at a temperature below 200°C, and the plate seal at a temperature below 225°C.

When the EIMAC SK-400 or SK-410 Air-System Socket is used, a minimum air flow of 14 cubic feet per minute at a static pressure of 0.25 inches of water or less, as measured in the socket or plenum chamber at sea level, is required to provide adequate cooling under all conditions of operation. Seal temperature limitations may require that cooling air be supplied to the tube even when the filament alone is on during standby periods.

Tube temperatures may be measured with a temperature sensitive paint, spray or crayon, such as manufactured by Tempil Division, Big Three Industrial Gas & Equipment Co., Hamilton Blvd., So. Plainfield, N.J. 07080.

ELECTRICAL

FILAMENT VOLTAGE - Filament voltage should be measured at the tube base with an accurate meter. When operating at the nominal voltage, variations of ±5% are tolerable and should have little effect on electrical performance of the tube. However, when very long life and consistent performance are factors, voltage can often be reduced to a value lower than the nominal voltage, but should be regulated and held to ±1% when this is done. To achieve a regulated voltage and still have it adjustable, a typical procedure would involve a one-to-one regulating transformer, feeding a variable ratio transformer (such as a POWERSTAT or a VARIAC), which in turn feeds the filament transformer. The equipment is first operated with nominal filament voltage applied, and when stable operation is achieved, the voltage is then reduced in small steps (about 0.2 volt at a time) until the point is reached where performance of the tube is clearly affected. The voltage is then

raised to a few tenths of a volt above this level for operation. Periodically (every 500 to 1000 hours) this procedure should be repeated and the operating value of the filament voltage readjusted if necessary.

BIAS VOLTAGE - The dc bias voltage for the 4-400C should not exceed 500 volts. If grid resistor bias is used, suitable means must be provided to prevent excessive plate or screen dissipation in the event of loss of excitation, and the grid resistor should be made adjustable to facilitate maintaining the bias voltage and plate current at the desired values from tube to tube. In operation above 50 MHz, it is advisable to keep the bias voltage as low as is practicable.

SCREEN VOLTAGE - The dc screen voltage for the 4-400C should not exceed 800 volts. The screen voltages shown under Typical Operation are representative voltages for the type of operation involved.

PLATE VOLTAGE - The plate-supply voltage for the 4-400C should not exceed 4000 volts in CW and audio applications. In plate-modulated telephony service the dc plate-supply voltage should not exceed 3200 volts, except below 30 MHz, intermittent service, where 4000 volts may be used.

GRID DISSIPATION - Grid dissipation for the 4-400C should not be allowed to exceed 10 watts. Grid dissipation may be calculated from the following expression:

$$Pg = egk \times Ic$$

where Pg = Grid dissipation

e_{gk} = Peak positive grid to cathode voltage, and

Ic = dc grid current

SCREEN DISSIPATION - The power dissipated by the screen of the 4-400C must not exceed 35 watts. Screen dissipation is likely to rise to excessive values when the plate voltage, bias voltage or plate load are removed with filament and screen voltages applied. Suitable protective means must be provided to limit screen dissipation to 35 watts in event of circuit failure.

PLATE DISSIPATION - Under normal operating conditions, the plate dissipation of the 4-400C should not be allowed to exceed 400 watts. The anode operates at a visibly red color at its maximum rated dissipation of 400 watts.

In plate modulated amplifier applications, the maximum allowable carrier-condition plate dissipation is 270 watts. The plate dissipation will rise to 400 watts under 100% sinusoidal modulation.

Plate dissipation in excess of the maximum rating is permissible for short periods of time, such as during tuning procedures.

MULTIPLE OPERATION - To obtain maximum power output with minimum distortion from tubes operated in multiple, it is desirable to adjust individual screen or grid bias voltages so that the peak plate current for each tube is equal at the crest of the exciting voltage. Under these conditions, individual dc plate currents will be approximately equal for full input signal for class AB1 operation.

CAUTION - GLASS IMPLOSION - The EIMAC 4-400C is pumped to a very high vacuum, which is contained by a glass envelope. When handling a glass tube, remember that glass is a relatively fragile material, and accidental breakage can result at any time. Breakage will result in flying glass fragments, so safety glasses, heavy clothing, and leather gloves are recommended for protection.

CAUTION-HIGH VOLTAGE - Operating voltage for the 4-400C can be deadly, so the equipment must be designed properly and operating precautions must be followed. Design equipment so that no one can come in contact with high voltages. All equipment must include safety enclosures for high voltage circuits and terminals, with interlock switches to open the primary circuits of the power supply and to discharge high voltage capacitors whenever access doors are opened. Interlock switches must not be bypassed or "cheated" to allow operation with access doors open. Always remember that HIGH VOLTAGE CAN KILL.

SPECIAL APPLICATION - If it is desired to operate this tube under conditions widely different from those listed here, write to Power Grid Tube Division, EIMAC Division of Varian, 301 Industrial Way, San Carlos, California 94070, for information and recommendations.

DIMENSIONAL DATA

DIM.	INCHES			MILLIMETERS		
	MIN.	MAX.	REF.	MIN.	MAX.	REF.
A	5.875	6.375	--	149.23	161.93	--
B	--	3.563	--	--	90.50	--
D	5.125	5.625	--	130.18	142.88	--
E	0.350	0.365	--	8.89	9.27	--
F	0.328	--	--	8.33	--	--
H	--	--	0.438	--	--	11.13
J	--	0.969	--	--	24.61	--
K	--	0.250	--	--	6.35	--
L	--	--	0.750	--	--	19.05
M	--	--	0.250	--	--	6.35
N	--	2.750	--	--	69.85	--
P	--	--	0.312	--	--	7.92
Q	--	--	0.500	--	--	12.70
R	--	--	1.625	--	--	41.28
S	--	--	1.250	--	--	31.75
T	0.185	0.191	--	4.70	4.85	--
U	--	--	30°	--	--	30°
V	--	--	60°	--	--	60°
W	--	--	45°	--	--	45°

NOTES:
1. REF. DIMENSIONS ARE FOR INFO. ONLY & ARE NOT REQUIRED FOR INSPECTION PURPOSES.

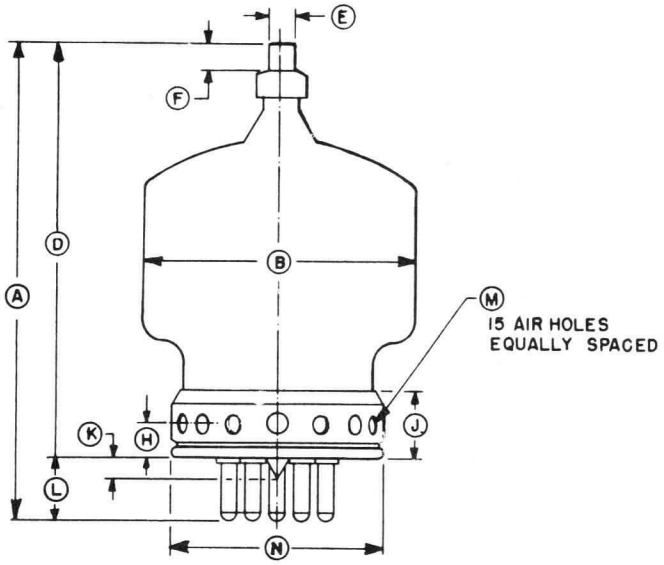

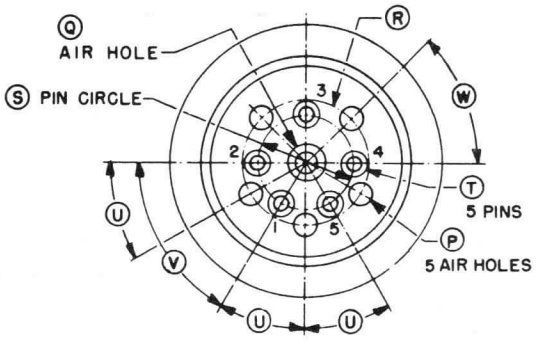

BOTTOM VIEW

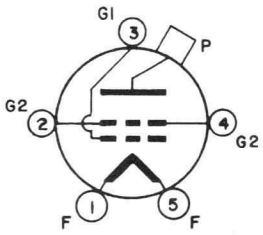

NOTE:

Base pins T and tubulation K are so alined that they can be freely inserted in a gage ¼ inch (6.35 mm) thick with hole diameters of .204 (5.18 mm) and .500 (12.70 mm), respectively, located on the true centers by the given dimensions S, U, V.

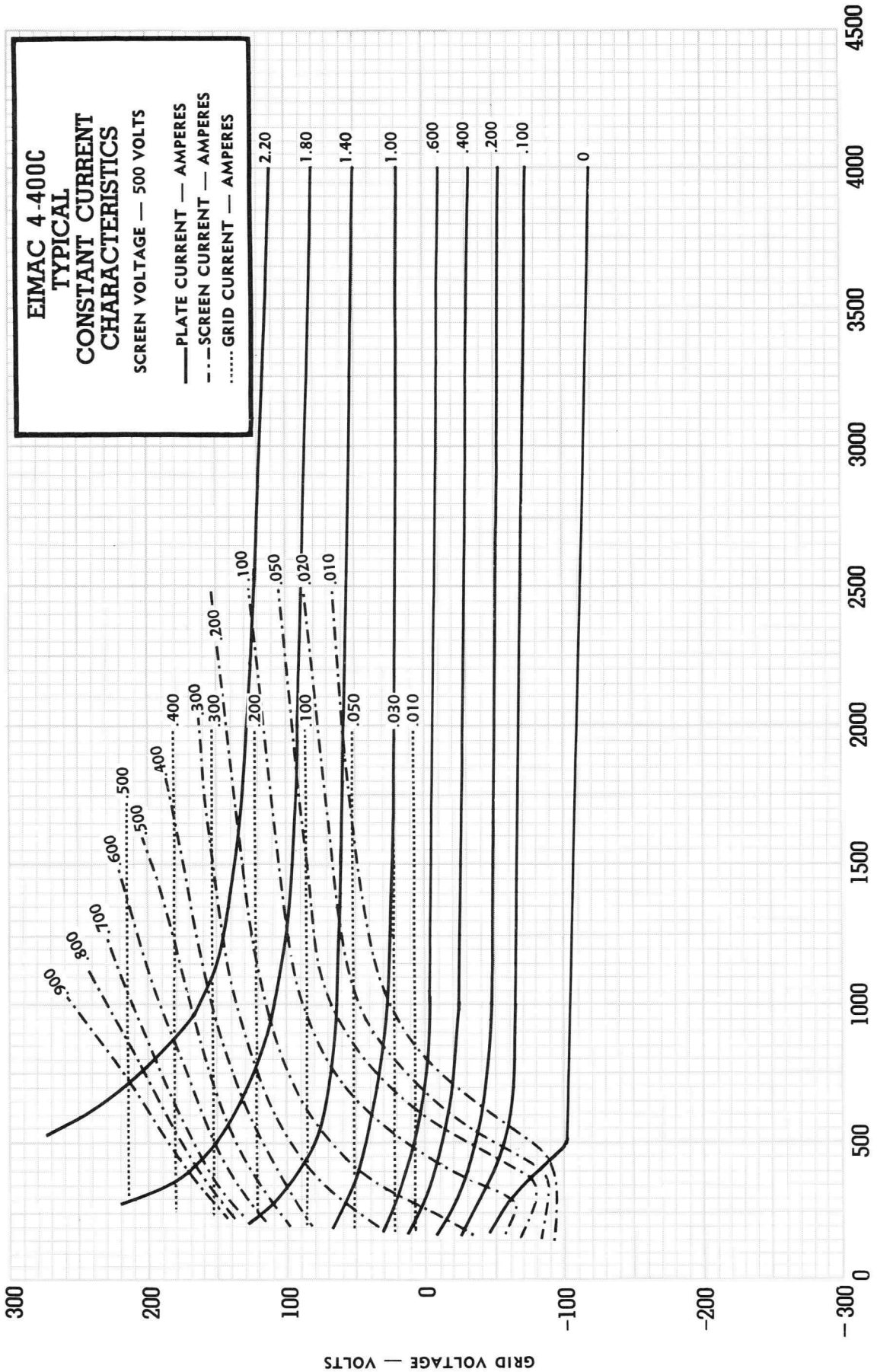
EIMAC 4-400C
TYPICAL
CONSTANT CURRENT
CHARACTERISTICS
SCREEN VOLTAGE — 500 VOLTS
——PLATE CURRENT — AMPERES
- - -SCREEN CURRENT — AMPERES
..... GRID CURRENT — AMPERES
2.20
1.80
1.40
1.00
.600
.400
.200
.100
0
.100
.050
.020
.010
.200
.100
.050
.030
.010
.300
.300
.400
.400
.500
.500
.600
.700
.800
.900
300
200
100
0
-100
-200
-300
0
500
1000
1500
2000
2500
3000
3500
4000
4500
GRID VOLTAGE — VOLTS
PLATE VOLTAGE — VOLTS

4–500A

TECHNICAL DATA

RADIAL BEAM
POWER TETRODE

The EIMAC 4-500A is a compact, ruggedly constructed, broadcast-quality tetrode having a maximum plate dissipation rating of 500 watts. It is intended for use as an amplifier, oscillator, or modulator. The low grid-plate capacitance of this tetrode coupled with its low driving-power requirement allows considerable simplification of the associated circuit and driver stage.

The 4-500A is cooled by radiation from the plate and by circulation of forced-air through the base, around the envelope, and over the plate seal. Cooling can be greatly simplified by using an EIMAC SK-400 Series Air-System Socket, and its accompanying glass chimney. This socket is designed to maintain the correct balance of cooling air between the component parts of the tube.

The 4-500A is especially recommended for applications where long life and consistent performance are of prime consideration.



GENERAL CHARACTERISTICS[1]

ELECTRICAL

Filament: Thoriated Tungsten	
Voltage	10.0 ± 0.5 V
Current, at 10.0 volts	10.2 A
Amplification Factor (Average):	
Grid to Screen	5.5
Direct Interelectrode Capacitances (grounded filament)[2]	
Cin	15.0 pF
Cout	5.0 pF
Cgp	0.15 pF
Frequency of Maximum Rating:	
CW	110 MHz

1. Characteristics and operating values are based on performance tests. These figures may change without notice as the result of additional data or product refinement. EIMAC Division of Varian should be consulted before using this information for final equipment design.

2. Capacitance values are for a cold tube as measured in a special shielded fixture in accordance with Electronic Industries Association Standard RS-191.

MECHANICAL

Maximum Overall Dimensions:	
Length	7.000 in; 177.80 mm
Diameter	3.562 in; 90.47 mm
Net Weight	8.7 oz; 245 gm

(Effective 3-10-72) © by Varian Printed in U.S.A.

Operating Position	Vertical, base up or down
Maximum Operating Temperature:	
Plate Seal	225° C
Base Seals	200° C
Cooling	Radiation and forced air
Base	Special 5-pin
Recommended Socket	EIMAC SK-410
Recommended Chimney	EIMAC SK-426
Recommended Heat-Dissipation Connectors:	
Plate	HR-6

RADIO FREQUENCY LINEAR AMPLIFIER GRID DRIVEN Class AB_1

ABSOLUTE MAXIMUM RATINGS:

DC PLATE VOLTAGE	4000	VOLTS
DC SCREEN VOLTAGE	1000	VOLTS
DC PLATE CURRENT	0.450	AMPERE
PLATE DISSIPATION	500	WATTS
SCREEN DISSIPATION	35	WATTS
GRID DISSIPATION	12	WATTS

1. Adjust for specified zero-signal plate current.
2. Approximate values.
3. The intermodulation distortion products are referenced against one tone of a two-equal-tone signal.

TYPICAL OPERATION (Frequencies to 30 MHz)

Plate Voltage	2500	3000	4000	Vdc
Screen Voltage	750	750	750	Vdc
Grid Voltage [1]	-117	-130	-140	Vdc
Zero-Signal Plate Current	150	100	80	mAdc
One-Tone Plate Current	338	320	322	mAdc
Two-Tone Plate Current	254	225	215	mAdc
Zero-Sig. Screen Current [2]	0	0	0	mAdc
One-Tone Screen Current [2]	38	36	32	mAdc
Two-Tone Screen Current [2]	12	10	8	mAdc
Peak rf Grid Voltage [2]	103	116	126	v
Plate Dissipation	418	427	500	W
One-Tone Plate Output Power	427	533	773	W
Resonant Load Impedance	3700	4800	6500	Ω
IMD Products [3]				
3rd Order	-33	-33	-29	dB
5th Order	-38	-35	-34	dB

RADIO FREQUENCY POWER AMPLIFIER OR OSCILLATOR (Class C Telegraphy or FM Telephony - Key Down Conditions)

ABSOLUTE MAXIMUM RATINGS:

DC PLATE VOLTAGE	4000	VOLTS
DC SCREEN VOLTAGE	600	VOLTS
DC PLATE CURRENT	0.450	AMPERE
PLATE DISSIPATION	500	WATTS
SCREEN DISSIPATION	35	WATTS
GRID DISSIPATION	12	WATTS

1. Approximate value.
2. Driving power increases with frequency. Values shown are calculated or measured at Low Frequency.

TYPICAL OPERATION (Frequencies to 75 MHz)

Plate Voltage	2500	3000	3800	Vdc
Screen Voltage	500	500	500	Vdc
Grid Voltage	-265	-270	-280	Vdc
Plate Current	402	428	445	mAdc
Screen Current [1]	34	48	49	mAdc
Peak rf Grid Voltage [1]	365	380	390	v
Driving Power [2]	6.6	8.4	9.0	W
Plate Input Power	1005	1285	1685	W
Plate Dissipation	360	395	420	W
Plate Output Power	645	890	1265	W
Resonant Load Impedance	2520	2970	4030	Ω

PLATE MODULATED RADIO FREQUENCY POWER AMPLIFIER - GRID DRIVEN

Class C Telephony (Carrier Conditions)

ABSOLUTE MAXIMUM RATINGS:

DC PLATE VOLTAGE	3200	VOLTS
DC SCREEN VOLTAGE	600	VOLTS
DC GRID VOLTAGE	-500	VOLTS
DC PLATE CURRENT	0.35	AMPERE
PLATE DISSIPATION [1]	335	WATTS
SCREEN DISSIPATION [2]	35	WATTS
GRID DISSIPATION [2]	12	WATTS

1. Corresponds to 500 watts at 100% sine-wave modulation.
2. Average, with or without modulation.
3. Approximate value.
4. Driving power increases with frequency. Values shown are calculated for low frequency.

TYPICAL OPERATION (Frequencies to 30 MHz)
(Continuous Service)

Plate Voltage	2700	3200	Vdc
Screen Voltage	500	500	Vdc
Grid Voltage	-280	-300	Vdc
Plate Current	338	337	mAdc
Screen Current [3]	30	40	mAdc
Grid Current [3]	12	15	mAdc
Peak af Screen Voltage [3] (100% modulation)	500	500	v
Peak rf Grid Voltage [3]	360	380	v
Calculated Driving Power [4]	4.3	5.8	W
Plate Input Power	915	1075	W
Plate Dissipation	245	245	W
Plate Output Power	670	830	W
Resonant Load Impedance	3610	4390	Ω

AUDIO FREQUENCY POWER AMPLIFIER OR MODULATOR Class AB, Grid Driven, Sinusoidal Wave

ABSOLUTE MAXIMUM RATINGS (Per Tube)

DC PLATE VOLTAGE	4000	VOLTS
DC SCREEN VOLTAGE	1000	VOLTS
DC PLATE CURRENT	0.450	AMPERE
PLATE DISSIPATION	500	WATTS
SCREEN DISSIPATION	35	WATTS
GRID DISSIPATION	12	WATTS

1. Approximate value.
2. Per tube.
3. Adjust to give stated zero-signal plate current.

TYPICAL OPERATION (Two Tubes - Class AB_1)

Plate Voltage	3000	3800	Vdc
Screen Voltage	750	750	Vdc
Grid Voltage[1/3]	-138	-150	Vdc
Zero-Signal Plate Current	200	150	mAdc
Max. Signal Plate Current	735	715	mAdc
Zero-Signal Screen Current	0	0	mAdc
Max. Signal Screen Current[1]	16	16	mAdc
Max. Signal Grid Current	0	0	mAdc
Peak af Grid Voltage[2]	123	135	v
Peak Driving Power	0	0	w
Max. Signal Plate Dissipation	480	500	W
Plate Output Power	1240	1720	W
Load Resistance (tube-to-tube)	7800	10500	Ω

NOTE: TYPICAL OPERATION data are obtained from direct measurement or by calculation from published characteristic curves. Adjustment of the rf grid voltage to obtain the specified plate current at the specified bias, screen and plate voltages is assumed. If this procedure is followed, there will be little variation in output power when the tube is changed, even though there may be some variation in grid and screen current. The grid and screen currents which result when the desired plate current is obtained are incidental and vary from tube to tube. These current variations cause no difficulty so long as the circuit maintains the correct voltage in the presence of the variations in current. In the case of Class C Service, if grid bias is obtained principally by means of a grid resistor, the resistor must be adjustable to obtain the required bias voltage when the correct rf grid voltage is applied.

RANGE VALUES FOR EQUIPMENT DESIGN

	Min.	Max.	
Filament: Current at 10.0 volts	9.7	11.2	A
Interelectrode Capacitances[1] (grounded filament connection):			
Cin	13.0	17.0	pF
Cout	4.0	6.0	pF
Cgp	---	0.20	pF

1. In Shielded Fixture, per EIA Standard RS-191.

APPLICATION

MECHANICAL

MOUNTING - The 4-500A must be mounted vertically. The socket must be constructed so as to allow an unimpeded flow of air through the holes in the base of the tube and must also provide clearance for the glass tip-off which extends from the center of the base. The metal tube-base shell should be grounded by means of suitable spring fingers. The above requirements are met by the EIMAC SK-410 Air-System Socket. A flexible connecting strap should be provided between the EIMAC HR-6 cooler on the plate terminal and the external plate circuit. The tube must be protected from severe vibration and shock.

COOLING - Adequate forced-air cooling must be provided to maintain the base seals at a temperature below 200°C, and the plate seal at a temperature below 225°C.

When the EIMAC SK-410 Socket and SK-426 Chimney are used, a minimum air flow of 14 cubic feet per minute at a static pressure of 0.25 inches of water or less, as measured in the socket or plenum chamber at sea level, is required to provide adequate cooling under all conditions of operation. Seal temperature limitations may require that cooling air be supplied to the tube even when the filament alone is on during standby periods.

Tube temperatures may be measured with a temperature sensitive paint, spray or crayon, such as manufactured by Tempil Division, Big Three Industrial Gas & Equipment Co., Hamilton Blvd., So. Plainfield, N.J. 07080.

ELECTRICAL

FILAMENT VOLTAGE - Filament voltage should be measured at the tube base with an accurate meter. When operating at the nominal

voltage, variations of ±5% are tolerable and should have little effect on electrical performance of the tube. However, when very long life and consistent performance are factors, voltage can often be reduced to a value lower than the nominal voltage, but should be regulated and held to ±1% when this is done. To achieve a regulated voltage and still have it adjustable, a typical procedure would involve a one-to-one regulating transformer, feeding a variable ratio transformer (such as a POWERSTAT or a VARIAC), which in turn feeds the filament transformer. The equipment is first operated with nominal filament voltage applied, and when stable operation is achieved, the voltage is then reduced in small steps (about 0.2 volt at a time) until the point is reached where performance of the tube is clearly affected. The voltage is then raised to a few tenths of a volt above this level for operation. Periodically (every 500 to 1000 hours) this procedure should be repeated and the operating value of the filament voltage readjusted if necessary.

BIAS VOLTAGE - The dc bias voltage for the 4-500A should not exceed 500 volts. If grid resistor bias is used, suitable means must be provided to prevent excessive plate or screen dissipation in the event of loss of excitation, and the grid resistor should be made adjustable to facilitate maintaining the bias voltage and plate current at the desired values from tube to tube. In operation above 50 MHz, it is advisable to keep the bias voltage as low as is practicable.

SCREEN VOLTAGE - The dc screen voltage for the 4-500A should not exceed 1000 volts. The screen voltages shown under Typical Operation are representative voltages for the type of operation involved.

PLATE VOLTAGE - The plate-supply voltage for the 4-500A should not exceed 4000 volts in CW and audio applications. In plate-modulated telephony service the dc plate-supply voltage should not exceed 3200 volts, except below 30 MHz, intermittent service, where 4000 volts may be used.

GRID DISSIPATION - Grid dissipation for the 4-500A should not be allowed to exceed 12 watts. Grid dissipation may be calculated from the following expression:

$$P_g = e_{gk} \times I_c$$

where P_g = Grid dissipation
e_{gk} = Peak positive grid to cathode voltage, and
I_c = dc grid current

SCREEN DISSIPATION - The power dissipated by the screen of the 4-500A must not exceed 35 watts. Screen dissipation is likely to rise to excessive values when the plate voltage, bias voltage or plate load are removed with filament and screen voltages applied. Suitable protective means must be provided to limit screen dissipation to 35 watts in event of circuit failure.

PLATE DISSIPATION - Under normal operating conditions, the plate dissipation of the 4-500A should not be allowed to exceed 500 watts. The anode operates at a visibly red color at its maximum rated dissipation of 500 watts.

In plate modulated amplifier applications, the maximum allowable carrier-condition plate dissipation is 335 watts. The plate dissipation will rise to 500 watts under 100% sinusoidal modulation.

Plate dissipation in excess of the maximum rating is permissible for short periods of time, such as during tuning procedures.

MULTIPLE OPERATION - To obtain maximum power output with minimum distortion from tubes operated in multiple, it is desirable to adjust individual screen or grid bias voltages so that the peak plate current for each tube is equal at the crest of the exciting voltage. Under these conditions, individual dc plate currents will be approximately equal for full input signal for class AB1 operation.

CAUTION-GLASS IMPLOSION - The EIMAC 4-500A is pumped to a very high vacuum, which is contained by a glass envelope. When handling a glass tube, remember that glass is a relatively fragile material, and accidental breakage can result at any time. Breakage will result in flying glass fragments, so safety glasses, heavy clothing, and leather gloves are recommended for protection.

CAUTION-HIGH VOLTAGE - Operating voltage for the 4-500A can be deadly, so the equipment must be designed properly and operating precautions must be followed. Design equipment so that

no one can come in contact with high voltages. All equipment must include safety enclosures for high voltage circuits and terminals, with interlock switches to open the primary circuits of the power supply and to discharge high voltage capacitors whenever access doors are opened. Interlock switches must not be bypassed or "cheated" to allow operation with access doors open. Always remember that HIGH VOLTAGE CAN KILL.

INTERELECTRODE CAPACITANCE - The actual internal interelectrode capacitance of a tube is influenced by many variables in most applications, such as stray capacitance to the chassis, capacitance added by the socket used, stray capacitance between tube terminals, and wiring effects. To control the actual capacitance values within the tube, as the key component involved, the industry and the Military Services use a standard test procedure as described in Electronic Industries Association Standard RS-191. This requires the use of specially constructed test fixtures which effectively shield all external tube leads from each other and eliminates any capacitance reading to "ground". The test is performed on a cold tube. Other factors being equal, controlling internal tube capacitance in this way normally assures good interchangeability of tubes over a period of time, even when the tube may be made by different manufacturers. The capacitance values shown in the manufacturer's technical data, or test specifications, normally are taken in accordance with Standard RS-191.

The equipment designer is therefore cautioned to make allowance for the actual capacitance values which will exist in any normal application. Measurements should be taken with the socket and mounting which represent approximate final layout if capacitance values are highly significant in the design.

SPECIAL APPLICATION - If it is desired to operate this tube under conditions widely different from those listed here, write to Power Grid Tube Division, EIMAC Division of Varian, 301 Industrial Way, San Carlos, California 94070, for information and recommendations.

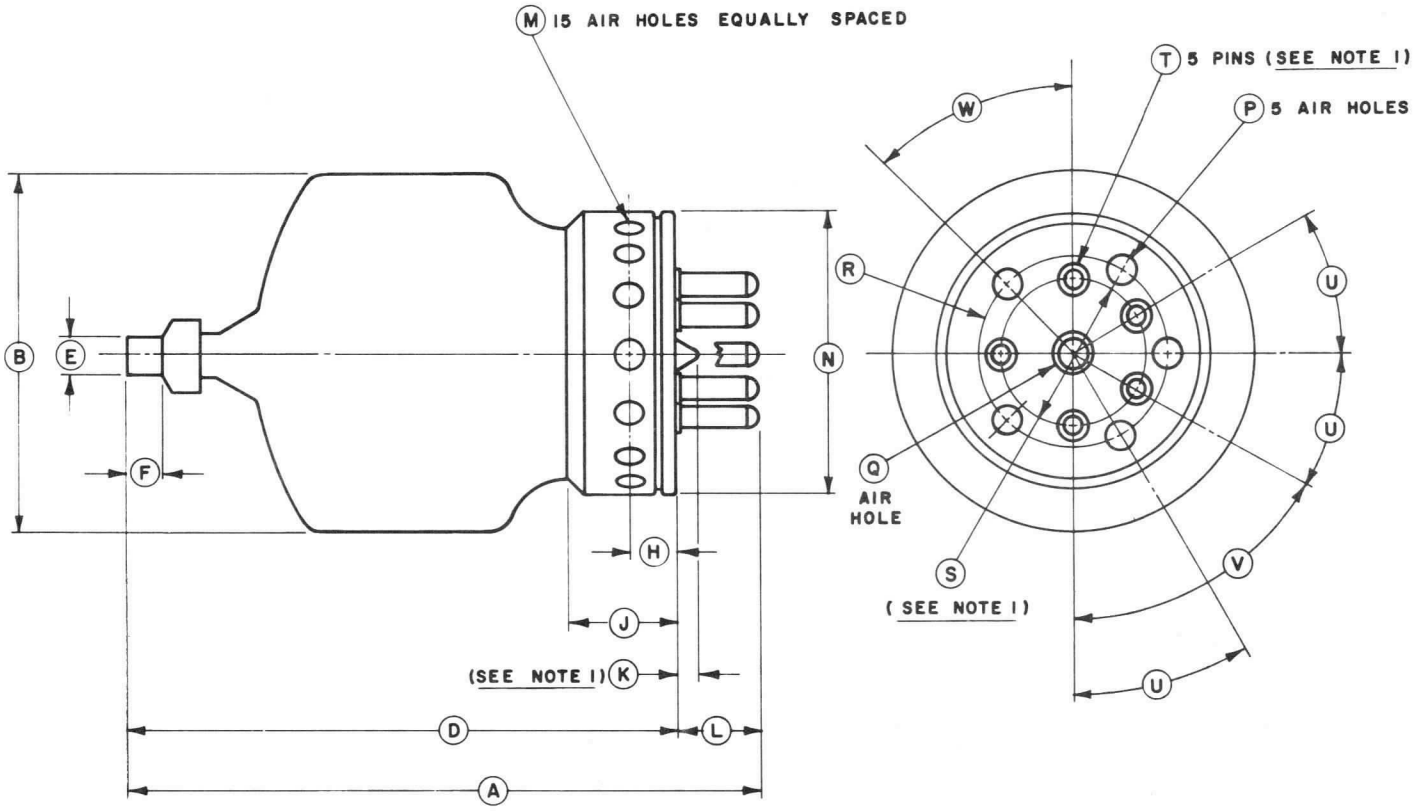

DIMENSIONAL DATA						
DIM.	INCHES			MILLIMETERS		
	MIN.	MAX.	REF.	MIN.	MAX.	REF.
A	6.500	7.000	- -	165.10	177.80	- -
B	- -	3.562	- -	- -	90.47	- -
D	5.750	6.250	- -	146.05	158.75	- -
E	0.350	0.365	- -	8.89	9.27	- -
F	0.328	- -	- -	8.33	- -	- -
H	- -	- -	0.468	- -	- -	11.89
J	- -	- -	1.125	- -	- -	28.57
K	- -	0.250	- -	- -	6.35	- -
L	- -	- -	0.750	- -	- -	19.05
M	- -	- -	0.250	- -	- -	6.35
N	- -	2.750	- -	- -	69.85	- -
P	- -	- -	0.312	- -	- -	7.92
Q	- -	- -	0.500	- -	- -	12.70
R	- -	- -	1.625	- -	- -	41.27
S	- -	- -	1.250	- -	- -	31.75
T	0.185	0.191	- -	4.70	4.85	- -
U	- -	- -	30°	- -	- -	30°
V	- -	- -	60°	- -	- -	60°
W	- -	- -	45°	- -	- -	45°

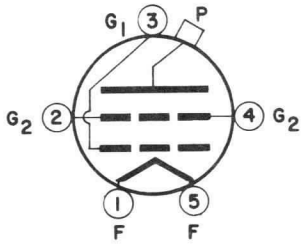

NOTES:

1. BASE PINS (T) & TUBULATION (K) ARE SO ALIGNED THAT THEY CAN BE FREELY INSERTED INTO A GAUGE 1/4 THICK WITH HOLE DIA'S OF .204 & .500 RESPECTIVELY LOCATED ON THE TRUE CENTERS BY THE GIVEN DIMENSIONS (V), (U) & (S).
2. REF. DIM'S ARE FOR INFO. ONLY & ARE NOT REQ'D FOR INSPECTION PURPOSES.

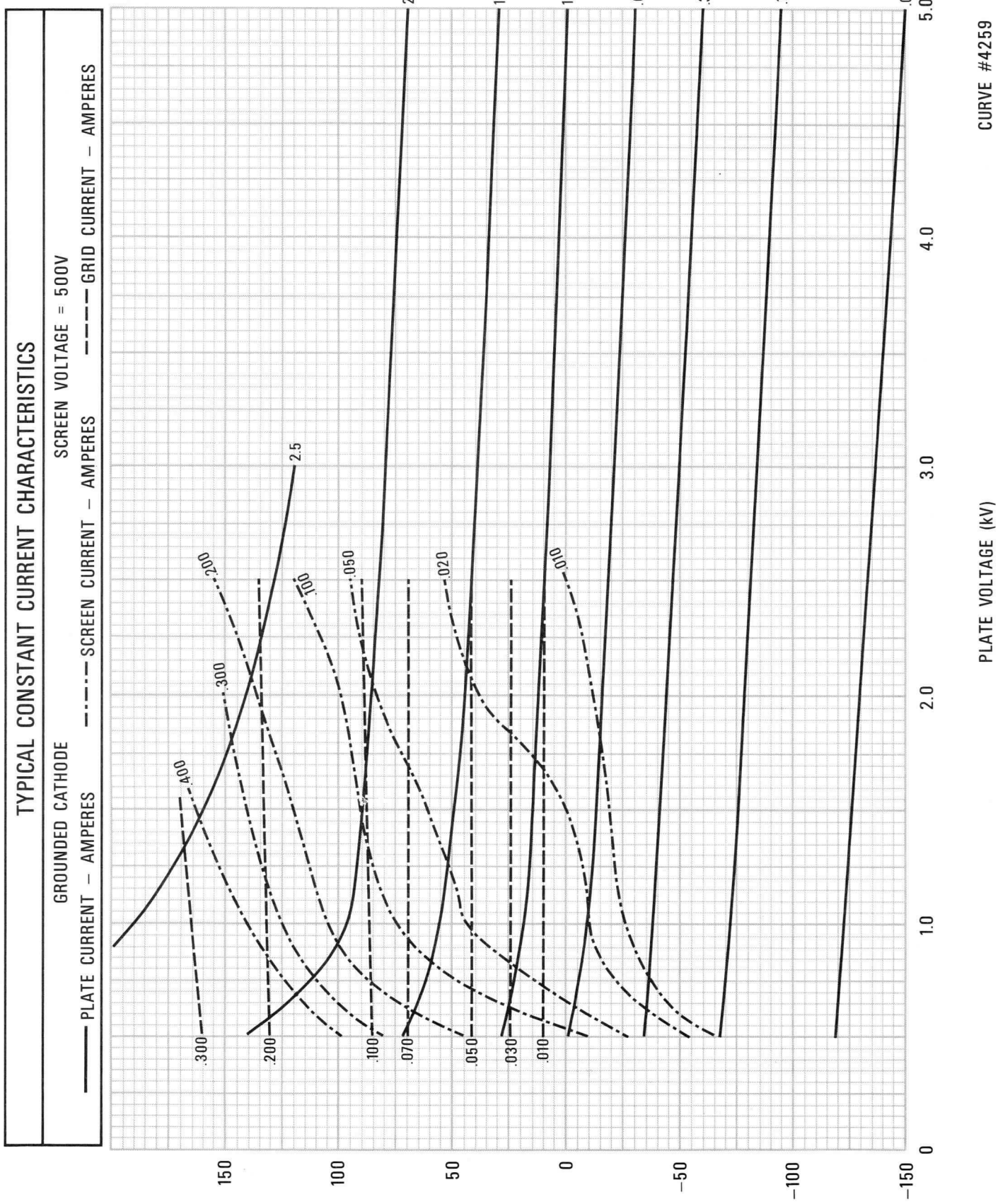
TYPICAL CONSTANT CURRENT CHARACTERISTICS
GROUNDED CATHODE
SCREEN VOLTAGE = 500V
PLATE CURRENT – AMPERES
SCREEN CURRENT – AMPERES
GRID CURRENT – AMPERES
.400
.300
.200
.100
.070
.050
.030
.010
2.5
200
100
050
020
010
2.0
1.5
1.0
.600
.300
.100
.001
150
100
50
0
–50
–100
–150
0
1.0
2.0
3.0
4.0
5.0
GRID VOLTAGE (V)
PLATE VOLTAGE (kV)
CURVE #4259

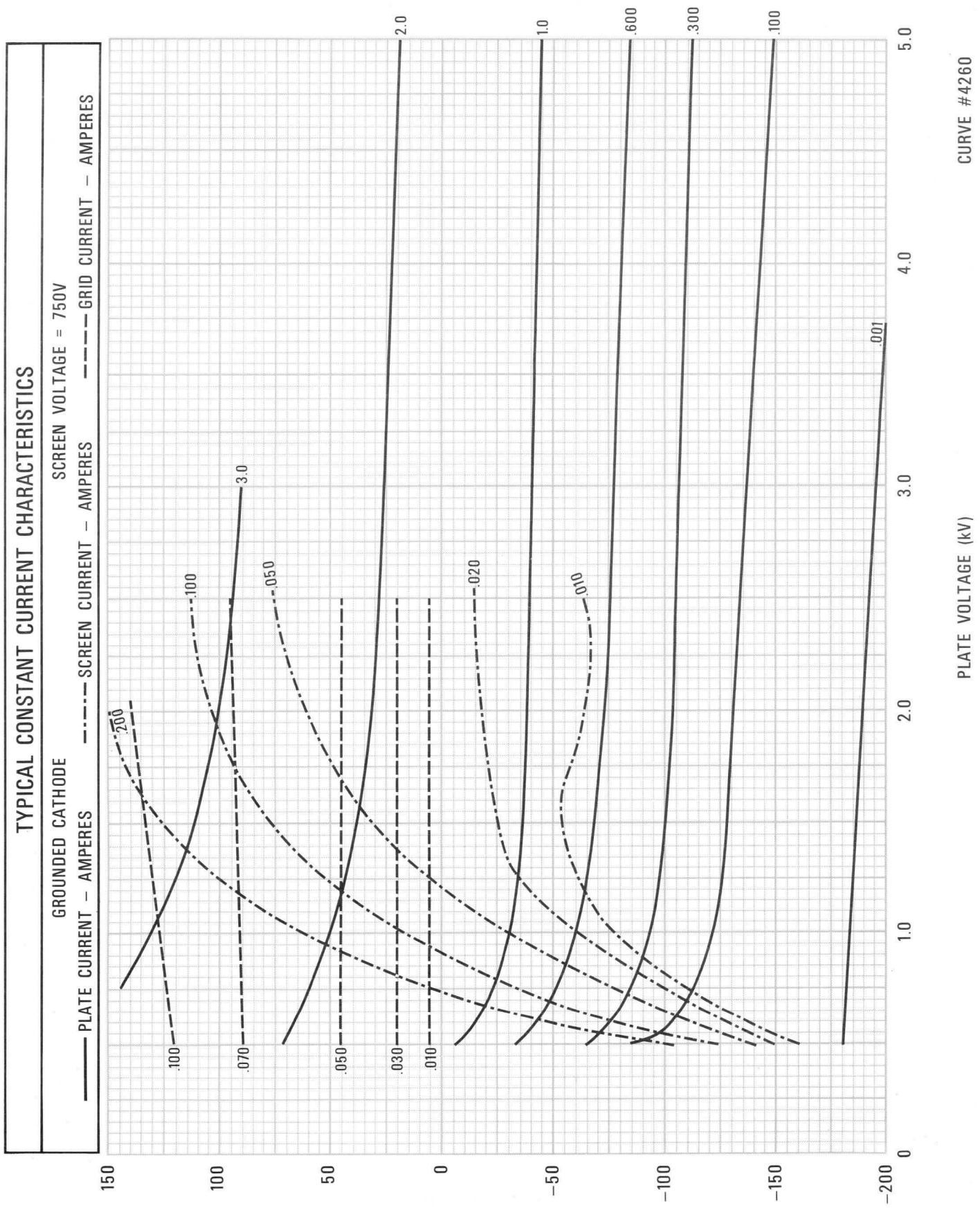
TYPICAL CONSTANT CURRENT CHARACTERISTICS
GROUNDED CATHODE
SCREEN VOLTAGE = 750V
PLATE CURRENT – AMPERES
SCREEN CURRENT – AMPERES
GRID CURRENT – AMPERES
GRID VOLTAGE (V)
PLATE VOLTAGE (kV)
CURVE #4260
150
100
50
0
–50
–100
–150
–200
0
1.0
2.0
3.0
4.0
5.0
2.0
1.0
.600
.300
.100
.001
3.0
.200
.100
.070
.100
.050
.050
.030
.020
.010
.010

TECHNICAL DATA

8166
4-1000A
RADIAL-BEAM POWER TETRODE

The EIMAC 8166/4-1000A is a radial-beam tetrode with a maximum plate dissipation rating of 1000 watts. Intended for use as an amplifier, oscillator, or modulator, the 8166/4-1000A is capable of efficient operation well into the VHF range.

In FM broadcast service on 110 Megahertz, two 8166/4-1000A tetrodes will deliver a useful output power of over 5000 watts.

Operating under class AB_2 modulator conditions with less than 10 watts of peak driving power, two of these tubes will deliver 3900 watts of output power.

In class AB_1, a pair of 8166/4-1000A tetrodes will deliver 3800 watts of output power.

Cooling of the tube is accomplished by radiation from the plate and by circulation of forced-air through the base and around the envelope. Cooling can be simplified through the use of the EIMAC SK-500 Air-System Socket.



GENERAL CHARACTERISTICS

ELECTRICAL

	Min.	*Nom.*	*Max.*	
Filament: Thoriated tungsten				
Voltage		7.5		volts
Current	20.0		22.7	amperes
Amplification Factor (Grid to Screen)	6.1		7.7	
Direct Interelectrode Capacitances:†				
Grid-Plate			0.35	μμf
Input	23.8		32.4	μμf
Output	6.8		9.4	μμf
Transconductance (I_b=300 ma)		10,000		μmhos
Highest Frequency for Maximum Ratings			110	MHz

MECHANICAL

Base	5-pin metal shell
Basing	See drawing
Recommended Socket	EIMAC SK-500 Air-System Socket
Recommended Chimney	SK-506
Operating Position	Vertical, base up or down
Cooling	Radiation and forced air
Recommended Heat-Dissipating Connector:	
Plate	EIMAC HR-8
Maximum Over-all Dimensions:	
Length	9.63 inches
Diameter	5.25 inches
Net Weight (tube only)	1.5 pounds
Shipping Weight	12 pounds

†In Shielded Fixture

(Revised 10-30-66) © 1963, 1966 Varian

Printed in U.S.A.

RADIO FREQUENCY POWER AMPLIFIER AND OSCILLATOR

Class-C Telegraphy or FM Telephony

MAXIMUM RATINGS (Key-down conditions, per tube to 110 MHz)

DC PLATE VOLTAGE	6000 VOLTS
DC SCREEN VOLTAGE	1000 VOLTS
DC GRID VOLTAGE	—500 VOLTS
DC PLATE CURRENT	700 MA
PLATE DISSIPATION	1000 WATTS
SCREEN DISSIPATION	75 WATTS
GRID DISSIPATION	25 WATTS

TYPICAL OPERATION (Frequencies below 110 MHz, one tube)

DC Plate Voltage	3000	4000	5000	6000	volts
DC Screen Voltage	500	500	500	500	volts
DC Grid Voltage	—150	—150	—200	—200	volts
DC Plate Current	700	700	700	700	ma
DC Screen Current	146	137	147	140	ma
DC Grid Current	38	39	45	42	ma
Screen Dissipation	73	69	73	70	watts
Grid Dissipation	5	6	7	6	watts
Peak RF Grid Input Voltage (approx.)	290	290	355	350	volts
Driving Power (approx.)*	11	12	16	15	watts
Plate Input Power	2100	2800	3500	4200	watts
Plate Dissipation	670	700	690	800	watts
Plate Output Power	1430	2100	2810	3400	watts

*Apparent driving power requirements increase above 30 MHz. At 110 MHz the driver should be capable of supplying 200 watts per tube to take care of feed-through, circuit losses, and radiation.

TYPICAL OPERATION (110 MHz, two tubes, push-pull)

DC Plate Voltage	4000	5000	6000	volts
DC Screen Voltage	450	500	500	volts
DC Grid Voltage	—150	—160	—180	volts
DC Plate Current	1.15	1.25	1.25	amps
DC Screen Current	280	240	250	ma
DC Grid Current	80	80	100	ma
Screen Dissipation (per tube)	63	60	63	watts
Driving Power (approx.)	350	400	400	watts
Plate Input Power	4600	6250	7500	watts
Plate Dissipation (per tube)	650	850	900	watts
Useful Output Power	3000	4200	5200	watts

These 110 MHz typical performance figures were obtained by direct measurement in operating equipment. The output power is useful power measured in a load circuit. The driving power is that taken by the tube and a practical resonant circuit. In many cases with further refinement and improved techniques, better performance might be obtained.

PLATE-MODULATED RADIO-FREQUENCY AMPLIFIER

Class-C Telephony (Carrier Conditions)

MAXIMUM RATINGS (Per tube to 110 MHz)

DC PLATE VOLTAGE	5000 VOLTS†
DC SCREEN VOLTAGE	1000 VOLTS
DC GRID VOLTAGE	—500 VOLTS
DC PLATE CURRENT	600 MA
PLATE DISSIPATION	670 WATTS
SCREEN DISSIPATION	25 WATTS
GRID DISSIPATION	75 WATTS

†5500 Max. volts below 30 MHz.

TYPICAL OPERATION (Frequencies below 110MHz, one tube)

DC Plate Voltage	3000	4000	5000	5500*	volts
DC Screen Voltage	500	500	500	500	volts
DC Grid Voltage	—200	—200	—200	—200	volts
DC Plate Current	600	600	600	600	ma
DC Screen Current	145	132	130	105	ma
DC Grid Current	36	33	33	28	ma
Screen Dissipation	72	66	65	52	watts
Grid Dissipation	5	4	4	3	watts
Peak AF Screen Voltage (100% modulation)	250	250	250	250	volts
Peak RF Grid Input Voltage	340	335	335	325	volts
Driving Power**	12	11	11	9	watts
Plate Input Power	1800	2400	3000	3300	watts
Plate Dissipation	410	490	560	670	watts
Plate Output Power	1390	1910	2440	2630	watts

*5500 volt operation may be used below 30 MHz only.

**Apparent driving power requirements increase above 30 MHz. At 110 MHz the driver should be capable of supplying 200 watts per tube to take care of feed-through, circuit losses, and radiation.

AUDIO FREQUENCY POWER AMPLIFIER AND MODULATOR

Class-AB

MAXIMUM RATINGS (Per tube)

DC PLATE VOLTAGE	6000 VOLTS
DC SCREEN VOLTAGE	1000 VOLTS
MAX-SIGNAL DC PLATE CURRENT	700 MA
PLATE DISSIPATION	1000 WATTS
SCREEN DISSIPATION	75 WATTS

TYPICAL OPERATION Class-AB_1
(Sinusoidal wave, two tubes unless otherwise specified)

DC Plate Voltage	4000	5000	6000	volts
DC Screen Voltage	1000	1000	1000	volts
DC Grid Voltage (approx.)*	—115	—125	—135	volts
Zero-Signal DC Plate Current	300	240	200	ma
Max-Signal DC Plate Current	1.05	1.00	0.95	amps
Zero-Signal DC Screen Current	0	0	0	ma
Max-Signal DC Screen Current	60	60	64	ma
Effective Load, Plate-to-Plate	7000	10,000	14,000	ohms
Peak AF Grid Input Voltage (per tube)	115	125	135	volts
Driving Power	0	0	0	watts
Max-Signal Plate Dissipation (per tube)	930	950	930	watts
Max-Signal Plate Output Power	2340	3100	3840	watts

*Adjust to give stated zero-signal plate current. The DC resistance in series with the control grid of each tube should not exceed 250,000 ohms.

TYPICAL OPERATION Class-AB_2
(Sinusoidal wave, two tubes unless otherwise specified)

DC Plate Voltage	4000	5000	6000	volts
DC Screen Voltage	500	500	500	volts
DC Grid Voltage (approx.)*	—60	—70	—75	volts
Zero-Signal DC Plate Current	300	200	150	ma
Max-Signal DC Plate Current	1.20	1.10	.95	amps
Zero-Signal DC Screen Current	0	0	0	ma
Max-Signal DC Screen Current	95	90	65	ma
Effective Load, Plate-to-Plate	7000	11,000	15,000	ohms
Peak AF Grid Input Voltage (per tube)	140	145	130	volts
Max-Signal Peak Driving Power	11.0	11.0	9.4	watts
Max-Signal Nominal Driving Power (approx.)	5.5	5.5	4.7	watts
Max-Signal Plate Dissipation (per tube)	900	850	900	watts
Max-Signal Plate Output Power	3000	3800	3900	watts

*Adjust to give stated zero-signal plate current.

Note: Typical operation data are based on conditions of adjusting the rf grid drive to a specified plate current, maintaining fixed conditions of grid bias and screen voltage. It will be found that if this procedure is followed there will be little variation in output power between tubes even though there may be some variation in grid and screen currents. Where grid bias is obtained principally by means of a grid resistor, it is necessary to make the resistor adjustable to control plate current.

IF IT IS DESIRED TO OPERATE THIS TUBE UNDER CONDITIONS WIDELY DIFFERENT FROM THOSE GIVEN UNDER "TYPICAL OPERATION," POSSIBLY EXCEEDING THE MAXIMUM RATINGS GIVEN FOR CW SERVICE, WRITE EIMAC DIVISION OF VARIAN ASSOCIATES, FOR INFORMATION AND RECOMMENDATIONS

APPLICATION

MECHANICAL

Mounting — The 4-1000A must be operated vertically. The base may be down or up. The recommended socket for this tube is the SK-500 Air-System Socket.

Cooling — Adequate forced-air cooling must be provided to maintain the base seal temperatures below 150°C and the plate seal temperature below 200°C. Cooling is simplified by the use of the EIMAC SK-500 Air-System Socket, and its SK-506 Air Chimney, which control the flow of air around the tube.

When the EIMAC SK-500 Air-System Socket is used, the following flow rates apply to sea level operation, with an ambient temperature of 25°C for the operating conditions described:

At 110 megahertz, with maximum rated plate dissipation, an air-flow rate of 35 cfm is required. The corresponding pressure drop as measured in the socket is 1.9 inches of water column.

At frequencies below 30 megahertz, an air-flow rate of 20 cfm provides adequate cooling. The corresponding pressure drop as measured in the socket is 0.6 inch of water column.

In the event that an Air-System Socket and Air Chimney are not used, air must be circulated through the base of the tube and over the envelope surface and the plate seal in sufficient quantities to maintain the temperatures below the maximum ratings. Seal-temperature ratings may require that cooling air be supplied to the tube if the filament is maintained at operating temperature during standby periods.

In any questionable situation, the only criterion for correct cooling practice is temperature. A convenient medium for measuring tube temperatures is a temperature-sensitive paint.

ELECTRICAL

Filament Voltage — For maximum tube life the filament voltage, as measured directly at the filament pins, should be the rated voltage of 7.5 volts. Variations in filament voltage must be kept within the range of 7.13 to 7.87 volts.

Bias Voltage — The dc bias voltage for the 4-1000A should not exceed 500 volts. With grid-leak bias, suitable means must be provided to prevent excessive plate or screen dissipation in the event of loss of excitation. The grid-resistor should be made adjustable to facilitate maintaining the bias voltage and plate current at the desired values from tube to tube. In the case of operation above 50 megahertz, it is advisabe to keep the bias voltage as low as possible.

Screen Voltage — The dc screen voltage for the 4-1000A should not exceed 1000 volts. The screen voltages shown under "Typical Operation" are representative voltages for the type of operation involved.

Plate Voltage — The plate-supply voltage for the 4-1000A should not exceed 6000 volts in CW and audio applications. In plate-modulated telephony service above 30 megahertz, the dc plate-supply voltage should not exceed 5000 volts; however, below 30 megahertz, 5500-volts may be used.

Grid Dissipation — Grid dissipation for the 4-1000A should not be allowed to exceed 25 watts. Grid dissipation may be calculated from the following expression:

$$P_g = e_{cmp} I_c$$

where: P_g = Grid dissipation,
e_{cmp} = Peak positive grid to cathode voltage
I_c = DC grid current.

e_{cmp} may be measured by means of a suitable peak voltmeter connected between filament and grid.

Screen Dissipation—The power dissipated by the screen of the 4-1000A must not exceed 75 watts. Screen dissipation is likely to rise to excessive values when the plate voltage, bias voltage, or plate load are removed with filament and screen voltages applied. Suitable protective means must be provided to limit screen dissipation to 75 watts in event of circuit failure.

Plate Dissipation — Under normal operating conditions, the plate dissipation of the 4-1000A should not be allowed to exceed 1000 watts.

In plate-modulated amplifier applications, the maximum allowable carrier-condition plate dissipation is 670 watts. The plate dissipation will rise to 1000 watts under 100 per-cent sinusoidal modulation.

Plate dissipation in excess of the maximum rating is permissible for short periods of time, such as during tuning procedures.

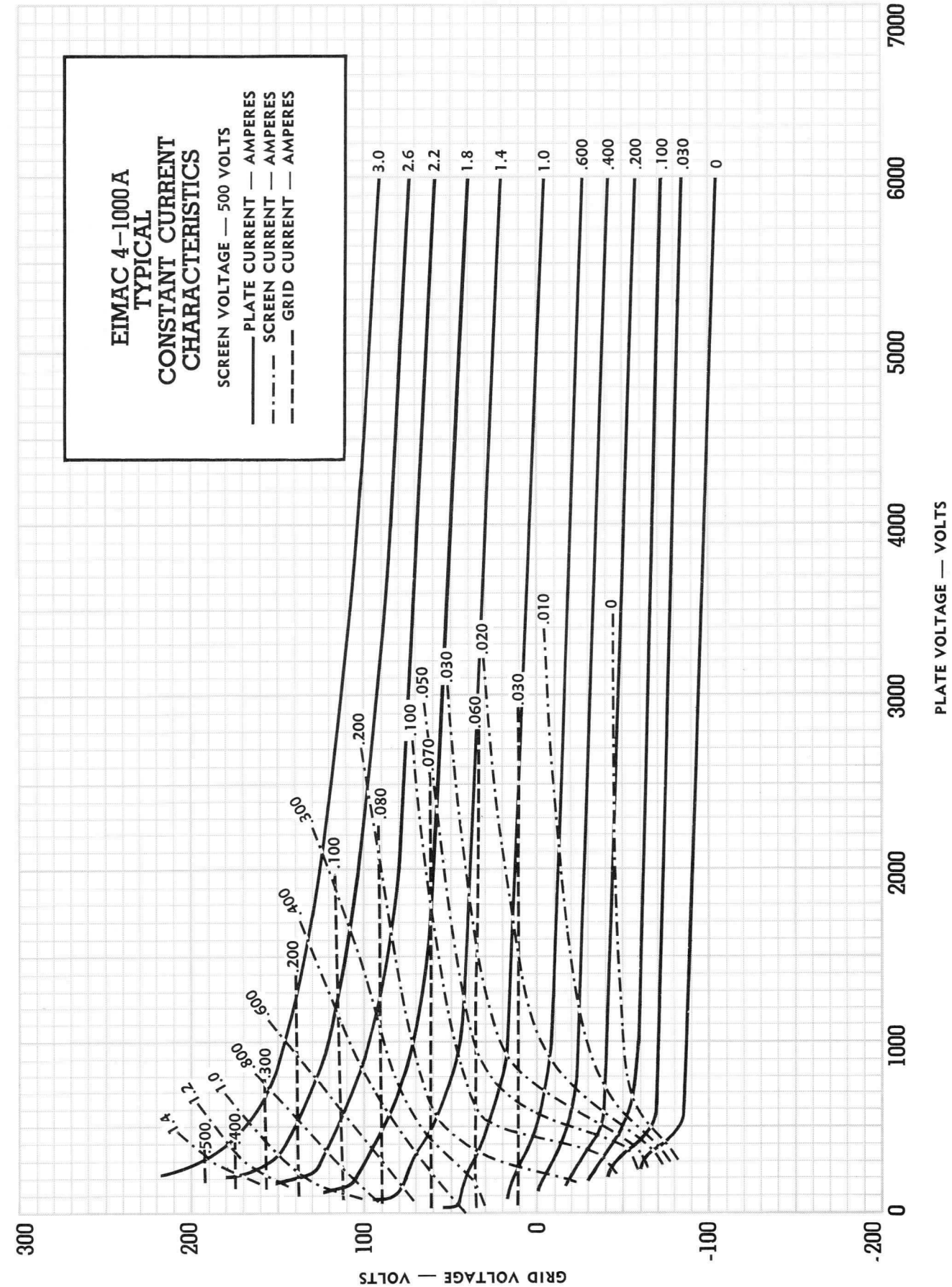
EIMAC 4-1000A
TYPICAL
CONSTANT CURRENT
CHARACTERISTICS
SCREEN VOLTAGE — 500 VOLTS
PLATE CURRENT — AMPERES
SCREEN CURRENT — AMPERES
GRID CURRENT — AMPERES
PLATE VOLTAGE — VOLTS
GRID VOLTAGE — VOLTS
0
1000
2000
3000
4000
5000
6000
7000
300
200
100
0
-100
-200
3.0
2.6
2.2
1.8
1.4
1.0
.600
.400
.200
.100
.030
0
.010
.020
.030
.050
.060
.070
.080
.100
.200
.300
.400
.600
.800
1.0
1.2
1.4
.500

Neutralization — If reasonable precautions are taken to prevent coupling between input and output circuits, the 4-1000A may be operated up to the 10-megahertz region without neutralization. In the region between 10 megahertz and 30 megahertz, the conventional type of cross-neutralizing may be used with push-pull circuits. In single-ended circuits ordinary neutralization systems may be used which provide 180° out of phase voltage to the grid.

At frequencies above 30 megahertz the feedback is principally due to screen-lead-inductance effects. Feedback is eliminated by using series capacitance in the screen leads between the screen and ground. A variable capacitor of from 25 to 50 $\mu\mu$fds will provide sufficient capacitance to neutralize each tube in the region of 100 megahertz. When using this method, the two screen terminals on the socket should be strapped together by the shortest possible lead. The lead from the mid-point of this screen strap to the variable capacitor and from the variable capacitor to ground should have as little inductance as possible.

In general, plate, grid, filament, and screen-bypass or screen-neutralizing capacitors should be returned to rf ground through the shortest possible leads.

In order to take full advantage of the high power gain obtainable with the 4-1000A, care should be taken to prevent feedback from the output to input circuits. A conventional method of obtaining the necessary shielding between the grid and plate circuits is to use a suitable metal chassis with the grid circuit mounted below the deck and the plate circuit mounted above the deck. Power-supply leads entering the amplifier should be bypassed to the ground and properly shielded to avoid feedback coupling in these leads. The output circuit and antenna feeders should be arranged so as to preclude any possibility of feedback into other circuits.

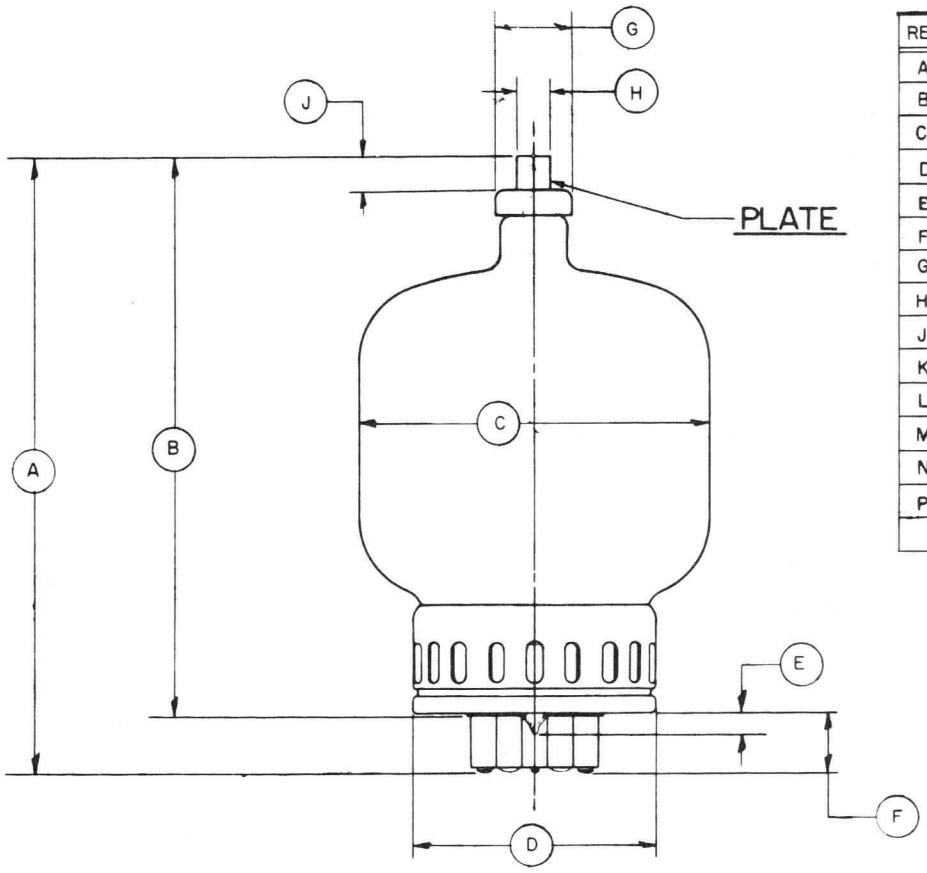

REF.	MIN.	NOM.	MAX.
A	8.875	9.250	9.625
B	8.000	8.375	8.750
C			5.250
D			3.625
E			.313
F	.825	.875	.925
G	1.110	1.125	1.140
H	.559	.566	.573
J	.484		
K		60°	
L		30°	
M		30°	
N	1.495	1.500	1.505
P	.371	.374	.377

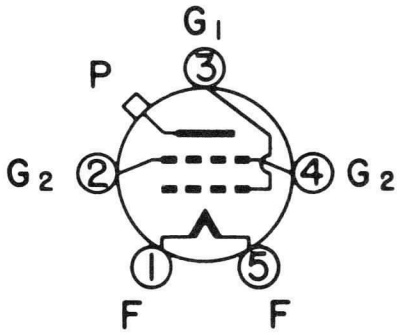

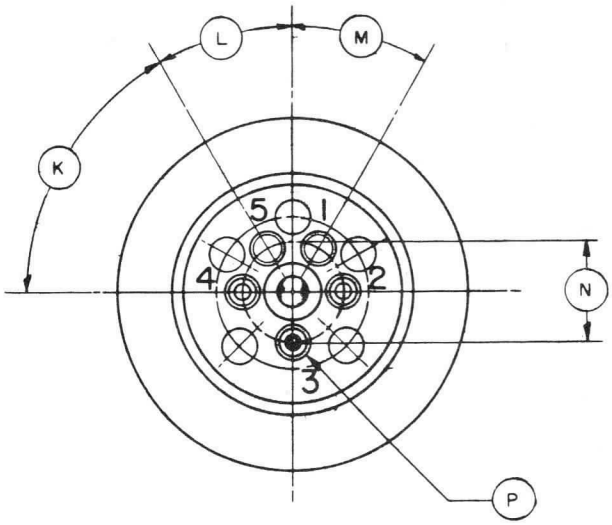

BOTTOM VIEW

DIMENSIONS
IN INCHES

EIMAC
Division of Varian
SAN CARLOS
CALIFORNIA

4CN15A

CERAMIC

POWER TETRODE

The Eimac 4CN15A is a coolerless version of the 4CX300A tetrode intended for use in low duty or pulse service. It is electrically identical to the 4CX300A with the exception of plate dissipation which is rated at 15 watts in air. Where other cooling means are used, such as liquid immersion, plate dissipation is limited only by the maximum allowable anode and seal temperatures.



GENERAL CHARACTERISTICS

ELECTRICAL

		Min.	Nom.	Max.	
Cathode:	Oxide-Coated, Unipotential				
	Heating Time	30	60		seconds
	Cathode-to-Heater Potential			±150	volts
Heater:	Voltage		6.0		volts
	Current	2.6		3.1	amperes
Amplification Factor (Grid to Screen)		4.0		5.6	
Transconductance (I_b = 200 ma)			12,000		umhos
Direct Interelectrode Capacitances, Grounded Cathode:					
	Input	25		33	uuf
	Output	3.5		4.5	uuf
	Feedback			0.06	uuf
Frequency for Maximum Ratings				500	Mc

MECHANICAL

Base	Special, breechblock terminal surfaces
Recommended Socket	Eimac SK-700 series
Operating Position	Any
Maximum Operating Temperatures:	
Ceramic-to-Metal Seals	250° C
Anode Core	250° C
Cooling	Convection or conduction
Maximum Over-all Dimensions:	
Height	2.5 inches
Diameter	inches
Net Weight	2.5 ounces
Shipping Weight	1 pound

MAXIMUM CW RATINGS

	Class-C FM or Teleg	Class-C Plate Mod	Class-AB		
DC PLATE VOLTAGE	2000	1500	2500*	MAX.	VOLTS
DC PLATE CURRENT	250	200	250	MAX.	MA
DC SCREEN VOLTAGE	300	300	400	MAX.	VOLTS
DC GRID VOLTAGE	-250	-250	---	MAX.	VOLTS
PLATE DISSIPATION	15**	10**	15**	MAX.	WATTS
SCREEN DISSIPATION	12	12	12	MAX.	WATTS
GRID DISSIPATION	2	2	2	MAX.	WATTS

*Up to 250 Mc.

**Rating in air - may be increased with adequate cooling.

(Effective 6-1-68) © 1963, 1968 by Varian

Printed in U.S.A.

MAXIMUM PULSE RATINGS

	Class-C Grid Pulsed	Class-C Plate Pulsed	Pulse Modulator		
DC PLATE VOLTAGE	2500	7000 (pulsed)	4000	MAX.	VOLTS
PEAK PLATE CURRENT (DC Component)	6.0*	6.0*	6.0*	MAX.	AMPS
DC GRID VOLTAGE	-300	-500	-300	MAX.	VOLTS
DC SCREEN VOLTAGE	750	1500 (pulsed)	750	MAX.	VOLTS
PLATE DISSIPATION (AVG)**	15	15	15	MAX.	WATTS
SCREEN DISSIPATION (AVG)	12	12	12	MAX.	WATTS
GRID DISSIPATION (AVG)	2	2	2	MAX.	WATTS

*According to table below.

**Depends on cooling method.

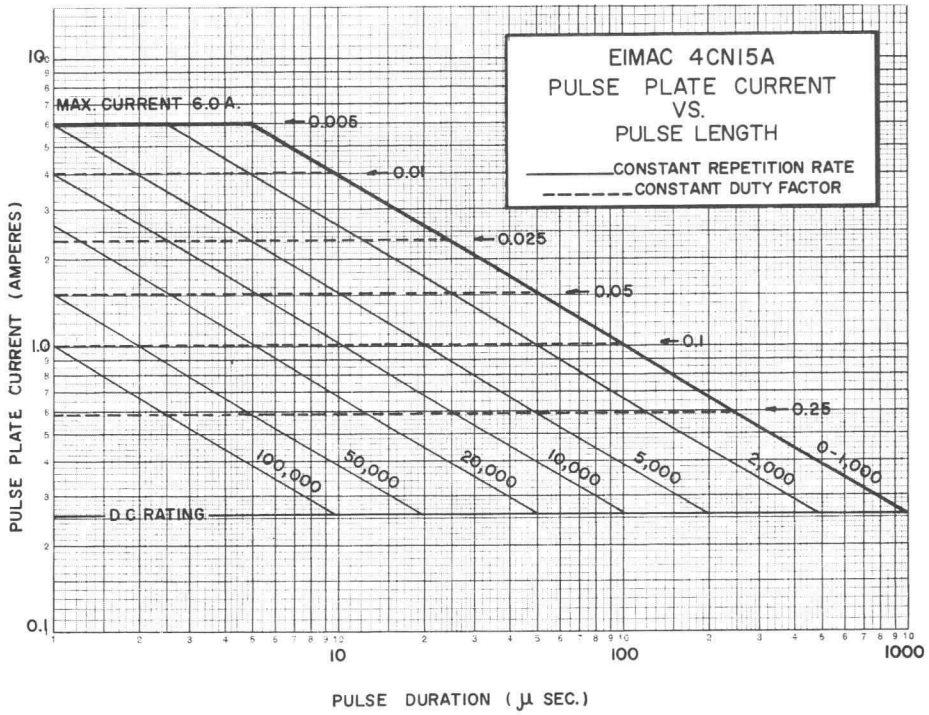

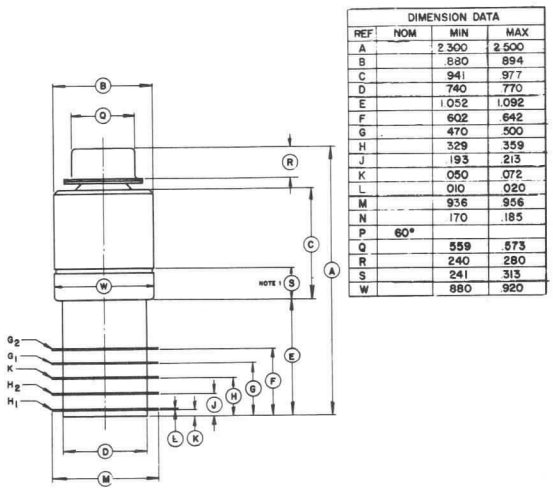

DIMENSION DATA			
REF	NOM	MIN	MAX
A		2.300	2.500
B		.880	.894
C		.941	.977
D		.740	.770
E		1.052	1.092
F		.602	.642
G		.470	.500
H		.329	.359
J		.193	.213
K		.050	.072
L		.010	.020
M		.936	.956
N		.170	.185
P	60°		
Q		.559	.573
R		.240	.280
S		.241	.313
W		.880	.920

NOTE: These dimensions reflect standard manufacturing tolerances. Where they are to be made the basis of purchase specifications, they should first be checked with the factory.

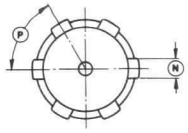

NOTES:
1. DO NOT CONTACT THIS SURFACE.
2. DIMENSIONS IN INCHES.

EIMAC
Division of Varian
SAN CARLOS
CALIFORNIA

8590
4CPX250K

RADIAL BEAM TETRODE

The EIMAC 8590/4CPX250K is a compact forced-air cooled, external anode radial beam tetrode, intended for wideband grid-pulsed radio frequency amplifier and pulse modulator service.

The 8590/4CPX250K has a maximum anode dissipation of 250 watts and is capable of delivering pulse output power in excess of 10 kW with 10 db gain when cathode driven at 450 MHz.

The tube is of coaxial construction and especially designed for cavity operation.



GENERAL CHARACTERISTICS [1]

ELECTRICAL

Cathode: Oxide Coated, Unipotential		
Heater: Voltage	6.0 ± 0.3	V
Current, at 6.0 volts	2.5	A
Amplification Factor (Average):		
Grid to Screen	5	
Direct Interelectrode Capacitances (Grounded grid)[2]		
Input	14.0	pF
Output	4.1	pF
Feedback	.006	pF
Frequency of Maximum Rating:		
CW	500	MHz
Plate or Grid-Pulsed	500	MHz

1. Characteristics and operating values are based upon performance tests. These figures may change without notice as the result of additional data or product refinement. EIMAC Division of Varian should be consulted before using this information for final equipment design.

2. In Shielded Fixture.

MECHANICAL

Maximum Overall Dimensions:	
Length	2.81 in; 71.37 mm
Diameter	1.64 in; 41.66 mm
Net Weight	4 oz; 114 gm
Operating Position	Any

(Effective 4-1-70) © 1970 by Varian Printed in U.S.A.

MECHANICAL

Maximum Operating Temperature:

Ceramic/Metal Seals	250 °C
Anode Core	250 °C
Cooling	Forced-Air
Base	Coaxial

Socketing: EIMAC collets are available as follows:

Heater pin connection	EIMAC Part No. 008290
Cathode connection	EIMAC Part No. 008291
Control grid connection	EIMAC Part No. 008292
Anode connection	EIMAC Part No. 008294
Screen grid connection	EIMAC Part No. 882931

RADIO FREQUENCY POWER AMPLIFIER OR OSCILLATOR

Class C Telegraphy or FM Telephony
(Key-Down Conditions)

MAXIMUM RATINGS

DC PLATE VOLTAGE	2500 VOLTS
DC SCREEN VOLTAGE	500 VOLTS
DC GRID VOLTAGE	-250 VOLTS
DC PLATE CURRENT	0.250 AMPERE
PLATE DISSIPATION	250 WATTS
SCREEN DISSIPATION	12 WATTS
GRID DISSIPATION	2 WATTS

TYPICAL OPERATION

Plate Voltage	1000	1500	2000	2500	Vdc
Screen Voltage	250	250	250	250	Vdc
Grid Voltage	-90	-90	-90	-90	Vdc
Plate Current	250	250	250	250	mAdc
Screen Current [1]	38	21	19	16	mAdc
Grid Current [1]	31	28	26	25	mAdc
Peak rf Grid Voltage [1]	114	112	112	111	v
Calculated Driving Power [1]	3.5	3.2	2.9	2.8	W
Plate Input Power	250	375	500	625	W
Plate Output Power	190	280	390	500	W

1. Approximate value.

PULSE MODULATOR SERVICE

MAXIMUM RATINGS

DC PLATE VOLTAGE	7000 VOLTS
DC SCREEN VOLTAGE	750 VOLTS
DC GRID VOLTAGE	-400 VOLTS
PEAK PLATE CURRENT	6.0 AMPERES
PULSE DURATION	(See Derating Chart)
DUTY FACTOR	(See Derating Chart)
PLATE DISSIPATION	250 WATTS
SCREEN DISSIPATION	12 WATTS
GRID DISSIPATION	2 WATTS

TYPICAL OPERATION

Plate Voltage	6000 Vdc
Screen Voltage	750 Vdc
Grid Voltage	-275 Vdc
Peak Drive Voltage [1]	280 v
Peak Plate Current	3.5 a
Peak Screen Current [1]	0.4 a
Peak Input Power	21.0 kW
Peak Output Power	17.5 kW
Peak Output Voltage	5000 kv
Pulse Duration	250 μs
Duty Factor	0.005

1. Approximate value .

RF POWER AMPLIFIER

Class B or C, Grid and Screen Pulsed

MAXIMUM RATINGS

DC PLATE VOLTAGE	5500	VOLTS
PEAK DC SCREEN VOLTAGE	1000	VOLTS
DC GRID VOLTAGE	-250	VOLTS
PEAK PLATE CURRENT [1]	6.0	AMPERES
PULSE DURATION	(See Derating Chart)	
DUTY FACTOR	(See Derating Chart)	
PLATE DISSIPATION	250	WATTS
SCREEN DISSIPATION	12	WATTS
GRID DISSIPATION	2	WATTS

1. Peak anode current may be considered as average during the pulse and should be limited to 6.0 amperes. With a pulse length longer than 80 μs, or a duty factor higher than 0.0016, peak current should be reduced in accordance with the data shown on the Derating Chart for Anode Current. For longer pulse duration or larger duty factor, consult EIMAC Division of Varian.

TYPICAL OPERATION (Frequencies to 500 MHz)
Class B, Grounded Grid (Measured Values)

Plate Voltage	5500	Vdc
Screen Voltage (Pulsed)	1000	v
Grid Voltage	-200	Vdc
Peak Grid Voltage [2]	255	v
Peak Driving Power [2]	1000	w
Peak Output Power (Useful)	10	kW
Pulse Duration	250	μs
Duty Factor	0.005	

2. Approximate value .

NOTE: TYPICAL OPERATION data are obtained by calculation from published characteristic curves. Adjustment of the rf grid voltage to obtain the specified plate current at the specified bias, screen and plate voltages is assumed. If this procedure is followed, there will be little variation in output power when the tube is changed, even though there may be some variation in grid and screen current. The grid and screen currents which result when the desired plate current is obtained are incidental and vary from tube to tube. These current variations cause no difficulty so long as the circuit maintains the correct voltage in the presence of the variations in current. If grid bias is obtained principally by means of a grid resistor, the resistor must be adjustable to obtain the required bias voltage when the correct rf grid voltage is applied.

RANGE VALUES FOR EQUIPMENT DESIGN

	Min.	Max.	
Heater: Current at 6.0 volts	2.3	3.0	A
Cathode Warmup Time	30	---	sec.
Interelectrode Capacitances [1] (Grounded Grid Connection)			
Input	12.0	16.0	pF
Output	3.90	4.35	pF
Feedback	---	0.01	pF

1. Capacitance values are for a cold tube as measured in a shielded fixture.

APPLICATION

MOUNTING - The 8590/4CPX250K may be mounted in any position. The concentric arrangement of the electrode terminals permits the use of the tube in coaxial line or cavity-type circuits to advantage. Connections to the contact surfaces should be made by means of spring finger collets which have sufficient pressure to maintain a good electrical contact at all fingers. Points of electrical contact should be kept clean and free of oxidation to minimize rf losses.

HEATER - The rated heater voltage for the 8590/4CPX250K is 6.0 volts, as measured at the base of the tube, and variations should be restricted to plus or minus 0.3 volt for long tube life and consistent performance. At frequencies above approximately 300 MHz under Class C Telegraphy conditions, it may be necessary to reduce heater voltage to compensate for rf transit-time heating of the cathode. This type of back-heating is a function of frequency, grid current, grid bias, anode current, duty cycle, and circuit design and adjustment. The following heater operation voltages are recommended for straight-through CW amplifier operation:

Frequency (MHz)	Heater Voltage
300 or lower	6.00
301 to 400	5.75
401 to 500	5.50

COOLING - Sufficient forced-air cooling must be provided to maintain the anode core and seal temperatures within maximum ratings. Special care must be observed to insure that there is adequate cooling in the area of the coaxial filament and grid terminals. With an anode dissipation of 250 watts and an incoming air temperature of 50°C at sea level, a minimum air flow of 4.8 cfm must be passed through the anode cooler, with a resultant pressure drop of approximately 0.25 inch of water. Air should normally be directed in a base-to-anode direction in order to minimize base cooling problems. In cases where long life and consistent performance are factors, cooling in excess of minimum requirements is normally beneficial. Air flow should be applied before or simultaneously with the application of electrode voltages (including heater voltage), and may be removed simultaneously with them.

CATHODE WARMUP TIME - Heater voltage should be applied for a minimum of 30 seconds before the application of other electrode voltages to allow proper conditioning of the cathode surface.

CATHODE OPERATION - The oxide-coated unipotential cathode must be protected against excessively high emission current. The DERATING CHART FOR ANODE CURRENT shows the current capability of the 8590/4CPX250K anode at various pulse durations and duty factors. To use this chart, enter with pulse duration and note the intersection with the desired peak anode current. At this intersection read off the values of maximum duty and/or pulse repetition rate.

Under a given set of operating conditions, element dissipation may limit the maximum permissible duty to a smaller value than anode current considerations alone would dictate. It will usually be found that screen grid dissipation is the limiting factor with large plate voltage swings and that plate dissipation limits the maximum duty with small plate voltage swings.

CONTROL GRID OPERATION - The average power dissipated by the control grid must not exceed two watts. The control grid dissipation can be computed as the product of average grid current, and peak positive grid to cathode voltage.

SCREEN GRID OPERATION - The average power dissipated by the screen grid must not exceed twelve watts. Screen grid dissipation is the product of dc screen voltage, average screen current during the pulse, and duty factor.

The screen grid current may reverse under certain operating conditions and produce negative current indications on the screen milliammeter. This is a normal characteristic of most tetrodes. The screen grid power supply should be designed with this characteristic in mind so that the correct operating voltage will be maintained on the screen grid under all conditions. A current path from screen to cathode must be provided by a bleeder resistor, gaseous voltage regulator, or an electron tube shunt regulator connected between screen and cathode and arranged to pass approximately 15 milliamperes per tube. A series pass tube regulated power supply can be used only when an adequate bleeder resistor is provided. Protection for the screen grid should be provided by an over-current relay and by interlocking the screen supply so that plate voltage must be applied before screen voltage can be applied.

PULSE MODULATOR PLATE OPERATION - Average plate dissipation may be calculated as the product of average plate current during the pulse, minimum anode voltage, and duty factor. Excessive average dissipation is likely to occur with high values of minimum anode voltage. The calculated value of plate dissipation may well be below 250 watts based on a rectangular pulse but excessive dissipation will result if pulse rise and fall times slow down the plate voltage swing and allow plate current to flow for longer periods in the high anode voltage region.

UHF OPERATION - Such operation should be conducted with heavy plate loading, minimum bias, and the lowest driving power consistent with satisfactory performance. It is often preferable to operate at a sacrifice in efficiency to obtain increased tube life.

MULTIPLE OPERATION - Tubes operating in parallel or push-pull must share the load equally. It is good engineering practice to provide individual metering and individual adjustments of bias and/or screen grid voltage to equalize the plate currents. Where overload protection is provided, it should be capable of protecting the surviving tube(s) in the event that any tube fails.

SPECIAL APPLICATION

If it is desired to operate this tube under conditions widely different from those listed here, write to Power Grid Tube Division, EIMAC Division of Varian, 301 Industrial Way, San Carlos, California 94070, for information and recommendations.

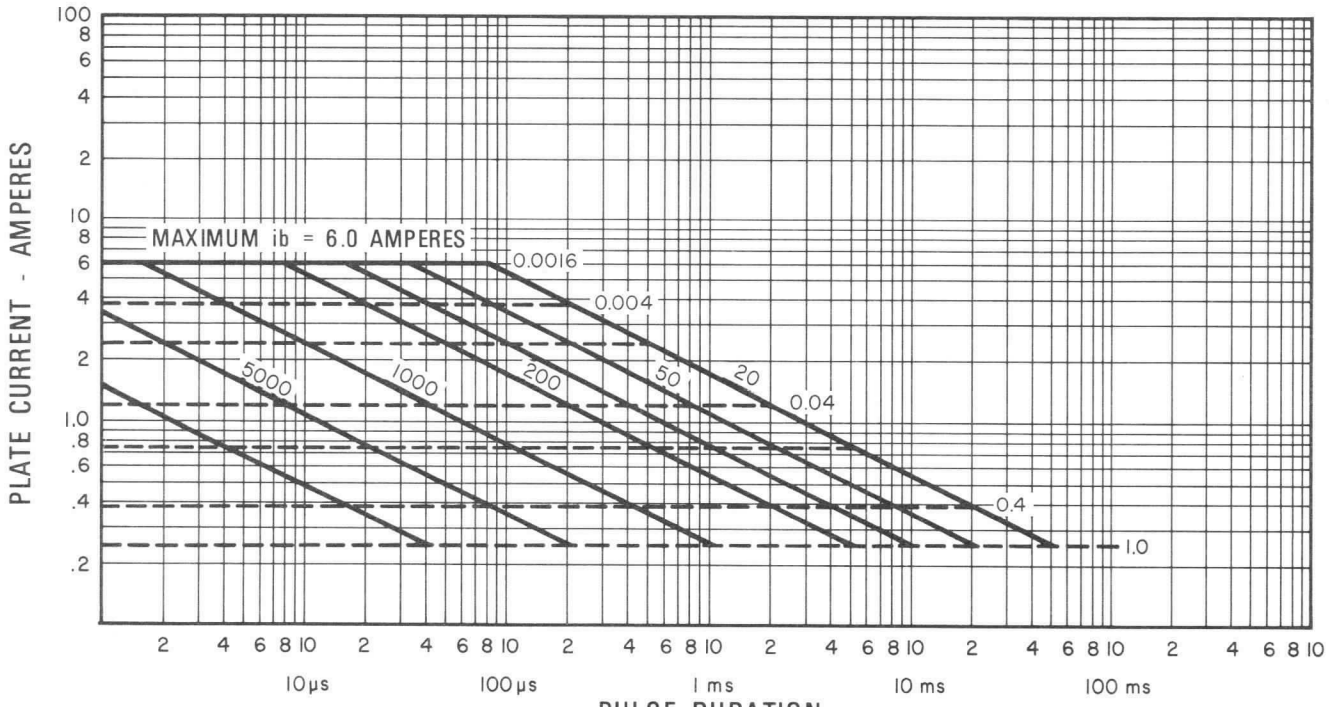

TYPE 8590/4CPX250K – DERATING CHART FOR ANODE CURRENT
(AVERAGE DURING PULSE)

SOLID LINES REPRESENT CONSTANT REPETITION RATES
DASHED LINES REPRESENT CONSTANT DUTIES
DO NOT EXTRAPOLATE ABOVE OR TO THE RIGHT OF BOLD LINES

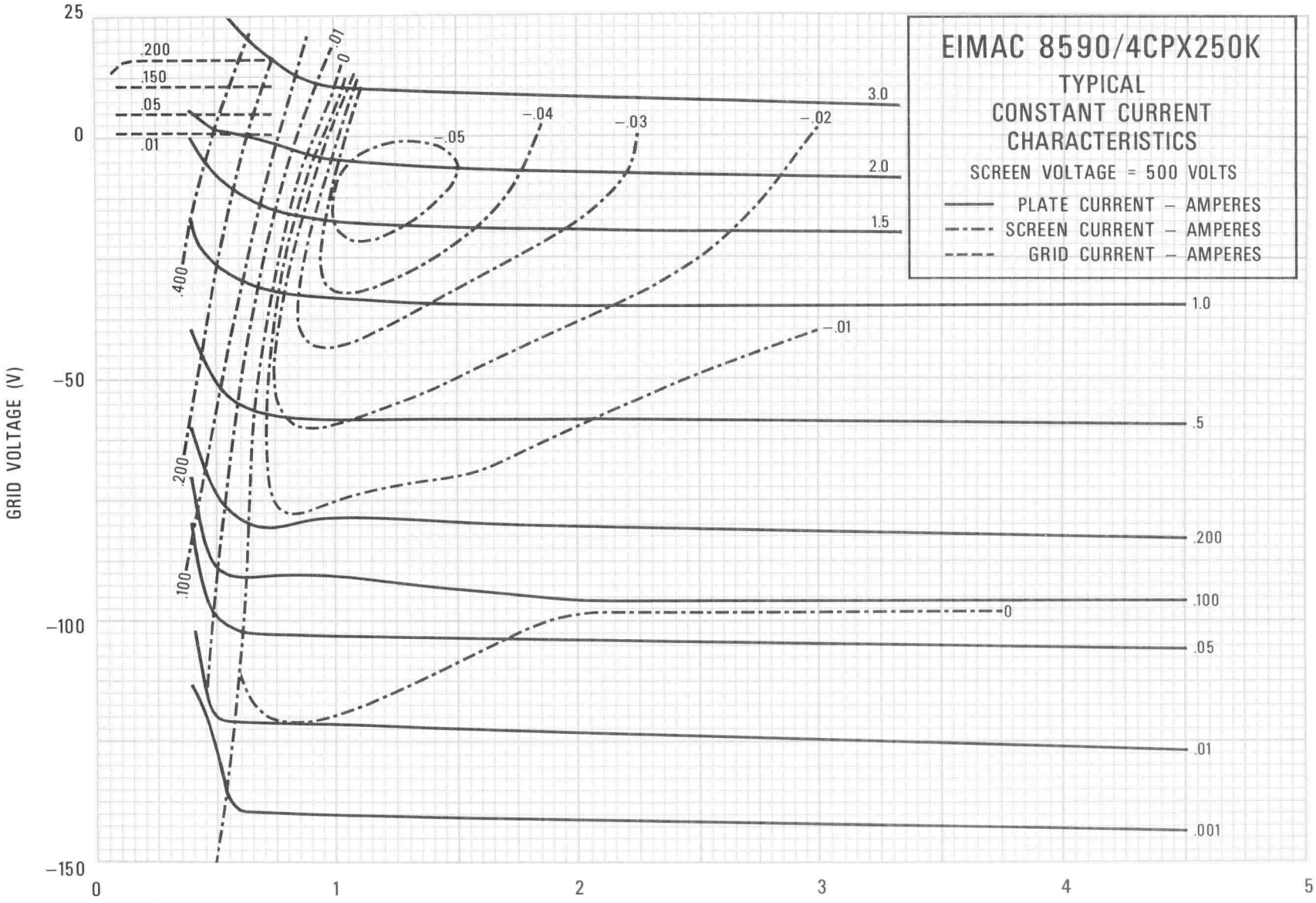
EIMAC 8590/4CPX250K
TYPICAL
CONSTANT CURRENT
CHARACTERISTICS
SCREEN VOLTAGE = 500 VOLTS
PLATE CURRENT – AMPERES
SCREEN CURRENT – AMPERES
GRID CURRENT – AMPERES
GRID VOLTAGE (V)
25
0
−50
−100
−150
0
1
2
3
4
5
PLATE VOLTAGE (KV)
CURVE #3539
3.0
2.0
1.5
1.0
.5
.200
.100
.05
.01
.001
.200
.150
.05
.01
.400
.200
.100
.01
0
−.05
−.04
−.03
−.02
−.01
0

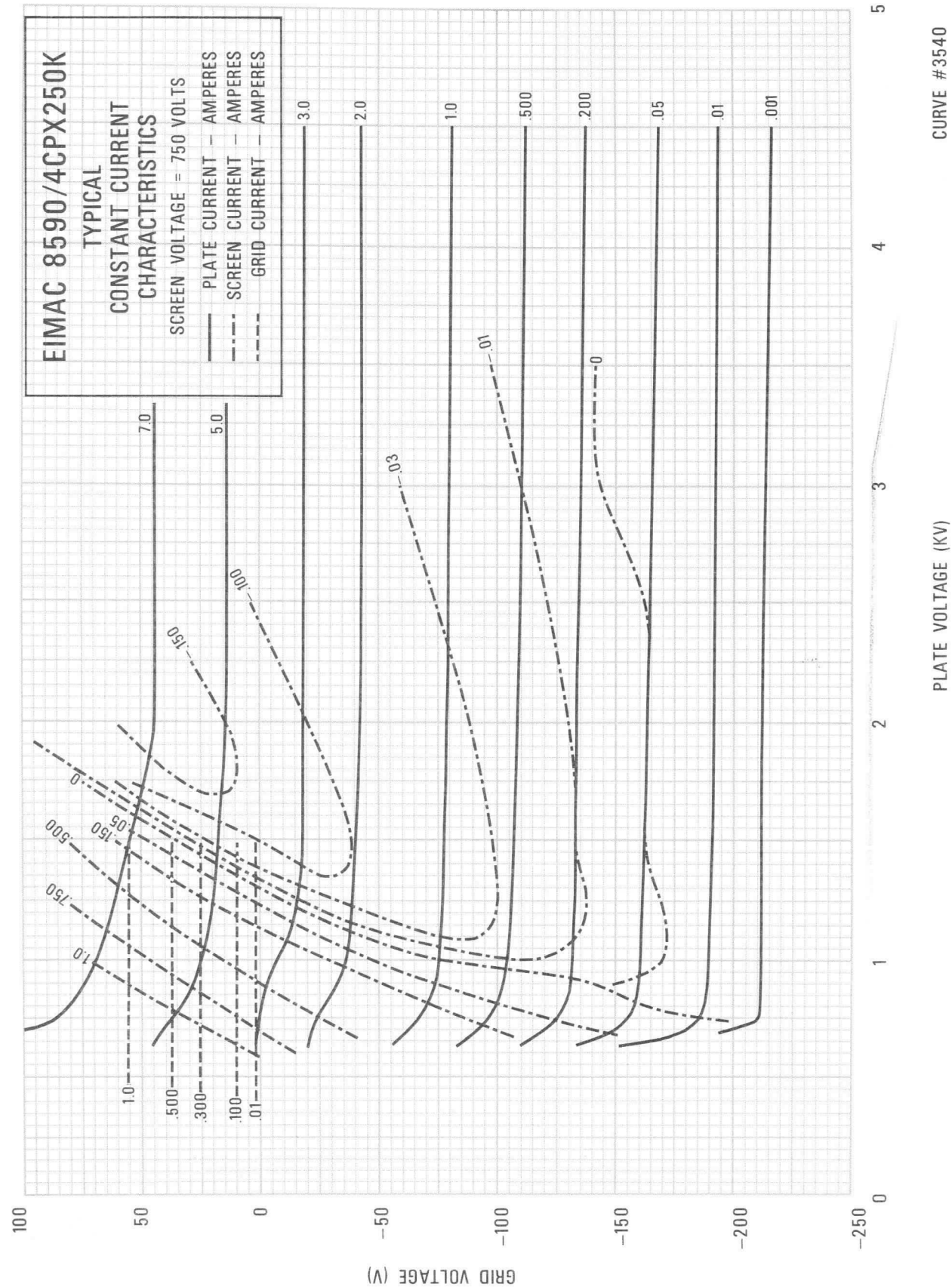
EIMAC 8590/4CPX250K
TYPICAL
CONSTANT CURRENT
CHARACTERISTICS
SCREEN VOLTAGE = 750 VOLTS
PLATE CURRENT – AMPERES
SCREEN CURRENT – AMPERES
GRID CURRENT – AMPERES
7.0
5.0
3.0
2.0
1.0
.500
.200
.05
.01
.001
.03
.01
0
.100
.150
.0
.05
.150
.500
.750
1.0
1.0
.500
.300
.100
.01
100
50
0
−50
−100
−150
−200
−250
0
1
2
3
4
5
GRID VOLTAGE (V)
PLATE VOLTAGE (KV)
CURVE #3540

DIMENSIONAL DATA				
DIM.	INCHES		MILLIMETERS	
	MIN.	MAX.	MIN.	MAX.
A	—	2.813	—	71.45
B	1.615	1.640	41.02	41.66
C	—	1.406	—	35.71
D	1.415	1.435	35.94	36.45
E	0.588	0.597	14.94	15.16
F	0.318	0.325	8.08	8.26
G	0.091	0.095	2.31	2.41
J	0.585	0.665	14.86	16.89
K	0.900	0.950	22.86	24.13
L	0.187	—	4.75	—
M	0.520	0.560	13.21	14.22
N	0.235	0.265	5.97	6.73
P	0.032	0.082	0.83	2.08
R	—	0.040	—	0.102
S	—	0.171	—	0.434
T	0.388	—	9.86	—
U	0.406	—	10.31	—
V	0.468	—	11.89	—
W	0.559	0.573	14.20	14.55
X	0.240	—	6.10	—

NOTES:

1. * INDICATES CONTACT SURFACE.
2. THE TUBE WILL BE ROTATED ON DIAMETER D WHEN ECCENTRICITY IS BEING MEASURED.
3. SURFACE Y MUST BE PERPENDICULAR TO THE MEASURING PLATFORM WHEN ECCENTRICITY IS BEING MEASURED.
4. AVERAGE DIAMETER OF E SHALL BE AS NOTED, & MAY BE OUT OF ROUND A TOTAL OF 0.006 (0.15 mm). AVERAGE DIAMETER OF F SHALL BE AS NOTED, AND MAY BE OUT OF ROUND A TOTAL OF 0.006 (0.15 mm).

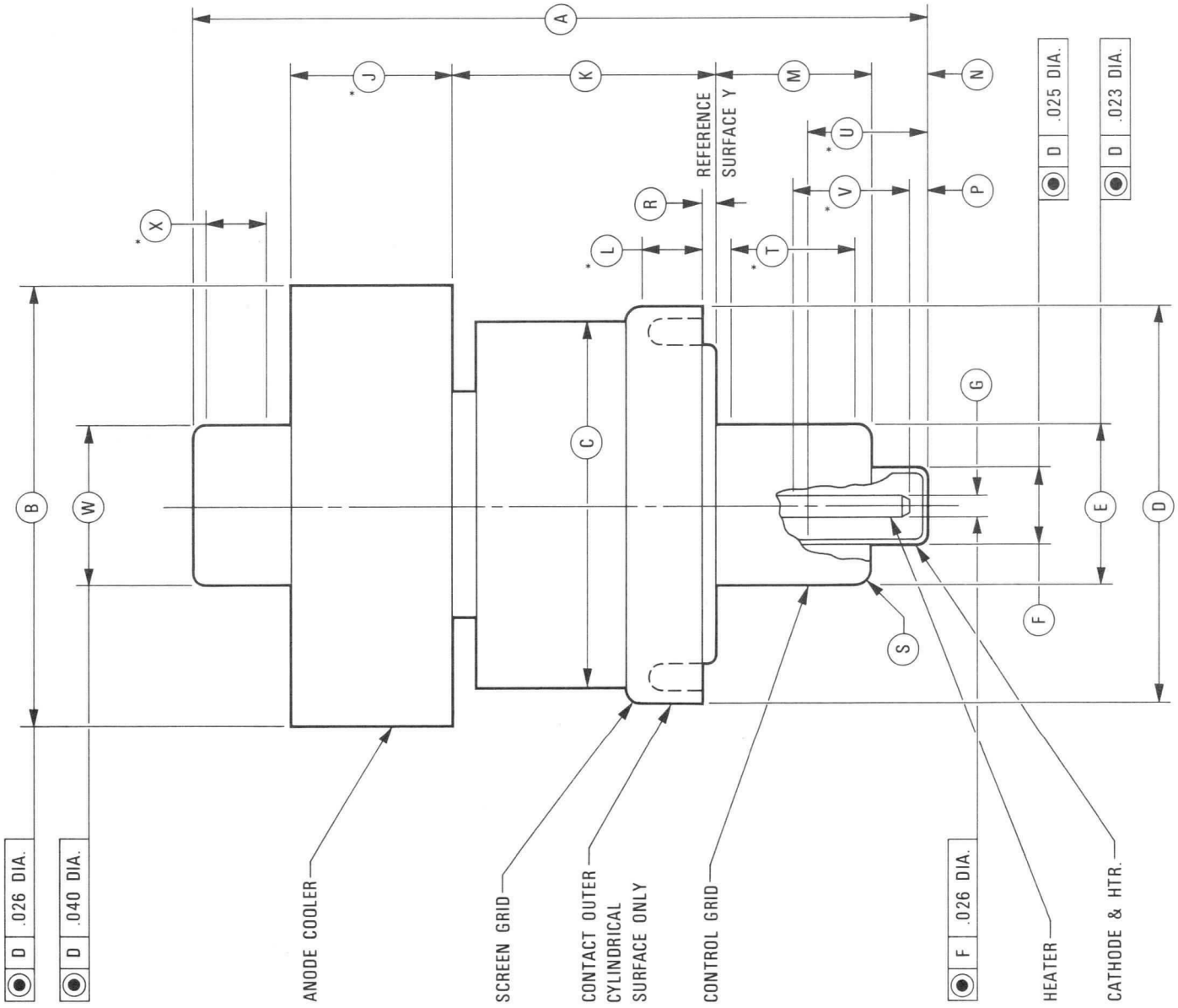

4CS250R

TECHNICAL DATA

CONDUCTION COOLED
RADIAL BEAM
TETRODE

The 4CS250R is a compact, conduction cooled, high perveance radial beam tetrode. It is electrically identical to the 4CX250R except that the maximum dissipation of the 4CS250R is limited only by the maximum allowable anode and ceramic/metal seal temperatures. A beryllium oxide (BeO) thermal link is brazed to the anode providing an electrically isolated, low thermal resistance path between the anode and the heat sink. Ruggedized construction allows the 4CS250R to be operated in applications where shock and/or vibration is experienced.

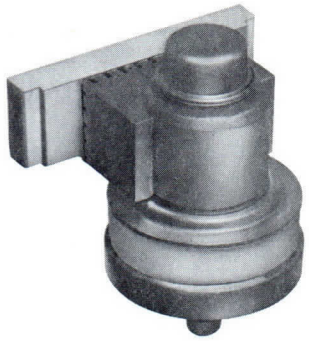

GENERAL CHARACTERISTICS[1]

ELECTRICAL

Cathode: Oxide Coated, Unipotential

Heater: Voltage	6.0 ± 0.3 V
Current, at 6.0 volts	2.6 A
Cathode - Heater Potential	±150 V

Direct Interelectrode Capacitances (grounded cathode)[2]

Input	17 pF
Output [3]	4.7 pF
Feedback	0.04 pF

Frequency of Maximum Rating:

CW	500 MHz
Plate or Grid-Pulsed	500 MHz

1. Characteristics and operating values are based upon performance tests. These figures may change without notice as the result of additional data or product refinement. EIMAC Division of Varian should be consulted before using this information for final equipment design.
2. In Shielded Fixture.
3. See output capacitance.

MECHANICAL

Maximum Overall Dimensions:

Length	2.46 in; 62.5 mm
Diameter	1.76 in; 44.9 mm
Net Weight	5 oz; 141.7 gm
Operating Position	Any

(Fffective 9-1-70) © by Varian Printed in U.S.A.

Maximum Operating Temperature:

Ceramic/Metal Seals	250°C
Anode Core	250°C
Plate and Base Seals	250°C
Cooling	Conduction
Base	Special 9-pin
Recommended Socket	EIMAC SK-660, SK-661 series

RADIO FREQUENCY LINEAR AMPLIFIER
GRID DRIVEN CATHODE DRIVEN
Class AB_1

MAXIMUM RATINGS:

DC PLATE VOLTAGE	2000	VOLTS
DC SCREEN VOLTAGE	500	VOLTS
DC GRID VOLTAGE	-250	VOLTS
DC PLATE CURRENT	0.250	AMPERE
SCREEN DISSIPATION	12	WATTS
GRID DISSIPATION	2	WATTS

TYPICAL OPERATION (Frequencies to 500 MHz)
Class AB_1, Grid Driven, Peak Envelope or Modulation Crest Conditions

Plate Voltage	1500	2000	Vdc
Screen Voltage	350	400	Vdc
Grid Voltage [1]	-62	-80	Vdc
Zero-Signal Plate Current	133	70	mAdc
Two-Tone Plate Current	250	245	mAdc
Two-Tone Screen Current [2]	-10	+1	mAdc
Peak rf Grid Voltage	56	80	v
Useful Output Power	262	470	w
Resonant Load Impedance	2160	2840	Ω
Intermodulation Distortion Products [3]			
3rd Order	-30	-23	db
5th Order	-35	-27	db

1. Adjust to specified zero-signal dc plate current.
2. Approximate values.
3. The intermodulation distortion products are referenced against one tone of a two equal tone signal.

RADIO FREQUENCY POWER AMPLIFIER OR OSCILLATOR
Class C Telegraphy or FM Telephony (Key-Down Conditions)

MAXIMUM RATINGS:

DC PLATE VOLTAGE	2000	VOLTS
DC SCREEN VOLTAGE	300	VOLTS
DC GRID VOLTAGE	-250	VOLTS
DC PLATE CURRENT	0.250	AMPERE
SCREEN DISSIPATION	12	WATTS
GRID DISSIPATION	2	WATTS

TYPICAL OPERATION (Frequencies to 175 MHz)

Plate Voltage	1000	1500	2000	Vdc
Screen Voltage	250	250	250	Vdc
Grid Voltage	-90	-90	-90	Vdc
Plate Current	227	240	241	mAdc
Screen Current [1]	9	8	8	mAdc
Grid Current [1]	11	10.5	10.5	mAdc
Peak rf Grid Voltage [1]	104	104	104	v
Calculated Driving Power [1]	1.2	1.1	1.1	W
Plate Input Power	170	360	482	W
Plate Dissipation	17	91	103	W
Plate Output Power	153	269	379	W
Resonant Load Impedance	1833	2900	4041	Ω

1. Approximate value.

PLATE MODULATED RADIO FREQUENCY POWER AMPLIFIER-GRID DRIVEN
Class C Telephony (Carrier Conditions)

MAXIMUM RATINGS:

DC PLATE VOLTAGE	1500	VOLTS
DC SCREEN VOLTAGE	300	VOLTS
DC GRID VOLTAGE	-250	VOLTS
DC PLATE CURRENT	0.200	AMPERE
SCREEN DISSIPATION [1]	12	WATTS
GRID DISSIPATION [1]	2	WATTS

1. Average, with or without modulation.

AUDIO FREQUENCY POWER AMPLIFIER OR MODULATOR

Class AB_1, Grid Driven (Sinusoidal Wave)

MAXIMUM RATINGS (Per Tube):

DC PLATE VOLTAGE	2000	VOLTS
DC SCREEN VOLTAGE	500	VOLTS
DC GRID VOLTAGE	-250	VOLTS
DC PLATE CURRENT	0.250	AMPERE
SCREEN DISSIPATION	12	WATTS
GRID DISSIPATION	2	WATTS

TYPICAL OPERATION (Two Tubes) (Push-Pull)

Plate Voltage	1500	2000	Vdc
Screen Voltage	300	350	Vdc
Grid Voltage 1/2	-48	-66	Vdc
Zero-Signal Plate Current	200	140	mAdc
Max. Signal Plate Current	490	500	mAdc
Zero-Signal Screen Current[1]	-2	-4	mAdc
Max. Signal Screen Current[1]	0	+4	mAdc
Plate Output Power	390	595	W
Load Resistance (plate to plate)	5920	8016	Ω

1. Approximate value.
2. Adjust to give stated zero-signal plate current.

NOTE: TYPICAL OPERATION data are obtained from direct measurement or by calculation from published characteristic curves. Adjustment of the rf grid voltage to obtain the specified plate current at the specified bias, screen and plate voltages is assumed. If this procedure is followed, there will be little variation in output power when the tube is changed, even though there may be some variation in grid and screen current. The grid and screen currents which result when the desired plate current is obtained are incidental and vary from tube to tube. These current variations cause no difficulty so long as the circuit maintains the correct voltage in the presence of the variations in current. In the case of Class C Service, if grid bias is obtained principally by means of a grid resistor, the resistor must be adjustable to obtain the required bias voltage when the correct rf grid voltage is applied.

RANGE VALUES FOR EQUIPMENT DESIGN

	Min.	Max.	
Heater: Current at 6.0 volts	2.3	2.9	A
Cathode Warmup Time	30	---	sec.
Interelectrode Capacitances[1] (grounded cathode connection)			
Input	16.0	18.5	pF
Output	4.2	5.2	pF
Feedback	---	0.06	pF

1. In Shielded Fixture.

APPLICATION

MECHANICAL

MOUNTING & SOCKETING - The 4CS250R may be mounted in any position. EIMAC SK-660 and SK-661 socket series is recommended. The SK-660 (made of alumina) and the SK-661 (made of BeO) will allow the tube base seal heat to be effectively transferred to the heat sink. Other sockets may be used if a means for keeping the ceramic/metal base seals below 250°C is provided. The EIMAC SK-655 and ERIE 2943 and 2929 series screen by-pass capacitor are recommended for use with the 4CS250R. Figure 1 shows the recommended method of mounting the 4CS-250R to the heat sink.

When using natural convection heat sinks, Figure 2 will assist the designer in determining the minimum heat sink surface area required for the given power dissipation. The thermal and electrical characteristics of the BeO used on the 4CS250R are given in Table I and Figure 3.

A good thermally conductive compound (1) should be used in the interface to reduce the thermal resistance of this joint. In addition, the method of fastening the tube to the heat sink should provide reasonable compression to help further reduce this interface thermal resistance.

The effectiveness of any cooling system used with the 4CS250R is determined by the anode and ceramic/metal seal temperatures. These must be held below 250°C for all conditions of expected ambient temperatures and operation. These temperature parameters should be measured in the design stage using accurate thermocouples or thermistors.

(1) Thermal joint compound and supplier.

a) Wakefield 120, Wakefield Engineering Co. Wakefield, Mass.
b) Dow Corning 340, Dow Corning Corp., Midland, Michigan.
c) Astrodyne Thermal Bond 312, Astrodyne, Inc., Burlington, Mass.
d) General Electric Insulgrease – G641, General Electric Co. Cleveland Ohio, 44117.

COOLING - The 4CS250R is designed for conduction cooled systems by using a beryllium oxide (BeO) thermal link brazed to the anode. The BeO is a ceramic material which exhibits high thermal conductance similar to aluminum and high electrical resistance and low loss typical of ceramics. When this BeO thermal link is fastened to a suitable heat sink, it provides a low thermal resistance path allowing the anode heat to be transferred to the heat sink. The BeO also provides electrical isolation between the tube anode and the heat sink.

The heat sink can be cooled by natural (free) convection, forced air convection, liquid cooling or a combination of these methods. The design choice is determined by the tubes application but in all cases the cooling system must maintain the anode and ceramic/metal seal temperatures below 250°C.

In a conduction cooled system, anode temperature and seal temperature are determined by the thermal resistance of the thermal path between the anode and the cooling medium, e.g., air, water. The thermal path consists of the Beryllium oxide thermal link, the interface between the thermal link and heat sink, and the heat sink. The thermal resistance of the BeO thermal link versus its average temperature is given in Figure 3. The tube user must then determine the thermal resistance of the thermal link from the BeO thermal link to the cooling medium for his particular application.

DANGER-BERYLLIUM OXIDE CERAMICS (BeO) BREATHING DUST OR FUMES CAN KILL
Normal use of tubes with Beryllium Oxide ceramics is not hazardous, but the user is cautioned that breathing small quantities of the dust or fumes from Beryllium Oxide can seriously injure or kill. Do not alter, disassemble, grind, lap, fire, chemically clean, or perform any other operation on the Beryllium Oxide block attached to the anode of the 4CS250R, or to the socket used with the tube, which may also contain Beryllium Oxide.

Any tube or accessory part containing Beryllium Oxide ceramics should be returned to EIMAC at the end of its useful life, with authorization for disposal.

SHOCK AND VIBRATION - The 4CS250R is shock and vibration tested with plate and screen voltages applied. Production tubes are randomly sampled and tested under the following conditions.

With a plate voltage of 2000 volts applied, the tubes sampled are subjected to six shocks of 90 G's minimum half-sine-wave motion, with a duration of 11.0 ± 2 milliseconds, in each of the three major axes (X, Y, Z).

With the rated plate and screen voltages applied and the control grid voltage adjusted for a plate current of 100 ma. through a plate load resistance of 4900 ohms, each of the tubes tested is vibrated in the three major axes throughout the range of 28 to 2000 and back to 28 Hz in a

CHARACTERISTICS OF 99.5% BeO

Electrical Resistivity in ohm-cm @250°F	10^{14}	Dielectric Strength in volts/mil	300
Dielectric Constant at 70°F and 1 MHz at 70°F and 8.5 GHz at 250°F and 8.5 GHz	 6.40 6.57 6.64	Thermal Conductivity (K) in Cal./Cm2/Cm/Sec./°C of 99.5% BeO	
		20°C 100°C 400°C	0.60 0.45 0.20
Loss Tangent at 70°F and 1 MHz at 70°F and 8.5 GHz at 250°F and 8.5 GHz	 0.0006 0.00044 0.00040	(From Coors Data Sheet 0001, Aug 1965)	

Table I

minimum time of six minutes per axis. The vibration level is maintained at 10 G's. The noise voltage developed across the plate load resistor may not exceed 30 volts rms.

VOLTAGE BREAKDOWN VERSUS ALTITUDE - Table II shows typical breakdown voltage versus altitude across the BeO thermal link. The measurements were taken with the heat sink plate at ground potential and the anode at the breakdown potential.

Altitude (thousands of feet)	All voltage readings in kVdc (typical)
Sea Level	11.5
5	10.5
10	10.5
15	9.0
20	7.5
25	6.5
30	5.5
35	5.0
40	4.0
45	4.0
50	3.5

Table II

OUTPUT CAPACITANCE - The interelectrode capacitances given in the General Characteristics are measured in a shielded fixture and does not include additional external capacitances. The typical capacitance between the anode and a heat sink plate 4'' x 4'' is 6.7 pF at 25°C. Total output capacitance will be approximately 11.5 pF. The measurement configuration is shown in Figure 1.

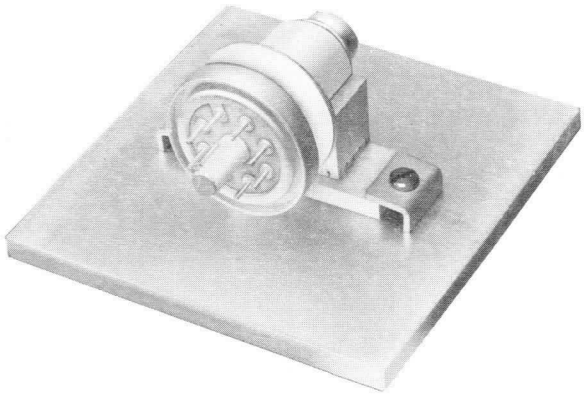

FIG. 1 TYPICAL MOUNTING CONFIGURATION

ELECTRICAL

HEATER/CATHODE OPERATION - For maximum life and uniform performance, the heater voltage should be maintained within plus or minus 5% of the rated 6.0 volts at operating frequencies up to 300 MHz for CW use. Between 300 and 400 MHz, 5.75 volts is recommended and between 400 and 500 MHz 5.5 volts is recommended.

GRID OPERATION - Maximum rated dc bias voltage is -250 volts. D.C. resistance, grid to cathode, should be no more than 100,000 ohms. Maximum grid dissipation allowable is 2 watts.

SCREEN OPERATION - Maximum screen dissipation is 12 watts, normally computed by multiplying dc screen voltage by the average screen current. This computation is essentially correct except in the case of heavy plate loading when secondary emission current may mask the normal screen current.

All tetrodes, under some conditions of loading and drive, will exhibit secondary emission from the screen which changes the net current to the screen and may even cause the screen meter to reverse. Normally, secondary emission is harmless provided the screen voltage is stable. To insure stable screen voltage, it is recommended that a bleeder resistor calculated to pass 15 ma from screen to ground be used.

PLATE OPERATION - The plate dissipation rating of the 4CS250R is limited by anode core and ceramic/metal seal temperature. These are a function of the thermal link and are discussed in the "Cooling" section.

MULTIPLE OPERATION - To obtain maximum power with minimum distortion from tubes operated in multiple it is desirable to adjust individual screen or grid-bias voltages so the peak plate current for each tube is equal at the crest of the exciting voltage. Under these conditions, individual dc plate currents will be approximately equal for full input signal for class-AB_1 operation.

SPECIAL APPLICATION - If it is desired to operate this tube under conditions widely different from those listed here, write to Power Grid Tube Division, EIMAC Division of Varian, 301 Industrial Way, San Carlos, California 94070, for information and recommendations.

ANODE POWER DISSIPATION OF 4CS250R VS HEAT SINK
AREA FOR WAKEFIELD B–1703 (SAFETY FACTOR INCLUDED)

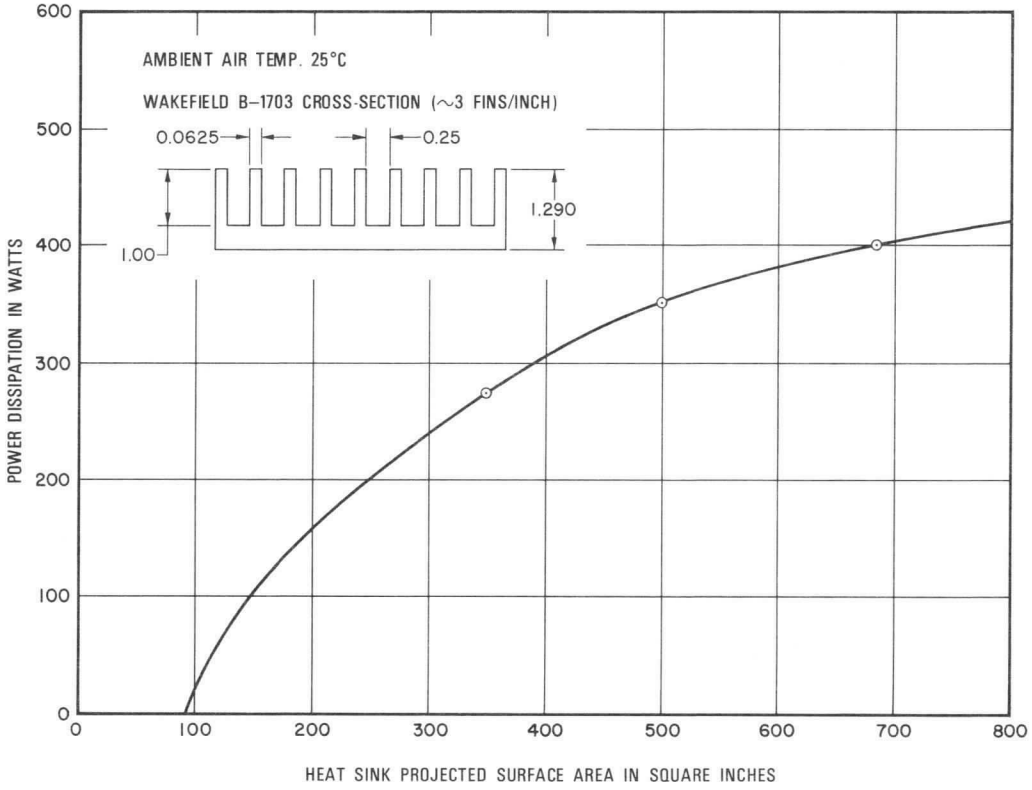

FIG. 2

THERMAL RESISTANCE VS AVERAGE TEMPERATURE OF 4CS250R THERMAL LINK INCLUDING 1 LAYER OF WAKEFIELD 120 THERMAL COMPOUND BETWEEN B_EO AND HEAT SINK

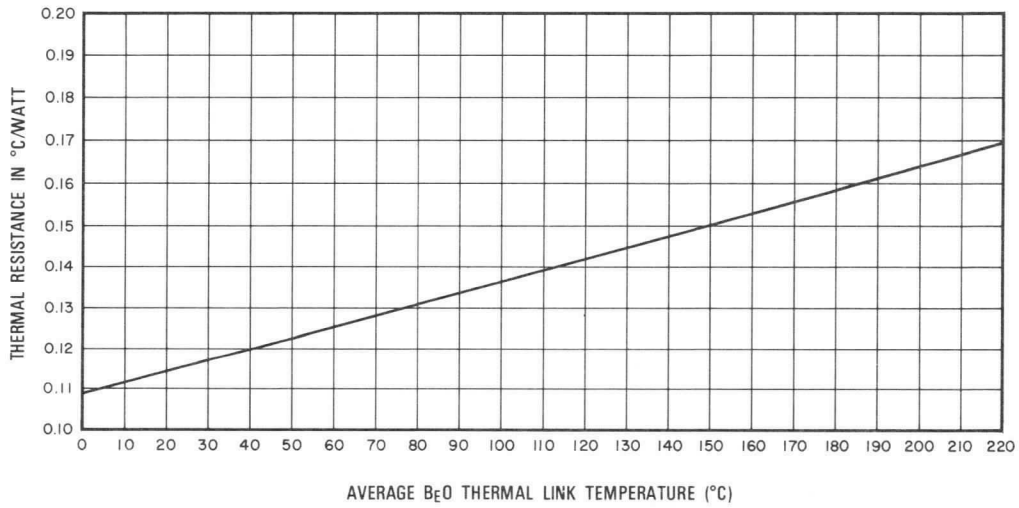

FIG. 3

PIN NO. 1. SCREEN GRID
PIN NO 2 CATHODE
PIN NO. 3. HEATER
PIN NO. 4. CATHODE
PIN NO. 5. I.C. DO NOT USE FOR EXTERNAL CONNECTION
PIN NO. 6. CATHODE
PIN NO. 7. HEATER
PIN NO. 8. CATHODE
CENTER PIN – CONTROL GRID

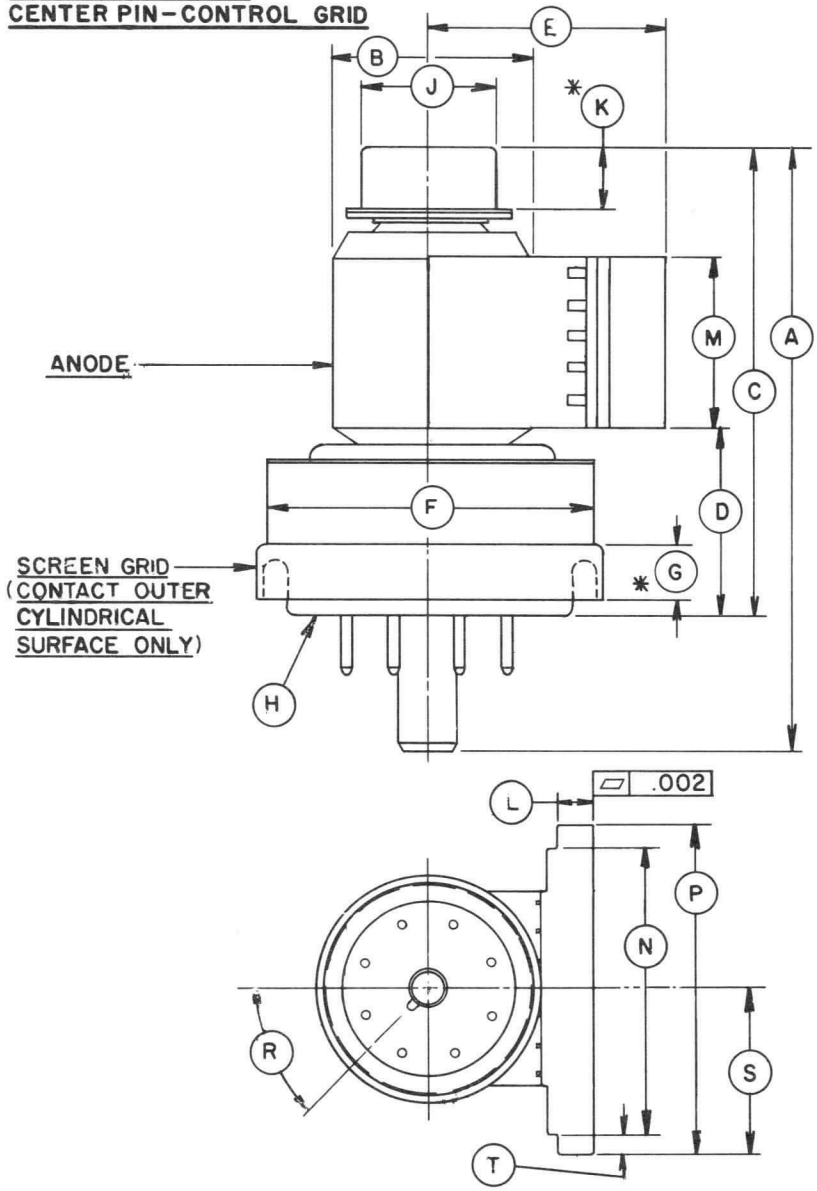

DIMENSIONAL DATA

DIM.	INCHES			MILLIMETERS		
	MIN.	MAX.	REF.	MIN.	MAX.	REF.
A	2.324	2.464	- -	59.03	62.59	- -
B	0.880	0.894	- -	22.35	22.71	- -
C	1.810	1.910	- -	45.97	48.51	- -
D	0.760	0.800	- -	19.30	20.32	- -
E	0.985	1.015	- -	25.02	25.78	- -
F	- -	1.406	- -	- -	35.71	- -
G	0.187	- -	- -	4.75	- -	- -
H	BASE B8-236 (JEDEC DESIGNATION)					
J	0.559	0.573	- -	14.20	14.55	- -
K	0.240	- -	- -	6.10	- -	- -
L	0.214	0.228	- -	5.44	5.79	- -
M	0.600	0.640	- -	15.24	16.26	- -
N	1.733	1.767	- -	44.02	44.88	- -
P	19.80	20.30	- -	50.29	51.56	- -
R	43°	47°	- -	43°	47°	- -
S	0.985	1.105	- -	25.02	25.78	- -
T	0.107	0.143	- -	2.72	3.63	- -

NOTES:
1. REF. DIMENSIONS ARE FOR INFO. ONLY & ARE NOT REQUIRED FOR INSPECTION PURPOSES.

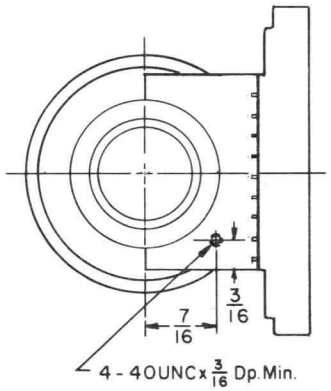

TOP VIEW

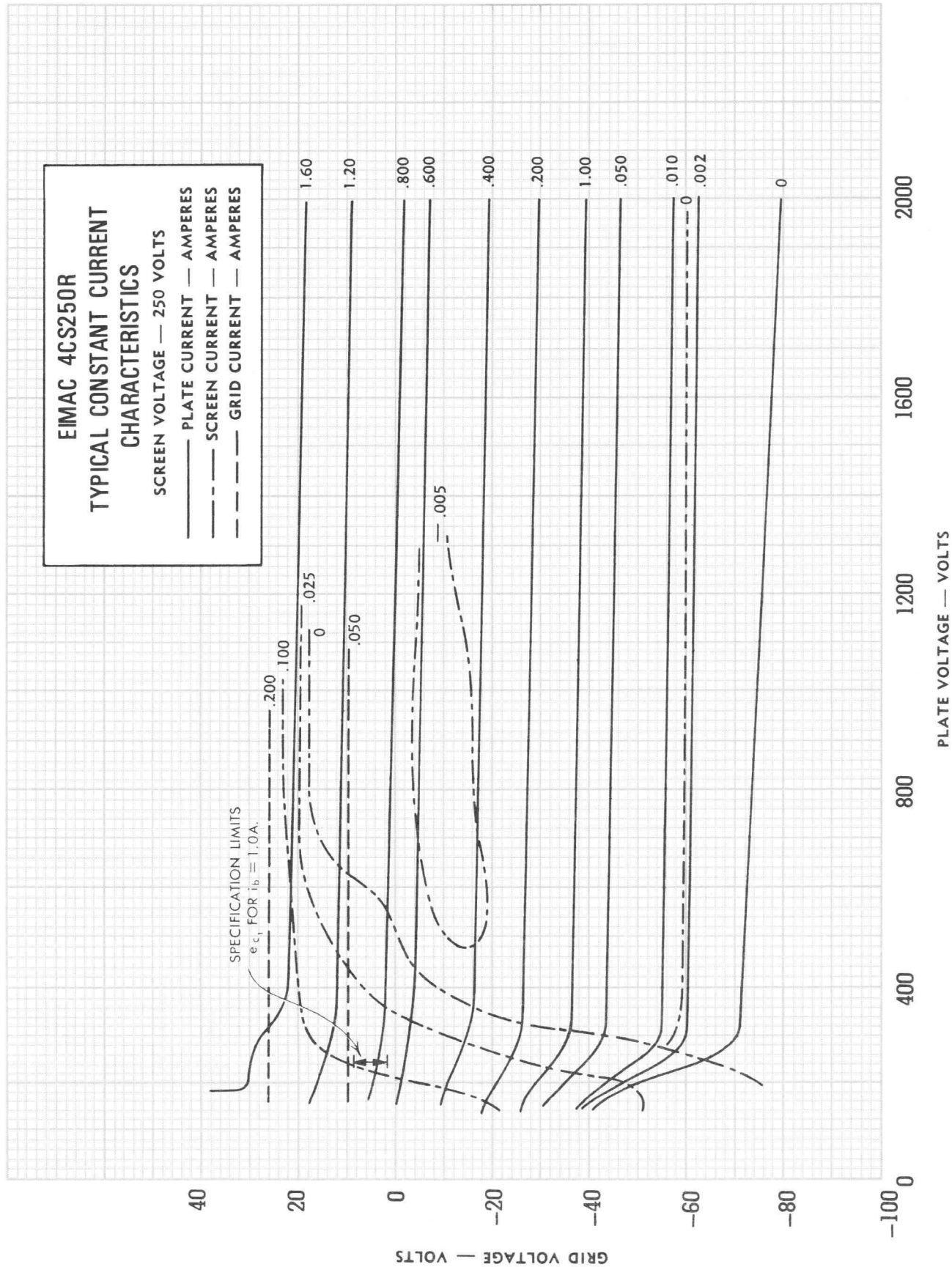
EIMAC 4CS250R
TYPICAL CONSTANT CURRENT CHARACTERISTICS
SCREEN VOLTAGE — 250 VOLTS
PLATE CURRENT — AMPERES
SCREEN CURRENT — AMPERES
GRID CURRENT — AMPERES
1.60
1.20
.800
.600
.400
.200
1.00
.050
.010
.002
0
.005
.025
.050
.100
.200
SPECIFICATION LIMITS
e_{c_1} FOR i_b = 1.0A.
GRID VOLTAGE — VOLTS
40
20
0
-20
-40
-60
-80
-100
0
400
800
1200
1600
2000
PLATE VOLTAGE — VOLTS

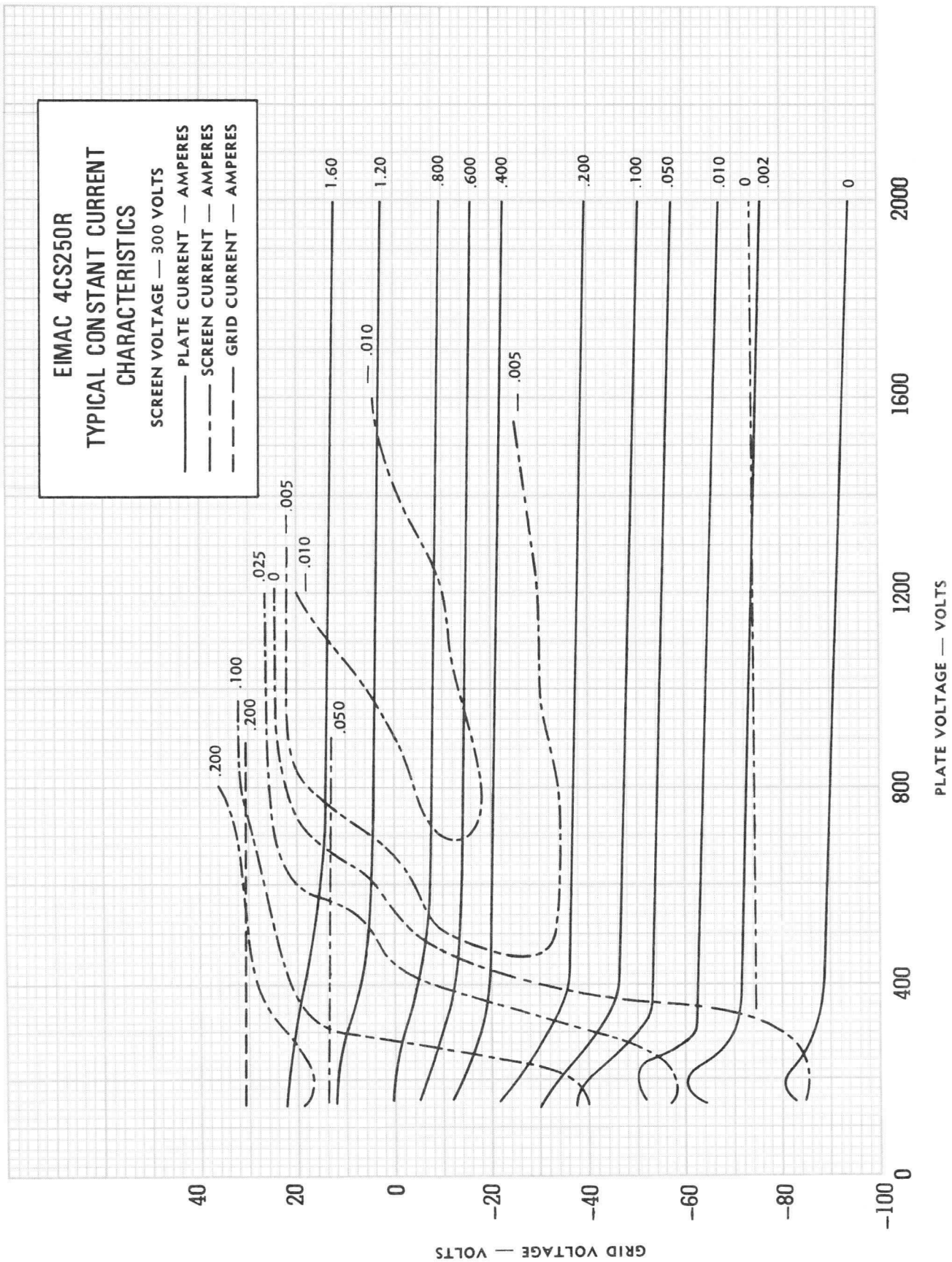
EIMAC 4CS250R
TYPICAL CONSTANT CURRENT
CHARACTERISTICS
SCREEN VOLTAGE — 300 VOLTS
PLATE CURRENT — AMPERES
SCREEN CURRENT — AMPERES
GRID CURRENT — AMPERES
1.60
1.20
.800
.600
.400
.200
.100
.050
.010
0
.002
.005
.010
.025
0
.005
.010
.050
.200
.100
.200
40
20
0
-20
-40
-60
-80
-100
0
400
800
1200
1600
2000
PLATE VOLTAGE — VOLTS
GRID VOLTAGE — VOLTS

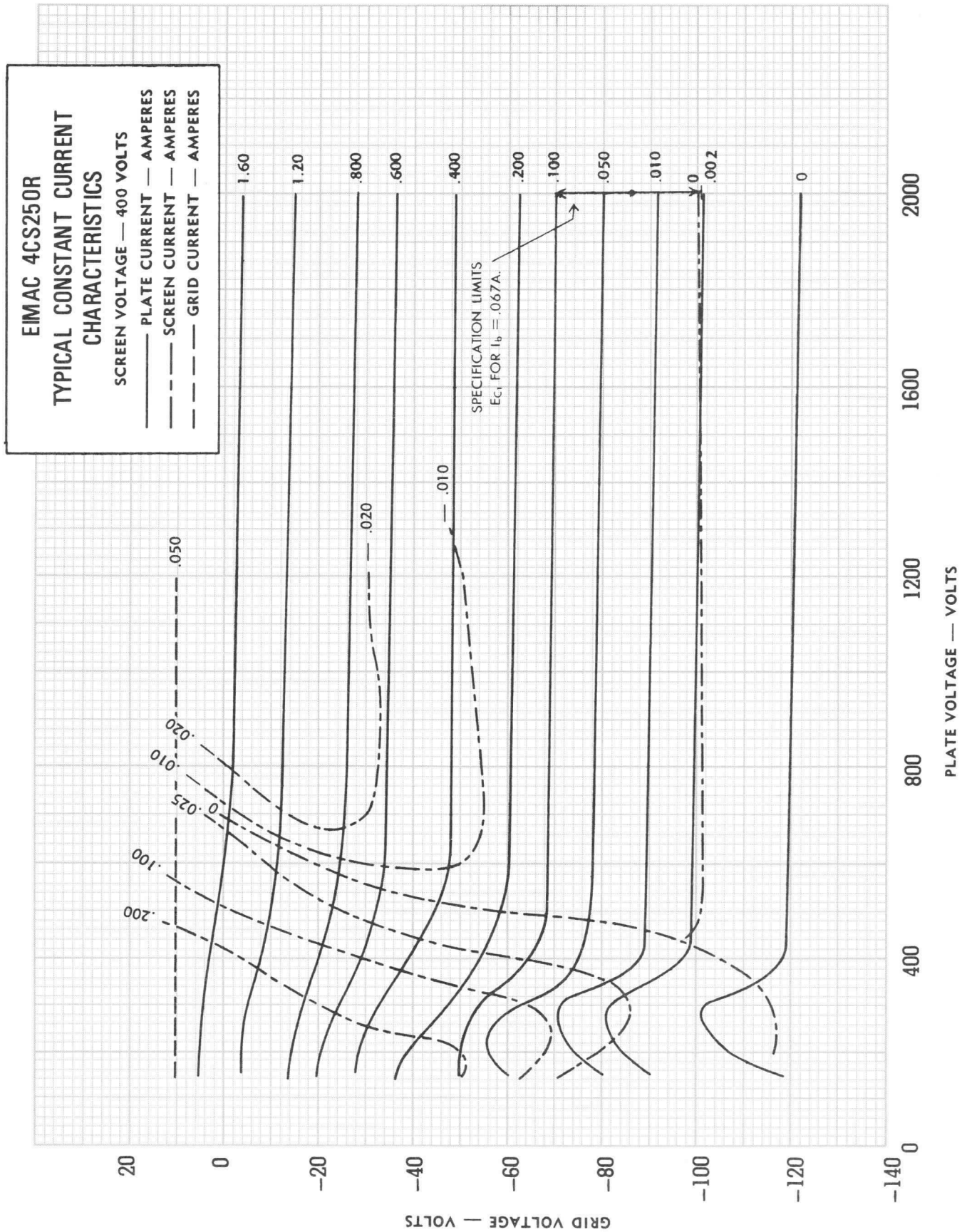
EIMAC 4CS250R
TYPICAL CONSTANT CURRENT CHARACTERISTICS
SCREEN VOLTAGE — 400 VOLTS
PLATE CURRENT — AMPERES
SCREEN CURRENT — AMPERES
GRID CURRENT — AMPERES
1.60
1.20
.800
.600
.400
.200
.100
.050
.010
0
.002
SPECIFICATION LIMITS
Ec1 FOR Ib = .067A.
.050
.020
.010
0
.025
.100
.200
20
0
-20
-40
-60
-80
-100
-120
-140
0
400
800
1200
1600
2000
GRID VOLTAGE — VOLTS
PLATE VOLTAGE — VOLTS

4CV8000A

TECHNICAL DATA

VAPOR-COOLED
RADIAL-BEAM
POWER-TETRODE

The EIMAC 4CV8000A is a ceramic/metal vapor-cooled power tetrode designed to be used as a Class-AB1 linear amplifier in audio or radio-frequency applications. Its characteristic of low intermodulation distortion makes it specially suitable for single-sideband service. The vapor-cooled anode has a dissipation rating of 8000 watts when mounted in an EIMAC BR-101 broiler.

The 4CV8000A is also recommended for Class-C radio-frequency power amplifier and plate-modulated radio-frequency power amplifier service.

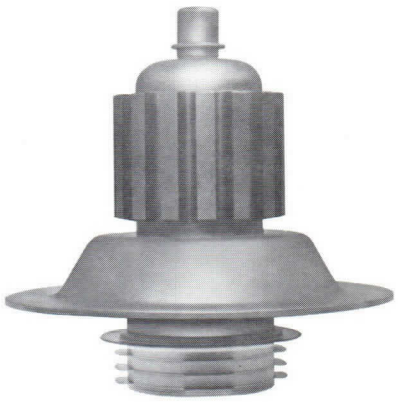

GENERAL CHARACTERISTICS[1]

Filament: Thoriated Tungsten	
Voltage	9.0 ± 0.45 V
Current, at 9.0 volts	41.5 A
Amplification Factor (Average):	
Grid to Screen	5.5
Direct Interelectrode Capacitance (grounded cathode)[2]	
Cin	130 pF
Cout	12.5 pF
Cpk	1.0 pF
Frequency of Maximum Rating:	
CW	150 MHz

1. Characteristics and operating values are based upon performance tests. These figures may change without notice as the result of additional data or product refinement. EIMAC Division of Varian should be consulted before using this information for final equipment design.

2. Capacitance values are for a cold tube as measured in a special shielded fixture in accorcance with Electronic Industries Association Standard RS-191.

MECHANICAL

Maximum Overall Dimensions:	
Length	7.98 in; 202.69 mm
Diameter	7.87 in; 199.90 mm
Net Weight	7.0 lb; 3.2 kg
Operating Position	Axis vertical, base up
Maximum Operating Temperature:	
Ceramic/Metal Seals	250°C
Anode Flange	110°C
Cooling	Vapor and Forced Air
Base	Special, ring and breach-block terminal surfaces
Recommended Air System Socket	SK-1490
Recommended Boiler	BR-101

(Revised 3-15-71) © by Varian

Printed in U.S.A.

RADIO FREQUENCY LINEAR AMPLIFIER GRID DRIVEN, Class AB1

ABSOLUTE MAXIMUM RATINGS

DC PLATE VOLTAGE	7000	VOLTS
DC SCREEN VOLTAGE	1000	VOLTS
DC PLATE CURRENT	2.0	AMPERES
PLATE DISSIPATION	8000	WATTS
SCREEN DISSIPATION	175	WATTS
GRID DISSIPATION	50	WATTS

1. Adjust to specified zero-signal dc plate current.

TYPICAL OPERATION (Frequencies to 30 MHz)
Class AB_1, Grid Driven, Peak Envelope or Modulation Crest Conditions.

Plate Voltage	5000	6000	Vdc
Screen Voltage	850	850	Vdc
Grid Voltage [1]	-130	-135	Vdc
Zero-Signal Plate Current	1.0	1.0	Adc
Single-Tone Plate Current	1.95	2.0	Adc
Single-Tone Screen Current [2]	130	125	mAdc
Peak rf Grid Voltage [2]	120	125	v
Plate Dissipation	3650	4750	W
Plate Output Power	6000	7250	W
Resonant Load Impedance	2170	1825	Ω

2. Approximate value .

RADIO FREQUENCY POWER AMPLIFIER OR OSCILLATOR

Class C Telegraphy or FM Telephony
(Key-Down Conditions)

ABSOLUTE MAXIMUM RATINGS

DC PLATE VOLTAGE	7000	VOLTS
DC SCREEN VOLTAGE	1000	VOLTS
DC PLATE CURRENT	2.0	AMPERES
PLATE DISSIPATION	8000	WATTS
SCREEN DISSIPATION	175	WATTS
GRID DISSIPATION	50	WATTS

TYPICAL OPERATION (Frequencies to 30 MHz)

Plate Voltage	6000	7000	Vdc
Screen Voltage	500	500	Vdc
Grid Voltage	-240	-265	Vdc
Plate Current	1.95	1.90	Adc
Screen Current [1]	315	295	mAdc
Grid Current [1]	135	125	mAdc
Peak rf Grid Voltage [1]	345	370	v
Calculated Driving Power	47	47	W
Plate Output Power	9.2	11.0	kW

1. Approximate value.

PLATE MODULATED RADIO FREQUENCY POWER AMPLIFIER-GRID DRIVEN

Class C Telephony (Carrier Conditions)

ABSOLUTE MAXIMUM RATINGS

DC PLATE VOLTAGE	5000	VOLTS
DC SCREEN VOLTAGE	600	VOLTS
DC PLATE CURRENT	1.4	AMPERES
PLATE DISSIPATION [1]	5500	WATTS
SCREEN DISSIPATION [2]	175	WATTS
GRID DISSIPATION [2]	50	WATTS

1. Corresponds to 8000 watts at 100% sine-wave modulation.
2. Average, with or without modulation.

TYPICAL OPERATION (Frequencies to 30 MHz)

Plate Voltage	4000	5000	Vdc
Screen Voltage	400	400	Vdc
Grid Voltage	-250	-250	Vdc
Plate Current	1.4	1.35	Adc
Screen Current [1]	225	235	mAdc
Grid Current [1]	115	125	mAdc
Peak af Screen Voltage [1] (100% modulation)	365	365	v
Peak rf Grid Voltage [1]	335	330	v
Calculated Driving Power	39	42	W
Plate Dissipation	1200	1250	W
Plate Output Power	4400	5500	W

1. Approximate value.

AUDIO FREQUENCY POWER AMPLIFIER OR MODULATOR

Class AB , Grid Driven (Sinusoidal Wave)

ABSOLUTE MAXIMUM RATINGS (per tube)

DC PLATE VOLTAGE	7000	VOLTS
DC SCREEN VOLTAGE	1000	VOLTS
DC PLATE CURRENT	2.0	AMPERES
PLATE DISSIPATION	8000	WATTS
SCREEN DISSIPATION	175	WATTS
GRID DISSIPATION	50	WATTS

TYPICAL OPERATION (Two Tubes)

Plate Voltage	5000	6000	Vdc
Screen Voltage	850	850	Vdc
Grid Voltage [1/3]	-130	-135	Vdc
Zero-Signal Plate Current	2.0	2.0	Adc
Max. Signal Plate Current	3.9	4.0	Adc
Max. Signal Screen Current[1]	260	250	mAdc
Peak af Grid Voltage[2]	120	125	v
Max. Signal Plate Dissipation[2]	3650	4750	W
Plate Output Power	12.0	14.5	kW
Load Resistance (plate to plate)	4340	3650	Ω

1. Approximate value.
2. Per Tube.
3. Adjust to give stated zero-signal plate current.

NOTE: TYPICAL OPERATION data are obtained direct measurement or by calculation from published characteristic curves. Adjustment of the rf grid voltage to obtain the specified plate current at the specified bias, screen and plate voltage is assumed. If this procedure is followed, there will be little variation in output power when the tube is changed, even though there may be some variation in grid and screen current. The grid and screen currents which result when the desired plate current is obtained are incidental and vary from tube to tube. These current variations cause no difficulty so long as the circuit maintains the correct voltage in the presence of the variations in current. In Class C service, if grid bias is obtained principally by means of a grid resistor, the resistor must be adjustable to obtain the required bias voltage when the correct rf grid voltage is applied.

RANGE VALUES FOR EQUIPMENT DESIGN

	Min.	Max.	
Heater: Current at 9.0 volts	39.5	43.5	A
Interelectrode Capacitances[1] (grounded cathode connection)			
Cin	120	140	pF
Cout	10.5	14.5	pF
Cgp	---	1.4	pF

1. Capacitance values are for a cold tube as measured in a special shielded fixture in accordance with Electronic Industries Association Standard RS-191.

APPLICATION

MECHANICAL

MOUNTING - The 4CV8000A must be operated with its axis vertical, base up in an EIMAC BR-101 boiler. Care must be exercised when installing to insure that the boiler is level, the water is at the proper level and that the flange of the tube makes a vapor tight seal against the rubber "0" ring and boiler. A typical vapor cooling system is shown in this data sheet.

SOCKET - The EIMAC SK-1490 socket is available for use with the 4CV8000A. Filament, control-grid, and screen-grid connections are made to this socket.

COOLING - Cooling is accomplished by immersing the anode in the distilled water filled BR-101 boiler. The energy dissipated at the anode causes the water to boil at the surfaces of the anode, be converted into steam and be carried away to the condenser. The boiling action keeps the anode surfaces at approximately 100°C. In a properly designed boiler-tube system (such as the 4CV8000A and BR-101), it is extremely unlikely that the anode surfaces will ever exceed 110°C - well below the 250°C maximum rating - at full dissipation ratings.

The water in the boiler must be maintained at

a constant level, just below the top of the fins on the anode cooler. This is accomplished automatically in the vapor cooling system shown. Condensate from the condenser is returned to the boiler to maintain this constant fluid level. Any decrease in liquid level is sensed by the control box, CB-102. A low water level in the control box activates the solenoid water valve, allowing make-up water from the reservoir to enter the boiler. When the proper level is reached, the control box de-energizes the solenoid, stopping the flow from the reservoir. A second switch in the control box is energized if the water level drops to a lower level because of an empty reservoir or a constriction in the line. This switch may be used to shut down the equipment or activate an alarm.

For reliable operation, it is important that the control box and boiler be mounted so that the level sensed by the control box is exactly the same as the level in the boiler.

Cooling of the tube base is accomplished by blowing 25-50 CFM of air through the socket from the sides.

ELECTRICAL

HIGH VOLTAGE - Normal operating voltages used with the 4CV8000A are deadly, and the equipment must be designed properly and operating precautions must be followed. Design all equipment so that no one can come in contact with high voltages. All equipment must include safety enclosures for high-voltage circuits and terminals, with interlock switches to open primary circuits of the power supply and to discharge high-voltage condensers whenever access doors are opened. Interlock switches must not be bypassed or "cheated" to allow operation with access doors open. Always remember that HIGH VOLTAGE CAN KILL.

FILAMENT OPERATION - The rated filament voltage for the 4CV8000A is 9.0 volts. Filament voltage, as measured at the socket, must be maintained at 9.0 volts plus or minus five percent to obtain maximum tube life. The use of a constant voltage filament transformer is recommended.

GRID OPERATION - The 4CV8000A grid has a maximum dissipation rating of 50 watts. Precautions should be observed to avoid exceeding this rating. Grid dissipation is the product of the dc grid current and the peak positive grid voltage swing.

SCREEN OPERATION - The power dissipated by the screen must not exceed 175 watts. Screen dissipation, in cases where no ac is applied to the screen, is the product of screen voltage and screen current. If the screen voltage is modulated, the screen dissipation will depend upon loading, driving power and screen voltage.

Screen dissipation is likely to rise to excessive values when the plate voltage, bias voltage or plate load are removed with filament and screen voltages applied. Suitable protective means must be provided to limit the screen dissipation in the event of these failures.

PLATE DISSIPATION - The plate dissipation rating of 8000 watts attainable through vapor cooling provides a large margin of safety. It is unlikely that this rating will be exceeded, even during tuning periods.

When the 4CV8000A is used as a plate-modulated rf amplifier, this rating is reduced to 5500 watts with a reduced plate input rating of 5000 volts and 1.4 amps.

SPECIAL APPLICATIONS - If it is desired to operate this tube under conditions widely different from those given here, write to Power Grid Tube Division, EIMAC Division of Varian, 301 Industrial Way, San Carlos, California 94070, for information and recommendations.

VAPOR COOLING SYSTEM

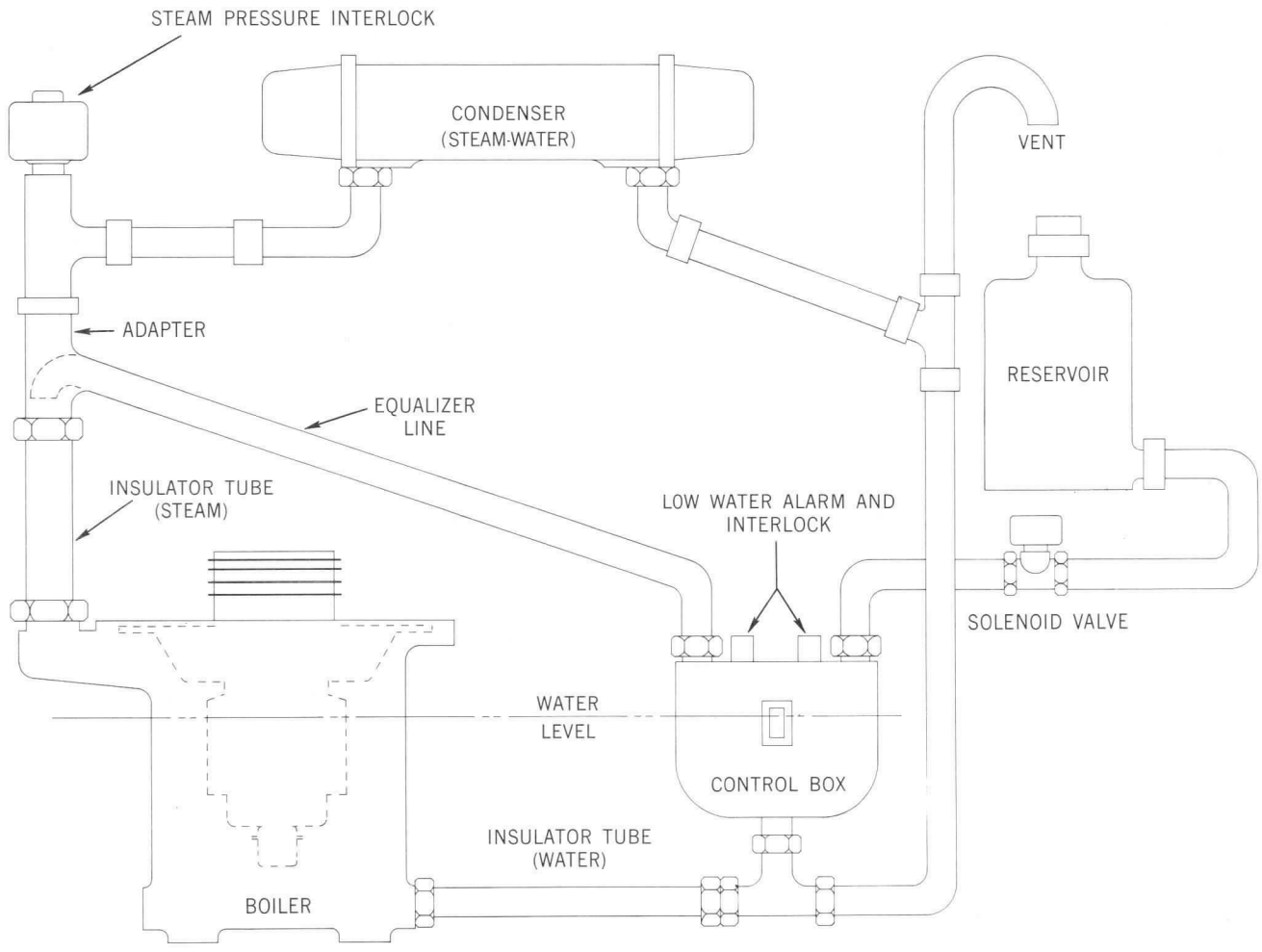

DIMENSIONAL DATA						
DIM.	INCHES			MILLIMETERS		
	MIN.	MAX.	REF.	MIN.	MAX.	REF.
A	3.475	3.525		88.27	89.53	- -
B	0.860	0.890		21.84	22.61	- -
C	2.985	3.025		75.82	76.84	- -
D	3.490	3.525		88.65	89.54	- -
E	3.472	3.602		88.19	91.49	- -
F	6.000	6.200		152.40	157.48	- -
G	7.753	7.983		196.93	202.77	- -
H	0.965	1.005		24.51	25.53	- -
K	0.700	0.730		17.78	18.54	- -
L	0.430	0.460		10.92	11.68	- -
M	0.160	0.180		4.06	4.57	- -
N	0.018	0.025		0.46	0.64	- -
P	1.050	1.100		26.67	27.94	- -
R	39°	41°		39°	41°	- -
S	89°	91°		89°	91°	- -
T	0.485	0.515		12.32	13.08	- -
U	1.557	1.567		39.55	39.80	- -
V	4.000	4.175		101.60	106.05	- -
W	- -	- -	2.968	- -	- -	75.39
X	- -	- -	7.875	- -	- -	200.03
Y	- -	- -	0.344	- -	- -	8.74
Z	1.785	1.915	- -	45.34	48.64	- -

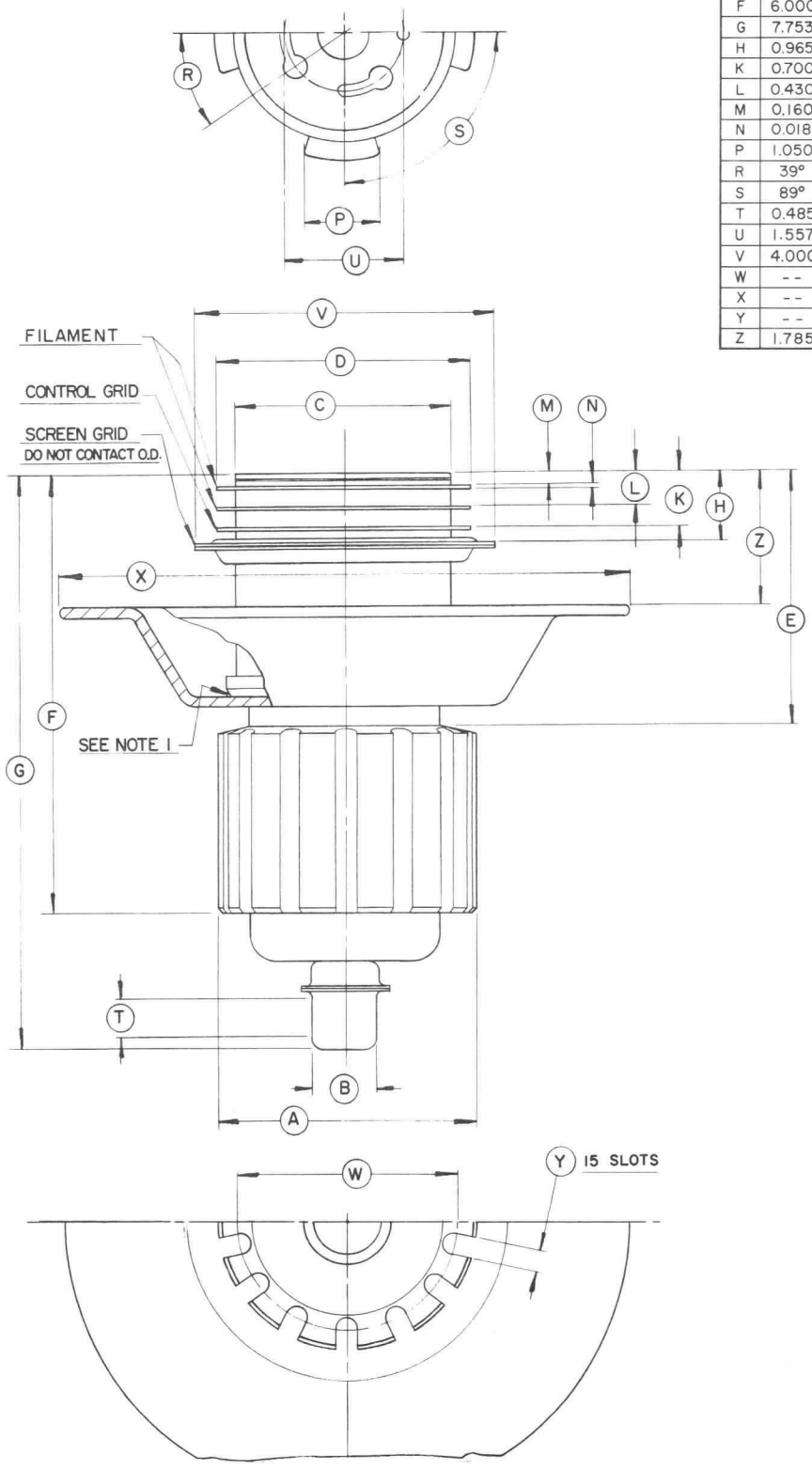

NOTES:
1. AREA FOR MEASURING ANODE FLANGE TEMPERATURE.
2. REFERENCE DIMENSIONS ARE FOR INFORMATION ONLY & ARE NOT REQ'D FOR INSPECTION PURPOSES.

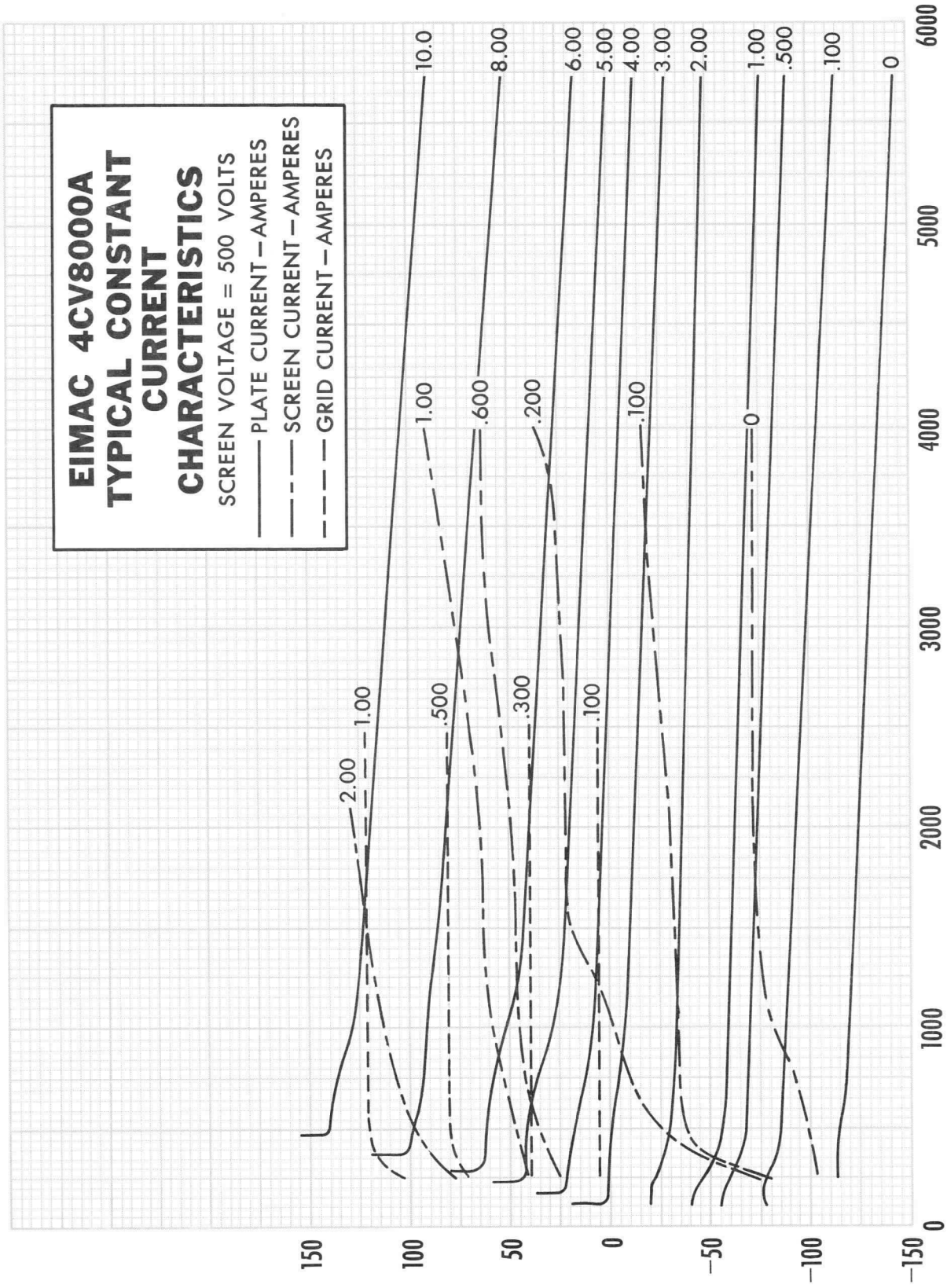
EIMAC 4CV8000A
TYPICAL CONSTANT
CURRENT
CHARACTERISTICS
SCREEN VOLTAGE = 500 VOLTS
PLATE CURRENT—AMPERES
SCREEN CURRENT—AMPERES
GRID CURRENT—AMPERES
10.0
8.00
6.00
5.00
4.00
3.00
2.00
1.00
.500
.100
0
1.00
.600
.200
.300
.100
2.00
1.00
.500
.100
0
150
100
50
0
−50
−100
−150
0
1000
2000
3000
4000
5000
6000
GRID VOLTAGE—VOLTS
PLATE VOLTAGE—VOLTS

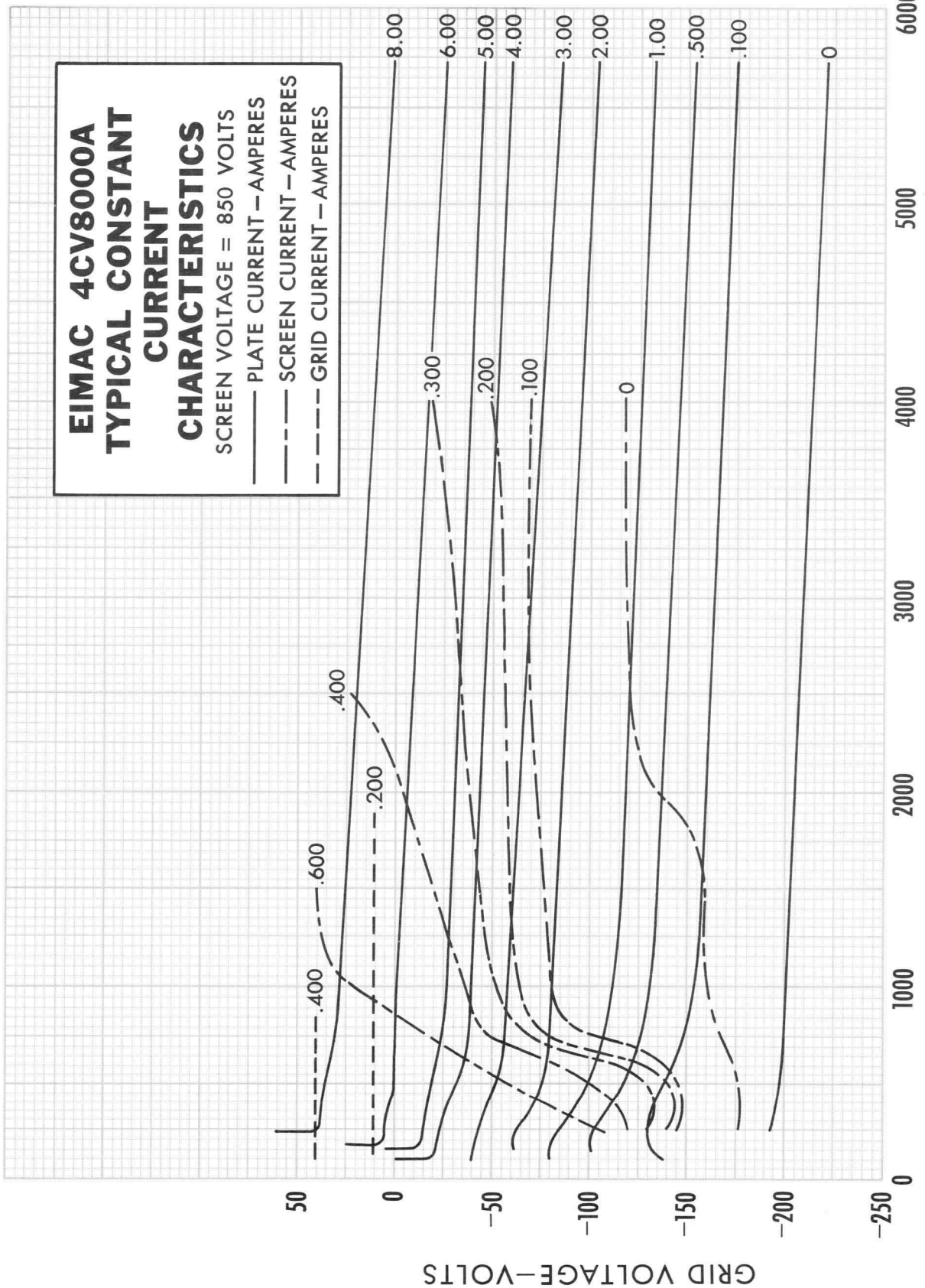
EIMAC 4CV8000A
TYPICAL CONSTANT CURRENT CHARACTERISTICS
SCREEN VOLTAGE = 850 VOLTS
PLATE CURRENT – AMPERES
SCREEN CURRENT – AMPERES
GRID CURRENT – AMPERES
8.00
6.00
5.00
4.00
3.00
2.00
1.00
.500
.100
0
.300
.200
.100
0
.400
.200
.600
.400
50
0
–50
–100
–150
–200
–250
0
1000
2000
3000
4000
5000
6000
GRID VOLTAGE – VOLTS
PLATE VOLTAGE – VOLTS

EIMAC
Division of Varian
SAN CARLOS
CALIFORNIA

4CV20,000A

VAPOR-COOLED
RADIAL-BEAM
POWER-TETRODE

The Eimac 4CV20,000A is a vapor-cooled, ceramic-metal, power tetrode designed for use as an oscillator, modulator, or amplifier in audio and radio-frequency applications. The vapor-cooled anode is conservatively rated at 20 kilowatts of plate dissipation when mounted in an Eimac BR-200 boiler.

A pair of these tubes in class AB_1 audio frequency or radio frequency linear amplifier service will deliver 35 kilowatts output. The frequency for maximum ratings is 30 megacycles; operation to 110 megacycles is possible at reduced input.

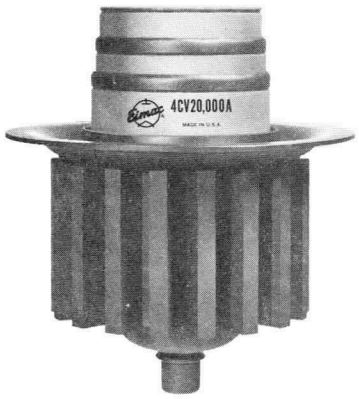

GENERAL CHARACTERISTICS

ELECTRICAL

		Min.	Nom.	Max.	
Filament:	Thoriated Tungsten				
	Voltage		7.5		V
	Current	73		78	A
Amplification Factor (Grid-Screen)			4.5		
Direct Interelectrode Capacitances, Grounded Cathode:					
	Input	108		122	pF
	Output	18		23	pF
	Feedback			1.0	pF
Direct Interelectrode Capacitances, Grounded Grid:					
	Input	48		58	pF
	Output	18		23	pF
	Feedback			1.0	pF
Frequency for Maximum Ratings				30	MHz

MECHANICAL

Base	Special, Concentric
Recommended Socket	Eimac, SK-300A
Recommended Boiler	Eimac, BR-200
Operating Position	Axis vertical, base up
Cooling	Vapor & Forced air
Maximum Seal Temperature	250° C
Maximum Anode Core Temperature	250° C
Maximum Over-all Dimensions:	
Height	9.13 in
Diameter	7.75 in
Net Weight	21 lbs

RADIO FREQUENCY POWER AMPLIFIER OR OSCILLATOR

Class-C Telegraphy or FM Telephony

MAXIMUM RATINGS

DC PLATE VOLTAGE (to 30 Mc)	7500 VOLTS
(30-60 Mc)	7000 VOLTS
(60-110 Mc)	6500 VOLTS
DC SCREEN VOLTAGE	1500 VOLTS
DC PLATE CURRENT (to 30 Mc)	3.0 AMPS
(30-60 Mc)	2.8 AMPS
(60-110 Mc)	2.6 AMPS
PLATE DISSIPATION	20,000 WATTS
SCREEN DISSIPATION	250 WATTS
GRID DISSIPATION	75 WATTS

TYPICAL OPERATION (Below 30 Mc)

DC Plate Voltage	6000	7500	volts
DC Screen Voltage	500	500	volts
DC Grid Voltage	-290	-300	volts
DC Plate Current	3.0	3.0	amps
DC Screen Current*	500	500	mA
DC Grid Current	290	290	mA
Peak RF Grid Voltage*	520	530	volts
Driving Power	150	155	watts
Plate Output Power	12,900	17,000	watts

*Approximate Values

(Effective 6-1-68) © 1962, 1968 by Varian

Printed in U.S.A.

PLATE-MODULATED RADIO-FREQUENCY POWER AMPLIFIER

Class-C Telephony (Carrier conditions except where noted)

MAXIMUM RATINGS

DC PLATE VOLTAGE	5000 VOLTS
DC SCREEN VOLTAGE	1000 VOLTS
DC PLATE CURRENT	2.5 AMPS
PLATE DISSIPATION*	13,500 WATTS
SCREEN DISSIPATION	250 WATTS
GRID DISSIPATION	75 WATTS

* Corresponds to 20,000 watts at 100-percent sine-wave modulation.

** Approximate values.

TYPICAL OPERATION
(Frequencies below 30 megacycles)

DC Plate Voltage	4000	5000	volts
DC Screen Voltage	500	500	volts
Peak AF Screen Voltage (For 100% modulation)	470	490	volts
DC Grid Voltage	-320	-340	volts
DC Plate Current	2.2	2.2	amps
DC Screen Current**	335	330	mA
DC Grid Current**	160	150	mA
Peak RF Grid Voltage**	490	510	volts
Grid Driving Power	78.5	76.5	watts
Plate Dissipation	3050	3250	watts
Plate Output Power	5750	7750	watts

RADIO-FREQUENCY LINEAR AMPLIFIER

Class AB_1

MAXIMUM RATINGS (per tube)

DC PLATE VOLTAGE	7500 VOLTS
DC SCREEN VOLTAGE	1500 VOLTS
DC PLATE CURRENT	4.0 AMPS
PLATE DISSIPATION	20,000 WATTS
SCREEN DISSIPATION	250 WATTS
GRID DISSIPATION	75 WATTS

* Per Tube

**Approximate values.

TYPICAL OPERATION (Peak-Envelope or Modulation-Crest Conditions.

DC Plate Voltage	5000	7500	volts
DC Screen Voltage	1500	1500	volts
DC Grid Voltage	-250	-260	volts
Max-Signal Plate Current			
Max-Signal Plate Current	4.0	4.0	amps
Zero-Signal Plate Current	2.0	2.0	amps
Max-Signal Screen Current*	165	150	mA
Peak RF Grid Voltage*	240	250	volts
Driving Power	0	0	watts
Plate Dissipation	9700	12,500	watts
Plate Output Power	10,300	17,500	watts
Resonant Load Impedance	590	1030	ohms

AUDIO-FREQUENCY AMPLIFIER OR MODULATOR

Class-AB_1

MAXIMUM RATINGS

DC PLATE VOLTAGE	7500 VOLTS
DC SCREEN VOLTAGE	1500 VOLTS
DC PLATE CURRENT	4.0 AMPS
PLATE DISSIPATION	20,000 WATTS
SCREEN DISSIPATION	250 WATTS
GRID DISSIPATION	75 WATTS

* Approximate values

TYPICAL OPERATION (Two Tubes)

DC Plate Voltage	5000	7500	volts
DC Screen Voltage	1500	1500	volts
DC Grid Voltage	-250	-260	volts
Max-Signal Plate Current	8.0	8.0	amps
Zero-Signal Plate Current	4.0	4.0	amps
Max-Signal Screen Current**	330	300	mA
Peak RF Driving Voltage**	240	250	volts
Driving Power	0	0	watts
Load Resistance, Plate-to-Plate	1180	2060	ohms
Max-Signal Plate Dissipation*	9700	12,500	watts
Max-Signal Plate Output Power	20,600	35,000	watts

NOTE: "TYPICAL OPERATION" data are obtained by calculation from published characteristic curves. No allowance is made for circuit losses of any kind. Adjustment of the rf grid drive to obtain the specified plate current at the specified grid bias, screen voltage, and plate voltage is assumed. If this procedure is followed, there will be little variation in output power when tubes are changed, even though there may be some variations in grid and screen currents. The grid and screen currents which result when the desired plate current is obtained are incidental and vary from tube to tube. These current variations cause no difficulty so long as the circuit maintains the correct voltage in the presence of the variations in current. If grid bias is obtained principally by means of a grid resistor, the resistor must be adjustable to obtain the required bias voltage when the correct rf driving voltage is applied.

APPLICATION

MECHANICAL

MOUNTING – The 4CV20,000A must be operated with its axis vertical, base up in an Eimac BR-200 boiler. Care must be exercised when installing to insure that the boiler is level, the water is at the proper level and that the flange of the tube makes a vapor tight seal against the rubber "O" ring and boiler. A typical vapor cooling system is shown below.

SOCKET – The Eimac SK-300A socket is available for use with the 4CV20,000A. Filament, control grid and screen grid connections are made to this socket.

COOLING – Cooling is accomplished by immersing the anode in the distilled water filled BR-200 boiler. The energy dissipated at the anode causes the water to boil at the surfaces of the anode, be converted into steam and be carried away to the condenser. The boiling action keeps the anode surfaces at approximately 100°C. In a properly designed boiler-tube system (such as the 4CV20,000A and BR-200), it is extremely unlikely that the anode surfaces will ever exceed 110°C - well below the 250°C maximum rating - at full dissipation ratings.

The water in the boiler must be maintained at a constant level as indicated by the mark on the boiler, just below the top of the fins on the anode cooler. This is accomplished automatically in the vapor cooling system shown. Condensate from the condenser is returned to the boiler to maintain this constant fluid level. Any losses or drops in liquid level are sensed by the control box, CB-202. A low water level in the control box activates the solenoid water valve, allowing make-up water from the reservoir to enter the boiler. When the proper level is reached, the control box de-energizes the solenoid, stopping the flow from the reservoir. A second switch in the control box is energized if the water level drops to a lower level because of an empty reservoir or a constriction in the line. This switch may be used to shut down the equipment or activate an alarm.

For reliable operation, it is important that the control box and boiler be mounted so that the level sensed by the control box is exactly the same as the level in the boiler.

Cooling of the tube base is accomplished by blowing 25-50 CFM of air into the socket in the area of the filament seals.

VAPOR COOLING SYSTEM

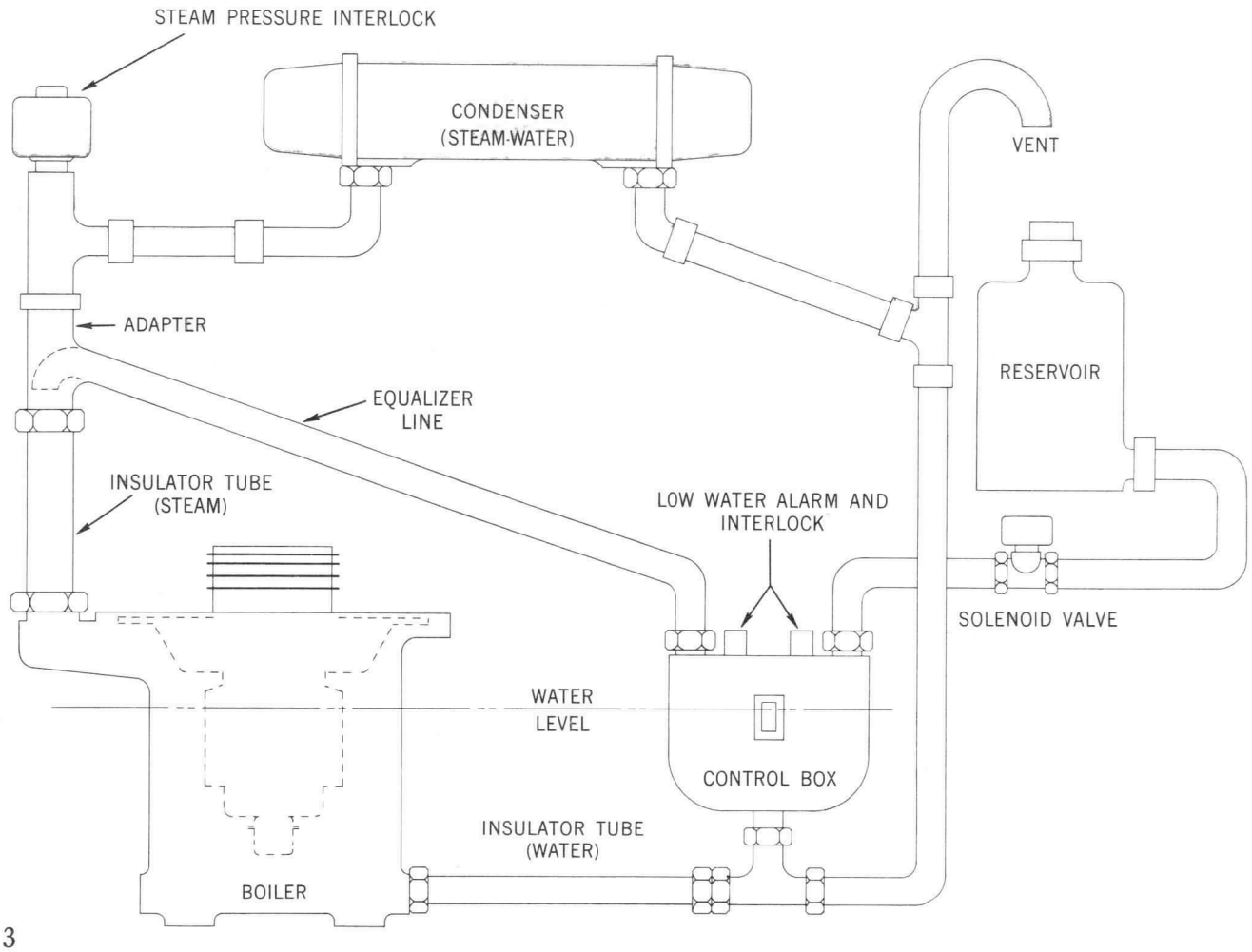

ELECTRICAL

FILAMENT OPERATION — The rated filament voltage for the 4CV20,000A is 7.5 volts. Filament voltage, as measured at the socket, must be maintained at 7.5 volts plus or minus five percent to obtain maximum tube life. The use of a constant voltage filament transformer is recommended.

CONTROL-GRID OPERATION — The 4CV20,000A control grid has a maximum dissipation rating of 75 watts. Precautions should be observed to avoid exceeding this rating. Grid dissipation is the product of the dc grid current and the peak positive grid voltage swing.

SCREEN-GRID OPERATION — The power dissipated by the screen must not exceed 250 watts. Screen dissipation, in cases where no ac is applied to the screen is the product of screen voltage and screen current. If the screen voltage is modulated, the screen dissipation will depend upon loading, driving power and screen voltage.

Screen dissipation is likely to rise to excessive values when the plate voltage, bias voltage or plate load are removed with filament and screen voltages applied. Suitable protective means must be provided to limit the screen dissipation in the event of these failures.

PLATE DISSIPATION — The plate dissipation rating of 20,000 watts attainable through vapor cooling provides a large margin of safety. It is unlikely that this rating will be exceeded, even during tuning periods.

When the 4CV20,000A is used as a plate-modulated rf amplifier, this rating is reduced to 13,500 watts with a reduced plate input rating of 5000 volts and 2.5 amps.

SPECIAL APPLICATIONS — If it is desired to operate this tube under conditions widely different from those given here, write to Power Grid Tube Marketing Department, EIMAC Division of Varian, 301 Industrial Way, San Carlos, California for information and recommendations.

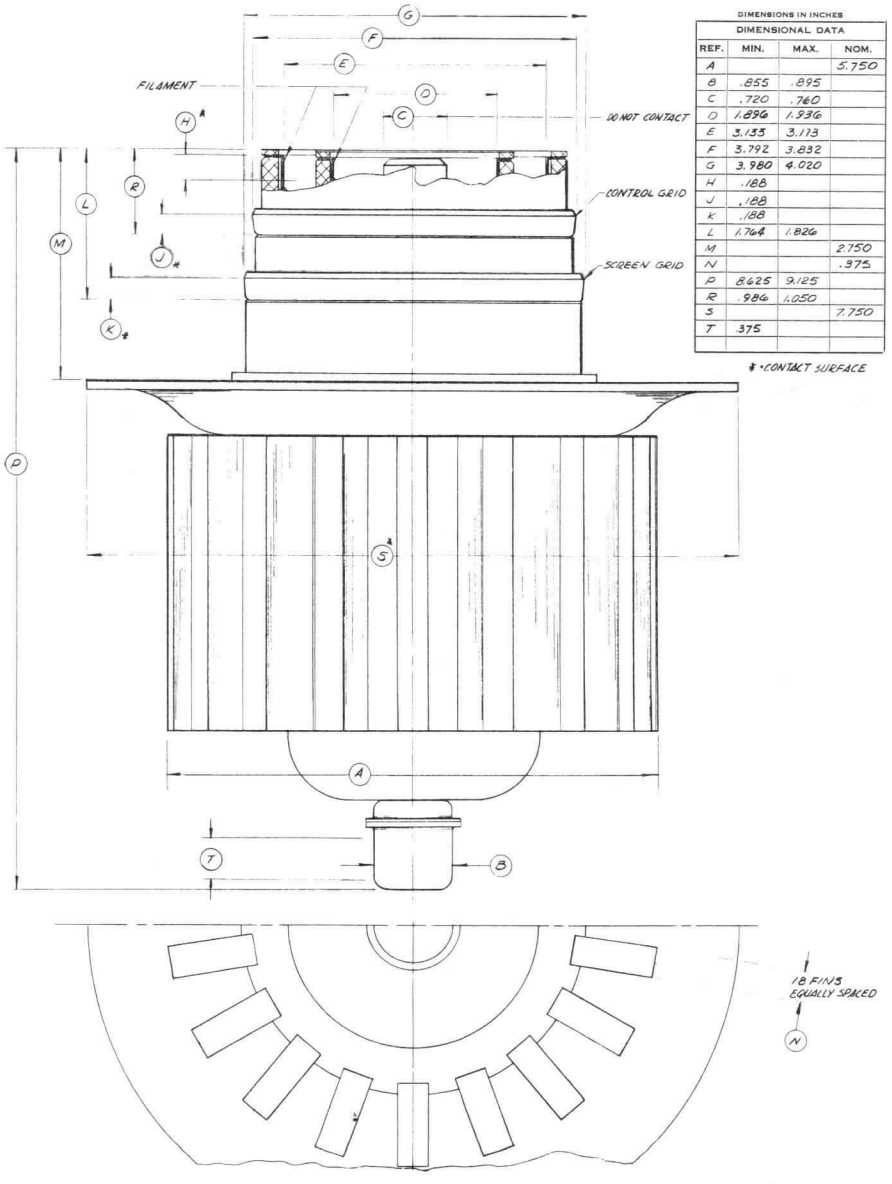

DIMENSIONS IN INCHES

DIMENSIONAL DATA

REF.	MIN.	MAX.	NOM.
A			5.750
B	.855	.895	
C	.720	.760	
D	1.896	1.936	
E	3.133	3.173	
F	3.792	3.832	
G	3.980	4.020	
H	.188		
J	.188		
K	.188		
L	1.764	1.826	
M			2.750
N			.375
P	8.625	9.125	
R	.986	1.050	
S			7.750
T	.375		

* CONTACT SURFACE

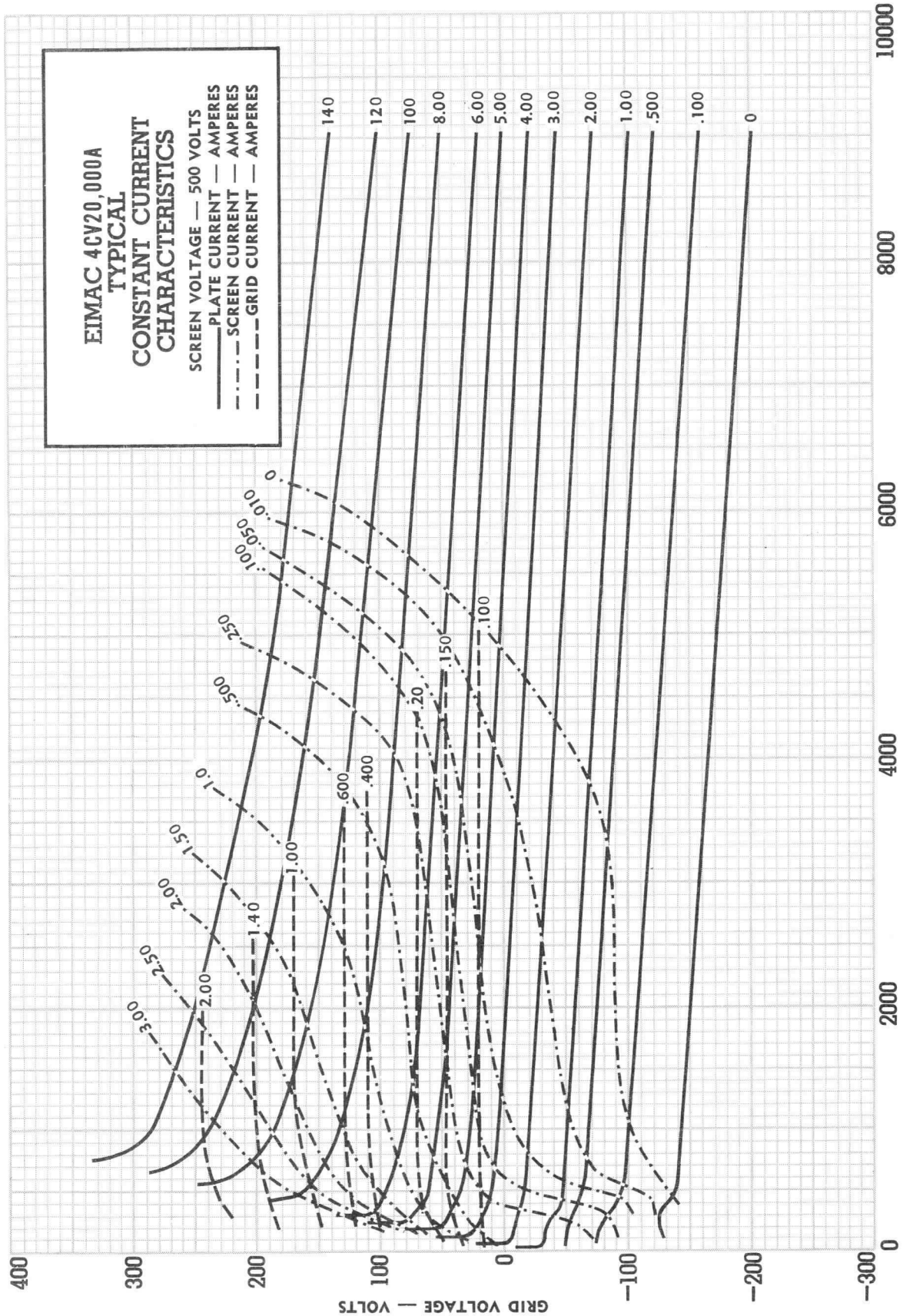
EIMAC 4CV20,000A
TYPICAL
CONSTANT CURRENT
CHARACTERISTICS
SCREEN VOLTAGE — 500 VOLTS
PLATE CURRENT — AMPERES
SCREEN CURRENT — AMPERES
GRID CURRENT — AMPERES
140
120
100
8.00
6.00
5.00
4.00
3.00
2.00
1.00
.500
.100
0
.010
.050
.100
.250
.500
1.0
1.40
2.00
2.50
3.00
.100
.150
.20
.400
.600
1.00
400
300
200
100
0
−100
−200
−300
0
2000
4000
6000
8000
10000
GRID VOLTAGE — VOLTS
PLATE VOLTAGE — VOLTS

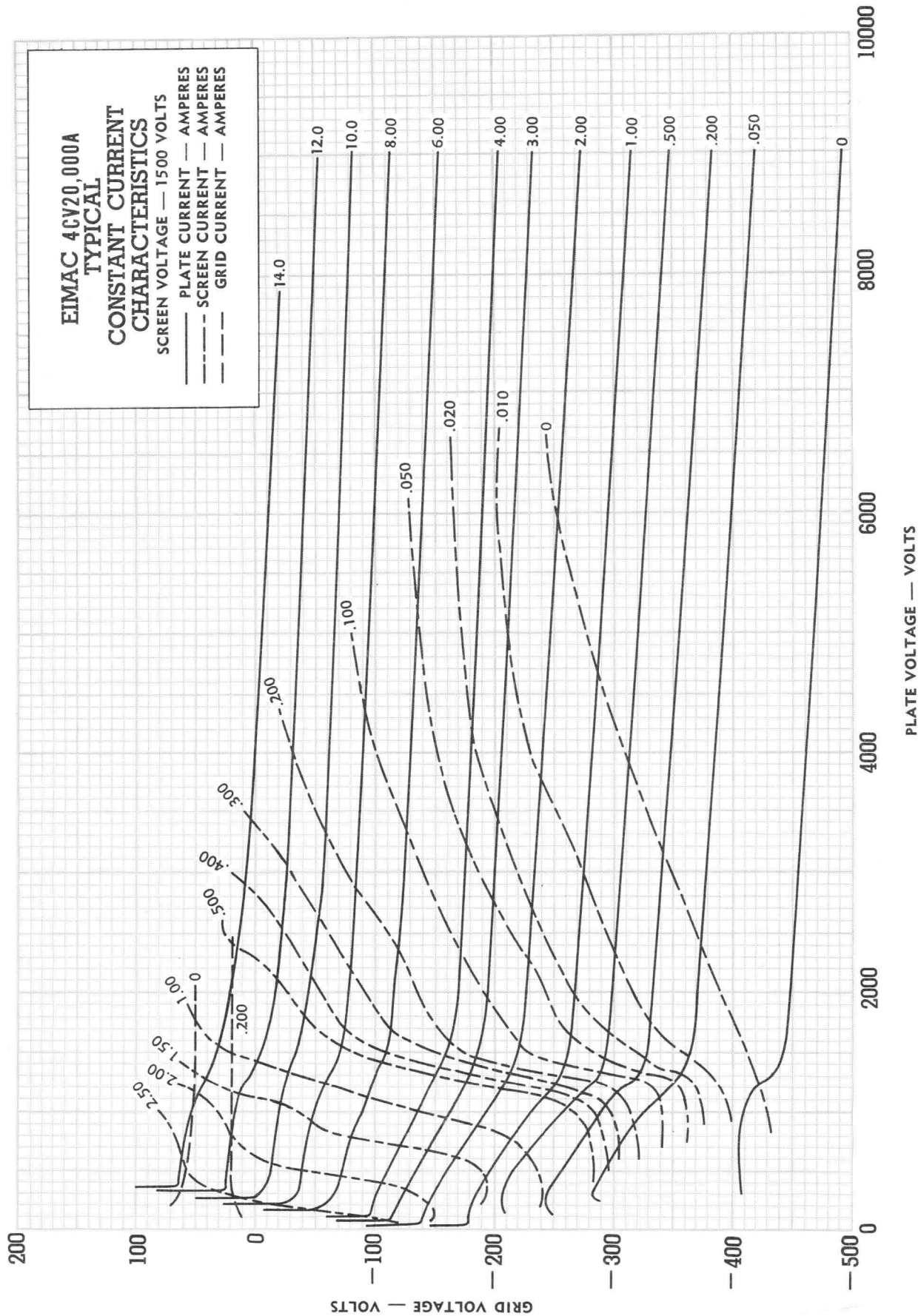
EIMAC 4CV20,000A
TYPICAL
CONSTANT CURRENT
CHARACTERISTICS
SCREEN VOLTAGE — 1500 VOLTS
PLATE CURRENT — AMPERES
SCREEN CURRENT — AMPERES
GRID CURRENT — AMPERES
14.0
12.0
10.0
8.00
6.00
4.00
3.00
2.00
1.00
.500
.200
.050
0
.020
.010
.050
.100
.200
.300
.400
.500
1.00
1.50
2.00
2.50
200
100
0
−100
−200
−300
−400
−500
0
2000
4000
6000
8000
10000
GRID VOLTAGE — VOLTS
PLATE VOLTAGE — VOLTS

TECHNICAL DATA

4CV35,000A

VAPOR-COOLED RADIAL-BEAM POWER-TETRODE

The EIMAC 4CV35,000A is a ceramic-metal power tetrode intended for use as a Class-C amplifier in radio-frequency applications. It features a new type of internal mechanical structure which results in higher RF operating efficiency. Low RF losses in this mechanical structure permit operation of the 4CV35,000A at full ratings up to 110 megahertz. The 4CV35,000A is also recommended for Class-AB audio-frequency and radio-frequency linear power amplifier service. The vapor-cooled anode is rated at 35 kilowatts of plate dissipation, making the tube attractive for low efficiency applications.



GENERAL CHARACTERISTICS

ELECTRICAL

	Min.	*Nom.*	*Max.*	
Filament: Thoriated Tungsten				
Voltage		6.3		volts
Current	152		168	amps
Amplification Factor (Grid-Screen) (average)		4.5		

	Min.	*Max.*	
Direct Interelectrode Capacitances, Grounded Cathode:			
Input	152	172	μμf
Output	22.0	27.0	μμf
Feedback		2.0	μμf
Direct Interelectrode Capacitances, Grounded Grid and Screen:			
Input	63.0	78.0	μμf
Output	23.0	28.0	μμf
Feedback		0.3	μμf

MECHANICAL

Base	Special, concentric
Maximum Seal Temperature	250°C
Maximum Anode Flange Temperature (See Outline Drawing)	110°C
Recommended Socket	EIMAC, SK-310
Boiler	EIMAC, BR-200
Operating Position	Axis vertical, base up or down
Maximum Dimensions:	
Height	9.44 inches
Diameter	7.75 inches
Base Cooling	Forced Air
Net Weight	20 pounds
Shipping Weight (Approximate)	35 pounds

THESE SPECIFICATIONS ARE BASED ON DATA APPLICABLE AT PRINTING DATE. SINCE EIMAC HAS A POLICY OF CONTINUING PRODUCT IMPROVEMENT, SPECIFICATIONS ARE SUBJECT TO CHANGE WITHOUT NOTICE.

(Revised 5-15-66) © 1962, 1966 Varian

Printed in U.S.A.

RADIO-FREQUENCY POWER AMPLIFIER OR OSCILLATOR

Class-C Telegraphy or FM Telephony (Key-down conditions)

MAXIMUM RATINGS

DC PLATE VOLTAGE	10,000 VOLTS
DC SCREEN VOLTAGE	2,000 VOLTS
DC PLATE CURRENT	5.0 AMPS
PLATE DISSIPATION	35,000 WATTS
SCREEN DISSIPATION	450 WATTS
GRID DISSIPATION	200 WATTS

TYPICAL OPERATION

DC Plate Voltage	7500	10,000 volts
DC Screen Voltage	750	750 volts
DC Grid Voltage	—515	—540 volts
DC Plate Current	4.95	4.8 amps
DC Screen Current	.580	.585 amp
DC Grid Current	.360	.320 amp
Peak RF Grid Voltage	675	700 volts
Driving Power	240	225 watts
Plate Dissipation	9000	10,000 watts
Plate Output Power	27,000	38,000 watts

PLATE-MODULATED RADIO-FREQUENCY POWER AMPLIFIER

Class-C Telephony (Carrier conditions unless noted)

MAXIMUM RATINGS

DC PLATE VOLTAGE	8000 VOLTS
DC SCREEN VOLTAGE	1500 VOLTS
DC PLATE CURRENT	4.0 AMPS
PLATE DISSIPATION*	23,000 WATTS
SCREEN DISSIPATION	450 WATTS
GRID DISSIPATION	200 WATTS

*Corresponds to 35,000 watts at 100 percent sine-wave modulation.

TYPICAL OPERATION

DC Plate Voltage	6000	8000 volts
DC Screen Voltage	750	750 volts
Peak AF Screen Voltage (For 100% modulation)	—740	710 volts
DC Grid Voltage	—600	—640 volts
DC Plate Current	3.75	3.65 amps
DC Screen Current	.450	.430 mA
DC Grid Current	.185	.180 mA
Peak RF Grid Voltage	800	840 volts
Grid Driving Power	150	150 watts
Plate Dissipation	5100	5800 watts
Plate Output Power	17,400	23,500 watts

AUDIO-FREQUENCY AMPLIFIER OR MODULATOR

Class-AB_1

MAXIMUM RATINGS (Per Tube)

DC PLATE VOLTAGE	10,000 VOLTS
DC SCREEN VOLTAGE	2,000 VOLTS
DC PLATE CURRENT	6.0 AMPS
PLATE DISSIPATION	35,000 WATTS
SCREEN DISSIPATION	450 WATTS
GRID DISSIPATION	200 WATTS

*Per Tube
**Approximate Values

TYPICAL OPERATION (Two Tubes)

DC Plate Voltage	8000	10,000 volts
DC Screen Voltage	1500	1500 volts
DC Grid Voltage	—290	—300 volts
Max-Signal Plate Current	10.7	10.7 amps
Zero-Signal Plate Current*	5.0	5.0 amps
Max-Signal Screen Current**	.390	.340 mA
Zero-Signal Screen Current	0	0 amps
Peak AF Driving Voltage*	280	290 volts
Driving Power	0	0 watts
Load Resistance, Plate-to-Plate	1680	2200 ohms
Max-Signal Plate Dissipation*	16,800	20,500 watts
Max-Signal Plate Output Power	50,000	66,000 watts

RADIO-FREQUENCY LINEAR AMPLIFIER

Class-AB_1

MAXIMUM RATINGS

DC PLATE VOLTAGE	10,000 VOLTS
DC SCREEN VOLTAGE	2,000 VOLTS
DC PLATE CURRENT	6.0 AMPS
PLATE DISSIPATION	35,000 WATTS
SCREEN DISSIPATION	450 WATTS
GRID DISSIPATION	200 WATTS

*Approximate Values

TYPICAL OPERATION, Peak-Envelope or Modulation-Crest Conditions

DC Plate Voltage	8000	10,000 volts
DC Screen Voltage	1500	1500 volts
DC Grid Voltage	—290	—300 volts
Max-Signal Plate Current	5.35	5.35 amps
Zero-Signal Plate Current	2.5	2.5 amps
Max-Signal Screen Current*	.195	.170 mA
Peak RF Grid Voltage	280	290 volts
Driving Power	0	0 watts
Plate Dissipation	16,800	20,500 watts
Plate Output Power	25,000	33,000 watts
Resonant Load Impedance	840	1100 ohms

NOTE: "TYPICAL OPERATION" data are obtained by calculation from published characteristic curves and confirmed by direct tests. No allowance is made for circuit losses of any kind. Adjustment of the rf grid drive to obtain the specified plate current at the specified grid bias, screen voltage, and plate voltage is assumed. If this procedure is followed, there will be little variation in output power when tubes are changed, even though there may be some variations in grid and screen currents. The grid and screen currents which result when the desired plate current is obtained are incidental and vary from tube to tube. These current variations cause no difficulty so long as the circuit maintains the correct voltage in the presence of the variations in current. If grid bias is obtained principally by means of a grid resistor, the resistor must be adjustable to obtain the required bias voltage when the correct rf driving voltage is applied.

APPLICATION

MECHANICAL

Mounting — The 4CV35,000A must be operated with its axis vertical, base up in an EIMAC BR-200 boiler. Care must be exercised when installing to insure that the boiler is level, the water is at the proper level and that the flange of the tube makes a vapor tight seal against the the rubber O-ring and boiler. A typical vapor cooling system is shown on the opposite page.

Socket — The EIMAC SK-310 socket is available for use with the 4CV35,000A. Filament, control grid and screen grid connections are made to this socket.

Cooling — Cooling is accomplished by immersing the anode in the distilled water filled BR-200 boiler. The energy dissipated at the anode causes the water to boil at the surfaces of the anode, be converted into steam and be carried away to the condenser. The boiling action keeps the anode surfaces at approximately 100°C. In a properly designed boiler-tube system (such as the 4CV35,000A and BR-200), it is extremely unlikely that the anode surfaces will ever exceed 110°C — well below the 250°C maximum rating — at full dissipation ratings.

The water in the boiler must be maintained at a constant level. Just below the top of the fins on the anode cooler. This is accomplished automatically in the vapor cooling system shown. Condensate from the condenser is returned to the boiler to maintain this constant fluid level. Any losses or drops in liquid level are sensed by the control box CB-202. A low water level in the control box activates the solenoid water valve, allowing make-up water from the reservoir to enter the boiler. When the proper level is reached, the control box de-energizes the solenoid, stopping the flow from the reservoir. A second switch in the control box is energized if the water level drops to a lower level because of an empty reservoir or a constriction in the line. This switch may be used to shut down the equipment or activate an alarm.

For reliable operation, it is important that the control box and boiler be mounted so that the level sensed by the control box is exactly the same as the level in the boiler.

Air cooling of the tube base is required. 100 CFM minimum should be directed straight down toward the center of the SK-310 socket from a blower or duct, not more than 5½ inches from the socket.

VAPOR COOLING SYSTEM

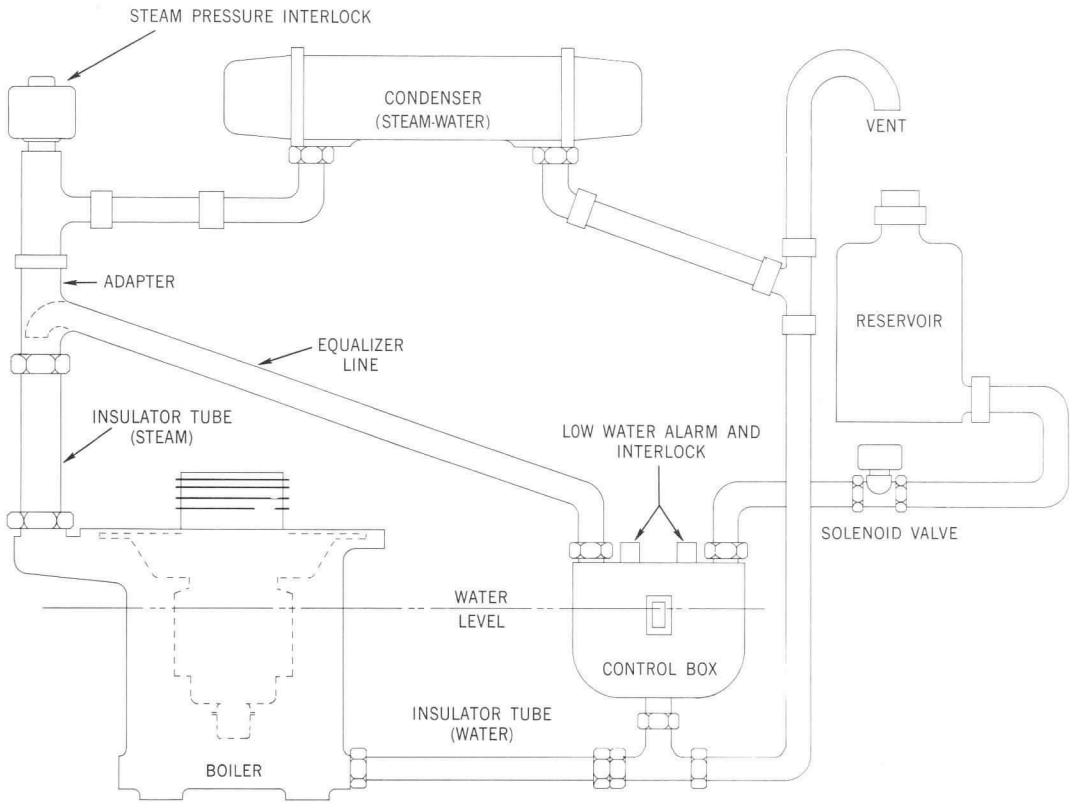

ELECTRICAL

Filament Operation — The rated filament voltage for the 4CV35,000A is 6.3 volts. Filament voltage, as measured at the socket, must be maintained at 6.3 volts plus or minus five percent to obtain maximum tube life. The use of a constant voltage filament transformer is recommended.

Control-Grid Operation — The 4CV35,000A control grid has a maximum dissipation rating of 200 watts. Precautions should be observed to avoid exceeding this rating. Grid dissipation is the product of the dc grid current and the peak positive grid voltage swing.

Screen-Grid Operation — The power dissipated by the screen must not exceed 450 watts. Screen dissipation, in cases where no ac is applied to the screen is the product of screen voltage and screen current. If the screen voltage is modulated, the screen dissipation will depend upon loading, driving power and screen voltage.

Screen dissipation is likely to rise to excessive values when the plate voltage, bias voltage or plate load are removed with filament and screen voltages applied. Suitable protective means must be provided to limit the screen dissipation in the event of these failures.

Plate Dissipation — The plate dissipation rating of 35,000 watts attainable through vapor cooling provides a large margin of safety. It is unlikely that this rating will be exceeded, even during tuning periods.

When the 4CV35,000A is used as a plate-modulated rf amplifier, this rating is reduced to 23,000 watts with a reduced plate input rating of 8000 volts and 4.0 amps.

Special Applications — If it is desired to operate this tube under conditions widely different from those given here, write to Power Grid Tube Marketing Department, EIMAC Division of Varian, 301 Industrial Way, San Carlos, California for information and recommendations.

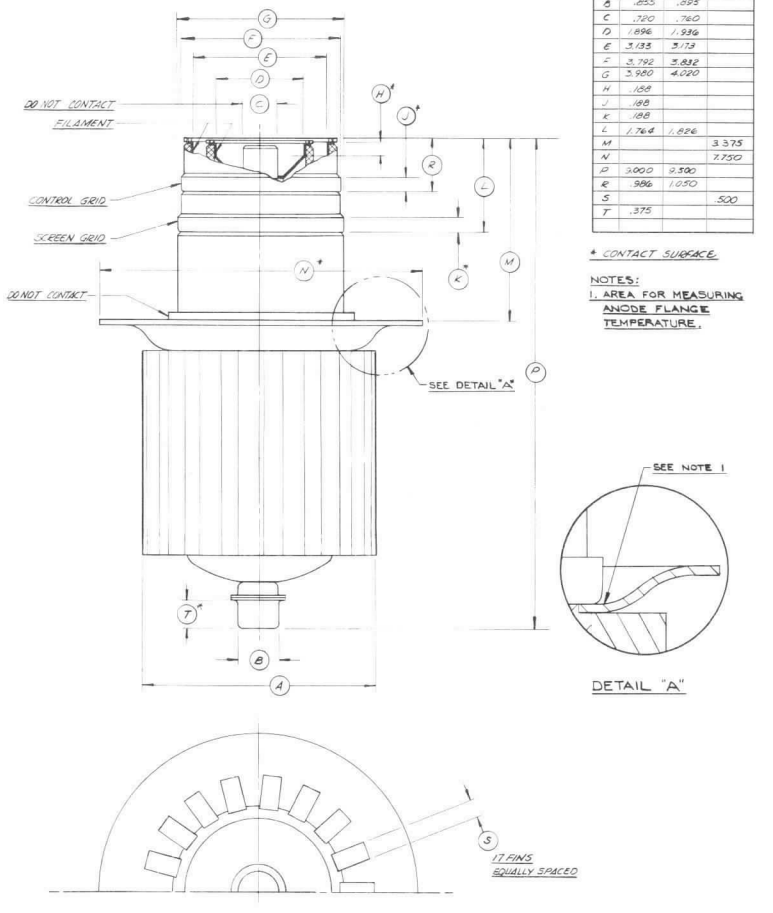

DIMENSIONS IN INCHES

DIMENSIONAL DATA

REF.	MIN.	MAX.	NOM.
A	6.125	6.375	
B	.655	.895	
C	.720	.760	
D	1.896	1.936	
E	3.133	3.173	
F	3.792	3.832	
G	3.980	4.020	
H	.188		
J	.188		
K	.188		
L	1.764	1.826	
M			3.375
N			7.750
P	3.000	9.500	
R	.986	1.050	
S			.500
T	.375		

* CONTACT SURFACE.

NOTES:
1. AREA FOR MEASURING ANODE FLANGE TEMPERATURE.

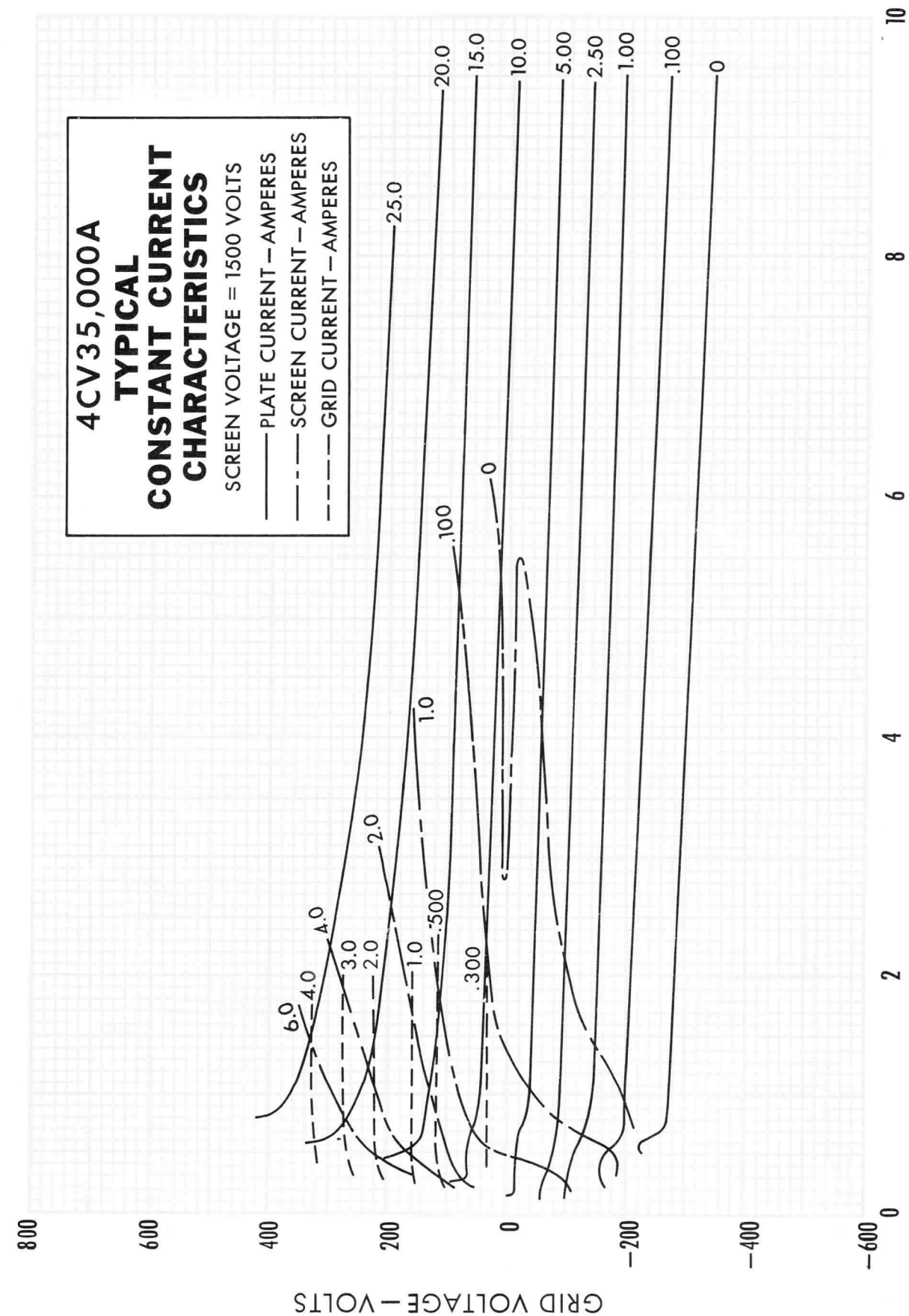
4CV35,000A
TYPICAL
CONSTANT CURRENT
CHARACTERISTICS
SCREEN VOLTAGE = 1500 VOLTS
PLATE CURRENT – AMPERES
SCREEN CURRENT – AMPERES
GRID CURRENT – AMPERES
25.0
20.0
15.0
10.0
5.00
2.50
1.00
.100
0
.100
.300
.500
1.0
2.0
3.0
4.0
6.0
800
600
400
200
0
−200
−400
−600
0
2
4
6
8
10
GRID VOLTAGE – VOLTS
PLATE VOLTAGE – KILOVOLTS

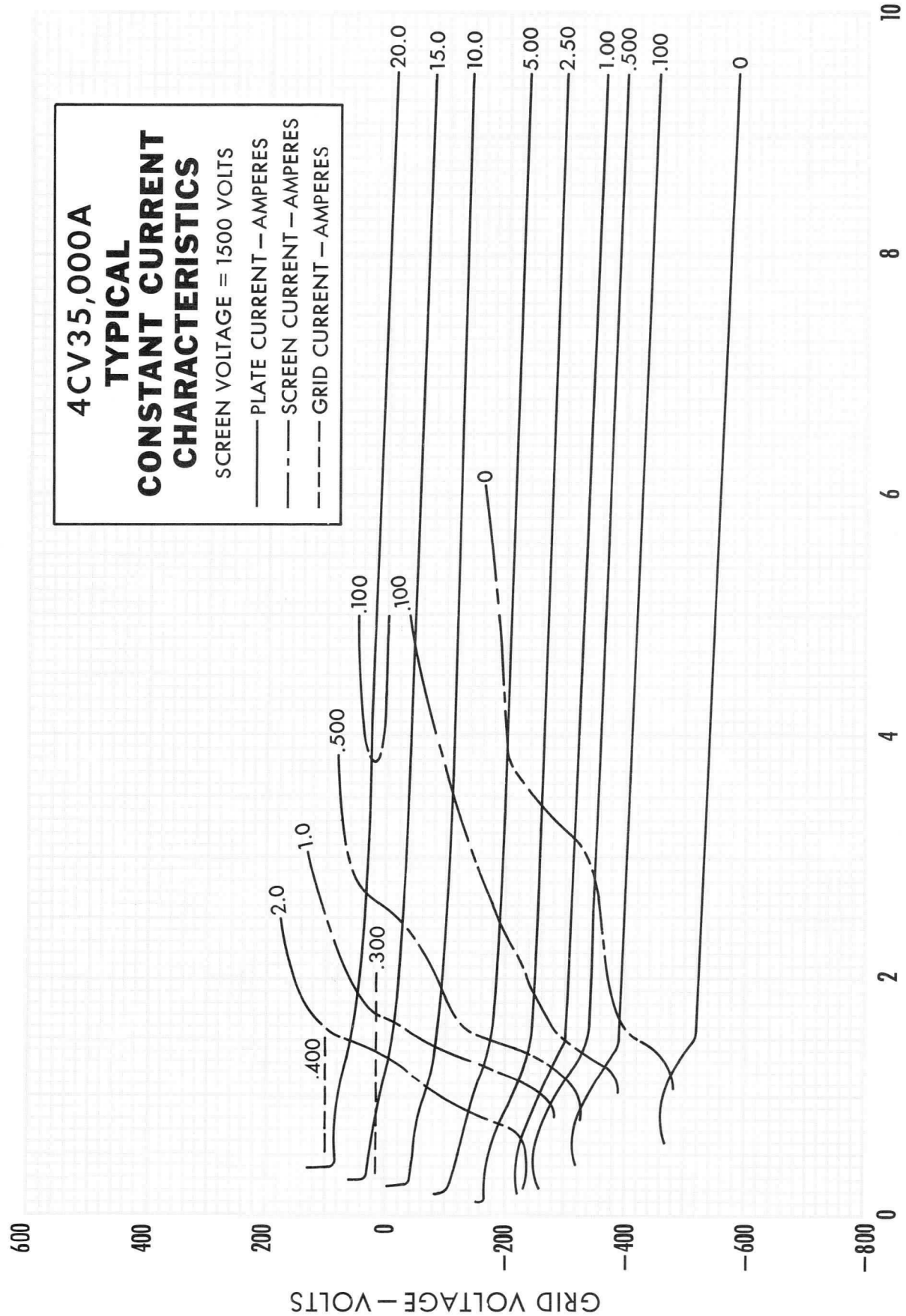
4CV35,000A
TYPICAL
CONSTANT CURRENT
CHARACTERISTICS
SCREEN VOLTAGE = 1500 VOLTS
——— PLATE CURRENT – AMPERES
—·—·— SCREEN CURRENT – AMPERES
– – – – GRID CURRENT – AMPERES
20.0
15.0
10.0
5.00
2.50
1.00
.500
.100
0
.100
.500
1.0
2.0
.400
.300
600
400
200
0
–200
–400
–600
–800
0
2
4
6
8
10
GRID VOLTAGE – VOLTS
PLATE VOLTAGE – KILOVOLTS

EIMAC
Division of Varian
SAN CARLOS
CALIFORNIA

4CV50,000E

VAPOR COOLED POWER TETRODE

The EIMAC 4CV50,000E is a ceramic/metal, vapor-cooled power tetrode intended for use at the 50 to 100 kilowatt output power level. This tube is characterized by low input and feedback capacitances and low internal lead inductances. A rugged mesh thoriated tungsten filament provides adequate emission over the long operating life. It is recommended for use as a class C rf amplifier or oscillator, a class AB rf linear amplifier or a class AB push-pull af amplifier or modulator. The 4CV50,000E is also useful as a plate and screen modulated class C rf amplifier. The vapor cooled anode is rated at 50 kilowatts dissipation.



Shown with boiler removed.

GENERAL CHARACTERISTICS[1]

ELECTRICAL

Filament: Mesh Thoriated Tungsten		
Voltage	12 ± 0.6	V
Current, at 12.0 volts	220	A
Amplification Factor (Average)		
Grid to Screen	4.5	
Direct Interelectrode Capacitances (grounded cathode)		
Input	310	pF
Output	53	pF
Feedback	0.7	pF
Frequency of Maximum Rating:		
CW	110	MHz

1. Characteristics and operating values are based upon performance tests. These figures may change without notice as the result of additional data or product refinement. EIMAC Division of Varian should be consulted before using this information for final equipment design.

MECHANICAL

Maximum Overall Dimensions:	
Length (less boiler)	11.500 in; (292.1 mm)
Diameter	9.531 in; (241.0 mm)
Net Weight (less boiler)	31.5 lb; (14.3 kg)
Operating Position	Vertical, base down
Maximum Operating Temperature:	
Ceramic/Metal Seals and terminals	250°C
Cooling	Vapor and Forced Air
Base	Special
Recommended Air System Socket	EIMAC SK-2000 Series
Recommended Boiler	EIMAC BR-700 Series

(Effective 5-1-70) © 1970 by Varian Printed in U.S.A.

RADIO FREQUENCY LINEAR AMPLIFIER GRID DRIVEN

Class AB

ABSOLUTE MAXIMUM RATINGS:

DC PLATE VOLTAGE	17,500	VOLTS
DC SCREEN VOLTAGE	2,500	VOLTS
DC PLATE CURRENT	12.0	AMPERES
PLATE DISSIPATION	50,000	WATTS
SCREEN DISSIPATION	1,500	WATTS
GRID DISSIPATION	400	WATTS

1. Adjust to specified zero-signal dc plate current.
2. Approximate value.

TYPICAL OPERATION (Frequencies to 30 MHz)
Class AB_1, Grid Driven, Peak Envelope or Modulation Crest Conditions.

Plate Voltage	10.0	kVdc
Screen Voltage	1.8	kVdc
Grid Voltage [1]	-260	Vdc
Zero-Signal Plate Current	3.4	Adc
Single Tone Plate Current	9.14	Adc
Peak rf Grid Voltage 2	230	v
Resonant Load Impedance	600	Ω
Plate Dissipation	35	kW
Plate Output Power	57	kW

RADIO FREQUENCY POWER AMPLIFIER OR OSCILLATOR

Class C Telegraphy or FM Telephony
(Key-Down Conditions)

ABSOLUTE MAXIMUM RATINGS:

DC PLATE VOLTAGE	17,500	VOLTS
DC SCREEN VOLTAGE	2,500	VOLTS
DC PLATE CURRENT	12.0	AMPERES
PLATE DISSIPATION	50,000	WATTS
SCREEN DISSIPATION	1,500	WATTS
GRID DISSIPATION	400	WATTS

TYPICAL OPERATION (Frequencies to 30 MHz)

Plate Voltage	15.0	15.0	kVdc
Screen Voltage	1.5	1.5	kVdc
Grid Voltage	-800	-800	Vdc
Plate Current	9.0	11.5	Adc
Screen Current [1]	0.9	0.83	Adc
Grid Current [1]	125	160	mAdc
Peak rf Grid Voltage [1]	880	925	v
Calculated Driving Power [1]	110	150	W
Plate Dissipation	25	36	kW
Plate Output Power	110	137	kW
Resonant Load Impedance	820	615	Ω

1. Approximate value

PLATE MODULATED RADIO FREQUENCY POWER AMPLIFIER-GRID DRIVEN

Class C Telephony (Carrier Conditions)

ABSOLUTE MAXIMUM RATINGS:

DC PLATE VOLTAGE	15,000	VOLTS
DC SCREEN VOLTAGE	2,000	VOLTS
DC PLATE CURRENT	12.0	AMPERES
PLATE DISSIPATION [1]	33,000	WATTS
SCREEN DISSIPATION [2]	1,500	WATTS
GRID DISSIPATION [2]	400	WATTS

1. Corresponds to 50,000 watts at 100% sine-wave modulation.
2. Average, with or without modulation.

TYPICAL OPERATION (Frequencies to 30 MHz)

Plate Voltage	9.0	14.0	kVdc
Screen Voltage	750	750	Vdc
Grid Voltage	-600	-600	Vdc
Plate Current	7.41	9.25	Adc
Screen Current [3]	0.69	1.15	Adc
Grid Current	0.333	0.833	Adc
Peak af Screen Voltage 3 (100% modulation)	750	750	v
Peak rf Grid Voltage 3	750	820	v
Calculated Driving Power	250	685	W
Plate Dissipation	12.5	21.5	kW
Plate Output Power	54.2	110	kW

3. Approximate value.

AUDIO FREQUENCY POWER AMPLIFIER OR MODULATOR

Class AB_1, Grid Driven (Sinusoidal Wave)

ABSOLUTE MAXIMUM RATINGS (Per Tube)

DC PLATE VOLTAGE	17,500	VOLTS
DC SCREEN VOLTAGE	2,500	VOLTS
DC PLATE CURRENT	12.0	AMPERES
PLATE DISSIPATION	50,000	WATTS
SCREEN DISSIPATION	1,500	WATTS
GRID DISSIPATION	400	WATTS

TYPICAL OPERATION (Two Tubes)

Plate Voltage	15.0	kVdc
Screen Voltage	1.25	kVdc
Grid Voltage [1/3]	-280	Vdc
Zero-Signal Plate Current	5.0	Adc
Max. Signal Plate Current	18.6	Adc
Max. Signal Screen Current [1]	0.6	Adc
Peak af Grid Voltage [2]	275	v
Peak Driving Power	0	w
Max. Signal Plate Dissipation [2]	41.7	kW
Plate Output Power	195	kW
Load Resistance (plate to plate)	1870	Ω

1. Approximate value.
2. Per tube.
3. Adjust to give stated zero-signal plate current.

NOTE: TYPICAL OPERATION data are obtained from direct measurement or by calculation from published characteristic curves. Adjustment of the rf grid voltage to obtain the specified plate current at the specified bias, screen and plate voltages is assumed. If this procedure is followed, there will be little variation in output power when the tube is changed, even though there may be some variation in grid and screen current. The grid and screen currents which result when the desired plate current is obtained are incidental and vary from tube to tube. These current variations cause no difficulty so long as the circuit maintains the correct voltage in the presence of the variations in current. In the case of Class C Service, if grid bias is obtained principally by means of a grid resistor, the resistor must be adjustable to obtain the required bias voltage when the correct rf grid voltage is applied.

RANGE VALUES FOR EQUIPMENT DESIGN	Min.	Max.	
Heater: Current at 12.0 volts	200	230	A
Interelectrode Capacitances (grounded cathode connection)			
Input	290	330	pF
Output	47.0	57.0	pF
Feedback	---	1.0	pF
Interelectrode Capacitances (grounded grid connection)			
Input	130	150	pF
Output	47.0	57.0	pF
Feedback	---	0.5	pF

APPLICATION

MECHANICAL

MOUNTING - The 4CV50,000E must be operated with its axis vertical. The base of the tube must be down.

SOCKET - The EIMAC sockets type SK-2000 series are recommended for use with the 4CV-50,000E.

COOLING - Cooling is accomplished by immersing the anode in the distilled water filled EIMAC boiler. The energy dissipated at the anode causes the water to boil at the surfaces of the anode, to be converted into steam and be carried away to the condenser. The boiling action keeps the anode surfaces at approximately 100°C. In a properly designed boiler-tube system, it is extremely unlikely that the anode surfaces will ever exceed 110°C at full dissipation ratings.

The water in the boiler must be maintained at a constant level which may be accomplished automatically in an EIMAC vapor cooling system. Condensate from the condenser is returned to the boiler to maintain a constant coolant level. Any losses or drops in coolant level are sensed and makeup water enters the boiler from the reservoir. When the proper level is reached the flow from the reservoir is stopped automatically. A switch is energized when the reservoir water level drops to a low level. This switch may be used to shut down the equipment or activate an alarm.

Air cooling of the tube base is required whenever filament voltage is applied. A minimum air flow of 100 cfm should be ducted toward the center of the EIMAC SK-2000 socket from a blower or fan. Pressure drop through the SK-2000 socket is approximately 0.5 inches of water. The air system must be capable of supplying 100 cfm into this head.

The water used as a coolant in the vapor phase cooling system is continuously distilled. It is imperative that the resistivity of the water be maintained above 200,000 ohms/cm^3. The entry of any contaminator to the system must be prevented. The use of any lead bearing alloys such as brass or soft/solder in fabrication of the cooling system must be avoided since steam leaches out the lead, contaminating the coolant.

Suitable materials for a cooling system are copper, hard solder, and polypropylene. Any contamination of the water causes leakage current to flow through the water supply lines to ground. When the resistivity is low this leakage current power will cause boiling in the lines, interfering with the proper operation of the system.

The user must be prepared to flush the system on initial startup to purge any contamination which may have entered the components during shipment or assembly.

ELECTRICAL

FILAMENT OPERATION - Filament voltage should be measured at the socket with a 1 percent rms responding meter. The peak emission at rated filament voltage of the EIMAC 4CV-50,000E is normally many times the peak emission required for communication service. A small decrease in filament temperature due to reduction of filament voltage can increase the life of the 4CV50,000E by a substantial percentage. It is good practice to determine the nominal filament voltage for a particular application that will not adversely affect equipment operation. This is done by measuring some important parameter of performance such as plate current, power output, or distortion while filament voltage is reduced on the 4CV50,000E. At some point in filament voltage there will be noticeable reduction in plate current, or power output, or an increase in age slightly higher than the point at which performance appears to deteriorate. This point should be periodically checked to maintain proper operation.

GRID OPERATION - The 4CV50,000E control grid is rated at 400 watts of dissipation. Grid dissipation is the approximate product of grid current and peak positive grid voltage.

SCREEN OPERATION - The power dissipated by the screen grid must not exceed 1500 watts. Where no ac is applied to the screen, dissipation is the product of dc screen voltage and dc screen current. With screen modulation the dissipation is dependent on rms screen voltage and rms screen current. Plate voltage, plate load or bias voltage must never be removed while filament and screen voltages are present since the screen dissipation rating will be exceeded. Suitable protective means must be provided to prevent any of these conditions.

The 4CV50,000E may exhibit reversed screen current to a greater or lesser degree depending on operating conditions. The screen supply voltage must be maintained constant for any values of negative and positive screen current which may be encountered. Dangerously high plate current may flow if the screen power supply exhibits a rising voltage characteristic with negative screen current. Stabilization may be accomplished with a bleeder resistor connected from screen to cathode, or an electron-tube regulator circuit may be employed in the screen supply. It is absolutely essential to use a bleeder if a series electron-tube regulator is employed.

PLATE DISSIPATION - The plate dissipation of 50 kilowatts attainable through vapor cooling provides a large margin of safety in most applications. The rating may be exceeded for brief periods during tuning. When the 4CV50,000E is used as a plate-modulated rf amplifier, plate dissipation under carrier conditions is limited to 33,300 watts.

HIGH VOLTAGE - Normal operating voltages used with the 4CV50,000E are deadly, and the equipment must be designed properly and operating precautions must be followed. Design all equipment so that no one can come in contact with high voltages. All equipment must include safety enclosures for high-voltage circuits and terminals, with interlock switches to open primary circuits of the power supply and to discharge high-voltage condensers whenever access doors are opened. Interlock switches must not be bypassed or "cheated" to allow operation with access doors open. Always remember that HIGH VOLTAGE CAN KILL.

X-RADIATION - High-vacuum tubes operating at voltages higher than 10 kilovolts produce progressively more dangerous X-ray radiation as the voltage is increased. The 4CV50,000E, operating at its rated voltages and currents, is a potential X-ray hazard. Only limited shielding is afforded by the tube envelope. Moreover, the X-ray radiation level can increase significantly with aging and gradual deterioration, due to leakage paths or emission characteristics as they are affected by the high voltage. X-ray shielding must be provided on all sides of tubes operating at these voltages to provide adequate protection throughout the tube's life. Periodic checks on the X-ray level should be made, and the tube should never be operated without adequate shielding in place when voltages above 10 kilovolts are in use. Lead glass, which attenuates X-rays, is available for viewing windows. If there is any doubt as to the requirement for or the adequacy of shielding, an expert in this field should be contacted to perform an X-ray survey of the equipment.

Operation of high-voltage equipment with interlock switches "cheated" and cabinet doors open in order to be better able to locate an equipment malfunction can result in serious X-ray exposure.

RADIO FREQUENCY RADIATION - Avoid exposure to strong rf fields even at relatively low frequency. Absorption of rf energy by human tissue is dependent on frequency. Under 30 MHz, most of the energy will pass completely through the human body with little attenuation or heating effect. Public health agencies are concerned with the hazard, however, even at these frequencies, and it is worth noting that some commercial dielectric heating units actually operate at frequencies as low as the 13 and 27 MHz bands.

Many EIMAC power tubes, such as the 4CV-50,000E, are specifically designed to generate or amplify radio frequency power. There may be a relatively strong rf field in the general proximity of the power tube and its associated circuitry---the more power involved, the stronger the rf field. Proper enclosure design and efficient coupling of rf energy to the load will minimize the rf field in the vicinity of the power amplifier unit itself.

FAULT PROTECTION - In addition to normal plate overcurrent interlock, screen current interlock, and coolant flow interlock, it is good practice to protect the tube from internal damage which could result from occasional plate arcing at high anode voltages.

In all cases some protective resistance, 5 ohms to 25 ohms, should be used in series with the tube anode to absorb power supply stored energy in case a plate arc should occur. If power supply stored energy exceeds 750 watt seconds, some form of electronic crowbar which will discharge power supply capacitors in a few microseconds following indication of start of a plate arc is recommended.

SPECIAL APPLICATION - If it is desired to operate this tube under conditions widely different from those listed here, write to Application Engineering, Power Grid Tube Division, EIMAC Division of Varian, 301 Industrial Way, San Carlos, California 94070, for information and recommendations.

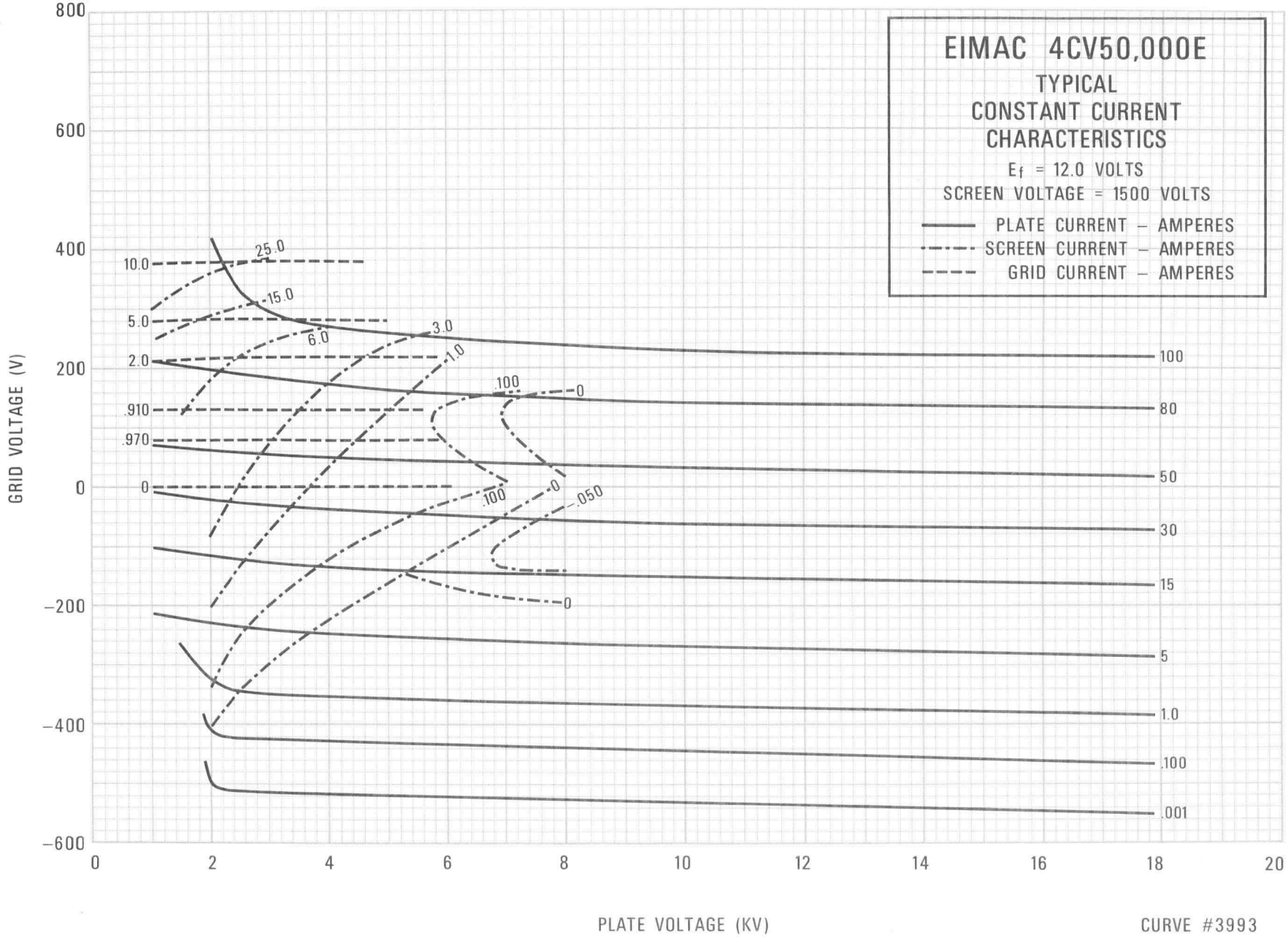
EIMAC 4CV50,000E
TYPICAL
CONSTANT CURRENT
CHARACTERISTICS
Ef = 12.0 VOLTS
SCREEN VOLTAGE = 1500 VOLTS
PLATE CURRENT – AMPERES
SCREEN CURRENT – AMPERES
GRID CURRENT – AMPERES
GRID VOLTAGE (V)
800
600
400
200
0
−200
−400
−600
0
2
4
6
8
10
12
14
16
18
20
PLATE VOLTAGE (KV)
25.0
10.0
15.0
5.0
6.0
3.0
2.0
1.0
.910
.100
0
.970
0
.100
0
.050
0
100
80
50
30
15
5
1.0
.100
.001
CURVE #3993

DIMENSIONAL DATA				
DIM.	INCHES		MILLIMETERS	
	MIN.	MAX.	MIN.	MAX.
A	9.468	9.531	240.49	242.09
B	5.000	5.250	127.00	133.35
C	--	--	--	--
D	1.230	1.270	31.24	32.26
E	3.865	3.885	98.17	98.68
F	4.240	4.260	107.70	108.20
G	4.490	4.510	114.05	114.55
H	7.750*		196.85*	
J	0.069	0.149	1.75	3.78
K	0.382	0.462	9.70	11.73
L	0.797	0.922	20.24	23.42
M	4.875	5.000	123.83	127.00
N	11.500*		292.10*	
P	1.437*		36.50*	
R	0.469	0.531	11.91	13.49
S	22 1/2°*		22 1/2°*	
T	30°*		30°*	

*REFERENCE DIMENSIONS ARE FOR INFORMATION ONLY AND ARE NOT REQUIRED FOR INSPECTION PURPOSES.

NOTE: NOMINAL OVERALL HEIGHT WITH BOILER = 13.0 INCHES (330.2 mm).

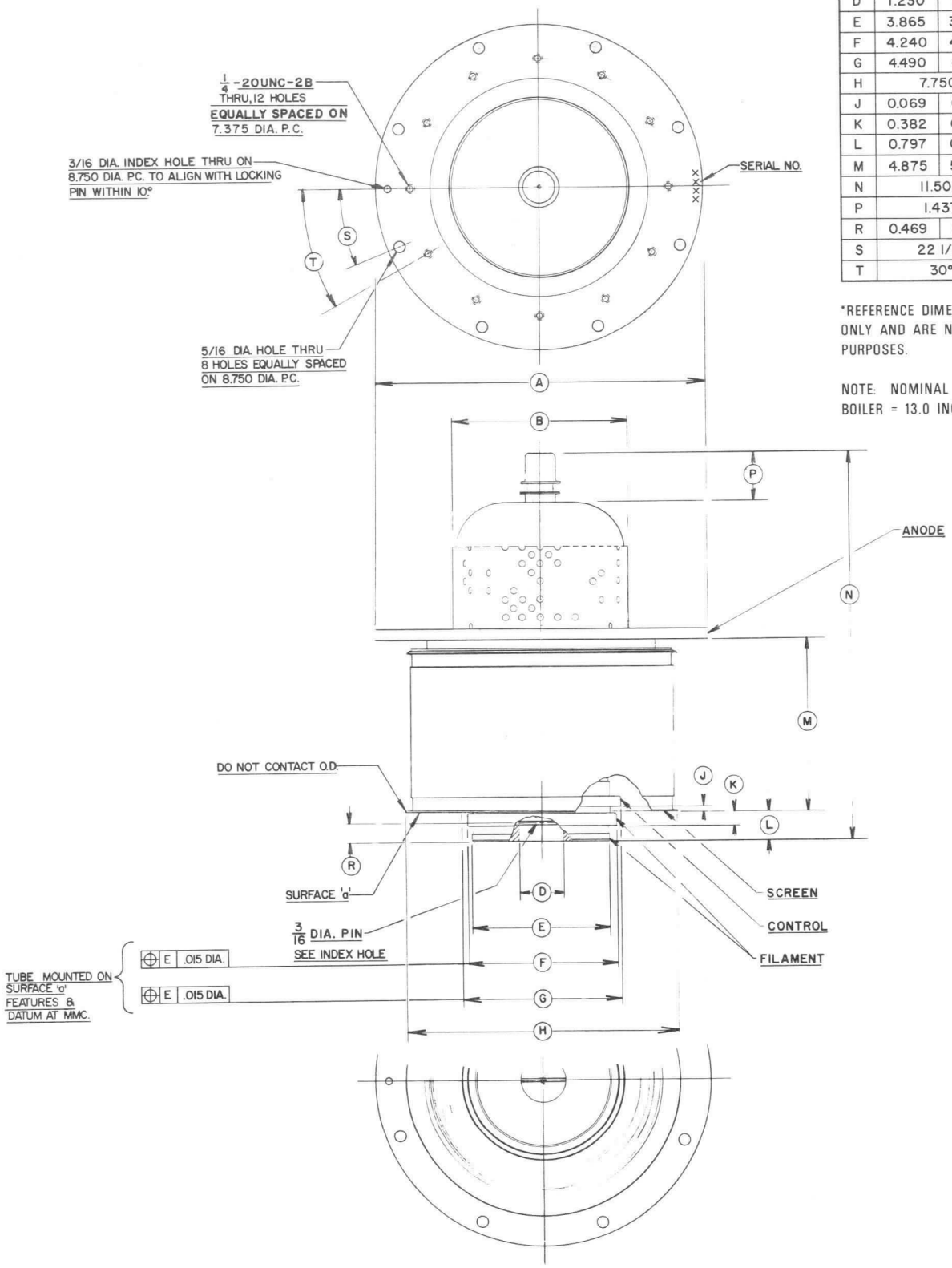

4CV50,000J

TECHNICAL DATA

VAPOR COOLED
POWER TETRODE

The EIMAC 4CV50,000J is a ceramic/metal, vapor-cooled power tetrode intended for use at the 50 to 100 kilowatt output power level. This tube is characterized by low input and feedback capacitances and low internal lead inductances. A rugged mesh thoriated tungsten filament provides adequate emission over the long operating life. It is recommended for use as a class AB_1 rf linear amplifier. The vapor cooled anode is rated at 50 kilowatts dissipation.



GENERAL CHARACTERISTICS[1]

ELECTRICAL

Filament: Mesh Thoriated Tungsten	
Voltage	12 ± 0.6 V
Current, at 12.0 volts	220 A
Amplification Factor (Average)	
Grid to Screen	4.5
Direct Interelectrode Capacitances (grounded cathode)	
Cin	310 pF
Cout	48 pF
Cgp	1.0 pF
Frequency of Maximum Rating:	
CW	110 MHz

1. Characteristics and operating values are based upon performance tests. These figures may change without notice as the result of additional data or product refinement. EIMAC Division of Varian should be consulted before using this information for final equipment design.

MECHANICAL

Overall Dimensions:	
Length (less boiler)	11.500 in; 292.1 mm
Diameter	9.531 in; 241.0 mm
Net Weight (less boiler)	31.5 lb; 14.3 kg
Operating Position	Vertical, base down
Maximum Operating Temperature:	
Ceramic/Metal Seals and terminals	250°C
Cooling	Vapor and Forced Air
Base	Special
Recommended Air System Socket	EIMAC SK-2000 Series
Recommended Boiler	EIMAC BR-710, 720

(Effective 7-15-71) © 1971 by Varian Printed in U.S.A.

RADIO FREQUENCY LINEAR AMPLIFIER
GRID DRIVEN Class AB

ABSOLUTE MAXIMUM RATINGS:

DC PLATE VOLTAGE	17,500	VOLTS
DC SCREEN VOLTAGE	2,500	VOLTS
DC PLATE CURRENT	12.0	AMPERES
PLATE DISSIPATION	50,000	WATTS
SCREEN DISSIPATION	1,500	WATTS
GRID DISSIPATION	400	WATTS

1. Adjust to specified zero-signal dc plate current.
2. Approximate value.
3. The IMD products are referenced against one tone of a two-equal tone signal.

TYPICAL OPERATION (Frequencies to 30 MHz)
Class AB_1, Grid Driven Peak Envelope or Modulation Crest Conditions

Plate Voltage	8.3	kVdc
Screen Voltage	1.5	kVdc
Grid Voltage 1	-250	Vdc
Zero-Signal Plate Current	3.6	Adc
Single-Tone Plate Current	9.8	Adc
Peak rf Grid Voltage 2	250	v
Resonant Load Impedance	413	Ω
Plate Dissipation	35	kW
Plate Output Power	45	kW
Intermod. Distortion Products 3		
3rd Order	-46	dB
5th Order	-60	dB

NOTE: TYPICAL OPERATION data are obtained from direct measurement or by calculation from published characteristic curves. Adjustment of the rf grid voltage to obtain the specified plate current at the specified bias, screen and plate voltages is assumed. If this procedure is followed, there will be little variation in output power when the tube is changed, even though there may be some variation in grid and screen current. The grid and screen currents which result when the desired plate current is obtained are incidental and vary from tube to tube. These current variations cause no difficulty so long as the circuit maintains the correct voltage in the presence of the variations in current.

RANGE VALUES FOR EQUIPMENT DESIGN

	Min.	Max.	
Heater: Current at 12.0 volts	200	230	A
Interelectrode Capacitances (grounded cathode connection)			
Cin	290	330	pF
Cout	42.0	53.0	pF
Cgp	---	1.5	pF
Interelectrode Capacitances (grounded grid connection)			
Cin	113	137	pF
Cout	45.0	55.0	pF
Cgk	---	0.5	pF

APPLICATION

MECHANICAL

MOUNTING - The 4CV50,000J must be operated with its axis vertical. The base of the tube must be down.

SOCKET - The EIMAC sockets type SK-2000 series are recommended for use with the 4CV-50,000J.

COOLING - Cooling is accomplished by immersing the anode in the distilled water filled EIMAC boiler. The energy dissipated at the anode causes the water to boil at the surfaces of the anode, to be converted into steam and be carried away to the condenser. The boiling action keeps the anode surfaces at approximately 100°C. In a properly designed boiler-tube system, it is extremely unlikely that the anode surfaces will ever exceed 110°C at full dissipation ratings.

The water in the boiler must be maintained at a constant level which may be accomplished automatically in an EIMAC vapor cooling system. Condensate from the condenser is returned to the boiler to maintain a constant coolant level. Any losses or drops in coolant level are sensed and makeup water enters the boiler from the reservoir. When the proper level is reached the flow from the reservoir is stopped automatically. A switch is energized when the reservoir water level drops to a low level. This switch may be used to shut down the equipment or activate an alarm.

Air cooling of the tube base is required whenever filament voltage is applied. A minimum air

flow of 100 cfm should be ducted toward the center of the EIMAC SK-2000 socket from a blower or fan. Pressure drop through the SK-2000 socket is approximately 0.5 inches of water. The air system must be capable of supplying 100 cfm into this head.

The water used as a coolant in the vapor phase cooling system is continuously distilled. It is imperative that the resistivity of the water be maintained above 200,000 ohms/cm . The entry of any contaminator to the system must be prevented. The use of any lead bearing alloys such as brass or soft/solder in fabrication of the cooling system must be avoided since steam leaches out the lead, contaminating the coolant.

Suitable materials for a cooling system are copper, hard solder, and polypropylene. Any contamination of the water causes leakage current to flow through the water supply lines to ground. When the resistivity is low this leakage current power will cause boiling in the lines, interfering with the proper operation of the system.

The user must be prepared to flush the system on initial startup to purge any contamination which may have entered the components during shipment or assembly.

ELECTRICAL

FILAMENT OPERATION - Filament voltage should be measured at the socket with a 1 percent rms responding meter. The peak emission at rated filament voltage of the EIMAC 4CV-50,000J is normally many times the peak emission required for communication service. A small decrease in filament temperature due to reduction of filament voltage can increase the life of the 4CV50,000J by a substantial percentage. It is good practice to determine the nominal filament voltage for a particular application that will not adversely affect equipment operation. This is done by measuring some important parameter of performance such as plate current, power output, or distortion while filament voltage is reduced on the 4CV50,000J. At some point in filament voltage there will be noticeable reduction in plate current, or power output, or an increase in distortion. Operation must be at a filament voltage slightly higher than the point at which performance appears to deteriorate. This point should be periodically checked to maintain proper operation.

GRID OPERATION - The 4CV50,000J control grid is rated at 400 watts of dissipation. Grid dissipation is the approximate product of grid current and peak positive grid voltage.

SCREEN OPERATION - The power dissipated by the screen grid must not exceed 1500 watts. Where no ac is applied to the screen, dissipation is the product of dc screen voltage and dc screen current. With screen modulation the dissipation is dependent on rms screen voltage and rms screen current. Plate voltage, plate load or bias voltage must never be removed while filament and screen voltages are present since the screen dissipation rating will be exceeded. Suitable protective means must be provided to prevent any of these conditions.

The 4CV50,000J may exhibit reversed screen current to a greater or lesser degree depending on operating conditions. The screen supply voltage must be maintained constant for any values of negative and positive screen current which may be encountered. Dangerously high plate current may flow if the screen power supply exhibits a rising voltage characteristic with negative screen current. Stabilization may be accomplished with a bleeder resistor connected from screen to cathode, or an electron-tube regulator circuit may be employed in the screen supply. It is absolutely essential to use a bleeder if a series electron-tube regulator is employed.

PLATE DISSIPATION - The plate dissipation of 50 kilowatts attainable through vapor cooling provides a large margin of safety in most applications. The rating may be exceeded for brief periods during tuning. When the 4CV50,000J is used as a plate-modulated rf amplifier, plate dissipation under carrier conditions is limited to 33,300 watts.

HIGH VOLTAGE - Normal operating voltages used with the 4CV50,000J are deadly, and the equipment must be designed properly and operating precautions must be followed. Design all equipment so that no one can come in contact with high voltages. All equipment must include safety enclosures for high-voltage circuits and terminals, with interlock switches to open primary circuits of the power supply and to discharge high-voltage condensers whenever access doors are opened. Interlock switches must not be bypassed or "cheated" to allow operation with access doors open. Always remember that HIGH VOLTAGE CAN KILL.

X-RADIATION - High-vacuum tubes operating at voltages higher than 10 kilovolts produce progressively more dangerous X-ray radiation as the voltage is increased. The 4CV50,000J, operating at its rated voltages and currents, is a potential

X-ray hazard. Only limited shielding is afforded by the tube envelope. Moreover, the X-ray radiation level can increase significantly with aging and gradual deterioration, due to leakage paths or emission characteristics as they are affected by the high voltage. X-ray shielding must be provided on all sides of tubes operating at these voltages to provide adequate protection throughout the tube's life. Periodic checks on the X-ray level should be made, and the tube should never be operated without adequate shielding in place when voltages above 10 kilovolts are in use. Lead glass, which attenuates X-rays, is available for viewing windows. If there is any doubt as to the requirement for or the adequacy of shielding, an expert in this field should be contacted to perform an X-ray survey of the equipment.

Operation of high-voltage equipment with interlock switches "cheated" and cabinet doors open in order to be better able to locate an equipment malfunction can result in serious X-ray exposure.

RADIO FREQUENCY RADIATION - Avoid exposure to strong rf fields even at relatively low frequency. Absorption of rf energy by human tissue is dependent on frequency. Under 30 MHz, most of the energy will pass completely through the human body with little attenuation or heating effect. Public health agencies are concerned with the hazard, however, even at these frequencies, and it is worth noting that some commercial dielectric heating units actually operate at frequencies as low as the 13 and 27 MHz bands.

Many EIMAC power tubes, such as the 4CV-50,000J, are specifically designed to generate or amplify radio frequency power. There may be a relatively strong rf field in the general proximity of the power tube and its associated circuitry---the more power involved, the stronger the rf field. Proper enclosure design and efficient coupling of rf energy to the load will minimize the rf field in the vicinity of the power amplifier unit itself.

FAULT PROTECTION - In addition to normal plate overcurrent interlock, screen current interlock, and coolant flow interlock, it is good practice to protect the tube from internal damage which could result from occasional plate arcing at high anode voltages.

In all cases some protective resistance, 5 ohms to 25 ohms, should be used in series with the tube anode to absorb power supply stored energy in case a plate arc should occur. If power supply stored energy exceeds 750 watt seconds, some form of electronic crowbar which will discharge power supply capacitors in a few microseconds following indication of start of a plate arc is recommended.

SPECIAL APPLICATION - If it is desired to operate this tube under conditions widely different from those listed here, write to Application Engineering, Power Grid Tube Division, EIMAC Division of Varian, 301 Industrial Way, San Carlos, California 94070, for information and recommendations.

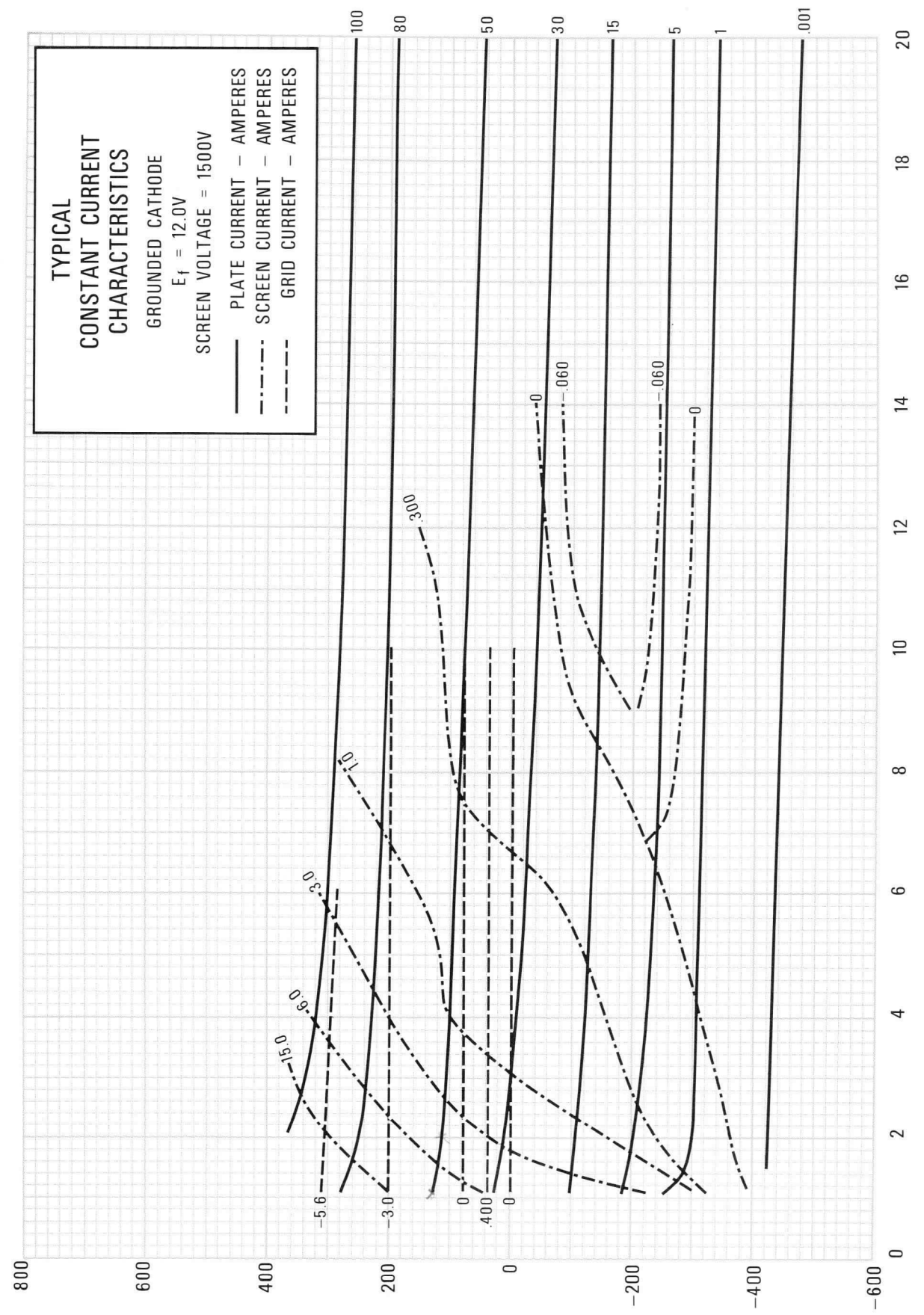
TYPICAL
CONSTANT CURRENT
CHARACTERISTICS
GROUNDED CATHODE
E_f = 12.0V
SCREEN VOLTAGE = 1500V
PLATE CURRENT – AMPERES
SCREEN CURRENT – AMPERES
GRID CURRENT – AMPERES
PLATE VOLTAGE (kV)
GRID VOLTAGE (V)
CURVE #4206

DIMENSIONAL DATA				
DIM.	INCHES		MILLIMETERS	
	MIN.	MAX.	MIN.	MAX.
A	9.468	9.531	240.49	242.09
B	5.000	5.250	127.00	133.35
C	--	--	--	--
D	1.230	1.270	31.24	32.26
E	3.865	3.885	98.17	98.68
F	4.240	4.260	107.70	108.20
G	4.490	4.510	114.05	114.55
H	7.750*		196.85*	
J	0.069	0.149	1.75	3.78
K	0.382	0.462	9.70	11.73
L	0.797	0.922	20.24	23.42
M	4.875	5.000	123.83	127.00
N	11.500*		292.10*	
P	1.437*		36.50*	
R	0.469	0.531	11.91	13.49
S	22 1/2°*		22 1/2°*	
T	30°*		30°*	

*REFERENCE DIMENSIONS ARE FOR INFORMATION ONLY AND ARE NOT REQUIRED FOR INSPECTION PURPOSES.

NOTE: NOMINAL OVERALL HEIGHT WITH BOILER = 13.0 INCHES (330.2 mm).

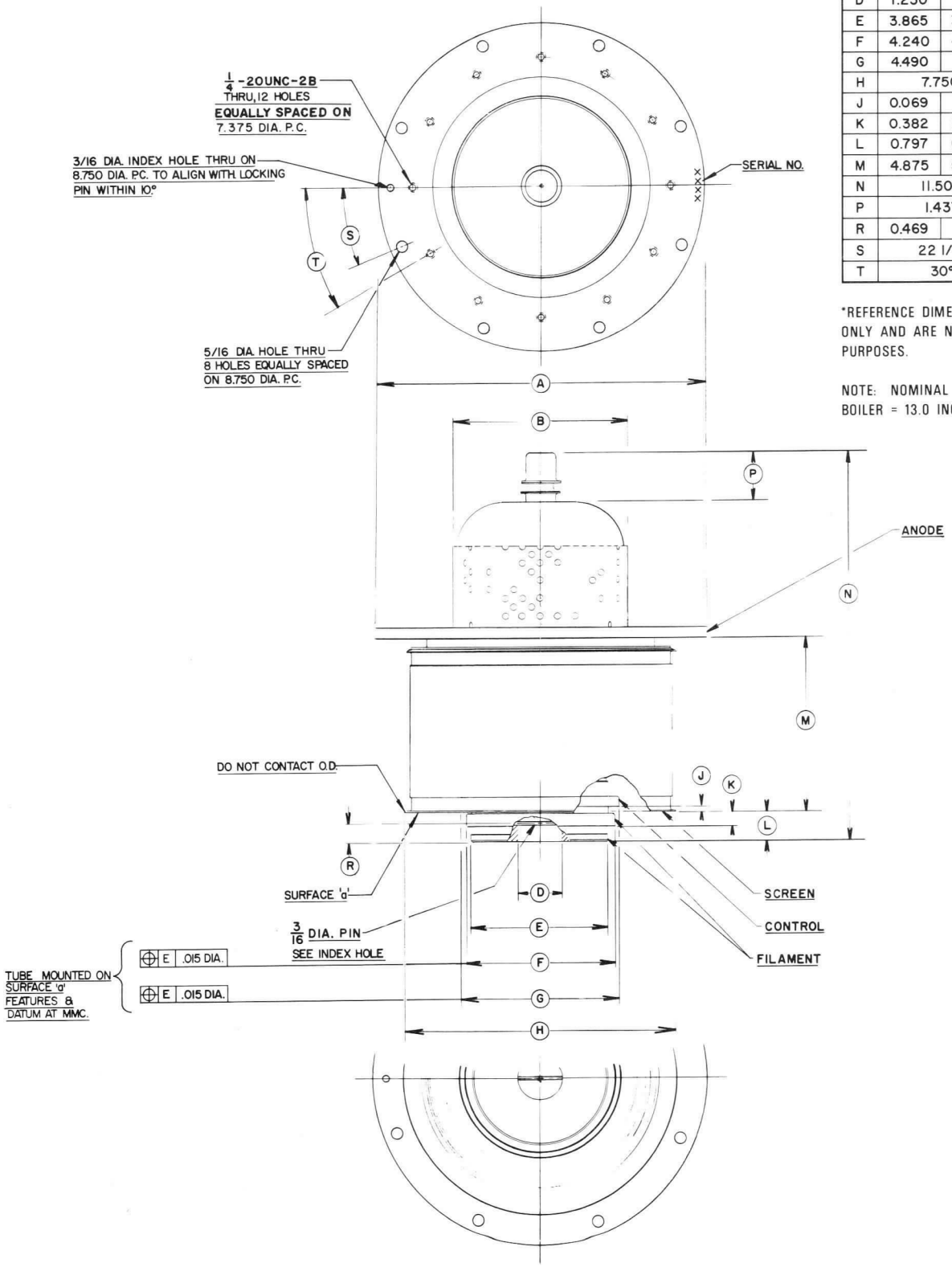

EIMAC
Division of Varian
SAN CARLOS
CALIFORNIA

8351
4CV100,000C
VAPOR COOLED POWER TETRODE

The EIMAC 8351/4CV100,000C is a ceramic-metal, vapor-cooled power tetrode intended for use at the 100 to 200 kilowatt output power level. It is recommended for use as a Class-C rf amplifier or oscillator, a Class-AB, rf linear amplifier or a Class-AB, push-pull af amplifier or modulator. The 8351/4CV100,000C is also useful as a plate and screen modulated Class-C rf amplifier.

The vapor-cooled anode is rated at 100 kilowatts of plate dissipation when mounted in the EIMAC BR-300 series boiler.

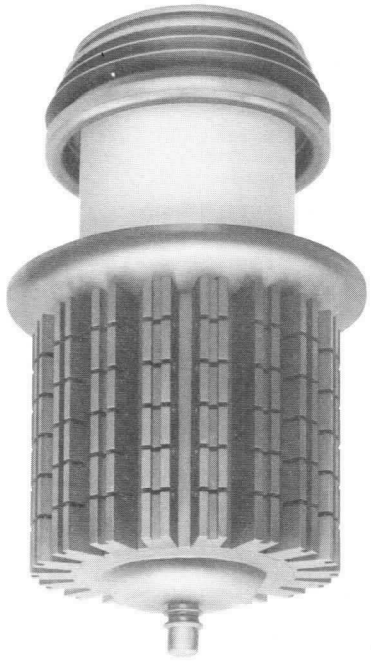

GENERAL CHARACTERISTICS

ELECTRICAL

Filament: Thoriated Tungsten

Voltage		10	V
Current		300	A
Amplification Factor (Grid-Screen) (average)		4.5	

Interelectrode Capacitances, Grounded Cathode	*Min.*	*Max.*	
Input	420	500	pF
Output	46	56	pF
Feedback	1.5	3.2	pF
Interelectrode Capacitances, Grounded Grid			
Input	170	210	pF
Output	48	58	pF
Feedback	---	0.6	pF

Frequency for Maximum Ratings - - - - - - - - - - - - - - - - 30 MHz

MECHANICAL

Base	Special, graduated rings
Maximum Seal Temperature	250°C
Maximum Anode Flange Temperature	130°C
Recommended Socket	EIMAC SK-1500 Series
Recommended Boiler	EIMAC BR-300 Series
Operating Position	Vertical, base up
Maximum Dimensions:	
Height	17.0 in
Diameter	10.0 in
Cooling	Liquid to vapor and forced air
Net Weight	95 lbs
Shipping Weight (approximate)	150 lbs

RADIO-FREQUENCY POWER AMPLIFIER OR OSCILLATOR

Class-C Telegraphy or FM Telephony (Key-down conditions)

MAXIMUM RATINGS

DC PLATE VOLTAGE	20,000	VOLTS
DC SCREEN VOLTAGE	2500	VOLTS
DC PLATE CURRENT	15.0	AMPS
PLATE DISSIPATION	100,000	WATTS
SCREEN DISSIPATION	1750	WATTS
GRID DISSIPATION	500	WATTS

TYPICAL OPERATION (Frequencies below 30 megacycles)

DC Plate Voltage	15	17.5	kV
DC Screen Voltage	1.5	1.5	kV
DC Grid Voltage	-1020	-1050	V
DC Plate Current	11.8	11.8	A
DC Screen Current	1.0	1.0	A
DC Grid Current	100	100	mA
Peak RF Grid Voltage	1220	1250	V
Driving Power*	120	125	W
Plate Dissipation	38	38.5	kW
Plate Output Power	139	168	kW
Resonant Load Impedance	600	710	Ω

(Effective 2-1-68) © 1963, 1968 by Varian

Printed in U.S.A.

PLATE-MODULATED RADIO-FREQUENCY POWER AMPLIFIER-CATHODE DRIVEN

Class-C Telephony (Carrier conditions except where noted)

MAXIMUM RATINGS		
DC PLATE VOLTAGE	17,500	VOLTS
DC SCREEN VOLTAGE	2000	VOLTS
DC PLATE CURRENT	15.0	AMPS
PLATE DISSIPATION*	66,500	WATTS
SCREEN DISSIPATION‡	1750	WATTS
GRID DISSIPATION‡	500	WATTS

* Corresponds to 100,000 watts at 100 per cent sine wave modulation
** Approximate value
† Calculated low frequency drive power
‡ Average, with or without modulation

TYPICAL OPERATION (Frequencies below 30 megacycles)

DC Plate Voltage	14	16	kV
DC Screen Voltage	750	750	V
Peak AF Screen Voltage (for 100% modulation**	750	750	V
DC Grid Voltage	-700	-700	V
DC Plate Current	9.1	12.0	A
DC Screen Current	2.0	1.75	A
DC Grid Current	1.0	1.20	A
Peak RF Grid Voltage	1000	1050	V
Grid Driving Power†	1000	1260	W
Plate Dissipation	20.4	54.0	kW
Plate Output Power	107	138.5	kW
Resonant Load Impedance	790	620	Ω

AUDIO-FREQUENCY AMPLIFIER OR MODULATOR

Class-AB_1

MAXIMUM RATINGS		
DC PLATE VOLTAGE	20,000	VOLTS
DC SCREEN VOLTAGE	2500	VOLTS
DC PLATE CURRENT	15.0	AMPS
PLATE DISSIPATION	100,000	WATTS
SCREEN DISSIPATION	1750	WATTS
GRID DISSIPATION	500	WATTS

*Per Tube
**Approximate value

TYPICAL OPERATION (Two Tubes)

DC Plate Voltage	15	18	kV
DC Screen Voltage	1.5	1.5	kV
DC Grid Voltage	-360	-380	V
Max-Signal Plate Current	18.8	20.0	A
Zero-Signal Plate Current	6.0	6.0	A
Max-Signal Screen Current**	0.690	0.700	A
Peak AF Driving Voltage*	350	380	V
Driving Power	0	0	W
Load Resistance, Plate-to-Plate	1800	2080	Ω
Max-Signal Plate Dissipation*	47.3	56.8	kW
Max. Signal Plate Output Power	187.4	246.4	kW

PLATE-MODULATED RADIO-FREQUENCY POWER AMPLIFIER-GRID DRIVEN

Class-C Telephony (Carrier conditions except where noted)

MAXIMUM RATINGS		
DC PLATE VOLTAGE	17,500	VOLTS
DC SCREEN VOLTAGE	2000	VOLTS
DC PLATE CURRENT	15.0	AMPS
PLATE DISSIPATION	66,500	WATTS
SCREEN DISSIPATION‡	1750	WATTS
GRID DISSIPATION‡	500	WATTS

*Voltages given are referenced to ground
‡Average, with or without modulation

TYPICAL OPERATION (Frequencies below 30 megacycles)

DC Plate Voltage*	12	15	kV
DC Screen Voltage*	560	900	V
DC Grid Voltage*	-440	-600	V
DC Plate Current	12.4	11.6	A
DC Screen Current	1.32	0.72	A
DC Grid Current	0.20	0.10	A
Peak RF Cathode Voltage	655	720	V
Cathode Driving Power	8.1	8.1	kW
Cathode Driving Impedance	27	32	Ω
Plate Dissipation	49.2	47.0	kW
Plate Output Power	112.7	141.0	kW
Resonant Load Impedance	480	650	Ω

RADIO-FREQUENCY LINEAR AMPLIFIER

Class-AB_1

MAXIMUM RATINGS		
DC PLATE VOLTAGE	20,000	VOLTS
DC SCREEN VOLTAGE	2500	VOLTS
DC PLATE CURRENT	15.0	AMPS
PLATE DISSIPATION	100,000	WATTS
SCREEN DISSIPATION	1750	WATTS
GRID DISSIPATION	500	WATTS

*Approximate value

TYPICAL OPERATION, Peak-Envelope or Modulation-Crest Conditions, (Frequencies below 30 megacycles)

DC Plate Voltage	15	18	kV
DC Screen Voltage	1.5	1.5	kV
DC Grid Voltage	-360	-380	V
Max-Signal Plate Current	9.4	10.0	A
Zero-Signal Plate Current	3.0	3.0	A
Max-Signal Screen Current*	0.345	0.350	A
Peak RF Grid Voltage	350	380	V
Driving Power	0	0	W
Plate Dissipation	47.3	56.8	kW
Plate Output Power	93.7	123.2	kW
Resonant Load Impedance	900	1040	Ω

NOTE: "TYPICAL OPERATION" data are obtained by calculation from published characteristic curves. Adjustment of the rf grid drive to obtain the specified plate current at the specified grid bias, screen voltage, and plate voltage is assumed. If this procedure is followed, there will be little variation in output power when the tubes are changed, even though there may be some variations in grid and screen currents. The grid and screen currents which result when the desired plate current is obtained are incidental and vary from tube to tube. These current variations cause no difficulty so long as the circuit maintains the correct voltage in the presence of the variations in current. If grid bias is obtained principally by means of a grid resistor, the resistor must be adjustable to obtain the required bias voltage when the correct rf driving voltage is applied.

APPLICATION
MECHANICAL

Mounting: The 4CV100,000C must be mounted vertically, anode down, in an EIMAC BR-300 series boiler. Care must be exercised to insure that the axis of the tube/boiler combination is vertical and that water in the boiler is at the level indicated. The anode flange on the tube must seat securely against the rubber "O" ring, forming a vapor-tight seal between tube and boiler.

Socket: The EIMAC SK-1500 series socket is available for use with the 4CV100,000C. Filament, control grid and screen grid connections are made to this socket. Spring finger contacts on the socket are used to make connections to the concentric rings on the tube base.

Cooling: Cooling is accomplished by immersing the anode of the 4CV100,000C in a "Boiler" filled with distilled water. Energy dissipated by the anode causes the water to boil at the anode surfaces, be converted into steam and be carried away to an external condenser. The condensate is then returned to the boiler, completing the cycle.

This boiling action maintains the anode surfaces at a fairly constant temperature near 100°C. The vapor-cooled tube has good overload capabilities; excess dissipation for moderate periods only causes more water to boil.

The system schematic drawing shown below outlines a vapor-cooling installation. A control box (EIMAC CB-202) is used to sense water level, to signal for make-up water and to shut down the system in case of low water level. In order to perform its function, the control box must be mounted so that its water level mark is at the same elevation as the water level mark on the boiler.

Since the tube anode and boiler are usually at high potential to ground, water and steam connections to the boiler are made through insulating tubing.

A pressure equalizing line is shown between the steam side of the system and the top of the control box. Its function is to provide the same pressure in the control box as in the boiler.

Separate cooling of the tube base is required and is accomplished by directing approximately 120 cfm of air horizontally through the socket from the side. It is preferable to direct this air through three equally spaced ducts.

The well in the center of the baseplate of the tube is a critical area which requires cooling to maintain envelope temperatures less than 250°C. For most applications, 1 to 2 C.F.M. of air directed through the center of the socket is sufficient for this purpose.

SCHEMATIC OF TYPICAL EIMAC MULTI-TUBE VAPOR COOLING INSTALLATION

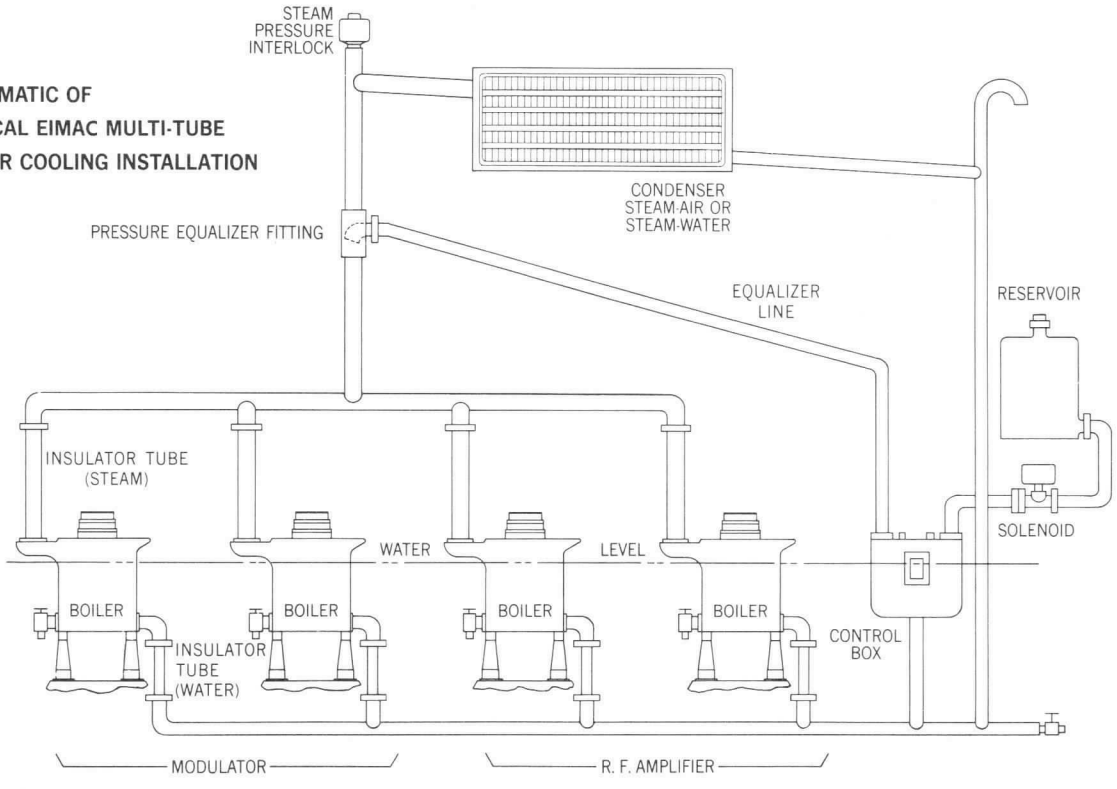

ELECTRICAL

Filament The rated filament voltage for the 4CV100,000C is 10.0 volts. Filament voltage, as measured at the socket, should be maintained at 10 volts plus or minus five percent to obtain maximum life and consistent performance.

Filament starting current must be limited to a maximum of 900 amperes.

Voltage between filament and the base plates of either tube, or SK-1500 socket, must not exceed 100 volts.

Control-Grid Operation The 4CV100,000C control grid is rated at 500 watts of dissipation. Grid dissipation is the approximate product of grid current and peak positive grid voltage.

Screen Dissipation The power dissipated by the screen grid must not exceed 1750 watts. Where no ac is applied to the screen, dissipation is the product of dc screen voltage and dc screen current. With screen modulation the dissipation is dependent on RMS screen voltage, and RMS screen current. Plate voltage, plate load or bias voltage must never be removed while filament and screen voltages are present since the screen dissipation rating will be exceeded. Suitable protective means must be provided to prevent any of these conditions.

Plate Dissipation The plate dissipation of 100 kilowatts attainable through vapor cooling provides a large margin of safety in most applications. The rating may be exceeded for brief periods during tuning. When the 4CV100,000C is used as a plate-modulated rf amplifier, plate dissipation under carrier conditions is limited to 66,500 watts.

Special Application Where it is desired to operate this tube under conditions widely different from those listed here, write to Power Grid Tube Division, EIMAC Division of Varian, 301 Industrial Way, San Carlos, California, for information and recommendations.

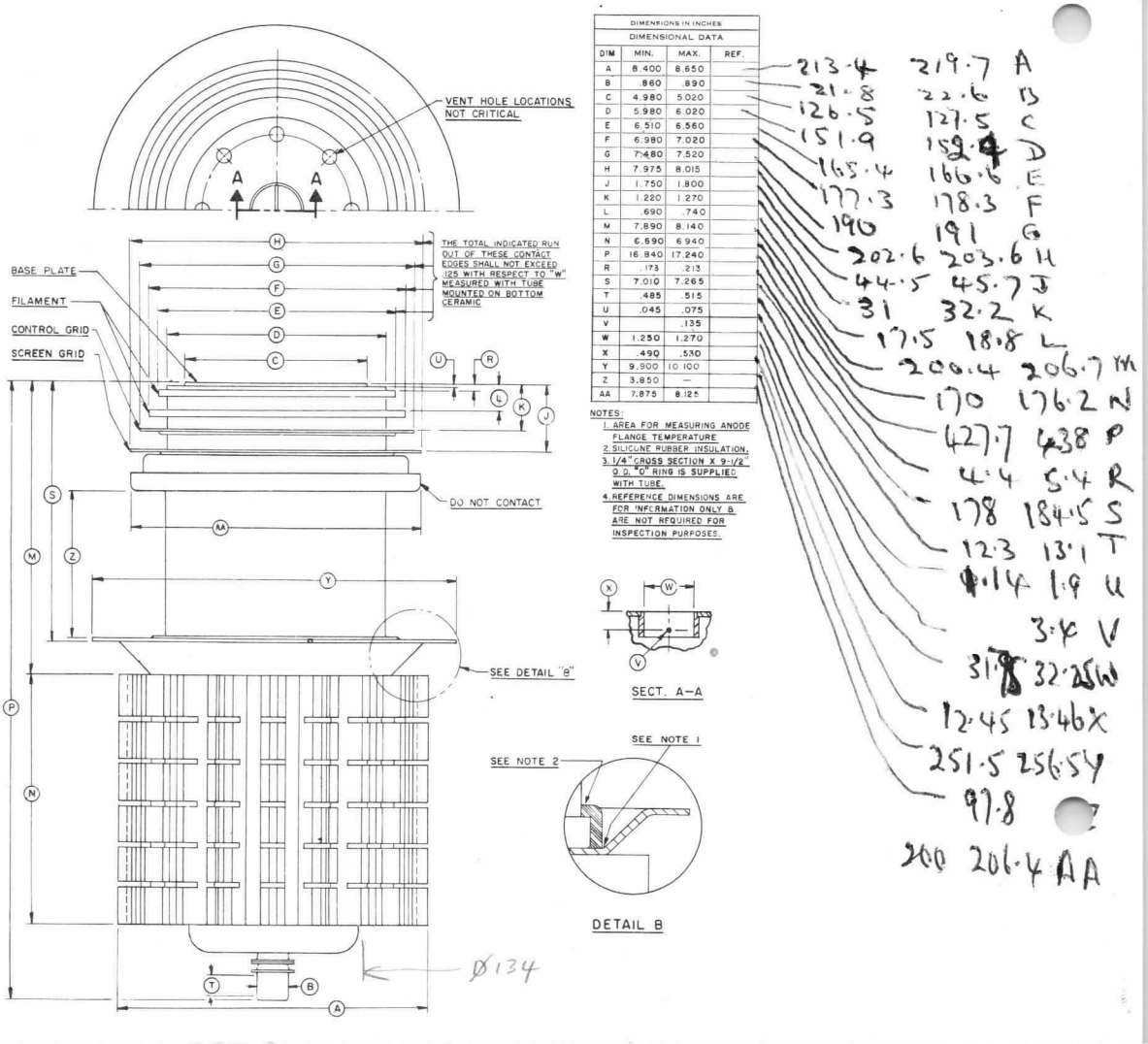

DIMENSIONS IN INCHES

DIMENSIONAL DATA

DIM	MIN.	MAX.	REF.
A	8.400	8.650	
B	.860	.890	
C	4.980	5.020	
D	5.980	6.020	
E	6.510	6.560	
F	6.980	7.020	
G	7.480	7.520	
H	7.975	8.015	
J	1.750	1.800	
K	1.220	1.270	
L	.690	.740	
M	7.890	8.140	
N	6.690	6.940	
P	16.840	17.240	
R	.173	.213	
S	7.010	7.265	
T	.485	.515	
U	.045	.075	
V		.135	
W	1.250	1.270	
X	.490	.530	
Y	9.900	10.100	
Z	3.850	—	
AA	7.875	8.125	

NOTES:
1. AREA FOR MEASURING ANODE FLANGE TEMPERATURE.
2. SILICONE RUBBER INSULATION.
3. 1/4" CROSS SECTION X 9-1/2" O.D. "O" RING IS SUPPLIED WITH TUBE.
4. REFERENCE DIMENSIONS ARE FOR INFORMATION ONLY & ARE NOT REQUIRED FOR INSPECTION PURPOSES.

213.4 219.7 A
21.8 22.6 B
126.5 127.5 C
151.9 152.4 D
165.4 166.6 E
177.3 178.3 F
190 191 G
202.6 203.6 H
44.5 45.7 J
31 32.2 K
17.5 18.8 L
200.4 206.7 M
170 176.2 N
427.7 438 P
4.4 5.4 R
178 184.5 S
12.3 13.1 T
0.14 1.9 U
3.4 V
31.8 32.25 W
12.45 13.46 X
251.5 256.54 Y
97.8 Z
200 206.4 AA

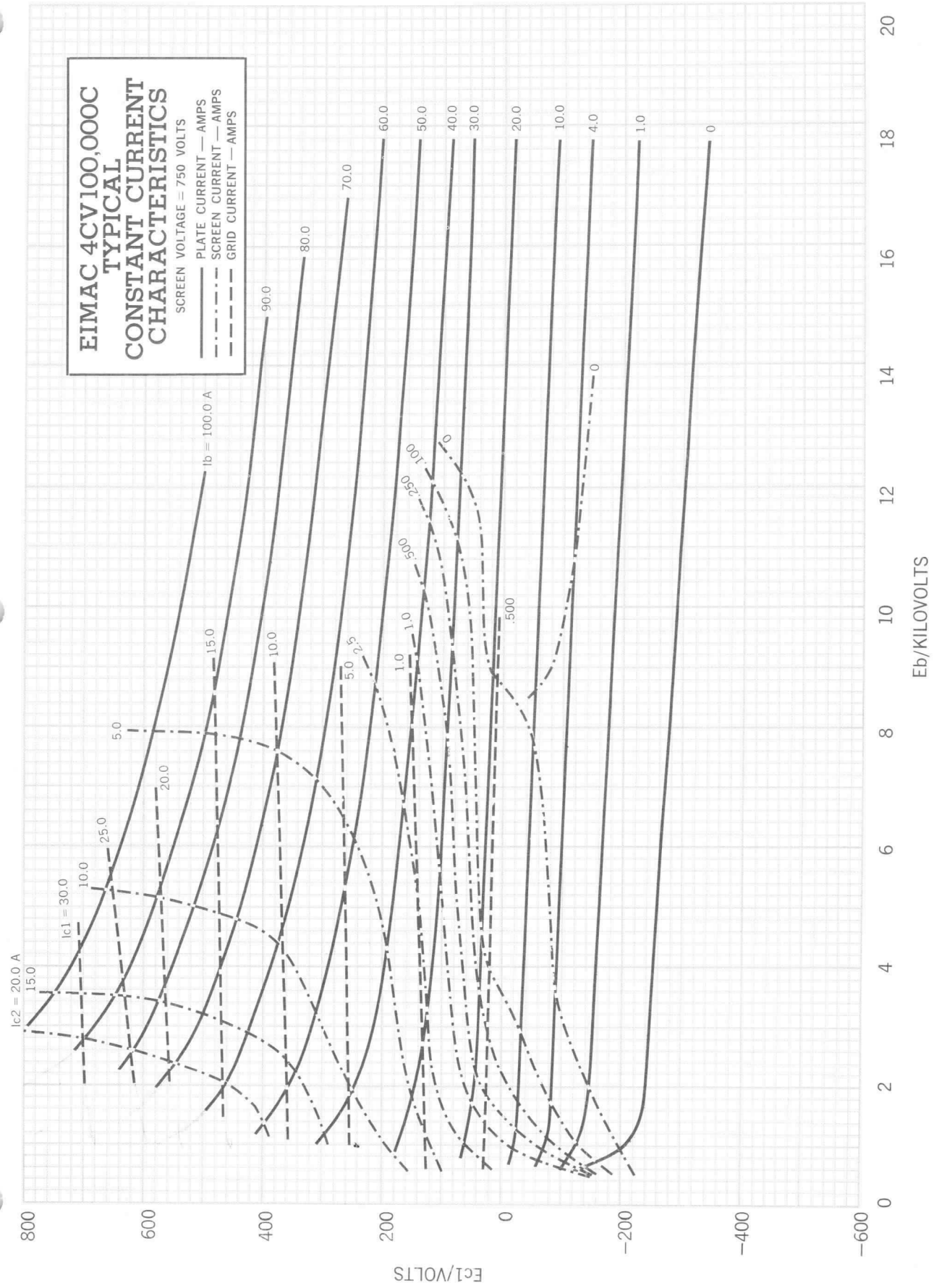
EIMAC 4CV100,000C
TYPICAL
CONSTANT CURRENT
CHARACTERISTICS
SCREEN VOLTAGE = 750 VOLTS
PLATE CURRENT — AMPS
SCREEN CURRENT — AMPS
GRID CURRENT — AMPS
Ib = 100.0 A
90.0
80.0
70.0
60.0
50.0
40.0
30.0
20.0
15.0
10.0
5.0
1.0
0
Ic1 = 30.0
25.0
20.0
15.0
10.0
5.0
2.5
1.0
.500
Ic2 = 20.0 A
15.0
10.0
5.0
2.5
1.0
.500
.250
.100
0
800
600
400
200
0
−200
−400
−600
Ec1/VOLTS
0
2
4
6
8
10
12
14
16
18
20
Eb/KILOVOLTS

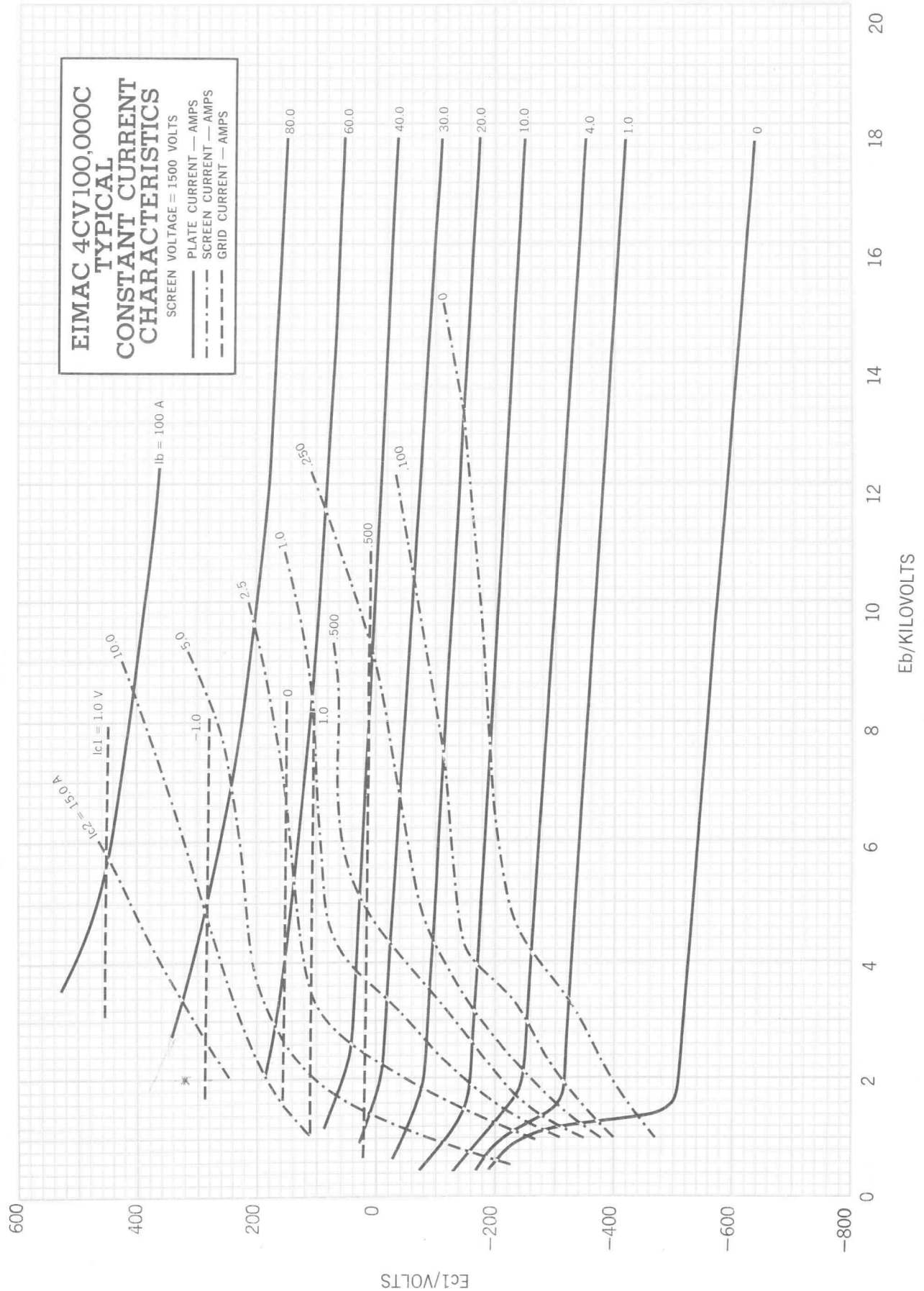
EIMAC 4CV100,000C
TYPICAL
CONSTANT CURRENT
CHARACTERISTICS
SCREEN VOLTAGE = 1500 VOLTS
PLATE CURRENT — AMPS
SCREEN CURRENT — AMPS
GRID CURRENT — AMPS
Ib = 100 A
Ic1 = 1.0 V
Ic2 = 15.0 A
10.0
5.0
2.5
1.0
.250
.500
.100
80.0
60.0
40.0
30.0
20.0
10.0
4.0
1.0
0
-1.0
0
1.0
.500
0
Eb/KILOVOLTS
Ec1/VOLTS
0
2
4
6
8
10
12
14
16
18
20
600
400
200
0
-200
-400
-600
-800

4CV250,000A

TECHNICAL DATA

VAPOR COOLED
POWER TETRODE

The EIMAC 4CV250,000A is a ceramic/metal, vapor-cooled power tetrode intended for use at the 250 to 500 kilowatt output power level. It is recommended for use as a Class C rf amplifier or oscillator, a Class AB rf linear amplifier or a Class AB push-pull af amplifier or modulator. The 4CV250,000A is also useful as a plate and screen modulated Class C rf amplifier.

The vapor cooled anode is rated at 250 kilowatts maximum dissipation when used with the EIMAC Y-585 boiler.



GENERAL CHARACTERISTICS[1]

ELECTRICAL

Filament: Thoriated Tungsten		
Voltage	12.0 ± 0.6	V
Current (at 12.0 volts)	660	A
Amplification Factor (Grid-Screen)(Avg.)	4.5	
Direct Interelectrode Capacitance: (Grounded Cathode)[2]		
Cin	765	pF
Cout	124	pF
Cgp	6.0	pF
Frequency for Maximum Ratings	30	MHz

1. Characteristics and operating values are based upon performance tests. These figures may change without notice as the result of additional data or product refinement. EIMAC Division of Varian should be consulted before using this information for final equipment design.

2. Capacitance values are for a cold tube as measured without any special shielded fixture.

MECHANICAL

Base	Special
Maximum Seal Temperature	200° C
Recommended Boiler	EIMAC Y-585
Operating Position	Vertical, Anode up
Maximum Dimensions:	
Height	28.02 in; 71.17 cm
Diameter	15.062 in; 38.26 cm
Cooling	Vapor and water
Net Weight	180 lb.; 82 kg
Shipping Weight (approximate)	350 lb.; 159 kg

(Revised 3-1-72) © 1972 Varian Printed in U.S.A.

RADIO-FREQUENCY POWER AMPLIFIER OR OSCILLATOR

Class C Telegraphy or FM Telephony
(Key-down Condition)

ABSOLUTE MAXIMUM RATINGS:

DC PLATE VOLTAGE	20,000	VOLTS
DC SCREEN VOLTAGE	2,500	VOLTS
DC PLATE CURRENT	40	AMPERES
PLATE DISSIPATION	250,000	WATTS
SCREEN DISSIPATION	3,500	WATTS
GRID DISSIPATION	1,500	WATTS

TYPICAL OPERATION (Frequencies below 30 MHz)

DC Plate Voltage	16	19	kV
DC Screen Voltage	800	800	V
DC Grid Voltage	-800	-800	V
DC Plate Current	23.5	32.5	A
DC Screen Current	2.4	3.5	A
DC Grid Current	1.15	2.5	A
Driving Power [1]	2.24	3.0	kW
Plate Output Power	275	460	kW
Plate Dissipation	100	155	kW
RF Load Impedance	300	275	Ω

2 63% 63%

1. Calculated Driving Power neglects input conductance and rf circuit loss.

PLATE-MODULATED RADIO-FREQUENCY POWER AMPLIFIER

Class C Telephony (Carrier conditions except where noted)

ABSOLUTE MAXIMUM RATINGS:

DC PLATE VOLTAGE	17,500	VOLTS
DC SCREEN VOLTAGE	2,000	VOLTS
DC PLATE CURRENT	30	AMPERES
PLATE DISSIPATION [1]	167,000	WATTS
SCREEN DISSIPATION	3,500	WATTS
GRID DISSIPATION	1,500	WATTS

1. Corresponds to 250,000 watts at 100 per cent sine wave modulation.
2. Approximate Value.

TYPICAL OPERATION (Frequencies below 30 MHz)

DC Plate Voltage	15	kV
DC Screen Voltage	800	V
Peak af Screen Voltage(for 100% Mod.)2.	800	V
DC Grid Voltage	-800	V
DC Plate Current	22.8	A
DC Screen Current	4.1	A
DC Grid Current	1.46	A
Peak rf Grid Voltage	1110	v
Grid Driving Power [3]	1630	W
Plate Output Power	280	kW
RF Load Impedance	323	Ω
Plate Dissipation	63	kW

2 66%

3. Calculated Driving Power neglects input conductance and rf circuit loss.

AUDIO-FREQUENCY AMPLIFIER OR MODULATOR

Class AB

ABSOLUTE MAXIMUM RATINGS (Per Tube)

DC PLATE VOLTAGE	20,000	VOLTS
DC SCREEN VOLTAGE	2,500	VOLTS
DC PLATE CURRENT	40	AMPERES
PLATE DISSIPATION	250,000	WATTS
SCREEN DISSIPATION	3,500	WATTS
GRID DISSIPATION	1,500	WATTS

1. Approximate Value.
2. Per Tube

TYPICAL OPERATION (Two Tubes Class AB_1)

DC Plate Voltage	15	20	kV
DC Screen Voltage	1.8	1.8	kV
DC Grid Voltage	-500	-500	V
Max-Signal Plate Current	40	46	A
Zero Signal Plate Current[2]	0.2	0.2	A
Max-Signal Screen Current [1]	1.1	1.2	A
Peak af Driving Voltage 2.	500	500	v
Driving Power	0	0	W
Load Impedance (plate to plate)	650	870	Ω
Plate Dissipation	160	260	kW
Max-Signal Output Power	440	660	kW

2 7 73% 71%

RADIO-FREQUENCY LINEAR AMPLIFIER

Class AB

ABSOLUTE MAXIMUM RATINGS

DC PLATE VOLTAGE	20,000	VOLTS
DC SCREEN VOLTAGE	2,500	VOLTS
DC PLATE CURRENT	40	AMPERES
PLATE DISSIPATION	250,000	WATTS
SCREEN DISSIPATION	3,500	WATTS
GRID DISSIPATION	1,500	WATTS

1. Approximate Value.
2. Calculated Driving Power neglects input conductance and rf circuit loss.

TYPICAL OPERATION Class AB_1 Peak-Envelope or Modulation Crest Conditions (Frequencies below 30 MHz)

DC Plate Voltage	15	20	kV
DC Screen Voltage	1.8	1.8	kV
DC Grid Voltage	-500	-500	V
Plate Current	20	23	A
Zero Signal Plate Current	0.2	0.2	A
Maximum Signal Screen Current 1.	1.1	1.2	A
Peak rf Grid Voltage	500	500	v
Driving Power 2.	0	0	W
Plate Dissipation	80	130	kW
Resonant Load Impedance	325	435	Ω
Plate Output Power	220	330	kW

2 75% 71%

PULSE MODULATOR OR REGULATOR

ABSOLUTE MAXIMUM RATINGS:

DC PLATE VOLTAGE	40,000	VOLTS	
DC SCREEN VOLTAGE	2,500	VOLTS	
PEAK CATHODE CURRENT	350	AMPERES	
PLATE DISSIPATION	250,000	WATTS	
SCREEN DISSIPATION	3,500	WATTS	
GRID DISSIPATION	1,500	WATTS	

APPLICATION

MECHANICAL

MOUNTING - The 4CV250,000A must be mounted vertically, anode up. The tube may be supported by the anode flange or the screen flange.

Care must be exercised to insure that the axis of the tube/boiler combination is vertical and that water in the boiler is at the level indicated. The anode flange on the tube must seat securely against the rubber "0" ring, forming a vapor-tight seal between tube and boiler.

COOLING - Cooling is accomplished by immersing the anode of the 4CV250,000A in a "Boiler" filled with distilled water. Energy dissipated by the anode causes the water to boil at the anode surfaces, be converted into steam and be carried away to an external condenser. The condensate is then returned to the boiler, completing the cycle.

This boiling action maintains the anode surfaces at a fairly constant temperature near 100°C. The vapor-cooled tube has good overload capabilities; excess dissipation for moderate periods only causes more water to boil.

Since the tube anode and boiler are usually at high potential to ground, water and steam connections to the boiler are made through insulated tubing.

The filament supports of the 4CV250,000A are water cooled. Approximately .5 GPM should circulate through each of the filament connectors with a pressure drop of 20 PSI. Filament connector assemblies, SK-1710, provide electrical and water connections. Two sets of SK-1710 are required.

It is recommended that the water cooled control grid connector, SK-1712, be used. Water flow of approximately .5 GPM should circulate through the grid connector. The pressure drop across the grid connector is low. A convenient way to make water connection is to series connect the grid cooling water with the outer filament cooling water path.

The outer filament water path has a lower pressure drop than the inner filament water path making this connection practical.

ELECTRICAL

FILAMENT OPERATION - The peak emission at rated filament voltage of the EIMAC 4CV-250,000A is normally many times the peak emission required for communication service. A small decrease in filament temperature due to reduction of filament voltage can increase the life of the 4CV250,000A by a substantial percentage. It is good practice to determine the nominal filament voltage for a particular application that will not affect the operation of the equipment. This is done by measuring some important parameter of performance such as plate current, power output, or an increase in distortion. Operation may be at a filament voltage slightly higher than that point at which performance appeared to deteriorate. This voltage should be measured at the socket with a 1% meter and periodically checked.

Filament starting current must be limited to a maximum of 1800 amperes.

CONTROL GRID OPERATION - The 4CV-250,000A control grid is rated at 1,500 watts of dissipation and protective measures should be included in circuitry to insure that this rating is not exceeded. Grid dissipation is the approximate product of dc grid current and peak positive grid voltage.

SCREEN DISSIPATION - The power applied to the screen grid must not exceed 3,500 watts. Where no ac is applied to the screen, dissipation is the product of dc screen voltage and dc screen current. With screen modulation the dissipation is the product of RMS screen current and RMS screen voltage.

PLATE DISSIPATION - The plate dissipation of 250 kilowatts attainable through vapor cooling provides a large margin of safety in most applications. The rating may be exceeded for brief periods during tuning. When the 4CV250,000A is used as a plate-modulated rf amplifier, plate dissipation under carrier conditions is limited to 167,000 watts.

X-RADIATION - High-vacuum tubes operating at voltages higher than 10 kilovolts produce progressively more dangerous X-ray radiation as the voltage is increased. The 4CV250,000A, operating at its rated voltages and currents, is a potential X-ray hazard. Only limited shielding is afforded by the tube envelope. Moreover, the X-ray radiation level can increase significantly with aging and gradual deterioration, due to leakage paths or emission characteristics as they are affected by the high voltage. X-ray shielding must be provided on all sides of tubes operating at these voltages to provide adequate protection throughout the tube's life. Periodic checks on the X-ray level should be made, and the tube should never be operated without adequate shielding in place when voltages above 10 kilovolts are in use. Lead glass, which attenuates X-rays, is available for viewing windows. If there is any doubt as to the requirement for or the adequacy of shielding, an expert in this field should be contacted to perform an X-ray survey of the equipment.

Operation of high-voltage equipment with interlock switches "cheated" and cabinet doors open in order to be better able to locate an equipment malfunction can result in serious X-ray exposure.

HIGH VOLTAGE - Normal operating voltages used with the 4CV250,000A are deadly, and the equipment must be designed properly and operating precautions must be followed. Design all equipment so that no one can come in contact with high voltages. All equipment must include safety enclosures for high-voltage circuits and terminals, with interlock switches to open primary circuits of the power supply and to discharge high-voltage condensers whenever access doors are opened. Interlock switches must not be bypassed or "cheated" to allow operation with access doors open. Always remember that HIGH VOLTAGE CAN KILL.

SPECIAL APPLICATION - If it is desired to operate this tube under conditions widely different from those listed here, write to Power Grid Tube Division, EIMAC Division of Varian, 301 Industrial Way, San Carlos, California 94070, for information and recommendations.

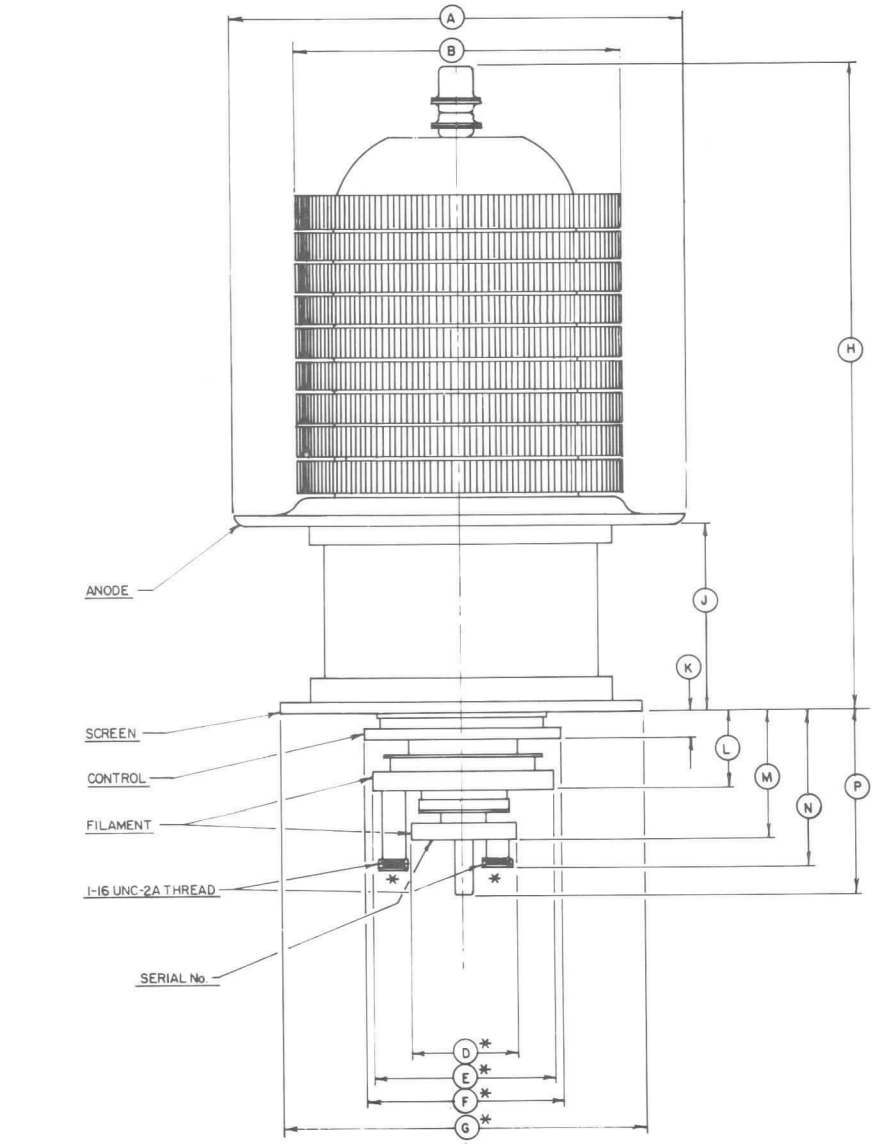

DIM.	DIMENSIONAL DATA					
	INCHES			MILLIMETERS		
	MIN.	MAX.	REF	MIN.	MAX.	REF
A	14.937	15.062	- -	379.40	382.57	- -
B	11.125	11.375	- -	282.57	288.92	- -
D	3.437	3.562	- -	87.30	90.47	- -
E	5.937	6.062	- -	150.80	153.97	- -
F	6.437	6.562	- -	163.50	166.67	- -
G	11.937	12.062	- -	303.20	306.37	- -
H	20.400	21.120	- -	518.16	536.45	- -
J	6.250	6.375	- -	158.75	161.92	- -
K	0.750	0.875	- -	19.05	22.22	- -
L	2.437	2.562	- -	61.90	65.07	- -
M	4.062	4.187	- -	103.17	106.35	- -
N	5.000	5.125	- -	127.00	130.17	- -
U	- -	- -	11.000	- -	- -	279.40
V	- -	- -	0.375	- -	- -	9.52
W	- -	- -	22-1/2°	- -	- -	22-1/2°
X	- -	- -	60°	- -	- -	60°
Y	- -	- -	0.261	- -	- -	6.63
Z	- -	- -	0.219	- -	- -	5.56
AA	- -	- -	0.438	- -	- -	11.12

NOTES:
1. REF. DIMENSIONS ARE FOR INFO. ONLY & ARE NOT REQUIRED FOR INSPECTION PURPOSES.

2. (*) CONTACT SURFACES.

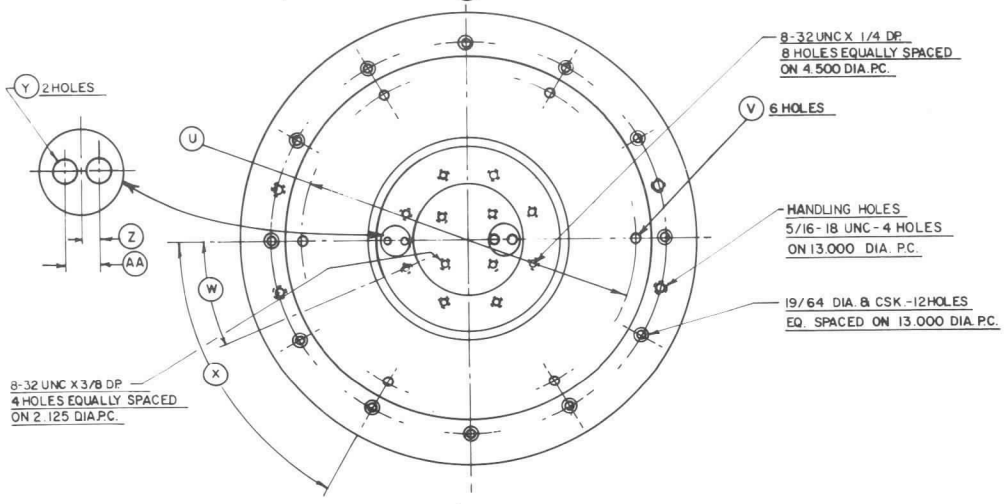

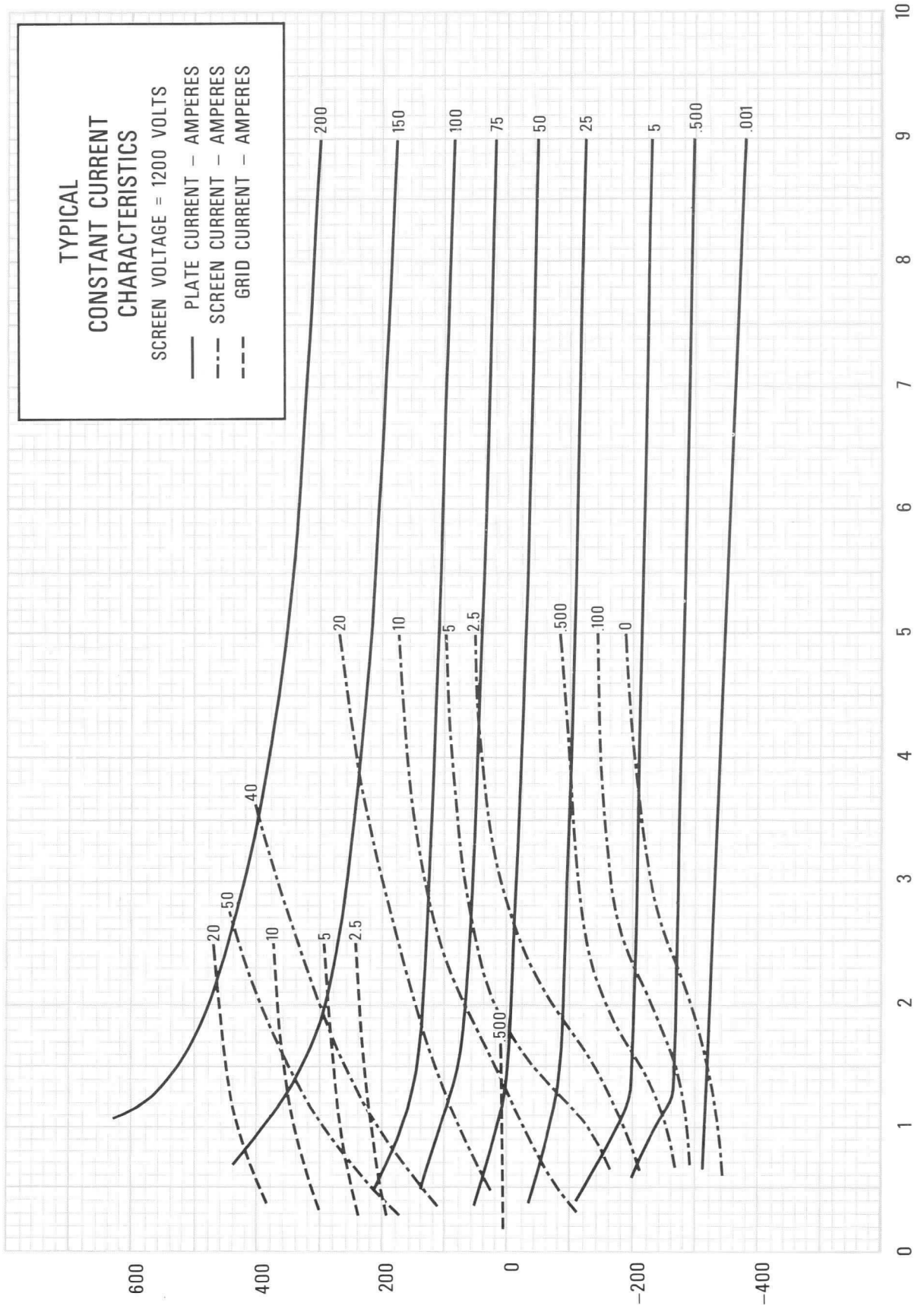
TYPICAL
CONSTANT CURRENT
CHARACTERISTICS
SCREEN VOLTAGE = 1200 VOLTS
PLATE CURRENT – AMPERES
SCREEN CURRENT – AMPERES
GRID CURRENT – AMPERES
200
150
100
75
50
25
5
.500
.001
40
20
50
10
5
2.5
20
10
5
2.5
500
500
100
0
600
400
200
0
–200
–400
0
1
2
3
4
5
6
7
8
9
10
GRID VOLTAGE – VOLTS
PLATE VOLTAGE – KILOVOLTS
CURVE #3285

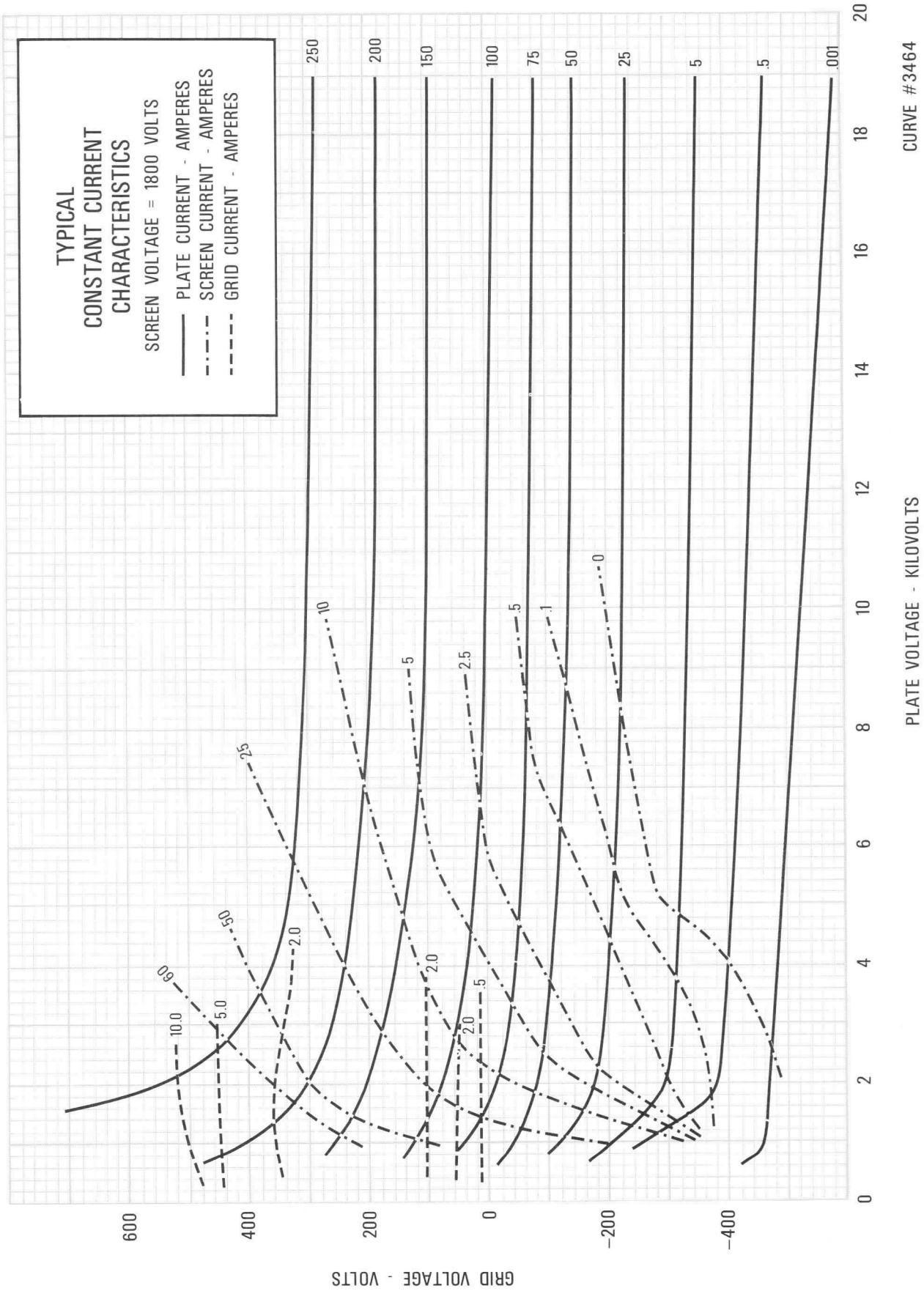
TYPICAL
CONSTANT CURRENT
CHARACTERISTICS
SCREEN VOLTAGE = 1800 VOLTS
PLATE CURRENT - AMPERES
SCREEN CURRENT - AMPERES
GRID CURRENT - AMPERES
250
200
150
100
75
50
25
5
.5
.001
10
25
50
60
10.0
5.0
2.0
5
2.5
.5
.1
0
GRID VOLTAGE - VOLTS
600
400
200
0
-200
-400
0
2
4
6
8
10
12
14
16
18
20
PLATE VOLTAGE - KILOVOLTS
CURVE #3464

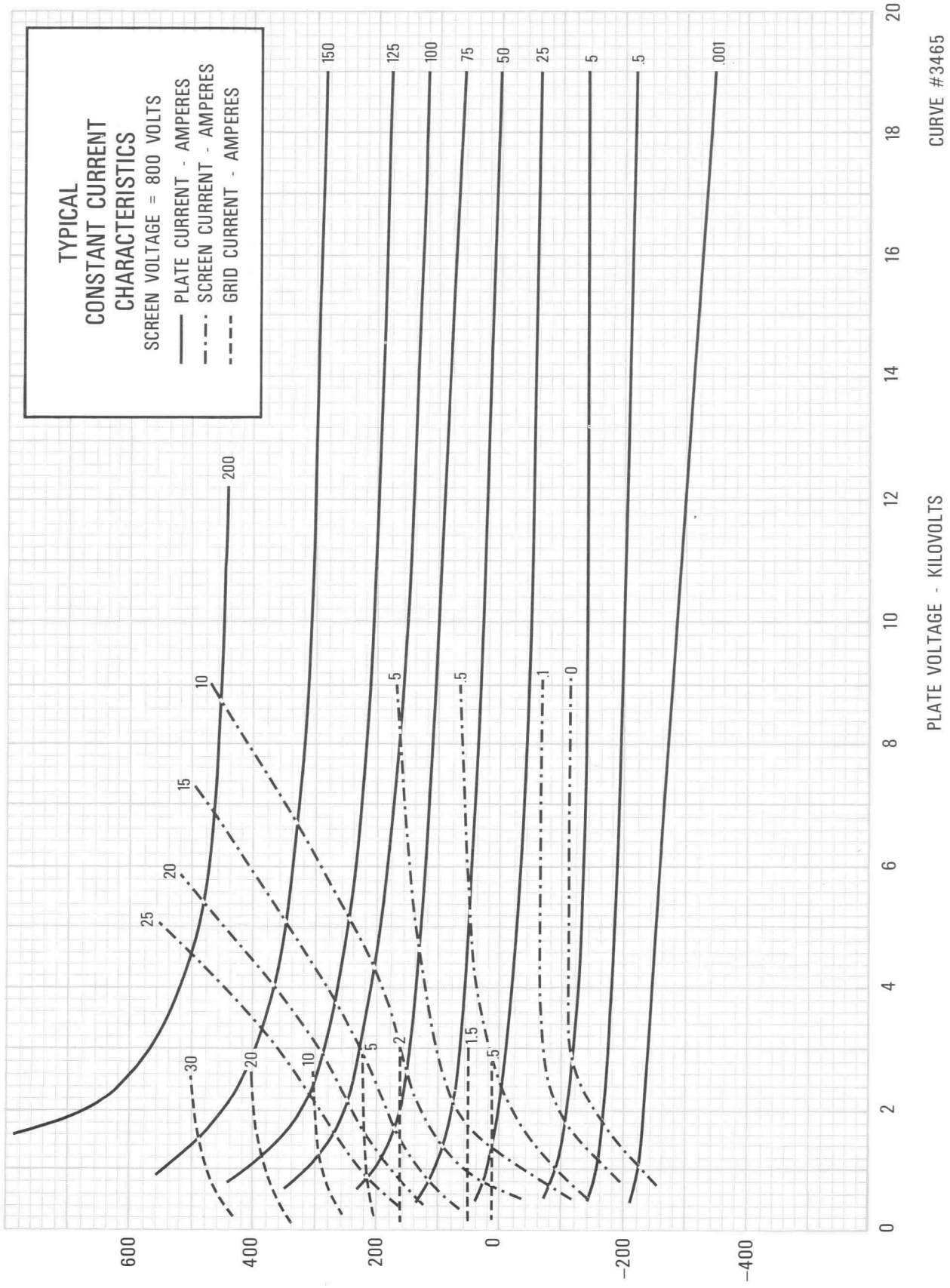
TYPICAL
CONSTANT CURRENT
CHARACTERISTICS
SCREEN VOLTAGE = 800 VOLTS
PLATE CURRENT - AMPERES
SCREEN CURRENT - AMPERES
GRID CURRENT - AMPERES
150
125
100
75
50
25
5
.5
.001
200
10
15
20
25
30
20
10
5
2
1.5
.5
.5
5
.1
0
600
400
200
0
-200
-400
0
2
4
6
8
10
12
14
16
18
20
GRID VOLTAGE - VOLTS
PLATE VOLTAGE - KILOVOLTS
CURVE #3465

TECHNICAL DATA

4CW800B
4CW800F

RADIAL BEAM
POWER TETRODE

The EIMAC 4CW800B and 4CW800F are ceramic/metal, liquid cooled radial-beam tetrodes designed for use in distributed amplifiers and VHF/UHF power amplifiers.

The mechanical and electrical features of these tubes are compatible with distributed amplifier circuit requirements, i.e., low lead inductance, low input and output capacitance and small size.

Ruggedized construction consisting of a unitized electrode structure and direct mounting to the chassis, combine to make the 4CW800B and 4CW800F suitable for environments of severe shock and vibration.

The maximum rated plate dissipation is 800 watts for both types.



GENERAL CHARACTERISTICS[1]

ELECTRICAL

Cathode: Oxide Coated, Unipotential

Heater: 4CW800B

Voltage	6.0 V
Current	4.4 A

Heater: 4CW800F

Voltage	26.5 V
Current	1.1 A
Transconductance: (I_b = 600 mAdc)	40,000 μmhos
Input Conductance: (I_b = 600 mAdc) (F = 30 MHz)	0.1 x 10^{-3} mhos
Frequency for Maximum Ratings	800 MHz

Direct Interelectrode Capacitance: (Grounded Cathode) [2]

Cin	45 pF
Cout	5.8 pF
Cgp	0.15 pF

1. Characteristics and operating values are based upon performance tests. These figures may change without notice as the result of additional data or product refinement. EIMAC Division of Varian should be consulted before using this information for final equipment design.
2. Capacitance values are for a cold tube as measured in a special shielded fixture.

MECHANICAL

Base	Special
Operating Position	Any
Maximum Operating Temperatures:	
Ceramic-to-Metal Seals	250°C
Base Plate	150°C
Cooling	Liquid

(Revised 11-1-73) © 1968, 1973 by Varian

Printed in U.S.A.

Maximum Over-all Dimensions:

Length	3.00 In; 76.20	mm
Diameter	2.03 In; 51.56	mm
Net Weight	7 oz; 198	gm

RANGE VALUES FOR EQUIPMENT DESIGN

Heater: 4CW800B - Current at 6.0 volts	4.0	4.7	A
4CW800F - Current at 26.5 volts	0.85	1.25	A
Cathode Warmup Time - both types	180	---	sec.
Interelectrode Capacitances (grounded cathode circuit)[1]			
Cin	42.0	48.0	pF
Cout	5.3	6.3	pF
Cgp	---	0.20	pF

1. Capacitance values are for a cold tube as measured in a special shielded fixture in accordance with Electronic Industries Association Standard RS-191.

BROADBAND RF LINEAR AMPLIFIER

Class AB, Grid Driven

ABSOLUTE MAXIMUM RATINGS:

DC PLATE VOLTAGE	3000 VOLTS
DC SCREEN VOLTAGE	500 VOLTS
DC PLATE CURRENT	0.6 AMPERE
PLATE DISSIPATION	800 WATTS
SCREEN DISSIPATION	15 WATTS
GRID DISSIPATION	3 WATTS

1. Adjust for specified zero-signal plate current.
2. Approximate value.

TYPICAL OPERATION

Plate Voltage	1000	1500	2500	Vdc
Screen Voltage	275	275	275	Vdc
Grid Voltage[1]	-40	-40	-40	Vdc
Zero Signal Plate Current	100	100	100	mAdc
Plate Current	570	580	585	mAdc
Screen Current[2]	32	29	17	mAdc
Peak rf Grid Voltage[2]	44	43	42	v
Plate Output Power[2]	320	590	1000	W
Plate Dissipation[2]	250	280	460	W
rf Load Impedance	765	1225	2325	Ω

RADIO FREQUENCY POWER AMPLIFIER

Class B, Grid Driven

ABSOLUTE MAXIMUM RATINGS:

DC PLATE VOLTAGE	3000 VOLTS
DC SCREEN VOLTAGE	500 VOLTS
DC PLATE CURRENT	0.6 AMPERE
PLATE DISSIPATION	800 WATTS
SCREEN DISSIPATION	15 WATTS
GRID DISSIPATION	3 WATTS

1. Adjust for specified zero-signal plate current.
2. Approximate value.
3. Delivered to the load.

TYPICAL OPERATION	140-250 MHz Strip-line amp			432 MHz Cavity	865 MHz Cavity	
Plate Voltage	1650	1950	2500	2000	2000	Vdc
Screen Voltage	400	300	300	300	300	Vdc
Grid Voltage[1]	-75	-60	-60	-54	-60	Vdc
Zero Signal Plate Current	15	15	15	20	15	mAdc
Maximum Signal Plate Current	600	530	600	600	600	mAdc
Screen Current[2]	14	11	11	7	8	mAdc
Grid Current[2]	-6	-2	+8	+14	0	mAdc
Useful Power Output[3]	540	555	820	770	550	W
Bandwith (3dB) of Amplifier	6	6	4.5	---	9	MHz
Power Gain[2]	---	---	---	15.3	10.4	dB

APPLICATION

MECHANICAL

MOUNTING - These tubes may be mounted in any position. No socket is required. The tube may be mounted directly on the SK-680 Screen Bypass Capacitor which in turn is mounted to the chassis with four 6-32 screws. The chassis thickness should be 0.062 inch to insure adequate space for connections to the base of the tube and care should be exercised to insure a flat mounting surface to minimize cathode lead inductance.

COOLING - Sufficient cooling must be provided for the anode and ceramic-to-metal seals to maintain operating temperatures below the rated maximum values:

Ceramic-to-metal seals	250°C
Base and flanges	150°C

Anode cooling is accomplished by circulating liquid through the integral water jacket.

At ambient temperatures of 25°C or less, no base cooling is required.

At higher temperatures, base cooling may be required to maintain base temperatures below 150°C. This can be accomplished by mounting the tube to a cold plate cooled by the inlet liquid.

WATER COOLING - The tabulation below lists the minimum water flow requirements for 25°C inlet water temperature with a temperature rise of 15°C from inlet to outlet.

Plate Dissipation (Watts)	Water Flow (GPM)	Pressure Drop (psi)
200	.050	.025
400	.100	.050
600	.156	.075
800	.202	.100

Water pressure should never exceed 200 psi and outlet temperature must be limited to 70°C.

OIL COOLING - The cooling jacket was specifically designed for oil coolant such as Coolanol 35. The minimum flow requirement and pressure drop can be derived from the following graph:

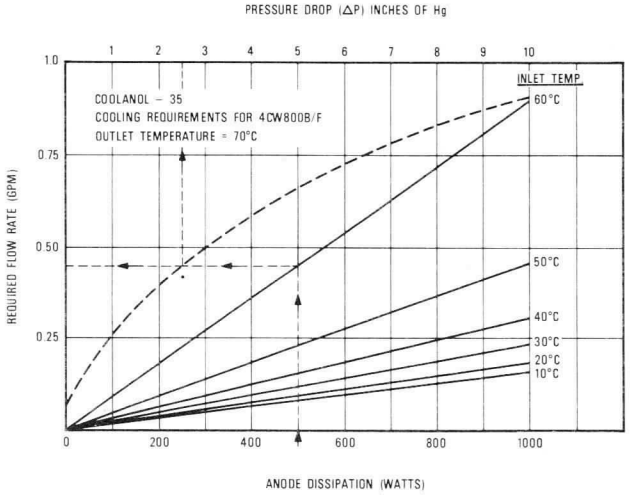

* Sample Calculation: For an inlet temperature of 60°C at 500 watts anode dissipation, the required flow rate is .45 GPM. The pressure drop will be .25 inches of Hg.

In cases where there is any doubt regarding the adequacy of the supplied cooling, it should be borne in mind that operating temperature is the sole criterion of cooling effectiveness.

ELECTRICAL

HEATER - The rated heater voltage is 6.0 volts for the 4CW800B and 26.5 volts for the 4CW800F. The voltage, as measured at the socket, should be maintained at this value to minimize variations in operation and to obtain maximum tube life. In no case should the voltage be allowed to exceed 5% above or below the rated value.

The cathode and one side of the heater are internally connected.

It is recommended that the heater voltage be applied for a period of not less than three minutes before current is drawn from the cathode. Tube operation will stabilize after a period of approximately five minutes from a cold start.

CONTROL-GRID OPERATION - The control-grid has a maximum dissipation of 3.0 watts and precautions should be observed to avoid exceeding this rating. Derating of the control grid dissipation will be necessary if the base flange temperature exceeds 150°C.

There are four threaded grid pins on the base of the tube. These pins can be used separately or in parallel to control the amount of grid lead in-

ductance to suit the requirements of the circuit. The grid lead inductance for one pin is 2.4 nanohenries.

SCREEN GRID OPERATION - The maximum rated screen dissipation for the 4CW800B or 4CW800F is 15 watts.

Under certain operating conditions the screen current of a tetrode may reverse as indicated on the screen current meter. This condition is the result of secondary emission from the screen and is normal for a power tetrode. If the impedance of the screen power supply is high, negative screen current will cause the screen voltage to approach the anode voltage, and the results will be a runaway condition which could lead to a catastrophic failure. This condition can be avoided if sufficient bleeder current is drawn from the screen supply by an appropriate bleeder or regulator tube. The recommended bleeder current for these tubes is 20 mA for each tube connected to a common screen power supply.

A low inductance screen bypass capacitor, EIMAC SK-680, is available for either tube. This capacitor is easily installed with six 0-80 screws. With the SK-680 capacitor installed, the screen self-resonant frequency of either tube is in excess of 900 MHz.

PLATE OPERATION - The maximum rated plate dissipation power for either tube is 800 watts. Except for brief periods during circuit adjustments, this maximum value should not be exceeded. Connection to the anode is accomplished by a clamp around the anode.

DISTRIBUTED AMPLIFIER SERVICE - The mechanical and electrical features of the 4CW800B and 4CW800F are compatible with distributed amplifier circuit requirements, combining the qualities of low lead inductance, low input and output capacitances, high transconductance, and small size. Connection is made to the control grid by means of four threaded studs. By using the correct number of connections, the designer has available a choice of several values of grid lead inductance. This feature is quite useful in design of VHF/UHF distributed amplifiers. In addition, rugged internal tube construction, consisting of a unitized electrode structure and a solid direct-chassis flange mount, are features which make these tubes suitable for environments exhibiting severe shock and vibration, such as encountered in mobile or airborne service.

A distributed amplifier is a wideband, cascade device, employing vacuum tubes placed along an artificial transmission line, the tube capacitances appearing as the shunt elements of the line. In a properly designed distributed amplifier, the driving impedance is virtually independent of the number of tubes. The amplifier may make use of the characteristics of the low pass, the band pass, or the high pass filter configuration.

The 4CW800B and 4CW800F are ideal tubes for distributed amplifier service, as anode heat may be readily disposed of by a compact, external cooling system. An amplifier using one of these types is an advantage in instantaneous bandwidth rf systems as it eliminates the need of complex and slow tuning and tracking equipment necessary for a tuned amplifier.

EIMAC APPLICATION BULLETIN NUMBER FOURTEEN - This 23-page booklet is available from EIMAC and contains additional information on the use of these tubes (or similar types of the same tube family), including some constructional details, in strip-line amplifier circuitry in the 140-250 MHz range, distributed amplifier service, and cavity amplifier operation at 432 MHz and 865 MHz.

HIGH VOLTAGE - The 4CW800B and 4CW800F operate at voltages which can be deadly, and the equipment must be designed properly and operating precautions must be followed. Equipment must be designed so that no one can come in contact with high voltages. All equipment must include safety enclosures for high-voltage circuits and terminals, with interlock switches to open the primary circuits of the power supplies and to discharge high voltage condensers whenever access doors are opened. Interlock switches must not be bypassed or "cheated" to allow operation with access doors open. Always remember that HIGH VOLTAGE CAN KILL.

RADIO FREQUENCY RADIATION - Avoid exposure to strong rf fields even at relatively low frequency. Absorption of rf energy by human tissue is dependent on frequency. Under 30 MHz, most of the energy will pass completely through the human body with little attenuation or heating effect. Public health agencies are concerned with the hazard, however, even at these frequencies, and it is worth noting that some commercial dielectric heating units actually operate at frequencies as low as the 13 and 27 MHz bands.

INTERELECTRODE CAPACITANCE - The actual internal interelectrode capacitance of a tube is influenced by many variables in most applications, such as stray capacitance to the chassis, stray capacitance between tube terminals, and wiring effects. To control the actual capacitance values within the tube, as the key component involved, the industry and the Military Services use a standard test procedure as described in Electronic Industries Association Standard RS-191. This requires the use of specially constructed test fixtures which effectively shield all external tube leads from each other and eliminates any capacitance reading to "ground". The test is performed on a cold tube. Other factors being equal, controlling internal tube capacitance in this way normally assures good interchangeability of tubes over a period of time, manufacturer's technical data, or test specifications, normally are taken in accordance with Standard RS-191.

The equipment designer is therefore cautioned to make allowance for the actual capacitance values which will exist in any normal application. Measurements should be taken with mounting which represent approximate final layout if capacitance values are highly significant in the design.

SPECIAL APPLICATIONS - If it is desired to operate this tube under conditions widely different from those given here, write to Power Grid Tube Division, EIMAC, Division of Varian, 301 Industrial Way, San Carlos, California 94070 for information and recommendations.

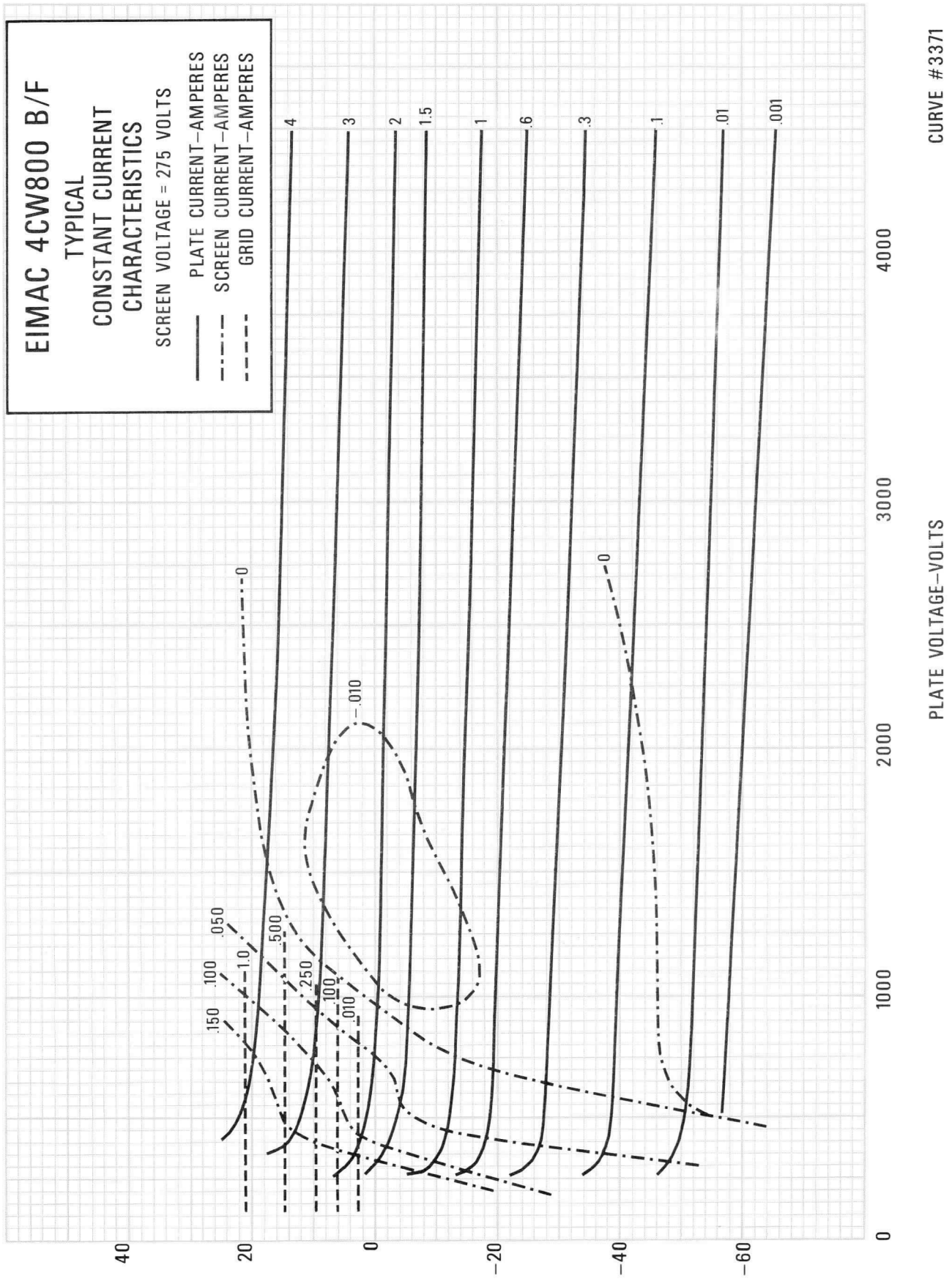
EIMAC 4CW800 B/F
TYPICAL
CONSTANT CURRENT
CHARACTERISTICS
SCREEN VOLTAGE = 275 VOLTS
PLATE CURRENT–AMPERES
SCREEN CURRENT–AMPERES
GRID CURRENT–AMPERES
4
3
2
1.5
1
.6
.3
.1
.01
.001
0
.150
.100
.050
1.0
.500
.250
.100
.010
.010
0
0
1000
2000
3000
4000
40
20
0
-20
-40
-60
PLATE VOLTAGE–VOLTS
GRID VOLTAGE–VOLTS
CURVE #3371

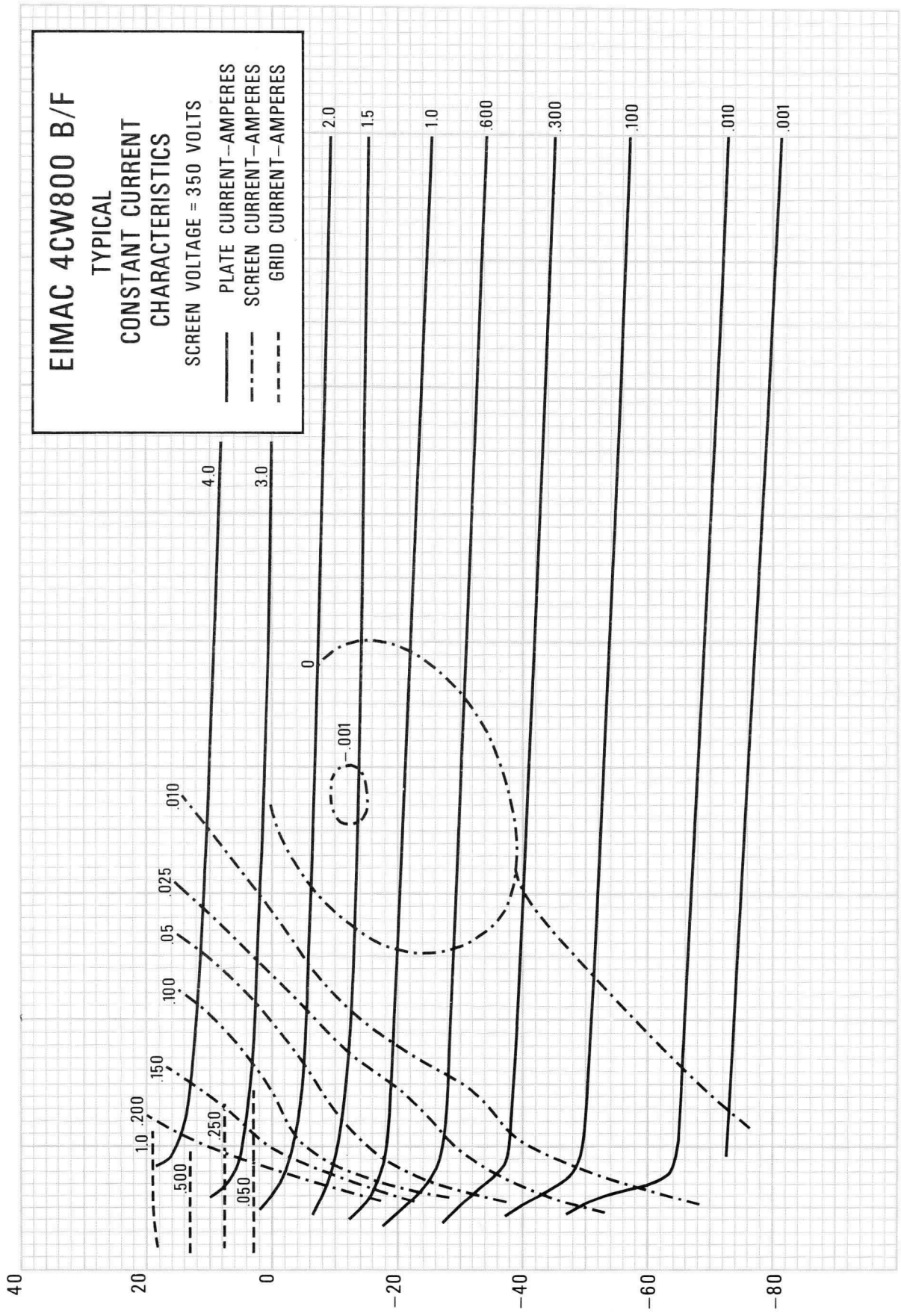
EIMAC 4CW800 B/F
TYPICAL
CONSTANT CURRENT
CHARACTERISTICS
SCREEN VOLTAGE = 350 VOLTS
PLATE CURRENT–AMPERES
SCREEN CURRENT–AMPERES
GRID CURRENT–AMPERES
4.0
3.0
2.0
1.5
1.0
.600
.300
.100
.010
.001
0
-.001
1.0
.200
.150
.100
.050
.025
.010
.500
.250
.050
40
20
0
-20
-40
-60
-80
0
1000
2000
3000
4000
GRID VOLTAGE–VOLTS
PLATE VOLTAGE–VOLTS
CURVE #3342

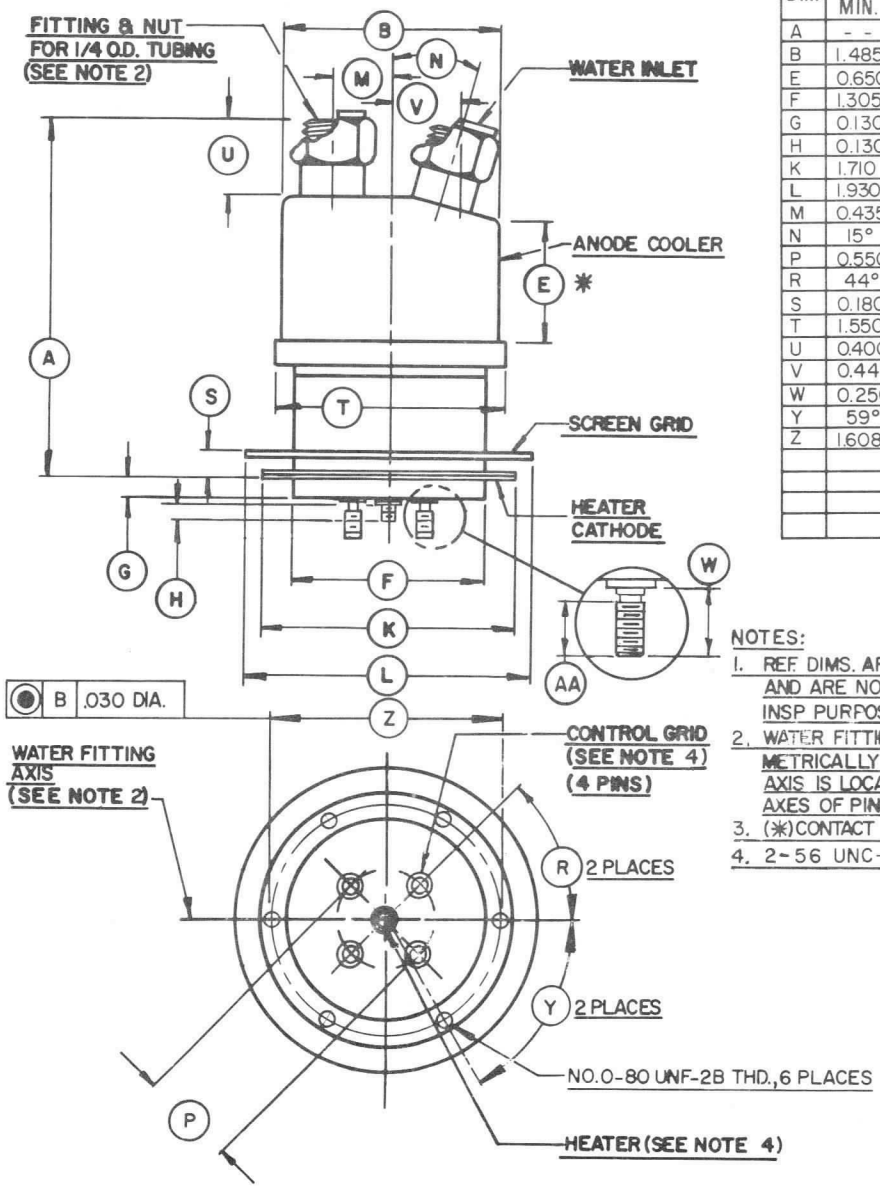

DIM	DIMENSIONAL DATA					
	INCHES			MILLIMETERS		
	MIN.	MAX.	REF.	MIN.	MAX.	REF.
A	- -	2.515	- -	- -	63.88	- -
B	1.485	1.515	- -	37.35	38.10	- -
E	0.650	- -	- -	16.35	- -	- -
F	1.305	1.325	- -	32.82	33.32	- -
G	0.130	0.155	- -	3.27	3.90	- -
H	0.130	0.180	- -	3.27	4.53	- -
K	1.710	1.750	- -	43.01	44.01	- -
L	1.930	2.025	- -	48.54	50.93	- -
M	0.435	0.475	- -	10.94	11.95	- -
N	15°	25°	- -	15°	25°	- -
P	0.550	0.600	- -	13.97	15.24	- -
R	44°	46°	- -	44°	46°	- -
S	0.180	0.220	- -	4.53	5.53	- -
T	1.550	1.610	- -	38.98	40.48	- -
U	0.400	- -	- -	10.06	- -	- -
V	0.440	0.520	- -	11.07	13.08	- -
W	0.250	0.300	- -	6.29	7.54	- -
Y	59°	61°	- -	59°	61°	- -
Z	1.608	1.628	- -	40.84	41.35	- -

NOTES:
1. REF. DIMS. ARE FOR INFO. ONLY AND ARE NOT REQD FOR INSP PURPOSES.
2. WATER FITTINGS ARE DIA-METRICALLY OPPOSED & AXIS IS LOCATED BETWEEN AXES OF PINS.
3. (✳) CONTACT SURFACE.
4. 2-56 UNC-2A.

TECHNICAL DATA

8244
4CW2000A

CERAMIC
POWER TETRODE

The EIMAC 8244/4CW2000A is a ceramic/metal water cooled radial-beam tetrode with a rated maximum plate dissipation of 2000 watts. It is a low-voltage high current tube designed for Class AB1 rf linear amplifier or audio amplifier applications where its high gain may be used to advantage. It is also recommended for voltage or current regulator service. As a regulator, the maximum dc plate voltage rating is 6000 volts. The 8244/4CW2000A is the water-cooled version of the 8168/4CX1000A.

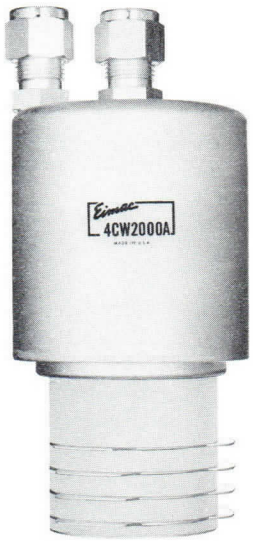

GENERAL CHARACTERISTICS[1]

ELECTRICAL

Cathode: Oxide-coated Unipotential	
Heater Voltage	6.0 ± 0.3 V
Heater Current, at 6.0 volts	9.0 A
Transconductance (Average):	
I_b = 1.0 Adc, E_{c2} = 325 Vdc	37,000 μmhos
Amplification Factor (Average):	
Grid to Screen	3.8
Direct Interelectrode Capacitance (grounded cathode)[2]	
Cin	81.5 pF
Cout	11.8 pF
Cgp	0.015 pF
Frequency of Maximum Rating:	
CW	110 MHz

1. Characteristics and operating values are based on performance tests. These figures may change without notice as the result of additional data or product refinement. EIMAC Division of Varian should be consulted before using this information for final equipment design.
2. Capacitance values are for a cold tube as measured in a special shielded fixture in accordance with Electronic Industries Association Standard RS-191.

MECHANICAL

Maximum Overall Dimensions:	
Length	5.69 in; 144.5 mm
Diameter	2.66 in; 67.6 mm
Net Weight	27 oz; 766 gm
Operating Position	Vertical
Maximum Operating Temperature:	
Ceramic/Metal Seals	250°C
Cooling	Water
Base	Special, breechlock terminal surfaces
Recommended Socket	EIMAC SK-800 Series

(Revised 6-15-71) © 1963,1966 by Varian Printed in U.S.A.

RADIO FREQUENCY LINEAR AMPLIFIER GRID DRIVEN

Class AB_1 or B (Single Side-Band Suppressed-Carrier Operation)

ABSOLUTE MAXIMUM RATINGS:

DC PLATE VOLTAGE	3000	VOLTS
DC SCREEN VOLTAGE	400	VOLTS
DC PLATE CURRENT	1.0	AMPERE
PLATE DISSIPATION	2000	WATTS
SCREEN DISSIPATION	12	WATTS
GRID DISSIPATION	0	WATTS

TYPICAL OPERATION (Frequencies to 30 MHz)
Class AB_1, Grid Driven, Peak Envelope or Modulation Crest Conditions

Plate Voltage	2000	2500	3000	Vdc
Screen Voltage	325	325	325	Vdc
Grid Voltage[1]	-60	-60	-60	Vdc
Zero-Signal Plate Current	250	250	250	mAdc
Single-Tone Plate Current[2]	890	885	875	mAdc
Two-Tone Plate Current[2]	645	650	635	mAdc
Zero-Signal Screen Current[2]	8	6	5	mAdc
Single-Tone Screen Current[2]	35	35	35	mAdc
Two-Tone Screen Current[2]	10	8	8	mAdc
Plate Output Power	930	1300	1630	W

1. Adjust to specified zero-signal dc plate current.
2. Approximate value.

AUDIO FREQUENCY POWER AMPLIFIER OR MODULATOR

Class AB , Grid Driven, Sinusoidal Wave

ABSOLUTE MAXIMUM RATINGS (per tube)

DC PLATE VOLTAGE	3000	VOLTS
DC SCREEN VOLTAGE	400	VOLTS
DC PLATE CURRENT	1.0	AMPERE
PLATE DISSIPATION	2000	WATTS
SCREEN DISSIPATION	12	WATTS
GRID DISSIPATION	0	WATTS

TYPICAL OPERATION (Two Tubes)

Plate Voltage	2000	2500	3000	Vdc
Screen Voltage	325	325	325	Vdc
Grid Voltage[1]	-60	-60	-60	Vdc
Zero-Signal Plate Current	500	500	500	mAdc
Maximum-Signal Plate Current	1.78	1.77	1.75	Adc
Zero-Signal Screen Current[2]	16	12	10	mAdc
Maximum-Signal Screen Current[2]	70	70	70	mAdc
Plate Output Power	1860	2600	3260	W
Load Resistance (Plate to Plate)	2040	2850	3860	Ω

1. Adjust to give stated zero-signal plate current.
2. Approximate value.

NOTE: TYPICAL OPERATION data are obtained from direct measurement or by calculation from published characteristic curves. Adjustment of the rf grid voltage to obtain the specified plate current at the specified bias, screen and plate voltages is assumed. If this procedure is followed, there will be little variation in output power when the tube is changed, even though there may be some variation in grid and screen current. The grid and screen currents which result when the desired plate current is obtained are incidental and vary from tube to tube. These current variations cause no difficulty so long as the circuit maintains the correct voltage in the presence of the variations in current. In the case of Class C Service, if grid bias is obtained principally by means of a grid resistor, the resistor must be adjustable to obtain the required bias voltage when the correct rf grid voltage is applied.

RANGE VALUES FOR EQUIPMENT DESIGN

	Min.	Max.	
Heater: Current at 6.0 volts	8.1	9.9	A
Cathode Warmup Time	3.0	---	Min.
Amplification Factor (g1 to g2)	3.2	4.5	---
Interelectrode Capacitance (grounded cathode connection)[1]			
Cin	75.0	88.0	pF
Cout	10.8	12.8	pF
Cgp	---	0.022	pF

1. Capacitance values are for a cold tube as measured in a special shielded fixture in accordance with Electronic Industries Association Standard RS-191.

APPLICATION

MECHANICAL

COOLING - Sufficient cooling must be provided for the anode and ceramic/metal seals to maintain operating temperatures below the rated maximum value of 250°C.

Anode cooling is accomplished by circulating water through the integral water jacket. The tabulation below lists the minimum water flow requirements for 50°C inlet water temperature.

Plate Dissipation (Watts)	Water Flow (gpm)	Pressure Drop (psi)
1000	1.0	1.0
2000	2.0	2.5

Water pressure should never exceed 50 psi and outgoing water temperature must be limited to 70°C.

At ambient temperatures of 25°C, or less, when mounted in an EIMAC SK-800B socket, the 4CW2000A does not require base cooling. At higher temperatures, however separate base cooling may be required.

In cases where there is any doubt regarding the adequacy of the supplied cooling, it should be borne in mind that operating temperature is the sole criterion of cooling effectiveness. Surface temperatures may be easily and effectively measured by using one of the several temperature-sensitive paints or sticks available from various chemical or scientific equipment suppliers. When these materials are used, extremely thin applications must be made to avoid interference with the transfer of heat from the tube to the air stream, which would cause inaccurate indications.

SHOCK AND VIBRATION - The 4CW2000A has the same internal construction as the EIMAC 4CX1000A, and both are capable of operation under vibration conditions at 10 g to 500 Hz, or long-duration shock (11 milliseconds) of 50 g, with full rated voltages applied.

When environmental stress is anticipated, care must be taken in mounting of the tube and socket so there is sufficient support for the tube to prevent relative motion between tube and socket under stress conditions. The socket is not designed to provide sole support for the tube during shock or vibrational stress.

ELECTRICAL

HEATER - The rated heater voltage for the 4CW2000A is 6.0 volts. The voltage, as measured at the socket, should be maintained at this value to minimize variations in operation and to obtain maximum tube life. In no case should the voltage be allowed to exceed 5% above or below the rated value.

The cathode and one side of the heater are internally connected.

It is recommended that the heater voltage be applied for a period of not less than 3 minutes before other operating voltages are applied. From an initial cold condition, tube operation will stabilize after a period of approximately 5 minutes.

GRID OPERATION - The grid dissipation rating of the 4CW2000A is zero watts. The design features which make the tube capable of maximum power operation without driving the grid into the positive region also make it neccessary to avoid positive grid operation.

Although the average grid current rating is zero, peak grid currents of less than five milliamperes as read on a five milliampere meter may be permitted to flow for peak signal monitoring purposes.

SCREEN OPERATION - Tetrode tubes may exhibit reversed screen current to a greater or lesser degree depending on individual tube design. This characteristic is prominent in the 4CW2000A and, under some operating conditions, indicated negative screen currents in the order of 25 milliamperes may be encountered.

The maximum rated power dissipation for the screen grid in the 4CW2000A is 12 watts and the screen power should be kept below this level. The product of the peak screen voltage and the indicated dc screen current approximates the screen input power except when the screen current indication is near zero or negative. In the usual tetrode amplifier, where no signal voltage appears between cathode and screen, the peak screen voltage is equal to the dc screen voltage. Experience has shown that the screen will operate within the limits established for this tube if the indicated screen current, plate voltage and drive voltage approximate the "Typical Operation" values.

The screen supply voltage must be main-

tained constant for any values of negative and positive screen currents that may be encountered. Dangerously high plate currents may flow if the screen power supply exhibits a rising voltage characteristic with negative screen current. Stabilization may be accomplished in several different ways. A bleeder resistor may be connected from screen or cathode; a combination of VR tubes may be connected from screen to cathode; or an electron-tube regulator circuit may be used in the screen supply. It is absolutely essential to use a bleeder if a series electron-tube regulator is employed. The screen bleeder current should approximate 70 milliamperes to adequately stabilize the screen voltage. It should be observed that this bleeder power may be usefully employed to energize low-power stages of the transmitter.

PLATE OPERATION - The maximum rated plate dissipation power is 2000 watts. Except for brief periods during circuit adjustments, this maximum value should not be exceeded.

VOLTAGE OR CURRENT REGULATOR - The 4CW2000A is attractive for regulator service. As a voltage or current regulator the dc plate voltage rating is increased to 6000 volts. All other ratings remain the same.

HIGH VOLTAGE - The 4CW2000A operates at voltages which can be deadly, and the equipment must be designed properly and operating precautions must be followed. Equipment must be designed so that no one can come in contact with high voltages. All equipment must include safety enclosures for high-voltage circuits and terminals, with interlock switches to open the primary circuits of the power supplies and to discharge high voltage condensers whenever access doors are opened. Interlock switches must not be bypassed or "cheated" to allow operation with access doors open. Always remember that HIGH VOLTAGE CAN KILL

INTERELECTRODE CAPACITANCE - The actual internal interelectrode capacitance of a tube is influenced by many variables in most applications, such as stray capacitance to the chassis, capacitance added by the socket used, stray capacitance between tube terminals, and wiring effects. To control the actual capacitance values within the tube, as the key component involved, the industry and the Military Services use a standard test procedure as described in Electronic Industries Association Standard RS-191. This requires the use of specially constructed test fixtures which effectively shield all external tube leads from each other and eliminates any capacitance reading to "ground". The test is performed on a cold tube. Other factors being equal, controlling internal tube capacitance in this way normally assures good interchangeability of tubes over a period of time, even when the tube may be made by different manufacturers. The capacitance values shown in the manufacturer's technical data, or test specifications, normally are taken in accordance with Standard RS-191.

The equipment designer is therefore cautioned to make allowance for the actual capacitance values which will exist in any normal application. Measurements should be taken with the socket and mounting which represent approximate final layout if capacitance values are highly significant in the design.

SPECIAL APPLICATIONS - If it is desired to operate this tube under conditions different from those given here, write to the Application Engineering Department, EIMAC Division of Varian, San Carlos, California, 94070, for information and recommendations.

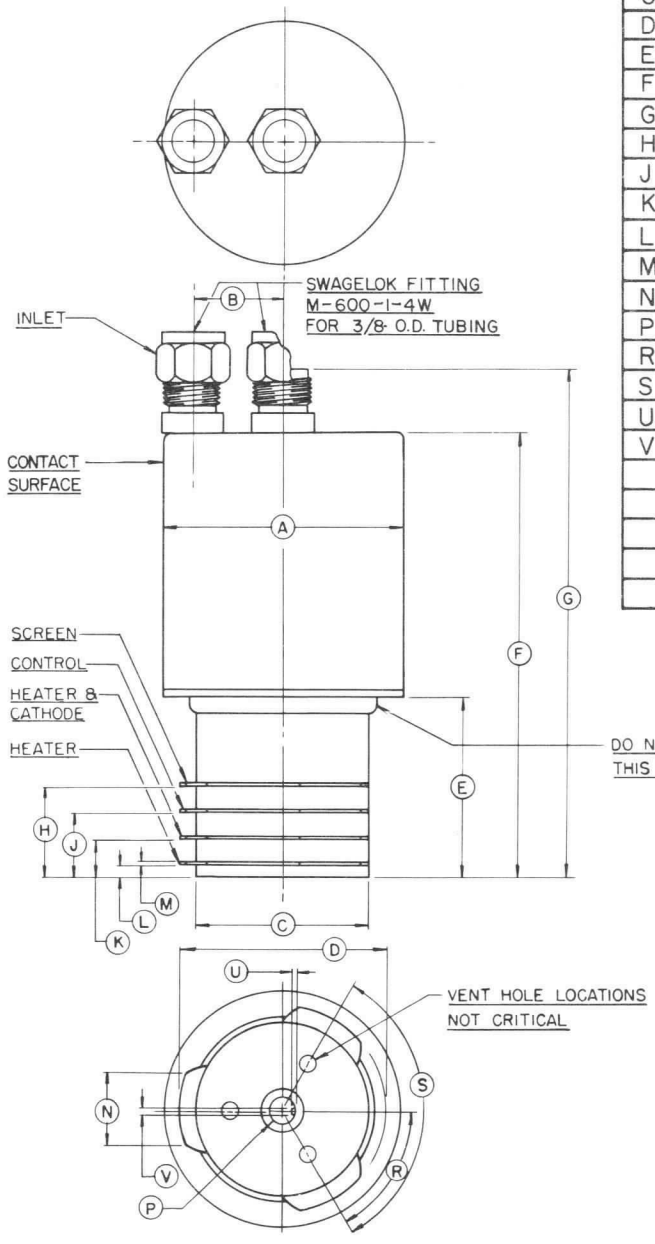

DIMENSIONAL DATA

DIM.	INCHES			MILLIMETERS		
	MIN.	MAX.	REF.	MIN.	MAX.	REF.
A	2.609	2.663	- -	66.27	66.88	- -
B	- -	- -	0.984	- -	- -	24.99
C	1.870	1.900	- -	47.50	48.26	- -
D	2.250	2.300	- -	57.15	58.42	- -
E	2.017	2.153	- -	51.23	54.69	- -
F	4.820	4.960	- -	122.43	125.98	- -
G	5.497	5.685	- -	139.62	144.40	- -
H	0.965	0.988	- -	24.51	25.10	- -
J	0.670	0.710	- -	17.02	18.03	- -
K	0.415	0.435	- -	10.54	11.05	- -
L	0.140	0.165	- -	3.56	4.19	- -
M	0.020	0.030	- -	0.51	0.76	- -
N	0.700	0.800	- -	17.78	20.32	- -
P	0.314	0.326	- -	7.98	8.28	- -
R	55°	65°	- -	55°	65°	- -
S	115°	125°	- -	115°	125°	- -
U	0.025	0.048	- -	0.64	1.22	- -
V	0.045	0.070	- -	1.14	1.78	- -

NOTES:
1. REF. DIMENSIONS ARE FOR INFO. ONLY & ARE NOT REQUIRED FOR INSPECTION PURPOSES.

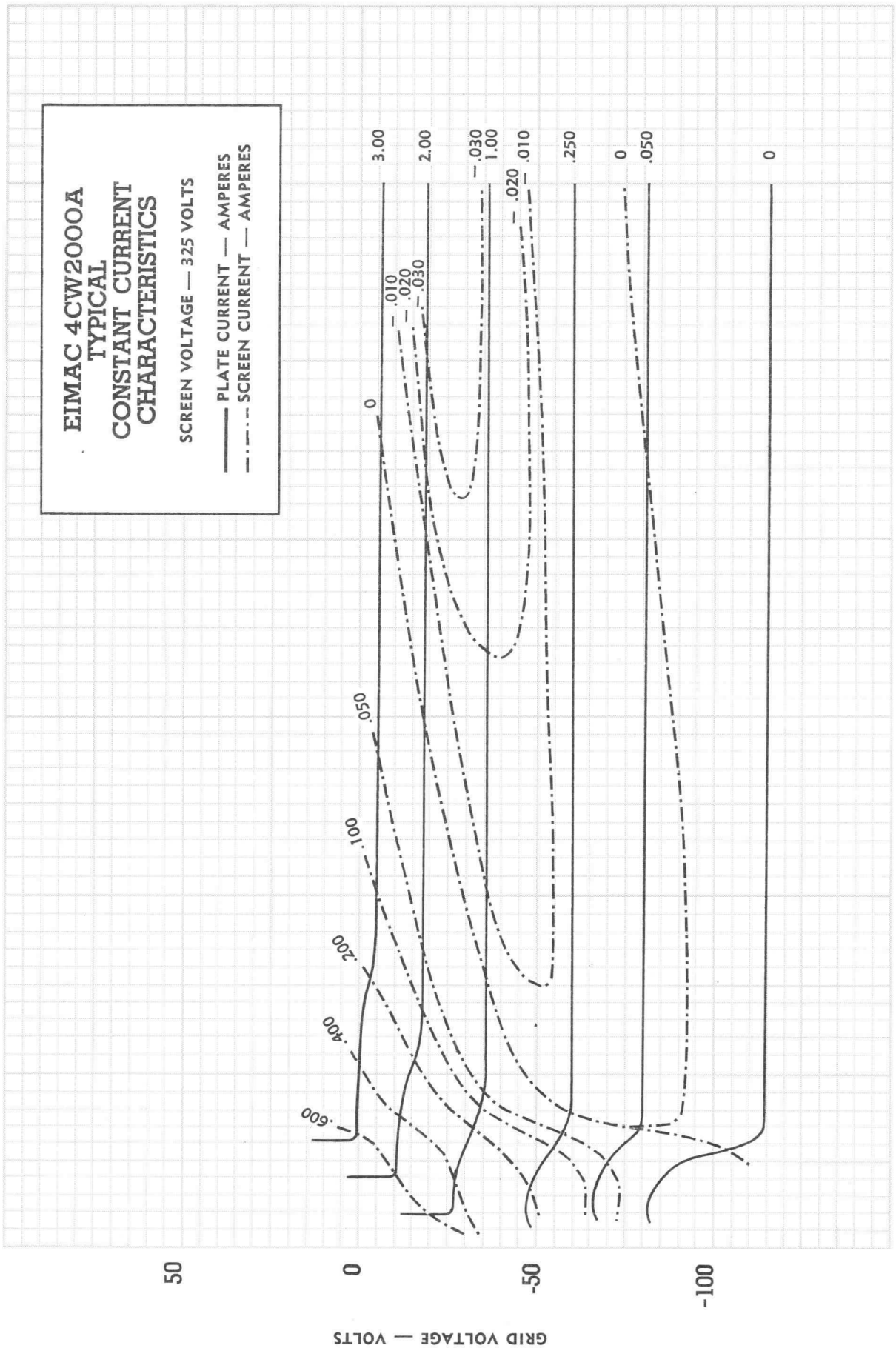
EIMAC 4CW2000A
TYPICAL
CONSTANT CURRENT
CHARACTERISTICS
SCREEN VOLTAGE — 325 VOLTS
PLATE CURRENT — AMPERES
SCREEN CURRENT — AMPERES
3.00
2.00
1.00
.250
0
.050
0
.030
.020
.010
0
.030
.020
.010
0
.050
100
200
400
600
50
0
-50
-100
1000
2000
3000
GRID VOLTAGE — VOLTS
PLATE VOLTAGE — VOLTS

EIMAC
Division of Varian
SAN CARLOS
CALIFORNIA

4CW10,000A

RADIAL-BEAM POWER TETRODE

The Eimac 4CW10,000A is a water-cooled, ceramic-metal power tetrode which is electrically identical to the 8171/4CX10,000D (and 8170/4CX5000A, except for plate dissipation). The water-cooled anode is equipped with an integral water jacket and is rated at 12 kilowatts dissipation.

The 4CW10,000A is useful as an oscillator, amplifier or modulator at frequencies up to 110 megacycles, and is particularly suited for use as a linear rf amplifier or or class-AB audio amplifier.

A pair of these tubes operating class AB will deliver more than 30 kilowatts of audio-frequency or radio-frequency plate output power.



GENERAL CHARACTERISTICS

ELECTRICAL

	Min.	Nom.	Max.	
Filament: Thoriated Tungsten				
Voltage		7.5		volts
Current	73		78	amperes
Amplification Factor (Grid-Screen)		4.5		
Frequency for Maximum Ratings			30	Mc

Direct Interelectrode Capacitances, Grounded Cathode:	Min.	Max.	
Input	108	122	uuf
Output	18	23	uuf
Feedback		1.0	uuf

Direct Interelectrode Capacitances, Grounded Grid and Screen:			
Input	48	58	uuf
Output	18	23	uuf
Feedback		0.16	uuf

MECHANICAL

Base	Special concentric
Maximum Seal Temperature	250° C
Maximum Anode-Core Temperature	250° C
Recommended Socket	Eimac SK-300A
Operating Position	Axis vertical, base up or down

Maximum Dimensions:	
Height	11.44 inches
Diameter	4.66 inches
Cooling	Water and Forced air
Net Weight	7.5 pounds
Shipping Weight (Approximate)	17 pounds

(Effective 4-15-63) 1963, 1967 by VARIAN Printed in U.S.A.

RADIO-FREQUENCY POWER AMPLIFIER OR OSCILLATOR (Up to 110 megacycles)

Class-C Telegraphy or FM Telephony (Key-down conditions)

MAXIMUM RATINGS

D-C PLATE VOLTAGE	up to 30 megacycles	7500 MAX.	VOLTS
	30 to 60 megacycles	7000 MAX.	VOLTS
	60 to 110 megacycles	6500 MAX.	VOLTS
D-C SCREEN VOLTAGE		1500 MAX.	VOLTS
D-C PLATE CURRENT	up to 30 megacycles	3 MAX.	AMPERES
	30 to 60 megacycles	2.8 MAX.	AMPERES
	60 to 110 megacycles	2.6 MAX.	AMPERES
PLATE DISSIPATION		10,000 MAX.	WATTS
SCREEN DISSIPATION		250 MAX.	WATTS
GRID DISSIPATION		75 MAX.	WATTS

TYPICAL OPERATION
(Frequencies below 30 megacycles)

D-C Plate Voltage	7500	volts
D-C Screen Voltage	500	volts
D-C Grid Voltage	—350	volts
D-C Plate Current	2.8	amperes
D-C Screen Current	0.5	ampere
D-C Grid Current	0.25	ampere
Peak R-F Grid Voltage	590	volts
Driving Power	150	watts
Plate Dissipation	5000	watts
Plate Output Power	16,000	watts

PLATE-MODULATED RADIO-FREQUENCY POWER AMPLIFIER

Class-C Telephony (Carrier conditions except where noted)

MAXIMUM RATINGS

D-C PLATE VOLTAGE	5000 MAX.	VOLTS
D-C SCREEN VOLTAGE	1000 MAX.	VOLTS
D-C PLATE CURRENT	2.5 MAX.	AMPERES
PLATE DISSIPATION*	6650 MAX.	WATTS
SCREEN DISSIPATION	250 MAX.	WATTS
GRID DISSIPATION	75 MAX.	WATTS

*Corresponds to 10,000 watts at 100-percent sine-wave modulation.

TYPICAL OPERATION (Frequencies below 30 megacycles)

D-C Plate Voltage	5000	volts
D-C Screen Voltage	500	volts
Peak A-F Screen Voltage (For 100-percent modulation)	500	volts
D-C Grid Voltage	—350	volts
D-C Plate Current	2.4	amperes
D-C Screen Current	0.4	ampere
D-C Grid Current	0.22	ampere
Peak R-F Grid Voltage	550	volts
Grid Driving Power	120	watts
Plate Dissipation	3500	watts
Plate Output Power	8.5	kilowatts

AUDIO-FREQUENCY AMPLIFIER OR MODULATOR

Class-AB_1

MAXIMUM RATINGS

D-C PLATE VOLTAGE	7500 MAX.	VOLTS
D-C SCREEN VOLTAGE	1500 MAX.	VOLTS
D-C PLATE CURRENT	4.0 MAX.	AMPERES
PLATE DISSIPATION	12,000 MAX.	WATTS
SCREEN DISSIPATION	250 MAX.	WATTS
GRID DISSIPATION	75 MAX.	WATTS

TYPICAL OPERATION, two tubes

D-C Plate Voltage	4000	5000	6000	7500	volts
D-C Screen Voltage	1500	1500	1500	1500	volts
D-C Grid Voltage	—315	—320	—330	—340	volts
Max.-Signal Plate Current	6.66	6.66	6.66	6.66	ampere
Zero-Signal Plate Current*	0.50	0.50	0.50	0.50	ampere
Max.-Signal Screen Current	0.33	0.32	0.30	0.25	ampere
Zero-Signal Screen Current	0	0	0	0	ampere
Peak A-F Driving Voltage	305	310	320	330	volts
Driving Power	0	0	0	0	watts
Load Resistance, Plate-to-Plate	940	1320	1700	2280	ohms
Max.-Signal Plate Dissipation *	6,670	7,950	8,100	9,050	watts
Max.-Signal Plate Output Power	13,300	17,500	23,800	31,900	watts

*Per Tube

RADIO-FREQUENCY LINEAR AMPLIFIER

Class-AB_1

MAXIMUM RATINGS

D-C PLATE VOLTAGE	7500 MAX.	VOLTS
D-C SCREEN VOLTAGE	1500 MAX.	VOLTS
D-C PLATE CURRENT	4.0 MAX.	AMPERES
PLATE DISSIPATION	12,000 MAX.	WATTS
SCREEN DISSIPATION	250 MAX.	WATTS
GRID DISSIPATION	75 MAX.	WATTS

TYPICAL OPERATION, Peak-Envelope or Modulation-Crest Conditions,
(Frequencies below 30 megacycles)

D-C Plate Voltage	7500	volts
D-C Screen Voltage	1500	volts
D-C Grid Voltage*	—340	volts
Max.-Signal Plate Current	3.33	amperes
Zero-Signal Plate Current	0.50	ampere
Max.-Signal Screen Current	0.125	ampere
Peak R-F Grid Voltage	330	volts
Driving Power	0	watts
Plate Dissipation	9050	watts
Plate Output Power**	15,950	watts

*Adjust grid voltage to obtain specified Zero-Signal plate current.
**PEP output or r-f output power at crest of modulation envelope.

NOTE: In most cases, "TYPICAL OPERATION" data are obtained by calculation from published characteristic curves. No allowance for circuit losses, either input or output, has been made.

APPLICATION

MECHANICAL

Mounting—The 4CW10,000A must be operated with its axis vertical. The base of the tube may be down or up at the convenience of the circuit designer.

Socket—The Eimac SK-300A air-system socket may be used with the 4CW10,000A. The socket has provision for directing cooling air through the socket and over the base seals.

Cooling—Base terminal cooling is accomplished by directing air through the socket and over the filament and grid seals. Anode cooling is accomplished by circulating water through the integral water jacket. The table below lists minimum water flow rates for proper cooling at various plate dissipation levels.

Minimum Cooling Water Requirement		
Plate Dissipation (kw)	Quantity (gpm)	Pressure Drop (psi)
6	4.0	2.2
8	5.1	3.1
10	6.3	4.3
12	7.4	5.5

Note: Since power dissipated by the filaments represented about 560 watts and grid plus screen dissipation can represent another 325 watts, an extra 900 watts has been added to plate dissipation in preparing this tabulation.

Maximum outlet-water temperature must never exceed 70°C and inlet-water pressure should be limited to 50 psi.

When the tube is mounted with its anode up, the water inlet is on the outer connector; when the anode is down, the inlet is the center connector. Water and air flow should start whenever filament voltage is applied. There is no danger in removing cooling water and air simultaneously with power removal.

Base cooling may be accomplished by directing approximately 30 cfm of air through the socket and over the seals. Pressure drop will be approximately 0.1 inch of water. An alternate method for frequencies below 30 Mc is to direct approximately 10 cfm through a ¾" ID tube directly at the center stud. The jet should be no more than two inches from the stud.

ELECTRICAL

Filament Operation—The rated filament voltage for the 4CW10,000A is 7.5 volts. Filament voltage, as measured at the socket, should be maintained at this value to obtain maximum tube life. In no case should it be allowed to deviate by more than plus or minus 5 percent from the rated value.

Electrode Dissipation Ratings—The maximum dissipation ratings for the 4CW10,000A must be respected to avoid damage to the tube. An exception is the plate dissipation, which may be permitted to rise above the rated maximum during brief periods, such as may occur during tuning.

Control Grid Operation—The 4CW10,000A control grid has a maximum dissipation rating of 75 watts. Precautions should be observed to avoid exceeding this rating. The grid bias and driving power should be kept near the values shown in the "Typical Operation" sections of the data sheet whenever possible.

Screen-Grid Operation—The power dissipated by the screen of the 4CW10,000A must not exceed 250 watts.

Screen dissipation, in cases where there is no ac applied to the screen, is the simple product of the screen voltage and the screen current. If the screen voltage is modulated, the screen dissipation will depend upon loading, driving power, and carrier screen voltage.

Screen dissipation is likely to rise to excessive values when the plate voltage, bias voltage, or plate load are removed with filament and screen voltages applied. Suitable protective means must be provided to limit the screen dissipation to 250 watts in the event of circuit failure.

Plate Dissipation—The plate-dissipation rating for the 4CW10,000A is 10,000 watts for most applications, but for audio and SSB amplifier applications, the maximum allowable dissipation is 12,000 watts.

When the 4CW10,000A is operated as a plate-modulated r f power amplifier, the input power is limited by conditions not connected with the plate efficiency, which is quite high. Therefore, except during tuning there is little possibility that the 6650-watt maximum plate dissipation rating will be exceeded.

Special Applications—If it is desired to operate this tube under conditions widely different from those given here, write to the Power Grid Tube Marketing Department, Eitel-McCullough, Inc., 301 Industrial Way, San Carlos, California, for information and recommendations.

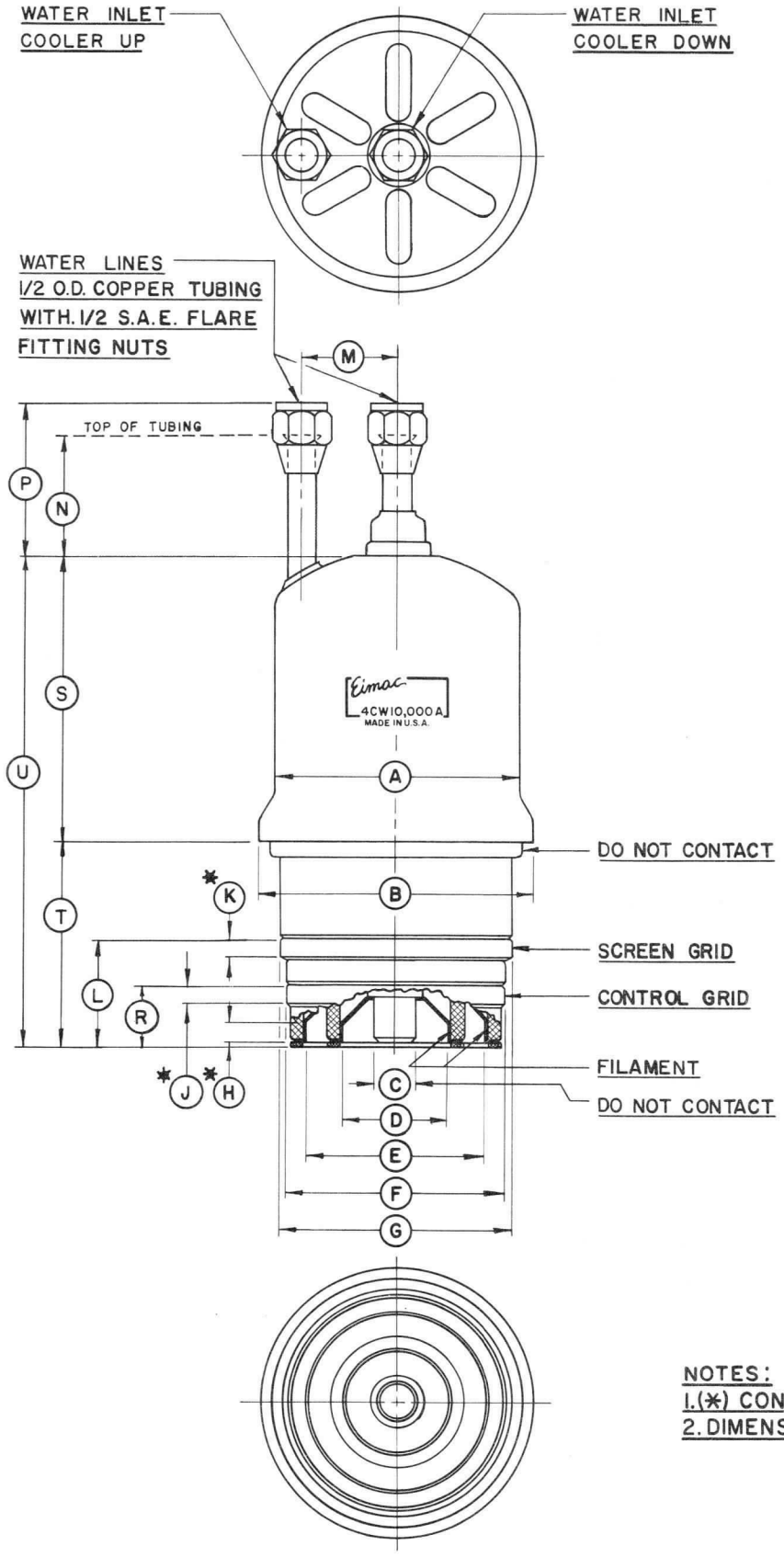

DIMENSION DATA			
REF	NOM.	MIN.	MAX.
A		4.094	4.156
B		4.594	4.656
C		.720	.760
D		1.896	1.936
E		3.133	3.173
F		3.792	3.832
G		3.980	4.020
H		.188	
J		.188	
K		.188	
L		1.764	1.826
M		1.500	1.750
N		1.937	2.187
P		2.312	2.812
R		.986	1.050
S		4.780	5.025
T		3.350	3.650
U		8.125	8.625

These dimensions reflect standard manufacturing tolerances. They should not be used as the basis for purchase specifications unless checked with Eitel-McCullough, Inc.

NOTES:
1.(*) CONTACT SURFACE.
2. DIMENSIONS IN INCHES.

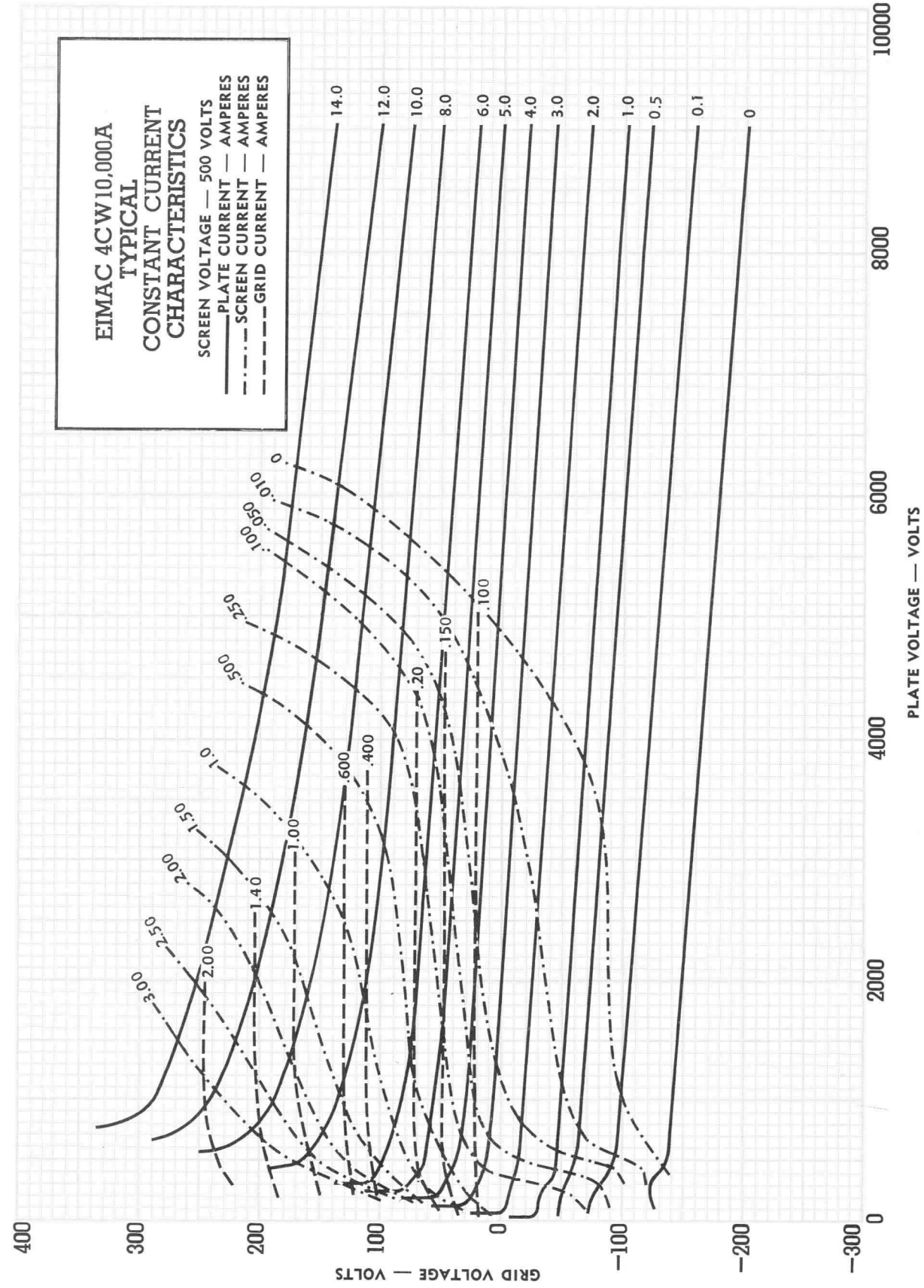
EIMAC 4CW10,000A
TYPICAL
CONSTANT CURRENT
CHARACTERISTICS
SCREEN VOLTAGE — 500 VOLTS
PLATE CURRENT — AMPERES
SCREEN CURRENT — AMPERES
GRID CURRENT — AMPERES
14.0
12.0
10.0
8.0
6.0
5.0
4.0
3.0
2.0
1.0
0.5
0.1
0
GRID VOLTAGE — VOLTS
400
300
200
100
0
−100
−200
−300
PLATE VOLTAGE — VOLTS
0
2000
4000
6000
8000
10000

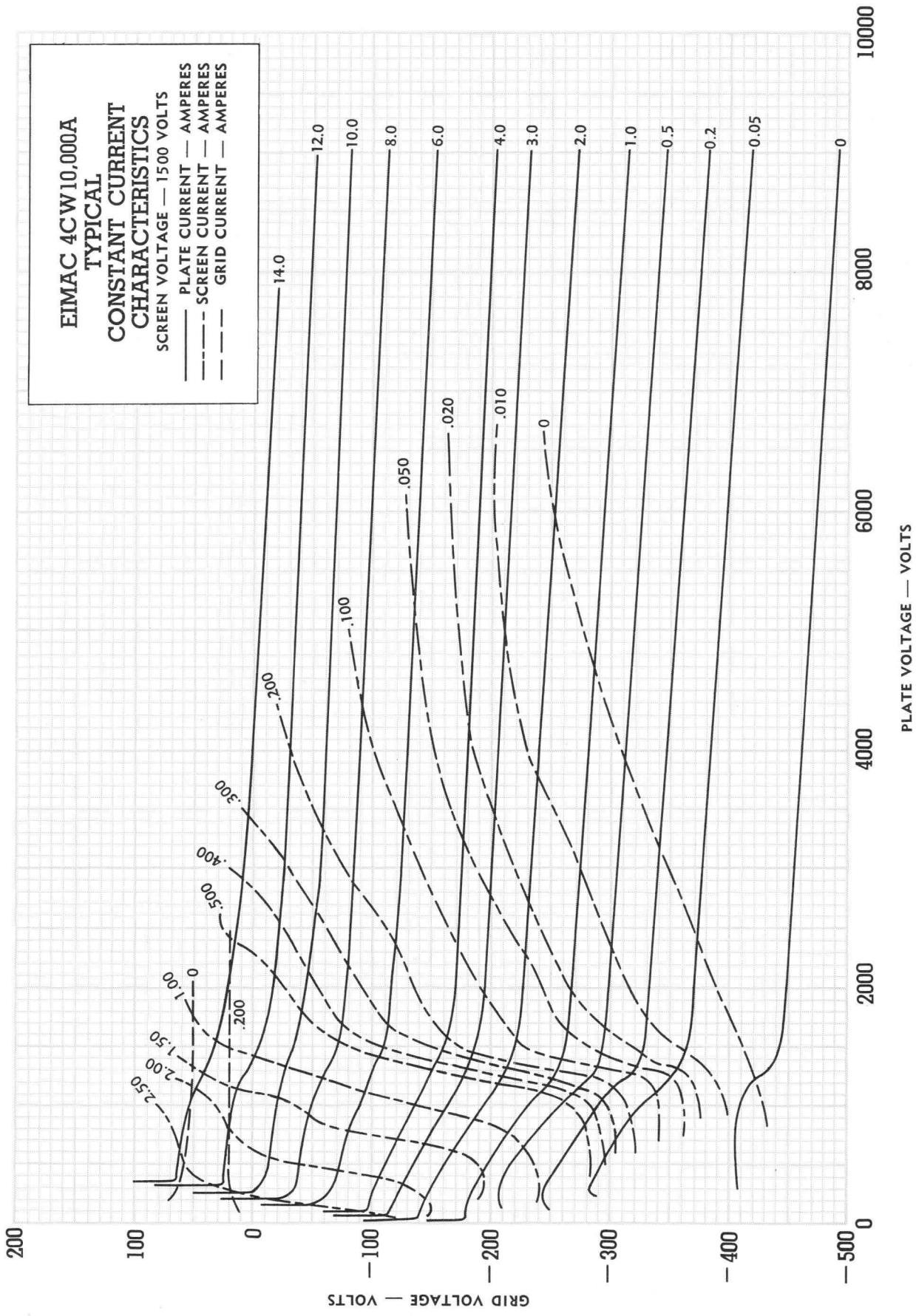
EIMAC 4CW10,000A
TYPICAL
CONSTANT CURRENT
CHARACTERISTICS
SCREEN VOLTAGE — 1500 VOLTS
PLATE CURRENT — AMPERES
SCREEN CURRENT — AMPERES
GRID CURRENT — AMPERES
14.0
12.0
10.0
8.0
6.0
4.0
3.0
2.0
1.0
0.5
0.2
0.05
0
.050
.020
.010
0
.100
.200
.300
.400
.500
1.00
0
.200
1.50
2.00
2.50
200
100
0
—100
—200
—300
—400
—500
0
2000
4000
6000
8000
10000
GRID VOLTAGE — VOLTS
PLATE VOLTAGE — VOLTS

4CW25,000A

TECHNICAL DATA

RADIAL BEAM
POWER TETRODE



The EIMAC 4CW25,000A is a ceramic/metal power tetrode intended for use in audio or radio frequency applications. It features a new type of internal mechanical structure which results in higher rf operating efficiency. Low rf losses in this mechanical structure permit operation of the 4CW25,000A at full ratings up to 110 MHz, and at reduced ratings, to 225 MHz.

The 4CW25,000A is recommended for radio-frequency linear power amplifier service, for television linear amplifier service, and as a switch tube for pulsed regulator service.

GENERAL CHARACTERISTICS[1]

ELECTRICAL

Filament: Thoriated Tungsten	
Voltage	6.3 ± 0.3 V
Current, at 6.3 volts	160 A
Amplification Factor, average	
Grid to Screen	4.5
Direct Interelectrode Capacitances (cathode grounded):[2]	
Cin	160.0 pF
Cout	24.5 pF
Cgp	1.5 pF
Direct Interelectrode Capacitances (grid and screen grounded):[2]	
Cin	67.0 pF
Cout	25.5 pF
Cpk	0.2 pF
Maximum Frequency Ratings	
CW	110 MHz

1. Characteristics and operating values are based on performance tests. These figures may change without notice as the result of additional data or product refinement. EIMAC Division of Varian should be consulted before using this information for final equipment design.

2. Capacitance values are for a cold tube as measured in a special shielded fixture in accordance with Electronic Industries Association Standard RS-191.

MECHANICAL

Maximum Overall Dimensions:	
Length	12.69 in; 322.33 mm
Diameter	4.750 in; 120.65 mm
Net Weight	13.5 lb; 6.10 kg
Operating Position	Axis vertical, base up or down
Cooling	Water and Forced Air

(Effective 2-1-72) © by Varian Printed in U.S.A.

Operating Temperature, maximum	
Ceramic/Metal Seals and Anode Core	250° C
Base	Special, concentric
Recommended Air System Socket	SK-300A

RADIO FREQUENCY LINEAR AMPLIFIER GRID DRIVEN, Class AB_1

ABSOLUTE MAXIMUM RATINGS:

PLATE VOLTAGE	10.0	kVdc
SCREEN VOLTAGE	2.0	kVdc
PLATE CURRENT	6.0	Adc
PLATE DISSIPATION	25.0	kW
SCREEN DISSIPATION	450	W
GRID DISSIPATION	200	W

1. Adjust for specified zero-signal plate current.
2. Approximate value.

TYPICAL OPERATION (Frequencies to 110 MHz)
Peak Envelope or Modulation Crest Conditions

Plate Voltage	7,500	10,000	Vdc
Screen Voltage	1,500	1,500	Vdc
Grid Voltage [1]	-350	-370	Vdc
Zero-Signal Plate Current	1.0	1.0	Adc
Single-Tone Plate Current	4.0	4.25	Adc
Single-Tone Screen Current [2]	170	150	mAdc
Peak rf Grid Voltage [2]	330	340	v
Plate Dissipation	12.2	14.0	kW
Single-Tone Plate Output Power	20.8	28.5	kW
Resonant Load Impedance	865	1,260	Ω

RADIO FREQUENCY POWER AMPLIFIER OR OSCILLATOR

Class C Telegraphy of FM Telephony
(Key-Down Conditions)

ABSOLUTE MAXIMUM RATINGS:

PLATE VOLTAGE	10.0	kVdc
SCREEN VOLTAGE	2.0	kVdc
PLATE CURRENT	5.0	Adc
PLATE DISSIPATION	25.0	kW
SCREEN DISSIPATION	450	W
GRID DISSIPATION	200	W

TYPICAL OPERATION (Frequencies to 110 MHz)

Plate Voltage	7,500	10,000	Vdc
Screen Voltage	750	750	Vdc
Grid Voltage	-510	-550	Vdc
Plate Current	4.65	4.55	Adc
Screen Current [1]	0.59	0.54	Adc
Grid Current [1]	0.30	0.27	Adc
Peak rf Grid Voltage [1]	730	790	v
Calculated Driving Power	220	220	W
Plate Dissipation	8.1	9.0	kW
Plate Output Power	26.7	36.5	kW

1. Approximate value.

PLATE MODULATED RADIO FREQUENCY POWER AMPLIFIER, GRID DRIVEN, Class C Telephony

(Carrier Conditions)

ABSOLUTE MAXIMUM RATINGS:

PLATE VOLTAGE	8.0	kVdc
SCREEN VOLTAGE	1.5	kVdc
PLATE CURRENT	4.0	Adc
PLATE DISSIPATION	16.4	kW
SCREEN DISSIPATION	450	W
GRID DISSIPATION	200	W

1. Approximate value.

TYPICAL OPERATION (Frequencies to 110 MHz)

Plate Voltage	6,000	8,000	Vdc
Screen Voltage	750	750	Vdc
Grid Voltage	-600	-640	Vdc
Plate Current	3.75	3.65	Adc
Screen Current [1]	0.45	0.43	Adc
Grid Current [1]	0.18	0.18	Adc
Peak af Screen Voltage [1] 100% modulation	740	710	v
Peak rf Grid Voltage [1]	800	840	v
Calculated Driving Power	150	150	W
Plate Dissipation	5.1	5.8	kW
Plate Output Power	17.4	23.5	kW

AUDIO FREQUENCY POWER AMPLIFIER OR MODULATOR, GRID DRIVEN, Class AB_1

(Sinusoidal Wave)

ABSOLUTE MAXIMUM RATINGS (per tube)

PLATE VOLTAGE	10.0	kVdc
SCREEN VOLTAGE	2.0	kVdc
PLATE CURRENT	6.0	Adc
PLATE DISSIPATION	25.0	kW
SCREEN DISSIPATION	450	W
GRID DISSIPATION	200	W

1. Adjust for specified zero-signal plate current.

TYPICAL OPERATION (Two tubes)

Plate Voltage	7,500	10,000	Vdc
Screen Voltage	1,500	1,500	Vdc
Grid Voltage [1]	-350	-370	Vdc
Zero-Signal Plate Current	1.00	1.00	Adc
Maximum Signal Plate Current	8.80	8.50	Adc
Maximum Signal Screen Current [2]	0.34	0.30	Adc
Peak af Grid Voltage [2]	330	340	v
Maximum Signal Plate Dissipation	12.2	14.0	kW
Plate Output Power	41.6	57.0	kW
Load Resistance (plate to plate)	1.730	2.520	Ω

2. Approximate value.

SWITCH TUBE OR PULSED REGULATOR SERVICE

ABSOLUTE MAXIMUM RATINGS:

PLATE VOLTAGE	20.0 kVdc
SCREEN VOLTAGE	3.0 kVdc
GRID VOLTAGE	-1.5 kVdc
PEAK CATHODE CURRENT	80 a
PEAK ANODE CURRENT	60 a
GRID DISSIPATION [1]	200 W
SCREEN DISSIPATION [1]	450 W
PLATE DISSIPATION [1]	25.0 kW
PULSE LENGTH	See Note 2
DUTY FACTOR	See Note 2

1. Dissipation values shown are average.

2. Duty must be maintained at a low enough level that average tube dissipation ratings are not exceeded. For pulse lengths in excess of 0.1 second, some reduction of electrode dissipation ratings will be required.

TYPICAL OPERATION values are obtained by calculations from published characteristic curves. To obtain the specified plate current at the specified bias, screen, and plate voltages, adjustment of the rf grid voltage is assumed. If this procedure is followed, there will be little variation in output power when the tube is replaced, even though there may be some variation in grid and screen currents. The grid and screen currents which occur when the desired plate current is obtained are incidental and vary from tube to tube. These current variations cause no performance degradation providing the circuit maintains the correct voltage in the presence of the current variations. If grid bias is obtained principally by means of a grid resistor, the resistor must be adjustable to produce the required bias voltage when the correct rf grid voltage is applied.

RANGE VALUES FOR EQUIPMENT DESIGN

	Min.	Max.	
Heater Current, at 6.3 volts	152	168	A
Interelectrode Capacitances, cathode grounded [1]			
Cin	154.0	167.0	pF
Cout	22.0	27.0	pF
Cgp	----	2.0	pF
Interelectrode Capacitances, grid and screen grounded [1]			
Cin	62.0	72.0	pF
Cout	23.0	28.0	pF
Cpk	----	0.3	pF

1. Capacitance values are for a cold tube as measured in a special shielded fixture in accordance with Electronic Industries Association Standard RS-191.

APPLICATION

MECHANICAL

MOUNTING - The 4CW25,000A must be operated with its axis vertical. The base of the tube may be down or up at the convenience of the circuit designer.

SOCKET - The EIMAC Air-System Socket Type SK-300A is designed especially for the concentric base terminals of the 4CW25,000A. The use of recommended air-flow rates through this socket provides effective forced-air cooling of the tube base seal areas.

COOLING - Anode cooling is accomplished by circulating water through the integral anode water jacket. The table below lists the minimum cooling water requirements at various dissipation levels.

Plate *Dissipation (kilowatts)	Water Flow GPM	Approx. Pressure Drop PSI
10	2.2	3.3
15	3.0	5.0
20	4.0	8.0
25	5.0	11.5

*Since the power dissipated by the filament represents about 1000 watts and since grid-plus-screen dissipation can, under some conditions, represent another 600 watts, allowance has been made in preparing this tabulation for an additional 1600 watts dissipation.

The cooling table assumes a water temperature rise of 20°C. Under no circumstances should the outlet water temperature exceed 70°C. Inlet water pressure should not exceed 50 PSI.

A major factor effecting long life of water cooled tubes is the condition of the cooling water.

A simple method of determing the condition of the water is to measure the resistance across a measured amount. This can be accomplished by inserting two electrodes into the water through an insulted section of water line and measuring the resistance between the two electrodes with a sensitive meter. The resistance of the water should be maintained above 50 kohms/cm^3.

Separate cooling of the tube base is required and is accomplished by directing approximately 50 cfm of air at sea level through the socket.

ELECTRICAL

FILAMENT OPERATION - The rated filament voltage for the 4CW25,000A is 6.3 volts. Filament voltage, as measured at the socket, should be maintained at this value to obtain maximum tube life. In no case should it be allowed to deviate by more than plus or minus five percent from the rated value.

ELECTRODE DISSIPATION RATINGS - The maximum dissipation ratings for the 4CW25,000A must be respected to avoid damage to the tube. An exception is the plate dissipation which may be permitted to rise above the rated maximum during brief periods, such as may occur during tuning.

GRID OPERATION - The 4CW25,000A control grid has a maximum dissipation rating of 200 watts. Precautions should be observed to avoid exceeding this rating. The grid bias and driving power should be kept near the values shown in the "Typical Operation" sections of the data sheet whenever possible. The maximum grid circuit resistance should not exceed 100,000 ohms per tube.

SCREEN OPERATION - The power dissipated by the screen of the 4CW25,000A must not exceed 450 watts.

Screen dissipation, in cases where there is no AC applied to the screen, is the simple product of the screen voltage and the screen current. If the screen voltage is modulated, the screen dissipation will depend upon loading, driving power, and carrier screen voltage.

Screen dissipation is likely to rise to excessive values when the plate voltage, bias voltage, or plate load are removed with filament and screen voltages applied. Suitable protective means must be provided to limit the screen dissipation to 450 watts in the event of circuit failure.

PLATE DISSIPATION - The plate-dissipation rating for the 4CW25,000A is 25,000 watts.

When the 4CW25,000A is operated as a plate-modulated rf power amplifier, the input power is limited by conditions not connected with the plate efficiency, which is quite high. Therefore, except during tuning there is little possibility that the 25,000 watt maximum plate dissipation rating will be exceeded.

HIGH VOLTAGE - Normal operating voltages used with the 4CW25,000A are deadly, and the equipment must be designed properly and operating precautions must be followed. Design all equipment so that no one can come in contact with high voltages. All equipment must include safety enclosures for high-voltage circuits and terminals, with interlock switches to open primary circuits of the power supply and to discharge high-voltage condensers whenever access doors are opened. Interlock switches must not be bypassed or "cheated" to allow operation with access doors open. Always remember that HIGH VOLTAGE CAN KILL.

X-RADIATION - High-vacuum tubes operating at voltages higher than 10 kilovolts produce progressively more dangerous X-ray radiation as the voltage is increased. The 4CW25,000A, operating at its rated voltages and currents, is a potential X-ray hazard. Only limited shielding is afforded by the tube envelope. Moreover, the X-ray radiation level can increase significantly with aging and gradual deterioration, due to leakage paths or emission characteristics as they are affected by the high voltage. X-ray shielding must be provided on all sides of tubes operating at these voltages to provide adequate protection throughout the tube's life. Periodic checks on the X-ray level should be made, and the tube should never be operated without adequate shielding in place when voltages above 10 kilovolts are in use. Lead glass, which attenuates X-rays, is available for viewing windows. If there is any doubt as to the requirement for or the adequacy of shielding, an expert in this field should be contacted to perform an X-ray survey of the equipment.

Operation of high-voltage equipment with interlock switches "cheated" and cabinet doors open in order to be better able to locate an equipment malfunction can result in serious X-ray exposure.

RADIO FREQUENCY RADIATION - Avoid exposure to strong rf fields even at relatively low frequency. Absorption of rf energy by human tissue is dependent on frequency. Under 30 MHz, most of the energy will pass completely through the human body with little attenuation or heating effect. Public health agencies are concerned with the hazard, however, even at these frequencies, and it is worth noting that some commercial dielectric heating units actually operate at frequencies as low as the 13 and 27 MHz bands.

Many EIMAC power tubes, such as the 4CW-25,000A, are specifically designed to generate or amplify radio frequency power. There may be a relatively strong rf field in the general proximity of the power tube and its associated circuitry---the more power involved, the stronger the rf field. Proper enclosure design and efficient coupling of rf energy to the load will minimize the rf field in the vicinity of the power amplifier unit itself.

INTERELECTRODE CAPACITANCE - The actual internal interelectrode capacitance of a tube is influenced by many variables in most applications, such as stray capacitance to the chassis, capacitance added by the socket used, stray capacitance between tube terminals, and wiring effects. To control the actual capacitance values within the tube, as the key component involved, the industry and the Military Services use a standard test procedure as described in Electronic Industries Association Standard RS-191. This requires the use of specially constructed test fixtures which effectively shield all external tube leads from each other and eliminates any capacitance reading to "ground". The test is performed on a cold tube. Other factors being equal, controlling internal tube capacitance in this way normally assures good interchangeability of tubes over a period of time, even when the tube may be made by different manufacturers. The capacitance values shown in the manufacturer's technical data, or test specifications, normally are taken in accordance with Standard RS-191.

The equipment designer is therefore cautioned to make allowance for the actual capacitance values which will exist in any normal application. Measurements should be taken with the socket and mounting which represent approximate final layout if capacitance values are highly significant in the design.

SPECIAL APPLICATIONS - If it is desired to operate this tube under conditions widely different from those given here, write to the Application Engineering Dept., Power Grid Tube Division, EIMAC, Division of Varian, 301 Industrial Way, San Carlos, California, 94070 for information and recommendations.

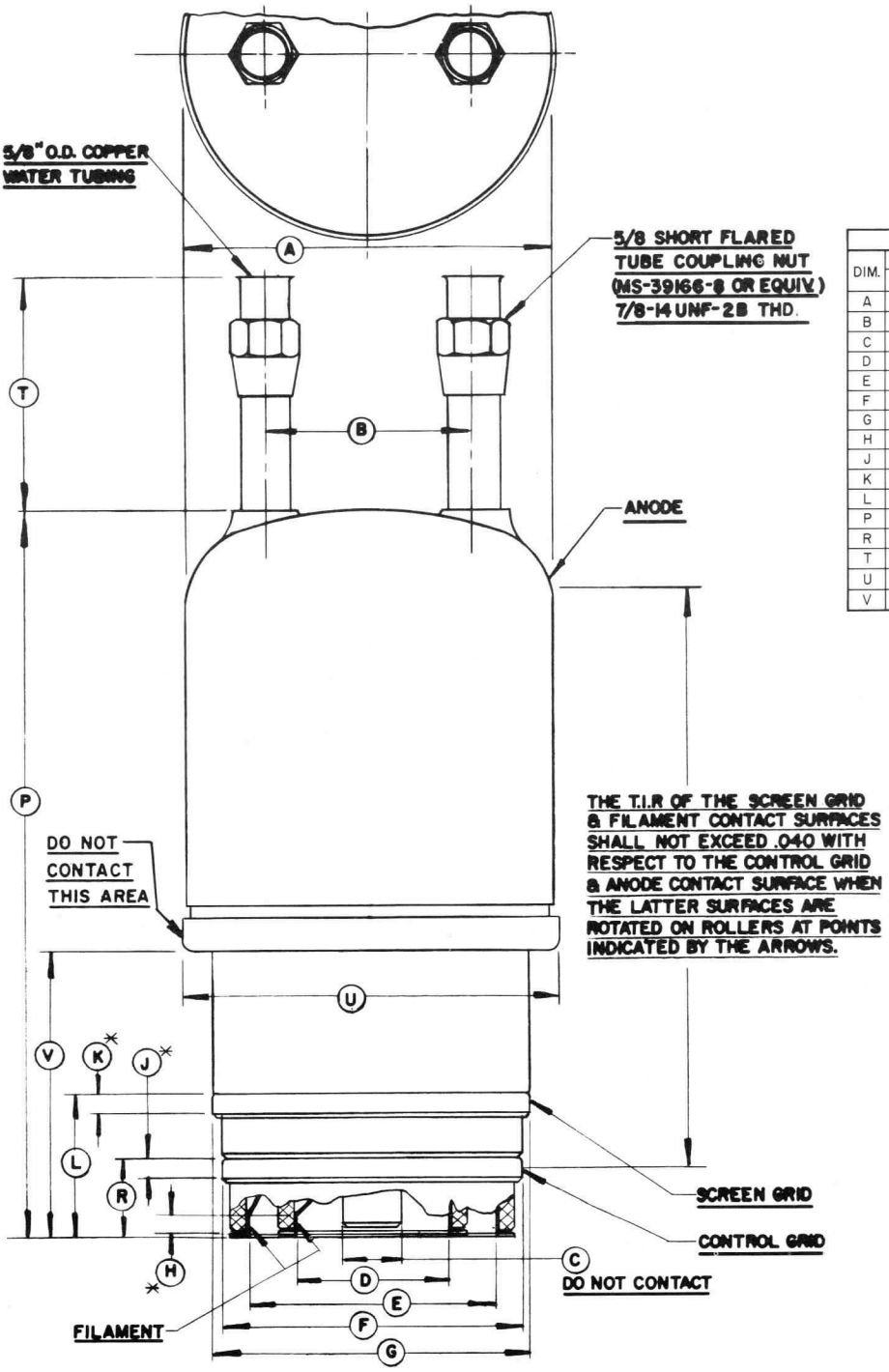

DIM.	DIMENSIONAL DATA					
	INCHES			MILLIMETERS		
	MIN.	MAX.	REF.	MIN.	MAX.	REF.
A	4.570	4.630	--	116.08	117.60	--
B	2.625	2.875	--	66.67	73.02	--
C	.720	.760	--	18.29	19.30	--
D	1.896	1.936	--	48.16	49.17	--
E	3.133	3.173	--	79.58	80.59	--
F	3.792	3.832	--	96.32	97.33	--
G	3.980	4.020	--	101.09	102.11	--
H	.188	--	--	4.77	--	--
J	.188	--	--	4.77	--	--
K	.188	--	--	4.77	--	--
L	1.764	1.826	--	44.80	46.38	--
P	9.065	9.565	--	230.25	242.95	--
R	.986	1.050	--	25.04	26.67	--
T	2.875	3.125	--	73.02	79.37	--
U	--	4.750	--	--	120.65	--
V	3.625	3.675	--	92.07	93.34	--

NOTES:

1. (*) CONTACT SURFACE
2. REF. DIMENSIONS ARE FOR INFORMATION ONLY & ARE NOT REQ'D FOR INSPECTION PURPOSES.

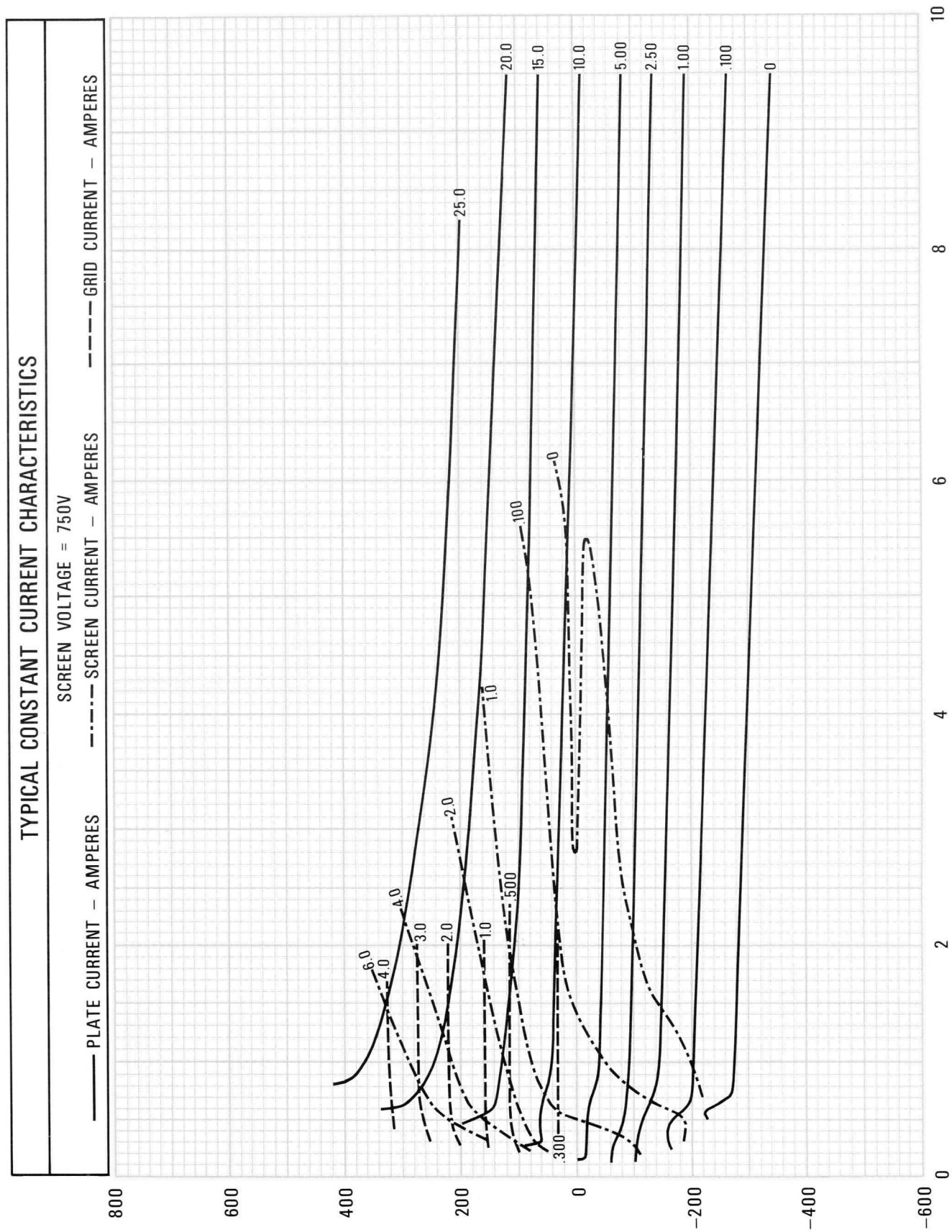
TYPICAL CONSTANT CURRENT CHARACTERISTICS
SCREEN VOLTAGE = 750V
PLATE CURRENT – AMPERES
SCREEN CURRENT – AMPERES
GRID CURRENT – AMPERES
GRID VOLTAGE (V)
800
600
400
200
0
-200
-400
-600
0
2
4
6
8
10
PLATE VOLTAGE (kV)
CURVE #2220
6.0
4.0
3.0
2.0
1.0
.500
.300
25.0
20.0
15.0
10.0
5.00
2.50
1.00
.100
0

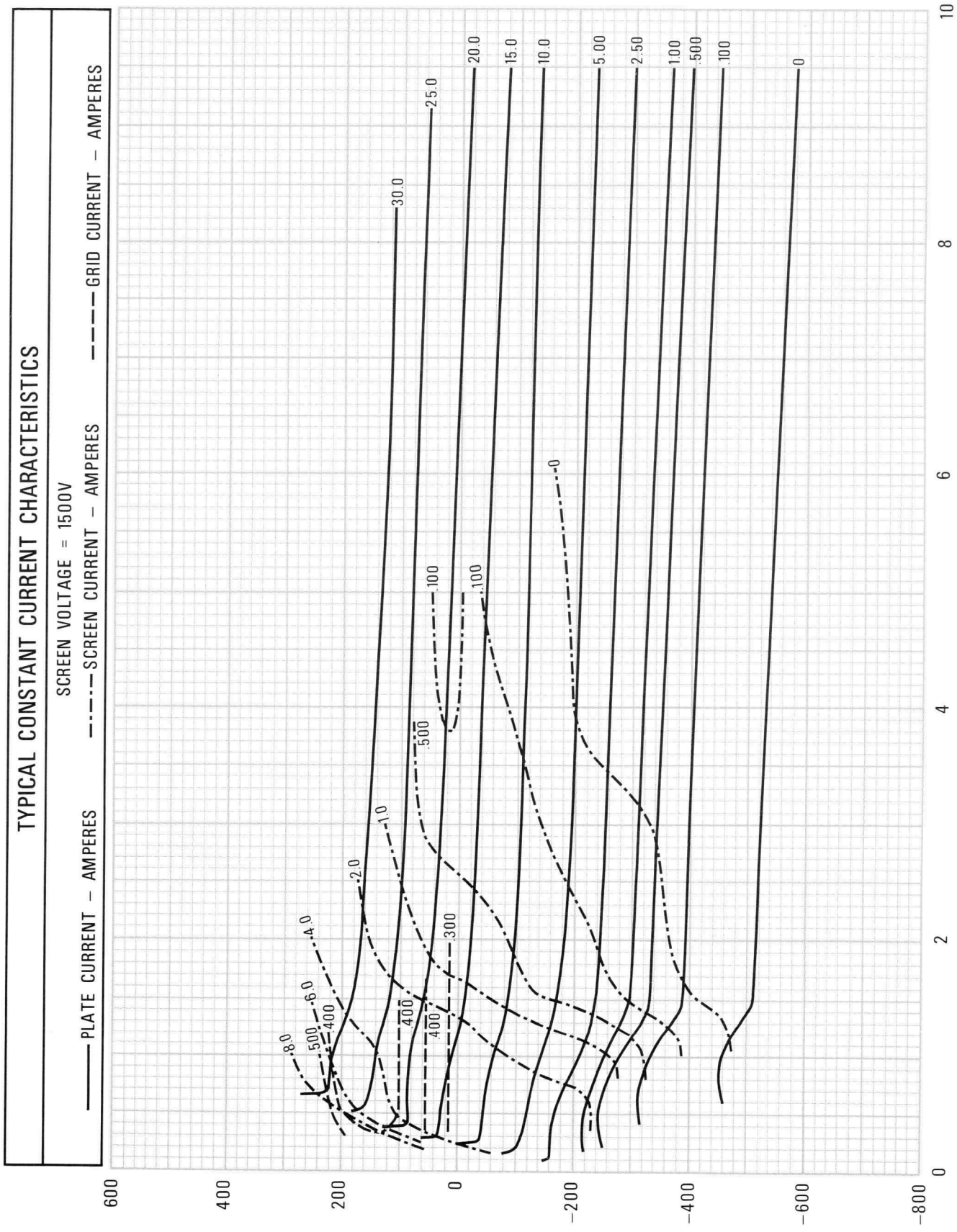
TYPICAL CONSTANT CURRENT CHARACTERISTICS
SCREEN VOLTAGE = 1500V
PLATE CURRENT – AMPERES
SCREEN CURRENT – AMPERES
GRID CURRENT – AMPERES
GRID VOLTAGE (V)
PLATE VOLTAGE (kV)
CURVE #2223
600
400
200
0
-200
-400
-600
-800
0
2
4
6
8
10
30.0
25.0
20.0
15.0
10.0
5.00
2.50
1.00
.500
.100
0
8.0
6.0
4.0
2.0
1.0
500
400
300
100

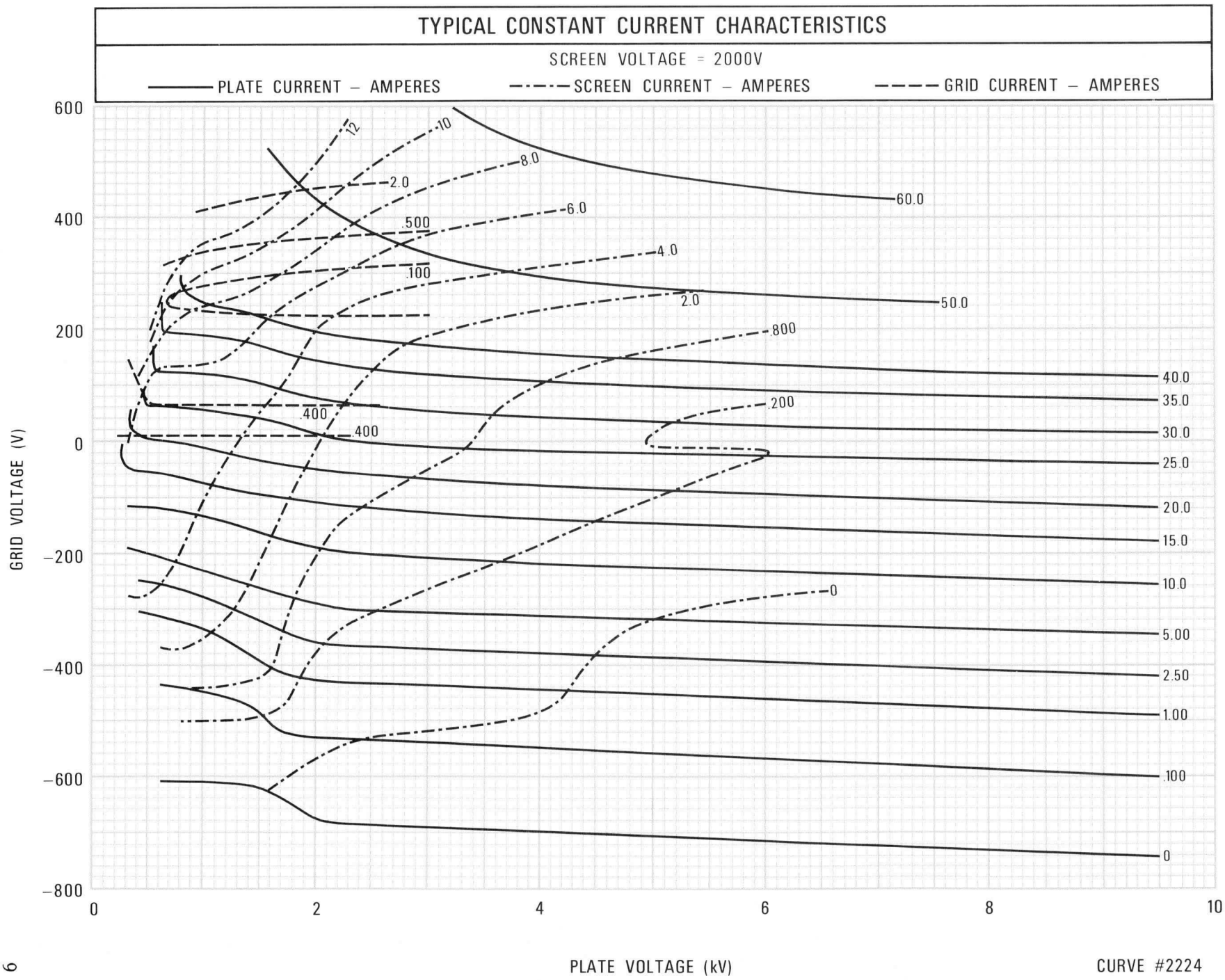
TYPICAL CONSTANT CURRENT CHARACTERISTICS
SCREEN VOLTAGE = 2000V
PLATE CURRENT – AMPERES
SCREEN CURRENT – AMPERES
GRID CURRENT – AMPERES
GRID VOLTAGE (V)
600
400
200
0
−200
−400
−600
−800
0
2
4
6
8
10
PLATE VOLTAGE (kV)
12
10
8.0
6.0
4.0
2.0
.500
.100
.400
.400
.800
.200
0
60.0
50.0
40.0
35.0
30.0
25.0
20.0
15.0
10.0
5.00
2.50
1.00
.100
0

CURVE #2224

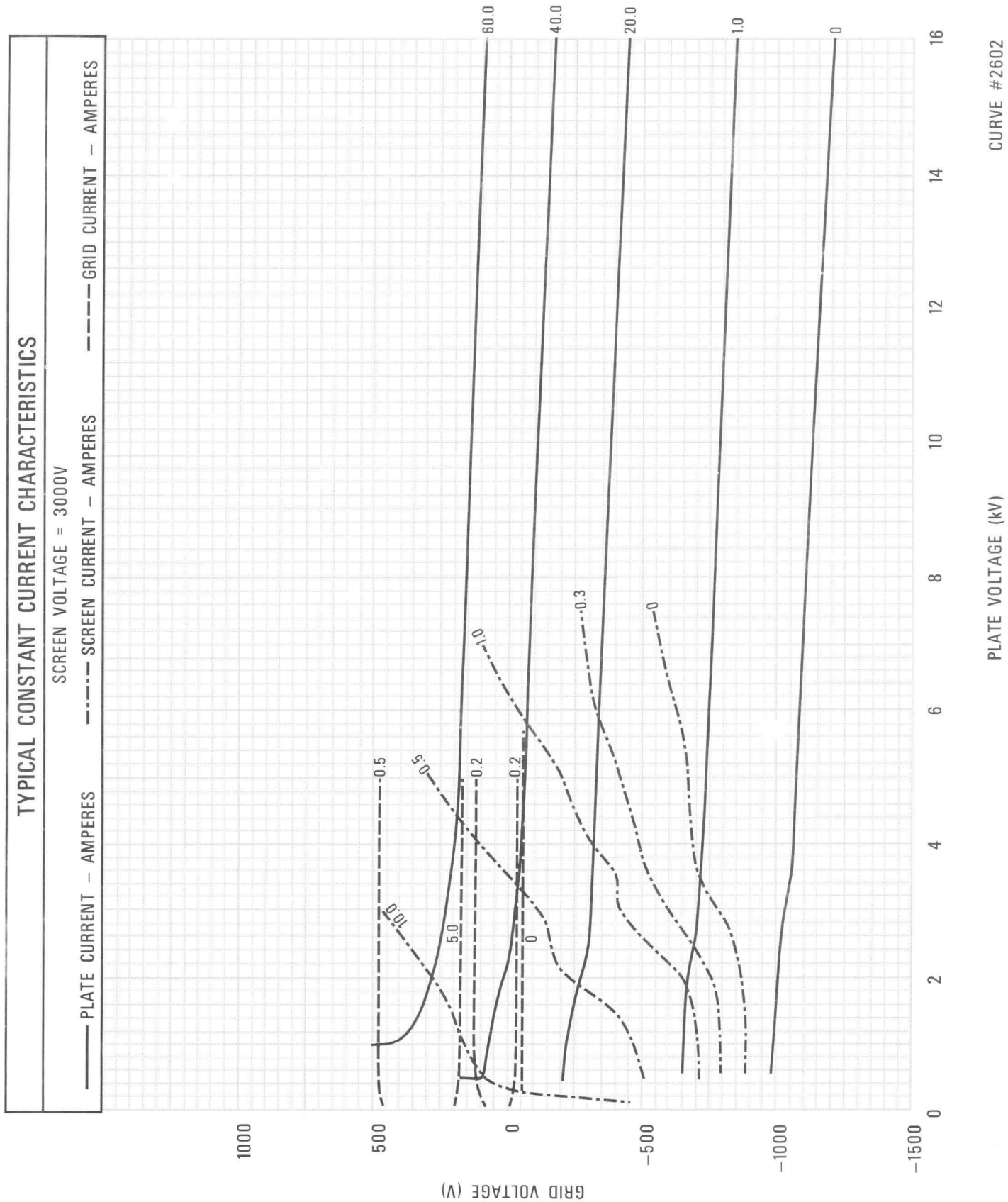
TYPICAL CONSTANT CURRENT CHARACTERISTICS
SCREEN VOLTAGE = 3000V
PLATE CURRENT – AMPERES
SCREEN CURRENT – AMPERES
GRID CURRENT – AMPERES
GRID VOLTAGE (V)
1000
500
0
–500
–1000
–1500
PLATE VOLTAGE (kV)
0
2
4
6
8
10
12
14
16
60.0
40.0
20.0
1.0
0
10.0
5.0
0.5
0.2
0.3
CURVE #2602

EIMAC
Division of Varian
SAN CARLOS
CALIFORNIA

4CW50,000E

WATER COOLED POWER TETRODE

The EIMAC 4CW50,000E is a ceramic/metal, liquid-cooled power tetrode intended for use at the 50 to 100 kilowatt output power level. This tube is characterized by low input and feedback capacitances and low internal lead inductances. A rugged mesh thoriated tungsten filament provides adequate emission over the long operating life. It is recommended for use as a Class C rf amplifier or oscillator, a Class AB rf linear amplifier or a Class AB push-pull af amplifier or modulator. The 4CW50,000E is also useful as a plate and screen modulated Class C rf amplifier. The liquid-cooled anode is rated at 50 kilowatts plate dissipation.



Shown with SK-2050 water jacket removed.

GENERAL CHARACTERISTICS[1]

ELECTRICAL

Filament: Mesh Thoriated Tungsten		
Voltage	12.0 ± 0.6	V
Current, at 12.0 volts	220	A
Amplification Factor (Average);		
Grid to Screen	4.5	
Direct Interelectrode Capacitances (grounded cathode)		
Input	310	pF
Output	53	pF
Feedback	0.7	pF
Frequency of Maximum Rating:		
CW	110	MHz

1. Characteristics and operating values are based upon performance tests. These figures may change without notice as the result of additional data or product refinement. EIMAC Division of Varian should be consulted before using this information for final equipment design.

MECHANICAL

Maximum Overall Dimensions:	
Length (with water jacket)	12.75 in; (324 mm)
Diameter	9.53 in; (242 mm)
Net Weight (less water jacket)	35 lb; (15.9 kg)
Operating Position	Vertical, base up or down
Maximum Operating Temperature:	
Ceramic/Metal Seals and terminals	250°C
Cooling	Liquid and Forced air
Base	Special
Recommended Socket	EIMAC SK-2000 Series
Recommended Water Jacket	EIMAC SK-2050

(Effective 7-1-70) © 1970 Varian Printed in U.S.A.

RADIO FREQUENCY LINEAR AMPLIFIER GRID DRIVEN

Class AB

ABSOLUTE MAXIMUM RATINGS:

DC PLATE VOLTAGE	17,500	VOLTS
DC SCREEN VOLTAGE	2,500	VOLTS
DC PLATE CURRENT	12.0	AMPERES
PLATE DISSIPATION	50,000	WATTS
SCREEN DISSIPATION	1,500	WATTS
GRID DISSIPATION	400	WATTS

1. Adjust to specified zero-signal dc plate current.
2. Approximate value.

TYPICAL OPERATION (Frequencies to 30 MHz)
Class AB_1, Grid Driven, Peak Envelope or Modulation Crest Conditions.

Plate Voltage	10.0	kVdc
Screen Voltage	1.8	kVdc
Grid Voltage [1]	-260	Vdc
Zero-Signal Plate Current	3.4	Adc
Single Tone Plate Current	9.14	Adc
Peak rf Grid Voltage 2	230	v
Resonant Load Impedance	600	Ω
Plate Dissipation	35	kW
Plate Output Power	57	kW

RADIO FREQUENCY POWER AMPLIFIER OR OSCILLATOR

Class C Telegraphy or FM Telephony
(Key-Down Conditions)

ABSOLUTE MAXIMUM RATINGS:

DC PLATE VOLTAGE	17,500	VOLTS
DC SCREEN VOLTAGE	2,500	VOLTS
DC PLATE CURRENT	12.0	AMPERES
PLATE DISSIPATION	50,000	WATTS
SCREEN DISSIPATION	1,500	WATTS
GRID DISSIPATION	400	WATTS

TYPICAL OPERATION (Frequencies to 30 MHz)

Plate Voltage	15.0	15.0	kVdc
Screen Voltage	1.5	1.5	kVdc
Grid Voltage	-800	-800	Vdc
Plate Current	9.0	11.5	Adc
Screen Current [1]	0.9	0.83	Adc
Grid Current [1]	125	160	mAdc
Peak rf Grid Voltage [1]	880	925	v
Calculated Driving Power [1]	110	150	W
Plate Dissipation	25	36	kW
Plate Output Power	110	137	kW
Resonant Load Impedance	820	615	Ω

1. Approximate value

PLATE MODULATED RADIO FREQUENCY POWER AMPLIFIER-GRID DRIVEN

Class C Telephony (Carrier Conditions)

ABSOLUTE MAXIMUM RATINGS:

DC PLATE VOLTAGE	15,000	VOLTS
DC SCREEN VOLTAGE	2,000	VOLTS
DC PLATE CURRENT	12.0	AMPERES
PLATE DISSIPATION [1]	33,000	WATTS
SCREEN DISSIPATION [2]	1,500	WATTS
GRID DISSIPATION [2]	400	WATTS

1. Corresponds to 50,000 watts at 100% sine-wave modulation.
2. Average, with or without modulation.

TYPICAL OPERATION (Frequencies to 30 MHz)

Plate Voltage	9.0	14.0	kVdc
Screen Voltage	750	750	Vdc
Grid Voltage	-600	-600	Vdc
Plate Current	7.41	9.25	Adc
Screen Current [3]	0.69	1.15	Adc
Grid Current	0.333	0.833	Adc
Peak af Screen Voltage 3 (100% modulation)	750	750	v
Peak rf Grid Voltage 3	750	820	v
Calculated Driving Power	250	685	W
Plate Dissipation	12.5	21.5	kW
Plate Output Power	54.2	110	kW

3. Approximate value.

AUDIO FREQUENCY POWER AMPLIFIER OR MODULATOR

Class AB_1, Grid Driven (Sinusoidal Wave)

ABSOLUTE MAXIMUM RATINGS (Per Tube)

DC PLATE VOLTAGE	17,500	VOLTS
DC SCREEN VOLTAGE	2,500	VOLTS
DC PLATE CURRENT	12.0	AMPERES
PLATE DISSIPATION	50,000	WATTS
SCREEN DISSIPATION	1,500	WATTS
GRID DISSIPATION	400	WATTS

TYPICAL OPERATION (Two Tubes)

Plate Voltage	15.0	kVdc
Screen Voltage	1.25	kVdc
Grid Voltage [1/3]	-280	Vdc
Zero-Signal Plate Current	5.0	Adc
Max. Signal Plate Current	18.6	Adc
Max. Signal Screen Current [1]	0.6	Adc
Peak af Grid Voltage 2	275	v
Peak Driving Power	0	w
Max. Signal Plate Dissipation 2	41.7	kW
Plate Output Power	195	kW
Load Resistance (plate to plate)	1870	Ω

1. Approximate value.
2. Per tube.
3. Adjust to give stated zero-signal plate current.

NOTE: TYPICAL OPERATION data are obtained from direct measurement or by calculation from published characteristic curves. Adjustment of the rf grid voltage to obtain the specified plate current at the specified bias, screen and plate voltages is assumed. If this procedure is followed, there will be little variation in output power when the tube is changed, even though there may be some variation in grid and screen current. The grid and screen currents which result when the desired plate current is obtained are incidental and vary from tube to tube. These current variations cause no difficulty so long as the circuit maintains the correct voltage in the presence of the variations in current. In the case of Class C Service, if grid bias is obtained principally by means of a grid resistor, the resistor must be adjustable to obtain the required bias voltage when the correct rf grid voltage is applied.

RANGE VALUES FOR EQUIPMENT DESIGN	Min.	Max.	
Filament: Current at 12.0 volts	200	230	A
Interelectrode Capacitances (grounded cathode connection)			
Input	290	330	pF
Output	45	58	pF
Feedback	---	1.0	pF
Interelectrode Capacitances (grounded grid connection)			
Input	130	150	pF
Output	47	57	pF
Feedback	---	0.5	pF

APPLICATION

MECHANICAL

MOUNTING - The 4CW50,000E must be operated with its axis vertical. The base of the tube may be up or down at the convenience of the circuit designer.

SOCKET - The EIMAC socket type SK-2000 is recommended for use with the 4CW50,000E.

COOLING - Anode cooling is accomplished by circulating water through the SK-2050 water jacket. The table below lists minimum cooling water requirements at various dissipation levels.

Plate Dissipation* (kilowatts)	Water Flow (GPM)	Pressure Drop (PSI)
10	3.0	2.0
20	5.0	3.0
30	6.5	4.0
40	8.5	5.2
50	10.5	6.5

*Since the power dissipated by the filament represents about 2500 watts and since grid-plus-screen dissipation can, under some conditions, represent another 1900 watts, allowance has been made in preparing this tabulation for an additional 4400 watts dissipation.

The cooling table above assumes a water temperature rise of 20°C. Under no circumstances should the outlet water temperature exceed 70°C. Inlet water pressure should not exceed 100 psi.

A major factor affecting long life of water cooled tubes is the condition of the cooling water. If the cooling water is ionized, deposits of copper oxide will form on the internal parts of the water jacket and can cause localized heating of the anode and eventual failure of the tube.

A simple method of determining the condition of the water is to measure the resistance across a known volume. The resistance of the water should be maintained above 50 K ohms/cm^3, and preferably above 250 K ohms/cm^3. A relative water resistance check can be made continuously by measuring the leakage current which will bypass a short section of the insulating hose column if metal nipples or fittings are used as electrodes.

Separate cooling of the tube base is required and is accomplished by directing approximately 200 cfm of air through the socket.

ELECTRICAL

FILAMENT OPERATION - Filament voltage should be measured at the socket with a 1 percent rms responding meter. The peak emission at rated filament voltage of the EIMAC 4CW50,000E is normally many times the peak emission required for communication service. A small decrease in filament temperature due to reduction of filament voltage can increase the life of the 4CW50,000E by a substantial percentage. It is good practice to determine the nominal filament voltage for a particular application that will not adversely affect equipment operation. This is

done by measuring some important parameter of performance such as plate current, power output, or distortion while filament voltage is reduced on the 4CW50,000E. At some point in filament voltage there will be noticeable reduction in plate current, or power output, or an increase in distortion. Operation must be at a filament voltage slightly higher than the point at which performance appears to deteriorate. This point should be periodically checked to maintain proper operation.

GRID OPERATION - The 4CW50,000E control grid is rated at 400 watts of dissipation. Grid dissipation is the approximate product of grid current and peak positive grid voltage.

SCREEN DISSIPATION - The power dissipated by the screen grid must not exceed 1500 watts. Where no ac is applied to the screen, dissipation is the product of dc screen voltage and dc screen current. With screen modulation the dissipation is dependent on rms screen voltage, and rms screen current. Plate voltage, plate load or bias voltage must never be removed while filament and screen voltages are present since the screen dissipation rating will be exceeded. Suitable protective means must be provided to prevent any of these conditions.

The 4CW50,000E may exhibit reversed screen current to a greater or lesser degree depending on operating conditions. The screen supply voltage must be maintained constant for any values of negative and positive screen current which may be encountered. Dangerously high plate current may flow if the screen power supply exhibits a rising voltage characteristic with negative screen current. Stabilization may be accomplished with a bleeder resistor connected from screen to cathode, or an electron-tube regulator circuit may be employed in the screen supply. It is absolutely essential to use a bleeder if a series electron-tube regulator is employed.

PLATE DISSIPATION - The plate dissipation of 50 kilowatts attainable through water cooling provides a large margin of safety in most applications. The rating may be exceeded for brief periods during tuning. When the 4CW50,000E is used as a plate-modulated rf amplifier, plate dissipation under carrier conditions is limited to 33,300 watts.

STANDBY OPERATION - Coolant must be circulated through the anode water jacket whenever filament power is applied even though no other voltages are present. Sixty to eighty percent of the filament power appears as heat in the anode. In the absence of coolant, flow temperatures will rise to levels which are detrimental to long life. If the coolant lines are obstructed the coolant jacket may rupture from the generated steam pressure.

HIGH VOLTAGE - Normal operating voltages used with the 4CW50,000E are deadly, and the equipment must be designed properly and operating precautions must be followed. Design all equipment so that no one can come in contact with high voltages. All equipment must include safety enclosures for high-voltage circuits and terminals, with interlock switches to open primary circuits of the power supply and to discharge high-voltage condensers whenever access doors are opened. Interlock switches must not be bypassed or "cheated" to allow operation with access doors open. Always remember that HIGH VOLTAGE CAN KILL.

X-RADIATION - High-vacuum tubes operating at voltages higher than 10 kilovolts produce progressively more dangerous X-ray radiation as the voltage is increased. The 4CW50,000E, operating at its rated voltages and currents, is a potential X-ray hazard. Only limited shielding is afforded by the tube envelope. Moreover, the X-ray radiation level can increase significantly with aging and gradual deterioration, due to leakage paths or emission characteristics as they are affected by the high voltage. X-ray shielding must be provided on all sides of tubes operating at these voltages to provide adequate protection throughout the tube's life. Periodic checks on the X-ray level should be made, and the tube should never be operated without adequate shielding in place when voltages above 10 kilovolts are in use. Lead glass, which attenuates X-rays, is available for viewing windows. If there is any doubt as to the requirement for or the adequacy of shielding, an expert in this field should be contacted to perform an X-ray survey of the equipment.

Operation of high-voltage equipment with interlock switches "cheated" and cabinet doors open in order to be better able to locate an equipment malfunction can result in serious X-ray exposure.

RADIO FREQUENCY RADIATION - Avoid exposure to strong rf fields even at relatively low frequency. Absorption of rf energy by human tissue is dependent on frequency. Under 30 MHz, most of the energy will pass completely through the human body with little attenuation or heating effect. Public health agencies are concerned with the hazard, however, even at these frequencies, and it is worth noting that some commercial dielectric heating units actually operate at frequencies as low as the 13 and 27 MHz bands.

Many EIMAC power tubes, such as the 4CW-50,000E, are specifically designed to generate or amplify radio frequency power. There may be a relatively strong rf field in the general proximity of the power tube and its associated circuitry --- the more power involved, the stronger the rf field. Proper enclosure design and efficient coupling of rf energy to the load will minimize the rf field in the vicinity of the power amplifier unit itself.

FAULT PROTECTION - In addition to normal plate over-current interlock, screen current interlock, and coolant flow interlock, it is good practice to protect the tube from internal damage which could result from occasional plate arcing at high anode voltage.

In all cases some protective resistance, 5 ohms to 25 ohms, should be used in series with each tube anode to absorb power supply stored energy in case a plate arc should occur. If power supply stored energy exceeds 750 watt seconds, we strongly recommend use of some form of electronic crowbar which will discharge power supply capacitors in a few microseconds following indication of start of a plate arc.

SPECIAL APPLICATION - Where it is desired to operate this tube under conditions widely different from those listed here, write to Power Grid Tube Division, EIMAC Division of Varian, 301 Industrial Way, San Carlos, California 94070 for information and recommendations.

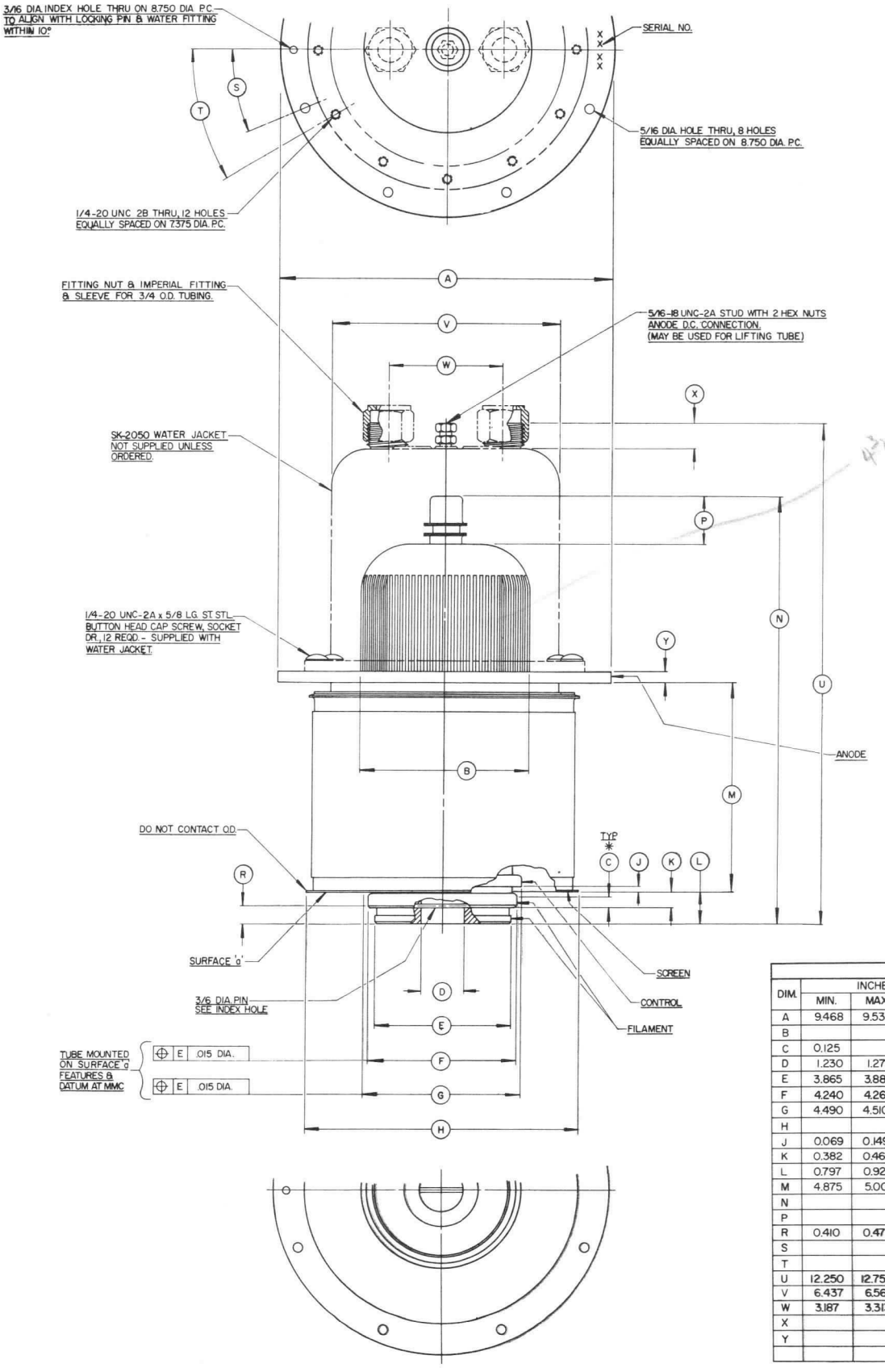

DIM.	DIMENSIONAL DATA					
	INCHES			MILLIMETERS		
	MIN.	MAX.	REF	MIN.	MAX.	REF
A	9.468	9.531		240.49	242.09	
B			5.000			127.00
C	0.125			3.18		
D	1.230	1.270		31.24	32.26	
E	3.865	3.885		98.17	98.68	
F	4.240	4.260		107.70	108.20	
G	4.490	4.510		114.05	114.55	
H			7.750			196.85
J	0.069	0.149		1.75	3.78	
K	0.382	0.462		9.70	11.73	
L	0.797	0.922		20.24	23.42	
M	4.875	5.000		123.83	127.00	
N			11.500			292.10
P			1.437			36.50
R	0.410	0.475		10.41	12.07	
S			22.5°			22.5°
T			30°			30°
U	12.250	12.750		311.15	323.85	
V	6.437	6.562		163.50	166.67	
W	3.187	3.313		80.95	84.15	
X			0.562			14.27
Y			0.312			7.92

NOTES:
1. REF DIMENSIONS ARE FOR INFO. ONLY & ARE NOT REQUIRED FOR INSPECTION PURPOSES.

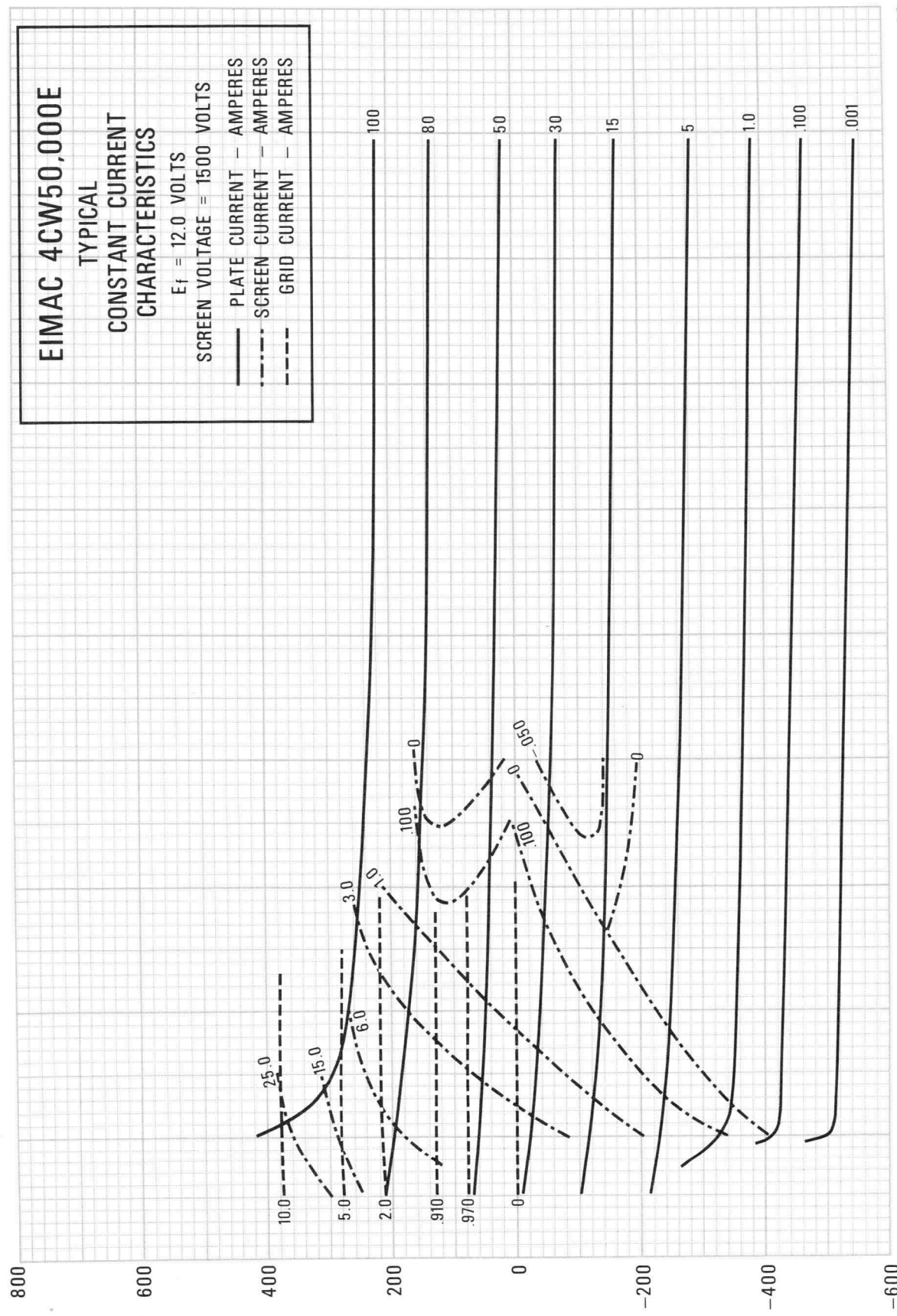
EIMAC 4CW50,000E
TYPICAL
CONSTANT CURRENT
CHARACTERISTICS
Ef = 12.0 VOLTS
SCREEN VOLTAGE = 1500 VOLTS
PLATE CURRENT – AMPERES
SCREEN CURRENT – AMPERES
GRID CURRENT – AMPERES
100
80
50
30
15
5
1.0
.100
.001
25.0
15.0
10.0
6.0
5.0
3.0
2.0
1.0
.910
.970
0
.100
.050
800
600
400
200
0
−200
−400
−600
0
2
4
6
8
10
12
14
16
18
20
GRID VOLTAGE (V)
PLATE VOLTAGE (KV)

CURVE #3993

4CW50,000J

TECHNICAL DATA

WATER COOLED
POWER TETRODE

The EIMAC 4CW50,000J is a ceramic/metal, liquid-cooled power tetrode intended for use at the 50 to 100 kilowatt output power level. This tube is characterized by low input and feedback capacitances and low internal lead inductances. A rugged mesh thoriated tungsten filament provides adequate emission over the long operating life. It is recommended for use as a Class AB_1 rf linear amplifier. The liquid-cooled anode is rated at 50 kilowatts plate dissipation.



Shown with SK-2050 Jacket
(order separately)

GENERAL CHARACTERISTICS[1]

ELECTRICAL

Filament: Mesh Thoriated Tungsten	
Voltage	12.0 ± 0.6 V
Current, at 12.0 volts	220 A
Amplification Factor (Average):	
Grid to Screen	4.5
Direct Interelectrode Capacitances (grounded cathode):	
Cin	310 pF
Cout	48 pF
Cgp	1.0 pF
Frequency of Maximum Rating:	
CW	110 MHz

1. Characteristics and operating values are based upon performance tests. These figures may change without notice as the result of additional data or product refinement. EIMAC Division of Varian should be consulted before using this information for final equipment design.

MECHANICAL

Maximum Overall Dimensions:	
Length (with water jacket)	12.75 in; 324 mm
Diameter	9.53 in; 242 mm
Net Weight (less water jacket)	35 lb; 15.9 kg
Operating Position	Vertical, base up or down
Maximum Operating Temperature:	
Ceramic/Metal Seals and terminals	250°C
Cooling	Liquid and Forced Air
Base	Special
Recommended Socket	EIMAC SK-2000 Series
Recommended Water Jacket	EIMAC SK-2050

(Effective 7-15-71) © 1971 Varian Printed in U.S.A.

RADIO FREQUENCY LINEAR AMPLIFIER
GRID DRIVEN Class AB

ABSOLUTE MAXIMUM RATINGS:

DC PLATE VOLTAGE	17,500	VOLTS
DC SCREEN VOLTAGE	2,500	VOLTS
DC PLATE CURRENT	12.0	AMPERES
PLATE DISSIPATION	50,000	WATTS
SCREEN DISSIPATION	1,500	WATTS
GRID DISSIPATION	400	WATTS

1. Adjust to specified zero-signal dc plate current.
2. Approximate value.
3. The IMD products are referenced against one tone of a two-equal tone signal.

TYPICAL OPERATION (Frequencies to 30 MHz)
Class AB1, Grid Driven
Peak Envelope or Modulation Crest Conditions

Plate Voltage	8.3	kVdc
Screen Voltage	1.5	kVdc
Grid Voltage [1]	-250	Vdc
Zero-Signal Plate Current	3.6	Adc
Single-Tone Plate Current	9.8	Adc
Peak rf Grid Voltage[2]	250	v
Resonant Load Impedance	413	Ω
Plate Dissipation	35	kW
Plate Output Power	45	kW
Intermod. Distortion Products [3]		
3rd Order	-46	dB
5th Order	-60	dB

NOTE: TYPICAL OPERATION data are obtained from direct measurement or by calculation from published characteristic curves. Adjustment of the rf grid voltage to obtain the specified plate current at the specified bias, screen and plate voltages is assumed. If this procedure is followed, there will be little variation in output power when the tube is changed, even though there may be some variation in grid and screen current. The grid and screen currents which result when the desired plate current is obtained are incidental and vary from tube to tube. These current variations cause no difficulty so long as the circuit maintains the correct voltage in the presence of the variations in current.

RANGE VALUES FOR EQUIPMENT DESIGN

	Min.	Max.	
Filament: Current at 12.0 volts	200	230	A
Interlectrode Capacitances (grounded cathode connection)			
Cin	290	330	pF
Cout	42.0	53.0	pF
Cgp	---	1.5	pF
Interelectrode Capacitances (grounded grid connection)			
Cin	113	137	pF
Cout	45.0	55.0	pF
Cgk	---	0.5	pF

APPLICATION

MECHANICAL

MOUNTING - The 4CW50,000J must be operated with its axis vertical. The base of the tube may be up or down at the convenience of the circuit designer.

SOCKET - The EIMAC socket type SK-2000 is recommended for use with the 4CW50,000J.

COOLING - Anode cooling is accomplished by circulating water through the SK-2050 water jacket. The table below lists minimum cooling water requirements at various dissipation levels.

Plate Dissipation* (kilowatts)	Water Flow (GPM)	Pressure Drop (PSI)
10	3.0	2.0
20	5.0	3.0
30	6.5	4.0
40	8.5	5.2
50	10.5	6.5

*Since the power dissipated by the filament represents about 2500 watts and since grid-plus-screen dissipation can, under some conditions, represent another 1900 watts, allowance has been made in preparing this tabulation for an additional 4400 watts dissipation.

The cooling table above assumes a water temperature rise of 20°C. Under no circumstances should the outlet water temperature exceed 70°C. Inlet water pressure should not exceed 100 psi.

A major factor affecting long life of water cooled tubes is the condition of the cooling water. If the cooling water is ionized, deposits of copper oxide will form on the internal parts of the water jacket and can cause localized heating of the anode and eventual failure of the tube.

A simple method of determining the condition of the water is to measure the resistance across a known volume. The resistance of the water should be maintained above 50 K ohms/cm^3, and preferably above 250 K ohms/cm^3. A relative water resistance check can be made continuously by measuring the leakage current which will bypass a short section of the insulating hose column if metal nipples or fittings are used as electrodes.

Separate cooling of the tube base is required and is accomplished by directing approximately 200 cfm of air through the socket.

ELECTRICAL

FILAMENT OPERATION - Filament voltage should be measured at the socket with a 1 percent rms responding meter. The peak emission at rated filament voltage of the EIMAC 4CW50,000J is normally many times the peak emission required for communication service. A small decrease in filament temperature due to reduction of filament voltage can increase the life of the 4CW50,000J by a substantial percentage. It is good practice to determine the nominal filament voltage for a particular application that will not adversely affect equipment operation. This is done by measuring some important parameter of performance such as plate current, power output, or distortion while filament voltage is reduced on the 4CW50,000J. At some point in filament voltage there will be noticeable reduction in plate current, or power output, or an increase in distortion. Operation must be at a filament voltage slightly higher than the point at which performance appears to deteriorate. This point should be periodically checked to maintain proper operation.

GRID OPERATION - The 4CW50,000J control grid is rated at 400 watts of dissipation. Grid dissipation is the approximate product of grid current and peak positive grid voltage.

SCREEN DISSIPATION - The power dissipated by the screen grid must not exceed 1500 watts. Where no ac is applied to the screen, dissipation is the product of dc screen voltage and dc screen current. With screen modulation the dissipation is dependent on rms screen voltage, and rms screen current. Plate voltage, plate load or bias voltage must never be removed while filament and screen voltages are present since the screen dissipation rating will be exceeded. Suitable protective means must be provided to prevent any of these conditions.

The 4CW50,000J may exhibit reversed screen current to a greater or lesser degree depending on operating conditions. The screen supply voltage must be maintained constant for any values of negative and positive screen current which may be encountered. Dangerously high plate current may flow if the screen power supply exhibits a rising voltage characteristic with negative screen current. Stabilization may be accomplished with a bleeder resistor connected from screen to cathode, or an electron-tube regulator circuit may be employed in the screen supply. It is absolutely essential to use a bleeder if a series electron-tube regulator is employed.

PLATE DISSIPATION - The plate dissipation of 50 kilowatts attainable through water cooling provides a large margin of safety in most applications. The rating may be exceeded for brief periods during tuning. When the 4CW50,000J is used as a plate-modulated rf amplifier, plate dissipation under carrier conditions is limited to 33,300 watts.

STANDBY OPERATION - Coolant must be circulated through the anode water jacket whenever filament power is applied even though no other voltages are present. Sixty to eighty percent of the filament power appears as heat in the anode. In the absence of coolant flow, temperatures will rise to levels which are detrimental to long life. If the coolant lines are obstructed the coolant jacket may rupture from the generated steam pressure.

HIGH VOLTAGE - Normal operating voltages used with the 4CW50,000J are deadly, and the equipment must be designed properly and operating precautions must be followed. Design all equipment so that no one can come in contact with high voltages. All equipment must include safety enclosures for high-voltage circuits and terminals, with interlock switches to open primary circuits of the power supply and to discharge high-voltage condensers whenever access doors are opened. Interlock switches must not be bypassed or "cheated" to allow operation with access doors open. Always remember that HIGH VOLTAGE CAN KILL.

X-RADIATION - High-vacuum tubes operating at voltages higher that 10 kilovolts produce progressively more dangerous X-ray radiation as the voltage is increased. The 4CW50,000J, operating at its rated voltages and currents, is a potential X-ray hazard. Only limited shielding is afforded by the tube envelope. Moreover, the X-ray radiation level can increase significantly with aging and gradual deterioration, due to leakage paths or emission characteristics as they are effected by the high voltage. X-ray shielding must be provided on all sides of tubes operating at these voltages to provide adequate protection throughout the tube's life. Periodic checks on the X-ray level should be made, and the tube should never be operated without adequate shielding in place when voltages above 10 kilovolts are in use. Lead glass, which attenuates X-rays, is available for viewing windows. If there is any doubt as to the requirement for or the adequacy of shielding, an expert in this field should be contacted to perform an X-ray survey of the equipment.

Operation of high-voltage equipment with interlock switches "cheated" and cabinet doors open in order to be better able to locate an equipment malfunction can result in serious X-ray exposure.

RADIO FREQUENCY RADIATION - Avoid exposure to strong rf fields even at relatively low frequency. Absorption of rf energy by human tissue is dependent on frequency. Under 30 MHz, most of the energy will pass completely through the human body with little attenuation or heating effect. Public health agencies are concerned with the hazard, however, even at these frequencies, and it is worth noting that some commercial dielectric heating units actually operate at frequencies as low as the 13 and 27 MHz bands.

Many EIMAC power tubes, such as the 4CW-50,000J, are specifically designed to generate or amplify radio frequency power. There may be a relatively strong rf field in the general proximity of the power tube and its associated circuitry --- the more power involved, the stronger the rf field. Proper enclosure design and efficient coupling of rf energy to the load will minimize the rf field in the vicinity of the power amplifier unit itself.

FAULT PROTECTION - In addition to normal plate over-current interlock, screen current interlock, and coolant flow interlock, it is good practice to protect the tube from internal damage which could result from occasional plate arcing at high anode voltage.

In all cases some protective resistance, 5 ohms to 25 ohms, should be used in series with each tube anode to absorb power supply stored energy in case a plate arc should occur. If power supply stored energy exceeds 750 watt seconds, we strongly recommend use of some form of electronic crowbar which will discharge power supply capacitors in a few microseconds following indication of start of a plate arc.

SPECIAL APPLICATION - Where it is desired to operate this tube under conditions widely different from those listed here, write to Power Grid Tube Division, EIMAC Division of Varian, 301 Industrial Way, San Carlos, California 94070 for information and recommendations.

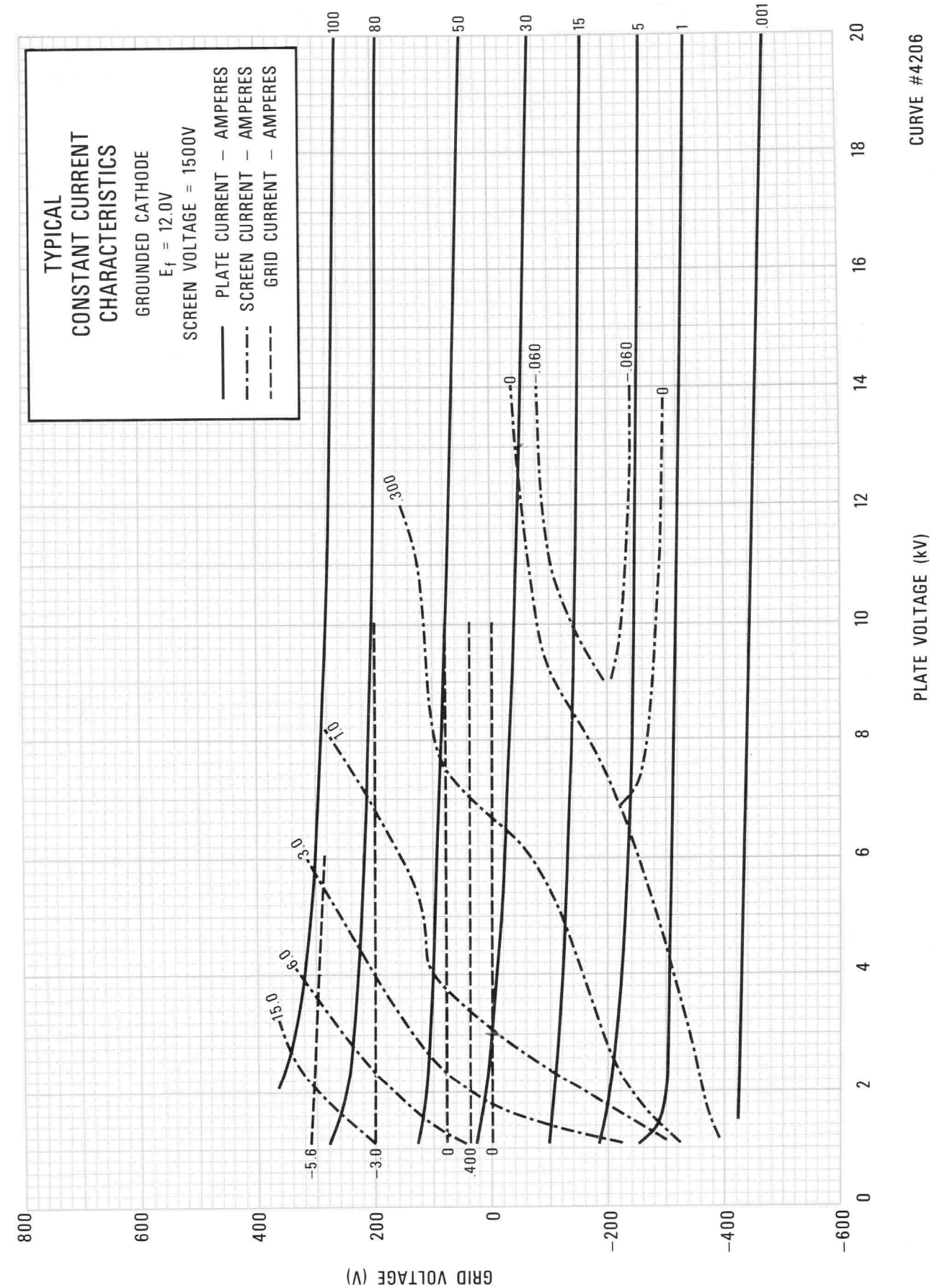
TYPICAL
CONSTANT CURRENT
CHARACTERISTICS
GROUNDED CATHODE
E_f = 12.0V
SCREEN VOLTAGE = 1500V
PLATE CURRENT – AMPERES
SCREEN CURRENT – AMPERES
GRID CURRENT – AMPERES
PLATE VOLTAGE (kV)
GRID VOLTAGE (V)
CURVE #4206
100
80
50
30
15
5
1
.001
.300
1.0
3.0
6.0
15.0
-5.6
-3.0
0
.400
0
-.060
-.060
0
0
2
4
6
8
10
12
14
16
18
20
800
600
400
200
0
-200
-400
-600

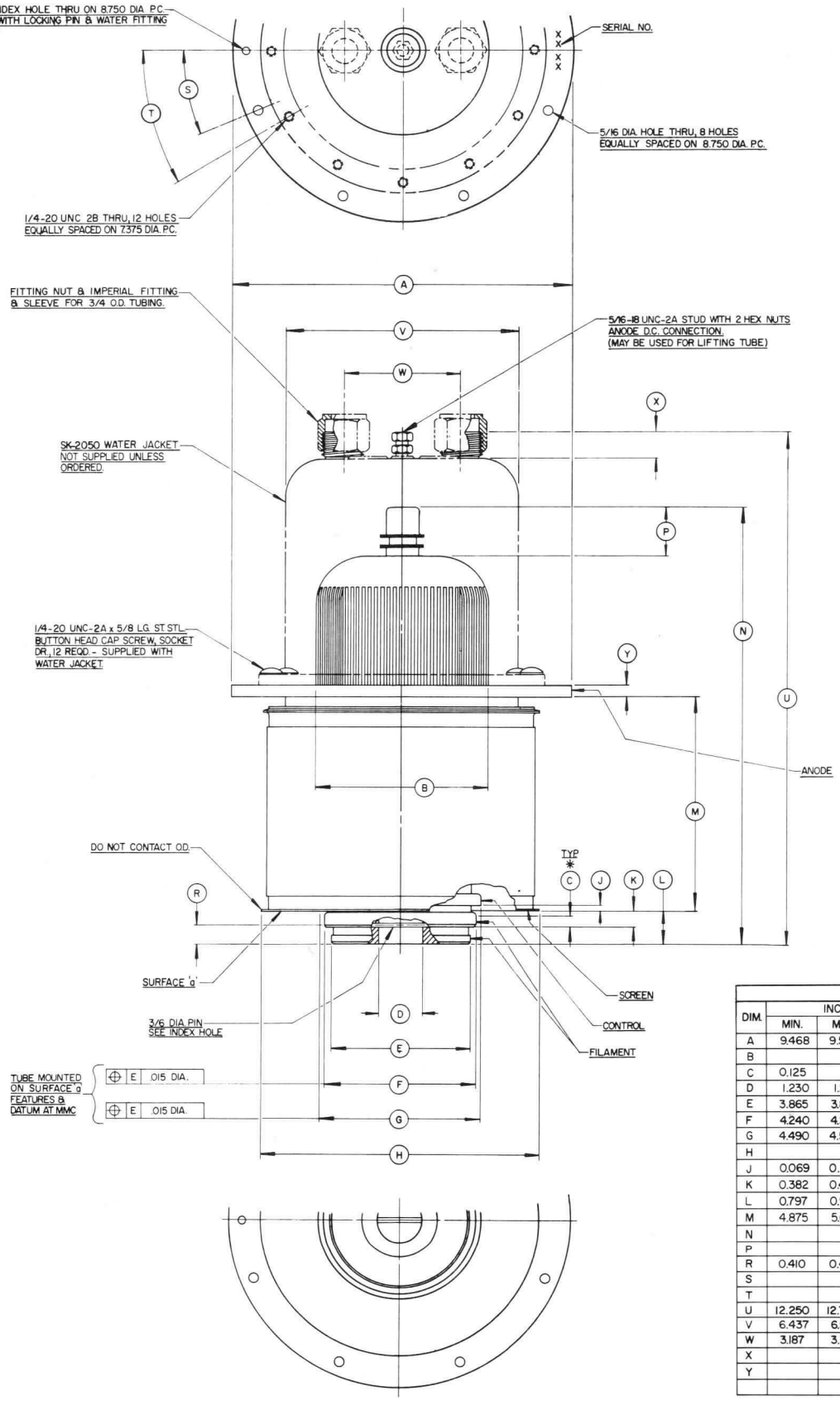

DIM.	DIMENSIONAL DATA					
	INCHES			MILLIMETERS		
	MIN.	MAX.	REF	MIN.	MAX.	REF
A	9.468	9.531		240.49	242.09	
B			5.000			127.00
C	0.125			3.18		
D	1.230	1.270		31.24	32.26	
E	3.865	3.885		98.17	98.68	
F	4.240	4.260		107.70	108.20	
G	4.490	4.510		114.05	114.55	
H			7.750			196.85
J	0.069	0.149		1.75	3.78	
K	0.382	0.462		9.70	11.73	
L	0.797	0.922		20.24	23.42	
M	4.875	5.000		123.83	127.00	
N			11.500			292.10
P			1.437			36.50
R	0.410	0.475		10.41	12.07	
S			22.5°			22.5°
T			30°			30°
U	12.250	12.750		311.15	323.85	
V	6.437	6.562		163.50	166.67	
W	3.187	3.313		80.95	84.15	
X			0.562			14.27
Y			0.312			7.92

NOTES:
1. REF DIMENSIONS ARE FOR INFO. ONLY & ARE NOT REQUIRED FOR INSPECTION PURPOSES.

4CW100,000D

TECHNICAL DATA

LIQUID COOLED
POWER TETRODE

The EIMAC 4CW100,000D is a ceramic/metal, liquid-cooled power tetrode intended for use at the 100 to 200 kilowatt output power level. It is recommended for use as a Class-C rf amplifier or oscillator, a Class-AB, rf linear amplifier or a Class-AB, push-pull af amplifier or modulator. The 4CW100,000D is also useful as a plate and screen modulated Class-C rf amplifier, and in pulse modulator-regulator service.

The liquid-cooled anode is rated at 100 kilowatts maximum plate dissipation.



GENERAL CHARACTERISTICS[1]

ELECTRICAL

Filament: Thoriated Tungsten		
Voltage	10.0	V
Current	295	A
Amplification Factor (Grid-Screen)(average)	4.5	
Interelectrode Capacitances, Grounded Cathode: [2]		
Cin	440	pF
Cout	55	pF
Cgp	2.4	pF
Interelectrode Capacitances, Grounded Grid: [2]		
Cin	175	pF
Cout	57	pF
Cpk	0.5	pF
Frequency for Maximum Ratings	30	MHz

1. Characteristics and operating values are based upon performance tests. These figures may change without notice as the result of additional data or product refinement. EIMAC Division of Varian should be consulted before using this information for final equipment design.

2. Capacitance values are for a cold tube as measured in a special shielded fixture in accordance with Electronic Industries Association Standard RS-191.

MECHANICAL

Base	Special, graduated rings
Maximum Seal Temperature	250°C
Maximum Envelope Temperature	250°C
Recommended Socket	EIMAC SK-1500 Series
Operating Position	Vertical, base up or down

(Effective 9-1-75) © 1967, 1975 by Varian Printed in U.S.A.

Maximum Dimensions:

Height	18.0 In.; 457.2 mm
Diameter	8.0 In.; 203.2 mm
Cooling	Liquid and forced air
Net Weight (Approximate)	60 lbs; 27.3 kg
Shipping Weight (Approximate)	85 lbs; 38.6 kg

RADIO-FREQUENCY POWER AMPLIFIER OR OSCILLATOR Class-C Telegraphy or FM

(Key-down conditions)

ABSOLUTE MAXIMUM RATINGS:

DC PLATE VOLTAGE	20,000	VOLTS
DC SCREEN VOLTAGE	2500	VOLTS
DC PLATE CURRENT	15.0	AMPERES
PLATE DISSIPATION	100,000	WATTS
SCREEN DISSIPATION	1750	WATTS
GRID DISSIPATION	500	WATTS

1. Calculated low frequency drive power.

TYPICAL OPERATION (Frequencies below 30 MHz)

Plate Voltage	15.0	17.0	19.0	kVdc
Screen Voltage	750	750	750	Vdc
Grid Voltage	-700	-700	-700	Vdc
Plate Current	9.0	9.8	10.6	Adc
Screen Current	1.6	1.67	1.83	Adc
Grid Current	0.8	1.0	1.12	Adc
Peak RF Grid Voltage	1000	1020	1040	v
Driving Power 1.	790	1020	1165	W
Plate Dissipation	24.0	30.0	35	kW
Plate Output Power	110	137.5	165	kW
Resonant Load Impedance	825	845	980	Ω

PLATE-MODULATED RADIO-FREQUENCY POWER AMPLIFIER-GRID DRIVEN

Class-C Telephony

(Carrier conditions except where noted)

ABSOLUTE MAXIMUM RATINGS:

DC PLATE VOLTAGE	17,500	VOLTS
DC SCREEN VOLTAGE	2000	VOLTS
DC PLATE CURRENT	15.0	AMPERES
PLATE DISSIPATION[1]	66,500	WATTS
SCREEN DISSIPATION[4]	1750	WATTS
GRID DISSIPATION[4]	500	WATTS

1. Corresponds to 100,000 watts at 100% sine wave modulation.
2. Approximate value, depends on degree of driver modulation.

TYPICAL OPERATION (Frequencies below 30 MHz)

Plate Voltage	14	16	kVdc
Screen Voltage	750	750	Vdc
Peak AF Screen Voltage (For 100% modulation)[2]	750	750	v
Grid Voltage	-700	-700	Vdc
Plate Current	9.1	12.0	Adc
Screen Current	2.0	1.75	Adc
Grid Current	1.0	1.20	Adc
Peak RF Grid Voltage	1000	1050	v
Grid Driving Power[3]	1000	1260	W
Plate Dissipation	20.4	54.0	kW
Plate Output Power	107	138.5	kW
Resonant Load Impedance	790	620	Ω

3. Calculated low frequency drive power.
4. Average, with or without modulation.

AUDIO-FREQUENCY AMPLIFIER OR MODULATOR

Class-AB

ABSOLUTE MAXIMUM RATINGS (per tube):

DC PLATE VOLTAGE	20,000	VOLTS
DC SCREEN VOLTAGE	2500	VOLTS
DC PLATE CURRENT.	15.0	AMPERES
PLATE DISSIPATION	100,000	WATTS
SCREEN DISSIPATION	1750	WATTS
GRID DISSIPATION	500	WATTS

1. Per Tube.
2. Approximate value.

TYPICAL OPERATION (Two Tubes) Class-AB1

Plate Voltage	15	18	kVdc
Screen Voltage	1.5	1.5	kVdc
Grid Voltage	-360	-380	Vdc
Max-Signal Plate Current	18.8	20.0	Adc
Zero-Signal Plate Current	6.0	6.0	Adc
Max-Signal Screen Current[2]	0.690	0.700	Adc
Peak AF Driving Voltage[1]	350	380	v
Driving Power	0	0	W
Load Resistance, Plate-to-Plate	1800	2080	Ω
Max-Signal Plate Dissipation[1]	47.3	56.8	kW
Max-Signal Plate Output Power	187.4	246.4	kW

RADIO-FREQUENCY LINEAR AMPLIFIER
Class-AB

ABSOLUTE MAXIMUM RATINGS:

DC PLATE VOLTAGE	20,000	VOLTS
DC SCREEN VOLTAGE	2500	VOLTS
DC PLATE CURRENT	15.0	AMPERES
PLATE DISSIPATION	100,000	WATTS
SCREEN DISSIPATION	1750	WATTS
GRID DISSIPATION	500	WATTS

1. Approximate value.

TYPICAL OPERATION, Peak-Envelope or Modulation-Crest Conditions, (Frequencies below 30 MHz)
Class-AB

Plate Voltage	15	18	kVdc
Screen Voltage	1.5	1.5	kVdc
Grid Voltage	-360	-380	Vdc
Max-Signal Plate Current	9.4	10.0	Adc
Zero-Signal Plate Current	3.0	3.0	Adc
Max-Signal Screen Current[1]	0.345	0.350	Adc
Peak RF Grid Voltage	350	380	v
Driving Power	0	0	W
Plate Dissipation	47.3	56.8	kW
Plate Output Power	93.7	123.2	kW
Resonant Load Impedance	900	1040	Ω

PULSE MODULATOR SERVICE

ABSOLUTE MAXIMUM RATINGS:

DC PLATE VOLTAGE	40	KILOVOLTS
DC SCREEN VOLTAGE	2.5	KILOVOLTS
DC GRID VOLTAGE	-2.0	KILOVOLTS
PEAK CATHODE CURRENT	200	AMPERES
PLATE DISSIPATION(average)	100	KILOWATTS
SCREEN DISSIPATION (average)	1750	WATTS
GRID DISSIPATION (average)	500	WATTS

1. Approximate value.
Note: The power dissipated during rise and fall time is considered negligible.

TYPICAL OPERATION

Plate Voltage	38	kVdc
Pulse Plate Current	112	a
Screen Voltage	1.5	kVdc
Pulse Screen Current [1]	18.0	a
Grid Voltage	-1.2	kVdc
Pulse Grid Current[1]	10.0	a
Pulse Positive Grid Voltage	480	v
Duty	5	%
Pulse Output Voltage	32	kv
Pulse Input Power	4.25	Mw
Pulse Output Power	3.58	Mw
Pulse Cathode Current	140	a

NOTE: TYPICAL OPERATION data are obtained from direct measurement or by calculation from published characteristic curves. Adjustment of the rf grid voltage to obtain the specified plate current at the specified bias, screen and plate voltages is assumed. If this procedure is followed, there will be little variation in output power when the tube is changed, even though there may be some variation in grid and screen current. The grid and screen currents which result when the desired plate current is obtained are incidental and vary from tube to tube. These current variations cause no difficulty so long as the circuit maintains the correct voltage in the presence of the variations in current. In the case of Class C Service, if grid bias is obtained principally by means of a grid resistor, the resistor must be adjustable to obtain the required bias voltage when the correct rf grid voltage is applied.

RANGE VALUES FOR EQUIPMENT DESIGN

	Min.	Max.	
Heater: Current at 10.0 volts	280	310	A
Interelectrode Capacitances (grounded cathode connection)[2]			
Cin	410	470	pF
Cout	50	60	pF
Cgp	1.5	3.2	pF

2. Capacitance values are for a cold tube as measured in a special shielded fixture in accordance with Electronic Industries Association Standard RS-191.

APPLICATION

MECHANICAL

MOUNTING - The 4CW100,000D must be operated with its axis vertical. The base of the tube may be up or down at the convenience of the circuit designer.

SOCKET - The EIMAC sockets, type SK-1500 and SK-1510 are recommended for use with the 4CW100,000D.

COOLING - Anode cooling is accomplished by circulating water through the integral anode water jacket. The table below lists minimum cooling water requirements at various dissipation levels.

Plate Dissipation * (kilowatts)	Water Flow (GPM)	Pressure Drop (PSI)
50	10	10
75	15	25
100	20	40

* Since the power dissipated by the filament represents about 3000 watts and since grid-plus-screen dissipation can, under some conditions, represent another 2250 watts, allowance has been made in preparing this tabulation for an additional 5250 watts dissipation.

The cooling table above assumes a water temperature rise of 20°C. Under no circumstances should the outlet water temperature exceed 70°C. Inlet water pressure should not exceed 80 PSI.

A major factor effecting long life of water cooled tubes is the condition of the cooling water. If the cooling water is ionized, deposits of copper oxide will form on the internal parts of the water jacket and can cause localized heating of the anode and eventual failure of the tube.

A simple method of determining the condition of the water is to measure the resistance across a known volume. The resistance of the water should be maintained above 50 K ohms/cm^3, and preferably above 250 K ohms/cm^3. A relative water resistance check can be made continuously by measuring the leakage current which will bypass a short section of the insulating hose column if metal nipples or fittings are used as electrodes.

Separate cooling of the tube base is required and is accomplished by directing approximately 120 cfm of air horizontally through the socket from the side. It is preferable to direct this air through three equally spaced ducts.

The well in the center of the baseplate of the tube is a critical area which requires cooling to maintain envelope temperatures less than 250°C. For most applications, 1 to 2 cfm of air directed through the center of the socket is sufficient for this purpose.

ELECTRICAL

FILAMENT OPERATION - The peak emission at rated filament voltage of the EIMAC 4CW100,000D is normally many times the peak emission required for communication service. A small decrease in filament temperature due to reduction of filament voltage can increase the life of the 4CW100,000D by a substantial percentage. It is good practice to determine the nominal filament voltage for a particular application that will not affect the operation of the equipment. This is done by measuring some important parameter of performance such as plate current, power output, or distortion while filament voltage is reduced on the 4CW100,000D. At some point in filament voltage there will be noticeable reduction in plate current, or power output, or an increase in distortion. Operation may be at a filament voltage slightly higher than that point at which performance appeared to deteriorate. This voltage should be measured at the socket with a 1% meter and periodically checked to maintain proper operation.

Filament starting current must be limited to a maximum of 900 amperes.

Voltage between filament and the base plates of the tube, and SK-1500 socket, must not exceed 100 volts.

CONTROL-GRID OPERATION - The 4CW-100,000D control grid is rated at 500 watts of dissipation. Grid dissipation is the approximate product of grid current and peak positive grid voltage.

SCREEN DISSIPATION - The power dissipated by the screen grid must not exceed 1750 watts.

Where no ac is applied to the screen, dissipation is the product of dc screen voltage and dc screen current. With screen modulation the dissipation is dependent on RMS screen voltage, and RMS screen current. Plate voltage, plate load or bias voltage must never be removed while filament and screen voltages are present since the screen dissipation rating will be exceeded. Suitable protective means must be provided to prevent any of these conditions.

PLATE DISSIPATION - The plate dissipation of 100 kilowatts attainable through water cooling provides a large margin of safety in most applications. The rating may be exceeded for brief periods during tuning. When the 4CW100,000D is used as a plate-modulated rf amplifier, plate dissipation under carrier conditions is limited to 66,500 watts.

HIGH VOLTAGE - Normal operating voltages used with this tube are deadly, and the equipment must be designed properly and operating precautions must be followed. Design all equipment so that no one can come in contact with high voltages. All equipment must include safety enclosures for high-voltage circuits and terminals, with interlock switches to open primary circuits of the power supply and to discharge high-voltage condensers whenever access doors are opened. Interlock switches must not be bypassed or "cheated" to allow operation with access doors open. Always remember that HIGH VOLTAGE CAN KILL.

X-RADIATION - High-vacuum tubes operating at voltages higher than 10 kilovolts produce progressively more dangerous X-ray radiation as the voltage is increased. This tube, operating at its rated voltages and currents, is a potential X-ray hazard. Only limited shielding is afforded by the tube envelope. Moreover, the X-ray radiation level can increase significantly with aging and gradual deterioration, due to leakage paths or emission characteristics as they are affected by the high voltage. X-ray shielding must be provided on all sides of tubes operating at these voltages to provide adequate protection throughout the tube's life. Periodic checks on the X-ray level should be made, and the tube should never be operated without adequate shielding in place when voltages above 10 kilovolts are in use. Lead glass, which attenuates X-rays, is available for viewing windows. If there is any doubt as to the requirement for or the adequacy of shielding, an expert in this field should be contacted to perform an X-ray survey of the equipment.

Operation of high-voltage equipment with interlock switches "cheated" and cabinet doors open in order to be better able to locate an equipment malfunction can result in serious X-ray exposure.

FAULT PROTECTION - In addition to normal plate overcurrent interlock, screen current interlock, and coolant flow interlock, it is good practice to protect the tube from internal damage which could result from occasional plate arcing at high anode voltage.

In all cases some protective resistance, 5 ohms to 25 ohms, should be used in series with each tube anode to absorb power supply stored energy in case a plate arc should occur. If power supply stored energy exceeds 750 watt seconds, we strongly recommend use of some form of electronic crowbar which will discharge power supply capacitors in a few microseconds following indication of start of a plate arc.

SPECIAL APPLICATIONS - If it is desired to operate this tube under conditions widely different from those given here, write to Power Grid Tube Product Manager, EIMAC Division of Varian, 301 Industrial Way, San Carlos, California 94070 for information and recommendations.

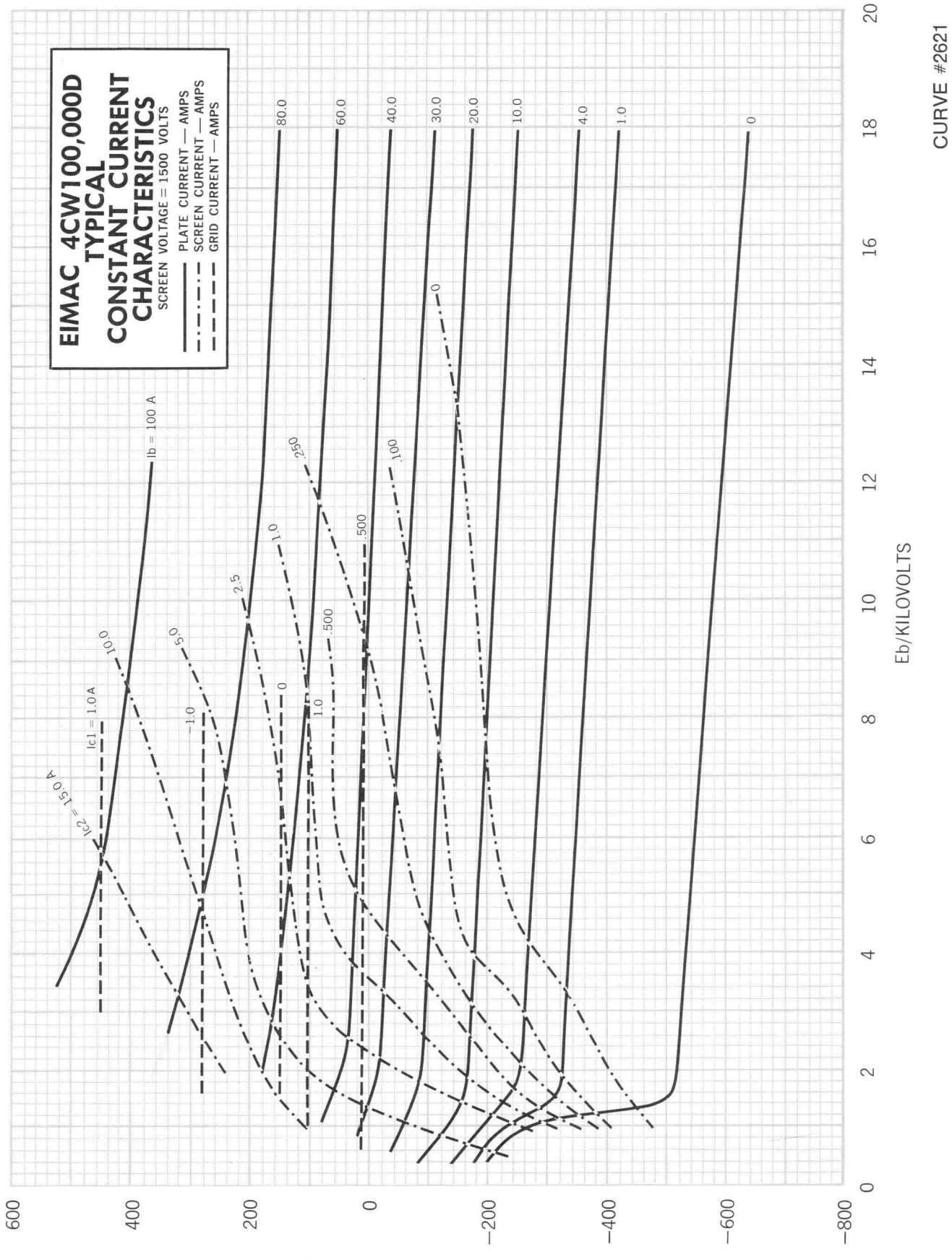
EIMAC 4CW100,000D
TYPICAL
CONSTANT CURRENT
CHARACTERISTICS
SCREEN VOLTAGE = 1500 VOLTS
PLATE CURRENT — AMPS
SCREEN CURRENT — AMPS
GRID CURRENT — AMPS
Ib = 100 A
Ic1 = 1.0A
Ic2 = 15.0 A
10.0
5.0
2.5
1.0
0
-1.0
80.0
60.0
40.0
30.0
20.0
10.0
4.0
1.0
0
250
100
500
1.0
.500
Eb/KILOVOLTS
Ec1/VOLTS
0
2
4
6
8
10
12
14
16
18
20
600
400
200
0
-200
-400
-600
-800

CURVE #2621

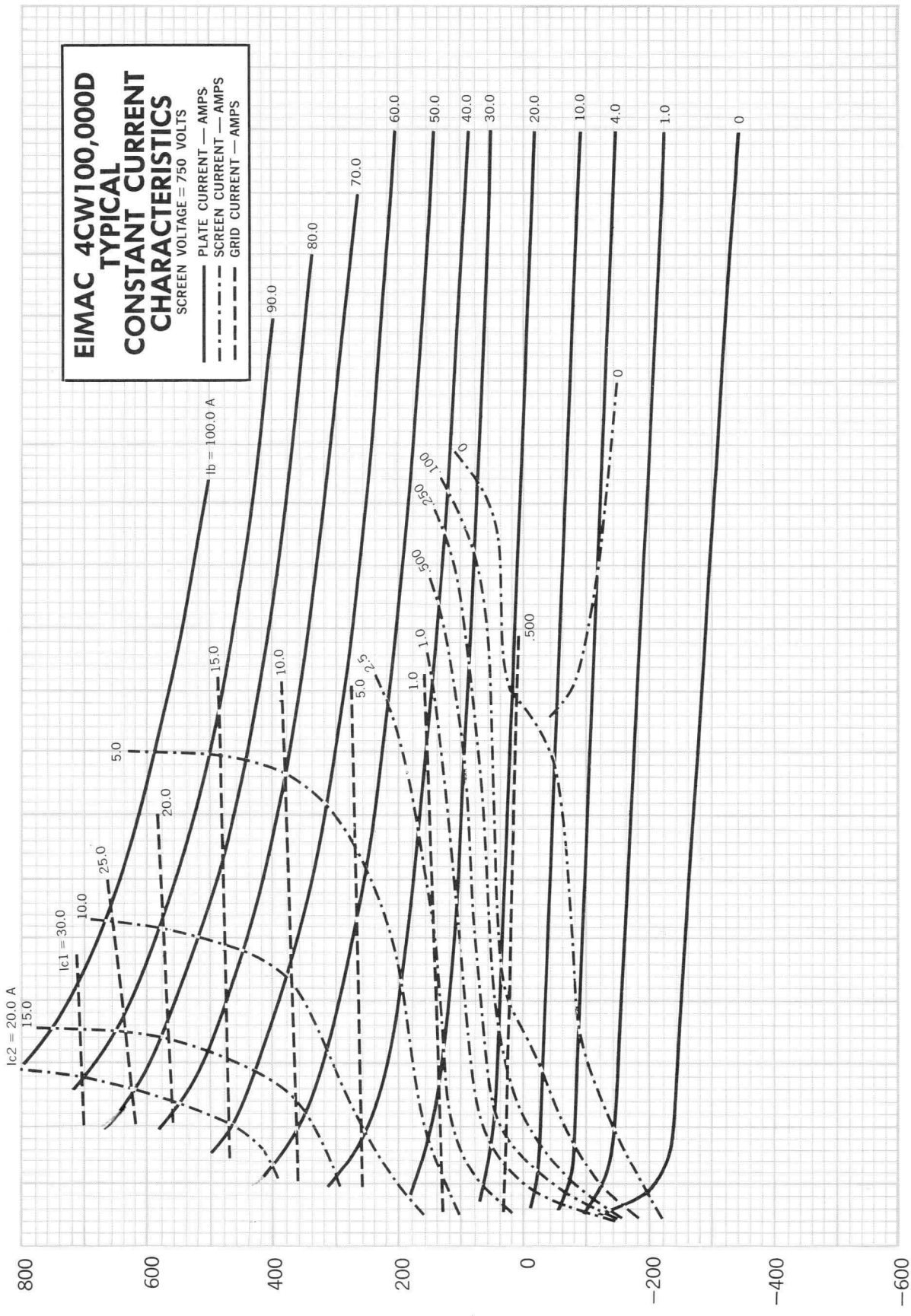
EIMAC 4CW100,000D
TYPICAL
CONSTANT CURRENT
CHARACTERISTICS
SCREEN VOLTAGE = 750 VOLTS
PLATE CURRENT — AMPS
SCREEN CURRENT — AMPS
GRID CURRENT — AMPS
Ib = 100.0 A
Ic1 = 30.0
Ic2 = 20.0 A
Eb/KILOVOLTS
Ec1/VOLTS
CURVE #2623

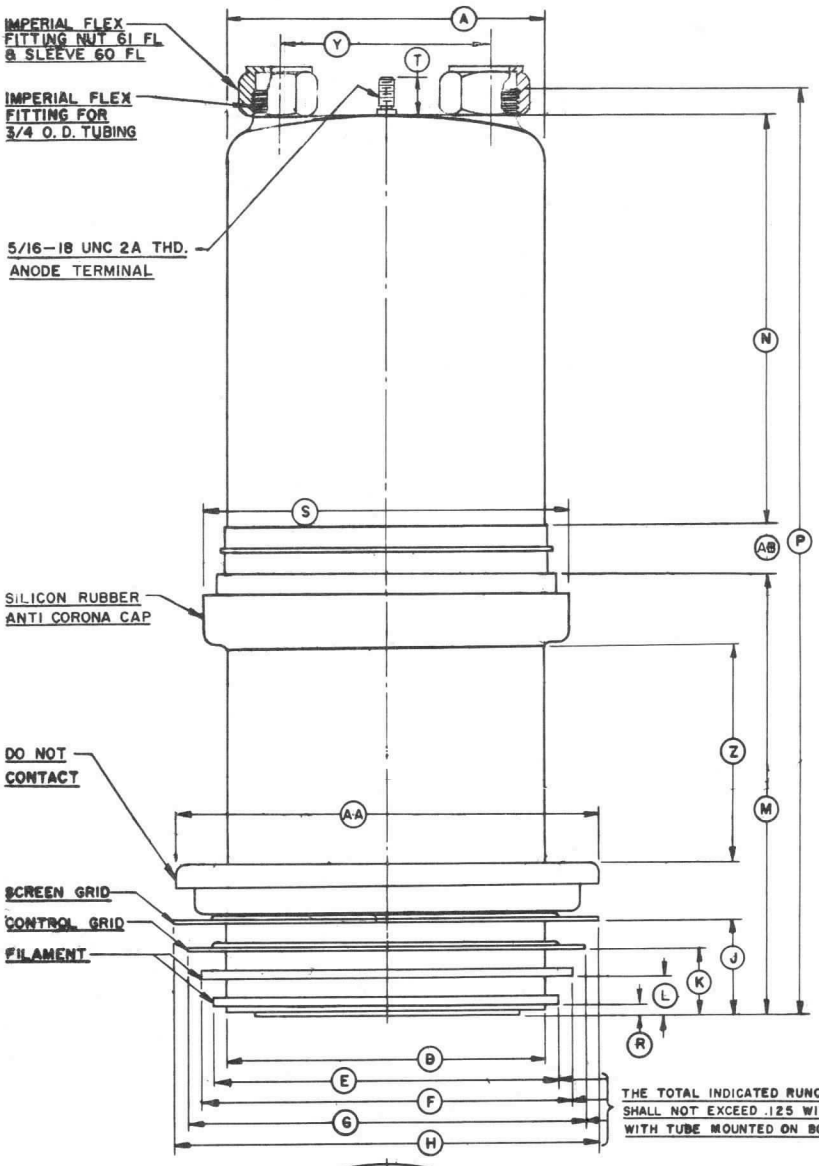

DIMENSIONAL DATA						
DIM	INCHES			MILLIMETERS		
	MIN.	MAX.	REF.	MIN.	MAX.	REF.
A	5.875	6.125	- -	149.2	155.6	- -
D	5.980	6.020	- -	151.9	152.9	- -
E	6.510	6.560	- -	165.3	166.6	- -
F	6.980	7.020	- -	177.3	178.3	- -
G	7.480	7.520	- -	190.0	191.0	- -
H	7.975	8.015	- -	202.6	203.6	- -
J	1.750	1.800	- -	44.4	45.7	- -
K	1.220	1.270	- -	31.0	32.3	- -
L	0.690	0.740	- -	17.5	18.8	- -
M	8.600	8.800	- -	218.4	223.5	- -
N	7.000	7.500	- -	177.8	190.5	- -
P	17.250	18.000	- -	438.1	457.2	- -
R	0.173	0.213	- -	4.39	5.41	- -
S	- -	- -	6.950	- -	- -	176.5
T	- -	- -	0.718	- -	- -	18.2
V	- -	0.135	- -	- -	3.43	- -
W	1.250	1.270	- -	31.7	32.2	- -
X	0.490	0.530	- -	12.4	13.5	- -
Y	3.940	4.060	- -	100.1	103.1	- -
Z	- -	- -	4.200	- -	- -	106.7
AA	- -	- -	8.000	- -	- -	203.2
AB	- -	- -	1.080	- -	- -	27.4

NOTES:
1. THE LATERAL AXES OF THE WATER FITTINGS & BASE LOCKING PIN ARE TO BE WITHIN 10°
2. REFERENCE DIMENSIONS ARE FOR INFORMATION ONLY AND ARE NOT REQUIRED FOR INSPECTION PURPOSES.

THE TOTAL INDICATED RUNOUT OF THESE CONTACT EDGES SHALL NOT EXCEED .125 WITH RESPECT TO "W" MEASURED WITH TUBE MOUNTED ON BOTTOM CERAMIC

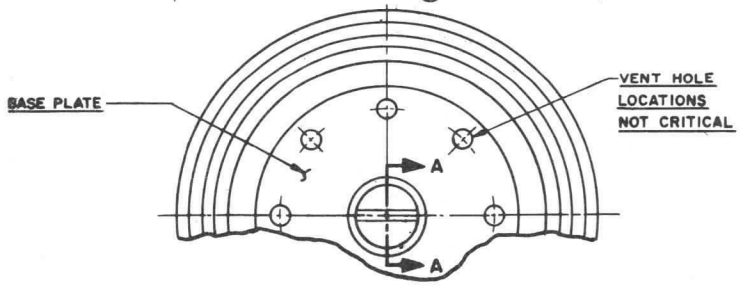

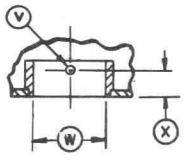

SECTION A-A
ROTATED 180°

TECHNICAL DATA

4CW100,000E

HIGH-POWER
WATER-COOLED
TETRODE

DESCRIPTION

The 4CW100,000E is a ceramic/metal, high-power tetrode for applications requiring tube outputs from 100 to 250 kilowatts. It is ideal for use as a Class C rf amplifier or oscillator, a Class AB rf linear amplifier, or a Class AB push-pull af amplifier or modulator as well as a plate- and screen-modulated Class C rf amplifier. In pulse-modulator service, it can deliver a peak output of 4 megawatts. The tube is characterized by low input and feedback capacitances and low internal lead inductances. Its rugged mesh thoriated-tungsten filament provides ample emission for long operating life. The water-cooled anode dissipates 100 kilowatts when used with the EIMAC SK-2100 water jacket.



4CW100,000E without SK-2100 Water Jacket

GENERAL CHARACTERISTICS[1]

ELECTRICAL

Filament	Thoriated Tungsten
Voltage	15.5 ± 0.75 V
Current, at 15.5 V	215 A
Direct Interelectrode Capacitances,	
Cathode grounded	
Input	370 pF
Output	60 pF
Feedback	1.0 pF
Grid grounded	
Input	175 pF
Output	60 pF
Feedback	0.35 pF
Maximum Frequency,	
for maximum CW ratings	108 MHz

PHYSICAL

Dimensions	See Outline Drawing
Net Weight	
Tube only	38.5 lb; 17.5 kg
Tube and water jacket	47.0 lb; 21.4 kg
Operating Position	Vertical, base up or down
Anode Cooling	Water
Base Cooling	Forced Air
Operating Temperature, maximum	
Ceramic/metal seals and envelope	250 °C
Anode Water Jacket,	
required	EIMAC SK-2100
Air System Socket,	
recommended	EIMAC SK-2000 Series
Base	Special

MAXIMUM RATINGS AND TYPICAL OPERATING CONDITIONS

RADIO FREQUENCY LINEAR AMPLIFIER, Class AB

Absolute Maximum Ratings

Plate Voltage	20 kVdc
Screen Voltage	2.5 kVdc
Plate Current	16 Adc
Plate Dissipation	100 kW
Screen Dissipation	1750 W
Grid Dissipation	500 W

Typical Operation, Class AB_1, Grid Driven

Peak Envelope or Modulation Crest Conditions

Plate Voltage	18 kVdc
Screen Voltage	1.5 kVdc
Grid Voltage[2]	-320 Vdc
Zero-Signal Plate Current	4 Adc
Single-Tone Plate Current	13.5 Adc
Peak rf Grid Voltage, approx	300 v
Plate Dissipation	75 kW
Plate Output Power	168 kW
Resonant Load Impedance	697 Ω

2479 9/70 © Varian 1970

Printed in U.S.A.

MAXIMUM RATINGS AND TYPICAL OPERATING CONDITIONS

RADIO FREQUENCY POWER AMPLIFIER OR OSCILLATOR
Class C Telegraphy or FM Telephony
(Key-down Conditions)

Absolute Maximum Ratings

Plate Voltage	20 kVdc
Screen Voltage	2.5 kVdc
Plate Current	16 Adc
Plate Dissipation	100 kW
Screen Dissipation	1750 W
Grid Dissipation	500 W

Typical Operation

Plate Voltage	20 kVdc
Screen Voltage	1.5 kVdc
Grid Voltage	-800 Vdc
Plate Current	15.2 Adc
Screen Current, approx	567 mAdc
Grid Current, approx	125 mAdc
Peak rf Grid Voltage, approx	900 v
Driving Power, calculated, approx	120 W
Plate Dissipation	54 kW
Plate Output Power	220 kW
Resonant Load Impedance	575 Ω

PLATE MODULATED RADIO FREQUENCY AMPLIFIER
GRID DRIVEN - Class C Telephony
(Carrier Conditions)

Absolute Maximum Ratings

Plate Voltage	17.5 kVdc
Screen Voltage	2.0 kVdc
Plate Current	16 Adc
Plate Dissipation[3]	67 kW
Screen Dissipation[4]	1750 W
Grid Dissipation[4]	500 W

Typical Operation

Plate Voltage	15 kVdc
Screen Voltage	750 Vdc
Grid Voltage	-600 Vdc
Plate Current	11.7 Adc
Screen Current, approx	875 mAdc
Grid Current, approx	660 mAdc
Peak af Screen Voltage, 100% mod., approx	750 v
Peak rf Grid Voltage, approx	800 v
Driving Power, calculated	530 W
Plate Dissipation	35 kW
Plate Output Power	140 kW
Resonant Load Impedance	620 Ω

AUDIO FREQUENCY POWER AMPLIFIER OR MODULATOR
GRID DRIVEN - Class AB_1, Sinusoidal Wave

Absolute Maximum Ratings, per tube

Plate Voltage	20 kVdc
Screen Voltage	2.5 kVdc
Plate Current	16 Adc
Plate Dissipation	100 kW
Screen Dissipation	1750 W
Grid Dissipation	500 W

Typical Operation, two tubes

Plate Voltage	15 kVdc
Screen Voltage	1.5 kVdc
Grid Voltage, approx[2]	-345 Vdc
Zero-Signal Plate Current	6 Adc
Maximum-Signal Plate Current	19.5 Adc
Maximum-Signal Screen Current, approx	830 mAdc
Peak af Grid Voltage, per tube	275 v
Maximum-Signal Plate Dissipation, per tube	46 kW
Plate Output Power	200 kW
Load Resistance, plate to plate	1825 Ω

PULSE MODULATOR SERVICE

Absolute Maximum Ratings

Plate Voltage	40 kVdc
Screen Voltage	2.5 kVdc
Grid Voltage	-2.0 kVdc
Peak Cathode Current	200 a
Plate Dissipation, during the pulse[5]	1.0 MW
Plate Dissipation, average	100 kW
Screen Dissipation, average	1750 W
Grid Dissipation, average	500 W
Pulse Length	10 ms

Typical Operation

Plate Voltage	40 kVdc
Plate Current, pulse	110 a
Screen Voltage	2.5 kVdc
Screen Current, pulse, approx	12 a
Grid Voltage	-1.2 kVdc
Grid Current, pulse, approx	400 ma
Positive Grid Voltage, pulse	110 v
Duty	6 %
Output Voltage, pulse	37 kv
Input Power, pulse	4.4 Mw
Output Power, pulse	4.1 Mw
Cathode Current, pulse, approx	122 a

TYPICAL OPERATION values are obtained by calculations from published characteristic curves. To obtain the specified plate current at the specified bias, screen, and plate voltages, adjustment of the rf grid voltage is assumed. If this procedure is followed, there will be little variation in output power when the tube is replaced, even though there may be some variation in grid and screen currents. The grid and screen currents which occur when the desired plate current is obtained are incidental and vary from tube to tube. These current variations cause no performance degradation providing the circuit maintains the correct voltage in the presence of the current variations. If grid bias is obtained principally by means of a grid resistor, the resistor must be adjustable to produce the required bias voltage when the correct rf grid voltage is applied.

RANGE VALUES FOR EQUIPMENT DESIGN

	Min	Max	
Filament Current, at 15.5 V ...	200	230	A
Cutoff Bias, at Eb = 25 kVdc, Ec2 = 1500 Vdc, Ib = 10 mAdc	---	-650	Vdc
Interelectrode Capacitances, Cathode grounded			
Input	350	390	pF
Output	55	65	pF
Feedback	---	1.2	pF
Grid grounded			
Input	160	190	pF
Output	55	65	pF
Feedback	---	0.5	pF

NOTES:

1. Characteristics and operating values are based upon performance tests. These figures may change without notice as the result of additional data or product refinement. The EIMAC Division of Varian should be consulted before using this information for final equipment design.
2. Adjust to give specified zero-signal plate current.
3. Corresponds to 100 kW at 100% sine-wave modulation.
4. Average value, with or without modulation.
5. Power dissipated during rise and fall time neglected.

APPLICATION NOTES

MOUNTING — The 4CW100,000E must be mounted with its major axis vertical. The tube base may be either up or down, at the discretion of the circuit designer.

SOCKETING — An EIMAC SK-2000 series Socket, or equivalent, is recommended.

ANODE WATER JACKET — The EIMAC SK-2100 Water Jacket must be used to provide anode cooling. To achieve an anode dissipation of 100 kilowatts, the water jacket must be installed over the tube anode and adequate water flow provided.

COOLING — Anode cooling is accomplished by circulating water through the SK-2100 Water Jacket. Insufficient water flow will cause the anode temperature to rise to levels which will shorten tube life. Also, if the coolant lines become clogged, enough steam pressure may be generated to rupture the water jacket and destroy the tube. The following table lists the minimum cooling water requirements at various dissipation levels with a maximum inlet water temperature of 50 °C.

Anode Dissipation (kW)	Minimum Water Flow (gpm)	Approximate Pressure Drop (psi)
20	5.0	2.8
40	9.0	5.8
60	12.5	9.3
80	16.5	14.2
100	20.0	19.2

Note: Since the filament dissipates about 3500 watts, and the grid-plus-screen can, under some conditions, dissipate another 2250 watts, the table allows for an additional dissipation of 5750 watts.

Outlet water temperature must never exceed 70 °C and inlet water pressure should be limited to 100 psi. Direction of water flow is optional.

Tube life can be seriously affected by the condition of the cooling water. If it becomes ionized, copper-oxide deposits form on the inside of the water jacket causing localized anode heating and eventual tube failure.

To insure minimum electrolysis, and power loss, the water resistance at 20 °C should be greater than 50,000 ohms/cm^3, preferably 250,000 ohms/cm^3 or higher. The relative water resistance can be continuously monitored by measuring the leakage current through a short section of the insulating hose, using metal nipples or fittings as electrodes.

Auxiliary forced-air cooling, of the tube base is required to maintain filament- and grid-seal temperatures below 250 °C. An air flow of approximately 120 ft^3/min at 50 °C maximum and sea level should be directed, through an EIMAC SK-2000 series socket or equivalent, toward the filament- and grid-seal areas.

Both anode and base cooling should be applied before or simultaneously with the application of electrode voltages, including the filament. Base cooling should continue for about three minutes after the removal of electrode voltages to allow the tube to cool properly.

FILAMENT OPERATION — At rated filament voltage, the peak emission of a 4CW100,000E is many times greater than the amount needed for communication service. Reducing the filament voltage decreases the filament temperature. A small decrease in filament temperature substantially increases filament life. The correct value of filament-voltage should be determined for the particular applications. First, gradually reduce the filament voltage to the point where there is a noticeable reduction in plate current or power output, or an increase in distortion. Then increase the voltage several tenths of a volt above the value where performance degradation occurred; this is the proper operating voltage. Filament voltage should always be measured at the tube base or socket using an rms responding meter. The above procedure should be performed periodically to assure optimum tube life.

GRID OPERATION — The maximum control-grid dissipation is 500 watts, determined approximately by the product of grid current and peak positive grid voltage.

Under some operating conditions, the control grid may exhibit a negative-resistance characteristic. This may occur when, with high screen-grid voltage, increasing the drive voltage decreases the grid current. As a result, large values of instantaneous negative grid current can be produced, causing the amplifier to become regenerative. Because this may happen, the driver stage must be designed to tolerate this condition. One technique is to swamp the driver so that the change in load, due to secondary grid emission, is a small percentage of the total driver load.

SCREEN OPERATION — The maximum screen-grid dissipation is 1750 watts. With no ac applied to the screen, dissipation is simply the product of dc screen voltage and dc screen current. With screen modulation, dissipation is dependent on rms screen voltage and rms screen current. Plate voltage, plate loading, or bias voltage must never be removed while filament and screen voltages are present, since the screen dissipation rating will be exceeded. Suitable protective circuitry should be provided.

The 4CW100,000E may exhibit reverse screen current to a greater or lesser degree depending on operating conditions. The screen supply voltage must be maintained constant for any values of negative and positive screen current which may be encountered. Dangerously high plate current may flow if the screen power supply exhibits a rising voltage characteristic with negative screen current. Stabilization may be accomplished with a bleeder resistor connected from screen to cathode, or an electron-tube regulator circuit may be employed in the screen supply. A bleeder resistor must be used if a series electron-tube regulator is employed.

PLATE DISSIPATION — The rated plate dissipation of 100 kilowatts, attainable with water cooling, provides a large margin of safety in most applications. This rating may be exceeded briefly during tuning. When the 4CW100,000E is used as a plate-modulated rf amplifier, plate dissipation under carrier conditions should be limited to 67 kilowatts.

FAULT PROTECTION — In addition to the normal plate-overcurrent interlock, screen-current interlock, and coolant-flow interlock, it is good practice to protect the tube from internal damage caused by an internal plate arc which may occur at high plate voltages.

A protective resistance of 5 to 25 ohms should always be connected in series with each tube anode, to absorb power-supply stored energy if a plate arc should occur. An electronic crowbar, which will discharge power-supply capacitors in a few microseconds after the start of a plate arc, is recommended.

OPERATING HAZARDS

Read the following and take all necessary precautions to safeguard personnel. Safe operating conditions are the responsibility of the equipment designer and the user.

HIGH VOLTAGE — This tube operates at voltages which can be deadly. Equipment must be designed so personnel cannot come in contact with operating voltages. Enclose high-voltage circuits and terminals and provide fail-safe interlocking switch circuits to open the primary circuits of the power supply and to discharge high-voltage condensers whenever access into the enclosure is required.

X-RAY RADIATION — The 4CW100,000E, operating at its rated voltages and currents, is a potential X-ray hazard. Moreover, the X-ray radiation level can increase significantly with aging and gradual deterioration, due to changes in leakage paths or emission characteristics as they are affected by high voltage. Only limited shielding is afforded by the tube envelope. Additional X-ray shielding must be provided on all sides of the tube to provide adequate protection to operating personnel throughout the tube's life. When this tube is used as a pulse modulator, shielding of the pulse transformer may also be necessary. X-ray caution signs or labels must be permanently attached to equipment using this tube directing operating personnel never to operate this device without X-ray shielding in place.

RADIO FREQUENCY RADIATION — Exposure of the human body to rf radiation becomes increasingly more hazardous as the power level and/or frequency are increased. Exposure to high-power rf radiation must be strictly prevented at any frequency.

Equipment must be designed to fully safeguard all personnel from these hazards. Labels and caution notices must be provided on equipment and in manuals clearly warning of these hazards.

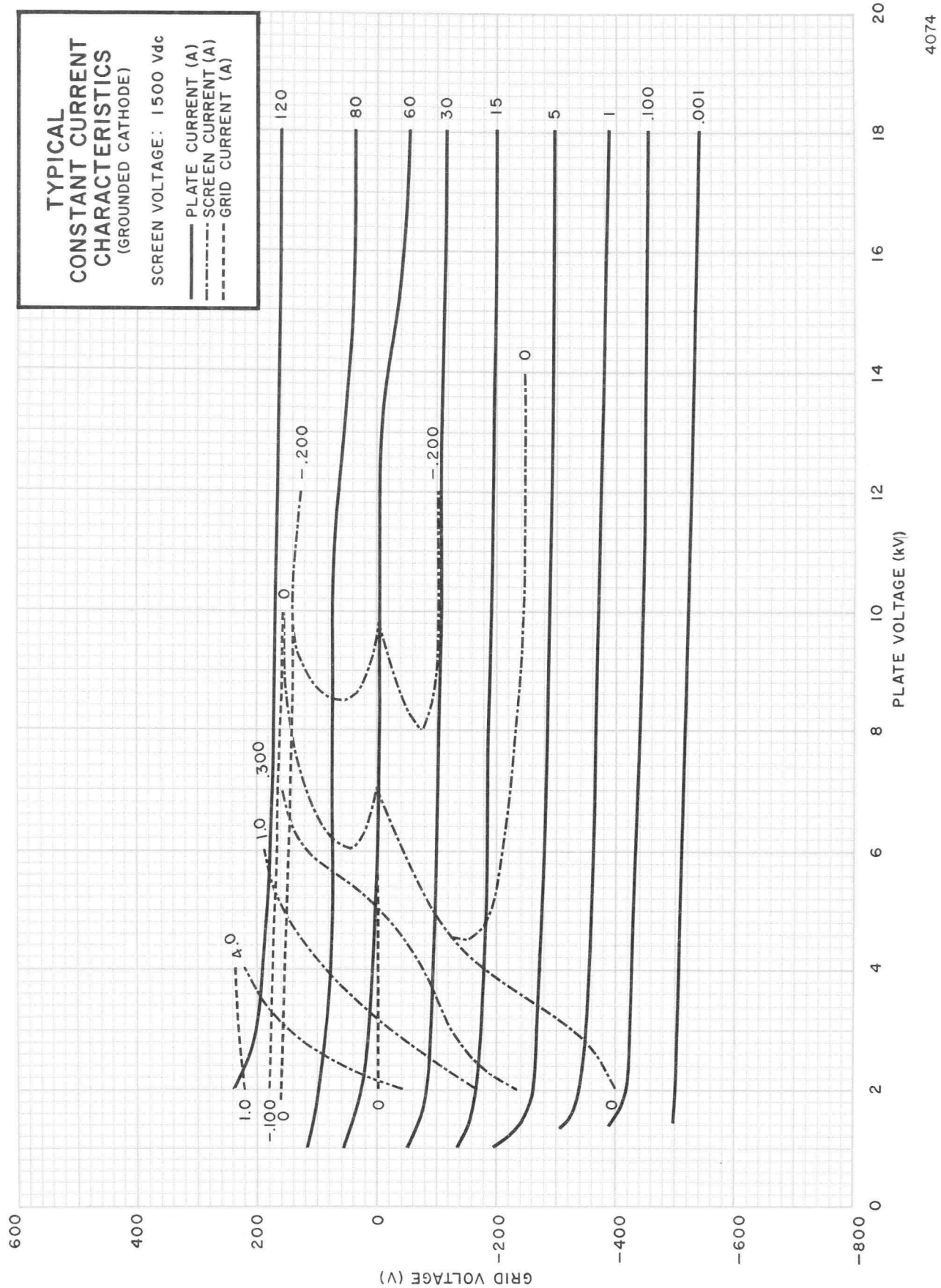
TYPICAL
CONSTANT CURRENT
CHARACTERISTICS
(GROUNDED CATHODE)
SCREEN VOLTAGE: 1500 Vdc
PLATE CURRENT (A)
SCREEN CURRENT (A)
GRID CURRENT (A)
120
80
60
30
15
5
1
.100
.001
4.0
1.0
.300
0
-.100
-.200
GRID VOLTAGE (V)
PLATE VOLTAGE (kV)
4074

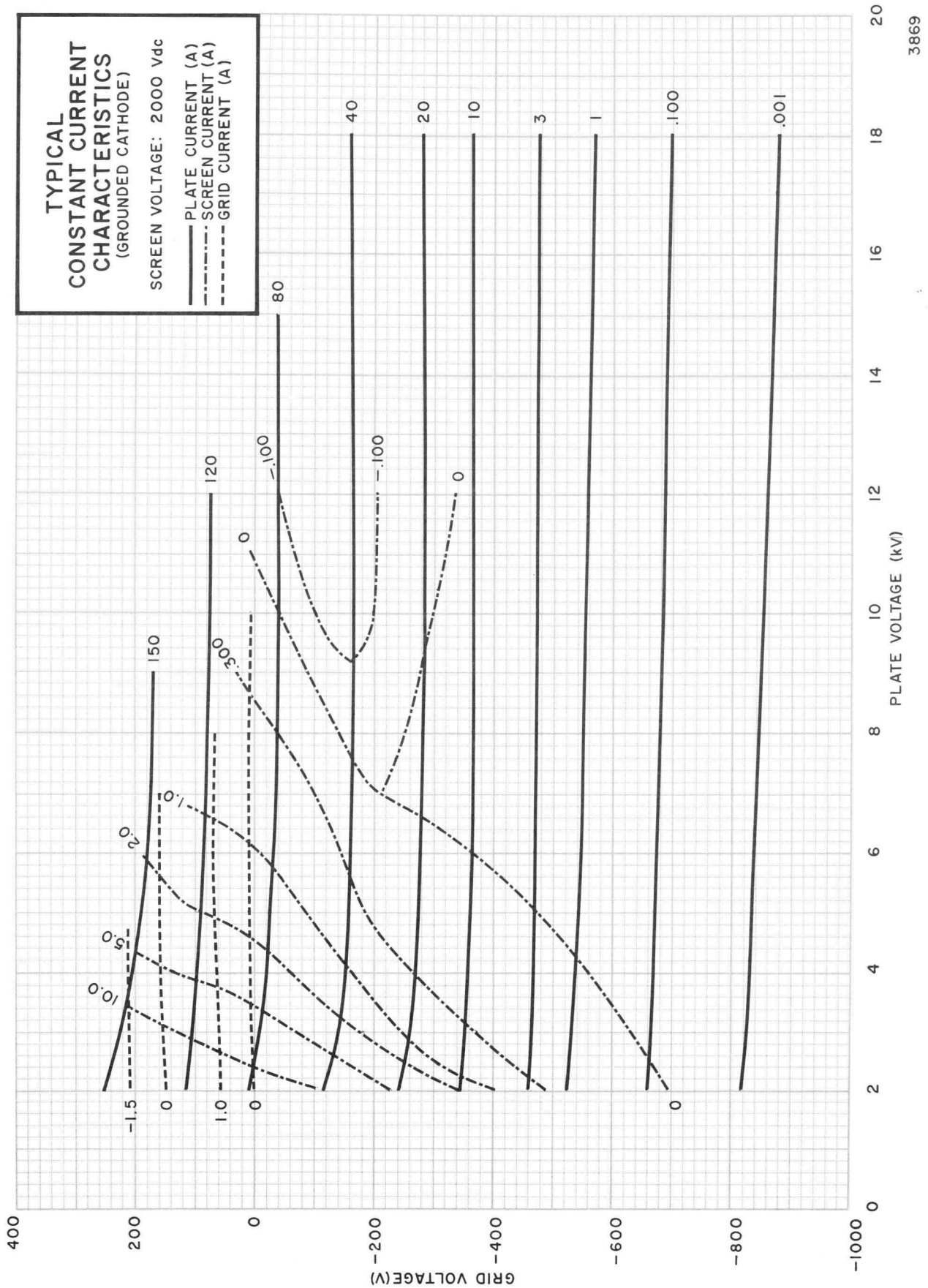
TYPICAL
CONSTANT CURRENT
CHARACTERISTICS
(GROUNDED CATHODE)
SCREEN VOLTAGE: 2000 Vdc
PLATE CURRENT (A)
SCREEN CURRENT (A)
GRID CURRENT (A)
PLATE VOLTAGE (kV)
GRID VOLTAGE (V)
3869

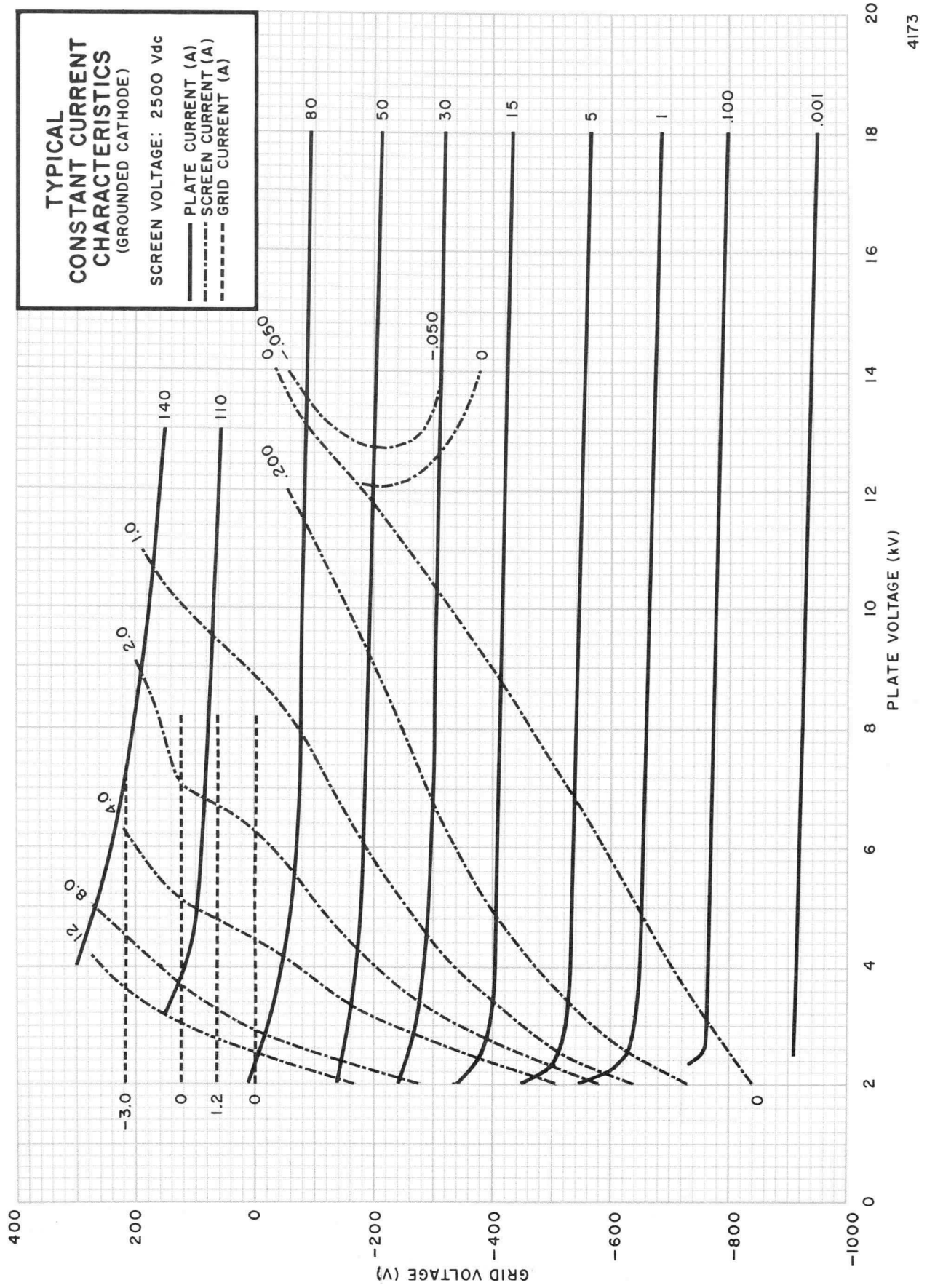
TYPICAL
CONSTANT CURRENT
CHARACTERISTICS
(GROUNDED CATHODE)
SCREEN VOLTAGE: 2500 Vdc
PLATE CURRENT (A)
SCREEN CURRENT (A)
GRID CURRENT (A)
PLATE VOLTAGE (kV)
GRID VOLTAGE (V)
4173

OUTLINE DRAWING

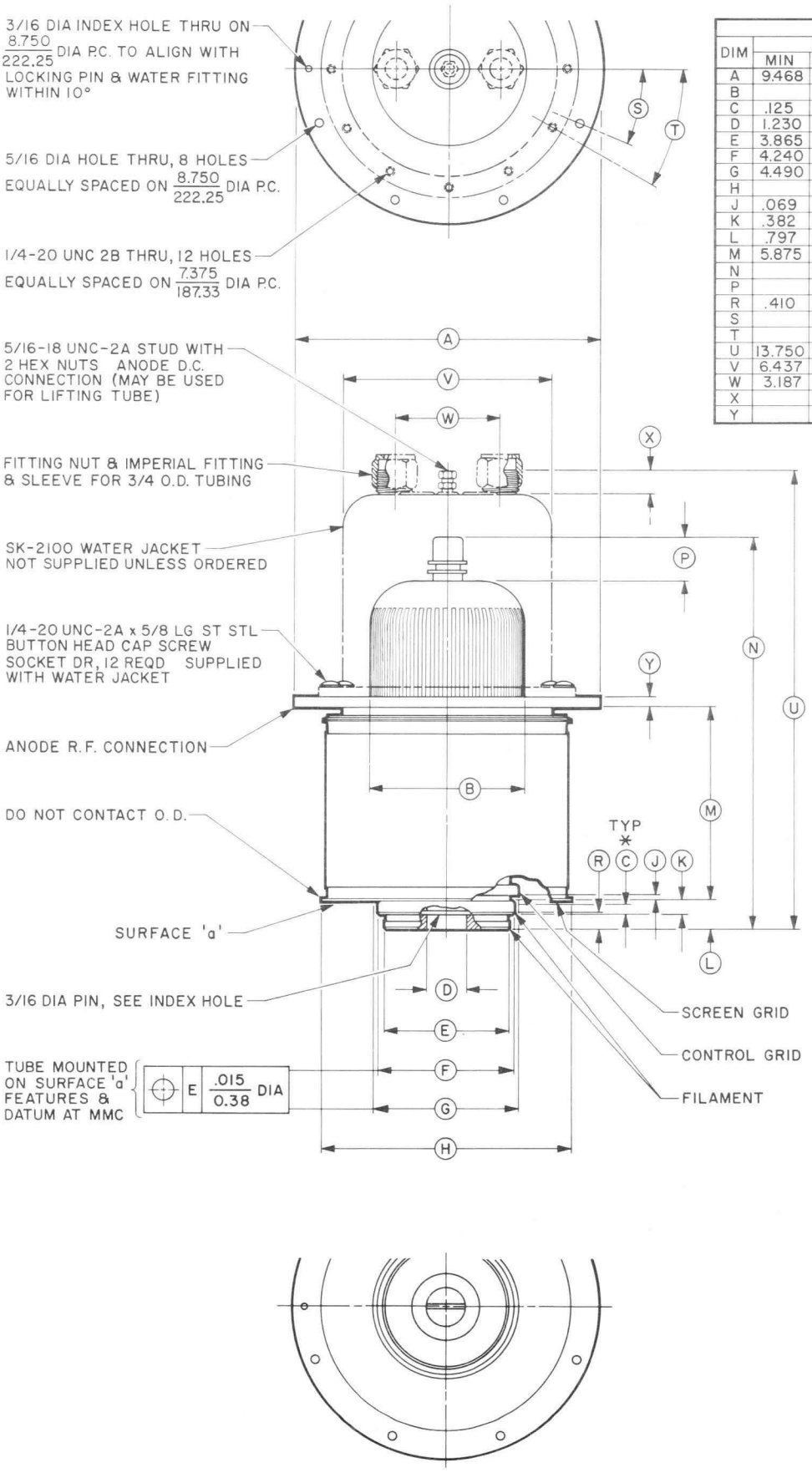

DIM	DIMENSIONAL DATA					
	INCHES			MILLIMETERS		
	MIN	MAX	REF	MIN	MAX	REF
A	9.468	9.531		240.49	242.09	
B			5.000			127
C	.125			3.18		
D	1.230	1.270		31.24	32.26	
E	3.865	3.885		98.17	98.68	
F	4.240	4.260		107.7	108.2	
G	4.490	4.510		114.05	114.55	
H			7.750			196.85
J	.069	.149		1.75	3.79	
K	.382	.462		9.70	11.74	
L	.797	.922		20.24	23.42	
M	5.875	6.000		149.23	152.6	
N			11.500			292.1
P			1.375			34.93
R	.410	.475		10.41	12.07	
S			22 1/2°			—
T			30°			—
U	13.750	14.250		349.25	361.95	
V	6.437	6.562		163.7	166.88	
W	3.187	3.313		80.95	84.15	
X			.562			14.28
Y			.312			7.93

REF DIMENSIONS ARE FOR INFORMATION ONLY

(*) MINIMUM CONTACT SURFACE

4CW100,000G

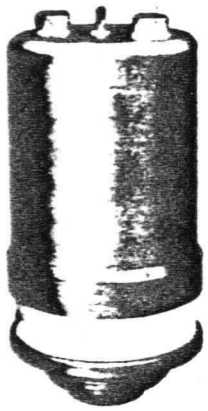

The 4CW100,000G is a tetrode intended for Class C HF and VHF service. It features high-stability pyrolytic graphite grids and an internal structure which permits high efficiency operation to 250 MHz. The tube is also recommended for FM broadcast service and for VHF-TV linear amplifier service. The anode is rated for 100 kW with water cooling.

CHARACTERISTICS

Plate Dissipation (Max.)	100,000 watts
Screen Dissipation (Max.)	1,500 watts
Grid Dissipation (Max.)	1,000 watts
Frequency for Max. Ratings (CW)	110 MHz
Cooling	Water and Forced Air
Filament	Thoriated Tungsten mesh
Voltage	15.0 volts
Current	170 amperes
Capacitances (Gnd. Cath. Connection)	
Input	445 pF
Output	37.0 pF
Feed-through	1.8 pF
Capacitances (Gnd. Grid Connection)	
Input	169 pF
Output	39.0 pF
Feed-through	0.17 pF
Amplification Factor (g_1–g_2)	8
Base	Special Coaxial
Recommended Air System Socket	SK-2400
Maximum Seal & Anode Core Temperature	250°C
Maximum Length	12.7 in; 32.3 cm
Maximum Diameter	6.4 in; 16.3 cm
Weight (approximate)	27.2 lb; 12.3 kg
Operating Position	Vertical, base up or down

Class of Operation	Type of Service	MAXIMUM RATINGS: Plate Voltage (volts)	MAXIMUM RATINGS: Plate Current (amps)	TYPICAL OPERATION: Plate Voltage (volts)	TYPICAL OPERATION: Screen Voltage (volts)	TYPICAL OPERATION: Plate Current (amps)	TYPICAL OPERATION: Drive Power (watts)	TYPICAL OPERATION: Output Power (kW)
C	RF Amplifier	14,000	12.5	10,600	800	7.0	250	60
C	RF Amplifier†	14,000	12.5	11,500	550	6.4	1,000	53

†100.5 MHz

4CW150,000E

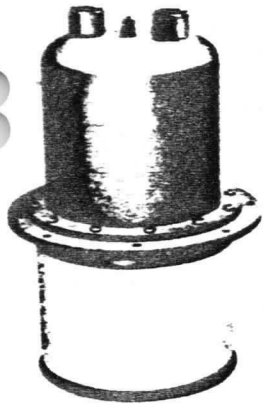

The 4CW150,000E is intended for use as a Class C RF amplifier or oscillator, a Class AB push-pull AF amplifier or modulator as well as a plate-and screen-modulated Class C RF amplifier. In pulse modulator service, it can deliver a peak output of 4 megawatts. The tube is characterized by low input and feedback capacitances and low internal lead inductance.

CHARACTERISTICS

Plate Dissipation (Max.)	150,000 watts
Screen Dissipation (Max.)	1,750 watts
Grid Dissipation (Max.)	500 watts
Frequency for Max. Ratings (CW)	110 MHz
Cooling	Water and Forced Air
Filament	Thoriated Tungsten mesh
Voltage	15.5 volts
Current	215 amperes
Capacitances (Gnd. Cath. Connection)	
Input	370 pF
Output	60.0 pF
Feed-through	1.0 pF
Capacitances (Gnd. Grid Connection)	
Input	175 pF
Output	60.0 pF
Feed-through	0.35 pF
Base	Special Coaxial
Recommended Air System Socket	SK-2011A
Maximum Seal & Anode Core Temperature	250°C
Maximum Length	14.3 in; 36.2 cm
Maximum Diameter	9.5 in; 24.2 cm
Weight (approximate)	47 lb; 21.4 kg
Operating Position	Vertical, base up or down

Class of Operation	Type of Service	MAXIMUM RATINGS: Plate Voltage (volts)	MAXIMUM RATINGS: Plate Current (amps)	TYPICAL OPERATION: Plate Voltage (volts)	TYPICAL OPERATION: Screen Voltage (volts)	TYPICAL OPERATION: Plate Current (amps)	TYPICAL OPERATION: Drive Power (watts)	TYPICAL OPERATION: Output Power (kW)
C	RF Amplifier	22,000	20.0	20,000	1,500	15.2	120	220
C	RF Amplifier Plate Modulated	17,500	20.0	15,000	750	11.7	530	140
AB_1	RF Linear Amplifier	22,000	20.0	18,000	1,500	13.5	—	168
—	Pulse Modulator	40,000	200†	40,000	2,500	122†	—	4,100‡

†Cathode current, pulse
‡Pulse value

4CW250,000B

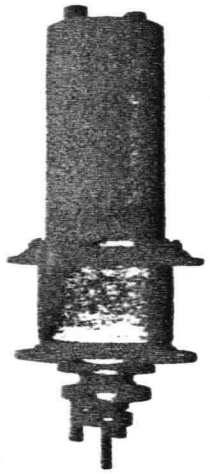

The 4CW250,000B is recommended as a Class C amplifier or oscillator; a Class AB RF linear amplifier; a Class AB push-pull AF linear amplifier or modulator; a plate or screen modulated Class C RF amplifier; or for pulse modulator or regulator service. Water jacket not included.

CHARACTERISTICS

Plate Dissipation (Max.)	250,000 watts
Screen Dissipation (Max.)	3,500 watts
Grid Dissipation (Max.)	1,500 watts
Frequency for Max. Ratings (CW)	50 MHz
Cooling	Water and Forced Air
Filament	Thoriated Tungsten
Voltage	12.0 volts
Current	660 amperes
Capacitances (Gnd. Cath. Connection):	
Input	745 pF
Output	124 pF
Feed-through	8.0 pF
Capacitances (Gnd. Grid Connection):	
Input	324 pF
Output	128 pF
Feed-through	1.2 pF
Amplification Factor (g_1–g_2)	4.5
Base	Special
Recommended Filament Connector	SK-1710
Recommended Grid Connector	SK-1712
Recommended Anode Water Jacket	SK-1720
Maximum Seal & Envelope Temperature	200°C
Maximum Length:	27.65 in; 70.23 cm
Maximum Diameter:	13.06 in; 33.17 cm
Weight (approximate) (tube only)	98.0 lb; 44.5 kg.
Operating Position	Vertical, base up or down

Class of Operation	Type of Service	MAXIMUM RATINGS		TYPICAL OPERATION				
		Plate Voltage (volts)	Plate Current (amps)	Plate Voltage (volts)	Screen Voltage (volts)	Plate Current (amps)	Drive Power (watts)	Output Power (kW)
C	RF Amplifier	20,000	40.0	19,000	800	32.5	3000	460
C	RF Amplifier Plate Modulated	17,500	30.0	14,000	800	29.0	2320	285
AB_1	RF Linear Amplifier	20,000	40.0	20,000	1800	23.0	—	330
AB_1	AF Amplifier or Modulator	20,000	40.0	20,000	1800	46.0*	—	660*

*Two tubes.

4W300B/8249

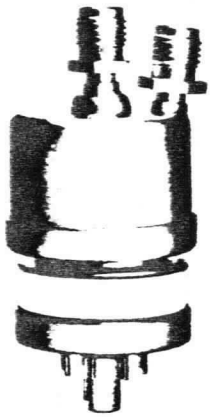

The 4W300B/8249 is a water-cooled version of the 4CX250B/7203 having an anode dissipation rating of 300 watts. It is intended for use where water cooling is preferred or when reserve anode dissipation is desired.

CHARACTERISTICS

Plate Dissipation (Max.)	300 watts
Screen Dissipation (Max.)	12 watts
Grid Dissipation (Max.)	2 watts
Frequency for Max. Ratings (CW)	500 MHz
Cooling	Water and Forced Air
Cathode	Oxide-coated Unipotential
Voltage	6.0 volts
Current	2.6 amperes
Capacitances (Gnd. Cath. Connection)	
Input	15.7 pF
Output	4.5 pF
Feed-through	0.04 pF
Capacitances (Gnd. Grid Connection)	
Input	13.0 pF
Output	4.5 pF
Feed-through	0.01 pF
Amplification Factor (g_1–g_2)	5
Base	9-Pin Special
Recommended Air System Socket	SK-600 Series
Maximum Seal & Anode Core Temperature	250°C
Maximum Length	3.4 in; 86.5 mm
Maximum Diameter	1.56 in; 39.7 mm
Weight (approximate)	5.75 oz; 163 gm
Operating Position	Vertical, base up or down

Class of Operation	Type of Service	MAXIMUM RATINGS		TYPICAL OPERATION				
		Plate Voltage (volts)	Plate Current (amps)	Plate Voltage (volts)	Screen Voltage (volts)	Plate Current (amps)	Drive Power (watts)	Output Power (watts)
C	RF Amplifier up to 175 MHz	2000	0.25	2000	300	0.25	2.9	390
C	RF Amplifier Plate Modulated up to 175 MHz	1500	0.20	1500	250	0.20	1.7	235
AB_1	RF Linear Amplifier up to 175 MHz	2000	0.25	2000	350	0.25	—	300
AB_1	RF Linear Amplifier (AM Service) up to 175 MHz	2000	0.25	2000	350	0.15	—	65†
AB_1	AF Amplifier or Modulator	2000	0.25	2000	350	0.50*	—	600*

*Two tubes
†Carrier Power

TECHNICAL DATA

4CV250,000B
VAPOR COOLED

4CW250,000B
WATER COOLED

POWER TETRODES

The EIMAC 4CV250,000B and 4CW250,000 are ceramic/metal (vapor cooled and water cooled, respectively) power tetrodes intended for use at the 250 to 500 kilowatt output power level. They are recommended for use as a Class C amplifier or oscillator, Class AB rf linear amplifier, Class AB push-pull af amplifier or modulator, plate or screen modulated Class C rf amplifier, or for pulse modulator or regulator service.

The 4CV250,000B is operated in the accessory boiler BR-620 (not supplied with the tube); the 4CW250,000B is operated with the accessory water jacket SK-1720 (not supplied with the tube), and both tubes are rated for 250 kilowatts maximum anode dissipation.

4CV250,000B

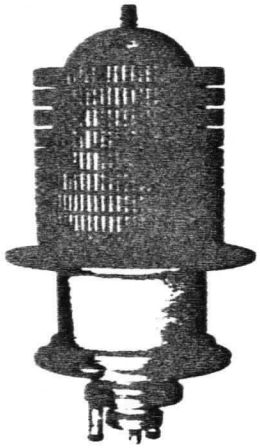

4CW250,000B

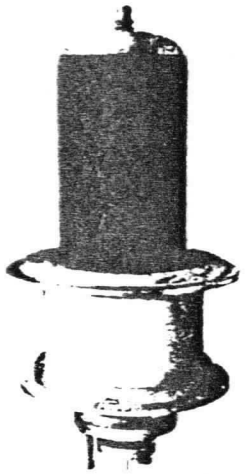

GENERAL CHARACTERISTICS[1]

ELECTRICAL

Filament: Thoriated Tungsten

Voltage	12.0 ± 0.6	V
Current @ 12.0 V	660	A
Amplification Factor (average), grid to screen	4.5	
Direct Interelectrode Capacitance (grounded cathode)[2]		
Cin	760	pF
Cout	124	pF
Cgp	6.0	pF
Frequency of Maximum Rating, CW	50	MHz

1. Characteristics and operating values are based upon performance tests. These figures may change without notice as the result of additional data or product refinement. EIMAC Division of Varian should be consulted before using this information for final equipment design.

2. Capacitance values are for a cold tube as measured without any special shielded fixture.

MECHANICAL

Maximum Overall Dimensions:

Length (4CV250,000B)	26.895 In; 68.31 cm
(4CW250,000B)	26.525 In; 67.37 cm
Diameter (4CV250,000B)	15.062 In; 38.26 cm
(4CW250,000B)	13.062 In; 33.18 cm

4177 (Effective 7-15-79) © 1979 by Varian Printed in U.S.A.

Base (both types)	Special
Recommended Base Connectors (both types):	
Filament Connector (2 required)	EIMAC SK-1710
Control Grid Connector (1 required)	EIMAC SK-1712
Recommended Accessories For Anode Cooling (not supplied with tube):	
4CV250,000B	EIMAC Boiler BR-620
4CW250,000B	EIMAC Jacket SK-1720
Operating Position: 4CV250,000B	Vertical, Anode Up
4CW250,000B	Vertical, Base Up or Down
Maximum Ceramic/Metal Seal or Envelope Temperature	200°C
Cooling: 4CV250,000B	Vapor and Water
4CW250,000B	Water
Net Weight: 4CV250,000B (w/o boiler)	180 Lb; 81.8 kg
4CW250,000B (w/o jacket)	98 Lb; 44.5 kg

RADIO FREQUENCY POWER AMPLIFIER OR OSCILLATOR
Class C Telegraphy or FM
(Key-down Condition)

ABSOLUTE MAXIMUM RATINGS:

DC PLATE VOLTAGE	20,000 VOLTS
DC SCREEN VOLTAGE	2,500 VOLTS
DC PLATE CURRENT	40 AMPERES
PLATE DISSIPATION	250,000 WATTS
SCREEN DISSIPATION	3,500 WATTS
GRID DISSIPATION	1,500 WATTS

TYPICAL OPERATION (Frequencies below 30 MHz)

DC Plate Voltage	16	19 kV
DC Screen Voltage	800	800 V
DC Grid Voltage	-800	-800 V
DC Plate Current	23.5	32.5 A
DC Screen Current	2.4	3.5 A
DC Grid Current	1.15	2.5 A
Driving Power[1]	2.24	3.0 kW
Plate Output Power	275	460 kW
Plate Dissipation	100	155 kW
RF Load Impedance	300	275 Ω

1. Calculated Driving Power neglects input conductance and rf circuit loss.

PLATE MODULATED RADIO FREQUENCY POWER AMPLIFIER
Class C Telephony
(Carrier conditions except where noted)

ABSOLUTE MAXIMUM RATINGS:

DC PLATE VOLTAGE	17,500 VOLTS
DC SCREEN VOLTAGE	2,000 VOLTS
DC PLATE CURRENT	30 AMPERES
PLATE DISSIPATION[1]	167,000 WATTS
SCREEN DISSIPATION	3,500 WATTS
GRID DISSIPATION	1,500 WATTS

1. Corresponds to 250,000 watts at 100 per cent sine wave modulation.
2. Approximate Value.

TYPICAL OPERATION (Frequencies below 30 MHz)

DC Plate Voltage	15 kV
DC Screen Voltage	800 V
Peak af Screen Voltage (for 100% Mod.)[2]	800 v
DC Grid Voltage	-800 V
DC Plate Current	22.8 A
DC Screen Current	4.1 A
DC Grid Current	1.46 A
Peak rf Grid Voltage	1110 v
Grid Driving Power[3]	1630 W
Plate Output Power	280 kW
RF Load Impedance	323 Ω
Plate Dissipation	63 kW

3. Calculated Driving Power neglects input conductance and rf circuit loss.

AUDIO FREQUENCY AMPLIFIER OR MODULATOR
Class AB

ABSOLUTE MAXIMUM RATINGS: (Per Tube)

DC PLATE VOLTAGE	20,000 VOLTS
DC SCREEN VOLTAGE	2,500 VOLTS
DC PLATE CURRENT	40 AMPERES
PLATE DISSIPATION	250,000 WATTS
SCREEN DISSIPATION	3,500 WATTS
GRID DISSIPATION	1,500 WATTS

1. Approximate Value.
2. Per Tube

TYPICAL OPERATION (Two Tubes)
Class AB 1

DC Plate Voltage	15	20 kV
DC Screen Voltage	1.8	1.8 kV
DC Grid Voltage	-500	-500 V
Max-Signal Plate Current	40	46 A
Zero Signal Plate Current[2]	0.2	0.2 A
Max-Signal Screen Current[1]	1.1	1.2 A
Peak af Driving Voltage[2]	500	500 v
Driving Power	0	0 W
Load Impedance (plate to plate)	650	870 Ω
Plate Dissipation	160	260 kW
Max-Signal Output Power	440	660 kW

RADIO FREQUENCY LINEAR AMPLIFIER
Class AB

ABSOLUTE MAXIMUM RATINGS:

DC PLATE VOLTAGE	20,000 VOLTS
DC SCREEN VOLTAGE	2,500 VOLTS
DC PLATE CURRENT	40 AMPERES
PLATE DISSIPATION	250,000 WATTS
SCREEN DISSIPATION	3,500 WATTS
GRID DISSIPATION	1,500 WATTS

1. Approximate Value
2. Calculated Driving Power neglects input conductance and rf circuit loss.

TYPICAL OPERATION (Frequencies below 30 MHz)
Class AB 1. Peak-Envelope or Modulation Crest Conditions

DC Plate Voltage	15	20 kV
DC Screen Voltage	1.8	1.8 kV
DC Grid Voltage	-500	-500 V
Plate Current	20	23 A
Zero Signal Plate Current	0.2	0.2 A
Max-Signal Screen Current[1]	1.1	1.2 A
Peak rf Grid Voltage	500	500 v
Driving Power[2]	0	0 W
Plate Dissipation	80	130 kW
Resonant Load Impedance	325	435 Ω
Plate Output Power	220	330 kW

PULSE MODULATOR OR REGULATOR

ABSOLUTE MAXIMUM RATINGS:

DC PLATE VOLTAGE	40,000 VOLTS
DC SCREEN VOLTAGE	2,500 VOLTS
PEAK CATHODE CURRENT	350 AMPERES
PLATE DISSIPATION	250,000 WATTS
SCREEN DISSIPATION	3,500 WATTS
GRID DISSIPATION	1,500 WATTS

APPLICATION

MECHANICAL

MOUNTING (4CV250,000B) - The tube must be mounted vertically, anode up. The tube may be supported by the anode flange or the screen flange.

Care must be exercised to insure that the axis of the tube/boiler combination is vertical and that the water in the boiler is at the correct level. The anode flange on the tube must seal securely against the "O" ring, forming a vapor-tight seal between the tube and boiler.

MOUNTING (4CW250,000B) - The tube must be mounted vertically, anode up or down. The tube may be supported by the anode flange or the screen flange.

ANODE COOLING (4CV250,000B) - Cooling is accomplished by immersing the anode of the 4CV250,000B in a "Boiler" filled with distilled water. Energy dissipated by the anode causes the water to boil at the anode surfaces, be converted into steam and be carried away to an external condenser. The condensate is then returned to the boiler, completing the cycle.

This boiling action maintains the anode surfaces at a fairly constant temperature near 100°C. The vapor-cooled tube has good overload capabilities; excess dissipation for moderate periods only causes more water to boil.

Since the tube anode and boiler are usually at high potential to ground, water and steam connections to the boiler are made through insulated tubing.

ANODE COOLING (4CW250,000B) - Minimum cooling water requirements for the anode are shown in the table for an outlet water temperature not to exceed 70°C and an inlet water temperature of 50°C. High-purity water must be used to minimize power loss, corrosion of metal fittings, and loss of anode dissipation capability. Water resistivity must be maintained at 1 megohm/cm³ or better for long term operation.

Anode Dissipation (kW)	Water Flow (gpm)	Approx. Jacket Press. Drop (psi)
150	37.5	3.5
200	50.0	9.0
250	60.0	10.0

EIMAC Application Bulletin #16 titled, "WATER PURITY REQUIREMENTS IN LIQUID COOLING SYSTEMS" is available on request, and should be consulted for details on maintenance of water quality standards and use of a water purification loop in the installation. Since the anode is normally at high potential to

ground, water connections to the anode are made through insulating tubing, with long enough sections that column resistance is above 4 megohms per 1000 plate supply volts, or 10 megohms total, whichever is less.

BASE COOLING (Both Types) - The filament supports of both tubes are water cooled. Approximately .5 GPM should circulate through each of the filament connectors with a pressure drop of 20 PSI. Filament connector assemblies, SK-1710, provide electrical and water connections. Two sets of SK-1710 are required.

It is recommended that the water cooled control grid connector, SK-1712, be used. Water flow of approximately .5 GPM should circulate through the grid connector. The pressure drop across the grid connector is low. A convenient way to make water connection is to series connect the grid cooling water with the outer filament cooling water path.

The outer filament water path has a lower pressure drop than the inner filament water path making this connection practical.

ALL COOLING MUST BE APPLIED BEFORE OR SIMULTANEOUSLY WITH THE APPLICATION OF ELECTRODE VOLTAGES, INCLUDING FILAMENT, AND SHOULD NORMALLY BE MAINTAINED FOR SEVERAL MINUTES AFTER ALL VOLTAGES ARE REMOVED TO ALLOW FOR TUBE COOLDOWN.

ELECTRICAL

FILAMENT OPERATION - The peak emission at rated filament voltage is normally many times the peak emission required for communication service. A small decrease in filament temperature due to reduction of filament voltage can increase life by a substantial percentage. It is good practice to determine the nominal filament voltage for a particular application that will not affect the operation of the equipment. This is done by measuring some important parameter of performance such as plate current, power output, or an increase in distortion. Operation may be at a filament voltage slightly higher than that point at which performance appeared to deteriorate. This voltage should be measured at the socket with a 1% meter and periodically checked.

Filament starting current must be limited to a maximum of 1800 amperes.

CONTROL GRID OPERATION - The control grid is rated at 1,500 watts of dissipation and protective measures should be included in circuitry to insure that this rating is not exceeded. Grid dissipation is the approximate product of dc grid current and peak positive grid voltage.

SCREEN DISSIPATION - The power applied to the screen grid must not exceed 3,500 watts. Where no ac is applied to the screen, dissipation is the product of dc screen voltage and dc screen current. With screen modulation the dissipation is the product of RMS screen current and RMS screen voltage.

PLATE DISSIPATION - The plate dissipation of 250 kilowatts provides a large margin of safety in most applications. The rating may be exceeded for brief periods during tuning. When used as a plate-modulated rf amplifier, plate dissipation under carrier conditions is limited to 167,000 watts.

LOAD VSWR - The load VSWR should be monitored and the detected signal used to operate the interlock system to remove the plate voltage within 20 milliseconds after a fault occurs. In the case of high stored energy in the load system, care must be taken to avoid excessive return energy from damaging the tube and associated circuit components.

FAULT PROTECTION - To assure non-destruction of tube elements from high-energy power supplies, during a fault condition, all supplies must be checked for proper operation of their protective circuits. An approved method to meet the tube protection criteria would be the use foil, solder wire, or small diameter wire to produce a controlled short on the power supply. The simplest technique is to short the plate to cathode, screen grid to cathode, control grid to cathode, and screen grid to anode (individually, one at a time) using

a vacuum relay through a section of #30 AWG copper wire. The wire will remain intact if the power supply protective circuitry is operating properly. An electronic crowbar will be required on the anode supply, and may be required on the other electrode supplies if the test outlined above is not passed. See EIMAC Application Bulletin #17 for further details.

Properly rated spark gaps must also be located between the screen grid and cathode and between the control grid and cathode to meet over-voltage protection criteria. A series resistance of 10 to 50 ohms is recommended in the screen and control grid power supply leads.

X-RADIATION - High-vacuum tubes operating at voltages higher than 15 kilovolts produce progressively more dangerous X-ray radiation as the voltage is increased. These tubes, operating at rated voltages and currents, are a potential X-ray hazard. Only limited shielding is afforded by the tube envelope. Moreover, the X-ray radiation level can increase significantly with aging and gradual deterioration, due to leakage paths or emission characteristics as they are affected by the high voltage. X-ray shielding must be provided on all sides of tubes operating at these voltages to provide adequate protection throughout the tube's life. Periodic checks on the X-ray level should be made, and the tube should never be operated without adequate shielding in place when voltages above 15 kilovolts are in use. Lead glass, which attenuates X-rays, is available for viewing windows. If there is any doubt as to the requirement for or the adequacy of shielding, an expert in this field should be contacted to perform an X-ray survey of the equipment.

Operation of high-voltage equipment with interlock switches "cheated" and cabinet doors open in order to be better able to locate an equipment malfunction can result in serious X-ray exposure.

HIGH VOLTAGE - Normal operating voltages used with these tubes are deadly, and the equipment must be designed properly and operating precautions must be followed. Design all equipment so that no one can come in contact with high voltages. All equipment must include safety enclosures for high-voltage circuits and terminals, with interlock switches to open primary circuits of the power supply and to discharge high-voltage condensers whenever access doors are opened. Interlock switches must not be bypassed or "cheated" to allow operation with access doors open. Always remember that HIGH VOLTAGE CAN KILL.

RADIO FREQUENCY RADIATION - Avoid exposure to strong rf fields even at relatively low frequency. Absorption of rf energy by human tissue is dependent on frequency. Under 30 MHz, most of the energy will pass completely through the human body with little attenuation or heating effect. Public health agencies are concerned with the hazard, however, even at these frequencies, and it is worth noting that some commercial dielectric heating units actually operate at frequencies as low as the 13 and 27 MHz bands.

SPECIAL APPLICATION - If it is desired to operate this tube under conditions widely different from those listed here, write to Power Grid Tube Division, EIMAC Division of Varian, 301 Industrial Way, San Carlos, California, 94070, For information and recommendations.

OPERATING HAZARDS

PROPER USE AND SAFE OPERATING PRACTICES WITH RESPECT TO POWER TUBES ARE THE RESPONSIBILITY OF EQUIPMENT MANUFACTURERS AND USERS OF SUCH TUBES. ALL PERSONS WHO WORK WITH OR ARE EXPOSED TO POWER TUBES OR EQUIPMENT WHICH UTILIZES SUCH TUBES MUST TAKE PRECAUTIONS TO PROTECT THEMSELVES AGAINST POSSIBLE SERIOUS BODILY INJURY. DO NOT BE CARELESS AROUND SUCH PRODUCTS.

The operation of power tubes involves one or more of the following hazards, any one of which, in the absence of safe operating practices and precautions, could result in serious harm to personnel:

a. *HIGH VOLTAGE* - Normal operating voltages can be deadly.

b. *RF RADIATION* - Exposure to strong rf fields should be avoided, even at relatively low frequencies. The dangers of rf radiation are more severe at UHF and microwave frequencies and can cause serious bodily and eye injuries. CARDIAC PACEMAKERS MAY BE AFFECTED.

c. *X-RAY RADIATION* - High voltage tubes can produce dangerous and possibly fatal x-rays.

d. *BERYLLIUM OXIDE POISONING* - Dust or fumes from BeO ceramics used as thermal links with some conduction-cooled power tubes are highly toxic and can cause serious injury or death.

e. *GLASS EXPLOSION* - Many electron tubes have glass envelopes. Breaking the glass can cause an implosion, which will result in an explosive scattering of glass particles. Handle glass tubes carefully.

f. *HOT WATER* - Water used to cool tubes may reach scalding temperatures. Touching or rupture of the cooling system can cause serious burns.

g. *HOT SURFACES* - Surfaces of air-cooled radiators and other parts of tubes can reach temperatures of several hundred degrees centigrade and cause serious burns if touched.

Please review the detailed operating hazards sheet enclosed with each tube or request a copy from the address shown below: Power Grid Tube Division, EIMAC Division of Varian, 301 Industrial Way, San Carlos, California 94070.

DIMENSIONAL DATA

DIM.	INCHES			MILLIMETERS		
	MIN.	MAX.	REF	MIN.	MAX.	REF
A	12.937	13.062	--	328.60	331.77	--
B	7.937	8.062	--	201.60	204.77	--
C	4.437	4.562	--	112.70	115.87	--
D	3.437	3.562	--	87.30	90.47	--
E	5.937	6.062	--	150.80	153.97	--
F	6.437	6.562	--	163.50	166.67	--
G	11.937	12.062	--	303.20	306.37	--
H	23.437	23.562	--	595.30	598.47	--
J	6.250	6.375	--	158.75	161.93	--
K	0.750	0.875	--	19.05	22.23	--
L	2.437	2.562	--	61.90	65.07	--
M	4.062	4.187	--	103.17	106.35	--
N	5.000	5.125	--	127.00	130.18	--
P	--	6.900	(3)	--	175.26	(3)
R	6.750	7.375	(3)	171.45	187.33	(3)
S	8.750	9.375	(3)	222.25	238.13	(3)
T	--	11.250	(3)	--	285.75	(3)
U	--	--	11.000	--	--	279.40
V	--	--	0.375	--	--	9.53
W	--	--	22.5°	--	--	22.5°
X	--	--	60.0°	--	--	60.0°
Y	--	--	0.261	--	--	6.63
Z	--	--	0.219	--	--	5.56
AA	--	--	0.438	--	--	11.13

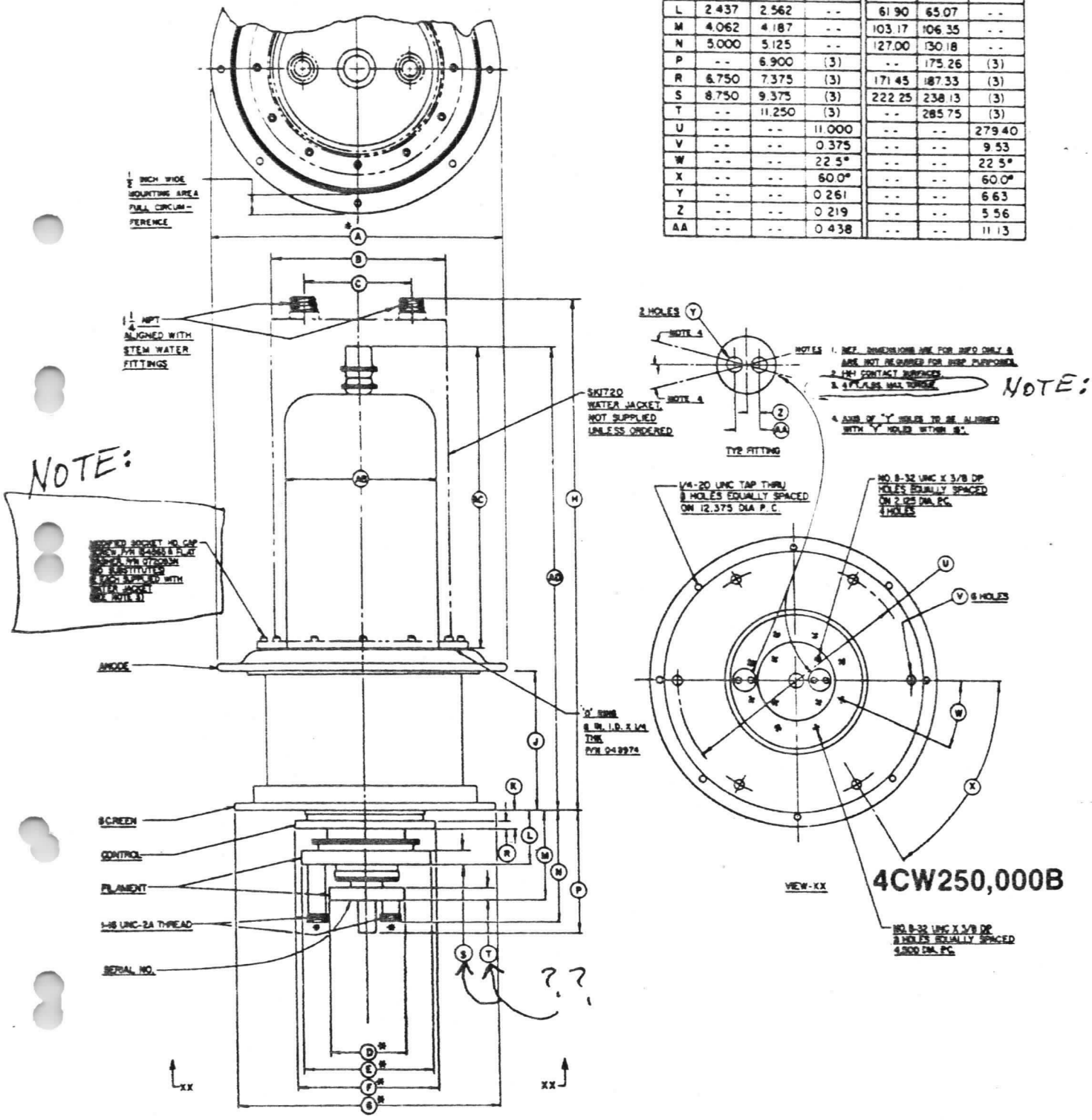

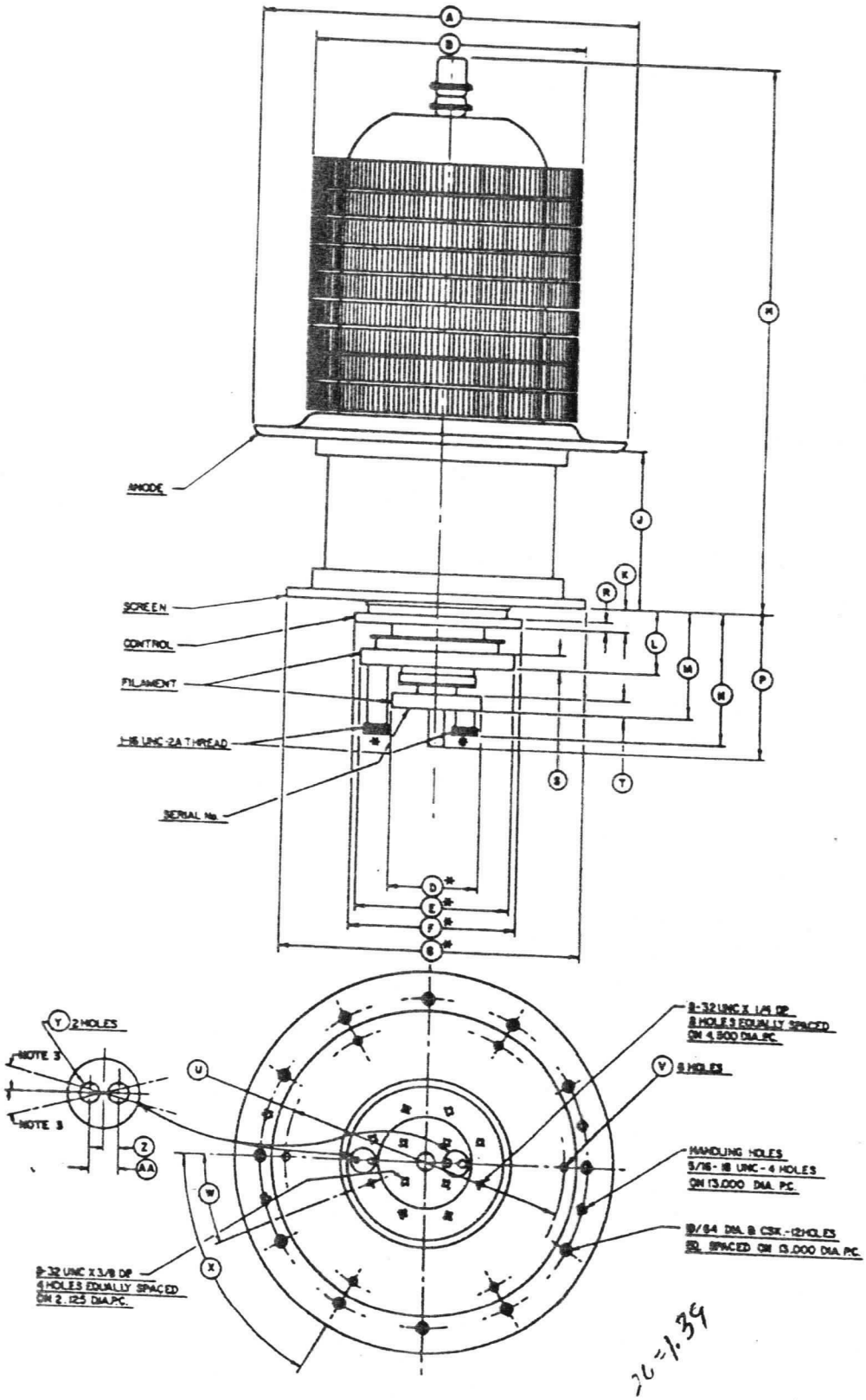

SYM.	INCHES			MILLIMETERS		
	MIN.	MAX.	REF.	MIN.	MAX.	REF.
A	14.937	15.062	- -	379.40	382.57	- -
B	11.125	11.375	- -	282.57	288.92	- -
D	3.437	3.562	- -	87.30	90.47	- -
E	5.937	6.062	- -	150.80	153.97	- -
F	6.437	6.562	- -	163.50	166.67	- -
G	11.937	12.062	- -	303.20	306.37	- -
H	20.400	21.120	- -	518.16	536.45	- -
J	6.250	6.375	- -	158.75	161.92	- -
K	0.750	0.875	- -	19.05	22.22	- -
L	2.437	2.562	- -	61.90	65.07	- -
M	4.062	4.187	- -	103.17	106.35	- -
N	5.000	5.125	- -	127.00	130.17	- -
U	- -	- -	11.000	- -	- -	279.40
V	- -	- -	0.375	- -	- -	9.52
W	- -	- -	22-1/2°	- -	- -	22-1/2°
X	- -	- -	60°	- -	- -	60°
Y	- -	- -	0.261	- -	- -	6.63
Z	- -	- -	0.219	- -	- -	5.56
AA	- -	- -	0.438	- -	- -	11.12

NOTES

1. REF DIMENSIONS ARE FOR INFO. ONLY & ARE NOT REQUIRED FOR INSPECTION PURPOSES.
2. 1/8 CONTACT SURFACES.
3. AXIS OF "Y" HOLES TO BE ALIGNED WITH "V" HOLES WITHIN 15°
4. "O" RING, P/N 0-49172N, 12 I.D. x 3/16 WALL, SUPPLIED WITH TUBE

4CV250,000B

1.2 32

26=1.39

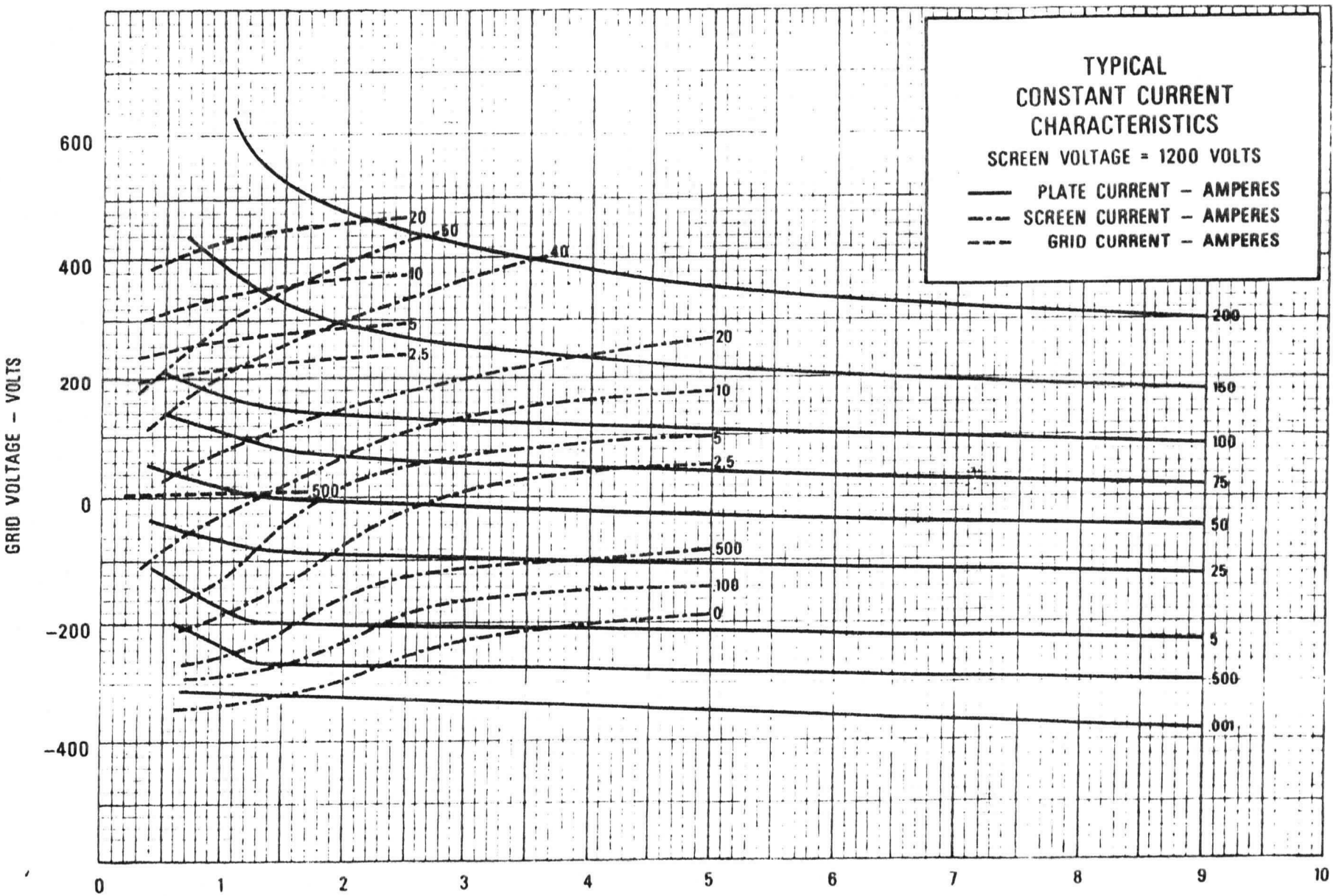

CURVE #3285

NEW

4CV250,000B/4CW250,000B

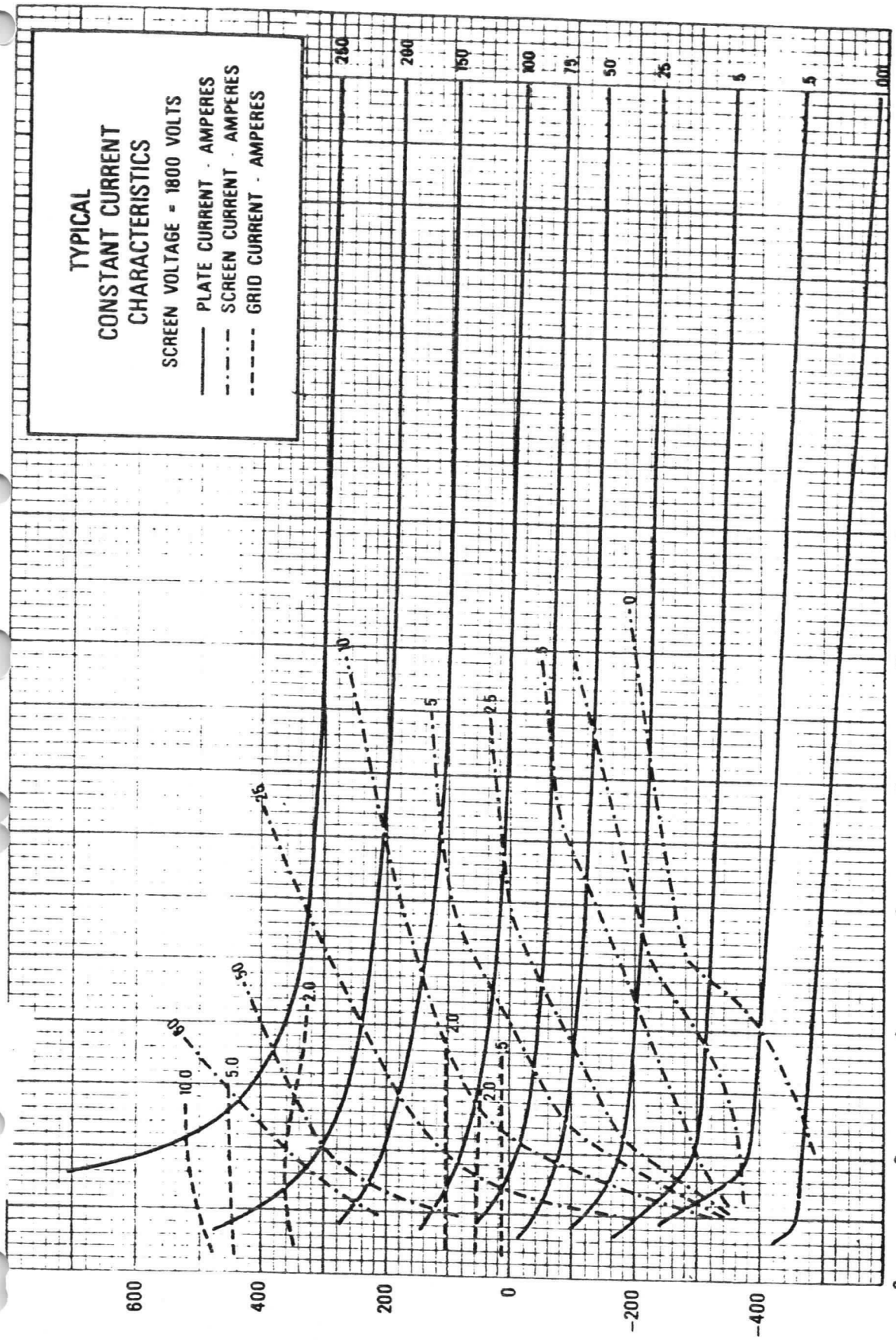

CURVE #3464

SAME

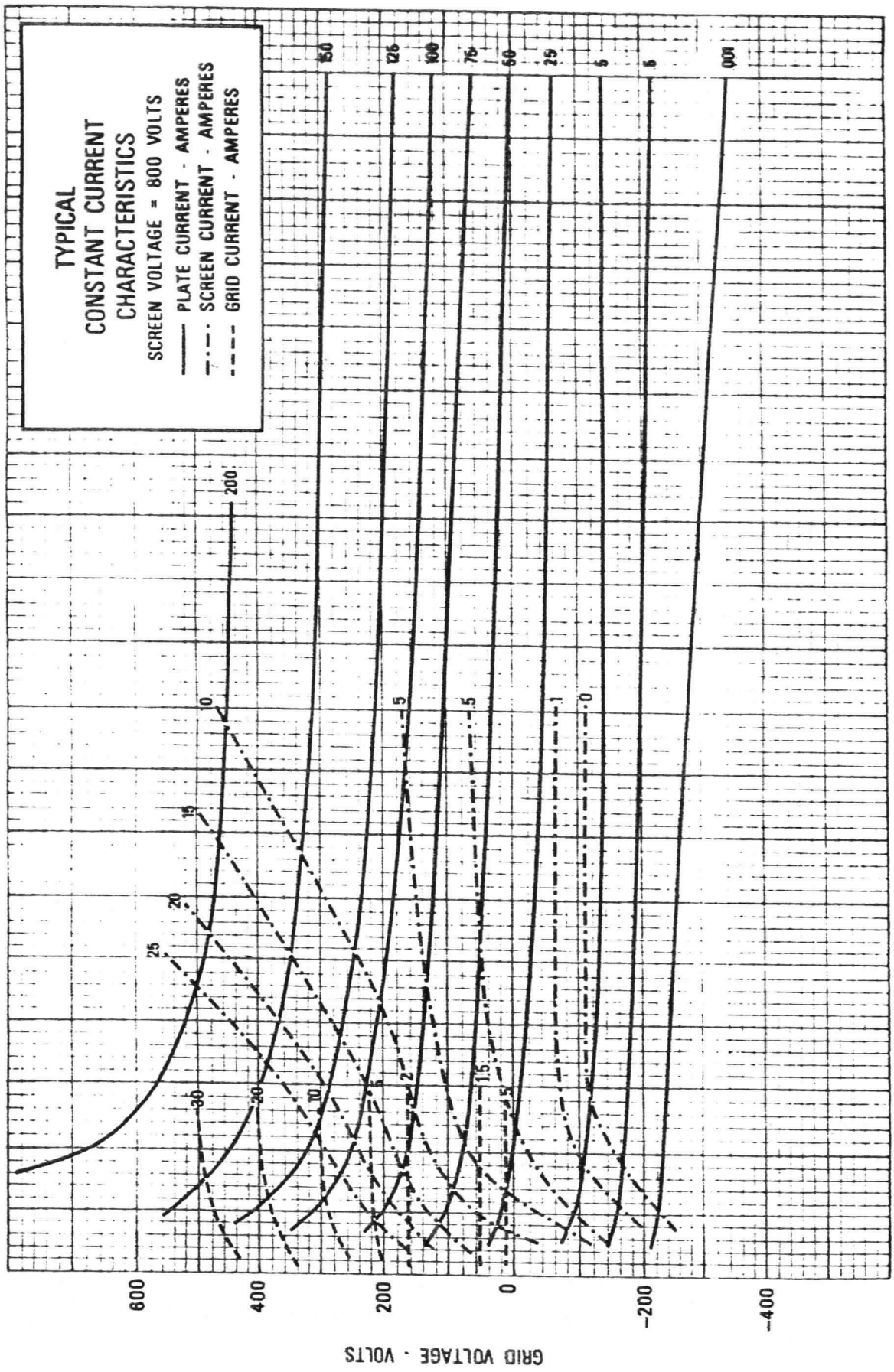
TYPICAL
CONSTANT CURRENT
CHARACTERISTICS
SCREEN VOLTAGE = 800 VOLTS
PLATE CURRENT - AMPERES
SCREEN CURRENT - AMPERES
GRID CURRENT - AMPERES
PLATE VOLTAGE - KILOVOLTS
GRID VOLTAGE - VOLTS
CURVE #3465
SAME

TECHNICAL DATA

4CW250,000V
4CW250,000A

WATER-COOLED
POWER TETRODE

The EIMAC 4CW250,000V/A is a ceramic/metal, water-cooled, power tetrode intended for use at the 250 to 500 kilowatt output power level. It is recommended as a Class C amplifier or oscillator; a Class AB rf linear amplifier; a Class AB push-pull af amplifier or modulator; a plate or screen modulated Class C rf amplifier; or for pulse modulator or regulator service. The 4CW250,000V is supplied with a VacIon® pump attached. On the 4CW-250,000A, no VacIon pump is attached.

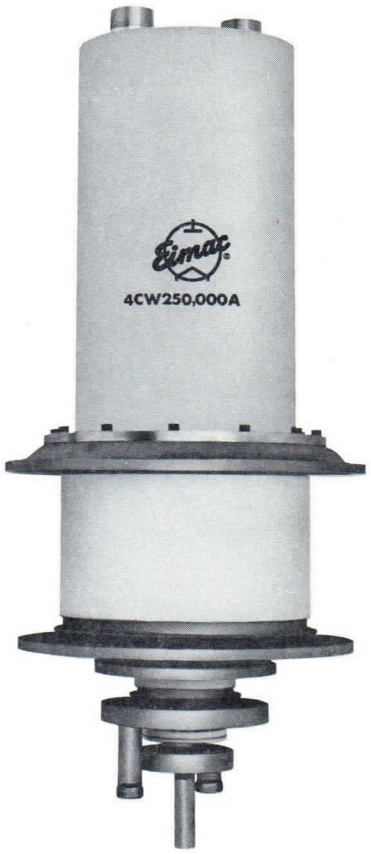

Shown with anode water jacket.

GENERAL CHARACTERISTICS[1]

ELECTRICAL

Filament: Thoriated Tungsten		
Voltage	12.0 ± 0.6	V
Current, at 12.0 volts	660	A
Amplification Factor (Average):		
Grid to Screen	4.5	
Direct Interelectrode Capacitance (grounded cathode) [2]		
Cin	765	pF
Cout	124	pF
Cgp	6.0	pF
Frequency or Maximum Rating:		
CW	50	MHz

1. Characteristics and operating values are based upon performance tests. These figures may change without notice as the result of additional data or product refinement. EIMAC Division of Varian should be consulted before using this information for final equipment design.
2. Capacitance values are for a cold tube.

MECHANICAL

Maximum Overall Dimensions:	
Length (4CW250,000V)	32.93 in; 837.0 mm
(4CW250,000A)	30.46 in; 774.0 mm
Diameter	13.06 in; 330.0 mm
Net Weight	98 lb; 44.5 kg
Operating Position	Vertical, base up or down
Maximum Operating Temperature:	
Ceramic/Metal Seals	200°C
Cooling	Liquid
Base	Special
Recommended Anode Water Jacket (not supplied)	SK-1720

(Revised 3-1-71) © by Varian

Printed in U.S.A.

RADIO FREQUENCY LINEAR AMPLIFIER GRID DRIVEN

Class AB

ABSOLUTE MAXIMUM RATINGS:

DC PLATE VOLTAGE	20,000	VOLTS
DC SCREEN VOLTAGE	2,500	VOLTS
DC PLATE CURRENT	40	AMPERES
PLATE DISSIPATION	250,000	WATTS
SCREEN DISSIPATION	3,500	WATTS
GRID DISSIPATION	1,500	WATTS

TYPICAL OPERATION (Frequencies to 50 MHz)
Class AB, Peak Envelope or Modulation Crest Conditions

Plate Voltage	15	20	kVdc
Screen Voltage	1.8	1.8	kVdc
Grid Voltage [1/2]	-500	-500	Vdc
Zero-Signal Plate Current	0.20	0.20	Adc
Single-Tone Plate Current	20	23	Adc
Single-Tone Screen Current[2]	1.1	1.2	Adc
Peak rf Grid Voltage [2]	500	500	v
Plate Dissipation	80	130	kW
Plate Output Power	220	330	kW
Resonant Load Impedance	325	435	Ω

1. Adjust to specified zero-signal dc plate current.
2. Approximate value.

RADIO FREQUENCY POWER AMPLIFIER OR OSCILLATOR

Class C Telegraphy or FM Telephony
(Key-Down Conditions)

ABSOLUTE MAXIMUM RATINGS:

DC PLATE VOLTAGE	20,000	VOLTS
DC SCREEN VOLTAGE	2,500	VOLTS
DC PLATE CURRENT	40	AMPERES
PLATE DISSIPATION	250,000	WATTS
SCREEN DISSIPATION	3,500	WATTS
GRID DISSIPATION	1,500	WATTS

TYPICAL OPERATION (Frequencies to 50 MHz)

Plate Voltage	16.0	19.0	kVdc
Screen Voltage	800	800	Vdc
Grid Voltage	-800	-800	Vdc
Plate Current	23.5	32.5	Adc
Screen Current[1]	2.4	3.5	Adc
Grid Current [1]	1.15	2.5	Adc
Calculated Driving Power	2.24	3.00	kW
Plate Dissipation	100.0	155.0	kW
Plate Output Power	275.0	460.0	kW
Resonant Load Impedance	300	275	Ω

1. Approximate value.

PLATE MODULATED RADIO FREQUENCY POWER AMPLIFIER

Class C Telephony (Carrier Conditions)

ABSOLUTE MAXIMUM RATINGS:

DC PLATE VOLTAGE	17,500	VOLTS
DC SCREEN VOLTAGE	2,000	VOLTS
DC PLATE CURRENT	30	AMPERES
PLATE DISSIPATION [1]	167,000	WATTS
SCREEN DISSIPATION [2]	3,500	WATTS
GRID DISSIPATION [2]	1,500	WATTS

1. Corresponds to 250,000 watts at 100% sine-wave modulation.
2. Average, with or without modulation.

TYPICAL OPERATION (Frequencies to 50 MHz)

Plate Voltage	14.0	kVdc
Screen Voltage	800	Vdc
Grid Voltage	-800	Vdc
Plate Current	29.0	Adc
Screen Current[1]	3.5	Adc
Grid Current [1]	2.0	Adc
Peak af Screen Voltage[1](100% modulation)	800	v
Peak rf Grid Voltage[1]	1160	v
Calculated Driving Power	2320	W
Plate Dissipation	119.0	kW
Plate Output Power	285.0	kW
Resonant Load Impedance	210	Ω

1. Approximate value.

AUDIO FREQUENCY POWER AMPLIFIER OR MODULATOR

Class AB

ABSOLUTE MAXIMUM RATINGS (per tube)

DC PLATE VOLTAGE	20,000	VOLTS
DC SCREEN VOLTAGE	2,500	VOLTS
DC PLATE CURRENT	40	AMPERES
PLATE DISSIPATION	250,000	WATTS
SCREEN DISSIPATION	3,500	WATTS
GRID DISSIPATION	1,500	WATTS

1. Approximate value.

TYPICAL OPERATION (Two Tubes), Sinusoidal Wave

Plate Voltage	15.0	20.0	kVdc
Screen Voltage	1.8	1.8	kVdc
Grid Voltage [1/3]	-500	-500	Vdc
Zero-Signal Plate Current	0.20	0.20	Adc
Max. Signal Plate Current	40.0	46.0	Adc
Max. Signal Screen Current [1]	1.1	1.2	Adc
Peak af Grid Voltage [2]	500	500	v
Max. Signal Plate Dissipation	160.0	260.0	kW
Plate Output Power	440.0	660.0	kW
Load Resistance (plate to plate)	650	870	Ω

2. Per Tube.
3. Adjust to give stated zero-signal plate current.

PULSE MODULATOR OR REGULATOR

ABSOLUTE MAXIMUM RATINGS:

DC PLATE VOLTAGE	40,000 VOLTS	PLATE DISSIPATION	250,000 WATTS
DC SCREEN VOLTAGE	2,500 VOLTS	SCREEN DISSIPATION	3,500 WATTS
PEAK CATHODE CURRENT	350 AMPERES	GRID DISSIPATION	1,500 WATTS

NOTE: TYPICAL OPERATION data are obtained from direct measurement or by calculation from published characteristic curves. Adjustment of the rf grid voltage to obtain the specified plate current at the specified bias, screen and plate voltages is assumed. If this procedure is followed, there will be little variation in output power when the tube is changed, even though there may be some variation in grid and screen current. The grid and screen currents which result when the desired plate current is obtained are incidental and vary from tube to tube. These current variations cause no difficulty so long as the circuit maintains the correct voltage in the presence of the variations in current. In the case of Class C Service, if grid bias is obtained principally by means of a grid resistor, the resistor must be adjustable to obtain the required bias voltage when the correct rf grid voltage is applied.

RANGE VALUES FOR EQUIPMENT DESIGN	Min.	Max.	
Filament: Current at 12 volts	620	700	A
Interelectrode Capacitances[1] (grounded cathode connection)			
Cin	730	800	pF
Cout	112	136	pF
Cgp	4.0	8.0	pF

1. Capacitance values are for a cold tube.

APPLICATION

MECHANICAL

MOUNTING - The 4CW250,000V/A must be mounted vertically, anode up or down. The tube may be supported by the anode flange or the screen flange.

COOLING - The EIMAC SK-1720 water jacket is available for use with the 4CW250,000A and V. Because of the small size of this cooler, high frequency operation is possible. It is essential that high purity water be used to minimize power loss and corrosion of metal fittings. Good distilled or de-ionized water will have a resistance of 1 to 2 megohms per cm^3. Water should be discarded if resistivity falls to 50,000 ohms cm^3.

Since the tube anode is usually at high potential to ground, water connections to the anode are made through insulating tubing. These insulating sections should be long enough so that column resistance is above 100,000 ohms per 1000 plate supply volts.

The table below lists minimum cooling water requirements at various plate dissipation levels.

Plate Dissipation (kilowatts)	Water Flow (GPM)	Pressure Drop (PSI)
100	25.0	3.5
150	37.5	3.7
200	50.0	4.0
250	60.0	6.0
300	73.0	9.0

The filament supports of the 4CW250,000V/A are water cooled. Approximately 0.5 GPM should circulate through each of the filament connectors with a pressure drop of 20 PSI. Filament connector assemblies, SK-1710, provide electrical and water connections. Two sets of SK-1710 are required.

It is recommended that the water cooled control grid connector, SK-1712, be used. Water flow of approximately 0.5 GPM should circulate through the grid connector. The pressure drop across the grid connector is low. A convenient way to make water connection is to series connect the grid cooling water with the outer filament cooling water path.

The outer filament water path has a lower pressure drop than the inner filament water path making this connection practical.

VacIon ® High Vacuum Pump –
Model 913-0011

This pump is included as standard equipment on the 4CW250,000V. It permits periodic checking of the vacuum condition of tubes in storage. It may be used to restore the vacuum of a tube which has been accidentally damaged by overheating in service.

Accessories required for VacIon ® pump operation but not supplied with the tube are:
Permanent magnet, Model 913-0011.
Control unit, Model 921-0006 for 60 Hz power.
Control unit, Model 921-0026 for 50 Hz power.

ELECTRICAL

FILAMENT OPERATION - The peak emission at rated filament voltage of the EIMAC 4CW-250,000V/A is normally many times the peak emission required for communication service. A small decrease in filament temperature due to reduction of filament voltage can increase the life of the 4CW250,000V/A by a substantial percentage. It is good practice to determine the nominal filament voltage for a particular application that will not affect the operation of the equipment. This is done by measuring some important parameter of performance such as plate current, power output, or distortion while filament voltage is reduced on the 4CW250,000V/A. At some value of filament voltage there will be a noticeable reduction in plate current or power output, or an increase in distortion. Operation may be at a filament voltage slightly higher than that point at which performance appeared to deteriorate. This voltage should be measured at the socket with a 1% meter and periodically checked.

Filament starting current must be limited to a maximum of 1800 amperes.

GRID OPERATION - The 4CW250,000V/A grid is rated at 1,500 watts of dissipation and protective measures should be included in circuitry to insure that this rating is not exceeded. Grid dissipation is the approximate product of dc grid current and peak positive grid voltage.

SCREEN DISSIPATION - The power applied to the screen grid must not exceed 3,500 watts. Where no ac is applied to the screen, dissipation is the product of dc screen voltage and dc screen current. With screen modulation the dissipation is the product of RMS screen current and RMS screen voltage.

Plate voltage, plate load and bias voltage must never be removed while filament and screen voltages are present since the screen dissipation rating will be exceeded. Suitable protective means must be provided to remove screen power at the occurrence of any such conditions.

PLATE DISSIPATION - The plate dissipation of 250 kilowatts attainable through water cooling provides a large margin of safety in most applications. The rating may be exceeded for brief periods during tuning. When the 4CW250,000V/A is used as a plate-modulated rf amplifier, plate dissipation under carrier conditions is limited to 167,000 watts.

HIGH VOLTAGE - Normal operating voltages used with the 4CW250,000V/A are deadly, and the equipment must be designed properly and operating precautions must be followed. Design all equipment so that no one can come in contact with high voltages. All equipment must include safety enclosures for high-voltage circuits and terminals, with interlock switches to open primary circuits of the power supply and to discharge high-voltage condensers whenever access doors are opened. Interlock switches must not be bypassed or "cheated" to allow operation with access doors open. Always remember that HIGH VOLTAGE CAN KILL.

X-RADIATION - High-vacuum tubes operating at voltages higher than 10 kilovolts produce progressively more dangerous X-ray radiation as the voltage is increased. The 4CW250,000V/A, operating at its rated voltages and currents, is a potential X-ray hazard. Only limited shielding is afforded by the tube envelope. Moreover, the X-ray radiation level can increase significantly with aging and gradual deterioration, due to leakage paths or emission characteristics as they are affected by the high voltage. X-ray shielding must be provided on all sides of tubes operating at these voltages to provide adequate protection throughout the tube's life. Periodic checks on the X-ray level should be made, and the tube should never be operated without adequate shielding in place when voltages above 10 kilovolts are in use. Lead glass, which attenuates X-rays, is available for viewing windows. If there is any doubt as to the requirement for or the adequacy of shielding, an expert in this field should be contacted to perform an X-ray survey of the equipment.

Operation of high-voltage equipment with interlock switches "cheated" and cabinet doors open in order to be better able to locate an equipment malfunction can result in serious X-ray exposure.

RADIO FREQUENCY RADIATION - Avoid exposure to strong rf fields even at relatively low frequency. Absorption of rf energy by human tissue is dependent on frequency. Under 30 MHz, most of the energy will pass completely through the human body with little attenuation or heating effect. Public health agencies are concerned with the hazard, however, even at these frequencies, and it is worth noting that some commercial dielectric heating units actually operate at frequencies as low as the 13 and 27 MHz bands.

SPECIAL APPLICATION - Where it is desired to operate this tube under conditions widely different from those listed here, write to Power Grid Tube Product Manager, EIMAC Division of Varian, 301 Industrial Way, San Carlos, California, 94070, for information and recommendations.

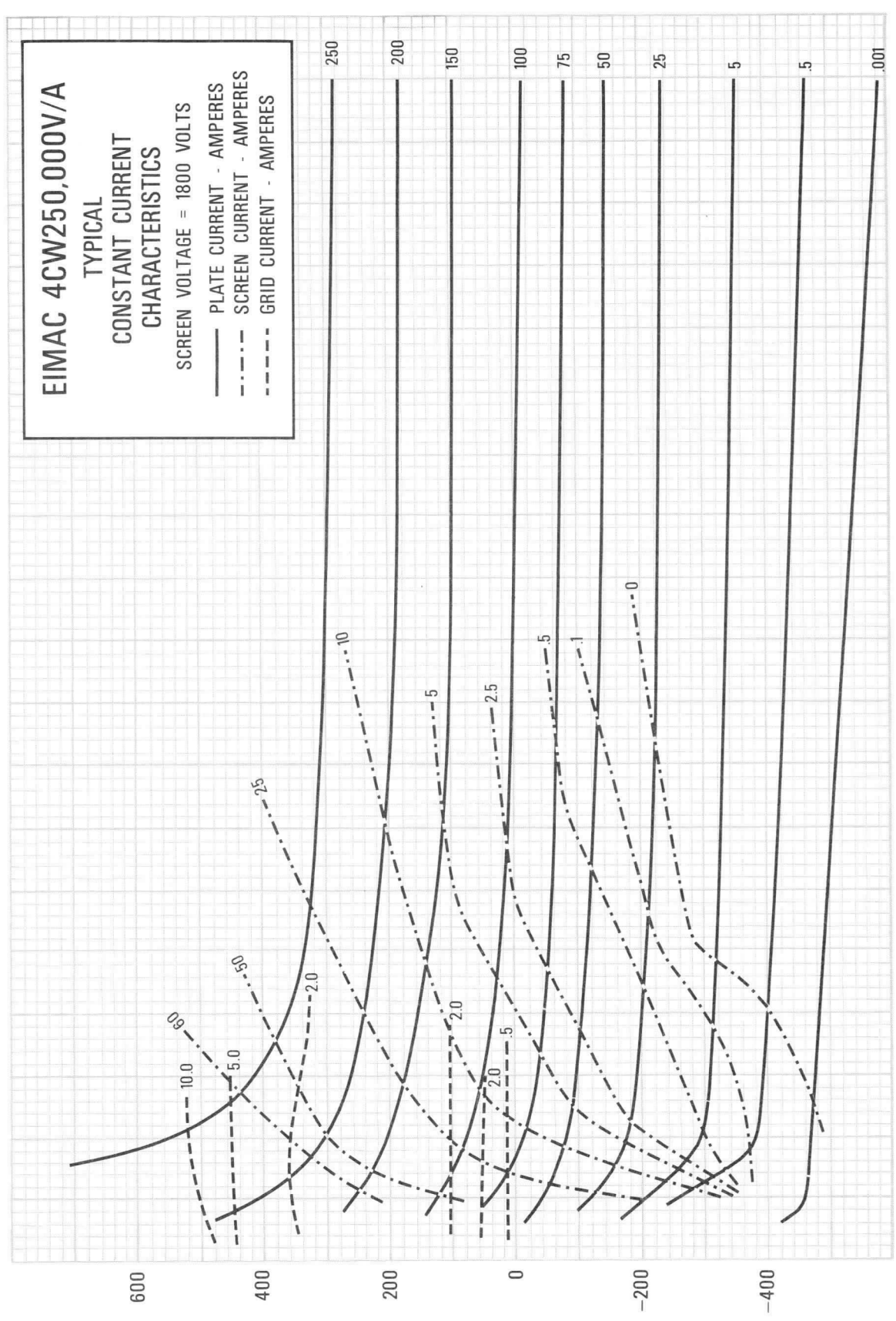
EIMAC 4CW250,000V/A
TYPICAL
CONSTANT CURRENT
CHARACTERISTICS
SCREEN VOLTAGE = 1800 VOLTS
PLATE CURRENT - AMPERES
SCREEN CURRENT - AMPERES
GRID CURRENT - AMPERES
250
200
150
100
75
50
25
5
.5
.001
60
10.0
5.0
50
25
10
5
2.5
2.0
.5
.1
0
GRID VOLTAGE - VOLTS
600
400
200
0
-200
-400
0
2
4
6
8
10
12
14
16
18
20
PLATE VOLTAGE - KILOVOLTS
CURVE #3464

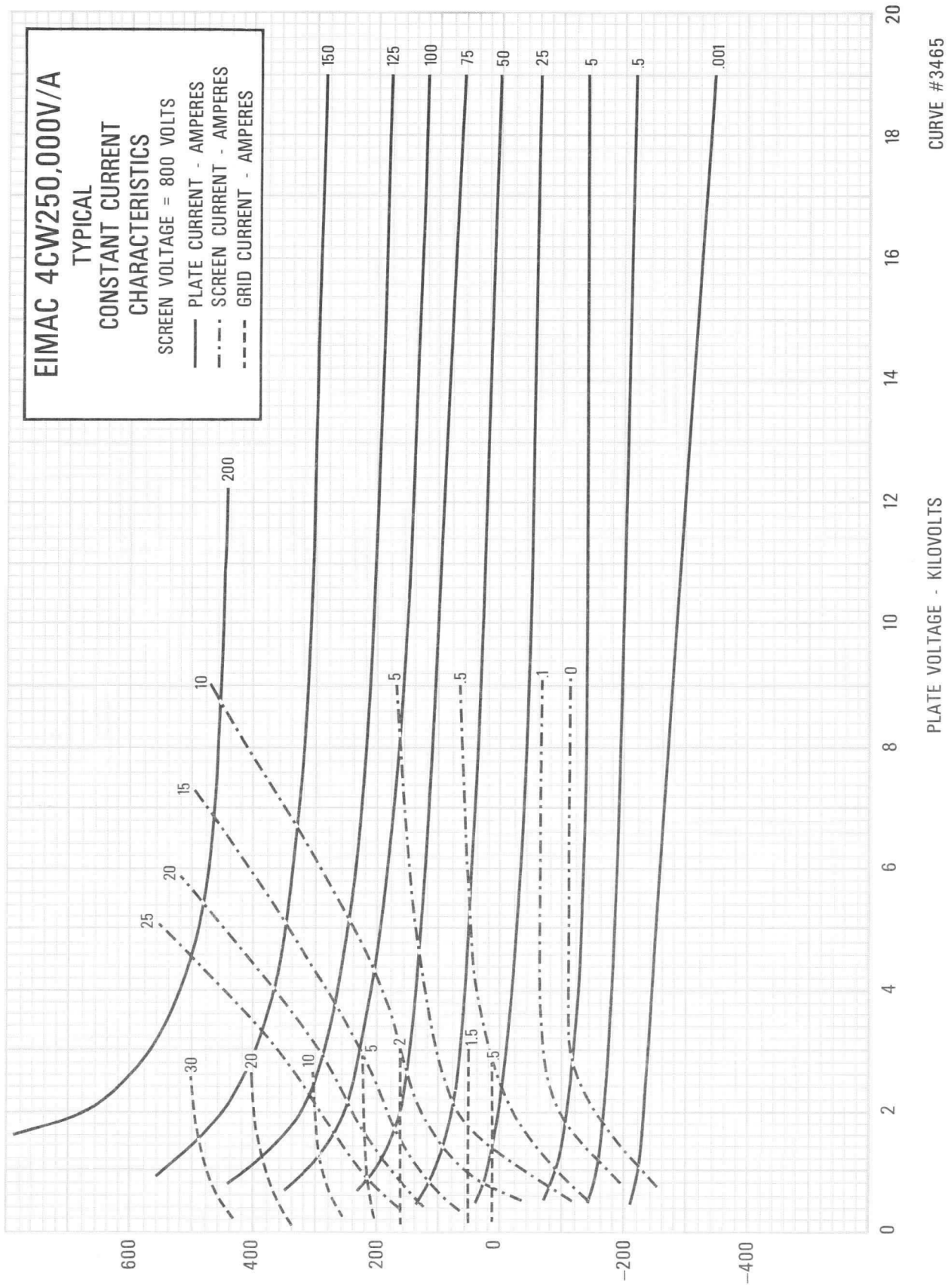
EIMAC 4CW250,000V/A
TYPICAL
CONSTANT CURRENT
CHARACTERISTICS
SCREEN VOLTAGE = 800 VOLTS
PLATE CURRENT - AMPERES
SCREEN CURRENT - AMPERES
GRID CURRENT - AMPERES
150
125
100
75
50
25
5
.5
.001
200
10
15
20
25
30
20
10
5
2
1.5
.5
5
.5
1
0
.5
600
400
200
0
-200
-400
GRID VOLTAGE - VOLTS
0
2
4
6
8
10
12
14
16
18
20
PLATE VOLTAGE - KILOVOLTS
CURVE #3465

DIMENSIONAL DATA						
DIM.	INCHES			MILLIMETERS		
	MIN.	MAX.	REF.	MIN.	MAX.	REF.
A	12.937	13.062	--	328.60	331.77	--
B	7.937	8.062	--	201.60	204.77	--
C	4.437	4.562	--	112.70	115.87	--
D	3.437	3.562	--	87.30	90.47	--
E	5.937	6.062	--	150.80	153.97	--
F	6.437	6.562	--	163.50	166.67	--
G	11.937	12.062	--	303.20	306.37	--
H	23.437	23.562	--	595.30	598.47	--
J	6.250	6.375	--	158.75	161.93	--
K	0.750	0.875	--	19.05	22.23	--
L	2.437	2.562	--	61.90	65.07	--
M	4.062	4.187	--	103.17	106.35	--
N	5.000	5.125	--	127.00	130.18	--
P	--	6.900	(3)	--	175.26	(3)
R	6.750	7.375	(3)	171.45	187.33	(3)
S	8.750	9.375	(3)	222.25	238.13	(3)
T	--	11.250	(3)	--	285.75	(3)
U	--	--	11.000	--	--	279.40
V	--	--	0.375	--	--	9.53
W	--	--	22.5°	--	--	22.5°
X	--	--	60.0°	--	--	60.0°
Y	--	--	0.261	--	--	6.63
Z	--	--	0.219	--	--	5.56
AA	--	--	0.438	--	--	11.13

NOTES:
1. REF. DIMS. ARE FOR INFO.ONLY AND ARE NOT REQ'D. FOR INSP. PURPOSES.
2. (*) CONTACT SURFACES.
3. 'P' DIM. APPLIES TO 'A' VERSION ONLY. R, S & T DIMS. APPLY TO 'V' VERSION ONLY.

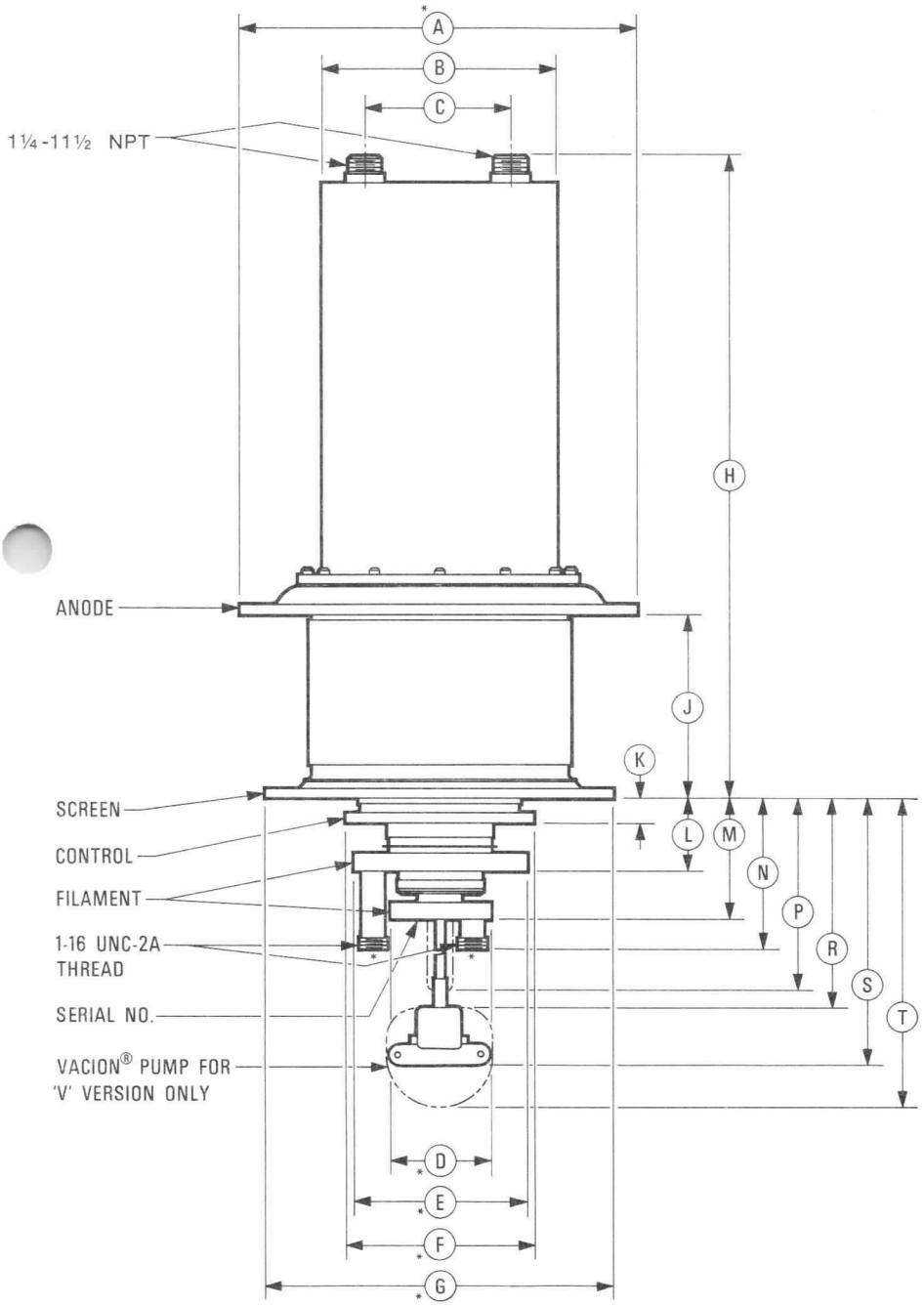

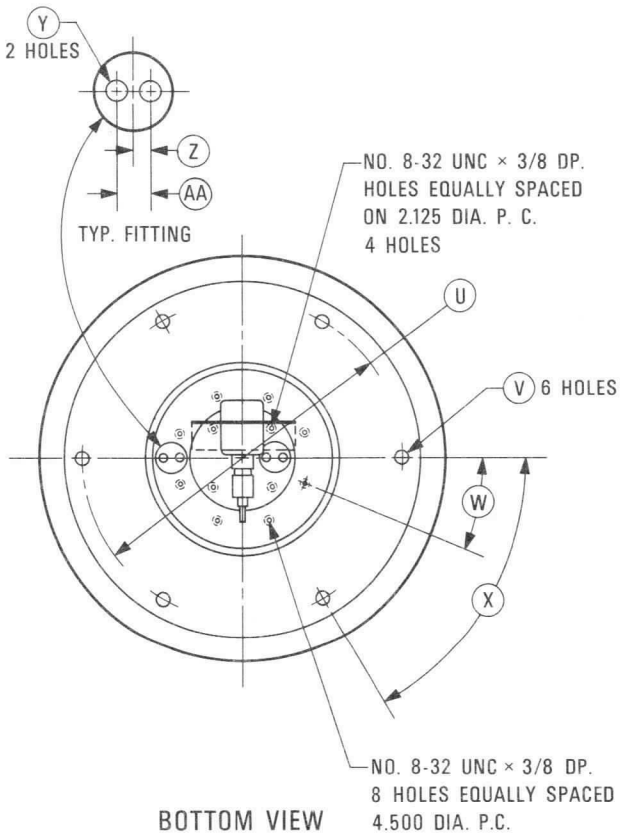

BOTTOM VIEW

EIMAC
Division of Varian
SAN CARLOS
CALIFORNIA

4CX125C
4CX125F

RADIAL-BEAM POWER TETRODES

The EIMAC 4CX125C and 4CX125F are horizontally-finned versions of the 4CX300A. These tubes possess the same rugged internal features of the 4CX300A and are quite free of mechanical noise under severe shock and vibration conditions.

The horizontal fins used on these tubes result in a lighter and smaller tube than the 4CX300A. Transverse cooling air-flow is required to attain the 125 watt nominal plate dissipation rating.

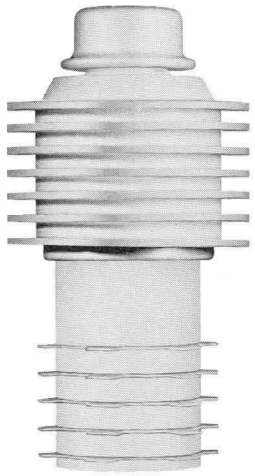

GENERAL CHARACTERISTICS

ELECTRICAL

		Min.	Nom.	Max.	
Cathode:	Oxide-coated, Unipotential				
	Heating Time	30	60		seconds
	Cathode-to-heater Potential			± 150	volts
Heater:	Voltage: 4CX125C		6.0		volts
	4CX125F		26.5		volts
	Current: 4CX125C	2.6		3.1	amperes
	4CX125F	0.6		0.7	amperes
Amplification Factor (Grid–Screen)		4.0		5.6	
Transconductance (I_b = 200 Ma)			12,000		umhos
Frequency for Maximum Ratings				500	MHz

Interelectrode Capacitances, Grounded Cathode:	Min.	Max.	
Input	25.0	33.0	pF
Output	3.5	4.5	pF
Feedback		0.06	pF

MECHANICAL

Base	Special, breechblock, terminal surfaces
Socket	EIMAC SK-700 series
Maximum Operating Temperatures:	
Anode Core	250° C
Ceramic-to-Metal Seals	250° C
Operating Position	Any
Cooling	Forced air
Net Weight	3.5 ounces
Shipping Weight (Approximate)	1 pound

MAXIMUM RATINGS

	Class–C Plate Mod	Class–C Teleg or FM	Class–AB Audio or SSB	
DC Plate Voltage	1500	2000	2000	volts
DC Screen Voltage	300	300	400	volts
DC Grid Voltage	– 250	– 250	. . .	volts
DC Plate Current	200	250	250	ma
Plate Dissipation	83	125	125	watts
Screen Dissipation	12	12	12	watts
Grid Dissipation	2	2	2	watts

Note: See 4CX300A data sheet for characteristic curves and typical operating conditions.

TYPICAL OPERATION

RF Amplifier (excluding circuit losses)	DC Plate Voltage (Volts)	Driving Power (Watts)	Input Power (Watts)	Output Power (Watts)
Class–C Telegraphy or FM Telephony	2000	3.0	500	390
Plate–Modulated Telephony (Carrier)	1500	2.0	300	235
Class–AB_1 Linear Amplifier	2000	0	315	205

(Revised 6-1-67) © 1963, 1967 by Varian

Printed in U.S.A.

APPLICATION

Cooling: The 4CX125C and 4CX125F are intended for use where transverse cooling air is desired. With the anode cooler installed in a duct of 1" x 1½" cross section, approximately 8 cfm of air is required to maintain seal temperatures below 250° C. This presumes sea level operation with an ambient temperature of 25 ° or less. Sufficient air must be circulated around the base terminals to maintain the rated seal temperatures.

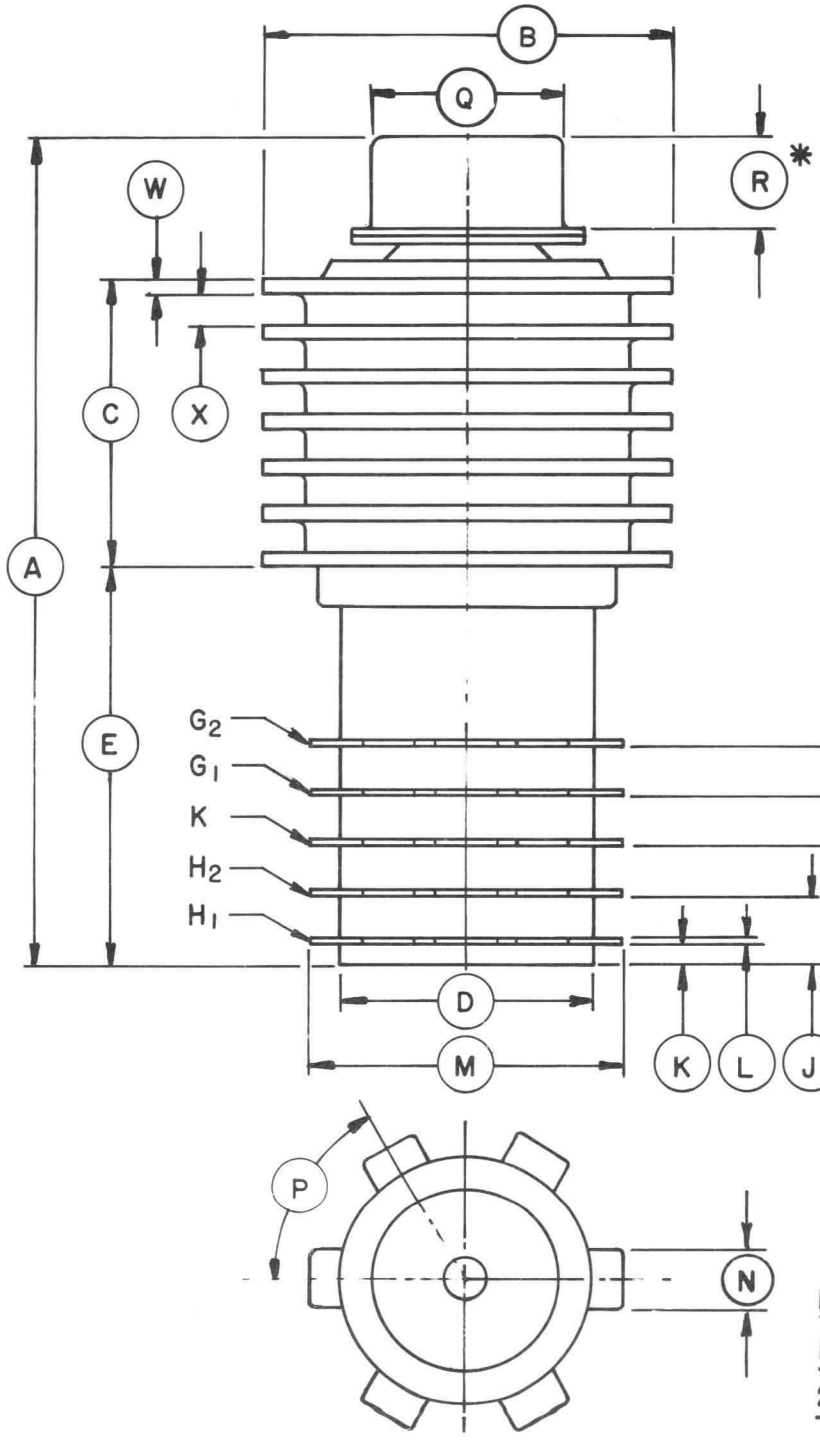

DIMENSIONS IN INCHES

DIMENSIONAL DATA

REF.	MIN.	MAX.	NOM.
A	2.300	2.500	
B	1.240DIA	1.265DIA.	
C	.710	.790	
D	.740DIA	.770DIA	
E	1.133	1.195	
F	.602	.642	
G	.470	.500	
H	.329	.359	
J	.193	.213	
K	.050	.072	
L	.010	.020	
M	.936DIA.	.956DIA.	
N	.170	.185	
P			60°
Q	.559DIA.	.573DIA.	
R	.240	.280	
W			.040
X	.060	.090	

NOTE: These dimensions reflect standard manufacturing tolerances. Where they are to be made the basis of purchase specifications, they should first be checked with the factory.

NOTES:

1. DIMENSIONS IN INCHES.
2. (*) CONTACT SURFACE

TECHNICAL DATA

7203
4CX250B
8621
4CX250FG

RADIAL-BEAM
POWER TETRODE

The 7203/4CX250B and 8621/4CX250FG are ceramic/metal forced-air cooled, external-anode radial-beam tetrodes with a maximum plate dissipation rating of 250 watts and a maximum input-power rating of 500 watts. The 7203/4CX250B is designed to operate with a heater voltage of 6.0 volts, while the 8621/4CX250FG is designed for operation at a heater voltage of 26.5 volts. Otherwise, the two tube types have identical characteristics.



GENERAL CHARACTERISTICS[1]

ELECTRICAL

Cathode: Oxide Coated, Unipotential		
Heater: Voltage (4CX250B)	6.0 ± 0.3	V
Current, at 6.0 volts	2.6	A
Cathode-Heater Potential, maximum	±150	V
Heater: Voltage (4CX250FG)	26.5 ± 1.3	V
Current, at 26.5 volts	0.54	A
Cathode-Heater Potential, maximum	±150	V
Amplification Factor (Average):		
Grid to Screen	5	
Direct Interelectrode Capacitances (Grounded cathode)[2]		
Input	15.7	pF
Output	4.5	pF
Feedback	0.04	pF
Direct Interelectrode Capacitances (grounded grid and screen)[2]		
Input	13	pF
Output	4.5	pF
Feedback	0.01	pF
Frequency of Maximum Rating:		
CW	500	MHz

1. Characteristics and operating values are based upon performance tests. These figures may change without notice as the result of additional data or product refinement. EIMAC Division of Varian should be consulted before using this information for final equipment design.
2. In Shielded Fixture.

MECHANICAL

Maximum Overall Dimensions:	
Length	2.46 in; 62.5 mm
Diameter	1.64 in; 41.7 mm
Net Weight	4 oz; 113 gm
Operating Position	Any

(Revised 8-1-74) © 1962, 1970, 1973, 1974 Varian

Printed in U.S.A.

Maximum Operating Temperature:
- Ceramic/Metal Seals . . . . . 250°C
- Anode Core . . . . . 250°C

Cooling . . . . . Forced Air
Base . . . . . Special 9-pin JEDEC-B8-236
Recommended Socket . . . . . EIMAC SK-600 Series
Recommended Chimney . . . . . EIMAC SK-600 Series

RADIO FREQUENCY LINEAR AMPLIFIER GRID DRIVEN (SSB)

Class AB_1

MAXIMUM RATINGS

DC PLATE VOLTAGE	2000	VOLTS
DC SCREEN VOLTAGE	400	VOLTS
DC GRID VOLTAGE	-250	VOLTS
DC PLATE CURRENT	0.25	AMPERE
PLATE DISSIPATION	250	WATTS
SCREEN DISSIPATION	12	WATTS
GRID DISSIPATION	2	WATTS

TYPICAL OPERATION (Frequencies to 175 MHz)
Class AB_1, Grid Driven, Peak Envelope or Modulation Crest Conditions

Plate Voltage	1000	1500	2000	Vdc
Screen Voltage	350	350	350	Vdc
Grid Voltage [1]	-55	-55	-55	Vdc
Zero-Signal Plate Current	100	100	100	mAdc
Single Tone Plate Current	250	250	250	mAdc
Two-Tone Plate Current	190	190	190	mAdc
Single-Tone Screen Current [2]	10	8	5	mAdc
Two-Tone Screen Current [2]	2	-1	-2	mAdc
Single-Tone Grid Current [2]	0	0	0	mAdc
Peak rf Grid Voltage [2]	50	50	50	v
Plate Output Power	120	215	300	W
Resonant Load Impedance	2000	3000	4000	Ω

1. Adjust to specified zero-signal dc plate current.
2. Approximate value.

RADIO FREQUENCY LINEAR AMPLIFIER GRID DRIVEN, CARRIER CONDITIONS

Class AB_1

MAXIMUM RATINGS

DC PLATE VOLTAGE	2000	VOLTS
DC SCREEN VOLTAGE	400	VOLTS
DC GRID VOLTAGE	-250	VOLTS
DC PLATE CURRENT	0.25	AMPERE
PLATE DISSIPATION	250	WATTS
SCREEN DISSIPATION	12	WATTS
GRID DISSIPATION	2	WATTS

TYPICAL OPERATION (Frequencies to 175 MHz)
Class AB_1, Grid Driven

Plate Voltage	1000	1500	2000	Vdc
Screen Voltage	350	350	350	Vdc
Grid Voltage [1]	-55	-55	-55	Vdc
Zero-Signal Plate Current	100	100	100	mAdc
Carrier Plate Current	150	150	150	mAdc
Carrier Screen Current	-3	-4	-4	mAdc
Peak rf Grid Voltage [2]	25	25	25	v
Plate Output Power	30	50	65	W

1. Adjust to specified zero-signal dc plate current

2. Approximate value.

RADIO FREQUENCY POWER AMPLIFIER OR OSCILLATOR

Class C Telegraphy or FM Telephony
(Key-Down Conditions)

MAXIMUM RATINGS

DC PLATE VOLTAGE	2000	VOLTS
DC SCREEN VOLTAGE	300	VOLTS
DC GRID VOLTAGE	-250	VOLTS
DC PLATE CURRENT	0.25	AMPERE
PLATE DISSIPATION	250	WATTS
SCREEN DISSIPATION	12	WATTS
GRID DISSIPATION	2	WATTS

TYPICAL OPERATION (Frequencies to 175 MHz)

					500 MHz [2]	
Plate Voltage	500	1000	1500	2000	2000	Vdc
Screen Voltage	250	250	250	250	300	Vdc
Grid Voltage	-90	-90	-90	-90	-90	Vdc
Plate Current	250	250	250	250	250	mAdc
Screen Current [1]	45	38	21	19	10	mAdc [2]
Grid Current [1]	35	31	28	26	10	mAdc [2]
Peak rf Grid Voltage [1]	114	114	112	112	---	v
Measured Driving Power [1]	4.0	3.5	3.2	2.9	---	W
Plate Input Power	125	250	375	500	500	W
Plate Output Power	70	190	280	390	290	W [2]
Heater Voltage (4CX250B)	6.0	6.0	6.0	6.0	5.5	V
Heater Voltage (4CX250FG)	26.5	26.5	26.5	26.5	24.3	V

1. Approximate value.
2. Measured values for a typical cavity amplifier circuit.

PLATE MODULATED RADIO FREQUENCY POWER AMPLIFIER-GRID DRIVEN

Class C Telephony (Carrier Conditions)

MAXIMUM RATINGS

DC PLATE VOLTAGE	1500	VOLTS
DC SCREEN VOLTAGE	300	VOLTS
DC GRID VOLTAGE	-250	VOLTS
DC PLATE CURRENT	0.20	AMPERE
PLATE DISSIPATION[1]	165	WATTS
SCREEN DISSIPATION[2]	12	WATTS
GRID DISSIPATION[2]	2	WATTS

1. Corresponds to 250 watts at 100% sine-wave modulation.
2. Average, with or without modulation.

TYPICAL OPERATION (Frequencies to 175 MHz)

Plate Voltage	500	1000	1500	Vdc
Screen Voltage	250	250	250	Vdc
Grid Voltage	-100	-100	-100	Vdc
Plate Current	200	200	200	mAdc
Screen Current	31	22	20	mAdc
Grid Current	15	14	14	mAdc
Peak rf Grid Voltage	118	117	117	v
Calculated Driving Power	1.8	1.7	1.7	W
Plate Input Power	100	200	300	W
Plate Output Power	60	145	235	W

3. Approximate value.

AUDIO FREQUENCY POWER AMPLIFIER OR MODULATOR

Class AB , Grid Driven (Sinusoidal Wave)

MAXIMUM RATINGS (Per Tube)

DC PLATE VOLTAGE	2000	VOLTS
DC SCREEN VOLTAGE	400	VOLTS
DC GRID VOLTAGE	-250	VOLTS
DC PLATE CURRENT	0.25	AMPERE
PLATE DISSIPATION	250	WATTS
SCREEN DISSIPATION	12	WATTS
GRID DISSIPATION	2	WATTS

1. Approximate value.
2. Per Tube.

TYPICAL OPERATION (Two Tubes)

Plate Voltage	1000	1500	2000	Vdc
Screen Voltage	350	350	350	Vdc
Grid Voltage 1/3	-55	-55	-55	Vdc
Zero-Signal Plate Current	200	200	200	mAdc
Max Signal Plate Current	500	500	500	mAdc
Max Signal Screen Current[1]	20	16	10	mAdc
Max Signal Grid Current[1]	0	0	0	mAdc
Peak af Grid Voltage[2]	50	50	50	v
Peak Driving Power	0	0	0	W
Plate Input Power	500	750	1000	W
Plate Output Power	240	430	600	W
Load Resistance (plate to plate)	3500	6200	9500	Ω

3. Adjust to give stated zero-signal plate current.

NOTE: TYPICAL OPERATION data are obtained from direct measurement or by calculation from published characteristic curves. Adjustment of the rf grid voltage to obtain the specified plate current at the specified bias, screen and plate voltages is assumed. If this procedure is followed, there will be little variation in output power when the tube is changed, even though there may be some variation in grid and screen current. The grid and screen currents which result when the desired plate current is obtained are incidental and vary from tube to tube. These current variations cause no difficulty so long as the circuit maintains the correct voltage in the presence of the variations in current. In the case of Class C Service, if grid bias is obtained principally by means of a grid resistor, the resistor must be adjustable to obtain the required bias voltage when the correct rf grid voltage is applied.

RANGE VALUES FOR EQUIPMENT DESIGN

	Min.	Nom.	Max.	
Heater: 4CX250B Current at 6.0 volts	2.3	---	2.9	A
Heater: 4CX250FG Current at 26.5 volts	0.45	---	0.62	A
Cathode Warmup Time	30	60	---	sec.
Interelectrode Capacitances[1] (grounded cathode connection)				
Input	14.2	---	17.2	pF
Output	4.0	---	5.0	pF†
Feedback	---	---	0.06	pF
Interelectrode Capacitances[1] (grounded grid and screen)				
Input	---	13.0	---	pF
Output	4.0	---	5.0	pF†
Feedback	---	0.01	---	pF
†Cout values shown are for 4CX250B; for 4CX250FG, values are	4.0	---	5.3	pF

APPLICATION

MECHANICAL

MOUNTING - The 4CX250B and 4CX250FG may be operated in any position. An EIMAC Air-System Socket, SK-600 series, or a socket having equivalent characteristics, is required. Sockets are available with or without built-in screen capacitors and may be obtained with either grounded or ungrounded cathode terminals.

COOLING - Sufficient forced-air cooling must be provided for the anode, base seals, and body seals to maintain operating temperatures below the rated maximum values. Air requirements to maintain anode core temperatures at 200°C with an inlet air temperature of 50°C are tabulated below. These requirements apply when a socket of the EIMAC SK-600 series and an EIMAC SK-606 chimney are used with air flow in the base to anode direction.

SEA LEVEL			10,000 FEET	
Plate Dissipation(watts)	Air Flow (CFM)	Pressure Drop(In.of water)	Air Flow (CFM)	Pressure Drop(In.of water)
200	5.0	0.52	7.3	0.76
250	6.4	0.82	9.3	1 20

The blower selected in a given application must be capable of supplying the desired airflow at a back pressure equal to the pressure drop shown above plus any drop encountered in ducts and filters. The blower must be designed to deliver the air at the desired altitude.

At 500 MHz or below, base cooling air requirements are satisfied automatically when the tube is operated in an EIMAC Air-System Socket and the recommended air flow rates are used. Experience has shown that if reliable long life operation is to be obtained, the cooling air flow must be maintained during standby periods when only the heater voltage is applied to the tube. The anode cooler should be inspected periodically and cleaned when necessary to remove any dirt which might interfere with effective cooling.

VIBRATION - These tubes are capable of satisfactorily withstanding ordinary shock and vibration, such as encountered in shipment and normal handling. The tubes will function well in automobile and truck mobile installations and similar environments. However, when shock and vibration more severe than this are expected, it is suggested that the EIMAC 4CX300A or 4CX250R be employed.

ELECTRICAL

HEATER - The rated heater voltage for the 4CX250B and 4CX250FG is 6.0 volts and 26.5 volts, respectively, and the voltage should be maintained as closely as practicable. Short-time changes of ± 10% will not damage the tube, but variations in performance must be expected. The heater voltage must be maintained within ± 5% to minimize these variations and to obtain maximum tube life.

At frequencies above approximately 300 MHz transit-time effects begin to influence the cathode temperature. The amount of driving power diverted to heating the cathode by back-bombardment will depend upon frequency, plate current, and driving power. When the tube is driven to maximum input as a class-C amplifier, the heater voltage should be reduced according to the table below;

Frequency MHz	4CX250B	4CX250FG
300 and lower	6.00 volts	26.5 volts
301 to 400	5.75 volts	25.3 volts
401 to 500	5.50 volts	24.3 volts

CATHODE OPERATION - The oxide coated unipotential cathode must be protected against excessively high emission currents. The maximum rated dc input current is 200 mA for plate-modulated operation and 250 mA for all other types of operation except pulse.

The cathode is internally connected to the four even-numbered base pins and all four of the corresponding socket terminals should be used to make connection to the external circuits. At radio frequencies it is important to keep the cathode leads short and direct and to use conductors with large areas to minimize the inductive reactances in series with the cathode leads.

It is recommended that rated heater voltage be applied for a minimum of 30 seconds before other operating voltages are applied. Where the circuit design requires the cathode and heater to be operated at different potentials, the rated maximum heater-to-cathode voltage is 150 volts regardless of polarity.

GRID OPERATION - The maximum rated dc grid bias voltage is -250 volts and the maximum grid dissipation rating is 2.0 watts. In ordinary audio and radio-frequency amplifiers the grid dissipation usually will not approach the maximum rating. At operating frequencies above the 100 MHz region, driving-power requirements for

amplifiers increase noticeably. At 500 MHz as much as 20 watts of driving power may have to be supplied. However, most of the driving power is absorbed in circuit losses other than grid dissipation, so that grid dissipation is increased only slightly. Satisfactory 500 MHz operation of the tube in a stable amplifier is indicated by grid-current values below approximately 15 mA.

The grid voltage required by different tubes may vary between limits approximately 20% above and below the center value, and means should be provided in the equipment to accommodate such variation. It is especially important that variations between individual tubes be compensated when tubes are operated in parallel or push-pull circuits, to assure equal load sharing.

The maximum permissible grid-circuit resistance per tube is 100,000 ohms.

SCREEN OPERATION - The maximum rated power dissipation for the screen is 12 watts, and the screen input power should be kept below that level. The product of the peak screen voltage and the indicated dc screen current approximates the screen input power except when the screen current indication is near zero or negative.

In the usual tetrode amplifier, where no signal voltage appears between cathode and screen, the peak screen voltage is equal to the dc screen voltage.

When signal voltages appear between screen and cathode, as in the case of screen-modulated amplifiers or cathode-driven tetrode amplifiers, the peak screen-to-cathode voltage is the sum of the dc screen voltage and the peak ac or rf signal voltage applied to screen or cathode.

Protection for the screen should be provided by an over-current relay and by interlocking the screen supply so that plate voltage must be applied before screen voltage can be applied.

The screen current may reverse under certain conditions and produce negative current indications on the screen milliammeter. This is a normal characteristic of most tetrodes. The screen power supply should be designed with this characteristic in mind so that the correct operating voltage will be maintained on the screen under all conditions. A current path from screen to cathode must be provided by a bleeder resistor, gaseous voltage regulator tubes, or an electron tube *shunt* regulator connected between screen and cathode and arranged to pass approximately 15 milliamperes per connected screen. An electron tube *series* regulator can be used only when an a equate bleeder resistor is provided.

Self-modulation of the screen in plate-modulated tetrode amplifiers using these tubes may not be satisfactory because of the screen-voltage screen-current characteristics. Screen modulation from a tertiary winding on the modulation transformer or by means of a small separate modulator tube will usually be more satisfactory. Screen-voltage modulation factors between 0.75 and 1.0 will result in 100% modulation for plate-modulated rf amplifiers using the 4CX250B or 4CX250FG.

PLATE OPERATION - The maximum rated plate dissipation power is 250 watts. In plate-modulated applications the carrier plate dissipation power must be limited to 165 watts to avoid exceeding the plate dissipation rating with 100% sine wave modulation. The maximum dissipation rating may be exceeded for brief periods during circuit adjustment without damage to the tube.

MULTIPLE OPERATION - Tubes operating in parallel or push-pull must share the load equally. It is good engineering practice to provide individual metering and individual adjustment of bias or screen voltage to equalize the inputs.

Where overload protection is provided, it should be capable of protecting the surviving tube(s) in the event that one tube fails.

VHF OPERATION-The 4CX250B and 4CX250FG are suitable for use in the VHF region. Such operation should be conducted with heavy plate loading, minimum bias, and the lowest driving power consistent with satisfactory performance. It is often preferable to operate at a sacrifice in efficiency to obtain increased tube life.

HIGH VOLTAGE - The 7203/4CX250B and 8621/4CX250FG operate at voltages which can be deadly, and the equipment must be designed properly and operating precautions must be followed. Equipment must be designed so that no one can come in contact with high voltages. All equipment must include safety enclosures for high-voltage circuits and terminals, with interlock switches to open the primary circuits of the power supplies and to discharge high-voltage condensers whenever access doors are opened. Interlock switches must not be bypassed or "cheated" to allow operation with access doors open. Always remember that HIGH VOLTAGE CAN KILL.

SPECIAL APPLICATIONS-If it is desired to operate these tubes under conditions widely different from those given here, write to Application Engineering Dept., EIMAC Division of Varian, San Carlos, Calif. 94070 for information and recommendations.

TYPICAL CONSTANT CURRENT CHARACTERISTICS

SCREEN VOLTAGE = 250V

——— PLATE CURRENT – AMPERES –·–·– SCREEN CURRENT – AMPERES – – – – GRID CURRENT – AMPERES

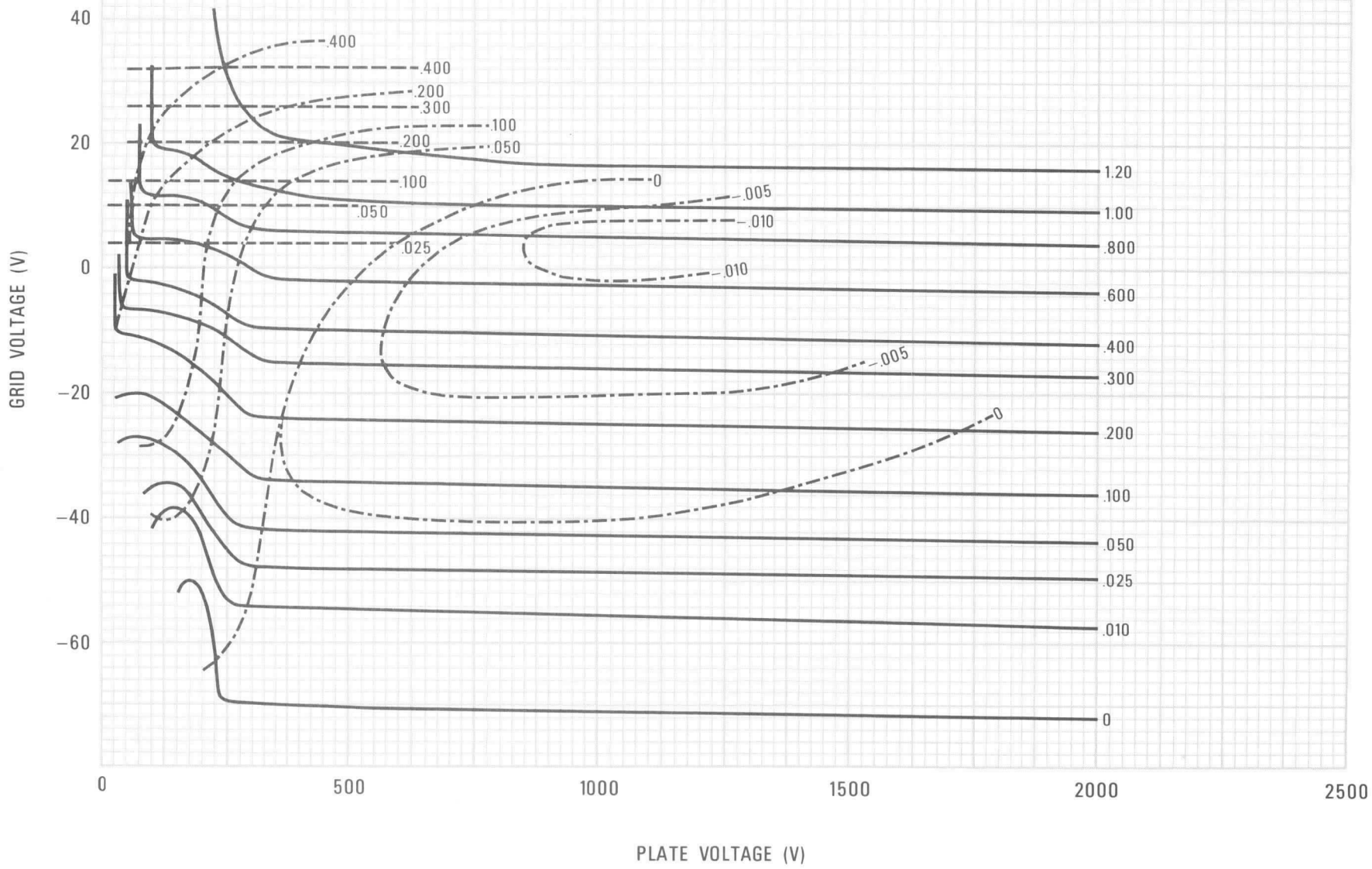

TYPICAL CONSTANT CURRENT CHARACTERISTICS

SCREEN VOLTAGE = 350V

——— PLATE CURRENT – AMPERES –·–·– SCREEN CURRENT – AMPERES – – – – GRID CURRENT – AMPERES

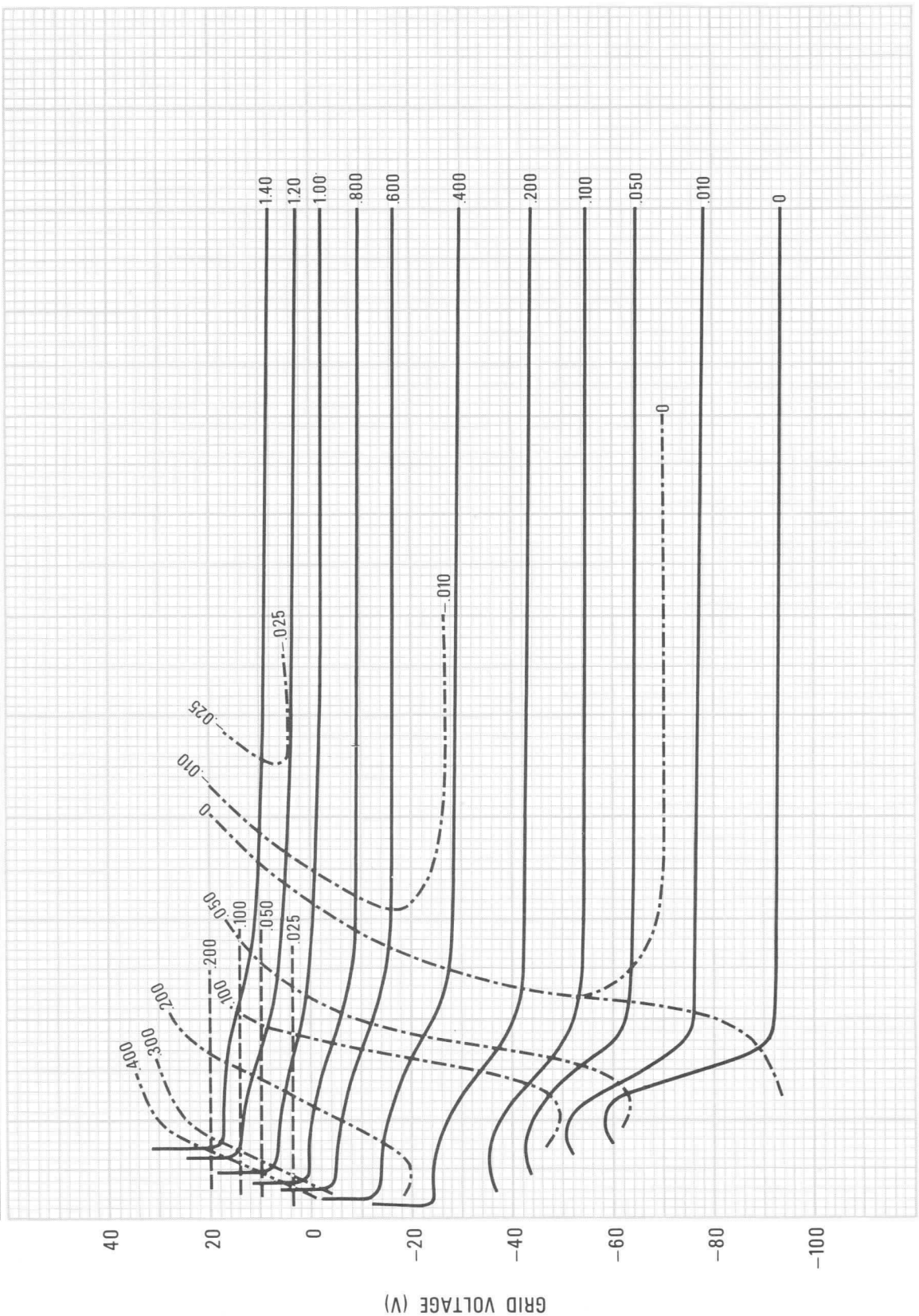

PIN DESIGNATION

PIN NO. 1	SCREEN GRID
PIN NO. 2	CATHODE
PIN NO. 3	HEATER
PIN NO. 4	CATHODE
PIN NO. 5	I.C. DO NOT USE FOR EXTERNAL CONNECTION.
PIN NO. 6	CATHODE
PIN NO. 7	HEATER
PIN NO. 8	CATHODE
CENTER PIN	CONTROL GRID

DIMENSIONAL DATA				
DIM.	INCHES		MILLIMETERS	
	MIN.	MAX.	MIN.	MAX.
A	2.342	2.464	59.03	62.59
B	1.610	1.640	40.89	41.66
C	1.810	1.910	45.97	48.51
D	0.750	0.810	19.05	20.57
E	0.710	0.790	18.03	20.07
F	--	1.406	--	35.71
G	0.187	--	4.75	--
H	BASE: B8-236 (JEDEC DESIGNATION)			
J	0.559	0.573	14.20	14.55
K	0.240	--	6.10	--

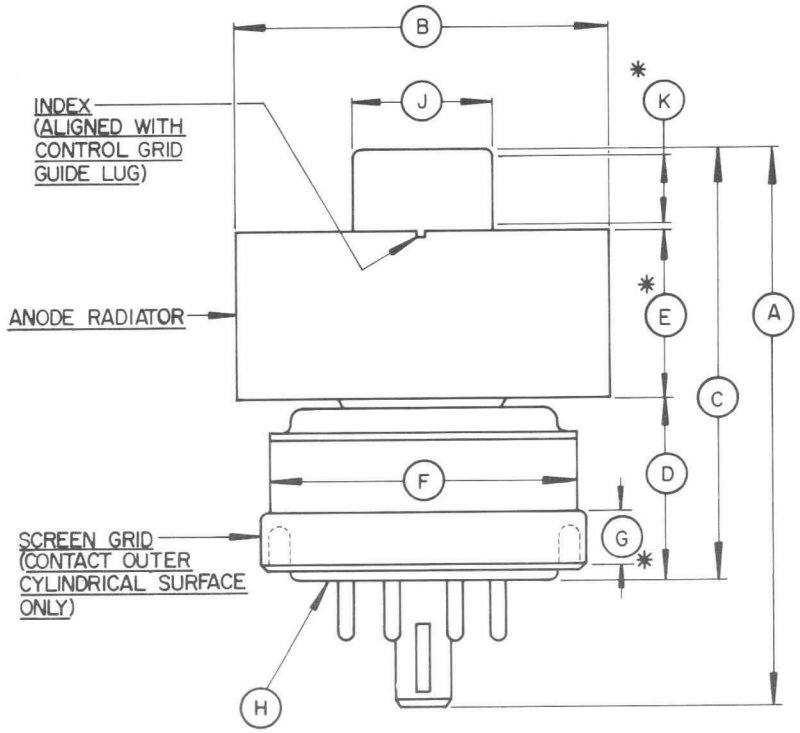

NOTES:
1. REF. DIMS. ARE FOR INFO. ONLY AND ARE NOT REQD. FOR INSPECTION PURPOSES.
2. (*) CONTACT SURFACES.

TECHNICAL DATA

8957
4CX250BC

RADIAL-BEAM
POWER TETRODE

The 8957/4CX250BC is a ceramic/metal, forced-air cooled, external-anode radial-beam tetrode with a maximum plate dissipation rating of 250 watts and a maximum input power rating of 500 watts. It is intended for use as an oscillator, amplifier, or modulator.

The 8957/4CX250BC is especially recommended as a premium-quality replacement for the 7203/4CX250B, in applications where long life and consistent performance are of prime concern and the closer heater voltage tolerance and increased cathode warmup time are acceptable.



GENERAL CHARACTERISTICS[1]

ELECTRICAL

Cathode: Oxide Coated, Unipotential		
Heater: Voltage	6.0 ± 0.3	V
Current, at 6.0 volts	2.4	A
Cathode-Heater Potential, maximum	±150	V
Amplification Factor (Average):		
Grid to Screen	5	
Direct Interelectrode Capacitances (grounded cathode) [2]		
Cin	15.7	pF
Cout	4.5	pF
Cgp	0.04	pF
Direct Interelectrode Capacitances (grounded grid and screen) [2]		
Cin	13.0	pF
Cout	4.5	pF
Cpk	0.01	pF
Frequency of Maximum Rating:		
CW	500	MHz

1. Characteristics and operating values are based upon performance tests. These figures may change without notice as the result of additional data or product refinement. EIMAC Division of Varian should be consulted before using this information for final equipment design.

2. Capacitance values are for a cold tube as measured in a special shielded fixture in accordance with Electronic Industries Association Standard RS-191.

MECHANICAL

Maximum Overall Dimensions:		
Length	2.46 in; 62.5	mm
Diameter	1.64 in; 41.7	mm
Net Weight	4 oz; 113	gm
Operating Position	Any	

(Effective 1-1-74) © 1974 by Varian Printed in U.S.A.

Maximum Operating Temperature:

Ceramic/Metal Seals	250°C
Anode Core	250°C
Cooling	Forced Air
Base	Special 9-pin JEDEC-B8-236
Recommended Socket	EIMAC SK-600 Series
Recommended Chimney	EIMAC SK-600 Series

RADIO FREQUENCY LINEAR AMPLIFIER GRID DRIVEN (SSB)

Class AB_1

MAXIMUM RATINGS:

DC PLATE VOLTAGE	2000	VOLTS
DC SCREEN VOLTAGE	400	VOLTS
DC GRID VOLTAGE	-250	VOLTS
DC PLATE CURRENT	0.25	AMPERE
PLATE DISSIPATION	250	WATTS
SCREEN DISSIPATION	12	WATTS
GRID DISSIPATION	2	WATTS

TYPICAL OPERATION (Frequencies to 175 MHz)
Class AB_1, Grid Driven, Peak Envelope or Modulation Crest Conditions

Plate Voltage	1000	1500	2000	Vdc
Screen Voltage	350	350	350	Vdc
Grid Voltage [1]	-55	-55	-55	Vdc
Zero-Signal Plate Current	100	100	100	mAdc
Single Tone Plate Current	250	250	250	mAdc
Two-Tone Plate Current	190	190	190	mAdc
Single-Tone Screen Current[2]	18	16	13	mAdc
Two-Tone Screen Current[2]	8	5	3	mAdc
Single-Tone Grid Current[2]	0	0	0	mAdc
Peak rf Grid Voltage[2]	50	50	50	v
Plate Output Power	120	215	300	W
Resonant Load Impedance	2000	3000	4000	Ω

1. Adjust to specified zero-signal dc plate current.
2. Approximate value.

RADIO FREQUENCY LINEAR AMPLIFIER GRID DRIVEN, CARRIER CONDITIONS

Class AB_1

MAXIMUM RATINGS:

DC PLATE VOLTAGE	2000	VOLTS
DC SCREEN VOLTAGE	400	VOLTS
DC GRID VOLTAGE	-250	VOLTS
DC PLATE CURRENT	0.25	AMPERE
PLATE DISSIPATION	250	WATTS
SCREEN DISSIPATION	12	WATTS
GRID DISSIPATION	2	WATTS

TYPICAL OPERATION (Frequencies to 175 MHz)
Class AB1, Grid Driven

Plate Voltage	1000	1500	2000	Vdc
Screen Voltage	350	350	350	Vdc
Grid Voltage [1]	-55	-55	-55	Vdc
Zero-Signal Plate Current	100	100	100	mAdc
Carrier Plate Current	150	150	150	mAdc
Carrier Screen Current	5	4	4	mAdc
Peak rf Grid Voltage[2]	25	25	25	v
Plate Output Power	30	50	65	W

1. Adjust to specified zero-signal dc plate current.
2. Approximate value.

RADIO FREQUENCY POWER AMPLIFIER OR OSCILLATOR

Class C Telegraphy or FM
(Key-Down Conditions)

MAXIMUM RATINGS:

DC PLATE VOLTAGE	2000	VOLTS
DC SCREEN VOLTAGE	300	VOLTS
DC GRID VOLTAGE	-250	VOLTS
DC PLATE CURRENT	0.25	AMPERE
PLATE DISSIPATION	250	WATTS
SCREEN DISSIPATION	12	WATTS
GRID DISSIPATION	2	WATTS

TYPICAL OPERATION (Frequencies to 175 MHz)					500 MHz	
Plate Voltage	500	1000	1500	2000	2000	Vdc
Screen Voltage	250	250	250	250	300	Vdc
Grid Voltage	-90	-90	-90	-90	-90	Vdc
Plate Current	250	250	250	250	250	mAdc [2]
Screen Current [1]	45	40	27	25	16	mAdc [2]
Grid Current [1]	35	31	28	26	25	mAdc
Peak rf Grid Voltage [1]	114	114	112	112	---	v
Measured Driving Power [1]	4.0	3.5	3.2	2.9	---	W
Plate Input Power	125	250	375	500	500	W
Plate Output Power	70	190	280	390	300	W [2]
Heater Voltage	6.0	6.0	6.0	6.0	5.7	V

1. Approximate value.
2. Measured values for a typical cavity amplifier circuit.

PLATE MODULATED RADIO FREQUENCY POWER AMPLIFIER-GRID DRIVEN

Class C Telephony (Carrier Conditions)

MAXIMUM RATINGS:

DC PLATE VOLTAGE	1500	VOLTS
DC SCREEN VOLTAGE	300	VOLTS
DC GRID VOLTAGE	-250	VOLTS
DC PLATE CURRENT	0.20	AMPERE
PLATE DISSIPATION[1]	165	WATTS
SCREEN DISSIPATION[2]	12	WATTS
GRID DISSIPATION[2]	2	WATTS

TYPICAL OPERATION (Frequencies to 175 MHz)

Plate Voltage	500	1000	1500	Vdc
Screen Voltage	250	250	250	Vdc
Grid Voltage	-100	-100	-100	Vdc
Plate Current	200	200	200	mAdc
Screen Current[3]	37	30	27	mAdc
Grid Current[3]	15	14	14	mAdc
Peak rf Grid Voltage[3]	118	117	117	v
Calculated Driving Power	1.8	1.7	1.7	W
Plate Input Power	100	200	300	W
Plate Output Power	60	145	235	W

1. Corresponds to 250 watts at 100% sine-wave modulation.
2. Average, with or without modulation.
3. Approximate value.

AUDIO FREQUENCY POWER AMPLIFIER OR MODULATOR

Class AB , Grid Driven (Sinusoidal Wave)

MAXIMUM RATINGS (Per Tube)

DC PLATE VOLTAGE	2000	VOLTS
DC SCREEN VOLTAGE	400	VOLTS
DC GRID VOLTAGE	-250	VOLTS
DC PLATE CURRENT	0.25	AMPERE
PLATE DISSIPATION	250	WATTS
SCREEN DISSIPATION	12	WATTS
GRID DISSIPATION	2	WATTS

1. Approximate value.

TYPICAL OPERATION (Two Tubes)

Plate Voltage	1000	1500	2000	Vdc
Screen Voltage	350	350	350	Vdc
Grid Voltage[1/3]	-55	-55	-55	Vdc
Zero-Signal Plate Current	200	200	200	mAdc
Max Signal Plate Current	500	500	500	mAdc
Max Signal Screen Current[1]	26	22	16	mAdc
Max Signal Grid Current[1]	0	0	0	mAdc
Peak af Grid Voltage[2]	50	50	50	v
Peak Driving Power	0	0	0	w
Plate Input Power	500	750	1000	W
Plate Output Power	240	430	600	W
Load Resistance (plate to plate)	3500	6200	9500	Ω

2. Per tube.
3. Adjust to give stated zero-signal plate current.

NOTE: TYPICAL OPERATION data is obtained by direct measurement or by calculation from published characteristic curves. Adjustment of the rf grid voltage to obtain the specified plate current at the specified bias, screen, and plate voltage is assumed. If this procedure is followed, there will be little variation in output power when the tube is changed, even though there may be some variation in grid and screen current. The grid and screen currents which result when the desired plate current is obtained are incidental and vary from tube to tube. These current variations cause no difficulty so long as the circuit maintains the correct voltage in the presence of the variations in current. In Class C service, if grid bias is obtained principally by means of a grid resistor, the resistor must be adjustable to obtain the required bias voltage when the correct rf grid voltage is applied.

RANGE VALUES FOR EQUIPMENT DESIGN

	Min.		Max.	
Heater: Current at 6.0 volts	2.2	---	2.7	A
Cathode Warmup Time, with Heater Voltage at 6.0 volts	60	---	---	sec.
Interelectrode Capacitances[1] (grounded cathode connection)				
Cin	14.2	---	17.2	pF
Cout	4.0	---	5.0	pF
Cgp	---	---	0.06	pF

1. Capacitance values are for a cold tube as measured in a special shielded fixture in accordance with Electronic Industries Association Standard RS-191.

MECHANICAL

MOUNTING - The 4CX250BC may be operated in any position. An EIMAC Air-System Socket, SK-600 series, or a socket having equivalent characteristics, is required. Sockets are available with or without built-in screen capacitors and may be obtained with either grounded or ungrounded cathode terminals. SK-600 series Air Chimneys are also available.

COOLING - Sufficient forced-air cooling must be provided for the anode, base seals, and body seals to maintain operating temperatures below the rated maximum values. Air requirements to maintain anode core temperatures at 225°C with an inlet air temperature of 50°C are tabulated below. These requirements apply when a socket of the EIMAC SK-600 series and an EIMAC SK-606 chimney are used with air flow in the base to anode direction.

SEA LEVEL			10,000 FEET	
Plate Dissipation (Watts)	Air Flow (CFM)	Pressure Drop(In. of water)	Air Flow (CFM)	Pressure Drop(In. of water)
200	4.2	0.4	6.1	0.6
250	5.7	0.7	8.2	1.0

The blower selected in a given application must be capable of supplying the desired airflow at a back pressure equal to the pressure drop shown above plus any drop encountered in ducts and filters. The blower must be designed to deliver the air at the desired altitude.

At 500 MHz or below, base cooling air requirements are satisfied automatically when the tube is operated in an EIMAC Air-System Socket and the recommended air flow rates are used. Experience has shown that if reliable long life operation is to be obtained, the cooling air flow must be maintained during standby periods when only the heater voltage is applied to the tube. The anode cooler should be inspected periodically and cleaned when necessary to remove any dirt which might interfere with effective cooling.

VIBRATION - This tube is designed to provide reliable service under ordinary shock and vibration conditions, such as encountered in mobile installations. However, when severe shock, or high-level and high-frequency vibration are expected, it is suggested that the EIMAC 7580W/4CX250R be employed.

ELECTRICAL

HEATER - The nominal heater voltage for the 4CX250BC is 6.0 volts when the voltage regulation is held to ±5%, and operation at this voltage and regulation will provide good life and stable performance. Regulation to a tolerance better than ±5% normally will be beneficial as regards life expectancy, and if variation can be held to ±1%, then the voltage may be reduced to as low as 5.7 volts, for greatest life expectancy. When this is done, however, voltage should be set and monitored with a voltmeter of high accuracy, which should be of the true-rms responding type.

Cathode peak current capability is dependent on cathode temperature, which is controlled by the heater operating voltage. Individual testing of the 4CX250BC assures adequate emission characteristics for normal rf or audio applications with heater voltage as low as 5.7 volts. Operation with the voltage lower than 5.7 volts should not be attempted at frequencies below UHF or cathode damage may result.

For pulse service, the full nominal value of 6.0 volts should be used on the heater.

At frequencies above approximately 300 MHz transit-time effects begin to influence the cathode temperature. The amount of driving power diverted to heating the cathode by back-bombardment will depend on frequency and operating conditions. When the tube is driven to a maximum input as a Class C amplifier, the heater voltage should be reduced in general accordance with the table below:

	Volt. Reg. to ±5%	Volt. Reg. to ±1%
300 MHz or lower	6.00 V	5.70 V
301 to 400 MHz	5.85 V	5.60 V
401 to 500 MHz	5.70 V	5.50 V

CATHODE OPERATION - The oxide coated unipotential cathode must be protected against excessively high emission current. The maximum rated dc input current (anode) is 200 mAdc for plate-modulated operation and 250 mAdc for all other types of operation except pulse.

The cathode is internally connected to the four even-numbered base pins and all four of the corresponding socket terminals should be used to make connection to the external circuits. At radio frequencies it is important to keep the cathode leads short and direct and to use conductors with large areas to minimize the inductive reactances in series with the cathode leads.

It is recommended that rated heater voltage be applied for a minimum of 60 seconds before other operating voltages are applied. If reduced heater voltage is being used, with close voltage regulation, a warmup time of longer than 60 seconds should be allowed. If the 4CX250BC is used as a replacement for the 7203/4CX250B, adjustment of the warmup time-delay relay may be required, since some equipments designed for the 4CX250B used a time delay setting as short as 30 seconds.

Where the circuit design requires the cathode and heater to be operated at different potentials, the rated maximum heater-to-cathode voltage is 150 volts, regardless of the polarity.

GRID OPERATION - The maximum rated dc grid bias voltage is -250 volts and the maximum grid dissipation rating is 2.0 watts. In ordinary audio and radio-frequency amplifiers the grid dissipation usually will not approach the maximum rating. At operating frequencies above the 100 MHz region, driving power requirements for amplifiers increase noticeably. At 500 MHz as much as 20 watts of driving power may have to be supplied. However, most of the driving power is absorbed in circuit losses other than grid dissipation, so that grid dissipation is increased only slightly. Satisfactory 500 MHz operation of the tube in a stable amplifier is indicated by grid-current values below approximately 25 mA.

The grid voltage required by different tubes may vary between limits approximately 20% above and below the center value, and means should be provided in the equipment to accommodate such variation. It is especially important that variations between individual tubes be compensated when tubes are operated in parallel or push-pull circuits, to assure equal load sharing.

This maximum permissible grid-circuit resistance per tube is 100,000 ohms.

SCREEN OPERATION - The maximum rated power dissipation for the screen is 12 watts, and the screen input power should be kept below that level. The product of the peak screen voltage and the indicated dc screen current approximates the screen input power except when the screen current indication is near zero.

In the usual tetrode amplifier, where no signal voltage appears between cathode and screen, the peak screen voltage is equal to the dc screen voltage.

When signal voltages appear between screen and cathode, as in the case of screen-modulated amplifiers or cathode-driven tetrode amplifiers, the peak screen-to-cathode voltage is the sum of the dc screen voltage and the peak ac or rf signal voltage applied to screen or cathode.

Protection for the screen should be provided by an over-current relay and by interlocking the screen supply so that plate voltage must be applied before screen voltage can be applied.

It is a normal characteristic of most tetrodes for the screen current to reverse under certain operating conditions, producing a negative current indication on the screen milliammeter. Though there is considerably less likelihood of this happening with the 4CX250BC than with similar types, the screen power supply should be designed with this characteristic in mind so that the correct operating voltage will be maintained on the screen under all conditions. A current path from screen to cathode should be provided by a bleeder resistor or a suitable regulating device, arranged to pass a minimum of 5 milliamperes per connected screen.

PLATE OPERATION - The maximum rated plate dissipation power is 250 watts. In plate-modulated applications the carrier plate dissipation power must be limited to 165 watts to avoid exceeding the plate dissipation rating with 100% sine wave modulation. The maximum dissipation rating may be exceeded for brief periods during circuit adjustment without damage to the tube.

MULTIPLE OPERATION - Tubes operating in parallel or push-pull must share the load equally. It is good engineering practice to provide individual metering and individual adjustment of bias or screen voltage to equalize the inputs.

Where overload protection is provided, it should be capable of protecting the surviving tube (s) in the event that one tube fails.

VHF OPERATION - The 4CX250BC is suitable for use in the VHF region. Such operation should be conducted with heavy plate loading, minimum bias, and the lowest driving power consistent with satisfactory performance. It is often preferable to operate at a sacrifice in efficiency to obtain increased tube life.

HIGH VOLTAGE - Normal operating voltages used with the 4CX250BC are deadly, and the equipment must be designed properly and operating precautions must be followed. Design all equipment so that no one can come in contact with high voltages. All equipment must include safety enclosures for high-voltage circuits and terminals, with interlock switches to open primary circuits of the power supply and to discharge high-voltage condensers whenever access doors are opened. Interlock switches must not be bypassed or "cheated" to allow operation with access doors open. Always remember that HIGH VOLTAGE CAN KILL.

INTERELECTRODE CAPACITANCE - The actual internal interelectrode capacitance of a tube is influenced by many variables in most applications, such as stray capacitance to the chassis, capacitance added by the socket used, stray capacitance between tube terminals, and wiring effects. To control the actual capacitance values within the tube, as the key component involved, the industry and the Military Services use a standard test procedure as described in Electronic Industries Association Standard RS-191. This requires the use of specially constructed test fixtures which effectively shield all external tube leads from each other and eliminates any capacitance reading to "ground". The test is performed on a cold tube. Other factors being equal, controlling internal tube capacitance in this way normally assures good interchangeability of tubes over a period of time, even when the tube may be made by different manufacturers. The capacitance values shown in the manufacturer's technical data, or test specifications, normally are taken in accordance with Standard RS-191.

The equipment designer is therefore cautioned to make allowance for the actual capacitance values which will exist in any normal application. Measurements should be taken with the socket and mounting which represent approximate final layout if capacitance values are highly significant in the design.

SPECIAL APPLICATIONS - If it is desired to operate these tubes under conditions widely different from those given here, write to Power Grid Tube Division, EIMAC Division of Varian, San Carlos, Calif. 94070 for information and recommendations.

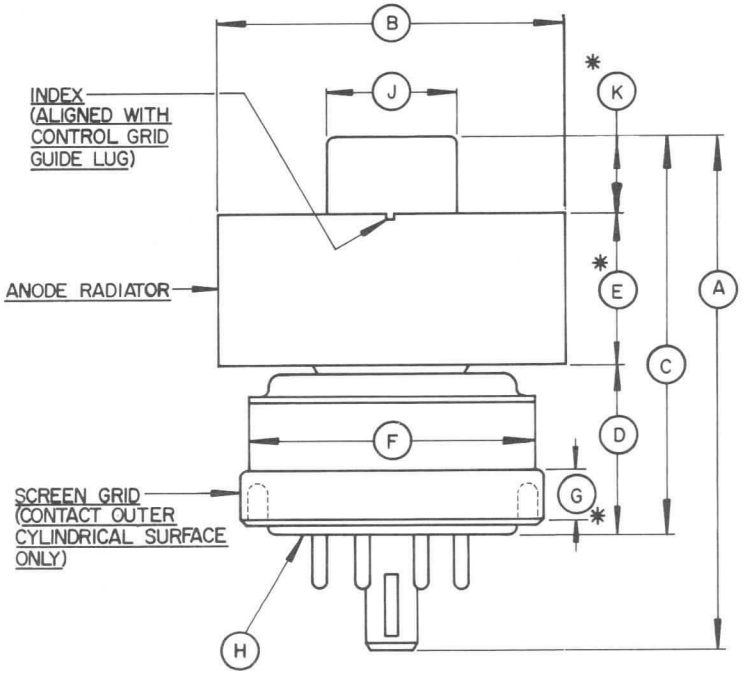

DIMENSIONAL DATA						
DIM	INCHES			MILLIMETERS		
	MIN.	MAX.	REF.	MIN.	MAX.	REF.
A	2.324	2464	- -	59.03	62.59	- -
B	1.610	1.640	- -	40.89	41.66	- -
C	1.810	1.910	- -	46.00	48.51	- -
D	0.750	0.810	- -	19.05	20.57	- -
E	0.710	0.790	- -	18.03	20.07	- -
F	- -	1.406	- -	- -	35.71	- -
G	0.187	- -	- -	4.75	- -	- -
H	BASE: B8-236 (JEDEC DESIGNATION)					
J	0.559	0.573	- -	14.20	14.55	- -
K	0.240	- -	- -	6.10	- -	- -

NOTES:
1. REF DIMS. ARE FOR INFO. ONLY AND ARE NOT REQD. FOR INSPECTION PURPOSES.
2. (*) CONTACT SURFACES.

PIN DESIGNATION

PIN NO. 1	SCREEN GRID
PIN NO. 2	CATHODE
PIN NO. 3	HEATER
PIN NO. 4	CATHODE
PIN NO. 5	I.C. DO NOT USE FOR EXTERNAL CONNECTION.
PIN NO. 6	CATHODE
PIN NO. 7	HEATER
PIN NO. 8	CATHODE
CENTER PIN	CONTROL GRID

TYPICAL CONSTANT CURRENT CHARACTERISTICS

GROUNDED CATHODE E_f = 6.0V SCREEN VOLTAGE = 350V

PLATE CURRENT – AMPERES — SCREEN CURRENT – AMPERES — GRID CURRENT – AMPERES

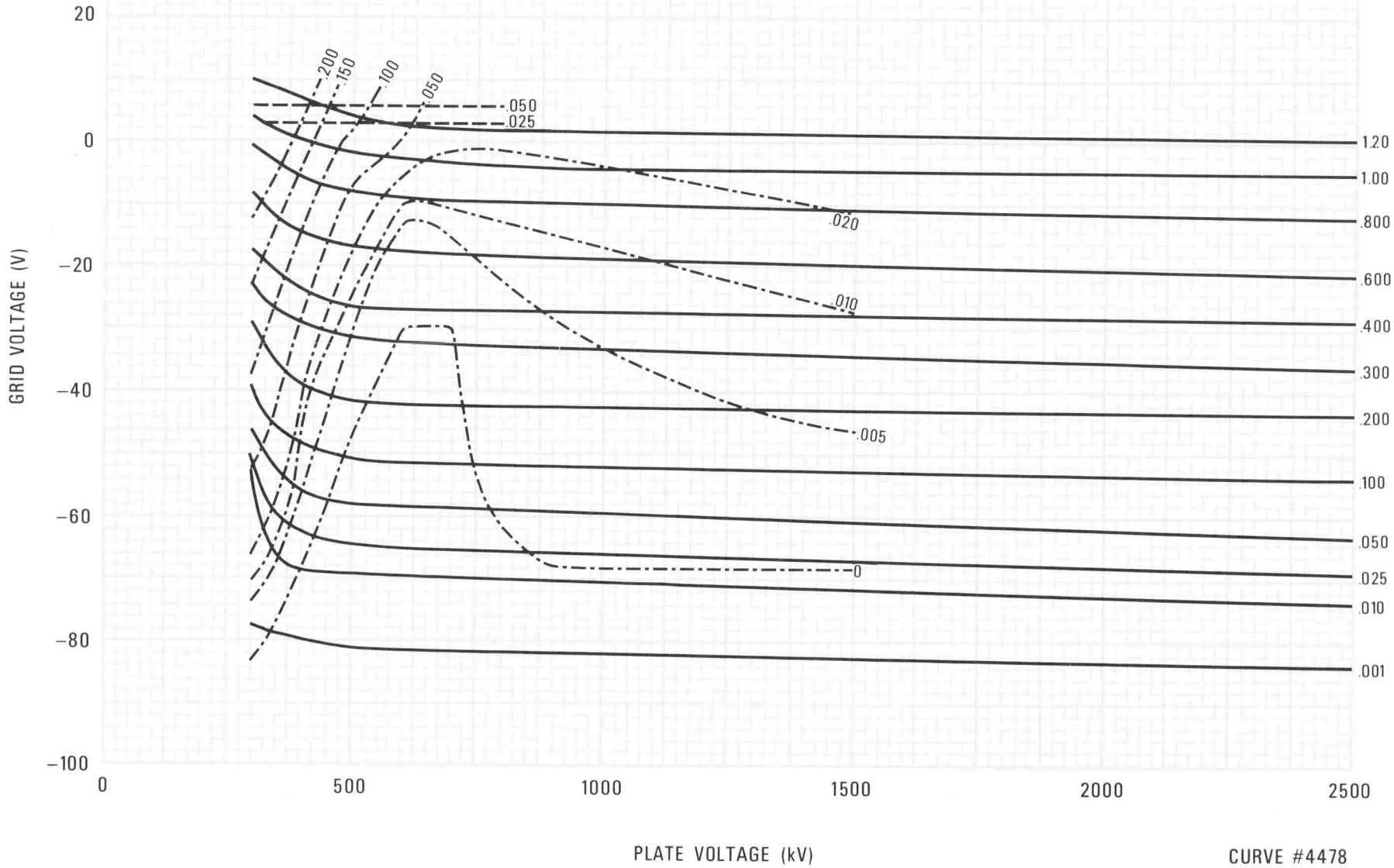

CURVE #4478

Eimac®

TYPICAL CONSTANT CURRENT CHARACTERISTICS

GROUNDED CATHODE E_f = 6.0V SCREEN VOLTAGE = 250V

PLATE CURRENT – AMPERES — SCREEN CURRENT – AMPERES - - - GRID CURRENT – AMPERES

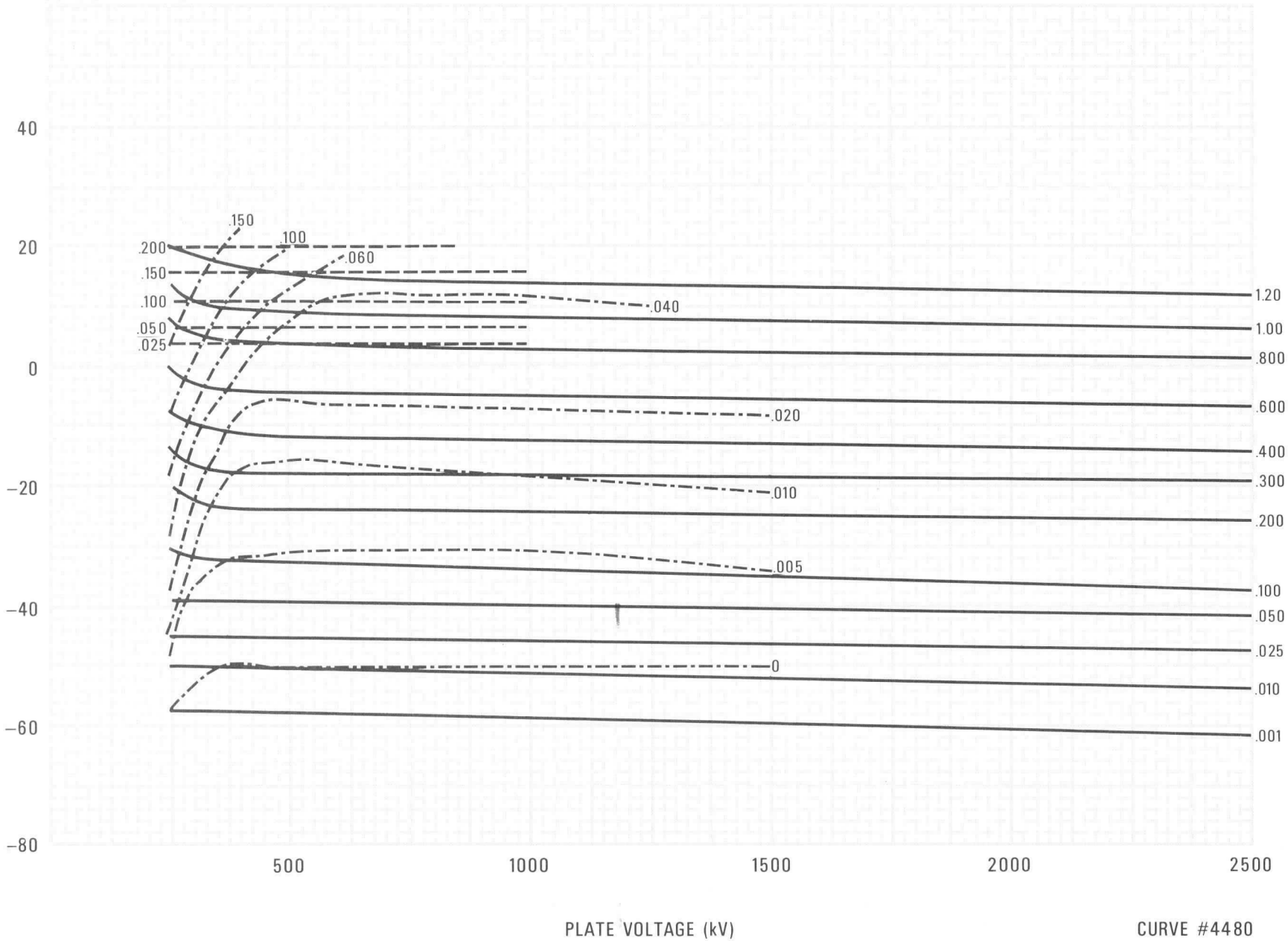

PLATE VOLTAGE (kV)

CURVE #4480

EIMAC
Division of Varian
SAN CARLOS
CALIFORNIA

8245 4CX250K

8246 4CX250M

RADIAL-BEAM POWER TETRODE

The 8245/4CX250K and 8246/4CX250M are compact, forced-air cooled, external-anode radial-beam tetrodes with a maximum plate dissipation rating of 250 watts and a maximum input-power rating of 500 watts. The 8245/4CX250K is designed to operate with a heater voltage of 6.0 volts, while the 8246/4CX-250M is designed for operation at a heater voltage of 26.5 volts. Otherwise, the two tube types have identical characteristics.

These tubes are of coaxial construction and are especially designed for cavity operation.



GENERAL CHARACTERISTICS

ELECTRICAL

		Min.	Nom.	Max.	
Cathode:	Oxide-Coated, Unipotential				
	Heating Time	30	60		s
	Cathode-to-heater Potential			±150	V
Heater:	Voltage 4CX250K		6.0		V
	Current 4CX250K	2.30		3.0	A
	Voltage 4CX250M		26.5		V
	Current 4CX250M	0.35		0.68	A
Amplification Factor (Grid-to-Screen)			5		
Direct Interelectrode Capacitances, Grounded Cathode:					
	Input	25.0		29.0	pF
	Output	4.2		5.2	pF
	Feedback			0.05	pF

Direct Interelectrode Capacitances, Grounded Grid and Screen	Min.	Max.	
Input	14.5	19	pF
Output	4.2	5.2	pF
Feedback		0.01	pF
Frequency for Maximum Ratings (CW)		500	MHz
(Pulsed)		1500	MHz

MECHANICAL

Base	Coaxial
Maximum Operating Temperatures:	
Ceramic-to-Metal-Seals	250° C
Anode Core	250° C
Operating Position	Any
Maximum Dimensions:	
Height	2.813 in
Diameter	1.640 in
Cooling	Forced Air
Net Weight	4.6 oz
Shipping Weight (Approximate)	1.6 lbs

RADIO-FREQUENCY POWER AMPLIFIER OR OSCILLATOR

Class-C Telegraphy or FM Telephony
(Key-down conditions)
MAXIMUM RATINGS

DC PLATE VOLTAGE	2000 VOLTS
DC SCREEN VOLTAGE	300 VOLTS
DC GRID VOLTAGE	-250 VOLTS
DC PLATE CURRENT	250 MA
PLATE DISSIPATION	250 WATTS
SCREEN DISSIPATION	12 WATTS
GRID DISSIPATION	2 WATTS

TYPICAL OPERATION

	Frequencies up to 175 MHz				500 MHz	
DC Plate Voltage	500	1000	1500	2000	2000	volts
DC Screen Voltage	250	250	250	250	300	volts
DC Grid Voltage	-90	-90	-90	-90	-90	volts
DC Plate Current	250	250	250	250	250	mA
DC Screen Current*	45	38	21	19	10**	mA
DC Grid Current*	35	31	28	26	25**	mA
Peak RF Grid Voltage*	114	114	112	112	—	volts
Driving Power*	4.0	3.5	3.2	2.9	—	watts
Plate Input Power	125	250	375	500	500	watts
Plate Output Power	70	190	280	390	225**	watts
Heater Voltage	6.0	6.0	6.0	6.0	5.5	volts

* Approximate values.

** Measured Values for a typical cavity amplifier circuit.

(Effective 5-1-68) © 1959, 1962, 1963, 1968 by Varian

Printed in U.S.A.

PLATE-MODULATED RADIO-FREQUENCY AMPLIFIER

Class-C Telephony (Carrier conditions)

MAXIMUM RATINGS

DC PLATE VOLTAGE	1500 VOLTS
DC SCREEN VOLTAGE	300 VOLTS
DC GRID VOLTAGE	-250 VOLTS
DC PLATE CURRENT	200 MA
PLATE DISSIPATION	165 WATTS
SCREEN DISSIPATION	12 WATTS
GRID DISSIPATION	2 WATTS

TYPICAL OPERATION (Frequencies up to 175 MHz)

DC Plate Voltage	500	1000	1500	volts
DC Screen Voltage	250	250	250	volts
DC Grid Voltage	-100	-100	-100	volts
DC Plate Current	200	200	200	mA
DC Screen Current*	31	22	20	mA
DC Grid Current*	15	14	14	mA
Peak RF Grid Input Voltage*	118	117	117	volts
Driving Power*	1.8	1.7	1.7	watts
Plate Input Power	100	200	300	watts
Plate Output Power	60	145	235	watts

* Approximate values.

RADIO-FREQUENCY POWER AMPLIFIER

Class-B Linear, Television Visual Service (per tube)

DC PLATE VOLTAGE	1250 VOLTS
DC SCREEN VOLTAGE	400 VOLTS
DC GRID VOLTAGE	-250 VOLTS
DC PLATE CURRENT (AVERAGE)	250 MA
PLATE DISSIPATION	250 WATTS
SCREEN DISSIPATION	12 WATTS
GRID DISSIPATION	2 WATTS

TYPICAL OPERATION (Frequencies up to 216 MHz, 5 MHz bandwidth)

DC Plate Voltage	750	1000	2000	volts
DC Screen Voltage	300	300	350	volts
DC Grid Voltage	-60	-65	-70	volts
During Sync-Pulse Peak:				
DC Plate Current	335	330	360	mA
DC Screen Current	50	45	29	mA
DC Grid Current	15	20	25	mA
Peak RF Grid Voltage	85	95	100	volts
RF Driver Power (approx.)	7	8	9	watts
Useful Power Output	135	200	440	watts
Black Level:				
DC Plate Current	245	240	250	mA
DC Screen Current	20	15	0	mA
DC Grid Current	4	4	4	mA
Peak RF Grid Voltage (approx.)	65	70	75	volts
RF Driver Power (approx.)	4.25	4.7	5.5	watts
Plate Power Input	185	240	500	watts
Useful Power Output	75	110	250	watts

PLATE PULSED RADIO FREQUENCY AMPLIFIER OR OSCILLATOR

MAXIMUM RATINGS

PULSED PLATE VOLTAGE	7000 VOLTS
PULSED SCREEN VOLTAGE	1500 VOLTS
DC GRID VOLTAGE	-500 VOLTS
MAXIMUM PULSE DURATION	5 μS
PULSED CATHODE CURRENT	7 AMPS
AVERAGE POWER INPUT	250 WATTS
PLATE DISSIPATION	250 WATTS
SCREEN DISSIPATION	12 WATTS
GRID DISSIPATION	2 WATTS

TYPICAL PULSE OPERATION

Single tube oscillator, 1200 MHz

Pulsed Plate Voltage	5	7	kV
Pulsed Plate Current	4.0	6.0	amps
Pulsed Screen Voltage	800	1200	volts
Pulsed Screen Current	0.3	0.4	amps
DC Grid Voltage	-200	-250	volts
Pulsed Grid Current	0.5	0.6	amps
Pulse Duration	4	5	μsec
Pulse Repetition Rate	2500	1000	pps
Peak Power Output	7	17	kW

RADIO-FREQUENCY LINEAR AMPLIFIER

Class-AB_1 (Single-Sideband Suppressed-Carrier Operation)

MAXIMUM RATINGS

DC PLATE VOLTAGE	2000 VOLTS
DC SCREEN VOLTAGE	400 VOLTS
DC PLATE CURRENT	250 MA
PLATE DISSIPATION	250 WATTS
SCREEN DISSIPATION	12 WATTS
GRID DISSIPATION	2 WATTS

TYPICAL OPERATION (Frequencies up to 175 MHz, peak-envelope conditions except where noted)

DC Plate Voltage	1000	1500	2000	volts
DC Screen Voltage	350	350	350	volts
DC Grid Voltage*	-55	-55	-55	volts
Zero-Signal DC Plate Current	100	100	100	mA
Peak RF Grid Voltage**	50	50	50	volts
DC Plate Current	250	250	250	mA
DC Screen Current**	10	8	5	mA
Plate Input Power	250	375	500	watts
Plate Output Power	120	215	300	watts
Two-Tone Average DC Plate Current	190	190	190	mA
Two-Tone Average DC Screen Current**	2	-1	-2	mA

* Approximate values.

** Adjust grid bias to obtain listed zero-signal plate current.

NOTE: "TYPICAL OPERATION" data are obtained by calculation from published characteristic curves and confirmed by direst tests. Adjustment of the r-f grid drive to obtain the specified plate current at the specified grid bias, screen voltage, and plate voltage is assumed. If this proceedure is followed, there will be little variation in output power when tubes are changed, even though there may be some variations in grid and screen currents. The grid and screen currents which result when the desired plate current is obtained are incidental and vary from tube to tube. These current variations cause no difficulty so long as the circuit maintains the correct voltage in the presence of the variations in current. If grid bias is obtained principally by means of a grid resistor, the resistor must be adjustable to obtain the required bias voltage when the correct r-f driving voltage is applied.

APPLICATION

MECHANICAL

Mounting The 4CX250K and 4CX250M may be mounted in any position. The concentric arrangements of the electrode terminals permits the use of the tube in coaxial line or cavity type circuits to advantage.

Connections to the contact surfaces should be made by means of spring-finger collets which have sufficient pressure to maintain a good electrical contact at all fingers. Points of electrical contact should be kept clean and free of oxidation to minimize rf losses.

Cooling Sufficient forced-air cooling must be provided to maintain the anode core and seal temperatures below 250° C. Special care must be observed to insure that there is adequate cooling in the area of the coaxial filament and grid terminals.

The table below lists the minimum cooling requirements at sea level with 50° C ambient air to maintain 225° C on the anode. For operation at 10,000 feet, the air-flow values should be multiplied by 1.46.

	BASE-TO-ANODE FLOW		ANODE-TO-BASE FLOW	
Plate Dissipation (Watts)	Air Flow (CFM)	Static Pressure (inches of water)	Air Flow (CFM)	Static Pressure (inches of water)
150	3.5	0.3	3.1	0.2
200	4.3	0.4	4.6	0.4
250	5.5	0.7	6.1	0.7

ELECTRICAL

Heater The rated heater voltages for the 4CX-250K and 4CX250M are 6.0 and 26.5 volts, respectively and should be maintained at these values plus or minus five percent. At frequencies above 300 megahertz, transit time effects begin to influence the cathode temperature. The amount of driving power diverted to cathode heating will depend on frequency, plate current and driving power. When the tube is driven to maximum input as a class-C amplifier, the heater voltage should be reduced according to the following table. Further reduction in filament voltage may be needed in pulse service above 500 MHz.

Frequency, MHz	4CX250K	4CX250M
301 to 400	5.75 volts	25.5 volts
401 to 500	5.50 volts	24.3 volts

Cathode The oxide-coated unipotential cathode must be protected against excessively high emission currents. The maximum dc plate current must be limited to 250 mA under CW conditions. Pulse current must never exceed 6.0 amperes.

Where it is necessary to operate with some heater-to-cathode potential, the maximum heater-to-cathode voltage is 150 volts regardless of polarity.

Grid Dissipation Maximum grid dissipation is 2.0 watts. In ordinary af and rf amplifiers the grid dissipation usually will not reach this level. Above 100 MHz, drive power requirements increase, but most of this increase is absorbed in circuit losses rather than in grid dissipation. Satisfactory operation at 500 MHz in a "straight through" amplifier is indicated by grid currents below approximately 15 milliamperes. Grid circuit resistance should not exceed 100,000 ohms per tube.

Screen-Grid Operation The maximum rated power dissipation for the screen grid is 12 watts, and the screen input power should be kept below that level. The product of the peak screen voltage and the indicated dc screen current approximates the screen input power except when the screen current indication is near zero or negative.

In the usual tetrode amplifier, where no signal voltage appears between cathode and screen, the peak screen voltage is equal to the dc screen voltage.

When screen voltages appear between screen and cathode, as in the case of screen-modulated amplifiers or cathode-driven tetrode amplifiers, the peak screen-to-cathode voltage is the sum of the dc screen voltage and the peak ac or rf signal voltage applied to screen or cathode.

Protection for the screen should be provided by an over-current relay and by interlocking the screen supply so that plate voltage must be applied before screen voltage can be applied.

The screen current may reverse under certain conditions and produce negative current indications on the screen milliammeter. This is a normal characteristic of most tetrodes. The screen power supply should be designed with this characteristic in mind so that the correct operating voltage will be maintained on the screen under all conditions. A current path from screen to cathode must be provided by a bleeder resistor, gaseous voltage regulator tubes or an electron tube shunt regulator connected between screen and cathode and arranged to pass approximately 15 milliamperes per connected screen. An electron tube series regulator can be used only when an adequate bleeder resistor is provided.

Self-modulation of the screen in plate-modulated tetrode amplifiers using these tubes may not be satisfactory because of the screen-voltage screen-current characteristics. Screen modulation from a tertiary winding on the modulation transformer or by means of a small separate modulator tube will usually be more satisfactory. Screen-voltage modulation factors between 0.75 and 1.0 will result in 100% modulation for plate-modulated rf amplifiers using the 4CX250K or 4CX250M.

Plate Operation The maximum rated plate-dissipation power is 250 watts. In plate-modulated applications the carrier plate-dissipation power must be limited to 165 watts to avoid exceeding the plate dissipation rating with 100% sine wave modulation. The maximum dissipation rating may be exceeded for brief periods during circuit adjustment without damage to the tube.

UHF Operation The 4CX250K and 4CX250M are suitable for use in the UHF region. Such operation should be conducted with heavy plate loading, minimum bias, and the lowest driving power consistent with satisfactory performance. It is often preferable to operate at a sacrifice in efficiency to obtain increased tube life.

Multiple Operation Tubes operating in parallel or push-pull must share the load equally. It is good engineering practice to provide individual metering and individual adjustments of bias or screen voltage to equalize the inputs.

Where overload protection is provided, it should be capable of protecting the surviving tube(s) in the event that one tube fails.

Special Applications If it is desired to operate these tubes under conditions widely different from those given here, write to Product Manager, Eimac Division of Varian, San Carlos, California, for information and recommendations.

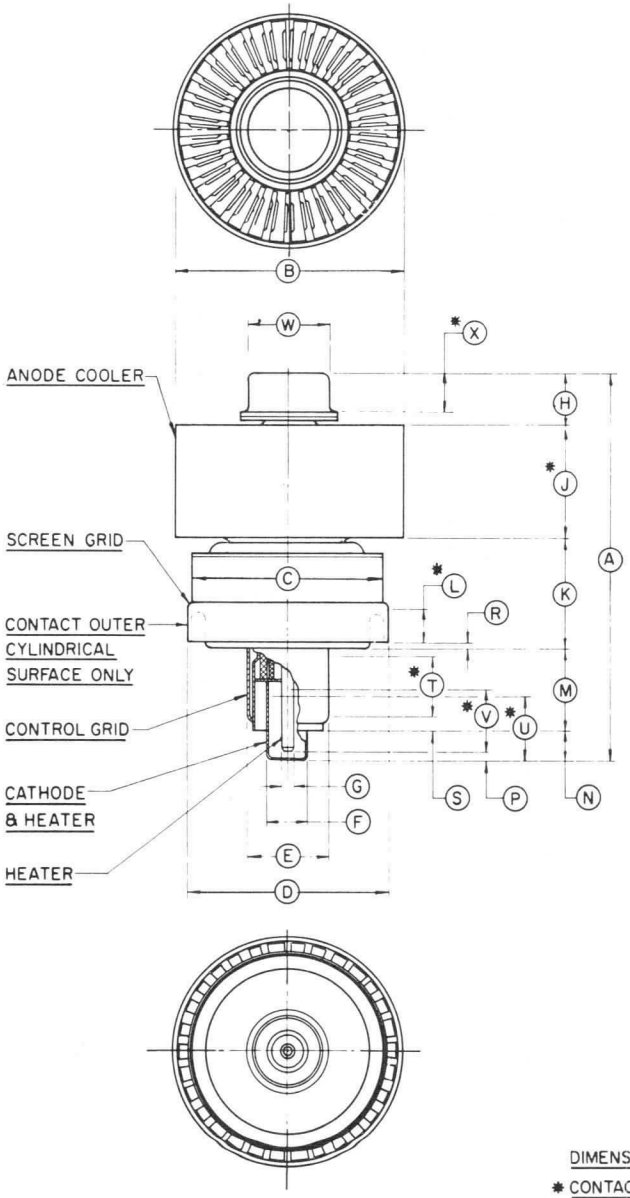

DIMENSIONS		
REF.	MIN.	MAX.
A		2.813
B	1.610 DIA.	1.640 DIA.
C		1.406 DIA.
D	1.410 DIA.	1.440 DIA.
E	.587 DIA.	.597 DIA.
F	.317 DIA.	.327 DIA.
G	.088 DIA.	.098 DIA.
H		.358
J	.710	.790
K	.740	.820
L	.187	
M	.500	.580
N	.235	.265
P	.032	.062
R	.020 NOM.	
S	.125 NOM.	
T	11/32	
U	13/32	
V	15/32	
W	.559	.573
X	.240	.280

DIMENSIONS IN INCHES

* CONTACT SURFACE

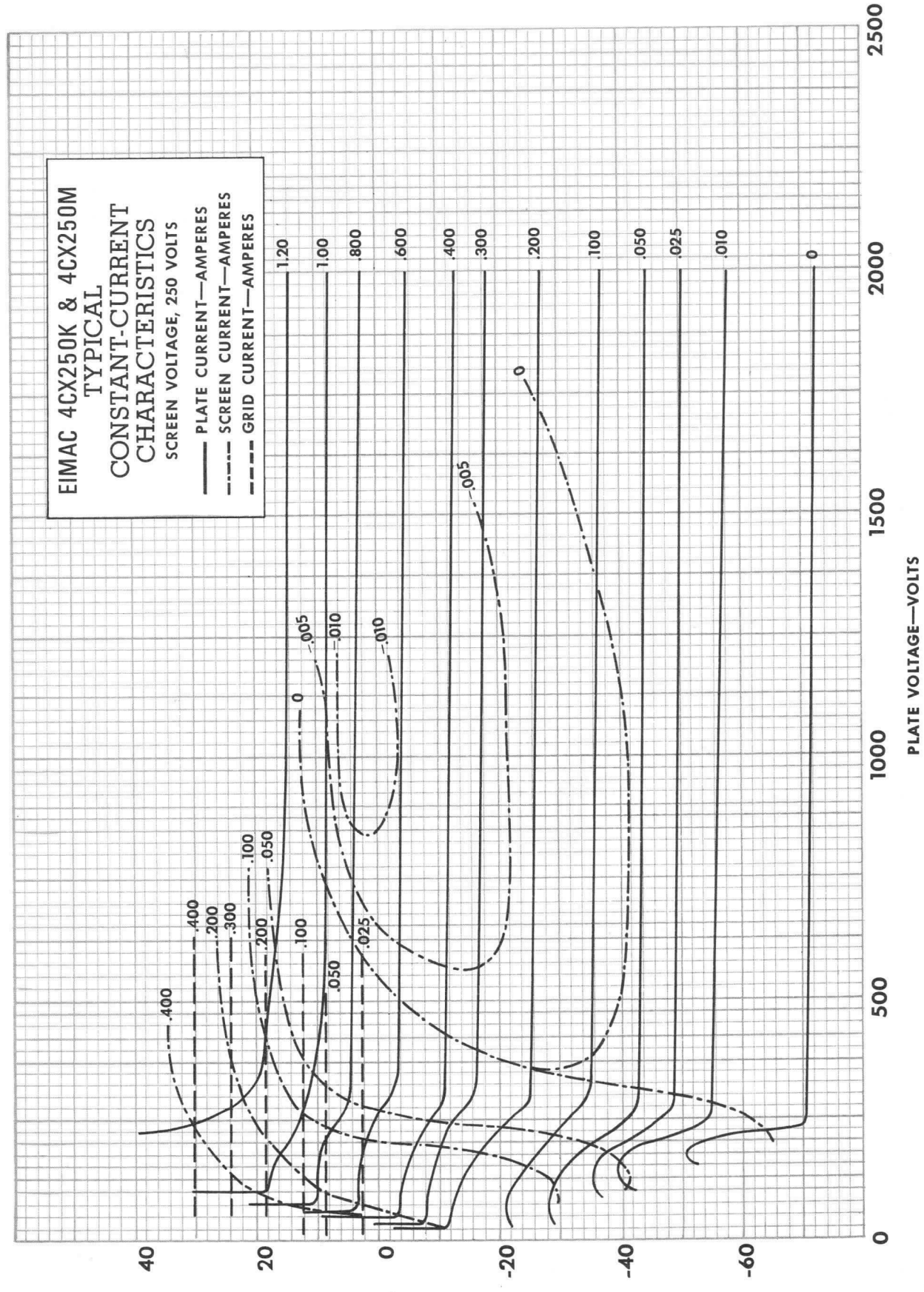
EIMAC 4CX250K & 4CX250M
TYPICAL
CONSTANT-CURRENT
CHARACTERISTICS
SCREEN VOLTAGE, 250 VOLTS
PLATE CURRENT—AMPERES
SCREEN CURRENT—AMPERES
GRID CURRENT—AMPERES
PLATE VOLTAGE—VOLTS
GRID VOLTAGE—VOLTS
0
500
1000
1500
2000
2500
40
20
0
-20
-40
-60
1.20
1.00
.800
.600
.400
.300
.200
.100
.050
.025
.010
0
.005
.010
.025
.050
.100
.200
.300
.400

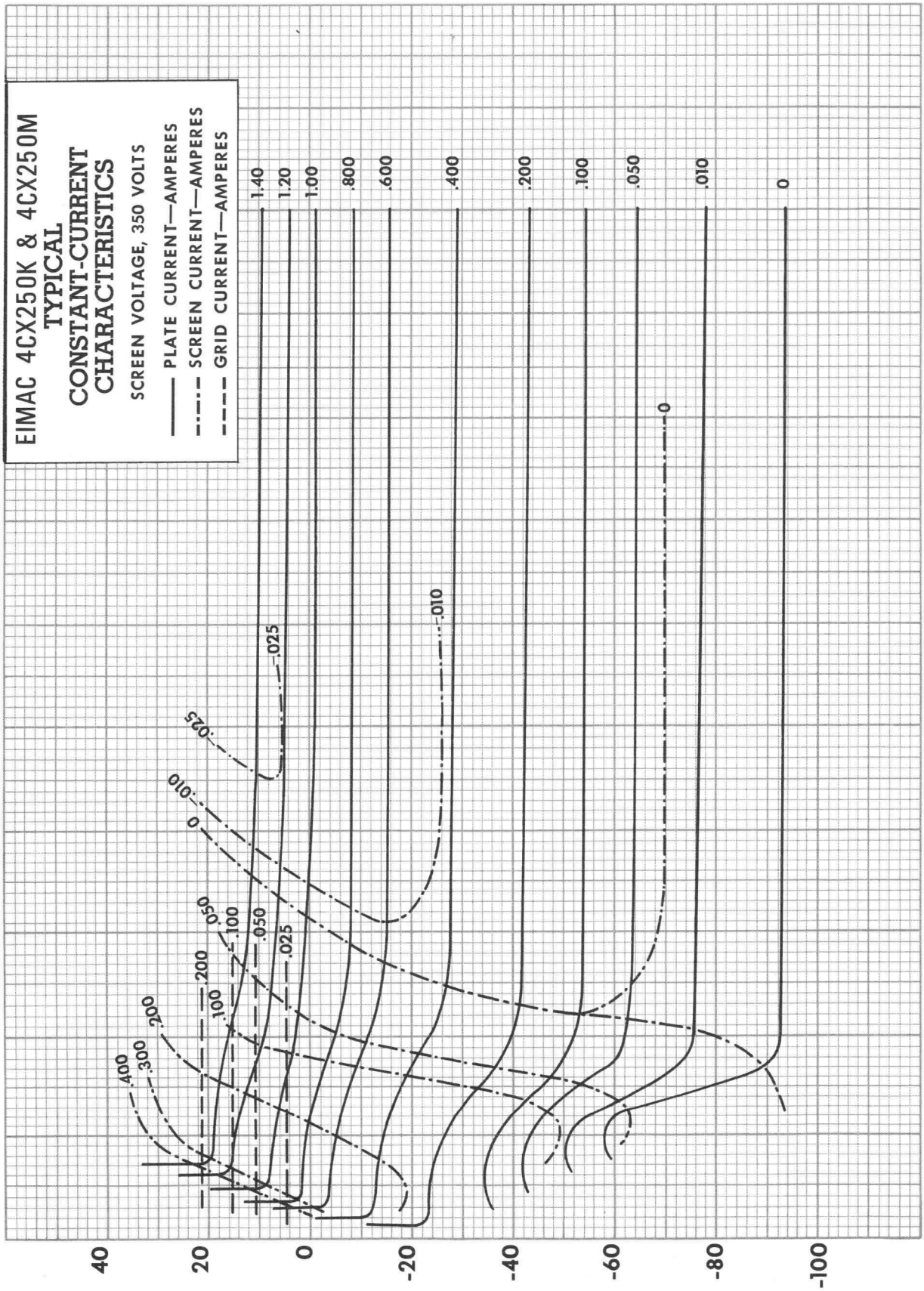
EIMAC 4CX250K & 4CX250M
TYPICAL
CONSTANT-CURRENT
CHARACTERISTICS
SCREEN VOLTAGE, 350 VOLTS
PLATE CURRENT—AMPERES
SCREEN CURRENT—AMPERES
GRID CURRENT—AMPERES
1.40
1.20
1.00
.800
.600
.400
.200
.100
.050
.010
0
.025
.010
.025
.010
0
.050
.100
.050
.025
.200
.100
.200
.300
.400
0
400
800
1200
1600
2000
PLATE VOLTAGE—VOLTS
40
20
0
-20
-40
-60
-80
-100
GRID VOLTAGE—VOLTS

EIMAC
Division of Varian
SAN CARLOS
CALIFORNIA

7580W
4CX250R

RADIAL-BEAM POWER TETRODE

The 4CX250R is a compact, high-perveance radial-beam tetrode designed specifically for use in class-AB_1 linear amplifiers where shock and/or vibration preclude the use of non-ruggedized tube types. The 4CX250R will replace the 7580 in almost all applications since it is electrically identical except for a minute (0.2 uuf) increase in output-capacitance limits. Further, it will replace the 4X250B or 4CX250B in equipments where the range of bias adjustment will tolerate this higher perveance tube and where tuning range can compensate for the small differences in input and output capacitances.

The 4CX250R will deliver more output power in most linear amplifiers which presently employ the 4X250B or 4CX250B and it will operate with maximum rated plate and screen voltages applied in equipments where shock and/or vibration is experienced. See **Shock and Vibration** section on page two for details.



GENERAL CHARACTERISTICS

ELECTRICAL

		Min.	Nom.	Max.	
Cathode:	Oxide-Coated, Unipotential				
	Heating Time	30	60		seconds
	Cathode-to-Heater Potential	—		±150	volts
Heater:	Voltage		6.0		volts
	Current	2.3		2.9	amperes
Direct Interelectrode Capacitances, Grounded Cathode:					
	Input	16.0		18.5	uuf
	Output	4.2		5.2	uuf
	Grid-to-Plate			0.06	uuf
Frequency for Maximum Ratings				500	Mc

MECHANICAL

Base	Special 9-pin
Maximum Operating Temperatures:	
Ceramic-to-Metal Seals	250°C
Anode Core	250°C
Recommended Socket	Eimac SK-600 Series
Operating Position	Any
Maximum Dimensions:	
Height	2.464 inches
Seated Height	1.910 inches
Diameter	1.640 inches
Cooling	Forced Air
Net Weight	4 ounces
Shipping Weight (Approximate)	1.6 pounds

RADIO-FREQUENCY LINEAR AMPLIFIER

Class-AB_1 - Single Sideband

MAXIMUM RATINGS

D-C PLATE VOLTAGE	2000 MAX. VOLTS
D-C SCREEN VOLTAGE	500 MAX. VOLTS
D-C GRID VOLTAGE	—250 MAX. VOLTS
D-C PLATE CURRENT	250 MAX. MA
PLATE DISSIPATION	250 MAX. WATTS
SCREEN DISSIPATION	12 MAX. WATTS

TYPICAL OPERATION

Two-Tone where peak envelope power is at least twice the average power output—Actual measurements—Tank-circuit efficiency estimated at 95%.

D-C Plate Voltage	1500	2000	volts
Zero-Signal D-C Plate Current	133	070	ma
Two-Tone D-C Plate Current	250	245	ma
D-C Screen Voltage	350	400	volts
Two-Tone D-C Screen Current	—10	+1	ma
D-C Grid-Bias Voltage	—62	—80	volts
Peak Signal Voltage	56	80	volts
3rd Order Intermodulation products referred to signal level	—30	—23	db
5th Order Intermodulation products referred to signal level	—35	—27	db
Worst 3rd Order Intermodulation as drive signal is reduced	—29	—21	db
Load Resistance	2160	2840	ohms
Peak Envelope Power, Useful	262	470	watts

 © 1968 by Varian

Printed in U.S.A.

RADIO-FREQUENCY LINEAR AMPLIFIER

Class-AB_1 (Carrier with Double Sidebands)

MAXIMUM RATINGS

D-C PLATE VOLTAGE	2000 MAX. VOLTS
D-C SCREEN VOLTAGE	500 MAX. VOLTS
D-C GRID VOLTAGE	—250 MAX. VOLTS
D-C PLATE CURRENT	250 MAX. MA
PLATE DISSIPATION	250 MAX. WATTS
SCREEN DISSIPATION	12 MAX. WATTS

TYPICAL OPERATION—Single Tube

(Quantities shown for carrier conditions, no modulation)

D-C Plate Voltage	1500	2000	volts
D-C Plate Current	172	172	ma
D-C Screen Voltage	350	400	volts
D-C Screen Current (Approx)	—3	—5	ma
D-C Grid-Bias Voltage	—58	—76	volts
Peak Grid-Signal Voltage	30	39	volts
Plate-Load Resistance	2320	3150	ohms
Power Output for Tank Circuit Efficiency of 95%	55	100	watts

AUDIO-FREQUENCY LINEAR AMPLIFIER

Class-AB_1

MAXIMUM RATINGS (Per Tube)

D-C PLATE VOLTAGE	2000 MAX. VOLTS
D-C SCREEN VOLTAGE	500 MAX. VOLTS
D-C GRID VOLTAGE	—250 MAX. VOLTS
D-C PLATE CURRENT	250 MAX. MA
PLATE DISSIPATION	250 MAX. WATTS
SCREEN DISSIPATION	12 MAX. WATTS

TYPICAL OPERATION (Two Tubes Push-Pull)

D-C Plate Voltage	1500	2000	volts
D-C Plate Current No Signal	200	140	ma
D-C Plate Current at Full Signal	490	500	ma
D-C Screen Voltage	300	350	volts
D-C Screen Current No Signal	—2	—4	ma
D-C Screen Current at Full Signal	0	+4	ma
D-C Grid-Bias Voltage (Approx)	—48	—66	volts
Plate-to-Plate Load Resistance	5920	8016	ohms
Power Output for Transformer Efficiency of 95%	390	595	watts

MAXIMUM RATINGS FOR OTHER TYPES OF OPERATION

Class-C Telegraphy or FM

D-C PLATE VOLTAGE	2000 MAX. VOLTS
D-C SCREEN VOLTAGE	300 MAX. VOLTS
D-C GRID VOLTAGE	—250 MAX. VOLTS
D-C PLATE CURRENT	250 MAX. MA
PLATE DISSIPATION	250 MAX. WATTS
SCREEN DISSIPATION	12 MAX. WATTS
GRID DISSIPATION	2 MAX. WATTS

Class-C, Plate Modulated

D-C PLATE VOLTAGE	1500 MAX. VOLTS
D-C SCREEN VOLTAGE	300 MAX. VOLTS
D-C GRID VOLTAGE	—250 MAX. VOLTS
D-C PLATE CURRENT	200 MAX. MA
PLATE DISSIPATION	165 MAX. WATTS
SCREEN DISSIPATION	12 MAX. WATTS
GRID DISSIPATION	2 MAX. WATTS

APPLICATION

MECHANICAL

Mounting—The 4CX250R may be mounted in any position. An Eimac Air-System Socket of the SK-600 series or equivalent is recommended. These sockets may be obtained with or without the r-f screen by-pass capacitor, and with or without the four cathode terminals grounded to the socket shell. A simple Lock-in socket restricts the flow of cooling air and is not recommended.

Cooling—The 4CX250R has an efficient louvered anode cooler. The maximum allowable temperature for any external surface is 250°C.

For long service life at sea level, at an ambient temperature of 25°C and maximum rated anode dissipation of 250 watts, a *minimum* of 4.6 cfm air should flow from tube base through the anode cooler. The corresponding pressure drop with the recommended socket and chimney will be approximately 0.32 inch water column. See table for other dissipation levels and conditions.

4.6 cfm of air at 25°C is the same as a mass air flow of 18 pounds per hour. Higher ambient temperature requires greater air mass and volume. Higher altitude requires equivalent mass air flow for a given ambient temperature and therefore requires greater volume at increased back pressure.

The use of temperature-sensitive laquer is recommended to determine the effectiveness of a cooling system under operating conditions.

Plate Dissipation (Watts)	55°C AMBIENT			
	SEA LEVEL		10,000 FEET ALTITUDE	
	Air Flow (CFM)	Pressure Drop (Inches of Water)	Air Flow (CFM)	Pressure Drop (Inches of Water)
75	1.15	0.025	1.8	0.036
125	2.3	0.09	3.35	0.13
250	6.4	0.59	9.3	0.86

Shock and Vibration—The 4CX250R is one of the Eimac tube types which is unique in that shock and vibration testing is performed with *maximum rated plate and screen voltages* applied. Two samples of production tubes are randomly selected periodically and tested under the conditions outlined below.

With *maximum rated plate and screen voltages* applied, each of the tubes in this sample is subjected to six shocks of 90 G (minimum) half-sine-wave motion, with a duration of 11 ± 2 milliseconds, in each of the three major axes (X1, X2, and Y1).

With *maximum rated plate and screen voltages* applied and with control-grid voltage adjusted to allow the flow of 100 ma through a plate load resistor of 4900 ohms, each of the tubes in this sample is vibrated in the three major axes throughout the range of 5-750-5 cps in a minimum time of six minutes per axis. The vibration level is maintained at 10 G from 28 cps to 750 cps and at 0.25 inch D.A. from 5 cps to 28 cps. During this test, noise voltage developed across the plate load resistor cannot exceed 30 volts rms. Sufficient plate power-supply voltage (2500 volts) is em-

ployed to assure that a minimum of 2000 volts appears at the plate of the tube under test even though 490 volts drop across the plate load resistor results from d-c plate-current flow.

The equipment designer is cautioned to provide adequate tube support to prevent relative motion between tube and socket in equipments where shock and/or vibration are anticipated.

ELECTRICAL

Heater—For maximum life and uniform performance, the heater voltage should be maintained within plus or minus 5% of the rated 6.0 volts at operating frequencies up to 300 Mc. For CW use between 300 and 400 Mc, 5.75 volts is recommended. For CW use, 400 to 500 Mc, 5.5 volts is recommended.

Cathode—The cathode is connected to the four even-numbered base pins to provide a low-inductance path, or permit separation of input and output circuits if required.

Rated heater voltage should be applied for 30 seconds before other operating voltages are applied.

Heater-to-cathode maximum voltage is ±150 volts.

Control Grid—Maximum rated d-c bias voltage is −250 volts. D-C resistance, grid to cathode, should be no more than 100,000 ohms.

Screen Grid—Maximum screen dissipation is 12 watts, normally computed by multiplying d-c screen voltage by the average screen current. This computation is essentially correct except in the case of heavy plate loading when secondary-emission current may mask the normal screen current.

All tetrodes, under some conditions of loading and drive, will exhibit secondary emission from the screen which changes the net current to the screen and may even cause the screen meter to reverse. Normally, secondary emission is harmless provided the screen voltage is stable. To insure stable screen voltage, it is recommended that a bleeder resistor calculated to pass 15 ma from screen to ground be used.

Plate Dissipation—The maximum plate dissipation is 250 watts. The usual single-sideband voice signal is complex and full peak envelope power shown in Typical Operating Conditions, may be developed without exceeding this plate dissipation. Single-tone testing for short periods with greater than 250 watts plate dissipation is permissible.

Multiple Operation — To obtain maximum power with minimum distortion from tubes operated in multiple it is desirable to adjust individual screen or grid-bias voltages so the peak plate current for each tube is equal at the crest of the exciting voltage. Under these conditions, individual d-c plate currents will be approximately equal for full input signal for class-AB_1 operation.

Special Application—If it is desired to use the 4CX250R under conditions widely different from those given here, consult the Power Grid Tube Marketing Department, EIMAC Division of Varian, San Carlos, California.

DIMENSION DATA		
REF.	MIN.	MAX.
A	2.324	2.464
B	1.610 DIA.	1.640 DIA.
C	1.810	1.910
D	.240	.280
E	.559 DIA.	.573 DIA.
F	.710	.790
G	.750	.810
H		1.406 DIA.
J	.187	
AA	.514	.554
AB		.456
AC	.360	
AD		.250
AF	.068	.108
AG	.031 NOM.	
AH	.298	.308
AJ	.255 DIA.	.265 DIA.
AK	.045 DIA.	.053 DIA.
AL	.078	.086
AM	.680 DIA.	.694 DIA.
AN		.043 R.
AP	.005 R. MIN. OR	
	.035 X 22.5°	
AR	30° NOM.	
AS	45° NOM.	
AT	22.5° NOM.	
AU	.080 NOM.	
AV	1.417 DIA.	1.433 DIA.

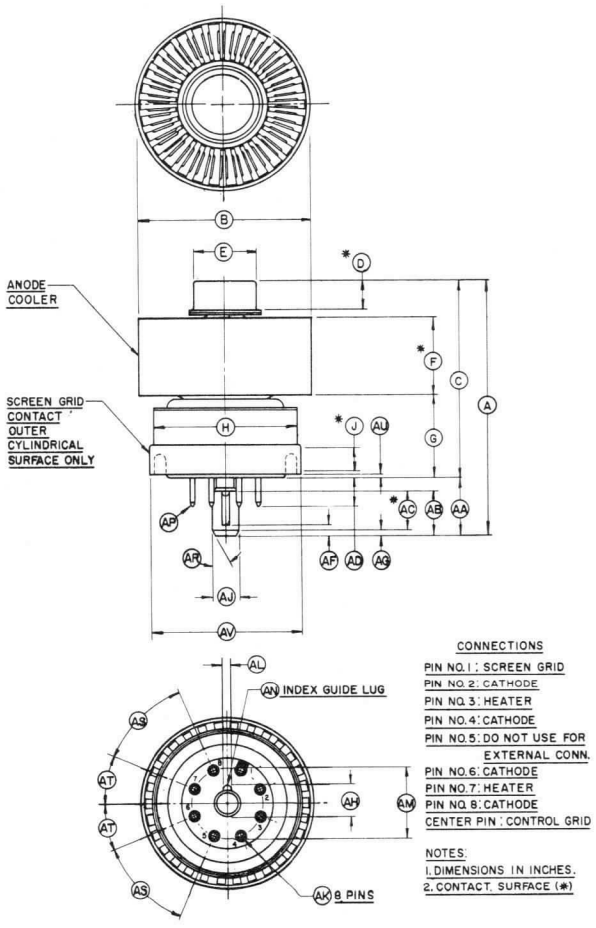

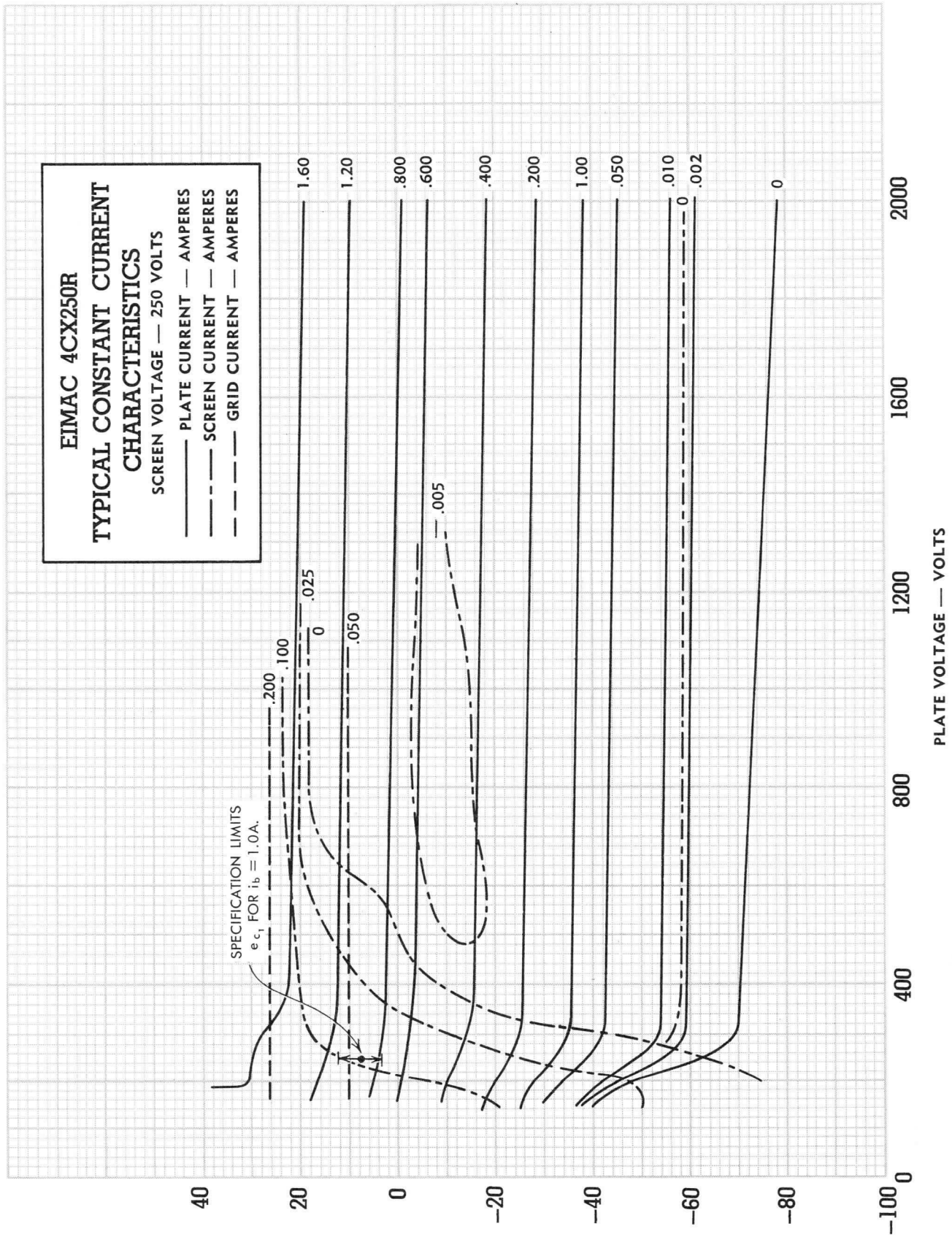
EIMAC 4CX250R
TYPICAL CONSTANT CURRENT CHARACTERISTICS
SCREEN VOLTAGE — 250 VOLTS
PLATE CURRENT — AMPERES
SCREEN CURRENT — AMPERES
GRID CURRENT — AMPERES
SPECIFICATION LIMITS
e_{c_1} FOR i_b = 1.0A.
1.60
1.20
.800
.600
.400
.200
1.00
.050
.010
.002
0
.200
.100
.025
0
.050
.005
40
20
0
−20
−40
−60
−80
−100
0
400
800
1200
1600
2000
GRID VOLTAGE — VOLTS
PLATE VOLTAGE — VOLTS

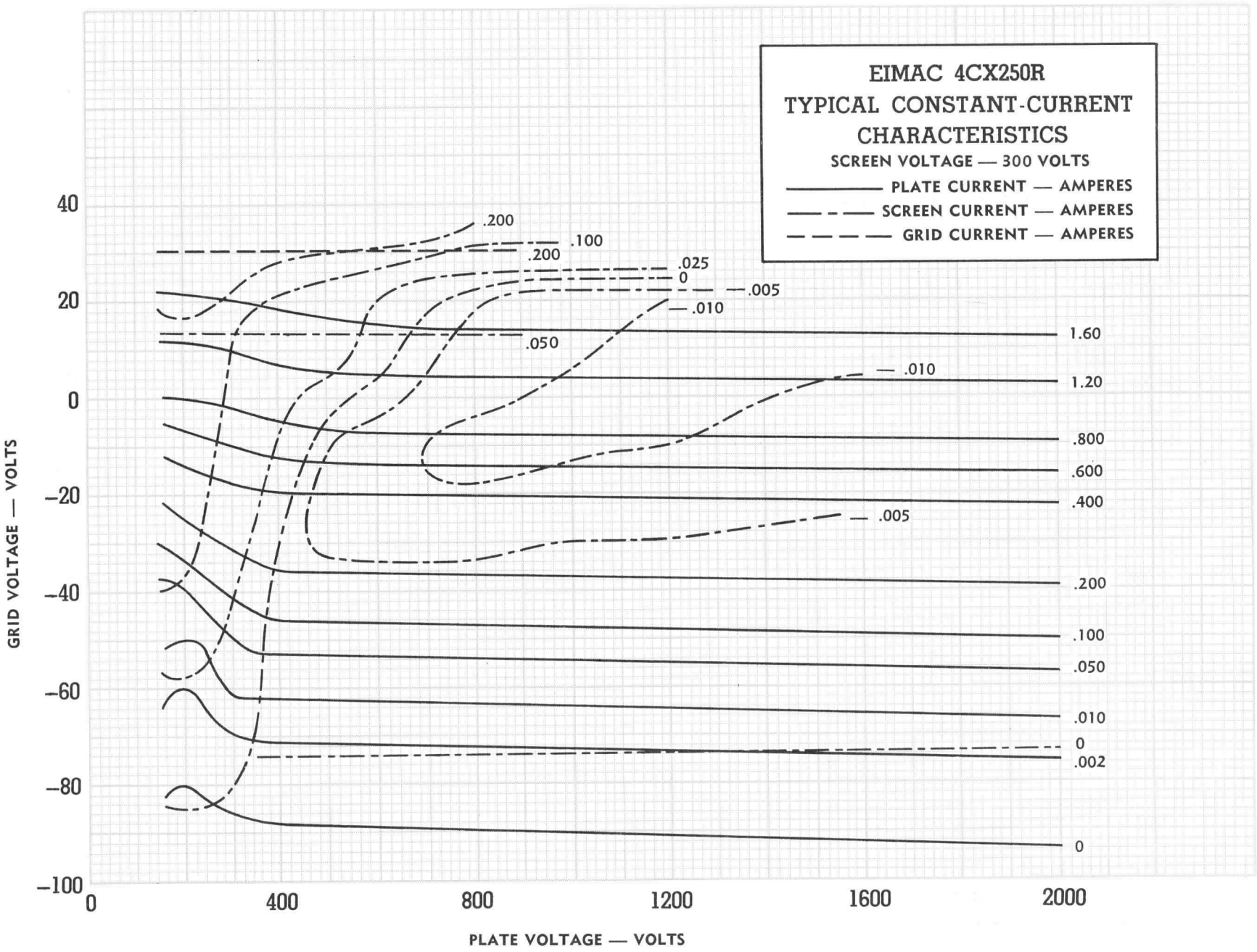
EIMAC 4CX250R
TYPICAL CONSTANT-CURRENT CHARACTERISTICS
SCREEN VOLTAGE — 300 VOLTS
PLATE CURRENT — AMPERES
SCREEN CURRENT — AMPERES
GRID CURRENT — AMPERES
GRID VOLTAGE — VOLTS
PLATE VOLTAGE — VOLTS
40
20
0
−20
−40
−60
−80
−100
0
400
800
1200
1600
2000
.200
.100
.200
.025
0
.005
.010
.050
1.60
.010
1.20
.800
.600
.400
.005
.200
.100
.050
.010
0
.002
0

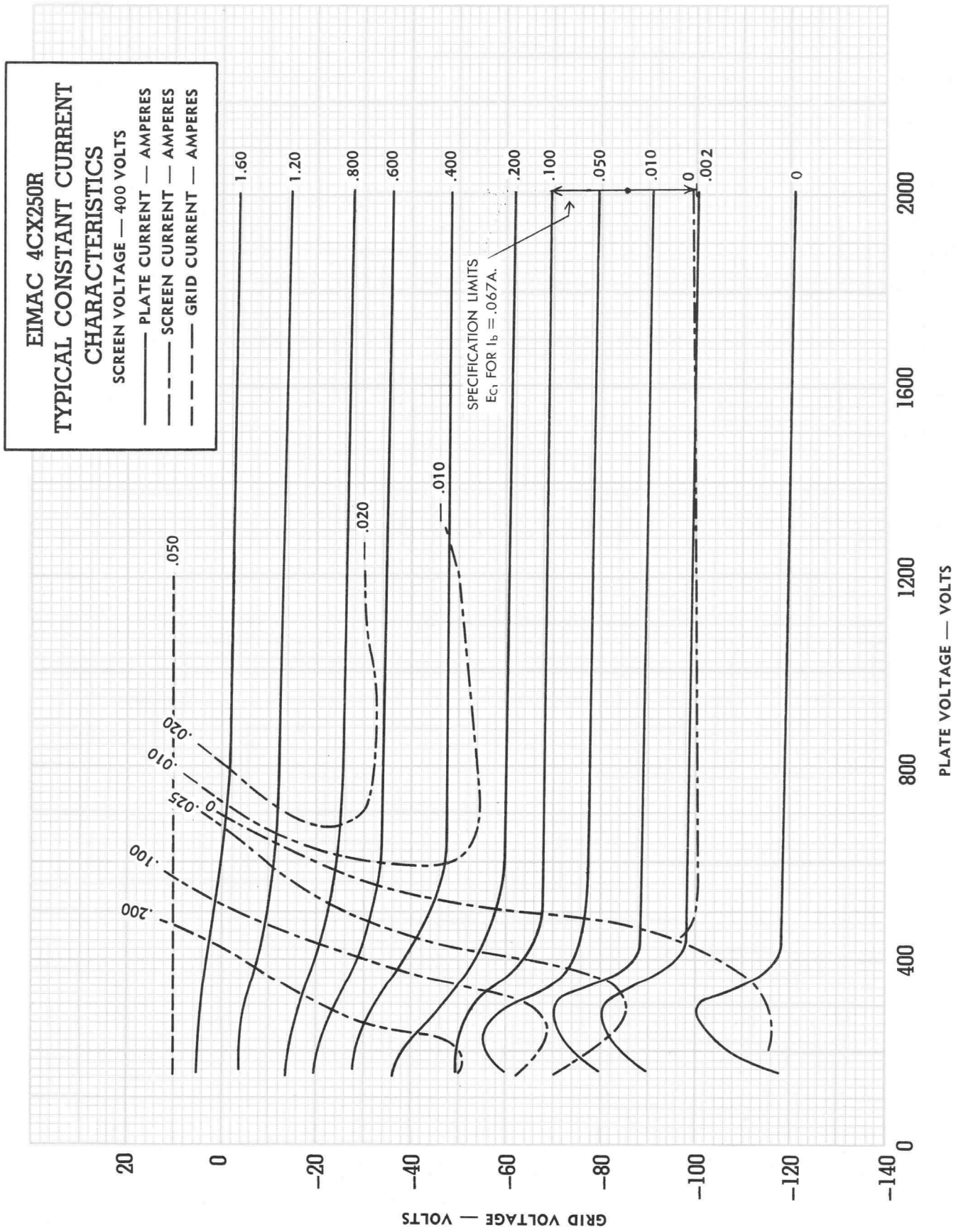
EIMAC 4CX250R
TYPICAL CONSTANT CURRENT CHARACTERISTICS
SCREEN VOLTAGE — 400 VOLTS
PLATE CURRENT — AMPERES
SCREEN CURRENT — AMPERES
GRID CURRENT — AMPERES
1.60
1.20
.800
.600
.400
.200
.100
.050
.010
0
.002
0
.050
.020
.010
0
.025
.100
.200
.020
.010
SPECIFICATION LIMITS
E_{C_1} FOR I_b = .067A.
20
0
-20
-40
-60
-80
-100
-120
-140
0
400
800
1200
1600
2000
GRID VOLTAGE — VOLTS
PLATE VOLTAGE — VOLTS

EIMAC
Division of Varian
SAN CARLOS
CALIFORNIA

8167
4CX300A

CERAMIC POWER TETRODE

The EIMAC 4CX300A is a compact integral-finned external-anode power tetrode having a maximum plate-dissipation rating of 300 watts. The 4CX300A may be operated at frequencies up to 500 megahertz.

The all-ceramic-and-metal construction and the internally-unitized electrode structure combine to make the 4CX300A especially durable and free from mechanically-induced noise under conditions of severe acceleration caused by shock or vibration.



GENERAL CHARACTERISTICS

ELECTRICAL

	Min.	Nom.	Max.	
Cathode: Oxide-Coated, Unipotential				
Heating Time	30	60		S
Cathode-to-Heater Potential			±150	V
Heater: Voltage (See "Application")		6.0		V
Current (E_f=6.0 volts)	2.6		3.1	A
Amplification Factor (Grid to Screen)	4.0		5.6	
Transconductance (I_b=200 ma.)		12,000		μmhos
Direct Interelectrode Capacitances, Grounded Cathode:				
Input	25		33	pF
Output	3.5		4.5	pF
Feedback			0.06	pF

Direct Interelectrode Capacitances, Grounded Grid and Screen:	Min.	Nom.	Max.	
Input		16.2		pF
Output	3.5		4.5	pF
Feedback		0.01		pF
Frequency for Maximum Ratings			500	MHz

MECHANICAL

Base	Special, breechblock terminal surfaces
Recommended Socket	EIMAC SK-700 Series
Operating Position	Any
Maximum Operating Temperatures:	
Ceramic-to-metal Seals	250°C
Anode Core	250°C
Cooling	Forced Air
Maximum Over-all Dimensions:	
Height	2.5 in
Diameter	1.65 in
Net Weight	4 oz
Shipping Weight (Approximate)	1 lb

(Revised 8-30-66) © 1959, 1966, 1968 by Varian

Printed in U.S.A.

RADIO-FREQUENCY POWER AMPLIFIER OR OSCILLATOR

Class-C Telegraphy or FM Telephony
(Key-down conditions)

MAXIMUM RATINGS

DC PLATE VOLTAGE	2000 VOLTS
DC SCREEN VOLTAGE	300 VOLTS
DC GRID VOLTAGE	—250 VOLTS
DC PLATE CURRENT	250 MA
PLATE DISSIPATION	300 WATTS
SCREEN DISSIPATION	12 WATTS
GRID DISSIPATION	2 WATTS

TYPICAL OPERATION

DC Plate Voltage	500	1000	1500	2000	2500‡	2000	volts
DC Screen Voltage	250	250	250	250	250	250	volts
DC Grid Votage	—90	—90	—90	—90	—90	—90	volts
DC Plate Current	250	250	250	250	250	250	ma
DC Screen Current*	45	38	21	19	16	10†	ma
DC Grid Current*	35	31	28	26	25	25†	ma
Peak RF Grid Voltage*	114	114	112	112	111	—	volts
Driving Power*	4.0	3.5	3.2	2.9	2.8	—	watts
Plate Input Power	125	250	375	500	625	500	watts
Plate Output Power	70	190	280	390	500	225†	watts
Heater Voltage						5.0	volts

*Approximate values
†Measured values for a typical cavity amplifier circuit at 500 MHz.
‡For operation below 250Mc. only.

AUDIO-FREQUENCY AMPLIFIER OR MODULATOR

Class-AB_1

MAXIMUM RATINGS (Per tube)

DC PLATE VOLTAGE	2500 VOLTS
DC SCREEN VOLTAGE	400 VOLTS
DC PLATE CURRENT	250 MA
PLATE DISSIPATION	300 WATTS
SCREEN DISSIPATION	12 WATTS
GRID DISSIPATION	2 WATTS

TYPICAL OPERATION (Sinusoidal wave, two tubes unless noted)

DC Plate Voltage	1000	1500	2000	2500 volts
DC Screen Voltage	350	350	350	350 volts
DC Grid Voltage[1]	—55	—55	—55	—55 volts
Zero-Signal DC Plate Current	200	200	200	200 ma
Max-Signal DC Plate Current	500	500	500	500 ma
Max-Signal DC Screen Current	20	16	10	8 ma
Effective Load, Plate to Plate	3500	6200	9500	11,600 ohms
Peak AF Grid Input Voltage (per tube)*	50	50	50	50 volts
Driving Power	0	0	0	0 watts
Max-Signal Plate Output Power	240	430	600	800 watts

*Approximate values.
[1]Adjust grid bias to obtain listed zero-signal plate current.

RADIO-FREQUENCY LINEAR AMPLIFIER

Class-AB_1 (Carrier conditions)

MAXIMUM RATINGS

DC PLATE VOLTAGE	2500 VOLTS
DC SCREEN VOLTAGE	400 VOLTS
DC PLATE CURRENT	250 MA
PLATE DISSIPATION	300 WATTS
SCREEN DISSIPATION	12 WATTS
GRID DISSIPATION	2 WATTS

TYPICAL OPERATION

DC Plate Voltage	1000	1500	2000	2500 volts
DC Screen Voltage	350	350	350	350 volts
DC Grid Voltage[1]	—55	—55	—55	—55 volts
Zero-Signal DC Plate Current	100	100	100	100 ma
DC Plate Current	150	150	150	150 ma
DC Screen Current*	—3	—4	—4	—4 ma
Peak RF Grid Voltage*	25	25	25	25 volts
Plate Output Power	30	50	65	85 watts

*Approximate values.
[1]Adjust grid bias to obtain listed zero-signal plate current.

RADIO-FREQUENCY LINEAR AMPLIFIER

Class-AB_1 (Single-Sideband Suppressed-Carrier Operation)

MAXIMUM RATINGS

DC PLATE VOLTAGE	2500 VOLTS
DC SCREEN VOLTAGE	400 VOLTS
DC PLATE CURRENT	250 MA
PLATE DISSIPATION	300 WATTS
SCREEN DISSIPATION	12 WATTS
GRID DISSIPATION	2 WATTS

TYPICAL OPERATION (Peak-envelope conditions except where noted)

DC Plate Voltage	1000	1500	2000	2500 volts
DC Screen Voltage	350	350	350	350 volts
DC Grid Voltage[1]	—55	—55	—55	—55 volts
Zero-Signal DC Plate Current	100	100	100	100 ma
Peak RF Grid Voltage*	50	50	50	50 volts
DC Plate Current	250	250	250	250 ma
DC Screen Current*	10	8	5	4 ma
Plate Input Power	250	375	500	625 watts
Plate Output Power	120	215	300	400 watts
Two-Tone Average DC Plate Current	190	190	190	190 ma
Two-Tone Average DC Screen Current*	2	—1	—2	—2 ma

*Approximate values.
[1]Adjust grid bias to obtain listed zero-signal plate current.

PLATE-MODULATED RADIO-FREQUENCY AMPLIFIER

Class-C Telephony (Carrier conditions)

MAXIMUM RATINGS

DC PLATE VOLTAGE	1500 VOLTS
DC SCREEN VOLTAGE	300 VOLTS
DC GRID VOLTAGE	—250 VOLTS
DC PLATE CURRENT	200 MA
PLATE DISSIPATION	200 WATTS
SCREEN DISSIPATION	12 WATTS
GRID DISSIPATION	2 WATTS

TYPICAL OPERATION

DC Plate Voltage	500	1000	1500 volts
DC Screen Voltage	250	250	250 volts
DC Grid Voltage	—100	—100	—100 volts
DC Plate Current	200	200	200 ma
DC Screen Current*	31	22	20 ma
DC Grid Current*	15	14	14 ma
Peak RF Grid Input Voltage*	118	117	117 volts
Driving Power*	1.8	1.7	1.7 watts
Plate Input Power	100	200	300 watts
Plate Output Power	60	145	235 watts

*Approximate values.

NOTE: "TYPICAL OPERATION" data are obtainable by calculation from published characteristic curves and confirmed by direct tests. The driving power and output power shown are substantially correct at frequencies below 175 MHz. Allowance must be made for grid and plate circuit losses. At frequencies above 175 MHz. additional allowance must be made for high-frequency effects within the tube itself. Adjustment of the rf grid drive to obtain the specified plate current at the specified grid bias, screen voltage, and plate voltage is assumed. If this procedure is followed, there will be little variation in output power when tubes are changed, even though there may be some variations in grid and screen currents. The grid and screen currents which result when the desired plate current is obtained are incidental and vary from tube to tube. These current variations cause no difficulty so long as the circuit maintains the correct voltage in the presence of the variations in current. If grid bias is obtained principally by means of a grid resistor, the resistor must be adjustable to obtain the required bias voltage when the correct rf driving voltage is applied.

APPLICATION

MECHANICAL

Mounting — The 4CX300A may be operated in any position. Recommended sockets for the 4CX300A are the EIMAC Air-System Sockets type SK-700 (ungrounded cathode) or type SK-710 (cathode and one heater contact grounded). Both sockets provide connections to all electrodes except the anode and each incorporates a screen by-pass capacitor of approximately 1100 $\mu\mu$f. The SK-606 chimney is recommended for use with the SK-700 and SK-710 sockets.

Other sockets suitable for use with the 4CX300A include the SK-740, SK-760, and SK-770. These sockets do not incorporate screen by-pass capacitors. The SK-760 and SK-770 incorporate integral air chimneys. Screen contacts are connected to the mounting flange in the SK-770 and are, therefore, grounded when the socket is installed in the usual manner.

Cooling — The maximum rated ceramic-to-metal seal temperature for the 4CX300A is 250°C. Adequate forced-air cooling must be provided to assure that this maximum temperature rating is not exceeded. Air flow requirements to maintain seal temperatures at 200°C in 50°C ambient air are tabulated below.

	Sea Level		10,000 Feet	
Plate Dissipation (watts)	Air Flow (CFM)	Pressure Drop (inches of water)	Air Flow (CFM)	Pressure Drop (inches of water)
100	2.2	0.065	3.2	0.095
150	3.4	0.14	4.9	0.21
200	4.6	0.26	6.7	0.37
250	5.9	0.40	8.6	0.58
300	7.2	0.58	10.5	0.85

A new, more efficient cooling fin design is incorporated in the 4CX300A which results in lower airflow requirements. This is reflected in the table above (which assumes the use of an EIMAC SK-700 or SK-710 socket and SK-606 chimney).

At high altitudes and high ambient temperatures the flow rate must be increased to obtain equivalent cooling. The flow rate and corresponding pressure differential must be determined individually in such cases, using the maximum rated temperature as the criterion for satisfactory cooling.

Cooling effectiveness should also be determined on an individual basis if the 4CX300A is operated immersed in an insulating fluid such as silicone oil, again using the maximum rated temperature as the criterion.

Impact and Vibration — The 4CX300A is designed to operate under impact or vibration capable of disabling a conventional tube of similar power capabilities. Impact forces up to 50g with 11-millisecond duration, or vibratory accelerations up to 20g at frequencies from 20 to 2000 cycles per second, will not destroy a normal 4CX300A unless unduly prolonged.

It is not suggested that the 4CX300A be subjected to abusive treatment unnecessarily, but in applications where operation under severe environmental conditions is unavoidable the 4CX300A will provide more reliable service than will conventional tubes.

ELECTRICAL

Heater Operation — The rated heater voltage for the 4CX300A is 6.0 volts. At frequencies higher than 300 megacycles the heater voltage should be reduced according to the following schedule:

Frequency (MHz)	Heater Voltage (Volts)
Up to 300	6.00
300 to 400	5.75
400 to 500	5.50

The heater voltage must be maintained within ±5% of the selected operating voltage if variations in circuit performance are to be minimized and best tube life obtained.

Cathode Operation — The 4CX300A employs a cylindrical indirectly-heated oxide-coated unipotential cathode. The minimum warm-up time is 30 seconds when rated heater voltage is applied.

Grid Operation — The 4CX300A control grid has a maximum dissipation rating of 2.0 watts, and precautions should be observed to avoid exceeding this rating. The grid bias and driving power should be kept near the values shown in the Typical Operation sections of the data sheet whenever possible.

At frequencies higher than 300 MHz., the driving power required by the circuits associated with the tube begins to increase, until at 500 MHz., as much as 30 watts of driving power may be required. The power dissipated by the control grid increases only slightly, however, in spite of the greatly increased driving power required by the circuit. Satisfactory 500-megahertz operation of the 4CX300A in a stable, "straight-through" amplifier is indicated by grid-current values below approximately 25 milliamperes.

In class-A and class-AB_1 amplifiers, where no grid current flows, the grid bias voltage may be applied through a resistor. The maximum permissible series resistance per tube is 100,000 ohms.

Screen Operation — The maximum rated screen dissipation for the 4CX300A is 12 watts. The maximum rated dc screen supply voltage is 300 volts when the tube is operated in class-C amplifier or oscillator service, and 400 volts when the tube is operated in class-AB or class-B amplifier service.

Under certain operating conditions the screen current of a tetrode may reverse. This makes it dangerous to rely on a screen-dropping resistor or a series regulator to supply the screen voltage unless a bleeder or regulator tube is connected from screen to cathode. This bleeder should draw at least 15 milliamperes for each tube connected to the screen supply.

The power input to the screen can be calculated from the voltage and current whenever

the screen-to-cathode potential does not vary. Screen modulation or cathode driving of tetrode amplifiers can lead to errors in measurement of screen input when the effective voltage and current exceed the indicated dc values. When there is reason to suspect that the screen input exceeds the indicated power, it is advisable to maintain the indicated screen power input below approximately 75% of the rated screen dissipation.

A screen by-pass capacitor of approximately 1100 $\mu\mu$f is incorporated in the body of the EIMAC SK-700 and SK-710 Air-System Sockets and is adequate for normal amplifier operation at high and ultra-high radio frequencies. Operation at low radio frequencies or audio frequencies may require that additional capacitance be connected externally. In the latter case, the screen by-pass capacitance within the socket helps to eliminate the high-frequency parasitic oscillations occasionally encountered in tetrode amplifiers.

The self-neutralizing frequency of the 4CX300A is above the useful high-frequency limit for the tube when either of the sockets with integral screen by-pass capacitors is used.

Plate Operation—The 4CX300A has a finned external anode for forced-air cooling. Connection to the anode may be made at the top cap or cylindrical cooler shell. The latter is usually used when the tube is installed in coaxial lines or cavities.

The absolute maximum plate-dissipation rating for the 4CX300A is 300 watts, which is also the rated maximum dissipation for class-C amplifier or oscillator applications and for class-B or class-AB amplifier applications. When the 4CX300A is used in plate-modulated amplifier applications, the plate-dissipation rating is 200 watts under carrier conditions, rising to 300 watts under 100% sine-wave modulation. Plate dissipation may be permitted to exceed the maximum rated value for brief periods, such as may occur while tuning.

The maximum rated plate voltage for class-AB_1 operation at frequencies up to 500 megahertz is 2500 volts. In class-C telegraphy and plate-modulated service the maximum rated plate voltage for operation up to 500 megahertz is 2000 and 1500 volts respectively. However, at frequencies below 250 megahertz, a plate potential of 2500 volts may be used in class-C telegraphy and FM telephony service.

Modulation — The 4CX300A can be modulated by any of the methods commonly used with tetrode tubes. Its large reserve plate dissipation makes it especially suited for use in screen-modulated and linear amplifiers in which the plate efficiency is low.

Plate modulation can be applied to the 4CX-300A when it is operated as a class-C amplifier. To obtain 100% modulation with minimum distortion the screen supply voltage should be modulated in phase with the modulation applied to the plate supply voltage. Screen voltage modulation factors between 0.75 and 1.00 may be used.

"Self-modulation" of the screen by means of a resistor in series with the screen supply line is not recommended because of the effects which require a bleeder from screen to cathode as described under "Screen Operation."

Special Applications — If it is desired to operate this tube under conditions widely different from those given here, write to EIMAC, Division of Varian, for information and recommendations.

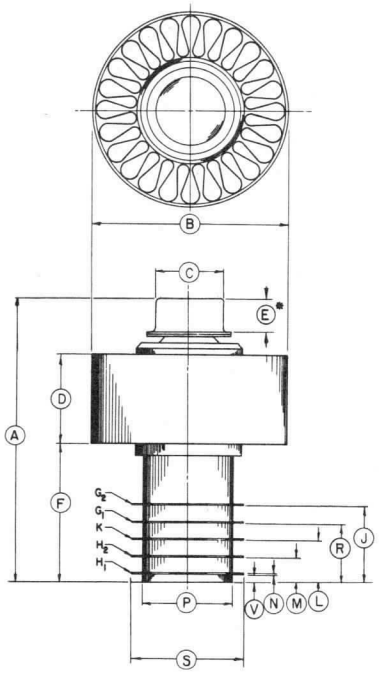

DIMENSION DATA			
REF	NOM.	MIN.	MAX.
A	2.400	2.300	2.500
B	1.625	1.610	1.640
C	.566	.559	.573
D	.750	.710	.790
E		.240	.280
F	1.164	1.133	1.195
J	.622	.602	.642
L	.344	.329	.359
M	.203	.193	.213
N	.015	.010	.020
P	.755	.740	.770
R	.485	.470	.500
S	.946	.936	.956
T	60°		
U	.175	.170	.185
V	.061	.050	.072

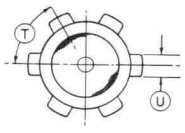

*CONTACT SURFACE

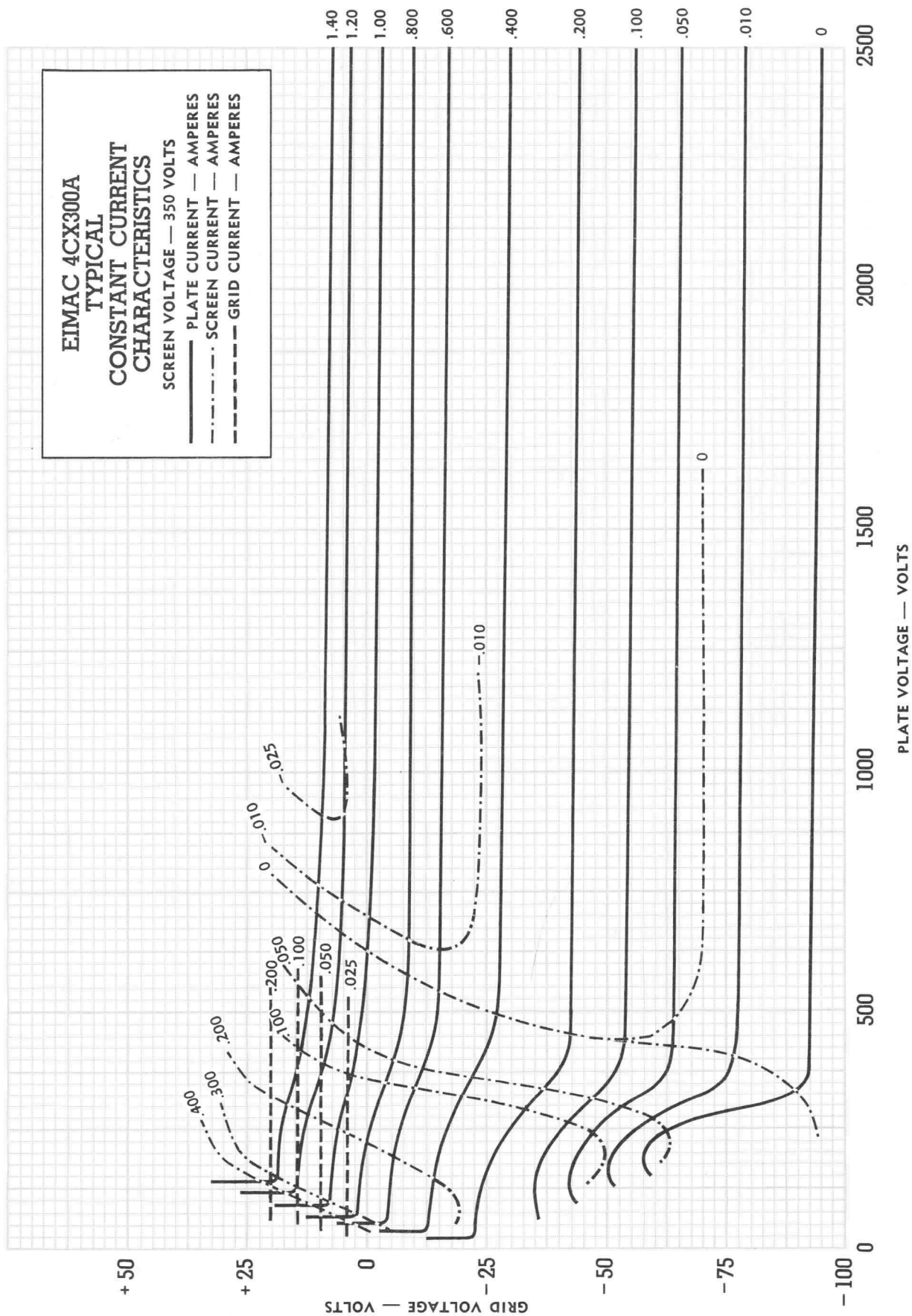
EIMAC 4CX300A
TYPICAL
CONSTANT CURRENT
CHARACTERISTICS
SCREEN VOLTAGE — 350 VOLTS
PLATE CURRENT — AMPERES
SCREEN CURRENT — AMPERES
GRID CURRENT — AMPERES
PLATE VOLTAGE — VOLTS
GRID VOLTAGE — VOLTS
0
500
1000
1500
2000
2500
+50
+25
0
-25
-50
-75
-100
1.40
1.20
1.00
.800
.600
.400
.200
.100
.050
.010
0
.025
.010
0
.050
.100
.200
.300
.400
.050
.025
.100
.200
.010
0

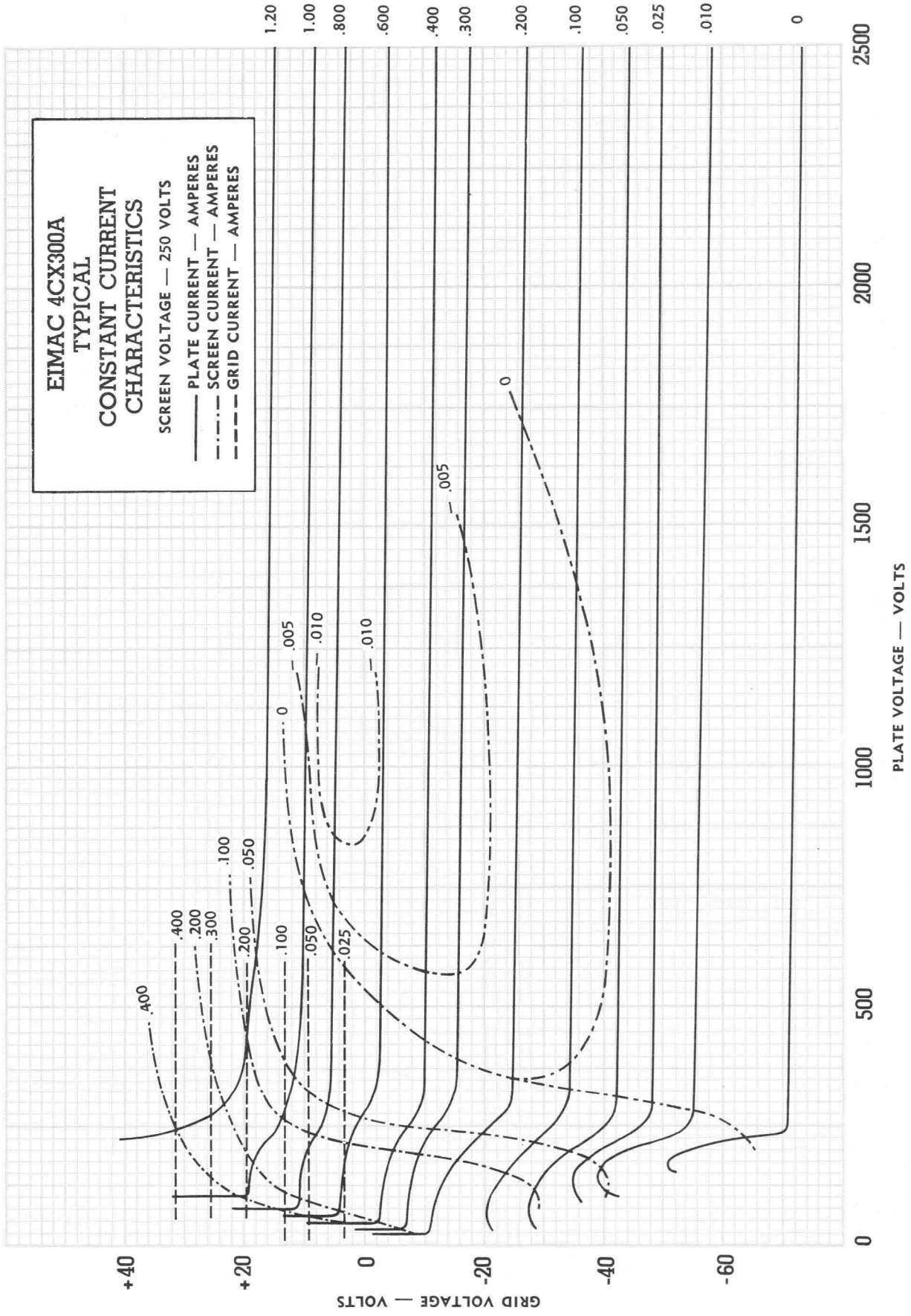
EIMAC 4CX300A
TYPICAL
CONSTANT CURRENT
CHARACTERISTICS
SCREEN VOLTAGE — 250 VOLTS
PLATE CURRENT — AMPERES
SCREEN CURRENT — AMPERES
GRID CURRENT — AMPERES
1.20
1.00
.800
.600
.400
.300
.200
.100
.050
.025
.010
0
.005
.010
.005
0
.400
.400
.200
.300
.200
.100
.100
.050
.050
.025
0
500
1000
1500
2000
2500
PLATE VOLTAGE — VOLTS
+40
+20
0
-20
-40
-60
GRID VOLTAGE — VOLTS

EIMAC
Division of Varian
SAN CARLOS
CALIFORNIA

4CX300Y

CERAMIC POWER TETRODE

The EIMAC 4CX300Y is a compact integral-finned external-anode power tetrode having a maximum plate-dissipation rating of 400 watts. The 4CX300Y may be operated at maximum ratings to 110 MHz.

The all-ceramic-and-metal construction and the internally-unitized electrode structure combine to make the 4CX300Y especially durable and free from mechanically-induced noise under conditions of severe acceleration caused by shock or vibration.



GENERAL CHARACTERISTICS

ELECTRICAL

	Min.	Nom.	Max.	
Cathode: Oxide-Coated, Unipotential				
Heating Time	30	60		S
Cathode-to-Heater Potential			±150	V
Heater: Voltage (See "Application")		6.0		V
Current (E_f=6.0 volts)	3.0		3.85	A
Amplification Factor (Grid to Screen)	4.0		5.6	
Transconductance (I_b=200 ma.)		12,000		μmhos

Direct Interelectrode Capacitances, Grounded Cathode:	Min.	Nom.	Max.	
Input	30		38	pF
Output	3.9		5.0	pF
Feedback			0.07	pF
Direct Interelectrode Capacitances, Grounded Grid and Screen:				
Input		18		pF
Output	3.9		5.0	pF
Feedback		0.01		pF
Frequency for Maximum Ratings			110	MHz

MECHANICAL

Base	Special, breechblock terminal surfaces
Recommended Socket	EIMAC SK-700 Series
Operating Position	Any
Maximum Operating Temperatures:	
Ceramic-to-Metal Seals	250°C
Anode Core	250°C
Cooling	Forced Air
Maximum Over-All Dimensions:	
Height	2.5 in
Diameter	1.65 in
Net Weight	4 oz
Shipping Weight (Approximate)	1 lb

(Revised 6-15-66) © 1962, 1966, 1968 by Varian

Printed in U.S.A.

RADIO-FREQUENCY POWER AMPLIFIER OR OSCILLATOR

Class-C Telegraphy or FM Telephony
(Key-down conditions)

MAXIMUM RATINGS

DC PLATE VOLTAGE	2000 VOLTS
DC SCREEN VOLTAGE	300 VOLTS
DC GRID VOLTAGE	—250 VOLTS
DC PLATE CURRENT	400 MA
PLATE DISSIPATION	400 WATTS
SCREEN DISSIPATION	8 WATTS
GRID DISSIPATION	1 WATT

TYPICAL OPERATION

DC Plate Voltage	1000	1500	2000 volts
DC Screen Voltage	250	250	250 volts
DC Grid Voltage	—90	—90	—90 volts
DC Plate Current	0.38	0.4	0.4 amps
DC Screen Current*	31	26	26 mA
DC Grid Current*	32	33	33 mA
Peak RF Grid Voltage*	110	110	110 volts
Driving Power*	3.5	3.8	3.8 watts
Plate Input Power	380	600	800 watts
Plate Output Power	240	425	600 watts

*Approximate values

AUDIO-FREQUENCY AMPLIFIER OR MODULATOR

Class-AB_1

MAXIMUM RATINGS (per tube)

DC PLATE VOLTAGE	2000 VOLTS
DC SCREEN VOLTAGE	400 VOLTS
DC PLATE CURRENT	400 MA
PLATE DISSIPATION	400 WATTS
SCREEN DISSIPATION	8 WATTS
GRID DISSIPATION	1 WATT

TYPICAL OPERATION (Sinusoidal wave, two tubes unless noted)

DC Plate Voltage	1000	1500	2000 volts
DC Screen Voltage	400	400	400 volts
DC Grid Voltage[1]	—60	—70	—70 volts
Zero-Signal DC Plate Current	400	200	200 mA
Max-Signal DC Plate Current	800	790	750 mA
Max-Signal DC Screen Current	24	16	4 mA
Effective Load, Plate to Plate	2060	3000	5100 ohms
Peak AF Grid Input Voltage (per tube)*	55	65	60 volts
Driving Power	0	0	0 watts
Max-Signal Plate Output Power	340	800	890 watts

*Approximate values
[1]Adjust grid bias to obtain listed zero-signal plate current.

RADIO-FREQUENCY LINEAR AMPLIFIER

Class-AB_1 (Carrier conditions)

MAXIMUM RATINGS

DC PLATE VOLTAGE	2000 VOLTS
DC SCREEN VOLTAGE	400 VOLTS
DC PLATE CURRENT	400 MA
PLATE DISSIPATION	400 WATTS
SCREEN DISSIPATION	8 WATTS
GRID DISSIPATION	1 WATT

TYPICAL OPERATION

DC Plate Voltage	1000	1500	2000 volts
DC Screen Voltage	400	400	400 volts
DC Grid Voltage[1]	—60	—70	—70 volts
Zero-Signal DC Plate Current	200	100	100 mA
DC Plate Current	280	210	205 mA
DC Screen Current*	—5	—5	—5 mA
Peak RF Grid Voltage*	28	33	30 volts
Plate Output Power	52	110	115 watts

*Approximate values.
[1]Adjust grid bias to obtain listed zero-signal plate current.

RADIO-FREQUENCY LINEAR AMPLIFIER

Class-AB_1 (Single-Sideband Suppressed-Carrier Operation)

MAXIMUM RATINGS

DC PLATE VOLTAGE	2000 VOLTS
DC SCREEN VOLTAGE	400 VOLTS
DC PLATE CURRENT	400 MA
PLATE DISSIPATION	400 WATTS
SCREEN DISSIPATION	8 WATTS
GRID DISSIPATION	1 WATT

TYPICAL OPERATION (Peak-envelope conditions except where noted)

DC Plate Voltage	1000	1500	2000 volts
DC Screen Voltage	400	400	400 volts
DC Grid Voltage[1]	—60	—70	—70 volts
Zero-Signal DC Plate Current	200	100	100 mA
Peak RF Grid Voltage*	55	65	60 volts
DC Plate Current	400	395	375 mA
DC Screen Current*	12	8	2 mA
Plate Input Power	400	590	750 watts
Plate Output Power	170	400	415 watts
Two-Tone Average DC Plate Current			
Two-Tone Average DC Screen Current			

*Approximate values.
[1]Adjust grid bias to obtain listed zero-signal plate current.

PLATE-MODULATED RADIO-FREQUENCY AMPLIFIER

Class-C Telephony (Carrier conditions)

MAXIMUM RATINGS

DC PLATE VOLTAGE	1500 VOLTS
DC SCREEN VOLTAGE	300 VOLTS
DC GRID VOLTAGE	—250 VOLTS
DC PLATE CURRENT	300 MA
PLATE DISSIPATION	250 WATTS
SCREEN DISSIPATION	8 WATTS
GRID DISSIPATION	1 WATT

TYPICAL OPERATION

DC Plate Voltage	1000	1500	volts
DC Screen Voltage	250	250	volts
DC Grid Voltage	—130	—130	volts
DC Plate Current	285	300	mA
DC Screen Current*	24	18	mA
DC Grid Current*	17	17	mA
Peak RF Grid Input Voltage*	148	148	volts
Driving Power*	1.7	1.7	watts
Plate Input Power	285	500	watts
Plate Output Power	165	300	watts

*Approximate values.

NOTE: "TYPICAL OPERATION" data are obtained by calculation from published characteristic curves. No allowance has been made for circuit losses. Adjustment of the rf grid drive to obtain the specified plate current at the specified grid bias, screen voltage, and plate voltage is assumed. If this procedure is followed, there will be little variation in output power when tubes are changed, even though there may be some variation in grid and screen currents. The grid and screen currents which result when the desired plate current is obtained are incidental and vary from tube to tube. These current variations cause no difficulty so long as the circuit maintains the correct voltage in the presence of the variations in current. If grid bias is obtained principally by means of a grid resistor, the resistor must be adjustable to obtain the required bias voltage when the correct rf driving voltage is applied.

APPLICATION

MECHANICAL

Mounting — The 4CX300Y may be operated in any position. Recommended sockets for the 4CX300Y are the EIMAC Air-System Sockets type SK-700 (ungrounded cathode) or type SK-710 (cathode and one heater contact grounded). Both sockets provide connections to all electrodes except the anode and each incorporates a screen by-pass capacitor of approximately 1100 pF. The SK-606 chimney is recommended for use with the SK-700 and SK-710 sockets.

Other sockets suitable for use with the 4CX300Y include the SK-740, SK-760, and SK-770. These sockets do not incorporate screen by-pass capacitors. The SK-760 and SK-770 incorporate integral air chimneys. Screen contacts are connected to the mounting flange in the SK-770 and are, therefore, grounded when the socket is installed in the usual manner.

Cooling — The maximum rated ceramic-to-metal seal temperature for the 4CX300Y is 250°C. Adequate forced-air cooling must be provided to assure that this maximum temperature rating is not exceeded. Air-flow requirements to maintain seal temperatures at 200°C in 50°C ambient air are tabulated below.

Plate Dissipation (Watts)	SEA LEVEL		10,000 FEET	
	Air Flow (CFM)	Pressure Drop (Inches of Water)	Air Flow (CFM)	Pressure Drop (Inches of Water)
100	2.2	0.065	3.2	0.095
150	3.4	0.14	4.9	0.21
200	4.6	0.26	6.7	0.37
250	5.9	0.40	8.6	0.58
300	7.2	0.58	10.5	0.85
350	8.7	0.82	12.7	1.2
400	10.3	1.12	15.0	1.6

A new, more efficient cooling fin design is incorporated in the 4CX300Y which results in lower air-flow requirements. This is reflected in the table above (which assumes the use of an EIMAC SK-700 or SK-710 socket and SK-606 chimney).

At high altitudes and high ambient temperatures the flow rate must be increased to obtain equivalent cooling. The flow rate and corresponding pressure differential must be determined individually in such cases, using the maximum rated temperature as the criterion for satisfactory cooling.

Cooling effectiveness should also be determined on an individual basis if the 4CX300Y is operated immersed in an insulating fluid such as silicone oil, again using the maximum rated temperature as the criterion.

ELECTRICAL

Heater Operation — The rated heater voltage for the 4CX300Y is 6.0 volts.

The heater voltage must be maintained within ±5% of the selected operating voltage if variations in circuit performance are to be minimized and best tube life obtained.

Cathode Operation — The 4CX300Y employs a cylindrical indirectly-heated oxide-coated unipotential cathode. The minimum warm-up time is 30 seconds when rated heater voltage is applied.

Grid Operation — The 4CX300Y control grid has a maximum dissipation rating of 1.0 watt, and precautions should be observed to avoid exceeding this rating. The grid bias and driving power should be kept near the values shown in the Typical Operation sections of the data sheet whenever possible.

In class-A and class AB_1 amplifiers, where no grid current flows, the grid bias voltage may be applied through a resistor. The maximum permissible series resistance per tube is 100,000 ohms.

Screen Operation — The maximum rated screen dissipation for the 4CX300Y is 8 watts. The maximum rated dc screen supply voltage is 300 volts when the tube is operated in class-C amplifier or oscillator service, and 400 volts when the tube is operated in class-AB_1 or class-B amplifier service.

Under certain operating conditions the screen current of a tetrode may reverse. This makes it dangerous to rely on a screen-dropping resistor or a series regulator to supply the screen voltage unless a bleeder or regulator tube is connected from screen to cathode. This bleeder should draw at least 15 milliamperes for each tube connected to the screen supply.

The power input to the screen can be calculated from the voltage and current whenever the screen-to-cathode potential does not vary. Screen modulation or cathode driving of tetrode amplifiers can lead to errors in measurement of screen input when the effective voltage and current exceed the indicated dc values. When there is reason to suspect that the screen input exceeds the indicated power, it is advisable to maintain the indicated screen power input below approximately 75% of the rated screen dissipation.

A screen by-pass capacitor of approximately 1100 $\mu\mu$f is incorporated in the body of the EIMAC SK-700 and SK-710 Air-System Sockets and is adequate for normal amplifier operation at high and ultra-high radio frequencies. Operation at low radio frequencies or audio frequencies may require that additional capacitance be connected externally. In the latter case, the screen by-pass capacitance within the socket helps to eliminate the high-frequency parasitic oscillations occasionally encountered in tetrode amplifiers.

The self-neutralizing frequency of the 4CX300Y is above the useful high-frequency limit for the tube when either of the sockets with integral screen by-pass capacitors is used.

Plate Operation—The 4CX300Y has a finned external anode for forced-air cooling. Connection to the anode may be made at the top cap or cylindrical cooler shell. The latter is usually used

when the tube is installed in coaxial lines or cavities.

The absolute maximum plate-dissipation rating for the 4CX300Y is 400 watts, which is also the rated maximum dissipation for class-C amplifier or oscillator applications and for class-B or class-AB_1 amplifier applications. When the 4CX300Y is used in plate-modulated amplifier applications, the plate-dissipation rating is 250 watts under carrier conditions, rising to 400 watts under 100% sine-wave modulation. Plate dissipation may be permitted to exceed the maximum rated value for brief periods, such as may occur while tuning.

The maximum rated plate voltage for class-AB_1 operation is 2000 volts. In class-C telegraphy and plate-modulated service the maximum rated plate voltage is 2000 and 1500 volts respectively.

Modulation — The 4CX300Y can be modulated by any of the methods commonly used with tetrode tubes. Its large reserve plate dissipation makes it especially suited for use in screen-modulated and linear amplifiers in which the plate efficiency is low.

Plate modulation can be applied to the 4CX300Y when it is operated as a class-C amplifier. To obtain 100% modulation with minimum distortion the screen supply voltage should be modulated in phase with the modulation applied to the plate supply voltage. Screen voltage modulation factors between 0.75 and 1.00 may be used.

"Self-modulation" of the screen by means of a resistor in series with the screen supply line is not recommended because of the effects which require a bleeder from screen to cathode as described under "Screen Operation" above.

Special Applications—If it is desired to operate this tube under conditions widely different from those given here, write to EIMAC, Division of Varian, 301 Industrial Way, San Carlos, California, for information and recommendations.

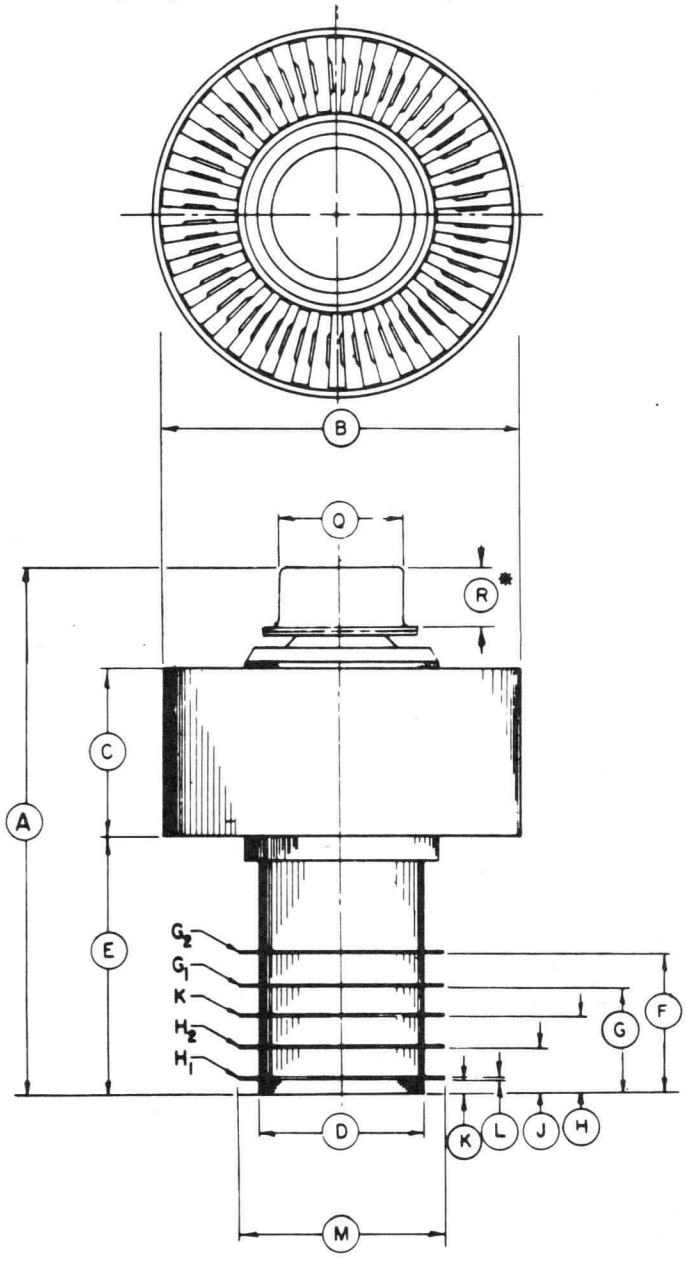

DIMENSION DATA			
REF.	NOM.	MIN.	MAX.
A		2.300	2.500
B		1.610	1.640
C		.710	.790
D		.740	.770
E		1.133	1.195
F		.602	.642
G		.470	.500
H		.329	.359
J		.193	.213
K		.050	.072
L		.010	.020
M		.936	.956
N		.170	.185
P	60°		
Q		.559	.573
R		.240	.280

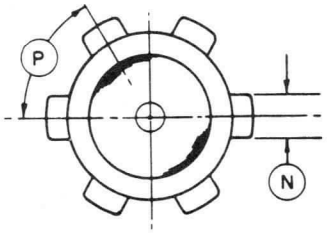

*CONTACT SURFACE

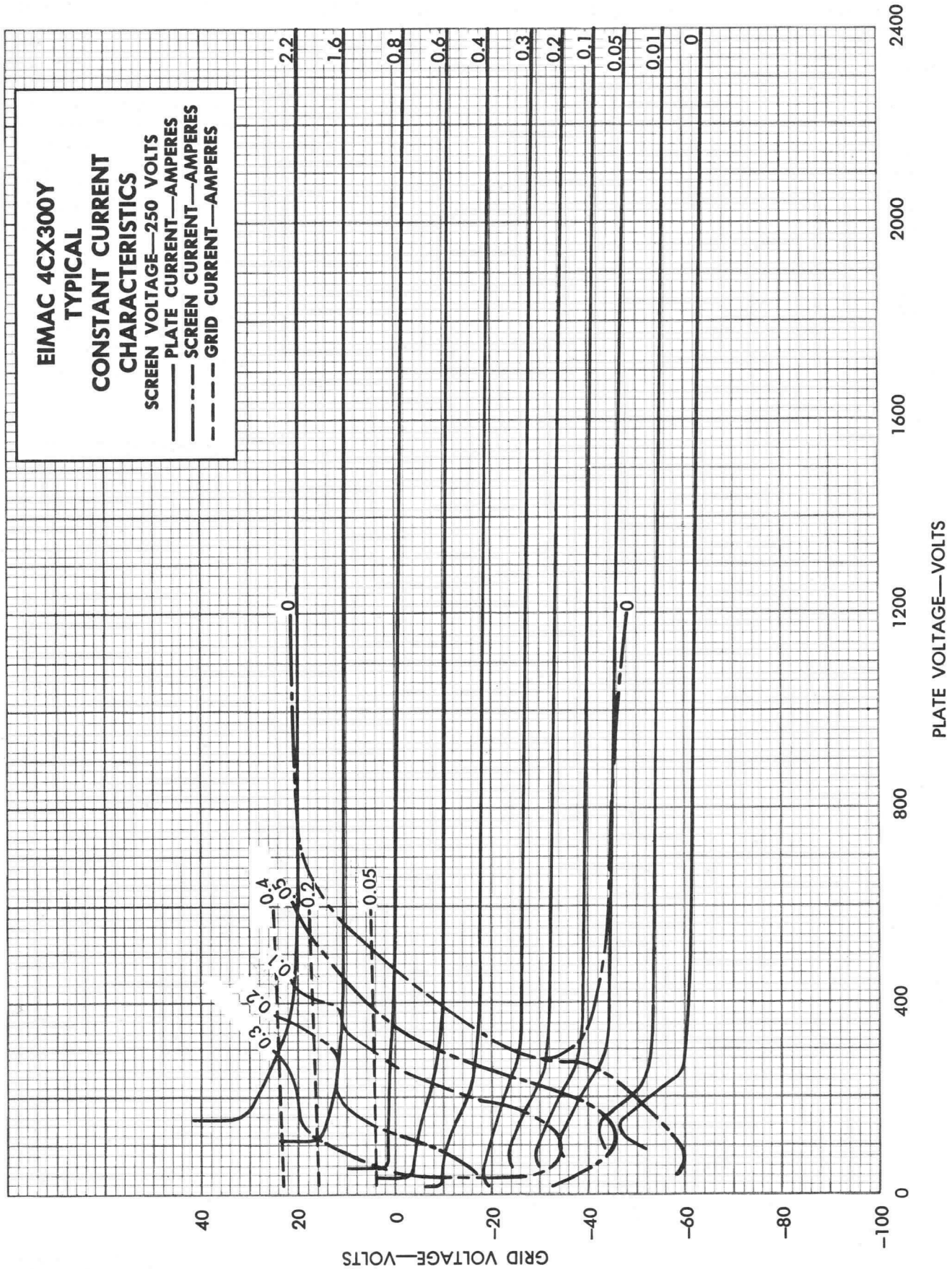
EIMAC 4CX300Y
TYPICAL
CONSTANT CURRENT
CHARACTERISTICS
SCREEN VOLTAGE—250 VOLTS
PLATE CURRENT—AMPERES
SCREEN CURRENT—AMPERES
GRID CURRENT—AMPERES
2.2
1.6
0.8
0.6
0.4
0.3
0.2
0.1
0.05
0.01
0
0.4
0.5
0.2
0.05
1.0
0.7
0.3
40
20
0
−20
−40
−60
−80
−100
0
400
800
1200
1600
2000
2400
GRID VOLTAGE—VOLTS
PLATE VOLTAGE—VOLTS

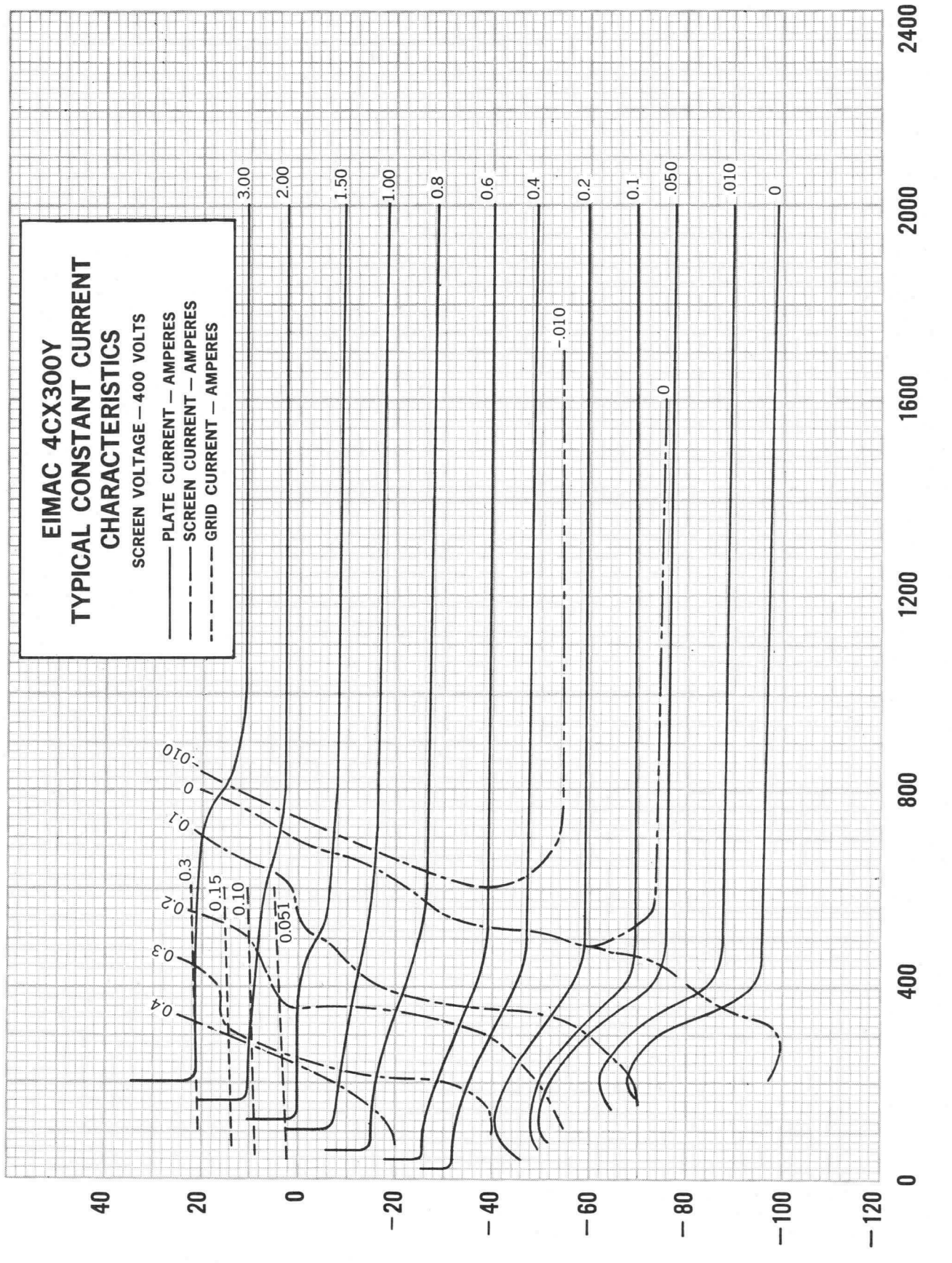
EIMAC 4CX300Y
TYPICAL CONSTANT CURRENT CHARACTERISTICS
SCREEN VOLTAGE — 400 VOLTS
PLATE CURRENT — AMPERES
SCREEN CURRENT — AMPERES
GRID CURRENT — AMPERES
3.00
2.00
1.50
1.00
0.8
0.6
0.4
0.2
0.1
.050
.010
0
-.010
0
0.1
0.3
0.2
0.15
0.10
0.4
0.3
0.05
0.1
40
20
0
-20
-40
-60
-80
-100
-120
0
400
800
1200
1600
2000
2400
GRID VOLTAGE — VOLTS
PLATE VOLTAGE — VOLTS

TECHNICAL DATA

8321 / 4CX350A
8322 / 4CX350F

RADIAL-BEAM POWER TETRODES



The Eimac 8321/4CX350A and 8322/4CX350F are compact radial beam tetrodes with maximum plate dissipation of 350 watts and are intended for Class-AB, audio or rf amplifier service. These tubes are externally identical to the 4CX250B but contain rugged internal construction features. Amplification factor and cathode area have been increased over the 4CX250B to give higher transconductance and figure of merit.

The 8321/4CX350A and 8322/4CX350F differ only in heater voltage and current; the 8321/4CX350A is used at 6.0 volts while the 8322/4CX350F is rated at 26.5 volts. Both types are of ceramic and metal construction and are recommended for new equipment design.

GENERAL CHARACTERISTICS

ELECTRICAL

		Min.	Nom.	Max.	
Cathode:	Oxide-Coated, Unipotential				
	Heating Time	30		60	secs
	Cathode-to-Heater Potential			±150	volts
Heater:	4CX350A Voltage		6.0		volts
	4CX350A Current	2.9		3.6	amps
	4CX350F Voltage		26.5		volts
	4CX350F Current	0.66		0.81	amps

	Min.	Nom.	Max.	
Amplification Factor (Grid-to-Screen)		13		
Transconductance (I_b = 150 mA)		22,000		umhos
Direct Interelectrode Capacitances, Grounded Cathode:				
Input	22.2		26.2	uuf
Output	5.0		6.0	uuf
Feedback			0.05	uuf
Direct Interelectrode Capacitances, Grounded Grid and Screen:				
Input	17.9		21.9	uuf
Output	5.0		6.0	uuf
Feedback			0.01	uuf

MECHANICAL

Base	Special 9-pin
Maximum Operating Temperatures:	
Ceramic-to-Metal Seals	250° C
Anode Core	250° C
Recommended Socket	Eimac SK-600 Series
Operating Position	Any
Maximum Dimensions:	
Height	2.464 inch
Seated Height	1.910 inch
Diameter	1.640 inch
Cooling	Forced air
Net Weight	4 ounces
Shipping Weight (approximate)	1.6 pounds

(Effective 6-15-65) c 1968 by Varian

Printed in U.S.A.

AUDIO-FREQUENCY AMPLIFIER OR MODULATOR

Class-AB_1

MAXIMUM RATINGS (Per tube)

DC PLATE VOLTAGE	2500 MAX. VOLTS
DC SCREEN VOLTAGE	400 MAX. VOLTS
DC PLATE CURRENT	300 MAX. MA
PLATE DISSIPATION	350 MAX. WATTS
SCREEN DISSIPATION	8 MAX. WATTS
GRID CURRENT	2 MAX. MA

*Approximate values.

[1]Adjust grid bias to obtain listed zero-signal plate current.

TYPICAL OPERATION (Sinusoidal wave, two tubes unless noted)

DC Plate Voltage	1000	1500	2200 volts
DC Screen Voltage	400	400	400 volts
DC Grid Voltage[1]	—27	—27	—27 volts
Zero-Signal DC Plate Current	200	200	200 mA
Max-Signal DC Plate Current	520	530	580 mA
Max-Signal DC Screen Current	—8	—10	—6 mA
Effective Load, Plate to Plate	2600	5000	7800 ohms
Peak AF Grid Input Voltage (per tube)*	21	21	50 volts
Driving Power	0	0	0 watts
Max-Signal Plate Input Power	560	800	1260 watts
Max Signal Plate Output Power	190	400	770 watts

RADIO-FREQUENCY LINEAR AMPLIFIER

Class-AB_1 (Single-Sideband Suppressed-Carrier Operation)

MAXIMUM RATINGS

DC PLATE VOLTAGE	2500 MAX. VOLTS
DC SCREEN VOLTAGE	400 MAX. VOLTS
DC PLATE CURRENT	300 MAX. MA
PLATE DISSIPATION	350 MAX. WATTS
SCREEN DISSIPATION	8 MAX. WATTS
GRID CURRENT	2 MAX. MA

*Approximate values

[1]Adjust grid bias to obtain listed zero-signal plate current.

TYPICAL OPERATION (Peak-envelope conditions except where noted)

DC Plate Voltage	1000	1500	2200 volts
DC Screen Voltage	400	400	400 volts
DC Grid Voltage[1]	—27	—27	—27 volts
Zero-Signal DC Plate Current	100	100	100 mA
Peak RF Grid Voltage*	21	21	25 volts
DC Plate Current	260	265	290 mA
DC Screen Current*	—4	—5	—3 mA
Plate Input Power	260	400	630 watts
Plate Output Power	95	200	385 watts
Two-Tone Average DC Plate Current	210	215	195 mA
Two-Tone Average DC Screen Current*	—7	—8	—3 mA
Resonant Load Impedance	1300	2500	3900 ohms

NOTE: "TYPICAL OPERATION" data are obtained by calculation from published characteristic curves. No allowance is made for circuit losses of any kind. Adjustment of the rf grid drive to obtain the specified plate current at the specified grid bias, screen voltage, and plate voltage is assumed. If this procedure is followed, there will be little variation in output power when tubes are changed, even though there may be some variations in grid and screen currents. The grid and screen currents which result when the desired plate current is obtained are incidental and vary from tube to tube. These current variations cause no difficulty so long as the circuit maintains the correct voltage in the presence of the variations in current. If grid bias is obtained principally by means of a grid resistor, the resistor must be adjustable to obtain the required bias voltage when the correct rf driving voltage is applied.

APPLICATION

MECHANICAL

MOUNTING — The 4CX350A and 4CX350F may be operated in any position. An Eimac Air-System Socket, SK-600 series, or a socket having equivalent characteristics, is required. Sockets are available with or without built-in screen by-pass capacitors and may be obtained with either grounded or ungrounded cathode terminals.

COOLING — Sufficient cooling must be provided for the anode, base seals and body seals to maintain operating temperatures below the rated maximum values. Air requirements to maintain seal temperatures at 225°C in 50°C ambient air are tabulated on page 3. These requirements apply when the Eimac SK-600 or SK-610 socket is used with the SK-606 chimney and air-flow in the base-to-anode direction.

At 500 mc or below, base-cooling air requirements are satisfied automatically when the tube is operated in an Eimac Air-System Socket and the recommended air-flow rates are used. Experience has shown that if reliable long-life operation is to be obtained, the cooling air flow must be maintained during standby periods when only the heater voltage is applied to the tube. The anode cooler should be inspected periodically and cleaned when necessary to remove any dirt, which might interfere with effective cooling.

The blower selected in a given application must be capable of supplying the desired air flow at a back pressure equal to the pressure drop shown below, plus any drop encountered in ducts and filters. The blower must be designed to deliver the air at the desired altitude.

MINIMUM COOLING AIR-FLOW REQUIREMENTS				
	SEA LEVEL		10,000 FEET	
Plate Dissipation (Watts)	Air-Flow (CFM)	Pressure Drop (Inches of water)	Air-Flow (CFM)	Pressure Drop (Inches of water)
250	5.3	0.6	7.7	0.85
300	6.5	0.9	9.5	1.25
350	7.8	1.2	12.0	1.9

If cooling methods other than forced air are used, if the recommended air-flow rates are not supplied or if there is any doubt that the cooling is adequate, it should be borne in mind that operating temperature is the sole criterion of cooling effectiveness. One method of measuring the surface temperatures is by the use of a temperature-sensitive lacquer. When temperature-sensitive materials are used, extremely thin applications must be used to avoid interference with the transfer of heat from the tube to the air stream, which would cause inaccurate indications.

VIBRATION — These tubes are capable of satisfactorily withstanding ordinary shock and vibration, such as encountered in shipment and normal handling. The tubes will function well in automobile and truck mobile installations and similar environments.

ELECTRICAL

HEATER — The rated heater voltages for the 4CX350A and 4CX350F are 6.0 volts and 26.5 volts respectively and these voltages should be maintained as closely as practicable. Short-time variations of the voltage of ±10% of the rated value will not damage the tube, but variations in performance must be expected. The heater voltage should be maintained within ±5% of its rated value to minimize variations in performance and to obtain maximum tube life.

CATHODE OPERATION — The cathode is internally connected to the four even-numbered base pins, and all four of the corresponding socket terminals should be used to make connection to the external circuits. At radio frequencies it is important to keep the cathode leads short and direct and to use conductors with large areas to minimize the inductive reactances in series with the cathode leads.

It is recommended that rated heater voltage be applied for a minimum of 30 seconds before other operating voltages are applied. Where the circuit design requires the cathode and heater to be operated at different potentials, the rated maximum heater-to-cathode voltage is 150 volts regardless of polarity.

CONTROL-GRID OPERATION — The grid dissipation rating of the 4CX350A and 4CX350F is zero watt. The design features which make the tubes capable of maximum power operation without driving the grid into the positive region also make it necessary to avoid positive grid operation. The grid current rating of 2.0 milliamperes allows the flow of positive grid current for peak-signal monitoring purposes.

SCREEN-GRID OPERATION — The maximum rated power dissipation for the screen grid is 8 watts, and the screen input power should be kept below that level. The product of the peak screen voltage and the indicated dc screen current approximates the screen input power except when the screen current indication is near zero or negative.

In the usual tetrode amplifier, where no signal voltage appears between cathode and screen, the peak screen voltage is equal to the dc screen voltage.

When signal voltages appear between screen and cathode, as in the case of screen-modulated amplifiers or cathode-driven tetrode amplifiers, the peak screen-to-cathode voltage is the sum of the d-c screen voltage and the peak ac or rf signal voltage applied to screen or cathode.

Protection for the screen can be provided by an overcurrent relay and by interlocking the screen supply so that the plate voltage must be applied before screen voltage can be applied.

The screen current may reverse under certain conditions, and produce negative current indications on the screen milliameter. This is a normal characteristic of most tetrodes. The screen power supply should be designed with this characteristic in mind, so that the correct operating voltage will be maintained on the screen under all conditions. A current path from screen to cathode must be provided by a bleeder resistor or shunt regulator connected between screen and cathode and arranged to pass approximately 15 milliamperes per connected screen. An electron tube series regulator can be used only when an adequate bleeder resistor is provided.

PLATE OPERATION — The maximum rated plate-dissipation power is 350 watts. The maximum dissipation rating may be exceeded for brief periods during circuit adjustment without damage to the tube.

At frequencies up to approximately 30 megacycles the top cap on the anode cooler may be used for a plate terminal. At higher frequencies a circular clamp or spring-finger collect encircling the cylindrical outer surface of the anode cooler should be used.

MULTIPLE OPERATION — Tubes operating in parallel or push-pull must share the load equally. It is good engineering practice to provide for individual metering and individual adjustment of the bias or screen voltage to equalize the inputs.

Where overload protection is provided, it should be capable of protecting the surviving tube/s in the event that one tube should fail.

UHF OPERATION — The 4CX350A and 4CX350F are useful in the UHF region. UHF operation should be conducted with heavy plate loading, minimum bias and the lowest driving power consistent with satisfactory performance. It is often preferable to operate at a sacrifice in efficiency to obtain increased tube life.

Some of the added circuit loss observed in UHF operation is in the base insulator of the tube. It is sometimes necessary to use more than the recommended minimum air-flow rates to maintain safe operating base temperatures at UHF.

These tubes may be used in frequency multiplier applications. Such operation results in low plate efficiency and requires high driving voltages. If the frequency multiplier is used as an output power stage, it is preferable to operate the final tube as a frequency doubler rather than a frequency tripler.

SPECIAL APPLICATIONS — If it is desired to operate these tubes under conditions widely different from those given here, write to Application Engineering Department, Eimac, Division of Varian, San Carlos, California for information and recommendations.

PIN NO. 1. SCREEN GRID
PIN NO. 2. CATHODE
PIN NO. 3. HEATER
PIN NO. 4. CATHODE
PIN NO. 5. I.C. DO NOT USE FOR EXTERNAL CONNECTION
PIN NO. 6. CATHODE
PIN NO. 7. HEATER
PIN NO. 8. CATHODE
CENTER PIN - CONTROL GRID

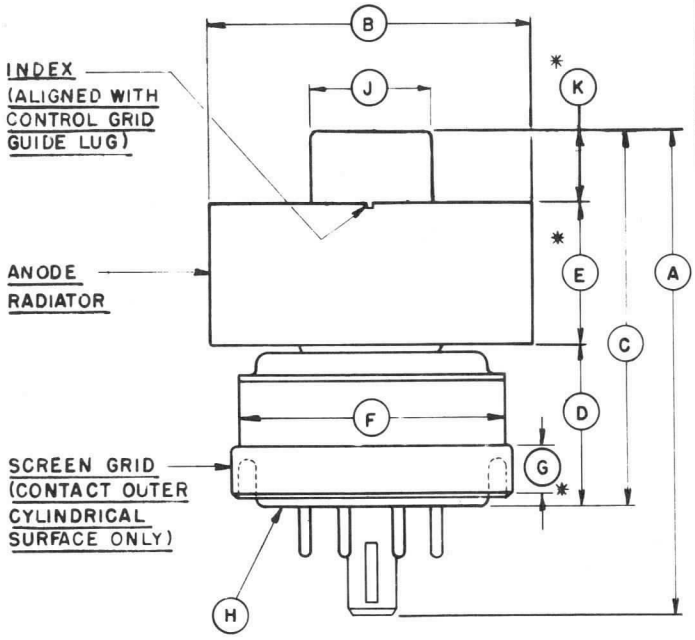

DIMENSIONS IN INCHES			
DIMENSIONAL DATA			
DIM.	MIN.	MAX.	REF.
A	2.324	2.464	
B	1.610	1.640	
C	1.810	1.910	
D	.750	.810	
E	.710	.790	
F		1.406	
G	.187		
H	BASE: B8-236 (JEDEC DESIGNATION)		
J	.559	.573	
K	.240		

NOTES
1. * CONTACT SURFACE
2. REF. DIMENSIONS ARE FOR INFORMATION ONLY & ARE NOT REQUIRED FOR INSP PURPOSES.

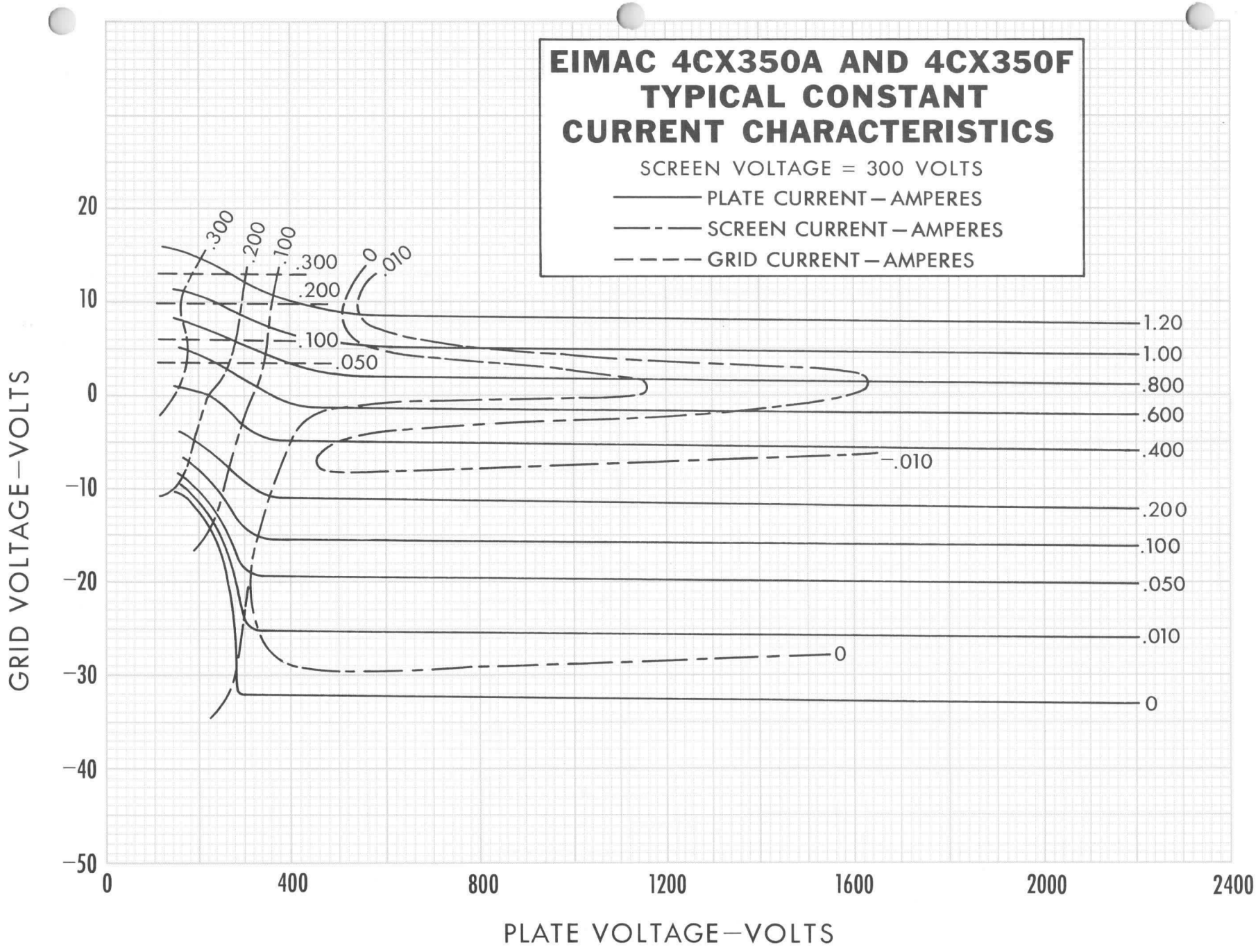
EIMAC 4CX350A AND 4CX350F
TYPICAL CONSTANT
CURRENT CHARACTERISTICS
SCREEN VOLTAGE = 300 VOLTS
PLATE CURRENT – AMPERES
SCREEN CURRENT – AMPERES
GRID CURRENT – AMPERES
GRID VOLTAGE – VOLTS
PLATE VOLTAGE – VOLTS
20
10
0
−10
−20
−30
−40
−50
0
400
800
1200
1600
2000
2400
.300
.200
.100
0
.010
.300
.200
.100
.050
1.20
1.00
.800
.600
.400
.200
.100
.050
.010
0
−.010
0

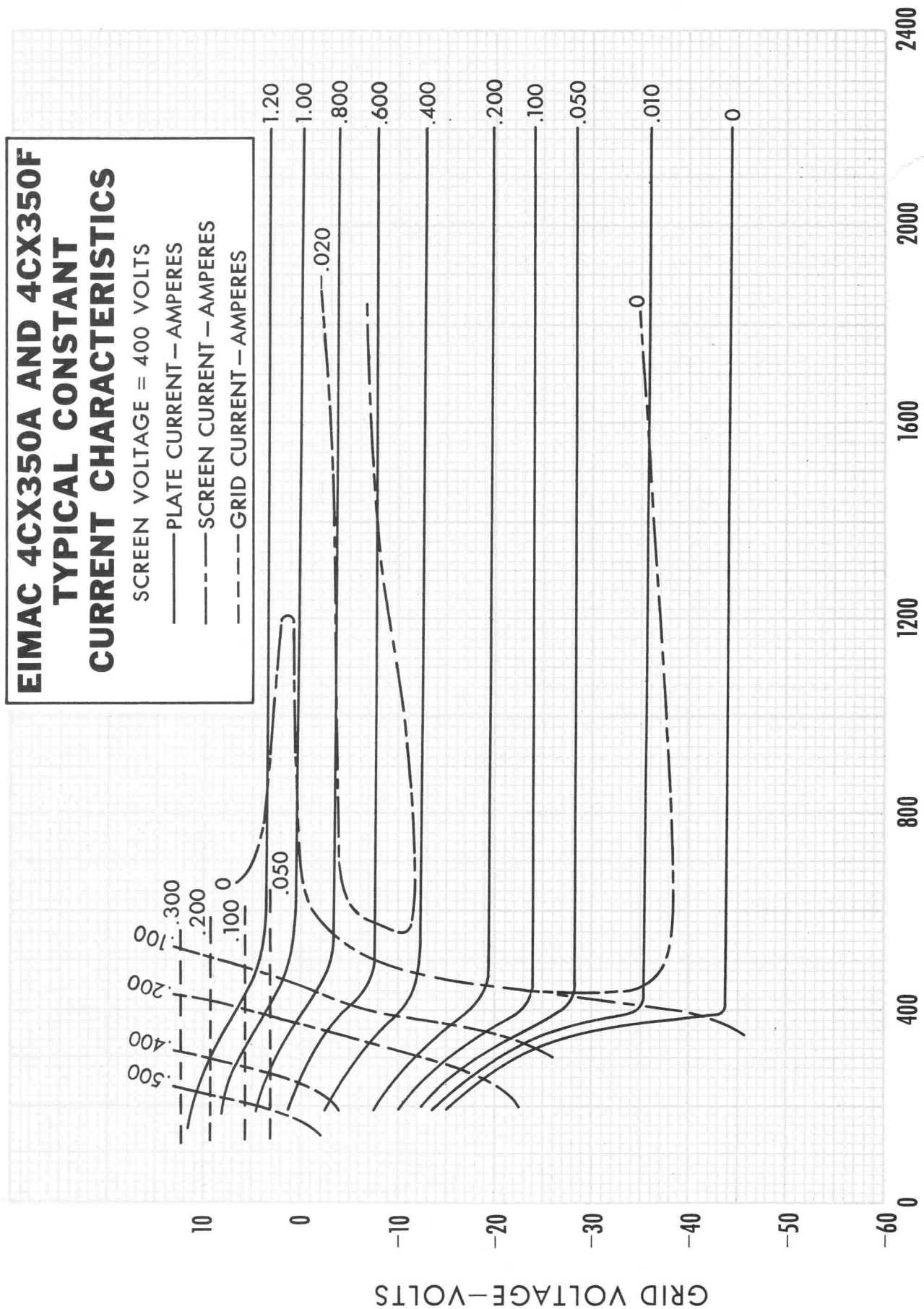
EIMAC 4CX350A AND 4CX350F
TYPICAL CONSTANT
CURRENT CHARACTERISTICS
SCREEN VOLTAGE = 400 VOLTS
PLATE CURRENT – AMPERES
SCREEN CURRENT – AMPERES
GRID CURRENT – AMPERES
1.20
1.00
.800
.600
.400
.200
.100
.050
.020
.010
0
0
.050
0
.100
.200
.300
100
200
400
500
10
0
−10
−20
−30
−40
−50
−60
0
400
800
1200
1600
2000
2400
PLATE VOLTAGE – VOLTS
GRID VOLTAGE – VOLTS

TECHNICAL DATA

8904
4CX350FJ

RADIAL BEAM
POWER TETRODE

The EIMAC 8904/4CX350FJ is a compact radial-beam tetrode with a maximum plate dissipation of 350 watts, intended for Class AB linear rf amplifier service. The tube has rugged internal construction features.

The 8904/4CX350FJ may be used as an exact replacement for the 8322/4CX350F in most applications, requiring only minor circuit adjustment and retuning. The tube has improved intermodulation distortion characteristics. It contains a 26.5 volt heater, and is recommended for new equipment designs.



GENERAL CHARACTERISTICS[1]

ELECTRICAL

Cathode: Oxide-coated, Unipotential

Voltage	26.5 ± 1.3 V
Current, at 26.5 volts	0.65 A
Transconductance (Average):	
I_b = 150 mAdc	22,000 μmhos
Amplification Factor (Average):	
Grid to Screen	17
Direct Interelectrode Capacitances (grounded cathode)[2]	
Cin	22.0 pF
Cout	5.9 pF
Cgp	0.033 pF

1. Characteristics and operating values are based on performance tests. These figures may change without notice as the result of additional data or product refinement. EIMAC Division of Varian should be consulted before using this information for final equipment design.

2. Capacitance values are for a cold tube as measured in a special shielded fixture in accordance with Electronic Industries Association Standard RS-191.

MECHANICAL

Base	Special 9-pin, JEDEC B8-236
Recommended Air-System Socket	EIMAC SK-600 Series
Recommended Air Chimney	EIMAC SK-600 Series
Maximum Overall Dimensions:	
Length	2.46 in; 62.59 mm
Diameter	1.64 in; 41.65 mm
Operating Position	Any
Cooling	Forced Air

(Effective 9-1-71) © by Varian

Printed in U.S.A.

Net Weight (Approximate) ..... 4 oz; 113 gm
Shipping Weight (Approximate)..... 1.6 lb; 3.5 kg
Maximum Operating Temperature:
Anode Core and metal/ceramic seals ..... 250°C

RADIO FREQUENCY LINEAR AMPLIFIER
GRID DRIVEN
Class AB 1

ABSOLUTE MAXIMUM RATINGS:

DC PLATE VOLTAGE	2500	VOLTS
DC SCREEN VOLTAGE	400	VOLTS
DC PLATE CURRENT	300	MA
PLATE DISSIPATION	350	WATTS
SCREEN DISSIPATION	8	WATTS
GRID CURRENT	2	MA

1. Adjust to specified Zero-Signal Plate Current.
2. Approximate value.

TYPICAL OPERATION (Frequencies to 30 MHz)
Class AB1, Grid Driven, Peak Envelope or Modulation Crest Conditions

Plate Voltage	1400	2200 Vdc
Screen Voltage	300	400 Vdc
Grid Voltage [1]	-14	-19 Vdc
Zero-Signal Plate Current	80	100 mAdc
Single-Tone Plate Current	165	227 mAdc
Single-Tone Screen Current [2]	6	8 mAdc
Useful Output Power [3]	100	250 W
Resonant Load Impedance	3600	5000 Ω
Intermodulation Distortion [4]		
3rd Order Products	-45	-40 dB
5th Order Products	-50	-45 db

3. Power delivered to the load.
4. The IMD products are referenced against one tone of a two-equal-tone signal.

NOTE: TYPICAL OPERATION data is obtained from direct measurement. Adjustment of the rf grid voltage to obtain the specified bias, screen, and plate voltages is assumed. If this procedure is followed, there will be little variation in output power when the tube is changed, even though there may be some variation in screen current, which is incidental and which will vary from tube to tube. These current variations cause no difficulty so long as the circuit maintains the correct screen grid voltage in the presence of the variations in current.

RANGE VALUES FOR EQUIPMENT DESIGN	Min.	Max.
Heater: Current at 26.5 volts	0.50	0.81 A
Interelectrode Capacitances[1] (grounded cathode):		
Cin	20.0	24.0 pF
Cout	5.6	6.2 pF
Cgp	---	0.038 pF

APPLICATION

MECHANICAL

MOUNTING - The 4CX350FJ may be operated in any position. An EIMAC Air-System Socket, SK-600 series, or a socket having equivalent characteristics, is required. Sockets are available with or without built-in screen bypass capacitors and may be obtained with either grounded or ungrounded cathode terminals. Air chimneys are also available for these sockets, including a unit which securely clamps the tube into place in the socket for applications where environmental stress is anticipated.

COOLING - Sufficient cooling must be provided for the anode, base seals, and body seals to maintain operating temperatures below the rated maximum value. Air requirements to maintain seal temperatures at 225°C in 50°C ambient air are shown. These values apply when the EIMAC

SK-600 or SK-610 socket is used with the SK-606 chimney, with air flowing in the base-to-anode direction.

Minimum Cooling Air Flow Requirements				
Plate Dissipation (watts)	Sea Level		10,000 Feet	
	Air Flow (cfm)	Approx. Press.drop, In. H_2O	Air Flow (cfm)	Approx. Press.drop, In. H_2O
250	5.3	0.6	7.7	0.85
300	6.5	0.9	9.5	1.25
350	7.8	1.2	12.0	1.90

Experience has shown that if reliable long-life operation is to be obtained, the cooling air flow must be maintained during standby periods when only the heater voltage is applied to the tube. The anode cooler should be inspected periodically and cleaned when necessary to remove any dirt, which may interfere with effective cooling.

The blower selected in any given application must be capable of supplying the desired air flow at a back pressure equal to the pressure drop shown, plus any drop encountered in ducts and filters, and the blower must be designed to deliver the air at the desired altitude.

It should be borne in mind that operating temperature is the sole criterion of cooling effectiveness. One method of measuring the surface temperature is by the use of a temperature-sensitive lacquer or paint. When these materials are used, thin applications must be used to avoid interference with the transfer of heat from the tube to the air stream, which would cause inaccurate indications.

SHOCK AND VIBRATION - The 4CX350FJ is recommended for applications where environmental stress is anticipated and reliable operation must be maintained under these circumstances. The tube is routinely tested at a vibration level of 10 G, over the frequency range of 28 to 750 Hertz, with full operating voltages applied, and also tested under 90 G long-duration (11 milliseconds) shock conditions, also with voltages applied. When shock or vibration stressing is expected, it is extremely important that relative motion between socket and tube be prevented or restricted by clamping the tube into place. This may be done with EIMAC Air-System Socket SK-620 or SK-630 and the EIMAC SK-636B chimney, which includes a clamping mechanism.

ELECTRICAL

HEATER - The heater voltage for the 4CX350FJ is 26.5 volts and should be maintained as closely as possible. Short-time variations of ±10% of the rated value will not damage the tube, but voltage should be maintained within ±5% of rated value to minimize variations in performance and to obtain maximum life.

CATHODE OPERATION - The cathode is internally connected to the four even-numbered base pins, and all four corresponding socket terminals should be used to make connection to the external circuits. At radio frequencies it is important to keep cathode leads short and direct and to use conductors with large areas to minimize inductive reactance in series with the cathode leads.

It is recommended that rated heater voltage be applied for a minimum of 60 seconds before other operating voltages are applied. Where the circuit design requires the cathode and heater to be operated at different potentials, the rated maximum heater-to-cathode voltage is 150 volts, regardless of polarity.

STANDBY OPERATION - When equipment is designed for very low-duty operation, where standby periods of many hours or even days at one time are anticipated, it is good engineering practice to include circuitry for reduction of the heater voltage of an oxide-cathode tube during the standby periods. This will greatly minimize the release of sublimation products within the tube. A reduction in heater voltage of 10% from the nominal value is recommended during such long standby periods, with simultaneous switching to normal voltage when the equipment is switched from STANDBY to OPERATE. A reduction in heater voltage of more than 10% is possible if operation is not attempted for several seconds after switching from the STANDBY to the OPERATE mode.

CONTROL-GRID OPERATION - The grid dissipation rating of the 4CX350FJ is zero watts. The grid current rating of 2.0 milliamperes allows the flow of positive grid current for peak-signal monitoring purposes.

SCREEN-GRID OPERATION - The maximum rated power dissipation for the screen grid of the

4CX350FJ is 8.0 watts, and the screen input power should be kept below that level. The product of the peak screen voltage and the indicated dc screen current approximates the screen input power except when the screen current indication is near zero or negative. In the usual tetrode amplifier, where no signal voltage appears between cathode and screen, the peak screen voltage is equal to the dc screen voltage.

If tuning of a linear amplifier circuit is to be done under single-tone conditions, extra care should be exercised to be sure the screen dissipation rating is not exceeded, as this is often the limiting factor during this type of operation.

Protection for the screen can be provided by an over-current relay and by interlocking the screen supply so the plate voltage must be applied before screen voltage can be applied.

The screen current may reverse under certain conditions and produce negative current indications on the screen milliameter. This is a normal characteristic of most tetrodes. The screen power supply should be designed with this characteristic in mind, so that the correct operating voltage will be maintained on the screen under all conditions. A current path from the screen to cathode must be provided by a bleeder resistor or shunt regulator connected between screen and cathode and arranged to pass approximately 15 milliamperes per connected screen. A series regulator circuit can be used only when an adequate bleeder resistor is provided.

PLATE OPERATION - The maximum rated plate-dissipation power for the 4CX350FJ is 350 watts. The maximum dissipation rating may be exceeded for brief periods during circuit adjustment without damage to the tube.

At frequencies up to approximately 30 Megahertz the top cap on the anode cooler may be used for a plate terminal. At higher frequencies a circular clamp or spring-finger collet encircling the outer surface of the anode cooler should be used.

MULTIPLE OPERATION - Tubes operating in parallel or push-pull must share the load equally. It is good engineering practice to provide for individual metering and individual adjustment of the bias or screen voltage to equalize inputs. Where overload protection is provided, it should be capable of protecting the surviving tube(s) in the event one tube should fail.

UHF OPERATION - The 4CX350FJ is useful in the UHF region. Operation at these frequencies should be conducted with heavy plate loading and the lowest driving power consistent with satisfactory performance. It is often preferable to operate at a sacrifice in efficiency to obtain increased tube life.

INTERELECTRODE CAPACITANCE - The actual internal interelectrode capacitance of a tube is influenced by many variables in most applications, such as stray capacitance to the chassis, capacitance added by the socket used, stray capacitance between tube terminals, and wiring effects. To control the actual capacitance values within the tube, as the key component involved, the industry and the Military Services use a standard test procedure as described in Electronic Industries Association Standard RS-191. This requires the use of specially constructed test fixtures which effectively shield all external tube leads from each other and eliminates any capacitance reading to "ground". The test is performed on a cold tube. Other factors being equal, controlling internal tube capacitance in this way normally assures good interchangeability of tubes over a period of time, even when the tube may be made by different manufacturers. The capacitance values shown in the manufacturer's technical data, or test specifications, normally are taken in accordance with Standard RS-191.

The equipment designer is therefore cautioned to make allowance for the actual capacitance values which will exist in any normal application. Measurements should be taken with the socket and mounting which represent approximate final layout if capacitance values are highly significant in the design.

HIGH VOLTAGE - The 4CX350FJ operates at voltages which can be deadly, and the equipment must be designed properly and operating precautions must be followed. Equipment must be designed so that no one can come in contact with high voltages. All equipment must include safety enclosures for high-voltage circuits and terminals, with interlock switches to open the primary circuits of the power supplies and to discharge high-

voltage condensers whenever access doors are opened. Interlock switches must not be bypassed or "cheated" to allow operation with access doors open. Always remember that HIGH VOLTAGE CAN KILL.

SPECIAL APPLICATIONS - If it is desired to operate this tube under conditions widely different from those given here, write to Power Grid Tube Division, EIMAC Division of Varian, 301 Industrial Way, San Carlos, CA 94070, for information and recommendations.

PIN No. 1: SCREEN GRID
PIN No. 2: CATHODE
PIN No. 3: HEATER
PIN No. 4: CATHODE
PIN No. 5: I.C. DO NOT USE FOR EXTERNAL CONNECTION
PIN No. 6: CATHODE
PIN No. 7: HEATER
PIN No. 8: CATHODE
CENTER PIN: CONTROL GRID

DIMENSIONAL DATA				
DIM.	INCHES		MILLIMETERS	
	MIN.	MAX.	MIN.	MAX.
A	2.324	2.464	59.03	62.59
B	1.610	1.640	40.89	41.66
C	1.810	1.910	45.97	48.51
D	0.750	0.810	19.05	20.57
E	0.710	0.790	18.03	20.07
F	--	1.406	--	35.71
G	0.187	--	4.75	--
H	BASE: B8-236 (JEDEC DESIGNATION)			
J	0.559	0.573	14.20	14.55
K	0.240	--	6.10	--

NOTES:
1. REF. DIMS. ARE FOR INFO. ONLY AND ARE NOT REQD. FOR INSPECTION PURPOSES.
2. (*) CONTACT SURFACE

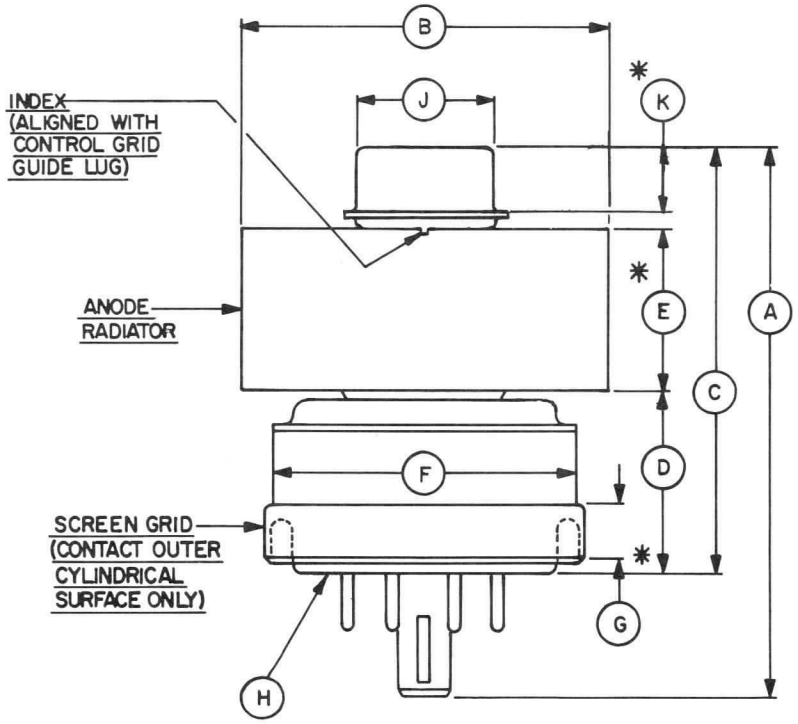

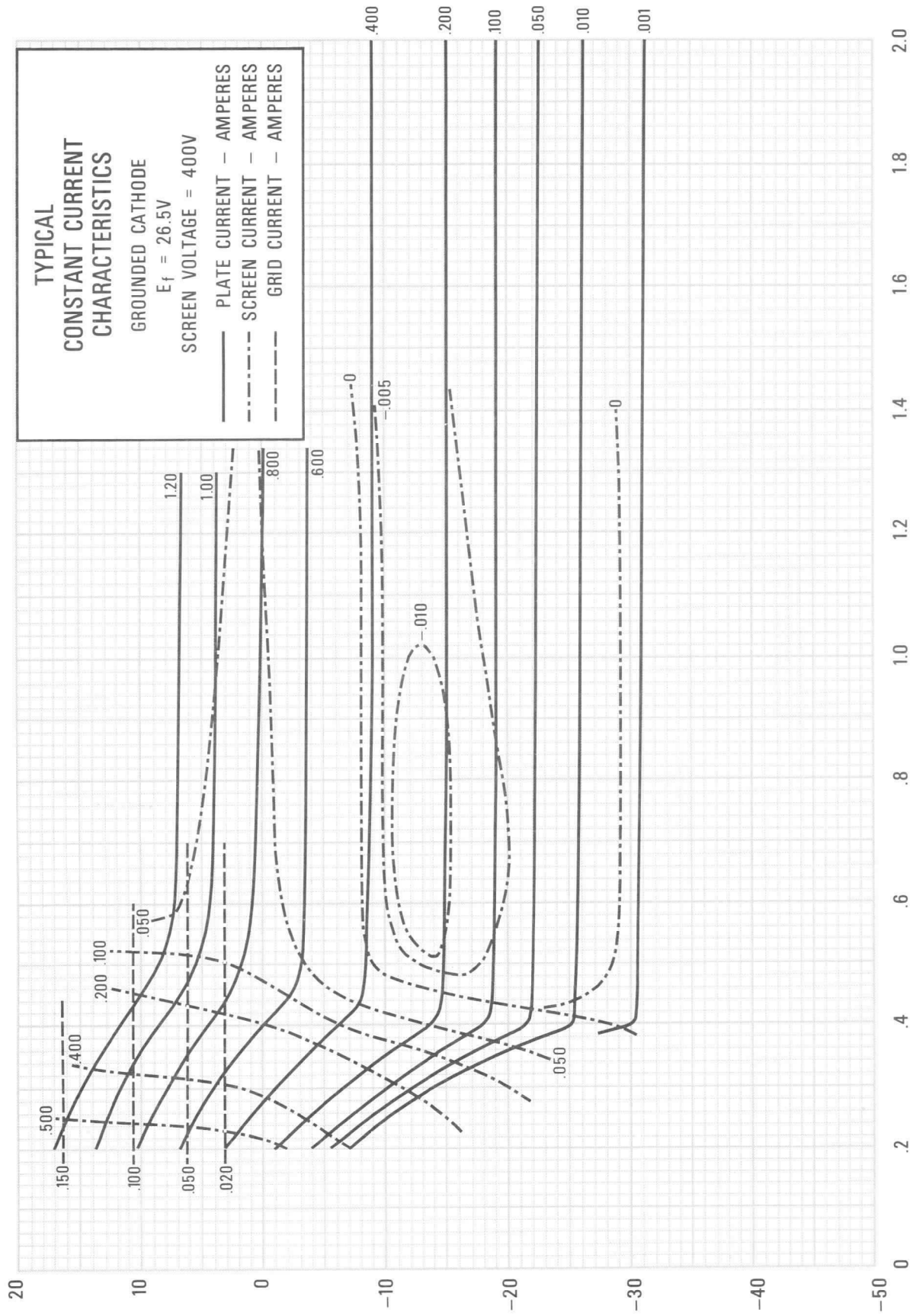
TYPICAL
CONSTANT CURRENT
CHARACTERISTICS
GROUNDED CATHODE
E_f = 26.5V
SCREEN VOLTAGE = 400V
PLATE CURRENT – AMPERES
SCREEN CURRENT – AMPERES
GRID CURRENT – AMPERES
GRID VOLTAGE (V)
PLATE VOLTAGE (kV)
CURVE #4335

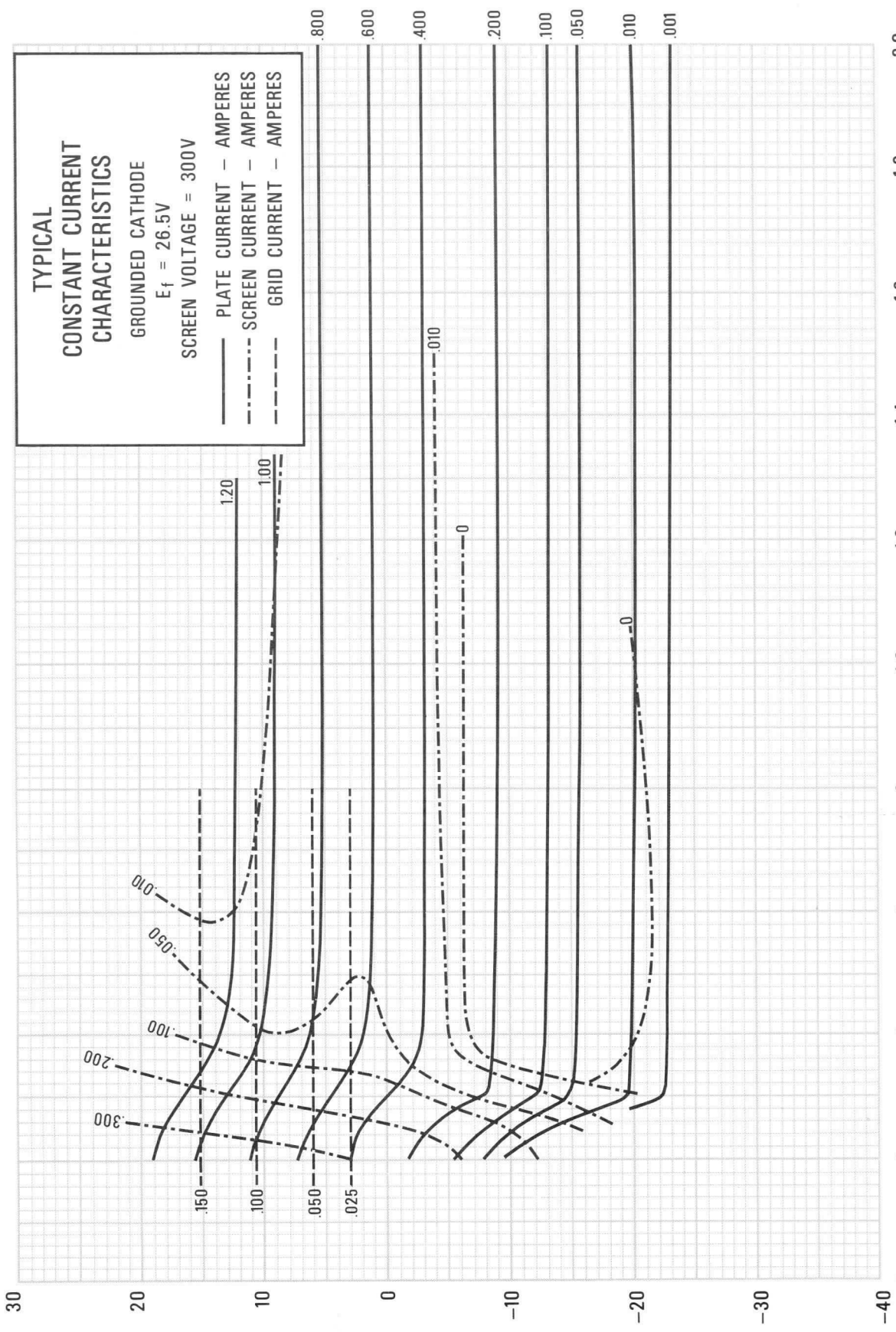
TYPICAL
CONSTANT CURRENT
CHARACTERISTICS
GROUNDED CATHODE
E_f = 26.5V
SCREEN VOLTAGE = 300V
PLATE CURRENT – AMPERES
SCREEN CURRENT – AMPERES
GRID CURRENT – AMPERES
.800
.600
.400
.200
.100
.050
.010
.001
1.20
1.00
.010
0
0
.010
.050
.100
.200
.300
.150
.100
.050
.025
30
20
10
0
−10
−20
−30
−40
0
.2
.4
.6
.8
1.0
1.2
1.4
1.6
1.8
2.0
GRID VOLTAGE (V)
PLATE VOLTAGE (kV)

CURVE #4336

TECHNICAL DATA

4CX600B
4CX600F

RADIAL BEAM POWER TETRODE

The EIMAC 4CX600B and 4CX600F are ceramic/metal, air cooled radial beam tetrodes designed for use in wideband amplifiers, particularly distributed amplifiers.



The mechanical and electrical features of these tubes are compatible with wideband amplifier circuit requirements; i.e., low lead inductance, low input and output capacitances, small size and high transconductance.

Rugged construction consisting of a unitized electrode structure and direct mounting to the chassis combine to make the 4CX600B and 4CX600F suitable for environments of severe shock and vibration.

The maximum rated plate dissipation of either type is 600 watts.

GENERAL CHARACTERISTICS[1]

ELECTRICAL

Cathode: (4CX600B) Oxide Coated, Unipotential		
Heater: Voltage	6.0 ± 0.3	V
Current, at 6.0 volts	4.3	A
Cathode: (4CX600F) Oxide Coated, Unipotential		
Heater: Voltage	26.5 ± 1.3	V
Current, at 26.5 volts	1.05	A
Transconductance (Average):		
I_b = 0.6 Adc	41,000	μmhos
Input Conductance:		
I_b = 0.6 Adc (F = 30 MHz)	0.1×10^{-3}	mhos
Direct Interelectrode Capacitances (grounded cathode)[2]		
Input	45	pF
Output	5.8	pF
Feedback	0.10	pF
Frequency of Maximum Rating:		
CW	500	MHz

1. Characteristics and operating values are based upon performance tests. These figures may change without notice as the result of additional data or product refinement. EIMAC Division of Varian should be consulted before using this information for final equipment design.

2. In Shielded Fixture.

(Effective 3-20-70) © 1970 by Varian

Printed in U.S.A.

MECHANICAL

Maximum Overall Dimensions:

Length	2.45 in; 62.23 mm
Diameter	2.08 in; 52.83 mm
Net Weight	7.0 oz; 198 gm
Operating Position	Any

Maximum Operating Temperature:

Ceramic/Metal Seals and Anode Core	250°C
SK-680 capacitor when used	150°C
Cooling	Air
Base	Special

BROADBAND LINEAR AMPLIFIER

Class AB

ABSOLUTE MAXIMUM RATINGS:

DC PLATE VOLTAGE	3000	VOLTS
DC SCREEN VOLTAGE	400	VOLTS
DC GRID VOLTAGE	-150	VOLTS
DC PLATE CURRENT	0.6	AMPERE
PLATE DISSIPATION	600	WATTS
SCREEN DISSIPATION	15	WATTS
GRID DISSIPATION	3	WATTS

TYPICAL OPERATION

Plate Voltage	1000	1500	2500	Vdc
Screen Voltage	275	275	275	Vdc
Grid Voltage [1]	-40	-40	-40	Vdc
Zero-Signal Plate Current	100	100	100	mAdc
Single Tone Plate Current	570	580	585	mAdc
Single-Tone Screen Current [2]	32	29	17	mAdc
Peak rf Grid Voltage	44	43	42	v
Screen Dissipation	8.8	8.0	4.7	W
Plate Input Power	570	870	1460	W
Plate Dissipation	250	280	460	W
Plate Output Power	320	590	1000	W
Rf Load Impedance	765	1225	2325	Ω

1. Adjust to specified zero-signal dc plate current.
2. Approximate value.

RADIO FREQUENCY POWER AMPLIFIER

Class AB

(Key-Down Conditions)

ABSOLUTE MAXIMUM RATINGS (890 MHz):

DC PLATE VOLTAGE	2500	VOLTS
DC SCREEN VOLTAGE	400	VOLTS
DC GRID VOLTAGE	-150	VOLTS
DC PLATE CURRENT	0.6	AMPERE
PLATE DISSIPATION	600	WATTS
SCREEN DISSIPATION	15	WATTS
GRID DISSIPATION	3	WATTS

1. Approximate value

2. Grid driven. Grounded screen, rf grounded cathode.

3. For CW operation on 865 MHz heater voltage is reduced 15%. Inquire for voltage recommended for other UHF conditions.

4CX600F TYPICAL OPERATION	NOTE 2	NOTE 4	
Frequency	432	865	MHz
Plate to Cathode Voltage	1830	2000	Vdc
Screen to Cathode Voltage	300	300	Vdc
Grid Voltage	-54	-53	Vdc
Plate Current	600	600	mAdc
Screen Current [1]	7.5	8	mAdc
Grid Current [1]	12	-1.0	mAdc
Zero-Signal dc Plate Current [1]	20	15	mAdc
Measured Driving Power [1]	25	52	W
Plate Input Power	1 100	1200	W
Plate Dissipation	350	550	W
Useful Output Power	700	585	W
Heater Voltage [3]	22.0	22.0	V
Gain	15.0	10.4	db
Efficiency	65	48	%
Bandwidth (3db) output circuit	10.7	13.5	MHz

4. Grid driven. Neutralized cavity. Grounded screen.

RADIO-FREQUENCY POWER AMPLIFIER
Class-B, Television Service (Frequencies to 890 MHz)

ABSOLUTE MAXIMUM RATINGS:

DC PLATE VOLTAGE	2500	VOLTS
DC SCREEN VOLTAGE	400	VOLTS
DC PLATE CURRENT	0.6	AMPERE
PLATE DISSIPATION	600	WATTS
SCREEN DISSIPATION	15	WATTS
GRID DISSIPATION	3	WATTS
DC GRID VOLTAGE	-150	VOLTS

TYPICAL OPERATION (865 MHz)
Grid driven, neutralized cavity, grounded screen. Rf grounded cathode, single tuned input and output circuits. Output circuit efficiency 80%.

Plate to Cathode Voltage	2000	Vdc
Screen to Cathode Voltage	300	Vdc
Grid Voltage[1]	-54	Vdc
Heater voltage (See note 3 page 2)		
Bandwidth at 3 db points	9	MHz
Zero-Signal dc Plate Current	100	mAdc
During Sync-Pulse		
dc Plate Current	600	mAdc
Pulse Screen Current[1]	8	mAdc
Drive Power [1]	52	W
Zero-Signal dc Plate Current	100	mAdc
Plate Dissipation	550	W
Useful Power Output	585	W
Black Level:		
dc Plate Current	450	mAdc
Drive Power[1]	25	W
Zero-Signal dc Plate Current	100	mAdc
Plate Dissipation	550	W
Useful Power Output	350	W

1. Approximate

NOTE: TYPICAL OPERATION data are obtained from direct measurement or by calculation from published characteristic curves. Adjustment of the rf grid voltage to obtain the specified plate current at the specified bias, screen and plate voltages is assumed. If this procedure is followed, there will be little variation in output power when the tube is changed, even though there may be some variation in grid and screen current. The grid and screen currents which result when the desired plate current is obtained are incidental and vary from tube to tube. These current variations cause no difficulty so long as the circuit maintains the correct voltage in the presence of the variations in current. In the case of Class C Service, if grid bias is obtained principally by means of a grid resistor, the resistor must be adjustable to obtain the required bias voltage when the correct rf grid voltage is applied.

RANGE VALUES FOR EQUIPMENT DESIGN

	Min.	Max.	
4CX600B			
Heater: Current at 6.0 volts	4.0	4.7	A
Cathode Warmup Time	180	--	sec.
4CX600F			
Heater: Current at 26.5 volts	0.85	1.25	A
Cathode Warmup Time	180	--	sec.
Interelectrode Capacitances [1] (grounded cathode connection)			
Input	42	48	pF
Output	5.3	6.3	pF
Feedback	---	0.2	pF

APPLICATION

MECHANICAL

MOUNTING - The 4CX600B and 4CX600F may be mounted in any position. No socket is required. The tube may be mounted directly on the SK-680 Screen Bypass Capacitor which in turn is mounted to the chassis with four screws. The chassis thickness should be 0.062 inches to insure adequate space for connections to the base of the tube and care should be exercised to insure a flat mounting surface to minimize cathode lead inductance.

COOLING - Sufficient forced-air cooling must be provided to maintain the anode core and seal temperatures below 250°C. The tabulation (page 4) lists the minimum cooling requirements at sea level and 10,000 feet with 50°C ambient air. At VHF and UHF, additional cooling air will be required due to circuit loss, a portion of which is chargeable to the tube.

Air cooling of the tube base is required. 10 CFM minimum should be directed straight up toward the center of tube base from a duct or blower, not more than 2-1/2 inches from the tube.

PLATE DISSIPATION (WATTS)	SEA LEVEL		10,000 FEET	
	AIR FLOW (CFM)	STATIC PRESSURE (W.C.)	AIR FLOW (CFM)	STATIC PRESSURE (W.C.)
300	5.5	0.14	8.0	0.20
450	11.4	0.47	16.6	0.68
600	14.1	0.65	20.6	0.94

The following diagram illustrates a typical cooling installation.

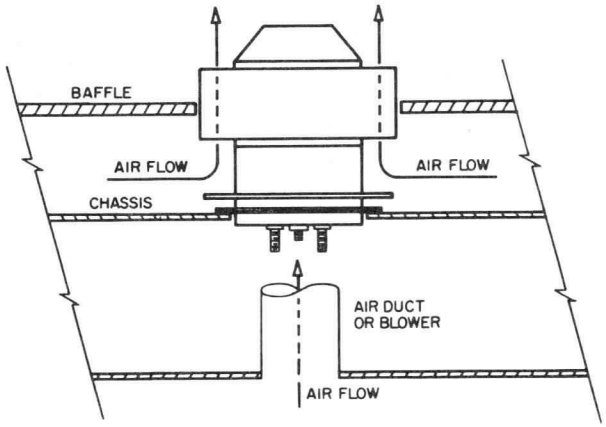

FIG. I

In cases where there is any doubt regarding the adequacy of the supplied cooling, it should be borne in mind that operating temperature is the sole criterion of cooling effectiveness.

ELECTRICAL

HEATER - The rated heater voltage is 6.0 volts for the 4CX600B and 26.5 volts for the 4CX600F. The voltage, as measured at the tube, should be maintained at this value to minimize variations in operation and to obtain maximum tube life. In no case should the voltage be allowed to exceed 5% above the rated value. (See note 3 page 2).

The cathode and one side of the heater are internally connected.

It is recommended that the heater voltage be applied for a period of not less than three minutes before current is drawn from the cathode. Tube operation will stabilize after a period of approximately five minutes from a cold start.

GRID OPERATION - The 4CX600B and 4CX600F control grid has a maximum dissipation of 3.0 watts and precautions should be observed to avoid exceeding this rating. Derating of the control grid dissipation will be necessary if the base flange temperature exceeds 150°C.

The 4CX600B and 4CX600F have four threaded grid pins on the base of the tube. These pins can be used separately or in parallel to control the amount of grid lead inductance to suit the requirements of the circuit. The grid lead inductance for one pin is 2.4 nanohenries.

Caution should be excercised when tightening the nuts on the control grid pins. Maximum torque of three inch-pounds is sufficient for good electrical connection and should not be exceeded due to possible damage to the vacuum seal.

SCREEN OPERATION - The maximum rated screen dissipation for the 4CX600B and 4CX600F is 15 watts.

Under certain operating conditions the screen current of a tetrode may reverse as indicated on the screen current meter. This condition is the result of secondary emission from the screen and is normal for a power tetrode. If the impedance of the screen power supply is high, negative screen current will cause the screen voltage to approach the anode voltage, and the results will be a runaway condition which could lead to a catastrophic failure. This condition can be avoided if sufficient bleeder current is drawn from the screen supply by an appropriate bleeder or regulator tube. The recommended bleeder current for the 4CX600B and 4CX600F is 20 mA for each tube connected to a common screen power supply.

A low inductance screen bypass capacitor, Eimac SK-680, is available for the 4CX600B and 4CX600F. This capacitor is easily installed with six 0-80 screws. With the SK-680 capacitor installed, the screen self-resonant frequency of the 4CX600B or 4CX600F is in excess of 900 MHz.

PLATE OPERATION - The maximum rated plate dissipation power for the 4CX600B and 4CX600F is 600 watts. Except for brief periods during circuit adjustments, this maximum value should not be exceeded. Connection to the anode is accomplished by a clamp around the anode.

SPECIAL APPLICATIONS - If it is desired to operate the tube under conditions different from those given here, contact the Power Grid Division, EIMAC Division of Varian, San Carlos, California, 94070, for information and recommendations.

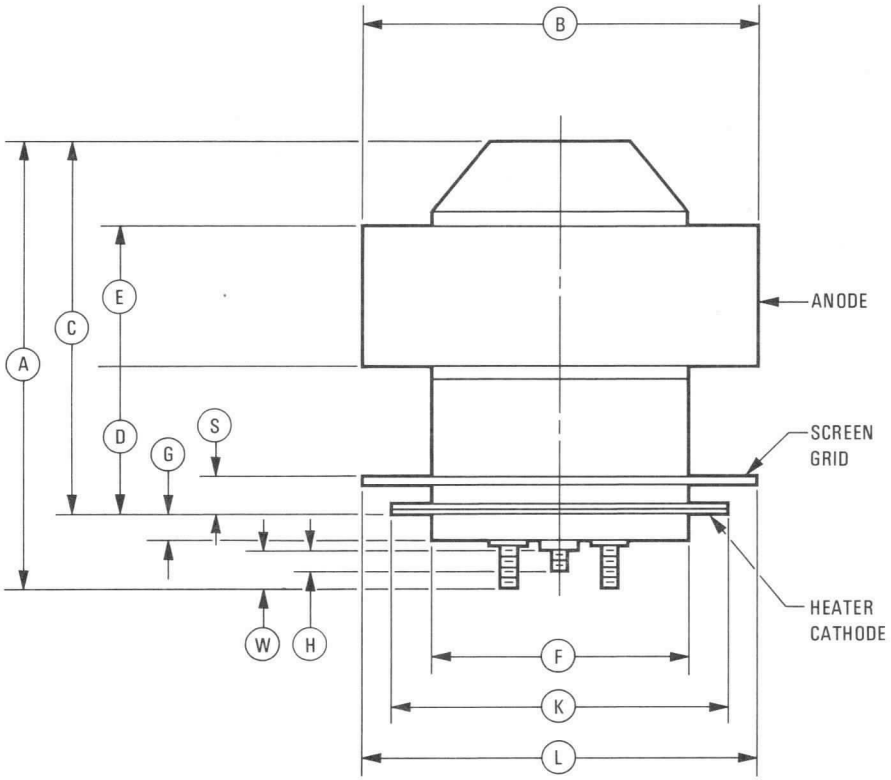

DIMENSIONAL DATA				
DIM.	INCHES		MILLIMETERS	
	MIN.	MAX.	MIN.	MAX.
A	--	2.450	--	62.23
B	2.040	2.080	51.82	52.83
C	1.825	1.975	46.35	50.16
D	.675	.810	17.14	20.57
E	.720	.800	18.29	20.32
F	1.305	1.325	33.15	33.65
G	.130	.155	3.30	3.94
H	.130	.180	3.30	4.57
K	1.710	1.750	43.43	44.45
L	1.930	2.025	49.02	51.43
P	.550	.600	13.97	15.24
R	88°	92°	88°	92°
S	.180	.210	4.57	5.33
W	.250	.300	6.35	7.62

NOTES:

1. 2–56 UNC–2A
2. REF. DIM. ARE FOR INFO. ONLY AND ARE NOT REQ'D. FOR INSPECTION PURPOSES.

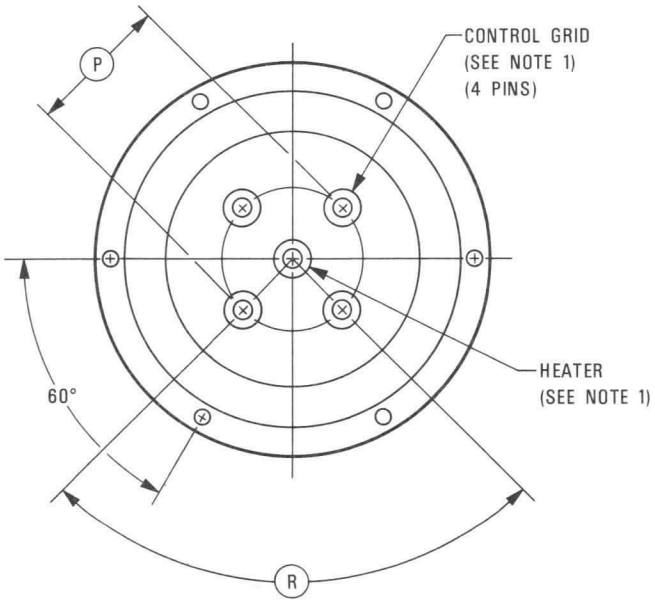

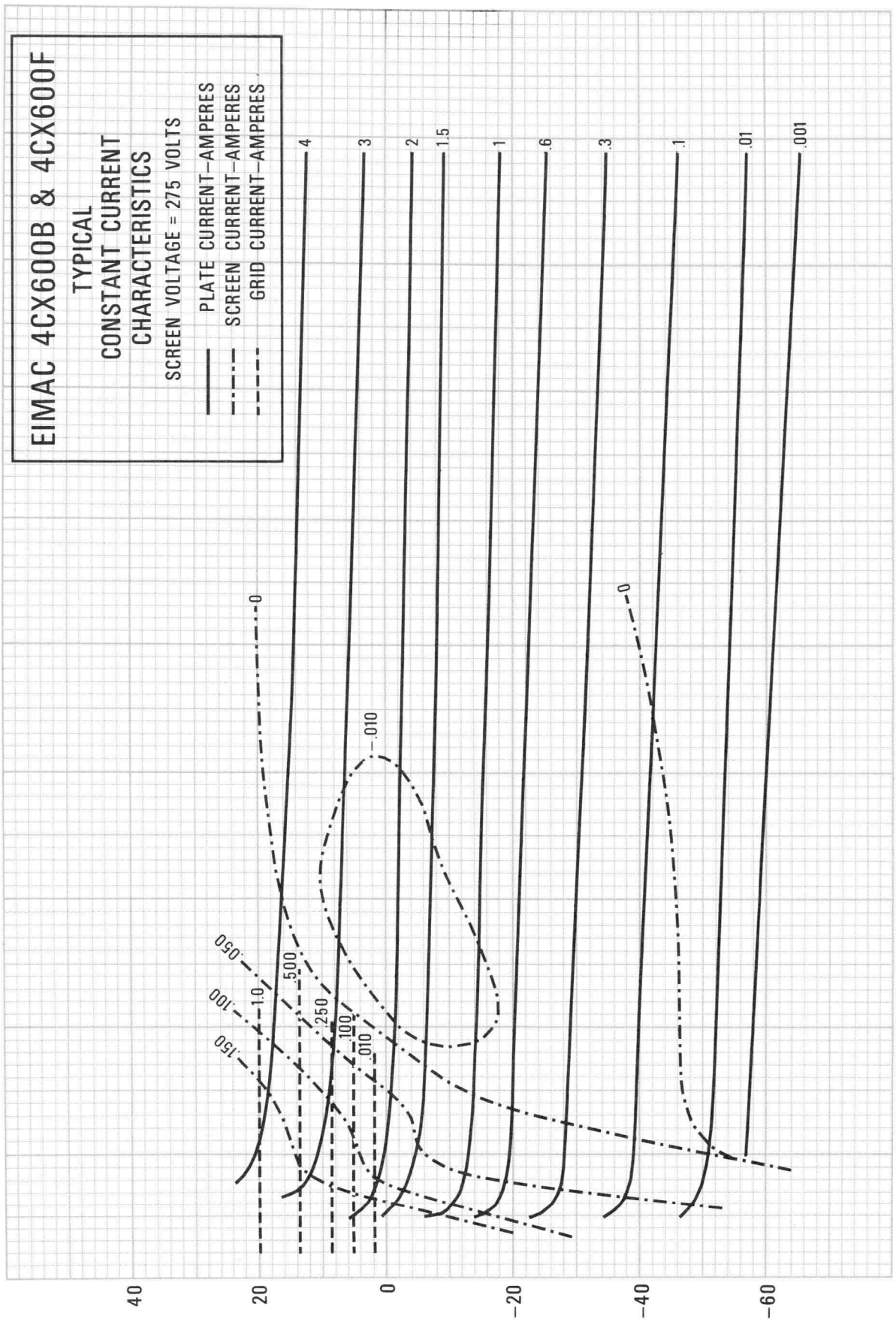
EIMAC 4CX600B & 4CX600F
TYPICAL
CONSTANT CURRENT
CHARACTERISTICS
SCREEN VOLTAGE = 275 VOLTS
PLATE CURRENT–AMPERES
SCREEN CURRENT–AMPERES
GRID CURRENT–AMPERES
4
3
2
1.5
1
.6
.3
.1
.01
.001
0
.010
0
.050
.100
.150
1.0
.500
.250
.100
.010
40
20
0
-20
-40
-60
0
1000
2000
3000
4000
GRID VOLTAGE (V)
PLATE VOLTAGE (V)
CURVE #3371

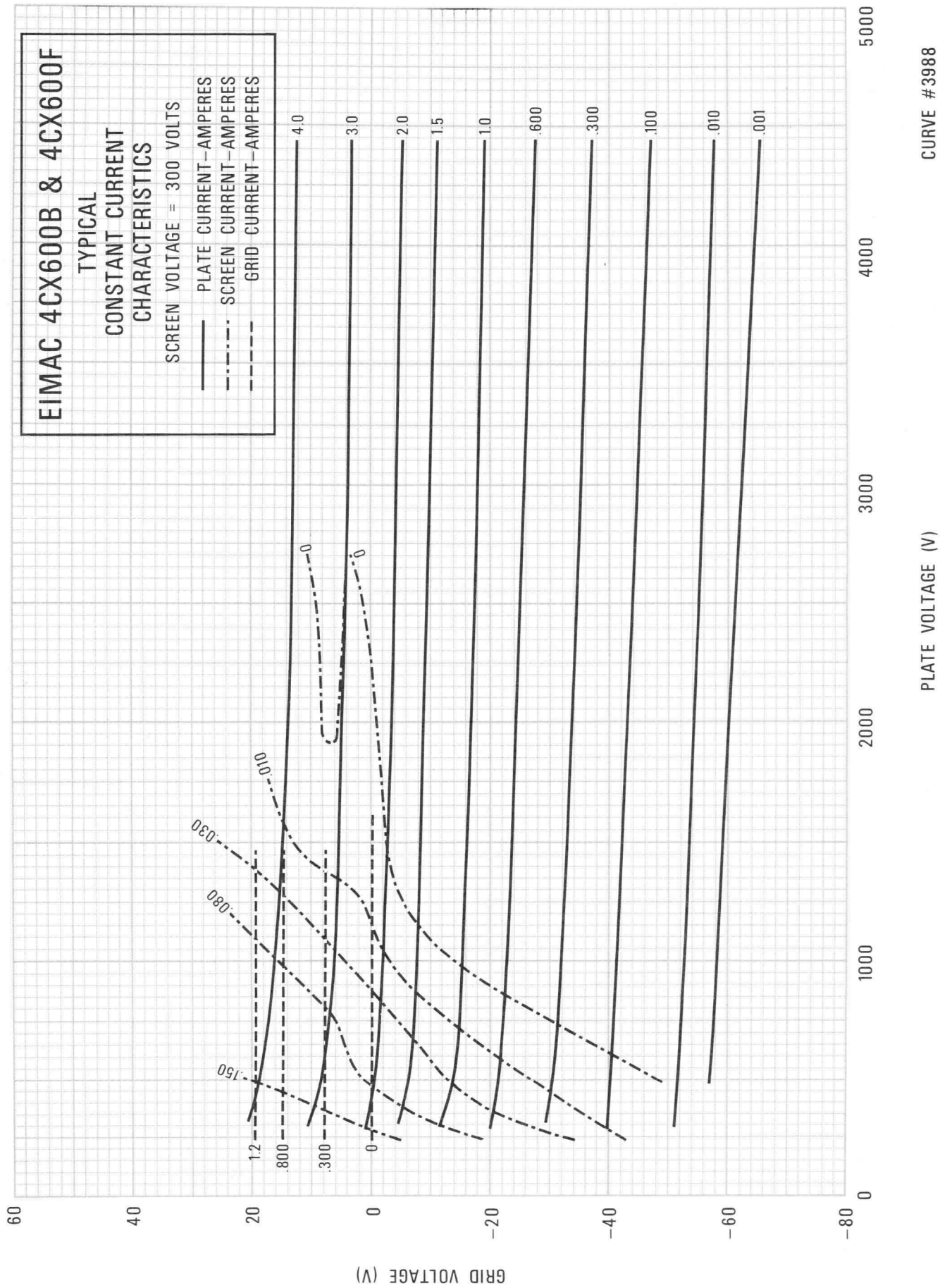
EIMAC 4CX600B & 4CX600F
TYPICAL
CONSTANT CURRENT
CHARACTERISTICS
SCREEN VOLTAGE = 300 VOLTS
PLATE CURRENT–AMPERES
SCREEN CURRENT–AMPERES
GRID CURRENT–AMPERES
4.0
3.0
2.0
1.5
1.0
.600
.300
.100
.010
.001
0
.010
.030
.080
.150
1.2
.800
.300
0
GRID VOLTAGE (V)
60
40
20
0
−20
−40
−60
−80
0
1000
2000
3000
4000
5000
PLATE VOLTAGE (V)
CURVE #3988

TECHNICAL DATA

8809 / 4CX600J
8921 / 4CX600JA
ULTRA LINEAR POWER TETRODE

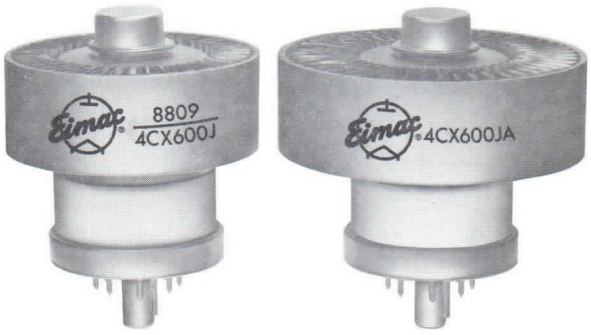

The EIMAC 8809/4CX600J is a ceramic/metal, forced-air cooled, radial beam tetrode with a rated maximum plate dissipation of 600 watts. It is a low-voltage, high-current tube specifically designed for exceptionally low intermodulation distortion and low grid interception. The low distortion characteristics make the 8809/4CX600J especially suitable for radio-frequency and audio-frequency linear amplifier service.

The 8921/4CX600JA has a larger anode cooler for reduced cooling air pressure-drop. It is electrically identical to the 4CX600J.

GENERAL CHARACTERISTICS[1]

ELECTRICAL

Cathode: Oxide Coated, Unipotential	
Heater: Voltage	6.0 ± .3 V
Current, at 6.0 volts	5.4 A
Cathode-Heater Potential (maximum)	±150 V
Transconductance (Average):	
I_b = 0.3 Adc, E_{c2} = 350 Vdc	27,000 μmhos
Direct Interelectrode Capacitance (grounded cathode)[2]	
Cin	50.0 pF
Cout	6.3 pF
Cgp	.13 pF

1. Characteristics and operating values are based upon performance tests. These figures may change without notice as the result of additional data or product refinement. EIMAC Division of Varian should be consulted before using this information for final equipment design.
2. Capacitance values are for a cold tube as measured in a special shielded fixture in accordance with Electronic Industries Association Standard RS-191.

MECHANICAL

Maximum Overall Dimensions:	4CX600J	4CX600JA
Length	2.71 in; 68.8 mm	2.71 in; 68.8 mm
Diameter	2.08 in; 52.8 mm	2.52 in; 64.0 mm
Net Weight	7.7 oz; 218 gm	9.0 oz; 255 gm
Operating Position		Any
Maximum Operating Temperature:		
Ceramic/Metal Seals		250°C
Anode Core		250°C

(Effective 8-15-71) © by Varian Printed in U.S.A.

Cooling	Forced air
Base	JEDEC B8-236
Recommended Air System Socket	SK-607
Recommended Air Chimney (4CX600J)	SK-646
Recommended Air Chimney (4CX600JA)	SK-656

RADIO FREQUENCY LINEAR AMPLIFIER
GRID DRIVEN Class AB

ABSOLUTE MAXIMUM RATINGS

DC PLATE VOLTAGE	3000	VOLTS
DC SCREEN VOLTAGE	450	VOLTS
DC PLATE CURRENT	0.6	AMPERE
PLATE DISSIPATION	600	WATTS
SCREEN DISSIPATION	15	WATTS
GRID DISSIPATION	1	WATT

TYPICAL OPERATION (Frequencies to 30 MHz)
Class AB, Grid Driven, Peak Envelope or Modulation Crest Conditions.

Plate Voltage	2000	2000	2500	Vdc
See Notes	---	(4)	(5&6)	
Screen Voltage	350	350	350	Vdc
Grid Voltage 1	-41	-41	-41	Vdc
Zero-Signal Plate Current	300	200	175	mAdc
Single-Tone Plate Current	500	497	680	mAdc
Two-Tone Plate Current	350	365	475	mAdc
Single-Tone Screen Current 3	5	16	30	mAdc
Two-Tone Screen Current 3	-2	3	10	mAdc
Single-Tone Grid Current 3	0	0	0.5	mAdc
Two-Tone Grid Current 3	0	0	0.2	mAdc
Peak rf Grid to Ground Voltage 3.	32	39.5	70	v
Single-Tone Useful Output Power	550	553	1100	W
Resonant Load Impedance	2000	2000	2000	Ω
Intermodulation Distortion Products 2				
3rd Order	-43	-46	-40	db
5th Order	-43	-51	-40	db

1. Adjust to specified zero-signal dc plate current.
2. The intermodulation distortion products will be as specified or better for all levels from zero-signal to maximum outout power and are referenced against one tone of a two equal tone signal.
3. Approximate values.
4. Cathode resistor 11 ohms, bypassed by 4000 pF.
5. Cathode resistor 11 ohms, no bypass capacitor.
6. Complex signal such that dc plate current maximum rating of 600 mA not exceeded.

AUDIO FREQUENCY POWER AMPLIFIER OR MODULATOR
Class AB, Grid Driven (Sinusoidal Wave)

ABSOLUTE MAXIMUM RATINGS (per tube)

DC PLATE VOLTAGE	3000	VOLTS
DC SCREEN VOLTAGE	450	VOLTS
DC PLATE CURRENT	.6	AMPERE
PLATE DISSIPATION	600	WATTS
SCREEN DISSIPATION	15	WATTS
GRID DISSIPATION	1	WATT

TYPICAL OPERATION (Two Tubes) Class AB1

Plate Voltage	2000	2500	2800	Vdc
Screen Voltage	350	350	350	Vdc
Grid Voltage 1/3	-52	-52	-52	Vdc
Zero-Signal Plate Current	200	200	200	mAdc
Max. Signal Plate Current	1.13	1.14	1.14	Adc
Zero-Signal Screen Current	-1	-2	0	mAdc
Max. Signal Screen Current	52	48	52	mAdc
Peak af Grid Voltage 2	46	46	46	v
Plate Output Power	1430	1720	1985	W
Load Resistance(plate to plate)	3850	4200	4800	Ω

1. Approximate value.
2. Per Tube.
3. Adjust to give stated zero-signal plate current.

NOTE: TYPICAL OPERATION data are obtained from direct measurement or by calculation from published characteristic curves. Adjustment of the rf grid voltage to obtain the specified plate current at the specified bias, screen and plate voltages is assumed. If this procedure is followed, there will be little variation in output power when the tube is changed, even though there may be some variation in grid and screen current. The grid and screen currents which result when the desired plate current is obtained are incidental and vary from tube to tube. These current variations cause no difficulty so long as the circuit maintains the correct voltage in the presence of the variations in current.

RANGE VALUES FOR EQUIPMENT DESIGN

	Min.	Max.	
Heater: Current at 6.0 volts	5.0	5.8	A
Cathode Warmup Time	5	--	minutes

Interelectrode Capacitances[1] (grounded cathode connection)	Min.	Max.
Cin	46.0	54.0 pF
Cout	5.7	7.0 pF
Cgp	---	.2 pF

1. Capacitance values are for a cold tube as measured in a special shielded fixture in accordance with Electronic Industries Association Standard RS-191.

APPLICATION

COOLING - The maximum temperature rating for the anode core of the 4CX600J is 250°C. Sufficient forced air circulation must be provided to keep the temperature of the anode at the base of the cooling fins and the temperature of the ceramic/metal seals below 250°C. Air flow requirements to maintain seal temperature at 225°C in ambient air are tabulated below (for operation below 30 megahertz), for the tube mounted in the recommended air-system socket and chimney, and air flowing in the base-to-anode direction.

Since the power dissipated by the heater represents about 33 watts and since grid plus screen dissipation can represent additional power, allowance has been made in preparing this tabulation for an additional 40 watts dissipation.

The blower selected in a given application must be capable of supplying the desired air flow at a back pressure equal to the pressure drop shown below plus any drop encountered in ducts and filters.

At other altitudes and ambient temperatures the flow rate must be modified to obtain equivalent cooling.

Plate Dissipation Watts	4CX600J			
	Sea Level		10,000 FEET	
	Air Flow CFM	Press.Drop in. water	Air Flow CFM	Press.Drop in. water
300	7.0	.3	10.2	.45
450	12.2	.53	17.7	.78
600	26.5	.81	38.7	1.18
	4CX600JA			
300	7.0	.08	10.2	.11
450	12.2	.13	17.7	.19
600	26.5	.21	38.7	.30

HEATER - The rated heater voltage for these tubes is 6.0 volts. The voltage, as measured at the socket, should be maintained at this value to minimize variations in operation and to obtain maximum tube life. In no case should the voltage be allowed to exceed 5% above the rated value except for short periods.

It is recommended that the heater voltage be applied for a period of not less than 5 minutes before other operating voltages are applied.

Refer to the EIMAC Division of Varian for special instructions if it is necessary to reduce cathode warmup time.

GRID OPERATION - The grid dissipation rating of these tubes is 1 watt. The design features which make these such extremely linear tubes also contribute to very low grid interception. The grid may be driven into the positive grid region in the typical operation of the tube.

SCREEN OPERATION - Tetrode tubes may exhibit reversed screen current to a greater or lesser degree depending on the individual tube. The 4CX600J and 4CX600JA, under some operating conditions, may indicate negative screen currents in the order of 10 milliamperes.

The maximum rated power dissipation for the screen grid is 15 watts and the screen power should be kept below this level. The product of the peak screen voltage and the indicated dc screen current approximates the screen input power except when the screen current indication is near zero or negative. In the usual tetrode amplifier, where no signal voltage appears between cathode and screen, the peak screen voltage is equal to the dc screen voltage. Experience has shown that the screen will operate within the limits established for this tube if the indicated screen current, plate voltage and drive voltage approximate the "Typical Operation" values.

The screen supply voltage must be maintained constant for any values of negative and positive screen currents that may be encountered. Dangerously high plate currents may flow if the screen power supply exhibits a rising voltage characteristic with negative screen current. Stabilization may be accomplished in several different ways. A bleeder resistor may be connected from screen to cathode; a zener regulator may be connected from

screen to cathode; or an electron-tube regulator circuit may be used in the screen supply. It is absolutely essential to use a bleeder if a series regulator is employed. The screen bleeder current should approximate 20 milliamperes to adequately stabilize the screen voltage. It should be observed that this bleeder power may be usefully employed to energize low-power stages of the transmitter.

PLATE OPERATION - The maximum rated plate dissipation power is 600 watts. Except for brief periods during circuit adjustments, this maximum value should not be exceeded.

The top cap on the anode cooler may be used as a plate terminal at low frequencies or a circular clamp or spring-finger collet encircling the cylindrical outer surface of the anode cooler may be used at high frequencies.

Points of electrical contact with the anode cooler should be kept clean and free of oxide to minimize radio-frequency loses. The anode cooler should be inspected periodically and cleaned when necessary to remove any dirt which might interfere with effective cooling.

INTERMODULATION DISTORTION - The typical radio frequency linear amplifier operating conditions, including the distortion data, are based on actual operation in a grid-driven amplified. Because the 4CX600J and 4CX600JA have very low grid interception it is possible to drive the grid positive with minimum adverse effects upon the distortion level or upon the driver. Class AB2 linear amplifier operation is therefore possible and recommended. It is also recommended that a low impedance driver be used and that the input of the 4CX600J or 4CX600JA be swamped with a 1000 ohm resistor from grid to cathode so as to provide an almost constant load to the driver.

In general, linearity is improved as grid bias value is shifted toward Class A operation. Linearity may also be improved without sacrifice of efficiency by use of cathode resistors bypassed for rf, or with no bypass capacitor. See "Radio Frequency Linear Amplifier, Typical Operation".

CAUTION-HIGH VOLTAGE - Operating voltage for the 4CX600J and 4CX600JA can be deadly, so the equipment must be designed properly and operating precautions must be followed. Design equipment so that no one can come in contact with high voltages. All equipment must include safety enclosures for high voltage circuits and terminals, with interlock switches to open the primary circuits of the power supply and to discharge high voltage capacitors whenever access doors are opened. Interlock switches must not be bypassed or "cheated" to allow operation with access doors open. Always remember that HIGH VOLTAGE CAN KILL.

INTERELECTRODE CAPACITANCE - The actual internal interelectrode capacitance of a tube is influenced by many variables in most applications, such as stray capacitance to the chassis, capacitance added by the socket used, stray capacitance between tube terminals, and wiring effects. To control the actual capacitance values within the tube, as the key component involved, the industry and the Military Services use a standard test procedure as described in Electronic Industries Association Standard RS-191. This requires the use of specially constructed test fixtures which effectively shield all external tube leads from each other and eliminates any capacitance reading to "ground". The test is performed on a cold tube. Other factors being equal, controlling internal tube capacitance in this way normally assures good interchangeability of tubes over a period of time, even when the tube may be made by different manufacturers. The capacitance values shown in the manufacturer's technical data, or test specifications, normally are taken in accordance with Standard RS-191.

The equipment designer is therefore cautioned to make allowance for the actual capacitance values which will exist in any normal application. Measurements should be taken with the socket and mounting which represent approximate final layout if capacitance values are highly significant in the design.

SPECIAL APPLICATION - If it is desired to operate this tube under conditions widely different from those listed here, write to Power Grid Tube Division, EIMAC Division of Varian, 301 Industrial Way, San Carlos, California 94070, for information and recommendations.

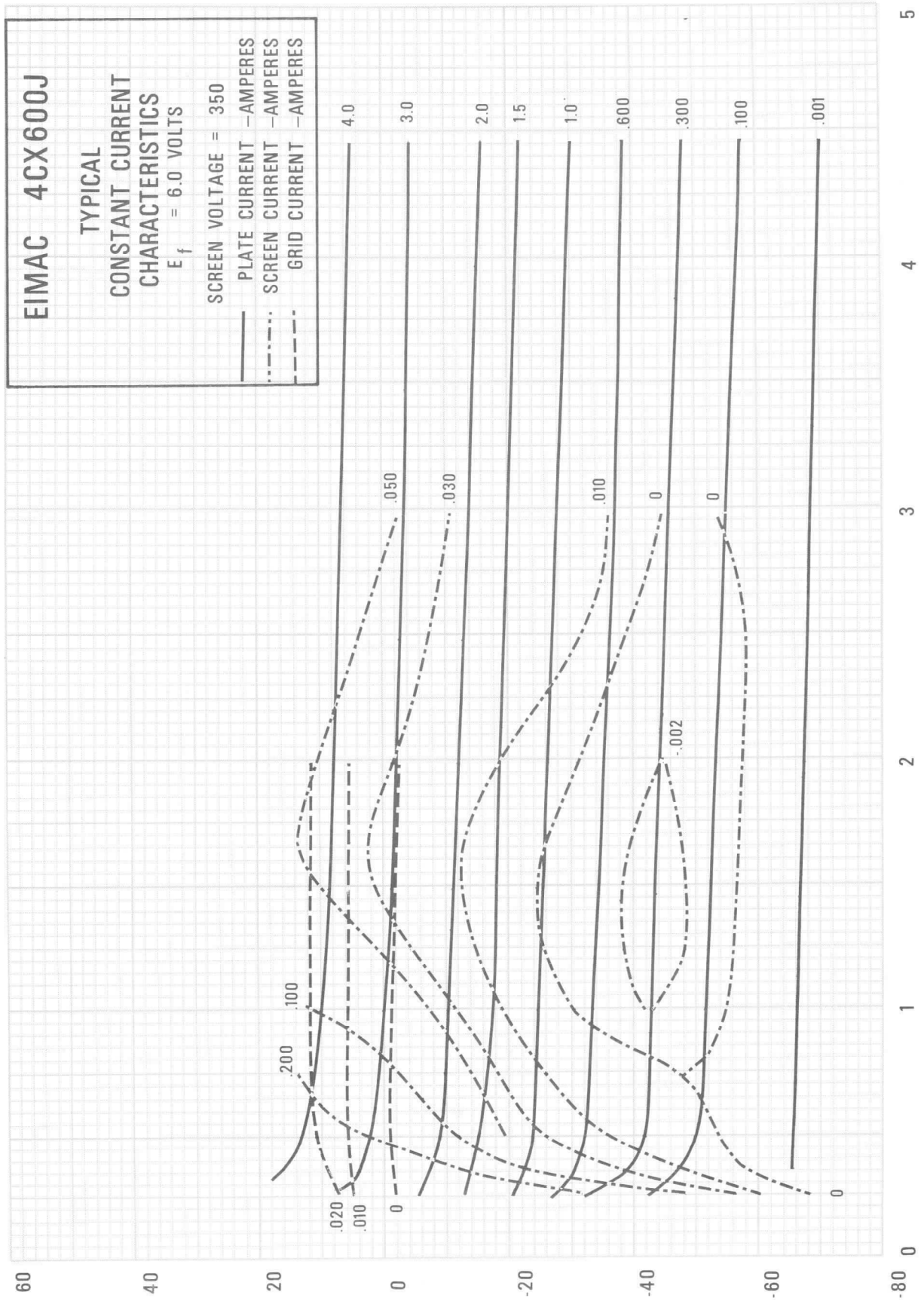
EIMAC 4CX600J
TYPICAL
CONSTANT CURRENT
CHARACTERISTICS
E_f = 6.0 VOLTS
SCREEN VOLTAGE = 350
PLATE CURRENT –AMPERES
SCREEN CURRENT –AMPERES
GRID CURRENT –AMPERES
4.0
3.0
2.0
1.5
1.0
.600
.300
.100
.001
.050
.030
.010
0
.002
.020
.010
0
.200
.100
60
40
20
0
-20
-40
-60
-80
0
1
2
3
4
5
GRID VOLTAGE (V)
PLATE VOLTAGE (KV)
CURVE #3836

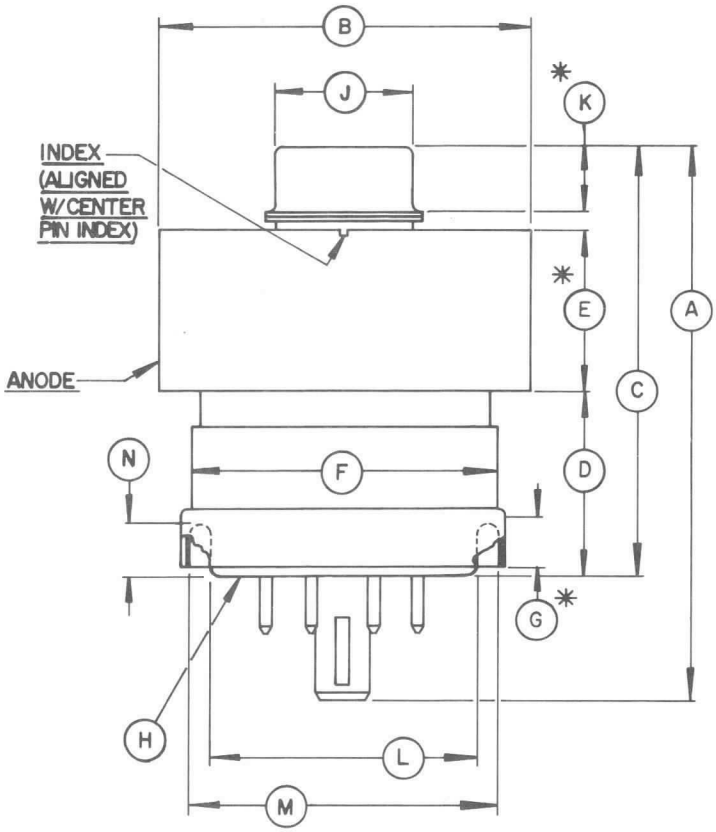

8809/4CX600J				
DIMENSIONAL DATA				
DIM.	INCHES		MILLIMETERS	
	MIN.	MAX.	MIN.	MAX.
A	2.507	2.707	63.68	68.76
B	2.050	2.080	52.07	52.83
C	1.973	2.173	50.11	55.19
D	0.910	1.030	23.11	26.16
E	0.710	0.790	18.03	20.07
F	--	1.406	--	35.71
G	0.187	--	4.75	--
H	BASE: B8-236 (JEDEC DESIGNATION)			
J	0.559	0.573	14.20	14.55
K	0.240	--	6.10	--
L	1.175	1.190	29.85	30.23
M	1.325	1.360	33.66	34.54
N	0.205	--	5.21	--
8921/4CX600JA				
B	2.485	2.515	63.00	63.80
ALL ELSE SAME AS ABOVE				

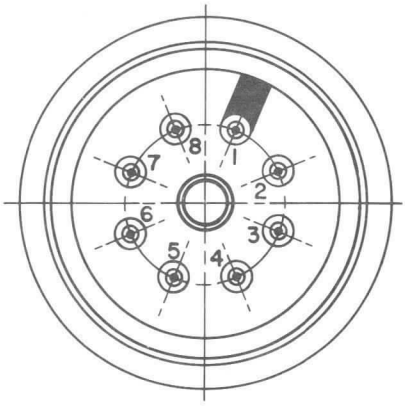

PIN DATA
PIN 1 &/OR BASE RING - SCREEN GRID
PINS 2,4,7 - CONTROL GRID
PINS 3,6,8 - CATHODE
PIN 5 - HEATER
CENTER PIN - HEATER

TECHNICAL DATA

8168
4CX1000A

CERAMIC POWER TETRODE

The EIMAC 8168/4CX1000A is a ceramic/metal, forced-air cooled, radial-beam tetrode with a rated maximum plate dissipation of 1000 watts. It is a low-voltage, high-current tube specifically designed for Class-AB_1 rf linear-amplifier or audio-amplifier applications where its high gain may be used to advantage. At its rated maximum plate voltage of 3000 volts, it is capable of producing 1630 watts of peak-envelope output power. Two 8168/4CX1000As operating in Class-AB_1 will produce 3260 watts of audio power.



GENERAL CHARACTERISTICS[1]

ELECTRICAL

Cathode: Oxide Coated, Unipotential		
Heater: Voltage	6.0 ± 0.3	V
Current, at 6.0 volts	9.0	A
Transconductance (Average):		
I_b = 1.0 Adc	37,000	μmhos
Direct Interelectrode Capacitances (grounded cathode)[2]		
Input	81	pF
Output	11.8	pF
Feedback	0.015	pF
Direct Interelectrode Capacitances (grounded grid and screen)[2]		
Input	35.5	pF
Output	12	pF
Feedback	0.004	pF
Frequency of Maximum Rating:		
CW	110	MHz

1. Characteristics and operating values are based upon performance tests. These figures may change without notice as the result of additional data or product refinement. EIMAC Division of Varian should be consulted before using this information for final equipment design.

2. In Shielded Fixture.

MECHANICAL

Maximum Overall Dimensions:	
Length	4.80 in; 122 mm
Diameter	3.37 in; 85.5 mm
Net Weight	27 oz; 768 gm
Operating Position	Any

(Revised 5-1-70) © 1963, 1966, 1967 Varian

Printed in U.S.A.

Maximum Operating Temperature:

Ceramic/Metal Seals	250°C
Anode Core	250°C
Cooling	Forced Air
Base	Special, breechblock terminal surfaces
Recommended Socket	EIMAC SK-800 Series
Recommended Chimney	EIMAC SK-806 Series

RADIO FREQUENCY LINEAR AMPLIFIER
GRID DRIVEN

Class AB_1

MAXIMUM RATINGS:

DC PLATE VOLTAGE	3000	VOLTS
DC SCREEN VOLTAGE	400	VOLTS
DC PLATE CURRENT	1.0	AMPERE
PLATE DISSIPATION	1000	WATTS
SCREEN DISSIPATION	12	WATTS
GRID DISSIPATION	0	WATT

1. Adjust to specified zero-signal dc plate current.
2. Approximate value.

TYPICAL OPERATION (Frequencies to 30 MHz)
Class AB_1 Grid Driven, Peak Envelope or Modulation Crest Conditions

Plate Voltage	2000	2500	3000	Vdc
Screen Voltage	325	325	325	Vdc
Grid Voltage[1]	-60	-60	-60	Vdc
Zero-Signal Plate Current	250	250	250	mAdc
Single Tone Plate Current	890	885	875	mAdc
Two-Tone Plate Current	645	650	635	mAdc
Zero-Signal Screen Current	8	6	5	mAdc
Single-Tone Screen Current[2]	35	35	35	mAdc
Two-Tone Screen Current[2]	10	8	8	mAdc
Plate Output Power	930	1300	1630	W

AUDIO FREQUENCY POWER AMPLIFIER OR MODULATOR

Class AB_1, Grid Driven(Sinusoidal Wave)

MAXIMUM RATINGS (Per Tube)

DC PLATE VOLTAGE	3000	VOLTS
DC SCREEN VOLTAGE	400	VOLTS
DC PLATE CURRENT	1.0	AMPERE
PLATE DISSIPATION	1000	WATTS
SCREEN DISSIPATION	12	WATTS
GRID DISSIPATION	0	WATT

TYPICAL OPERATION (Two Tubes)

Plate Voltage	2000	2500	3000	Vdc
Screen Voltage	325	325	325	Vdc
Grid Voltage[1,2]	-60	-60	-60	Vdc
Zero-Signal Plate Current	500	500	500	mAdc
Max Signal Plate Current	1.78	1.77	1.75	Adc
Zero-Signal Screen Current[1]	16	12	10	mAdc
Max Signal Screen Current[1]	70	70	70	mAdc
Plate Output Power	1860	2600	3260	W
Load Resistance (plate to plate)	2040	2850	3860	Ω

1. Approximate value.
2. Adjust to give stated zero-signal plate current.

NOTE: TYPICAL OPERATION data are obtained by calculation from published characteristic curves. Adjustment of the rf grid voltage to obtain the specified plate current at the specified bias, screen and plate voltages is assumed. If this procedure is followed, there will be little variation in output power when the tube is changed, even though there may be some variation in grid and screen current. The grid and screen currents which result when the desired plate current is obtained are incidental and vary from tube to tube. These current variations cause no difficulty so long as the circuit maintains the correct voltage in the presence of the variations in current. When grid drive is applied, the screen voltage required to obtain the specified value of plate current without drawing grid current may vary somewhat from the typical values shown.

RANGE VALUES FOR EQUIPMENT DESIGN

	Min.	Max.	
Heater: Current at 6.0 volts	8.1	9.9	A
Cathode Warmup Time	3	---	min.
Interelectrode Capacitances[1] (grounded cathode connection)			
Input	75	88	pF
Output	10.8	12.8	pF
Feedback	---	0.022	pF

1. In shielded fixture

APPLICATION

MECHANICAL

COOLING - Sufficient cooling must be provided for the anode and ceramic/metal seals to maintain operating temperatures below the rated maximum values:

Ceramic/Metal Seals	250°C
Anode Core	250° C

A flow rate of 25 cubic feet per minute will be adequate for operation at maximum rated plate dissipation at sea level and with inlet air temperatures up to 40°C. Under these conditions, 25 cfm of air flow corresponds to a pressure difference across the tube and socket of 0.2 inch of water column. Experience has shown that if reliable long-life operation is to be obtained, the cooling air flow must be maintained during standby periods when only the heater voltage is applied to the tube.

At higher altitudes and at VHF increased air flow will be required. For example, at an altitube of 10,000 feet, a flow rate of 37 cfm will be required and will be obtained with a pressure drop across tube and socket of 0.3 inch of water column. In selecting a blower for use at high altitudes, care must be taken to assure that the blower is designed to deliver the desired volume of air at the corresponding pressure drop and *at the particular altitude.*

In cases where there is any doubt regarding the adequacy of the supplied cooling, it should be borne in mind that operating temperature is the sole criterion of cooling effectiveness. Surface temperatures may be easily and effectively measured by using one of the several temperature-sensitive paints or sticks available from various chemical or scientific-equipment suppliers. When these materials are used, extremely thin applications must be made to avoid interference with the transfer of heat from the tube to the air stream, which would cause inaccurate indications.

The 4CX1000A is tested for vibration (noise) from 10 Hz to 500 Hz. Vibration level is 10 G units peak 28 Hz to 500 Hz. Below 28 Hz vibration double amplitude is .25 inch.

The 4CX1000A is tested for shock, 50 G, 11 ms, three axes, after which the tube must be within specification for grid bias voltage and gas current.

ELECTRICAL

HEATER - The rated heater voltage for the 4CX1000A is 6.0 volts. The voltage, as measured at the socket, should be maintained at this value to minimize variations in operation and to obtain maximum tube life. In no case should the voltage be allowed to exceed 5% above the rated value.

The cathode and one side of the heater are internally connected.

It is recommended that the heater voltage be applied for a period of not less than 3 minutes before other operating voltages are applied. From an initial cold condition, tube operation will stabilize after a period of approximately 5 minutes.

GRID OPERATION - The grid dissipation rating of the 4CX1000A is zero watts. The design features which make the tube capable

of maximum power operation without driving the grid into the positive region also make it necessary to avoid positive-grid operation.

Although the average grid-current rating is zero, peak grid currents of less than five-milliamperes as read on a five-milliampere meter may be permitted to flow for peak-signal monitoring purposes.

SCREEN OPERATION - Tetrode tubes may exhibit reversed screen current to a greater or lesser degree depending on individual tube design. This characteristic is prominent in the 4CX1000A and, under some operating conditions, indicated negative screen currents in the order of 25 milliamperes may be encountered.

The maximum rated power dissipation for the screen grid in the 4CX1000A is 12 watts and the screen power should be kept below this level. The product of the peak screen voltage and the indicated dc screen current approximates the screen input power except when the screen current indication is near zero or negative. In the usual tetrode amplifier, where no signal voltage appears between cathode and screen, the peak screen voltage is equal to the dc screen voltage. Experience has shown that the screen will operate within the limits established for this tube if the indicated screen current, plate voltage and drive voltage approximate the "Typical Operation" values.

The screen supply voltage must be maintained constant for any values of negative and positive screen currents that may be encountered. Dangerously high plate currents may flow if the screen power supply exhibits a rising voltage characteristic with negative screen current. Stabilization may be accomplished in several different ways. A bleeder resistor may be connected from screen to cathode; a combination of VR tubes may be connected from screen to cathode; or an electron-tube regulator circuit may be used in the screen supply. It is absolutely essential to use a bleeder if a series electron-tube regulator is employed. The screen bleeder current should approximate 70 milliamperes to adequately stabilize the screen voltage. It should be observed that this bleeder power may be usefully employed to energize low-power stages of the transmitter.

PLATE OPERATION - The maximum rated plate dissipation power is 1000 watts. Except for brief periods during circuit adjustments, this maximum value should not be exceeded.

The top cap on the anode cooler may be used as a plate terminal at low frequencies or a circular clamp or spring-finger collet encircling the cylindrical outer surface of the anode cooler may be used at high frequencies.

SPECIAL APPLICATIONS - If it is desired to operate this tube under conditions different from those given here, write to the Power Grid Tube Marketing Department, EIMAC Division of Varian, San Carlos, California 94070, for information and recommendations.

DIMENSIONAL DATA				
DIM.	INCHES		MILLIMETERS	
	MIN.	MAX.	MIN.	MAX.
A	3.335	3.365	84.71	85.47
B	0.807	0.817	20.50	20.75
C	1.870	1.900	47.50	48.26
D	2.250D	2.300D	57.15D	58.42D
E	2.195	2.380	55.75	60.45
F	3.410	3.550	86.61	90.17
G	4.600	4.800	116.84	121.92
H	0.965	0.988	24.51	25.10
J	0.690	0.710	17.53	18.03
K	0.415	0.435	10.54	11.05
L	0.140	0.165	3.56	4.19
M	0.020	0.030	0.51	0.76
N	0.700	0.800	17.78	20.32
P	0.314D	0.326D	7.98D	8.28D
R	55°	65°	55°	65°
S	115°	125°	115°	125°
T	0.470	0.530	11.94	13.46
U	0.025	0.048	0.63	1.22
V	0.045D	0.070D	1.14	1.78

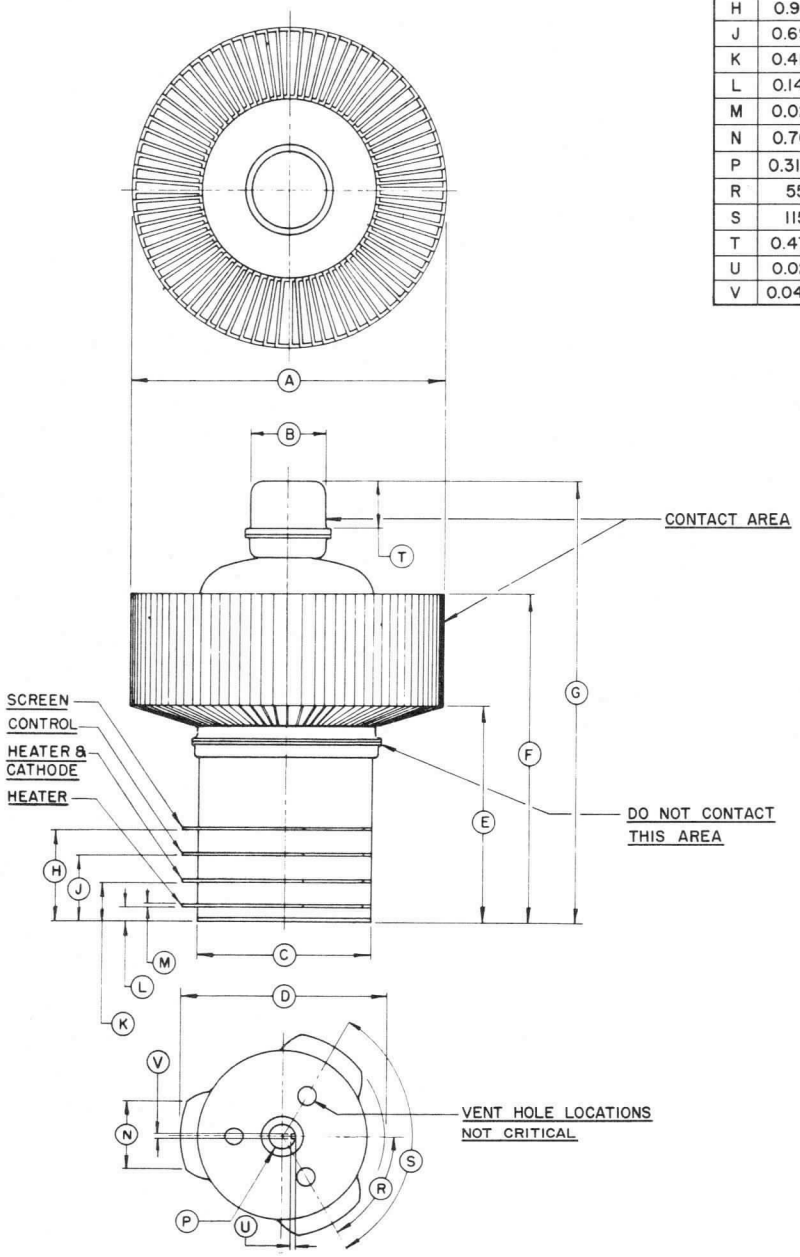

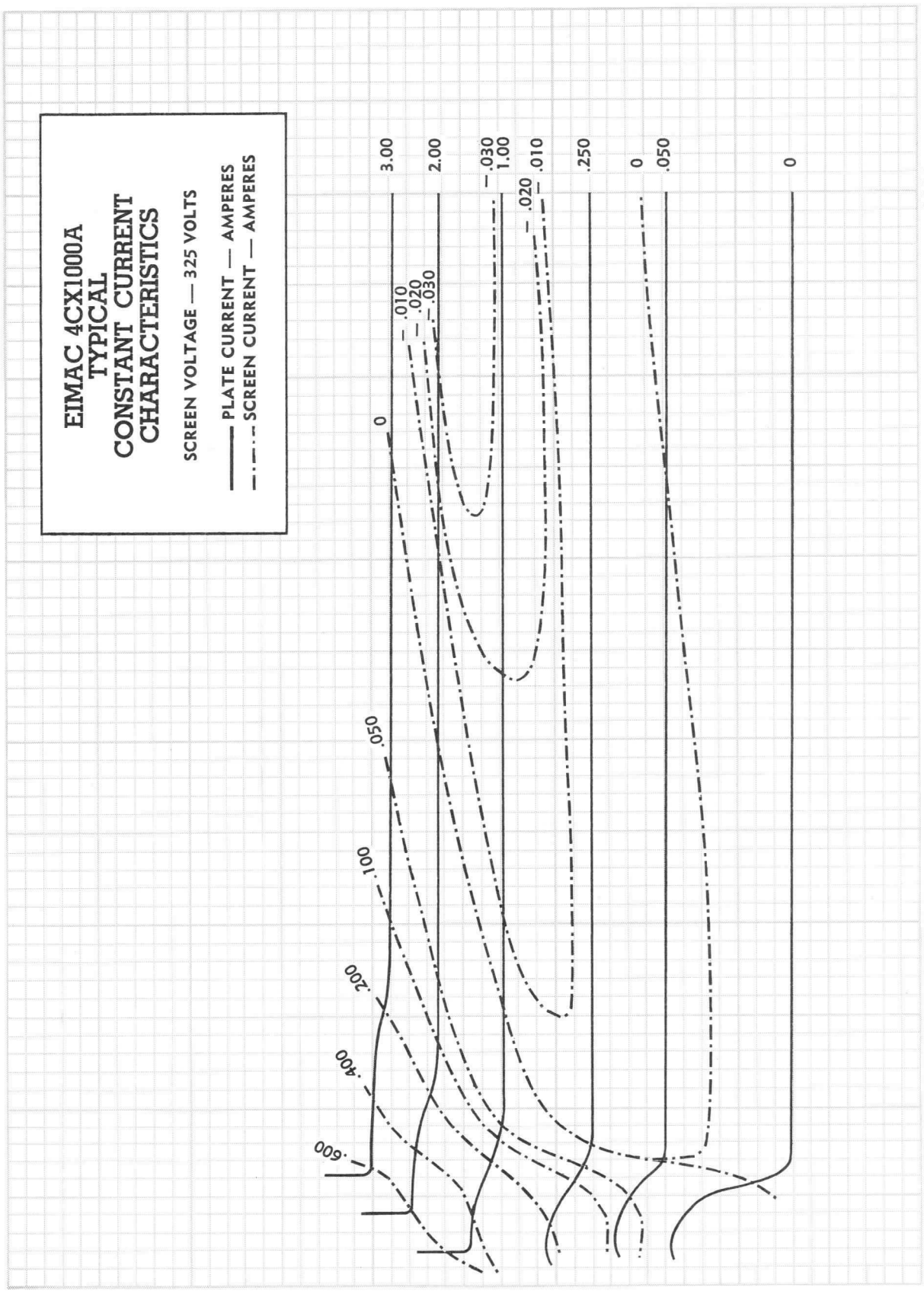
EIMAC 4CX1000A
TYPICAL
CONSTANT CURRENT
CHARACTERISTICS
SCREEN VOLTAGE — 325 VOLTS
PLATE CURRENT — AMPERES
SCREEN CURRENT — AMPERES
3.00
2.00
1.00
.250
0
.050
.030
.020
.010
0
.030
.020
.010
0
.050
100
200
400
600
50
0
-50
-100
1000
2000
3000
GRID VOLTAGE — VOLTS
PLATE VOLTAGE — VOLTS

EIMAC
Division of Varian
SAN CARLOS
CALIFORNIA

8352
4CX1000K

CERAMIC
POWER TETRODE

The Eimac 8352/4CX1000K is a ceramic and metal, forced-air cooled, radial-beam tetrode with a rated maximum plate dissipation of 1000 watts. It is a low-voltage, high-current tube specifically designed for Class-AB_1 rf linear-amplifier applications where its high gain and low distortion characteristics may be used to advantage. The 8352/4CX1000K is similar to the 8168/4CX1000A but contains a solid screen ring that improves isolation between input and output circuits and permits use of the tube in UHF service.



GENERAL CHARACTERISTICS

ELECTRICAL

	Min.	Nom.	Max.	
Cathode: Oxide Coated, Unipotential				
Heating Time	3			minutes
Heater: Voltage		6.0		volts
Current	8.1		9.9	amperes
Transconductance (I_b=1.0 ampere)		37,000		umhos
Direct Interelectrode Capacitances, Grounded Cathode:*				
Input	77		90	uuf
Output	11		13	uuf
Feedback			0.022	uuf

Direct Interelectrode Capacitances, Grounded Grid and Screen:*	Min.	Nom.	Max.	
Input	32.5		38.0	uuf
Output	11		13	uuf
Feedback			0.004	uuf
Maximum Useable Frequency			400	Mc

*In shielded fixture.

MECHANICAL

Base			Special, breechblock terminal surfaces	
Maximum Operating Temperatures:				
Ceramic-to-Metal Seals			250°	C
Anode Core			250°	C
Recommended Socket			Eimac SK-820 or SK-830	
Operating Position			Any	
Maximum Over-All Dimensions:				
Height			4.8	inches
Diameter			3.37	inches
Net Weight			27	ounces

RADIO-FREQUENCY LINEAR AMPLIFIER—Class AB or B

(Single Side-Band Suppressed-Carrier Operation)

MAXIMUM RATINGS

DC PLATE VOLTAGE	3000 MAX. WATTS
DC SCREEN VOLTAGE	400 MAX. VOLTS
DC PLATE CURRENT	1.0 MAX. AMP
PLATE DISSIPATION	1000 MAX. WATTS
SCREEN DISSIPATION	12 MAX. WATTS
GRID DISSIPATION	0 MAX. WATTS

TYPICAL OPERATION (Frequencies below 30 Mc)

DC Plate Voltage	2000	2500	3000 volts
DC Screen Voltage	325	325	325 volts
DC Grid Voltage[1]	—60	—60	—60 volts
Zero-Signal DC Plate Current	250	250	250 mA
Single-Tone DC Plate Current	890	885	875 mA
Two-Tone Average DC Plate Current	645	650	635 mA
Zero-Signal DC Screen Current*	8	6	5 mA
Single-Tone DC Screen Current*	35	35	35 mA
Two-Tone Average DC Screen Current*	10	8	8 mA
Plate Output Power	930	1300	1630 watts

*Approximate values.

[1]Adjust grid bias to obtain listed zero-signal plate current.

(Revised 8-20-66) © 1964, 1966, 1969 by Varian

Printed in U.S.A.

AUDIO AMPLIFIER OR MODULATOR Class AB,

MAXIMUM RATINGS	
DC PLATE VOLTAGE	3000 MAX. VOLTS
DC SCREEN VOLTAGE	400 MAX. VOLTS
DC PLATE CURRENT	1.0 MAX. AMP
PLATE DISSIPATION	1000 MAX. WATTS
SCREEN DISSIPATION	12 MAX. WATTS
GRID DISSIPATION	0 MAX. WATTS

TYPICAL OPERATION (Sinusoidal wave, two tubes unless noted)

DC Plate Voltage	2000	2500	3000	volts
DC Screen Voltage	325	325	325	volts
DC Grid Voltage[1]	—60	—60	—60	volts
Zero-Signal DC Plate Current	500	500	500	mA
Max-Signal DC Plate Current	1.78	1.77	1.75	amps
Zero-Signal DC Screen Current*	16	12	10	mA
Max-Signal DC Screen Current*	70	70	70	mA
Effective Load, Plate to Plate	2040	2850	3680	ohms
Driving Power	0	0	0	watts
Max-Signal Plate Output Power	1860	2600	3260	watts

*Approximate values.

[1]Adjust grid bias to obtain listed zero-signal plate current.

"TYPICAL OPERATION" data are obtained by calculation from published characteristic curves; NO ALLOWANCE is made for circuit losses. Adjustment of the grid bias to obtain the specific zero-signal plate current is assumed. The screen voltage required to obtain the listed value of maximum plate current, without drawing grid current, MAY VARY from the typical values shown. These conditions are valid to approximately 100 Mc. at higher frequencies, power output will be lower due to tube and circuit losses.

APPLICATION

MECHANICAL

Cooling—Sufficient cooling must be provided for the anode and ceramic-to-metal seals to maintain operating temperatures below the rated maximum values:

Ceramic-to-Metal Seals	250°C
Anode Core	250°C

A flow rate of 25 cubic feet per minute will be adequate for operation at maximum rated plate dissipation at sea level and with inlet air temperatures up to 40°C. Under these conditions, 25 cfm of air flow corresponds to a pressure difference across the tube and socket of 0.2 inch of water column. Experience has shown that if reliable long-life operation is to be obtained, the cooling air flow must be maintained during standby periods when only the heater voltage is applied to the tube.

At higher altitudes and at UHF increased air flow will be required. For example, at an altitude of 10,000 feet, a flow rate of 37 cfm will be required and will be obtained with a pressure drop across tube and socket of 0.3 inch of water column. In selecting a blower for use at high altitudes, care must be taken to assure that the blower is designed to deliver the desired volume of air at the corresponding pressure drop and *at the particular altitude.*

In cases where there is any doubt regarding the adequacy of the supplied cooling, it should be borne in mind that operating temperature is the sole criterion of cooling effectiveness. Surface temperatures may be easily and effectively measured by using one of the several temperature-sensitive paints or sticks available from various chemical or scientific-equipment suppliers. When these materials are used, extremely thin applications must be made to avoid interference with the transfer of heat from the tube to the air stream, which would cause inaccurate indications.

ELECTRICAL

Heater—The rated heater voltage for the 4CX1000K is 6.0 volts. The voltage, as measured at the socket, should be maintained at this value to minimize variations in operation and to obtain maximum tube life. In no case should the voltage be allowed to exceed 5% above or below the rated value.

The cathode and one side of the heater are internally connected.

It is recommended that the heater voltage be applied for a period of not less than 3 minutes before other operating voltages are applied. From an initial cold condition, tube operation will stabilize after a period of approximately 5 minutes.

Control Grid Operation—The grid dissipation rating of the 4CX1000K is zero watts. The design features which make the tube capable of maximum power operation without driving the grid into the positive region also make it necessary to avoid positive-grid operation.

Although the average grid-current rating is zero, peak grid currents of less than five milliamperes as read on a five-milliamperes meter may be permitted to flow for peak-signal monitoring purposes.

Screen Grid Operation—Tetrode tubes may exhibit reversed screen current to a greater or lesser degree depending on individual tube design. This characteristic is prominent in the 4CX1000K and, under some operating conditions, indicated negative screen currents in the order of 25 milliamperes may be encountered.

The maximum rated power dissipation for the screen grid in the 4CX1000K is 12 watts and the screen power should be kept below this level. The product of the peak screen voltage and the indicated dc screen current approximates the screen input power except when the screen current indication is near zero or negative. In the usual tetrode amplifier, where no signal voltage appears between cathode and screen, the peak screen voltage is equal to the dc screen voltage. Experience has shown that the screen will operate within the limits established for this tube if the indicated screen current, plate voltage and drive voltage approximate the 'Typical Operation" values.

The screen supply voltage must be maintained constant for any values of negative and positive screen currents that may be encountered. Dangerously high plate currents may flow if the screen power supply exhibits a rising voltage characteristic with negative screen current. Stabilization may be accomplished in several different ways. A bleeder resistor may be connected from screen to cathode; a combination of VR tubes may be connected from screen to cathode; or an electron-tube regulator circuit may be used in the

screen supply. It is absolutely essential to use a bleeder if a series electron-tube regulator is employed. The screen bleeder current should approximate 70 milliamperes to adequately stabilize the screen voltage. It should be observed that this bleeder power may be usefully employed to energize low-power stages of the transmitter.

Plate Operation—The maximum rated plate dissipation power is 1000 watts. Except for brief periods during circuit adjustments, this maximum value should not be exceeded.

The top cap on the anode cooler may be used as a plate terminal at low frequencies or a circular clamp or spring-finger collet encircling the cylindrical outer surface of the anode cooler may be used at high frequencies.

Points of electrical contact with the anode cooler should be kept clean and free of oxide to minimize radio-frequency losses. The anode cooler should be inspected periodically and cleaned when necessary to remove any dirt which might interfere with effective cooling.

Special Applications – If it is desired to operate this tube under conditions different from those given here, write to the Power Grid Tube Marketing, EIMAC, Division of Varian, San Carlos California, for information and recommendations.

DIMENSIONS IN INCHES			
DIMENSIONAL DATA			
REF.	MIN.	MAX.	NOM.
A	3.335	3.365	
B	.807	.817	
C	1.870	1.900	
D	2.250	2.300	
E	2.195	2.380	
F	3.410	3.550	
G	4.600	4.800	
H	.950	1.000	
J	.675	.725	
K	.400	.450	
L	.140	.170	
M	.020	.030	
N	.700	.800	
P	.314	.326	
R	55°	65°	
S	115°	125°	
T	.470	.530	
U	.025	.048	
V	.045 DIA	.070 DIA	
W	2.468	2.531	

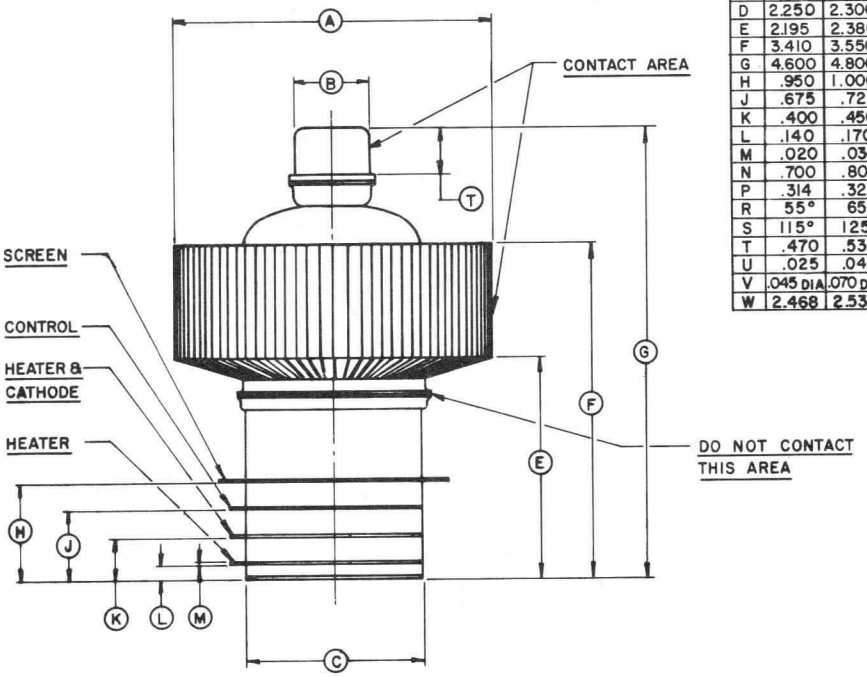

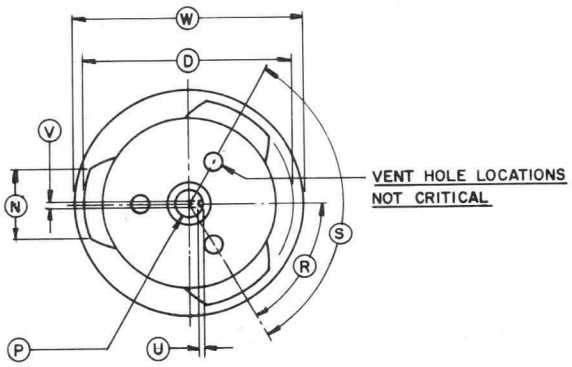

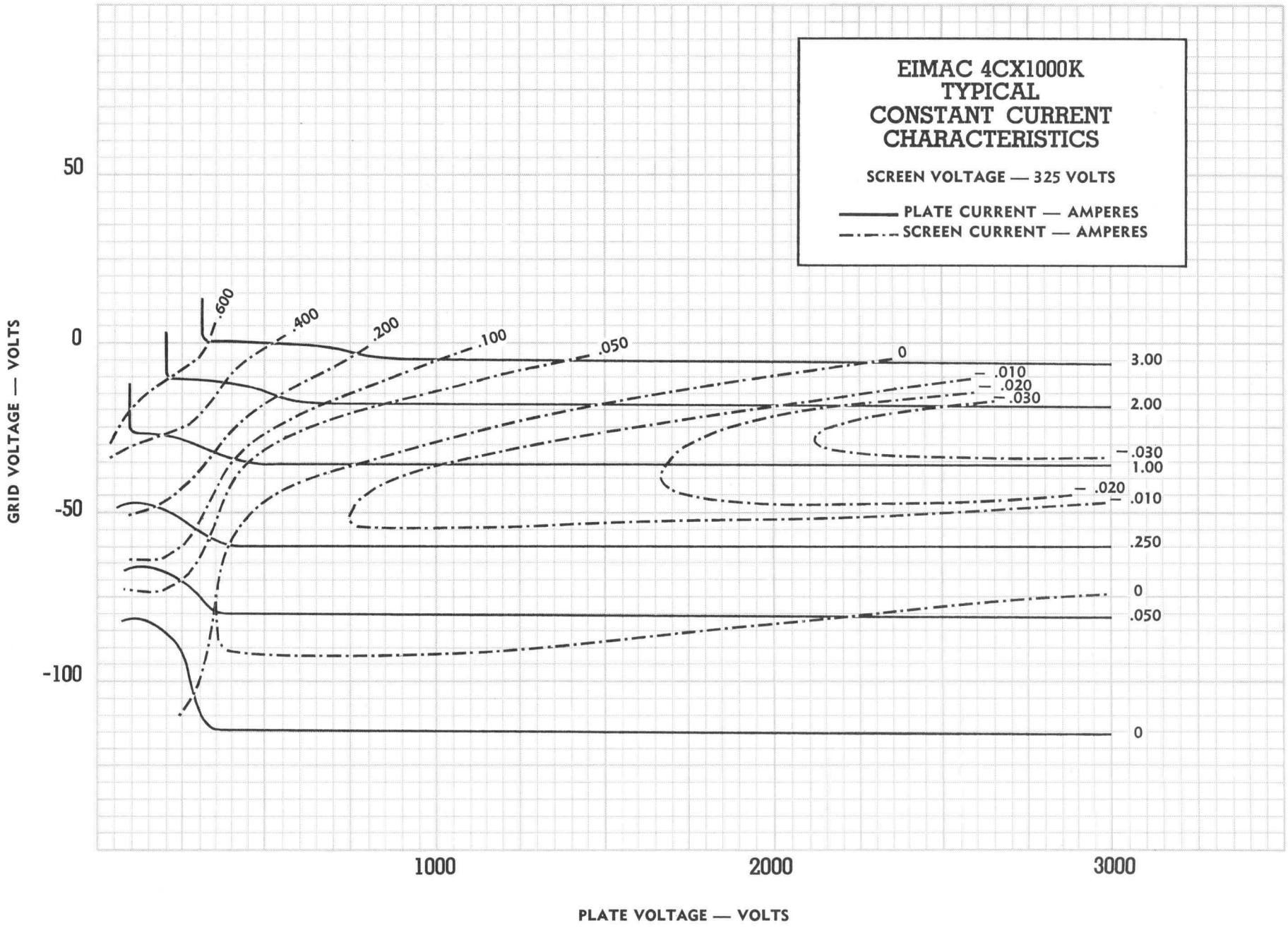
EIMAC 4CX1000K
TYPICAL
CONSTANT CURRENT
CHARACTERISTICS
SCREEN VOLTAGE — 325 VOLTS
PLATE CURRENT — AMPERES
SCREEN CURRENT — AMPERES
GRID VOLTAGE — VOLTS
50
0
-50
-100
1000
2000
3000
PLATE VOLTAGE — VOLTS
.600
.400
.200
.100
.050
0
.010
.020
.030
3.00
2.00
.030
1.00
.020
.010
.250
0
.050
0

4CX1500A

TECHNICAL DATA

RADIAL BEAM TETRODE

The EIMAC 4CX1500A is a general purpose tetrode for use up to and through VHF. Insulation is ceramic and the thoriated tungsten filament is a rugged mesh design. The screen terminal is a continuous ring which allows good isolation between the plate circuit and the control grid circuit.

The 4CX1500A is recommended for use as a class C power amplifier, class B, or class AB_1 linear amplifier, as a regulator, and in pulse modulator service.



GENERAL CHARACTERISTICS[1]

ELECTRICAL

Filament Voltage	5.0 volts
Filament Current	38.5 amps
Amplification Factor (Grid Screen)	5.5
Transconductance (I_b = 1 ampere)	
E_{c_2} = 500 volts, Eb = 200 volts)	26,000 μmho
Frequency for Maximum Ratings	150 MHz
Direct Interelectrode Capacitances (Grounded Cathode) [2]	
Cin	78.0 pF
Cout	10.5 pF
Cgp	0.25 pF

1. Characteristics and operating values are based upon performance tests. These figures may change without notice as the result of additional data or product refinement. EIMAC Division of Varian should be consulted before using this information for final equipment design.

2. Capacitance values are for a cold tube as measured in a special shielded fixture in accordance with Electronic Industries Association Standard RS-191.

MECHANICAL

Base	Special ring and breechblock terminal surfaces
Recommended Socket	EIMAC SK-831
Recommended Air Chimney	EIMAC SK-806
Operating Position	Axis Vertical
Maximum Anode Core Temperature	250°C
Maximum Seal Temperature	250°C
Cooling	Forced Air

(Effective 12-1-71) © by Varian Printed in U.S.A.

Maximum Dimensions

Height	4.90 in; 124.5 mm
Diameter	3.37 in; 85.6 mm
Net Weight	30 oz; 850 gm
Shipping Weight (Approximately)	3 lb; 1.21 kg

RANGE VALUES FOR EQUIPMENT DESIGN

	Min.	Max.
Filament Current, E_f = 5.0 V	36.5	40.5 A
Interelectrode Capacitance (grounded cathode circuit) [1]		
Cin	73.0	83.0 pF
Cout	8.5	12.5 pF
Cgp	---	0.4 pF

1. Capacitance values are for a cold tube as measured in a special shielded fixture in accordance with Electronic Industries Association Standard RS-191.

RADIO-FREQUENCY LINEAR AMPLIFIER

Class AB

MAXIMUM RATINGS:

DC PLATE VOLTAGE	4000 VOLTS
DC SCREEN VOLTAGE	750 VOLTS
DC PLATE CURRENT	1.0 AMPERE
PLATE DISSIPATION	1500 WATTS
SCREEN DISSIPATION	75 WATTS
CONTROL GRID DISSIPATION	25 WATTS

TYPICAL OPERATION Class AB_1

DC Plate Voltage	2500	3900 V
DC Screen Voltage	600	600 V
DC Grid Voltage [1]	-105	-110 V
Zero-Signal Plate Current	250	200 mA
Max-Signal Plate Current	765	750 mA
Max-Signal Screen Current [2]	46	40 mA
Peak RF Driving Voltage	95	100 v
Resonant Plate Load Resistance	1670	2900 Ω
Max-Signal Plate Power Out	1080	1850 W

1. Adjust to specified zero-signal dc plate current.
2. Approximate values.

RADIO-FREQUENCY POWER AMPLIFIER OR OSCILLATOR

Class C Telegraphy or FM
(Continuous Operating Conditions)

MAXIMUM RATINGS:

DC PLATE VOLTAGE	5000 VOLTS
DC SCREEN VOLTAGE	750 VOLTS
DC PLATE CURRENT	1.0 AMPERE
PLATE DISSIPATION	1500 WATTS
SCREEN DISSIPATION	75 WATTS
CONTROL GRID DISSIPATION	25 WATTS

TYPICAL OPERATION

	Low Freq. Calculated		220 MHz Measured
DC Plate Voltage	3000	4000	3000 V
DC Screen Voltage	500	500	500 V
DC Grid Voltage	-200	-200	-116 V
DC Plate Current	800	800	1000 mA
DC Screen Current [2]	36	37	35 mA
DC Grid Current [2]	17	15	0 mA
Peak RF Grid Voltage	240	240	--- v
Driving Power	4.1	3.6	31.5 W
Resonant Load Resistance	1720	2570	--- Ω
Plate Dissipation	600	700	--- W
Power Output	1800	2500	1500 W [1]

1. Useful Power Output
2. Approximate values.

PLATE-MODULATED RADIO-FREQUENCY POWER AMPLIFIER

Class C Telephony
(Carrier Conditions unless noted)

MAXIMUM RATINGS:

DC PLATE VOLTAGE	3500	VOLTS
DC SCREEN VOLTAGE	550	VOLTS
DC PLATE CURRENT	.8	AMPERE
PLATE DISSIPATION [1]	1000	WATTS
SCREEN DISSIPATION	75	WATTS
CONTROL GRID DISSIPATION	25	WATTS

1. Corresponds to 1500 watts at 100% sine-wave modulation.

TYPICAL OPERATION

	Low Frequency Calculated		
DC Plate Voltage	2500	3400	V
DC Screen Voltage	500	500	V
DC Grid Voltage	-300	-300	V
Peak Audio Screen Voltage (For 100% mod. approx.)	500	500	v
DC Plate Current	800	900	mA
DC Screen Current [2]	46	28	mA
DC Grid Current [2]	27	28	mA
Peak RF Grid Voltage	365	365	v
Grid Driving Power	10	10	W
Resonant Load Resonant	3200	1940	Ω
Plate Dissipation	620	780	W
Plate Power Out	1600	2320	W

2. Approximate value.

AUDIO-FREQUENCY AMPLIFIER OR MODULATOR

Class AB

MAXIMUM RATINGS:

DC PLATE VOLTAGE	4000	VOLTS
DC SCREEN VOLTAGE	750	VOLTS
DC PLATE CURRENT	1.0	AMPERE
PLATE DISSIPATION	1500	WATTS
SCREEN DISSIPATION	75	WATTS
CONTROL GRID DISSIPATION	25	WATTS

TYPICAL OPERATION (Two Tubes) Class AB_1

DC Plate Voltage	2500	3900	V
DC Screen Voltage	600	600	V
DC Grid Voltage	-105	-110	V
Zero-Signal Plate Current	500	400	mA
Max-Signal Plate Current	1.530	1.500	A
Max-Signal Screen Current [2]	90	80	mA
Peak AF Driving Voltage	95	100	v
Load Resistance Plate to Plate	3340	5800	Ω
Max-Signal Plate Dissipation [1]	820	1070	W
Max-Signal Plate Power Out	2160	3700	W

1. Per Tube
2. Approximate value.

NOTE: TYPICAL OPERATION data is obtained by direct measurement or by calculation from published characteristic curves. Adjustment of the rf grid voltage to obtain the specified plate current at the specified bias screen and plate voltage is assumed. If this procedure is followed, there will be little variation in output power when the tube is changed, even though there may be some variation in grid and screen current. The grid and screen currents which result when the desired plate current is obtained are incidental and vary from tube to tube. These current variations cause no difficulty so long as the circuit maintains the correct voltage in the presence of the variations in current. In Class C service, if grid bias is obtained principally by means of a grid resistor, the resistor must be adjustable to obtain the required bias voltage when the correct rf grid voltage is applied.

APPLICATION

MECHANICAL

MOUNTING - The 4CX1500A must be operated with its axis vertical. The base of the tube may be down or up at the convenience of the circuit designer.

SOCKET - The EIMAC SK-831 socket and SK-806 chimney have been designed especially for the 4CX1500A. The use of recommended airflow rates through these sockets provides effective forced-air cooling of the tube. Air forced into the bottom of the socket passes over the tube terminals through the Air Chimney, and through the anode cooling fins.

COOLING - The maximum temperature rating for the anode core of the 4CX1500A is 250°C. Sufficient forced-air circulation must be provided to keep the temperature of the anode at the base of the cooling fins and the temperature of the ceramic/metal seals below 250°C. Air-flow requirements to maintain seal temperature at 225°C in 50°C ambient air are tabulated on page 4 (for operation below 30 MHz).

	SEA LEVEL		6000 FEET	
Plate Dissipation (Watts)	Air Flow (CFM)	Pressure Drop (Inches of Water)	Air Flow (CFM)	Pressure Drop (Inches of Water)
1000	27	0.33	33	0.40
1500	47	0.76	58	0.95

*Since the power dissipated by the filament represents about 200 watts and since grid-plus-screen dissipation can, under some conditions, represent another 100 watts, allowance has been made in preparing this tabulation for an additional 300 watts dissipation.

The blower selected in a given application must be capable of supplying the desired air flow at a back pressure equal to the pressure drop shown above plus any drop encountered in ducts and filters.

At other altitudes and ambient temperatures the flow rate must be modified to obtain equivalent cooling. The flow rate and corresponding pressure differential must be determined individually in such cases, using rated maximum temperatures as the criteria for satisfactory cooling.

ELECTRICAL

FILAMENT OPERATION - The rated filament voltage for the 4CX1500A is 5.0 volts. Filament voltage, as measured at the socket, should be maintained at this value or below to obtain maximum tube life.

CONTROL GRID OPERATION - The rated dissipation of the grid is 25 watts. This is approximately the product of dc grid current and peak positive grid voltage. Operation at bias and drive levels near those listed will insure safe operation.

SCREEN GRID OPERATION - The power dissipated by the screen of the 4CX1500A must not exceed 75 watts.

Screen dissipation, in cases where there is no ac applied to the screen, is the simple product of the screen voltage and the screen current. If the screen voltage is modulated, the screen dissipation will depend upon RMS screen current and voltage.

Screen dissipation is likely to rise to excessive values when the plate voltage, bias voltage, or plate load are removed with filament and screen voltages applied. Suitable protective means must be provided to limit the screen dissipation to 75 watts in the event of circuit failure.

HIGH VOLTAGE - Normal operating voltages used with the 4CX1500A are deadly, and the equipment must be designed properly and operating precautions must be followed. Design all equipment so that no one can come in contact with high voltages. All equipment must include safety enclosures for high-voltage circuits and terminals, with interlock switches to open primary circuits of the power supply and to discharge high-voltage condensers whenever access doors are opened. Interlock switches must not be bypassed or "cheated" to allow operation with access doors open. Always remember that HIGH VOLTAGE CAN KILL.

RADIO FREQUENCY RADIATION - Avoid exposure to strong rf fields even at relatively low frequency. Absorption of rf energy by human tissue is dependent on frequency. Under 30 MHz, most of the energy will pass completely through the human body with little attenuation or heating effect. Public health agencies are concerned with the hazard, however, even at these frequencies, and it is worth noting that some commercial dielectric heating units actually operate at frequencies as low as the 13 and 27 MHz bands.

INTERELECTRODE CAPACITANCE - The actual internal interelectrode capacitance of a tube is influenced by many variables in most applications, such as stray capacitance to the chassis, capacitance added by the socket used, stray capacitance between tube terminals, and wiring effects. To control the actual capacitance values within the tube, as the key component involved, the industry and the Military Services use a standard test procedure as described in Electronic Industries Association Standard RS-191. This requires the use of specially constructed test fixtures which effectively shield all external tube leads from each other and eliminates any capacitance reading to "ground".

The test is performed on a cold tube. Other factors being equal, controlling internal tube capacitance in this way normally assures good interchangeability of tubes over a period of time, even when the tube may be made by different manufacturers. The capacitance values shown in the manufacturer's technical data, or test specifications, normally are taken in accordance with Standard RS-191.

The equipment designer is therefore cautioned to make allowance for the actual capacitance values which will exist in any normal application. Measurements should be taken with the socket and mounting which represent approximate final layout if capacitance values are highly significant in the design.

MULTIPLE OPERATION - To obtain maximum power output with minimum distortion from tubes operated in multiple, it is desirable to adjust individual screen or grid bias voltages so that the peak plate current for each tube is equal at the crest of the exciting voltage. Under these conditions, individual dc plate currents will be approximately equal for full input signal.

SPECIAL APPLICATION - If it is desired to operate this tube under conditions widely different from those listed here, write to Power Grid Tube Division, EIMAC Division of Varian, 301 Industrial Way, San Carlos, California 94070, for information and recommendations.

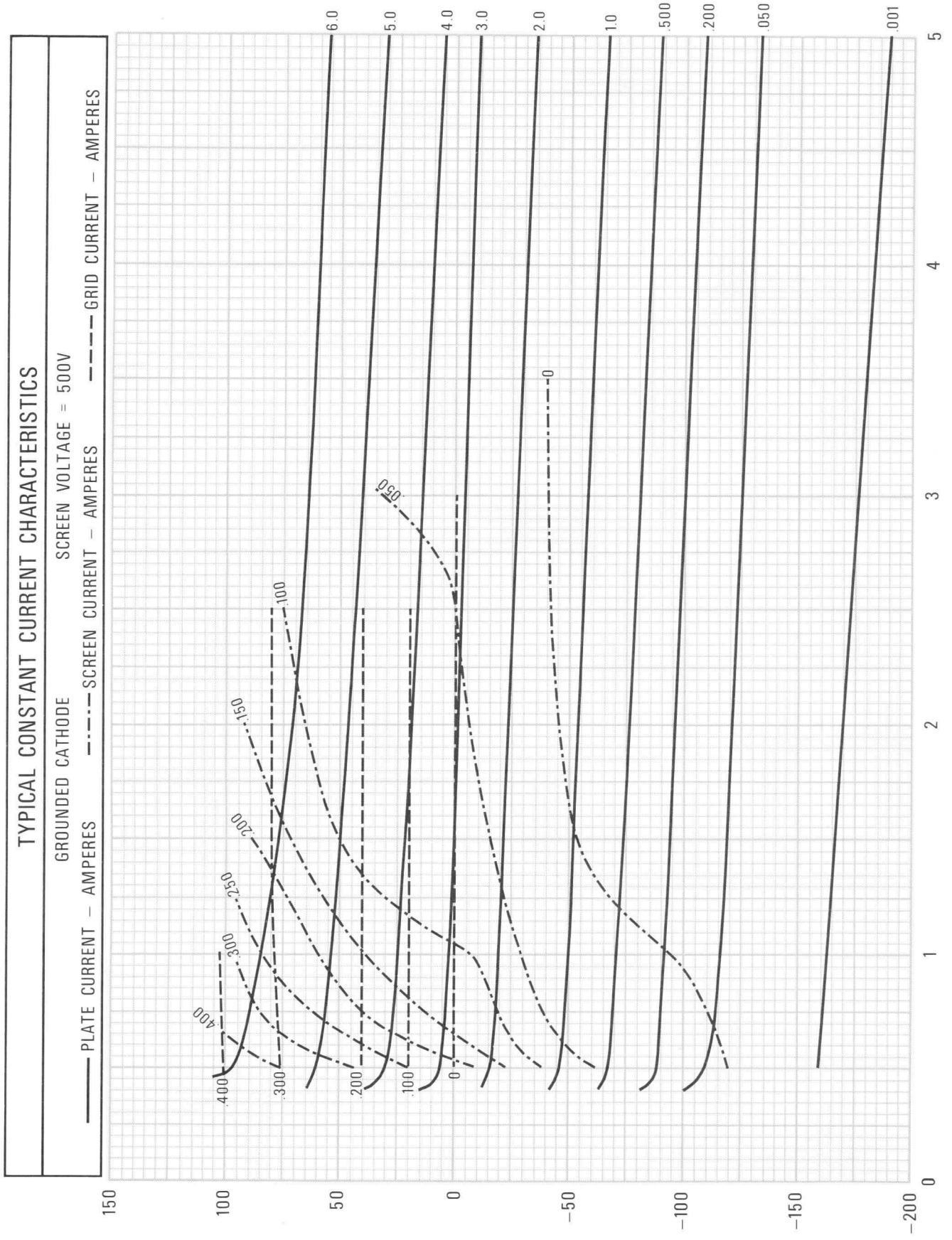
TYPICAL CONSTANT CURRENT CHARACTERISTICS
GROUNDED CATHODE
SCREEN VOLTAGE = 500V
PLATE CURRENT – AMPERES
SCREEN CURRENT – AMPERES
GRID CURRENT – AMPERES
GRID VOLTAGE (V)
PLATE VOLTAGE (kV)
CURVE #4145
6.0
5.0
4.0
3.0
2.0
1.0
.500
.200
.050
.001
.400
.300
.250
.200
.150
.100
.050
0
150
100
50
0
–50
–100
–150
–200
0
1
2
3
4
5

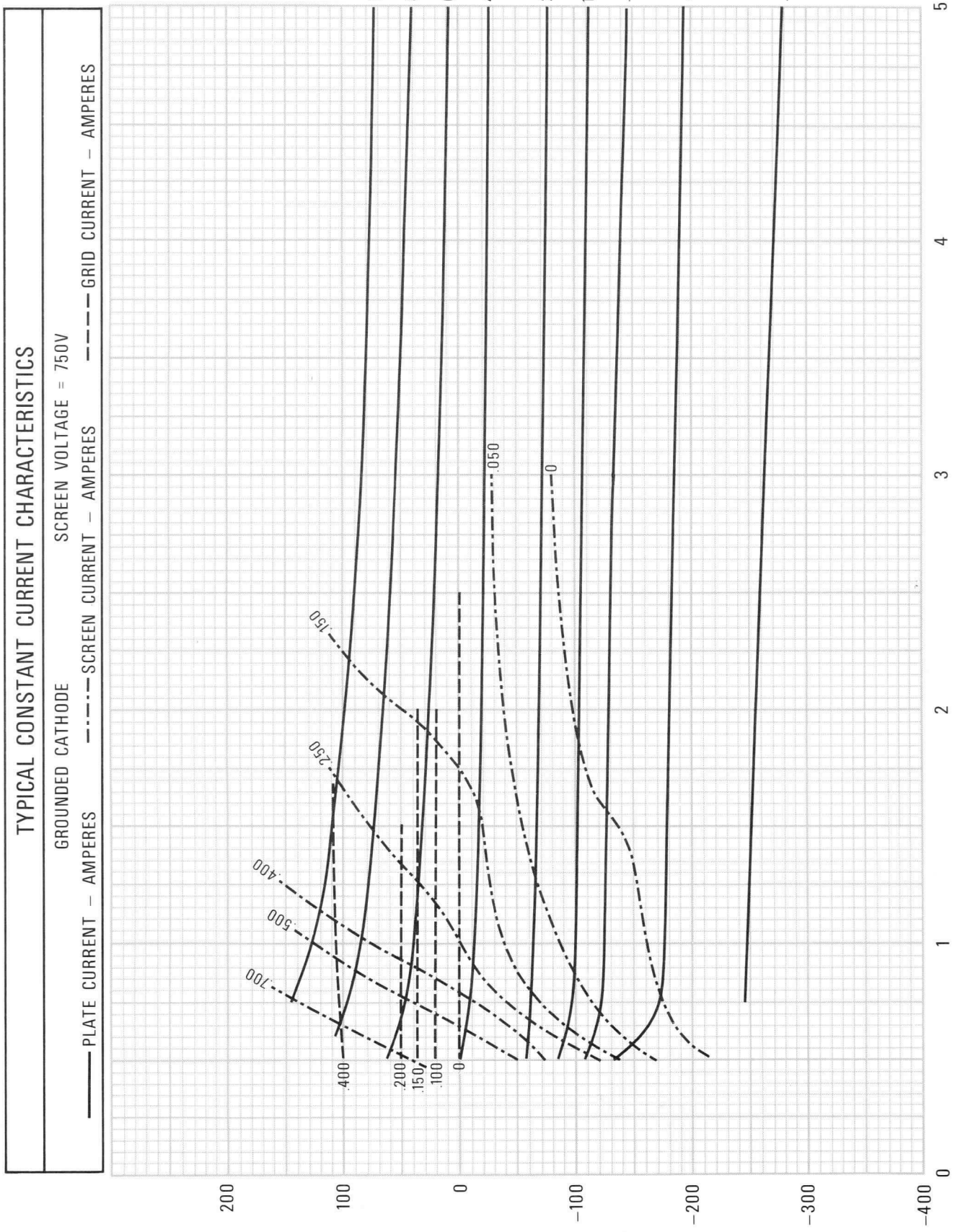
TYPICAL CONSTANT CURRENT CHARACTERISTICS
GROUNDED CATHODE
SCREEN VOLTAGE = 750V
PLATE CURRENT – AMPERES
SCREEN CURRENT – AMPERES
GRID CURRENT – AMPERES
10.0
8.0
6.0
4.0
2.0
1.0
.500
.050
.001
.050
0
150
250
400
500
700
400
200
150
100
0
200
100
0
–100
–200
–300
–400
0
1
2
3
4
5
GRID VOLTAGE (V)
PLATE VOLTAGE (kV)
CURVE #4146

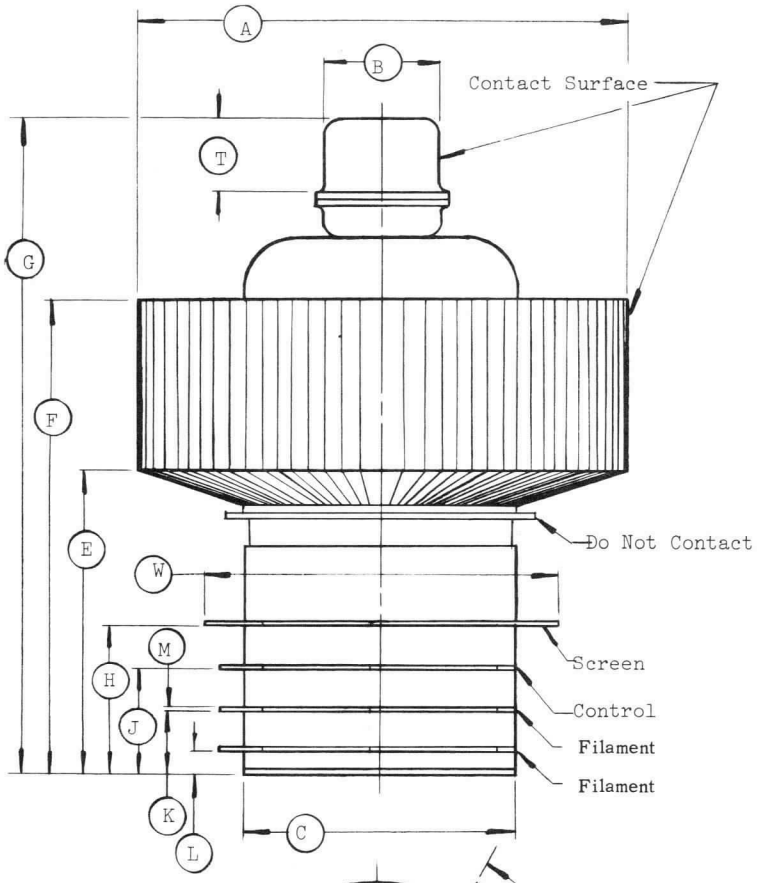

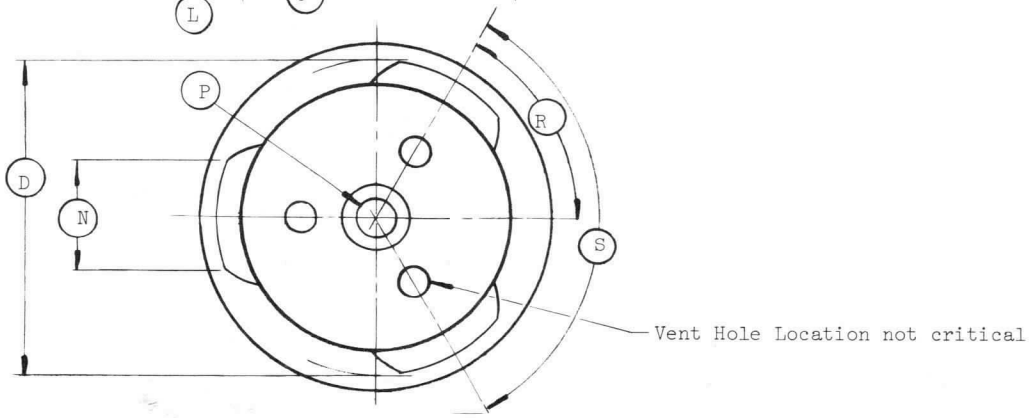

DIMENSIONAL DATA						
DIM.	INCHES			MILLIMETERS		
	MIN.	MAX.	REF.	MIN.	MAX.	REF.
A	3.335	3.370	- -	84.71	85.60	- -
B	0.807	0.820	- -	20.50	20.83	- -
C	1.865	1.900	- -	47.37	48.26	- -
D	2.250	2.300	- -	57.15	58.42	- -
E	2.265	2.465	- -	57.53	62.61	- -
F	3.454	3.654	- -	87.73	92.81	- -
G	4.675	4.900	- -	118.74	124.46	- -
H	0.965	0.988	- -	24.51	25.09	- -
J	0.690	0.710	- -	17.53	18.03	- -
K	0.415	0.435	- -	10.54	11.05	- -
L	0.140	0.165	- -	3.56	4.19	- -
M	0.018	0.030	- -	00.46	0.76	- -
N	0.700	0.800	- -	17.78	20.32	- -
P	0.314	0.326	- -	7.97	8.28	- -
R	55°	65°	- -	55°	65°	- -
S	115°	125°	- -	115°	125°	- -
T	0.470	0.530	- -	11.94	13.46	- -
W	2.468	2.531	- -	62.69	64.29	- -

NOTES:
1. REF. DIMENSIONS ARE FOR INFO. ONLY & ARE NOT REQUIRED FOR INSPECTION PURPOSES.

EIMAC
Division of Varian
SAN CARLOS
CALIFORNIA

4CX1500B
RADIAL BEAM POWER TETRODE

JEDEC DESIGNATION
8660



The EIMAC 4CX1500B is ceramic and metal, forced-air cooled, radial beam tetrode with a rated maximum plate dissipation of 1500 watts. It is a low-voltage, high-current tube specifically designed for exceptionally low intermodulation distortion and low grid interception. The low distortion characteristics make the 4CX1500B especially suitable for radio-frequency and audio-frequency linear amplifier service.

GENERAL CHARACTERISTICS

ELECTRICAL

	Min.	Nom.	Max.	
Cathode: Oxide Coated, Unipotential				
Heating Time	3			min
Heater: Voltage		6.0		V
Current	9.0		11.0	A
Transconductance:				
(I_b=0.5 amperes, E_{c2}=225 volts)		30,000		umhos

Direct Interelectrode Capacitances, Grounded Cathode: *	Min.	Nom.	Max.	
Input	75		88	pF
Output	10.8		12.8	pF
Feedback			.03	pF
Direct Interelectrode Capacitances, Grounded Grid and Screen: *				
Input		38		pF
Output		12		pF
Feedback			0.005	pF

*In Shielded Fixture

MECHANICAL

Base	Special, breechblock terminal surfaces
Maximum Operating Temperatures:	
Ceramic-to-Metal Seals	250°C
Anode Core	250°C
Recommended Socket	EIMAC SK-800 Series
Operating Position	Any
Maximum Over-All Dimensions:	
Height	4.8 in
Diameter	3.37 in
Net Weight	27 oz
Shipping Weight (Approximate)	3 lbs

RADIO-FREQUENCY LINEAR AMPLIFIER

Class AB

MAXIMUM RATINGS

DC PLATE VOLTAGE	3000 VOLTS
DC SCREEN VOLTAGE	400 VOLTS
DC PLATE CURRENT	.900 AMP
PLATE DISSIPATION	1500 WATTS
SCREEN DISSIPATION	12 WATTS
CONTROL GRID DISSIPATION	1 WATT

*Adjust to the specified Zero-Signal Plate Current.
**The driving power specified includes the power dissipated in a 1000 ohm swamping resistor between the control grid and the cathode.
***The intermodulation distortion products will be as specified or better for all levels from zero-signal to maximum output power and are referenced against one tone of a two equal tone signal.

TYPICAL OPERATION (Frequencies below 30 MHz)

Class AB_2, Grid Driven, Peak Envelope or Modulation Crest Conditions

DC Plate Voltage	2500	2750	2900	Volts
DC Screen Voltage	225	225	225	Volts
DC Grid Voltage*	—34	—34	—34	Volts
Zero-Signal DC Plate Current	300	300	300	mA
Single-Tone DC Plate Current	720	755	710	mA
Two-Tone DC Plate Current	530	555	542	mA
Single-Tone DC Grid Current	1.3	0.95	0.53	mA
Two-Tone DC Grid Current	0.06	0.20	0.06	mA
Single-Tone DC Screen Current	—7	—14	—15	mA
Two-Tone DC Screen Current	—11	—11	—11	mA
Peak RF Grid Voltage	46	45	41	Volts
Driving Power**	1.5	1.5	1.5	Watts
Useful Output Power	900	1100	1100	Watts
Resonant Load Impedance	1900	1900	2200	Ohms
Intermodulation Distortion Products***— 3rd order	—38	—40	—43	dB
5th order	—47	—48	—47	dB

(Revised 6-1-67) © 1966, 1967, 1968 by Varian

Printed in U.S.A.

AUDIO AMPLIFIER OR MODULATOR

Class AB_1

MAXIMUM RATINGS

DC PLATE VOLTAGE	3000 VOLTS
DC SCREEN VOLTAGE	400 VOLTS
DC PLATE CURRENT	.900 AMP
PLATE DISSIPATION	1500 WATTS
SCREEN DISSIPATION	12 WATTS
GRID DISSIPATION	1.0 WATTS

*Approximate values.
**Adjust grid bias to obtain listed zero-signal plate current.

TYPICAL OPERATION (Sinusoidal wave, 2 tubes unless noted)

DC Plate Voltage	2000	2500	2900	Volts
DC Screen Voltage	325	325	325	Volts
DC Grid Voltage**	—60	—60	—60	Volts
Zero-Signal DC Plate Current	500	500	500	mA
Max.-Signal DC Plate Current	1.68	1.69	1.69	Amps
Zero-Signal DC Screen Current*	—30	—25	—20	mA
Max.-Signal DC Screen Current*	—27	—33	—32	mA
Effective Load, Plate to Plate	1948	2715	3333	Ohms
Driving Power	0	0	0	Watts
Max.-Signal Plate Output Power	1604	2258	2774	Watts

NOTE: "TYPICAL OPERATION" data are obtained by calculation from the published characteristic curves and confirmed by direct tests. Adjustment of the grid bias to obtain the specified zero-signal plate current is assumed. When grid drive is applied, the screen voltage required to obtain the specified value of plate current without drawing grid current may vary somewhat from the typical values shown.

APPLICATION

Cooling — The maximum temperature rating for the anode core of the 4CX1500B is 250°C. Sufficient forced air circulation must be provided to keep the temperature of the anode at the base of the cooling fins and the temperature of the ceramic-to-metal seals to below 250°C. Air flow requirements to maintain seal temperature at 225°C in 50°C ambient air are tabulated below (for operation below 30 megahertz). Tube mounted in recommended socket and chimney.

	Sea Level		10,000 feet	
Plate Dissipation watts	Air Flow CFM	Pressure Drop inches water	Air Flow CFM	Pressure Drop inches water
1000	18	.23	24	.31
1500	34	.60	45	.80

*Since the power dissipated by the heater represents about 60 watts and since grid plus screen dissipation can, under some conditions, represent another 13 watts, allowance has been made in preparing this tabulation for an additional 73 watts dissipation.

The blower selected in a given application must be capable of supplying the desired air flow at a back pressure equal to the pressure drop shown above plus any drop encountered in ducts and filters.

At other altitudes and ambient temperatures the flow rate must be modified to obtain equivalent cooling. The flow rate and corresponding pressure differential must be determined individually in such cases, using rated maximum temperatures as the criteria for satisfactory cooling.

Heater — The rated heater voltage for the 4CX1500B is 6.0 volts. The voltage, as measured at the socket, should be maintained at this value to minimize variations in operation and to obtain maximum tube life. In no case should the voltage be allowed to exceed 5% above or below the rated value.

The cathode and one side of the heater are internally connected.

It is recommended that the heater voltage be applied for a period of not less than 3 minutes before other operating voltages are applied. From an initial cold condition, tube operation will stabilize after a period of approximately 5 minutes.

Intermodulation Distortion — The Radio Frequency Linear Amplifier operating conditions including the distortion data are the results of actual operation in a neutralized grid-driven amplifier. Plots of IM distortion versus power output under two-tone conditions, as a function of zero-signal plate current, are included to illustrate the effect of this parameter upon distortion. Because the 4CX1500B has very low grid interception it is possible to drive the grid positive without any adverse effects upon the distortion level or upon the driver. Class AB_2 linear amplifier operation is therefore possible and recommended. It is also recommended that a low impedance driver be used and that the input of the 4CX1500B be swamped with a 1000 ohm resistor from grid to cathode so as to provide an almost constant load to the driver.

Control-Grid Operation — The control grid dissipation rating of the 4CX1500B is 1 watt. The design features which make the 4CX1500B such an extremely linear tube also contribute to very low grid interception. It will be found that the grid will be driven into the positive grid region in the typical operation of the tube. The grid current will usually be less than 1.0 milliampere.

Screen-Grid Operation — Tetrode tubes may exhibit reversed screen current to a greater or lesser degree depending on individual tube design. This characteristic is prominent in the 4CX1500B and, under some operating conditions, indicated negative screen currents in the order of 35 milliamperes may be encountered.

The maximum rated power dissipation for the screen grid in the 4CX1500B is 12 watts and

the screen power should be kept below this level. The product of the peak screen voltage and the indicated dc screen current approximates the screen input power except when the screen current indication is near zero or negative. In the usual tetrode amplifier, where no signal voltage appears between cathode and screen, the peak screen voltage is equal to the dc screen voltage. Experience has shown that the screen will operate within the limits established for this tube if the indicated screen current, plate voltage and drive voltage approximate the "Typical Operation" values.

The screen supply voltage must be maintained constant for any values of negative and positive screen currents that may be encountered. Dangerously high plate currents may flow if the screen power supply exhibits a rising voltage characteristic with negative screen current. Stabilization may be accomplished in several different ways. A bleeder resistor may be connected from screen to cathode; a combination of VR tubes may be connected from screen to cathode; or an electron-tube regulator circuit may be used in the screen supply. It is absolutely essential to use a bleeder if a series electron-tube regulator is employed. The screen bleeder current should approximate 70 milliamperes to adequately stabilize the screen voltage. It should be observed that this bleeder power may be usefully employed to energize low-power stages of the transmitter.

Plate Operation — The maximum rated plate dissipation power is 1500 watts. Except for brief periods during circuit adjustments, this maximum value should not be exceeded.

The top cap on the anode cooler may be used as a plate terminal at low frequencies or a circular clamp or spring-finger collet encircling the cylindrical outer surface of the anode cooler may be used at high frequencies.

Points of electrical contact with the anode cooler should be kept clean and free of oxide to minimize radio-frequency losses. The anode cooler should be inspected periodically and cleaned when necessary to remove any dirt which might interfere with effective cooling.

Special Applications — If it is desired to operate this tube under conditions different from those given here, write to the Power Grid Product Manager, EIMAC Division of Varian Associates, San Carlos, California, for information and recommendations.

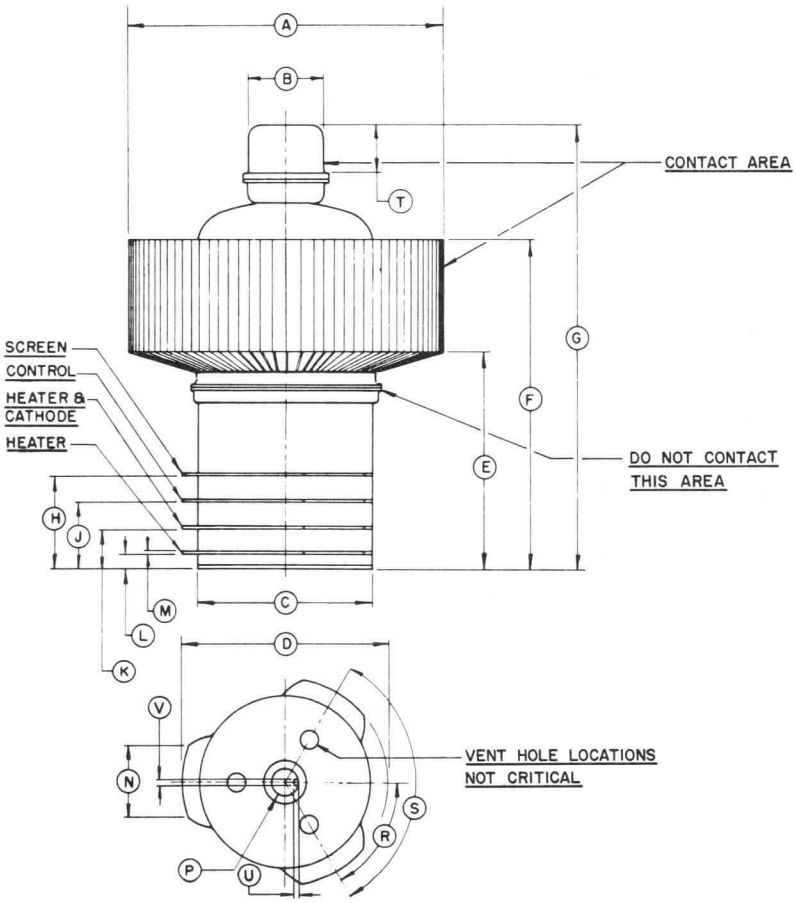

DIMENSION DATA			
REF.	NOM.	MIN.	MAX.
A		3.335	3.365
B		.807	.817
C		1.870	1.900
D		2.250 DIA.	2.300 DIA.
E		2.195	2.380
F		3.410	3.550
G		4.600	4.800
H		.950	1.000
J		.675	.725
K		.400	.450
L		.140	.170
M		.020	.030
N		.700	.800
P		.314 DIA.	.326 DIA.
R		55°	65°
S		115°	125°
T		.470	.530
U		.023	.043
V		.057 DIA.	.073 DIA.

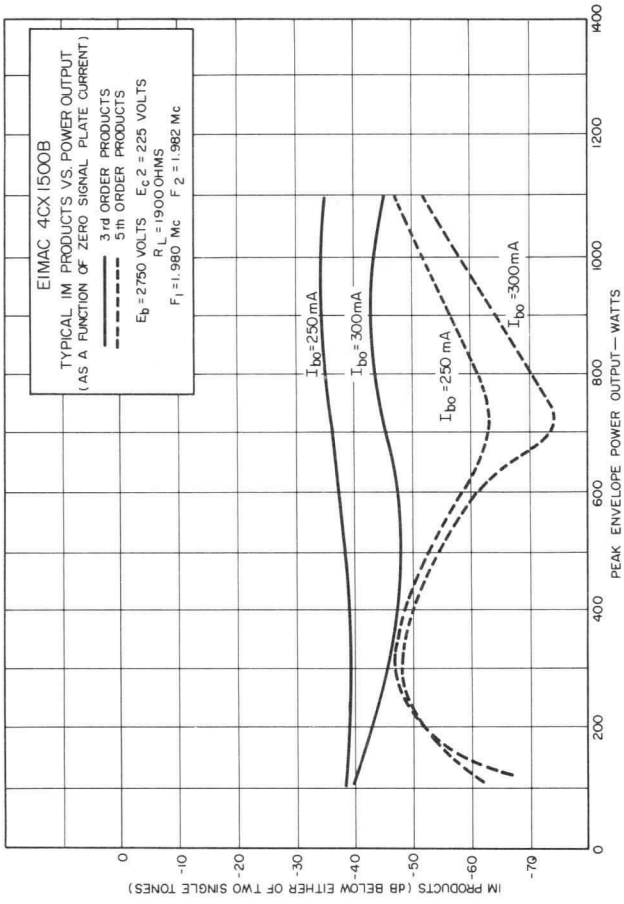
EIMAC 4CX1500B
TYPICAL IM PRODUCTS VS. POWER OUTPUT
(AS A FUNCTION OF ZERO SIGNAL PLATE CURRENT)
3rd ORDER PRODUCTS
5th ORDER PRODUCTS
Eb = 2750 VOLTS Ec2 = 225 VOLTS
RL = 1900 OHMS
F1 = 1.980 Mc F2 = 1.982 Mc
Ibo = 250mA
Ibo = 300mA
Ibo = 250 mA
Ibo = 300mA
IM PRODUCTS (dB BELOW EITHER OF TWO SINGLE TONES)
PEAK ENVELOPE POWER OUTPUT — WATTS

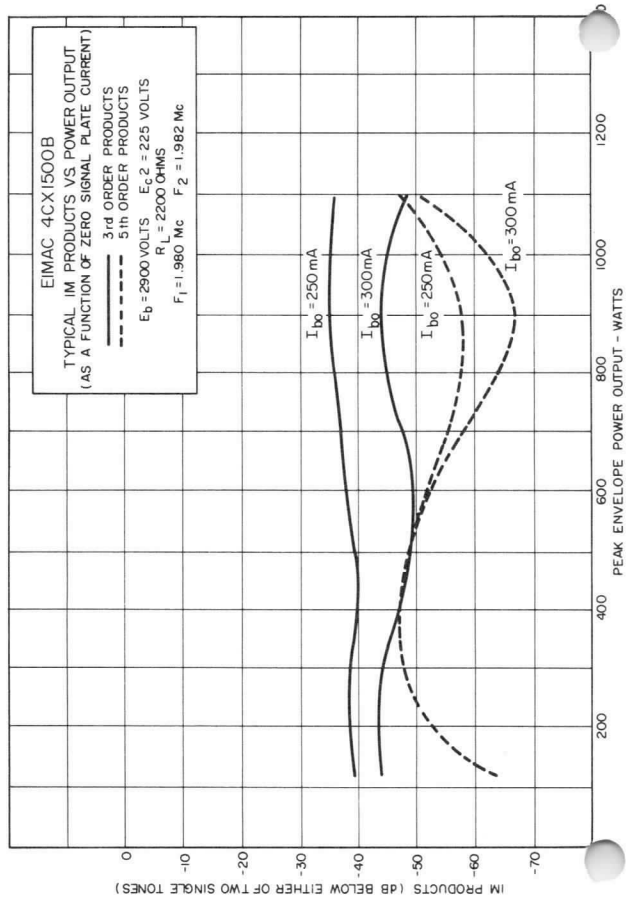
EIMAC 4CX1500B
TYPICAL IM PRODUCTS VS. POWER OUTPUT
(AS A FUNCTION OF ZERO SIGNAL PLATE CURRENT)
3rd ORDER PRODUCTS
5th ORDER PRODUCTS
Eb = 2900 VOLTS Ec2 = 225 VOLTS
RL = 2200 OHMS
F1 = 1.980 Mc F2 = 1.982 Mc
Ibo = 250mA
Ibo = 300mA
Ibo = 250mA
Ibo = 300mA
IM PRODUCTS (dB BELOW EITHER OF TWO SINGLE TONES)
PEAK ENVELOPE POWER OUTPUT - WATTS

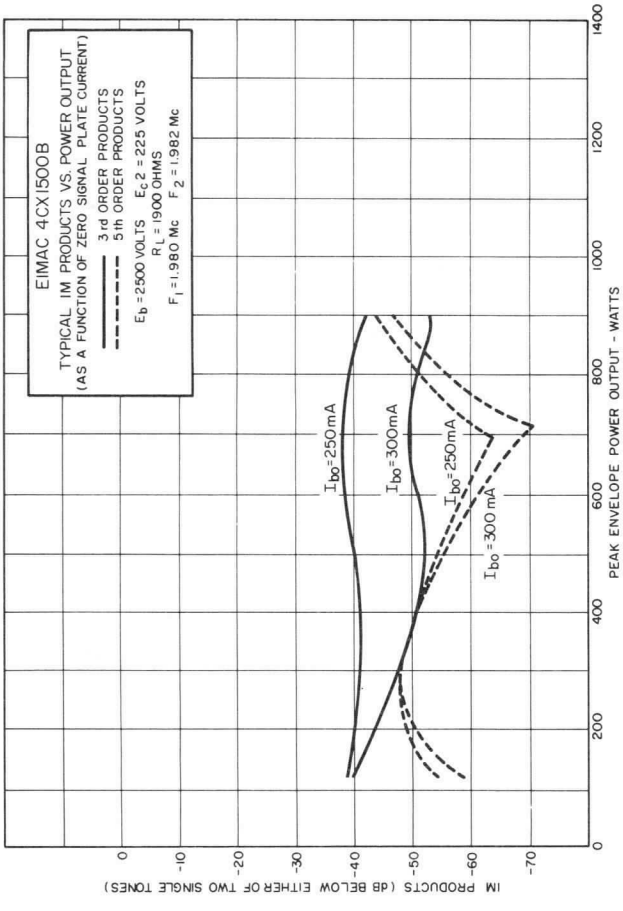
EIMAC 4CX1500B
TYPICAL IM PRODUCTS VS. POWER OUTPUT
(AS A FUNCTION OF ZERO SIGNAL PLATE CURRENT)
3rd ORDER PRODUCTS
5th ORDER PRODUCTS
Eb = 2500 VOLTS Ec2 = 225 VOLTS
RL = 1900 OHMS
F1 = 1.980 Mc F2 = 1.982 Mc
Ibo = 250mA
Ibo = 300mA
Ibo = 250mA
Ibo = 300 mA
IM PRODUCTS (dB BELOW EITHER OF TWO SINGLE TONES)
PEAK ENVELOPE POWER OUTPUT - WATTS

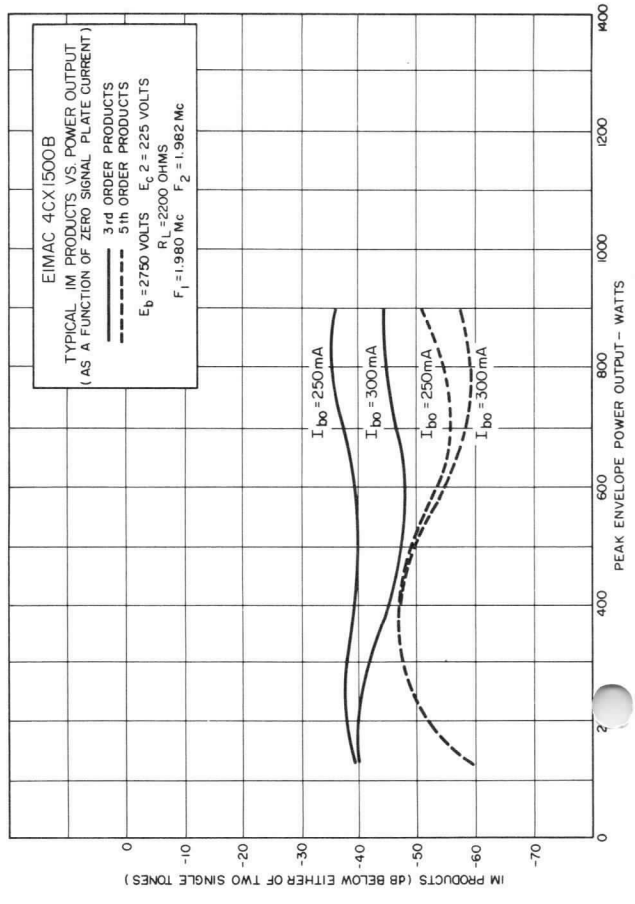
EIMAC 4CX1500B
TYPICAL IM PRODUCTS VS. POWER OUTPUT
(AS A FUNCTION OF ZERO SIGNAL PLATE CURRENT)
3rd ORDER PRODUCTS
5th ORDER PRODUCTS
Eb = 2750 VOLTS Ec2 = 225 VOLTS
RL = 2200 OHMS
F1 = 1.980 Mc F2 = 1.982 Mc
Ibo = 250mA
Ibo = 300mA
Ibo = 250mA
Ibo = 300mA
IM PRODUCTS (dB BELOW EITHER OF TWO SINGLE TONES)
PEAK ENVELOPE POWER OUTPUT - WATTS

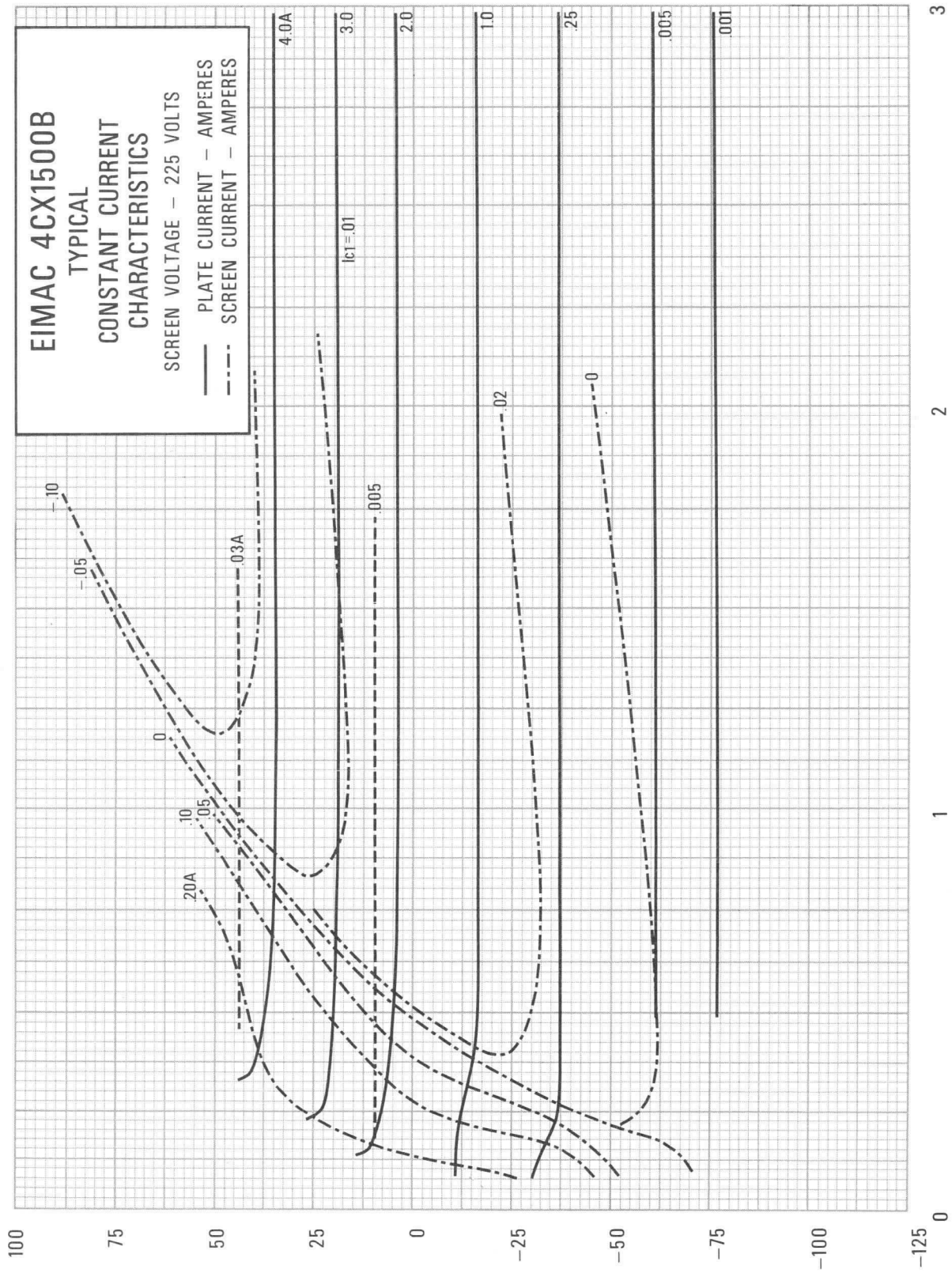
EIMAC 4CX1500B
TYPICAL
CONSTANT CURRENT
CHARACTERISTICS
SCREEN VOLTAGE – 225 VOLTS
PLATE CURRENT – AMPERES
SCREEN CURRENT – AMPERES
4.0A
3.0
2.0
1.0
.25
.005
.001
Ic1=.01
.005
.02
0
.03A
-.10
-.05
0
.10
.05
.20A
100
75
50
25
0
-25
-50
-75
-100
-125
0
1
2
3
Eb/KILOVOLTS
Ec1/VOLTS

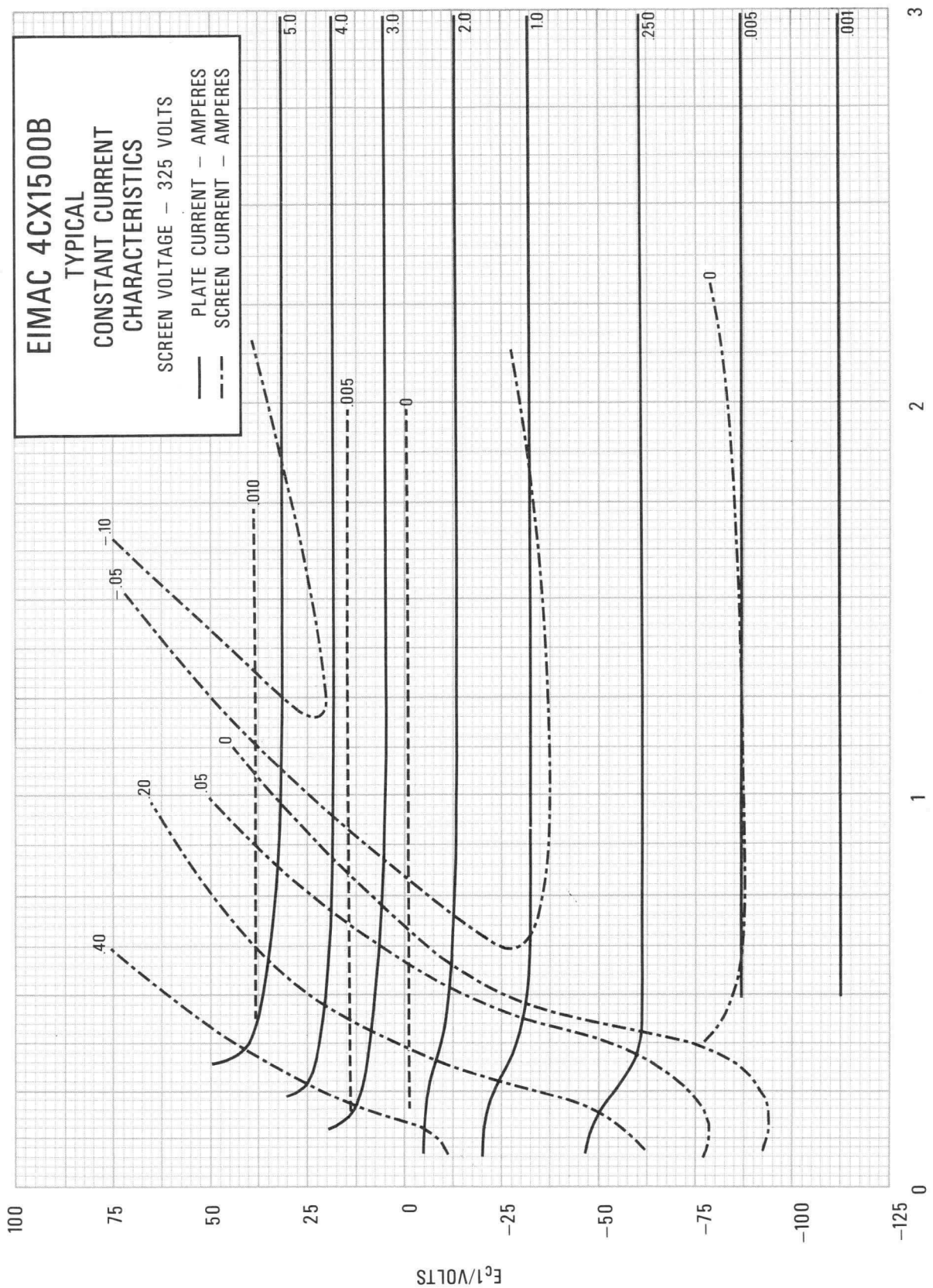
EIMAC 4CX1500B
TYPICAL
CONSTANT CURRENT
CHARACTERISTICS
SCREEN VOLTAGE – 325 VOLTS
PLATE CURRENT – AMPERES
SCREEN CURRENT – AMPERES
5.0
4.0
3.0
2.0
1.0
.250
.005
.001
0
.005
.010
-.10
-.05
0
.05
.20
.40
100
75
50
25
0
-25
-50
-75
-100
-125
0
1
2
3
E_C1/VOLTS
E_b/KILOVOLTS

EIMAC
Division of Varian
SAN CARLOS
CALIFORNIA

8169
4CX3000A
RADIAL-BEAM POWER TETRODE

The EIMAC 8169/4CX3000A is a ceramic and metal power tetrode designed to be used as a Class-AB_1 linear amplifier in audio or radio-frequency applications. Its characteristics of low intermodulation distortion make it especially suitable for single sideband service.

This tube is unique in that a production test is included to insure minimum distortion products. The 8169/4CX3000A must produce a *minimum* of 5300 watts in Class AB_1 service with IM distortion at least 32 db down, 3rd order.

The tube is also recommended for use as a Class-C radio-frequency power amplifier and plate-modulated radio-frequency power amplifier.



GENERAL CHARACTERISTICS

ELECTRICAL

	Min.	Nom.	Max.	
Filament: Thoriated Tungsten				
Voltage		9.0		volts
Current	39.5		43.5	amps
Amplification Factor (Grid Screen)		5.5		
Frequency For Maximum Ratings			150	MHz
Direct Interelectrode Capacitances, Grounded Cathode:				
Input	120		140	pF
Output	10.5		14.5	pF
Feedback			1.4	pF

Direct Interelectrode Capacitances, Grounded Grid and Screen:	Min.	Max.	
Input	55	67	pF
Output	10.5	14.5	pF
Feedback		0.2	pF

MECHANICAL

Base	Special ring and breechblock terminal surfaces
Maximum Seal Temperature	250°C
Maximum Anode Core Temperature	250°C
Recommended Socket	EIMAC SK-1400 series
Recommended Air Chimney	EIMAC SK-1406
Operating Position	Axis vertical, base up or down
Maximum Dimensions:	
Height	7.9 inches
Diameter	4.6 inches
Cooling	Forced air
Net Weight	5.5 pounds
Shipping Weight (Approximate)	10 pounds

(Revised 5-1-67) © 1965, 1967, 1969 by Varian

Printed in U.S.A.

RADIO-FREQUENCY POWER AMPLIFIER OR OSCILLATOR

Class-C Telegraphy or FM Telephony
(Key-down conditions)

MAXIMUM RATINGS

DC PLATE VOLTAGE	7000 VOLTS
DC SCREEN VOLTAGE	1000 VOLTS
DC PLATE CURRENT	2.0 AMPS
PLATE DISSIPATION	3000 WATTS
SCREEN DISSIPATION	175 WATTS
GRID DISSIPATION	50 WATTS

TYPICAL OPERATION

DC Plate Voltage	5000	7000 volts
DC Screen Voltage	500	500 volts
DC Grid Voltage	—280	—300 volts
DC Plate Current	1.9	1.9 amps
DC Screen Current	250	230 mA
DC Grid Current	100	100 mA
Peak RF Grid Voltage	385	405 volts
Driving Power	39	41 watts
Plate Dissipation	1900	2300 watts
Plate Output Power	7600	11,000 watts

PLATE-MODULATED RADIO-FREQUENCY POWER AMPLIFIER

Class-C Telephony (Carrier Conditions unless noted)

MAXIMUM RATINGS

DC PLATE VOLTAGE	5000 VOLTS
DC SCREEN VOLTAGE	600 VOLTS
DC PLATE CURRENT	1.4 AMPS
PLATE DISSIPATION*	2000 WATTS
SCREEN DISSIPATION	175 WATTS
GRID DISSIPATION	50 WATTS

*Corresponds to 3000 watts at 100 percent sine-wave modulation.

TYPICAL OPERATION

DC Plate Voltage	5000 volts
DC Screen Voltage	500 volts
Peak AF Screen Voltage (For 100% Modulation)	415 volts
DC Grid Voltage	—375 volts
DC Plate Current	1.4 amps
DC Screen Current	170 mA
DC Grid Current	68 mA
Peak RF Grid Voltage	455 volts
Grid Driving Power	31 watts
Plate Dissipation	1250 watts
Plate Output Power	5750 watts

AUDIO-FREQUENCY AMPLIFIER OR MODULATOR

Class-AB

MAXMUM RATINGS (Per Tube)

DC PLATE VOLTAGE	6000 VOLTS
DC SCREEN VOLTAGE	1000 VOLTS
DC PLATE CURRENT	2.0 AMPS
PLATE DISSIPATION	3500 WATTS
SCREEN DISSIPATION	175 WATTS
GRID DISSIPATION	50 WATTS

*Per tube
**Approximate values

TYPICAL OPERATION (Two Tubes), Class AB_1

DC Plate Voltage	5000	6000 volts
DC Screen Voltage	850	850 volts
DC Grid Voltage*	—180	—200 volts
Max-Signal Plate Current	3.6	3.1 amps
Zero-Signal Plate Current	1.0	0.7 amp
Max-Signal Screen Current**	170	120 mA
Zero-Signal Screen Current	0	0 mA
Peak AF Driving Voltage*	155	175 volts
Driving Power	0	0 watts
Load Resistance, Plate-to-Plate	3000	4160 ohms
Max-Signal Plate Dissipation*	3300	3100 watts
Max-Signal Plate Output Power	11,400	12,400 watts

NOTE: In Class AB operation, maximum plate voltage and plate current must not be applied simultaneously, as plate dissipation will be exceeded.

RADIO-FREQUENCY LINEAR AMPLIFIER

Class-AB

MAXIMUM RATINGS

DC PLATE VOLTAGE	6000 VOLTS
DC SCREEN VOLTAGE	1000 VOLTS
DC PLATE CURRENT	2.0 AMPS
PLATE DISSIPATION	3500 WATTS
SCREEN DISSIPATION	175 WATTS
GRID DISSIPATION	50 WATTS

*Approximate values

These values are obtained in existing equipment. A design test is performed on a sampling basis, insuring that the 4CX3000A will perform as indicated with respect to IM distortion products and power output.

TYPICAL OPERATION Class AB_1, Grid Driven

DC Plate Voltage	5000 volts
DC Screen Voltage	850 volts
DC Grid Voltage*	180 volts
Zero-Signal DC Plate Current	0.5 amp
Single-Tone DC Plate Current	1.65 amps
Single-Tone DC Screen Current	25 mA
Two-Tone DC Plate Current	1.10 amps
Two-Tone DC Screen Current	20 mA
Peak RF Grid Voltage	155 volts
Driving Power	0 watts
Peak Envelope Useful Output Power	5300 watts
Resonant Load Impedance	1700 ohms
Intermodulation Distortion Products (without negative feedback)	—32 db

NOTE: "TYPICAL OPERATION" data are obtained by calculation from published characteristic curves and confirmed by direct tests. No allowance is made for circuit losses. Adjustment of the rf grid drive to obtain the specified plate current at the specified grid bias, screen voltage, and plate voltage is assumed.

APPLICATION

MECHANICAL

Mounting — The 4CX3000A must be operated with its axis vertical. The base of the tube may be down or up at the convenience of the circuit designer.

Socket — The EIMAC SK-1400A and SK-1470A sockets have been designed especially for the 4CX3000A. The use of recommended air-flow rates through these sockets provides effective forced-air cooling of the tube. Air forced into the bottom of the socket passes over the tube terminals through an Air Chimney, the SK-1406, and through the anode cooling fins.

Cooling — The maximum temperature rating for the external surfaces of the 4CX3000A is 250°C. Sufficient forced-air circulation must be provided to keep the temperature of the anode at the base of the cooling fins and the temperature of the ceramic-metal seals below 250°C. Air-flow requirements to maintain seal temperature at 200°C in 40°C ambient air are tabulated below (for operation below 30 megahertz).

Plate Dissipation* (Watts)	SEA LEVEL		10,000 FEET	
	Air Flow (CFM)	Pressure Drop (Inches of water)	Air Flow (CFM)	Pressure Drop (inches of water)
1500	36.5	0.3	53	0.4
2500	60	0.8	88	1.2
3500	86	1.6	125	2.3

***Since the power dissipated by the filament represents about 450 watts and since grid-plus-screen dissipation can, under some conditions, represent another 225 watts, allowance has been made in preparing this tabulation for an additional 675 watts dissipation.**

The blower selected in a given application must be capable of supplying the desired air flow at a back pressure equal to the pressure drop shown above plus any drop encountered in ducts and filters.

At other altitudes and ambient temperatures the flow rate must be modified to obtain equivalent cooling. The flow rate and corresponding pressure differential must be determined individually in such cases, using rated maximum temperatures as the criteria for satisfactory cooling.

ELECTRICAL

Filament Operation—The rated filament voltage for the 4CX3000A is 9.0 volts. Filament voltage, as measured at the socket, should be maintained at this value to obtain maximum tube life. In no case should it be allowed to deviate by more than plus or minus five percent from the rated value.

Intermodulation Distortion — The operating conditions including distortion data are the results of actual operation in a neutralized, grid-driven amplifier. This test is performed on sample tubes from regular production runs. A plot of IM distortion versus power output under two-tone condition for a typical tube is shown on the next page.

Control Grid Operation — The rated dissipation of the grid is 50 watts. This is approximately the product of dc grid current and peak positive grid voltage. Operation at bias and drive levels near those listed will insure safe operation.

Screen-Grid Operation — The power dissipated by the screen of the 4CX3000A must not exceed 175 watts.

Screen dissipation, in cases where there is no ac applied to the screen, is the simple product of the screen voltage and the screen current. If the screen voltage is modulated, the screen dissipation will depend upon loading, driving power, and carrier screen voltage.

Screen dissipation is likely to rise to excessive values when the plate voltage, bias voltage, or plate load are removed with filament and screen voltages applied. Suitable protective means must be provided to limit the screen dissipation to 175 watts in the event of circuit failure.

Plate Dissipation—The plate-dissipation ratings for the 4CX3000A are 2000 watts for Class-C plate-modulated service and 3000 watts for Class-C telegraphy. In Class-AB operation this rating has been increased to 3500 watts to allow more input. In any Class-AB application maximum plate current and maximum plate voltage should not be applied simultaneously as the plate-dissipation rating would be exceeded.

Special Applications—If it is desired to operate this tube under conditions widely different from those given here, write to the Power Grid Tube Division or Product Manager, EIMAC Division of Varian, 301 Industrial Way, San Carlos, California, for information and recommendations.

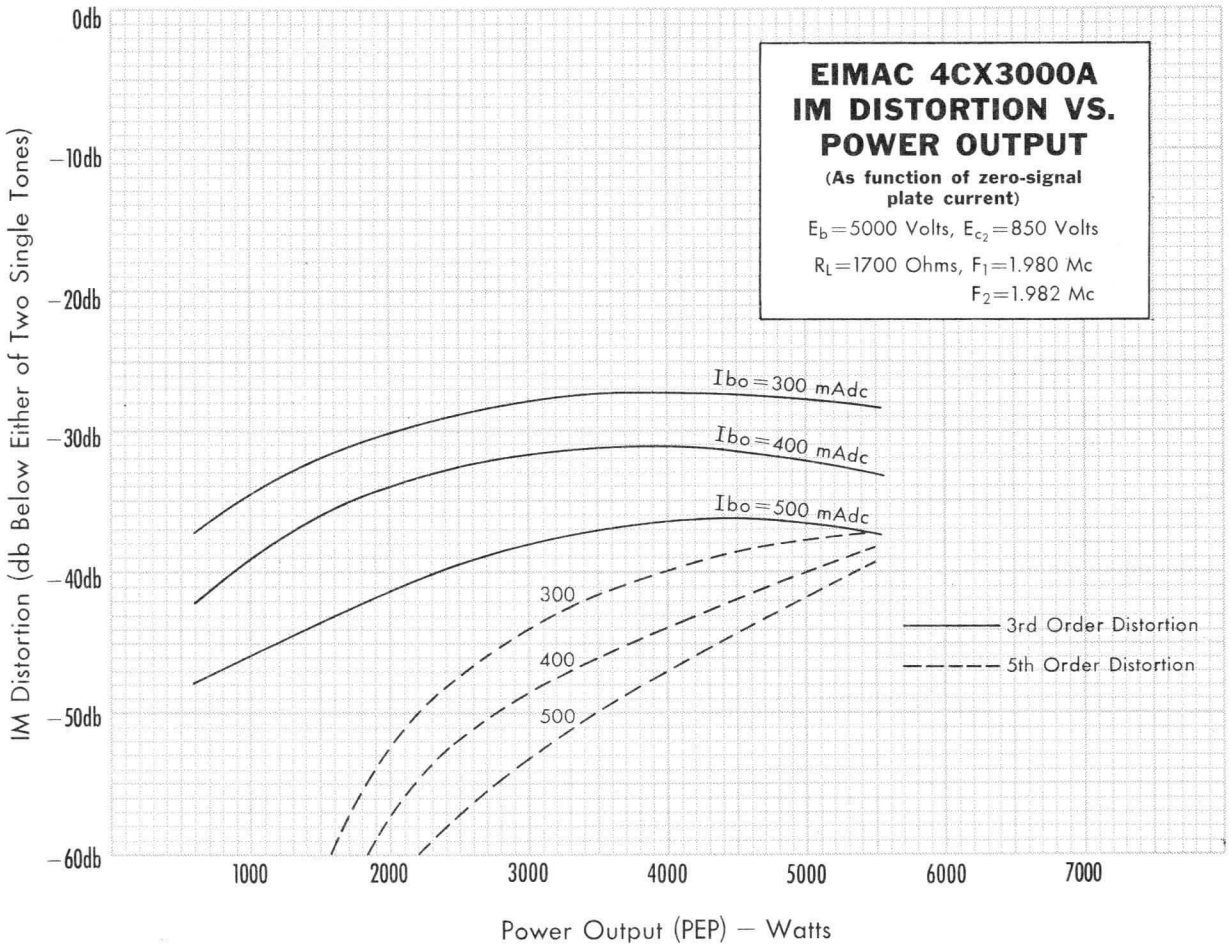

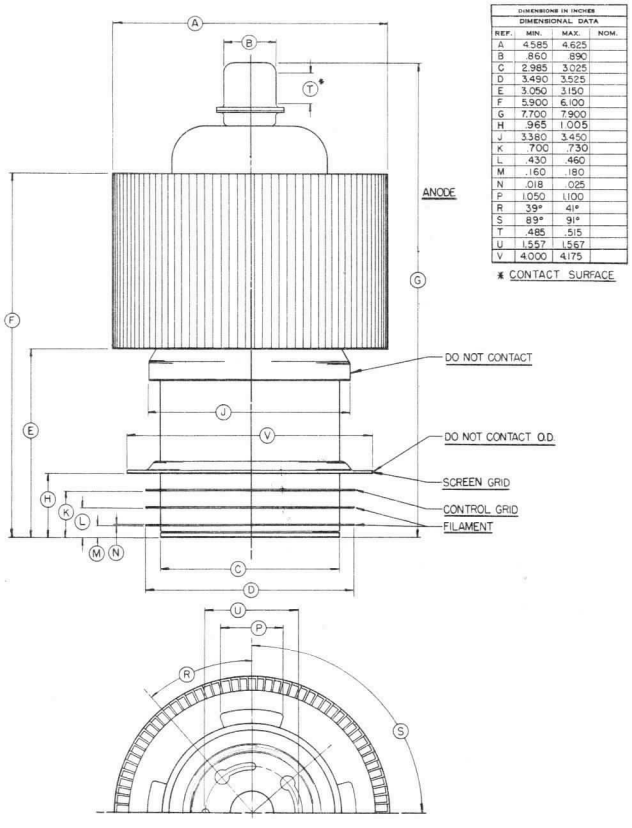

DIMENSIONS IN INCHES			
DIMENSIONAL DATA			
REF.	MIN.	MAX.	NOM.
A	4.585	4.625	
B	.860	.890	
C	2.985	3.025	
D	3.490	3.525	
E	3.050	3.150	
F	5.900	6.100	
G	7.700	7.900	
H	.965	1.005	
J	3.380	3.450	
K	.700	.730	
L	.430	.460	
M	.160	.180	
N	.018	.025	
P	1.050	1.100	
R	39°	41°	
S	89°	91°	
T	.485	.515	
U	1.557	1.567	
V	4.000	4.175	

* CONTACT SURFACE

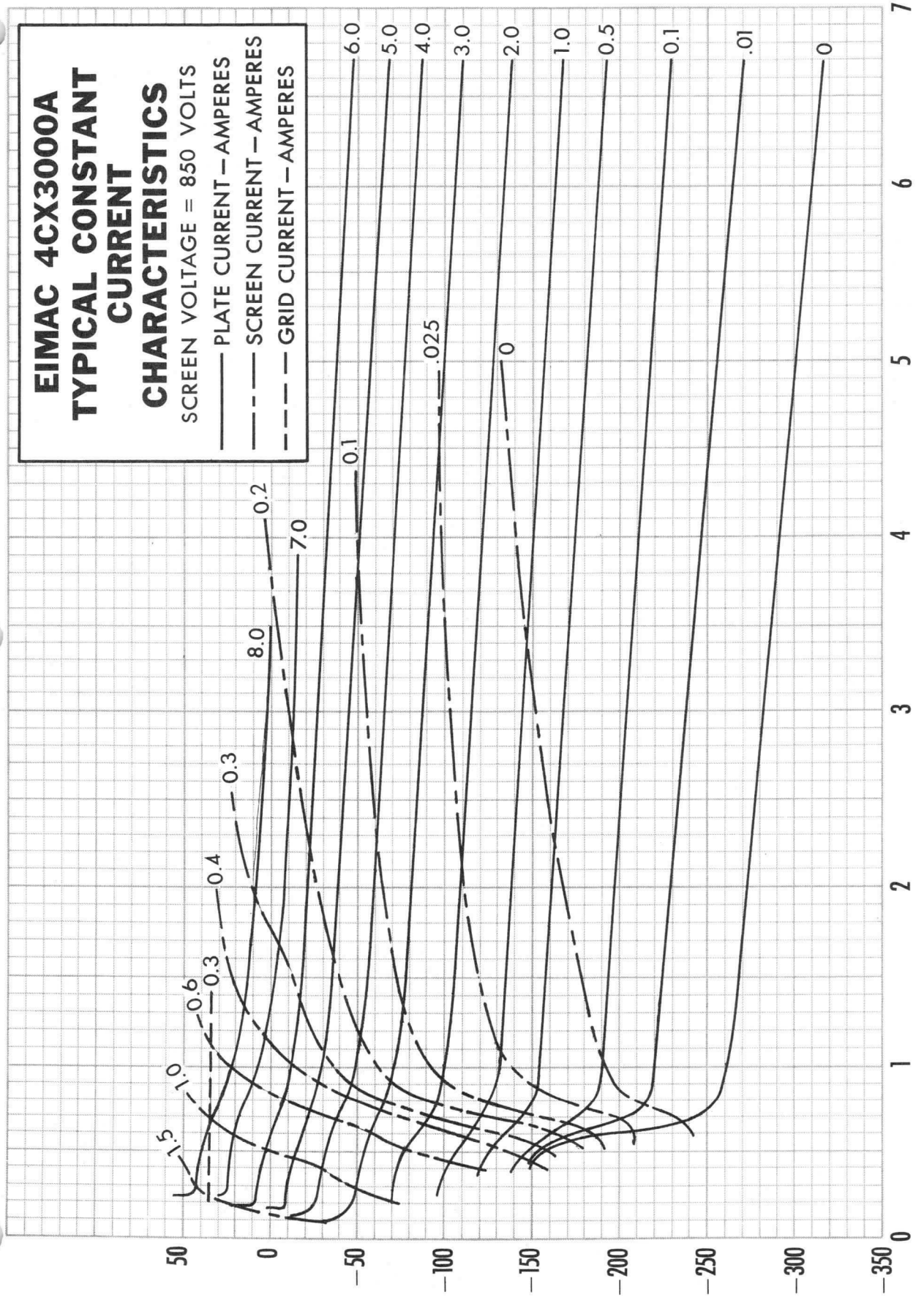
EIMAC 4CX3000A
TYPICAL CONSTANT
CURRENT
CHARACTERISTICS
SCREEN VOLTAGE = 850 VOLTS
PLATE CURRENT—AMPERES
SCREEN CURRENT—AMPERES
GRID CURRENT—AMPERES
6.0
5.0
4.0
3.0
2.0
1.0
0.5
0.1
.01
0
.025
0
0.1
7.0
0.2
8.0
0.3
0.4
0.3
0.6
1.0
1.5
50
0
—50
—100
—150
—200
—250
—300
—350
0
1
2
3
4
5
6
7
GRID VOLTAGE—VOLTS
PLATE VOLTAGE—KILOVOLTS

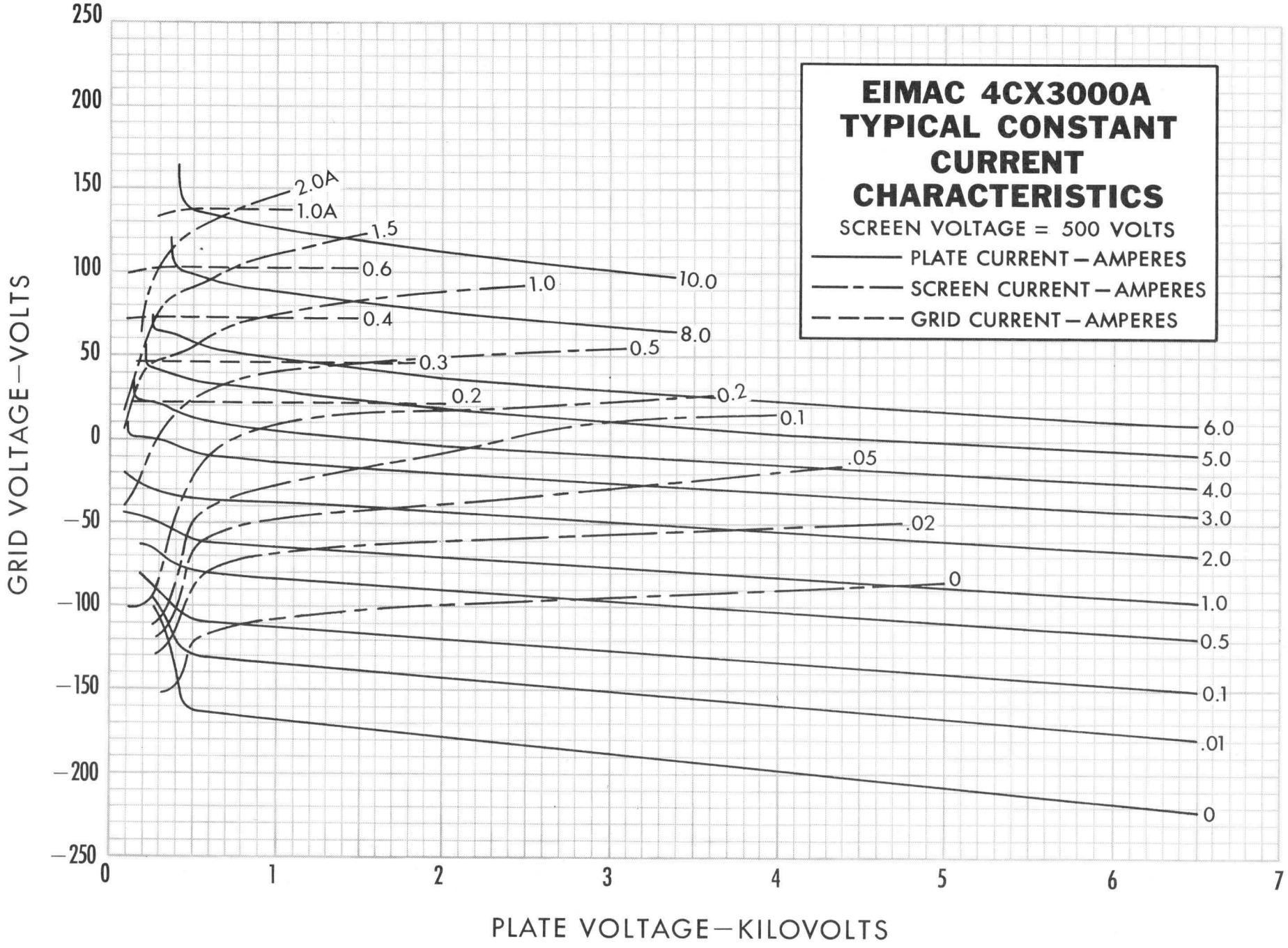
EIMAC 4CX3000A
TYPICAL CONSTANT CURRENT CHARACTERISTICS
SCREEN VOLTAGE = 500 VOLTS
PLATE CURRENT – AMPERES
SCREEN CURRENT – AMPERES
GRID CURRENT – AMPERES
GRID VOLTAGE – VOLTS
PLATE VOLTAGE – KILOVOLTS
250
200
150
100
50
0
−50
−100
−150
−200
−250
0
1
2
3
4
5
6
7
2.0A
1.0A
1.5
0.6
1.0
0.4
0.5
0.3
0.2
0.2
0.1
.05
.02
0
10.0
8.0
6.0
5.0
4.0
3.0
2.0
1.0
0.5
0.1
.01
0

TECHNICAL DATA

4CX3500A VHF RADIAL BEAM POWER TETRODE



The EIMAC 4CX3500A is a compact ceramic/metal radial beam power tetrode intended for use in VHF power amplifier applications. It features a type of internal mechanical structure which results in high rf operating efficiency. Low rf losses in this structure permit operation at full ratings to 220 MHz.

The 4CX3500A has a gain of over 18 dB in FM broadcast service, and is also recommended for rf linear power amplifier service and for VHF-TV linear amplifier service. The anode is rated for 3500 watts of dissipation with forced-air cooling.

GENERAL CHARACTERISTICS[1]

ELECTRICAL

Filament: Thoriated Tungsten Mesh		
Voltage	5.0 ± 0.25	V
Current, at 5.0 volts	90	A
Amplification Factor, average		
Grid to Screen	4.5	
Direct Interelectrode Capacitances (cathode grounded)[2]		
Cin	111	pF
Cout	12	pF
Cgp	0.5	pF
Direct Interelectrode Capacitances (grids grounded)[2]		
Cin	58.5	pF
Cout	10	pF
Cpk	0.4	pF
Maximum Frequency for Full Ratings (CW)	220	MHz

1. Characteristics and operating values are based on performance tests. These figures may change without notice as the result of additional data or product refinement. Varian EIMAC should be consulted before using this information for final equipment design.
2. Capacitance values are for a cold tube as measured in a special shielded fixture in accordance with Electronic Industries Association Standard RS-191.

MECHANICAL

Maximum Overall Dimensions:	
Length	7.25 In; 18.42 cm
Diameter	4.94 In; 12.55 cm
Net Weight (approximate)	5.5 Lbs; 2.5 kg
Operating Position	Axis Vertical, Base Up or Down
Cooling	Forced Air
Maximum Operating Temperature, Ceramic/Metal Seals & Anode Core	250 Deg.C
Base	Special, Coaxial
Recommended Air-System Socket	HF: EIMAC SK-340 VHF: EIMAC SK-350
Recommended Air-System Chimney	HF: EIMAC SK-306 VHF: EIMAC SK-356

394350 (Effective 16 Jan 84 - supersedes 30 Mar 82)
VA4520

Printed in U.S.A.

RADIO FREQUENCY POWER AMPLIFIER

Class C Telegraphy or FM
(Key-down Conditions)

ABSOLUTE MAXIMUM CONDITIONS

DC PLATE VOLTAGE	6000	VOLTS
DC SCREEN VOLTAGE	1500	VOLTS
DC GRID VOLTAGE	-500	VOLTS
DC PLATE CURRENT	2.0	AMPERES
PLATE DISSIPATION	3500	WATTS
SCREEN DISSIPATION	165	WATTS
GRID DISSIPATION	50	WATTS

TYPICAL OPERATION (frequencies to 30 MHz)

Plate Voltage	5.0	5.0	kVdc
Screen Voltage	500	500	
Grid Voltage	-200	-250	Vdc
Plate Current	1.32	0.80	Adc
Screen Current *	75	43	mAdc
Grid Current *	59	21	mAdc
Peak rf Grid Voltage *	335	290	v
Calculated Driving Power	25	7	W
Plate Dissipation *	1320	640	W
Plate Output Power *	5280	3360	W
Load Impedance	1700	2700	Ohms

* Approximate value

RADIO FREQUENCY POWER AMPLIFIER
FM BROADCAST SERVICE

ABSOLUTE MAXIMUM RATINGS

DC PLATE VOLTAGE	6000	VOLTS
DC SCREEN VOLTAGE	1500	VOLTS
DC GRID VOLTAGE	-500	VOLTS
DC PLATE CURRENT	2.0	AMPERES
PLATE DISSIPATION	3500	WATTS
SCREEN DISSIPATION	165	WATTS
GRID DISSIPATION	50	WATTS

MEASURED DATA AT 100.5 MHZ

Plate Voltage	4000	4300	Vdc
Plate Current	1.5	1.9	Adc
Screen Voltage	500	700	Vdc
Screen Current *	140	123	mAdc
Grid Voltage	-300	-400	Vdc
Grid Current *	84	63	mAdc
Useful Power Out * #	3838	5531	W
Efficiency *	64	68	%
Driving Power *	56	66	W
Power Gain *	18.4	19.2	dB

* Approximate; will vary from tube to tube
\# Delivered to the load

TYPICAL OPERATION values are obtained by measurement or by calculation from published characteristic curves. To obtain the specified plate current at the specified bias, screen, and plate voltages, adjustment of the rf grid voltage is assumed. If this procedure is followed, there will be little variation in ouput power when the tube is replaced, even though there may be some variation in grid and screen currents. The grid and screen currents which occur when the desired plate current is obtained are incidental and vary from tube to tube. These current variations cause no performance degradation providing the circuit maintains the correct voltage in the presence of the current variations. If grid bias is obtained principally by means of a grid resistor, the resistor must be adjusted to produce the required bias voltage when the correct rf grid voltage is applied.

APPLICATION

MECHANICAL

MOUNTING - The 4CX3500A must be mounted with its axis vertical, base up or down at the convenience of the circuit designer.

AIR-SYSTEM SOCKET & CHIMNEY - The EIMAC sockets type SK-340 and SK-350 are designed especially for the concentric base terminals of the 4CX3500A. The SK-340 is intended for use at HF, while the SK-350 is recommended for VHF applications. The SK-306 chimney should be used with the SK340 socket for the lower frequencies, while the SK-356 chimney is intended for use with the SK-350 socket. Use of the recommended air flow rates through either socket will provide effective forced-air cooling of the tube. Air forced into the bottom of the socket passes over the tube terminals and through the chimney and into the anode cooling fins.

COOLING - At full rated anode dissipation, at sea level and with cooling air at 50 Deg.C maximum, for frequencies below 110 MHz, and with the tube mounted in either an SK-340 or SK-350 socket with a chimney in place, a minimum of 241 CFM of air must be passed through the socket and the tube anode cooling fins. Air flow should be in the base-to-anode direction. The pressure drop across the tube/ socket/chimney combination with this air flow rate will be approximately 1.87 inches of water.

The blower selected in a given application must be capable of supplying the desired air flow at a back pressure equal to that shown, plus any drop encounted in ducts and filters.

Air flow must be applied before or simultaneously with the application of power, including the tube filament, and may be removed simultaneously with filament voltage. An air interlock system should be incorporated in the design to automatically remove all voltages from the tube in case of even a partial failure of the tube cooling air.
It is considered good engineering practice to supply more than the minimum required cooling air, to allow for variables such as dirty air filters, rf seal heating, and the fact that the anode cooling fins may not be clean if the tube has been in service for some time.

ELECTRICAL

ABSOLUTE MAXIMUM RATINGS - The values shown for each type of service are based on the "absolute system" and are not to be exceeded under any service conditions. These ratings are limiting values outside which the serviceability of the tube may be impaired. In order not to exceed absolute ratings the equipment designer has the responsibility of determining an average design value for each rating below the absolute value of that rating by a safety factor so that the absolute values will never be exceeded under any usual conditions of supply voltage variation in the equipment itself. It does not necessarily follow that combinations of absolute maximum ratings can be attained simultaneously.

FILAMENT OPERATION - At rated (nominal) filament voltage the peak emission capability of the tube is many times that needed for communication service. A reduction in filament voltage will lower the filament temperature, which will substantially increase life expectancy. The correct value of filament voltage should be determined for the particular application. It is recommended the tube be operated at full nominal voltage for an initial stabilization period of 100 to 200 hours before any action is taken to operate at reduced voltage. The voltage should gradually be reduced until there is a slight degradation in performance (such as power output or distortion). The filament voltage should then be increased a few tenths of a volt above the value where performance degradation was noted. The operating point should be rechecked after 24 hours. Filament voltage should be closely regulated when voltage is to be reduced below nominal in this manner, to avoid any adverse influence by normal line voltage variations.

Filament voltage should be measured at the tube base or socket, using an accurate rms-responding meter. Periodically the procedure outlined above for reduction of voltage should be repeated, with voltage reset as required, to assure best life.

GRID OPERATION - The maximum control grid dissipation is 50 watts, determined approximately by the product of the dc grid current and the peak positive grid voltage.

SCREEN OPERATION - The maximum screen grid dissipation is 165 watts. With no ac applied to the screen grid, dissipation is simply the product of dc screen voltage and the dc screen current. With screen modulation, dissipation is dependent on rms screen voltage and rms screen current. Plate voltage, plate loading, or bias voltage must never be removed while filament and screen voltages are present, since screen dissipation ratings will be exceeded. A protective spark-gap device should be connected between the screen grid and the cathode to guard against excessive voltage.

SCREEN CURRENT - The screen current may reverse under certain conditions and produce negative indictions on the screen current meter. This is a normal characteristic of most tetrodes. The screen power supply should be designed with this characteristic in mind, so that the correct operating voltage will be maintained on the screen under all conditions. A current path from the screen to cathode must be provided by a bleeder resistor or a shunt regulator connected between screen and cathode and arranged to pass approximately 10% of the average screen current per connected tube. A series regulated power supply can be used only when an adequate bleeder resistor is provided.

FAULT PROTECTION - In addition to the normal plate over-current interlock, screen current interlock, and air-flow interlock, the tube must be protected from internal damage caused by an internal plate arc which may occur at high plate voltage. A protective resistance should always be connected in series with each tube anode, to absorb power supply stored energy if an internal arc should occur. EIMAC's Application Bulletin #17 titled FAULT PROTECTION contains considerable detail, and is available on request.

HIGH VOLTAGE - Normal operating voltages used with this tube are deadly, and the equipment must be designed properly and operating precautions must be followed. Design all equipment so that no one can come in contact with high voltages. All equipment must include safety enclosures for high-voltage circuits and terminals, with interlock switches to open primary circuits of the power supply and to discharge high-voltage capacitors whenever access doors are opened. Interlock switches must not be bypassed or "cheated" to allow operation with access doors open. Always remember that HIGH VOLTAGE CAN KILL.

RADIO-FREQUENCY RADIATION - Avoid exposure to strong rf fields even at relatively low frequency. Absorption of rf energy by human tissue is dependent on frequency. Under 300 MHz most of the energy will pass completely through the human body with little attenuation or heating affect. Public health agencies are concerned with the hazard even at these frequencies. OSHA (Occupational Safety and Health Administration) recommends that prolonged exposure to rf radiation should be limited to 10 milliwatts per square centimeter.

INTERELECTRODE CAPACITANCE - The actual internal interelectrode capacitance of a tube is influenced by many variables in most applications, such as stray capacitance to the chassis, capacitance added by the socket used, stray capacitance between tube terminals, and wiring effects. To control the actual capacitance values within the tube, as the key component involved, the industry and Military Services use a standard test procedure as described in Electronic Industries Association Standard RS-191. This requires the use of specially constructed test fixtures which effectively shield all external tube leads from each other and eliminates any capacitance reading to "ground". The test is performed on a cold tube. Other factors being equal, controlling internal tube capacitance in this way normally assures good interchangeability of tubes over a period of time. The capacitance values shown here are taken in accordance with Standard RS-191. The equipment designer is therefore cautioned to make allowance for the actual capacitance values which will exist in any normal appliction. Measurements should be taken with the socket and mounting which represent approximate final layout if capacitance values are highly significant in the design.

SPECIAL APPLICATIONS - When it is desired to operate this tube under conditions widely different from those listed here, write to Varian EIMAC; attn:Applications Engineering; 301 Industrial Way; San Carlos, CA 94070 U.S.A.

OPERATING HAZARDS

PROPER USE AND SAFE OPERATING PRACTICES WITH RESPECT TO POWER TUBES ARE THE RESPONSIBILITY OF EQUIPMENT MANUFACTURERS AND USERS OF SUCH TUBES. ALL PERSONS WHO WORK WITH OR ARE EXPOSED TO POWER TUBES OR EQUIPMENT WHICH UTILIZES SUCH TUBES MUST TAKE PRECAUTIONS TO PROTECT THEMSELVES AGAINST POSSIBLE SERIOUS BODILY INJURY. DO NOT BE CARELESS AROUND SUCH PRODUCTS.

The operation of this tube may involve the following hazards, any one of which, in the absence of safe operating practices and precautions, could result in serious harm to personnel:

a. HIGH VOLTAGE - Normal operating voltages can be deadly. Always remember that HIGH VOLTAGE CAN KILL.

b. RF RADIATION - Exposure to strong rf fields should be avoided, even at relatively low frequencies. The dangers of rf radiation are more severe at UHF and microwave frequencies and can cause serious bodily and eye injuries. CARDIAC PACEMAKERS MAY BE EFFECTED.

c. HOT SURFACES - Surfaces of air-cooled radiators and other parts of tubes can reach temperatures of several hundred Degrees C and cause serious burns if touched for several minutes after all power is removed.

Please review the detailed operating hazards sheet enclosed with each tube, or request a copy from: Varian EIMAC, Power Grid Tube Division, 301 Industrial Way, San Carlos CA 94070.

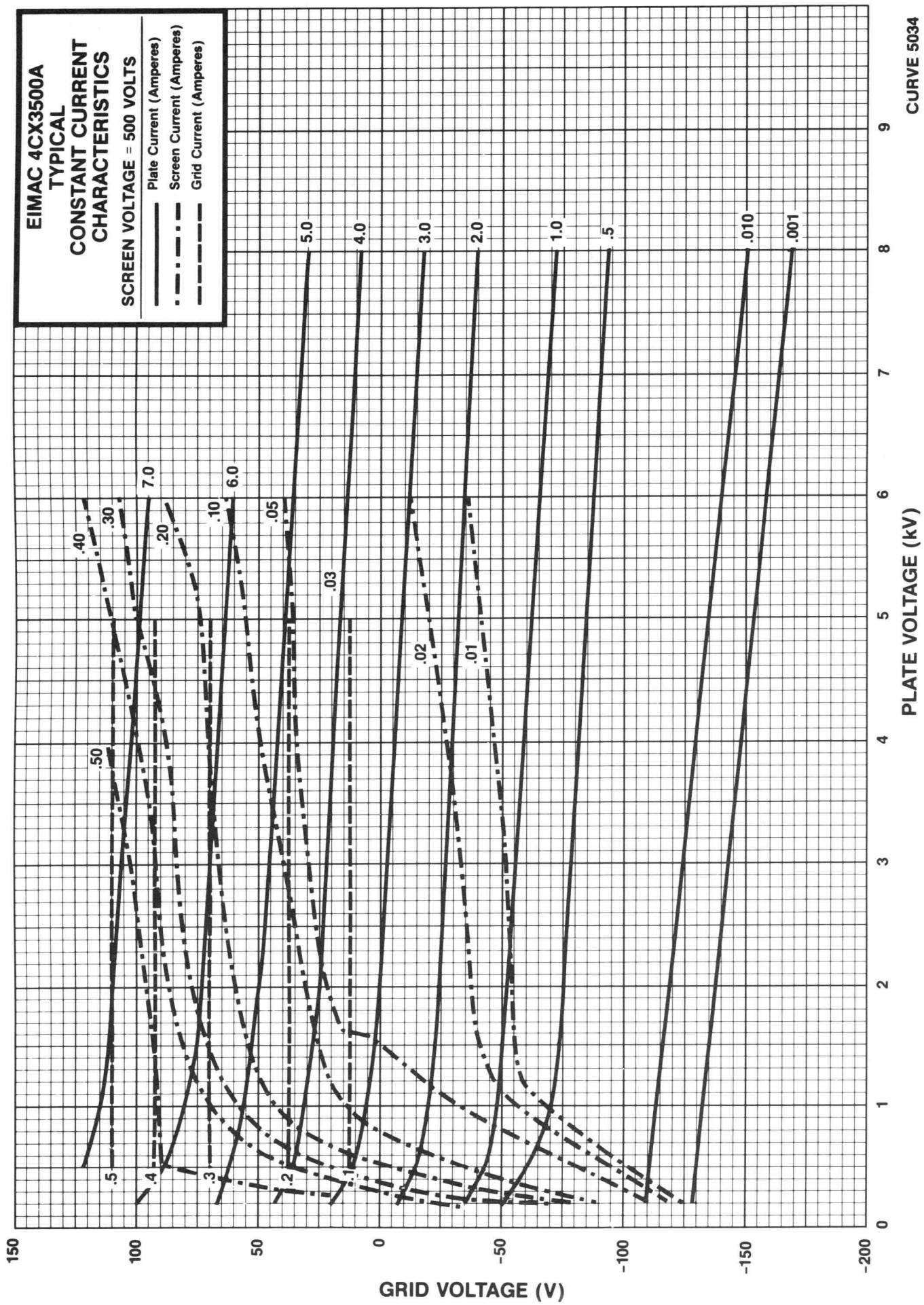
EIMAC 4CX3500A
TYPICAL
CONSTANT CURRENT
CHARACTERISTICS
SCREEN VOLTAGE = 500 VOLTS
Plate Current (Amperes)
Screen Current (Amperes)
Grid Current (Amperes)
CURVE 5034
PLATE VOLTAGE (kV)
GRID VOLTAGE (V)
0
1
2
3
4
5
6
7
8
9
150
100
50
0
-50
-100
-150
-200
.5
.4
.3
.2
.1
.50
.40
.30
.20
.10
.05
.03
.02
.01
7.0
6.0
5.0
4.0
3.0
2.0
1.0
.5
.010
.001

DIMENSIONAL DATA						
	INCHES			MILLIMETERS		
DIM	MIN	MAX	REF	MIN	MAX	REF
A	4.812	4.938		122.22	125.43	
B	.855	.895		21.72	22.73	
C	.600	.760		15.24	19.30	
D	1.896	1.936		48.16	49.17	
E	3.133	3.173		79.58	80.59	
F	3.792	3.832		96.32	97.33	
G	3.980	4.020		101.09	102.11	
H	.188			4.78		
J	.188			4.78		
K	.188			4.78		
M	3.474	3.848		88.11	94.28	
N	1.359	1.733		33.30	42.46	
P	6.931	7.181		169.81	175.93	
S	2.359	2.733		57.80	66.96	
T	.375			9.53		

NOTES:

1. REF DIMENSIONS ARE FOR INFO ONLY & ARE NOT REQUIRED FOR INSPECTION PURPOSES.
2. DIMENSIONS IN [ ] ARE MILLIMETERS.
3. (✱) CONTACT SURFACE.
4. OPTIMUM FILAMENT & GRID CONNECTOR HEIGHTS FOR SOCKET DESIGN PURPOSES.

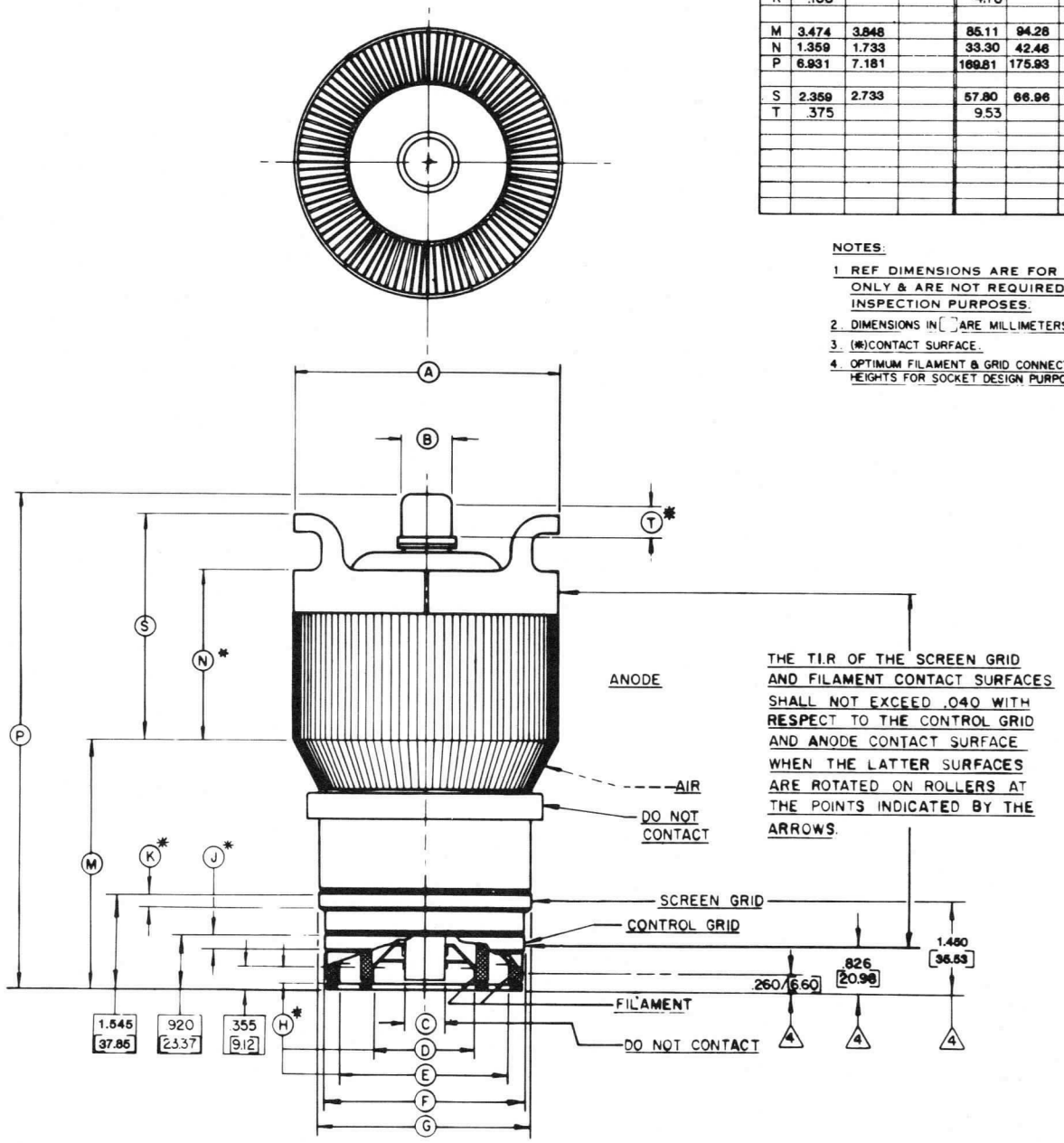

TECHNICAL DATA

8170
4CX5000A

RADIAL-BEAM POWER TETRODE

The EIMAC 8170/4CX5000A is a compact high-power ceramic and metal tetrode cooled by forced air. It is useful as an oscillator, amplifier, or modulator at frequencies up to 110 megahertz and is particularly suited for use as a linear single-sideband amplified, Class-AB_1 audio amplifier, or as a screen-modulated radio-frequency amplifier.

A pair of these tubes will deliver 17.5 kilowatts of audio-frequency or radio-frequency power with zero driving power. The rated plate dissipation is five kilowatts for most classes of services and six kilowatts for Class-AB operation.



GENERAL CHARACTERISTICS

ELECTRICAL

	Min.	Nom.	Max.	
Filament: Thoriated Tungsten				
Voltage		7.5		volts
Current	73		78	amperes
Amplification Factor (Grid Screen)		4.5		
Direct Interelectrode Capacitances, Grounded Cathode:				
Input	108		122	pF
Output	18		23	pF
Feedback			1.0	pF

Direct Interelectrode Capacitances, Grounded Grid and Screen:	Min.	Max.	
Input	48	58	pF
Output	18	23	pF
Feedback		0.16	pF

MECHANICAL

Base	Special concentric
Maximum Seal Temperature	250°C
Maximum Anode-Core Temperature	250°C
Recommended Socket	EIMAC SK-300A
Recommended Chimney	EIMAC SK-306
Operating Position	Axis vertical, base up or down
Maximum Dimensions:	
Height	9.13 inches
Diameter	4.94 inches
Cooling	Forced air
Net Weight	9.5 pounds
Shipping Weight (Approximate)	22 pounds

RADIO-FREQUENCY POWER AMPLIFIER OR OSCILLATOR (Up to 30 megahertz)

Class-C Telegraphy (Key-down conditions)

MAXIMUM RATINGS

DC PLATE VOLTAGE	7500 VOLTS
DC SCREEN VOLTAGE	1500 VOLTS
DC PLATE CURRENT	3 AMPS
PLATE DISSIPATION	5000 WATTS
SCREEN DISSIPATION	250 WATTS
GRID DISSIPATION	75 WATTS

TYPICAL OPERATION
(Frequencies below 30 megahertz)

DC Plate Voltage	7500 volts
DC Screen Voltage	500 volts
DC Grid Voltage	—350 volts
DC Plate Current	2.8 amps
DC Screen Current	0.5 amp
DC Grid Current	0.25 amp
Peak RF Grid Voltage	590 volts
Driving Power	150 watts
Plate Dissipation	5000 watts
Plate Output Power	16,000 watts

(Revised 4-15-69) © 1967, 1969 by Varian

Printed in U.S.A.

RADIO-FREQUENCY POWER AMPLIFIER OR OSCILLATOR
(From 30 to 220 MHz)

Class-C Telegraphy or FM Telephony

MAXIMUM RATINGS

DC PLATE VOLTAGE:	
30 to 60 MHz	7000 VOLTS
60 to 110 MHz	6500 VOLTS
110 to 220 MHz	5800 VOLTS
DC SCREEN VOLTAGE	1500 VOLTS
DC PLATE CURRENT:	
30 to 60 MHz	2.8 AMPS
60 to 220 MHz	2.6 AMPS
PLATE DISSIPATION	5000 WATTS
SCREEN DISSIPATION	250 WATTS
GRID DISSIPATION	75 WATTS

TYPICAL OPERATION

	108MHz	220MHz	
DC PLATE VOLTAGE	6500	5500	volts
DC SCREEN VOLTAGE	750	680	volts
DC GRID VOLTAGE	-350	-140	volts
DC PLATE CURRENT	2.3	1.6	amperes
DC SCREEN CURRENT	.2	.034	amperes
DC GRID CURRENT	.05	.030	amperes
DRIVING POWER	100	---	watts
USEFUL OUTPUT POWER	10,000	5,500	watts

PLATE-MODULATED RADIO-FREQUENCY POWER AMPLIFIER

Class-C Telephony
(Carrier conditions except where noted)

MAXIMUM RATINGS

DC PLATE VOLTAGE	5500 VOLTS
DC SCREEN VOLTAGE	1000 VOLTS
DC PLATE CURRENT	2.5 AMPS
PLATE DISSIPATION*	3500 WATTS
SCREEN DISSIPATION	250 WATTS
GRID DISSIPATION	75 WATTS

*Corresponds to 5000 watts at 100-percent sine-wave modulation.

TYPICAL OPERATION (Frequencies below 30 megahertz)

DC Plate Voltage	5000 volts
DC Screen Voltage	500 volts
Peak AF Screen Voltage (For 100-percent modulation)	450 volts
DC Grid Voltage	—400 volts
DC Plate Current	1.4 amperes
DC Screen Current	0.26 ampere
DC Grid Current	0.05 ampere
Peak RF Grid Voltage	520 volts
Grid Driving Power	25 watts
Plate Dissipation	1100 watts
Plate Output Power	5.8 kilowatts

SCREEN-MODULATED RADIO-FREQUENCY POWER AMPLIFIER

Class-C Telephony
(Carrier conditions except where noted)

MAXIMUM RATINGS (Per Tube)

DC PLATE VOLTAGE	7500 VOLTS
DC SCREEN VOLTAGE	750 VOLTS
DC PLATE CURRENT	3.0 AMPS
PLATE DISSIPATION	5000 WATTS
SCREEN DISSIPATION	250 WATTS
GRID DISSIPATION	75 WATTS

TYPICAL OPERATION (Frequencies below 30 megahertz per tube)

DC Plate Voltage	7500	7500 volts
DC Screen Voltage	350	350 volts
Peak AF Screen Voltage (For 100-percent modulation)	550	550 volts
DC Grid Voltage	—300	—300 volts
DC Plate Current	0.9	1.14 amperes
DC Screen Current*	—0.01	—0.01 ampere
DC Grid Current	0.015	0.03 ampere
Peak RF Grid Voltage	350	375 volts
Grid Driving Power	7	11 watts
RF Load Impedance	2000	1600 ohms
Plate Dissipation	4000	5000 watts
Useful Output Power	2750	3550 watts

*DC Screen Current is a function of loading; values of plus or minus 20 milliamperes may be considered typical at carrier level.

NOTE: Two tubes can be employed under conditions listed in the first column to obtain more than five kilowatts plate output power. Likewise, three tubes can be utilized at conditions listed in the second column to obtain better than ten kilowatts output power.

AUDIO-FREQUENCY AMPLIFIER OR MODULATOR

Class-AB_1

MAXIMUM RATINGS (Per Tube)

DC PLATE VOLTAGE	7500 VOLTS
DC SCREEN VOLTAGE	1500 VOLTS
DC PLATE CURRENT	4.0 AMPS
PLATE DISSIPATION	6000 WATTS
SCREEN DISSIPATION	250 WATTS
GRID DISSIPATION	75 WATTS

TYPICAL OPERATION, two tubes

DC Plate Voltage	4000	5000	6000	7000 volts
DC Screen Voltage	1250	1250	1250	1250 volts
DC Grid Voltage	—270	—280	—310	—325 volts
Max-Signal Plate Current	5.10	4.40	4.25	3.65 amperes
Zero-Signal Plate Current	1.25	1.00	0.83	0.70 amperes
Max-Signal Screen Current	0.35	0.33	0.30	0.24 ampere
Zero-Signal Screen Current	0	0	0	0 amperes
Peak AF Driving Voltage	250	240	270	235 volts
Driving Power	0	0	0	0 watts
Load Resistance, Plate-to-Plate	1500	2370	2940	4100 ohms
Max-Signal Plate Dissipation*	4200	4200	4200	4200 watts
Max-Signal Plate Output Power	11,500	13,500	17,000	17,500 watts

*Per Tube

RADIO-FREQUENCY LINEAR AMPLIFIER

Class-AB_1

MAXIMUM RATINGS

DC PLATE VOLTAGE	7500 VOLTS
DC SCREEN VOLTAGE	1500 VOLTS
DC PLATE CURRENT	4.0 AMPS
PLATE DISSIPATION	6000 WATTS
SCREEN DISSIPATION	250 WATTS
GRID DISSIPATION	75 WATTS

TYPICAL OPERATION, Peak-Envelope or modulation-Crest Conditions, (Frequencies below 30 megahertz)

DC Plate Voltage	7500 volts
DC Screen Voltage	1250 volts
DC Grid Voltage*	—300 volts
Max-Signal Plate Current	1.9 amperes
Zero-Signal Plate Current	0.50 ampere
Max-Signal Screen Current	0.20 ampere
Peak RF Grid Voltage	300 volts
Driving Power	0 watts
Plate Dissipation	4200 watts
Plate Output Power **	10,000 watts

*Adjust grid voltage to obtain specified Zero-Signal plate current.
**PEP output or rf output power at crest of modulation envelope.

NOTE: In most cases, "TYPICAL OPERATION" data are obtained by calculation from published characteristic curves and confirmed by direct tests. No allowance for circuit losses, either input or output, has been made. Exceptions are distinguished by a listing of "Useful" output power as opposed to "Plate" output power. Values appearing in these groups have been obtained from existing equipment(s) and the output power is that measured at the load.

APPLICATION

MECHANICAL

Mounting — The 4CX5000A must be operated with its axis vertical. The base of the tube may be down or up at the convenience of the circuit designer.

Socket—The EIMAC SK-300A Air-System Socket is designed especially for the concentric base terminals of the 4CX5000A. The use of recommended air-flow rates through this socket provides effective forced-air cooling of the tube. Air forced into the bottom of the socket passes over the tube terminals and through an Air Chimney, the SK-306, into the anode cooling fins. The SK-300 socket may be used instead of the SK-300A, but its use will result in a slightly less efficient cooling system at high dissipation levels.

Cooling — The maximum temperature rating for the external surfaces of the 4CX5000A is 250°C. Sufficient forced-air circulation must be provided to keep the temperature of the anode at the base of the cooling fins and the temperature of the ceramic-metal seals below 250°C. Sea level air-flow requirements to maintain seal temperatures at 200°C in 50°C ambient air are tabulated below (for operation below 30 megahertz).

Plate Dissipation* (Watts)	SK-300A Socket		SK-300 Socket	
	Air Flow (CFM)	Pressure Drop (Inches of water)	Air Flow (CFM)	Pressure Drop (inches of water)
2000	75	0.4	75	0.4
3000	105	0.7	100	0.7
4000	145	1.1	135	1.2
5000	190	1.5	165	1.8
6000	230	2.0	200	2.5

***Since the power dissipated by the filament represents about 560 watts and since grid-plus-screen dissipation can, under some conditions, represent another 200 to 300 watts, allowance has been made in preparing this tabulation for an additional 1000 watts dissipation.**

The blower selected in a given application must be capable of supplying the desired air flow at a back pressure equal to the pressure drop shown above plus any drop encountered in ducts and filters.

At higher altitudes, higher frequencies, or higher ambient temperatures the flow rate must be increased to obtain equivalent cooling. The flow rate and corresponding pressure differential must be determined individually in such cases, using maximum rated temperatures as the criteria for satisfactory cooling.

ELECTRICAL

Filament Operation—The rated filament voltage for the 4CX5000A is 7.5 volts. Filament voltage, as measured at the socket, should be maintained at this value to obtain maximum tube life. In no case should it be allowed to deviate by more than 5 percent from the rated value.

Electrode Dissipation Ratings—The maximum dissipation ratings for the 4CX5000A must be respected to avoid damage to the tube. An exception is the plate dissipation, which may be permitted to rise above the maximum rating during brief periods, such as may occur during tuning.

Control Grid Operation — The 4CX5000A control grid has a maximum dissipation rating of 75 watts. Precautions should be observed to avoid exceeding this rating. The grid bias and driving power should be kept near the values shown in "Typical Operation" sections of the data sheet whenever possible.

Screen-Grid Operation — The power dissipated by the screen of the 4CX5000A must not exceed 250 watts.

Screen dissipation, in cases where there is no ac applied to the screen, is the simple product of the screen voltage and the screen current. If the screen voltage is modulated, the screen dissipation will depend upon loading, driving power, and carrier screen voltage.

Screen dissipation is likely to rise to excessive values when the plate voltage, bias voltage, or plate load are removed with filament and screen voltages applied. Suitable protective means must be provided to limit the screen dissipation to 250 watts in the event of circuit failure.

Plate Dissipation—The plate-dissipation rating for the 4CX5000A is 5000 watts for most applications but for audio and SSB amplifier applications, the maximum allowable dissipation is 6000 watts.

When the 4CX5000A is operated as a plate-modulated rf power amplifier, the input power is limited by conditions not connected with the plate efficiency, which is quite high. Therefore, except during tuning there is little possibility that the 3500-watt maximum plate dissipation rating will be exceeded.

Special Applications—If it is desired to operate this tube under conditions widely different from those given here, write to Power Grid Tube Marketing, EIMAC Division of Varian, 301 Industrial Way, San Carlos, California, for information and recommendations.

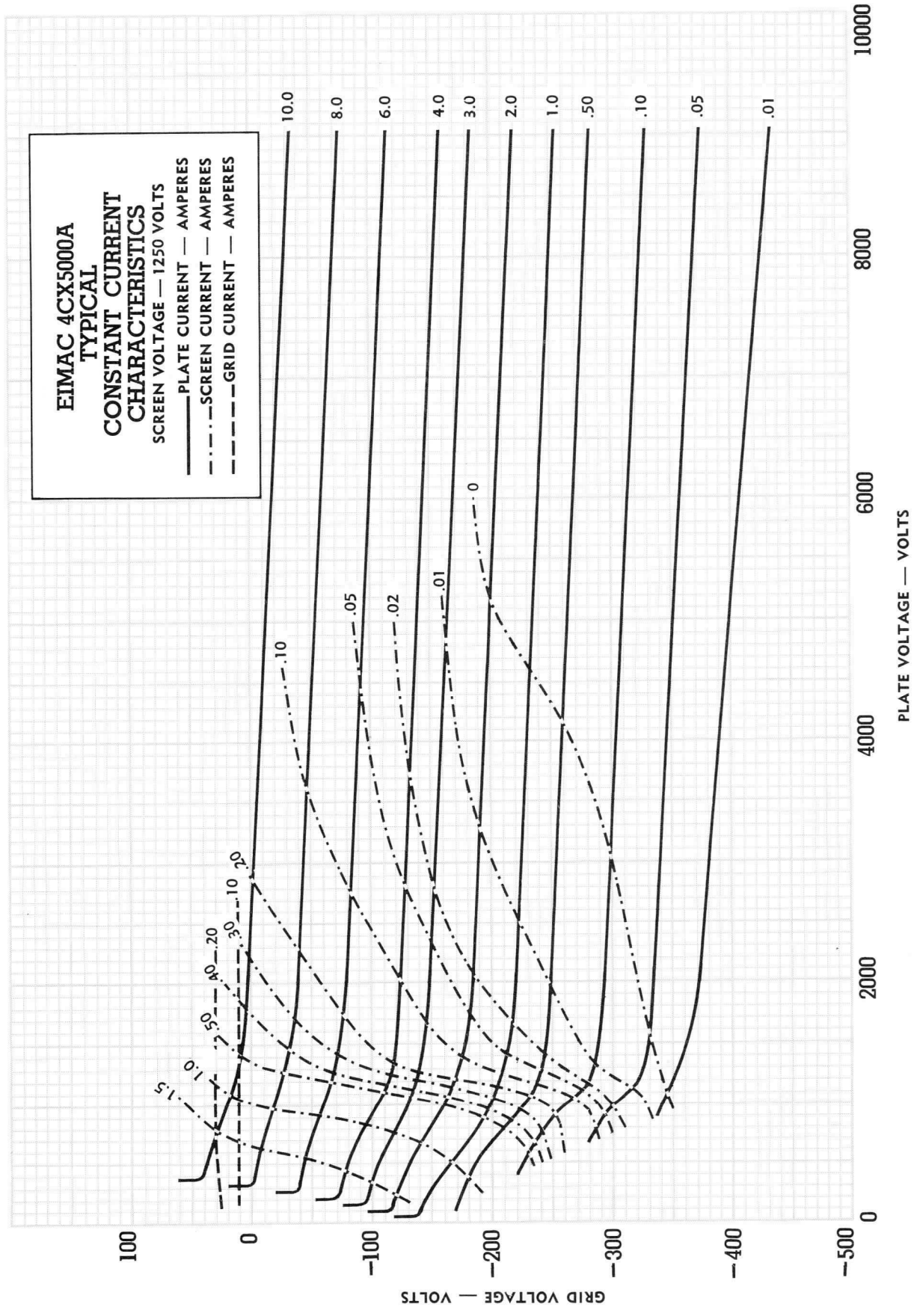
EIMAC 4CX5000A
TYPICAL
CONSTANT CURRENT
CHARACTERISTICS
SCREEN VOLTAGE — 1250 VOLTS
PLATE CURRENT — AMPERES
SCREEN CURRENT — AMPERES
GRID CURRENT — AMPERES
10.0
8.0
6.0
4.0
3.0
2.0
1.0
.50
.10
.05
.01
.0
.01
.02
.05
.10
1.5
1.0
.50
.40
.30
.20
.10
.20
100
0
−100
−200
−300
−400
−500
0
2000
4000
6000
8000
10000
GRID VOLTAGE — VOLTS
PLATE VOLTAGE — VOLTS

DIMENSION DATA			
REF.	NOM.	MIN.	MAX.
A		4.812	4.938
B		.855	.895
C		.720	.760
D		1.896	1.936
E		3.133	3.173
F		3.792	3.832
G		3.980	4.020
H		.188	
J		.188	
K		.188	
L		1.764	1.826
M		4.188	4.563
N		2.875	3.250
P		8.625	9.125
R		.986	1.050
S		3.875	4.250
T		.375	

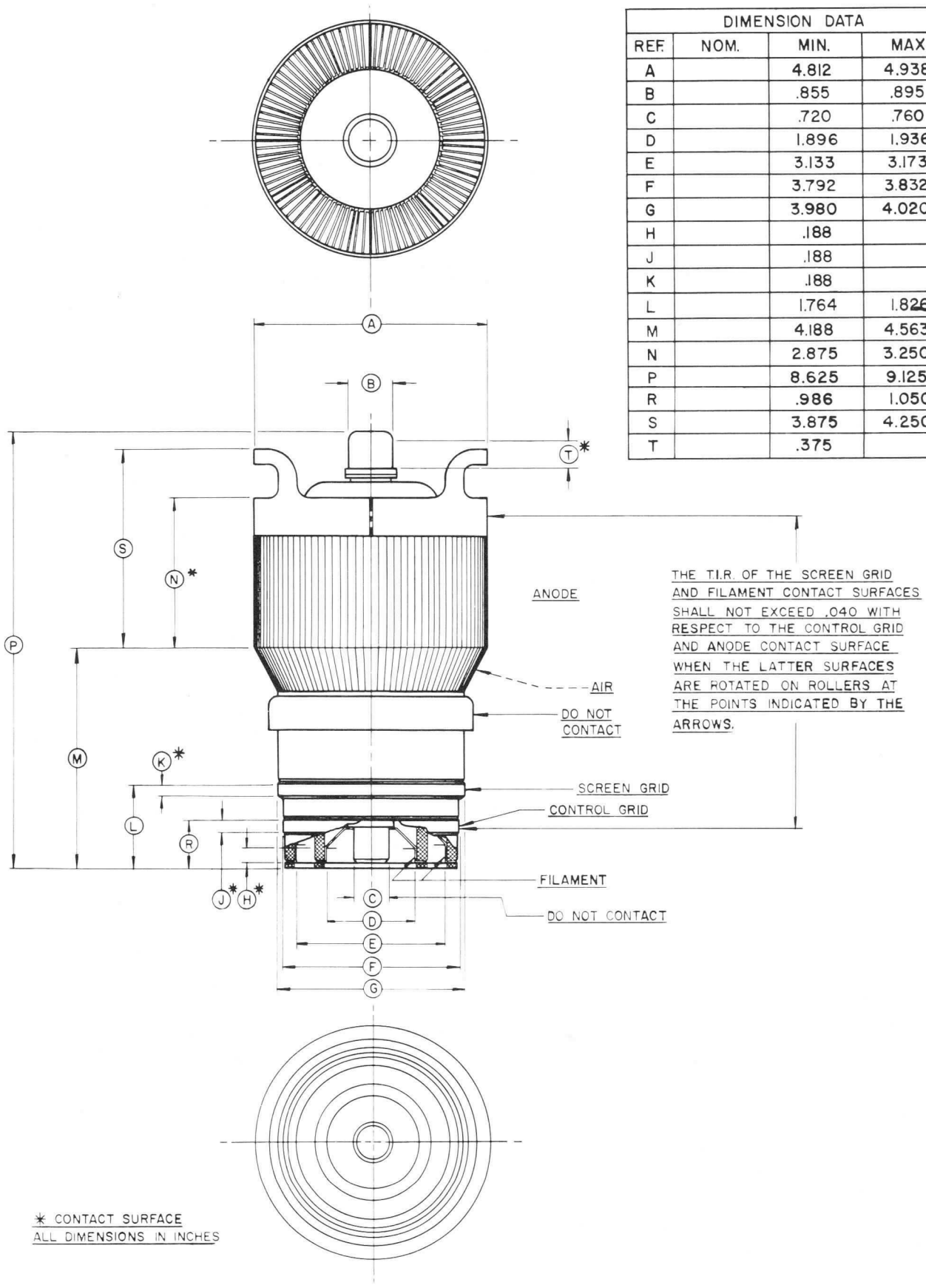

* CONTACT SURFACE
ALL DIMENSIONS IN INCHES

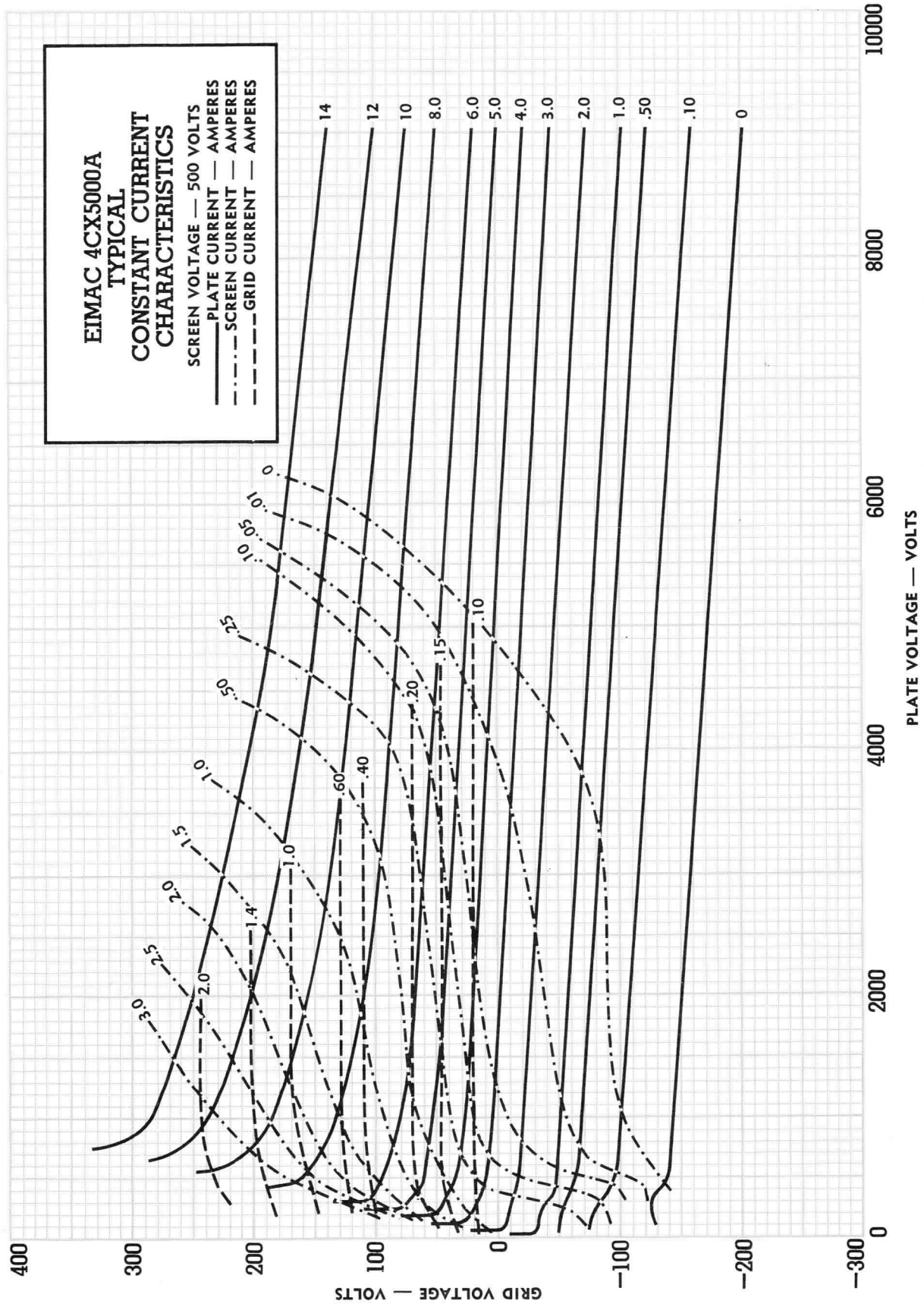
EIMAC 4CX5000A
TYPICAL
CONSTANT CURRENT
CHARACTERISTICS
SCREEN VOLTAGE — 500 VOLTS
PLATE CURRENT — AMPERES
SCREEN CURRENT — AMPERES
GRID CURRENT — AMPERES
14
12
10
8.0
6.0
5.0
4.0
3.0
2.0
1.0
.50
.10
0
PLATE VOLTAGE — VOLTS
0
2000
4000
6000
8000
10000
GRID VOLTAGE — VOLTS
400
300
200
100
0
−100
−200
−300

TECHNICAL DATA

8909
4CX5000J

RADIAL-BEAM
POWER TETRODE

The EIMAC 8909/4CX5000J is a compact, high-power, ceramic/metal, forced-air cooled tetrode with a rated maximum plate dissipation of 6000 watts. It incorporates rugged internal construction features, including a mesh filament/cathode.

The 8909/4CX5000J is specifically designed for exceptionally low intermodulation distortion in radio-frequency linear amplifier service.



GENERAL CHARACTERISTICS[1]

ELECTRICAL

Filament: Thoriated Tungsten	
Voltage	7.5 ± 0.37 V
Current, at 7.5 volts	103 A
Amplification Factor (Average):	
Grid to Screen	4.5
Direct Interelectrode Capacitance (grounded filament)[2]	
Cin	120 pF
Cout	20.5 pF
Cgp	0.7 pF
Direct Interelectrode Capacitance (grounded grid)[2]	
Cin	56 pF
Cout	21.5 pF
Cpk	0.10 pF
Frequency of Maximum Rating:	
CW	100 MHz

1. Characteristics and operating values are based upon performance tests. These figures may change without notice as the result of additional data or product refinement. EIMAC Division of Varian should be consulted before using this information for final equipment design.
2. Capacitance values are for a cold tube as measured in a special shielded fixture in accordance with Electronic Industries Association Standard RS-191.

MECHANICAL

Maximum Overall Dimensions:	
Length	9.125 in; 231.77 mm
Diameter	4.938 in; 125.43 mm
Net Weight	9.5 lb; 4.31 kg
Operating Position	Axis vertical, base up or down

(Effective 10-1-71) © by Varian

Printed in U.S.A.

Maximum Operating Temperature:	
Ceramic/Metal Seals or Anode Core	250°C
Cooling	Forced Air
Base	Special concentric
Recommended Air System Socket	SK-300 or SK-300A
Recommended (Air) Chimney	SK-306

RADIO FREQUENCY LINEAR AMPLIFIER
GRID DRIVEN
Class AB_1

ABSOLUTE MAXIMUM RATINGS:

DC PLATE VOLTAGE	7500	VOLTS
DC SCREEN VOLTAGE	1500	VOLTS
DC PLATE CURRENT	4.0	AMPERES
PLATE DISSIPATION	6000	WATTS
SCREEN DISSIPATION	250	WATTS
GRID DISSIPATION	75	WATTS

1. Adjust to specified zero-signal dc plate current.
2. Approximate value.
3. Useful power is that delivered to the load.
4. Referenced against one tone of a two equal-tone signal.

TYPICAL OPERATION (Frequencies to 100 MHz)
Class AB_1, Grid Driven, Peak Envelope or Modulation Crest Conditions

Plate Voltage	4050	Vdc
Screen Voltage	800	Vdc
Grid Voltage [1]	-155	Vdc
Zero-Signal Plate Current	750	mAdc
Single-Tone Plate Current	1.65	Adc
Single-Tone Screen Current [2]	67	mAdc
Peak rf Grid Voltage [2]	140	v
Single-Tone Plate Dissipation	3300	W
Useful Power Output (PEP) [3]	3150	W
Load Impedance	1350	Ω
Intermod. Distortion Products [4]:		
3rd Order	-41	dB
5th Order	-44	dB

NOTE: TYPICAL OPERATION data are obtained from direct measurement or by calculation from published characteristic curves. Adjustment of the rf grid voltage to obtain the specified plate current at the specified bias, screen and plate voltages is assumed. If this procedure is followed, there will be little variation in output power when the tube is changed, even though there may be some variation in screen current. The screen current which results when the desired plate current is obtained is incidental and varies from tube to tube. This current variation causes no difficulty so long as the circuit maintains the correct voltage in the presence of the variations in current.

RANGE VALUES FOR EQUIPMENT DESIGN	Min.	Max.	
Filament: Current at 7.5 volts	98	108	A
Interelectrode Capacitances [1] (grounded filament connection)			
Cin	113	127	pF
Cout	18	23	pF
Cgp	---	1.0	pF
Interelectrode Capacitances [1] (grounded grid connection)			
Cin	51	61	pF
Cout	19	24	pF
Cpk	---	0.16	pF

1. Capacitance values are for a cold tube as measured in a special shielded fixture in accordance with Electronic Industries Association Standard RS-191.

APPLICATION

MECHANICAL

MOUNTING - The 4CX5000J must be operated with its axis vertical. The base of the tube may be down or up at the convenience of the circuit designer.

SOCKET - The EIMAC SK-300A Air-System Socket is designed especially for the concentric base terminals of the 4CX5000J. The use of recommended air-flow rates through this socket

provides effective forced-air cooling of the tube. Air forced into the bottom of the socket passes over the tube terminals and through an Air Chimney, the SK-306, into the anode cooling fins. The SK-300 socket may be used instead of the SK-300A, but its use will result in a slightly less efficient cooling system at high dissipation levels.

COOLING - The maximum temperature rating for the external surfaces of the 4CX5000J is 250°C. Sufficient forced-air circulation must be provided to keep the temperature of the anode at the base of the cooling fins and the temperature of the ceramic/metal seals below 250°C. Sea level airflow requirements to maintain seal temperatures at 200°C in 50°C ambient air are tabulated below (for operation below 30 megacycles).

	SK-300A Socket		SK-300 Socket	
Plate Dissipation (Watts)	Air Flow (CFM)	Pressure Drop(Inches of water)	Air Flow (CFM)	Pressure Drop(Inches of water)
2000	75	0.4	75	0.4
3000	105	0.7	100	0.7
4000	145	1.1	135	1.2
5000	190	1.5	165	1.8
6000	230	2.0	200	2.5

Since the power dissipated by the filament represents about 770 watts and since grid-plus screen dissipation can, under some conditions, represent another 200 to 300 watts, allowance has been made in preparing this tabulation for an additional 1200 watts dissipation.

At higher altitudes, higher frequencies, or higher ambient temperatures the flow rate must be increased to obtain equivalent cooling. The flow rate and corresponding pressure differential must be determined individually in such cases, using maximum rated temperatures as the criteria for satisfactory cooling.

IMPACT AND VIBRATION - The 4CX5000J is designed to operate under shock and vibration conditions which might disable a less rugged tube. Production tubes are subjected to testing to insure ability to withstand 15 G impact at 11 milliseconds duration and 2 G vibratory acceleration over the range of 5 to 55 Hz.

ELECTRICAL

FILAMENT VOLTAGE - The rated filament voltage for the 4CX5000J is 7.5 volts. Filament voltage, as measured at the socket, should be maintained at this value to obtain maximum tube life. In no case should it be allowed to deviate by more than 5 percent from the rated value.

GRID DISSIPATION - The 4CX5000J control grid has a maximum dissipation rating of 75 watts. Precautions should be observed to avoid exceeding this rating. Grid dissipation is approximately the product of dc grid current and peak positive grid voltage. The grid bias and driving power should be kept near the values shown in the "Typical Operation" sections of the data sheet whenever possible.

SCREEN DISSIPATION - The power dissipated by the screen of the 4CX5000J must not exceed 250 watts.

Screen dissipation, in cases where there is no ac applied to the screen, is the simple product of the screen voltage and the screen current.

Screen dissipation is likely to rise to excessive values when the plate voltage, bias voltage, or plate load are removed with filament and screen voltages applied. Suitable protective means must be provided to limit the screen dissipation to 250 watts in the event of circuit failure.

PLATE DISSIPATION - The plate-dissipation rating for the 4CX5000J is 6000 watts. Plate dissipation may be permitted to rise above the maximum rating during brief periods, such as may occur during tuning.

HIGH VOLTAGE - The 4CX5000J operates at voltages which can be deadly, and the equipment must be designed properly and operating precautions must be followed. Equipment must be designed so that no one can come in contact with high voltages. All equipment must include safety enclosures for high-voltage circuits and terminals, with interlock switches to open the primary circuits of the power supplies and to discharge high voltage condensers whenever access doors are opened. Interlock switches must not be bypassed or "cheated" to allow operation with access doors open. Always remember that HIGH VOLTAGE CAN KILL.

INTERELECTRODE CAPACITANCE - The actual internal interelectrode capacitance of a tube is influenced by many variables in most applications, such as stray capacitance to the chassis, capacitance added by the socket used, stray capacitance between tube terminals, and

wiring effects. To control the actual capacitance values within the tube, as the key component involved, the industry and the Military Services use a standard test procedure as described in Electronic Industries Association Standard RS-191. This requires the use of specially constructed test fixtures which effectively shield all external tube leads from each other and eliminates any capacitance reading to "ground". The test is performed on a cold tube. Other factors being equal, controlling internal tube capacitance in this way normally assures good interchangeability of tubes over a period of time, even when the tube may be made by different manufacturers. The capacitance values shown in the manufacturer's technical data, or test specifications, normally are taken in accordance with Standard RS-191.

The equipment designer is therefore cautioned to make allowance for the actual capacitance values which will exist in any normal application. Measurements should be taken with the socket and mounting which represent approximate final layout if capacitance values are highly significant in the design.

SPECIAL APPLICATIONS - If it is desired to operate this tube under conditions widely different from those given here, write to Power Grid Tube Division, EIMAC Division of Varian, 301 Industrial Way, San Carlos, California 94070, for information and recommendations.

DIMENSIONAL DATA						
DIM.	INCHES			MILLIMETERS		
	MIN.	MAX.	REF.	MIN.	MAX.	REF.
A	4.812	4.938	--	122.22	125.43	--
B	0.855	0.895	--	21.72	22.73	--
C	0.720	0.760	--	18.29	19.30	--
D	1.896	1.936	--	48.16	49.17	--
E	3.133	3.173	--	79.58	80.59	--
F	3.792	3.832	--	96.32	97.33	--
G	3.980	4.020	--	101.09	102.11	--
H	0.188	--	--	4.78	--	--
J	0.188	--	--	4.78	--	--
K	0.188	--	--	4.78	--	--
L	1.764	1.826	--	44.81	46.38	--
M	4.188	4.563	--	106.38	115.90	--
N	2.875	3.250	--	73.03	82.55	--
P	8.625	9.125	--	219.08	231.78	--
R	0.986	1.050	--	25.04	26.67	--
S	3.875	4.250	--	98.43	107.95	--
T	0.375	--	--	9.53	--	--
U						
V						
W						
X						
Y						
Z						

NOTES:
1. REF. DIMENSIONS ARE FOR INFO. ONLY & ARE NOT REQUIRED FOR INSPECTION PURPOSES.

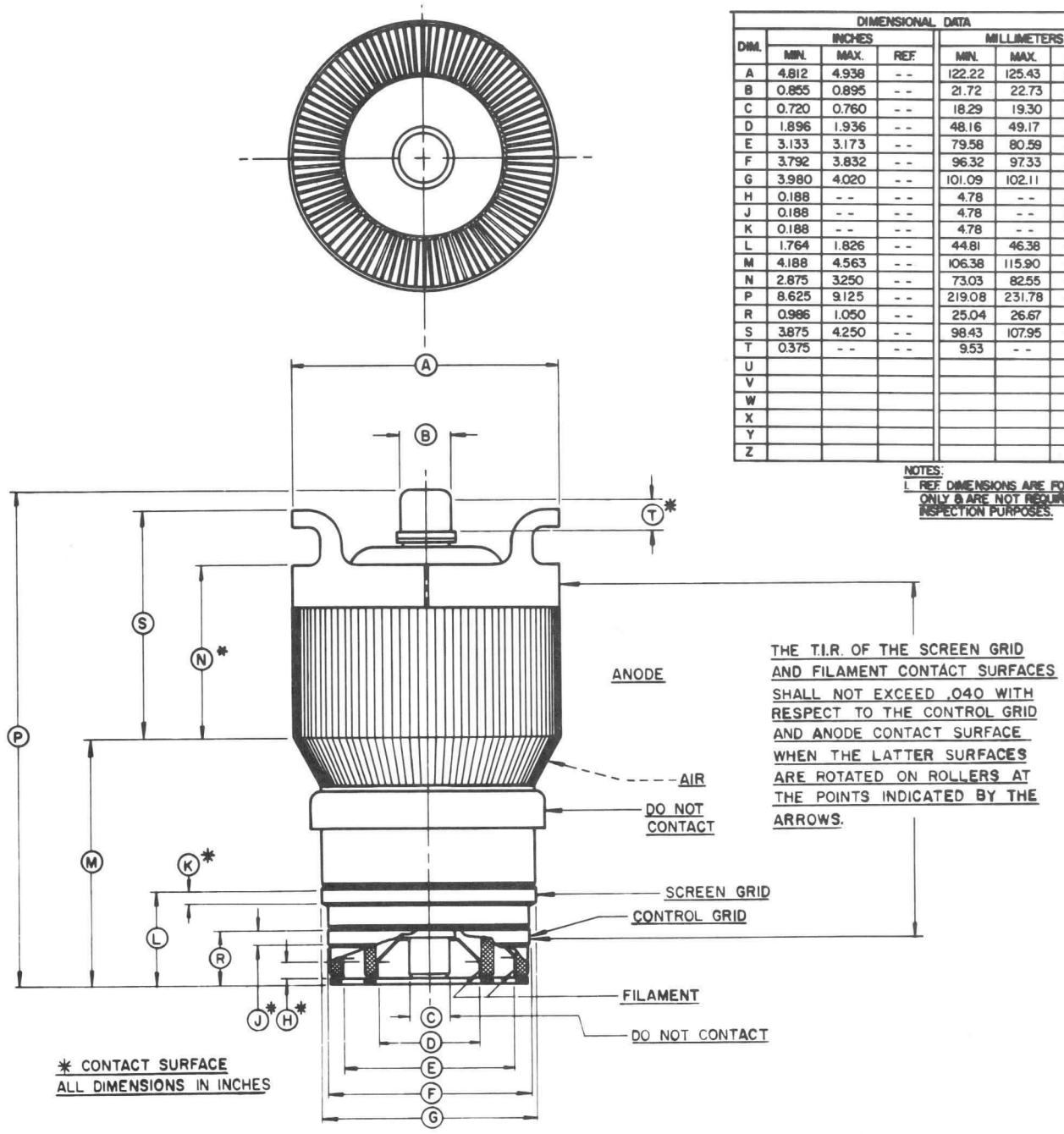

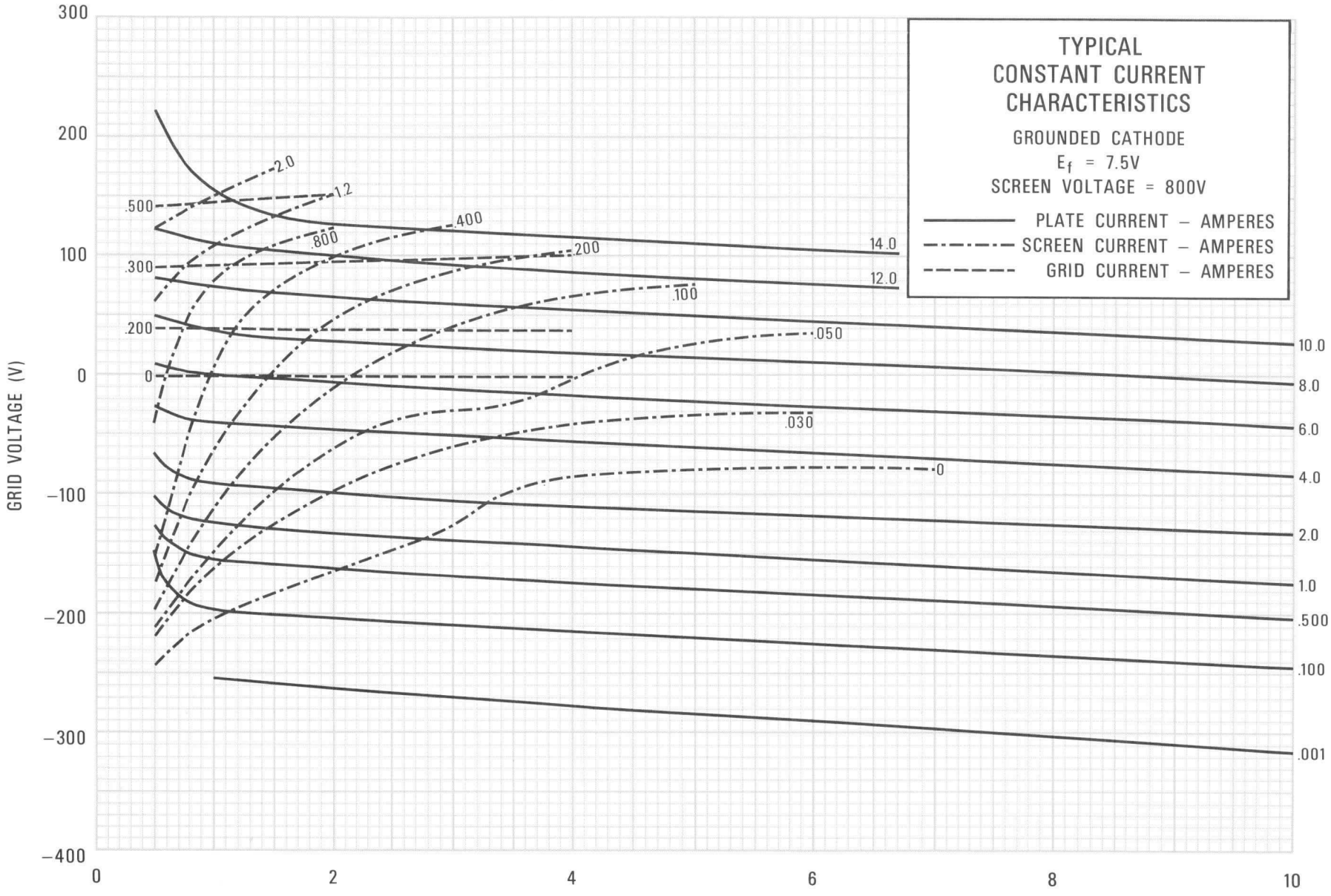
TYPICAL
CONSTANT CURRENT
CHARACTERISTICS
GROUNDED CATHODE
E_f = 7.5V
SCREEN VOLTAGE = 800V
PLATE CURRENT – AMPERES
SCREEN CURRENT – AMPERES
GRID CURRENT – AMPERES
GRID VOLTAGE (V)
300
200
100
0
−100
−200
−300
−400
0
2
4
6
8
10
PLATE VOLTAGE (kV)
2.0
1.2
.800
.400
.200
.100
.050
.030
0
.500
.300
.200
0
14.0
12.0
10.0
8.0
6.0
4.0
2.0
1.0
.500
.100
.001

CURVE #4337

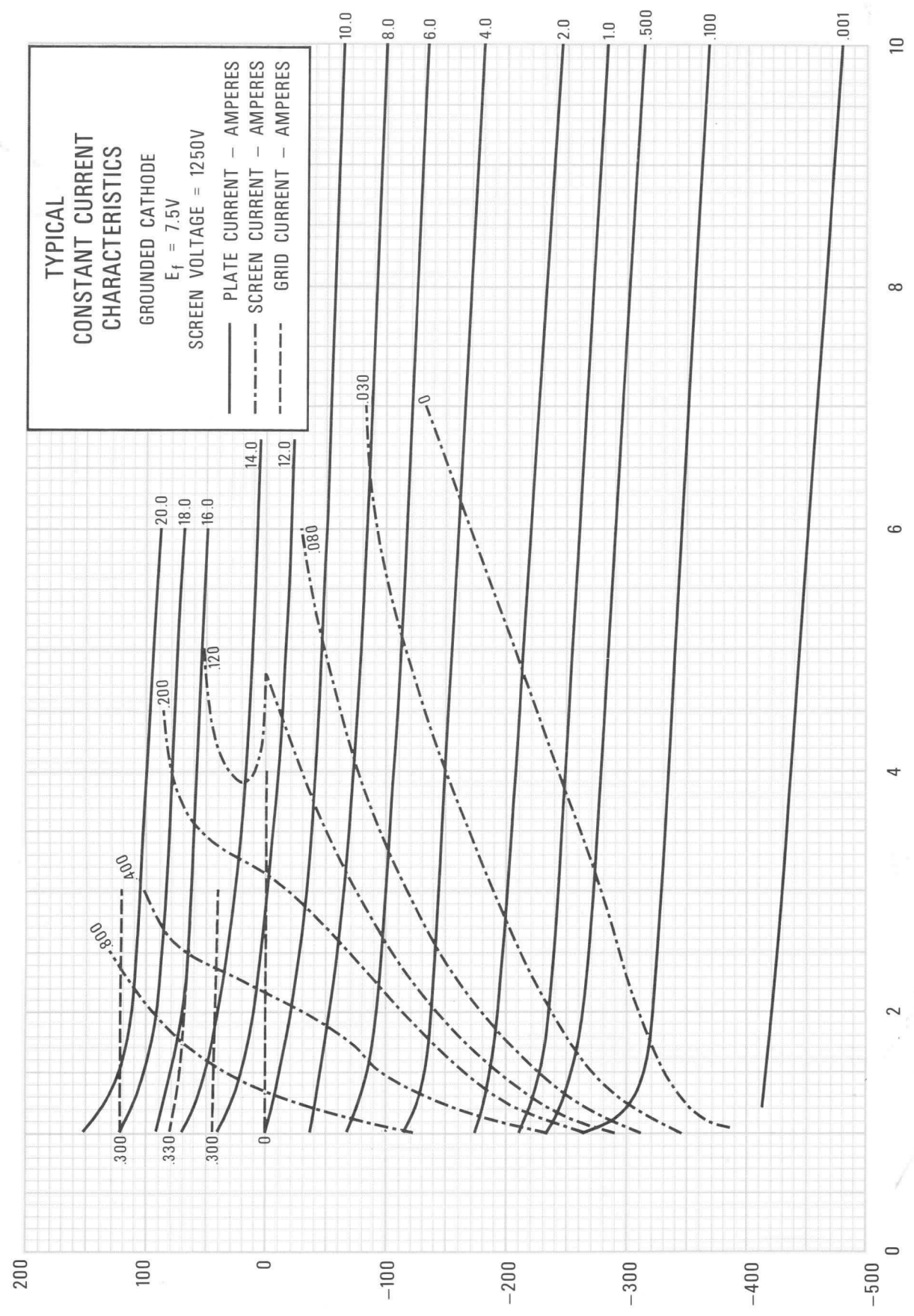
TYPICAL
CONSTANT CURRENT
CHARACTERISTICS
GROUNDED CATHODE
E_f = 7.5V
SCREEN VOLTAGE = 1250V
PLATE CURRENT – AMPERES
SCREEN CURRENT – AMPERES
GRID CURRENT – AMPERES
10.0
8.0
6.0
4.0
2.0
1.0
.500
.100
.001
.030
0
.080
.120
.200
.400
.800
14.0
12.0
20.0
18.0
16.0
.300
.330
.300
0
200
100
0
−100
−200
−300
−400
−500
0
2
4
6
8
10
GRID VOLTAGE (V)
PLATE VOLTAGE (kV)

CURVE #4339

8170W
4CX5000R

TECHNICAL DATA

RADIAL-BEAM POWER TETRODE

The EIMAC 8170W/4CX5000R is a compact, high-power, ceramic/metal tetrode. It is directly interchangeable with the 8170/4CX5000A but incorporates more rugged internal construction features, including a sturdy mesh cathode, which allows it to meet demanding vibration and shock specifications.

The 8170W/4CX5000R is useful up to 110 Mc and is recommended for use as a radio-frequency linear amplifier, a Class-AB audio amplifier, or a Class-C power amplifier or plate-modulated amplifier.



GENERAL CHARACTERISTICS [1]

ELECTRICAL

Filament: Thoriated Tungsten		
Voltage	7.5 ± 0.37	V
Current, at 7.5 volts	75	A
Amplification Factor (Average):		
Grid to Screen	4.5	
Direct Interelectrode Capacitance (grounded filament)[2]		
Cin	115	pF
Cout	20	pF
Cgp	0.7	pF
Direct Interelectrode Capacitance (grounded grid)[2]		
Cin	53	pF
Cout	22.5	pF
Cpk	0.10	pF
Frequency of Maximum Rating:		
CW	100	MHz

1. Characteristics and operating values are based upon performance tests. These figures may change without notice as the result of additional data or product refinement. EIMAC Division of Varian should be consulted before using this information for final equipment design.
2. Capacitance values are for a cold tube as measured in a special shielded fixture in accordance with Electronic Industries Association Standard RS-191.

MECHANICAL

Maximum Overall Dimensions:	
Length	9.125 in;231.77 mm
Diameter	4.938 in;125.43 mm
Net Weight	9.5 lb; 4.31 kg
Operating Position	Axis vertical, base up or down

(Effective 5-1-76) © 1963, 1970, 1971, 1976 by Varian Printed in U.S.A.

Maximum Operating Temperature:
Ceramic/Metal Seals or Anode Core . . . . . 250°C
Cooling . . . . . Forced Air
Base . . . . . Special concentric
Recommended Air System Socket . . . . . SK-300 or SK-300A
Recommended (Air) Chimney SK-306

RADIO FREQUENCY LINEAR AMPLIFIER GRID DRIVEN

Class AB_1

ABSOLUTE MAXIMUM RATINGS

DC PLATE VOLTAGE	7500	VOLTS
DC SCREEN VOLTAGE	1500	VOLTS
DC PLATE CURRENT	4.0	AMPERES
PLATE DISSIPATION	6000	WATTS
SCREEN DISSIPATION	250	WATTS
GRID DISSIPATION	75	WATTS

TYPICAL OPERATION (Frequencies to 100 MHz)
Class AB_1, Grid Driven, Peak Envelope or Modulation Crest Conditions

Plate Voltage	7500	Vdc
Screen Voltage	1250	Vdc
Grid Voltage [1]	-300	Vdc
Zero-Signal Plate Current	0.50	Adc
Single-Tone Plate Current	1.90	Adc
Single-Tone Screen Current [2]	0.20	Adc
Peak rf Grid Voltage [2]	300	v
Plate Dissipation	4200	W
Single-Tone Plate Output Power	10,000	W

1. Adjust to specified zero-signal dc plate current.
2. Approximate value.

RADIO FREQUENCY POWER AMPLIFIER OR OSCILLATOR

Class C Telegraphy or FM Telephony
(Key-Down Conditions)

ABSOLUTE MAXIMUM RATINGS:

DC PLATE VOLTAGE	7500	VOLTS
DC SCREEN VOLTAGE	1500	VOLTS
DC PLATE CURRENT	3.0	AMPERES
PLATE DISSIPATION	5000	WATTS
SCREEN DISSIPATION	250	WATTS
GRID DISSIPATION	75	WATTS

TYPICAL OPERATION (Frequencies to 100 MHz)

Plate Voltage	6500	Vdc
Screen Voltage	750	Vdc
Grid Voltage	-350	Vdc
Plate Current	2.30	Adc
Screen Current [1]	0.20	Adc
Grid Current [1]	0.05	Adc
Measured Driving Power [1]	100	W
Useful Output Power	10,000	W

1. Approximate value.

PLATE MODULATED RADIO FREQUENCY POWER AMPLIFIER-GRID DRIVEN

Class C Telephony (Carrier Conditions)

ABSOLUTE MAXIMUM RATINGS:

DC PLATE VOLTAGE	5000	VOLTS
DC SCREEN VOLTAGE	1000	VOLTS
DC PLATE CURRENT	2.5	AMPERES
PLATE DISSIPATION [1]	3500	WATTS
SCREEN DISSIPATION [2]	250	WATTS
GRID DISSIPATION [2]	75	WATTS

1. Corresponds to 5000 watts at 100% sine-wave modulation.
2. Average, with or without modulation.

TYPICAL OPERATION (Frequencies to 100 MHz)

Plate Voltage	5000	Vdc
Screen Voltage	500	Vdc
Grid Voltage	-400	Vdc
Plate Current	1.40	Adc
Screen Current [1]	0.26	Adc
Grid Current [1]	0.05	Adc
Peak af Screen Voltage [1] (100% modulation)	450	v
Peak rf Grid Voltage [1]	520	v
Calculated Driving Power	25	W
Plate Dissipation	1200	W
Plate Output Power	5800	W

1. Approximate value

AUDIO FREQUENCY POWER AMPLIFIER OR MODULATOR

Class AB_1, Grid Driven (Sinusoidal Wave)

ABSOLUTE MAXIMUM RATINGS (per tube)

DC PLATE VOLTAGE	7500	VOLTS
DC SCREEN VOLTAGE	1500	VOLTS
DC PLATE CURRENT	4.0	AMPERES
PLATE DISSIPATION	6000	WATTS
SCREEN DISSIPATION	250	WATTS
GRID DISSIPATION	75	WATTS

TYPICAL OPERATION (Two Tubes)

Plate Voltage	4000	5000	6000	7000	Vdc
Screen Voltage	1250	1250	1250	1250	Vdc
Grid Voltage 1/4	-270	-280	-310	-325	Vdc
Zero-Signal Plate Current	1.25	1.00	0.83	0.70	Adc
Max. Signal Plate Current	5.10	4.40	4.25	3.65	Adc
Max. Signal Screen Current[1]	0.35	0.33	0.30	0.24	Adc
Peak af Grid Voltage[2]	250	240	270	235	v
Max. Signal Plate Dissipation[1]	4200	4200	4200	4200	W
Plate Output Power	11,500	13,500	17,000	17,500	W
Load Resistance (plate to plate)	1500	2370	2940	4100	Ω

1. Approximate value.
2. Per Tube.
3. Nominal drive power is one-half peak power.
4. Adjust to give stated zero-signal plate current.

NOTE: TYPICAL OPERATION data are obtained from direct measurement or by calculation from published characteristic curves. Adjustment of the rf grid voltage to obtain the specified plate current at the specified bias, screen and plate voltages is assumed. If this procedure is followed, there will be little variation in output power when the tube is changed, even though there may be some variation in grid and screen current. The grid and screen currents which result when the desired plate current is obtained are incidental and vary from tube to tube. These current variations cause no difficulty so long as the circuit maintains the correct voltage in the presence of the variations in current. In the case of Class C Service, if grid bias is obtained principally by means of a grid resistor, the resistor must be adjustable to obtain the required bias voltage when the correct rf grid voltage is applied.

RANGE VALUES FOR EQUIPMENT DESIGN

	Min.	Max.	
Filament: Current at 7.5 volts	73	78	A
Interelectrode Capacitances[1] (grounded filament connection)			
Cin	108	122	pF
Cout	18	23	pF
Cgp	---	1.0	pF
Interelectrode Capacitances[1] (grounded grid connection)			
Cin	48	58	pF
Cout	19	24	pF
Cpk	---	0.16	pF

1. Capacitance values are for a cold tube as measured in a special shielded fixture in accordance with Electronic Industries Association Standard RS-191.

APPLICATION

MECHANICAL

MOUNTING - The 4CX5000R must be operated with its axis vertical. The base of the tube may be down or up at the convenience of the circuit designer.

SOCKET - The EIMAC SK-300A Air-System Socket is designed especially for the concentric base terminals of the 4CX5000R. The use of recommended air-flow rates through this socket provides effective forced-air cooling of the tube. Air forced into the bottom of the socket passes over the tube terminals and through an Air Chimney, the SK-306, into the anode cooling fins. The SK-300 socket may be used instead of the SK-300A, but its use will result in a slightly less efficient cooling system at high dissipation levels.

COOLING - The maximum temperature rating for the external surfaces of the 4CX5000R is 250°C. Sufficient forced-air circulation must be

provided to keep the temperature of the anode at the base of the cooling fins and the temperature of the ceramic/metal seals below 250°C. Sea level air-flow requirements to maintain seal temperatures at 200°C in 50°C ambient air are tabulated below (for operation below 30 megacycles).

	SK-300A Socket		SK-300 Socket	
Plate Dissipation (Watts)	Air Flow (CFM)	Pressure Drop (Inches of water)	Air Flow (CFM)	Pressure Drop (Inches of water)
2000	75	0.4	75	0.4
3000	105	0.7	100	0.7
4000	145	1.1	135	1.2
5000	190	1.5	165	1.8
6000	230	2.0	200	2.5

Since the power dissipated by the filament represents about 560 watts and since grid-plus screen dissipation can, under some conditions, represent another 200 to 300 watts, allowance has been made in preparing this tabulation for an additional 1000 watts dissipation

At higher altitudes, higher frequencies, or higher ambient temperatures the flow rate must be increased to obtain equivalent cooling. The flow rate and corresponding pressure differential must be determined individually in such cases, using maximum rated temperatures as the criteria for satisfactory cooling.

IMPACT AND VIBRATION - The 4CX5000R is designed to operate under shock and vibration that might disable a less rugged tube. Up to 50 g of impact of 11 millisecond duration can be sustained and vibratory acceleration up to 5 g from 14 to 200 Hz and 2 g from 200 to 500 Hz will not ordinarily injure the tube unless prolonged. Production tubes are subjected to testing to insure this ruggedness.

ELECTRICAL

FILAMENT VOLTAGE - The rated filament voltage for the 4CX5000R is 7.5 volts. Filament voltage, as measured at the socket, should be maintained at this value to obtain maximum tube life. In no case should it be allowed to deviate by more than 5 percent from the rated value.

GRID DISSIPATION - The 4CX5000R control grid has a maximum dissipation rating of 75 watts. Precautions should be observed to avoid exceeding this rating. Grid Dissipation is approximately the product of dc grid current and peak positive grid voltage. The grid bias and driving power should be kept near the values shown in the "Typical Operation" sections of the data sheet whenever possible.

SCREEN DISSIPATION - The power dissipated by the screen of the 4CX5000R must not exceed 250 watts.

Screen dissipation, in cases where there is no ac applied to the screen, is the simple product of the screen voltage and the screen current. If the screen voltage is modulated, the screen dissipation will depend upon loading, driving power, and carrier screen voltage.

Screen dissipation is likely to rise to excessive values when the plate voltage, bias voltage, or plate load are removed with filament and screen voltages applied. Suitable protective means must be provided to limit the screen dissipation to 250 watts in the event of circuit failure.

PLATE DISSIPATION - The plate-dissipation rating for the 4CX5000R is 5000 watts for most applications but for audio and SSB amplifier applications, the maximum allowable dissipation is 6000 watts. Plate dissipation may be permitted to rise above the maximum rating during brief periods, such as may occur during tuning.

When the 4CX5000R is operated as a plate-modulated rf power amplifier, the input power is limited by conditions not connected with the plate efficiency, which is quite high. Therefore, except during tuning there is little possibility that the 3500-watt maximum plate dissipation rating will be exceeded.

HIGH VOLTAGE - The 4CX5000R operates at voltages which can be deadly, and the equipment must be designed properly and operating precautions must be followed. Equipment must be designed so that no one can come in contact with high voltages. All equipment must include safety enclosures for high-voltage circuits and terminals, with interlock switches to open the primary circuits of the power supplies and to discharge high voltage condensers whenever access doors are opened. Interlock switches must not be bypassed or "cheated" to allow operation with access doors open. Always remember that HIGH VOLTAGE CAN KILL.

SPECIAL APPLICATIONS - If it is desired to operate this tube under conditions widely different from those given here, write to Power Grid Tube Division, EIMAC Division of Varian, 301 Industrial Way, San Carlos, California 94070, for information and recommendations.

DIM.	DIMENSIONAL DATA					
	INCHES			MILLIMETERS		
	MIN.	MAX.	REF.	MIN.	MAX.	REF.
A	4.812	4.938	- -	122.22	125.43	- -
B	0.855	0.895	- -	21.72	22.73	- -
C	0.600	0.760	- -	15.24	19.30	- -
D	1.896	1.936	- -	48.16	49.17	- -
E	3.133	3.173	- -	79.58	80.59	- -
F	3.792	3.832	- -	96.32	97.33	- -
G	3.980	4.020	- -	101.09	102.11	- -
H	0.188	- -	- -	4.78	- -	- -
J	0.188	- -	- -	4.78	- -	- -
K	0.188	- -	- -	4.78	- -	- -
L	1.764	1.826	- -	44.81	46.38	- -
M	4.188	4.563	- -	106.38	115.90	- -
N	2.875	3.250	- -	73.03	82.55	- -
P	8.625	9.125	- -	219.08	231.78	- -
R	0.986	1.050	- -	25.04	26.67	- -
S	3.875	4.250	- -	98.43	107.95	- -
T	0.375	- -	- -	9.53	- -	- -
U						
V						
W						
X						
Y						
Z						

NOTES:
1. REF. DIMENSIONS ARE FOR INFO. ONLY & ARE NOT REQUIRED FOR INSPECTION PURPOSES.

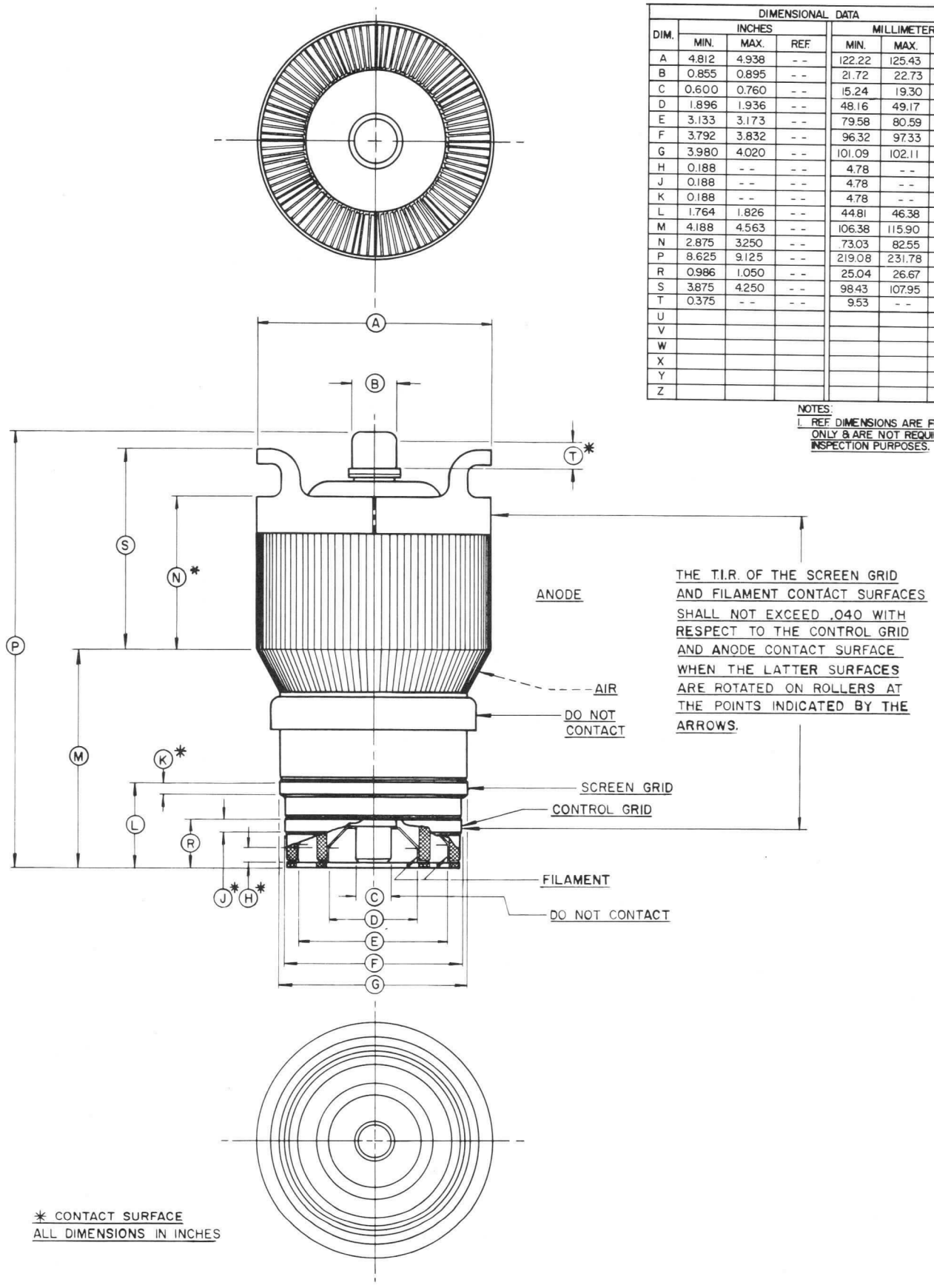

* CONTACT SURFACE
ALL DIMENSIONS IN INCHES

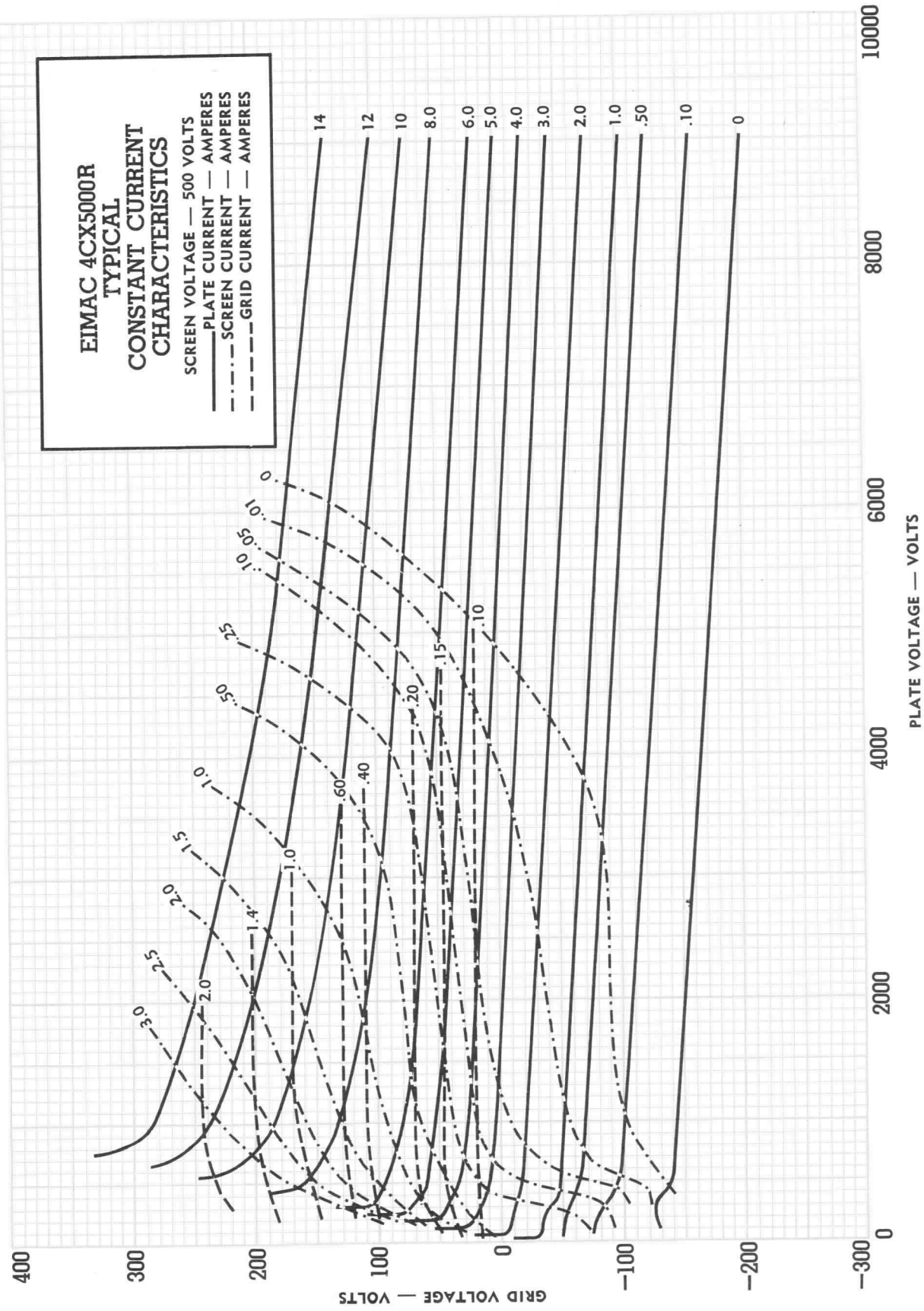
EIMAC 4CX5000R
TYPICAL
CONSTANT CURRENT
CHARACTERISTICS
SCREEN VOLTAGE — 500 VOLTS
PLATE CURRENT — AMPERES
SCREEN CURRENT — AMPERES
GRID CURRENT — AMPERES
14
12
10
8.0
6.0
5.0
4.0
3.0
2.0
1.0
.50
.10
0
PLATE VOLTAGE — VOLTS
GRID VOLTAGE — VOLTS

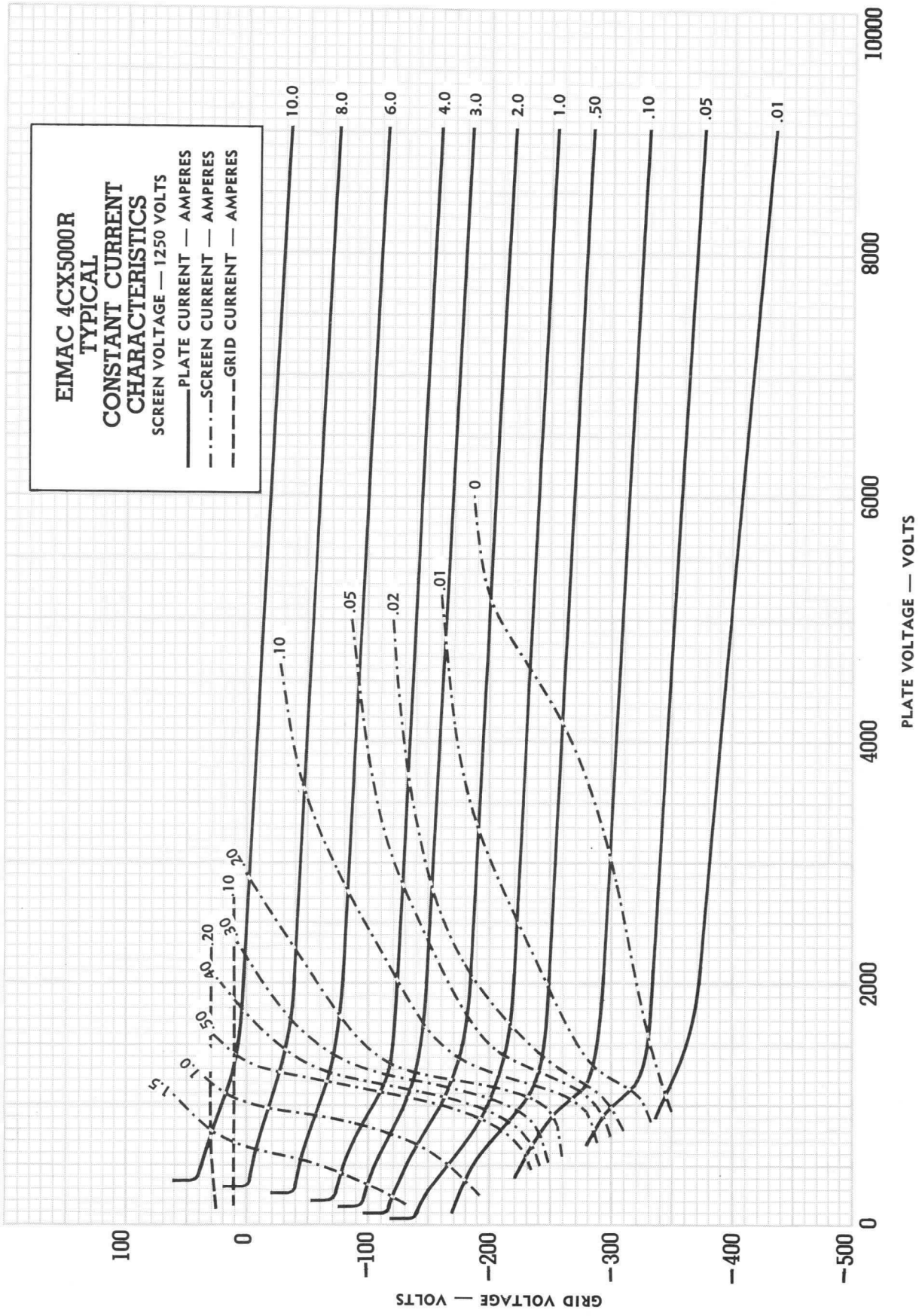
EIMAC 4CX5000R
TYPICAL
CONSTANT CURRENT
CHARACTERISTICS
SCREEN VOLTAGE — 1250 VOLTS
PLATE CURRENT — AMPERES
SCREEN CURRENT — AMPERES
GRID CURRENT — AMPERES
10.0
8.0
6.0
4.0
3.0
2.0
1.0
.50
.10
.05
.01
0
.10
.05
.02
.01
1.5
1.0
.50
.40
.30
.20
.10
.20
100
0
−100
−200
−300
−400
−500
0
2000
4000
6000
8000
10000
GRID VOLTAGE — VOLTS
PLATE VOLTAGE — VOLTS

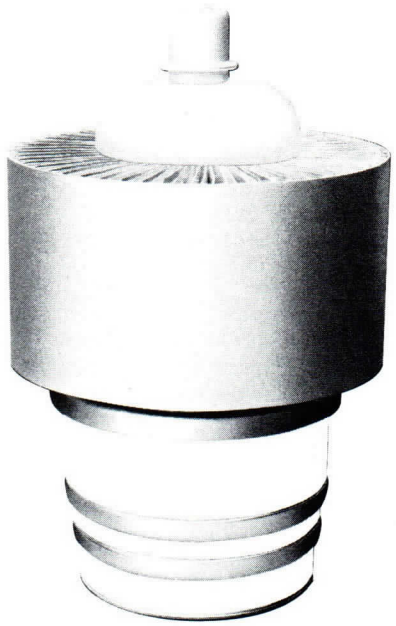

TECHNICAL DATA

4CX7500A
VHF RADIAL BEAM POWER TETRODE

The EIMAC 4CX7500A is a compact ceramic/metal radial beam power tetrode intended for use in VHF power amplifier applications. It features a type of internal mechanical structure which results in high rf operating efficiency. Low rf losses in this structure permit operation at full ratings to 220 MHz. A dense mesh filament is used which contributes to the high performance capability.

The 4CX7500A has a gain of over 20 dB in FM broadcast service, and is also recommended for rf linear power amplifier service and for VHF-TV linear amplifier service. The anode is rated for 7500 watts of dissipation with forced air cooling.

GENERAL CHARACTERISTICS[1]

ELECTRICAL

Filament: Thoriated Tungsten Mesh		
Voltage	7.0 ± 0.35	V
Current, at 7.0 volts	110	A
Amplification Factor, average		
Grid to Screen	4.5	
Direct Interelectrode Capacitances (cathode grounded)[2]		
Cin	145	pF
Cout	20	pF
Cgp	0.5	pF
Direct Interelectrode Capacitances (grids grounded)[2]		
Cin	74.1	pF
Cout	20.6	pF
Cpk	0.065	pF
Maximum Frequency for Full Ratings (CW)	220	MHz

[1]Characteristics and operating values are based on performance tests. These figures may change without notice as the result of additional data or product refinement. Varian Power Grid & X-Ray Tube Products should be consulted before using this information for final equipment design.

[2]Capacitance values are for a cold tube as measured in a special shielded fixture in accordance with Electronic Industries Association Standard RS-191.

394625 (Effective April 1985) VA4807 2216

Printed in U.S.A.

varian

power grid & x-ray tube products

301 Industrial Way / San Carlos, CA 94070 / U.S.A. / (415) 592-1221

MECHANICAL

Maximum Overall Dimensions:	
Length	8.72 In; 21. 5 cm
Diameter	5.66 In; 14.4 cm
Net Weight (approximate)	7.7 Lbs; 3.5 kg
Operating Position	Axis Vertical, Base Up or Down
Cooling	Forced Air
Maximum Operating Temperature, Ceramic/Metal Seals & Anode Core	250°C
Base	Special, Coaxial
Recommended Air-System Socket	HF: EIMAC SK-340
	VHF: EIMAC SK-350
Available Screen Grid Bypass Capacitor Kit for SK-350 or SK-360 (8000 pF @ 5000 DCWV)	EIMAC SK-355
Recommended Air-System Chimney (for SK-350 or SK-360)	EIMAC SK-346
Recommended EIMAC Cavity Assembly for FM Broadcast Service	CV-2228
Available Anode Connector Clip	EIMAC ACC-3

RADIO FREQUENCY POWER AMPLIFIER
Class C Telegraphy or FM
(Key-down Conditions)

ABSOLUTE MAXIMUM CONDITIONS

DC PLATE VOLTAGE	7500	VOLTS
DC SCREEN VOLTAGE	1500	VOLTS
DC GRID VOLTAGE	-500	VOLTS
DC PLATE CURRENT	3.0	AMPERES
PLATE DISSIPATION	7500	WATTS
SCREEN DISSIPATION	165	WATTS
GRID DISSIPATION	50	WATTS

TYPICAL OPERATION
(Measured data in EIMAC CV2228 FM cavity at 100.5 MHz)

Plate Voltage	6.5	6.5	6.5	kVdc
Screen Voltage	635	750	750	Vdc
Grid Voltage	-460	-275	-400	Vdc
Plate Current	2.1	2.2	2.4	Adc
Screen Current	195	128	140	mAdc
Grid Current	185	90	95	mAdc
Driving Power	247	100	130	W
Efficiency	79.3	77.6	77.0	%
Useful Output Power	10.8	11.1	12.1	kW
Power Gain	16	20	19.7	dB

RADIO FREQUENCY LINEAR AMPLIFIER
Class AB1

ABSOLUTE MAXIMUM RATINGS

DC PLATE VOLTAGE	7500	VOLTS
DC SCREEN VOLTAGE	1500	VOLTS
DC GRID VOLTAGE	-500	VOLTS
DC PLATE CURRENT	3.0	AMPERES
PLATE DISSIPATION	7500	WATTS
SCREEN DISSIPATION	165	WATTS
GRID DISSIPATION	50	WATTS

* Approximate Value
** Adjust to specified zero-signal plate current
\# PEP output or rf power at crest of modulation envelope
§ Referenced against one tone of a two equal-tone signal

Typical Operation, Peak Envelope or Modulation Crest Conditions (frequencies below 30 MHz)

Plate Voltage	7500	Vdc
Zero Signal Plate Current	750	mAdc
Max. Signal Plate Current	2.2	Adc
Screen Voltage	1250	Vdc
Screen Current*	95	mAdc
Grid Bias Voltage**	-190	Vdc
Grid Current*	0	mAdc
Useful Power Out#,##	10	kW
Driving Power*	0	W
Intermodulation Distortion Products§		
3rd Order Products	-32	dB
5th Order Products	-44	dB

##Delivered to the load

TYPICAL OPERATION values are obtained by measurement or by calculation from published characteristic curves. To obtain the specified plate current at the specified bias, screen, and plate voltages, adjustment of the rf grid voltage is assumed. If this procedure is followed, there will be little variation in output power when the tube is replaced, even though there may be some variation in grid and screen currents. The grid and screen currents which occur when the desired plate current is obtained are incidental and vary from tube to tube. These current variations cause no performance degradation providing the circuit maintains the correct voltage in the presence of the current variations.

APPLICATION

MECHANICAL

MOUNTING - The 4CX7500A must be mounted with its axis vertical, base up or down at the convenience of the equipment designer, and should be protected from shock and vibration which could damage the internal structure of the tube.

AIR-SYSTEM SOCKET & CHIMNEY - The EIMAC sockets type SK-340 and SK-350 are designed especially for the concentric base terminals of the 4CX7500A. The SK-340 is intended for use at HF, while the SK-350 is recommended for VHF applications. The SK-346 chimney is intended for use with either. Use of the recommended air flow rates through either socket will provide effective forced-air cooling of the tube. Air forced into the bottom of the socket passes over the tube terminals and through the chimney and into the anode cooling fins.

COOLING - Forced-air cooling is required in all applications. The blower selected in a given application must be capable of supplying the desired air flow at a back pressure sufficient for the tube, plus any drop caused by ducts and filters. Air flow must be applied before or simultaneously with filament voltage.

Minimum air flow requirements for a maximum anode temperature of 225°C for various altitudes and dissipation levels are listed. The pressure drop values shown are approximate and are for the SK-340/tube/SK-346 combination. If an SK-350 is used air passages in addition to those in the socket may be required for low pressure drop.

Inlet Air Temperature = 25°C

Sea Level	Plate Diss. Watts	Flow Rate CFM	Press. Drop In. Water
	5000	192	1.0
	7500	414	4.3
5000 Feet	Plate Diss. Watts	Flow Rate CFM	Press. Drop In. Water
	5000	232	1.2
	7500	501	5.1
10,000 Feet	Plate Diss. Watts	Flow Rate CFM	Press. Drop In. Water
	5000	281	1.4
	7500	607	6.1

Inlet Air Temperature = 35°C

Sea Level	Plate Diss. Watts	Flow Rate CFM	Press. Drop In. Water
	5000	220	1.25
	7500	476	5.42
5000 Feet	Plate Diss. Watts	Flow Rate CFM	Press. Drop In. Water
	5000	268	1.5
	7500	576	6.5
10,000 Feet	Plate Diss. Watts	Flow Rate CFM	Press. Drop In. Water
	5000	324	1.75
	7500	6.98	7.75

Inlet Air Temperature = 50°C

Sea Level	Plate Diss. Watts	Flow Rate CFM	Press Drop In. Water
	5000	280	1.8
	7500	592	7.9
5000 Feet	Plate Diss. Watts	Flow Rate CFM	Press Drop In. Water
	5000	332	2.1
	7500	717	9.4
10,000 Feet	Plate Diss. Watts	Flow Rate CFM	Press. Drop In. Water
	5000	402	2.5
	7500	868	11.3

With operation at plate dissipation below 5.0 kW and lower air flow inherent with that operation, special attention is required for cooling the center of the stem (base), by means of special directors or some other provision. Temperature measurements in this area should be made, as well as the anode seal areas, during development of the equipment. Temperature-sensitive paints are available for this purpose, and Application Bulletin #20 titled TEMPERATURE MEASUREMENTS WITH EIMAC POWER TUBES is available from Varian Power Grid & X-Ray Tube Products on request.

An air interlock system should be incorporated in the design to automatically remove all voltages from the tube in case of even a partial failure of the tube cooling air.

It is considered good engineering practice to supply more than the minimum required cooling air, to allow for variables such as dirty air filters, rf seal heating, and dirty anode cooling fins if the tube has been in service for some time.

ELECTRICAL

ABSOLUTE MAXIMUM RATINGS - Values shown for each type of service are based on the "absolute system" and are not to be exceeded under any service conditions. These ratings are limiting values outside

which the serviceability of the tube may be impaired. In order not to exceed absolute ratings the equipment designer has the responsibility of determining an average design value for each rating below the absolute value of that rating by a safety factor so that the absolute values will never be exceeded under any usual conditions of supply-voltage variation, load variation, or manufacturing variation in the equipment itself. It does not necessarily follow that combinations of absolute maximum ratings can be attained simultaneously.

FILAMENT OPERATION - At rated (nominal) filament voltage the peak emission capability of the tube is many times that needed for communication service. A reduction in filament voltage will lower the filament temperature, which will substantially increase life expectancy. The correct value of filament voltage should be determined for the particular application. It is recommended the tube be operated at full nominal voltage for an initial stabilization period of 100 to 200 hours before any action is taken to operate at reduced voltage. The voltage should gradually be reduced until there is a slight degradation in performance (such as power output or distortion). The filament voltage should then be increased a few tenths of a volt above the value where performance degradation was noted. The operating point should be rechecked after 24 hours. Filament voltage should be closely regulated when voltage is to be reduced in this manner, to avoid any adverse influence by normal line voltage variations. Filament voltage should be measured at the tube base or socket, using an accurate rms-responding meter. Periodically the procedure outlined above for reduction of voltage should be repeated, with voltage reset as required, to assure best life.

GRID OPERATION - The maximum control grid dissipation is 50 watts, determined approximately by the product of the dc grid current and the peak positive grid voltage.

SCREEN OPERATION - The maximum screen grid dissipation is 165 watts. With no ac applied to the screen grid, dissipation is simply the product of dc screen voltage and the dc screen current. With screen modulation, dissipation is dependent on rms screen voltage and rms screen current. Plate voltage, plate loading, or bias voltage must never be removed while filament and screen voltages are present, since screen dissipation ratings will be exceeded. A protective spark-gap device should be connected between the screen grid and the cathode to guard against excessive voltage.

SCREEN CURRENT - The screen current may reverse under certain conditions and produce negative indications on the screen current meter. This is a normal characteristic of most tetrodes. The screen power supply should be designed with this characteristic in mind, so that the correct operating voltage will be maintained on the screen under all conditions. A current path from the screen to cathode must be provided by a bleeder resistor or a shunt regulator connected between screen and cathode and arranged to pass approximately 10% of the average screen current per connected tube. A series regulated power supply can be used only when an adequate bleeder resistor is provided.

FAULT PROTECTION - In addition to the normal plate over-current interlock, screen current interlock, and air-flow interlock, the tube must be protected from internal damage caused by an internal plate arc which may occur at high plate voltage. A protective resistance should always be connected in series with each tube anode, to absorb power supply stored energy if an internal arc should occur. EIMAC's Application Bulletin #17 titled FAULT PROTECTION contains considerable detail, and is available on request.

HIGH VOLTAGE - Normal operating voltages used with this tube are deadly, and the equipment must be designed properly and operating precautions must be followed. Design all equipment so that no one can come in contact with high voltages. All equipment must include safety enclosures for high-voltage circuits and terminals, with interlock switches to open primary circuits of the power supply and to discharge high-voltage capacitors whenever access doors are opened. Interlock switches must not be bypassed or "cheated" to allow operation with access doors open. Always remember that **HIGH VOLTAGE CAN KILL.**

RADIO-FREQUENCY RADIATION - Avoid exposure to strong rf fields even at relatively low frequency. Absorption of rf energy by human tissue is dependent on frequency. Under 300 MHz most of the energy will pass completely through the human body with little attenuation or heating affect. Public health agencies are concerned with the hazard even at these frequencies. OSHA (Occupational Safety and Health Administration) recommends that prolonged exposure to rf radiation should be limited to 10 milliwatts per square centimeter.

INTERELECTRODE CAPACITANCE - The actual internal interelectrode capacitance of a tube is influenced by many variables in most applications, such as stray capacitance to the chassis, capacitance added by the socket used, stray capacitance between tube terminals, and wiring effects. To control the actual capacitance values within the tube, as the key component involved, the industry and Military Services use a standard test procedure as described in Electronic Industries Association Standard RS-191. This requires the use of specially constructed test fixtures which effectively shield all external tube leads from each other and eliminates any capacitance reading to "ground." The test is performed on a cold tube. Other factors being equal, controlling internal tube capacitance in this way normally assures good interchangeability of tubes over a period of time. The capacitance values shown here are taken in accordance with Standard RS-191. The equipment designer is therefore cautioned to make allowance for the actual capacitance values which will exist in any normal application. Measurements should be taken with the socket and mounting which represent approximate final layout if capacitance values are highly significant in the design.

SPECIAL APPLICATIONS - When it is desired to operate this tube under conditions widely different from those listed here, write to Varian Power Grid & X-Ray Tube Products, Attn: Product Manager; 301 Industrial Way; San Carlos, CA 94070 U.S.A.

OPERATING HAZARDS

PROPER USE AND SAFE OPERATING PRACTICES WITH RESPECT TO POWER TUBES ARE THE RESPONSIBILITY OF EQUIPMENT MANUFACTURERS AND USERS OF SUCH TUBES. ALL PERSONS WHO WORK WITH OR ARE EXPOSED TO POWER TUBES OR EQUIPMENT WHICH UTILIZES SUCH TUBES MUST TAKE PRECAUTIONS TO PROTECT THEMSELVES AGAINST POSSIBLE SERIOUS BODILY INJURY. DO NOT BE CARELESS AROUND SUCH PRODUCTS.

The operation of this tube may involve the following hazards, any one of which, in the absence of safe operating practices and precautions, could result in serious harm to personnel:

a. HIGH VOLTAGE - Normal operating voltages can be deadly. Remember that HIGH VOLTAGE CAN KILL.

b. LOW-VOLTAGE HIGH-CURRENT CIRCUITS - personal jewelry, such as rings, should not be worn when working with filament contacts or connectors as a short circuit can produce very high current and melting, resulting in severe burns.

c. RF RADIATION - Exposure to strong rf fields should be avoided, even at relatively low frequencies. The dangers of rf radiation are more severe at UHF and microwave frequencies and can cause serious bodily and eye injuries. CARDIAC PACEMAKERS MAY BE AFFECTED.

d. HOT SURFACES - Surfaces of tubes can reach temperatures of several hundred °C and cause serious burns if touched for several minutes after all power is removed.

Please review the detailed operating hazards sheet enclosed with each tube, or request a copy from: Varian Power Grid & X-Ray Tube Products, Power Grid Application Engineering, 301 Industrial Way, San Carlos, CA 94070.

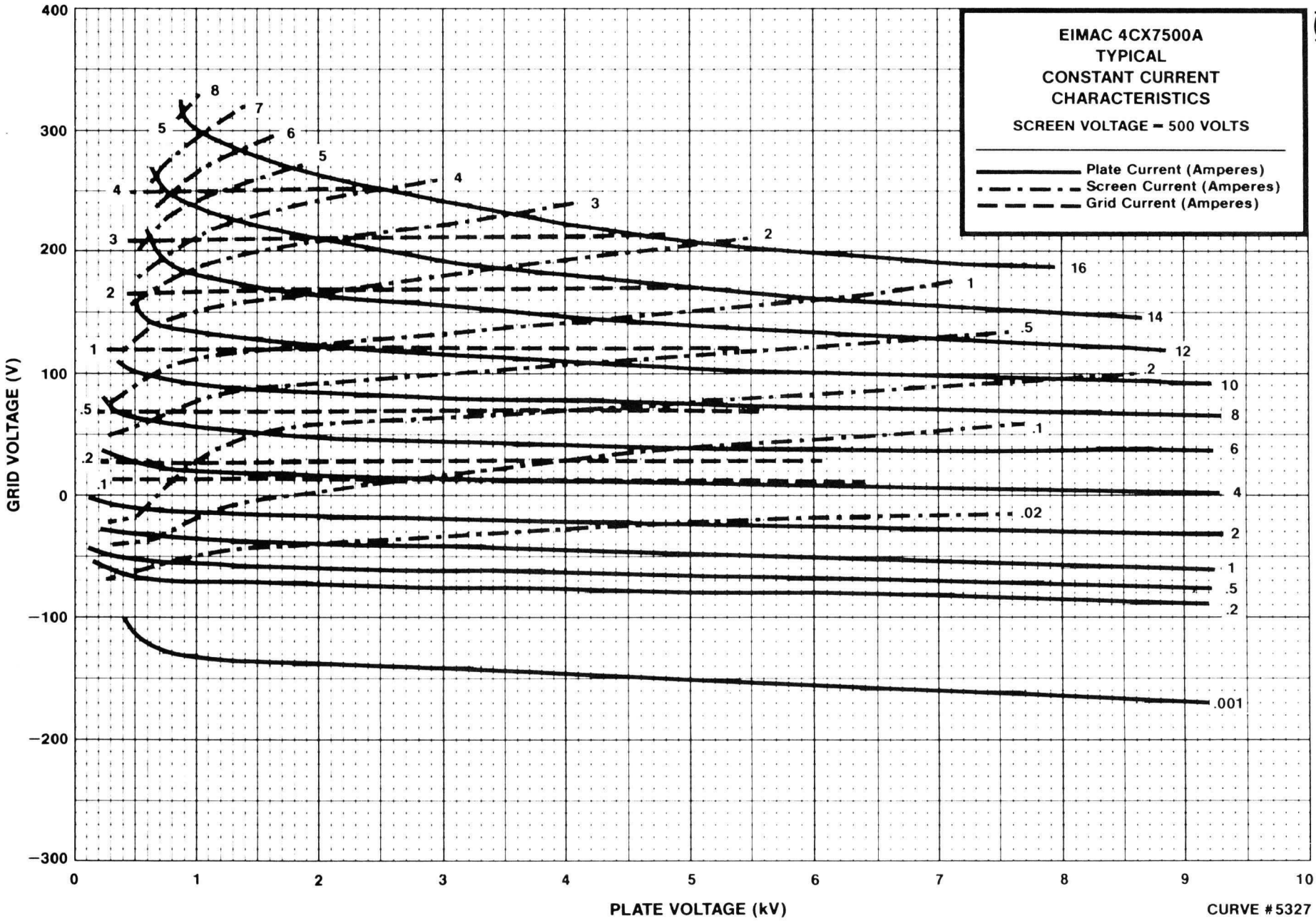
EIMAC 4CX7500A
TYPICAL
CONSTANT CURRENT
CHARACTERISTICS
SCREEN VOLTAGE = 500 VOLTS
Plate Current (Amperes)
Screen Current (Amperes)
Grid Current (Amperes)
GRID VOLTAGE (V)
PLATE VOLTAGE (kV)
400
300
200
100
0
−100
−200
−300
0
1
2
3
4
5
6
7
8
9
10
16
14
12
10
8
6
4
2
1
.5
.2
.1
.02
.001

CURVE #5327

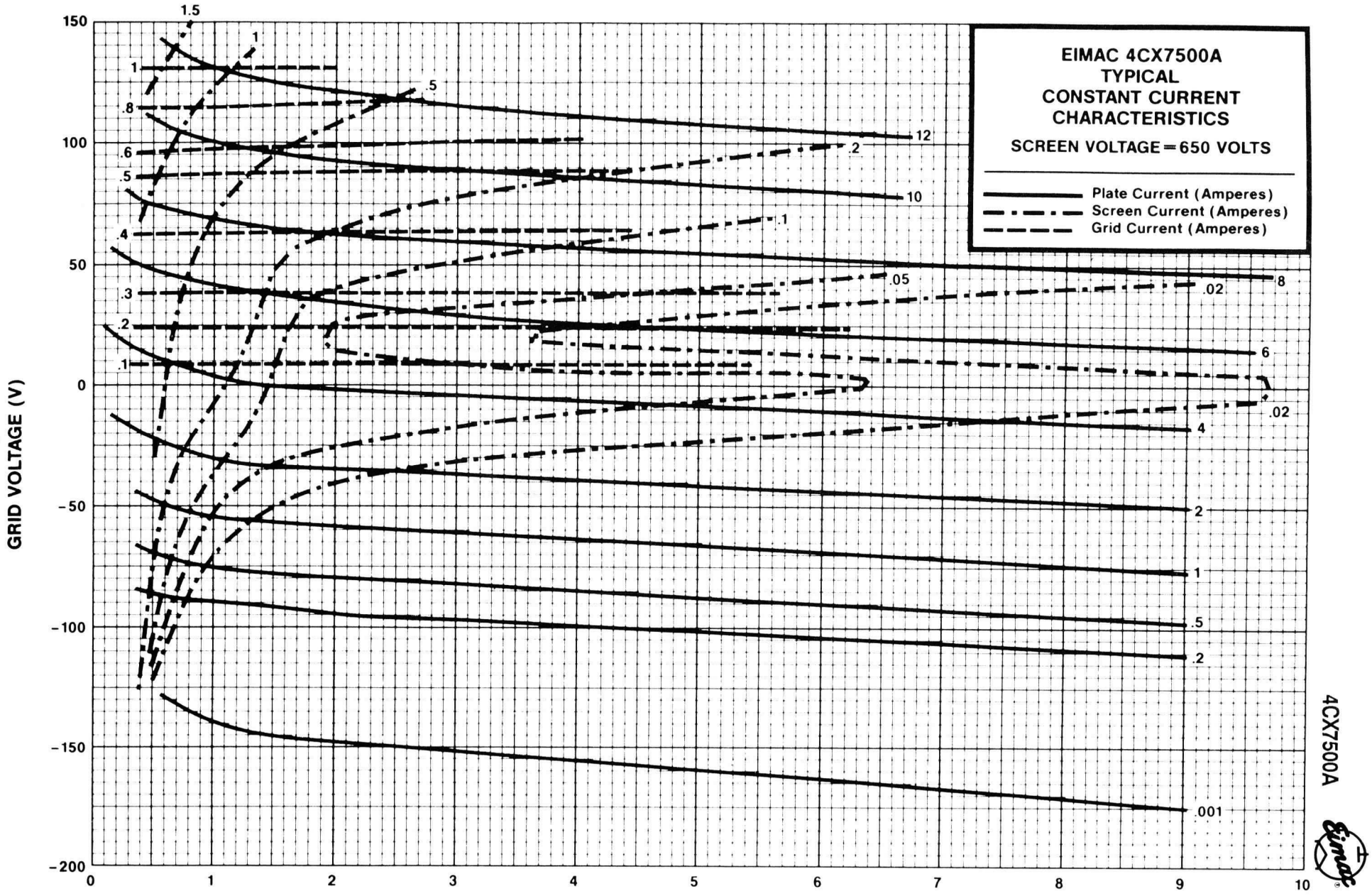

4CX7500A

CURVE #5282

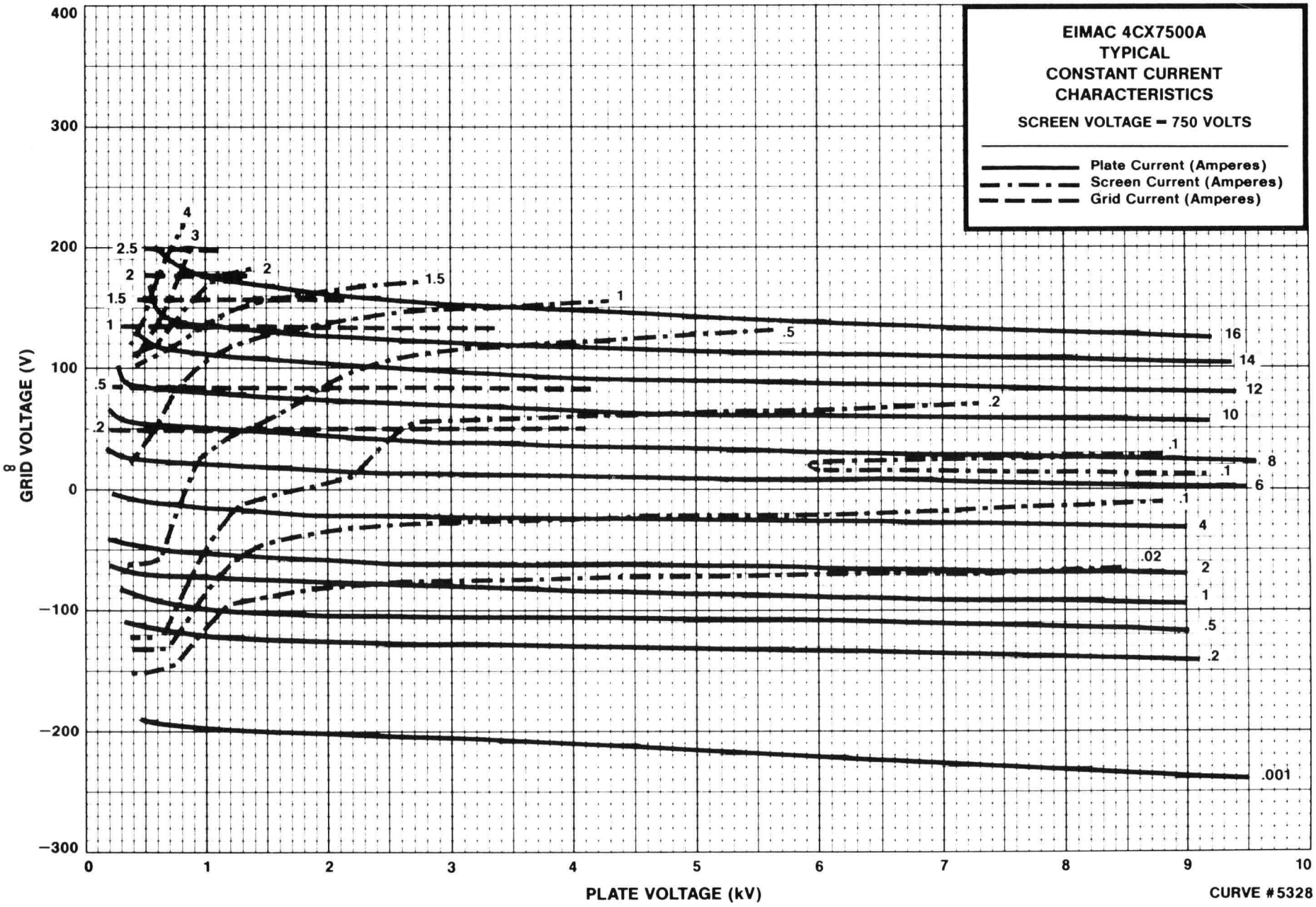
EIMAC 4CX7500A
TYPICAL
CONSTANT CURRENT
CHARACTERISTICS
SCREEN VOLTAGE = 750 VOLTS
Plate Current (Amperes)
Screen Current (Amperes)
Grid Current (Amperes)
GRID VOLTAGE (V)
PLATE VOLTAGE (kV)
CURVE #5328
400
300
200
100
0
−100
−200
−300
0
1
2
3
4
5
6
7
8
9
10
16
14
12
10
8
6
4
2
1
.5
.2
.1
.02
.001

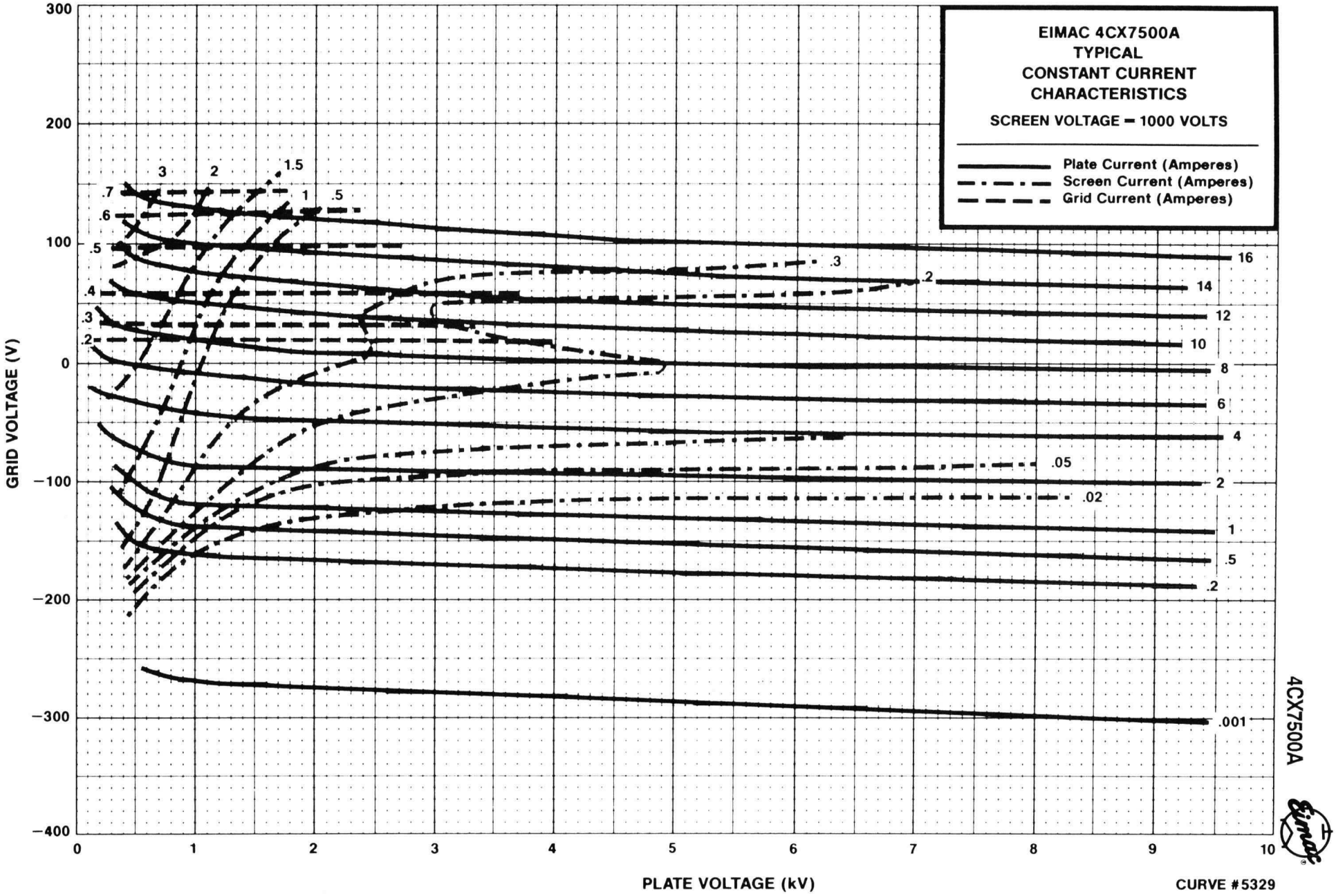
EIMAC 4CX7500A
TYPICAL
CONSTANT CURRENT
CHARACTERISTICS
SCREEN VOLTAGE = 1000 VOLTS
Plate Current (Amperes)
Screen Current (Amperes)
Grid Current (Amperes)
GRID VOLTAGE (V)
PLATE VOLTAGE (kV)
300
200
100
0
−100
−200
−300
−400
0
1
2
3
4
5
6
7
8
9
10
3
2
1.5
1
.5
.7
.6
.5
.4
.3
.2
.3
.2
.05
.02
.001
16
14
12
10
8
6
4
2
1
.5
.2
4CX7500A
CURVE #5329

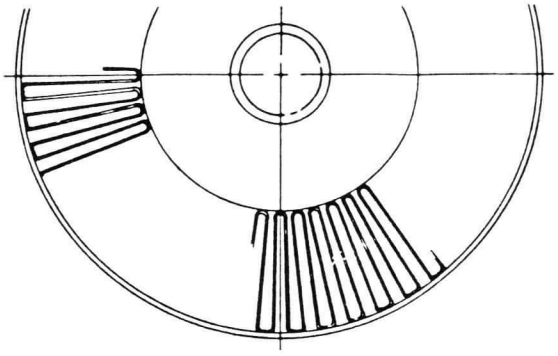

DIMENSIONAL DATA						
	INCHES			MILLIMETERS		
DIM.	MIN.	MAX.	REF.	MIN.	MAX.	REF.
A	5.539	5.663		140.69	143.84	
B	.855	.895		21.72	22.73	
C	.600	.760		15.24	19.30	
D	1.896	1.936		48.16	49.17	
E	3.133	3.173		79.58	80.59	
F	3.792	3.832		96.32	97.32	
G	3.980	4.020		101.09	102.11	
H	.188			4.78		
J	.188			4.78		
K	.188			4.78		
L	3.863	4.210		97.43	106.93	
M	2.812	3.187		71.42	80.95	
N	8.469	8.718		215.11	246.86	
P	.375			9.53		

NOTES:
1. Ref. dimensions are for info only & are not required for inspection purposes.
2. Dimensions in [ ] are millimeters.
3. (*) Contact surface.
4. Optimum filament & Grid connector heights for socket design purposes.

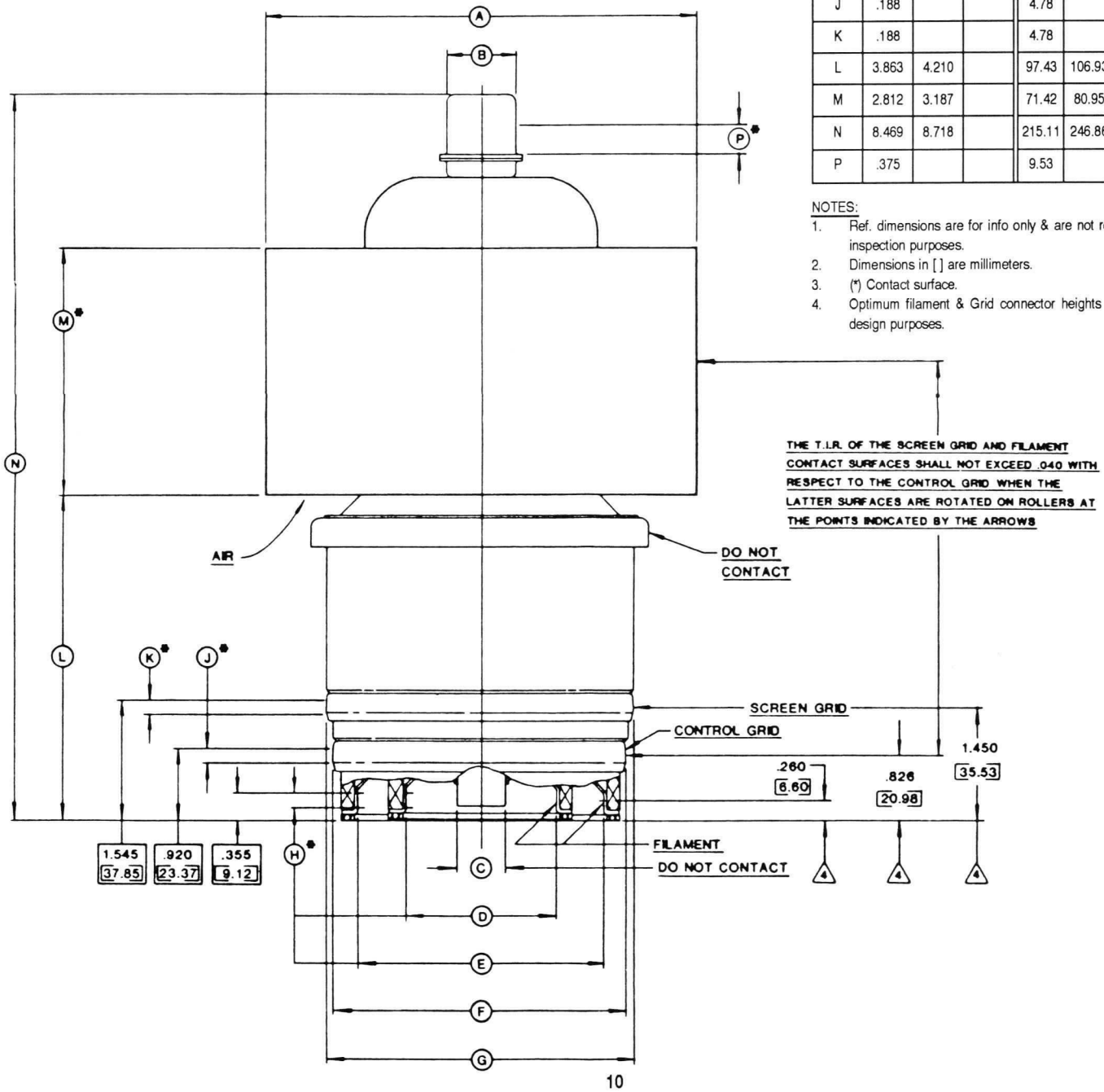

4CX10,000J

TECHNICAL DATA

RADIAL-BEAM
POWER TETRODE

The EIMAC 4CX10,000J is a compact, high-power, ceramic/metal, forced-air cooled tetrode with a rated maximum plate dissipation of 12,000 watts. It incorporates rugged internal construction features, including a mesh filament/cathode.

The 4CX10,000J is specifically designed for exceptionally low intermodulation distortion in radio-frequency linear amplifier service.



GENERAL CHARACTERISTICS[1]

ELECTRICAL

Filament: Thoriated Tungsten		
Voltage	7.5 ± 0.37	V
Current, at 7.5 volts	103	A
Amplification Factor (Average):		
Grid to Screen	4.5	
Direct Interelectrode Capacitance (grounded filament)[2]		
Cin	120	pF
Cout	20.5	pF
Cgp	0.7	pF
Direct Interelectrode Capacitance (grounded grid) [2]		
Cin	56	pF
Cout	21.5	pF
Cpk	0.10	pF
Frequency of Maximum Rating:		
CW	100	MHz

1. Characteristics and operating values are based upon performance tests. These figures may change without notice as the result of additional data or product refinement. EIMAC Division of Varian should be consulted before using this information for final equipment design.
2. Capacitance values are for a cold tube as measured in a special shielded fixture in accordance with Electronic Industries Association Standard RS-191.

MECHANICAL

Maximum Overall Dimensions:	
Length	9.125 in: 231.77 mm
Diameter	7.050 in; 179.07 mm
Net Weight	12.2 lb; 5.55 kg
Operating Position	Axis vertical, base up or down

(Effective 2-1-72) © by Varian Printed in U.S.A.

Maximum Operating Temperature:	
Ceramic/Metal Seals or Anode Core	250°C
Cooling	Forced Air
Base	Special concentric
Recommended Air System Socket	SK-300A
Recommended (Air) Chimney	SK-1306

RADIO FREQUENCY LINEAR AMPLIFIER
GRID DRIVEN
Class AB1

ABSOLUTE MAXIMUM RATINGS:

DC PLATE VOLTAGE	7500	VOLTS
DC SCREEN VOLTAGE	1600	VOLTS
DC PLATE CURRENT	4.0	AMPERES
PLATE DISSIPATION	12,000	WATTS
SCREEN DISSIPATION	250	WATTS
GRID DISSIPATION	75	WATTS

1. Adjust to specified zero-signal dc plate current.
2. Approximate value.
3. Useful power is that delivered to the load.
4. Referenced against one tone of a two equal-tone signal.

TYPICAL OPERATION
Class AB_1, Grid Driven, Peak Envelope or Modulation Crest Conditions

Plate Voltage	7500	Vdc
Screen Voltage	1600	Vdc
Grid Voltage [1]	-400	Vdc
Zero-Signal Plate Current	300	mAdc
Single-Tone Plate Current	2.2	Adc
Single-Tone Screen Current [2]	30	mAdc
Peak rf Grid Voltage [2]	400	v
Single-Tone Plate Dissipation	8500	W
Useful Power Output (PEP) [3]	10	kW
Load Impedance	1650	Ω
Intermodulation Distortion Products [4]:		
3rd Order	-35	dB
5th Order	-40	dB

NOTE: TYPICAL OPERATION data are obtained from direct measurement or by calculation from published characteristic curves. Adjustment of the rf grid voltage to obtain the specified plate current at the specified bias, screen and plate voltages is assumed. If this procedure is followed, there will be little variation in output power when the tube is changed, even though there may be some variation in screen current. The screen current which results when the desired plate current is obtained is incidental and varies from tube to tube. This current variation causes no difficulty so long as the circuit maintains the correct voltage in the presence of the variations in current.

RANGE VALUES FOR EQUIPMENT DESIGN

	Min.	Max.	
Filament: Current at 7.5 volts	98	108	A
Interelectrode Capacitances[1](grounded filament connection)			
Cin	113	127	pF
Cout	18	23	pF
Cgp	---	1.0	pF
Interelectrode Capacitances[1](grounded grid connection)			
Cin	51	61	pF
Cout	19	24	pF
Cpk	---	0.16	pF

1. Capacitance values are for a cold tube as measured in a special shielded fixture in accordance with Electronic Industries Association Standard RS-191.

APPLICATION

MECHANICAL

MOUNTING - The 4CX10,000J must be operated with its axis vertical. The base of the tube may be down or up at the convenience of the circuit designer.

SOCKET - The EIMAC SK-300A Air-System Socket is designed especially for the concentric base terminals of the 4CX10,000J. The use of recommended air-flow rates through this socket pro-

vides effective forced-air cooling of the tube. Air forced into the bottom of the socket passes over the tube terminals and through an Air Chimney, the SK-1316, into the anode cooling fins.

COOLING - The maximum temperature rating for the external surfaces of the 4CX10,000J is 250°C. Sufficient forced-air circulation must be provided to keep the temperature of the anode at the base of the cooling fins and the temperature of the ceramic/metal seals below 250°C. Air-flow requirements to maintain seal temperatures at 200°C in 50°C ambient air are tabulated below (for operation below 30 megahertz). The pressure drop values shown are for the Tube/Socket/Chimney combination.

	SEA LEVEL		10,000 FEET	
Plate * Dissipation (Watts)	Air Flow (CFM)	Pressure Drop (In. of water)	Air Flow (CFM)	Pressure Drop (In. of water)
4000	110	0.4	160	0.6
6000	200	0.8	290	1.2
8000	315	1.7	460	2.5
10000	445	2.8	645	4.1
12000	600	4.4	870	6.4

* Since the power dissipated by the filament represents about 770 watts and since grid-plus screen dissipation can, under some conditions, represent another 200 to 300 watts, allowance has been made in preparing this tabulation for an additional 1200 watts dissipation.

At higher altitudes, higher frequencies, or higher ambient temperatures the flow rate must be increased to obtain equivalent cooling. The flow rate and corresponding pressure differential must be determined individually in such cases, using maximum rated temperatures as the criteria for satisfactory cooling.

IMPACT AND VIBRATION - The 4CX10,000J is designed to operate under shock and vibration conditions which might disable a less rugged tube. Production tubes are subjected to testing to insure ability to withstand 15 G impact at 11 milliseconds duration and 2 G vibratory acceleration over the range of 5 to 55 Hz.

ELECTRICAL

FILAMENT VOLTAGE - The rated filament voltage for the 4CX10,000J is 7.5 volts. Filament voltage, as measured at the socket, should be maintained at this value to obtain maximum tube life. In no case should it be allowed to deviate by more than 5 percent from the rated value.

GRID DISSIPATION - The 4CX10,000J control grid has a maximum dissipation rating of 75 watts. Precautions should be observed to avoid exceeding this rating. Grid dissipation is approximately the product of dc grid current and peak positive grid voltage. The grid bias and driving power should be kept near the values shown in the "Typical Operation" sections of the data sheet whenever possible.

SCREEN DISSIPATION - The power dissipated by the screen of the 4CX10,000J must not exceed 250 watts.

Screen dissipation, in cases where there is no ac applied to the screen, is the simple product of the screen voltage and the screen current.

Screen dissipation is likely to rise to excessive values when the plate voltage, bias voltage, or plate load are removed with filament and screen voltages applied. Suitable protective means must be provided to limit the screen dissipation to 250 watts in the event of circuit failure.

PLATE DISSIPATION - The plate-dissipation rating for the 4CX10,000J is 12,000 watts. Plate dissipation may be permitted to rise above the maximum rating during brief periods, such as may occur during tuning.

HIGH VOLTAGE - The 4CX10,000J operates at voltages which can be deadly, and the equipment must be designed properly and operating precautions must be followed. Equipment must be designed so that no one can come in contact with high voltages. All equipment must include safety enclosures for high-voltage circuits and terminals, with interlock switches to open the primary circuits of the power supplies and to discharge high voltage condensers whenever access doors are opened. Interlock switches must not be bypassed or "cheated" to allow operation with access doors open. Always remember that HIGH VOLTAGE CAN KILL.

INTERELECTRODE CAPACITANCE - The actual internal interelectrode capacitance of a tube is influenced by many variables in most applications, such as stray capacitance to the chassis, capacitance added by the socket used, stray capacitance between tube terminals, and wiring effects. To control the actual capacitance values within the tube, as the key component involved, the industry and the Military Services use a standard test procedure as described in Electronic Industries Association Standard

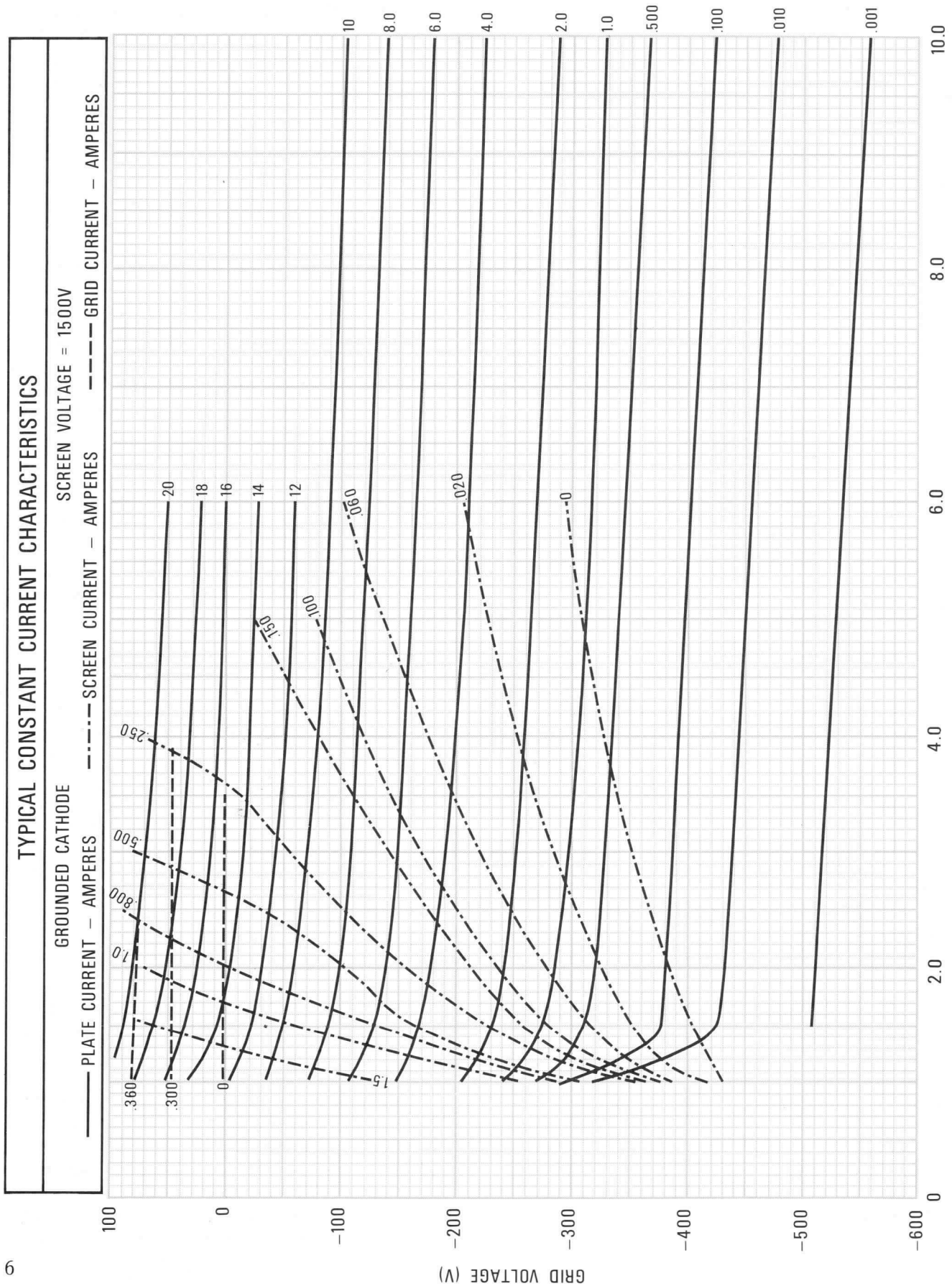
TYPICAL CONSTANT CURRENT CHARACTERISTICS
GROUNDED CATHODE
SCREEN VOLTAGE = 1500V
PLATE CURRENT – AMPERES
SCREEN CURRENT – AMPERES
GRID CURRENT – AMPERES
GRID VOLTAGE (V)
PLATE VOLTAGE (kV)
CURVE #4339
100
0
-100
-200
-300
-400
-500
-600
0
2.0
4.0
6.0
8.0
10.0
20
18
16
14
12
10
8.0
6.0
4.0
2.0
1.0
.500
.100
.010
.001
.360
.300
0
1.5
.150
.100
.060
.020
0
.250
.500
.800
1.0

RS-191. This requires the use of specially constructed test fixtures which effectively shield all external tube leads from each other and eliminates any capacitance reading to "ground". The test is performed on a cold tube. Other factors being equal, controlling internal tube capacitance in this way normally assures good interchangeability of tubes over a period of time, even when the tube may be made by different manufacturers. The capacitance values shown in the manufacturer's technical data, or test specifications, normally are taken in accordance with Standard RS-191.

The equipment designer is therefore cautioned to make allowance for the actual capacitance values which will exist in any normal application. Measurements should be taken with the socket and mounting which represent approximate final layout if capacitance values are highly significant in the design.

SPECIAL APPLICATIONS - If it is desired to operate this tube under conditions widely different from those given here, write to Power Grid Tube Division, EIMAC Division of Varian, 301 Industrial Way, San Carlos, California 94070, for information and recommendations.

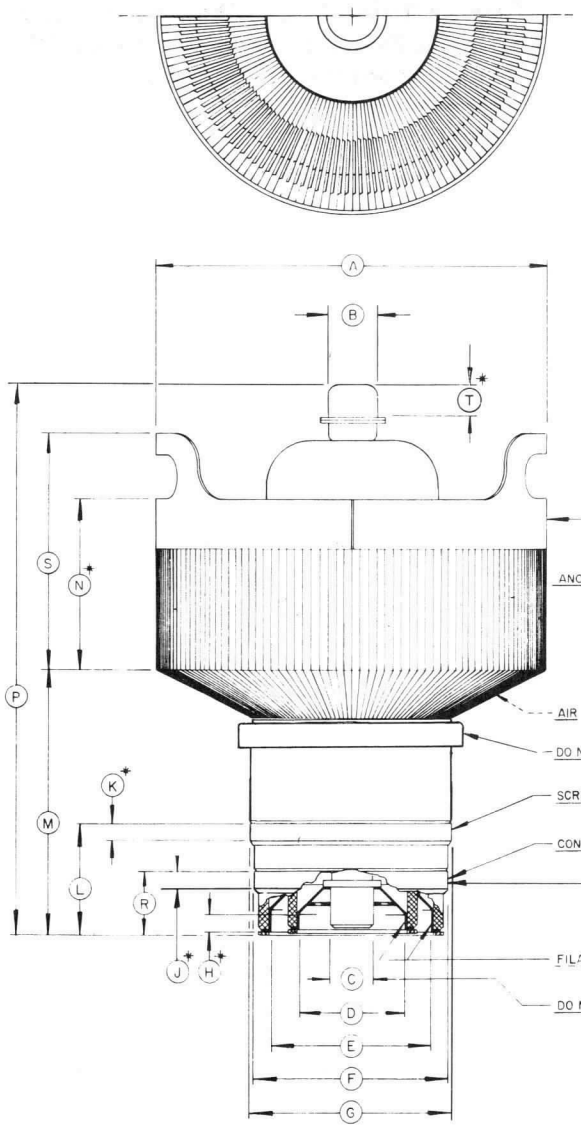

DIMENSIONAL DATA						
DIM.	INCHES			MILLIMETERS		
	MIN.	MAX.	REF.	MIN.	MAX.	REF.
A	6.928	7.050	- -	175.97	179.07	- -
B	0.855	0.895	- -	21.72	22.73	- -
C	0.720	0.760	- -	18.29	19.30	- -
D	1.896	1.936	- -	48.16	49.17	- -
E	3.133	3.173	- -	79.58	80.59	- -
F	3.792	3.832	- -	96.32	97.33	- -
G	3.980	4.020	- -	101.09	102.11	- -
H	0.188	- -	- -	4.77	- -	- -
J	0.188	- -	- -	4.77	- -	- -
K	0.188	- -	- -	4.77	- -	- -
L	1.764	1.826	- -	44.80	46.38	- -
M	4.186	4.568	- -	106.32	116.03	- -
N	2.412	2.788	- -	61.26	70.81	- -
P	8.812	9.062	- -	223.82	230.17	- -
R	0.986	1.050	- -	25.04	26.67	- -
S	3.412	3.788	- -	86.66	96.21	- -
T	0.375	- -	- -	9.52	- -	- -

NOTES:
1. ✱ CONTACT SURFACE.
2. ALL DIMENSIONS IN INCHES.
3. REF DIMENSION ARE FOR INFO ONLY AND ARE NOT REQD. FOR INSPECTION PURPOSES.

THE T.I.R. OF THE SCREEN GRID AND FILAMENT CONTACT SURFACES SHALL NOT EXCEED .040 WITH RESPECT TO THE CONTROL GRID AND ANODE CONTACT SURFACE WHEN THE LATTER SURFACES ARE ROTATED ON ROLLERS AT THE POINTS INDICATED BY THE ARROWS.

See new data sheet Feb 81.

8989
4CX12,000A

VHF
RADIAL BEAM
POWER TETRODE

TECHNICAL DATA

The EIMAC 8989 is a ceramic/metal power tetrode intended for use in audio or radio frequency applications. It features a type of internal mechanical structure which results in high rf operating efficiency. Low rf losses in this structure permit operation at full ratings up to 220 MHz.

The 8989 has a gain of over 18 dB in FM broadcast service, and is also recommended for radio-frequency linear power amplifier service, and for VHF television linear amplifier service. The anode is rated for 15 kilowatts of dissipation with forced-air cooling and incorporates a highly efficient cooler of new design.

GENERAL CHARACTERISTICS [1]

ELECTRICAL

Filament: Thoriated Tungsten

Voltage	7.5 ± 0.37	V
Current @ 7.5 volts	120	A

Amplification Factor, average

Grid to Screen	6.7	

Direct Interelectrode Capacitances (grounded cathode):

Cin	160	pF
Cout	18.5	pF
Cgp	1.0	pF

Direct Interelectrode Capacitances (grid and screen grounded):

Cin	70	pF
Cout	18.6	pF
Cpk	0.1	pF

Frequency of Maximum Ratings (CW)	220	MHz

1 Characteristics and operating values are based on calculations and measured data. These figures may change without notice as a result of data or product refinement. Varian EIMAC Division should be consulted before using this information for final equipment design.

(Revised 3 Feb 81 - supersedes Dec 78)

MECHANICAL

Maximum Overall Dimensions:	
Length (height)	9.84 in; 24.99 cm
Diameter	7.76 in; 19.71 cm
Net Weight (approximate)	14 lbs; 6.4 kg
Operating Position	Axis vertical, base up or down
Cooling	Forced Air
Operating Temperature, Maximum:	
Ceramic/Metal Seals & Anode Core	250 °C
Base	Special, concentric
Recommended Air System Socket	EIMAC SK-300A
Recommended Air Chimney	EIMAC SK-336

RADIO FREQUENCY POWER AMPLIFIER OR OSCILLATOR

Class C Telegraphy or FM

(Key-Down Conditions)

ABSOLUTE MAXIMUM RATINGS:

DC PLATE VOLTAGE	10.0	KILOVOLTS
DC SCREEN VOLTAGE	2000	VOLTS
DC PLATE CURRENT	3.5	AMPERES
PLATE DISSIPATION	15.0	KILOWATTS
SCREEN DISSIPATION	300	WATTS
GRID DISSIPATION	150	WATTS

TYPICAL OPERATION (frequencies to 30 MHz)

Plate Voltage	9.0	kVdc
Screen Voltage	750	Vdc
Grid Voltage	-250	Vdc
Plate Current	2.83	Adc
Screen Current [1]	135	mAdc
Grid Current [1]	63	mAdc
Peak rf Grid Voltage [1]	335	v
Calculated Drive Power	23	W
Plate Dissipation [1]	5.47	kW
Plate Output Power [1]	20	kW
Load Impedance	1590	Ω

1 Approximate value

TYPICAL OPERATION, COMMERCIAL FM SERVICE

(measured values at frequency shown, in EIMAC cavity amplifier)

Frequency of Operation	90.5	108.1	MHz
Plate Voltage	9.95	10.0	kVdc
Screen Voltage	600	800	Vdc
Grid Voltage	-300	-300	Vdc
Plate Current	3.08	2.81	Adc
Screen Current	200	130	mAdc
Grid Current	41	32	mAdc
Driving Power	245	275	W
Useful Power Output [1]	22.9	22.5	kW
Efficiency	74.7	80.2	%
Gain	19.7	19.1	dB

1 Delivered to the load

APPLICATION

MOUNTING - The 8989 must be operated with its axis vertical. The base of the tube may be up or down at the convenience of the circuit designer.

SOCKET & CHIMNEY - The EIMAC air-system socket SK-300A and air chimney SK-336 are recommended for use with the 8989. The use of the recommended air flow through this socket provides effective forced-air cooling of the tube base, with air then guided through the anode cooling fins by the air chimney.

COOLING - The maximum temperature rating for the external surfaces of the tube is 250°C, and sufficient forced-air cooling must be used in all applications to keep the temperature of the anode (at the base of the cooling fins) and the temperature of the ceramic/metal seals comfortably below the rated maximum.

The cooling characteristics of the tube are shown in the attached graph. The designer is cauted to keep in mind that this is ABSOLUTE data, with pure dc power, with no safety factors added, and the pressure drop figures make no allowance for losses in filters, ducting, and the like.

It is considered good engineering practice to design for maximum anode core temperature of 225°C, and temperature-sensitive paints are available for checking tube temperatures before any design is finalized. It is also considered good practice to add a 15% safety factor to the indicated airflow, and allow for variables such as dirty air filters, rf seal heating at VHF, and the fact that the anode cooling fins may not be clean if the tube has been in service for some length of time. Special cooling is required in the center of the stem (base), by means of special air directors or some other provision. An air interlock system should be incorporated into the design to

automatically remove all voltages from the tube in case of even partial failure of the tube cooling air.

Air flow must be applied before or simultaneously with the application of power, including the tube filament, and should normally be maintained for a short period of time after all power is removed to allow for tube cool-down.

FILAMENT OPERATION - The rated nominal filament voltage for the 8989 is 7.5 volts, as measured at the socket or tube base. Variation in voltage should be maintained within plus or minus five percent. During application of filament voltage the inrush current should be limited to no more than twice normal current.

The peak emission capability at nominal filament voltage is normally more than that required for communication service. A small decrease in filament temperature due to reduction in filament voltage can increase tube life by a substantial percentage. It is good practice to determine the nominal filament voltage for a particular application that will not adversely effect equipment operation. This is done by measuring some important parameter of performance (such as power output or distortion) while filament voltage is reduced. At some point in filament voltage there will be a noticeable change in the operating parameter being monitored, and the operating filament voltage must be slightly higher than the level at which deterioration was noted. When filament voltage is to be reduced in this manner it should be regulated and held to plus or minus one percent, and the actual operating value should be checked periodically to maintain proper operation.

ELECTRODE DISSIPATION RATINGS - The maximum dissipation ratings for the 8989 must be respected to avoid damage to the tube. An exception is the plate dissipation, which may be permitted to rise above the rated maximum during brief periods, such as may occur during tuning.

GRID OPERATION - The 8989 control grid has a maximum dissipation rating of 150 watts. Precautions should be observed to avoid exceeding this rating. The grid bias and driving power should normally be kept near the values shown in the TYPICAL OPERATION section of the data sheet whenever possible.

SCREEN OPERATION - The power dissipated by the screen grid of the 8989 must not exceed 300 watts. Screen dissipation, in cases where there is no ac applied to the screen, is the simple product of the screen voltage and the screen current. If the screen voltage is modulated, the screen dissipation will depend on loading, driving power, and the carrier screen voltage.

Screen dissipation is likely to rise to excessive values when the plate voltage, bias voltage, or plate load are removed with the filament and screen voltages applied. Suitable protective means must be provided to limit the screen dissipation to 300 watts in the event of circuit failure. Energy limiting circuitry (which will activate if there is a fault condition) and spark gap over-voltage protection are recommended as good engineering practice.

The 8989 may exhibit reversed (negative) screen current under some operating conditions. The screen supply voltage must be maintained constant for any values of negative and positive screen currents which may be encountered. Dangerously high plate current may flow if the screen power supply exhibits a rising voltage characteristic with negative screen current. Stabilization may be accomplished with a bleeder resistor connected from screen to cathode, and this is absolutely essential if a series electronic regulator is employed.

FAULT PROTECTION - In addition to normal plate overcurrent interlock and screen current interlock, it is good practice to protect the tube from internal damage which could result from a plate arc at high voltage. In all cases some protective resistance, 10 to 50 ohms, should be used in series with the tube anode to absorb power supply stored energy in case a tube arc should occur. If power supply stored energy is very high, some form of electronic crowbar which will discharge power supply capacitors in a few microseconds following indication of start of a tube arc is recommended.

EIMAC APPLICATION BULLETIN #17 titled "FAULT PROTECTION" is available on request and includes detailed information on this subject.

HIGH VOLTAGE - Normal operating voltages used with the 8989 are deadly and the equipment must be designed properly and operating precautions must be followed. All equipment must be designed so that no one can come into contact with high voltages. All equipment must include safety enclosures for high-voltage circuits and terminals, with interlock switches to open primary circuits of the power supply and to discharge high-voltage capacitors whenever access doors are opened. Interlock switches must not be bypassed or "cheated" to allow operation with access doors open. Always remember that HIGH VOLTAGE CAN KILL.

INTERELECTRODE CAPACITANCE - The actual internal interelectrode capacitance of a tube is influenced by many variables in most applications, such as stray capacitance to the chassis, capacitance added by the socket used, stray capacitance between tube terminals, and wiring effects. To control the actual capacitance values within the tube, as the key component involved, industry and the Military Services use a standard test procedure as described in Electronic Industries Association Standard RS-191. This requires the use of specially constructed test fixtures which effectively shield all external tube leads from each other and eliminate any capacitance reading to "ground". The test is performed on a cold tube. Other factors being equal, controlling internal tube capacitance in this way normally assures good interchangeability of tubes over a period of time, even when the tube may be made by different tube manufacturers. The capacitance values shown in the manufacturer's technical data, or test specification, normally are taken in accordance with Standard RS-191.

The equipment designer is therefore cautioned to make allowance for the actual capacitance values which will exist in any normal application. Measurements should be taken with the socket and mounting which represent approximate final layout if capacitance values are highly significant in the design.

SPECIAL APPLICATIONS - If it is desired to operate this tube under conditions widely different from those listed here, write to Application Engineering, Power Grid Tube Division, Varian EIMAC Division, 301 Industrial Way, San Carlos, CA 94070 for recommendations.

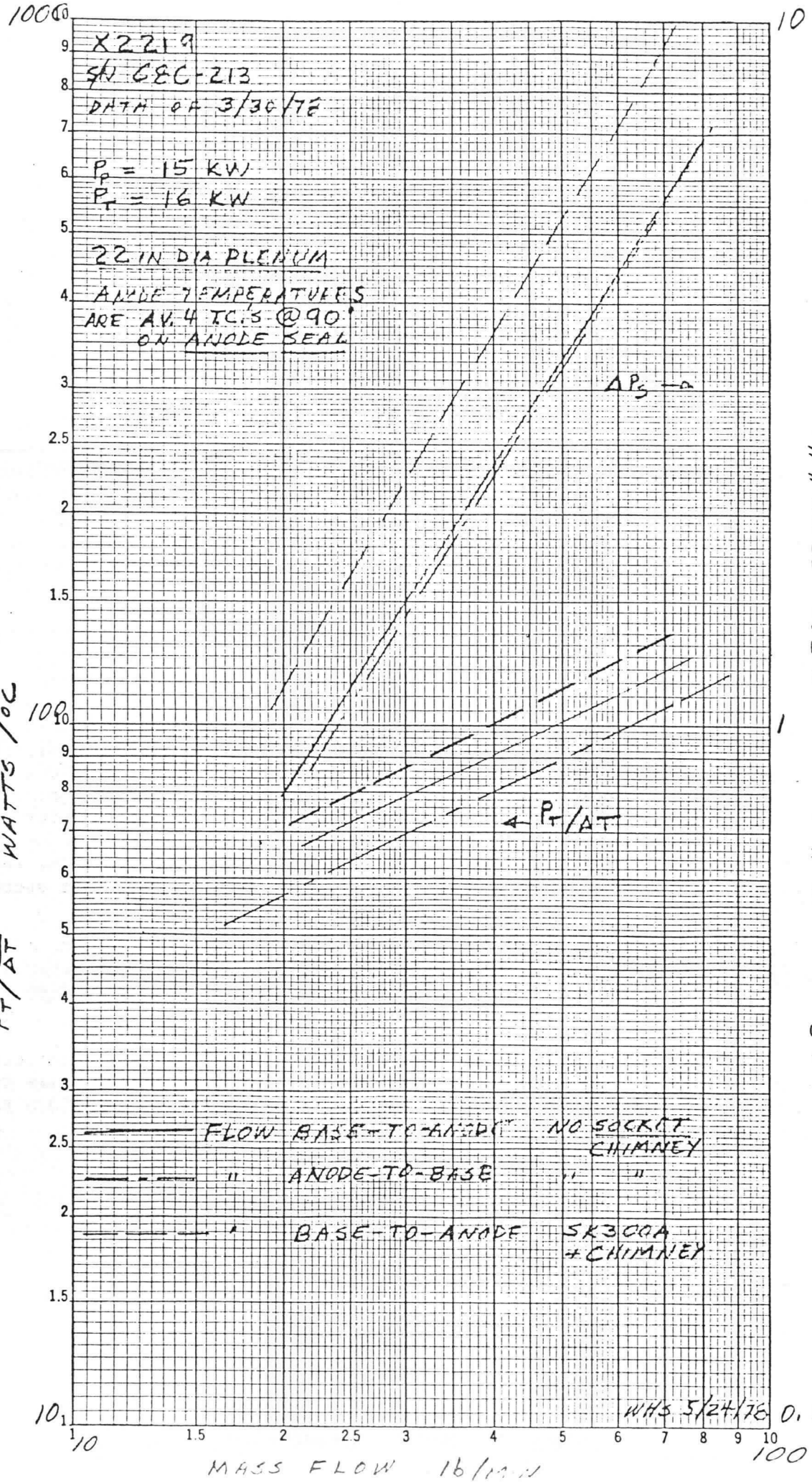

LOGARITHMIC 359-103
KEUFFEL & ESSER CO. MADE IN U.S.A.
2 X 1 CYCLES

TUBE NO. _____ PLOTTED BY _____ DATE _____
COORDINATES: EIMAC 7 X 10 8-17-54

GROUNDED CATHODE
CONSTANT CURRENT CHARACTERISTICS

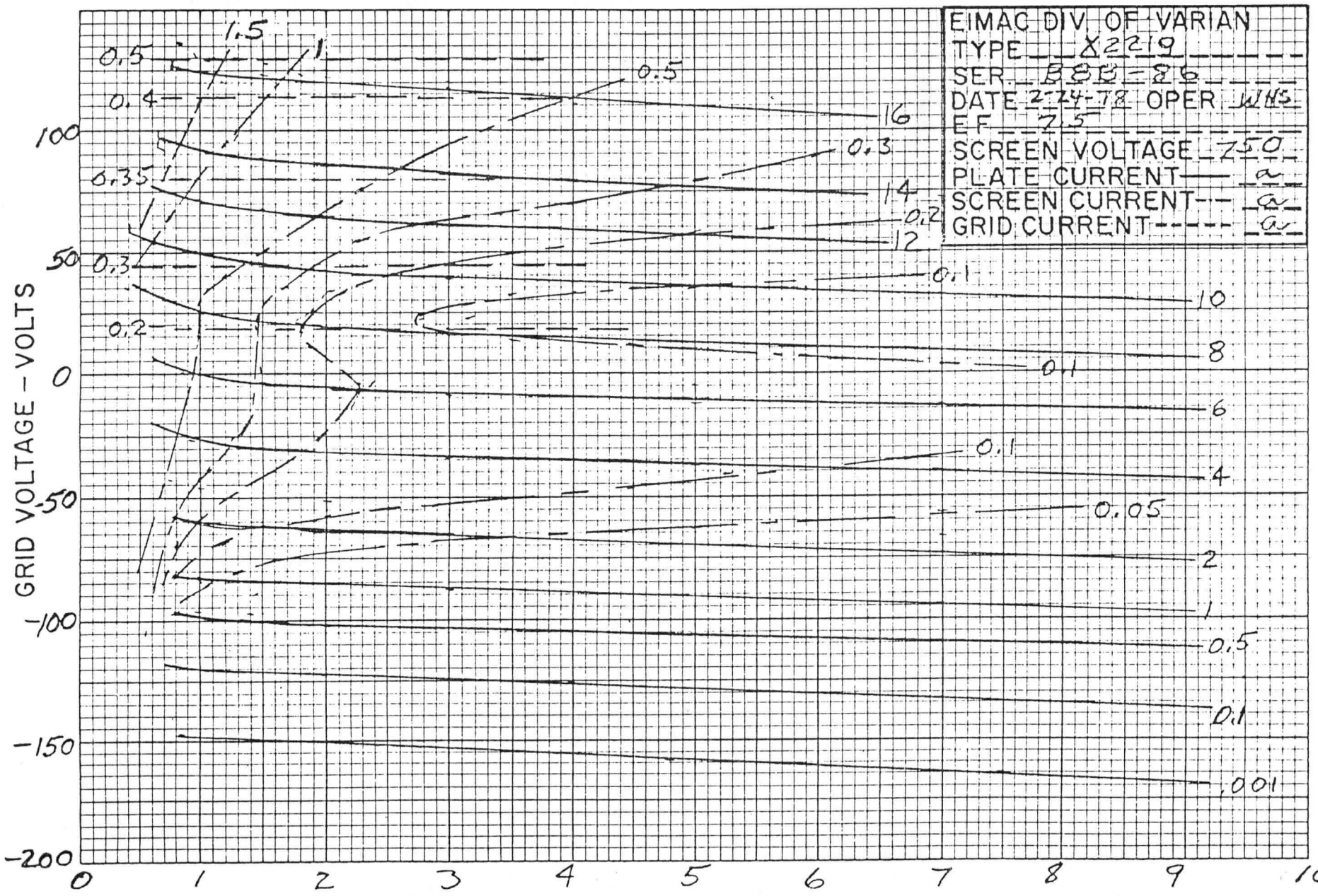

DIMENSIONAL DATA						
	INCHES			MILLIMETERS		
DIM	MIN.	MAX.	REF.	MIN.	MAX.	REF.
A	7.700	7.760				
B	.855	.895				
C	4.406	4.468				
D	.600	.760				
E	1.896	1.936				
F	3.133	3.173				
G	3.792	3.832				
H	3.980	4.020				
J	.188					
K	.188					
L	.188					
M	3.718	3.781				
N	.219					
P	4.593	4.656				
R	2.100	2.200				
S	9.465	9.840				
T	.500					

NOTES

1. REF. DIMENSIONS ARE FOR INFO ONLY & ARE NOT REQUIRED FOR INSPECTION PURPOSES
2. ✱ CONTACT SURFACE.
3. OPTIMUM FILAMENT & GRID CONNECTOR HEIGHTS FOR SOCKET DESIGN PURPOSES

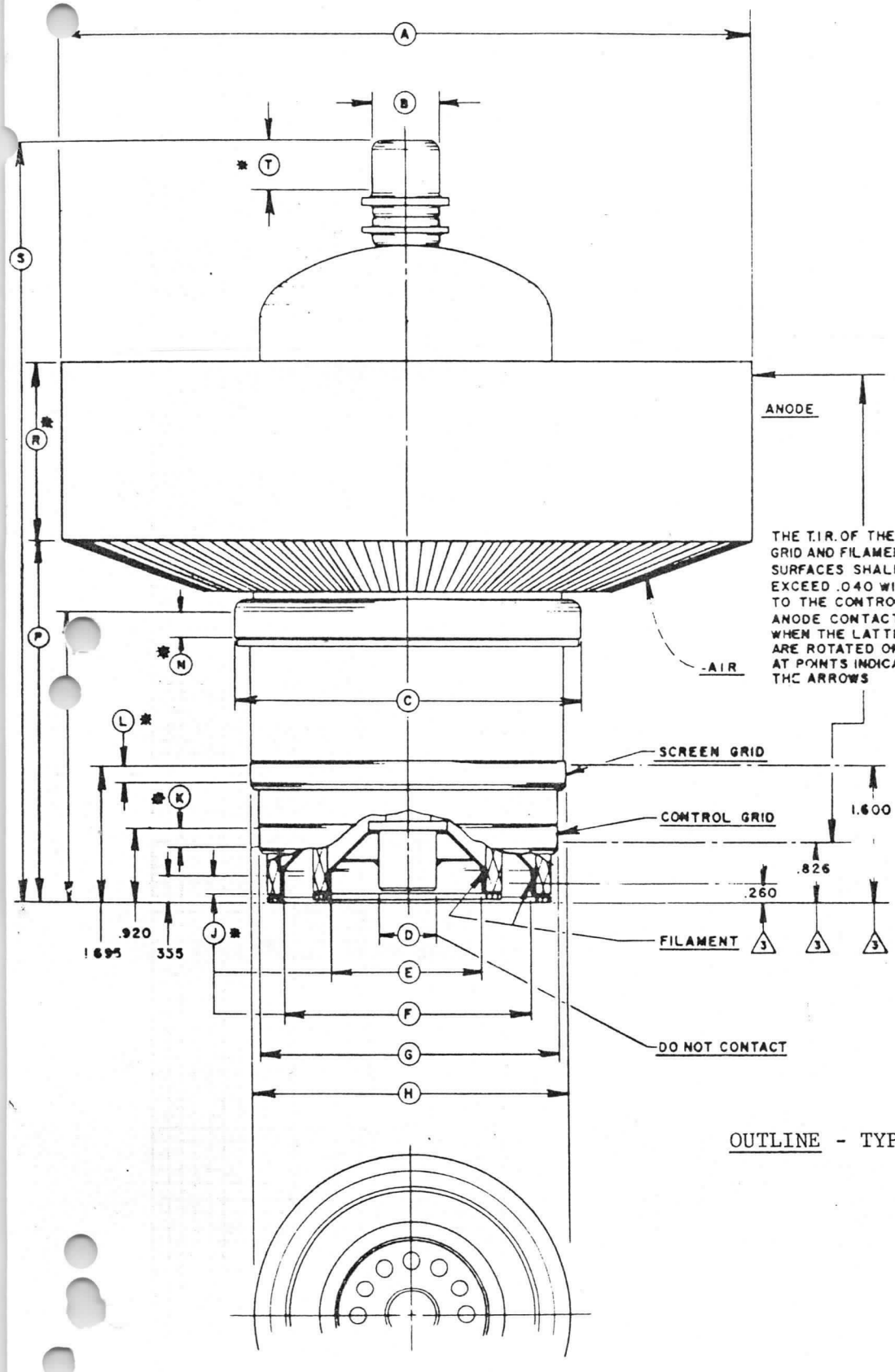

OUTLINE - TYPE 8989/4CX12,000A

MIL-E-1/1767B
2 May 1984
SUPERSEDING
MIL-E-1/1767A(EC)
31 July 1978

MILITARY SPECIFICATION SHEET

ELECTRON TUBE, POWER

TYPE 8281

Ⓑ This specification is approved for use by all Departments and Agencies of the Department of Defense.

The complete requirements for acquiring the electron tube described herein shall consist of this specification and the latest issue of MIL-E-1.

DESCRIPTION: Tetrode, ceramic-metal
See figure 1
Mounting position: Vertical, base down or up
Weight: 12.8 pounds (5.8 kg) nominal

ABSOLUTE RATINGS: F = 110 MHz

Parameter: Unit: Maximum:	Ef V ac	Eb kV dc	Ec2 kV dc	Ec1 kV dc	Ib A dc	Pg1 W	Pg2 W	Pp kW	Anode core & seal T °C	Cooling --- (Note 1)
C Teleg:	6.3 ±5%	10	2	-1.5	5	200	450	15	250	---
C Telep: (anode mod)	6.3 ±5%	8	1.5	-1.5	4	200	450	10	250	---
Class AB:	6.3 ±5%	10	2	---	6	200	450	15	250	---
TEST CONDITIONS:	6.3	2	0.75	Adj	1	---	---	---	---	Note 2

Ⓑ GENERAL:

Qualification - Required

RECEIVED
14 AUG 1984

Ⓑ denotes changes

Method	Requirement or test	Notes	Conditions	AQL (percent defective)	Inspection level or code	Symbol	Limits Min	Limits Max	Unit
	Quality conformance inspection, part 1								
1301	Filament current	-	t = 120 ±15	0.65	II	If	152	168	A ac
1261	Electrode voltage (grid)	-		0.65	II	Ec1	-110	-146	V dc
1266	Total grid current	-		0.65	II	Ic1	---	-25	µA dc
1256	Electrode current (screen)	-		0.65	II	Ic2	---	25	mA dc
1231	Peak emission	-	eb = ec2 = ec1 = 2.5 kv	0.65	II	is	90	---	a
1266	Primary grid emission (grid)	-	Pg1 = 200 W; t = 120 max or until stable; anode and g2 floating	0.65	II	Isg1	---	-500	µA dc
1266	Primary grid emission (screen)	-	Pg2 = 450 W; Ec1 = 0 V dc; t = 120 max or until stable; anode floating	0.65	II	Isg2	---	-500	µA dc
	Quality conformance inspection, part 2								
1331	Direct-interelectrode capacitance (ground cathode connection)	-		---	---	Cin	154	167	pF
						Cout	22	27	pF
						Cgp	---	2	pF
1331	Direct-interelectrode capacitance (ground grid connection)	-		---	---	Cin	62	72	pF
						Cout	23	28	pF
						Cpk	---	0.30	pF
1372	Current division (method B, short pulse)	-	Eb = Ec2 = 2,000 V dc; Ec1 = -800 V dc; egk/ib = 19 a	---	---	egk	---	0	v
				---	---	ic2	---	3.2	a
---	Power output	6	Class AB1 amp; F = 1 MHz (min); Eb = 9 kV dc; Ec2 = 2 kV dc; Ec1/Ibo = 0.1 A dc; Eg1/Ib = 3.7 A dc; Rℓ = 1,125 ±5%; anode tank Ω = 10 to 15	---	---	Po	20	---	kW (useful)

Method	Requirement or test	Notes	Conditions	AQL (percent defective)	Inspection level or code	Symbol	Limits		Unit
							Min	Max	
	Quality conformance inspection, part 3								
---	Service-life guarantee	3		---	---	---	---	---	---
1042	Shock, specified pulse	4	No voltages applied; shock = 11 ms half-sine; accel = 15 G peak (min); impacts = 6 (3 each X and Z axes)	---	---	---	---	---	---
1032	Vibration, mechanical	4	No voltages applied; accel = 2 G peak (min); F = 10 to 50 Hz, ascending only; sweep t = 3 to 8 minutes; 1 sweep each X and Y axes	---	---	---	---	---	---
---	Shock and vibration, mechanical end points:								
1261	Electrode voltage (grid)	-		---	---	Ec1	-100	-146	V dc
1266	Total grid current	-		---	---	Ic1	---	-30	μA dc
1301	Filament current	5		---	---	ΔIf	---	3	A ac

NOTES:

1. Minimum airflow requirements for incoming air at 50°C maximum at sea level, for operation under 30 MHz, are shown. Additional cooling may be required for operation above 30 MHz. In all cases of operation a socket which provides for forced-air cooling of the base must be used, such as the EIMAC SK-300A, or equivalent, used with the EIMAC SK-316 Air Chimney, or equivalent, with air flowing in a base-to-anode direction. Where long life and consistent performance are factors, cooling in excess of minimum requirements is normally beneficial. Cooling air should be applied before or simultaneously with the application of electrode voltages, including the filament, and should normally be maintained for a short period after all voltages are removed to allow for tube cool-down. The cooling data shown is for the tube in a SK-300A socket with a SK-316 Air Chimney.

Anode dissipation	Sea level		10,000 feet	
	Airflow (cfm)	Approximate pressure drop ($In.H_2O$)	Airflow (cfm)	Approximate pressure drop ($In.H_2O$)
7,500 W	220	0.4	320	0.6
12,500 W	555	2.5	810	3.6
15,000 W	775	5.0	1,130	7.3

2. In all electrical tests involving application of filament voltage an air-system socket and chimney may be used and forced-air cooling is allowable.

3. The tube manufacturer warrants the tube for 1 year from date of shipment, or 1,000 hours of filament life, whichever first elapses. This warranty applies only when the tube is operated within the maximum ratings (see "Absolute Ratings" of MIL-E-1). A defective tube shall either be replaced, or at the option of the manufacturer, a credit shall be made in the amount of the original purchase price pro rated on the basis of 1,000 hours of "filament-on" time.

4. Testing shall be performed every 6 months, with sampling as follows:

$n_1 = 4$ $c_1 = 0$

$n_2 = 4$ $c_2 = 1$;

where c_2 represents the total allowable failures for the first and second samples combined.

Separate samples may be used at the option of the manufacturer. None of the listed tests shall be considered destructive except in case of failure. In th event of failure after double sampling, that specific test shall become qualit conformance inspection, part 2; after three consecutive successful submissions, the testing may revert to the quality conformance inspection, part 3 tests.

5. Any change in filament current resulting from the vibration or shock testing (considered individually) shall not exceed the specified limit for ΔIf.

6. During this test the tube shall be operated as a Class AB1 amplifier; the control grid shall not be driven positive, as indicated by grid current flow.

Custodians:
Army - ER
Navy - EC
Air Force - 85

Review activities:
Air Force - 99
DLA - ES

User activities:
Navy - AS, OS, MC, CG
Air Force - 11, 19

Agent:
DLA - ES

Preparing activity:
Navy - EC

(Project 5960-3331)

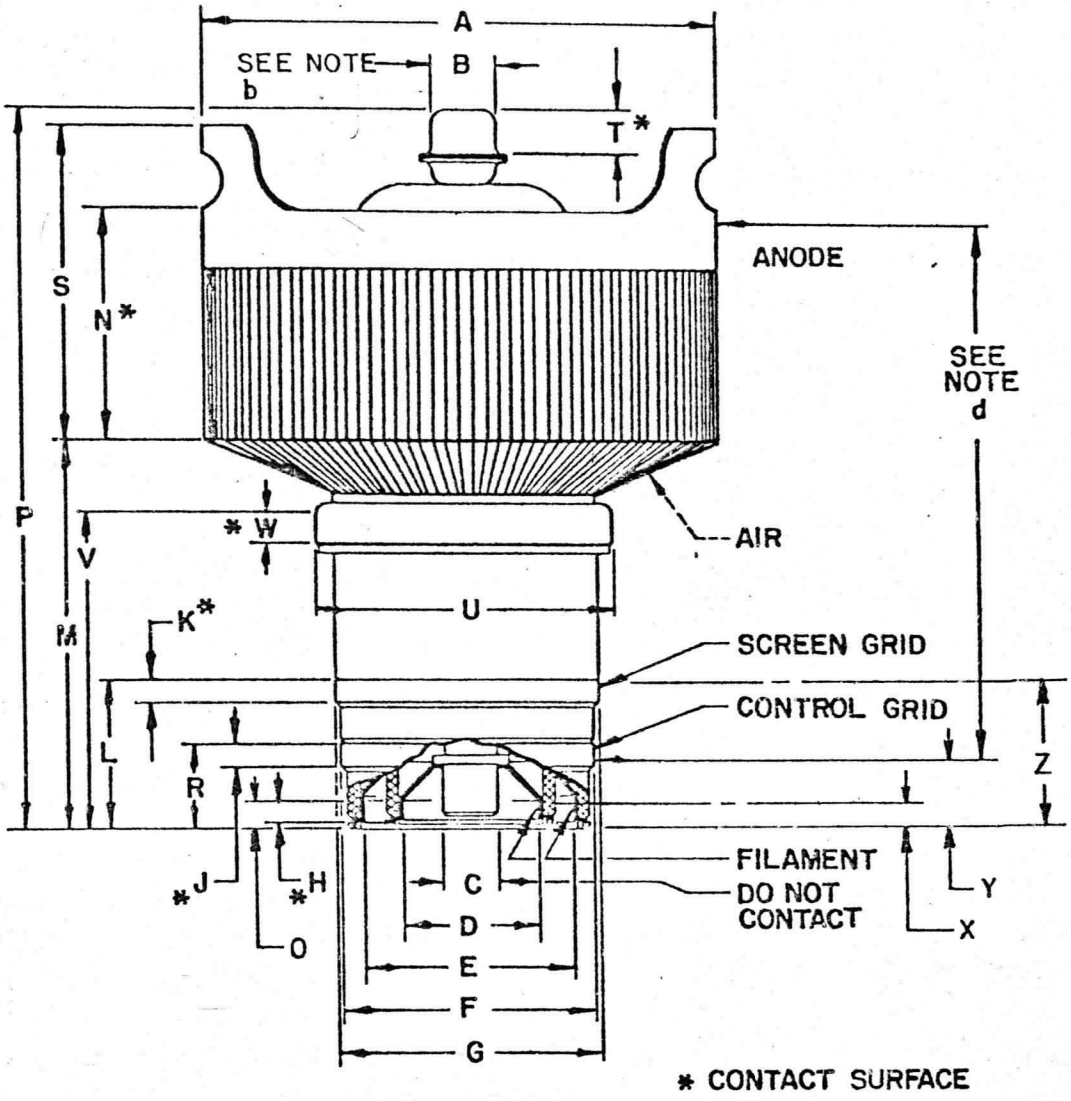

FIGURE 1. Outline drawing of electron tube type 8281.

Ltr	Dimensions in inches with metric equivalents (mm) in parentheses	
	Minimum	Maximum
Quality conformance inspection, part 2		
C	.600 (15.24)	.760 (19.30)
D	1.896 (48.16)	1.936 (49.17)
E	3.133 (79.58)	3.173 (80.59)
F	3.792 (96.32)	3.832 (97.33)
G	3.980 (101.09)	4.020 (102.11)
H	.188 (4.78)	--- ---
J	.188 (4.78)	--- ---
K	.188 (4.78)	--- ---
L	1.695 (43.05) BASIC (See note e)	
O	.355 (9.02) BASIC (See note e)	
P	9.000 (228.60)	9.375 (238.12)
R	.920 (23.37) BASIC (See note e)	
T	.375 (9.52)	--- ---
U	4.406 (111.91)	4.468 (113.49)
V	3.718 (94.44)	3.781 (96.04)
W	.219 (5.56)	--- ---
Quality conformance inspection, part 3 (See note c)		
A	7.460 (189.48)	7.580 (192.53)
B	.855 (21.72)	.895 (22.73)
M	4.550 (115.57)	4.783 (121.49)
N	2.412 (61.26)	2.788 (70.82)
S	3.560 (90.42)	3.684 (93.57)
Reference dimensions (See notes f & g)		
X	.260 (6.60)	
Y	.826 (20.98)	
Z	1.600 (40.64)	

FIGURE 1. Outline drawing of electron tubes type 8281 - Continued

NOTES:

a. The total indicator reading (T.I.R.) (the sum of the positive and negative deflection shown by the indicator when measuring the eccentricity of the surface with respect to another, with the reference axis established) of the screen grid and filament contact surfaces shall not exceed .040 (1.02 mm) with respect to the control grid and anode contact surfaces when the latter surfaces are rotated on rollers at the points indicated by the arrows. Quality conformance inspection part 2, shall apply.

b. Top cap outline optional provided it meets requirements of dimensions B and T.

c. Dimensions shall be checked every 6 months, with sampling as follows:

$n_1 = 4$ $c_1 = 0$ where c_2 represents the total allowable
$n_2 = 4$ $c_2 = 1$; failures for the first and second samples combined.

Separate samples may be used at the option of the manufacturer. None of the listed tests shall be considered destructive except in case of failure. In the event of failure after double sampling, that specific test shall become quality conformance inspection, part 2; after three consecutive successful submissions, the testing may revert to the quality conformance inspection, part 3 tests.

d. The T.I.R. of the screen grid and filament contact surfaces shall not exceed .040 (1.02 mm) with respect to the control grid and anode contact surface when the latter surfaces are rotated on rollers at points indicated by the arrows.

e. Basic dimension is a numerical value used to describe the theoretically exact size, shape or location of a feature or datum target. It is the basis from which permissible variations are established by tolerances on other dimensions, in notes or by feature control symbols.

f. Optimum filament and grid connector heights for socket design purposes.

g. Reference or nominal dimensions are listed for information only, and are not required for inspection purposes.

FIGURE 1. Outline drawing of electron tube type 8281 - Continued.

* U.S. GOVERNMENT PRINTING OFFICE: 1984—705—040/A283

INSTRUCTIONS: In a continuing effort to make our standardization documents better, the DoD provides this form for use in submitting comments and suggestions for improvements. All users of military standardization documents are invited to provide suggestions. This form may be detached, folded along the lines indicated, taped along the loose edge *(DO NOT STAPLE)*, and mailed. In block 5, be as specific as possible about particular problem areas such as wording which required interpretation, was too rigid, restrictive, loose, ambiguous, or was incompatible, and give proposed wording changes which would alleviate the problems. Enter in block 6 any remarks not related to a specific paragraph of the document. If block 7 is filled out, an acknowledgement will be mailed to you within 30 days to let you know that your comments were received and are being considered.

NOTE: This form may not be used to request copies of documents, nor to request waivers, deviations, or clarification of specification requirements on current contracts. Comments submitted on this form do not constitute or imply authorization to waive any portion of the referenced document*(s)* or to amend contractual requirements.

(Fold along this line)

(Fold along this line)

DEPARTMENT OF THE NAVY
Naval Electronic Systems Command
Washington, DC 20363

NO POSTAGE NECESSARY IF MAILED IN THE UNITED STATES

OFFICIAL BUSINESS
PENALTY FOR PRIVATE USE $300

BUSINESS REPLY MAIL
FIRST CLASS PERMIT NO. 12503 WASHINGTON D. C.

POSTAGE WILL BE PAID BY THE DEPARTMENT OF THE NAVY

COMMANDER
NAVAL ELECTRONIC SYSTEMS COMMAND
DEFENSE STANDARDIZATION PROGRAM BRANCH
DEPARTMENT OF THE NAVY
WASHINGTON, DC 20363
ATTN: ELEX 8111

STANDARDIZATION DOCUMENT IMPROVEMENT PROPOSAL

(See Instructions – Reverse Side)

1. DOCUMENT NUMBER	2. DOCUMENT TITLE
MIL-E-11761B	

3a. NAME OF SUBMITTING ORGANIZATION	4. TYPE OF ORGANIZATION *(Mark one)*
	☐ VENDOR ☐ USER ☐ MANUFACTURER ☐ OTHER *(Specify)*: _____
b. ADDRESS *(Street, City, State, ZIP Code)*	

5. PROBLEM AREAS

a. Paragraph Number and Wording:

b. Recommended Wording:

c. Reason/Rationale for Recommendation:

6. REMARKS

7a. NAME OF SUBMITTER *(Last, First, MI)* – Optional	b. WORK TELEPHONE NUMBER *(Include Area Code)* – Optional
c. MAILING ADDRESS *(Street, City, State, ZIP Code)* – Optional	8. DATE OF SUBMISSION *(YYMMDD)*

DD FORM 82 MAR 1426

PREVIOUS EDITION IS OBSOLETE.

(TO DETACH THIS FORM, CUT ALONG THIS LINE.)

X Nov 87. Now Eimac have added wire left 30 AWG (= 0.254 mm/m ϕ Cu. wire).

8281
4CX15,000A

TECHNICAL DATA

RADIAL BEAM
POWER TETRODE

The EIMAC 8281/4CX15,000A is a ceramic/metal power tetrode intended for use in audio or radio frequency applications. It features a new type of internal mechanical structure which results in higher rf operating efficiency. Low rf losses in this mechanical structure permit operation of the 8281/4CX15,000A at full ratings up to 110 MHz, and at reduced ratings, to 225 MHz.

The 8281/4CX15,000A is also recommended for radio-frequency linear power amplifier service, and for VHF television linear amplifier service.



GENERAL CHARACTERISTICS[1]

ELECTRICAL

Filament: Thoriated Tungsten	
Voltage	6.3 ± 0.3 V
Current, at 6.3 volts	160 A
Amplification Factor, average	
Grid to Screen	4.5
Direct Interelectrode Capacitances (cathode grounded):[2]	
Cin	160.0 pF
Cout	24.5 pF
Cgp	1.5 pF
Direct Interelectrode Capacitances (grid and screen grounded):[2]	
Cin	67.0 pF
Cout	25.5 pF
Cpk	0.2 pF
Maximum Frequency Ratings	
CW	110 MHz

1. Characteristics and operating values are based on performance tests. These figures may change without notice as the result of additional data or product refinement. EIMAC Division of Varian should be consulted before using this information for final equipment design.

2. Capacitance values are for a cold tube as measured in a special shielded fixture in accordance with Electronic Industries Association Standard RS-191.

MECHANICAL

Maximum Overall Dimensions:	
Length	9.375 in; 238.13 mm
Diameter	7.580 in; 192.53 mm
Net Weight	12.8 lb; 5.81 kg
Operating Position	Axis vertical, base up or down
Cooling	Forced air
Operating Temperature, maximum	
Ceramic/Metal Seals and Anode Core	250°C
Base	Special, concentric
Recommended Air System Socket	SK-300A
Recommended Air Chimney	SK-316

(Revised 12-15-73) © 1971 by Varian Printed in U.S.A.

RADIO FREQUENCY LINEAR AMPLIFIER
GRID DRIVEN, Class AB_1

ABSOLUTE MAXIMUM RATINGS

DC PLATE VOLTAGE	10,000	VOLTS
DC SCREEN VOLTAGE	2000	VOLTS
DC PLATE CURRENT	6.0	AMPERES
PLATE DISSIPATION	15,000	WATTS
SCREEN DISSIPATION	450	WATTS
GRID DISSIPATION	200	WATTS

1. Adjust for specified zero-signal plate current.
2. Approximate value.

TYPICAL OPERATION
Peak Envelope or Modulation Crest Conditions

Plate Voltage	7,500	10,000	Vdc
Screen Voltage	1,500	1,500	Vdc
Grid Voltage [1]	-350	-370	Vdc
Zero-Signal Plate Current	1.0	1.0	Adc
Single-Tone Plate Current	4.0	4.25	Adc
Single-Tone Screen Current [2]	170	150	mAdc
Peak rf Grid Voltage [2]	330	340	v
Plate Dissipation	12.2	14.0	kW
Single-Tone Plate Output Power	20.8	28.5	kW
Resonant Load Impedance	865	1,260	Ω

RADIO FREQUENCY POWER AMPLIFIER OR OSCILLATOR
Class C Telegraphy or FM Telephony
(Key-Down Conditions)

ABSOLUTE MAXIMUM RATINGS

DC PLATE VOLTAGE	10,000	VOLTS
DC SCREEN VOLTAGE	2000	VOLTS
DC PLATE CURRENT	5.0	AMPERES
PLATE DISSIPATION	15,000	WATTS
SCREEN DISSIPATION	450	WATTS
GRID DISSIPATION	200	WATTS

TYPICAL OPERATION

Plate Voltage	7,500	10,000	Vdc
Screen Voltage	750	750	Vdc
Grid Voltage	-510	-550	Vdc
Plate Current	4.65	4.55	Adc
Screen Current [1]	0.59	0.54	Adc
Grid Current [1]	0.30	0.27	Adc
Peak rf Grid Voltage [1]	730	790	v
Calculated Driving Power	220	220	W
Plate Dissipation	8.1	9.0	kW
Plate Output Power	26.7	36.5	kW

1. Approximate value.

PLATE MODULATED RADIO FREQUENCY POWER AMPLIFIER
GRID DRIVEN Class C Telephony
(Carrier Conditions)

ABSOLUTE MAXIMUM RATINGS

DC PLATE VOLTAGE	8000	VOLTS
DC SCREEN VOLTAGE	1500	VOLTS
DC PLATE CURRENT	4.0	AMPERES
PLATE DISSIPATION	10,000	WATTS
SCREEN DISSIPATION	450	WATTS
GRID DISSIPATION	200	WATTS

TYPICAL OPERATION

Plate Voltage	6,000	8,000	Vdc
Screen Voltage	750	750	Vdc
Grid Voltage	-600	-640	Vdc
Plate Current	3.75	3.65	Adc
Screen Current [1]	0.45	0.43	Adc
Grid Current [1]	0.18	0.18	Adc
Peak af Screen Voltage [1] 100% modulation	740	710	v
Peak rf Grid Voltage [1]	800	840	v
Calculated Driving Power	150	150	W
Plate Dissipation	5.1	5.8	kW
Plate Output Power	17.4	23.5	kW

1. Approximate value.

AUDIO FREQUENCY POWER AMPLIFIER OR MODULATOR
GRID DRIVEN, Class AB_1 (Sinusoidal Wave)

ABSOLUTE MAXIMUM RATINGS (per tube)

DC PLATE VOLTAGE	10,000	VOLTS
DC SCREEN VOLTAGE	2000	VOLTS
DC PLATE CURRENT	6.0	AMPERES
PLATE DISSIPATION	15,000	WATTS
SCREEN DISSIPATION	450	WATTS
GRID DISSIPATION	200	WATTS

TYPICAL OPERATION (Two tubes)

Plate Voltage	7,500	10,000	Vdc
Screen Voltage	1,500	1,500	Vdc
Grid Voltage [1]	-350	-370	Vdc
Zero-Signal Plate Current [3]	1.00	1.00	Adc
Maximum Signal Plate Current	8.80	8.50	Adc
Maximum Signal Screen Current [2]	0.34	0.30	Adc
Peak af Grid Voltage [2]	330	340	v
Maximum Signal Plate Dissipation [3]	12.2	14.0	kW
Plate Output Power	41.6	57.0	kW
Load Resistance (plate to plate)	1,730	2,520	Ω

1. Adjust for specified zero-signal plate current.
2. Approximate value.
3. Per Tube.

TELEVISION LINEAR AMPLIFIER
Cathode Driven

ABSOLUTE MAXIMUM RATINGS

110 MHz to 225 MHz

DC PLATE VOLTAGE	6500	VOLTS
DC SCREEN VOLTAGE	1500	VOLTS
DC PLATE CURRENT	5.0	AMPERES
PLATE DISSIPATION	15,000	WATTS
SCREEN DISSIPATION	450	WATTS
GRID DISSIPATION	200	WATTS

TYPICAL OPERATION, Composite Signal Black Level
Unless Otherwise Stated

Plate Voltage	5000	6000	Vdc
Screen Voltage	500	700	Vdc
Grid Voltage [1]	-160	-180	Vdc
Plate Current (zero sig.)	.500	.650	Adc
Plate Current	2.800	3.335	Adc
Grid Current	.075	.035	Adc
Screen Current	.060	.040	Adc
Peak Cath. Volt. (pk synch.)	310	345	v
Cath. Driving Power (pk. synch.)	975	1350	w
Plate Output Power (pk. synch.)	11.0	16.5	kw
Plate Load Resistance	600	600	Ω

1. Approximate value.

TYPICAL OPERATION values are obtained by calculations from published characteristic curves. To obtain the specified plate current at the specified bias, screen, and plate voltages, adjustment of the rf grid voltage is assumed. If this procedure is followed, there will be little variation in output power when the tube is replaced, even though there may be some variation in grid and screen currents. The grid and screen currents which occur when the desired plate current is obtained are incidental and vary from tube to tube. These current variations cause no performance degradation providing the circuit maintains the correct voltage in the presence of the current variations. If grid bias is obtained principally by means of a grid resistor, the resistor must be adjustable to produce the required bias voltage when the correct rf grid voltage is applied.

RANGE VALUES FOR EQUIPMENT DESIGN

	Min.	Max.	
Heater Current, at 6.3 volts	152	168	A
Interelectrode Capacitances, cathode grounded [1]			
Cin	154.0	167.0	pF
Cout	22.0	27.0	pF
Cgp	----	2.0	pF
Interelectrode Capacitances, grid and screen grounded [1]			
Cin	62.0	72.0	pF
Cout	23.0	28.0	pF
Cpk	----	0.3	pF

1. Capacitance values are for a cold tube as measured in a special shielded fixture in accordance with Electronic Industries Association Standard RS-191.

MECHANICAL

MOUNTING - The 4CX15,000A must be operated with its axis vertical. The base of the tube may be down or up at the convenience of the circuit designer.

SOCKET - The EIMAC Air-System Socket Type SK-300A is designed especially for the concentric base terminals of the 4CX15,000A. The use of recommended air-flow rates through this socket provides effective forced-air cooling of the tube. Air forced into the bottom of the socket passes over the tube terminals and through the SK-316 Air Chimney, into the anode cooling fins.

COOLING - The maximum temperature rating for the external surfaces of the 4CX15,000A is 250°C. Sufficient forced-air circulation must be provided to keep the temperature of the anode at the base of the cooling fins and the temperature of the ceramic/metal seals below 250°C. Air-flow requirements to maintain seal temperatures at 225°C in 50°C ambient air are tabulatted below (for operation below 30 megahertz). This data is for the tube mounted in an SK-300A socket with an SK-316 chimney.

APPLICATION

SEA LEVEL			10,000 FEET	
Plate Dissipation * (Watts)	Air Flow (CFM)	Pressure Drop(Inches of Water)	Air Flow (CFM)	Pressure Drop(Inches of Water)
7,500	230	.7	336	1.0
12,500	490	2.7	710	4.1
15,000	645	4.6	945	7.0

*Since the power dissipated by the filament represents about 1000 watts and since grid-plus-screen dissipation can, under some conditions, represent another 600 watts, allowance has been made in preparing this tabulation for an additional 1600 watts dissipation.

The blower selected in a given application must be capable of supplying the desired air flow at a back pressure equal to the pressure drop shown above plus any drop encountered in ducts and filters.

At other altitudes and ambient temperatures the flow rate must be modified to obtain equivalent cooling. The flow rate and corresponding pressure differential must be determined individually in such cases, using rated maximum temperatures as the criteria for satisfactory cooling.

ELECTRICAL

FILAMENT OPERATION - The rated filament voltage for the 4CX15,000A is 6.3 volts. Filament voltage, as measured at the socket, should be maintained at this value to obtain maximum tube life. In no case should it be allowed to deviate by more than plus or minus five percent from the rated value.

ELECTRODE DISSIPATION RATINGS - The maximum dissipation ratings for the 4CX15,000A must be respected to avoid damage to the tube. An exception is the plate dissipation which may be permitted to rise above the rated maximum during brief periods, such as may occur during tuning.

GRID OPERATION - The 4CX15,000A control grid has a maximum dissipation rating of 200 watts. Precautions should be observed to avoid exceeding this rating. The grid bias and driving power should be kept near the values shown in the "Typical Operation" sections of the data sheet whenever possible. The maximum grid circuit resistance should not exceed 100,000 ohms per tube.

SCREEN OPERATION - The power dissipated by the screen of the 4CX15,000A must not exceed 450 watts.

Screen dissipation, in cases where there is no AC applied to the screen, is the simple product of the screen voltage and the screen current. If the screen voltage is modulated, the screen dissipation will depend upon loading, driving power, and carrier screen voltage.

Screen dissipation is likely to rise to excessive values when the plate voltage, bias voltage, or plate load are removed with filament and screen voltages applied. Suitable protective means must be provided to limit the screen dissipation to 450 watts in the event of circuit failure.

PLATE DISSIPATION - The plate-dissipation rating for the 4CX15,000A is 15,000 watts.

When the 4CX15,000A is operated as a plate-modulated rf power amplifier, the input power is limited by conditions not connected with the plate efficiency, which is quite high. Therefore, except during tuning there is little possibility that the 10,000 watt maximum plate dissipation rating will be exceeded.

HIGH VOLTAGE - Normal operating voltages used with the 4CX15,000A are deadly, and the equipment must be designed properly and operating precautions must be followed. Design all equipment so that no one can come in contact with high voltages. All equipment must include safety enclosures for high-voltage circuits and terminals, with interlock switches to open primary circuits of the power supply and to discharge high-voltage condensers whenever access doors are opened. Interlock switches must not be bypassed or "cheated" to allow operation with access doors open. Always remember that HIGH VOLTAGE CAN KILL.

X-RADIATION - High-vacuum tubes operating at voltages higher than 10 kilovolts produce progressively more dangerous X-ray radiation as the voltage is increased. The 4CX15,000A, operating at its rated voltages and currents, is a potential X-ray hazard. Only limited shielding is afforded by the tube envelope. Moreover, the X-ray radiation level can increase significantly with aging and gradual deterioration, due to leakage paths or emission characteristics as they are affected by the high voltage. X-ray shielding must be provided on all sides of tubes operating at these voltages to provide adequate protection throughout the tube's life. Periodic checks on the X-ray level should be made, and the tube should never be operated without adequate shielding in place when voltages above 10 kilovolts are in use. Lead glass, which attenuates X-rays, is available for viewing windows. If there is any doubt as to the requirement for or the adequacy of shielding, an expert in this field should be contacted to perform an X-ray survey of the equipment.

Operation of high-voltage equipment with interlock switches "cheated" and cabinet doors open in order to be better able to locate an equipment malfunction can result in serious X-ray exposure.

RADIO FREQUENCY RADIATION - Avoid exposure to strong rf fields even at relatively low frequency. Absorption of rf energy by human tissue is dependent on frequency. Under 30 MHz, most of the energy will pass completely through the human body with little attenuation or heating effect. Public health agencies are concerned with the hazard, however, even at these frequencies, and it is worth noting that some commercial dielectric heating units actually operate at frequencies as low as the 13 and 27 MHz bands.

Many EIMAC power tubes, such as the 4CX 15,000A, are specifically designed to generate or amplify radio frequency power. There may be a relatively strong rf field in the general proximity of the power tube and its associated circuitry --- the more power involved, the stronger the rf field. Proper enclosure design and efficient coupling of rf energy to the load will minimize the rf field in the vicinity of the power amplifier unit itself.

INTERELECTRODE CAPACITANCE - The actual internal interelectrode capacitance of a tube is influenced by many variables in most applications, such as stray capacitance to the chassis, capacitance added by the socket used, stray capacitance between tube terminals, and wiring effects. To control the actual capacitance values within the tube, as the key component involved, the industry and the Military Services use a standard test procedure as described in Electronic Industries Association Standard RS-191. This requires the use of specially constructed test fixtures which effectively shield all external tube leads from each other and eliminates any capacitance reading to "ground". The test is performed on a cold tube. Other factors being equal, controlling internal tube capacitance in this way normally assures good interchangeability of tubes over a period of time, even when the tube may be made by different manufacturers. The capacitance values shown in the manufacturer's technical data, or test specifications, normally are taken in accordance with Standard RS-191.

The equipment designer is therefore cautioned to make allowance for the actual capacitance values which will exist in any normal application. Measurements should be taken with the socket and mounting which represent approximate final layout if capacitance values are highly significant in the design.

SPECIAL APPLICATIONS - If it is desired to operate this tube under conditions widely different from those given here, write to the Application Engineering Dept., Power Grid Tube Division, EIMAC Division of Varian, 301 Industrial Way, San Carlos, California, 94070 for information and recommendations.

DIMENSIONAL DATA

DIM.	INCHES			MILLIMETERS		
	MIN.	MAX.	REF.	MIN.	MAX.	REF.
A	7.460	7.580	- -	189.48	192.53	- -
B	0.855	0.895	- -	21.72	22.73	- -
C	0.720	0.760	- -	18.29	19.30	- -
D	1.896	1.936	- -	46.63	49.17	- -
E	3.133	3.173	- -	79.58	80.59	- -
F	3.792	3.832	- -	96.32	97.33	- -
G	3.980	4.020	- -	101.09	102.11	- -
H	0.188	- -	- -	4.78	- -	- -
J	0.188	- -	- -	4.78	- -	- -
K	0.188	- -	- -	4.78	- -	- -
L	1.764	1.826	- -	44.81	46.38	- -
M	4.659	4.783	- -	118.34	121.49	- -
N	2.412	2.788	- -	61.26	70.82	- -
P	9.000	9.375	- -	228.60	238.13	- -
R	0.986	1.050	- -	25.04	26.67	- -
S	3.560	3.684	- -	90.42	93.57	- -
T	0.375	- -	- -	9.53	- -	- -
U	4.406	4.468	- -	111.91	113.49	- -
V	3.718	3.781	- -	94.44	96.04	- -
W	0.219	- -	- -	5.56	- -	- -

NOTES:
1. REF. DIMENSIONS ARE FOR INFO. ONLY & ARE NOT REQUIRED FOR INSPECTION PURPOSES.

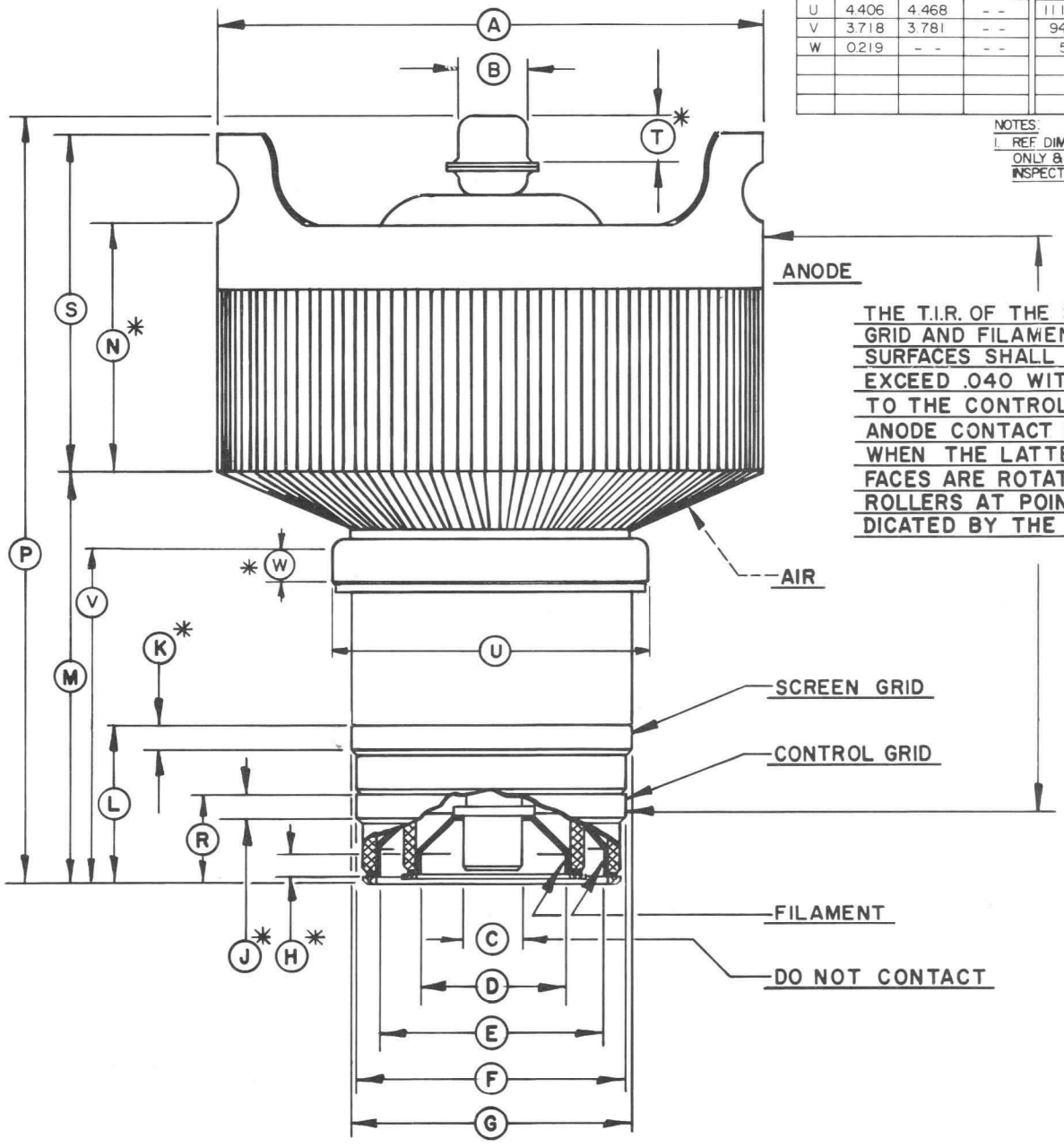

* CONTACT SURFACE

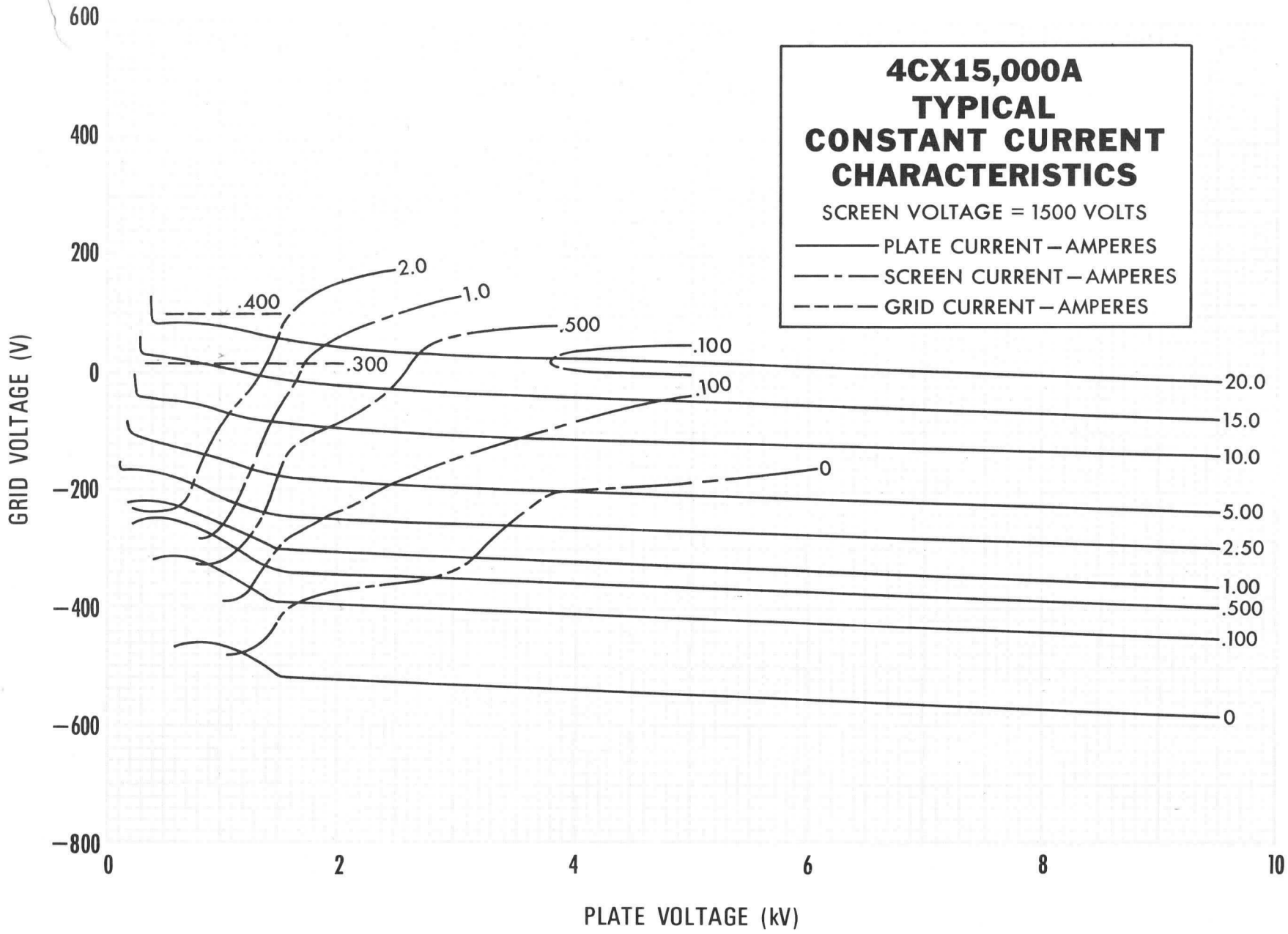
4CX15,000A
TYPICAL
CONSTANT CURRENT
CHARACTERISTICS
SCREEN VOLTAGE = 1500 VOLTS
PLATE CURRENT – AMPERES
SCREEN CURRENT – AMPERES
GRID CURRENT – AMPERES
GRID VOLTAGE (V)
600
400
200
0
−200
−400
−600
−800
0
2
4
6
8
10
PLATE VOLTAGE (kV)
2.0
1.0
.500
.400
.300
.100
.100
0
20.0
15.0
10.0
5.00
2.50
1.00
.500
.100
0

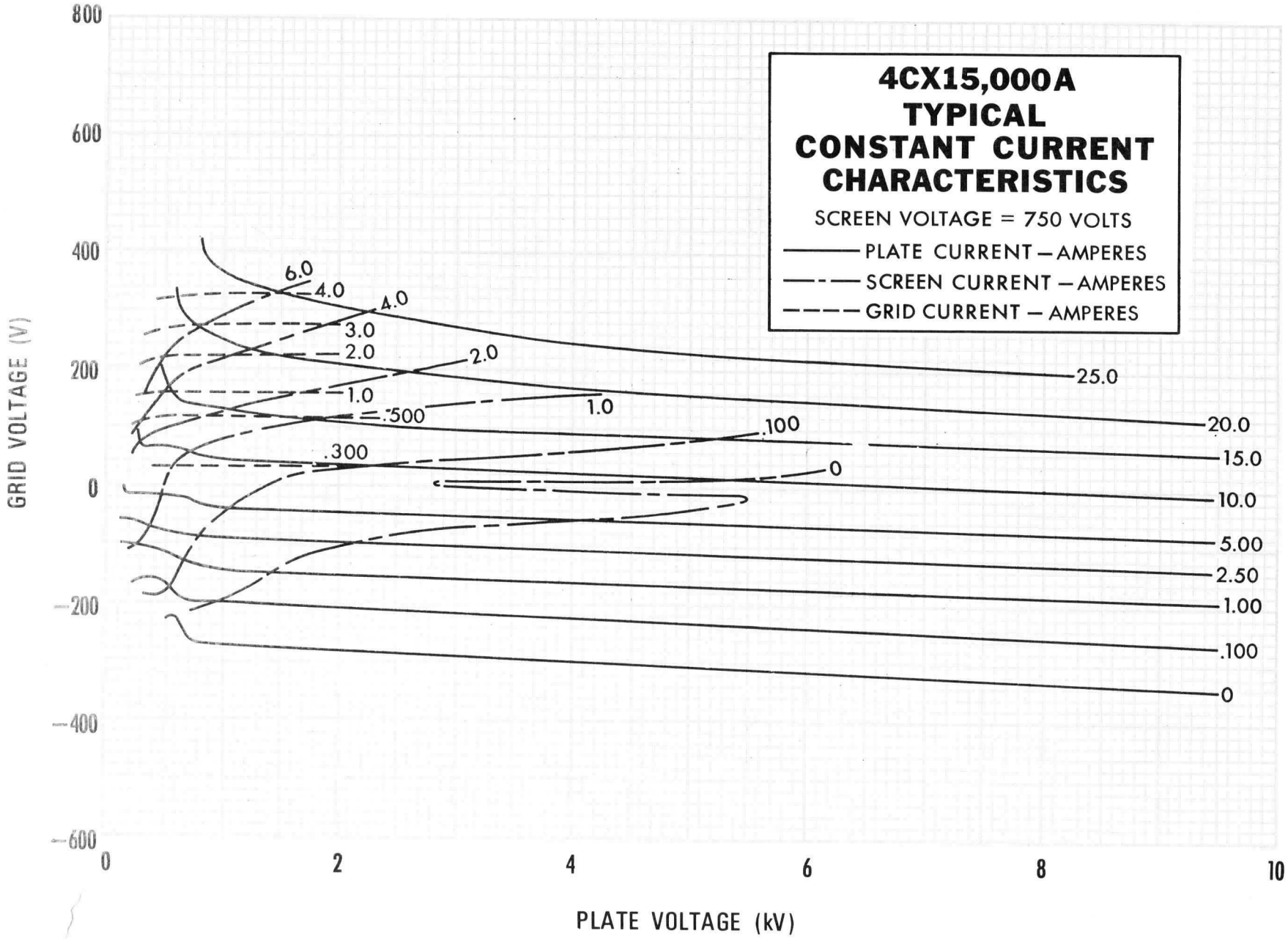
4CX15,000A
TYPICAL
CONSTANT CURRENT
CHARACTERISTICS
SCREEN VOLTAGE = 750 VOLTS
PLATE CURRENT – AMPERES
SCREEN CURRENT – AMPERES
GRID CURRENT – AMPERES
GRID VOLTAGE (V)
800
600
400
200
0
-200
-400
-600
0
2
4
6
8
10
PLATE VOLTAGE (kV)
6.0
4.0
4.0
3.0
2.0
2.0
1.0
.500
1.0
.100
.300
0
25.0
20.0
15.0
10.0
5.00
2.50
1.00
.100
0

ADVANCE PRODUCT ANNOUNCEMENT

9019
YC130
VHF RADIAL BEAM POWER TETRODE

The EIMAC 9019/YC130 is a ceramic/metal VHF power tetrode. It is rated for full power input to 110 MHz and is recommended for use as a Class C power amplifier or plate modulated amplifier.

Air-system sockets and matching air chimneys are available from EIMAC. A connector clip is available for making the dc connection to the anode.

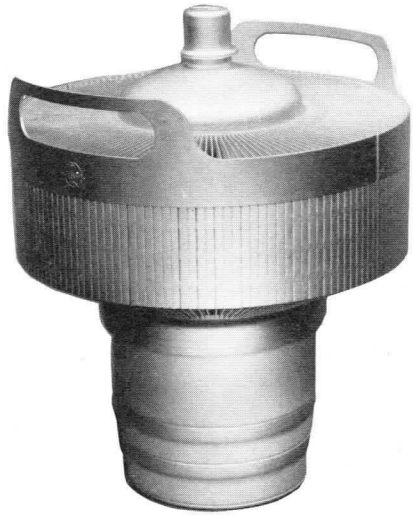

GENERAL CHARACTERISTICS [1]

ELECTRICAL

Filament: Thoriated Tungsten Mesh		
Voltage	7.5 ± 0.37	V
Current, at 7.5 volts	160	A
Amplification Factor (average), Grid to Screen	4.5	
Direct Interelectrode Capacitance (cathode grounded) [2]		
Cin	160	pF
Cout	26.5	pF
Cgp	1.5	pF
Direct Interelectrode Capacitance (grids grounded) [2]		
Cin	67	pF
Cout	27.5	pF
Cpk	0.2	pF
Maximum Frequency for Full Ratings (CW)	110	MHz

1. Characteristics and operating values are based on performance tests. These figures may change without notice as the result of additional data or product refinement. Varian EIMAC should be consulted before using this information for final equipment design.
2. Capacitance values are for a cold tube as measured in a special shielded fixture in accordance with Electronic Industries Association Standard RS-191.

MECHANICAL

Maximum Overall Dimensions:	
Length	9.375 In; 23.81 cm
Diameter	7.580 In; 19.25 cm
Net Weight	12.8 Lb; 5.8 kg
Operating Position	Axis Vertical, Base Up or Down
Maximum Operating Temperature, Ceramic/Metal Seals or Envelope	250°C
Cooling	Forced Air
Base	Special Concentric
Recommended Air-System Socket: For LF or HF Service	EIMAC SK-300A
For VHF Service	EIMAC SK-360
Recommended Air-System Chimney: For Either the SK-300A or SK-360 Socket	EIMAC SK-316
Recommended Screen Grid Bypass Capacitor Kit for the SK-360 Socket	EIMAC SK-355
Available Anode Connector Clip	EIMAC ACC-3

RADIO FREQUENCY POWER AMPLIFIER
Class C FM
(Key-down conditions)

ABSOLUTE MAXIMUM RATINGS

DC PLATE VOLTAGE	10,000 VOLTS
DC SCREEN VOLTAGE	2000 VOLTS
DC GRID VOLTAGE	-750 VOLTS
DC PLATE CURRENT	5.0 AMPERES
PLATE DISSIPATION	18 KILOWATTS
SCREEN DISSIPATION	450 WATTS
GRID DISSIPATION	200 WATTS

TYPICAL OPERATION (Frequencies to 110 MHz)

DC Plate Voltage	7.5	10.0	kVdc
DC Screen Voltage	750	750	Vdc
DC Grid Voltage	-510	-550	Vdc
DC Plate Current	4.65	4.55	Adc
DC Screen Current *	0.59	0.54	Adc
DC Grid Current *	0.30	0.27	Adc
Peak rf Grid Voltage *	730	790	v
Calculated Driving Power	220	220	W
Plate Dissipation	8.1	9.0	kW
Plate Output Power	26.7	36.5	kW

* Approximate value; will vary with circuit and tube

395035(Effective March 1986)
VA4889

Printed in U.S.A.

PLATE MODULATED RF POWER AMPLIFIER
Grid Driven
Class C Telephony - Carrier Conditions

ABSOLUTE MAXIMUM RATINGS

DC PLATE VOLTAGE	8000 VOLTS
DC SCREEN VOLTAGE	2000 VOLTS
DC GRID VOLTAGE	-750 VOLTS
DC PLATE CURRENT	4.0 AMPERES
PLATE DISSIPATION #	12 KILOWATTS
SCREEN DISSIPATION ##	450 WATTS
GRID DISSIPATION ##	200 WATTS

\# Corresponds to 18 kW at 100% sine-wave modulation.

TYPICAL OPERATION

DC Plate Voltage	6.0	8.0	kVdc
DC Screen Voltage	750	750	Vdc
Peak AF Screen Voltage (100% Mod)	740	710	v
DC Grid Bias Voltage	-600	-640	Vdc
DC Plate Current	3.75	3.65	Adc
DC Screen Current *	0.45	0.43	Adc
DC Grid Current *	0.18	0.18	Adc
Peak rf Grid Voltage *	800	840	v
Grid Driving Power (calculated) *	150	150	W
Plate Dissipation *	5.1	5.8	kW
Plate Output Power *	17.4	23.5	kW

* Approximate value.
Average, with or without modulation.

AUDIO FREQUENCY AMPLIFIER OR MODULATOR
Grid Driven, Class AB1, Sinusoidal Wave

ABSOLUTE MAXIMUM RATINGS

DC PLATE VOLTAGE	10.0 KILOVOLTS
DC SCREEN VOLTAGE	2000 VOLTS
DC PLATE CURRENT	6.0 AMPERES
PLATE DISSIPATION	18.0 KILOWATTS
SCREEN DISSIPATION	450 WATTS
GRID DISSIPATION	200 WATTS

* Approximate value. # Per tube.
Adjust for specified zero-signal plate current.

TYPICAL OPERATION (two tubes)

DC Plate Voltage	7.5	10.0	kVdc
DC Screen Voltage	1500	1500	Vdc
DC Grid Voltage ##	-350	-370	Vdc
Zero-Signal Plate Current	1.0	1.0	Adc
Maximum Signal Plate Current	8.8	8.5	Adc
Maximum Signal Screen Current *	0.34	0.30	Adc
Peak AF Grid Voltage * #	330	340	v
Driving Power *	0	0	W
Load Resistance Plate-to-Plate	1730	2520	Ohms
Maximum Signal Plate Dissipation * #	12.2	14.0	kW
Plate Output Power *	41.6	57.0	kW

TYPICAL OPERATION values are obtained by measurement or by calculation from published characteristic curves. To obtain the specified plate current at the specified bias, screen, and plate voltages, adjustment of the rf grid voltage is assumed. If this procedure is followed, there will be little variation in output power when the tube is replaced, even though there may be some variation in grid and screen currents. The grid and screen currents which occur when the desired plate current is obtained are incidental and vary from tube to tube. These current variations cause no performance degradation providing the circuit maintains the correct voltage in the presence of the current variations.

RANGE VALUES FOR EQUIPMENT DESIGN	Min.	Max.	
Filament: Current at 7.5 volts	148	168	A
Interelectrode Capacitance (grounded filament connection) [1]			
Cin	154	167	pF
Cout	24	29	pF
Cgp	---	2.0	pF

1 Capacitance values are for a cold tube as measured in a special shielded fixture in accordance with Electronic Industries Standard RS-191.

APPLICATION

MECHANICAL

MOUNTING - The tube must be mounted vertically, base up or down at the designer's convenience, and should be protected from vibration and shock.

STORAGE - If a tube is to be stored as a spare it should be kept in its original shipping carton, with the original packing material, to minimize the possibility of handling damage.

Before storage a new tube should be operated in the equipment for 100 to 200 hours to establish it has not been damaged and operates properly (See FILAMENT OPERATION for recommendations on initial value of filament voltage during this operation period). If the tube is still in storage 6 months later it again should be operated in the equipment for 100 to 200 hours to make sure there has been no degradation. If operation is satisfactory the tube can again be stored with great assurance of being a known-good spare.

SOCKETING - An air-system socket should be used in all applications to assure cooling of the tube base seals. The EIMAC SK-300A is recommended for audio or LF/HF rf operation; the SK-360 is recommended for VHF operation. The SK-360 incorporates low-inductance filament bypassing in the form of three 5000 pF copper-clad Kapton®capacitors. A screen grid bypass capacitor kit (the SK-355) is also available for the SK-360 socket, and includes eight 1000 pF 5000 DCWV capacitors (EIMAC P/N 050706), 16 mounting clips (EIMAC P/N 242859), and an assembly drawing (EIMAC P/N 243135) which shows how the parts are attached to the socket.

COOLING - The tube requires forced-air cooling in all applications. An air-system socket is recommended, with a matching air chimney. Normally the tube socket is mounted in a pressurized compartment so the cooling air passes through the socket and is then guided to the anode cooling fins by an air chimney. A chimney is available from EIMAC, the SK-316, for use with the SK-300A socket at frequencies below 30 MHz and with the SK-360 at VHF. If all cooling air is not passed around the base of the tube and through the socket, then arrangements must be made to assure adequate cooling of the tube base and the socket contacts themselves.

In this regard it should be noted the contact fingers used in the four contact collet assemblies (inner and outer filament, control grid and screen grid) are made of beryllium copper. If operated above 150°C for any appreciable length of time this material will lose its temper (or springy characteristic) and then will no longer make good contact to the base rings of the tube. This can lead to arcing which, in an extreme case, can burn through the metal of the tube base ring and the tube's vacuum integrity is then destroyed.

Thus adequate movement of cooling air around the base of the tube accomplishes a double purpose in keeping the tube base and the socket contact fingers at a safe operating temperature.

Though the maximum temperature rating for seals and the anode core is 250°C, it is considered good engineering practice to allow some safety factor and the table shown is for sea level with cooling air at 50°C and maximum tube anode temperature of 225 °C. Such a safety factor makes some allowance for variables such as dirty air filters, dirty tube anode cooling fins which will effect cooling efficiency, duct losses, etc. The figures shown are for the tube in an air-system socket with an air chimney in place, with air passing in a base-to-anode direction. Pressure drop values shown are approximate and are for the tube/socket/chimney combination.

Plate Diss. (Watts)	Air Flow (cfm)	Press.Drop Inches Water
7,500	230	0.7
12,500	490	2.7
15,000	645	4.6
18,000	970	8.2

At altitudes significantly above sea level flow rate must be increased for equivalent cooling. At 5000 feet both the flow rate and the pressure drop should be increased by a factor of 1.20, while at 10,000 feet both flow rate and pressure drop must be increased by 1.46.

Anode and base cooling should be applied before or simultaneously with filament voltage turnon and should normally continue for a brief period after shutdown to allow the tube to cool down properly.

IMPACT AND VIBRATION - The 9019/YC130 has a thoriated tungsten mesh filament and is intended for regular commercial service. Any tube with a thoriated tungsten filament should be protected from undue shock and vibration and if not installed in equipment should always be stored in its protective packing material in its shipping container.

ELECTRICAL

ABSOLUTE MAXIMUM RATINGS - Values shown for each type of service are based on the "absolute system" and are not to be exceeded under any service conditions. These ratings are limiting values outside which the serviceability of the tube may be impaired. In order not to exceed absolute ratings the equipment designer has the responsibility of determining an average design value for each rating below the absolute value of that rating by a safety factor so the absolute values will never be exceeded under any usual conditions of supply-voltage variation, load variation, or manufacturing variation in the equipment itself. It does not necessarily follow that combinations of absolute maximum ratings can be attained simultaneously.

HIGH VOLTAGE - Normal operating voltages used with this tube are deadly, and the equipment must be designed properly and operating precautions must be followed. Design all equipment so that no one can come in contact with high voltages. All equipment must include safety enclosures for high-voltage circuits and terminals, with interlock switches to open primary circuits of the power supply and to discharge high-voltage capacitors whenever access doors are opened. Interlock switches must not be bypassed or "cheated" to allow operation with access doors open. Always remember that HIGH VOLTAGE CAN KILL.

FILAMENT OPERATION - With a new tube, or one which has been in storage for some period of time, operation with filament voltage only applied for a period of 30 to 60 minutes is recommended before full operation begins. This allows the active getter material mounted within the filament structure to absorb any residual gas molecules which have accumulated during storage. Once normal operation has been established a minimum filament warmup time of four to five seconds is normally sufficient.

At rated (nominal) filament voltage the peak emission capability of the tube is many times that needed for communication service. A reduction in filament voltage will lower the filament temperature, which will substantially increase life expectancy. The correct value of filament voltage should be determined for the particular application. It is recommended the tube be operated at full nominal voltage for an initial stabilization period of 100 to 200 hours before any action is taken to operate at reduced voltage. The voltage should gradually be reduced until there is a slight degradation in performance (such as power output or distortion). The voltage should then be increased a few tenths of a volt above the value where performance degradation was noted for operation. The operating point should be rechecked after 24 hours.

Filament voltage should be closely regulated when voltage is to be reduced below nominal in this manner, to avoid any adverse influence by normal line voltage variations.

Filament voltage should be measured at the tube base or socket, using an accurate rms-responding meter. Periodically throughout the life of the tube the procedure outlined above for reduction of voltage should be repeated, with voltage reset as required, to assure best tube life.

EIMAC Application Bulletin #18 titled "EXTENDING TRANSMITTER TUBE LIFE" contains valuable information and is available on request.

GRID OPERATION - Maximum control grid dissipation is 200 watts, determined approximately by the product of the dc grid current and the peak positive grid voltage. A protective spark-gap device should be connected between control grid and cathode to guard against excessive voltage.

SCREEN OPERATION - The maximum screen grid dissipation is 450 watts. With no ac applied to the screen grid, dissipation is simply the product of dc screen voltage and the dc screen current. With screen modulation, dissipation is dependent on rms screen voltage and rms screen current. Plate voltage, plate loading, or bias voltage must never be removed while filament and screen voltages are present, since screen dissipation ratings will be exceeded. A protective spark-gap device should be connected between the screen grid and the cathode to guard against excessive voltage.

PLATE DISSIPATION - The rated maximum plate dissipation of the tube is 18 kilowatts, which may be safely sustained with adequate air cooling. When the tube is used as a plate-modulated rf amplifier the dissipation under carrier conditions should be limited to 12 kilowatts.

FAULT PROTECTION - In addition to the normal plate over-current interlock, screen current interlock, and cooling air interlock, the tube must be protected from internal damage caused by an internal plate arc which may occur at high plate voltage. A protective resistance should always be connected in series with each tube anode, to help absorb power supply stored energy if an internal arc should occur. An electronic crowbar, which will discharge power supply capacitors in a few microseconds after the start of an arc, is recommended. The protection criteria for each electrode supply is to short each electrode to ground, one at a time, through a vacuum relay switch and a 6-inch length of #30 AWG copper wire. The wire will remain intact if protection is adequate.

EIMAC Application Bulletin #17 titled FAULT PROTECTION contains considerable detail and is available from EIMAC on request.

RADIO-FREQUENCY RADIATION - Avoid exposure to strong rf fields even at relatively low frequency. Absorption of rf energy by human tissue is dependent on frequency. Under 300 MHz most of the energy will pass completely through the human body with little attenuation or heating affect. Public health agencies are concerned with the hazard even at these frequencies. OSHA (Occupational Safety and Health Administration) recommends that prolonged exposure to rf radiation should be limited to 10 milliwatts per square centimeter.

INTERELECTRODE CAPACITANCE - The actual internal interelectrode capacitance of a tube is influenced by many variables in most applications, such as stray capacitance to the chassis, capacitance added by the socket used, stray capacitance between tube terminals, and wiring effects. To control the actual capacitance values within the tube, as the key component involved, the industry and Military Services use a standard test procedure as described in Electronic Industries Association Standard RS-191. This requires the use of a specially constructed test fixture which shields all external tube leads or contacts from each other and eliminates any capacitance reading to "ground". The test is performed on a cold tube. Other factors being equal, controlling internal tube capacitance in this way normally assures good interchangeability of tubes over a period of time. The capacitance values shown in the technical data are taken in accordance with Standard RS-191.

The equipment designer is therefore cautioned to make allowance for the actual capacitance values which will exist in the appliction. Measurements should be taken with the mounting which represents approximate final layout if capacitance values are highly significant in the design.

SPECIAL APPLICATIONS - When it is desired to operate this tube under conditions widely different from those listed here, write to Varian EIMAC; attn: Product Manager; 301 Industrial Way; San Carlos, CA 94070 U.S.A.

OPERATING HAZARDS

PROPER USE AND SAFE OPERATING PRACTICES WITH RESPECT TO POWER TUBES ARE THE RESPONSIBILITY OF EQUIPMENT MANUFACTURERS AND USERS OF SUCH TUBES. ALL PERSONS WHO WORK WITH OR ARE EXPOSED TO POWER TUBES OR EQUIPMENT WHICH UTILIZES SUCH TUBES MUST TAKE PRECAUTIONS TO PROTECT THEMSELVES AGAINST POSSIBLE SERIOUS BODILY INJURY. DO NOT BE CARELESS AROUND SUCH PRODUCTS.

The operation of this tube may involve the following hazards, any one of which, in the absence of safe operating practices and precautions, could result in serious harm to personnel:

a. HIGH VOLTAGE - Normal operating voltages can be deadly. Remember that HIGH VOLTAGE CAN KILL.

b. LOW-VOLTAGE HIGH-CURRENT CIRCUITS - Personal jewelry, such as rings, should not be worn when working with filament contacts or connectors as a short circuit can produce very high current and melting, resulting in severe burns.

c. RF RADIATION - Exposure to strong rf fields should be avoided, even at relatively low frequencies. The dangers of rf radiation are more severe at UHF and microwave frequencies and can cause serious bodily and eye injuries. CARDIAC PACEMAKERS MAY BE EFFECTED.

d. HOT SURFACES - Surfaces of tubes can reach temperatures of several hundred °C and cause serious burns if touched for several minutes after all power is removed.

Please review the detailed operating hazards sheet enclosed with each tube, or request a copy from: Varian EIMAC, Power Grid Application Engineering, 301 Industrial Way, San Carlos CA 94070.

DIMENSIONAL DATA

DIM.	INCHES			MILLIMETERS		
	MIN.	MAX.	REF.	MIN.	MAX.	REF
A	7.460	7.580	- -	189.48	192.53	- -
B	0.855	0.895	- -	21.72	22.73	- -
C	0.720	0.760	- -	18.29	19.30	- -
D	1.896	1.936	- -	46.63	49.17	- -
E	3.133	3.173	- -	79.58	80.59	- -
F	3.792	3.832	- -	96.32	97.33	- -
G	3.980	4.020	- -	101.09	102.11	- -
H	0.188	- -	- -	4.78	- -	- -
J	0.188	- -	- -	4.78	- -	- -
K	0.188	- -	- -	4.78	- -	- -
L	1.764	1.826	- -	44.81	46.38	- -
M	4.659	4.783	- -	118.34	121.49	- -
N	2.412	2.788	- -	61.26	70.82	- -
P	9.000	9.375	- -	228.60	238.13	- -
R	0.986	1.050	- -	25.04	26.67	- -
S	3.560	3.684	- -	90.42	93.57	- -
T	0.375	- -	- -	9.53	- -	- -
U	4.406	4.468	- -	111.91	113.49	- -
V	3.718	3.781	- -	94.44	96.04	- -
W	0.219	- -	- -	5.56	- -	- -

NOTES:
1. REF. DIMENSIONS ARE FOR INFO. ONLY & ARE NOT REQUIRED FOR INSPECTION PURPOSES.

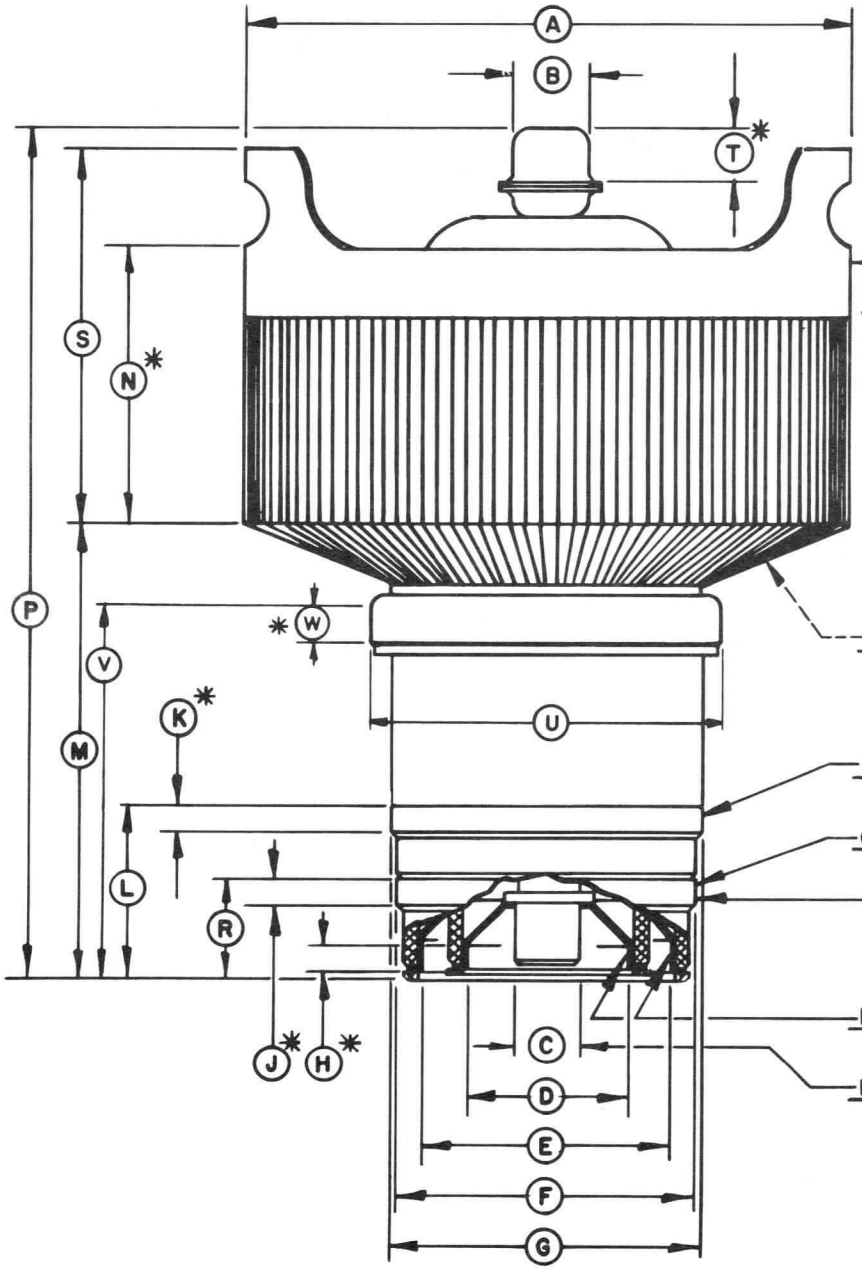

THE T.I.R. OF THE SCREEN GRID AND FILAMENT CONTACT SURFACES SHALL NOT EXCEED .040 WITH RESPECT TO THE CONTROL GRID AND ANODE CONTACT SURFACE WHEN THE LATTER SURFACES ARE ROTATED ON ROLLERS AT POINTS INDICATED BY THE ARROWS

* CONTACT SURFACE

TECHNICAL DATA

8910
4CX15,000J

RADIAL BEAM
POWER TETRODE

The EIMAC 8910/4CX15,000J is a ceramic/metal, forced-air cooled power tetrode intended for use in audio or radio frequency applications. The internal structure features a mesh filament and a mechanical design which assures good strength and high rf operating efficiency.

Full ratings on the 8910/4CX15,000J apply to 110 MHz, and it is especially recommended for radio frequency linear amplifier service.



GENERAL CHARACTERISTICS[1]

ELECTRICAL

Filament; Thoriated Tungsten Mesh	
Voltage	7.5 ± 0.3 V
Current, at 7.5 volts	160 A
Amplification Factor, average	
Grid to Screen	4.5
Direct Interelectrode Capacitances (cathode grounded);[2]	
Cin	160.0 pF
Cout	26.5 pF
Cgp	1.5 pF
Direct Interelectrode Capacitances (grid and screen grounded):[2]	
Cin	67.0 pF
Cout	27.5 pF
Cpk	0.2 pF
Maximum Frequency Ratings	
CW	110 MHz

1. Characteristics and operating values are based on performance tests. These figures may change without notice as the result of additional data or product refinement. EIMAC Division of Varian should be consulted before using this information for final equipment design.

2. Capacitance values are for a cold tube as measured in a special shielded fixture in accordance with Electronic Industries Association Standard RS-191.

MECHANICAL

Maximum Overall Dimensions:	
Length	9.375 in; 238.13 mm
Diameter	7.580 in; 192.53 mm
Net Weight	12.8 lb; 5.81 kg
Operating Position	Axis vertical, base up or down
Cooling	Forced air
Operating Temperature, maximum	
Ceramic/Metal Seals and Anode Core	250°C

(Effective 10-15-71) © 1971 by Varian

Printed in U.S.A.

Base	Special, concentric
Recommended Air System Socket	SK-300A
Recommended Air Chimney	SK-316

RADIO FREQUENCY LINEAR AMPLIFIER
GRID DRIVEN, Class AB

ABSOLUTE MAXIMUM RATINGS

PLATE VOLTAGE	10.0	kVdc
SCREEN VOLTAGE	2.0	kVdc
PLATE CURRENT	6.0	Adc
PLATE DISSIPATION	15.0	kW
SCREEN DISSIPATION	450	W
GRID DISSIPATION	200	W

1. Adjust for specified zero-signal plate current.
2. Approximate value.
3. Useful power is that delivered to the load.
4. Referenced against one tone of a two equal-tone signal.

TYPICAL OPERATION
Peak Envelope or Modulation Crest Conditions
Class AB1

Plate Voltage	7500	Vdc
Screen Voltage	1250	Vdc
Grid Voltage [1]	-250	Vdc
Zero-Signal Plate Current	1.25	Adc
Single-Tone Plate Current	2.90	Adc
Single-Tone Screen Current[2]	200	mAdc
Peak rf Grid Voltage[2]	200	v
Plate Dissipation	8300	W
Single-Tone Useful Power Out[3]	12	kW
Resonant Load Impedance	1450	Ω
Intermod. Distortion Products [4]		
3rd Order	-41	dB
5th Order	-41	dB

RADIO FREQUENCY POWER AMPLIFIER OR OSCILLATOR
Class C Telegraphy or FM Telephony
(Key-Down Conditions)

ABSOLUTE MAXIMUM RATINGS

PLATE VOLTAGE	10.0	kVdc
SCREEN VOLTAGE	2.0	kVdc
PLATE CURRENT	5.0	Adc
PLATE DISSIPATION	15.0	kW
SCREEN DISSIPATION	450	W
GRID DISSIPATION	200	W

TYPICAL OPERATION

Plate Voltage	7,500	10,000	Vdc
Screen Voltage	750	750	Vdc
Grid Voltage	-510	-550	Vdc
Plate Current	4.65	4.55	Adc
Screen Current [1]	0.59	0.54	Adc
Grid Current [1]	0.30	0.27	Adc
Peak rf Grid Voltage [1]	730	790	v
Calculated Driving Power	220	220	W
Plate Dissipation	8.1	9.0	kW
Plate Output Power	26.7	36.5	kW

1. Approximate value

PLATE MODULATED RADIO FREQUENCY POWER AMPLIFIER
GRID DRIVEN, Class C Telephony
(Carrier Conditions)

ABSOLUTE MAXIMUM RATINGS

PLATE VOLTAGE	8.0	kVdc
SCREEN VOLTAGE	1.5	kVdc
PLATE CURRENT	4.0	Adc
PLATE DISSIPATION	10.0	kW
SCREEN DISSIPATION	450	W
GRID DISSIPATION	200	W

TYPICAL OPERATION

Plate Voltage	6,000	8,000	Vdc
Screen Voltage	750	750	Vdc
Grid Voltage	-600	-640	Vdc
Plate Current	3.75	3.65	Adc
Screen Current [1]	0.45	0.43	Adc
Grid Current [1]	0.18	0.18	Adc
Peak af Screen Voltage [1]			
100% modulation	740	710	v
Peak rf Grid Voltage [1]	800	840	v
Calculated Driving Power	150	150	W
Plate Dissipation	5.1	5.8	kW
Plate Output Power	17.4	23.5	kW

1. Approximate value

AUDIO FREQUENCY POWER AMPLIFIER OR MODULATOR
GRID DRIVEN , Class AB_1 (Sinusoidal Wave)

ABSOLUTE MAXIMUM RATINGS (per tube)

PLATE VOLTAGE	10.0	kVdc
SCREEN VOLTAGE	2.0	kVdc
PLATE CURRENT	6.0	Adc
PLATE DISSIPATION	15.0	kW
SCREEN DISSIPATION	450	W
GRID DISSIPATION	200	W

1. Adjust for specified zero-signal plate current.
2. Approximate value.

TYPICAL OPERATION (Two Tubes)

Plate Voltage	7,500	10,000	Vdc
Screen Voltage	1,500	1,500	Vdc
Grid Voltage [1]	-350	-370	Vdc
Zero-Signal Plate Current	1.00	1.00	Adc
Maximum Signal Plate Current	8.80	8.50	Adc
Maximum Signal Screen Current [2]	0.34	0.30	Adc
Peak af Grid Voltage [2]	330	340	v
Maximum Signal Plate Dissipation	12.2	14.0	kW
Plate Output Power	41.6	57.0	kW
Load Resistance (plate to plate)	1.730	2.520	Ω

TYPICAL OPERATION values are obtained by calculations from published characteristic curves. To obtain the specified plate current at the specified bias, screen, and plate voltages, adjustment of the rf grid voltage is assumed. If this procedure is followed, there will be little variation in output power when the tube is replaced, even though there may be some variation in grid and screen currents. The grid and screen currents which occur when the desired plate current is obtained are incidental and vary from tube to tube. These current variations cause no performance degradation providing the circuit maintains the correct voltage in the presence of the current variations. If grid bias is obtained principally by means of a grid resistor, the resistor must be adjustable to produce the required bias voltage when the correct rf grid voltage is applied.

RANGE VALUES FOR EQUIPMENT DESIGN	Min.	Max.	
Heater Current, at 7.5 volts	148	168	A
Interelectrode Capacitances, cathode grounded [1]			
Cin	154.0	167.0	pF
Cout	24.0	29.0	pF
Cgp	----	2.0	pF

1. Capacitance values are for a cold tube as measured in a special shielded fixture in accordance with Electronic Industries Association Standard RS-191.

APPLICATION

MECHANICAL

MOUNTING - The 4CX15,000J must be operated with its axis vertical. The base of the tube may be down or up at the convenience of the circuit designer.

SOCKET - The EIMAC Air-System Socket Type SK-300A is designed especially for the concentric base terminals of the 4CX15,000J. The use of recommended air-flow rates through this socket provides effective forced-air cooling of the tube. Air forced into the bottom of the socket passes over the tube terminals and through the SK-316 Air Chimney, into the anode cooling fins.

COOLING - The maximum temperature rating for the external surfaces of the 4CX15,000J is 250°C. Sufficient forced-air circulation must be provided to keep the temperature of the anode at the base of the cooling fins and the temperature of the ceramic/metal seals below 250°C. Air-flow requirements to maintain seal temperatures at 225°C in 50°C ambient air are tabulated below (for operation below 30 megahertz). This data is for the tube mounted in an SK-300A socket with an SK-316 chimney.

SEA LEVEL			10,000 FEET	
Plate Dissipation * (Watts)	Air Flow (CFM)	Pressure Drop (Inches of Water)	Air Flow (CFM)	Pressure Drop (Inches of Water)
7,500	230	.7	336	1.0
12,500	490	2.7	710	4.1
15,000	645	4.6	945	7.0

* Since the power dissipated by the filament represents about 1000 watts and since grid-plus-screen dissipation can, under some conditions, represent another 600 watts, allowance has been made in preparing this tabulation for an additional 1600 watts dissipation.

The blower selected in a given application must be capable of supplying the desired air flow at a back pressure equal to the pressure drop shown above plus any drop encountered in ducts and filters.

At other altitudes and ambient temperatures the flow rate must be modified to obtain equivalent cooling. The flow rate and corresponding pressure differential must be determined individually in such cases, using rated maximum temperatures as the criteria for satisfactory cooling.

IMPACT AND VIBRATION - The 4CX15,000J is designed to operate under shock and vibration conditions which might disable a less rugged tube. Production tubes are subjected to testing to insure ability to withstand 15 G impact at 11 milliseconds duration and 2 G vibratory acceleration over the range of 5 to 55 Hz.

ELECTRICAL

FILAMENT OPERATION - The rated filament voltage for the 4CX15,000J is 7.5 volts. Filament voltage, as measured at the socket, should be maintained at this value to obtain maximum tube life. In no case should it be allowed to deviate by more than plus or minus five percent from the rated value.

ELECTRODE DISSIPATION RATINGS - The maximum dissipation ratings for the 4CX15,000J must be respected to avoid damage to the tube. An exception is the plate dissipation which may be permitted to rise above the rated maximum during brief periods, such as may occur during tuning.

GRID OPERATION - The 4CX15,000J control grid has a maximum dissipation rating of 200 watts. Precautions should be observed to avoid exceeding this rating. The grid bias and driving power should be kept near the values shown in the "Typical Operation" sections of the data sheet whenever possible. The maximum grid circuit resistance should not exceed 100,000 ohms per tube.

SCREEN OPERATION - The power dissipated by the screen of the 4CX15,000J must not exceed 450 watts.

Screen dissipation, in cases where there is no AC applied to the screen, is the simple product of the screen voltage and the screen current. If the screen voltage is modulated, the screen dissipation will depend upon loading, driving power, and carrier screen voltage.

Screen dissipation is likely to rise to excessive values when the plate voltage, bias voltage, or plate load are removed with filament and screen voltages applied. Suitable protective means must be provided to limit the screen dissipation to 450 watts in the event of circuit failure.

PLATE DISSIPATION - The plate-dissipation rating for the 4CX15,000J is 15,000 watts.

When the 4CX15,000J is operated as a plate-modulated rf power amplifier, the input power is limited by conditions not connected with the plate efficiency, which is quite high. Therefore, except during tuning there is little possibility that the 10,000 watt maximum plate dissipation rating will be exceeded.

HIGH VOLTAGE - Normal operating voltages used with this tube are deadly, and the equipment must be designed properly and operating precautions must be followed. Design all equipment so that no one can come in contact with high voltages. All equipment must include safety enclosures for high-voltage circuits and terminals, with interlock switches to open primary circuits of the power supply and to discharge high-voltage condensers whenever access doors are opened. Interlock switches must not be bypassed or "cheated" to allow operation with access doors open. Always remember that HIGH VOLTAGE CAN KILL.

X-RADIATION - High-vacuum tubes operating at voltages higher than 10 kilovolts produce progressively more dangerous X-ray radiation as the voltage is increased. This tube, operating at its rated voltages and currents, is a potential X-ray hazard. Only limited shielding is afforded by the tube envelope. Moreover, the X-ray radiation level can increase significantly with aging and gradual deterioration, due to leakage paths or emission characteristics as they are affected by the high voltage. X-ray shielding must be provided on all sides of tubes operating at these voltages to provide adequate protection throughout the tube's life. Periodic checks on the X-ray level should be made, and the tube should never be operated without adequate shielding in place when voltages above 10 kilovolts are in use. Lead glass, which attenuates X-rays, is available for viewing win-

dows. If there is any doubt as to the requirement for or the adequacy of shielding, an expert in this field should be contacted to perform an X-ray survey of the equipment.

Operation of high-voltage equipment with interlock switches "cheated" and cabinet doors open in order to be better able to locate an equipment malfunction can result in serious X-ray exposure.

RADIO FREQUENCY RADIATION - Avoid exposure to strong rf fields even at relatively low frequency. Absorption of rf energy by human tissue is dependent on frequency. Under 30 MHz, most of the energy will pass completely through the human body with little attenuation or heating effect. Public health agencies are concerned with the hazard, however, even at these frequencies, and it is worth noting that some commercial dielectric heating units actually operate at frequencies as low as the 13 and 27 MHz bands.

Many EIMAC power tubes, such as this, are specifically designed to generate or amplify radio frequency power. There may be a relatively strong rf field in the general proximity of the power tube and its associated circuitry---the more power involved, the stronger the rf field. Proper enclosure design and efficient coupling of rf energy to the load will minimize the rf field in the vicinity of the power amplifier unit itself.

INTERELECTRODE CAPACITANCE - The actual internal interelectrode capacitance of a tube is influenced by many variables in most applications, such as stray capacitance to the chassis, capacitance added by the socket used, stray capacitance between tube terminals, and wiring effects. To control the actual capacitance values within the tube, as the key component involved, the industry and the Military Services use a standard test procedure as described in Electronic Industries Association Standard RS-191. This requires the use of specially constructed test fixtures which effectively shield all external tube leads from each other and eliminates any capacitance reading to "ground".

The test is performed on a cold tube. Other factors being equal, controlling internal tube capacitance in this way normally assures good interchangeability of tubes over a period of time, even when the tube may be made by different manufacturers. The capacitance values shown in the manufacturer's technical data, or test specifications, normally are taken in accordance with Standard RS-191.

The equipment designer is therefore cautioned to make allowance for the actual capacitance values which will exist in any normal application. Measurements should be taken with the socket and mounting which represent approximate final layout if capacitance values are highly significant in the design.

SPECIAL APPLICATIONS - If it is desired to operate this tube under conditions widely different from those given here, write to the Application Engineering Dept., Power Grid Tube Division, EIMAC Division of Varian, 301 Industrial Way, San Carlos, California, 94070 for information and recommendations.

E_{c2} = 1500V

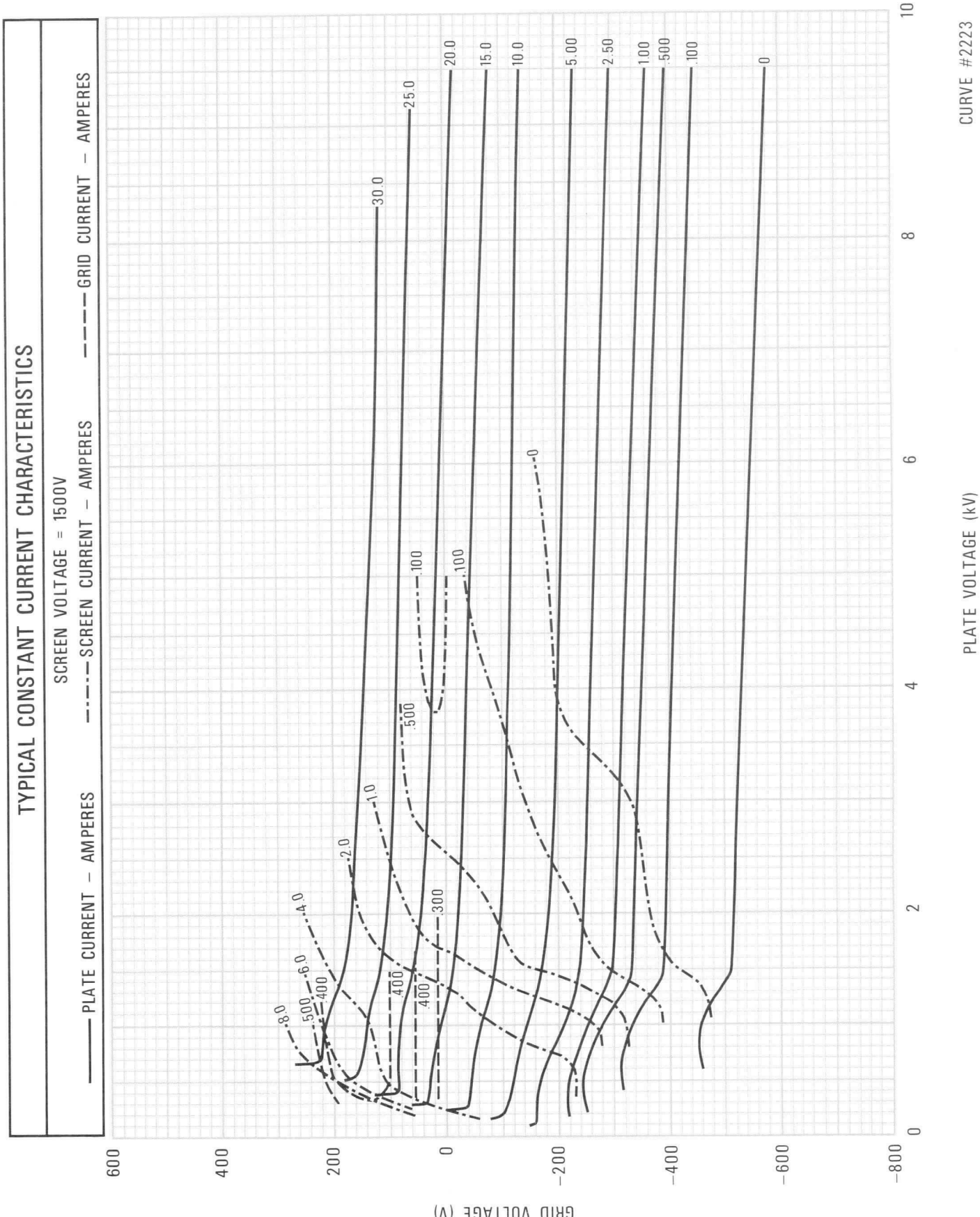
TYPICAL CONSTANT CURRENT CHARACTERISTICS
SCREEN VOLTAGE = 1500V
PLATE CURRENT – AMPERES
SCREEN CURRENT – AMPERES
GRID CURRENT – AMPERES
GRID VOLTAGE (V)
PLATE VOLTAGE (kV)
CURVE #2223
600
400
200
0
−200
−400
−600
−800
0
2
4
6
8
10
30.0
25.0
20.0
15.0
10.0
5.00
2.50
1.00
.500
.100
0
8.0
6.0
4.0
2.0
1.0
.500
.400
.300
.100
.400
.500
.400

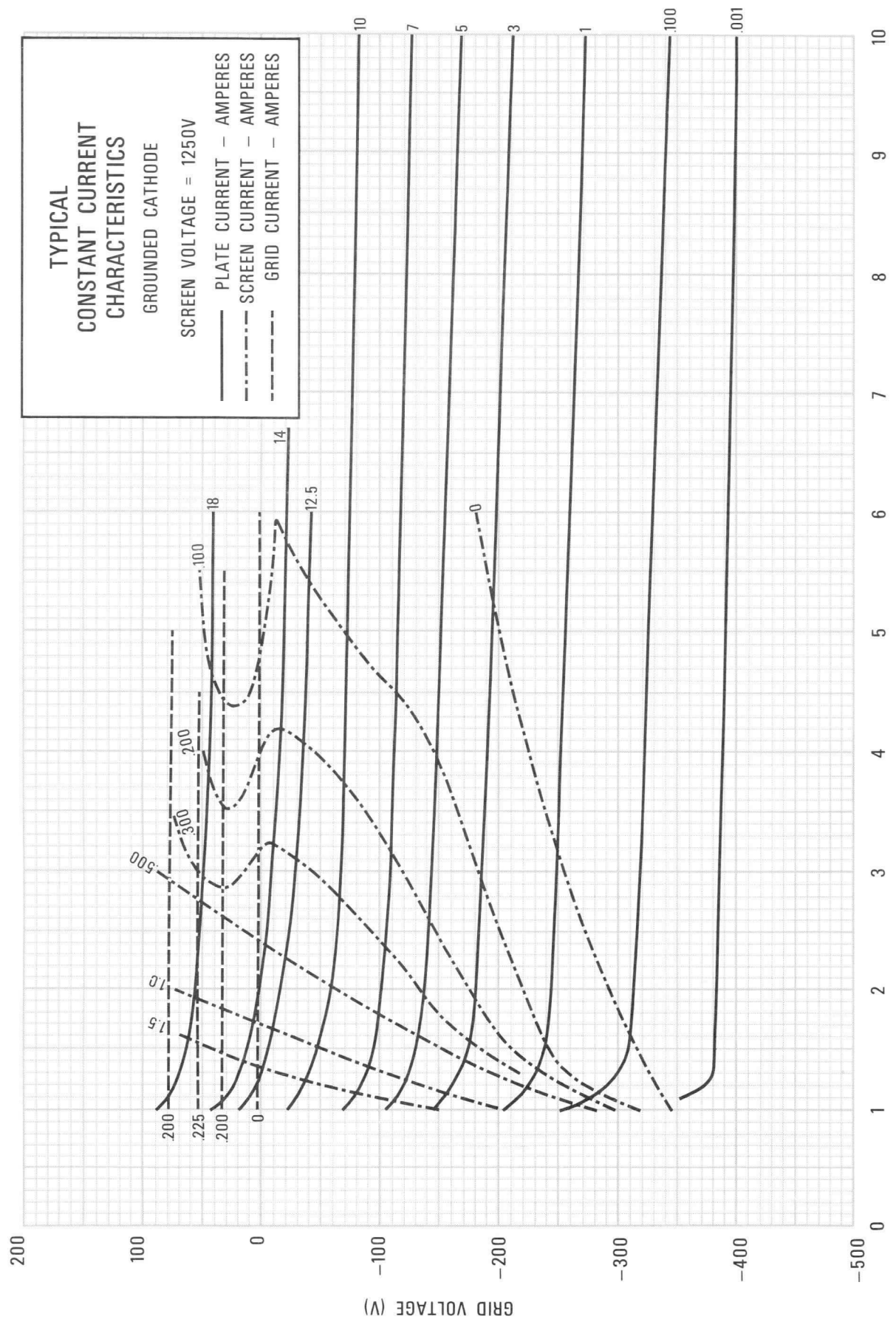
TYPICAL
CONSTANT CURRENT
CHARACTERISTICS
GROUNDED CATHODE
SCREEN VOLTAGE = 1250V
PLATE CURRENT – AMPERES
SCREEN CURRENT – AMPERES
GRID CURRENT – AMPERES
10
7
5
3
1
.100
.001
14
12.5
18
0
.100
200
300
500
1.0
1.5
200
225
200
0
200
100
0
−100
−200
−300
−400
−500
0
1
2
3
4
5
6
7
8
9
10
GRID VOLTAGE (V)
PLATE VOLTAGE (kV)
CURVE #3910

DIMENSIONAL DATA

DIM.	INCHES			MILLIMETERS		
	MIN.	MAX.	REF.	MIN.	MAX.	REF
A	7.460	7.580	- -	189.48	192.53	- -
B	0.855	0.895	- -	21.72	22.73	- -
C	0.720	0.760	- -	18.29	19.30	- -
D	1.896	1.936	- -	46.63	49.17	- -
E	3.133	3.173	- -	79.58	80.59	- -
F	3.792	3.832	- -	96.32	97.33	- -
G	3.980	4.020	- -	101.09	102.11	- -
H	0.188	- -	- -	4.78	- -	- -
J	0.188	- -	- -	4.78	- -	- -
K	0.188	- -	- -	4.78	- -	- -
L	1.764	1.826	- -	44.81	46.38	- -
M	4.659	4.783	- -	118.34	121.49	- -
N	2.412	2.788	- -	61.26	70.82	- -
P	9.000	9.375	- -	228.60	238.13	- -
R	0.986	1.050	- -	25.04	26.67	- -
S	3.560	3.684	- -	90.42	93.57	- -
T	0.375	- -	- -	9.53	- -	- -
U	4.406	4.468	- -	111.91	113.49	- -
V	3.718	3.781	- -	94.44	96.04	- -
W	0.219	- -	- -	5.56	- -	- -

NOTES:
1. REF. DIMENSIONS ARE FOR INFO. ONLY & ARE NOT REQUIRED FOR INSPECTION PURPOSES.

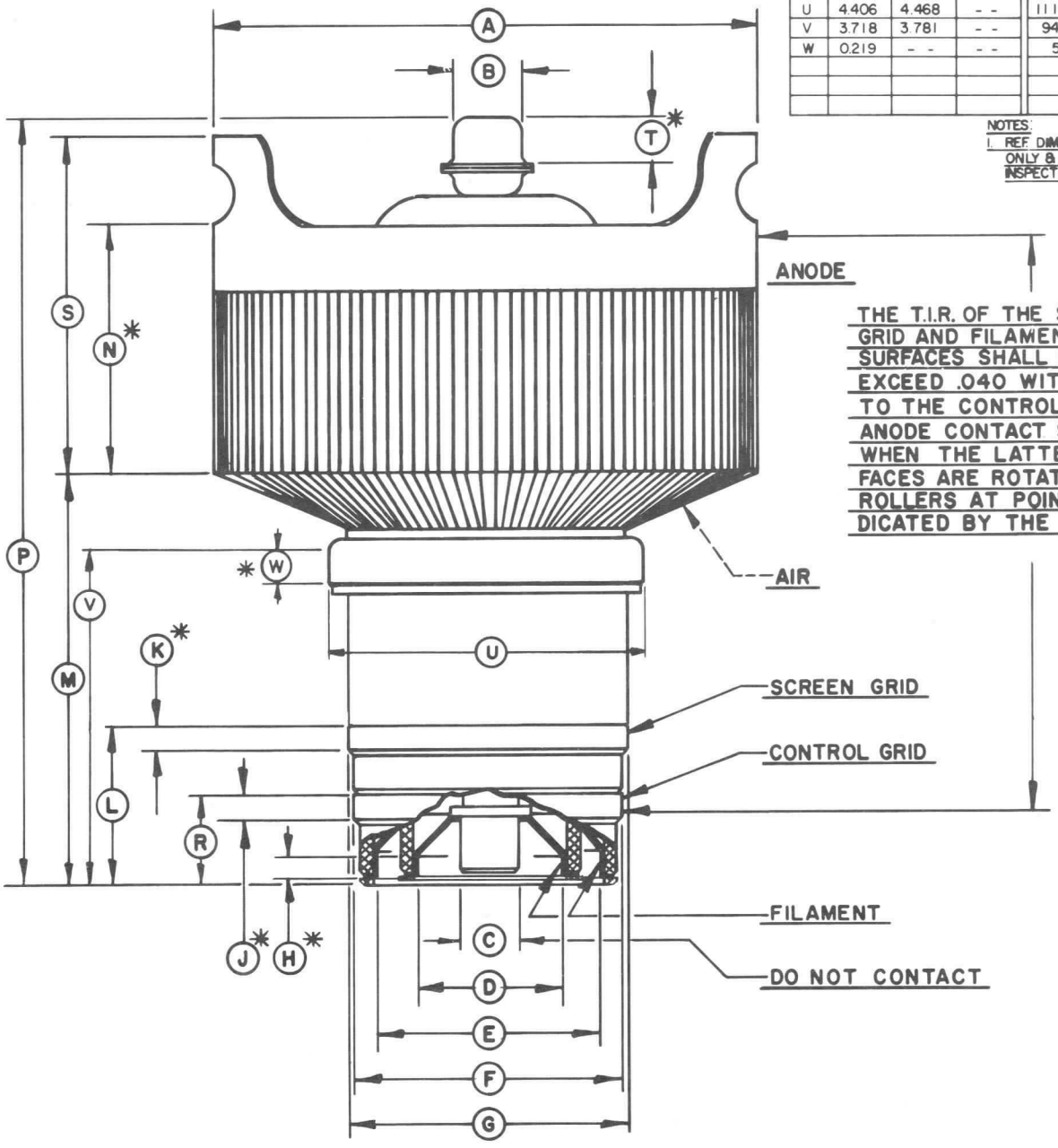

THE T.I.R. OF THE SCREEN GRID AND FILAMENT CONTACT SURFACES SHALL NOT EXCEED .040 WITH RESPECT TO THE CONTROL GRID AND ANODE CONTACT SURFACE WHEN THE LATTER SURFACES ARE ROTATED ON ROLLERS AT POINTS INDICATED BY THE ARROWS

* CONTACT SURFACE

E_{c2} = 1500V

4CX15000J

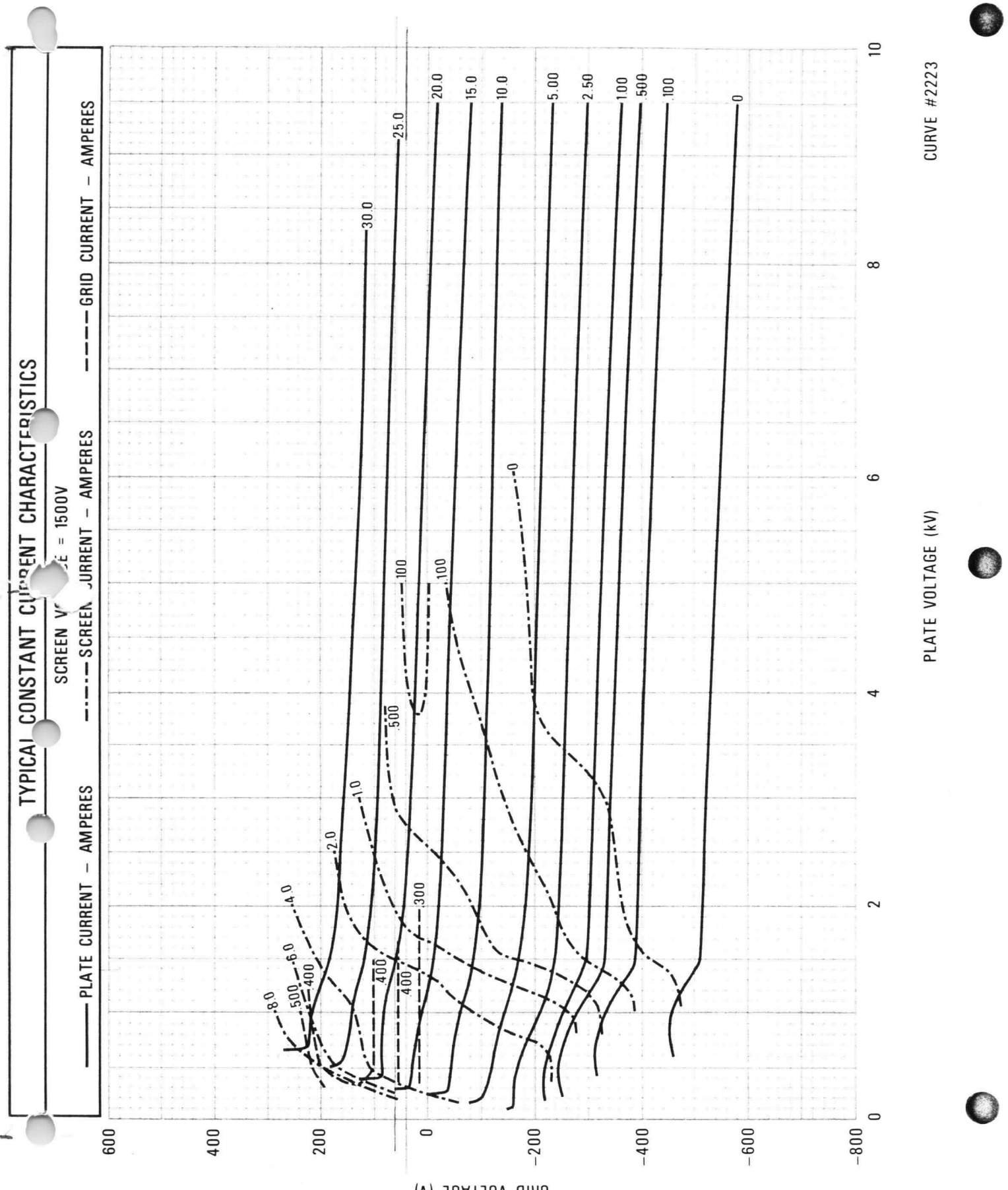

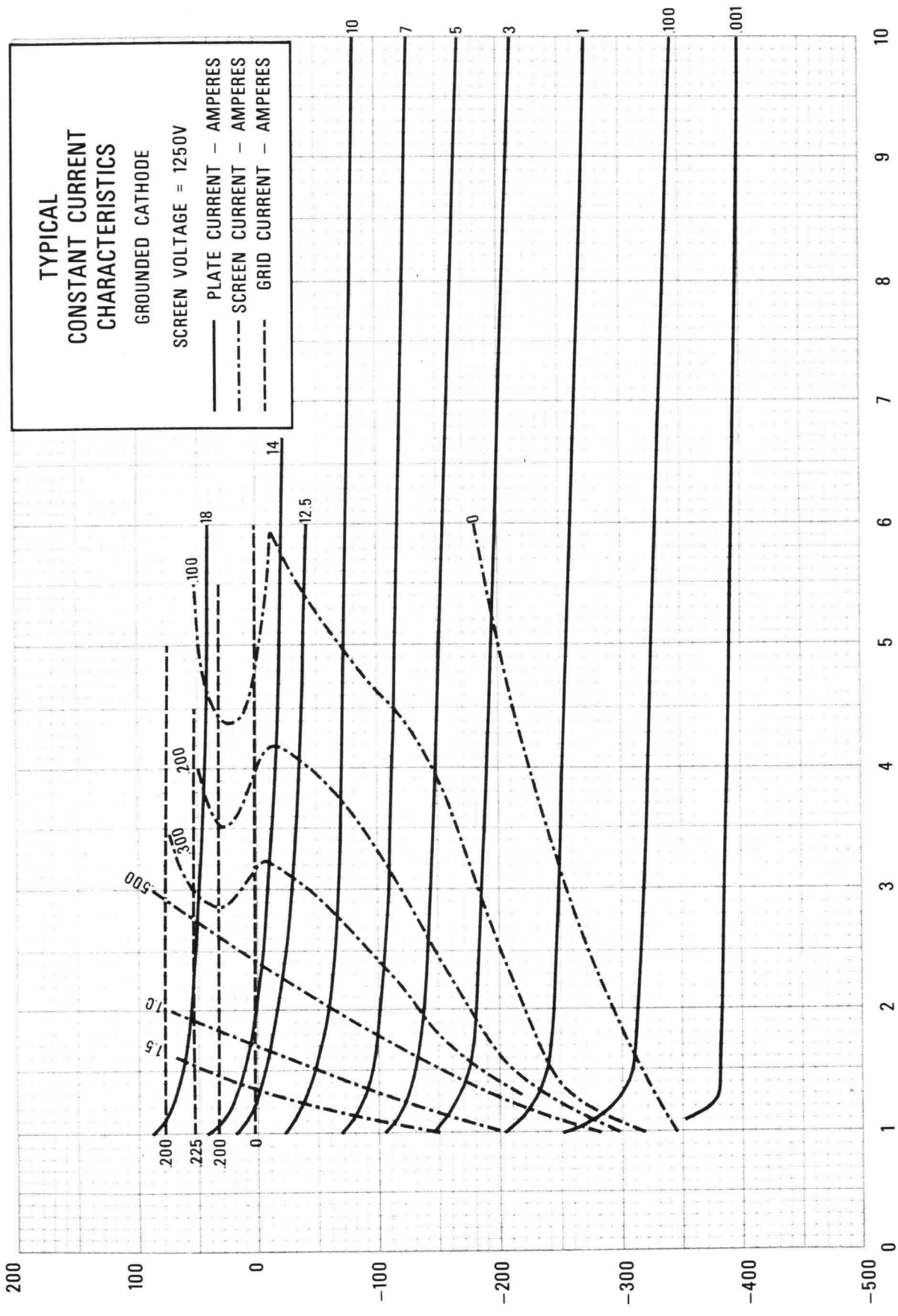
TYPICAL
CONSTANT CURRENT
CHARACTERISTICS
GROUNDED CATHODE
SCREEN VOLTAGE = 1250V
PLATE CURRENT – AMPERES
SCREEN CURRENT – AMPERES
GRID CURRENT – AMPERES
CURVE #3910
PLATE VOLTAGE (kV)
GRID VOLTAGE (V)
200
100
0
-100
-200
-300
-400
-500
0
1
2
3
4
5
6
7
8
9
10
10
7
5
3
1
.100
.001
14
12.5
18
0
.100
500
300
200
1.5
1.0
200
225
200

4CX10,000J

TECHNICAL DATA

RADIAL-BEAM
POWER TETRODE

The EIMAC 4CX10,000J is a compact, high-power, ceramic/metal, forced-air cooled tetrode with a rated maximum plate dissipation of 12,000 watts. It incorporates rugged internal construction features, including a mesh filament/cathode.

The 4CX10,000J is specifically designed for exceptionally low intermodulation distortion in radio-frequency linear amplifier service.



GENERAL CHARACTERISTICS[1]

ELECTRICAL

Filament: Thoriated Tungsten		
Voltage	7.5 ± 0.37	V
Current, at 7.5 volts	103	A
Amplification Factor (Average):		
Grid to Screen	4.5	
Direct Interelectrode Capacitance (grounded filament)[2]		
Cin	120	pF
Cout	20.5	pF
Cgp	0.7	pF
Direct Interelectrode Capacitance (grounded grid) [2]		
Cin	56	pF
Cout	21.5	pF
Cpk	0.10	pF
Frequency of Maximum Rating:		
CW	100	MHz

1. Characteristics and operating values are based upon performance tests. These figures may change without notice as the result of additional data or product refinement. EIMAC Division of Varian should be consulted before using this information for final equipment design.
2. Capacitance values are for a cold tube as measured in a special shielded fixture in accordance with Electronic Industries Association Standard RS-191.

MECHANICAL

Maximum Overall Dimensions:	
Length	9.125 in: 231.77 mm
Diameter	7.050 in; 179.07 mm
Net Weight	12.2 lb; 5.55 kg
Operating Position	Axis vertical, base up or down

(Effective 2-1-72) © by Varian Printed in U.S.A.

Maximum Operating Temperature:	
Ceramic/Metal Seals or Anode Core	250°C
Cooling	Forced Air
Base	Special concentric
Recommended Air System Socket	SK-300A
Recommended (Air) Chimney	SK-1306

RADIO FREQUENCY LINEAR AMPLIFIER
GRID DRIVEN
Class AB1

ABSOLUTE MAXIMUM RATINGS:

DC PLATE VOLTAGE	7500	VOLTS
DC SCREEN VOLTAGE	1600	VOLTS
DC PLATE CURRENT	4.0	AMPERES
PLATE DISSIPATION	12,000	WATTS
SCREEN DISSIPATION	250	WATTS
GRID DISSIPATION	75	WATTS

1. Adjust to specified zero-signal dc plate current.
2. Approximate value.
3. Useful power is that delivered to the load.
4. Referenced against one tone of a two equal-tone signal.

TYPICAL OPERATION
Class AB_1, Grid Driven, Peak Envelope or Modulation Crest Conditions

Plate Voltage	7500	Vdc
Screen Voltage	1600	Vdc
Grid Voltage [1]	-400	Vdc
Zero-Signal Plate Current	300	mAdc
Single-Tone Plate Current	2.2	Adc
Single-Tone Screen Current [2]	30	mAdc
Peak rf Grid Voltage [2]	400	v
Single-Tone Plate Dissipation	8500	W
Useful Power Output (PEP) [3]	10	kW
Load Impedance	1650	Ω
Intermodulation Distortion Products [4]:		
3rd Order	-35	dB
5th Order	-40	dB

NOTE: TYPICAL OPERATION data are obtained from direct measurement or by calculation from published characteristic curves. Adjustment of the rf grid voltage to obtain the specified plate current at the specified bias, screen and plate voltages is assumed. If this procedure is followed, there will be little variation in output power when the tube is changed, even though there may be some variation in screen current. The screen current which results when the desired plate current is obtained is incidental and varies from tube to tube. This current variation causes no difficulty so long as the circuit maintains the correct voltage in the presence of the variations in current.

RANGE VALUES FOR EQUIPMENT DESIGN

	Min.	Max.	
Filament: Current at 7.5 volts	98	108	A
Interelectrode Capacitances[1](grounded filament connection)			
Cin	113	127	pF
Cout	18	23	pF
Cgp	---	1.0	pF
Interelectrode Capacitances[1](grounded grid connection)			
Cin	51	61	pF
Cout	19	24	pF
Cpk	---	0.16	pF

1. Capacitance values are for a cold tube as measured in a special shielded fixture in accordance with Electronic Industries Association Standard RS-191.

APPLICATION

MECHANICAL

MOUNTING - The 4CX10,000J must be operated with its axis vertical. The base of the tube may be down or up at the convenience of the circuit designer.

SOCKET - The EIMAC SK-300A Air-System Socket is designed especially for the concentric base terminals of the 4CX10,000J. The use of recommended air-flow rates through this socket pro-

vides effective forced-air cooling of the tube. Air forced into the bottom of the socket passes over the tube terminals and through an Air Chimney, the SK-1316, into the anode cooling fins.

COOLING - The maximum temperature rating for the external surfaces of the 4CX10,000J is 250°C. Sufficient forced-air circulation must be provided to keep the temperature of the anode at the base of the cooling fins and the temperature of the ceramic/metal seals below 250°C. Air-flow requirements to maintain seal temperatures at 200°C in 50°C ambient air are tabulated below (for operation below 30 megahertz). The pressure drop values shown are for the Tube/Socket/Chimney combination.

	SEA LEVEL		10,000 FEET	
Plate Dissipation* (Watts)	Air Flow (CFM)	Pressure Drop (In. of water)	Air Flow (CFM)	Pressure Drop (In. of water)
4000	110	0.4	160	0.6
6000	200	0.8	290	1.2
8000	315	1.7	460	2.5
10000	445	2.8	645	4.1
12000	600	4.4	870	6.4

* Since the power dissipated by the filament represents about 770 watts and since grid-plus screen dissipation can, under some conditions, represent another 200 to 300 watts, allowance has been made in preparing this tabulation for an additional 1200 watts dissipation.

At higher altitudes, higher frequencies, or higher ambient temperatures the flow rate must be increased to obtain equivalent cooling. The flow rate and corresponding pressure differential must be determined individually in such cases, using maximum rated temperatures as the criteria for satisfactory cooling.

IMPACT AND VIBRATION - The 4CX10,000J is designed to operate under shock and vibration conditions which might disable a less rugged tube. Production tubes are subjected to testing to insure ability to withstand 15 G impact at 11 milliseconds duration and 2 G vibratory acceleration over the range of 5 to 55 Hz.

ELECTRICAL

FILAMENT VOLTAGE - The rated filament voltage for the 4CX10,000J is 7.5 volts. Filament voltage, as measured at the socket, should be maintained at this value to obtain maximum tube life. In no case should it be allowed to deviate by more than 5 percent from the rated value.

GRID DISSIPATION - The 4CX10,000J control grid has a maximum dissipation rating of 75 watts. Precautions should be observed to avoid exceeding this rating. Grid dissipation is approximately the product of dc grid current and peak positive grid voltage. The grid bias and driving power should be kept near the values shown in the "Typical Operation" sections of the data sheet whenever possible.

SCREEN DISSIPATION - The power dissipated by the screen of the 4CX10,000J must not exceed 250 watts.

Screen dissipation, in cases where there is no ac applied to the screen, is the simple product of the screen voltage and the screen current.

Screen dissipation is likely to rise to excessive values when the plate voltage, bias voltage, or plate load are removed with filament and screen voltages applied. Suitable protective means must be provided to limit the screen dissipation to 250 watts in the event of circuit failure.

PLATE DISSIPATION - The plate-dissipation rating for the 4CX10,000J is 12,000 watts. Plate dissipation may be permitted to rise above the maximum rating during brief periods, such as may occur during tuning.

HIGH VOLTAGE - The 4CX10,000J operates at voltages which can be deadly, and the equipment must be designed properly and operating precautions must be followed. Equipment must be designed so that no one can come in contact with high voltages. All equipment must include safety enclosures for high-voltage circuits and terminals, with interlock switches to open the primary circuits of the power supplies and to discharge high voltage condensers whenever access doors are opened. Interlock switches must not be bypassed or "cheated" to allow operation with access doors open. Always remember that HIGH VOLTAGE CAN KILL.

INTERELECTRODE CAPACITANCE - The actual internal interelectrode capacitance of a tube is influenced by many variables in most applications, such as stray capacitance to the chassis, capacitance added by the socket used, stray capacitance between tube terminals, and wiring effects. To control the actual capacitance values within the tube, as the key component involved, the industry and the Military Services use a standard test procedure as described in Electronic Industries Association Standard

RS-191. This requires the use of specially constructed test fixtures which effectively shield all external tube leads from each other and eliminates any capacitance reading to "ground". The test is performed on a cold tube. Other factors being equal, controlling internal tube capacitance in this way normally assures good interchangeability of tubes over a period of time, even when the tube may be made by different manufacturers. The capacitance values shown in the manufacturer's technical data, or test specifications, normally are taken in accordance with Standard RS-191.

The equipment designer is therefore cautioned to make allowance for the actual capacitance values which will exist in any normal application. Measurements should be taken with the socket and mounting which represent approximate final layout if capacitance values are highly significant in the design.

SPECIAL APPLICATIONS - If it is desired to operate this tube under conditions widely different from those given here, write to Power Grid Tube Division, EIMAC Division of Varian, 301 Industrial Way, San Carlos, California 94070, for information and recommendations.

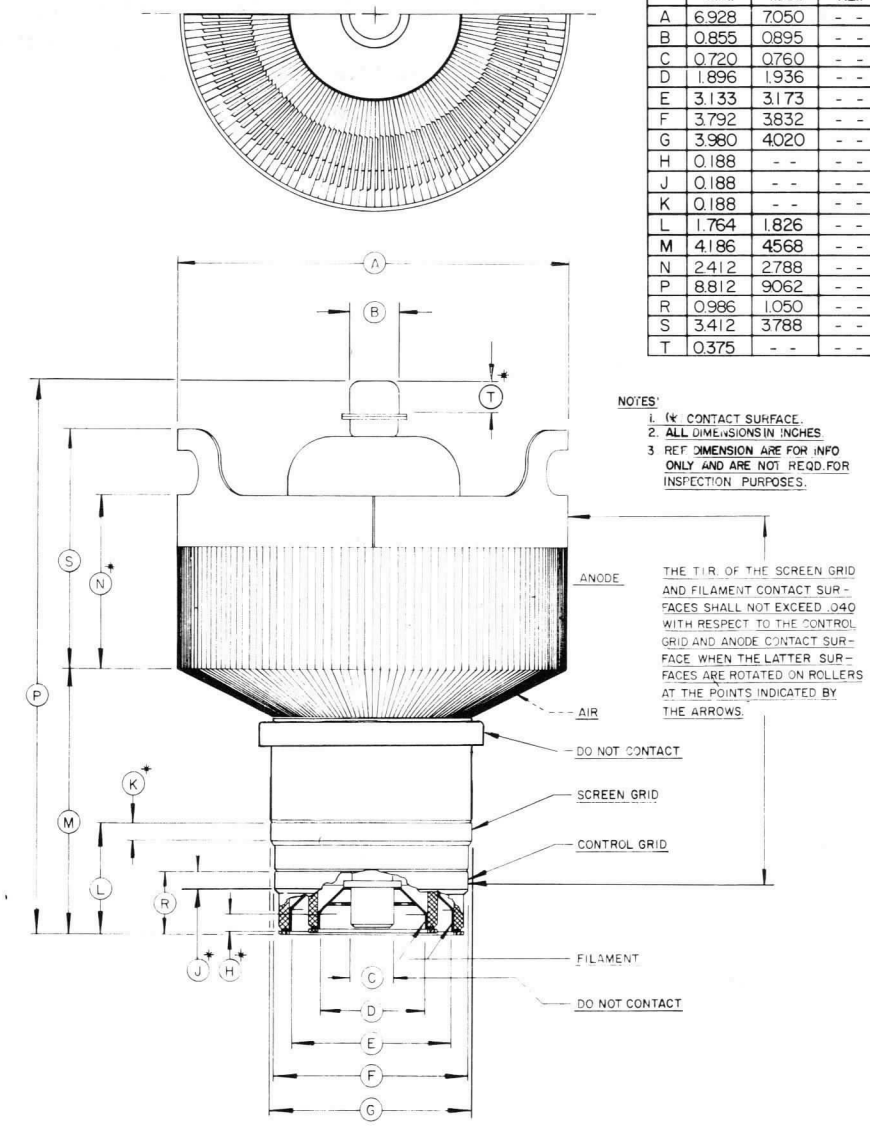

DIMENSIONAL DATA						
DIM.	INCHES			MILLIMETERS		
	MIN.	MAX.	REF	MIN.	MAX.	REF
A	6.928	7.050	- -	175.97	179.07	- -
B	0.855	0.895	- -	21.72	22.73	- -
C	0.720	0.760	- -	18.29	19.30	- -
D	1.896	1.936	- -	48.16	49.17	- -
E	3.133	3.173	- -	79.58	80.59	- -
F	3.792	3.832	- -	96.32	97.33	- -
G	3.980	4.020	- -	101.09	102.11	- -
H	0.188	- -	- -	4.77	- -	- -
J	0.188	- -	- -	4.77	- -	- -
K	0.188	- -	- -	4.77	- -	- -
L	1.764	1.826	- -	44.80	46.38	- -
M	4.186	4.568	- -	106.32	116.03	- -
N	2.412	2.788	- -	61.26	70.81	- -
P	8.812	9.062	- -	223.82	230.17	- -
R	0.986	1.050	- -	25.04	26.67	- -
S	3.412	3.788	- -	86.66	96.21	- -
T	0.375	- -	- -	9.52	- -	- -

NOTES:
1. ℄ CONTACT SURFACE.
2. ALL DIMENSIONS IN INCHES.
3. REF. DIMENSION ARE FOR INFO ONLY AND ARE NOT REQD. FOR INSPECTION PURPOSES.

THE T.I.R. OF THE SCREEN GRID AND FILAMENT CONTACT SURFACES SHALL NOT EXCEED .040 WITH RESPECT TO THE CONTROL GRID AND ANODE CONTACT SURFACE WHEN THE LATTER SURFACES ARE ROTATED ON ROLLERS AT THE POINTS INDICATED BY THE ARROWS.

TYPICAL CONSTANT CURRENT CHARACTERISTICS

GROUNDED CATHODE — SCREEN VOLTAGE = 1500V

——— PLATE CURRENT – AMPERES -·-·- SCREEN CURRENT – AMPERES – – – GRID CURRENT – AMPERES

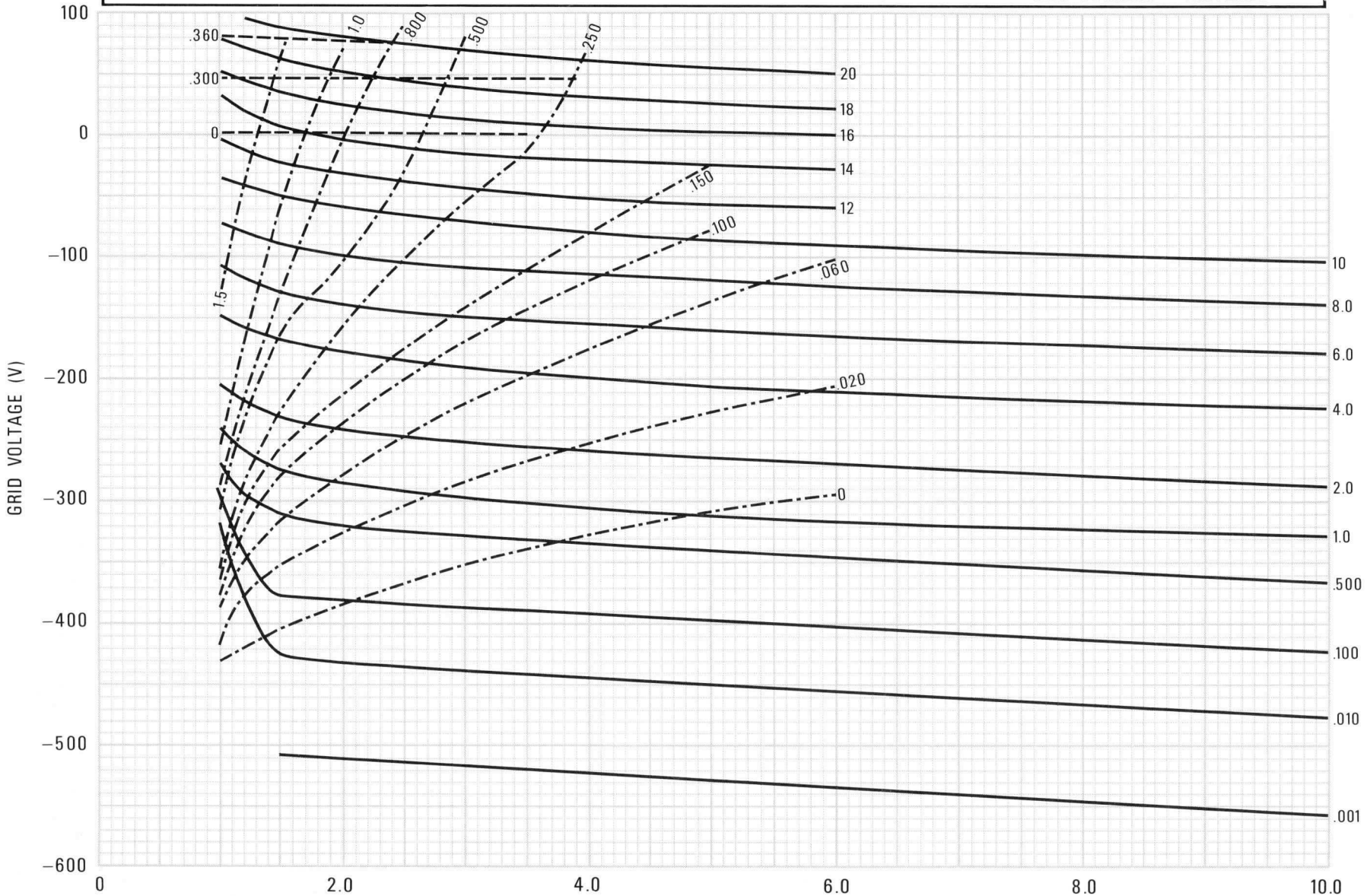

CURVE #4339

TECHNICAL DATA

8990
4CX20,000A
8990A

VHF
RADIAL BEAM
POWER TETRODE

The EIMAC 8990/4CX20,000A is a ceramic/metal power tetrode intended for use in audio or radio-frequency applications. It features a type of internal mechanical structure which results in high rf operating efficiency. Low rf losses in this structure permit operation at full ratings up to 110 MHz.



The 8990/4CX20,000A has a gain of over 18 dB in FM broadcast service, and is also recommended for radio-frequency linear power amplifier service, and for VHF television linear amplifier service. The anode is rated for 20 kW of dissipation with forced-air cooling and incorporates a highly efficient cooler of new design.

The 8990A is recommended for high-level, plate modulated amplifier service.

GENERAL CHARACTERISTICS[1]

ELECTRICAL

Filament: Thoriated Tungsten		
Voltage	10.0 ± 0.5	V
Current, at 10.0 volts	140	A
Amplification Factor, average		
Grid to Screen	6.7	
Direct Interelectrode Capacitances (cathode grounded):[2]		
Cin	190	pF
Cout	23.5	pF
Cgp	1.5	pF
Direct Interelectrode Capacitances (grid and screen grounded):[2]		
Cin	83	pF
Cout	24.5	pF
Cpk	0.2	pF
Frequency of Maximum Ratings (CW)	110	MHz

1. Characteristics and operating values are based on performance tests. These figures may change without notice as the result of additional data or product refinement. EIMAC Division of Varian should be consulted before using this information for final equipment design.
2. Capacitance values are for a cold tube as measured in a special shielded fixture in accordance with Electronic Industries Association Standard RS-191.

MECHANICAL

Maximum Overall Dimensions:	
Length	9.840 in; 24.99 cm
Diameter	8.800 in; 22.35 cm
Net Weight (Approximate)	14.0 lbs; 6.35 kg
Operating Position	Axis vertical, base up or down
Cooling	Forced air
Operating Temperature, maximum	
Ceramic/Metal Seals and Anode Core	250°C
Base	Special, concentric
Recommended Air System Socket	SK-320
Recommended Air Chimney	SK-326

4402 (Effective 20 October 1980)

Printed in U.S.A.

Varian / EIMAC Division / 301 Industrial Way / San Carlos / California 94070
Telephone: (415) 592-1221 Twx: 910 376-4893

RADIO FREQUENCY POWER AMPLIFIER OR OSCILLATOR

Class C Telegraphy or FM
(Key-Down Conditions)

ABSOLUTE MAXIMUM RATINGS

DC PLATE VOLTAGE	10,000	VOLTS
DC SCREEN VOLTAGE	2,000	VOLTS
DC PLATE CURRENT	5.0	AMPERES
PLATE DISSIPATION	20,000	WATTS
SCREEN DISSIPATION	450	WATTS
GRID DISSIPATION	200	WATTS

TYPICAL OPERATION (frequencies to 30 MHz)

Plate Voltage	7.5	9.0	kVdc
Screen Voltage	750	900	Vdc
Grid Voltage	–200	–250	Vdc
Plate Current	3.68	4.01	Adc
Screen Current[1]	208	222	mAdc
Grid Current[1]	91	88	mAdc
Peak rf Grid Voltage[1]	265	300	v
Calculated Drive Power	24.1	26.4	W
Plate Dissipation[1]	5.84	7.93	kW
Plate Output Power[1]	21.8	28.2	kW
Load Impedance	1062	1136	Ω

[1] Approximate value

TYPICAL OPERATION, COMMERCIAL FM SERVICE
(measured values at frequency shown, in
EIMAC CV-2200 cavity amplifier)

Frequency of Operation	88.3	107.7	MHz
Plate Voltage	9.0	9.0	kVdc
Screen Voltage	800	800	Vdc
Grid Voltage	–400	–300	Vdc
Plate Current	4.08	4.15	Adc
Screen Current	200	200	mAdc
Grid Current	40	38	mAdc
Drive Power	325	360	W
Useful Power Output[1]	28.75	28.9	kW
Efficiency	80.5	77.4	%
Gain	19.5	19.0	dB

[1] Delivered to the load

PLATE MODULATED RADIO FREQUENCY POWER AMPLIFIER 8990A RECOMMENDED

GRID DRIVEN Class C Telephony
(Carrier Conditions)

ABSOLUTE MAXIMUM RATINGS

DC PLATE VOLTAGE	8,000	VOLTS
DC SCREEN VOLTAGE	2,000	VOLTS
DC GRID VOLTAGE	–1,000	VOLTS
DC PLATE CURRENT	5	AMPERES
PLATE DISSIPATION	13.5	KILOWATTS
SCREEN DISSIPATION	450	WATTS
GRID DISSIPATION	200	WATTS

TYPICAL OPERATION

Plate Voltage	7,800	Vdc
Screen Voltage	750	Vdc
Grid Voltage	–300	Vdc
Peak af screen voltage (100% modulation)	750	v
Plate Current	4.6	Adc
Screen Current[1]	220	mAdc
Grid Current[1]	108	mAdc
Calculated Driving Power	35	W
Plate Impedance	845	Ω
Plate Output Power	29	kW
Plate Dissipation	6880	W

[1] Approximate

AUDIO FREQUENCY POWER AMPLIFIER OR MODULATOR

GRID DRIVEN, Class AB1
(sinusoidal wave)

ABSOLUTE MAXIMUM RATINGS (per tube)

DC PLATE VOLTAGE	10,000	VOLTS
DC SCREEN VOLTAGE	2,500	VOLTS
DC PLATE CURRENT	6	AMPERES
PLATE DISSIPATION	20	KILOWATTS
SCREEN DISSIPATION	450	WATTS
GRID DISSIPATION	200	WATTS

TYPICAL OPERATION (2 tubes)

Plate Voltage	7,800	7,800	7800	Vdc
Screen Voltage	500	750	1500	Vdc
Grid Voltage[1]	–70	–125	–250	Vdc
Zero Signal Plate Current	0.75	0.75	1.0	Adc
Max. Signal Plate Current	3.4	5.2	9.2	Adc
Max. Signal Screen Current[2]	90	220	600	mAdc
Peak Grid Voltage[2]	65	115	200	v
Max. Signal Plate Dissipation[3]	6	7	13.5	kW
Plate Output Power	14.5	26	44	kW
Load Impedance p/p	6,300	3,500	1600	Ω

[1] Adjust for specified zero-signal plate current.
[2] Approximate value
[3] Per tube

TYPICAL OPERATION values are obtained by calculations from published characteristic curves. To obtain the specified plate current at the specified bias, screen, and plate voltages, adjustment of the rf grid voltage is assumed. If this procedure is followed, there will be little variation in output power when the tube is replaced, even though there may be some variation in grid and screen currents. The grid and screen currents which occur when the desired plate current is obtained are incidental and vary from tube to tube. These current variations cause no performance degradation providing the circuit maintains the correct voltage in the presence of the current variations. If grid bias is obtained principally by means of a grid resistor, the resistor must be adjustable to produce the required bias voltage when the correct rf grid voltage is applied.

APPLICATION

MOUNTING – The 8990 must be operated with its axis vertical. The base of the tube may be up or down at the convenience of the circuit designer.

SOCKET & CHIMNEY – The EIMAC air-system socket SK-320 and air chimney SK-326 are designed especially for use with the 8990. The use of the recommended air flow through this socket provides effective forced-air cooling of the base, with air then guided through the anode cooling fins by the air chimney.

COOLING – The maximum temperature rating for the external surfaces of the tube is 250°C, and sufficient forced-air cooling must be used in all applications to keep the temperature of the anode (at the base of the cooling fins) and the temperature of the ceramic/metal seals comfortably below the rated maximum.

The cooling characteristics of the anode are shown in the attached graph, for power levels from 7.5 kW to 20 kW dissipation. The designer is cautioned to keep in mind that is ABSOLUTE data, with pure dc power, with no safety factors added, and the pressure drop figures make no allowance for losses in filters, ducting, and the like.

It is considered good engineering practice to design for a maximum anode core temperature of 225°C, and temperature sensitive paints are available for checking base and seal temperatures before any design is finalized. It is also considered good practice to add a 15% safety factor to the indicated airflow, and allow for variables such as dirty air filters, rf seal heating at VHF, and the fact that the anode coolings fins may not be clean if the tube has been in service for some length of time. Special attention is required in cooling the center of the stem (base), by means of special directors or some other provision. An air interlock system should be incorporated into the design to automatically remove all voltages from the tube in case of even partial failure of the tube cooling air.

Air flow must be applied before or simultaneously with the application of power, including the tube filament, and should normally be maintained for a short period of time after all power is removed to allowed for tube cooldown.

FILAMENT OPERATION – The rated nominal filament voltage for the 8990 is 10.0 volts, as measured at the socket or tube base. Variation in voltage should be maintained within plus or minus five percent. During application of filament voltage the inrush current should be limited to no more than twice normal current.

The peak emission capability at nominal filament voltage is normally more than that required for communication service. A small decrease in filament temperature due to reduction in filament voltage can increase tube life by a substantial percentage. It is good practice to determine the nominal filament voltage for a particular application that will not adversely affect equipment operation. This is done by measuring some important parameter of performance (such as plate current, power output, or distortion) while filament voltage is reduced. At some point in filament voltage there will be a noticeable change in the operating parameter being monitored, and the operating filament voltage must be slightly higher than the level at which deterioration was noted. When filament voltage is to be reduced in this manner it should be regulated and held to plus or minus one percent, and the actual operating value should be checked periodically to maintain proper operation.

ELECTRODE DISSIPATION RATINGS – The maximum dissipation ratings for the 8990 must be respected to avoid damage to the tube. An exception is the plate dissipation which may be permitted to rise above the rated maximum during brief periods (10 seconds maximum) such as may occur during tuning.

GRID OPERATION – The 8990 control grid has a maximum dissipation rating of 200 watts. Precautions should be observed to avoid exceeding this rating. The grid bias and driving power should normally be kept near the values shown in the TYPICAL OPERATION section of the data sheet whenever possible.

SCREEN OPERATION – The power dissipated by the screen of the 8990 must not exceed 450 watts. Screen dissipation, in cases where there is no ac applied to the screen, is the simple product of the screen voltage and the screen current. If the screen voltage is modulated, the screen dissipation will depend upon loading, driving power, and carrier screen voltage.

Screen dissipation is likely to rise to excessive values when the plate voltage, bias voltage, or plate load are removed with the filament and screen voltages applied. Suitable protective means must be provided to limit the screen dissipation to 450 watts in the event of circuit failure. Energy limiting circuitry (which will activate if there is a fault condition) and spark gap over-voltage protection are recommended as good engineering practice.

The 8990 may exhibit reversed (negative) screen current under some operating conditions.

The screen supply voltage must be maintained constant for any values of negative and positive screen current which may be encountered. Dangerously high plate current may flow if the screen power supply exhibits a rising voltage characteristic with negative screen current. Stabilization may be accomplished with a bleeder resistor connected from screen to cathode, to assure that net screen supply current is always positive. This is absolutely essential if a series electronic regulator is employed.

FAULT PROTECTION – In addition to normal plate overcurrent interlock and screen current interlock it is good practice to protect the tube from internal damage which could result from a plate arc at high voltage. In all cases some protective resistance, 10 to 50 ohms, should be used in series with the tube anode to absorb power supply stored energy in case a tube arc should occur. If power supply stored energy is high some form of electronic crowbar which will discharge power supply capacitors in a few microseconds following indication of start of a tube arc is recommended.

HIGH VOLTAGE – Normal operating voltages used with the 8990 are deadly and the equipment must be designed properly and operating precautions must be followed. All equipment must be designed so that no one can come into contact with high voltages. All equipment must include safety enclosures for high-voltage circuits and terminals, with interlock switches to open primary circuits of the power supply and to discharge high-voltage capacitors whenever access doors are opened. Interlock switches must not be bypassed or "cheated" to allow operation with access doors open. Always remember that HIGH VOLTAGE CAN KILL.

INTERELECTRODE CAPACITANCE – The actual internal interelectrode capacitance of a tube is influenced by many variables in most applications, such as stray capacitance to the chassis, capacitance added by the socket used, stray capacitance between tube terminals and wiring effects. To control the actual capacitance values within the tube, as the key component involved, the industry and Military Services use a standard test procedure as described in Electronic Industries Association Standard RS-191. This requires the use of specially constructed test fixtures which effectively shield all external tube leads from each other and eliminate any capacitance reading to "ground". The test is performed on a cold tube. Other factors being equal, controlling internal tube capacitance in this way normally assures good interchangeability of tubes over a period of time, even when the tube may be made by different manufacturers. The capacitance values shown in the manufacturer's technical data, or test specifications, normally are taken in accordance with Standard RS-191.

The equipment designer is therefore cautioned to make allowance for the actual capacitance values which will exist in any normal application. Measurements should be taken with the socket and mounting which represent approximate final layout if capacitance values are highly significant in the design.

SPECIAL APPLICATIONS – If it is desired to operate this tube under conditions widely different from those listed here, write to Application Engineering, Power Grid Tube Division, EIMAC Division of Varian, 301 Industrial Way, San Carlos, CA 94070 for recommendations.

OPERATING HAZARDS

PROPER USE AND SAFE OPERATING PRACTICES WITH RESPECT TO POWER TUBES ARE THE RESPONSIBILITY OF EQUIPMENT MANUFACTURERS AND USERS OF SUCH TUBES. ALL PERSONS WHO WORK WITH OR ARE EXPOSED TO POWER TUBES OR EQUIPMENT WHICH UTILIZES SUCH TUBES MUST TAKE PRECAUTIONS TO PROTECT THEMSELVES AGAINST POSSIBLE SERIOUS BODILY INJURY. DO NOT BE CARELESS AROUND SUCH PRODUCTS.

The operation of power tubes involves one or more of the following hazards, any one of which, in the absence of safe operating practices and precautions, could result in serious harm to personnel:

a. HIGH VOLTAGE – Normal operating voltages can be deadly.

b. RF RADIATION – Exposure to strong rf fields should be avoided, even at relatively low frequencies. The dangers of rf radiation are more severe at UHF and microwave frequencies and can cause serious bodily and eye injuries. CARDIAC PACEMAKERS MAY BE AFFECTED.

c. X-RAY RADIATION – High voltage tubes can produce dangerous and possibly fatal x-rays.

d. BERYLLIUM OXIDE POISONING – Dust or fumes from BeO ceramics used as thermal links with some conduction-cooled power tubes are highly toxic and can cause serious injury or death.

e. GLASS EXPLOSION – Many electron tubes have glass envelopes. Breaking the glass can cause an implosion, which will result in an explosive scattering of glass particles. Handle glass tubes carefully.

f. HOT WATER – Water used to cool tubes may reach scalding temperatures. Touching or rupture of the cooling system can cause serious burns.

g. HOT SURFACES – Surfaces of air-cooled radiators and other parts of tubes can reach temperatures of several hundred degrees centigrade and cause serious burns if touched.

Please review the detailed operating hazards sheet enclosed with each tube or request a copy from the address shown below: Power Grid Tube Division, Varian, EIMAC division, 301 Industrial Way, San Carlos, California 94070.

CURVE 4800

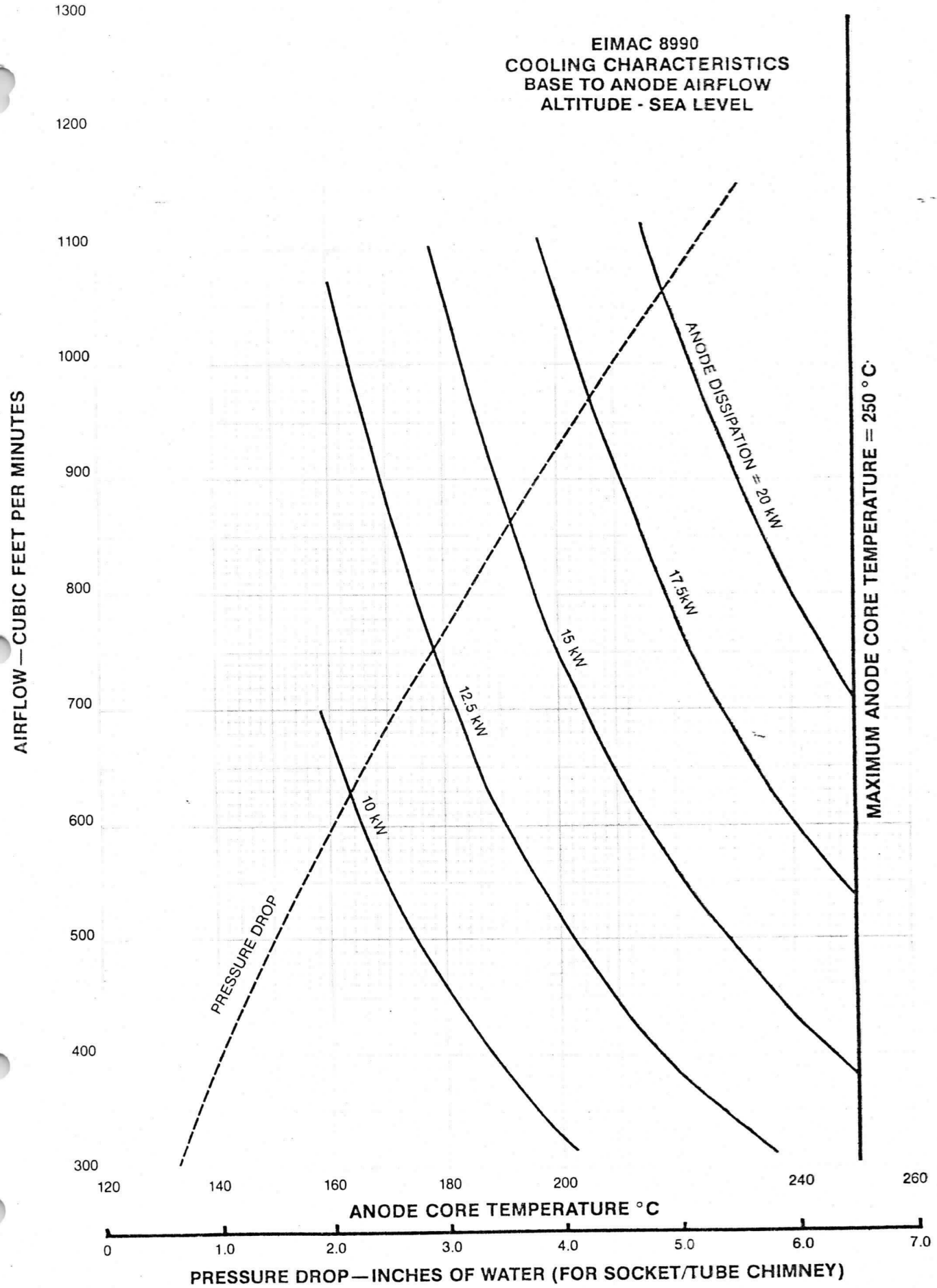
EIMAC 8990
COOLING CHARACTERISTICS
BASE TO ANODE AIRFLOW
ALTITUDE - SEA LEVEL
AIRFLOW—CUBIC FEET PER MINUTES
1300
1200
1100
1000
900
800
700
600
500
400
300
ANODE DISSIPATION = 20 kW
17.5kW
15 kW
12.5 kW
10 kW
PRESSURE DROP
MAXIMUM ANODE CORE TEMPERATURE = 250 °C
120
140
160
180
200
240
260
ANODE CORE TEMPERATURE °C
0
1.0
2.0
3.0
4.0
5.0
6.0
7.0
PRESSURE DROP—INCHES OF WATER (FOR SOCKET/TUBE CHIMNEY)

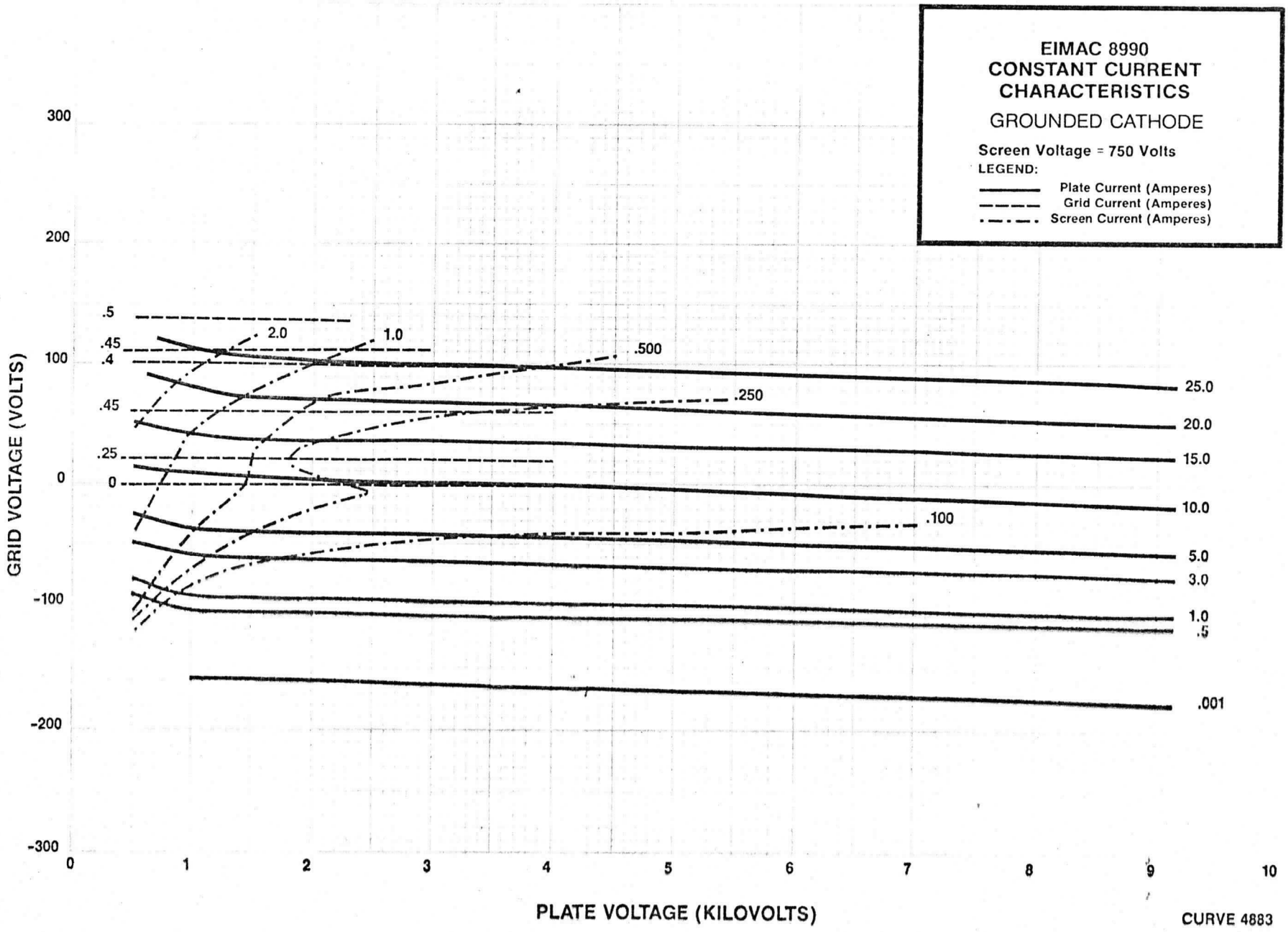
EIMAC 8990
CONSTANT CURRENT
CHARACTERISTICS
GROUNDED CATHODE
Screen Voltage = 750 Volts
LEGEND:
Plate Current (Amperes)
Grid Current (Amperes)
Screen Current (Amperes)
GRID VOLTAGE (VOLTS)
300
200
100
0
-100
-200
-300
0
1
2
3
4
5
6
7
8
9
10
PLATE VOLTAGE (KILOVOLTS)
.5
.45
.4
.45
.25
0
2.0
1.0
.500
.250
.100
25.0
20.0
15.0
10.0
5.0
3.0
1.0
.5
.001
CURVE 4883

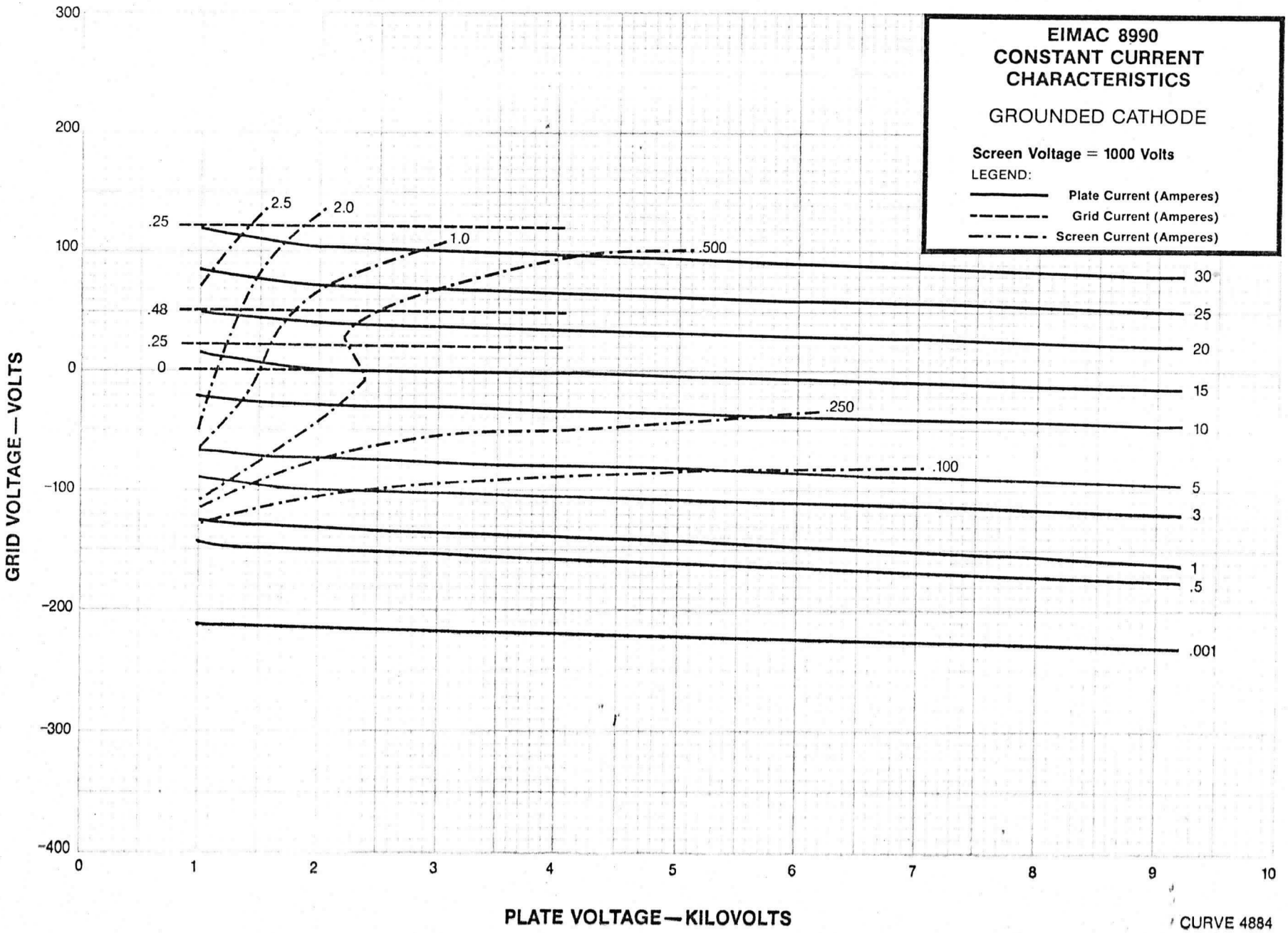

8990/4CX20,000A,8990A

Eimac®

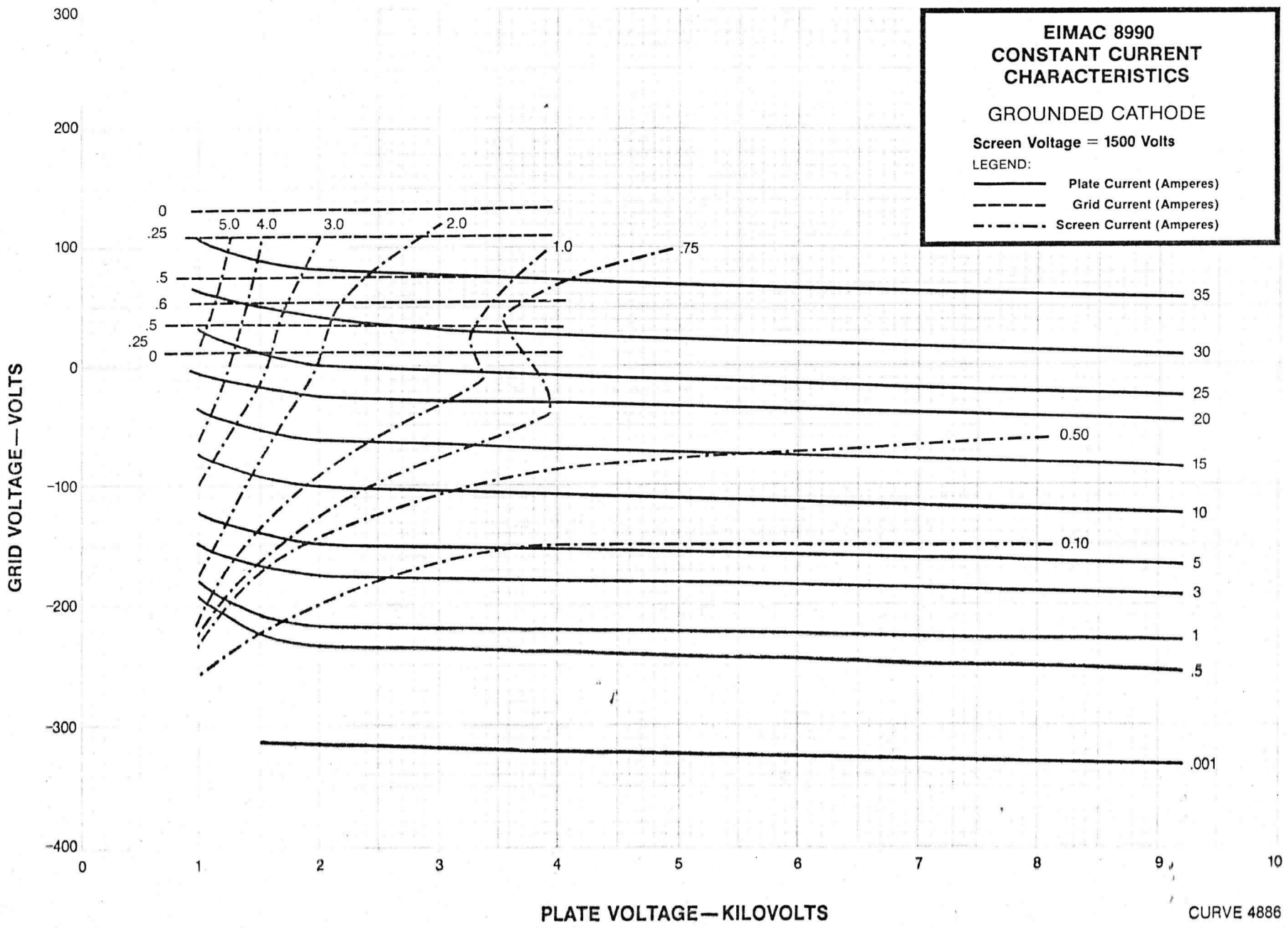
EIMAC 8990
CONSTANT CURRENT
CHARACTERISTICS
GROUNDED CATHODE
Screen Voltage = 1500 Volts
LEGEND:
Plate Current (Amperes)
Grid Current (Amperes)
Screen Current (Amperes)
GRID VOLTAGE—VOLTS
PLATE VOLTAGE—KILOVOLTS
CURVE 4886
300
200
100
0
-100
-200
-300
-400
0
1
2
3
4
5
6
7
8
9
10
5.0
4.0
3.0
2.0
1.0
.75
0.50
0.10
.25
.6
35
30
25
20
15
10
5
3
1
.5
.001

DIM	DIMENSIONAL DATA					
	INCHES			MILLIMETERS		
	MIN.	MAX	REF	MIN	MAX	REF
A	8.670	8.800		220.22	223.52	
B	.855	.895		21.72	22.73	
C	4.406	4.468		111.91	113.49	
D	.600	.760		15.24	19.30	
E	1.896	1.936		48.16	49.17	
F	3.133	3.173		79.58	80.59	
G	3.792	3.832		96.32	97.33	
H	3.980	4.020		101.09	102.11	
J	.188			4.78		
K	.188			4.78		
L	.188			4.78		
M	3.718	3.781		94.44	96.04	
N	.219			5.56		
P	4.593	4.656		116.66	118.26	
R	2.705	2.825		68.71	71.76	
S	9.465	9.840		240.41	249.94	
T	.500			12.70		

NOTES:
1. REF DIMENSIONS ARE FOR INFO ONLY & ARE NOT REQUIRED FOR INSPECTION PURPOSES.
2. * CONTACT SURFACE.
3. OPTIMUM FILAMENT & GRID CONNECTOR HEIGHTS FOR SOCKET DESIGN PURPOSES.

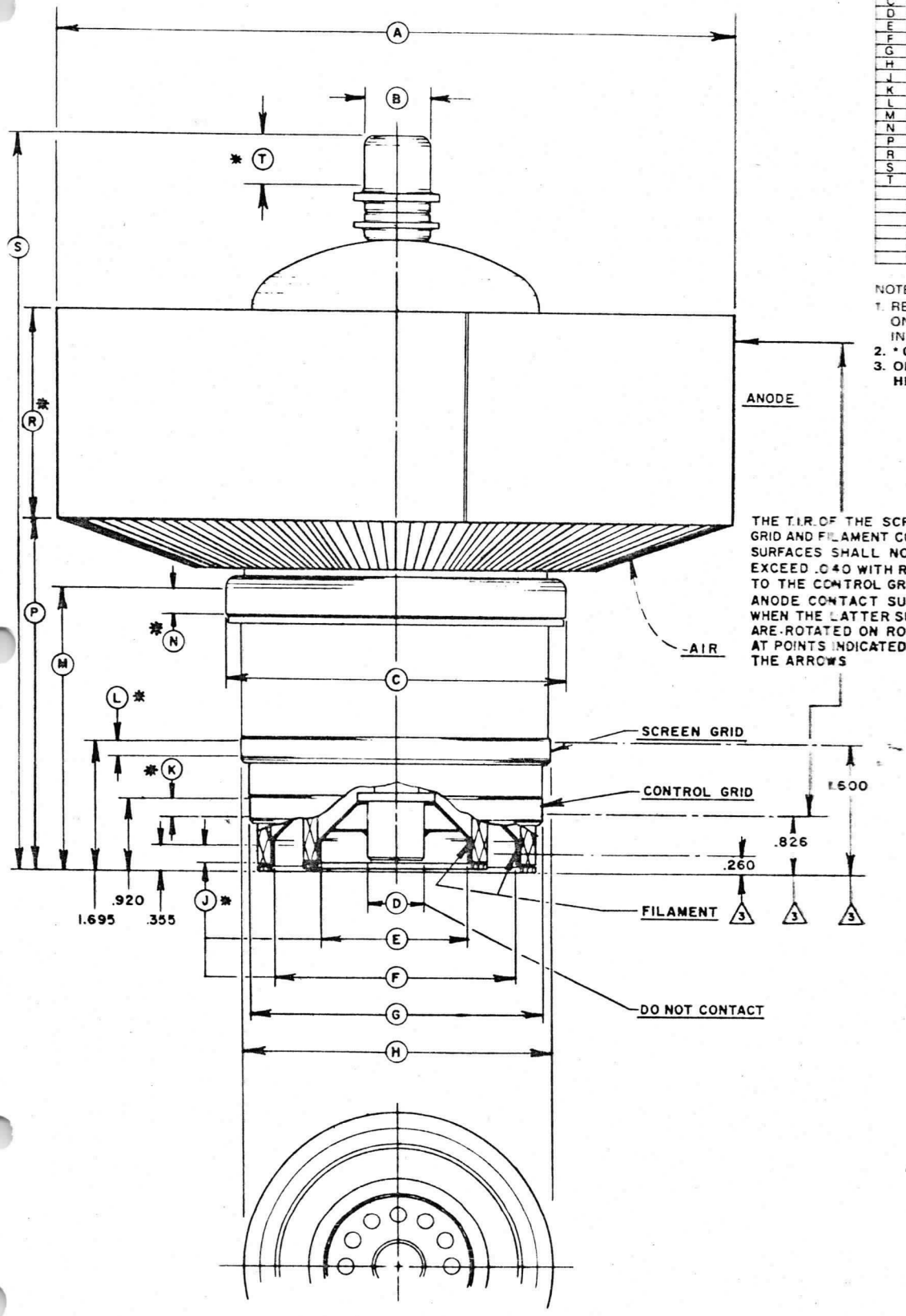

TYPE 8990

DIM	DIMENSIONAL DATA					
	INCHES			MILLIMETERS		
	MIN.	MAX.	REF.	MIN.	MAX.	REF.
A	8.670	8.800		220.22	223.52	
B	.855	.895		21.72	22.73	
C	4.593	4.656		116.66	118.26	
D	.600	.760		15.24	19.30	
E	1.896	1.936		48.16	49.17	
F	3.133	3.173		79.58	80.59	
G	3.792	3.832		96.32	97.33	
H	3.980	4.020		101.09	102.11	
J	.188			4.78		
K	.188			4.78		
L	.188			4.78		
M						
N						
P	4.593	4.656		116.66	118.26	
R	2.705	2.825		68.71	71.76	
S	9.465	9.840		240.41	249.94	
T	.500			12.70		

NOTES:
1. REF DIMENSIONS ARE FOR INFO ONLY & ARE NOT REQUIRED FOR INSPECTION PURPOSES.
2. * CONTACT SURFACE.
3. OPTIMUM FILAMENT & GRID CONNECTOR HEIGHTS FOR SOCKET DESIGN PURPOSES.

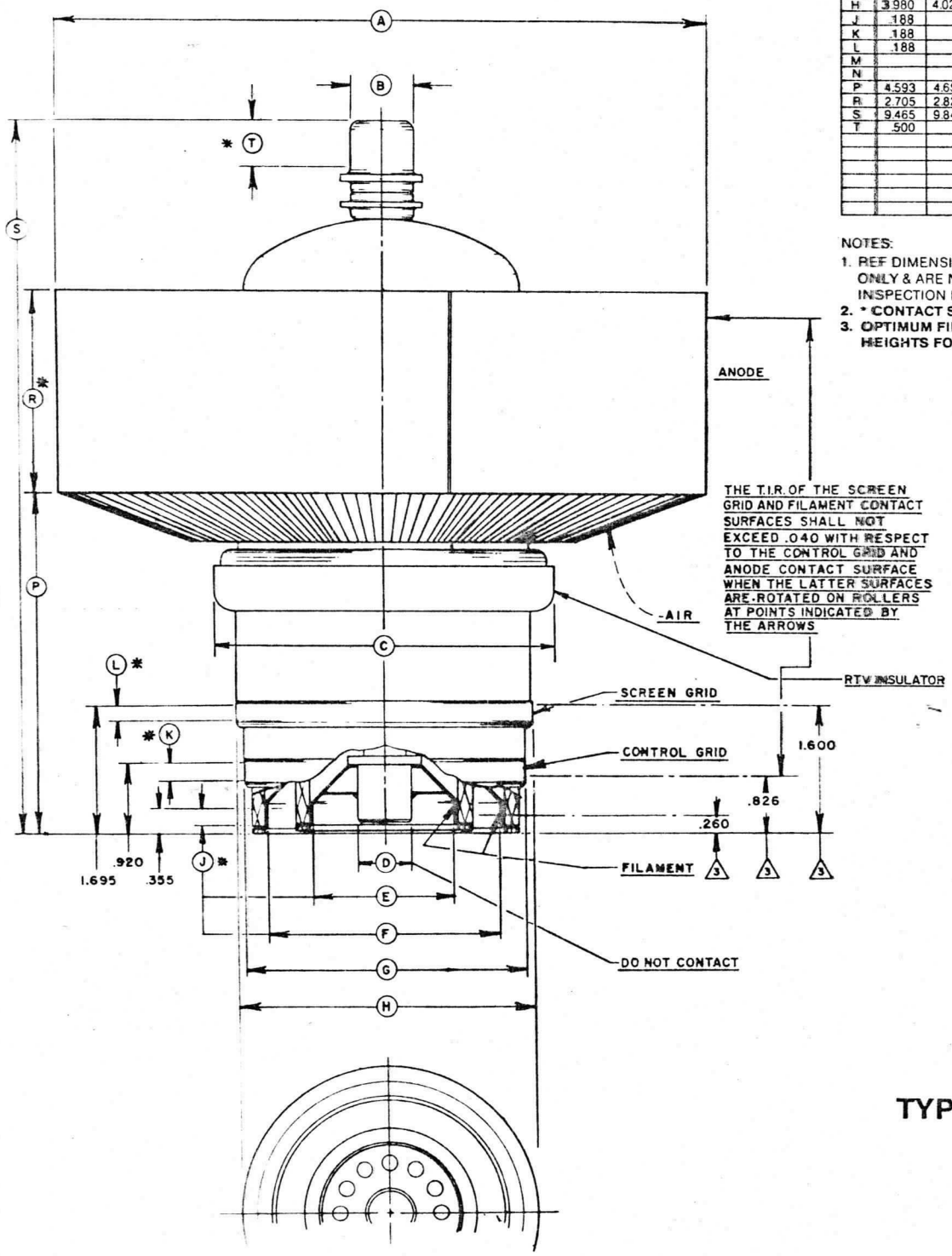

TYPE 8990A

ADVANCE PRODUCT ANNOUNCEMENT

4CX25,000A VHF POWER TETRODE

The EIMAC 4CX25,000A is a ceramic/metal power tetrode intended for use in VHF-TV linear amplifier service. It features a type of internal mechanical structure which results in high rf operating efficiency. Low rf losses in this structure permit operation at full ratings to 230 MHz in TV linear amplifier service.

The anode is rated for 25 kW dissipation with forced-air cooling and uses a highly efficient cooler.



GENERAL CHARACTERISTICS [1]

ELECTRICAL

Filament: Thoriated Tungsten Mesh	
Voltage	9.5 ± 0.5 V
Current, at 10.0 volts	150 A
Maximum Cold Start Inrush Current	300 A
Amplification Factor (Average) Grid to Screen	6.7
Direct Interelectrode Capacitances (cathode grounded) [2]	
Cin	171 pF
Cout	18.4 pF
Cgp	0.57 pF
Direct Interelectrode Capacitances (grids grounded) [2]	
Cin	79 pF
Cout	19 pF
Cpk	0.06 pF
Maximum Frequency for Full Ratings (CW)	230 MHz

1. Characteristics and operating values are based on performance tests. These figures may change without notice as the result of additional data or product refinement. Varian EIMAC should be consulted before using this information for final equipment design.
2. Capacitance values are for a cold tube as measured in a special shielded fixture in accordance with Electronic Industries Association Standard RS-191.

MECHANICAL

Maximum Overall Dimensions:	
Length	9.15 In; 23.24 cm
Diameter	8.85 In; 22.50 cm
Net Weight (approximate)	26.4 Lbs; 12.0 kg
Operating Position	Axis Vertical, Base Up or Down
Cooling	Forced Air
Operating Temperature, Absolute Maximum	
Ceramic/Metal Seals and Anode Core	250°C
Base	Special, Coaxial
Recommended Air-System Socket (for grid-driven dc or LF/HF applications)	EIMAC SK-320
Recommended Air Chimney (for use with SK-360 Socket)	EIMAC SK-326
Recommended Air-System Socket (for grid-driven VHF applications)	EIMAC SK-360
Available Screen Grid Bypass Capacitor Kit for SK-360 (8000 pF @ DCWV = 5000)	EIMAC SK-355
Available Anode Contact Connector	EIMAC ACC-3

TELEVISION LINEAR AMPLIFIER
CHANNELS 7-13 - Cathode Driven

ABSOLUTE MAXIMUM RATINGS

DC PLATE VOLTAGE	10.0	KILOVOLTS
DC SCREEN VOLTAGE	2.0	KILOVOLTS
DC GRID VOLTAGE	-1.0	KILOVOLT
DC PLATE CURRENT	8.0	AMPERES
PLATE DISSIPATION	25	KILOWATTS
SCREEN DISSIPATION	300	WATTS
GRID DISSIPATION	180	WATTS

* Approximate; will vary tube-to-tube.
\# Calculated; including circuit losses gain will be 1 to 2 dB lower.

TYPICAL OPERATION, Composite Signal Black Level unless otherwise stated

Plate Voltage	7800	Vdc
Screen Voltage	1400	Vdc
Grid Bias Voltage *	-107	Vdc
Zero-Signal Plate Current	1.6	Adc
Plate Current	5.3	Adc
Grid Current *	100	mAdc
Screen Current *	120	mAdc
Peak Cathode Voltage (peak sync)	173	v
Cathode Driving Power (peak sync) *	1000	w
Plate Output Power (peak sync)	34.7	kw
Plate Load Resistance	634	Ohms
Cathode Load Resistance	15	Ohms
Gain #	15.4	dB
Plate Dissipation	21	kW

395090(Effective March 1986)
VA4857

Printed In U.S.A.

VHF CLASS B CW RF AMPLIFIER
Cathode Driven

ABSOLUTE MAXIMUM RATINGS

DC PLATE VOLTAGE	10.0	KILOVOLTS
DC SCREEN VOLTAGE	2.0	KILOVOLTS
DC GRID VOLTAGE	-1.0	KILOVOLT
DC PLATE CURRENT	8.0	AMPERES
PLATE DISSIPATION	25	KILOWATTS
SCREEN DISSIPATION	300	WATTS
GRID DISSIPATION	180	WATTS

* Approximate; will vary tube-to-tube.
\# Adjust for zero-signal plate current.

TYPICAL OPERATION:

Plate Voltage	6400	7000	Vdc
Screen Voltage	1200	1200	Vdc
Grid Bias Voltage #	-95	-110	Vdc
Zero-Signal Plate Current	1.0	0.5	Adc
Plate Current	4.05	3.4	Adc
Grid Current *	77	40	mAdc
Screen Current *	200	200	mAdc
Plate Output Power	16.5	16.5	kW
Plate Dissipation	9.8	7.8	kW
Plate Load Resistance	820	1090	Ohms
Cathode Load Resistance	18	22	Ohms
Cathode Drive Power *	420	380	W

TYPICAL OPERATION values are obtained by measurement or by calculation from published characteristic curves. To obtain the specified plate current at the specified bias, screen, and plate voltages, adjustment of the rf grid voltage is assumed. If this procedure is followed, there will be little variation in ouput power when the tube is replaced, even though there may be some variation in grid and screen currents. The grid and screen currents which occur when the desired plate current is obtained are incidental and vary from tube to tube. These current variations cause no performance degradation providing the circuit maintains the correct voltage in the presence of the current variations.

APPLICATION

MECHANICAL

STORAGE - If a tube is to be stored as a spare it should be kept in its original shipping carton, with the original packing material, to minimize the possibility of handling damage.

Before storage a new tube should be operated in the equipment for 100 to 200 hours to establish it has not been damaged and operates properly (See FILAMENT OPERATION for recommendations on initial value of filament voltage during this operation period). If the tube is still in storage 6 months later it again should be operated in the equipment for 100 to 200 hours to make sure there has been no degradation. If operation is satisfactory the tube can again be stored with great assurance of being a known-good spare.

MOUNTING - The 4CX25,000A must be operated with its axis vertical. The base of the tube may be up or down at the convenience of the designer.

SOCKET & CHIMNEY - The EIMAC air-system socket SK-320 and air chimney SK-326 are designed for use with the 4CX25,000A in dc or LF/HF applications. For VHF applications the SK-360 air-system socket is recommended. The use of the recommended air flow through an air-system socket will provide effective forced-air cooling of the base, with air then guided through the anode cooling fins by the air chimney.

COOLING - The maximum temperature rating for the external surfaces of the tube is 250 Deg.C, and sufficient forced-air cooling must be used in all applications to keep the temperature of the anode (at the base of the cooling fins) and the temperature of the ceramic/metal seals comfortably below this rated maximum.

It is considered good engineering practice to design for a maximum anode core temperature of 225°C and temperature-sensitive paints are available for checking base and seal temperatures before any design is finalized. EIMAC Application Bulletin #20 titled "TEMPERATURE MEASUREMENTS WITH EIMAC TUBES" is available on request.

It is also good practice to allow for variables such as dirty air filters, rf seal heating, and the fact that the anode cooling fins may not be clean if the tube has been in service for some length of time. Special attention is required in cooling the center of the stem (base), by means of special directors or some other provision. An air interlock system should be incorporated in the design to automatically remove all voltages from the tube in case of even partial failure of the tube cooling air.

It should be noted the contact fingers used in the contact collet assemblies (inner and outer filament, control grid and screen grid) are made of beryllium copper. If operated above 150°C for any appreciable length of time this material will loose its temper (or springy characteristic) and then will no longer make good contact to the base contact areas of the tube. This can lead to arcing which can melt metal in a contact area (primarily the inner or outer filament contacts) and the tube's vacuum integrity is then destroyed.

If all cooling air is not passed around the base of the tube and through the socket, then arrangements must be made to assure adequate cooling of the tube base and the socket contacts. Movement of cooling air around the base of the tube accomplishes a double purpose in keeping the tube base and the socket contact fingers at a safe operating temperature.

Minimum air flow requirements for a maximum anode temperature of 225°C for various altitudes and dissipation levels are listed. The pressure drop values shown are approximate and are for the tube anode cooler only. Pressure drop in a typical installation will be higher because of system loss.

Inlet Air Temperature = 25°C

Sea Level	Plate Diss. kW	Flow Rate CFM	Press. Drop In.Water
	10	150	0.3
	15	320	0.9
	20	550	2.2
	25	840	4.6

5000 Feet	Plate Diss. kW	Flow Rate CFM	Press. Drop In.Water
	10	190	0.3
	15	390	1.0
	20	660	2.5
	25	1010	5.2

10,000 Feet	Plate Diss. kW	Flow Rate CFM	Press. Drop In.Water
	10	230	0.4
	15	470	1.1
	20	800	2.8
	25	1230	5.9

Inlet Air Temperature = 35°C

Sea Level	Plate Diss. kW	Flow Rate CFM	Press. Drop In.Water
	10	180	0.4
	15	370	1.1
	20	630	2.7
	25	960	5.6

5000 Feet	Plate Diss. kW	Flow Rate CFM	Press. Drop In.Water
	10	210	0.4
	15	440	1.2
	20	590	2.0
	25	1170	6.4

10,000 Feet	Plate Diss. kW	Flow Rate CFM	Press. Drop In.Water
	10	260	0.4
	15	540	1.4
	20	920	3.4
	25	1410	7.3

Inlet Air Temperature = 50°C

Sea Level	Plate Diss. kW	Flow Rate CFM	Press. Drop In.Water
	10	220	0.5
	15	460	1.5
	20	780	3.6
	25	1200	7.7

5000 Feet	Plate Diss. kW	Flow Rate CFM	Press. Drop In.Water
	10	270	0.5
	15	550	1.6
	20	950	4.1
	25	1450	8.9

10,000 Feet	Plate Diss. kW	Flow Rate CFM	Press. Drop In.Water
	10	320	0.6
	15	670	1.8
	20	1140	4.7
	25	1760	10.3

When long life and consistent performance are factors cooling in excess of minimum requirements is normally beneficial.

Air flow must be applied before or simultaneously with the application of power, including the tube filament, and should normally be maintained for a short period of time after all power is removed to allow for tube cooldown.

ELECTRICAL

HIGH VOLTAGE - Normal operating voltages used with this tube are deadly, and operating precautions must be followed. Design all equipment so that no one can come in contact with high voltages. All equipment must include safety enclosures for high-voltage circuits and terminals, with interlock switches to open primary circuits of the power supply and to discharge high-voltage capacitors whenever access doors are opened. Interlock switches must not be bypassed or "cheated" to allow operation with access doors open. Always remember that HIGH VOLTAGE CAN KILL.

FILAMENT OPERATION - This tube is designed for commercial service, with no more than one normal off/on filament cycle per day. If additional cycling is anticipated it is recommended the user contact Application Engineering at Varian EIMAC for additional information.

Filament inrush current should be limited to twice normal current. A suitable step-start procedure can accomplish this, with full operating temperature reached in as little as four seconds.

With a new tube, or one which has been in storage for some period of time, operation with filament voltage only applied for a period of 30 to 60 minutes is recommended before full operation begins. This allows the active getter material mounted within the filament structure to absorb any residual gas molecules which have accumulated during storage. Once normal operation has been established a minimum filament warmup time of four seconds is normally sufficient. (See current inrush limitation and step-start comment above.)

At rated (nominal) filament voltage the peak emission capability of the tube is many times that needed for communication service. A reduction in filament voltage will lower the filament temperature, which will substantially increase life expectancy. The correct value of filament voltage should be determined for the particular application. It is recommended the tube be operated at full nominal voltage for an initial stabilization period of 100 to 200 hours before any action is taken to operate at reduced voltage. The voltage should gradually be reduced until there is a slight degradation in performance (such as power output or distortion). The voltage should then be increased a few tenths of a volt above the value where performance degradation was noted for operation. The operating point should be rechecked after 24 hours.

Filament voltage should be closely regulated when voltage is to be reduced below nominal in this manner, to avoid any adverse influence by normal line voltage variations.

Filament voltage should be measured at the tube base or socket, using an accurate rms-responding meter. Periodically throughout the life of the tube the procedure outlined above for reduction of voltage should be repeated, with voltage reset as required, to assure best tube life.

EIMAC Application Bulletin #18 titled "EXTENDING TRANSMITTER TUBE LIFE" contains valuable information and is available on request.

DISSIPATION RATINGS - Maximum dissipation ratings for the 4CX25,000A must be respected to avoid damage to the tube. An exception is plate dissipation which may be permitted to rise above the rated maximum during brief periods (10 seconds maximum) such as may occur during tuning.

GRID OPERATION - The maximum control grid dissipation is 180 watts, determined approximately by the product of the dc grid current and the peak positive grid voltage. A protective spark-gap device should be connected between the control grid and the cathode to guard against excessive voltage.

SCREEN OPERATION - The maximum screen grid dissipation is 300 watts. With no ac applied to the screen grid, dissipation is simply the product of dc screen voltage and the dc screen current. Plate voltage, plate loading, or bias voltage must never be removed while filament and screen voltages are present, since screen dissipation ratings will be exceeded. Energy limiting circuitry (which will activate if there is a fault condition) and spark gap over-voltage protection are recommended as good engineering practice.

The tube may exhibit reversed (negative) screen current under some operating conditions. Screen supply voltage must be maintained constant for any values of negative and positive screen current which may be encountered. Dangerously high plate current may flow if the screen power supply exhibits a rising voltage characteristic with negative screen current. Stabilization may be accomplished with a bleeder resistor connected from screen to cathode, to assure that net screen supply current is always positive. This is essential if a series electronic regulator is employed.

FAULT PROTECTION - In addition to the normal plate over-current interlock, screen current interlock, and coolant interlock, the tube must be protected from internal damage caused by an internal plate arc which may occur at high plate voltage. A protective resistance should always be connected in series with the tube anode (in the B+ line, to absorb power supply stored energy if an internal arc should occur. If power supply stored energy is high an electronic crowbar, which will discharge power supply capacitors in a few microseconds after the start of an arc, is recommended. The protection criteria for each electrode supply is to short each electrode to ground, one at a time, through a vacuum relay switch and a 6-inch section of #30 AWG copper wire. The wire will remain intact if protection is adequate.

EIMAC's Application Bulletin #17 FAULT PROTECTION contains considerable detail, and is available on request.

RADIO-FREQUENCY RADIATION - Avoid exposure to strong rf fields even at relatively low frequency. Absorption of rf energy by human tissue is dependent on frequency. Under 300 MHz most of the energy will pass completely through the human body with little attenuation or heating affect. Public health agencies are concerned with the hazard even at these frequencies. OSHA (Occupational Safety and Health Administration) recommends that prolonged exposure to rf radiation should be limited to 10 milliwatts per square centimeter.

INTERELECTRODE CAPACITANCE - The actual internal interelectrode capacitance of a tube is influenced by many variables in most applications, such as stray capacitance to the chassis, capacitance added by the socket used, stray capacitance between tube terminals, and wiring effects. To control the actual capacitance values within the tube, as the key component involved, the industry and Military Services use a standard test procedure as described in Electronic Industries Association Standard RS-191. This requires the use of a specially constructed test fixture which shields all external tube leads or contacts from each other and eliminates any capacitance reading to "ground". The test is performed on a cold tube. Other factors being equal, controlling internal tube capacitance in this way normally assures good interchangeability of tubes over a period of time. The capacitance values shown in the technical data are taken in accordance with Standard RS-191. The equipment designer is therefore cautioned to make allowance for the actual capacitance values which will exist in the appliction. Measurements should be taken with the mounting which represents approximate final layout if capacitance values are highly significant in the design.

SPECIAL APPLICATIONS - When it is desired to operate this tube under conditions widely different from those listed here, write to Varian EIMAC; attn: Product Manager; 301 Industrial Way; San Carlos, CA 94070 U.S.A.

OPERATING HAZARDS

PROPER USE AND SAFE OPERATING PRACTICES WITH RESPECT TO POWER TUBES ARE THE RESPONSIBILITY OF EQUIPMENT MANUFACTURERS AND USERS OF SUCH TUBES. ALL PERSONS WHO WORK WITH OR ARE EXPOSED TO POWER TUBES OR EQUIPMENT WHICH UTILIZES SUCH TUBES MUST TAKE PRECAUTIONS TO PROTECT THEMSELVES AGAINST POSSIBLE SERIOUS BODILY INJURY. DO NOT BE CARELESS AROUND SUCH PRODUCTS.

The operation of this tube may involve the following hazards, any one of which, in the absence of safe operating practices and precautions, could result in serious harm to personnel:

a. HIGH VOLTAGE - Normal operating voltages can be deadly. Remember that HIGH VOLTAGE CAN KILL.

b. LOW-VOLTAGE HIGH-CURRENT CIRCUITS - personal jewelry, such as rings, should not be worn when working with filament contacts or connectors as a short circuit can produce very high current and melting, resulting in severe burns.

c. RF RADIATION - Exposure to strong rf fields should be avoided, even at relatively low frequencies. The dangers of rf radiation are more severe at UHF and microwave frequencies and can cause serious bodily and eye injuries. CARDIAC PACEMAKERS MAY BE EFFECTED.

d. HOT SURFACES - Surfaces of tubes can reach temperatures of several hundred °C and cause serious burns if touched for several minutes after all power is removed.

Please review the detailed operating hazards sheet enclosed with each tube, or request a copy from: Varian EIMAC, Power Grid Application Engineering, 301 Industrial Way, San Carlos CA 94070.

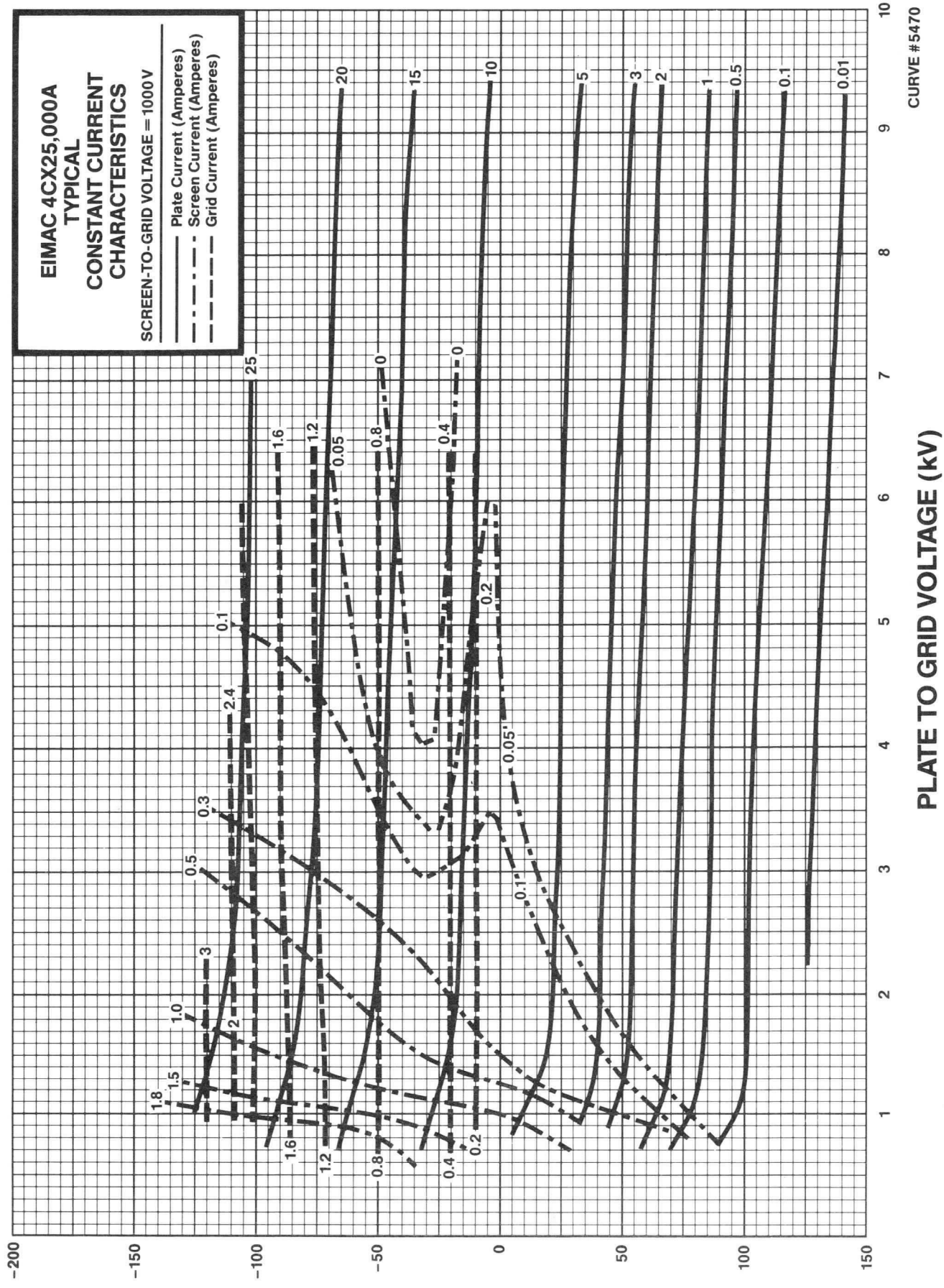
EIMAC 4CX25,000A
TYPICAL
CONSTANT CURRENT
CHARACTERISTICS
SCREEN-TO-GRID VOLTAGE = 1000 V
Plate Current (Amperes)
Screen Current (Amperes)
Grid Current (Amperes)
CATHODE DRIVEN
CATHODE TO GRID VOLTAGE (V)
PLATE TO GRID VOLTAGE (kV)
CURVE #5470

CATHODE DRIVEN

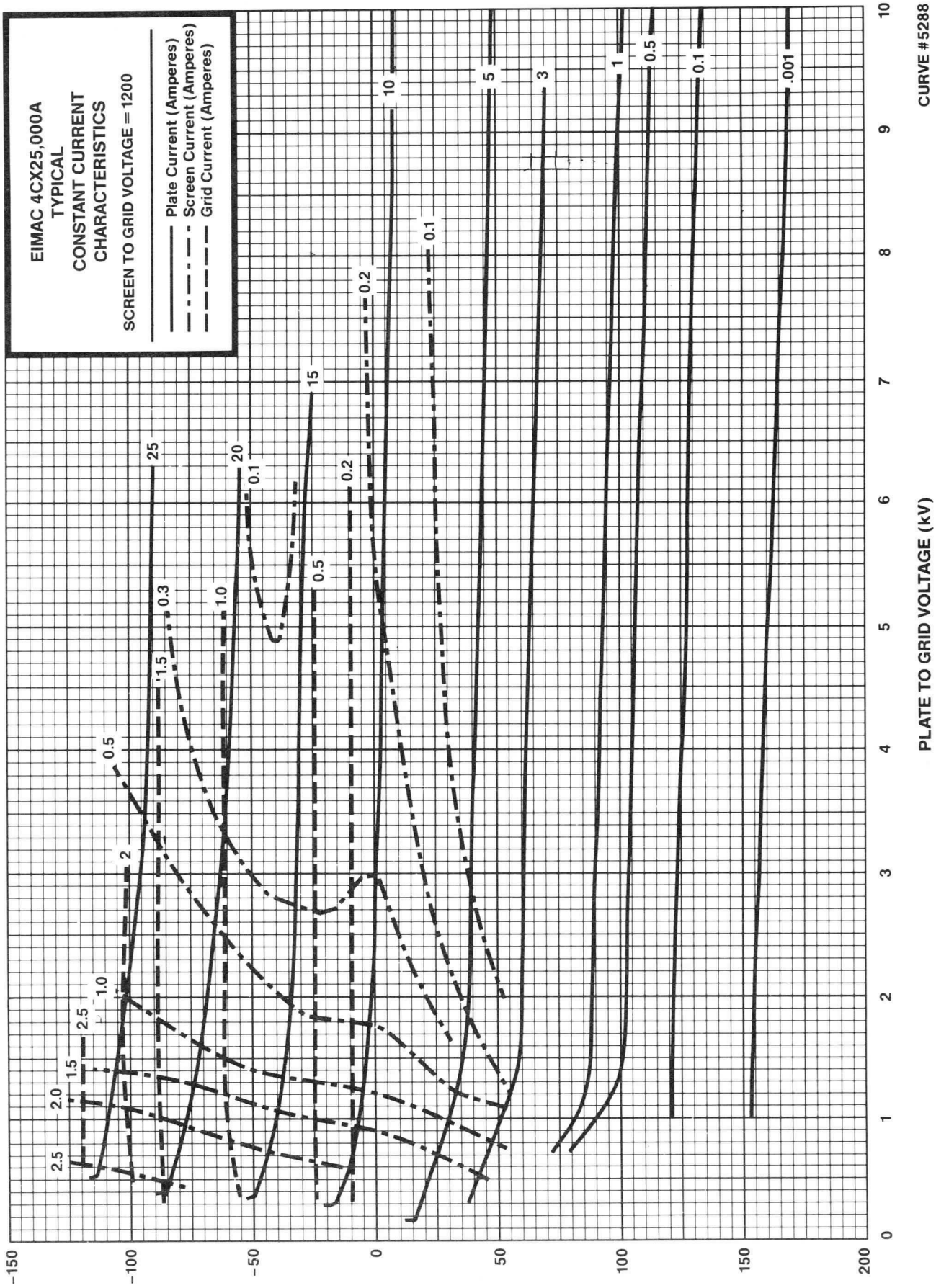

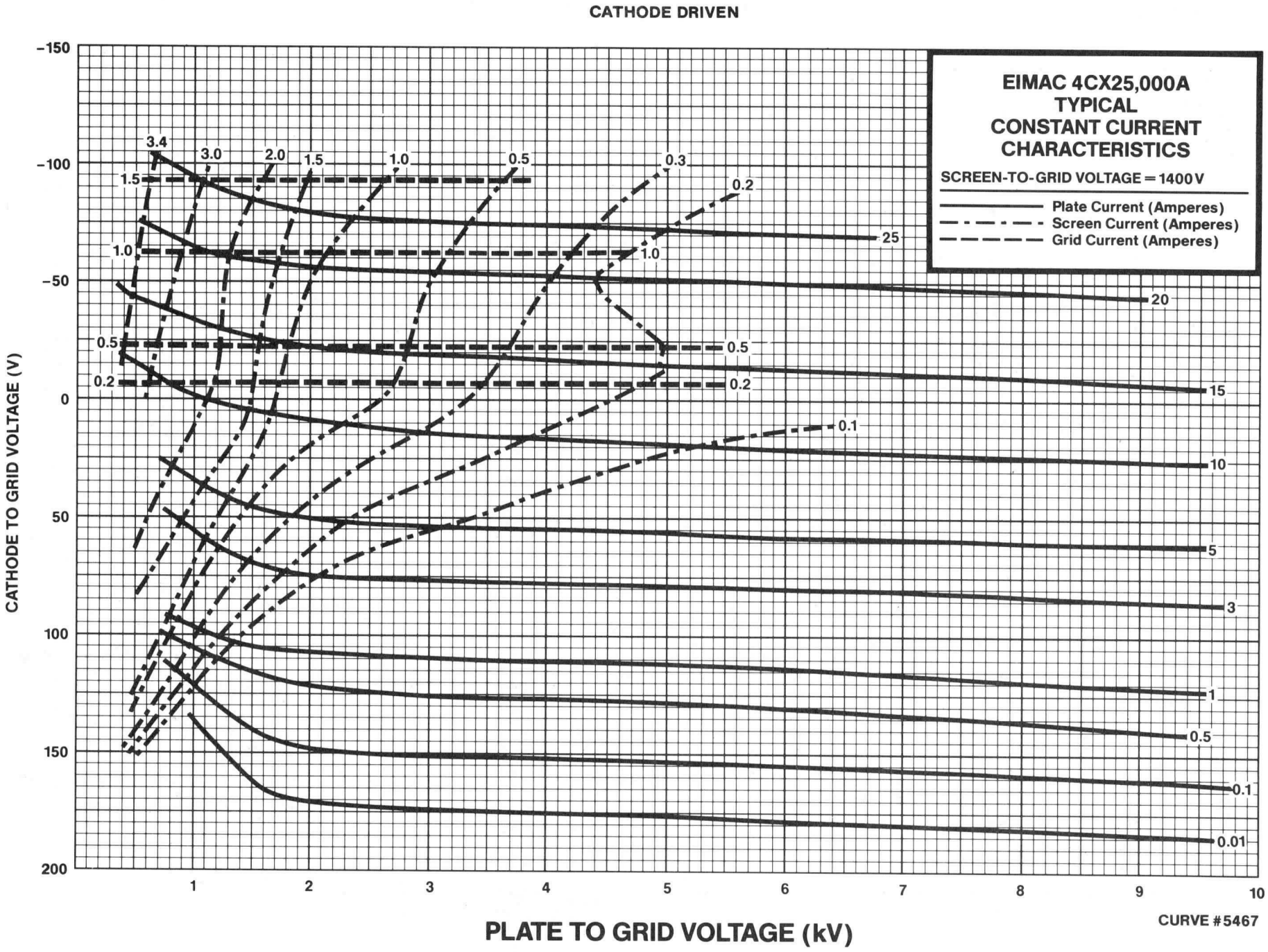
CATHODE DRIVEN
EIMAC 4CX25,000A
TYPICAL
CONSTANT CURRENT
CHARACTERISTICS
SCREEN-TO-GRID VOLTAGE = 1400 V
Plate Current (Amperes)
Screen Current (Amperes)
Grid Current (Amperes)
CATHODE TO GRID VOLTAGE (V)
-150
-100
-50
0
50
100
150
200
PLATE TO GRID VOLTAGE (kV)
1
2
3
4
5
6
7
8
9
10
3.4
3.0
2.0
1.5
1.0
0.5
0.3
0.2
25
20
15
10
5
3
1
0.5
0.1
0.01
CURVE #5467

DIMENSIONAL DATA						
	INCHES			MILLIMETERS		
DIM	MIN	MAX	REF	MIN	MAX	REF
A	8.730	8.860		221.74	225.04	
B	.855	.895		21.72	22.73	
C	4.406	4.468		111.91	113.49	
D	.600	.760		15.24	19.30	
E	1.896	1.936		48.16	49.17	
F	3.133	3.173		79.58	80.59	
G	3.792	3.832		96.32	97.33	
H	3.980	4.020		101.09	102.11	
J	.188			4.78		
K	.188			4.78		
L	.188			4.78		
M	3.160	3.220		80.26	81.79	
N	.219			5.56		
P	3.300	3.380		83.82	85.85	
R	2.690	2.810		68.32	71.37	
S	9.025	9.150		229.24	232.41	
T	.500			12.70		
U	1.766	1.828		44.86	46.43	

NOTES:

1. REF DIMENSIONS ARE FOR INFO ONLY & ARE NOT REQUIRED FOR INSPECTION PURPOSES.
2. DIMENSIONS IN [ ] ARE MILLIMETERS.
3. (*) CONTACT SURFACE.
4. OPTIMUM FILAMENT & GRID CONNECTOR HEIGHTS FOR SOCKET DESIGN PURPOSES.

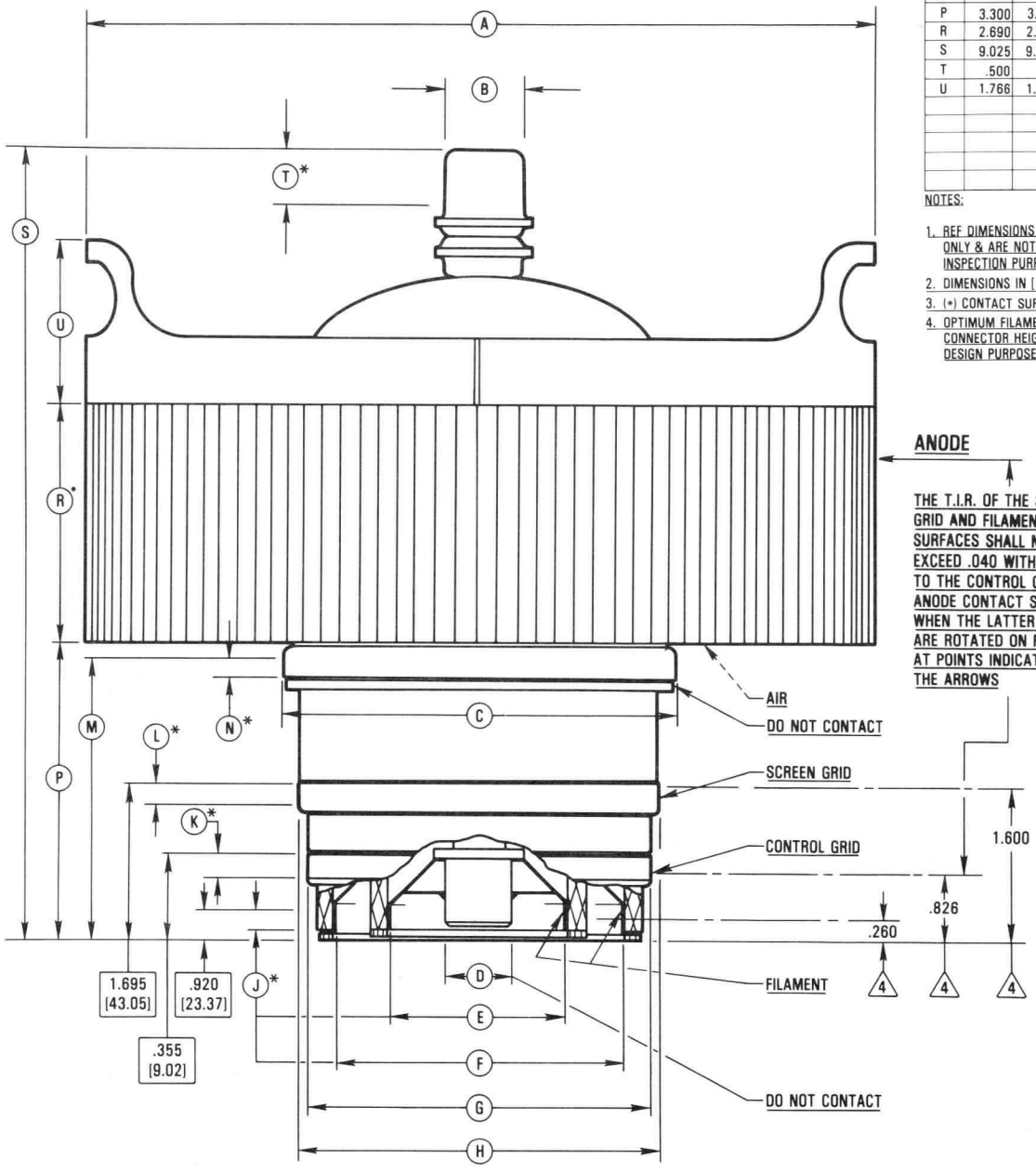

TECHNICAL DATA

8349
4CX35,000C

RADIAL-BEAM
POWER TETRODE

The EIMAC 8349/4CX35,000C is a ceramic/metal, forced-air cooled power tetrode intended for use at the 50 to 150 kilowatt output power level. It is recommended for use as a Class-C rf amplifier or oscillator, a Class-AB rf linear amplifier, or a Class-AB push-pull af amplifier or modulator. The 8349/4CX35,000C is also useful as a plate and screen modulated Class-C rf amplifier.

The forced-air cooled anode is rated at 35 kilowatts maximum dissipation.



GENERAL CHARACTERISTICS [1]

ELECTRICAL

Filament: Thoriated Tungsten	
Voltage	10.0 V
Current, at 10.0 volts	295 A
Amplification Factor (Average):	
Grid to Screen	4.5
Direct Interelectrode Capacitances (grounded cathode)[2]	
Cin	440 pF
Cout	55 pF
Cgp	2.3 pF
Frequency of Maximum Rating:	
CW	30 MHz

1. Characteristics and operating values are based upon performance tests. These figures may change without notice as the result of additional data or product refinement. EIMAC Division of Varian should be consulted before using this information for final equipment design.
2. Capacitance values are for a cold tube as measured in a special shielded fixture in accordance with Electronic Industries Association Standard RS-191.

MECHANICAL

Maximum Overall Dimensions:	
Length	17.34 in; 440.4 mm
Diameter	9.75 in; 247.7 mm
Net Weight	50 lb; 22.7 kg
Operating Position	Vertical, base up or down
Maximum Operating Temperature:	
Ceramic/Metal Seals	250°C
Anode Core	250°C
Cooling	Forced Air
Base	Special, graduated rings
Recommended Socket	EIMAC SK-1500

(Revised 12-1-70) © 1963, 1967, 1970 by Varian

Printed in U.S.A.

RADIO FREQUENCY LINEAR AMPLIFIER GRID DRIVEN

Class AB

MAXIMUM RATINGS:

DC PLATE VOLTAGE	20,000	VOLTS
DC SCREEN VOLTAGE	2500	VOLTS
DC PLATE CURRENT	15.0	AMPERES
PLATE DISSIPATION	35,000	WATTS
SCREEN DISSIPATION	1750	WATTS
GRID DISSIPATION	500	WATTS

1. Adjust to specified zero-signal dc plate current.
2. Approximate value.

TYPICAL OPERATION (Frequencies to 30 MHz)
Class AB_1, Grid Driven, Peak Envelope or Modulation Crest Conditions

Plate Voltage	15.0	kVdc
Screen Voltage	1.5	kVdc
Grid Voltage [1]	-400	Vdc
Zero-Signal Plate Current	1.0	Adc
Single Tone Plate Current	5.7	Adc
Single-Tone Screen Current [2]	0.9	Adc
Peak rf Grid Voltage [2]	250	v
Peak Driving Power [2]	0	w
Plate Dissipation	30	kW
Plate Output Power	55	kW
Resonant Load Impedance	1280	Ω

RADIO FREQUENCY POWER AMPLIFIER OR OSCILLATOR

Class C Telegraphy or FM Telephony
(Key-Down Conditions)

MAXIMUM RATINGS:

DC PLATE VOLTAGE	20,000	VOLTS
DC SCREEN VOLTAGE	2500	VOLTS
DC PLATE CURRENT	15.0	AMPERES
PLATE DISSIPATION	35,000	WATTS
SCREEN DISSIPATION	1750	WATTS
GRID DISSIPATION	500	WATTS

TYPICAL OPERATION (Frequencies to 30 MHz)

Plate Voltage	10.0	15.0	19.0	kVdc
Screen Voltage	750	750	750	Vdc
Grid Voltage	-425	-480	-550	Vdc
Plate Current	7.5	6.8	6.96	Adc
Screen Current [1]	0.84	0.51	0.80	Adc
Grid Current [1]	0.29	0.23	0.35	Adc
Peak rf Grid Voltage [1]	600	660	730	v
Calculated Driving Power [1]	180	150	258	W
Plate Dissipation	19.3	19.0	21.0	kW
Plate Output Power	55.5	82.5	110	kW

1. Approximate value.

PLATE MODULATED RADIO FREQUENCY POWER AMPLIFIER-GRID DRIVEN

Class C Telephony (Carrier Conditions)

MAXIMUM RATINGS:

DC PLATE VOLTAGE	14,000	VOLTS
DC SCREEN VOLTAGE	2000	VOLTS
DC PLATE CURRENT	15.0	AMPERES
PLATE DISSIPATION [1]	23,000	WATTS
SCREEN DISSIPATION [2]	1750	WATTS
GRID DISSIPATION [2]	500	WATTS

1. Corresponds to 35,000 watts at 100% sine-wave modulation.
2. Average, with or without modulation.

TYPICAL OPERATION (Frequencies to 30 MHz)

Plate Voltage	12.0	kVdc
Screen Voltage	750	Vdc
Grid Voltage	-600	Vdc
Plate Current	5.4	Adc
Screen Current [1]	0.52	Adc
Grid Current [1]	0.16	Adc
Peak af Screen Voltage [2] (100% modulation)	500	v
Peak rf Grid Voltage [1]	740	v
Calculated Driving Power	125	W
Plate Dissipation	13.2	kW
Plate Output Power	55.0	kW
Resonant Load Impedance	1120	Ω

1. Approximate value.
2. Approximate value, depending upon degree of driver modulation.

AUDIO FREQUENCY POWER AMPLIFIER OR MODULATOR

Class AB, Grid Driven (Sinusoidal Wave)

MAXIMUM RATINGS (Per Tube):

DC PLATE VOLTAGE	20,000	VOLTS
DC SCREEN VOLTAGE	2,500	VOLTS
DC PLATE CURRENT	15.0	AMPERES
PLATE DISSIPATION	35,000	WATTS
SCREEN DISSIPATION	1750	WATTS
GRID DISSIPATION	500	WATTS

1. Approximate value.

TYPICAL OPERATION (Two Tubes)

Plate Voltage	12.0	kVdc
Screen Voltage	1.5	kVdc
Grid Voltage [1/3]	-400	Vdc
Zero-Signal Plate Current	3.0	Adc
Max Signal Plate Current	9.2	Adc
Max Signal Screen Current [1]	1.8	Adc
Peak af Grid Voltage [2]	280	v
Max Signal Plate Dissipation [2]	20	kW
Plate Output Power	70	kW
Load Resistance (plate to plate)	2860	Ω

2. Per Tube
3. Adjust to give stated zero-signal plate current.

NOTE: TYPICAL OPERATION data are obtained from direct measurement or by calculation from published characteristic curves. Adjustment of the rf grid voltage to obtain the specified plate current at the specified bias, screen and plate voltages is assumed. If this procedure is followed, there will be little variation in output power when the tube is changed, even though there may be some variation in grid and screen current. The grid and screen currents which result when the desired plate current is obtained are incidental and vary from tube to tube. These current variations cause no difficulty so long as the circuit maintains the correct voltage in the presence of the variations in current. In the case of Class C Service, if grid bias is obtained principally by means of a grid resistor, the resistor must be adjustable to obtain the required bias voltage when the correct rf grid voltage is applied.

RANGE VALUES FOR EQUIPMENT DESIGN

	Min.	Max.	
Heater: Current at 10.0 volts	280	310	A
Interelectrode Capacitances (grounded cathode connection) [2]			
Cin	410	470	pF
Cout	50	60	pF
Cgp	1.5	3.2	pF

2. Capacitance values are for a cold tube as measured in a special shielded fixture in accordance with Electronic Industries Association Standard RS-191.

APPLICATION

MECHANICAL

MOUNTING - The 4CX35,000C must be operated with its axis vertical. The base of the tube may be down or up at the convenience of the circuit designer.

SOCKET - The EIMAC sockets, type SK-1500, and SK-1510 have been designed especially for the concentric base terminals of the 4CX35,000C.

COOLING - The maximum temperature rating for the external surfaces of the 4CX35,000C is 250°C. Sufficient forced-air circulation must be provided to keep the temperature of the anode at the base of the cooling fins and the temperature of the ceramic/metal seals below 250°C.

Air-flow requirements to maintain core temperature at 225°C in 40° ambient air are tabulated below (for operation below 30 megahertz.) These data are for air flowing in the base-to-anode direction.

	Base-to-Anode Air Flow			
	Sea Level		10,000 Feet	
Plate Dissipation* (Watts)	Air Flow (CFM)	Pressure Drop (Inches of Water)	Air Flow (CFM)	Pressure Drop (Inches of Water)
15,000	554	1.2	795	1.7
20,000	820	2.1	1100	3.0
25,000	1140	3.6	1665	5.2
30,000	1465	5.0	2140	7.4
35,000	1800	7.2	2630	10.3

* Since the power dissipated by the filament represents about 3000 watts and since grid-plus-screen dissipation can, under some conditions, represent another 2250 watts, allowance has been made in preparing this tabulation for an additional 5250 watts dissipation.

The blower selected in a given application must be capable of supplying the desired air flow at a back pressure equal to the pressure drop shown above plus any drop encountered in ducts and filters.

Separate cooling of the tube base is required and is accomplished by directing approximately 120 cfm of air horizontally through the socket from the side. It is preferable to direct this air through three equally spaçed ducts.

The well in the center of the baseplate of the tube is a critical area which requires cooling to maintain envelope temperatures less than 250°C. For most applications, 1 to 2 CFM of air directed through the center of the socket is sufficient for this purpose.

At other altitudes and ambient temperatures the flow rate must be modified to obtain equivalent cooling. The flow rate and corresponding pressure differential must be determined individually in such cases, using rated maximum temperatures as the criteria for satisfactory cooling.

ELECTRICAL

FILAMENT OPERATION - The peak emission at rated filament voltage of the EIMAC 4CX35, 000C is normally many times the peak emission required for communication service. A small decrease in filament temperature due to reduction of filament voltage can increase the life of the 4CX35,000C by a substantial percentage. It is good practice to determine the nominal filament voltage for a particular application that will not affect the operation of the equipment. This is done by measuring some important parameter of performance such as plate current, power output, or distortion while filament voltage is reduced on the 4CX35,000C. At some point in filament voltage there will be a noticeable reduction in plate current, or power output, or an increase in distortion. Operation may be at a filament voltage slightly higher than that point at which performance appears to deteriorate. This voltage should be measured at the socket with a 1% meter and periodically checked to maintain proper operation.

Filament starting current must be limited to a maximum of 900 amperes.

Voltage between filament and the base plates of tube and SK-1500 socket, must not exceed 100 volts.

GRID OPERATION - The 4CX35,000C grid has a maximum dissipation rating of 500 watts. Precautions should be observed to avoid exceeding this rating. The grid bias and driving power should be kept near the values shown in the "Typical Operation" sections of the data sheet whenever possible. The maximum grid circuit resistance should not exceed 100,000 ohms per tube.

SCREEN OPERATION - The power dissipated by the screen of the 4CX35,000C must not exceed 1750 watts.

Screen dissipation, in cases where there is no ac applied to the screen, is the simple product of the screen voltage and the screen current. If the screen voltage is modulated, the screen dissipation will depend upon loading, driving power, and carrier screen voltage.

Screen dissipation is likely to rise to excessive values when the plate voltage, bias voltage, or plate load are removed with filament and screen voltages applied. Suitable protective means must be provided to limit the screen dissipation to 1750 watts in the event of circuit failure.

PLATE DISSIPATION - The plate-dissipation rating for the 4CX35,000C is 35,000 watts. When the 4CX35,000C is operated as a plate-modulated rf amplifier, under carrier conditions, the maximum plate dissipation is 23,000 watts.

INTERELECTRODE CAPACITANCE - The actual internal interelectrode capacitance of a tube is influenced by many variables in most applications, such as stray capacitance to the chassis, capacitance added by the socket used, stray capacitance between tube terminals, and wiring effects. To control the actual capacitance values within the tube, as the key component involved, the industry and the Military Services use a standard test procedure as described in Electronic Industries Association Standard RS-191. This requires the use of specially constructed test fixtures which effectively shield all external tube leads from each other and eliminates any capacitance reading to "ground". The test is performed on a cold tube. Other factors being equal, controlling internal tube capacitance in this way normally assures good interchangeability of tubes over a period of time, even when the tube may be made by different manufacturers. The capacitance values shown in the manufacturer's technical data, or test specifications, normally are taken in accordance with Standard RS-191.

The equipment designer is therefore cautioned to make allowance for the actual capaci-

tance values which will exist in any normal application. Measurements should be taken with the socket and mounting which represent approximate final layout if capacitance values are highly significant in the design.

HIGH VOLTAGE - Normal operating voltages used with the 4CX35,000C are deadly, and the equipment must be designed properly and operating precautions must be followed. Design all equipment so that no one can come in contact with high voltages. All equipment must include safety enclosures for high-voltage circuits and terminals, with interlock switches to open primary circuits of the power supply and to discharge high-voltage condensers whenever access doors are opened. Interlock switches must not be bypassed or "cheated" to allow operation with access doors open. Always remember that HIGH VOLTAGE CAN KILL.

X-RADIATION - High-vacuum tubes operating at voltages higher than 10 kilovolts produce progressively more dangerous X-ray radiation as the voltage is increased. The 4CX35,000C, operating at its rated voltages and currents, is a potential X-ray hazard. Only limited shielding is afforded by the tube envelope. Moreover, the X-ray radiation level can increase significantly with aging and gradual deterioration, due to leakage paths or emission characteristics as they are affected by the high voltage. X-ray shielding must be provided on all sides of tubes operating at these voltages to provide adequate protection throughout the tube's life. Periodic checks on the X-ray level should be made, and the tube should never be operated without adequate shielding in place when voltages above 10 kilovolts are in use. Lead glass, which attenuates X-rays, is available for viewing windows. If there is any doubt as to the requirement for or the adequacy of shielding, an expert in this field should be contacted to perform an X-ray survey of the equipment.

Operation of high-voltage equipment with interlock switches "cheated" and cabinet doors open in order to be better able to locate an equipment malfunction can result in serious X-ray exposure.

SPECIAL APPLICATIONS - If it is desired to operate this tube under conditions widely different from those given here, write to Power Grid Tube Product Manager, EIMAC Division of Varian, 301 Industrial Way, San Carlos, California 94070 for information and recommendations.

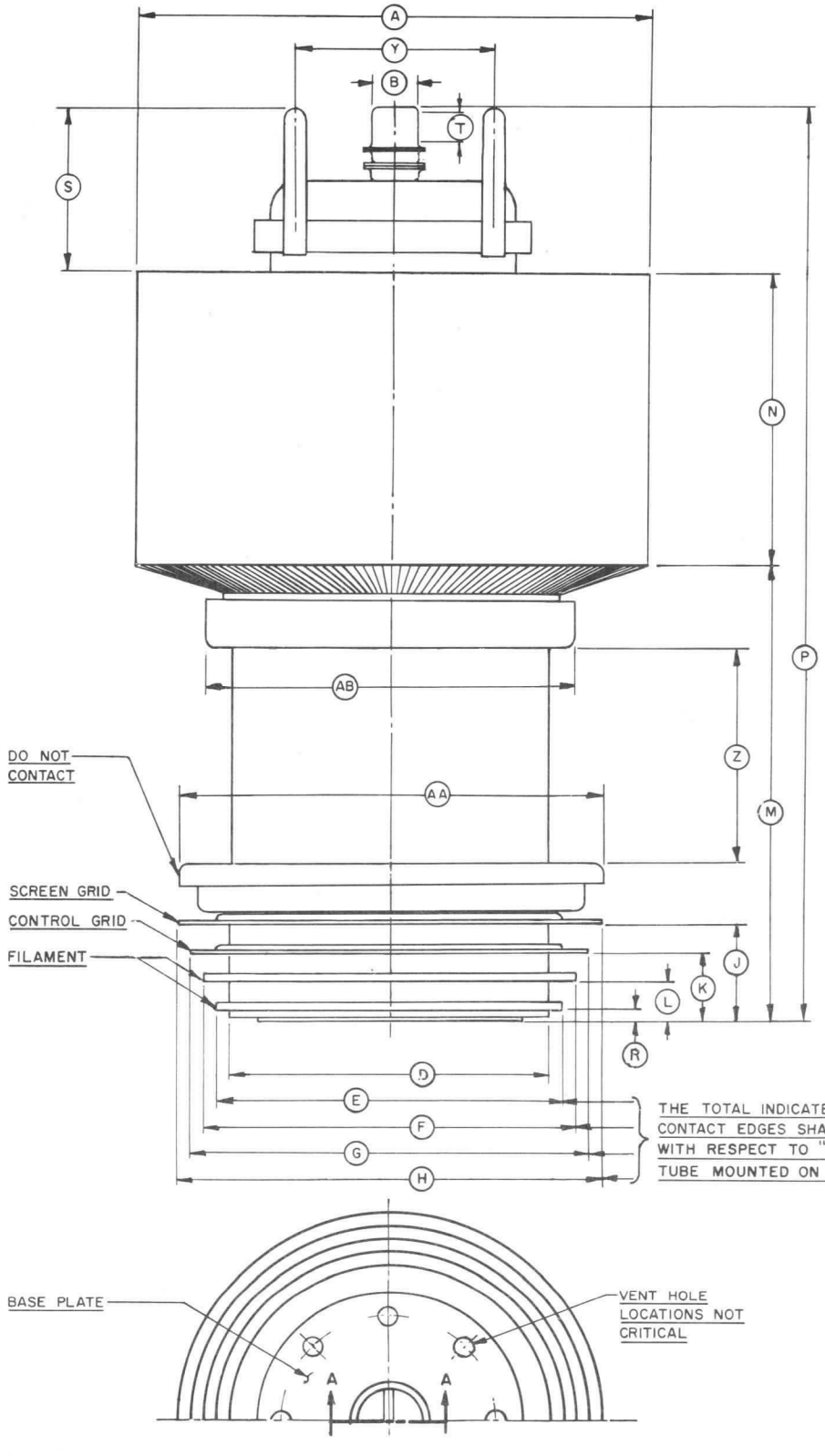

DIMENSIONAL DATA				
DIM.	INCHES		MILLIMETERS	
	MIN.	MAX.	MIN.	MAX.
A	9.500	9.750	241.30	247.65
B	0.860	0.890	21.84	22.60
D	5.980	6.020	151.89	152.91
E	6.510	6.560	165.35	166.62
F	6.980	7.020	177.29	178.31
G	7.480	7.520	189.99	191.01
H	7.975	8.015	202.57	203.58
J	1.750	1.800	44.45	45.72
K	1.220	1.270	30.99	32.26
L	0.690	0.740	17.53	18.80
M	8.442	8.692	214.43	220.78
N	5.375	5.625	136.52	142.88
P	17.070	17.340	433.58	440.44
R	0.173	0.213	4.40	5.41
S	3.062 (1)		77.77 (1)	
T	0.485	0.515	12.32	13.08
V	— —	0.135	— —	3.43
W	1.250	1.270	31.75	32.26
X	0.490	0.530	12.45	13.46
Y	4.500 (1)		114.30 (1)	
Z	3.750 (1)		95.25 (1)	
AA	8.000 (1)		203.20 (1)	
AB	6.875 (1)		174.63 (1)	

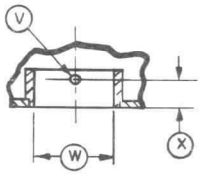

SECTION A–A
ROTATED 180°

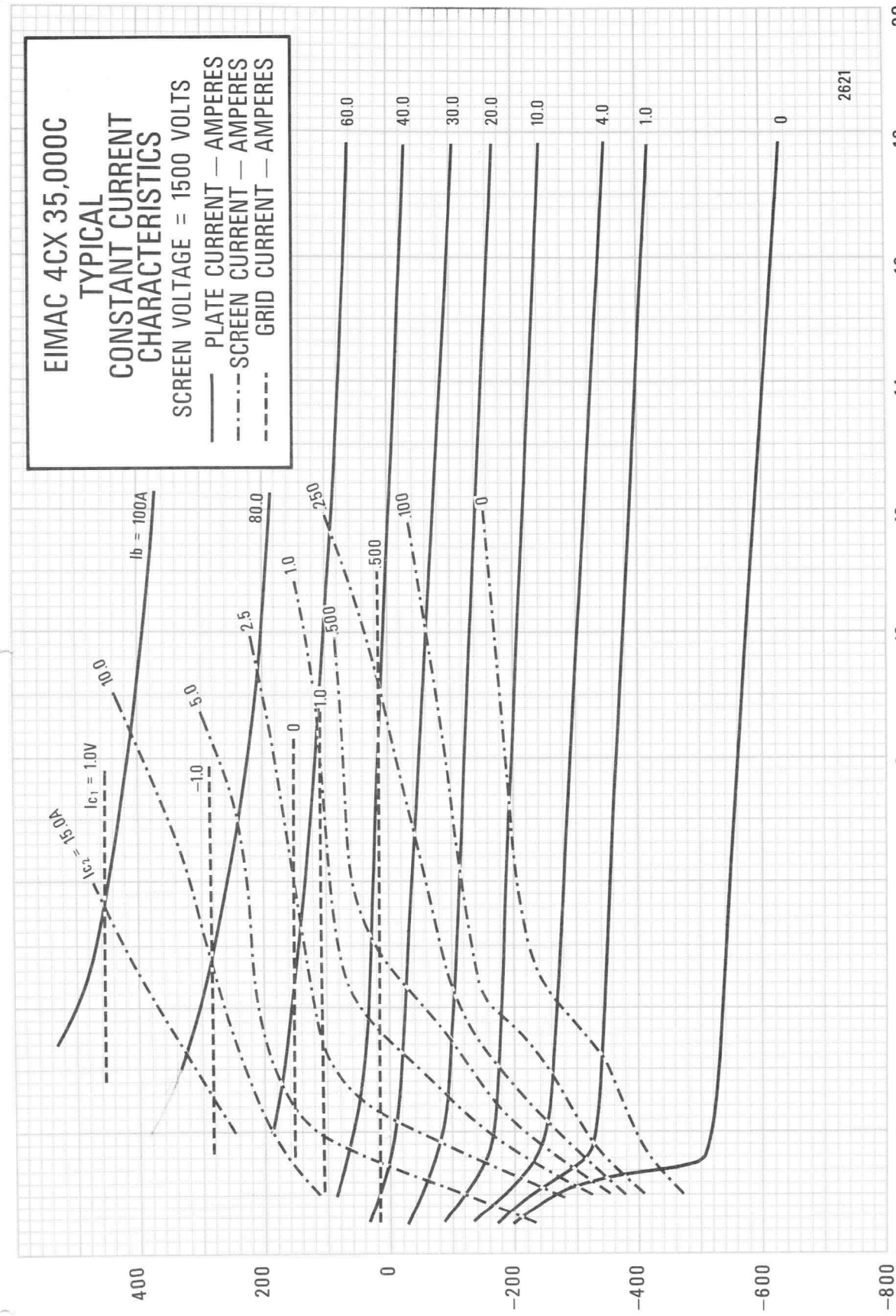
EIMAC 4CX 35,000C
TYPICAL
CONSTANT CURRENT
CHARACTERISTICS
SCREEN VOLTAGE = 1500 VOLTS
PLATE CURRENT — AMPERES
SCREEN CURRENT — AMPERES
GRID CURRENT — AMPERES
Ib = 100A
80.0
60.0
40.0
30.0
20.0
10.0
4.0
1.0
0
2.5
1.0
.500
.250
.100
.500
1.0
0
-1.0
5.0
10.0
Ic1 = 1.0V
Ic2 = 15.0A
2621
GRID VOLTAGE—VOLTS
400
200
0
-200
-400
-600
-800
0
2
4
6
8
10
12
14
16
18
20
PLATE VOLTAGE—KILOVOLTS

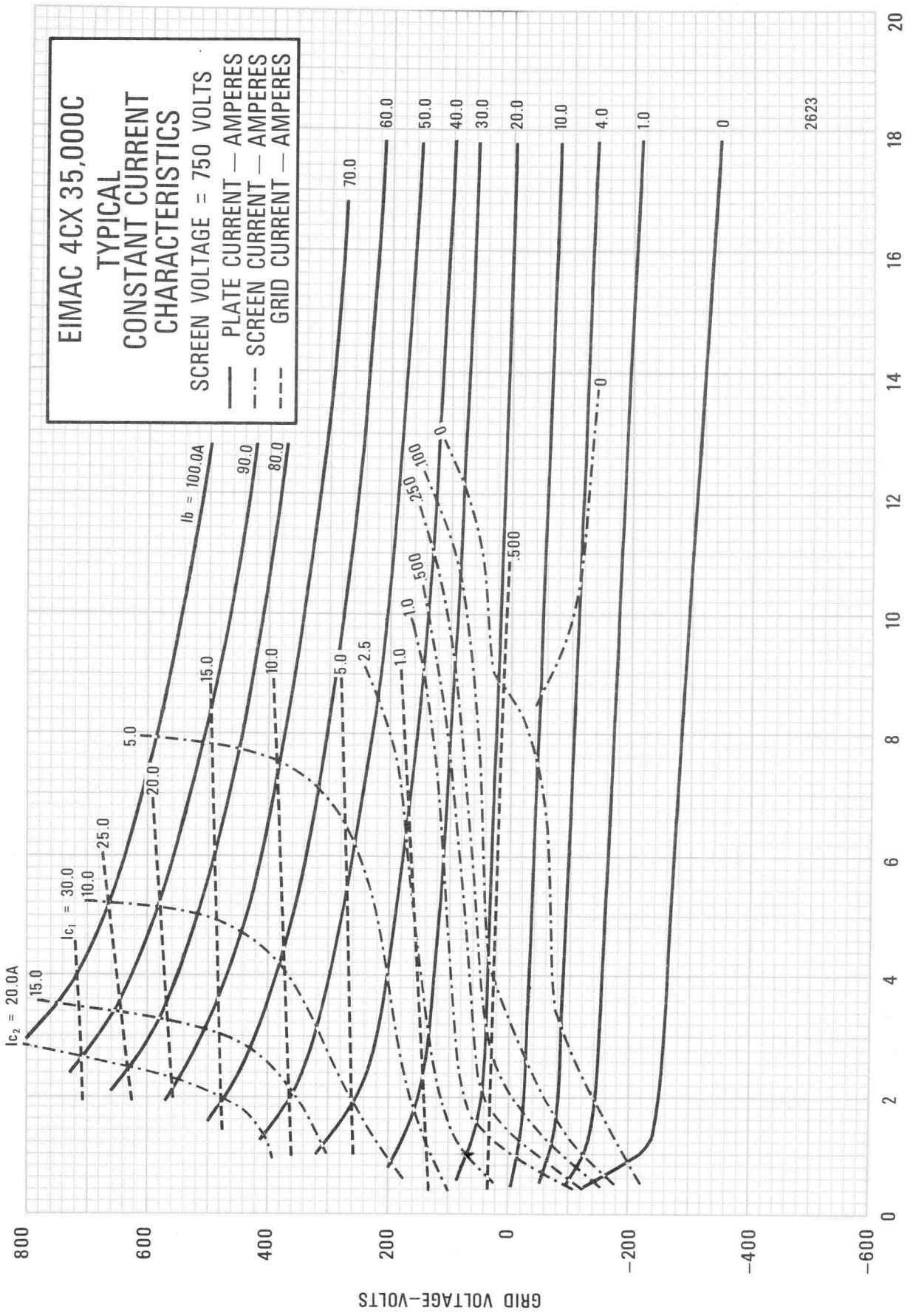
EIMAC 4CX 35,000C
TYPICAL
CONSTANT CURRENT
CHARACTERISTICS
SCREEN VOLTAGE = 750 VOLTS
PLATE CURRENT — AMPERES
SCREEN CURRENT — AMPERES
GRID CURRENT — AMPERES
Ic2 = 20.0A
Ic1 = 30.0
Ib = 100.0A
90.0
80.0
70.0
60.0
50.0
40.0
30.0
20.0
15.0
10.0
5.0
2.5
1.0
500
250
100
0
4.0
2623
GRID VOLTAGE—VOLTS
PLATE VOLTAGE—KILOVOLTS
800
600
400
200
0
-200
-400
-600
0
2
4
6
8
10
12
14
16
18
20

TECHNICAL DATA

8349
4CX35,000C

RADIAL-BEAM
POWER TETRODE

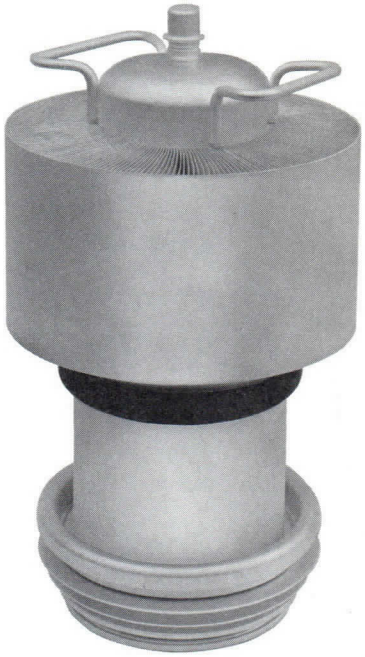

The EIMAC 8349/4CX35,000C is a ceramic/metal, forced-air cooled power tetrode intended for use at the 50 to 150 kilowatt output power level. It is recommended for use as a Class-C rf amplifier or oscillator, a Class-AB rf linear amplifier, or a Class-AB push-pull af amplifier or modulator. The 8349/4CX35,000C is also useful as a plate and screen modulated Class-C rf amplifier.

The forced-air cooled anode is rated at 35 kilowatts maximum dissipation.

GENERAL CHARACTERISTICS [1]

ELECTRICAL

Filament: Thoriated Tungsten	
Voltage	10.0 V
Current, at 10.0 volts	295 A
Amplification Factor (Average):	
Grid to Screen	4.5
Direct Interelectrode Capacitances (grounded cathode)[2]	
Cin	440 pF
Cout	55 pF
Cgp	2.3 pF
Frequency of Maximum Rating:	
CW	30 MHz

1. Characteristics and operating values are based upon performance tests. These figures may change without notice as the result of additional data or product refinement. EIMAC Division of Varian should be consulted before using this information for final equipment design.
2. Capacitance values are for a cold tube as measured in a special shielded fixture in accordance with Electronic Industries Association Standard RS-191.

MECHANICAL

Maximum Overall Dimensions:	
Length	17.34 in; 440.4 mm
Diameter	9.75 in; 247.7 mm
Net Weight	50 lb; 22.7 kg
Operating Position	Vertical, base up or down
Maximum Operating Temperature:	
Ceramic/Metal Seals	250°C
Anode Core	250°C
Cooling	Forced Air
Base	Special, graduated rings
Recommended Socket	EIMAC SK-1500 Series

(Revised 9-1-75) © 1963, 1967, 1970, 1975 by Varian Printed in U.S.A.

RADIO FREQUENCY LINEAR AMPLIFIER GRID DRIVEN

Class AB

MAXIMUM RATINGS:

DC PLATE VOLTAGE	20,000	VOLTS
DC SCREEN VOLTAGE	2500	VOLTS
DC PLATE CURRENT	15.0	AMPERES
PLATE DISSIPATION	35,000	WATTS
SCREEN DISSIPATION	1750	WATTS
GRID DISSIPATION	500	WATTS

1. Adjust to specified zero-signal dc plate current.
2. Approximate value.

TYPICAL OPERATION (Frequencies to 30 MHz)
Class AB_1, Grid Driven, Peak Envelope or Modulation Crest Conditions

Plate Voltage	15.0	kVdc
Screen Voltage	1.5	kVdc
Grid Voltage [1]	-400	Vdc
Zero-Signal Plate Current	1.0	Adc
Single Tone Plate Current	5.7	Adc
Single-Tone Screen Current [2]	0.9	Adc
Peak rf Grid Voltage [2]	250	v
Peak Driving Power [2]	0	w
Plate Dissipation	30	kW
Plate Output Power	55	kW
Resonant Load Impedance	1280	Ω

RADIO FREQUENCY POWER AMPLIFIER OR OSCILLATOR

Class C Telegraphy or FM
(Key-Down Conditions)

MAXIMUM RATINGS:

DC PLATE VOLTAGE	20,000	VOLTS
DC SCREEN VOLTAGE	2500	VOLTS
DC PLATE CURRENT	15.0	AMPERES
PLATE DISSIPATION	35,000	WATTS
SCREEN DISSIPATION	1750	WATTS
GRID DISSIPATION	500	WATTS

TYPICAL OPERATION (Frequencies to 30 MHz)

Plate Voltage	10.0	15.0	19.0	kVdc
Screen Voltage	750	750	750	Vdc
Grid Voltage	-425	-480	-550	Vdc
Plate Current	7.5	6.8	6.96	Adc
Screen Current [1]	0.84	0.51	0.80	Adc
Grid Current [1]	0.29	0.23	0.35	Adc
Peak rf Grid Voltage [1]	600	660	730	v
Calculated Driving Power [1]	180	150	258	W
Plate Dissipation	19.3	19.0	21.0	kW
Plate Output Power	55.5	82.5	110	kW

1. Approximate value.

PLATE MODULATED RADIO FREQUENCY POWER AMPLIFIER-GRID DRIVEN

Class C Telephony (Carrier Conditions)

MAXIMUM RATINGS:

DC PLATE VOLTAGE	14,000	VOLTS
DC SCREEN VOLTAGE	2000	VOLTS
DC PLATE CURRENT	15.0	AMPERES
PLATE DISSIPATION [1]	23,000	WATTS
SCREEN DISSIPATION [2]	1750	WATTS
GRID DISSIPATION [2]	500	WATTS

1. Corresponds to 35,000 watts at 100% sine-wave modulation.
2. Average, with or without modulation.

TYPICAL OPERATION (Frequencies to 30 MHz)

Plate Voltage	12.0	kVdc
Screen Voltage	750	Vdc
Grid Voltage	-600	Vdc
Plate Current	5.4	Adc
Screen Current [1]	0.52	Adc
Grid Current [1]	0.16	Adc
Peak af Screen Voltage [2] (100% modulation)	500	v
Peak rf Grid Voltage [1]	740	v
Calculated Driving Power	125	W
Plate Dissipation	13.2	kW
Plate Output Power	55.0	kW
Resonant Load Impedance	1120	Ω

1. Approximate value.
2. Approximate value, depending upon degree of driver modulation.

AUDIO FREQUENCY POWER AMPLIFIER OR MODULATOR

Class AB, Grid Driven (Sinusoidal Wave)

MAXIMUM RATINGS (Per Tube):

DC PLATE VOLTAGE	20,000	VOLTS
DC SCREEN VOLTAGE	2,500	VOLTS
DC PLATE CURRENT	15.0	AMPERES
PLATE DISSIPATION	35,000	WATTS
SCREEN DISSIPATION	1750	WATTS
GRID DISSIPATION	500	WATTS

1. Approximate value.

TYPICAL OPERATION (Two Tubes)

Plate Voltage	12.0	kVdc
Screen Voltage	1.5	kVdc
Grid Voltage[1/3]	-400	Vdc
Zero-Signal Plate Current	3.0	Adc
Max Signal Plate Current	9.2	Adc
Max Signal Screen Current[1]	1.8	Adc
Peak af Grid Voltage[2]	280	v
Max Signal Plate Dissipation[2]	20	kW
Plate Output Power	70	kW
Load Resistance (plate to plate)	2860	Ω

2. Per Tube
3. Adjust to give stated zero-signal plate current.

NOTE: TYPICAL OPERATION data are obtained from direct measurement or by calculation from published characteristic curves. Adjustment of the rf grid voltage to obtain the specified plate current at the specified bias, screen and plate voltages is assumed. If this procedure is followed, there will be little variation in output power when the tube is changed, even though there may be some variation in grid and screen current. The grid and screen currents which result when the desired plate current is obtained are incidental and vary from tube to tube. These current variations cause no difficulty so long as the circuit maintains the correct voltage in the presence of the variations in current. In the case of Class C Service, if grid bias is obtained principally by means of a grid resistor, the resistor must be adjustable to obtain the required bias voltage when the correct rf grid voltage is applied.

RANGE VALUES FOR EQUIPMENT DESIGN

	Min.	Max.	
Heater: Current at 10.0 volts	280	310	A
Interelectrode Capacitances (grounded cathode connection)[2]			
Cin	410	470	pF
Cout	50	60	pF
Cgp	1.5	3.2	pF

2. Capacitance values are for a cold tube as measured in a special shielded fixture in accordance with Electronic Industries Association Standard RS-191.

APPLICATION

MECHANICAL

MOUNTING - The 4CX35,000C must be operated with its axis vertical. The base of the tube may be down or up at the convenience of the circuit designer.

SOCKET - The EIMAC sockets, type SK-1500, and SK-1510 have been designed especially for the concentric base terminals of the 4CX35,000C.

COOLING - The maximum temperature rating for the external surfaces of the 4CX35,000C is 250°C. Sufficient forced-air circulation must be provided to keep the temperature of the anode at the base of the cooling fins and the temperature of the ceramic/metal seals below 250°C.

Air-flow requirements to maintain core temperature at 225°C in 40° ambient air are tabulated below (for operation below 30 megahertz.) These data are for air flowing in the base-to-anode direction.

	Base-to-Anode Air Flow			
	Sea Level		10,000 Feet	
Plate Dissipation* (Watts)	Air Flow (CFM)	Pressure Drop (Inches of Water)	Air Flow (CFM)	Pressure Drop (Inches of Water)
15,000	440	1.0	635	1.44
20,000	650	2.0	935	2.9
25,000	975	3.8	1400	5.5
30,000	1300	6.0	1870	8.6
35,000	1760	9.6	2535	13.8

* Since the power dissipated by the filament represents about 3000 watts and since grid-plus-screen dissipation can, under some conditions, represent another 2250 watts, allowance has been made in preparing this tabulation for an additional 5250 watts dissipation.

The blower selected in a given application must be capable of supplying the desired air flow at a back pressure equal to the pressure drop shown above plus any drop encountered in ducts and filters.

Separate cooling of the tube base is required and is accomplished by directing approximately 120 cfm of air horizontally through the socket from the side. It is preferable to direct this air through three equally spaced ducts.

The well in the center of the baseplate of the tube is a critical area which requires cooling to maintain envelope temperatures less than 250°C. For most applications, 1 to 2 CFM of air directed through the center of the socket is sufficient for this purpose.

At other altitudes and ambient temperatures the flow rate must be modified to obtain equivalent cooling. The flow rate and corresponding pressure differential must be determined individually in such cases, using rated maximum temperatures as the criteria for satisfactory cooling.

ELECTRICAL

FILAMENT OPERATION - The peak emission at rated filament voltage of the EIMAC 4CX35,000C is normally many times the peak emission required for communication service. A small decrease in filament temperature due to reduction of filament voltage can increase the life of the 4CX35,000C by a substantial percentage. It is good practice to determine the nominal filament voltage for a particular application that will not affect the operation of the equipment. This is done by measuring some important parameter of performance such as plate current, power output, or distortion while filament voltage is reduced on the 4CX35,000C. At some point in filament voltage there will be a noticeable reduction in plate current, or power output, or an increase in distortion. Operation may be at a filament voltage slightly higher than that point at which performance appears to deteriorate. This voltage should be measured at the socket with a 1% meter and periodically checked to maintain proper operation.

Filament starting current must be limited to a maximum of 900 amperes.

Voltage between filament and the base plates of tube and SK-1500 socket, must not exceed 100 volts.

GRID OPERATION - The 4CX35,000C grid has a maximum dissipation rating of 500 watts. Precautions should be observed to avoid exceeding this rating. The grid bias and driving power should be kept near the values shown in the "Typical Operation" sections of the data sheet whenever possible. The maximum grid circuit resistance should not exceed 100,000 ohms per tube.

SCREEN OPERATION - The power dissipated by the screen of the 4CX35,000C must not exceed 1750 watts.

Screen dissipation, in cases where there is no ac applied to the screen, is the simple product of the screen voltage and the screen current. If the screen voltage is modulated, the screen dissipation will depend upon loading, driving power, and carrier screen voltage.

Screen dissipation is likely to rise to excessive values when the plate voltage, bias voltage, or plate load are removed with filament and screen voltages applied. Suitable protective means must be provided to limit the screen dissipation to 1750 watts in the event of circuit failure.

PLATE DISSIPATION - The plate-dissipation rating for the 4CX35,000C is 35,000 watts. When the 4CX35,000C is operated as a plate-modulated rf amplifier, under carrier conditions, the maximum plate dissipation is 23,000 watts.

INTERELECTRODE CAPACITANCE - The actual internal interelectrode capacitance of a tube is influenced by many variables in most applications, such as stray capacitance to the chassis, capacitance added by the socket used, stray capacitance between tube terminals, and wiring effects. To control the actual capacitance values within the tube, as the key component involved, the industry and the Military Services use a standard test procedure as described in Electronic Industries Association Standard RS-191. This requires the use of specially constructed test fixtures which effectively shield all external tube leads from each other and eliminates any capacitance reading to "ground". The test is performed on a cold tube. Other factors being equal, controlling internal tube capacitance in this way normally assures good interchangeability of tubes over a period of time, even when the tube may be made by different manufacturers. The capacitance values shown in the manufacturer's technical data, or test specifications, normally are taken in accordance with Standard RS-191.

The equipment designer is therefore cautioned to make allowance for the actual capaci-

tance values which will exist in any normal application. Measurements should be taken with the socket and mounting which represent approximate final layout if capacitance values are highly significant in the design.

HIGH VOLTAGE - Normal operating voltages used with the 4CX35,000C are deadly, and the equipment must be designed properly and operating precautions must be followed. Design all equipment so that no one can come in contact with high voltages. All equipment must include safety enclosures for high-voltage circuits and terminals, with interlock switches to open primary circuits of the power supply and to discharge high-voltage condensers whenever access doors are opened. Interlock switches must not be bypassed or "cheated" to allow operation with access doors open. Always remember that HIGH VOLTAGE CAN KILL.

FAULT PROTECTION - In addition to normal cooling airflow interlock and plate and screen over-current interlocks, it is good practice to protect the tube from internal damage which could result from occasional plate arcing at high plate voltage.

In all cases some protective resistance, at least one or two ohms, should be used in series with the tube anode to absorb power supply stored energy in case a plate arc should occur. Where stored energy is high, it is recommended that some form of electronic crowbar be used which will discharge power supply capacitors in as short a time as possible following indication of start of a plate arc.

X-RADIATION - High-vacuum tubes operating at voltages higher than 10 kilovolts produce progressively more dangerous X-ray radiation as the voltage is increased. The 4CX35,000C, operating at its rated voltages and currents, is a potential X-ray hazard. Only limited shielding is afforded by the tube envelope. Moreover, the X-ray radiation level can increase significantly with aging and gradual deterioration, due to leakage paths or emission characteristics as they are affected by the high voltage. X-ray shielding must be provided on all sides of tubes operating at these voltages to provide adequate protection throughout the tube's life. Periodic checks on the X-ray level should be made, and the tube should never be operated without adequate shielding in place when voltages above 10 kilovolts are in use. Lead glass, which attenuates X-rays, is available for viewing windows. If there is any doubt as to the requirement for or the adequacy of shielding, an expert in this field should be contacted to perform an X-ray survey of the equipment.

Operation of high-voltage equipment with interlock switches "cheated" and cabinet doors open in order to be better able to locate an equipment malfunction can result in serious X-ray exposure.

SPECIAL APPLICATIONS - If it is desired to operate this tube under conditions widely different from those given here, write to Power Grid Tube Product Manager, EIMAC Division of Varian, 301 Industrial Way, San Carlos, California 94070 for information and recommendations.

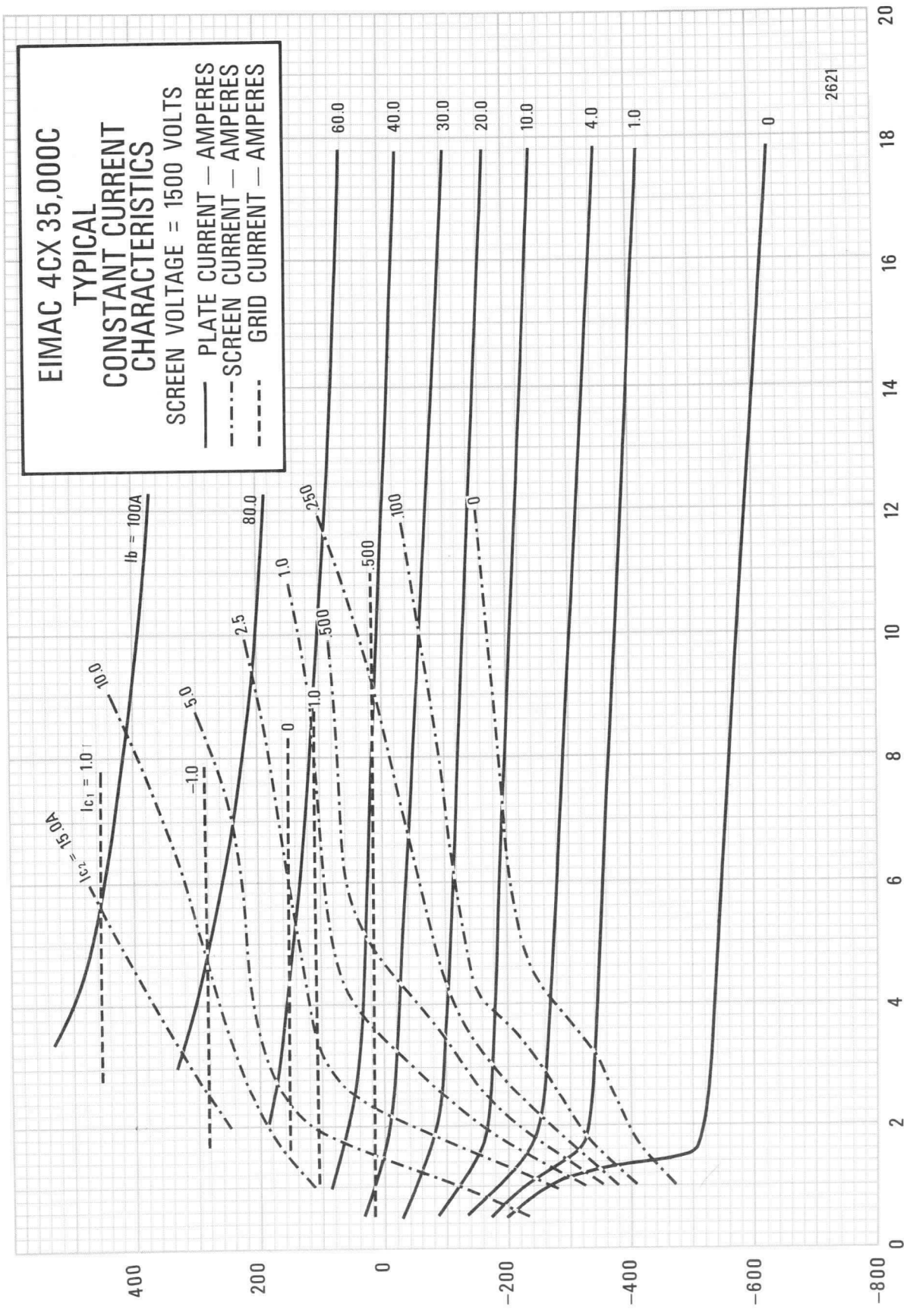
EIMAC 4CX 35,000C
TYPICAL
CONSTANT CURRENT
CHARACTERISTICS
SCREEN VOLTAGE = 1500 VOLTS
PLATE CURRENT — AMPERES
SCREEN CURRENT — AMPERES
GRID CURRENT — AMPERES
Ib = 100A
Ic2 = 15.0A
Ic1 = 1.0
10.0
5.0
-1.0
2.5
80.0
0
1.0
1.0
.500
.250
60.0
.500
.100
40.0
0
30.0
20.0
10.0
4.0
1.0
0
2621
400
200
0
-200
-400
-600
-800
0
2
4
6
8
10
12
14
16
18
20
GRID VOLTAGE—VOLTS
PLATE VOLTAGE—KILOVOLTS

#2621

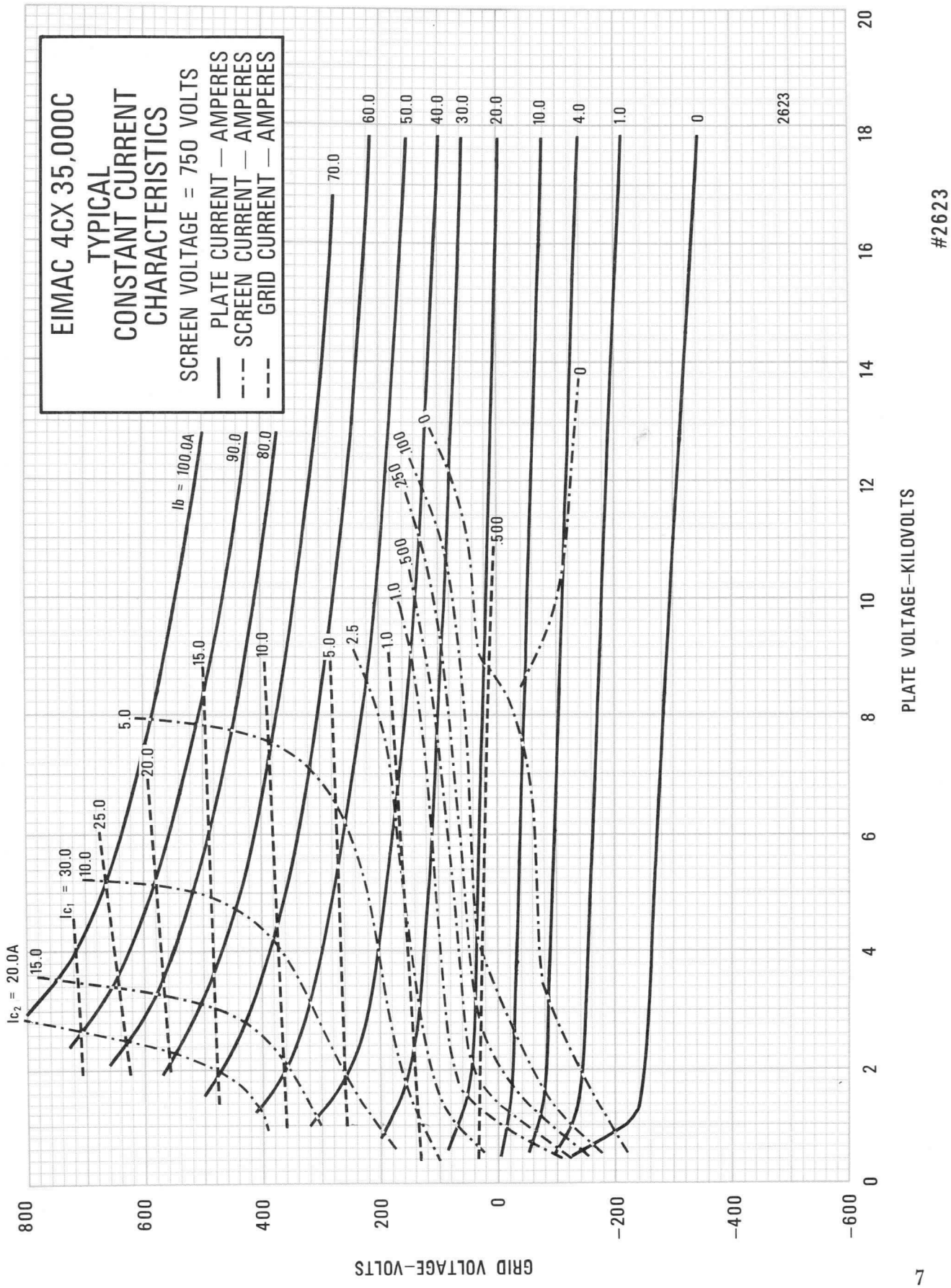
EIMAC 4CX 35,000C
TYPICAL
CONSTANT CURRENT
CHARACTERISTICS
SCREEN VOLTAGE = 750 VOLTS
PLATE CURRENT — AMPERES
SCREEN CURRENT — AMPERES
GRID CURRENT — AMPERES
Ib = 100.0A
90.0
80.0
70.0
60.0
50.0
40.0
30.0
20.0
10.0
4.0
1.0
0
2623
Ic2 = 20.0A
Ic1 = 30.0
15.0
10.0
25.0
20.0
5.0
15.0
10.0
5.0
2.5
1.0
1.0
.500
.250
.100
0
.500
0
PLATE VOLTAGE—KILOVOLTS
0
2
4
6
8
10
12
14
16
18
20
GRID VOLTAGE—VOLTS
800
600
400
200
0
−200
−400
−600

#2623

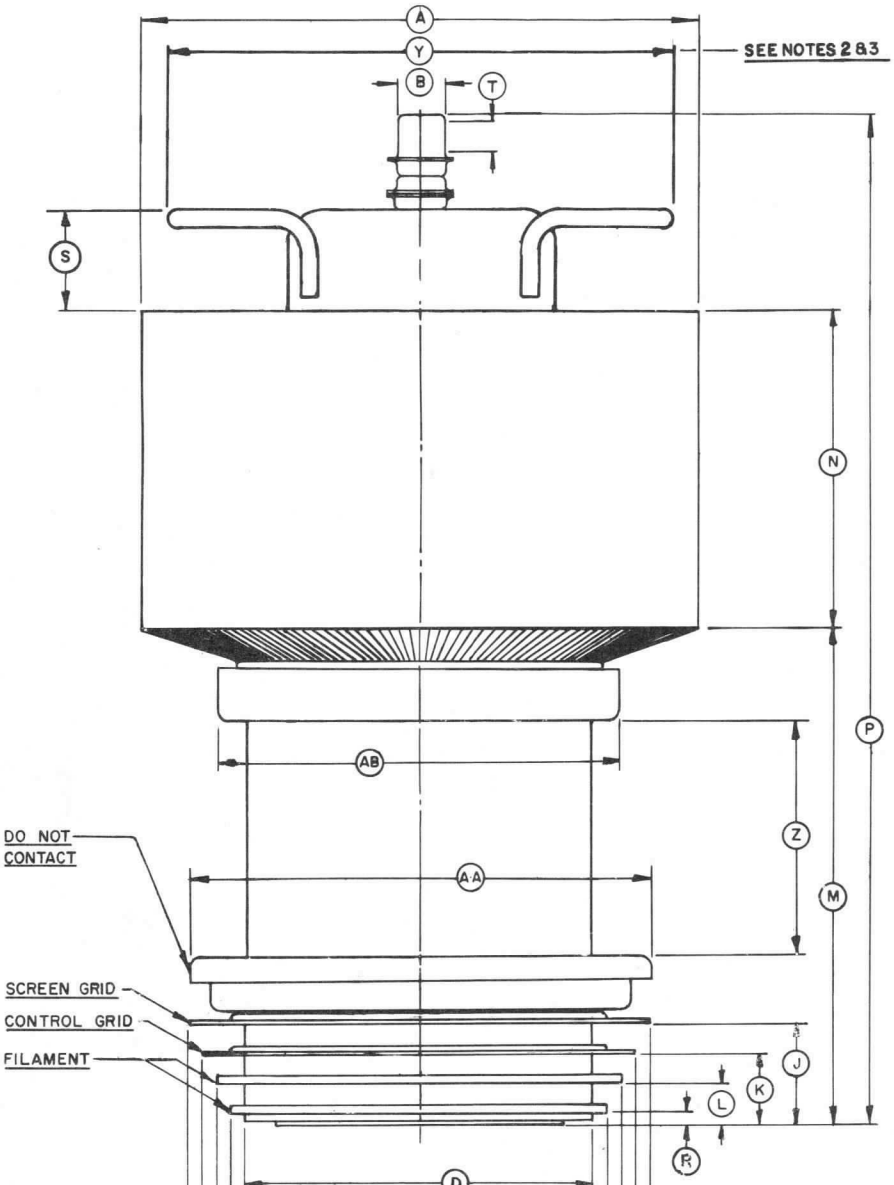

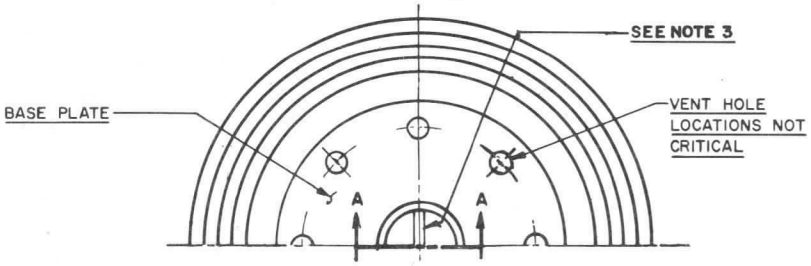

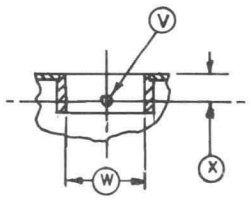

SECTION A–A

DIMENSIONAL DATA				
DIM.	INCHES		MILLIMETERS	
	MIN.	MAX.	MIN.	MAX.
A	9.500	9.750	241.30	247.65
B	0.860	0.890	21.84	22.60
D	5.980	6.020	151.89	152.91
E	6.510	6.560	165.35	166.62
F	6.980	7.020	177.29	178.31
G	7.480	7.520	189.99	191.01
H	7.975	8.015	202.57	203.58
J	1.750	1.800	44.45	45.72
K	1.220	1.270	30.99	32.26
L	0.690	0.740	17.53	18.80
M	8.442	8.692	214.43	220.78
N	5.375	5.625	136.52	142.88
P	17.070	17.340	433.58	440.44
R	0.173	0.213	4.40	5.41
S	1.750		44.45	
T	0.485	0.515	12.32	13.08
V	— —	0.135	— —	3.43
W	1.250	1.270	31.75	32.26
X	0.490	0.530	12.45	13.46
Y	— —	8.750	— —	222.25
Z	3.750		95.25	
AA	8.000		203.20	
AB	6.875		174.63	

NOTES:
1. REFERENCE DIMENSIONS ARE FOR INFORMATION ONLY AND ARE NOT REQUIRED FOR INSPECTION PURPOSES.
2. DIM. Y IS MAXIMUM DIA. ACROSS CORNERS
3. HANDLE LATERAL AXIS ORIENTATION WITH BASE LOCK PIN IS AS SHOWN.

07 09 83 16 25

SEP 07 '83 11:24 001 EEV EMFD NY P.01

EEV, INC.
7 Westchester Plaza
Elmsford, New York 10523
Telephone (914) 592-6050
Telex 646180

FAX NUMBER - (914) 592-8342 GROUP 3

DATE Sept. 7th

TO David Wilcox

FROM C. Thews

NO. OF PAGES TO FOLLOW 10

COMMENTS:

Reference: Our US9457 For RFQ 25
Type 4CX35000C

GW

ELECTRONIC INDUSTRIES ASSOCIATION

2001 EYE STREET, N. W.
WASHINGTON, D. C. 20006

TELEPHONE: (202) 659-2200
CABLES: ELECTRON WASHINGTON DC

Announcement

of

Electron Device Type Reregistration

Release No. 4123C(final)

February 10, 1976

E. I. A.
REGISTRATION
FILE

The Joint Electron Device Engineering Council announced the proposed reregistration of the following electron device designation:

8349

on December 2, 1975.

This announcement is notice that the proposed reregistration covered by Release No. 4123, dated February 4, 1963, may be considered "FINAL".

SEP 07 '83 11:26 001 FEV FMED NY P.03

5 + Att

ELECTRONIC INDUSTRIES ASSOCIATION

2001 EYE STREET, N. W.
WASHINGTON, D. C. 20006

TELEPHONE: 202 | 659-2300
CABLES: ELECTRON WASHINGTON DC

E. I. A.
REGISTRATION
FILE

Announcement

of

Electron Device Reregistration

Release No. 4123C(Tentative*)

December 2, 1975

The Joint Electron Device Engineering Council announced the registration of the following electron device designation:

8349

on February 4, 1963, in Release No. 4123, under the sponsorhsip of Eimac Division of Varian

The sponsor now proposes reregistration as based on the attached data sheet. A summary of the changes which have been made are as follows:

1. Page 1 - New photograph, as lifting handles have changed.
2. Page 3 - Revised cooling data in tabulation.
3. Page 5 - Paragraph added on FAULT PROTECTION.
4. Page 8 - Revised outline drawing.

*Unless valid written objection to this reregistration is lodged with the EIA Type Administration Office at the above address prior to February 2, 1975 this reregistration will be made and this information will be considered "FINAL".

8349
4CX35,000

TECHNICAL DATA

RADIAL-BEAM
POWER TETROD

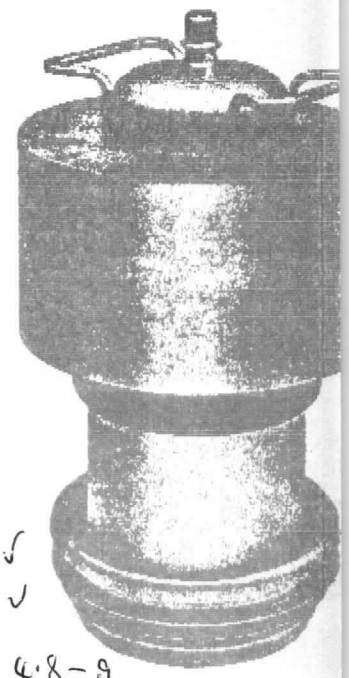

The EIMAC 8349/4CX35,000C is a ceramic/metal, forced-air cooled power tetrode intended for use at the 50 to 150 kilowatt output power level. It is recommended for use as a Class-C rf amplifier or oscillator, a Class-AB rf linear amplifier, or a Class-AB push-pull af amplifier or modulator. The 8349/4CX35,000C is also useful as a plate and screen modulated Class-C rf amplifier.

The forced-air cooled anode is rated at 35 kilowatts maximum dissipation.

GENERAL CHARACTERISTICS [1]

ELECTRICAL

Filament: Thoriated Tungsten		
Voltage	10.0	V
Current, at 10.0 volts	295	A
Amplification Factor (Average):		
Grid to Screen	4.5	
Direct Interelectrode Capacitances (grounded cathode)[2]		
Cin	440	pF
Cout	55	pF
Cgp	2.3	pF
Frequency of Maximum Rating:		
CW	30	MHz

1. Characteristics and operating values are based upon performance tests. These figures may change without notice as the result of additional data or product refinement. EIMAC Division of Varian should be consulted before using this information for final equipment design.
2. Capacitance values are for a cold tube as measured in a special shielded fixture in accordance with Electronic Industries Association Standard RS-191.

MECHANICAL

Maximum Overall Dimensions:	
Length	17.34 in; 440.4 mm
Diameter	9.75 in; 247.7 mm
Net Weight	50 lb; 22.7 kg
Operating Position	Vertical, base up or down
Maximum Operating Temperature:	
Ceramic/Metal Seals	250°C
Anode Core	250°C
Cooling	Forced Air
Base	Special, graduated rings
Recommended Socket	EIMAC SK-1500 Series

(Revised 9-1-75) © 1963, 1967, 1970, 1975 by Varian

Printed in U.S.A.

RADIO FREQUENCY LINEAR AMPLIFIER GRID DRIVEN

Class AB

MAXIMUM RATINGS:

DC PLATE VOLTAGE	20,000	VOLTS
DC SCREEN VOLTAGE	2500	VOLTS
DC PLATE CURRENT	15.0	AMPERES
PLATE DISSIPATION	35,000	WATTS
SCREEN DISSIPATION	1750	WATTS
GRID DISSIPATION	500	WATTS

1. Adjust to specified zero-signal dc plate current.
2. Approximate value.

TYPICAL OPERATION (Frequencies to 30 MHz)
Class AB_1, Grid Driven, Peak Envelope or Modulation Crest Conditions

Plate Voltage	15.0	kVdc
Screen Voltage	1.5	kVdc
Grid Voltage [1]	-400	Vdc
Zero-Signal Plate Current	1.0	Adc
Single Tone Plate Current	5.7	Adc
Single-Tone Screen Current [2]	0.9	Adc
Peak rf Grid Voltage [2]	250	v
Peak Driving Power [2]	0	w
Plate Dissipation	30	kW
Plate Output Power	55	kW
Resonant Load Impedance	1280	Ω

RADIO FREQUENCY POWER AMPLIFIER OR OSCILLATOR

Class C Telegraphy or FM
(Key-Down Conditions)

MAXIMUM RATINGS:

DC PLATE VOLTAGE	20,000	VOLTS
DC SCREEN VOLTAGE	2500	VOLTS
DC PLATE CURRENT	15.0	AMPERES
PLATE DISSIPATION	35,000	WATTS
SCREEN DISSIPATION	1750	WATTS
GRID DISSIPATION	500	WATTS

TYPICAL OPERATION (Frequencies to 30 MHz)

Plate Voltage	10.0	15.0	19.0	kVdc
Screen Voltage	750	750	750	Vdc
Grid Voltage	-425	-480	-550	Vdc
Plate Current	7.5	6.8	6.98	Adc
Screen Current [1]	0.84	0.51	0.80	Adc
Grid Current [1]	0.29	0.23	0.35	Adc
Peak rf Grid Voltage [1]	600	660	730	v
Calculated Driving Power [1]	180	150	258	W
Plate Dissipation	19.3	19.0	21.0	kW
Plate Output Power	55.5	82.5	110	kW

1. Approximate value.

PLATE MODULATED RADIO FREQUENCY POWER AMPLIFIER-GRID DRIVEN

Class C Telephony (Carrier Conditions)

MAXIMUM RATINGS:

DC PLATE VOLTAGE	14,000	VOLTS
DC SCREEN VOLTAGE	2000	VOLTS
DC PLATE CURRENT	15.0	AMPERES
PLATE DISSIPATION [1]	23,000	WATTS
SCREEN DISSIPATION [2]	1750	WATTS
GRID DISSIPATION [2]	500	WATTS

1. Corresponds to 35,000 watts at 100% sine-wave modulation.
2. Average, with or without modulation.

TYPICAL OPERATION (Frequencies to 30 MHz)

Plate Voltage	12.0	kVdc
Screen Voltage	750	Vdc
Grid Voltage	-600	Vdc
Plate Current	5.4	Adc
Screen Current [1]	0.52	Adc
Grid Current [1]	0.16	Adc
Peak af Screen Voltage [2] (100% Modulation)	600	v
Peak rf Grid Voltage [1]	740	v
Calculated Driving Power	125	W
Plate Dissipation	13.2	kW
Plate Output Power	55.0	kW
Resonant Load Impedance	1120	Ω

1. Approximate value.
2. Approximate value, depending upon degree of driver modulation.

AUDIO FREQUENCY POWER AMPLIFIER OR MODULATOR

Class AB, Grid Driven (Sinusoidal Wave)

MAXIMUM RATINGS (Per Tube):

DC PLATE VOLTAGE	20,000	VOLTS
DC SCREEN VOLTAGE	2,500	VOLTS
DC PLATE CURRENT	15.0	AMPERES
PLATE DISSIPATION	35,000	WATTS
SCREEN DISSIPATION	1750	WATTS
GRID DISSIPATION	500	WATTS

1. Approximate value.

TYPICAL OPERATION (Two Tubes)

Plate Voltage	12.0	kVdc
Screen Voltage	1.5	kVdc
Grid Voltage[1,3]	-400	Vdc
Zero-Signal Plate Current	3.0	Adc
Max Signal Plate Current	9.2	Adc
Max Signal Screen Current[1]	1.8	Adc
Peak af Grid Voltage[2]	280	v
Max Signal Plate Dissipation[2]	20	kW
Plate Output Power	70	kW
Load Resistance (plate to plate)	2860	Ω

2. Per Tube
3. Adjust to give stated zero-signal plate current.

NOTE: TYPICAL OPERATION data are obtained from direct measurement or by calculation from published characteristic curves. Adjustment of the rf grid voltage to obtain the specified plate current at the specified bias, screen and plate voltages is assumed. If this procedure is followed, there will be little variation in output power when the tube is changed, even though there may be some variation in grid and screen current. The grid and screen currents which result when the desired plate current is obtained are incidental and vary from tube to tube. These current variations cause no difficulty so long as the circuit maintains the correct voltage in the presence of the variations in current. In the case of Class C Service, if grid bias is obtained principally by means of a grid resistor, the resistor must be adjustable to obtain the required bias voltage when the correct rf grid voltage is applied.

RANGE VALUES FOR EQUIPMENT DESIGN

	Min.	Max.	
Heater: Current at 10.0 volts	280	310	A
Interelectrode Capacitances (grounded cathode connection)[2]			
Cin	410	470	pF
Cout	50	60	pF
Cgp	1.5	3.2	pF

2. Capacitance values are for a cold tube as measured in a special shielded fixture in accordance with Electronic Industries Association Standard RS-191.

APPLICATION

MECHANICAL

MOUNTING - The 4CX35,000C must be operated with its axis vertical. The base of the tube may be down or up at the convenience of the circuit designer.

SOCKET - The EIMAC sockets, type SK-1500, and SK-1510 have been designed especially for the concentric base terminals of the 4CX35,000C.

COOLING - The maximum temperature rating for the external surfaces of the 4CX35,000C is 250°C. Sufficient forced-air circulation must be provided to keep the temperature of the anode at the base of the cooling fins and the temperature of the ceramic/metal seals below 250°C.

Air-flow requirements to maintain core temperature at 225°C in 40° ambient air are tabulated below (for operation below 30 megahertz.) These data are for air flowing in the base-to-anode direction.

	Base-to-Anode Air Flow			
	Sea Level		10,000 Feet	
Plate Dissipation* (Watts)	Air Flow (CFM)	Pressure Drop (Inches of Water)	Air Flow (CFM)	Pressure Drop (Inches of Water)
15,000	440	1.0	635	1.44
20,000	650	2.0	935	2.9
25,000	975	3.8	1400	5.5
30,000	1300	6.0	1870	8.6
35,000	1760	9.6	2535	13.8

* Since the power dissipated by the filament represents about 3000 watts and since grid-plus-screen dissipation can, under some conditions, represent another 2250 watts, allowance has been made in preparing this tabulation for an additional 5250 watts dissipation.

The blower selected in a given application must be capable of supplying the desired air flow at a back pressure equal to the pressure drop shown above plus any drop encountered in ducts and filters.

Separate cooling of the tube base is required and is accomplished by directing approximately 120 cfm of air horizontally through the socket from the side. It is preferable to direct this air through three equally spaced ducts.

The well in the center of the baseplate of the tube is a critical area which requires cooling to maintain envelope temperatures less than 250°C. For most applications, 1 to 2 CFM of air directed through the center of the socket is sufficient for this purpose.

At other altitudes and ambient temperatures the flow rate must be modified to obtain equivalent cooling. The flow rate and corresponding pressure differential must be determined individually in such cases, using rated maximum temperatures as the criteria for satisfactory cooling.

ELECTRICAL

FILAMENT OPERATION - The peak emission at rated filament voltage of the EIMAC 4CX35,000C is normally many times the peak emission required for communication service. A small decrease in filament temperature due to reduction of filament voltage can increase the life of the 4CX35,000C by a substantial percentage. It is good practice to determine the nominal filament voltage for a particular application that will not affect the operation of the equipment. This is done by measuring some important parameter of performance such as plate current, power output, or distortion while filament voltage is reduced on the 4CX35,000C. At some point in filament voltage there will be a noticeable reduction in plate current, or power output, or an increase in distortion. Operation may be at a filament voltage slightly higher than that point at which performance appears to deteriorate. This voltage should be measured at the socket with a 1% meter and periodically checked to maintain proper operation.

Filament starting current must be limited to a maximum of 900 amperes.

Voltage between filament and the base plates of tube and SK-1500 socket, must not exceed 100 volts.

GRID OPERATION - The 4CX35,000C grid has a maximum dissipation rating of 500 watts. Precautions should be observed to avoid exceeding this rating. The grid bias and driving power should be kept near the values shown in the "Typical Operation" sections of the data sheet whenever possible. The maximum grid circuit resistance should not exceed 100,000 ohms per tube.

SCREEN OPERATION - The power dissipated by the screen of the 4CX35,000C must not exceed 1750 watts.

Screen dissipation, in cases where there is no ac applied to the screen, is the simple product of the screen voltage and the screen current. If the screen voltage is modulated, the screen dissipation will depend upon loading, driving power, and carrier screen voltage.

Screen dissipation is likely to rise to excessive values when the plate voltage, bias voltage, or plate load are removed with filament and screen voltages applied. Suitable protective means must be provided to limit the screen dissipation to 1750 watts in the event of circuit failure.

PLATE DISSIPATION - The plate-dissipation rating for the 4CX35,000C is 35,000 watts. When the 4CX35,000C is operated as a plate-modulated rf amplifier, under carrier conditions, the maximum plate dissipation is 23,000 watts.

INTERELECTRODE CAPACITANCE - The actual internal interelectrode capacitance of a tube is influenced by many variables in most applications, such as stray capacitance to the chassis, capacitance added by the socket used, stray capacitance between tube terminals, and wiring effects. To control the actual capacitance values within the tube, as the key component involved, the industry and the Military Services use a standard test procedure as described in Electronic Industries Association Standard RS-191. This requires the use of specially constructed test fixtures which effectively shield all external tube leads from each other and eliminates any capacitance reading to "ground". The test is performed on a cold tube. Other factors being equal, controlling internal tube capacitance in this way normally assures good interchangeability of tubes over a period of time, even when the tube may be made by different manufacturers. The capacitance values shown in the manufacturer's technical data, or test specifications, normally are taken in accordance with Standard RS-191.

The equipment designer is therefore cautioned to make allowance for the actual capaci-

tance values which will exist in any normal application. Measurements should be taken with the socket and mounting which represent approximate final layout if capacitance values are highly significant in the design.

HIGH VOLTAGE - Normal operating voltages used with the 4CX35,000C are deadly, and the equipment must be designed properly and operating precautions must be followed. Design all equipment so that no one can come in contact with high voltages. All equipment must include safety enclosures for high-voltage circuits and terminals, with interlock switches to open primary circuits of the power supply and to discharge high-voltage condensers whenever access doors are opened. Interlock switches must not be bypassed or "cheated" to allow operation with access doors open. Always remember that HIGH VOLTAGE CAN KILL.

FAULT PROTECTION - In addition to normal cooling airflow interlock and plate and screen over-current interlocks, it is good practice to protect the tube from internal damage which could result from occasional plate arcing at high plate voltage.

In all cases some protective resistance, at least one or two ohms, should be used in series with the tube anode to absorb power supply stored energy in case a plate arc should occur. Where stored energy is high, it is recommended that some form of electronic crowbar be used which will discharge power supply capacitors in as short a time as possible following indication of start of a plate arc.

X-RADIATION - High-vacuum tubes operating at voltages higher than 10 kilovolts produce progressively more dangerous X-ray radiation as the voltage is increased. The 4CX35,000C, operating at its rated voltages and currents, is a potential X-ray hazard. Only limited shielding is afforded by the tube envelope. Moreover, the X-ray radiation level can increase significantly with aging and gradual deterioration, due to leakage paths or emission characteristics as they are affected by the high voltage. X-ray shielding must be provided on all sides of tubes operating at these voltages to provide adequate protection throughout the tube's life. Periodic checks on the X-ray level should be made, and the tube should never be operated without adequate shielding in place when voltages above 10 kilovolts are in use. Lead glass, which attenuates X-rays, is available for viewing windows. If there is any doubt as to the requirement for or the adequacy of shielding, an expert in this field should be contacted to perform an X-ray survey of the equipment.

Operation of high-voltage equipment with interlock switches "cheated" and cabinet doors open in order to be better able to locate an equipment malfunction can result in serious X-ray exposure.

SPECIAL APPLICATIONS - If it is desired to operate this tube under conditions widely different from those given here, write to Power Grid Tube Product Manager, EIMAC Division of Varian, 301 Industrial Way, San Carlos, California 94070 for information and recommendations.

4CX35,000C

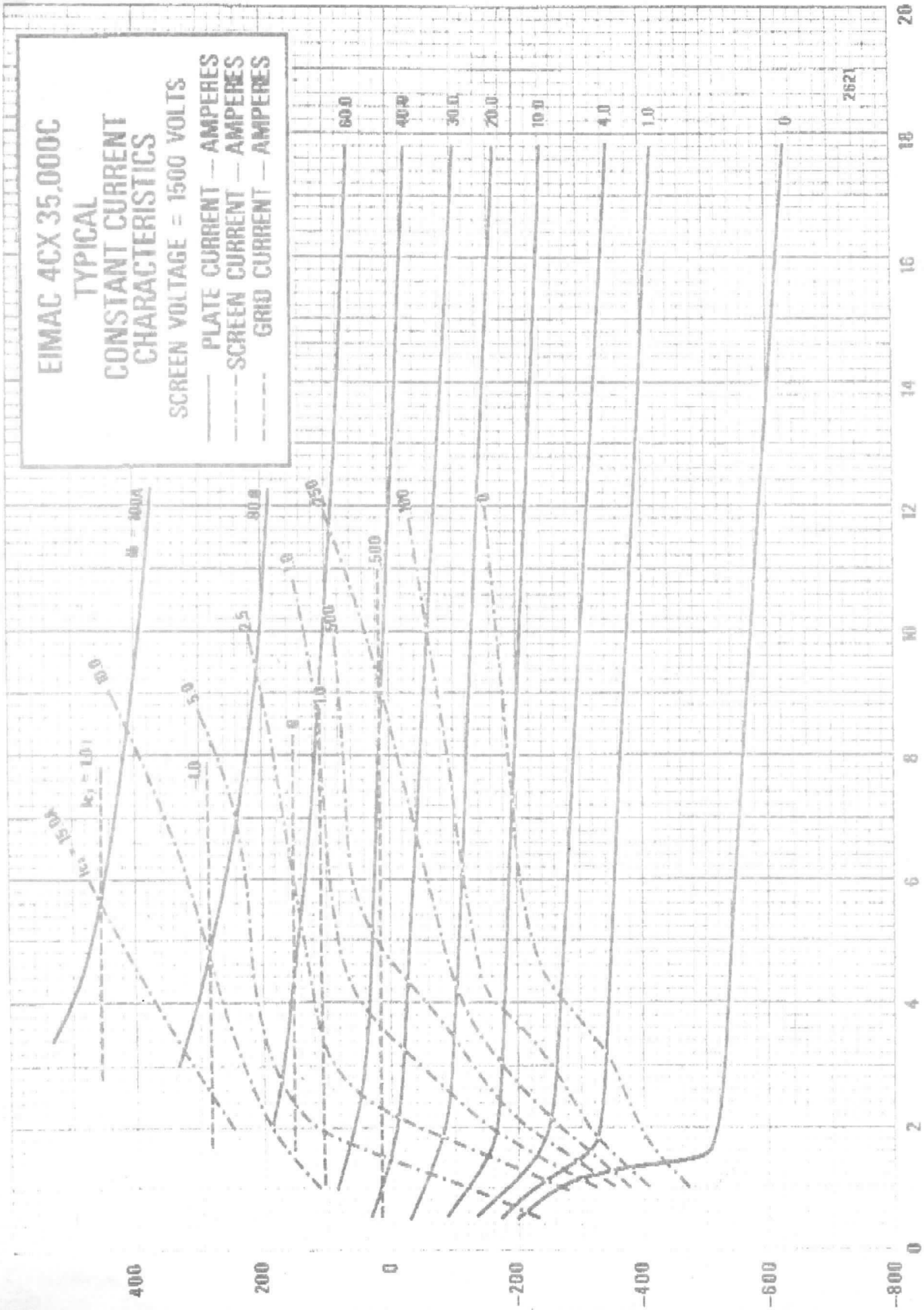
EIMAC 4CX 35,000C
TYPICAL
CONSTANT CURRENT
CHARACTERISTICS
SCREEN VOLTAGE = 1500 VOLTS
—— PLATE CURRENT — AMPERES
-·-·- SCREEN CURRENT — AMPERES
- - - - GRID CURRENT — AMPERES
#2621
PLATE VOLTAGE—KILOVOLTS
GRID VOLTAGE—VOLTS

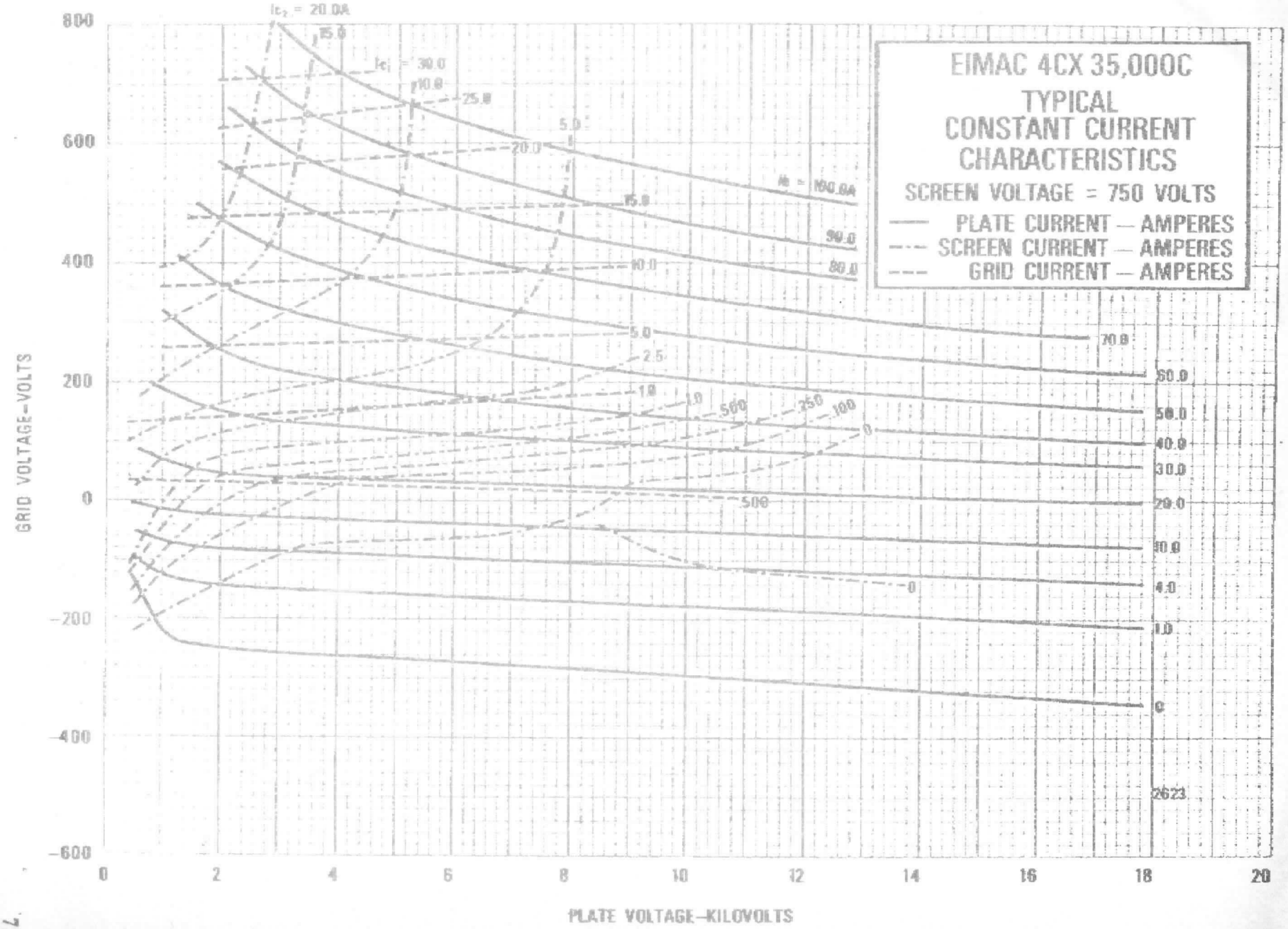
EIMAC 4CX 35,000C
TYPICAL
CONSTANT CURRENT
CHARACTERISTICS
SCREEN VOLTAGE = 750 VOLTS
PLATE CURRENT — AMPERES
SCREEN CURRENT — AMPERES
GRID CURRENT — AMPERES
GRID VOLTAGE—VOLTS
PLATE VOLTAGE—KILOVOLTS
800
600
400
200
0
−200
−400
−600
0
2
4
6
8
10
12
14
16
18
20
I_{c_2} = 20.0A
15.0
I_{c_1} = 30.0
10.0
25.0
5.0
20.0
15.0
I_b = 100.0A
90.0
80.0
40.0
5.0
2.5
1.0
1.0
500
250
100
0
500
0
70.0
60.0
50.0
40.0
30.0
20.0
10.0
4.0
1.0
0
2623

#2623

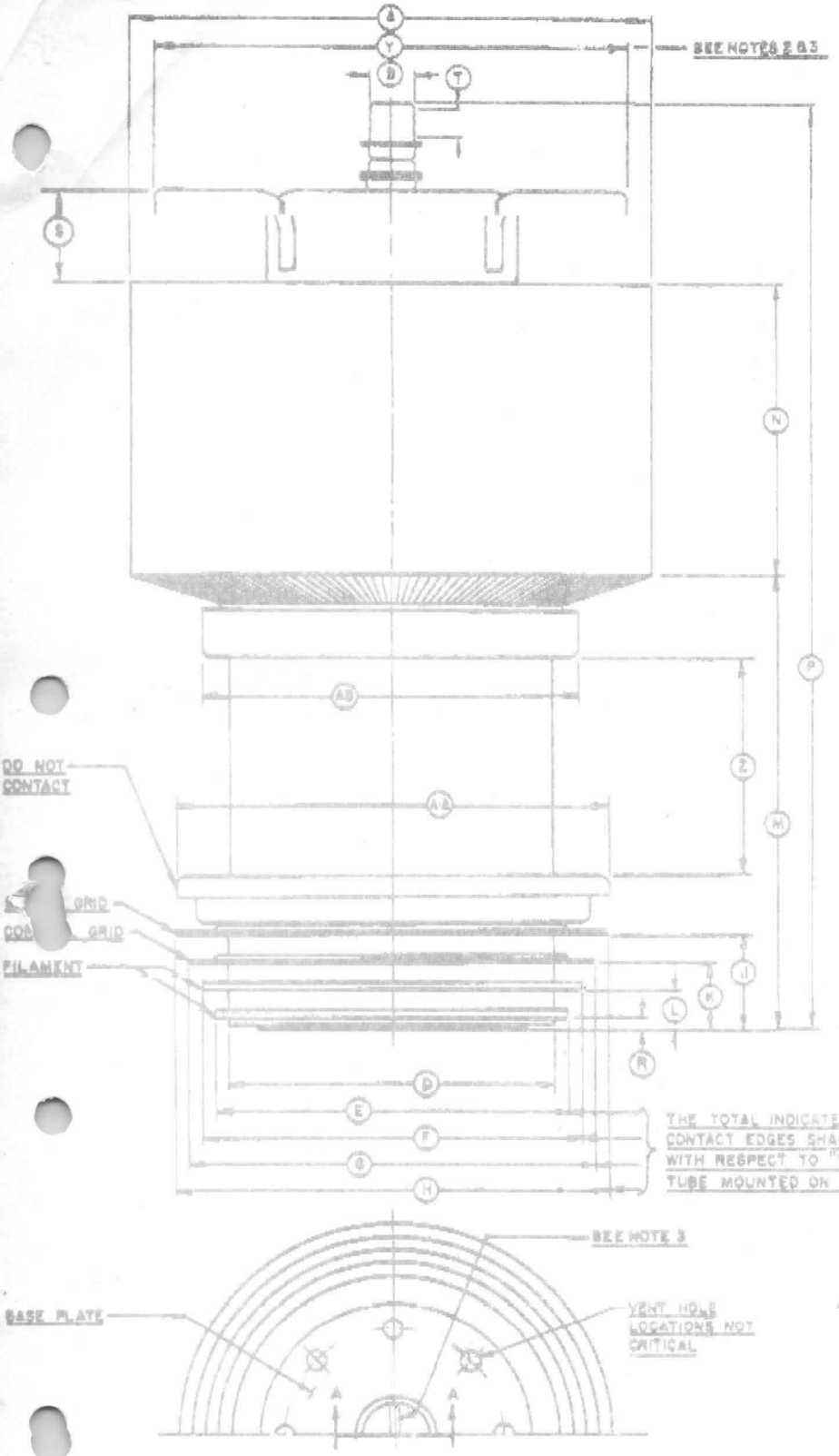

DIMENSIONAL DATA				
DIM.	INCHES		MILLIMETERS	
	MIN.	MAX.	MIN.	MAX.
A	9.500	9.750	241.30	247.65
B	0.860	0.890	21.84	22.60
D	6.000	6.000	171.00	180.01
E	6.510	6.560	165.35	166.62
F	6.980	7.020	177.29	178.31
G	7.480	7.520	189.99	191.01
H	7.975	8.015	202.57	203.58
J	1.750	1.800	44.45	45.72
K	1.220	1.270	30.99	32.26
L	0.690	0.740	17.53	18.80
M	8.442	8.692	214.43	220.78
N	5.375	5.625	136.52	142.88
P	17.070	17.340	433.58	440.44
R	0.173	0.213	4.40	5.41
S	1.750		44.45	
T	0.485	0.515	12.32	13.08
V	— —	0.135	— —	3.43
W	1.250	1.270	31.75	32.26
X	0.490	0.530	12.45	13.46
Y	— —	8.750	— —	222.25
Z	3.750		95.25	
AA	8.000		203.20	
AB	6.875		174.63	

NOTES:
1. REFERENCE DIMENSIONS ARE FOR INFORMATION ONLY AND ARE NOT REQUIRED FOR INSPECTION PURPOSES.
2. DIM. Y IS MAXIMUM DIA. ACROSS CORNERS.
3. HANDLE LATERAL AXIS ORIENTATION WITH BASE LOCK PIN IS AS SHOWN.

TECHNICAL DATA

4CX35,000D HF POWER TETRODE



The EIMAC 4CX35,000D is a ceramic/metal forced-air cooled power tetrode intended for use at the 50 to 150 kW output power level. It is recommended for use as a Class-C rf amplifier, a Class-AB rf linear amplifier, or a Class-AB push-pull audio amplifier or modulator. It is also useful as a plate and screen modulated Class-C rf amplifier.

The tube utilizes a rugged thoriated tungsten mesh cathode. It is interchangeable with the 8349/4CX35,000C and provides improved performance in many applications.

The forced-air cooled anode is rated at 35 kW maximum dissipation.

G E N E R A L C H A R A C T E R I S T I C S [1]

ELECTRICAL

Filament: Thoriated Tungsten		
Voltage	10.0 ± 0.5	V
Current, at 10.0 volts	275	A
Amplification Factor (average)	4.5	
Direct Interelectrode Capacitance (grounded cathode)[2]		
Cin	445	pF
Cout	51	pF
Cgp	2.3	pF
Direct Interelectrode Capacitance (grounded grid)[2]		
Cin	195	pF
Cout	55	pF
Cpk	0.5	pF
Maximum Frequency for Full Ratings (CW)	30	MHz

1. Characteristics and operating values are based on performance tests. These figures may change without notice as the result of additional data or product refinement. Varian EIMAC should be consulted before using this information for final equipment design.
2. Capacitance values are for a cold tube as measured in a special shielded fixture in accordance with Electronic Industries Association Standard RS-191.

MECHANICAL

Maximum Overall Dimensions:	
Length	17.34 In; 44.04 cm
Diameter	9.75 In; 24.77 cm
Net Weight	50 lb; 22.7 kg
Operating	Vertical, base up or down
Maximum Operating Temperature, Anode Core or Ceramic/Metal Seals	250°C
Cooling	Forced Air
Base	Special, graduated rings
Recommended Air-System Socket	EIMAC SK-1500A or SK-1510A
Available Screen Grid Bypass Capacitor Components	2300 pF - EIMAC P/N 149089
	1100 PF - EIMAC P/N 149090
	Required Set of Insulator Bushings - EIMAC P/N 149088
Available Anode Connector Clip	EIMAC ACC-3

RADIO FREQUENCY LINEAR AMPLIFIER
GRID DRIVEN
Class AB

ABSOLUTE MAXIMUM RATINGS:

DC PLATE VOLTAGE	20 KILOVOLTS
DC SCREEN VOLTAGE	2.5 KILOVOLTS
DC GRID VOLTAGE	-2.0 KILOVOLTS
DC PLATE CURRENT	15 AMPERES
PLATE DISSIPATION	35 KILOWATTS
SCREEN DISSIPATION	1750 WATTS
GRID DISSIPATION	500 WATTS

* Approximate; will vary tube to tube.
\# Adjust to specified zero-signal dc plate current.

TYPICAL OPERATION (Frequencies to 30 MHz)
Class AB1, Grid Driven, Peak Envelope or Modulation
Crest Conditions

Plate Voltage	10.00	15.0	kVdc
Screen Voltage	1500	1500	Vdc
Grid Voltage #	-350	-400	Vdc
Zero-Signal Plate Current	2.0	0.91	Adc
Single-Tone Plate Current	8.7	7.9	Adc
Single-Tone Screen Current *	0.23	0.16	Adc
Peak rf Grid Driving Voltage *	287	335	v
Peak Driving Power *	0	0	w
Plate Dissipation *	30	33	kW
Plate Output Power *	56.5	85	kW
Resonant Load Impedance	593	1019	Ohms

395110(Effective March 1986)
VA4898

Printed in U.S.A.

RADIO FREQUENCY POWER AMPLIFIER
Class C Telegraphy or FM
(Key-Down Conditions)

ABSOLUTE MAXIMUM RATINGS:

DC PLATE VOLTAGE	20 KILOVOLTS
DC SCREEN VOLTAGE	2.5 KILOVOLTS
DC GRID VOLTAGE	-2.0 KILOVOLTS
DC PLATE CURRENT	15 AMPERES
PLATE DISSIPATION	35 KILOWATTS
SCREEN DISSIPATION	1750 WATTS
GRID DISSIPATION	500 WATTS

TYPICAL OPERATION (Frequencies to 30 MHz)

Plate Voltage	10.0	15.0	19.0	kVdc
Screen Voltage	750	750	750	Vdc
Grid Voltage	-425	-480	-550	Vdc
Plate Current	7.1	6.6	8.7	Adc
Screen Current *	0.35	0.39	0.25	Adc
Grid Current *	0.17	0.14	0.30	Adc
Peak rf Grid Driving Voltage *	528	570	690	v
Calculated Driving Power *	88	77	197	W
Plate Dissipation *	14.7	15	25	kW
Plate Output Power *	56.6	85	140	kW

* Approximate; will vary tube to tube.

PLATE MODULATED RADIO-FREQUENCY
POWER AMPLIFIER - GRID DRIVEN
Class C Telephony (Carrier Conditions)

ABSOLUTE MAXIMUM RATINGS:

DC PLATE VOLTAGE	17.5 KILOVOLTS
DC SCREEN VOLTAGE	2.0 KILOVOLTS
DC GRID VOLTAGE	-2.0 KILOVOLTS
DC PLATE CURRENT	15 AMPERES
PLATE DISSIPATION **	23 KILOWATTS
SCREEN DISSIPATION #	1750 WATTS
GRID DISSIPATION #	500 WATTS

TYPICAL OPERATION (Frequencies to 30 MHz)

Plate Voltage	10	15	kVdc
Screen Voltage	750	750	Vdc
Grid Voltage	-520	-540	Vdc
Plate Current	7.1	6.9	Adc
Screen Current *	0.22	0.21	Adc
Grid Current *	0.18	0.19	Adc
Peak af Screen Voltage (100% modulation)##	540	530	v
Peak rf Grid Driving Voltage *	640	655	v
Calculated Driving Power *	130	120	W
Plate Dissipation *	10.6	13.6	kW
Plate Output Power *	60	90	kW
Resonant Load Impedance	705	1110	Ohms

* Approximate; will vary tube to tube.
** Corresponds to 35 kilowatts at 100% sine-wave modulation.
\# Average, with or without modulation.
Approximate, depending on degree of driver modulation.

AUDIO FREQUENCY POWER AMPLIFIER
OR MODULATOR
Class AB, Grid Driven (Sinusoidal Wave)

ABSOLUTE MAXIMUM RATINGS:

DC PLATE VOLTAGE	20 KILOVOLTS
DC SCREEN VOLTAGE	2.5 KILOVOLTS
DC GRID VOLTAGE	-2.0 KILOVOLTS
DC PLATE CURRENT	15 AMPERES
PLATE DISSIPATION	35 KILOWATTS
SCREEN DISSIPATION	1750 WATTS
GRID DISSIPATION	500 WATTS

* Approximate; will vary tube to tube.

TYPICAL OPERATION (Two Tubes)

Plate Voltage	10	15	kVdc
Screen Voltage	1500	1500	Vdc
Grid Voltage * #	-350	-410	Vdc
Zero-Signal Plate Current	4.0	1.8	Adc
Max.Signal Plate Current	17.4	15.8	Adc
Max.Signal Screen Current *	0.46	0.32	Adc
Peak af Grid Driving Voltage * ##	287	335	v
Max.Signal Plate Dissipation * ##	30.3	33	kW
Plate Output Power *	113	170	kW
Load Resistance (plate to plate)	1190	2040	Ohms

\# Adjust to give stated zero-signal plate current.
Per tube.

TYPICAL OPERATION values are obtained by calculation from published characteristic curves. To obtain the specified plate current at the specified bias, screen, and plate voltages, adjustment of the rf grid voltage is assumed. If this procedure is followed, there will be little variation in output power when the tube is replaced, even though there may be some variation in grid and screen currents. The grid and screen currents which occur when the desired plate current is obtained are incidental and vary from tube to tube. These current variations cause no performance degradation providing the circuit maintains the correct voltage in the presence of the current variations.

RANGE VALUES FOR EQUIPMENT DESIGN:	MIN.	MAX.	
Filament Current, at 10.0 Volts[1]	260	290	A
Interelectrode Capacitance (grounded cathode connection)[1]			
Cin	410	480	pF
Cout	46	56	pF
Cgp	1.5	3.2	pF
Interelectrode Capacitance (grounded grid connection)[1]			
Cin	185	215	pF
Cout	50	60	pF
Cpk	---	0.6	pF

1 Measured in a specially shielded fixture in accordance with EIA Standard RS-191.

APPLICATION

MECHANICAL

MOUNTING - The 4CX35,000D must be operated with its axis vertical, base up or down at the option of the equipment designer.

SOCKET - Air-system sockets SK-1500A and SK-1510A have been designed especially for the concentric base terminals of the 4CX35,000D. The SK-1510A includes a tube seating & locking device. Special screen bypass capacitor dielectrics are available and the EIMAC part numbers are shown on Page 1.

COOLING - The maximum temperature rating for the external surfaces of the tube is 250°C. Sufficient forced-air cooling must be provided to maintain the anode at the base of the cooling fins, and the ceramic/metal seals, below 250°C.

Air flow requirements to maintain anode core temperature at 225°C with 40°C ambient cooling air are tabulated below (for operation below 30 MHz). This data is for flow in the base-to-anode direction; pressure drop figures are in inches of water, are for the anode cooler only, and are approximate.

	SEA LEVEL		10,000 FEET	
Plate Diss. (watts)	Air Flow (cfm)	Press. Drop	Air Flow (cfm)	Press. Drop
15,000	440	1.0	635	1.5
20,000	650	2.0	935	2.9
25,000	975	3.8	1400	5.5
30,000	1300	6.0	1870	8.6
35,000	1760	9.6	2535	13.8

The blower selected in any given application must be able to supply the desired air flow at a back pressure equal to the pressure drop shown above plus any drop(s) encountered in ducts and filters.

Separate cooling of the tube base is required and is accomplished by directing approximately 120 cfm of air horizontally through the socket from the side. It is preferable to direct this air through three equally spaced ducts. Temperature of spring contacts in the socket should not exceed 150°C to provide proper socket life.

The well in the center of the baseplate of the tube is a critical area which requires cooling to maintain envelope temperatures less than 250°C. For most applications, 1 to 2 cfm of air directed through the center of the socket is sufficient.

At other altitudes and ambient temperatures the flow rate must be modified to obtain equivalent cooling. The flow rate and corresponding pressure differential must be determined individually in such cases. The designer is reminded that it is considered good engineering practice to allow some safety factor so the tube is not operated at the absolute maximum temperature rating. Temperature sensitive paints are available for testing before any equipment design is finalized, and Application Bulletin #20 titled TEMPERATURE MEASUREMENTS WITH EIMAC POWER TUBES is available on request.

Air flow must be applied before or simultaneously with the application of power, including the tube filament, and should normally be maintained for a short period of time after power is removed to allow for tube cooldown.

ELECTRICAL

ABSOLUTE MAXIMUM RATINGS - Values shown for each type of service are based on the "absolute system" and are not to be exceeded under any service conditions. These ratings are limiting values outside which serviceability of the tube may be impaired. In order not to exceed absolute ratings the equipment designer has the responsibility of determining an average design value for each rating below the absolute value of that rating by a safety factor so that the absolute values will never be exceeded under any usual conditions of supply-voltage variation, load variation, or manufacturing variation in the equipment itself. It does not necessarily follow that combinations of absolute maximum ratings can be attained simultaneously.

HIGH VOLTAGE - Normal operating voltages used with this tube are deadly, and the equipment must be designed properly and operating precautions must be followed. Design all equipment so that no one can come in contact with high voltages. All equipment must include safety enclosures for high-voltage circuits and terminals, with interlock switches to open primary circuits of the power supply and to discharge high-voltage capacitors whenever access doors are opened. Interlock switches must not be bypassed or "cheated" to allow operation with access doors open. Always remember that HIGH VOLTAGE CAN KILL.

FILAMENT OPERATION - During turn-on the filament inrush current should be limited to 600 amperes.

At rated (nominal) filament voltage the peak emission capability of the tube is many times that needed for communication service. A reduction in voltage will lower the filament temperature, which will substantially increase life expectancy. The correct value of filament voltage should be determined for the particular application. It is recommended the tube be operated at full nominal voltage for an initial stabilization period of 100 to 200 hours before any action is taken to operate at reduced voltage. The voltage should gradually be reduced until there is a slight degradation in performance (such as power output or distortion). The filament voltage should then be increased a few tenths of a volt above the value where performance degradation was noted for operation. The operating point should be rechecked in 24 hours. Filament voltage should be closely regulated when voltage is to be reduced below nominal in this manner, to avoid any adverse influence by normal line voltage variations.

Filament voltage should be measured at the tube base or socket, using an accurate rms-responding meter. Periodically throughout the life of the tube the procedure outlined above for reduction of voltage should be repeated, with voltage reset as required, to assure best tube life.

Where hum is an important system consideration it is permissible to operate the filaments with dc rather than ac power. Contact Varian EIMAC Application Engineering for special precautions when using a dc filament supply.

This tube is designed for commercial service, with only one off/on filament cycle per day. If addi-

tional cycling is anticipated it is recommended the user contact Application Engineering at EIMAC.

BASE PLATE VOLTAGE - Any difference in potential between the base plate and the tube filament must be limited to 100 volts (peak).

GRID OPERATION - The maximum control grid dissipation is 500 watts, determined approximately by the product of the dc grid current and the peak positive grid voltage. A protective spark-gap device should be connected between the grid and the cathode to guard against excessive voltage.

SCREEN OPERATION - The maximum screen grid dissipation is 1750 watts. With no ac applied to the screen grid, dissipation is simply the product of dc screen voltage and the dc screen current. With screen modulation, dissipation is dependent on rms screen voltage and rms screen current. Plate voltage, plate loading, or bias voltage must never be removed while filament and screen voltages are present, since screen dissipation ratings will be exceeded. A protective spark-gap device should be connected between the screen grid and the cathode to guard against excessive voltage.

The screen current may reverse under certain conditions and produce negative indictions on the screen current meter. This is a normal characteristic of most tetrodes. The screen power supply should be designed with this characteristic in mind, so that the correct operating voltage will be maintained on the screen under all conditions. A current path from the screen to cathode in the form of a bleeder resistor or a shunt regulator, connected between screen and cathode, may be required. A series regulated power supply can be used only when an adequate bleeder resistor is provided.

PLATE OPERATION - The rated maximum dissipation for the tube is 35,000 watts. When operated as a plate-modulated rf amplifier, under carrier conditions the maximum dissipation rating is 23,000 watts, which corresponds to 35,000 watts at 100% sine-wave modulation.

Operation with significant plate current under some conditions of high instantaneous anode voltage (such as regulator service or low power and low impedance "tuning" conditions) can, as a result of the screen and grid voltages chosen, lead to anode damage and subsequent failure. If operation under such conditions is necessary EIMAC Application Engineering should be contacted for assistance in selection of operating parameters.

FAULT PROTECTION - In addition to the normal plate over-current interlock, screen current interlock, and coolant interlock, the tube must be protected from internal damage caused by an internal plate arc which may occur at high plate voltage. A protective resistance should always be connected in series with each tube anode, to help absorb power supply stored energy if an internal arc should occur. An electronic crowbar, which will discharge power supply capacitors in a few microseconds after the start of an arc, is recommended. The protection criteria for each electrode supply is to short each electrode to ground, one at a time, through a vacuum relay switch and a 6-inch length of #30 AWG copper wire. The wire will remain intact if the protection is adequate.

EIMAC Application Bulletin #17 titled FAULT PROTECTION contains considerable detail; it is available on request.

X-RADIATION HAZARD - High-vacuum tubes operating at voltages higher than 15 kilovolts produce progressively more dangerous X-ray radiation as the voltage is increased. This tube, operating at its rated voltages and currents, is a potential X-ray source. Only limited shielding is afforded by the tube envelope. Moreover, the X-radiation level may increase significantly with tube aging and gradual deterioration, due to leakage paths or emission characteristics as they are effected by the high voltage. X-ray shielding may be required on all sides of tubes operating at these voltages to provide adequate protection throughout the life of the tube. Periodic checks on the X-ray level should be made, and the tube should never be operated without required shielding in place. If there is any question as to the need for or the adequacy of shielding, an expert in this field should be contacted to perform an equipment X-ray survey.

In cases where shielding has been found to be required operation of high voltage equipment with interlock switches "cheated" and cabinet doors open in order to be better able to locate an equipment malfunction can result in serious X-ray exposure.

RADIO-FREQUENCY RADIATION - Avoid exposure to strong rf fields even at relatively low frequency. Absorption of rf energy by human tissue is dependent on frequency. Under 300 MHz most of the energy will pass completely through the human body with little attenuation or heating affect. Public health agencies are concerned with the hazard even at these frequencies.

INTERELECTRODE CAPACITANCE - The actual internal interelectrode capacitance of a tube is influenced by many variables in most applications, such as stray capacitance to the chassis, capacitance added by the socket used, stray capacitance between tube terminals, and wiring effects. To control the actual capacitance values within the tube [as the key component involved] the industry and Military Services use a standard test procedure as described in Electronic Industries Association Standard RS-191. This requires use of a specially constructed test fixture which shields all external tube leads or contacts from each other and eliminates any capacitance reading to "ground". The test is performed on a cold tube. Other factors being equal, controlling internal tube capacitance in this way normally assures good interchangeability of tubes over a period of time. The capacitance values shown in the technical data are taken in accordance with Standard RS-191.

The equipment designer is therefore cautioned to make allowance for the actual capacitance values which will exist in the application. Measurements should be taken with the mounting which represents approximate final layout if capacitance values are highly significant in the design.

SPECIAL APPLICATIONS - When it is desired to operate this tube under conditions widely different from those listed here, write to Varian EIMAC; attn: Applications Engineering; 301 Industrial Way; San Carlos, CA 94070 U.S.A.

OPERATING HAZARDS

PROPER USE AND SAFE OPERATING PRACTICES WITH RESPECT TO POWER TUBES ARE THE RESPONSIBILITY OF EQUIPMENT MANUFACTURERS AND USERS OF SUCH TUBES. ALL PERSONS WHO WORK WITH OR ARE EXPOSED TO POWER TUBES OR EQUIPMENT WHICH UTILIZES SUCH TUBES MUST TAKE PRECAUTIONS TO PROTECT THEMSELVES AGAINST POSSIBLE SERIOUS BODILY INJURY. DO NOT BE CARELESS AROUND SUCH PRODUCTS.

The operation of this tube may involve the following hazards, any one of which, in the absence of safe operating practices and precautions, could result in serious harm to personnel:

a. HIGH VOLTAGE - Normal operating voltages can be deadly. Always remember that HIGH VOLTAGE CAN KILL.

b. LOW-VOLTAGE HIGH-CURRENT CIRCUITS - Personal jewelry, such as rings, should not be worn when working with filament contacts or connectors as a short circuit can produce very high current and melting, resulting in severe burns.

c. X-RAY RADIATION - High-voltage pulse modulator tubes are a potential source of dangerous X-Ray radiation and shielding may be required on all sides of the tube. A survey may be required by an expert in this field.

d. RF RADIATION - Exposure to strong rf fields should be avoided, even at relatively low frequencies. The dangers of rf radiation are more severe at UHF and microwave frequencies and can cause serious bodily and eye injuries. CARDIAC PACEMAKERS MAY BE EFFECTED.

e. HOT SURFACES - Surfaces of tubes can reach temperatures of several hundred °C and cause serious burns if touched for several minutes after all power is removed.

Please review the detailed operating hazards sheet enclosed with each tube, or request a copy from: Varian EIMAC, Power Grid Application Engineering, 301 Industrial Way, San Carlos CA 94070.

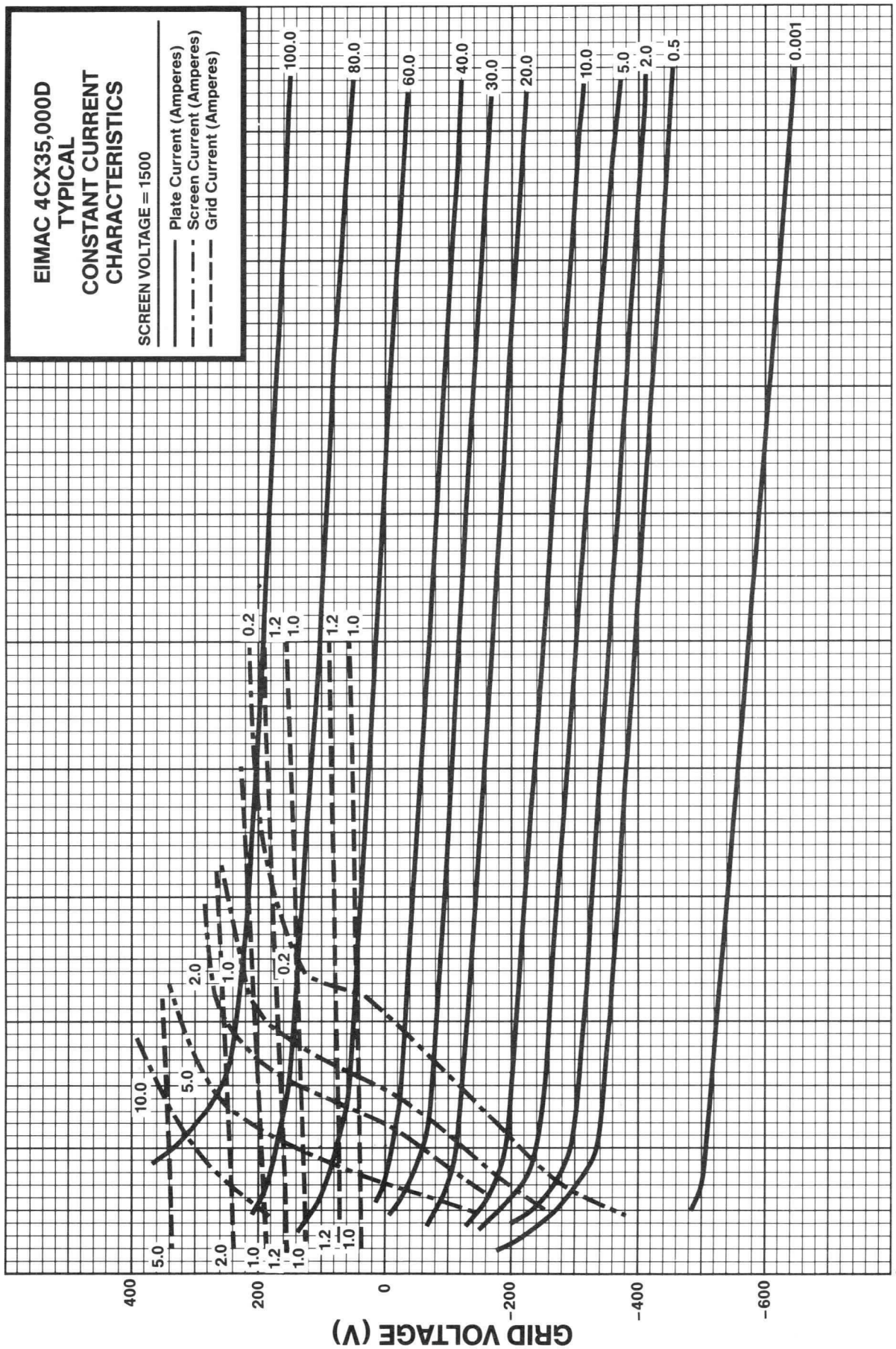
EIMAC 4CX35,000D
TYPICAL
CONSTANT CURRENT
CHARACTERISTICS
SCREEN VOLTAGE = 1500
Plate Current (Amperes)
Screen Current (Amperes)
Grid Current (Amperes)
100.0
80.0
60.0
40.0
30.0
20.0
10.0
5.0
2.0
0.5
0.001
0.2
1.2
1.0
GRID VOLTAGE (V)
400
200
0
-200
-400
-600
PLATE VOLTAGE (kV)
0
2
4
6
8
10
12
14
16
18

CURVE #5480

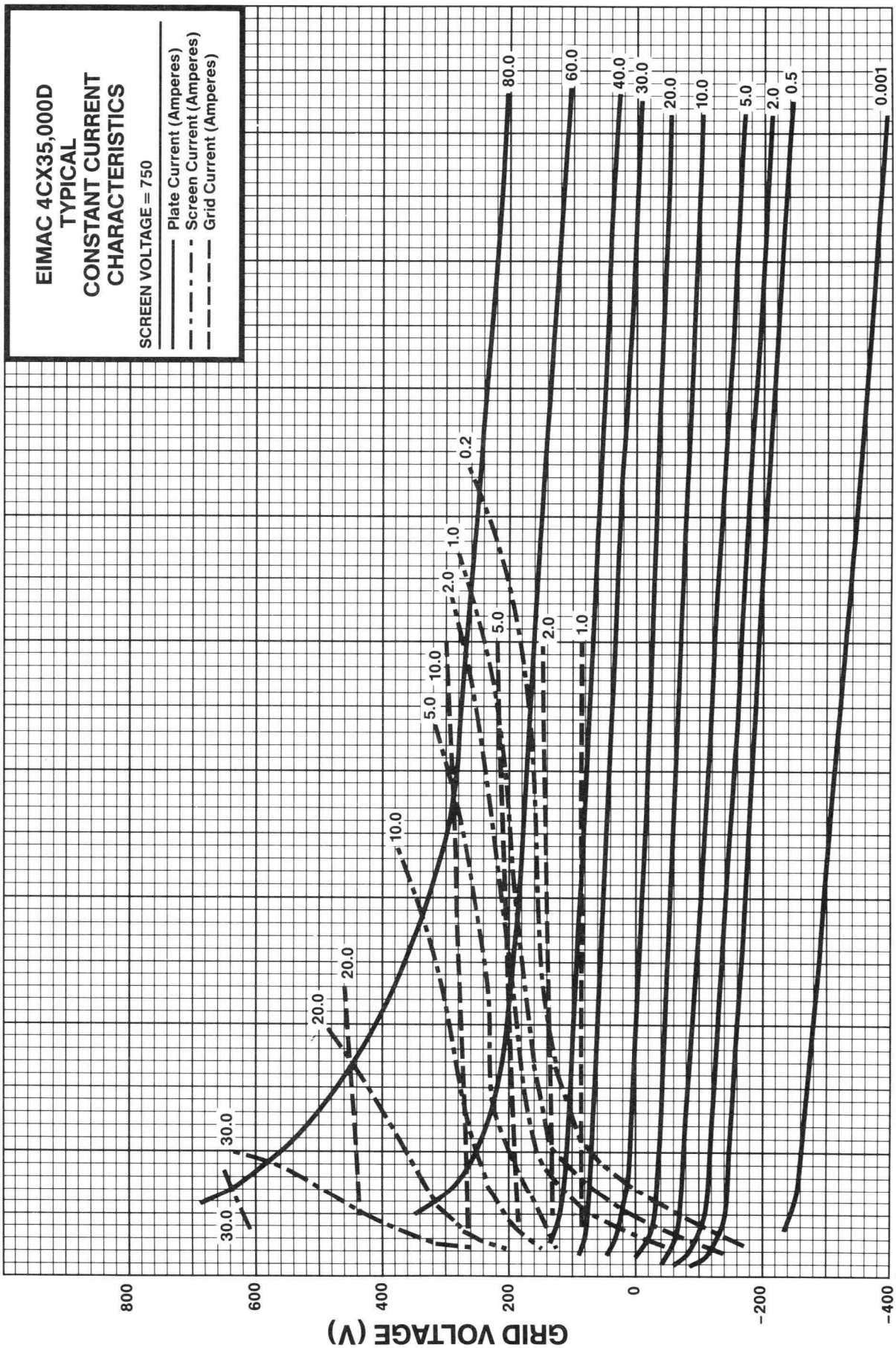
EIMAC 4CX35,000D
TYPICAL
CONSTANT CURRENT
CHARACTERISTICS
SCREEN VOLTAGE = 750
Plate Current (Amperes)
Screen Current (Amperes)
Grid Current (Amperes)
GRID VOLTAGE (V)
800
600
400
200
0
-200
-400
PLATE VOLTAGE (kV)
0
2
4
6
8
10
12
14
16
18
80.0
60.0
40.0
30.0
20.0
10.0
5.0
2.0
0.5
0.001
0.2
1.0
2.0
5.0
10.0
20.0
30.0
CURVE #5481

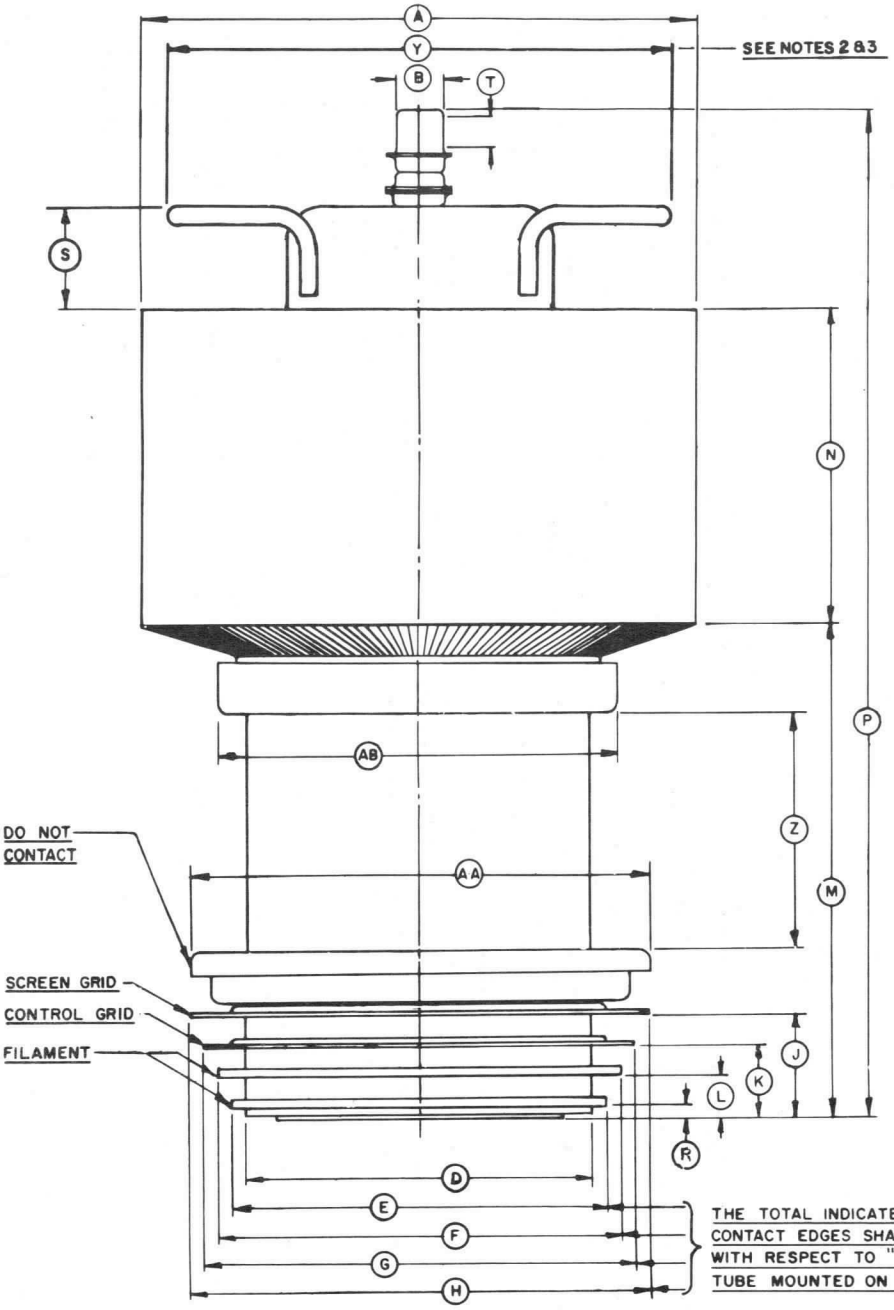

DIMENSIONAL DATA				
DIM.	INCHES		MILLIMETERS	
	MIN.	MAX.	MIN.	MAX.
A	9.500	9.750	241.30	247.65
B	0.860	0.890	21.84	22.60
D	5.980	6.020	151.89	152.91
E	6.510	6.560	165.35	166.62
F	6.980	7.020	177.29	178.31
G	7.480	7.520	189.99	191.01
H	7.975	8.015	202.57	203.58
J	1.750	1.800	44.45	45.72
K	1.220	1.270	30.99	32.26
L	0.690	0.740	17.53	18.80
M	8.442	8.692	214.43	220.78
N	5.375	5.625	136.52	142.88
P	17.070	17.340	433.58	440.44
R	0.173	0.213	4.40	5.41
S	1.750		44.45	
T	0.485	0.515	12.32	13.08
V	— —	0.135	— —	3.43
W	1.250	1.270	31.75	32.26
X	0.490	0.530	12.45	13.46
Y	— —	8.750	— —	222.25
Z	3.750		95.25	
AA	8.000		203.20	
AB	6.875		174.63	

NOTES:
1. REFERENCE DIMENSIONS ARE FOR INFORMATION ONLY AND ARE NOT REQUIRED FOR INSPECTION PURPOSES.
2. DIM. Y IS MAXIMUM DIA. ACROSS CORNERS
3. HANDLE LATERAL AXIS ORIENTATION WITH BASE LOCK PIN IS AS SHOWN.

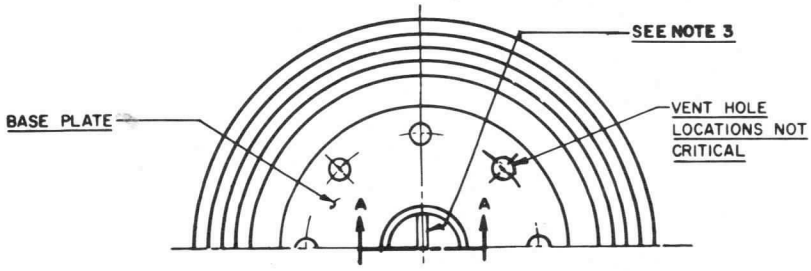

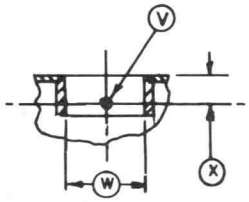

SECTION A–A

TENTATIVE TECHNICAL DATA

4CX40,000G

VHF RADIAL BEAM POWER TETRODE

The EIMAC 4CX40,000G is a ceramic/metal power tetrode intended for use in audio or radio-frequency applications. It features a high-stability pyrolytic graphite grid and a type of internal mechanical structure which results in high rf operating efficiency. Low rf losses in this structure permit operation of the tube at full ratings up to 220 MHz.

The 4CX40,000G is recommended for FM broadcast service, rf linear power amplifier service, and for VHF-TV linear amplifier service. The anode is rated for 40 kW of dissipation with forced-air cooling, and incorporates a highly efficient cooler of new design.

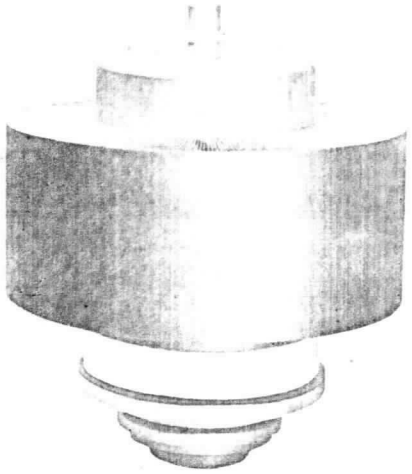

GENERAL CHARACTERISTICS [1]

ELECTRICAL

Filament: Thoriated-tungsten Mesh

Voltage	15.0 ± 0.75	V
Current, @ 15.0 volts	170	A

Warmup: see FILAMENT WARMUP RECOMMENDATION

Amplification Factor, average at Ib = 10 Adc

Grid to screen	8	

Direct Interelectrode Capacitances (cathode grounded)

Cin	447	pF
Cout	33	pF
Cgp	1.8	pF

Direct Interelectrode Capacitances (grid & screen grounded)

Cin	155	pF
Cout	35	pF
Cfp	0.15	pF

Frequency of Maximum Ratings (CW)	220	MHz

1. Characteristics and operating values are based upon performance tests. These figures may change without notice as the result of additional data or product refinement. EIMAC Division of Varian should be consulted before using this information for final equipment design.

Effective: September 1979

MECHANICAL

Maximum Length	11.85 In; 30.10 Cm
Maximum Diameter	10.08 In; 25.60 Cm
Net Weight (approximate)	55 lbs ; 25 kg
Operating Position	Axis Vertical, Base Up or Down
Cooling	Forced Air
Operating Temperature, Maximum	
Ceramic/Metal Seals and Anode Core	250 °C
Base	Special, Coaxial
Recommended Air-System Socket	EIMAC SK-2400
Recommended Air-System Chimney	EIMAC SK-2406

RADIO FREQUENCY POWER AMPLIFIER OR OSCILLATOR

Class C Telegraph or FM

ABSOLUTE MAXIMUM RATINGS:

DC PLATE VOLTAGE	14	KILOVOLTS
DC SCREEN VOLTAGE	2000	VOLTS
DC GRID VOLTAGE	-1000	VOLTS
DC PLATE CURRENT	10	AMPERES
PLATE DISSIPATION	40	KILOWATTS
SCREEN DISSIPATION	1500	WATTS
GRID DISSIPATION	1000	WATTS

TYPICAL OPERATION

Class C rf Amplifier

Plate Voltage	10.6	kVdc
Screen Voltage	800	Vdc
Grid Voltage	-300	Vdc
Plate Current	7.0	Adc
Screen Current [1]	440	mAdc
Grid Current [1]	700	mAdc
Load Impedance	800	Ω
Driving Power [1]	250	W
Usetul Power Output [2]	60	kW

1 Approximate value

2 Measured at the load

TYPICAL OPERATION values are obtained by calculations from published characteristic curves. To obtain the specified plate current at the specified bias, screen, and plate voltages, adjustment of the rf grid voltage is assumed. If this procedure is followed, there will be little variation in output power when the tube is replaced, even though there may be some variation in grid and screen currents. The grid and screen currents which occur when the desired plate current is obtained are incidental and vary from tube to tube. These current variations cause no performance degradation providing the circuit maintains the correct voltage in the presence of the current variations. If grid bias is obtained principally by means of a grid resistor, the resistor must be adjustable to produce the required bias voltage when the correct rf grid voltage is applied.

APPLICATION

MECHANICAL

MOUNTING - The tube must be operated with its axis vertical. The base of the tube may be up or down at the convenience of the designer.

SOCKET & CHIMNEY - The EIMAC air-system socket SK-2400 and air chimney SK-2406 are designed especially for use with the 4CX40,000G. The use of the recommended air flow through this socket provides effective forced-air cooling of the base, with air then guided through the anode cooling fins by the air chimney.

COOLING - The maximum temperature rating for the external surfaces of the tube is 250°C, and sufficient forced-air cooling must be used in all applications to keep the temperature of the anode (at the base of the cooling fins) and the temperature of the ceramic/metal seals comfortably below the rated maximum.

The cooling characteristics of the anode are shown in the attached graphs, for power levels (anode dissipation) from 20 to 40 kW and for sea level, 5000 feet, and 10,000 feet. The designer is cautioned to keep in mind this is ABSOLUTE data, with pure dc power, with no safety factors added, and the pressure drop figures make no allowance for losses in filters, ducting, and the like.

It is considered good engineering practice to design for a maximum anode core temperature of 225 °C, and temperature-sensitive paints are available for checking base and seal temperatures before any design is finalized. It is also considered good practice to add a 15% safety factor to the indicated air flow, and allow for variables such as dirty air filters, rf seal heating at VHF, and the fact that the anode cooling fins may not be clean if the tube has been in service for some length of time. Special attention may be required in cooling the center of the stem (base), by means of special directors or some other provision. An air interlock system should be incorporated into the design to automatically remove all voltages from the tube in case of even partial failure of the tube cooling air.

Air flow must be applied before or simultaneously with the application of power, including the tube filament, and should normally be maintained for a short period of time after all power is removed to allow for tube cooldown.

ELECTRICAL

FILAMENT WARMUP RECOMMENDATION - Filament inrush surge current must be limited to two times rated current. The filament should be brought to rated voltage over a two-minute period. If a step-start sequence is used the initial voltage applied should be 1/3 to 1/2 the nominal rated filament voltage. After two minutes the voltage may then be increased to the rated value. In the event of power failure which does not exceed 60 seconds the full filament voltage may be applied to the tube instantaneously. If the power failure exceeds 60 seconds, the programmed warmup procedure should be used.

FILAMENT OPERATION - The rated nominal filament voltage for the tube is 15.0 volts, as measured at the socket or tube base. Variation in voltage should be maintained within plus or minus five percent, and the filament warmup procedure should be adhered to.

The peak emission capability at nominal filament voltage is normally more than that required for communication service. A small decrease in filament temperature due to a reduction in filament voltage can increase tube life by a substantial percentage. It is good practice to determine the nominal filament voltage for a particular application that will not adversely affect equipment operation. This is done by measuring some important parameter of performance (such as plate current, power output, or distortion) while filament voltage is reduced. At some point in filament voltage there will be a noticeable change in the operating parameter being monitored, and the operating filament voltage must be slightly higher than the level at which deterioration was noted. When filament voltage is to be reduced in this manner it should be regulated and held to plus or minus one percent, and the actual operating value should be checked periodically to maintain proper operation.

ELECTRODE DISSIPATION RATINGS - The maximum dissipation ratings of the tube must be respected to avoid damage. An exception is the plate dissipation which may be permitted to rise above the rated maximum during brief periods (10 seconds maximum) such as may occur during tuning.

GRID OPERATION - The control grid has a maximum dissipation rating of 1000 watts. Precautions should be observed to avoid exceeding this rating. The grid bias and driving power should normally be kept near the values shown in the TYPICAL OPERATION section of the data sheet whenever possible.

SCREEN OPERATION - The power dissipated by the screen grid must not exceed 1500 watts. Screen dissipation, in cases where there is no ac applied to the screen, is the simple product of the screen voltage and the screen current. If the screen voltage is modulated, the screen dissipation will depend upon loading, driving power, and carrier screen voltage.

Screen dissipation is likely to rise to excessive values when the plate voltage, bias voltage, or plate load are removed with the filament and screen voltages applied. Suitable protective means must be provided to limit screen dissipation in the event of circuit failure. Energy limiting circuitry (which will activate if there is a fault condiition) and spark gap over-voltage protection are recommended as good engineering proactice.

HIGH VOLTAGE - Normal operating voltages used with the 4CX40,000G are deadly, and the equipment must be designed properly and operating precautions must be followed. Design all equipment so that no one can come in contact with high voltages. All equipment must include safety enclosures for high-voltage circuits and terminals, with interlock switches to open primary circuits of the power supply and to discharge high voltage capacitors whenever access doors are opened. Interlock switches must not be bypassed or "cheated" to allow operation with access doors open. Always remember that HIGH VOLTAGE CAN KILL.

FAULT PROTECTION - In addition to normal cooling airflow interlock and plate and screen over-current interlocks, it is good practice to protect the tube from internal damage which could result from occasional plate arcing at high voltage.

In all cases some protective resistance, at least one or two ohms, should be used in series with the tube anode to absorb power supply stored energy in case a plate arc should occur. When stored energy is high, it is recommended that some form of electronic crowbar be used which will discharge power supply capacitors in as short a time as possible following indication of start of a plate arc.

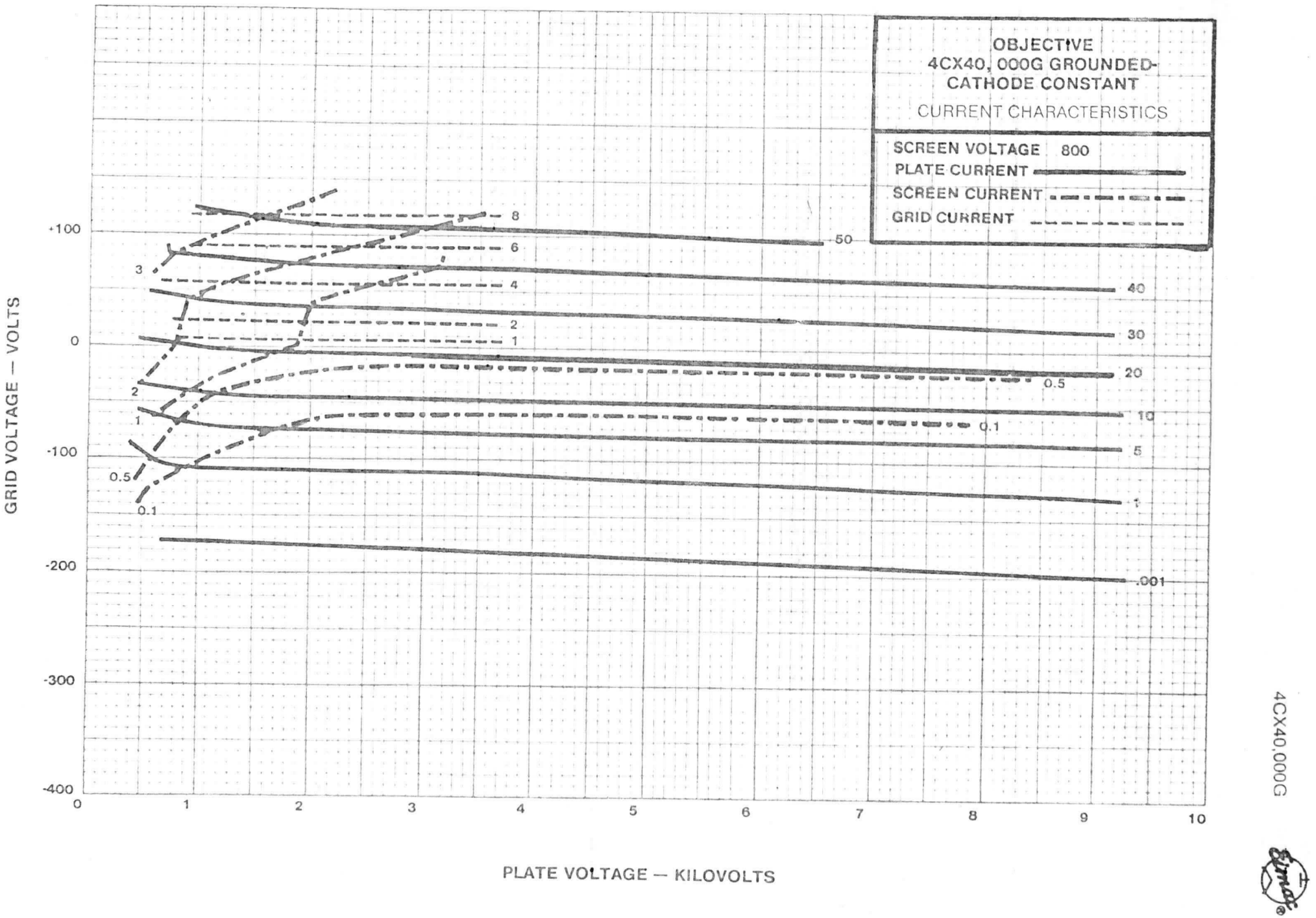
OBJECTIVE
4CX40, 000G GROUNDED-CATHODE CONSTANT
CURRENT CHARACTERISTICS
SCREEN VOLTAGE 800
PLATE CURRENT
SCREEN CURRENT
GRID CURRENT
GRID VOLTAGE — VOLTS
+100
0
-100
-200
-300
-400
PLATE VOLTAGE — KILOVOLTS
0
1
2
3
4
5
6
7
8
9
10
8
6
4
2
1
0.5
0.1
3
2
1
0.5
0.1
50
40
30
20
10
5
1
.001

4CX40,000G

4928

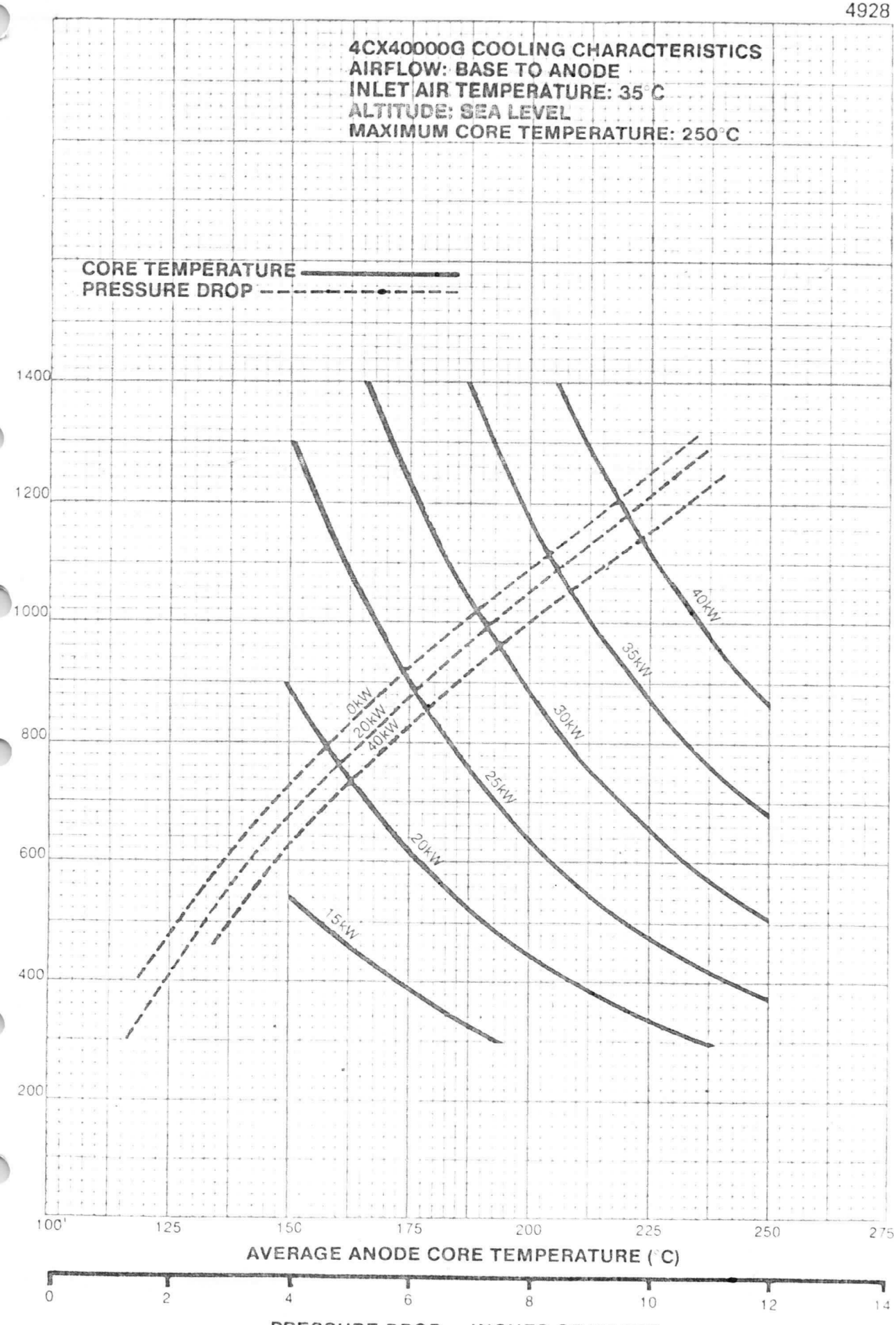
4CX40000G COOLING CHARACTERISTICS
AIRFLOW: BASE TO ANODE
INLET AIR TEMPERATURE: 35°C
ALTITUDE: SEA LEVEL
MAXIMUM CORE TEMPERATURE: 250°C
CORE TEMPERATURE
PRESSURE DROP
1400
1200
1000
800
600
400
200
40kW
35kW
30kW
25kW
20kW
15kW
0kW
20kW
40kW
100
125
150
175
200
225
250
275
AVERAGE ANODE CORE TEMPERATURE (°C)
0
2
4
6
8
10
12
14
PRESSURE DROP — INCHES OF WATER

4929

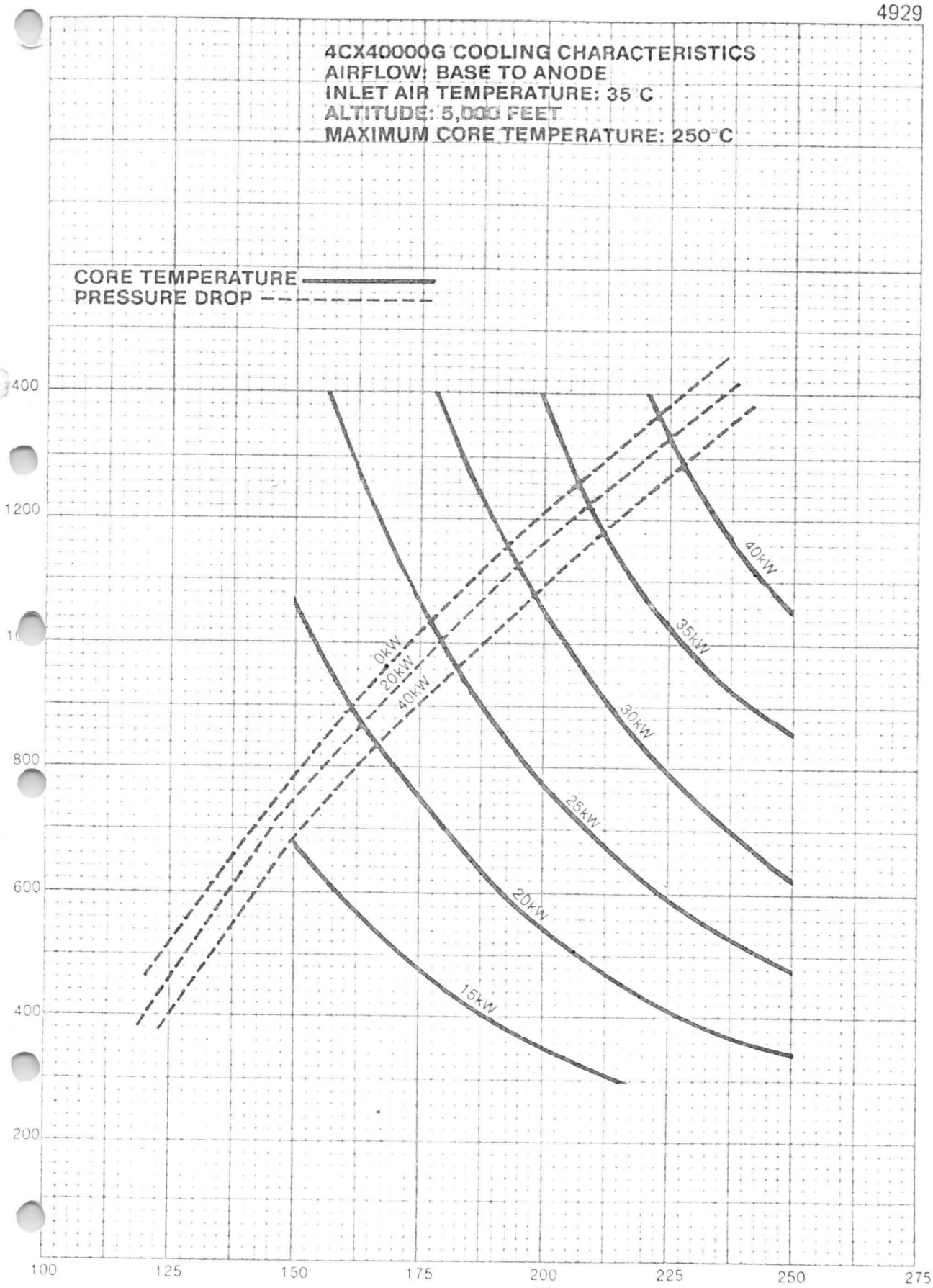
4CX40000G COOLING CHARACTERISTICS
AIRFLOW: BASE TO ANODE
INLET AIR TEMPERATURE: 35°C
ALTITUDE: 5,000 FEET
MAXIMUM CORE TEMPERATURE: 250°C
CORE TEMPERATURE
PRESSURE DROP
400
1200
800
600
400
200
0KW
20KW
40KW
40kW
35kW
30kW
25kW
20kW
15kW
100
125
150
175
200
225
250
275
AVERAGE ANODE CORE TEMPERATURE (°C)
0
2
4
6
8
10
12
14
PRESSURE DROP — INCHES OF WATER

4930

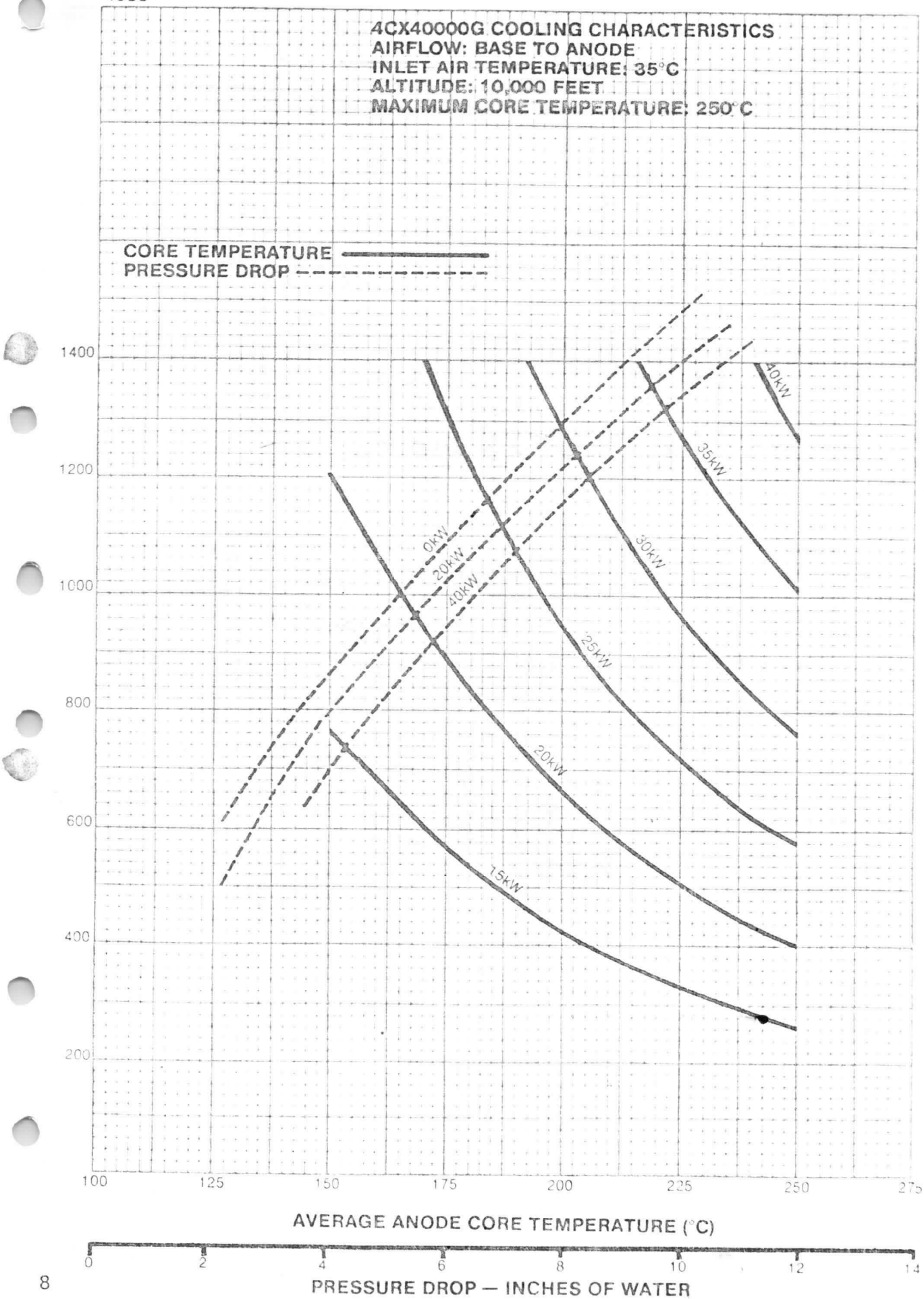
4CX40000G COOLING CHARACTERISTICS
AIRFLOW: BASE TO ANODE
INLET AIR TEMPERATURE: 35°C
ALTITUDE: 10,000 FEET
MAXIMUM CORE TEMPERATURE: 250°C
CORE TEMPERATURE
PRESSURE DROP
0KW
20KW
40KW
15KW
20KW
25KW
30KW
35KW
40KW
AIRFLOW — CUBIC FEET PER MINUTE
1400
1200
1000
800
600
400
200
100
125
150
175
200
225
250
275
AVERAGE ANODE CORE TEMPERATURE (°C)
0
2
4
6
8
10
12
14
PRESSURE DROP — INCHES OF WATER

4CX40,000G

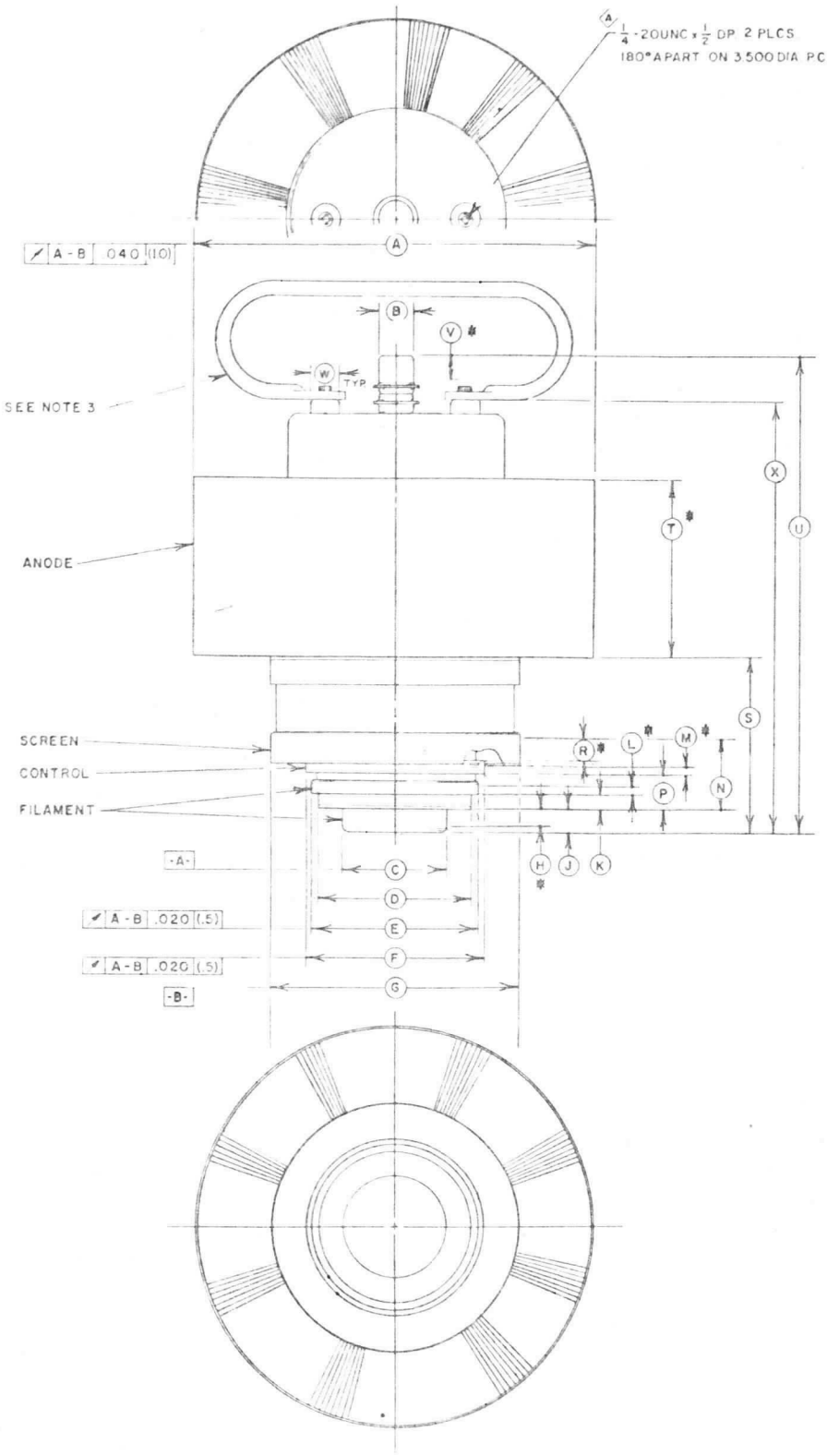

DIMENSIONAL DATA						
	INCHES			MILLIMETERS		
DIM	MIN	MAX	REF	MIN	MAX	REF
A	9.960	10.080		253.0	256.0	
B	.860	.890		21.8	22.6	
C	2.615	2.625		66.42	66.68	
D			3.825			97.2
E	4.245	4.265		107.80	108.30	
F	4.490	4.520		114.03	114.81	
G	6.360	6.405		161.5	162.7	
H	.440			11.2		
J	.640	.680		16.2	17.3	
K	.260	.290		6.6	7.4	
L	.250			6.3		
M	.150			3.8		
N	1.600			40.6		
P	.790	.830		20.1	21.1	
R	.350			8.9		
S	4.170	4.400		106.0	111.8	
T	4.400	4.600		112.0	117.0	
U	11.550	11.850		293.0	301.0	
V	.500			12.7		
W			.750			19.1
X	10.500	10.850		267.0	276.0	

NOTES:

1. REF. DIMENSIONS ARE FOR INFO. ONLY & ARE NOT REQUIRED FOR INSPECTION PURPOSES.
2. ✱ CONTACT SURFACE
3. SHIPPED WITH HANDLE ATTACHED. REMOVE BEFORE OPERATION.

Varian EIMAC
San Carlos, California

Issue Date Here

TEST SPECIFICATION

ELECTRON TUBE, TRANSMITTING TETRODE
EXTERNAL ANODE, FORCED-AIR COOLED

TYPE 4CX40,000GM

F1 = 110 MHz

ABSOLUTE MAXIMUM RATINGS: (See Note 1)

Parameter:	Ef	Eb	Ec2	Ec1	Ib	Pg1	Pg2	Pp	Anode Core & Seal T	Cooling	Alt.
Units:	Vac	kVdc	kVdc	kVdc	Adc	W	W	kW	°C	---	Ft.
	Note 2								Note 3	Note 4	Note 5
Class AB1 (audio or rf) :	15.0±5%	14.0	2.0	-1.0	10	500	1500	40	250	---	10,000
TEST COND :	15.0	---	1.4	---	---	---	---	---	---	Note 6	---

METHOD OR PAR. references: MIL-E-1 or MIL-STD-1311

Mounting: See Note 7

Recommended Air-System Socket: EIMAC SK-2400

Envelope: Ceramic & Metal

Fault Protection: See Note 8

rf Radiation Hazard: See Note 9

METHOD OR PAR.	REQUIREMENT OR TEST	CONDITIONS	AQL%	INSP. LEVEL	SYMB.	LIMITS Min	LIMITS Max	UNITS
	General							
---	Cathode	Thoriated-tungsten filament	---	---	---	---	---	---
4.8.5	Holding Period		---	---	†:	72	---	hrs

METHOD OR PAR.	REQUIREMENT OR TEST	CONDITIONS	AQL%	INSP. LEVEL	SYMB.	LIMITS Min	LIMITS Max	UNITS
	Quality Conformance Inspection - Part 1 (Production) Note 10							
D-30(a), 40, 60	Visual & Mechanical Inspection Criteria		---	---	---	---	---	---
1301	Filament Current	t = 5 minutes minimum; See Note 11	0.65	II	If:	168	182	Aac
1261	Grid Voltage (1)	Eb = 10.5 ± 0.5 kVdc; Ec1/Ib = 2.5 Adc	0.65	II	-Ec1:	160	230	Vdc
					-Ic1:	---	1.0	mAdc
1266	Primary Grid Emission (control)	Pg1 = 500 W; t = 120 minimum; Ec2 = 0 Vdc; anode = -500 to -1000 Vdc	0.65	II	-Isg1:	---	1.0	mAdc
1266	Primary Grid Emission (screen)	Ec1 = 0 Vdc; t = 120 minimum; Pg2 = 2000 W; anode = -500 to -1000 Vdc	0.65	II	-Isg2:	---	6.0	mAdc
---	Ion Current	Ec1 = 0 Vdc; Ec2 = 75 Vdc; Eb = -45 Vdc; t = 180; Ef/Ic2 = 25 mAdc	0.65	II	Iz:	---	1.0	uAdc
1261	Grid Voltage (2) (cut-off)	Eb = 16 kVdc; Eco = Ec1/Ib = 20 mAdc	0.65	II	-Eco:	---	350	Vdc
1372	Current Division (1)	Eb = 5000 Vdc; Ec1 = -400 Vdc; egk/Ib = 17 a; See Note 12	0.65	II	egk:	---	0	v
					Ic2:	---	2.0	a
1372	Current Division (2)	Eb = Ec2 = 2000 Vdc; Ec1 = -400 Vdc; egk/Ib = 27 a; See Note 12	0.65	II	egk:	---	0	v
					Ic2:	---	5.0	a
1231	Pulsing Emission	eb = ec2 = ec1 = 1000 v etd/Ib = 100 a	0.65	II	Is:	200	---	a
---	rf Operation	To Be Specified	0.65	II	---	---	---	---

METHOD OR PAR.	REQUIREMENT OR TEST	CONDITIONS	AQL%	INSP. LEVEL	SYMB.	LIMITS Min	LIMITS Max	UNITS
	Quality Conformance Inspection - Part 2 (Design) - Note 13							
D-30(b)	Dimensions	Per Outline Drawing	6.5	S3	---	---	---	---
1331	Direct Interelectrode Capacitance (gnd.cath.connection)		6.5	S3	Cin:	420	480	pF
					Cout:	33	43	pF
					Cgp:	---	2.0	pF
1331	Direct Interelectrode Capacitance (gnd.grid connection)		6.5	S3	Cin:	150	180	pF
					Cout:	35	45	pF
					Cpk:	---	0.5	pF

NOTES

1. The values shown for each type of service are based on the "absolute system" and are not to be exceeded under any service conditions. These ratings are limiting values outside which the serviceability of the tube may be impaired. In order not to exceed absolute ratings the equipment designer has the responsibility of determining an average design value for each rating below the absolute value of that rating by a safety factor so that the absolute values will never be exceeded under any usual conditions of supply voltage variation in the equipment itself. It does not necessarily follow that combinations of absolute maximum ratings can be attained simultaneously.

2. Filament inrush surge current must be limited to 300 amperes. For best reliability experience has shown that the filament and its internal supporting structure should be raised to operating temperature over a two-minute period. This should be accomplished by a linear increase in voltage to the operating value over 120 seconds. This can be accomplished by a motor-driven variable transformer or an equivalent solid-state device. A step-start sequence can be used with equivalent reliability, as follow:

   1) Turn on at 40% to 50% of operating voltage and maintain this value for 120 seconds.
   2) Increase voltage to full operating value.

   In the event of a power failure not exceeding 60 seconds the full operating voltage may be reapplied instantaneously. If the power failure exceeds 60 seconds, the programmed warmup procedure should be used. In case of emergency the turn-on program may be bypassed with no serious effect on reliability but normal startup should be programmed.

   Filament voltage should be measured at the tube base or socket, using an known-accurate rms-responding meter.

3. Under all operating conditions the specified maximum temperature should not be exceeded for the anode core or surface, the seals, and the envelope. Where long life and consistent performance are factors, maintaing temperature well below the rated maximum is normally beneficial.

4. In all cases of operation forced-air cooling of the anode and base is required. Minimum air flow requirements for the anode are shown, based on a maximum tube temperature of 225°C and a cooling air temperature of 35°C, with air flow through the anode cooler in a base-to-anode direction. The pressure drop values shown are in inches of water for the anode cooler and are approximate.

	SEA LEVEL		10,000 FEET	
Anode Diss. (kW)	Air Flow (cfm)	Press. Drop	Air Flow (cfm)	Press. Drop
20	340	1.6	510	2.2
30	660	4.2	970	6.3
40	1110	9.4	1600	13.6

Cooling of the base requires a minimum of 100 cfm of air (at a maximum temperature of 35°C) be directed horizontally through the socket from the sides. It is preferable to direct this air through three equally-spaced ducts.

Particular care should be taken to insure that the blower selected for anode cooling is capable of supplying the desired air flow at a back pressure equal to the pressure drop shown in the table plus any drop built up in ducts and/or filters. At higher altitudes or ambient temperatures the amount of cooling air must be modified to obtain equivalent cooling. Both base and anode cooling must be applied before or simultaneously with the application of electrode voltages (including the filament) and should normally be maintained for approximately 2 minutes after all electrode voltages are removed.

5. Operation at altitudes significantly above sea level may require that electrode voltages be set lower than the maximum values shown. Normally only the anode would require reduction.

6. In all electrical tests involving the application of filament voltage, the use of an air-system socket is permissible and forced-air cooling of the anode and base is permissible.

7. The tube must be mounted vertically, base up or down.

8. In addition to the normal plate over-current interlock, screen current interlock, and air-flow interlock, the tube must be protected from internal damage caused by an internal plate arc which may occur at high plate voltage. A protective resistance should always be connected in series with each tube anode, to absorb power supply stored energy if an internal arc should occur. An electronic crowbar, which will discharge power supply capacitors in a few microseconds after the start of an arc, is recommended. The protection criteria for each electrode supply is to short each electrode to ground, one at a time, through a vacuum relay switch and a section of #30 AWG copper wire. The wire will remain intact if the criteria is met.

9. Avoid exposure to strong rf fields even at relatively low frequency. Absorption of rf energy by human tissue is dependent on frequency. Under 300 MHz most of the energy will pass completely through the human body with little attenuation or heating affect. Public health agencies are concerned with the hazard even at these frequencies. A widely accepted standard is that prolonged exposure to rf radiation should be limited to 10 milliwatts per square centimeter.

10. These tests are carried out 100% by the manufacturer as standard production tests. On final acceptance testing, sampling in accord with MIL-STD-105 may be used. The AQL for the combined defectives for attributes, excluding mechanical, shall be 1%. A tube having 1 or more defects shall be counted as 1 defective.

11. Filament voltage shall be maintained at the specified value for a minimum of 5 minutes before the filament current is read.

12. The symbol egk represents peak positive voltage between the control grid and the cathode.

13. Sampling shall be in accord with MIL-STD-105.

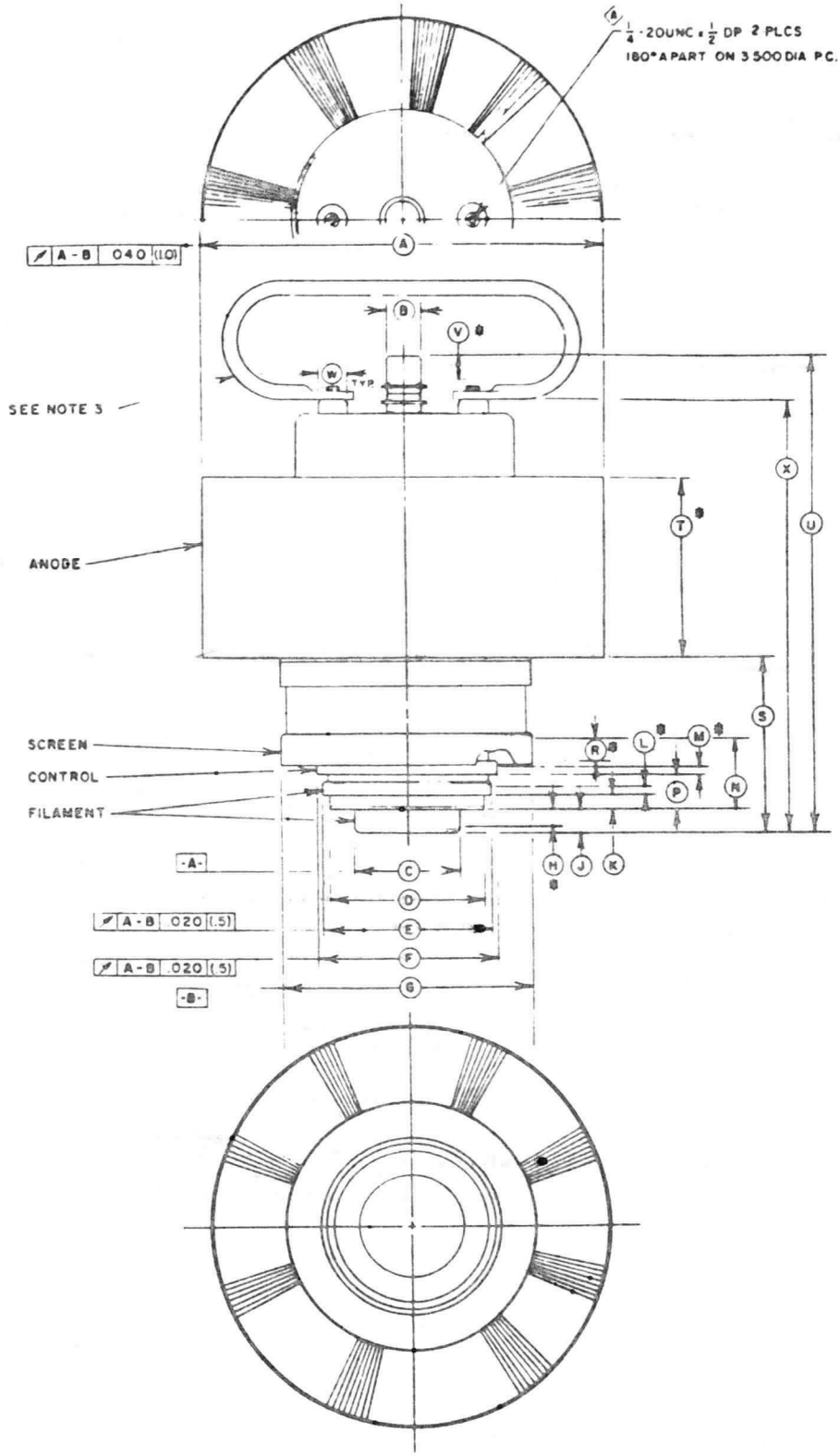

DIMENSIONAL DATA						
	INCHES			MILLIMETERS		
DIM	MIN	MAX	REF	MIN	MAX	REF
A	9.960	10.080		253.0	256.0	
B	.860	.890		21.8	22.6	
C	2.615	2.625		66.42	66.68	
D			3.825			97.2
E	4.245	4.265		107.80	108.30	
F	4.490	4.520		114.05	114.81	
G	6.360	6.405		161.5	162.7	
H	.440			11.2		
J	.640	.680		16.2	17.3	
K	.260	.290		6.6	7.4	
L	.250			6.3		
M	.150			3.8		
N	1.600			40.6		
P	.790	.830		20.1	21.1	
R	.350			8.9		
S	4.170	4.400		106.0	111.8	
T	4.400	4.600		112.0	117.0	
U	11.550	11.850		293.0	301.0	
V	.500			12.7		
W			.750			19.1
X	10.500	10.850		267.0	276.0	

NOTES

1. REF. DIMENSIONS ARE FOR INFO ONLY & ARE NOT REQUIRED FOR INSPECTION PURPOSES.
2. Ⓑ CONTACT SURFACE
3. SHIPPED WITH HANDLE ATTACHED. REMOVE BEFORE OPERATION.

EIMAC TEST SPECIFICATION.

RE 2ND DRAFT 17/8/83 15/3/84.

4CX 40,000 G M.

RF operation

1. Test circuit

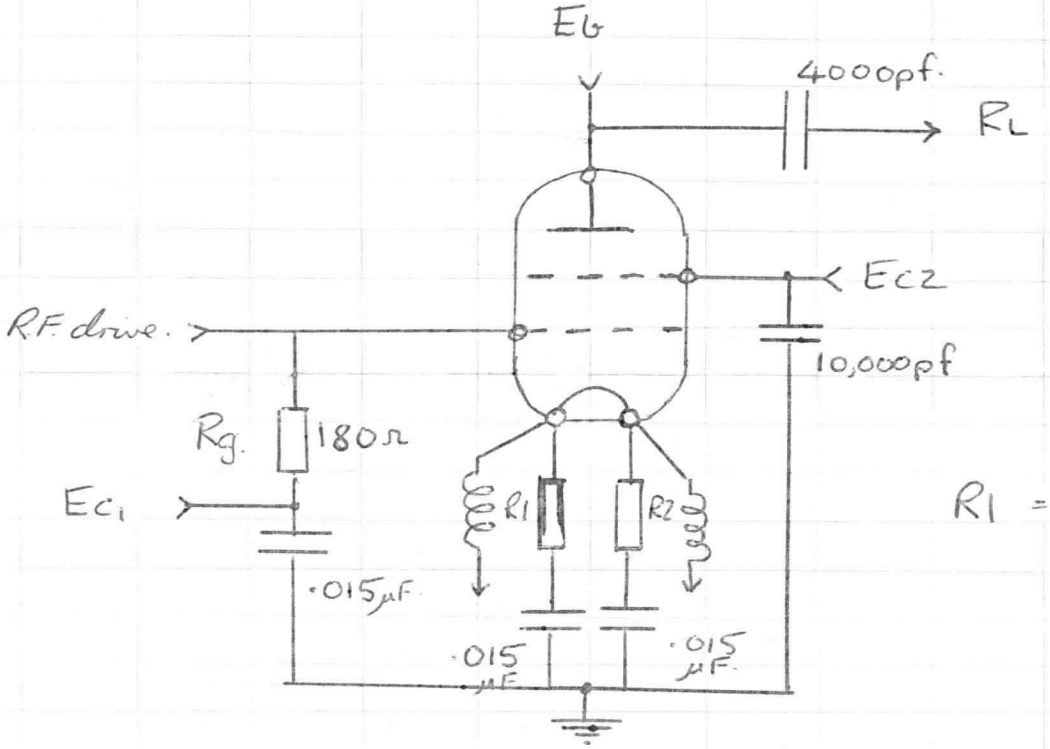

R1 = R2 = 6·5Ω.

2. Class AB Amplifier.

3. E_b = 10·5 KV d.c.

4. E_{c2} = 1400 V d.c.

5. R_L = 650Ω ± 5%

Anode loaded tank Q = 10 to 15

6. R_g = 180Ω ± 5%

7. I_{BO} < 2·5A d.c. (after adjustment for optimum I.M.D.)

8. Power Out and Intermodulation distortion.

8.1 The power out measured at the anode to be at least 56 KW PEP at 3 MHz with two equal tones spaced at 600 Hz.

8.2. Peak R.F. grid voltage < 260 V at 56 KW PEP

8.3 I_{C2} < 400 ma dc. at 56 KW PEP.

8.4. I.M.D. - measured relative to each tone at any level up to 56 KW P.E.P.

3RD I.M.D. < −41 db.

5TH I.M.D < −46 db.

The drive signal I.M.D and Harmonics < −55 db.

COMPARISON OF I.M.D. PERFORMANCE OF V1, V3, V4 & V5

WITH TEST CIRCUIT AS SHOWN.

0dB = 56 KW PEP. AT ANODE.

V1	I_{BO} = 2.0A				I_{BO} = 2.2A				I_{BO} = 2.6A			
dB	5th	3rd	3rd	5th	5th	3rd	3rd	5th	5th	3rd	3rd	5th
0	45	49	45	45	47	53	46	48	50	41	39	50
-1	50	42	42	50	53	47	46	53	60	47	45	60
-3	60	41	41	60	60	46	46	60	54	52	52	54
-6	58	50	50	58	57	59	59	57	53	48	47	53
-10	60	60	60	60	60	53	53	60	58	46	46	58

Bk1/95

V3	I_{BO} = 2.8A				I_{BO} = 3.2A				I_{BO} =			
dB	5	3	3	5	5	3	3	5	5	3	3	5
0	48	39	39	47	52	47	46	51				
-1	56	38	38	56	57	43	43	57				
-3	57	40	40	56	53	45	45	53				
-6	54	51	52	56	55	56	56	57				
-10	60	54	54	60	60	52	53	60				

Bk2/164

V4	I_{BO} = 1·7A				I_{BO} = 2·0A				I_{BO} = 2·6A			
dB	5	3	3	5	5	3	3	5	5	3	3	5
0	49	39	38	49	58	47	43	58	51	44	42	52
−1	54	39	38	54	53	44	44	54	46	44	43	46
−3	56	42	42	54	50	56	56	50	46	40	40	46
−6	56	58	58	56	52	45	45	52	50	38	38	52
−10	60	49	49	60	60	44	46	60	60	42	42	60

BK2/213

V5	I_{BO} = 1·8A				I_{BO} = 2·0A				I_{BO} = 2·4A			
dB	5	3	3	5	5	3	3	5	5	3	3	5
0	58	38	38	58	52	42	41	52	46	51	46	46
−1	56	38	38	58	48	44	43	48	44	50	46	44
−3	52	44	44	52	48	52	50	48	46	42	42	46
−6	52	54	52	50	52	44	43	52	~~58~~	38	38	52
−10	55	44	44	55	58	43	43	56	62	42	42	62

BK3/51

TECHNICAL DATA

8249
4W300B

RADIAL BEAM POWER TETRODE

The EIMAC 8249/4W300B is a ceramic/metal, water cooled, external-anode radial-beam tetrode with a maximum plate dissipation rating of 300 watts and a maximum power input rating of 500 watts. The 8249/4W300B is designed to operate with a heater voltage of 6.0 volts. Electrically identical to the 4CX250B, it is intended for use where water cooling is preferred or where reserve anode dissipation is desired.



GENERAL CHARACTERISTICS[1]

ELECTRICAL

Cathode: Oxide Coated, Unipotential		
Heater: Voltage	6.0 ± 0.3	V
Current, at 6.0 volts	2.6	A
Cathode - Heater Potential	±150	V
Transconductance (Average):		
I_b = 200 mAdc	12,000	μmhos
Amplification Factor (Average):		
Grid to Screen	5.0	
Direct Interelectrode Capacitance (grounded cathode)[2]		
Input	15.7	pF
Output	4.5	pF
Feedback	0.04	pF
Direct Interelectrode Capacitance (grounded grid)[2]		
Input	13.0	pF
Output	4.5	pF
Feedback	0.01	pF
Frequency of Maximum Rating:		
CW	500	MHz

1. Characteristics and operating values are based upon performance tests. These figures may change without notice as the result of additional data or product refinement. EIMAC Division of Varian should be consulted before using this information for final equipment design.
2. Capacitance values are for a cold tube as measured in a special shielded fixture.

MECHANICAL

Maximum Overall Dimensions:	
Length	3.407 in; 86.54 mm
Diameter	1.562 in; 39.67 mm
Net Weight	5.75 oz; 163.0 gm
Operating Position	Vertical, base up or down

(Revised 11-1-73) © 1970, 1973 by Varian

Printed in U. S. A.

Maximum Operating Temperature:
Ceramic/Metal Seals . . . . . 250°C
Cooling . . . . . Water and forced air
Base . . . . . Special 9-pin JEDEC-B8-236
Recommended Air System Socket . . . . . SK-600 series

MAXIMUM RATINGS:	Class C Plate Mod	Class C CW or FM	Class AB Audio or SSB	
DC PLATE VOLTAGE . . .	1500	2000	2000	VOLTS
DC SCREEN VOLTAGE . .	300	300	400	VOLTS
DC GRID VOLTAGE . . .	-250	-250	-250	VOLTS
DC PLATE CURRENT . . .	0.20	0.25	0.25	AMPERE
PLATE DISSIPATION . . .	200	300	300	WATTS
SCREEN DISSIPATION . .	12	12	12	WATTS
GRID DISSIPATION . . .	2	2	2	WATTS

TYPICAL OPERATION:	DC Plate Voltage (Volts)	Power Input (Watts)	Driving Power (Watts)	Power Output (Watts)
CLASS C AMPLIFIER				
CW or FM	2000	500	3	390
Plate Modulated	1500	300	2	235
CLASS AB_1 AMPLIFIER				
Audio (Two tubes)	2000	1000	0	600
SSB (One tube)	2000	500	0	300

For full listing of ratings, constant current curves and typical operating conditions, see EIMAC data sheet for 7203/4CX250B.

RANGE VALUES FOR EQUIPMENT DESIGN

	Min.	Max.	
Heater: Current at 6.0 volts	2.3	2.9	A
Cathode Warmup Time	30	--	sec.
Interelectrode Capacitances[1] (grounded cathode connection)			
Input	14.2	17.2	pF
Output	4.0	5.0	pF
Feedback	---	0.06	pF

1. Capacitance values are for a cold tube as measured in a shielded fixture.

APPLICATION

COOLING - The water-cooled anode requires a minimum of 1/16 gallon of cooling water per minute for the rated plate dissipation of 300 watts. The outlet-water temperature should not exceed 70°C and the system pressure should not exceed 50 pounds per square inch.

The ceramic/metal seals must be cooled by forced air. At frequencies below 30 MHz and when one of the recommended sockets is used, a flow rate of 1.0 CFM is sufficient. As the operating frequency is increased, the air-flow rate must be increased. At 500 MHz a minimum of 3.8 CFM is required. In all cases, seal temperatures are the criteria which determine cooling effectiveness.

PIN NO. 1. SCREEN GRID
PIN NO. 2. CATHODE
PIN NO. 3. HEATER
PIN NO. 4. CATHODE
PIN NO. 5. I.C-DO NOT USE FOR EXTERNAL CONNECTION
PIN NO. 6. CATHODE
PIN NO. 7. HEATER
PIN NO. 8. CATHODE
CENTER PIN - CONTROL GRID

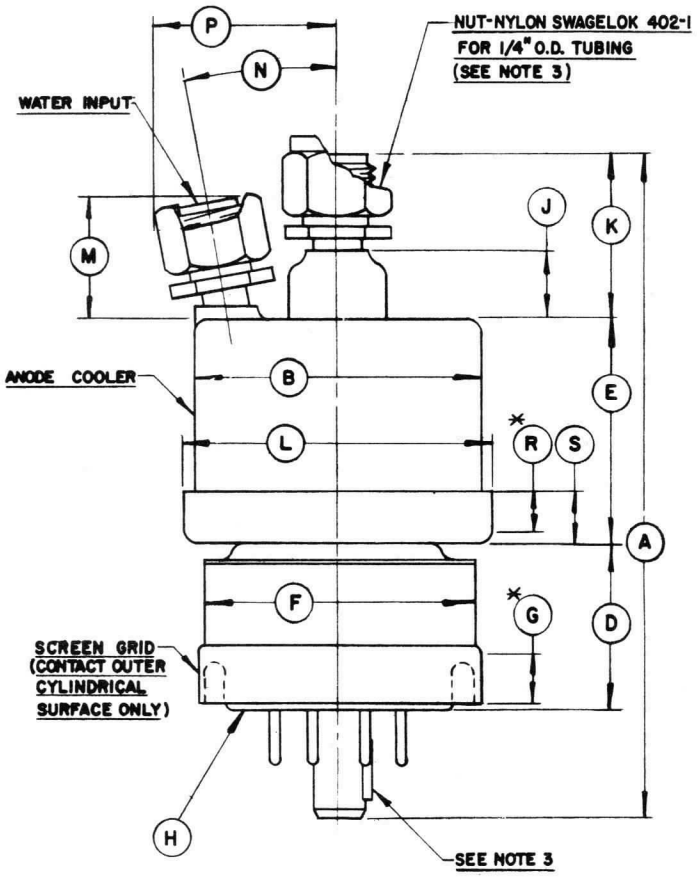

DIMENSIONAL DATA						
DIM	INCHES			MILLIMETERS		
	MIN.	MAX.	REF.	MIN.	MAX.	REF.
A	- -	3.407	- -	- -	86.54	- -
B	1.450	1.490	- -	36.83	37.85	- -
D	0.750	0.810	- -	19.05	20.57	- -
E	1.106	1.186	- -	28.09	30.12	- -
F	- -	1.406	- -	- -	35.71	- -
G	0.187	- -	- -	4.75	- -	- -
H	BASE: B8-236 (JEDEC DESIGNATION)					
J	- -	- -	0.244	- -	- -	6.20
K	0.797	0.857	- -	20.24	21.77	- -
L	- -	1.562	- -	- -	39.67	- -
M	- -	- -	0.670	- -	- -	17.02
N	- -	- -	10°	- -	- -	10°
R	0.156	- -	- -	3.96	- -	- -
S	- -	- -	0.250	- -	- -	6.35
P	- -	1.063	- -	- -	27.00	- -

NOTES:
1. REF. DIMENSIONS ARE FOR INFORMATION ONLY & ARE NOT REQ'D FOR INSPECTION PURPOSES.
2. (*) CONTACT SURFACE
3. AXIS OF FITTINGS IS ON AXIS OF INDEX OF CENTER PIN AS SHOWN.

TECHNICAL DATA

7034
4X150A
7609

RADIAL-BEAM
POWER TETRODE

The 7034/4X150A and 7609 are forced-air cooled, external-anode radial-beam tetrodes with a maximum plate dissipation rating of 250 watts and a maximum input-power rating of 500 watts up to 150 MHz, with reduced ratings applicable to 500 MHz. The 7034/4X150A is designed to operate with a heater voltage of 6.0 volts, while the 7609 is designed for operation at a heater voltage of 26.5 volts. Otherwise, the two tube types have identical characteristics.



GENERAL CHARACTERISTICS[1]

ELECTRICAL

Cathode: Oxide Coated, Unipotential		
Heater: Voltage (7034)	6.0 ± 0.6	V
Current, at 6.0 volts	2.6	A
Cathode-Heater Potential	±150	V
Heater: Voltage (7609)	26.5 ± 2.6	V
Current at 26.5 volts	0.51	A
Cathode Heater Potential	±150	V
Amplification Factor (Average):		
Grid to Screen	5	
Direct Interelectrode Capacitances (Grounded Cathode)[2]		
Input	15.7	pF
Output (7034)	4.5	pF
Output (7609)	4.2	pF
Feedback	0.03	pF
Frequency of Maximum Rating:	150	MHz
Highest Useful Frequency:	500	MHz

1. Characteristics and operating values are based upon performance tests. These figures may change without notice as the results of additional data or product refinement. EIMAC Division of Varian should be consulted before using this information for final equipment design.

2. In Shielded Fixture.

MECHANICAL

Maximum Overall Dimensions:	
Length	2.414 in; 61.32 mm
Diameter	1.640 in; 41.66 mm
Net Weight	4 oz; 113 gm
Operating Position	Any

(Revised 8-1-74) 1962, 1970, 1974 Varian Printed in U.S.A.

Maximum Operating Temperature: Glass Seals	200 °C
Ceramic Seals	250 °C
Anode Core	250 °C
Cooling	Forced Air
Base	Special 9-pin JEDEC-B8-236
Recommended Socket	EIMAC SK-600 Series
Recommended Chimney	EIMAC SK-600 Series

RADIO FREQUENCY LINEAR AMPLIFIER GRID DRIVEN (SSB)

Class AB_1

MAXIMUM RATINGS:

DC PLATE VOLTAGE [1]	2000	VOLTS
DC SCREEN VOLTAGE	400	VOLTS
DC GRID VOLTAGE	-250	VOLTS
DC PLATE CURRENT	0.25	AMPERE
PLATE DISSIPATION	250	WATTS
SCREEN DISSIPATION	12	WATTS
GRID DISSIPATION	2	WATTS

1. Dc plate voltage rating is 1250 volts above 150 MHz.

TYPICAL OPERATION (Frequencies to 150 MHz)
Class AB1, Grid Driven, Peak Envelope or Modulation Crest Conditions

Plate Voltage	1000	1500	2000	Vdc
Screen Voltage	350	350	350	Vdc
Grid Voltage [2]	-55	-55	-55	Vdc
Zero-Signal Plate Current	100	100	100	mAdc
Single Tone Plate Current	250	250	250	mAdc
Two-Tone Plate Current	190	190	190	mAdc
Single-Tone Screen Current [3]	10	8	5	mAdc
Two-Tone Screen Current [3]	2	-1	-2	mAdc
Single-Tone Grid Current [3]	0	0	0	mAdc
Peak rf Grid Voltage [3]	50	50	50	v
Plate Output Power	120	215	300	W
Resonant Load Impedance	1750	3100	4750	Ω

2. Adjust to specified zero-signal dc plate current.
3. Approximate value.

RADIO FREQUENCY LINEAR AMPLIFIER GRID DRIVEN, CARRIER CONDITIONS

Class AB_1

MAXIMUM RATINGS:

DC PLATE VOLTAGE [1]	2000	VOLTS
DC SCREEN VOLTAGE	400	VOLTS
DC GRID VOLTAGE	-250	VOLTS
DC PLATE CURRENT	0.25	AMPERE
PLATE DISSIPATION	250	WATTS
SCREEN DISSIPATION	12	WATTS
GRID DISSIPATION	2	WATTS

1. Dc plate voltage rating is 1250 volts above 150 MHz.

TYPICAL OPERATION (Frequencies to 150 MHz)
Class AB_1, Grid Driven

Plate Voltage	1000	1500	2000	Vdc
Screen Voltage	350	350	350	Vdc
Grid Voltage [2]	-55	-55	-55	Vdc
Zero-Signal Plate Current	100	100	100	mAdc
Carrier Plate Current	150	150	150	mAdc
Carrier Screen Current	-3	-4	-4	mAdc
Peak rf Grid Voltage [3]	25	25	25	v
Plate Output Power	30	50	65	W

2. Adjust to specified zero-signal dc plate current.
3. Approximate value.

RADIO FREQUENCY POWER AMPLIFIER OR OSCILLATOR

Class C Telegraphy or FM Telephony
(Key-Down Conditions)

MAXIMUM RATINGS:

DC PLATE VOLTAGE [1]	2000	VOLTS
DC SCREEN VOLTAGE	300	VOLTS
DC GRID VOLTAGE	-250	VOLTS
DC PLATE CURRENT	0.25	AMPERE
PLATE DISSIPATION	250	WATTS
SCREEN DISSIPATION	12	WATTS
GRID DISSIPATION	2	WATTS

1. Dc plate voltage rating is 1250 volts above 150 MHz.

TYPICAL OPERATION (Frequencies to 150 MHz)					500 MHz [3]	
Plate Voltage	500	1000	1500	2000	1250	Vdc
Screen Voltage	250	250	250	250	250	Vdc
Grid Voltage	-90	-90	-90	-90	-80	Vdc
Plate Current	250	250	250	250	200	mAdc
Screen Current [2]	45	38	21	19	7	mAdc
Grid Current [2]	35	31	28	26	10	mAdc
Peak rf Grid Voltage [2]	114	114	112	112	---	v
Measured Driving Power [2]	4.0	3.5	3.2	2.9	10	W
Plate Input Power	125	250	375	500	250	W
Plate Output Power	70	190	280	390	140	W [2]
Heater Voltage	6.0	6.0	6.0	6.0	(4)	

2. Approximate value.
3. Measured values for a typical cavity amplifier circuit.
4. Heater voltage reduced to 5.5 volts and 24.3 volts for the 7034 and 7609 respectively.

PLATE MODULATED RADIO FREQUENCY POWER AMPLIFIER-GRID DRIVEN

Class C Telephony (Carrier Conditions)

MAXIMUM RATINGS:

DC PLATE VOLTAGE[1]	1600	VOLTS
DC SCREEN VOLTAGE	300	VOLTS
DC GRID VOLTAGE	-250	VOLTS
DC PLATE CURRENT	0.20	AMPERE
PLATE DISSIPATION[2]	165	WATTS
SCREEN DISSIPATION[3]	12	WATTS
GRID DISSIPATION[3]	2	WATTS

1. Dc plate voltage rating is 1250 volts above 150 MHz.
2. Corresponds to 250 watts at 100% sine-wave modulation.
3. Average, with or without modulation.

TYPICAL OPERATION (Frequencies to 150 MHz)

Plate Voltage	500	1000	1600	Vdc
Screen Voltage	250	250	250	Vdc
Grid Voltage	-100	-100	-100	Vdc
Plate Current	200	200	200	mAdc
Screen Current[4]	25	20	18	mAdc
Grid Current[4]	23	21	21	mAdc
Peak rf Grid Voltage[4]	173	172	172	v
Calculated Driving Power[4]	4.0	3.6	3.6	W
Plate Input Power	100	200	320	W
Plate Output Power	47	140	250	W

4. Approximate value.

AUDIO FREQUENCY POWER AMPLIFIER OR MODULATOR

Class AB_1, Grid Driven (Sinusoidal Wave)

MAXIMUM RATINGS (Per Tube):

DC PLATE VOLTAGE	2000	VOLTS
DC SCREEN VOLTAGE	400	VOLTS
DC GRID VOLTAGE	-250	VOLTS
DC PLATE CURRENT	0.25	AMPERE
PLATE DISSIPATION	250	WATTS
SCREEN DISSIPATION	12	WATTS
GRID DISSIPATION	2	WATTS

1. Approximate value.
2. Per Tube.

TYPICAL OPERATION (Two Tubes)

Plate Voltage	1000	1500	2000	Vdc
Screen Voltage	350	350	350	Vdc
Grid Voltage[1/3]	-55	-55	-55	Vdc
Zero-Signal Plate Current	200	200	200	mAdc
Max Signal Plate Current	500	500	500	mAdc
Max Signal Screen Current[1]	20	16	10	mAdc
Max Signal Grid Current[1]	0	0	0	mAdc
Peak af Grid Voltage[2]	50	50	50	v
Peak Driving Power	0	0	0	W
Plate Input Power	500	750	1000	W
Plate Output Power	240	430	600	W
Load Resistance (Plate to Plate)	3500	6200	9500	Ω

3. Adjust to give stated zero-signal plate current.

NOTE: TYPICAL OPERATION data are obtained from direct measurement or by calculation from published characteristic curves. Adjustment of the rf grid voltage to obtain the specified plate current at the specified bias, screen and plate voltages is assumed. If this procedure is followed, there will be little variation in output power when the tube is changed, even though there may be some variation in grid and screen current. The grid and screen currents which result when the desired plate current is obtained are incidental and vary from tube to tube. These current variations cause no difficulty so long as the circuit maintains the correct voltage in the presence of the variations in current. In the case of Class C Service, if grid bias is obtained principally by means of a grid resistor, the resistor must be adjustable to obtain the required bias voltage when the correct rf grid voltage is applied.

RANGE VALUES FOR EQUIPMENT DESIGN

	Min.	Nom.	Max.	
Heater: 7034-Current at 6.0 volts	2.3	---	2.9	A
Heater: 7609-Current at 26.5 volts	0.40	---	0.62	A
Cathode Warmup Time	30	60	---	sec
Interelectrode Capacitances[1] (grounded cathode connection)				
Input	14.5	---	17.0	pF
Output (7034)	4.0	---	4.8	pF
Output (7609)	3.7	---	4.45	pF
Feedback	---	---	0.05	pF

1. In Shielded Fixture.

APPLICATION

MECHANICAL

MOUNTING - The 7034 and 7609 may be operated in any position. An EIMAC Air-System Socket, SK-600 series, or a socket having equivalent characteristics, is required. Sockets are available with or without built-in screen capacitors and may be obtained with either grounded or ungrounded cathode terminals.

COOLING - Sufficient forced-air cooling must be provided for the anode, base seals, and body seals to maintain operating temperatures below the rated maximum values. Air requirements to maintain anode core temperatures at 200°C with an inlet air temperature of 50°C are tabulated below. These requirements apply when a socket of the EIMAC SK-600 series and an EIMAC SK-606 chimney are used with air flow in the base to anode direction.

SEA LEVEL			10,000 FEET	
Plate Dissipation(watts)	Air Flow (CFM)	Pressure Drop(In. of water)	Air Flow (CFM)	Pressure Drop(In. of water)
200	5.2	0.58	7.8	0.85
250	6.1	0.79	9.0	1.10

The blower selected in a given application must be capable of supplying the desired airflow at a back pressure equal to the pressure drop shown above plus any drop encountered in ducts and filters. The blower must be designed to deliver the air at the desired altitude.

At 500 MHz or below, base cooling air requirements are satisfied automatically when the tube is operated in an EIMAC Air-System Socket and the recommended air flow rates are used. Experience has shown that if reliable long life operation is to be obtained, the cooling air flow must be maintained during standby periods when only the heater voltage is applied to the tube. The anode cooler should be inspected periodically and cleaned when necessary to remove any dirt which might interfere with effective cooling.

VIBRATION - These tubes are capable of satisfactorily withstanding ordinary shock and vibration, such as encountered in shipment and normal handling. The tubes will function well in automobile and truck mobile installations and similar environments. However, when shock and vibration more severe than this is expected, it is suggested that the EIMAC 4CX300A or 4CX250R be employed.

ELECTRICAL

HEATER - The rated heater voltage for the 7034 and 7609 is 6.0 volts and 26.5 volts, respectively, and the voltage should be maintained as closely as practicable. Short-time changes of ± 10% will not damage the tube, but variations in performance must be expected. The heater voltage must be maintained within ± 5% to minimize these variations and to obtain maximum tube life.

At frequencies above approximately 300 MHz transit-time effects begin to influence the cathode temperature. The amount of driving power diverted to heating the cathode by back-bombardment will depend upon frequency, plate current, and driving power. When the tube is driven to maximum input as a class-C amplifier, the heater voltage should be reduced according to the table below:

Frequency MHz	7034	7609
300 and lower	6.00 volts	26.5 volts
301 to 400	5.75 volts	25.3 volts
401 to 500	5.50 volts	24.3 volts

CATHODE OPERATION - The oxide coated unipotential cathode must be protected against excessively high emission currents. The maximum rated dc input current is 200 mA for plate-modulated operation and 250 mA for all other types of operation except pulse.

The cathode is internally connected to the four even-numbered base pins and all four of the corresponding socket terminals should be used to make connection to the external circuits. At radio frequencies it is important to keep the cathode leads short and direct and to use conductors with large areas to minimize the inductive reactances in series with the cathode leads.

It is recommended that rated heater voltage be applied for a minimum of 30 seconds before other operating voltages are applied. Where the circuit design requires the cathode and heater to be operated at different potentials, the rated maximum heater-to-cathode voltage is 150 volts regardless of polarity.

GRID OPERATION - The maximum rated dc grid bias voltage is -250 volts and the maximum grid dissipation rating is 2.0 watts. In ordinary audio and radio-frequency amplifiers the grid dissipation usually will not approach the maximum rating. At operating frequencies above the 100 MHz region, driving-power requirements for

amplifiers increase noticeably. At 500 MHz as much as 20 watts of driving power may have to be supplied. However, most of the driving power is absorbed in circuit losses other than grid dissipation, so that grid dissipation is increased only slightly. Satisfactory 500 MHz operation of the tube in a stable amplifier is indicated by grid-current values below approximately 15 mA.

The grid voltage required by different tubes may vary between limits approximately 20% above and below the center value, and means should be provided in the equipment to accommodate such variation. It is especially important that variations between individual tubes be compensated when tubes are operated in parallel or push-pull circuits, to assure equal load sharing.

The maximum permissible grid-circuit resistance per tube is 100,000 ohms.

SCREEN OPERATION - The maximum rated power dissipation for the screen is 12 watts, and the screen input power should be kept below that level. The product of the peak screen voltage and the indicated dc screen current approximates the screen input power except when the screen current indication is near zero or negative.

In the usual tetrode amplifier, where no signal voltage appears between cathode and screen, the peak screen voltage is equal to the dc screen voltage.

When signal voltages appear between screen and cathode, as in the case of screen-modulated amplifiers or cathode-driven tetrode amplifiers, the peak screen-to-cathode voltage is the sum of the dc screen voltage and the peak ac or rf signal voltage applied to screen or cathode.

Protection for the screen should be provided by an over-current relay and by interlocking the screen supply so that plate voltage must be applied before screen voltage can be applied.

The screen current may reverse under certain conditions and produce negative current indications on the screen milliammeter. This is a normal characteristic of most tetrodes. The screen power supply should be designed with this characteristic in mind so that the correct operating voltage will be maintained on the screen under all conditions. A current path from screen to cathode must be provided by a bleeder resistor, gaseous voltage regulator tubes, or an electron tube *shunt* regulator connected between screen and cathode and arranged to pass approximately 15 milliamperes per connected screen. An electron tube *series* regulator can be used only when an adequate bleeder resistor is provided.

Self-modulation of the screen in plate-modulated tetrode amplifiers using these tubes may not be satisfactory because of the screen-voltage screen-current characteristics. Screen modulation from a tertiary winding on the modulation transformer or by means of a small separate modulator tube will usually be more satisfactory. Screen-voltage modulation factors between 0.75 and 1.0 will result in 100% modulation for plate-modulated rf amplifiers using the 7034 or 7609.

PLATE OPERATION - The maximum rated plate dissipation power is 250 watts. In plate-modulated applications the carrier plate dissipation power must be limited to 165 watts to avoid exceeding the plate dissipation rating with 100% sine wave modulation. The maximum dissipation rating may be exceeded for brief periods during circuit adjustment without damage to the tube.

MULTIPLE OPERATION - Tubes operating in parallel or push-pull must share the load equally. It is good engineering practice to provide individual metering and individual adjustment of bias or screen voltage to equalize the inputs.

Where overload protection is provided, it should be capable of protecting the surviving tube(s) in the event that one tube fails.

VHF OPERATION - The 7034 and 7609 are suitable for use in the VHF region. Such operation should be conducted with heavy plate loading, minimum bias, and the lowest driving power consistent with satisfactory performance. It is often preferable to operate at a sacrifice in efficiency to obtain increased tube life.

HIGH VOLTAGE - The 7034 and 7609 operate at voltages which can be deadly, and the equipment must be designed properly and operating precautions must be followed. Equipment must be designed so that no one can come in contact with high voltages. All equipment must include safety enclosures for high-voltage circuits and terminals, with interlock switches to open the primary circuits of the power supplies and to discharge high-voltage condensers whenever access doors are opened. Interlock switches must not be bypassed or "cheated" to allow operation with access doors open. Always remember that HIGH VOLTAGE CAN KILL.

SPECIAL APPLICATIONS-If it is desired to operate these tubes under conditions widely different from those given here, write to Application Engineering Dept., EIMAC Division of Varian, San Carlos, Calif. 94070 for information and recommendations.

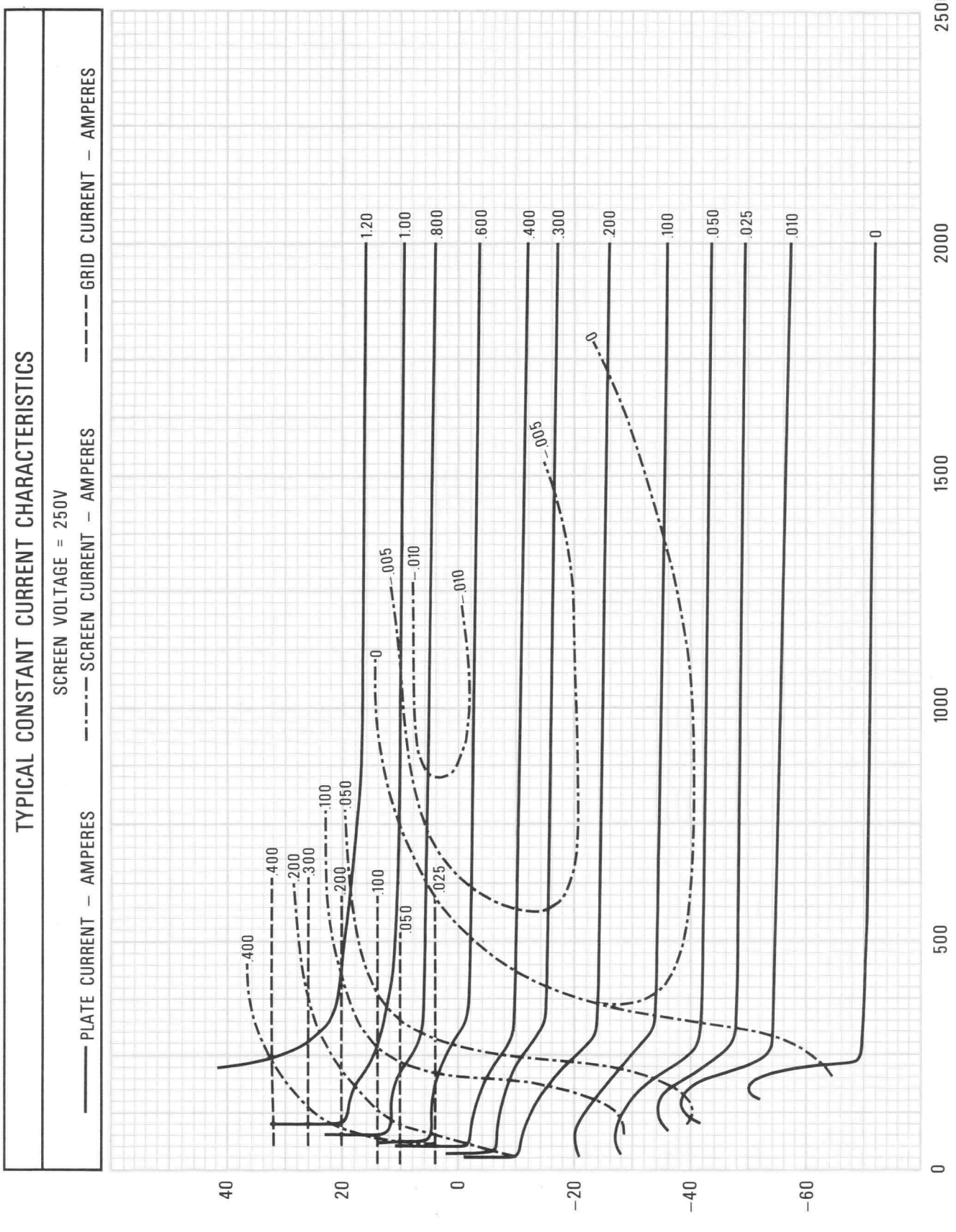
TYPICAL CONSTANT CURRENT CHARACTERISTICS
SCREEN VOLTAGE = 250V
PLATE CURRENT – AMPERES
SCREEN CURRENT – AMPERES
GRID CURRENT – AMPERES
GRID VOLTAGE (V)
PLATE VOLTAGE (V)
40
20
0
-20
-40
-60
0
500
1000
1500
2000
2500
1.20
1.00
.800
.600
.400
.300
.200
.100
.050
.025
.010
0
.400
.200
.300
.200
.100
.050
.025
.010
.005
0
.005
0

TYPICAL CONSTANT CURRENT CHARACTERISTICS

SCREEN VOLTAGE = 350V

PLATE CURRENT – AMPERES — SCREEN CURRENT – AMPERES — GRID CURRENT – AMPERES

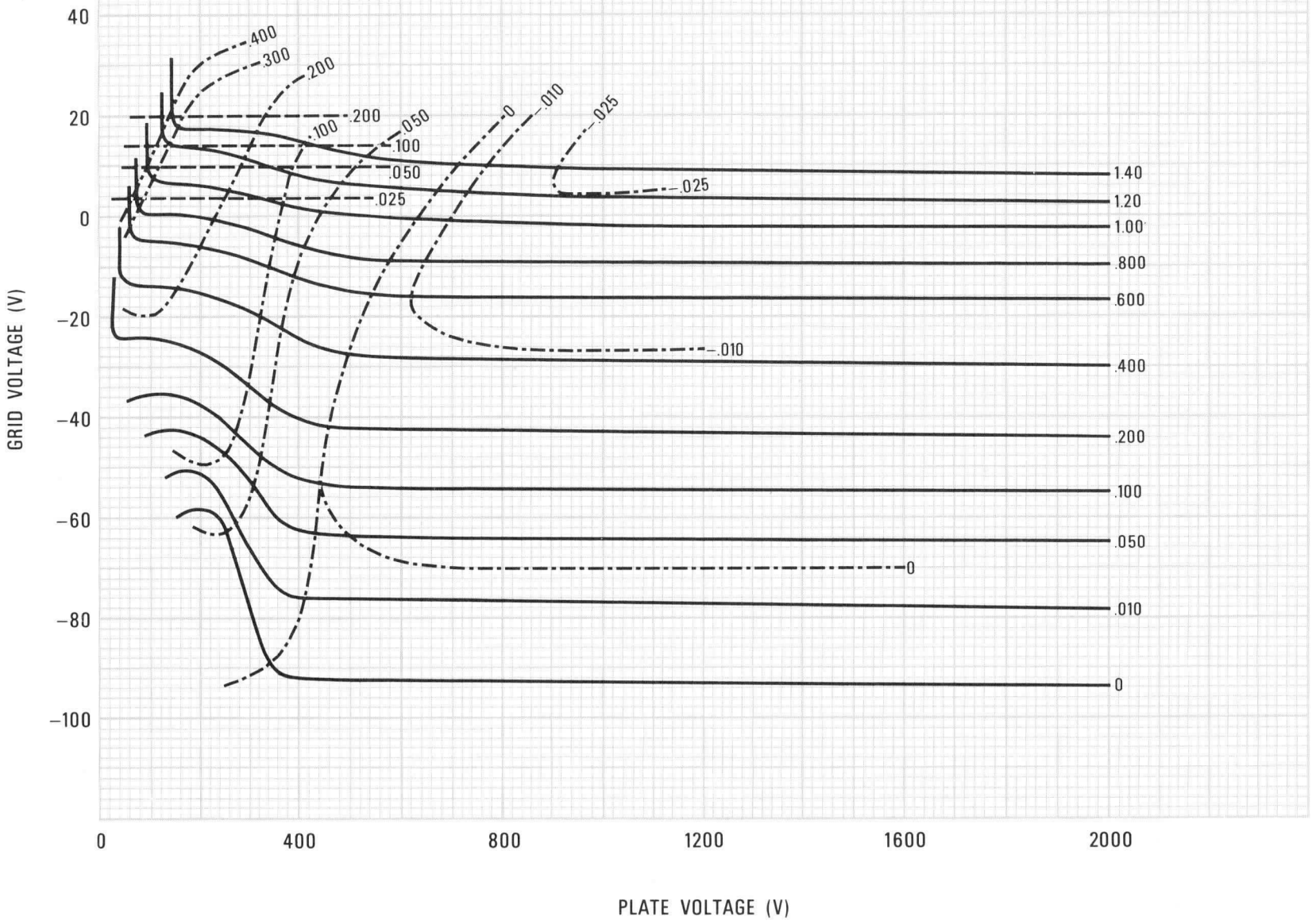

7034-7609

Eimac®

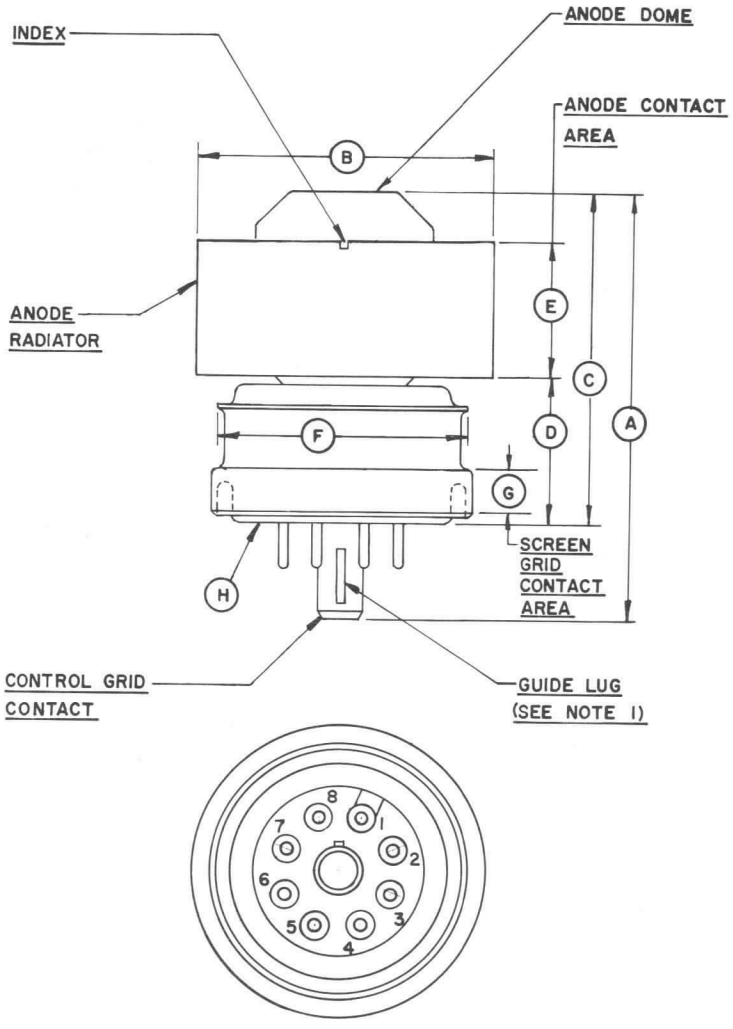

DIMENSIONAL DATA						
	INCHES			MILLIMETERS		
DIM.	MIN.	MAX.	NOM.	MIN.	MAX.	NOM.
A	2.224	2.414		59.03	62.59	
B	1.610	1.640		40.89	41.65	
C	1.710	1.860		43.43	47.24	
D	.750	.810		19.05	20.57	
E	.710	.790		18.03	20.07	
F		1.406			35.71	
G	.187			4.75		
H	BASE: B8-236 (JEDEC DESIGNATION)					

NOTES:

1. LOCATION OF GUIDE LUG OF CONTROL GRID CONTACT MAY BE REFERENCED BY AN ARROW OR NOTCH ON THE ANODE RADIATOR IN THE POSITION SHOWN.

PIN DATA

PIN NO. 1 SCREEN GRID
PIN NO. 2 CATHODE
PIN NO. 3 HEATER
PIN NO. 4 CATHODE
PIN NO. 5 I.C.–DO NOT USE FOR EXTERNAL CONNECTION
PIN NO. 6 CATHODE
PIN NO. 7 HEATER
PIN NO. 8 CATHODE
CENTER PIN–CONTROL GRID

TECHNICAL DATA

8172
4X150G

RADIAL-BEAM POWER TETRODE

The EIMAC 8172/4X150G is an extremely compact external-anode tetrode intended for use as a radio-frequency amplifier, frequency multiplier, or oscillator at frequencies well into the UHF region or as an amplifier in any service requiring a high-gain tube capable of delivering high power-output at low plate-voltage. The combination of a high ratio of transconductance to capacitance and a plate dissipation capability of 250 watts makes the tube an excellent wide-band amplifier for video applications.

The cathode, grid and screen electrodes are mounted on conical and cylindrical supports giving a minimum of circuit discontinuities and lead inductance. The rugged cylindrical terminals, progressively larger in size, allow the tube to be inserted in coaxial line cavities. The screen support and terminal provide maximum isolation between the grid-cathode terminals and the plate circuit.

In amplifier service at 500 megahertz, output power of 140 watts per tube, with a stage power-gain of 14, can be obtained. At 1000 megahertz an output power of 50 watts per tube is obtained with a power-gain of five.

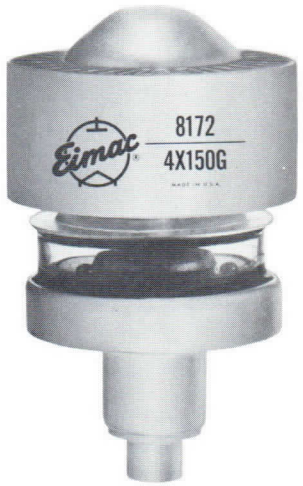

GENERAL CHARACTERISTICS

ELECTRICAL

	Min.	*Nom.*	*Max.*	
Cathode: Oxide-Coated, Unipotential				
Heating Time	30	60		seconds
Cathode-to-heater Potential			150	volts
Heater: Voltage		2.5		volts
Current	6.2		7.3	amperes
Amplification Factor (Grid-to-Screen)		5		

Direct Interelectrode Capacitances, Grounded Cathode:	*Min.*	*Max.*	
Input	25.0	29.0	pf
Output	4.0	4.9	pf
Feedback		0.05	pf

Direct Interelectrode Capacitances, Grounded Grid and Screen	*Min.*	*Max.*	
Input	14.5	19	pf
Output	4.0	4.9	pf
Feedback		0.01	pf

Frequency for Maximum Ratings (CW)	500 MHz
(pulsed)	1500 MHz

MECHANICAL

Base	Coaxial
Maximum Operating Temperatures:	
Glass-to-Metal Seals	175°C
Ceramic-to-Metal Seals	250°C
Anode Core	250°C
Operating Position	Any
Maximum Dimensions:	
Height	2.75 inches
Diameter	1.635 inches
Cooling	Forced Air
Net Weight	6 ounces
Shipping Weight (Approximate)	1.6 pounds

(Revised 10-15-73)© 1959, 1966, 1973 Varian

Printed in U.S.A.

RADIO-FREQUENCY POWER AMPLIFIER OR OSCILLATOR

Class-C Telegraphy or FM Telephony
(Key-down Conditions)

MAXIMUM RATINGS

DC PLATE VOLTAGE	1250 VOLTS
DC SCREEN VOLTAGE	300 VOLTS
DC GRID VOLTAGE	—250 VOLTS
DC PLATE CURRENT	250 MA
PLATE DISSIPATION	250 WATTS
SCREEN DISSIPATION	12 WATTS
GRID DISSIPATION	2 WATTS

TYPICAL OPERATION (Frequencies up to 165 MHz)

DC Plate Voltage	600	750	1000	1250	1250	volts
DC Screen Voltage	250	250	250	250	250	volts
DC Grid Voltage	—75	—80	—80	—90	—80	volts
DC Plate Current	200	200	200	200	200	mA
DC Screen Current*	37	37	30	20	7	mA†
DC Grid Current*	10	10	10	10	10	mA†
Peak RF Grid Voltage*	90	95	95	105	—	volts
Driving Power*	0.7	0.7	0.7	0.8	10	watts†
Plate Input Power	120	150	200	250	250	watts
Plate Output Power	85	110	150	195	140	watts†

*Approximate values.
†Measured values for a typical cavity amplifier circuit.

PLATE-MODULATED RADIO-FREQUENCY AMPLIFIER

Class-C Telephony (Carrier conditions)

MAXIMUM RATINGS

DC PLATE VOLTAGE	1000 VOLTS
DC SCREEN VOLTAGE	300 VOLTS
DC GRID VOLTAGE	—250 VOLTS
DC PLATE CURRENT	200 MA
PLATE DISSIPATION	165 WATTS
SCREEN DISSIPATION	12 WATTS
GRID DISSIPATION	2 WATTS

TYPICAL OPERATION (Frequencies up to 165 MHz)

DC Plate Voltage	600	800	1000	volts
DC Screen Voltage	250	250	250	volts
DC Grid Voltage	—95	—100	—105	volts
DC Plate Current	200	200	200	mA
DC Screen Current*	35	25	20	mA
DC Grid Current*	8	10	15	mA
Peak RF Grid Input Voltage*	120	120	125	volts
Driving Power*	1	1.5	2	watts
Plate Input Power	40	60	60	watts
Plate Output Power	120	160	200	watts

*Approximate values.

RADIO-FREQUENCY POWER AMPLIFIER

Class-B Linear, Television Visual Service (per tube)

MAXIMUM RATINGS

DC PLATE VOLTAGE	1250 VOLTS
DC SCREEN VOLTAGE	400 VOLTS
DC GRID VOLTAGE	250 VOLTS
DC PLATE CURRENT (Average)	250 MA
PLATE DISSIPATION	250 WATTS
SCREEN DISSIPATION	12 WATTS
GRID DISSIPATION	2 WATTS

TYPICAL OPERATION
(Frequencies up to 216 MHz, 5-MHz bandwidth)

DC Plate Voltage	750	1000	1250	volts
DC Screen Voltage	300	300	300	volts
DC Grid Voltage	—60	—65	—70	volts
During Sync-Pulse Peak:				
DC Plate Current	335	330	305	mA
DC Screen Current	50	45	45	mA
DC Grid Current	15	20	25	mA
Peak RF Grid Voltage	85	95	100	volts
RF Driving Power (approx.)	7	8	9	watts
Useful Power Output	135	200	250	watts
Black Level:				
DC Plate Current	245	240	230	mA
DC Screen Current	20	15	10	mA
DC Grid Current	4	4	4	mA
Peak RF Grid Voltage (approx.)	65	70	75	volts
RF Driver Power (approx.)	4.25	4.7	5.5	watts
Plate Power Input	185	240	290	watts
Useful Power Output	75	110	140	watts

PLATE PULSED RADIO FREQUENCY AMPLIFIER OR OSCILLATOR

MAXIMUM RATINGS

PULSED PLATE VOLTAGE	7000 VOLTS
PULSED SCREEN VOLTAGE	1500 VOLTS
DC GRID VOLTAGE	—500 VOLTS
PULSE DURATION	5 USEC
PULSED CATHODE CURRENT	7 AMPS
AVERAGE POWER INPUT	250 WATTS
PLATE DISSIPATION	250 WATTS
SCREEN DISSIPATION	12 WATTS
GRID DISSIPATION	2 WATTS

TYPICAL PULSE OPERATION
Single tube oscillator, 1200-MHz

Pulsed Plate Voltage	5	7	kV
Pulsed Plate Current	4.0	6.0	amps
Pulsed Screen Voltage	800	1200	volts
Pulsed Screen Current	0.3	0.4	amps
DC Grid Voltage	—200	—250	volts
Pulsed Grid Current	0.5	0.6	amps
Pulse Duration	4	5	μsec
Pulse Repetition Rate	2500	1000	pps
Peak Power Output	7	17	kW

RADIO-FREQUENCY LINEAR AMPLIFIER

Class-AB_1 (Single-Sideband Suppressed-Carrier Operation)

MAXIMUM RATINGS

DC PLATE VOLTAGE	2000 VOLTS
DC SCREEN VOLTAGE	400 VOLTS
DC PLATE CURRENT	250 MA
PLATE DISSIPATION	250 WATTS
SCREEN DISSIPATION	12 WATTS
GRID DISSIPATION	2 WATTS

TYPICAL OPERATION (Frequencies up to 165 MHz peak-envelope conditions except where noted)

DC Plate Voltage	1000	1250	volts
DC Screen Voltage	350	350	volts
DC Grid Voltage*	—55	—55	volts
Zero-Signal DC Plate Current	100	100	mA
Peak RF Grid Voltage**	50	50	volts
DC Plate Current	250	250	mA
DC Screen Current**	10	9	mA
Plate Input Power	250	310	watts
Plate Output Power	120	170	watts
Two-Tone Average DC Plate Current	190	190	mA
Two-Tone Average DC Screen Current**	2	—1	mA

*Approximate values.
**Adjust grid bias to obtain listed zero-signal plate current.

NOTE: "TYPICAL OPERATION" data are obtained by calculation from published characteristic curves and confirmed by direct tests. Adjustment of the rf grid drive to obtain the specified plate current at the specified grid bias, screen voltage, and plate voltage is assumed. If this procedure is followed, there will be little variation in output power when tubes are changed, even though there may be some variations in grid and screen currents. The grid and screen currents which result when the desired plate current is obtained are incidental and vary from tube to tube. These current variations cause no difficulty so long as the circuit maintains the correct voltage in the presence of the variations in current. If grid bias is obtained principally by means of a grid resistor, the resistor must be adjustable to obtain the required bias voltage when the correct rf driving voltage is applied.

APPLICATION

MECHANICAL

Mounting—The 4X150G may be mounted in any position. The concentric arrangements of the electrode terminals permits the use of the tube in coaxial line or cavity type circuits to advantage.

Connections to the contact surfaces should be made by means of spring-finger collets which have sufficient pressure to maintain a good electrical contact at all fingers. Points of electrical contact should be kept clean and free of oxidation to minimize rf losses.

Cooling — The 4X150G requires sufficient forced air to keep the glass-to-metal seals below 175°C and the ceramic-metal seals and anode core below 250°C. The air flow must be started when power is applied to the heater and must continue without interruption until all electrode voltages have been removed from the tube.

Effective cooling of the anode is accomplished by directing six cubic feet per minute of air through the anode cooler. This flow is obtained at a pressure drop across the cooler of approximately 0.25 inch of water column. The grid, cathode and heater terminals are cooled by high velocity air directed at the terminals and the connecting collets which aid in the removal of heat from the terminals by conduction. The volume required will depend upon the socket arrangement and should be adequate to keep the metal-to-glass seals below 175°C and the center heater terminal below 250°C.

The air requirements stated above are based on operation at sea level an ambient temperature of 20°C. Operation at high altitudes or at high ambient temperatures requires a greater volume of air flow.

Temperature of the external parts of a tube may be measured with the aid of a temperature-sensitive lacquer.

ELECTRICAL

Heater — The rated heater voltage for the 4X150G is 2.5 volts, and should be maintained at this value plus or minus five percent. At frequencies above 300 megahertz, transit time effects begin to influence the cathode temperature. The amount of driving power diverted to cathode heating will depend on frequency, plate current and driving power. When the tube is driven to maximum input as a class-C CW amplifier, the heater voltage should be reduced according to the following table.

Frequency	Heater Voltage
301 to 400 MHz	2.4 volts
401 to 500 MHz	2.3 volts

At low duty, in pulse service, no reduction in heater voltage is normally required up to 1500 MHz.

Cathode — The oxide-coated unipotential cathode must be protected against excessively high emission currents. The maximum dc plate current must be limited to 250 mA under CW conditions. Pulse current must never exceed 6.0 amperes.

Where it is necessary to operate with some heater-to-cathode potential, the maximum heater-to-cathode voltage is 150 volts regardless of polarity.

Grid Dissipation—Maximum grid dissipation is 2.0 watts. In ordinary af and rf amplifiers the grid dissipation usually will not reach this level. Above 100 MHz drive power requirements increase, but most of this increase is absorbed in circuit losses rather than in grid dissipation. Satisfactory operation at 500 MHz in a "straight through" amplifier is indicated by grid currents below approximately 15 milliamperes. Grid circuit resistance should not exceed 100,000 ohms per tube.

Screen-Grid Operation — The maximum rated power dissipation for the screen grid is 12 watts, and the screen input power should be kept below that level. The product of the peak screen voltage and the indicated dc screen current approximates the screen input power except when the screen current indication is near zero or negative.

In the usual tetrode amplifier, where no signal voltage appears between cathode and screen, the peak screen voltage is equal to the dc screen voltage.

When screen voltages appear between screen and cathode, as in the case of screen-modulated amplifiers or cathode-driven tetrode amplifiers, the peak screen-to-cathode voltage is the sum of the dc screen voltage and the peak ac or rf signal voltage applied to screen or cathode.

Protection for the screen should be provided by an over-current relay and by interlocking the screen supply so that plate voltage must be applied before screen voltage can be applied.

The screen current may reverse under certain conditions and produce negative current indications on the screen milliammeter. This is a normal characteristic of most tetrodes. The screen power supply should be designed with this characteristic in mind so that the correct operating voltage will be maintained on the screen under all conditions. A current path from screen to cathode must be provided by a bleeder resistor, gaseous voltage regulator tubes or an electron tube shunt regulator connected

between screen and cathode and arranged to pass approximately 15 milliamperes per connected screen. An electron tube series regulator can be used only when an adequate bleeder resistor is provided.

Self-modulation of the screen in plate-modulated tetrode amplifiers using these tubes may not be satisfactory because of the screen-voltage screen-current characteristics. Screen modulation from a tertiary winding on the modulation transformer or by means of a small separate modulator tube will usually be more satisfactory. Screen-voltage modulation factors between 0.75 and 1.0 will result in 100% modulation for plate-modulated rf amplifiers using the 4X150G.

Plate Operation — The maximum rated plate-dissipation power is 250 watts. In plate-modulated applications the carrier plate-dissipation power must be limited to 165 watts to avoid exceeding the plate-dissipation rating with 100% sine wave modulation. The maximum dissipation rating may be exceeded for brief periods during circuit adjustment without damage to the tube.

UHF Operation — The 4X150G is suitable use in the UHF region. Such operation should be conducted with heavy plate loading, minimum bias, and the lowest driving power consistent with satisfactory performance. It is often preferable to operate at a sacrifice in efficiency to obtain increased tube life.

Multiple Operation—Tubes operating in parallel or push-pull must share the load equally. It is good engineering practice to provide individual metering and individual adjustments of bias or screen voltage to equalize the inputs.

Where overload protection is provided, it should be capable of protecting the surviving tube(s) in the event that one tube fails.

Special Applications—If it is desired to operate these tubes under conditions widely different from those given here, write to Power Grid Tube Division, EIMAC Division of Varian, 301 Industrial Way, San Carlos, CA 94070, for information and recommendations.

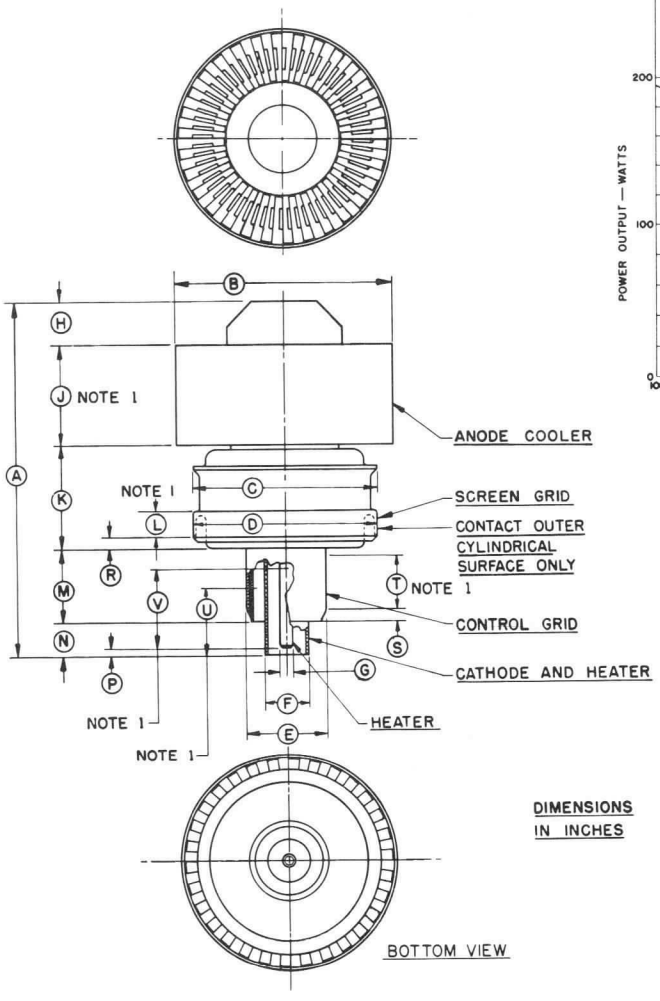

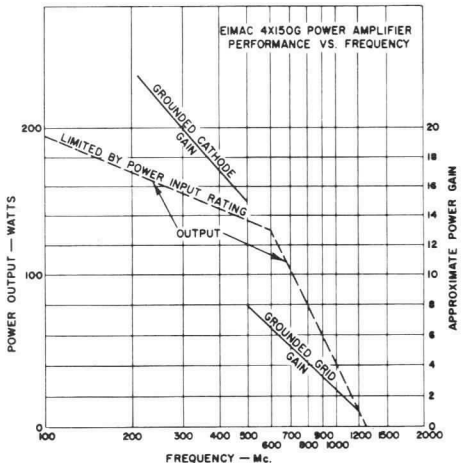

DIMENSION			
REF	NOMINAL	MINIMUM	MAXIMUM
A			2 3/4
B		1.615	1.635
C			1.406
D		1.417	1.433
E		.587	.597
F		.317	.327
G		.088	.098
H			5/16
J		23/32	25/32
K		3/4	13/16
L		3/16	
M		.500	.578
N		15/64	17/64
P		1/32	1/16
R	3/32		
S	1/8		
T		11/32	
U		13/32	
V		15/32	

NOTE 1. LENGTH AVAILABLE FOR CONTACT.

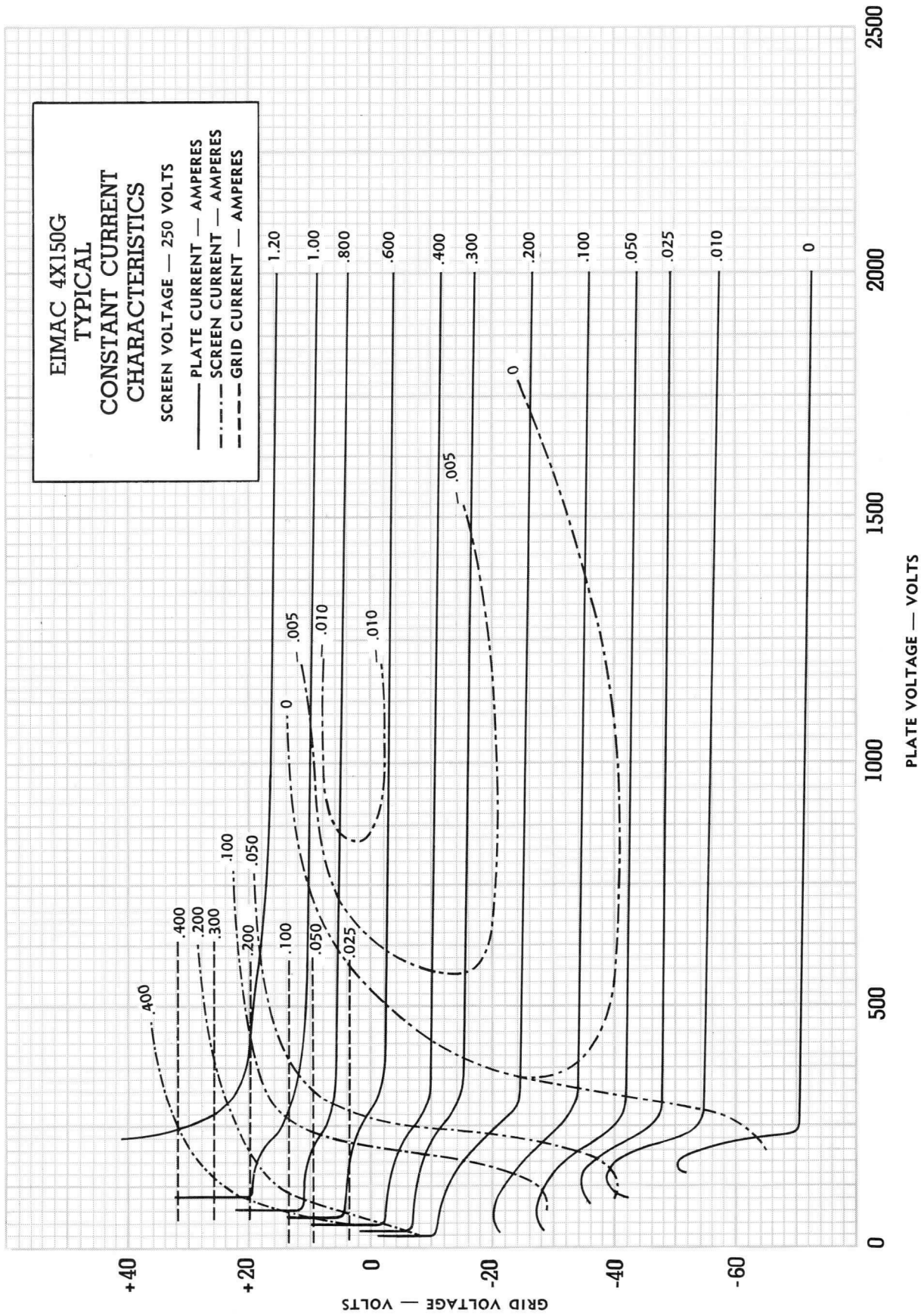
EIMAC 4X150G
TYPICAL
CONSTANT CURRENT
CHARACTERISTICS
SCREEN VOLTAGE — 250 VOLTS
PLATE CURRENT — AMPERES
SCREEN CURRENT — AMPERES
GRID CURRENT — AMPERES
1.20
1.00
.800
.600
.400
.300
.200
.100
.050
.025
.010
0
.005
.010
.010
.005
0
.400
.400
.200
.300
.200
.100
.050
.100
.050
.025
0
500
1000
1500
2000
2500
PLATE VOLTAGE — VOLTS
+40
+20
0
-20
-40
-60
GRID VOLTAGE — VOLTS

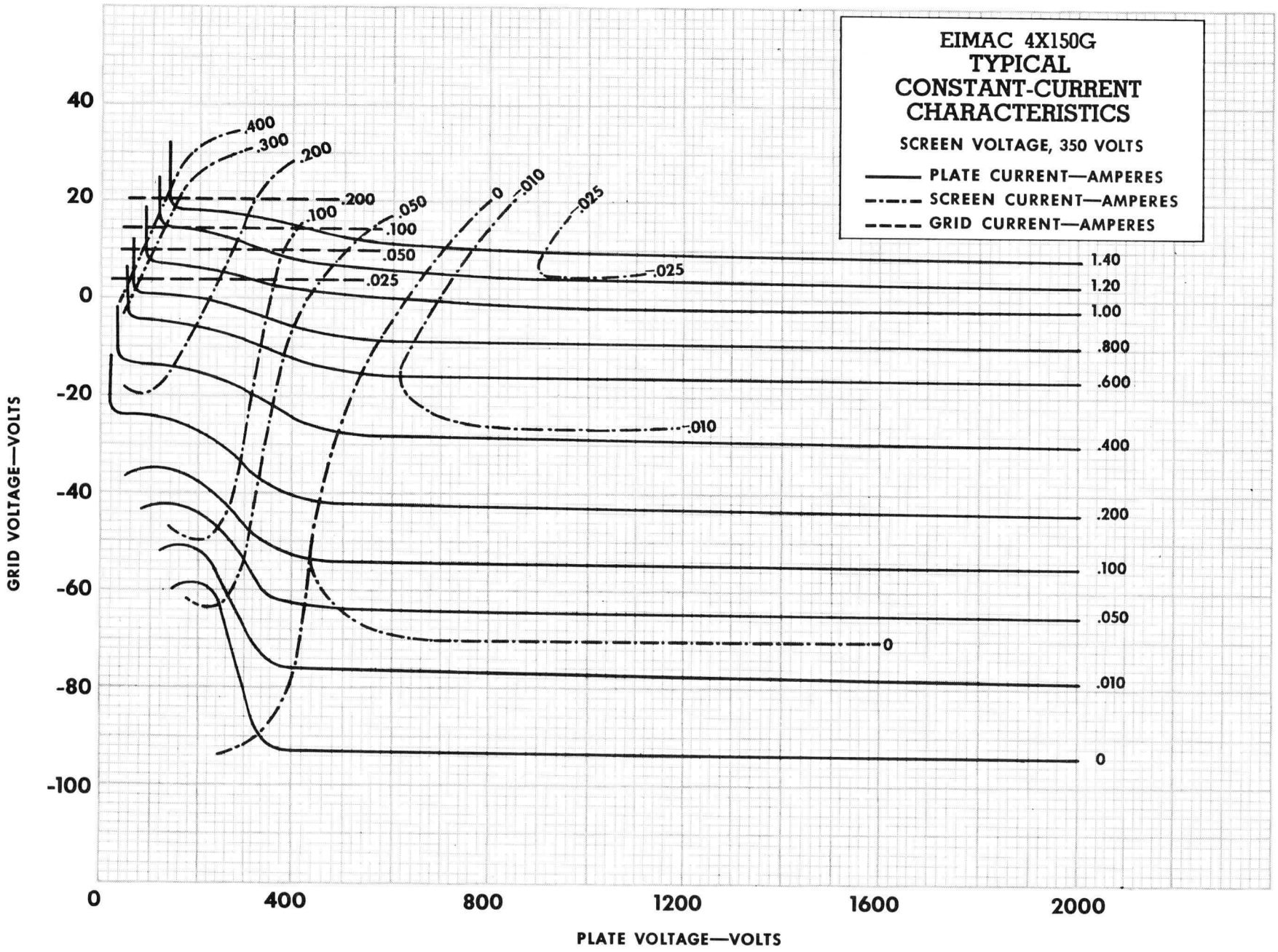
EIMAC 4X150G
TYPICAL
CONSTANT-CURRENT
CHARACTERISTICS
SCREEN VOLTAGE, 350 VOLTS
PLATE CURRENT—AMPERES
SCREEN CURRENT—AMPERES
GRID CURRENT—AMPERES
GRID VOLTAGE—VOLTS
PLATE VOLTAGE—VOLTS
40
20
0
-20
-40
-60
-80
-100
0
400
800
1200
1600
2000
.400
.300
.200
.100
.050
.025
0
.010
.025
.200
.100
.050
.025
1.40
1.20
1.00
.800
.600
.400
.200
.100
.050
.010
0
.010
0

EIMAC
Division of Varian
SAN CARLOS
CALIFORNIA

4X500A

RADIAL-BEAM POWER TETRODE

The Eimac 4X500A is an external-anode tetrode having a maximum plate dissipation rating of 500 watts. Its small size and low-inductance leads permit efficient operation at relatively large outputs well into the VHF region. The screen grid is mounted on a disc which terminates in a connector ring located between grid and plate, thus making possible effective shielding between the grid and plate circuits. The grid terminal is located at the center of the glass base to facilitate single-tube operation in coaxial circuits.

The combination of low grid-plate capacitance, low screen-lead inductance and functionally located terminals contributes to the stable operation of the 4X500A at high frequencies, making neutralization unnecessary in most cases and greatly simplifying it in others.



GENERAL CHARACTERISTICS

ELECTRICAL

	Min.	Nom.	Max.	
Filament: Thoriated Tungsten				
Voltage		5		volts
Current	12.2		13.7	amperes
Amplification Factor (Grid-to-Screen)	4.5		6.5	
Transconductance (I_b = 200 ma., E_b = 2500v., E_c2 = 500v.)		5200		umhos
Direct Interelectrode Capacitances Grounded Cathode:				
Input	10.6		14.4	uuf
Output	4.9		6.9	uuf
Feedback			0.1	uuf
Frequency for Maximum Ratings			120	mc.

MECHANICAL

Base	Special 4 pin
Maximum Operating Temperatures:	
Glass-to-Metal Seals	175° C
Anode Core	175° C
Recommended Socket	Eimac SK900
Operating Position	Vertical, base up or down
Maximum Dimension:	
Height	4.75 inches
Diameter	2.625 inches
Cooling (See following page)	Forced Air
Net Weight	1.7 pounds
Shipping Weight (Approximate)	6 pounds

RADIO FREQUENCY POWER AMPLIFIER AND OSCILLATOR

Class-C FM or Telegraphy (Key-down conditions, 1 tube)
MAXIMUM RATINGS (Frequencies up to 120 Mc.)

D-C PLATE VOLTAGE	4000 MAX. VOLTS
D-C SCREEN VOLTAGE	500 MAX. VOLTS
D-C GRID VOLTAGE	—500 MAX. VOLTS
D-C PLATE CURRENT	350 MAX. MA.
PLATE DISSIPATION	500 MAX. WATTS
SCREEN DISSIPATION	30 MAX. WATTS
GRID DISSIPATION	10 MAX. WATTS

TYPICAL OPERATION (Per tube, at 110 Mc.)

D-C Plate Voltage	2500	3000	4000	Volts
D-C Plate Current	310	310	315	Ma.
D-C Screen Voltage	500	500	500	Volts
D-C Screen Current	26	24	22	Ma.
D-C Grid Voltage	—150	—150	—150	Volts
D-C Grid Current	15	16	16	Ma.
Driving Power (approx.)	5	5	5	Watts
Useful Power Output (approx.)	475	600	835	Watts

(Effective 1-1-64) © 1961, 1964, 1968 by Varian

Printed in U.S.A.

RADIO FREQUENCY POWER AMPLIFIER

Class-B Linear Amplifier,

Television Visual Service

MAXIMUM RATINGS (Frequencies below 220 mc.)

D-C PLATE VOLTAGE	3000 MAX. VOLTS
D-C PLATE CURRENT	350 MAX. MA.
D-C SCREEN VOLTAGE	500 MAX. VOLTS
D-C GRID VOLTAGE	—500 MAX. VOLTS
PLATE DISSIPATION	500 MAX. WATTS
SCREEN DISSIPATION	30 MAX. WATTS
GRID DISSIPATION	10 MAX. WATTS

TYPICAL OPERATION

(Per tube at peak synchronizing level, 5-Mc. bandwidth, assumed load resistance 3,000 ohms per tube.)[1]

D-C Plate Voltage	1850	2400	Volts
D-C Screen Voltage	500	500	Volts
D-C Grid Voltage	—100	—100	Volts
D-C Plate Current	285	400[1]	Ma.
D-C Screen Current (approx.)	20	35	Ma.
D-C Grid Current (approx.)	10	15	Ma.
Peak R-F Grid Voltage	140	185	Volts
Driving Power, 220 Mc. (approx.)	15	25	Watts
Plate Power Input	525	960	Watts
Power Output	300	600	Watts
BLACK LEVEL			
D-C Plate Current	215	300	Ma.
D-C Screen Current	2	3	Ma.
D-C Grid Current	2	5	Ma.
Plate Power Input	400	720	Watts
Plate Dissipation	230	380	Watts
Power Output	170	340	Watts

[1] Operating conditions at peak synchronizing level may be permitted to exceed maximum ratings of the tube because of the low duty factor. Maximum ratings apply to black level conditions.

NOTE: "TYPICAL OPERATION" data are obtained by calculation from published characteristic curves and confirmed by direct tests. Adjustment of the r-f grid drive to obtain the specified plate current at the specified grid bias, screen voltage, and plate voltage is assumed. If this procedure is followed, there will be little variation in output power when tubes are changed, even though there may be some variations in grid and screen currents. The grid and screen currents which result when the desired plate current is obtained are incidental and vary from tube to tube. These current variations cause no difficulty so long as the circuit maintains the correct voltage in the presence of the variations in current. If grid bias is obtained principally by means of a grid resistor, the resistor must be adjustable to obtain the required bias voltage when the correct r-f driving voltage is applied.

APPLICATION

MECHANICAL

Mounting—The 4X500A must be operated vertically. The base may be down or up. The recommended socket for this tube is the SK-900 Air-System Socket.

Cooling—Forced-air cooling must be provided to hold the glass-to-metal seals and the anode cooler core below the maximum rated temperature of 150°C.

A flow rate of 20 cfm will be adequate for operation at sea level and with an inlet air temperature up to 50°C. Under these conditions, 20 cfm of air flow corresponds to a pressure difference across the tube and SK-900 socket of 2.25 inch of water column. Experience has shown that if reliable long-life operation is to be obtained, the cooling air flow must be maintained during standby periods when only the heater voltage is applied to the tube.

At higher altitudes increased air flow will be required. For example, at an altitude of 10,000 feet, a flow-rate of 29 cfm will be required and will be obtained with a pressure drop across tube and socket of 3.25 inch of water column. In selecting a blower for use at high altitudes, care must be taken to assure that the blower is designed to deliver the desired volume of air at the corresponding pressure drop and at the particular altitude.

The pressure drop figures indicated above are those measured directly at the air gage hole in the SK-900 air system socket. In the event that a socket is not used, and a plenum pressure drop measurement is required, this plenum pressure drop rating must equal the pressure drop figures indicated above multiplied by 1.5 for the specific application.

ELECTRICAL

Filament Operation—For maximum tube life the filament voltage, as measured directly at the filament pins, should be the rated voltage of 5.0 volts. Variations in filament voltage must be kept within the range from 4.75 to 5.25 volts.

Control Grid Operation—The d-c voltage for the 4X500A should not exceed 500 volts. If grid leak bias is used, suitable means must be provided to prevent excessive plate or screen dissipation in the event of loss of excitation, and the grid-leak resistor should be made adjustable to facilitate maintaining the bias voltage and plate current at the desired values from tube to tube. In operation above 50 Mc., it is advisable to keep the bias voltage as low as is practicable.

Screen Grid Operation—Power dissipated by the screen of the 4X500A must not exceed 30 watts. Screen dissipation is likely to rise to excessive values when the plate voltage, bias voltage, or plate load are removed with filament and screen voltages applied. Suitable protective means must be provided to limit screen dissipation to 30 watts in event of circuit failure.

Plate Operation—The maximum rated plate-dissipation power is 500 watts. Plate dissipation in excess of the maximum rating is permissible for short periods of time, such as during tuning procedures.

Multiple Operation—Tubes operating in parallel or push-pull must share the load equally. It is good engineering practice to provide for individual metering and individual adjustment of the bias or screen voltage to equalize the inputs.

Where overload protection is provided, it should be capable of protecting the surviving tube/s in the event that one tube should fail.

Special Applications— If it is desired to operate this tube under conditions widely different from those given here, write to Application Engineering Department, Eimac Division of Varian, San Carlos, California for information and recommendations.

DIMENSIONS IN INCHES		
REF	MIN.	MAX.
A	1.980	2.020
B	.559	.573
C	2.365	2.385
D		2.625
E	.500	
F	1.438	1.562
G	.156	
H	.062	
J	1	1.125
K	1.406	1.594
L	1.344	1.406
M	.438	.562
N	4.250	4.750
P	1.490	1.510
R	44°	46°
S	44°	46°
T	.308	.318
U	.031R	
V	.094R	

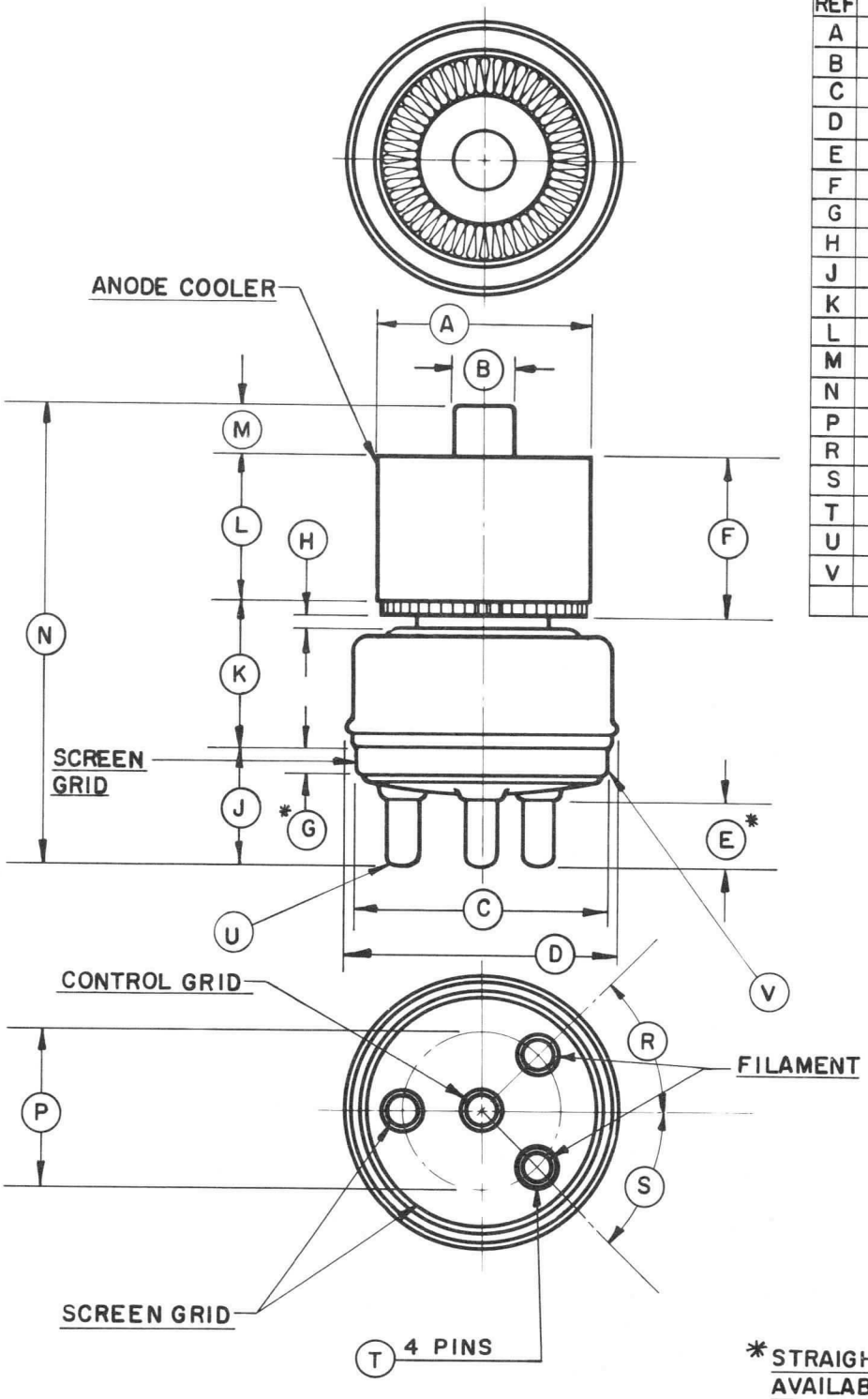

*STRAIGHT SIDE AVAILABLE FOR CONTACT

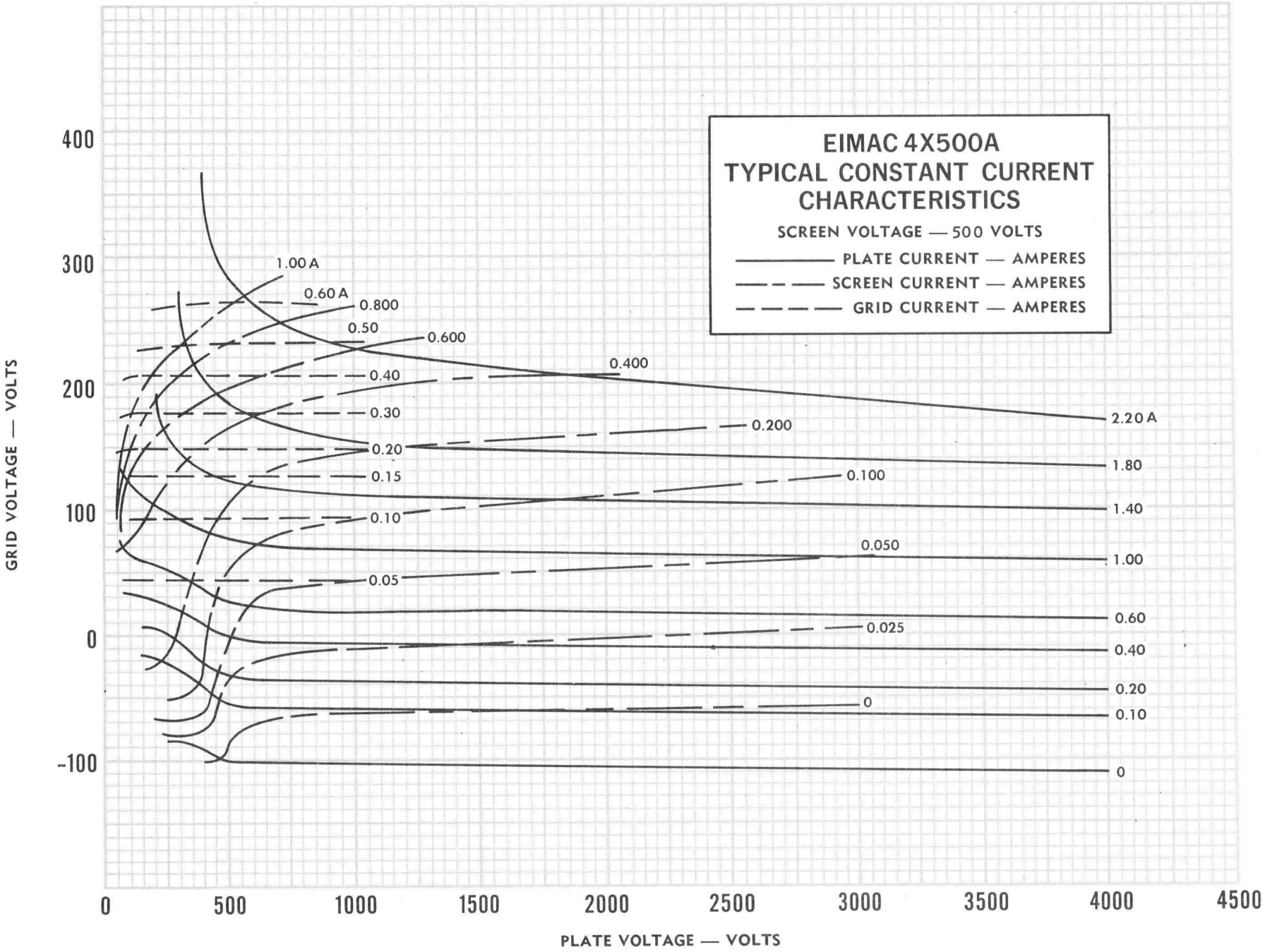
EIMAC 4X500A
TYPICAL CONSTANT CURRENT CHARACTERISTICS
SCREEN VOLTAGE — 500 VOLTS
PLATE CURRENT — AMPERES
SCREEN CURRENT — AMPERES
GRID CURRENT — AMPERES
GRID VOLTAGE — VOLTS
400
300
200
100
0
-100
0
500
1000
1500
2000
2500
3000
3500
4000
4500
PLATE VOLTAGE — VOLTS
1.00 A
0.60 A
0.800
0.50
0.600
0.40
0.30
0.20
0.15
0.10
0.05
0.400
0.200
0.100
0.050
0.025
0
2.20 A
1.80
1.40
1.00
0.60
0.40
0.20
0.10
0

TECHNICAL DATA

6816
6884
7843

RADIAL-BEAM
POWER TETRODES

The EIMAC 6816, 6884, and 7843 are compact external anode ceramic/metal radial-beam tetrodes for use in rf power amplifier or oscillator service, linear rf power amplifier applications, and as audio amplifiers or modulators. The 6816 has a 6.3 volt heater, while the 6884 has a 26.5 volt heater, and both are designed for transverse-flow forced-air cooling of the anode. The 7843 has a 26.5 volt heater and its anode is designed for conduction cooling.

All three types have an F1 rating of 1215 MHz for full-rated power input, and are tested to give a useful power output of 80 watts at 400 MHz and 40 watts at 1200 MHz.



6816/6884



7843

GENERAL CHARACTERISTICS[1]

ELECTRICAL

Cathode: Oxide Coated Unipotential		
Heater Voltage (6816)	6.3 ± 10%	V
Heater Current (at 6.3 V)	2.0	A
Heater Voltage (6884, 7843)	26.5 ± 10%	V
Heater Current (at 26.5 V)	0.53	A
Amplification Factor (Average):		
Grid to screen	18	
Direct Interelectrode Capacitances [2]		
Control Grid to Cathode	13.0	pF
Control Grid to Screen Grid	17.5	pF
Screen Grid to Anode	4.7	pF
Control Grid to Anode	0.05	pF
Anode to Cathode	0.01	pF
Screen Grid to Cathode	0.33	pF

1. Characteristics and operating values are based on performance tests. These figures may change without notice as a result of additional data or product refinement. EIMAC Division of Varian should be consulted before using this information for final equipment design.
2. Capacitance values are for a cold tube as measured in a special shielded fixture, in accordance with Electronic Industries Association Standard RS-191.

MECHANICAL

Maximum Overall Dimensions:	6816 & 6884	7843
Length	1.930 In; 49.02 mm	1.955 In; 49.66 mm
Diameter	1.265 In; 32.13 mm	1.120 In; 28.45 mm
Net Weight	2.0 oz; 56.7 gm	1.7 oz; 48.2 gm
Operating Position	Any	Any

(Effective 11-15-71) © by Varian

Printed in U.S.A.

Cooling:
- Type 6816, 6884 ..... Forced Air
- Type 7843 ..... Conduction Cooled

Operating Temperature, Maximum, all three types:
- Ceramic/Metal Seals and Anode Core ..... 250°C

Base (all types) ..... Special Coaxial

Recommended Sockets (Screen Grid bypass capacitor included): Erie 2948-000
E.F. Johnson 124-152-1
Jettron 89-001

Recommended Screen Grid bypass capacitor (separate unit): ..... Erie 2929-001

RANGE VALUES FOR EQUIPMENT DESIGN

	Min.	Max.	
Heater Current (Type 6816, at 6.3 volts)	1.84	2.26	V
(Type 6884, 7843, at 26.5 volts)	0.48	0.60	A
Cathode Warmup Time (all types)	60	---	Sec
Interelectrode Capacitances [1]			
Control Grid to Cathode	11.0	15.0	pF
Control Grid to Screen Grid	15.0	20.0	pF
Screen Grid to Anode	4.2	5.2	pF
Control Grid to Anode	---	0.065	pF
Anode to Cathode	---	0.013	pF
Screen Grid to Cathode	0.20	0.45	pF

1. Capacitance values are for a cold tube as measured in a special shielded fixture, in accordance with Electronic Industries Association Standard RS-191.

RADIO FREQUENCY LINEAR AMPLIFIER

Grid-driven, Class AB 1

ABSOLUTE MAXIMUM RATINGS:

DC PLATE VOLTAGE	1000	VOLTS
DC SCREEN VOLTAGE	300	VOLTS
DC GRID VOLTAGE	-100	VOLTS
DC PLATE CURRENT [1]	.180	AMPERE
PLATE DISSIPATION [2]	115	WATTS
SCREEN DISSIPATION	4.5	WATTS

TYPICAL OPERATION (Frequencies to 30 MHz) Class AB 1 Grid Driven, Peak Envelope or Modulation Crest Conditions

Plate Voltage	650	850	Vdc
Screen Voltage	300	300	Vdc
Grid Voltage [3]	-18	-18	Vdc
Zero Signal Plate Current	40	40	mAdc
Single-Tone Plate Current	100	100	mAdc
Two-Tone Plate Current	75	75	mAdc
Single-Tone Screen Current [4]	8	4	mAdc
Two-Tone Screen Current [4]	3.5	2	mAdc
Resonant Load Impedance	2200	3500	Ω
Useful Power Output [5] PEP	25	40	W
Distortion Products [6] 3rd:	-35	-30	dB
5th:	-40	-35	dB

1. The maximum rating for a signal having a minimum peak-to-average power ratio less than 2.0, such as single-tone operation, is 180 mAdc. During short periods of circuit adjustment under single-tone conditions, the average anode current may reach the level of 250 mAdc.
2. With proper cooling for Types 6816 and 6884 and with adequate heat sink for Type 7843.
3. Adjust for the specified zero-signal plate current.
4. Approximate value.
5. Approximate value delivered to the load.
6. Referenced against one tone of a two equal-tone signal.

RADIO FREQUENCY POWER AMPLIFIER OR OSCILLATOR Class C Telegraphy or FM Telephony

(Key-Down Conditions)

ABSOLUTE MAXIMUM RATINGS:

DC PLATE VOLTAGE	1000	VOLTS
DC SCREEN VOLTAGE	300	VOLTS
DC GRID VOLTAGE	-100	VOLTS
DC PLATE CURRENT	0.180	AMPERE
PLATE DISSIPATION [1]	115	WATTS
SCREEN DISSIPATION	4.5	WATTS
GRID DISSIPATION	1.0	WATT

TYPICAL OPERATION

	400 MHz		1200 MHz	
Plate Voltage	400	900	900	Vdc
Screen Voltage	200	300	300	Vdc
Grid Voltage	-35	-30	-22	Vdc
Plate Current	150	170	170	mAdc
Screen Current [2]	5	1	1	mAdc
Grid Current [2]	3	10	4	mAdc
Driving Power [2]	3	3	5	W
Useful Power Output [3]	23	80	40	W

1. With proper cooling for Types 6816 and 6884 and with adequate heat sink for Type 7843.
2. Approximate value.
3. Approximate power delivered to the load.

PLATE MODULATED POWER AMPLIFIER

Class C Telephony

(Key-Down Carrier Conditions)

ABSOLUTE MAXIMUM RATINGS:

DC PLATE VOLTAGE	800	VOLTS
DC SCREEN VOLTAGE	300	VOLTS
DC GRID VOLTAGE	-100	VOLTS
DC PLATE CURRENT	0.150	AMPERE
PLATE DISSIPATION [1]	75	WATTS
SCREEN DISSIPATION	4.5	WATTS
GRID DISSIPATION	1.0	WATT

TYPICAL OPERATION AT 400 MHz

Plate Voltage	400	700	Vdc
Screen Voltage	200	250	Vdc
Grid Voltage	-20	-50	Vdc
Plate Current	100	130	mAdc
Screen Current [2]	5	10	mAdc
Grid Current [2]	5	10	mAdc
Peak Screen Voltage [2] (100% modulation)	150	150	v
Driving Power [2]	2	3	W
Useful Power Output [3]	16	45	W

1. With proper cooling for Types 6816 and 6884 and with adequate heat sink for Type 7843.
2. Approximate value.
3. Approximate power delivered to the load.

AUDIO FREQUENCY POWER AMPLIFIER & MODULATOR Grid-driven, Class AB 1

ABSOLUTE MAXIMUM RATINGS:

DC PLATE VOLTAGE	1000	VOLTS
DC SCREEN VOLTAGE	300	VOLTS
DC PLATE CURRENT	0.180	AMPERE
PLATE DISSIPATION [1]	115	WATTS
SCREEN DISSIPATION	4.5	WATTS

1. With proper cooling for Types 6816 and 6884 and with adequate heat sink for Type 7843.
2. Adjust for specified zero signal plate current.
3. Approximate value.

TYPICAL OPERATION, Class AB 1

Values are for 2 tubes

Plate Voltage	650	850	Vdc
Screen Voltage	300	300	Vdc
Grid Voltage [2]	-15	-15	Vdc
Peak Drive Voltage, grid-to-grid	30	30	v
Zero Signal Plate Current	80	80	mAdc
Maximum Signal Plate Current	200	200	mAdc
Zero Signal Screen Current [3]	0	0	mAdc
Maximum Signal Screen Current [3]	20	20	mAdc
Effective Load Resistance (plate to plate)	4330	7000	Ω
Maximum Signal Power Output [3]	50	80	W

AUDIO FREQUENCY POWER AMPLIFIER & MODULATOR Grid-driven, Class AB 2

ABSOLUTE MAXIMUM RATINGS:

DC PLATE VOLTAGE	1000	VOLTS
DC SCREEN VOLTAGE	300	VOLTS
DC PLATE CURRENT	0.180	AMPERE
DC GRID CURRENT	0.030	AMPERE
PLATE DISSIPATION [1]	115	WATTS
SCREEN DISSIPATION	4.5	WATTS
GRID DISSIPATION	1.0	WATT

1. With proper cooling for Types 6816 and 6884 and with adequate heat sink for type 7843.
2. Adjust for specified zero signal plate current.
3. Approximate value.

TYPICAL OPERATION, Class AB 2

Values are for 2 tubes

Plate Voltage	650	850	Vdc
Screen Voltage	300	300	Vdc
Grid Voltage [2]	-15	-15	Vdc
Peak Drive Voltage, grid-to-grid	46	46	v
Zero Signal Plate Current	80	80	mAdc
Maximum Signal Plate Current	355	355	mAdc
Zero Signal Screen Current [3]	0	0	mAdc
Maximum Signal Screen Current [3]	25	25	mAdc
Maximum Signal Grid Current [3]	15	15	mAdc
Effective Load Resistance (plate to plate)	2450	3960	Ω
Driving Power [3]	0.3	0.3	W
Maximum Signal Power Output [3]	85	140	W

APPLICATION

ELECTRICAL

HEATER/CATHODE OPERATION - The rated heater voltage for the 6884 and the 7843 is 26.5 volts, and for the 6816, 6.3 volts, as measured at the base of the tube. Variations must be restricted to plus or minus ten percent, and where long life and consistent performance are factors, variation from the nominal value should be held to plus or minus five percent.

Because the cathode is subjected to considerable back bombardment (transit-time heating) as the frequency is increased, with resultant increase in cathode temperature, the heater voltage should be reduced in some applications, depending on operating conditions and frequency, to prevent overheating of the cathode and resultant short tube life.

ANODE CURRENT - The 6816, 6884, and 7843 are rated for 180 mAdc of continuous anode current. During short periods of circuit adjustment under CW or single-tone conditions, the average anode current may be as high as 250 mAdc, but care must be taken to keep the time period when the current is above the rating as brief as possible in order to prevent tube overheating.

HIGH VOLTAGE - The 6816, 6884, and 7843 operate at voltages which can be deadly and the equipment must be designed properly and operating precautions must be followed. Equipment must include safety enclosures for high-voltage circuits and terminals, with interlock switches to open the primary circuits of the power supplies and to discharge high voltage condensers whenever access doors are opened. Interlock switches must not be bypassed or "cheated" to allow operation with access doors open. Always remember that HIGH VOLTAGE CAN KILL.

MECHANICAL

MOUNTING & SOCKETING - The 6816, 6884, and 7843 may be mounted in any position. Sockets such as the E.F. Johnson 124-152-1, Erie 2948-000, Jettron 89-001, or equivalent may be used as long as there are no unusual circumstances which would allow the ceramic/metal base seal temperatures to exceed the rated maximum of 250°C. Mounting should be such that free movement of air past the base by convection is possible, or when forced-air cooling is being provided for the anode, some of this air may be bled off to provide for come circulation past the tube base.

The 7843 mounting is normally controlled by its heat-sink configuration and location. If air movement is restricted in the base area, the socket may also require coupling to a heat sink in order to limit base seal temperatures.

VIBRATION - These tubes are capable of satisfactorily withstanding ordinary shock and vibration, such as encountered in shipment and normal handling. The tubes will function well in automobile and truck mobile installations and similar environments. However, when shock and vibration more severe than this are expected, it is suggested the EIMAC 7457 be employed.

COOLING (6816 & 6884) - Forced-air cooling must be provided to maintain the anode core and seal temperatures within the maximum rating. For best cooling efficiency a close-fitting insulated cowl assembly should be used to direct air past the anode cooling fins, and with such a cowl 12 cfm of air at 50°C maximum at sea level is sufficient to limit the anode core temperature to 225°C. With a short section of cowl, the required pressure drop to produce this air flow is approximately 0.1 inch of water. At higher altitudes, additional air is required. For 10,000 feet, for example, flow rate and pressure drop values will both increase by a factor of 1.46. The equipment designer is cautioned to allow for some air circulation around the base of the tube to maintain temperatures well within ratings, and if necessary some of the air available for anode cooling should be bled into the vicinity of the base to provide a small amount of forced circulation.

COOLING (7843) - This tube is designed for use in a conduction-cooled system, where tube anode heat is transferred to a heat sink, which in turn may be cooled by natural (free) convection, forced-air convection, liquid cooling, or a combination of these methods. Anode dissipation is normally limited only by the allowable temperature rise for the seals and the anode core. The nominal dissipation rating of 115 watts may be realized with relatively simple heat sink configurations, with higher dissipation levels possible with more

thorough designs. In all cases, however, the cooling system must maintain the anode and ceramic/metal seal temperatures below 250°C, and in cases where long life and consistent performance are factors, cooling in excess of minimum requirements is normally beneficial.

Intimacy of contact and pressure are two factors which will effect transfer of heat from the tube anode to the heat sink. A good thermally conductive compound should be used in the interface between the anode and the sink to reduce thermal resistance of the joint. Examples of commercially available thermal joint compound are:

WAKEFIELD 120-Wakefield Engineering Co., Wakefield, MA 01880.
DOW CORNING 340-Dow Corning Corp., Midland, MI 48640.
ASTRODYNE THERMAL BOND 312-Astrodyne Inc., Burlington, MA 01803.
G.E. INSULGREASE G641-General Electric Co., Cleveland, OH 44117.

The designer is cautioned to allow for some movement in the socket mount to assure that the anode makes good contact to its heat sink without interference. If the tube anode and the sink are not making intimate contact, heat transfer will be seriously affected. The designer is encouraged to use temperature-sensitive paint or other temperature-sensing devices in connection with any equipment design before the layout is finalized.

GRID OPERATION - The maximum rated dc grid bias voltage is -100 volts and the maximum grid dissipation rating is 1.0 watts. In normal applications the grid dissipation will not approach the maximum rating.

At operating frequencies above the 100 MHz region, driving-power requirements for amplifiers increase noticeably. However, most of the driving power is absorbed in circuit losses other than grid dissipation, so that grid dissipation is increased only slightly. Satisfactory VHF/UHF operation of the tube in a stable amplifier is indicated by grid current values below approximately 15 mAdc.

The grid voltage required by different tubes may vary between limits approximately 20% above and below the center value, and means should be provided in the equipment to accommodate such variation. It is especially important that variations between individual tubes be compensated when tubes are operated in parallel or push-pull circuits, to assure equal load sharing.

The maximum permissible grid-circuit resistance per tube is 25,000 ohms.

SCREEN OPERATION - The maximum rated power dissipation for the screen grid is 4.5 watts, and the screen input power should be kept below this level. The product of peak screen voltage and the indicated dc screen current approximates the screen input power except when the screen current indication is near zero or negative.

In the usual tetrode amplifier, where no signal voltage appears between cathode and screen, the peak screen voltage is equal to the dc screen voltage.

The screen current may reverse under certain conditions and produce negative current indications on the screen milliammeter. This is a normal characteristic of most tetrodes. The screen power supply should be designed with this characteristic in mind so that the correct operating voltage will be maintained on the screen under all conditions. A current path from screen to cathode must be provided by a bleeder resistor or shunt regulator connected between screen and cathode. A series regulator circuit can be used only when an adequate bleeder resistor is provided.

Protection for the screen should be provided by an over-current relay and by interlocking the screen supply so that plate voltage must be on before screen voltage can be applied.

MULTIPLE OPERATION - Tubes operating in parallel or push-pull must share the load equally. It is a good engineering practice to provide individual metering and individual adjustment of bias or screen voltage to equalize the inputs.

Where overload protection is provided, it should be capable of protecting the surviving tube(s) in the event one tube fails.

VHF OPERATION - The 6816, 6884, and 7843 are suitable for use in the VHF/UHF region. Such operation should be conducted with heavy plate loading, minimum bias, and the lowest driving power consistent with satisfactory performance. It is often preferable to operate at a sacrifice in efficiency to obtain increased tube life.

INTERELECTRODE CAPACITANCE - The actual internal interelectrode capacitance of a tube is increased by many variables in most applications, such as stray capacitance to the chassis,

capacitance added by the socket used, stray capacitance between tube terminals, and wiring effects. To control the actual capacitance values within the tube, as the key component involved, the industry and the Military Services use a standard test procedure as described in Electronic Industries Association Standard RS-191. This requires the use of specially constructed test fixtures which effectively shield all external tube leads from each other and eliminates any capacitance reading to "ground". The test is performed on a cold tube. Other factors being equal, controlling internal tube capacitance in this way normally assures good interchangeability of tubes over a period of time, even when the tube may be made by different manufacturers. The capacitance values shown in the manufacturer's technical data, or test specifications, normally are taken in accordance with Standard RS-191. The equipment designer is therefore cautioned to make allowance for the additional capacitance values which will exist in any normal application. Actual measurements should be taken with the socket and mounting which represent approximate final layout if capacitance values are highly significant in the design.

SPECIAL APPLICATIONS - If it is desired to operate any of these tubes under conditions widely different from those given here, write to Power Grid Division, Attention: Applications, EIMAC Division of Varian, 301 Industrial Way, San Carlos, CA 94070, for information and recommendations.

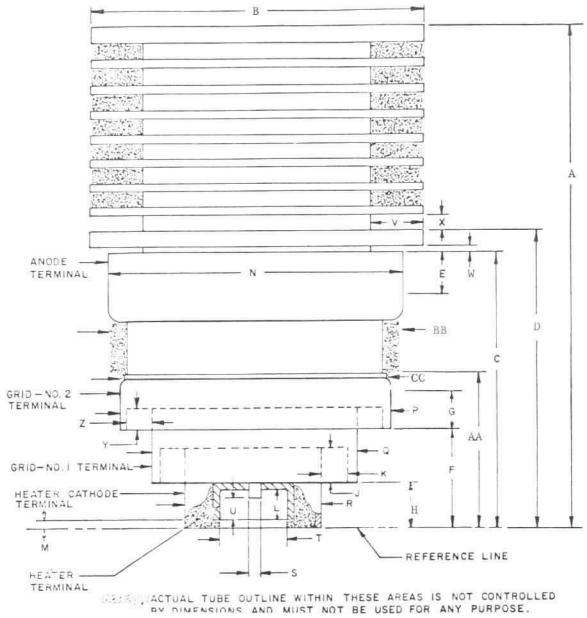

ACTUAL TUBE OUTLINE WITHIN THESE AREAS IS NOT CONTROLLED BY DIMENSIONS AND MUST NOT BE USED FOR ANY PURPOSE.

6816/6884

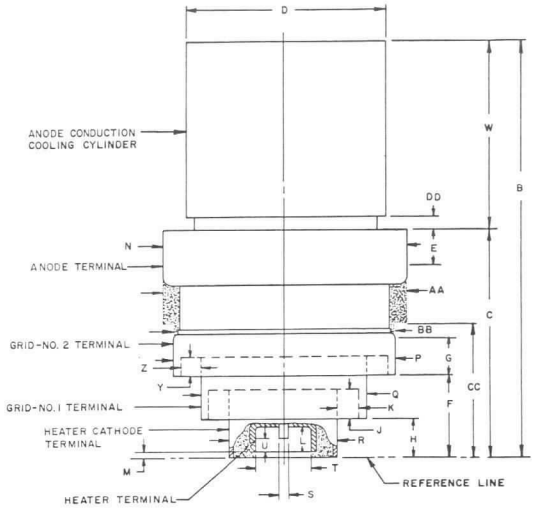

ACTUAL TUBE OUTLINE WITHIN THESE AREAS IS NOT CONTROLLED BY DIMENSIONS AND MUST NOT BE USED FOR ANY PURPOSE.

7843

DIM.	DIMENSIONAL DATA					
	INCHES			MILLIMETERS		
	MIN.	MAX.	REF.	MIN.	MAX.	REF.
A	1.830	1.930	- -	46.48	49.02	- -
B	1.235	1.265	- -	31.37	32.13	- -
C	1.000	1.060	- -	25.40	26.92	- -
D	1.090	1.180	- -	27.26	29.97	- -
E	0.165	- -	- -	4.19	- -	- -
F	0.350	0.390	- -	8.89	9.91	- -
G	0.140	- -	- -	3.56	- -	- -
H	0.160	0.190	- -	4.06	4.83	- -
J	0.120	- -	- -	3.05	- -	- -
K	0.095	- -	- -	2.41	- -	- -
L	0.100	- -	- -	3.05	- -	- -
M	- -	0.050	- -	- -	1.27	- -
N	1.085	- -	- -	27.56	- -	- -
P	0.985	- -	- -	25.02	- -	- -
Q	0.735	- -	- -	18.67	- -	- -
R	0.480	- -	- -	12.19	- -	- -
S	- -	0.072	- -	- -	1.83	- -
T	0.240	0.260	- -	6.10	6.60	- -
U	0.054	- -	- -	1.37	- -	- -
V	0.200	- -	- -	5.08	- -	- -
W	0.035	- -	- -	0.89	- -	- -
X	0.050	- -	- -	1.27	- -	- -
Y	0.060	- -	- -	1.52	- -	- -
Z	0.090	- -	- -	2.29	- -	- -
AA	0.600	- -	- -	15.24	- -	- -
BB	- -	1.120	- -	- -	28.45	- -
CC	- -	1.020	- -	- -	25.91	- -

NOTE: With the cylindrical surfaces of anode terminal, screen grid terminal, control grid terminal, heater-cathode terminal, and heater terminal clean, smooth, and free from burrs, the tube shall enter a gage which defines diameters which are concentric within 0.001 inch (0.03 mm), with diameters as follows:

Radiator band	1.316 In.	33.43 mm
Anode terminal	1.120	28.45
Grid No. 2 (screen) terminal	1.020	25.91
Grid No. 1 (control) terminal	0.765	19.43
Heater-cathode terminal	0.520	13.21
Heater terminal	0.240	6.10
Axial Pin	0.072	1.83

DIM.	DIMENSIONAL DATA					
	INCHES			MILLIMETERS		
	MIN.	MAX.	REF.	MIN.	MAX.	REF.
B	1.805	1.955	- -	45.85	49.66	- -
C	0.990	1.080	- -	25.15	27.43	- -
D	0.895	0.905	- -	22.73	22.99	- -
E	0.165	- -	- -	4.19	- -	- -
F	0.340	0.410	- -	8.64	10.41	- -
G	0.140	- -	- -	3.56	- -	- -
H	0.150	0.200	- -	3.81	5.08	- -
J	0.120	- -	- -	3.05	- -	- -
K	0.095	- -	- -	2.41	- -	- -
L	0.100	- -	- -	2.54	- -	- -
M	0	0.050	- -	0	1.27	- -
N	1.085	- -	- -	27.56	- -	- -
P	0.985	- -	- -	25.02	- -	- -
Q	0.735	- -	- -	18.67	- -	- -
R	0.480	- -	- -	12.12	- -	- -
S	- -	0.072	- -	- -	1.83	- -
T	- -	0.260	- -	- -	6.60	- -
U	0.054	- -	- -	1.37	- -	- -
W	0.780	- -	- -	19.81	- -	- -
Y	0.060	- -	- -	1.52	- -	- -
Z	0.090	- -	- -	2.29	- -	- -
AA	- -	1.120	- -	- -	28.45	- -
BB	- -	1.020	- -	- -	25.91	- -
CC	0.600	- -	- -	15.24	- -	- -
DD	0	- -	- -	0	- -	- -

NOTE: With the cylindrical surfaces of anode terminal, screen grid terminal, control grid terminal, heater-cathode terminal, and heater terminal clean, smooth, and free from burrs, the tube shall enter a gage which defines diameters which are concentric within 0.001 inch (0.03 mm), with diameters as follows:

Anode proper	0.952 In.	24.19 mm
Anode terminal	1.120	28.45
Grid No. 2 (screen) terminal	1.020	25.91
Grid No. 1 (control) terminal	0.765	19.43
Heater-cathode terminal	0.520	13.21
Heater terminal	0.240	6.10
Axial pin	0.072	1.83

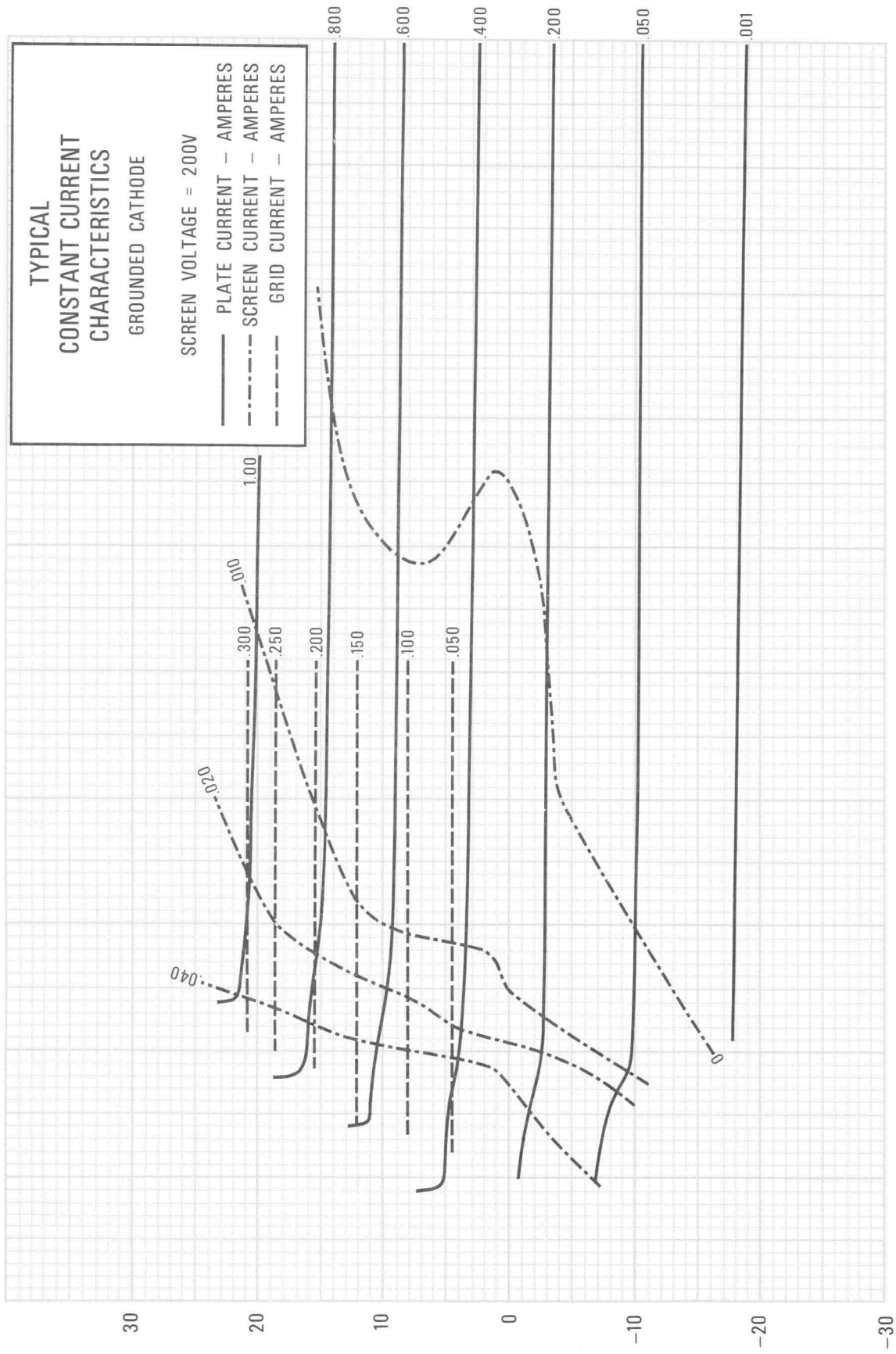
TYPICAL
CONSTANT CURRENT
CHARACTERISTICS
GROUNDED CATHODE
SCREEN VOLTAGE = 200V
PLATE CURRENT – AMPERES
SCREEN CURRENT – AMPERES
GRID CURRENT – AMPERES
.800
.600
.400
.200
.050
.001
1.00
.010
.300
.250
.200
.150
.100
.050
.020
.040
0
30
20
10
0
−10
−20
−30
0
.1
.2
.3
.4
.5
.6
.7
.8
.9
1.0
GRID VOLTAGE (V)
PLATE VOLTAGE (kV)
CURVE #4354

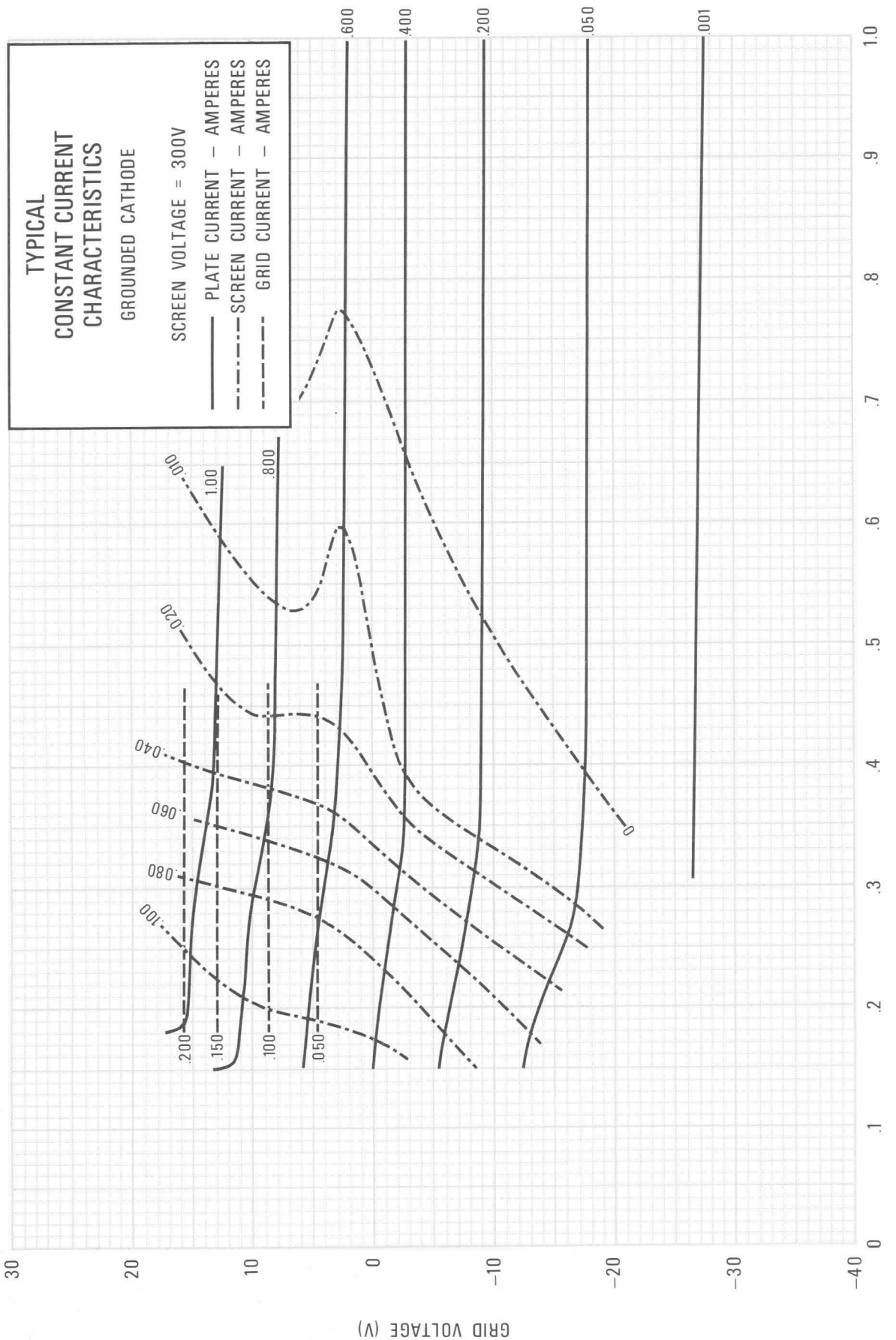
TYPICAL
CONSTANT CURRENT
CHARACTERISTICS
GROUNDED CATHODE
SCREEN VOLTAGE = 300V
PLATE CURRENT – AMPERES
SCREEN CURRENT – AMPERES
GRID CURRENT – AMPERES
.600
.400
.200
.050
.001
.010
1.00
.800
.020
.040
.060
.080
.100
.200
.150
.100
.050
0
30
20
10
0
−10
−20
−30
−40
0
.1
.2
.3
.4
.5
.6
.7
.8
.9
1.0
GRID VOLTAGE (V)
PLATE VOLTAGE (kV)

CURVE #4355

8560A

TECHNICAL DATA

CONDUCTION-COOLED
RADIAL-BEAM
POWER TETRODE

The 8560A is a ceramic/metal conduction-cooled, external-anode radial-beam tetrode intended for use as an rf amplifier or oscillator or in audio amplifier or modulator service.

The 8560A has electrical characteristics which are similar but not identical to the 7203/4CX250B.

Anode dissipation is limited only by heat-sink capability, and the tube is designed for operation at a heater voltage of 6.0 volts.



GENERAL CHARACTERISTICS[1]

ELECTRICAL

Cathode: Oxide Coated, Unipotential	
Heater: Voltage	6.0 ± 0.3 V
Current, at 6.0 volts	2.6 A
Cathode-Heater Potential, Maximum	±150 V
Amplification Factor (Average):	
Grid-to-screen	5
Direct Interelectrode Capacitances (Grounded Cathode)[2]	
Cin	16.5 pF
Cout	4.6 pF
Cgp	0.04 pF
Frequency of Maximum Rating:	
CW	500 MHz

1. Characteristics and operating values are based on performance tests. These figures may change without notice as the result of additional data or product refinement. EIMAC Division of Varian should be consulted before using this information for final equipment design.

2. Capacitance values are for a cold tube as measured in a special shielded fixture in accordance with Electronic Industries Association Standard RS-191.

MECHANICAL

Maximum Overall Dimensions:	
Length	2.445 in; 62.1 mm
Diameter	1.630 in; 41.4 mm
Net Weight	8.2 oz; 235 gm
Operating Position	Any
Maximum Operating Temperature:	
Ceramic/Metal Seals and Anode Core	250°C
Cooling: Conduction Cooled	
Recommended Beryllium Oxide thermal link	EIMAC SK-1920
Recommended Socket	EIMAC SK-660 Series
Base	Special 9-Pin JEDEC B8-236

(Effective 7-15-71) © by Varian

Printed in U.S.A.

RADIO FREQUENCY LINEAR AMPLIFIER GRID DRIVEN (SSB)

Class AB_1

MAXIMUM RATINGS

DC PLATE VOLTAGE	2000 VOLTS
DC SCREEN VOLTAGE	400 VOLTS
DC GRID VOLTAGE	-250 VOLTS
DC PLATE CURRENT	0.25 AMPERE
PLATE DISSIPATION	See COOLING NOTE
SCREEN DISSIPATION	12 WATTS
GRID DISSIPATION	2 WATTS

TYPICAL OPERATION (Frequencies to 175 MHz)
Class AB_1, Grid Driven, Peak Envelope or Modulation Crest Conditions

Plate Voltage	1000	1500	2000	Vdc
Screen Voltage	350	350	350	Vdc
Grid Voltage [1]	-55	-55	-55	Vdc
Zero-Signal Plate Current	100	100	100	mAdc
Single Tone Plate Current	250	250	250	mAdc
Two-Tone Plate Current	190	190	190	mAdc
Single-Tone Screen Current [2]	10	8	5	mAdc
Two-Tone Screen Current [2]	2	-1	-2	mAdc
Single-Tone Grid Current [2]	0	0	0	mAdc
Peak rf Grid Voltage [2]	50	50	50	v
Plate Output Power	120	215	300	W
Resonant Load Impedance	2000	3000	4000	Ω

1. Adjust to specified zero-signal dc plate current.
2. Approximate value.

RADIO FREQUENCY LINEAR AMPLIFIER GRID DRIVEN, CARRIER CONDITIONS

Class AB_1

MAXIMUM RATINGS

DC PLATE VOLTAGE	2000 VOLTS
DC SCREEN VOLTAGE	400 VOLTS
DC GRID VOLTAGE	-250 VOLTS
DC PLATE CURRENT	0.25 AMPERE
PLATE DISSIPATION	See COOLING NOTE
SCREEN DISSIPATION	12 WATTS
GRID DISSIPATION	2 WATTS

TYPICAL OPERATION (Frequencies to 175 MHz)
Class AB_1, Grid Driven

Plate Voltage	1000	1500	2000	Vdc
Screen Voltage	350	350	350	Vdc
Grid Voltage [1]	-55	-55	-55	Vdc
Zero-Signal Plate Current	100	100	100	mAdc
Carrier Plate Current	150	150	150	mAdc
Carrier Screen Current	-3	-4	-4	mAdc
Peak rf Grid Voltage [2]	25	25	25	v
Plate Output Power	30	50	65	W

1. Adjust to specified zero-signal dc plate current
2. Approximate value.

RADIO FREQUENCY POWER AMPLIFIER OR OSCILLATOR

Class C Telegraphy or FM Telephony
(Key-Down Conditions)

MAXIMUM RATINGS

DC PLATE VOLTAGE	2000 VOLTS
DC SCREEN VOLTAGE	300 VOLTS
DC GRID VOLTAGE	-250 VOLTS
DC PLATE CURRENT	0.25 AMPERE
PLATE DISSIPATION	See COOLING NOTE
SCREEN DISSIPATION	12 WATTS
GRID DISSIPATION	2 WATTS

TYPICAL OPERATION (Frequencies to 175 MHz)

					500 MHz	
Plate Voltage	500	1000	1500	2000	2000	Vdc
Screen Voltage	250	250	250	250	300	Vdc
Grid Voltage	-90	-90	-90	-90	-90	Vdc
Plate Current	250	250	250	250	250	mAdc
Screen Current [1]	45	38	21	19	10	mAdc
Grid Current [1]	35	31	28	26	25	mAdc
Peak rf Grid Voltage [1]	114	114	112	112	---	v
Measured Driving Power [1]	4.0	3.5	3.2	2.9	---	W
Plate Input Power	125	250	375	500	500	W
Plate Output Power	70	190	280	390	225	W
Heater Voltage	6.0	6.0	6.0	6.0	5.5	V

1. Approximate value.

COOLING NOTE: When using the SK-1920 BeO thermal link between the anode and heat sink, the maximum allowable thermal gradient from the hottest part of the anode to the heat sink is 1.9°C per watt of anode dissipation. Example: Maximum anode temperature = 250°C; maximum heat sink temperature for 200 watts of anode dissipation is then $250°C - \frac{200\,W}{1.9°C/W} = 145°C$

PLATE MODULATED RADIO FREQUENCY POWER AMPLIFIER-GRID DRIVEN

Class C Telephony (Carrier Conditions)

MAXIMUM RATINGS

DC PLATE VOLTAGE	1500	VOLTS
DC SCREEN VOLTAGE	300	VOLTS
DC GRID VOLTAGE	-250	VOLTS
DC PLATE CURRENT	0.20	AMPERE
PLATE DISSIPATION[1]	See COOLING NOTE	
SCREEN DISSIPATION[2]	12	WATTS
GRID DISSIPATION[2]	2	WATTS

1. Corresponds to 250 watts at 100% sine-wave modulation.
2. Average, with or without modulation.

TYPICAL OPERATION (Frequencies to 175 MHz)

Plate Voltage	500	1000	1500	Vdc
Screen Voltage	250	250	250	Vdc
Grid Voltage	-100	-100	-100	Vdc
Plate Current	200	200	200	mAdc
Screen Current[3]	31	22	20	mAdc
Grid Current[3]	15	14	14	mAdc
Peak rf Grid Voltage	118	117	117	v
Calculated Driving Power	1.8	1.7	1.7	W
Plate Input Power	100	200	300	W
Plate Output Power	60	145	235	W

3. Approximate value.

AUDIO FREQUENCY POWER AMPLIFIER OR MODULATOR

Class AB , Grid Driven (Sinusoidal Wave)

MAXIMUM RATINGS (Per Tube)

DC PLATE VOLTAGE	2000	VOLTS
DC SCREEN VOLTAGE	400	VOLTS
DC GRID VOLTAGE	-250	VOLTS
DC PLATE CURRENT	0.25	AMPERE
PLATE DISSIPATION	See COOLING NOTE	
SCREEN DISSIPATION	12	WATTS
GRID DISSIPATION	2	WATTS

1. Approximate value.
2. Per Tube.

TYPICAL OPERATION (Two Tubes)

Plate Voltage	1000	1500	2000	Vdc
Screen Voltage	350	350	350	Vdc
Grid Voltage 1/3	-55	-55	-55	Vdc
Zero-Signal Plate Current	200	200	200	mAdc
Max Signal Plate Current	500	500	500	mAdc
Max Signal Screen Current[1]	20	16	10	mAdc
Max Signal Grid Current[1]	0	0	0	mAdc
Peak af Grid Voltage[2]	50	50	50	v
Peak Driving Power	0	0	0	w
Plate Input Power	500	750	1000	W
Plate Output Power	240	430	600	W
Load Resistance (plate to plate)	3500	6200	9500	Ω

3. Adjust to give stated zero-signal plate current.

NOTE: TYPICAL OPERATION data are obtained from direct measurement or by calculation from published characteristic curves. Adjustment of the rf grid voltage to obtain the specified plate current at the specified bias, screen and plate voltages is assumed. If this procedure is followed, there will be little variation in output power when the tube is changed, even though there may be some variation in grid and screen current. The grid and screen currents which result when the desired plate current is obtained are incidental and vary from tube to tube. These current variations cause no difficulty so long as the circuit maintains the correct voltage in the presence of the variations in current. In the case of Class C Service, if grid bias is obtained principally by means of a grid resistor, the resistor must be adjustable to obtain the required bias voltage when the correct rf grid voltage is applied.

RANGE VALUES FOR EQUIPMENT DESIGN

	Min.	Max.	
Heater Current, at 6.0 volts	2.3	2.9	A
Interelectrode Capacitances (grounded cathode) [1]			
Cin	14.2	17.2	pF
Cout	4.0	5.0	pF
Cgp	---	0.06	pF
Cathode Warmup Time	30	---	sec

1. Capacitance values are for a cold tube as measured in a special shielded fixture in accordance with EIA Standard RS-191. (See APPLICATION NOTE on Capacitance)

APPLICATION

MOUNTING & SOCKETING - The 8560A may be mounted in any position, but its mounting is normally controlled by the heat sink configuration and location. Where possible, the socket can be mounted on a bracket which in turn is mounted to the heat sink so that the one sink will act for removal of heat from the tube anode and also the tube base. The EIMAC SK-1920 beryllium oxide (BeO) thermal link is available for use between the tube anode and the heat sink. BeO is a ceramic material which exhibits high thermal conductance, similar to aluminum, and high electrical resistance and low loss typical of ceramics. Properly installed, it provides a low thermal resistance path allowing the anode heat to be transferred to the heat sink, while providing electrical isolation between the anode and the sink.

The EIMAC SK-660 series of sockets are designed for use in heat-sink applications. The SK-660 and SK-660A both use a high-alumina ceramic body, while the SK-661 and the SK-661A use a BeO body. The SK-661A includes a bracket which is adaptable to some heat-sink design applications.

VIBRATION & SHOCK - The 8560A is capable of satisfactorily withstanding ordinary shock and vibration, such as encountered in shipment and normal handling. The tube will function well in automobile and truck mobile installations and similar environments. However, when shock and vibration more severe than this are expected, it is suggested that other, more rugged, EIMAC tube types be considered.

COOLING - This tube is designed for use in a conduction-cooled system, where the anode is in direct intimate contact with a heat sink, or coupled to the heat sink by means of a Be0 thermal link. The heat sink in turn can be cooled by natural (free) convection, forced-air convection, liquid cooling, or a combination of these methods. The design choice is determined by the tube application, but in all cases the cooling system must maintain the anode and the ceramic/metal seal temperatures below 250°C.

Intimacy of contact and pressure are two factors which will effect transfer of heat from the tube anode to the heat sink, whether direct or through a thermal link such as the EIMAC SK-1920. A good thermally conductive compound should be used in the interface between mating parts to reduce thermal resistance of the joints. Examples of commercially available thermal joint compound are:

WAKEFIELD 120 - Wakefield Engineering Co., Wakefield, Mass. 01880.

DOW CORNING 340 - Dow Corning Corp., Midland, Mich. 48640

ASTRODYNE THERMAL BOND 312 - Astrodyne Inc., Burlington, Mass. 01803.

G.E. INSULGREASE G641 - G.E. Company, Cleveland, Ohio 44117.

The method of fastening the tube to the heat sink should provide reasonable compression to reduce interface thermal resistance. When it is desired to insulate the anode from the heat sink, the EIMAC SK-1920 thermal link is recommended, as it is the correct size and thickness to match the physical and electrical characteristics of the 8560A tube.

Socketing is accomplished with one of the units mentioned earlier, mounted so as to provide a path for heat from the base of the tube to a heat-sink surface. The designer is cautioned to allow for some lateral movement in the socket mount, and to make sure the anode (or anode/thermal link combination) is flat against the heat sink before the socket mounts are tightened, or heat transfer may be seriously affected.

In all cases, temperature of the tube anode and the ceramic/metal seals is the limiting factor, and the equipment designer is encouraged to use temperature-sensitive paint or other temperature-sensing devices in connection with any equipment design before the layout is finalized.

HEATER - The rated heater voltage for the 8560A is 6.0 volts and should be maintained as closely as practical. Short-time changes of ±10% will not damage the tube, but variations in performance must be expected. The heater voltage must be maintained within ±5% to minimize these variations and to obtain maximum tube life.

At frequencies above approximately 300 MHz, transit-time effects begin to influence the cathode temperature. The amount of driving power diverted to heating the cathode by back-bombardment will depend on frequency, plate current, and driving power. When the tube is driven to maximum input as a Class-C amplifier, the heater voltage should be reduced according to the following table:

Frequency (MHz)	Ef (Volts)
300 or lower	6.00
301 to 400	5.75
401 to 500	5.50

CATHODE OPERATION - The oxide coated unipotential cathode must be protected against excessively high emission currents. The maximum rated dc input current is 200 mA for plate-modulated operation and 250 mA for all other types of operation except pulse.

The cathode is internally connected to the four even-numbered base pins and all four of the corresponding socket terminals should be used to make connection to the external circuits. At radio frequencies it is important to keep the cathode leads short and direct and to use conductors with large areas to minimize the inductive reactances in series with the cathode leads.

It is recommended that rated heater voltage be applied for a minimum of 30 seconds before other operating voltages are applied. Where the circuit design requires the cathode and heater to be operated at different potentials, the rated maximum heater-to-cathode voltage is 150 volts regardless of polarity.

GRID OPERATION - The maximum rated dc grid bias voltage is -250 volts and the maximum grid dissipation rating is 2.0 watts. In ordinary audio and radio-frequency amplifiers the grid dissipation usually will not approach the maximum rating. At operating frequencies above the 100 MHz region, driving-power requirements for amplifiers increase noticeably. At 500 MHz as much as 20 watts of driving power may have to be supplied. However, most of the driving power is absorbed in circuit losses other than grid dissipation, so that grid dissipation is increased only slightly. Satisfactory 500 MHz operation of the tube in a stable amplifier is indicated by grid-current values below approximately 15 mA.

The grid voltage required by different tubes may vary between limits approximately 20% above and below the center value, and means should be provided in the equipment to accommodate such variation. It is especially important that variations between individual tubes be compensated when tubes are operated in parallel or push-pull circuits, to assure equal load sharing.

The maximum permissible grid-circuit resistance per tube is 100,000 ohms.

SCREEN OPERATION - The maximum rated power dissipation for the screen is 12 watts, and the screen input power should be kept below that level. The product of the peak screen voltage and the indicated dc screen current approximates the screen input power except when the screen current indication is near zero or negative.

In the usual tetrode amplifier, where no signal voltage appears between cathode and screen, the peak screen voltage is equal to the dc screen voltage.

When signal voltages appear between screen and cathode, as in the case of screen-modulated amplifiers or cathode-driven tetrode amplifiers, the peak screen-to-cathode voltage is the sum of the dc screen voltage and the peak ac or rf signal voltage applied to screen or cathode.

Protection for the screen should be provided by an over-current relay and by interlocking the screen supply so that plate voltage must be applied before screen voltage can be applied.

The screen current may reverse under certain conditions and produce negative current indications on the screen milliammeter. This is a normal characteristic of most tetrodes. The screen power supply should be designed with this characteristic in mind so that the correct operating voltage will be maintained on the screen under all conditions. A current path from screen to cathode must be provided by a bleeder resistor, gaseous voltage regulator tubes, or an electron tube *shunt* regulator connected between screen and cathode and arranged to pass approximately 15 milliamperes per connected screen. An electron tube *series* regulator can be used only when an adequate bleeder resistor is provided.

Self-modulation of the screen in plate-modulated tetrode amplifiers using these tubes may not be satisfactory because of the screen-voltage screen-current characteristics. Screen modulation from a tertiary winding on the modulation transformer or by means of a small separate modulator tube will usually be more satisfactory. Screen-voltage modulation factors between 0.75 and 1.0 will result in 100% modulation for plate-modulated rf amplifiers using the 8560A.

PLATE OPERATION - The maximum rated plate dissipation power is 250 watts. In plate-modulated applications the carrier plate dissipation power must be limited to 165 watts to avoid exceeding the plate dissipation rating with 100% sine wave modulation. The maximum dissipation rating may be exceeded for brief periods during circuit adjustment without damage to the tube.

MULTIPLE OPERATION - Tubes operating in parallel or push-pull must share the load equally. It is good engineering practice to provide individual metering and individual adjustment of bias or screen voltage to equalize the inputs.

Where overload protection is provided, it should be capable of protecting the surviving tube(s) in the event that one tube fails.

VHF OPERATION - The 8560A is suitable for use in the VHF region. Such operation should be conducted with heavy plate loading, minimum bias, and the lowest driving power consistent with satisfactory performance. It is often preferable to operate at a sacrifice in efficiency to obtain increased tube life.

DANGER-BERYLLIUM OXIDE CERAMICS (BeO) Do not alter, grind, lap, fire, chemically clean, or perform any other operation on the SK-1920 Beryllium Oxide thermal link used with the 8560A or any other equivalent section of BeO used with the 8560A. Normal use of Beryllium Oxide ceramics parts is not hazardous, but the user is cautioned that breathing small quantities of the dust or fumes from Beryllium Oxide can seriously injure or kill.

HIGH VOLTAGE - The 8560A operates at voltages which can be deadly, and the equipment must be designed properly and operating precautions must be followed. Equipment must be designed so that no one can come in contact with high voltages. All equipment must include safety enclosures for high-voltage circuits and terminals, with interlock switches to open the primary circuits of the power supplies and to discharge high voltage condensers whenever access doors are opened. Interlock switches must not be bypassed or "cheated" to allow operation with access doors open. Always remember that HIGH VOLTAGE CAN KILL.

INTERELECTRODE CAPACITANCE - The actual internal interelectrode capacitance of a tube is influenced by many variables in most applications, such as stray capacitance to the chassis, capacitance added by the socket used, stray capacitance between tube terminals, and wiring effects. To control the actual capacitance values within the tube, as the key component involved, the industry and the Military Services use a standard test procedure as described in Electronic Industries Association Standard RS-191. This requires the use of specially constructed test fixtures which effectively shield all external tube leads from each other and eliminates any capacitance reading to "ground". The test is performed on a cold tube. Other factors being equal, controlling internal tube capacitance in this way normally assures good interchangeability of tubes over a period of time, even when the tube may be made by different manufacturers. The capacitance values shown in the manufacturer's technical data, or test specifications, normally are taken in accordance with Standard RS-191.

The equipment designer is therefore cautioned to make allowance for the actual capacitance values which will exist in any normal application. Measurements should be taken with the socket and mounting which represent approximate final layout if capacitance values are highly significant in the design.

SPECIAL APPLICATIONS-If it is desired to operate these tubes under conditions widely different from those given here, write to Application Engineering Dept., EIMAC Division of Varian, San Carlos, Calif. 94070 for information and recommendations.

PIN NO. 1 SCREEN GRID
PIN NO. 2 CATHODE
PIN NO. 3 HEATER
PIN NO. 4 CATHODE
PIN NO. 5 I.C. DO NOT USE FOR EXTERNAL CONNECTION
PIN NO. 6 CATHODE
PIN NO. 7 HEATER
PIN NO. 8 CATHODE
CENTER PIN – CONTROL GRID

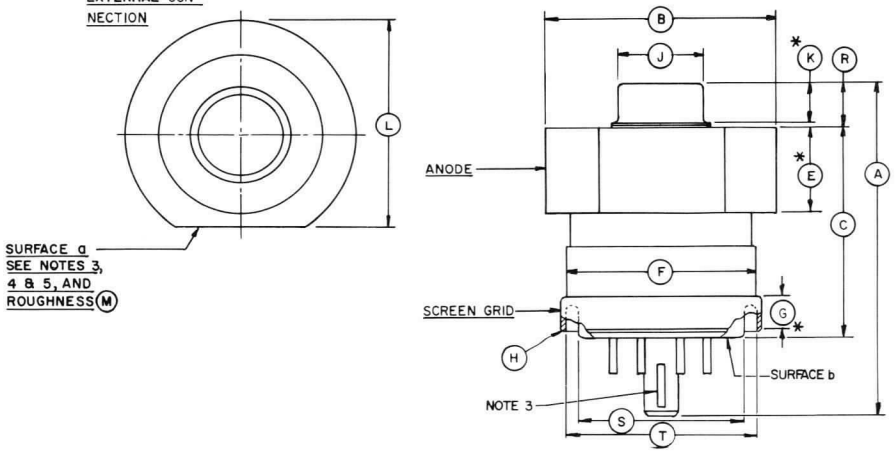

DIMENSIONAL DATA

DIM.	INCHES MIN.	INCHES MAX.	INCHES REF.	MILLIMETERS MIN.	MILLIMETERS MAX.	MILLIMETERS REF
A	2.305	2.445	- -	58.55	62.10	- -
B	1.620	1.630	- -	41.15	41.40	- -
C	1.530	1.590	- -	38.86	40.39	- -
D	- -	- -	- -	- -	- -	- -
E	0.660	0.740	- -	16.76	18.80	- -
F	- -	1.406	- -	- -	35.71	- -
G	0.187	- -	- -	4.75	- -	- -
H	BASE: B8-236 (JEDEC DESIGNATION)					
J	0.559	0.572	- -	14.20	14.53	- -
K	0.240	- -	- -	6.10	- -	- -
L	1.525	1.540	- -	38.74	39.12	- -
M	- -	32AA	- -	- -	32AA	- -
N	89°	91°	- -	89°	91°	- -
P	88°	92°	- -	88°	92°	- -
R	0.270	0.310	- -	6.86	7.87	- -
S	- -	1.194	- -	- -	30.33	- -
T	1.338	- -	- -	33.98	- -	- -

NOTES:
1. * CONTACT SURFACE.
2. REF. DIMS. ARE FOR INF. ONLY AND ARE NOT REQD. FOR INSP PURPOSES.
3. SUR. a TO BE PERP TO INDEX KEY LATERAL AXIS WITHIN (P) LIMITS AND ON SAME SIDE.
4. SUR a MUST BE FLAT WITHIN .001 & PERP TO SUR. b WITHIN (N) LIMITS.
5. SUR. a TO BE FREE OF ANY CODING & LABELING.

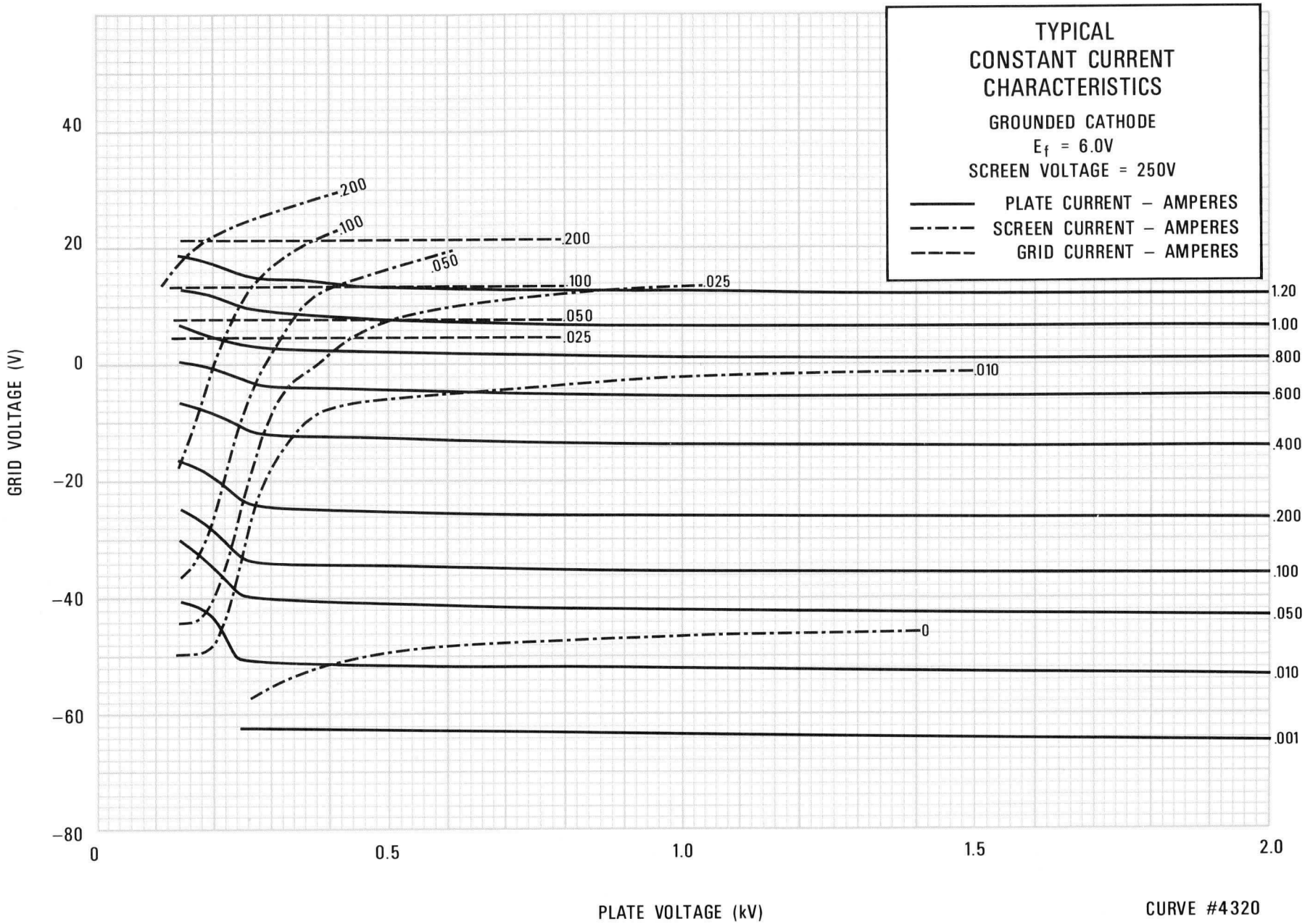
TYPICAL
CONSTANT CURRENT
CHARACTERISTICS
GROUNDED CATHODE
E_f = 6.0V
SCREEN VOLTAGE = 250V
PLATE CURRENT – AMPERES
SCREEN CURRENT – AMPERES
GRID CURRENT – AMPERES
GRID VOLTAGE (V)
40
20
0
−20
−40
−60
−80
0
0.5
1.0
1.5
2.0
PLATE VOLTAGE (kV)
.200
.100
.050
.025
.010
0
1.20
1.00
.800
.600
.400
.200
.100
.050
.010
.001

CURVE #4320

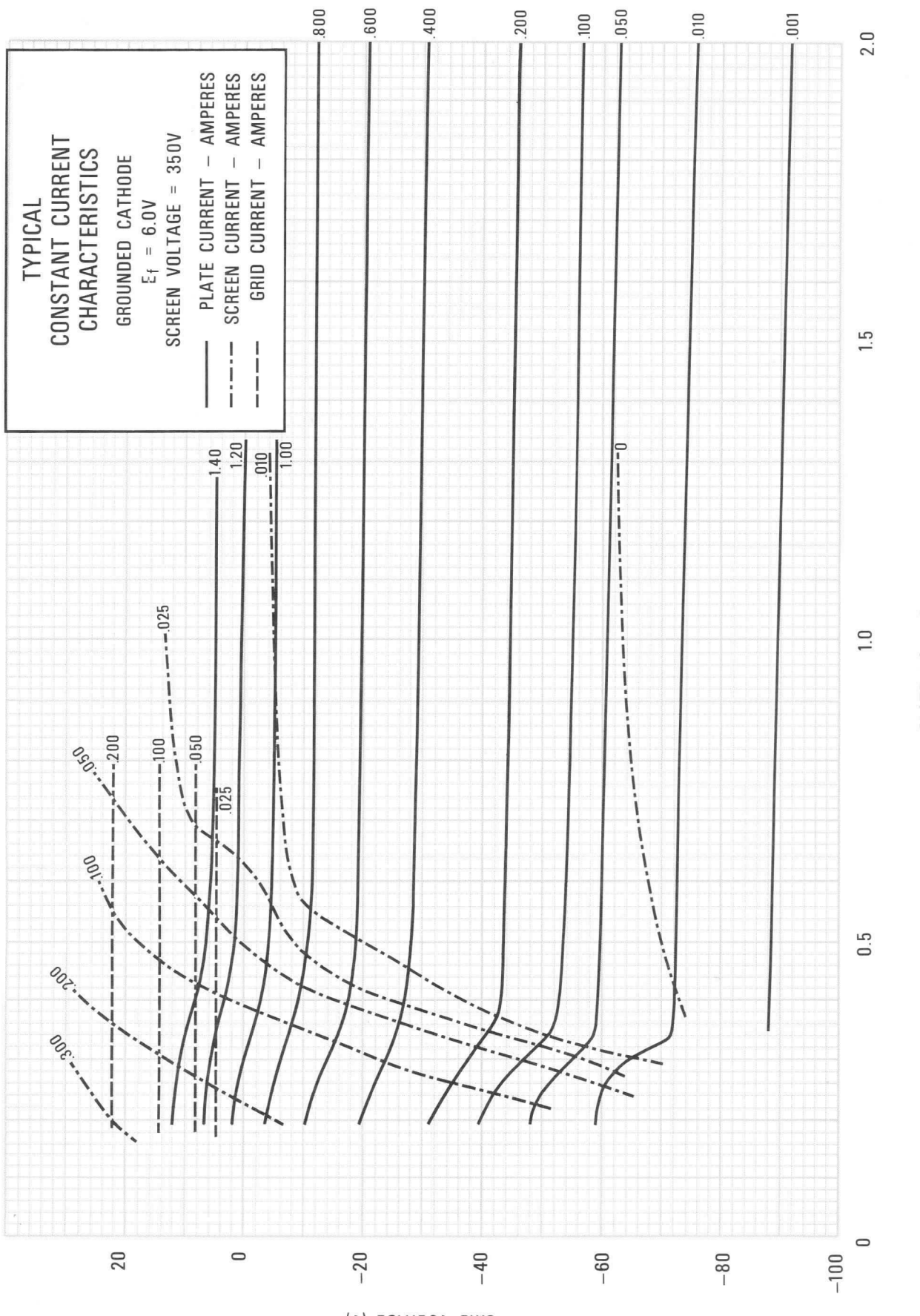
TYPICAL
CONSTANT CURRENT
CHARACTERISTICS
GROUNDED CATHODE
E_f = 6.0V
SCREEN VOLTAGE = 350V
PLATE CURRENT – AMPERES
SCREEN CURRENT – AMPERES
GRID CURRENT – AMPERES
.800
.600
.400
.200
.100
.050
.010
.001
1.40
1.20
.010
1.00
0
.025
.050
.200
.100
.050
.025
.100
.200
.300
20
0
−20
−40
−60
−80
−100
GRID VOLTAGE (V)
0
0.5
1.0
1.5
2.0
PLATE VOLTAGE (kV)
CURVE #4321

8876

TECHNICAL DATA

RADIAL-BEAM
POWER TETRODE

The 8876 is a ceramic/metal forced-air cooled, external-anode radial-beam tetrode with a maximum plate dissipation rating of 250 watts and a maximum input-power rating of 500 watts. The 8876 is designed for very long life and reliable performance in oscillator, amplifier, or modulator service. In most applications, it may be used as a direct replacement for the 7203/4CX250B, with only minor circuit retuning required.



GENERAL CHARACTERISTICS[1]

ELECTRICAL

Cathode: Oxide Coated, Unipotential		
Heater: Voltage	6.0 ± 0.3	V
Current, at 6.0 volts	2.4	A
Cathode-Heater Potential, maximum	±150	V
Amplification Factor (Average):		
Grid to Screen	5	
Direct Interelectrode Capacitances (grounded cathode)[2]		
Cin	17.0	pF
Cout	4.5	pF
Cgp	0.04	pF
Direct Interelectrode Capacitances (grounded grid and screen)[2]		
Cin	13.6	pF
Cout	4.5	pF
Cpk	0.01	pF
Frequency of Maximum Rating:		
CW	500	MHz

1. Characteristics and operating values are based upon performance tests. These figures may change without notice as the result of additional data or product refinement. EIMAC Division of Varian should be consulted before using this information for final equipment design.
2. Capacitance values are for a cold tube as measured in a special shielded fixture in accordance with Electronic Industries Association Standard RS-191.

MECHANICAL

Maximum Overall Dimensions:	
Length	2.46 in; 62.5 mm
Diameter	1.64 in; 41.7 mm
Net Weight	4 oz; 113 gm
Operating Position	Any
Maximum Operating Temperature:	
Ceramic/Metal Seals	250°C
Anode Core	250°C

(Effective 6-15-71) © 1971 Varian Printed in U.S.A.

Cooling	Forced Air
Base	Special 9-pin JEDEC-B8-236
Recommended Socket	EIMAC SK-600 Series
Recommended Chimney	EIMAC SK-600 Series

RADIO FREQUENCY LINEAR AMPLIFIER GRID DRIVEN (SSB)

Class AB_1

MAXIMUM RATINGS:

DC PLATE VOLTAGE	2000	VOLTS
DC SCREEN VOLTAGE	400	VOLTS
DC GRID VOLTAGE	-250	VOLTS
DC PLATE CURRENT	0.25	AMPERE
PLATE DISSIPATION	250	WATTS
SCREEN DISSIPATION	12	WATTS
GRID DISSIPATION	2	WATTS

TYPICAL OPERATION (Frequencies to 175 MHz)
Class AB_1, Grid Driven, Peak Envelope or Modulation Crest Conditions

Plate Voltage	1000	1500	2000	Vdc
Screen Voltage	350	350	350	Vdc
Grid Voltage[1]	-55	-55	-55	Vdc
Zero-Signal Plate Current	100	100	100	mAdc
Single Tone Plate Current	250	250	250	mAdc
Two-Tone Plate Current	190	190	190	mAdc
Single-Tone Screen Current[2]	10	8	5	mAdc
Two-Tone Screen Current[2]	2	-1	-2	mAdc
Single-Tone Grid Current[2]	0	0	0	mAdc
Peak rf Grid Voltage[2]	50	50	50	v
Plate Output Power	120	215	300	W
Resonant Load Impedance	2000	3000	4000	Ω

1. Adjust to specified zero-signal dc plate current.
2. Approximate value.

RADIO FREQUENCY LINEAR AMPLIFIER GRID DRIVEN, CARRIER CONDITIONS

Class AB_1

MAXIMUM RATINGS:

DC PLATE VOLTAGE	2000	VOLTS
DC SCREEN VOLTAGE	400	VOLTS
DC GRID VOLTAGE	-250	VOLTS
DC PLATE CURRENT	0.25	AMPERE
PLATE DISSIPATION	250	WATTS
SCREEN DISSIPATION	12	WATTS
GRID DISSIPATION	2	WATTS

TYPICAL OPERATION (Frequencies to 175 MHz)
Class AB_1, Grid Driven

Plate Voltage	1000	1500	2000	Vdc
Screen Voltage	350	350	350	Vdc
Grid Voltage[1]	-55	-55	-55	Vdc
Zero-Signal Plate Current	100	100	100	mAdc
Carrier Plate Current	150	150	150	mAdc
Carrier Screen Current	-3	-4	-4	mAdc
Peak rf Grid Voltage[2]	25	25	25	v
Plate Output Power	30	50	65	W

1. Adjust to specified zero-signal dc plate current.
2. Approximate value

RADIO FREQUENCY POWER AMPLIFIER OR OSCILLATOR

Class C Telegraphy or FM Telephony
(Key-Down Conditions)

MAXIMUM RATINGS:

DC PLATE VOLTAGE	2000	VOLTS
DC SCREEN VOLTAGE	300	VOLTS
DC GRID VOLTAGE	-250	VOLTS
DC PLATE CURRENT	0.25	AMPERE
PLATE DISSIPATION	250	WATTS
SCREEN DISSIPATION	12	WATTS
GRID DISSIPATION	2	WATTS

TYPICAL OPERATION (Frequencies to 175 MHz)					500 MHz	
Plate Voltage	500	1000	1500	2000	2000	Vdc
Screen Voltage	250	250	250	250	300	Vdc
Grid Voltage	-90	-90	-90	-90	-90	Vdc
Plate Current	250	250	250	250	250	mAdc
Screen Current[1]	45	38	21	19	10	mAdc2
Grid Current[1]	35	31	28	26	25	mAdc2
Peak rf Grid Voltage[1]	114	114	112	112	---	v
Measured Driving Power[1]	4.0	3.5	3.2	2.9	---	W
Plate Input Power	125	250	375	500	500	W
Plate Output Power	70	190	280	390	300	W[2]
Heater Voltage	6.0	6.0	6.0	6.0	5.7	V

1. Approximate value.
2. Measured values for a typical cavity amplifier circuit.

PLATE MODULATED RADIO FREQUENCY POWER AMPLIFIER-GRID DRIVEN

Class C Telephony (Carrier Conditions)

MAXIMUM RATINGS:

DC PLATE VOLTAGE	1500	VOLTS
DC SCREEN VOLTAGE	300	VOLTS
DC GRID VOLTAGE	-250	VOLTS
DC PLATE CURRENT	0.20	AMPERE
PLATE DISSIPATION[1]	165	WATTS
SCREEN DISSIPATION[2]	12	WATTS
GRID DISSIPATION[2]	2	WATTS

TYPICAL OPERATION (Frequencies to 175 MHz)

Plate Voltage	500	1000	1500	Vdc
Screen Voltage	250	250	250	Vdc
Grid Voltage	-100	-100	-100	Vdc
Plate Current	200	200	200	mAdc
Screen Current[3]	31	22	20	mAdc
Grid Current[3]	15	14	14	mAdc
Peak rf Grid Voltage[3]	118	117	117	v
Calculated Driving Power	1.8	1.7	1.7	W
Plate Input Power	100	200	235	W

1. Corresponds to 250 watts at 100% sine-wave modulation.
2. Average, with or without modulation.
3. Approximate value.

AUDIO FREQUENCY POWER AMPLIFIER OR MODULATOR

Class AB , Grid Driven (Sinusoidal Wave)

MAXIMUM RATINGS (Per Tube)

DC PLATE VOLTAGE	2000	VOLTS
DC SCREEN VOLTAGE	400	VOLTS
DC GRID VOLTAGE	-250	VOLTS
DC PLATE CURRENT	0.25	AMPERE
PLATE DISSIPATION	250	WATTS
SCREEN DISSIPATION	12	WATTS
GRID DISSIPATION	2	WATTS

1. Approximate value

TYPICAL OPERATION (Two Tubes)

Plate Voltage	1000	1500	2000	Vdc
Screen Voltage	350	350	350	Vdc
Grid Voltage[1/3]	-55	-55	-55	Vdc
Zero-Signal Plate Current	200	200	200	mAdc
Max Signal Plate Current	500	500	500	mAdc
Max Signal Screen Current[1]	20	16	10	mAdc
Max Signal Grid Current[1]	0	0	0	mAdc
Peak af Grid Voltage[2]	50	50	50	v
Peak Driving Power	0	0	0	W
Plate Input Power	500	750	1000	W
Plate Output Power	240	430	600	W
Load Resistance (plate to plate)	3500	6200	9500	Ω

2. Per tube.
3. Adjust to give stated zero-signal plate current.

NOTE: TYPICAL OPERATION data are obtained from direct measurement or by calculation from published characteristic curves. Adjustment of the rf grid voltage to obtain the specified plate current at the specified bias, screen and plate voltages is assumed. If this procedure is followed, there will be little variation in output power when the tube is changed, even though there may be some variation in grid and screen current. The grid and screen currents which result when the desired plate current is obtained are incidental and vary from tube to tube. These current variations cause no difficulty so long as the circuit maintains the correct voltage in the presence of the variations in current. In the case of Class C Service, if grid bias is obtained principally by means of a grid resistor, the resistor must be adjustable to obtain the required bias voltage when the correct rf grid voltage is applied.

RANGE VALUES FOR EQUIPMENT DESIGN

	Min.		Max.	
Heater: Current at 6.0 volts	2.2	---	2.7	A
Cathode Warmup Time	60	---	---	sec.
Interelectrode Capacitances[1] (grounded cathode connection)				
Cin	15.0	---	18.0	pF
Cout	4.0	---	5.0	pF
Cgp	---	---	0.06	pF

1. Capacitance values are for a cold tube as measured in a special shielded fixture in accordance with Electronic Industries Association Standard RS-191.

APPLICATION

MECHANICAL

MOUNTING - The 8876 may be operated in any position. An EIMAC Air-System Socket, SK-600 series, or a socket having equivalent characteristics, is required. Sockets are available with or without built-in screen capacitors and may be obtained with either grounded or ungrounded cathode terminals.

COOLING - Sufficient forced-air cooling must be provided for the anode, base seals, and body seals to maintain operating temperatures below the rated maximum values. Air requirements to maintain anode core temperatures at 200°C with an inlet air temperature of 50°C are tabulated below. These requirements apply when a socket of the EIMAC SK-600 series and an EIMAC SK-606 chimney are used with air flow in the base to anode direction.

SEA LEVEL			10,000 FEET	
Plate Dissipation(watts)	Air Flow (CFM)	Pressure Drop(In.of water)	Air Flow (CFM)	Pressure Drop(In.of water)
200	5.0	0.52	7.3	0.76
250	6.4	0.82	9.3	1.20

The blower selected in a given application must be capable of supplying the desired airflow at a back pressure equal to the pressure drop shown above plus any drop encountered in ducts and filters. The blower must be designed to deliver the air at the desired altitude.

At 500 MHz or below, base cooling air requirements are satisfied automatically when the tube is operated in an EIMAC Air-System Socket and the recommended air flow rates are used. Experience has shown that if reliable long life operation is to be obtained, the cooling air flow must be maintained during standby periods when only the heater voltage is applied to the tube. The anode cooler should be inspected periodically and cleaned when necessary to remove any dirt which might interfere with effective cooling.

VIBRATION - This tube is designed to provide reliable service under ordinary shock and vibration conditions, such as encountered in mobile installations. However, when severe shock, or high-level and high-frequency vibration are expected, it is suggested that the EIMAC 4CX300A or 4CX250R be employed.

ELECTRICAL

HEATER - The rated heater voltage for the 8876 is 6.0 volts and the voltage must be maintained within ±5% to obtain good tube life and stable performance. Regulation to a tolerance better than ±5% normally will be beneficial as regards life expectancy.

At frequencies above approximately 300 MHz transit-time effects begin to influence the cathode temperature. The amount of driving power diverted to heating the cathode by back-bombardment will depend upon frequency, plate current, and driving power. When the tube is driven to maximum input as a class-C amplifier, the heater voltage should be reduced according to the table below;

300 MHz or lower	6.00 volts
301 to 400 MHz	5.85 volts
401 to 500 MHz	5.70 volts

CATHODE OPERATION - The oxide coated unipotential cathode must be protected against excessively high emission currents. The maximum rated dc input current is 200 mA for plate-modulated operation and 250 mA for all other types of operation except pulse.

The cathode is internally connected to the four even-numbered base pins and all four of the corresponding socket terminals should be used to make connection to the external circuits. At radio frequencies it is important to keep the cathode leads short and direct and to use conductors with large areas to minimize the inductive reactances in series with the cathode leads.

It is recommended that rated heater voltage be applied for a minimum of 60 seconds before other operating voltages are applied. If faster warmup is required, an over-voltage of 8.0 volts may be applied to the heater and held for 30 seconds, at which time the voltage must be reduced to the rated value. Full operating cathode temperature is reached in 30 seconds with this technique. From a cold start, it is imperative that the over-voltage be held not over 30 seconds, and if the tube has not completely cooled since previous use, a shorter period of over-voltage must be used.

Where the circuit design requires the cathode and heater to be operated at different potentials, the rated maximum heater-to-cathode voltage is 150 volts regardless of polarity.

GRID OPERATION - The maximum rated dc grid bias voltage is -250 volts and the maximum grid dissipation rating is 2.0 watts. In ordinary audio and radio-frequency amplifiers the grid dissipation usually will not approach the maximum rating. At operating frequencies above the 100 MHz region, driving power requirements for amplifiers increase noticeably. At 500 MHz as much as 20 watts of driving power may have to be supplied. However, most of the driving power is absorbed in circuit losses other than grid dissipation, so that grid dissipation is increased only slightly. Satisfactory 500 MHz operation of the tube in a stable amplifier is indicated by grid-current values below approximately 15 mA.

The grid voltage required by different tubes may vary between limits approximately 20% above and below the center value, and means should be provided in the equipment to accommodate such variation. It is especially important that variations between individual tubes be compensated when tubes are operated in parallel or push-pull circuits, to assure equal load sharing.

The maximum permissible grid-circuit resistance per tube is 100,000 ohms.

SCREEN OPERATION - The maximum rated power dissipation for the screen is 12 watts, and the screen input power should be kept below that level. The product of the peak screen voltage and the indicated dc screen current approximates the screen input power except when the screen current indication is near zero or negative.

In the usual tetrode amplifier, where no signal voltage appears between cathode and screen, the peak screen voltage is equal to the dc screen voltage.

When signal voltages appear between screen and cathode, as in the case of screen-modulated amplifiers or cathode-driven tetrode amplifiers, the peak screen-to-cathode voltage is the sum of the dc screen voltage and the peak ac or rf signal voltage applied to screen or cathode.

Protection for the screen should be provided by an over-current relay and by interlocking the screen supply so that plate voltage must be applied before screen voltage can be applied.

The screen current may reverse under certain conditions and produce negative current indications on the screen milliammeter. This is a normal characteristic of most tetrodes. The screen power supply should be designed with this characteristic in mind so that the correct operating voltage will be maintained on the screen under all conditions. A current path from screen to cathode must be provided by a bleeder resistor, gaseous voltage regulator tubes, or an electron tube *shunt* regulator connected between screen and cathode and arranged to pass approximately 15 milliamperes per connected screen. An electron tube *series* regulator can be used only when an adequate bleeder resistor is provided.

Self-modulation of the screen in plate-modulated tetrode amplifiers using these tubes may not be satisfactory because of the screen-voltage screen-current characteristics. Screen modulation from a tertiary winding on the modulation transformer or by means of a small separate modulator tube will usually be more satisfactory. Screen-voltage modulation factors between 0.75 and 1.0 will result 100% modulation for plate-modulated rf amplifiers using the 8876.

PLATE OPERATION - The maximum rated plate dissipation power is 250 watts. In plate-modulated applications the carrier plate dissipation power must be limited to 165 watts to avoid exceeding the plate dissipation rating with 100% sine wave modulation. The maximum dissipation rating may be exceeded for brief periods during circuit adjustment without damage to the tube.

MULTIPLE OPERATION - Tubes operating in parallel or push-pull must share the load equally. It is good engineering practice to provide individual metering and individual adjustment of bias or screen voltage to equalize the inputs.

Where overload protection is provided, it should be capable of protecting the surviving tube (s) in the event that one tube fails.

VHF OPERATION - The 8876 is suitable for use in the VHF region. Such operation should be conducted with heavy plate loading, minimum bias, and the lowest driving power consistent with satisfactory performance. It is often preferable to operate at a sacrifice in efficiency to obtain increased tube life.

HIGH VOLTAGE - Normal operating voltages used with the 8876 are deadly, and the equipment must be designed properly and operating precautions must be followed. Design all equipment so that no one can come in contact with high voltages. All equipment must include safety enclosures for high-voltage circuits and terminals, with interlock switches to open primary circuits of the power supply and to discharge high-voltage condensers whenever access doors are opened. Interlock switches must not be bypassed or "cheated" to allow operation with access doors open. Always remember that HIGH VOLTAGE CAN KILL.

INTERELECTRODE CAPACITANCE - The actual internal interelectrode capacitance of a tube is influenced by many variables in most applications, such as stray capacitance to the chassis, capacitance added by the socket used, stray capacitance between tube terminals, and wiring effects. To control the actual capacitance values within the tube, as the key component involved, the industry and the Military Services use a standard test procedure as described in Electronic Industries Association Standard RS-191. This requires the use of specially constructed test fixtures which effectively shield all external tube leads from each other and eliminates any capacitance reading to "ground". The test is performed on a cold tube. Other factors being equal, controlling internal tube capacitance in this way normally assures good interchangeability of tubes over a period of time, even when the tube may be made by different manufacturers. The capacitance values shown in the manufacturer's technical data, or test specifications, normally are taken in accordance with Standard RS-191.

The equipment designer is therefore cautioned to make allowance for the actual capacitance values which will exist in any normal application. Measurements should be taken with the socket and mounting which represent approximate final layout if capacitance values are highly significant in the design.

SPECIAL APPLICATIONS - If it is desired to operate these tubes under conditions widely different from those given here, write to Power Grid Tube Division, EIMAC Division of Varian, San Carlos, Calif. 94070 for information and recommendations.

PIN DESIGNATION	
PIN NO. 1	SCREEN GRID
PIN NO. 2	CATHODE
PIN NO. 3	HEATER
PIN NO. 4	CATHODE
PIN NO. 5	I.C. DO NOT USE FOR EXTERNAL CONNECTION.
PIN NO. 6	CATHODE
PIN NO. 7	HEATER
PIN NO. 8	CATHODE
CENTER PIN	CONTROL GRID

DIMENSIONAL DATA				
DIM.	INCHES		MILLIMETERS	
	MIN.	MAX.	MIN.	MAX.
A	2.342	2.464	59.03	62.59
B	1.610	1.640	40.89	41.66
C	1.810	1.910	45.97	48.51
D	0.750	0.810	19.05	20.57
E	0.710	0.790	18.03	20.07
F	--	1.406	--	35.71
G	0.187	--	4.75	--
H	BASE: B8-236 (JEDEC DESIGNATION)			
J	0.559	0.573	14.20	14.55
K	0.240	--	6.10	--

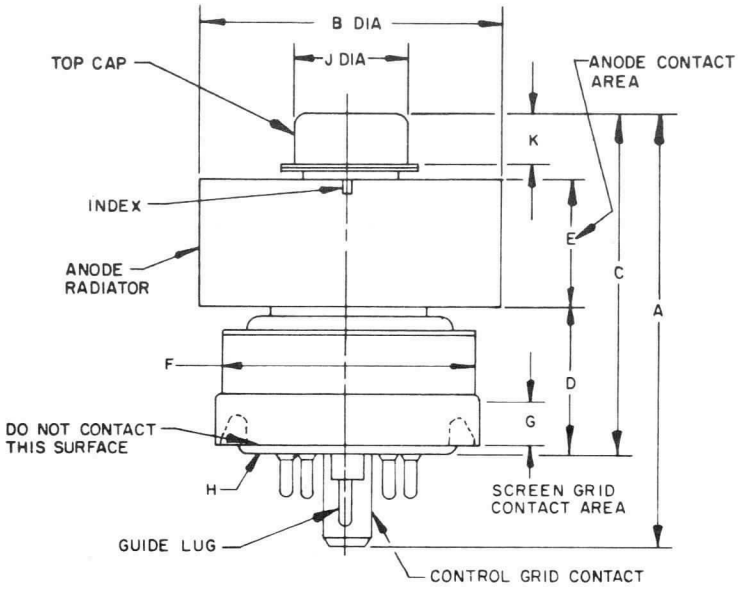

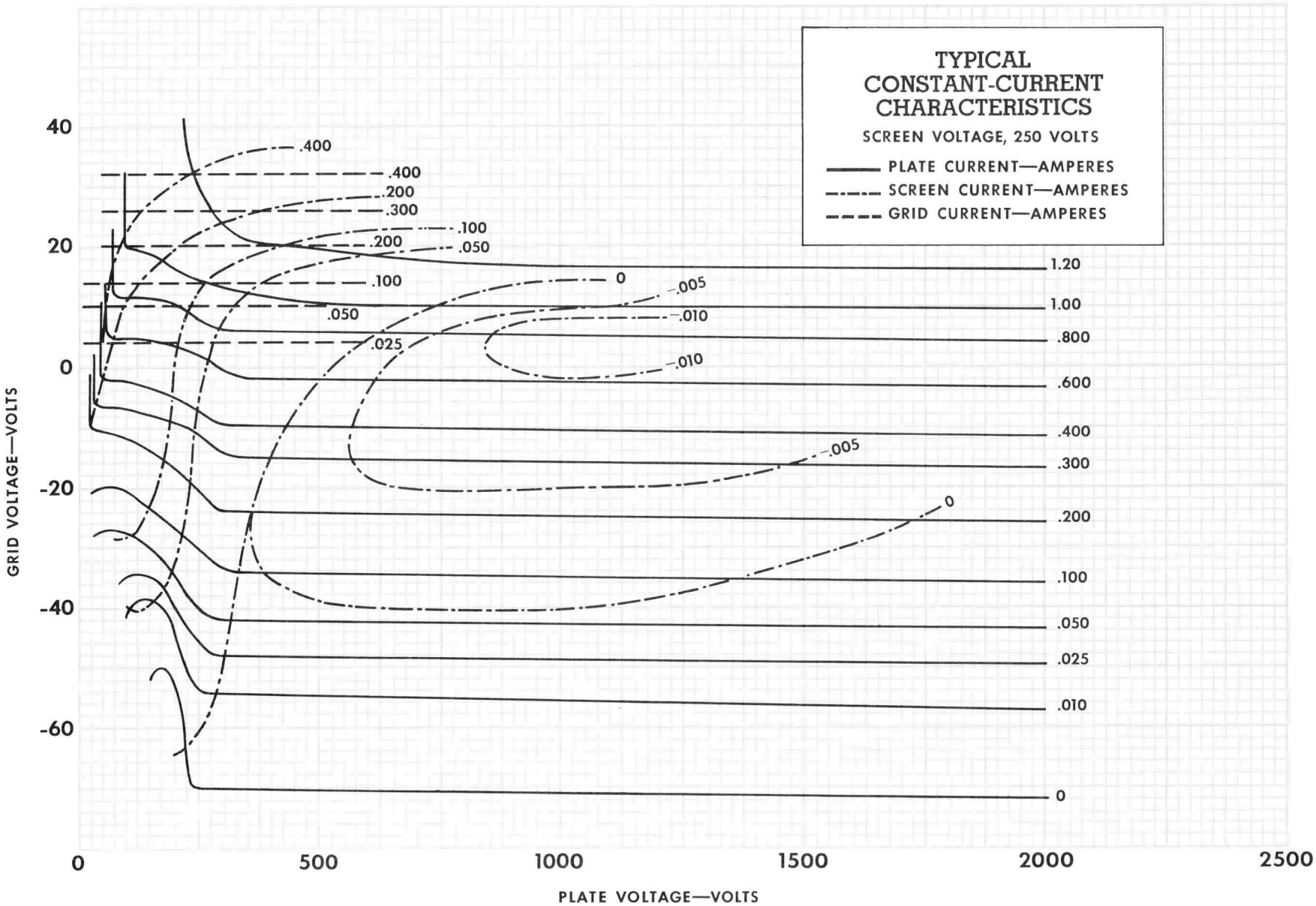
TYPICAL
CONSTANT-CURRENT
CHARACTERISTICS
SCREEN VOLTAGE, 250 VOLTS
PLATE CURRENT—AMPERES
SCREEN CURRENT—AMPERES
GRID CURRENT—AMPERES
GRID VOLTAGE—VOLTS
PLATE VOLTAGE—VOLTS
40
20
0
-20
-40
-60
0
500
1000
1500
2000
2500
1.20
1.00
.800
.600
.400
.300
.200
.100
.050
.025
.010
0
.400
.400
.200
.300
.100
.200
.050
.100
.050
.025
0
-.005
-.010
-.010
-.005
0

8876

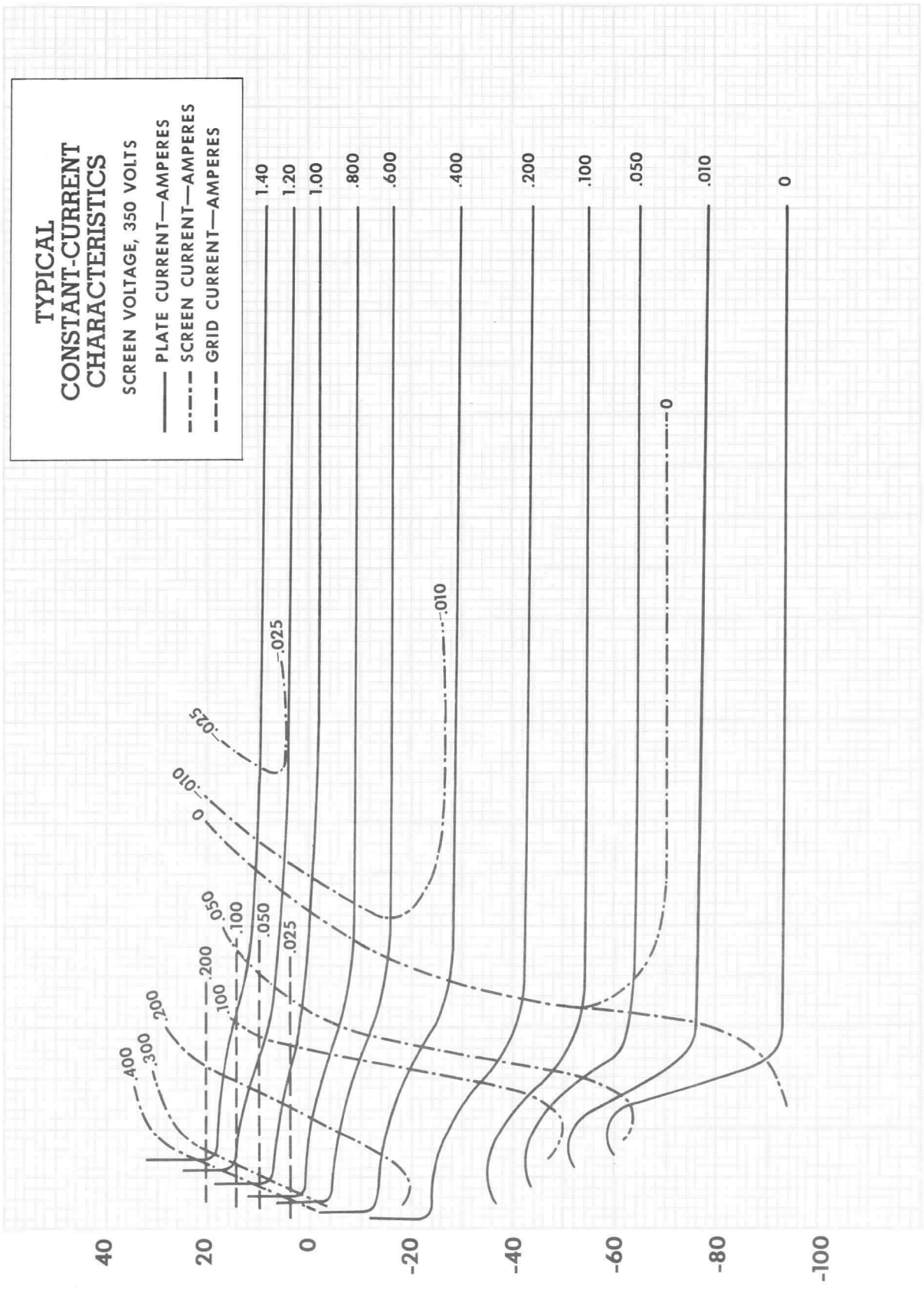
TYPICAL
CONSTANT-CURRENT
CHARACTERISTICS
SCREEN VOLTAGE, 350 VOLTS
PLATE CURRENT—AMPERES
SCREEN CURRENT—AMPERES
GRID CURRENT—AMPERES
1.40
1.20
1.00
.800
.600
.400
.200
.100
.050
.010
0
.025
.010
0
.025
.010
0
.050
.100
.050
.025
.200
.100
.200
.300
.400
40
20
0
-20
-40
-60
-80
-100
GRID VOLTAGE—VOLTS
0
400
800
1200
1600
2000
PLATE VOLTAGE—VOLTS

8930

TECHNICAL DATA

RADIAL BEAM
POWER TETRODE

The EIMAC 8930 is a compact, high-perveance tetrode with a maximum plate dissipation of 350 watts. It is electrically identical to the EIMAC 7589W/4CX250R but the larger anode radiator assembly allows higher dissipation with low air flow and pressure drop characteristics.

The tube has rugged internal construction features for reliable operation under heavy shock or vibration conditions.



GENERAL CHARACTERISTICS[1]

ELECTRICAL

Cathode: Oxide-coated, Unipotential

Voltage	6.0 ± 0.3 V
Current, at 6.0 volts	2.6 A
Frequency of Maximum Rating	500 MHz
Amplification Factor (Average):	
Grid to Screen	5
Direct Interelectrode Capacitances (grounded cathode)[2]	
Cin	17.5 pF
Cout	4.9 pF
Cgp	0.04 pF

1. Characteristics and operating values are based on performance tests. These figures may change without notice as the result of additional data or product refinement. EIMAC Division of Varian should be consulted before using this information for final equipment design.
2. Capacitance values are for a cold tube as measured in a special shielded fixture in accordance with Electronic Industries Association Standard RS-191.

MECHANICAL

Base	Special 9-pin, JEDEC B8-236
Recommended Air-System Socket	EIMAC SK-600 Series
Recommended Air-System Chimney	EIMAC SK-646
Maximum Overall Dimensions:	
Length	2.46 in; 62.59 mm
Diameter	2.08 in; 52.83 mm
Operating Position	Any
Cooling	Forced Air
Net Weight (Approximate)	5.5 oz; 156 gm
Maximum Operating Temperature:	
Anode Core & Ceramic/Metal Seals	250°C

(Effective 12-1-73) © by Varian

Printed in U.S.A.

RADIO FREQUENCY LINEAR AMPLIFIER GRID DRIVEN Class AB (SSB)

ABSOLUTE MAXIMUM RATINGS

DC PLATE VOLTAGE	2400	VOLTS
DC SCREEN VOLTAGE	500	VOLTS
DC PLATE CURRENT	0.25	AMPERE
PLATE DISSIPATION	350	WATTS
SCREEN DISSIPATION	12	WATTS
GRID DISSIPATION	2	WATTS

1. Approximate; adjust for specified zero-signal plate current.
2. Approximate; should be held above Absolute Maximum rating of 250 mAdc only for brief periods of tuning.
3. Approximate; rated screen dissipation should not be exceeded.
4. Approximate value.
5. The Intermodulation Distortion Products are referenced against one tone of a two equal tone signal.

TYPICAL OPERATION (Frequencies to 30 MHz)
Class AB_1, Grid Driven, Peak Envelope or Modulation Crest Conditions

Plate Voltage	2000	Vdc
Screen Voltage	350	Vdc
Grid Voltage [1]	-63	Vdc
Zero-Signal Plate Current	90	mAdc
One-Tone Plate Current [2]	290	mAdc
Two-Tone Plate Current [4]	205	mAdc
One-Tone Screen Current [3]	30	mAdc
Two-Tone Screen Current [4]	7	mAdc
One-Tone Useful Output Power	350	W
Resonant Load Impedance	4000	Ω
Intermodulation Distortion Products [5]		
3rd Order	-27	dB
5th Order	-30	dB

RADIO FREQUENCY LINEAR AMPLIFIER GRID DRIVEN, CARRIER CONDITIONS Class AB

ABSOLUTE MAXIMUM RATINGS

DC PLATE VOLTAGE	2400	VOLTS
DC SCREEN VOLTAGE	400	VOLTS
DC PLATE CURRENT	0.25	AMPERE
PLATE DISSIPATION	350	WATTS
SCREEN DISSIPATION	12	WATTS
GRID DISSIPATION	2	WATTS

1. Approximate; adjust for specified value of zero-signal plate current.
2. Approximate value.

TYPICAL OPERATION (Measured data at 400 MHz)
Class AB_1, Grid Driven

Plate Voltage	2000	Vdc
Screen Voltage	400	Vdc
Grid Voltage [1]	-85	Vdc
Zero-Signal Plate Current	70	mAdc
Plate Current, 65 W Carrier [2]	170	mAdc
Plate Current, 65 W Carrier [2] Modulated 90%	200	mAdc
Screen Current, 65 W Carrier	-10	mAdc
Peak Screen Current, 65 W Carrier Modulated 90% [2]	30	mAdc
Driving Power, 65 W Carrier	4	W

AUDIO FREQUENCY POWER AMPLIFIER OR MODULATOR Class AB, Grid Driven (Sinusoidal Wave)

ABSOLUTE MAXIMUM RATINGS (Per Tube)

DC PLATE VOLTAGE	2400	VOLTS
DC SCREEN VOLTAGE	500	VOLTS
DC PLATE CURRENT	0.25	AMPERE
PLATE DISSIPATION	350	WATTS
SCREEN DISSIPATION	12	WATTS
GRID DISSIPATION	2	WATTS

1. Approximate; adjust for specified value of zero-signal plate current.
2. Approximate value.

TYPICAL OPERATION (Two Tubes)
Class AB_1

Plate Voltage	2000	Vdc
Screen Voltage	350	Vdc
Grid Voltage [1]	-66	Vdc
Zero Signal Plate Current	140	mAdc
Max. Signal Plate Current	500	mAdc
Zero Signal Screen Current [2]	-4	mAdc
Max. Signal Screen Current [2]	+4	mAdc
Peak Driving Power	0	W
Load Resistance (plate-to-plate)	8000	Ω
Power Output (Trans. Eff. = 95%) [2]	595	W

ABSOLUTE MAXIMUM RATINGS FOR OTHER TYPES OF OPERATION

RADIO FREQUENCY POWER AMPLIFIER OR OSCILLATOR Class C Telegraphy or FM

DC PLATE VOLTAGE	2400	VOLTS
DC SCREEN VOLTAGE	300	VOLTS
DC PLATE CURRENT	0.25	AMPERE
PLATE DISSIPATION	350	WATTS
SCREEN DISSIPATION	12	WATTS
GRID DISSIPATION	2	WATTS

PLATE MODULATED RADIO FREQUENCY POWER AMPLIFIER, GRID DRIVEN Class C Telephony (Carrier Conditions)

DC PLATE VOLTAGE	1800	VOLTS
DC SCREEN VOLTAGE	300	VOLTS
DC PLATE CURRENT	0.20	AMPERE
PLATE DISSIPATION	280	WATTS
SCREEN DISSIPATION	12	WATTS
GRID DISSIPATION	2	WATTS

NOTE: TYPICAL OPERATION data is obtained from direct measurement. Adjustment of the rf grid voltage to obtain the specified bias, screen, and plate voltages is assumed. If this procedure is followed, there will be little variation in output power when the tube is changed, even though there may be some variation in screen current, which is incidental and which will vary from tube to tube. These current variations cause no difficulty so long as the circuit maintains the correct screen grid voltage in the presence of the variations in current.

RANGE VALUES FOR EQUIPMENT DESIGN	Min.	Max.	
Heater: Current at 6.0 volts	2.3	2.9	A
Interelectrode Capacitances[1](grounded cathode):			
Cin	16.0	18.5	pF
Cout	4.2	5.2	pF
Cgp	---	0.06	pF

1. In a shielded fixture (see INTERELECTRODE CAPACITANCE)

APPLICATION

MECHANICAL

MOUNTING - The 8930 may be operated in any position. An EIMAC Air-System Socket, SK-600 series, or a socket having equivalent characteristics, is required. Sockets are available with or without built-in screen bypass capacitors and may be obtained with either grounded or ungrounded cathode terminals. The SK-646 Air Chimney is also available.

When environmental stress (such as shock and/or vibration) is anticipated, special attention should be given to securing the tube, to prevent relative motion between the tube and socket during stress, as such motion could effect both the electrical and mechanical performance.

COOLING - Sufficient cooling must be provided for the anode, base seals, and body seals to maintain operating temperatures below the rated maximum value. Air requirements to maintain seal temperatures at 225°C in 50°C ambient air are shown. These values apply when the EIMAC SK-600 or SK-610 socket is used with the SK-646 chimney, with air flowing in the base-to-anode direction.

Minimum Cooling Air Flow Requirements				
Plate Dissipation (watts)	Sea Level		10,000 Feet	
	Air Flow (cfm)	Approx. Press.drop, In. H_2O	Air Flow (cfm)	Approx. Press.drop, In. H_2O
250	4.5	0.35	6.5	0.51
300	5.8	0.56	8.5	0.82
350	7.0	0.85	10.2	1.24

Experience has shown that if reliable long-life operation is to be obtained, the cooling air flow must be maintained during standby periods when only the heater voltage is applied to the tube. The anode cooler should be inspected periodically and cleaned when necessary to remove any dirt, which may interfere with effective cooling.

The blower selected in any given application must be capable of supplying the desired air flow at a back pressure equal to the pressure drop shown, plus any drop encountered in ducts and filters, and the blower must be designed to deliver the air at the desired altitude.

It should be borne in mind that operating temperature is the sole criterion of cooling effectiveness. One method of measuring the surface temperature is by the use of a temperature-sensitive lacquer or paint. When these materials are used, thin applications must be used to avoid interference with the transfer of heat from the tube to the air stream, which would cause inaccurate indications.

SHOCK AND VIBRATION - The 8930 is recommended for applications where environmental stress is anticipated and reliable operation must be maintained under these circumstances. The tube structure is routinely tested at a vibration level of 10 G, over the frequency range of 28 to 2000 Hz, with full operating voltages applied, and also tested under 90 G long-duration (11 milliseconds) shock conditions, also with voltages

applied. When shock or vibration stressing is expected, it is extremely important that relative motion between socket and tube be prevented or restricted by clamping the tube into place.

ELECTRICAL

HEATER - The heater voltage for the 8930 is 6.0 volts and should be maintained within ±5% of rated value to minimize variations in performance and maximum life.

Above approximately 300 MHz some transit-time heating of the cathode will occur, and heater voltage should be lowered. For operation in the 300 to 400 MHz range, heater voltage should be 5.75 volts; in the 400 to 500 MHz range, 5.5 volts. Under no circumstances should heater voltage be allowed lower than 5.4 volts.

CATHODE OPERATION - The cathode is internally connected to the four even-numbered base pins, and all four corresponding socket terminals should be used to make connection to the external circuits. At radio frequencies it is important to keep cathode leads short and direct and to use conductors with large areas to minimize inductive reactance in series with the cathode leads.

It is recommended that rated heater voltage be applied for a minimum of 30 seconds before other operating voltages are applied. Where the circuit design requires the cathode and heater to be operated at different potentials, the rated maximum heater-to-cathode voltage is 150 volts, regardless of polarity.

STANDBY OPERATION - When equipment is designed for very low-duty operation, where standby periods of many hours or even days at one time are anticipated, it is good engineering practice to include circuitry for reduction of the heater voltage of an oxide-cathode tube during the standby periods. This will greatly minimize the release of sublimation products within the tube. A reduction in heater voltage of 10% from the nominal value is recommended during such long standby periods, with simultaneous switching to normal voltage when the equipment is switched from STANDBY to OPERATE. A reduction in heater voltage of more than 10% is possible if operation is not attempted for several seconds after switching from the STANDBY to the OPERATE mode.

CONTROL GRID - The grid is rated for a maximum dissipation of 2 watts. The maximum dc bias voltage rating is -250 volts.

SCREEN-GRID OPERATION - The maximum rated power dissipation for the screen grid of the 8930 is 12 watts, and the screen input power should be kept below that level. The product of the peak screen voltage and the indicated dc screen current approximates the screen input power except when the screen current indication is near zero or negative. In the usual tetrode amplifier, where no signal voltage appears between cathode and screen, the peak screen voltage is equal to the dc screen voltage.

If tuning of a linear amplifier circuit is to be done under single-tone conditions, extra care should be exercised to be sure the screen dissipation rating is not exceeded, as this is often the limiting factor during this type of operation.

Protection for the screen can be provided by an over-current relay and by interlocking the screen supply so the plate voltage must be applied before screen voltage can be applied.

The screen current may reverse under certain conditions and produce negative current indications on the screen milliameter. This is a normal characteristic of most tetrodes. The screen power supply should be designed with this characteristic in mind, so that the correct operating voltage will be maintained on the screen under all conditions. A current path from the screen to cathode must be provided by a bleeder resistor or shunt regulator connected between screen and cathode and arranged to pass approximately 15 milliamperes per connected screen. A series regulator circuit can be used only when an adequate bleeder resistor is provided.

PLATE OPERATION - The maximum rated plate-dissipation power for the 8930 is 350 watts. The maximum dissipation rating may be exceeded for brief periods during circuit adjustment without damage to the tube.

At frequencies up to approximately 30 Megahertz the top cap on the anode cooler may be used for a plate terminal. At higher frequencies a circular clamp or spring-finger collet encircling the outer surface of the anode cooler should be used.

MULTIPLE OPERATION - Tubes operating in parallel or push-pull must share the load equally. It is good engineering practice to provide for individual metering and individual adjustment of the bias or screen voltage to equalize inputs. Where overload protection is provided, it should be capable of protecting the surviving tube(s) in the event one tube should fail.

UHF OPERATION - The 8930 is useful in the UHF region. Operation at these frequencies should be conducted with heavy plate loading and the lowest driving power consistent with satisfactory performance. It is often preferable to operate at a sacrifice in efficiency to obtain increased tube life.

INTERELECTRODE CAPACITANCE - The actual internal interelectrode capacitance of a tube is influenced by many variables in most applications, such as stray capacitance to the chassis, capacitance added by the socket used, stray capacitance between tube terminals, and wiring effects. To control the actual capacitance values within the tube, as the key component involved, the industry and the Military Services use a standard test procedure as described in Electronic Industries Association Standard RS-191. This requires the use of specially constructed test fixtures which effectively shield all external tube leads from each other and eliminates any capacitance reading to "ground". The test is performed on a cold tube. Other factors being equal, controlling internal tube capacitance in this way normally assures good interchangeability of tubes over a period of time, even when the tube may be made by different manufacturers. The capacitance values shown in the manufacturer's technical data, or test specifications, normally are taken in accordance with Standard RS-191.

The equipment designer is therefore cautioned to make allowance for the actual capacitance values which will exist in any normal application. Measurements should be taken with the socket and mounting which represent approximate final layout if capacitance values are highly significant in the design.

HIGH VOLTAGE - The 8930 operates at voltages which can be deadly, and the equipment must be designed properly and operating precautions must be followed. Equipment must be designed so that no one can come in contact with high voltages. All equipment must include safety enclosures for high-voltage circuits and terminals, with interlock switches to open the primary circuits of the power supplies and to discharge high-voltage condensers whenever access doors are opened. Interlock switches must not be bypassed or "cheated" to allow operation with access doors open. Always remember that HIGH VOLTAGE CAN KILL.

RADIO FREQUENCY RADIATION - Avoid exposure to strong rf fields even at relatively low frequency. Absorption of rf energy by human tissue is dependent on frequency. Under 30 MHz, most of the energy will pass completely through the human body with little attenuation or heating effect. Public health agencies are concerned with the hazard, however, even at these frequencies, and it is worth noting that some commercial dielectric heating units actually operate at frequencies as low as the 13 and 27 MHz bands.

SPECIAL APPLICATIONS - If it is desired to operate this tube under conditions widely different from those given here, write to Power Grid Tube Division, EIMAC Division of Varian, 301 Industrial Way, San Carlos, CA 94070, for information and recommendations.

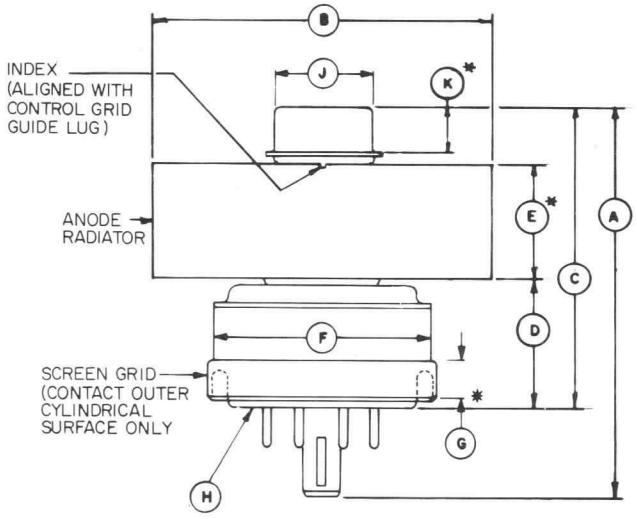

DIM	DIMENSIONAL DATA					
	INCHES			MILLIMETERS		
	MIN.	MAX.	REF.	MIN.	MAX.	REF.
A	2.324	2.464	- -	59.03	62.58	- -
B	2.050	2.080	- -	52.07	52.83	- -
C	1.810	1.910	- -	45.97	48.51	- -
D	0.750	0.810	- -	19.05	20.57	- -
E	0.710	0.790	- -	18.03	20.07	- -
F	- -	1.406	- -	- -	35.71	- -
G	0.187	- -	- -	4.75	- -	- -
H	BASE: B8-236 (JEDEC DESIGNATION)					
J	0.559	0.573	- -	14.20	14.55	- -
K	0.240	- -	- -	6.10	- -	- -

(*) CONTACT SURFACE

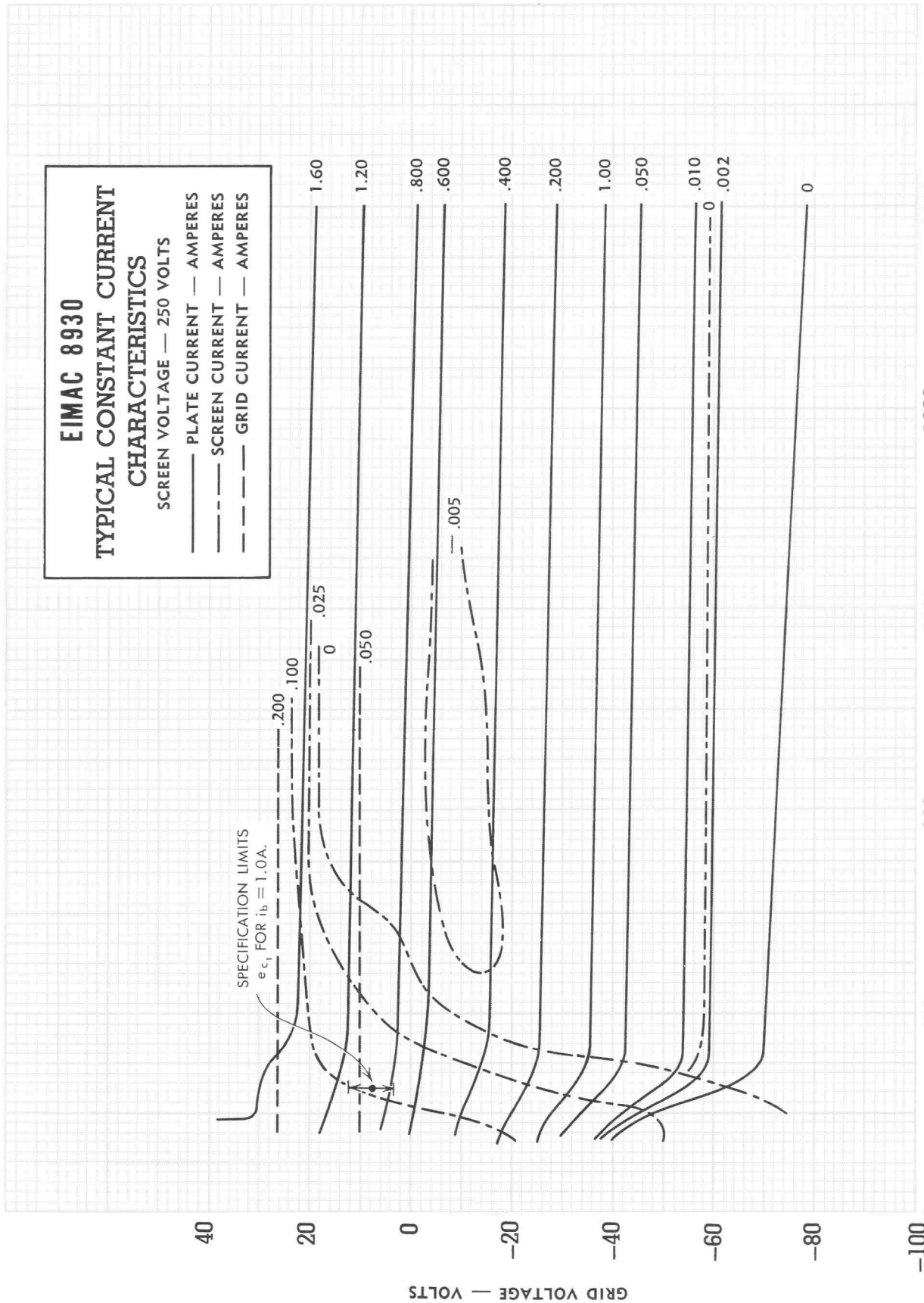
EIMAC 8930
TYPICAL CONSTANT CURRENT CHARACTERISTICS
SCREEN VOLTAGE — 250 VOLTS
PLATE CURRENT — AMPERES
SCREEN CURRENT — AMPERES
GRID CURRENT — AMPERES
1.60
1.20
.800
.600
.400
.200
1.00
.050
.010
0
.002
0
.005
.200
.100
.050
0
.025
SPECIFICATION LIMITS
e_{c_1} FOR i_b = 1.0A.
GRID VOLTAGE — VOLTS
40
20
0
-20
-40
-60
-80
-100
0
400
800
1200
1600
2000
PLATE VOLTAGE — VOLTS

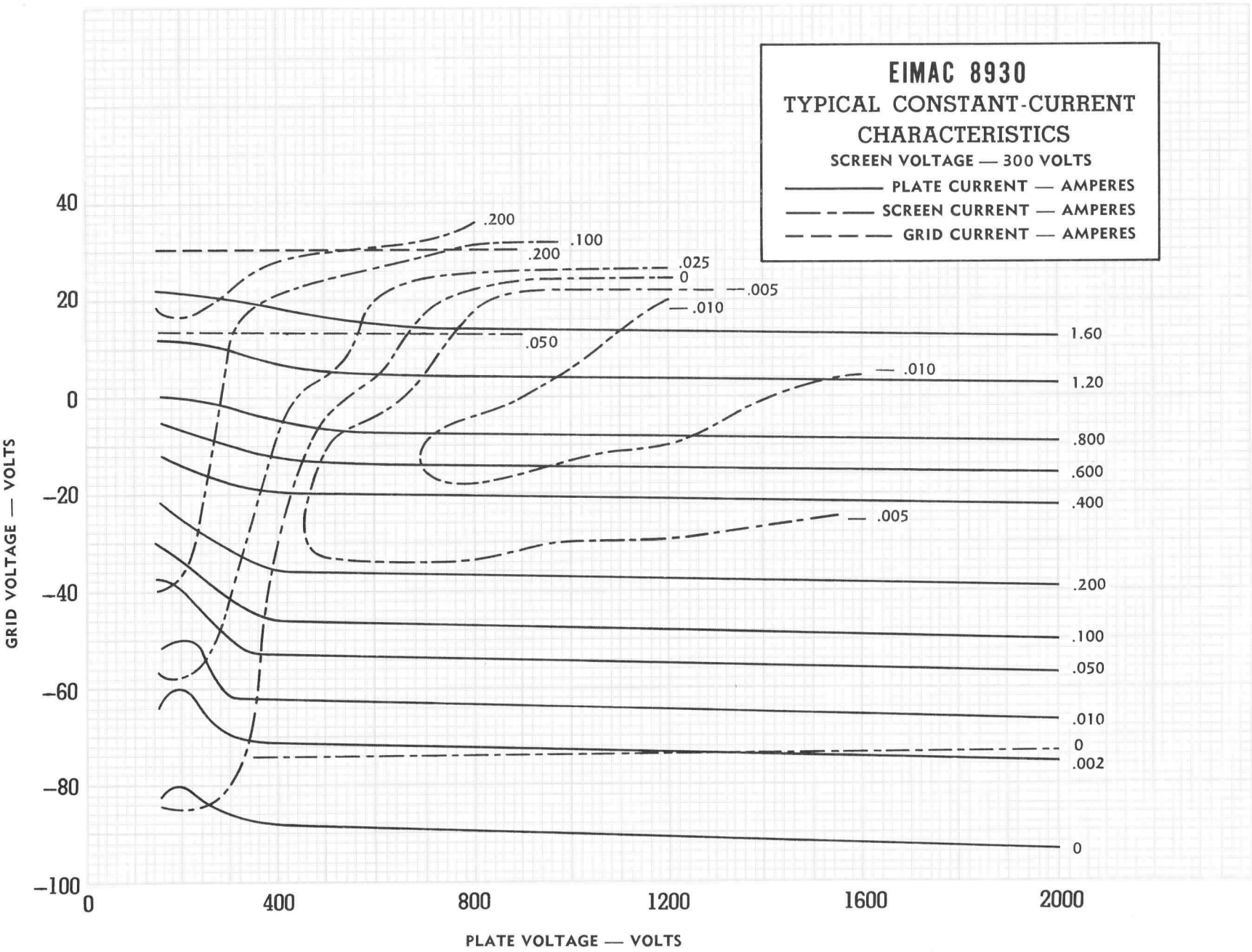
EIMAC 8930
TYPICAL CONSTANT-CURRENT CHARACTERISTICS
SCREEN VOLTAGE — 300 VOLTS
PLATE CURRENT — AMPERES
SCREEN CURRENT — AMPERES
GRID CURRENT — AMPERES
GRID VOLTAGE — VOLTS
PLATE VOLTAGE — VOLTS
40
20
0
-20
-40
-60
-80
-100
0
400
800
1200
1600
2000
.200
.100
.200
.025
0
.005
.010
.050
.010
.005
1.60
1.20
.800
.600
.400
.200
.100
.050
.010
0
.002
0

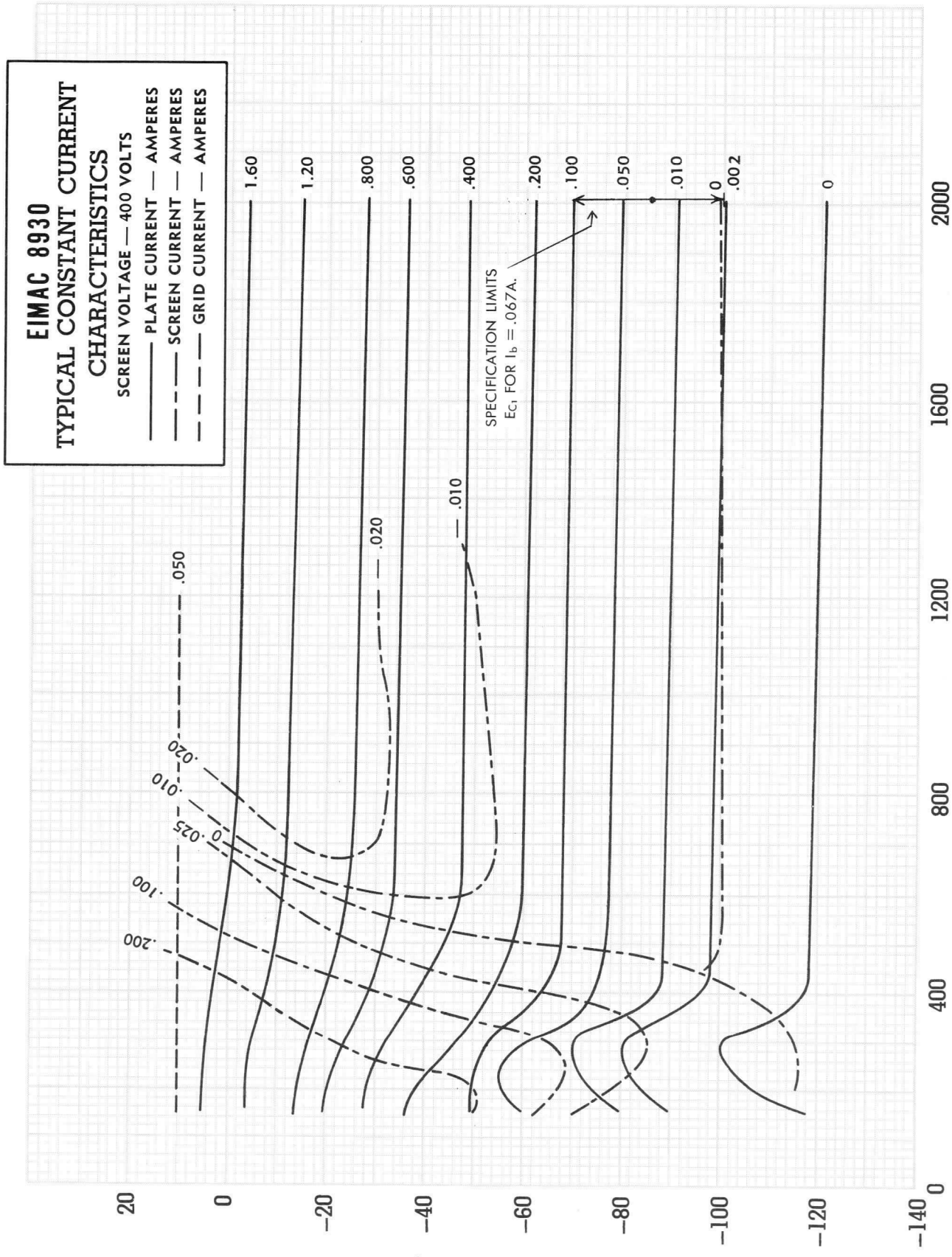
EIMAC 8930
TYPICAL CONSTANT CURRENT CHARACTERISTICS
SCREEN VOLTAGE — 400 VOLTS
PLATE CURRENT — AMPERES
SCREEN CURRENT — AMPERES
GRID CURRENT — AMPERES
1.60
1.20
.800
.600
.400
.200
.100
.050
.010
0
.002
0
SPECIFICATION LIMITS
Ec1 FOR Ib = .067A.
.050
.020
.010
0
.025
.100
.200
20
0
-20
-40
-60
-80
-100
-120
-140
0
400
800
1200
1600
2000
GRID VOLTAGE — VOLTS
PLATE VOLTAGE — VOLTS

8954

TECHNICAL DATA

VOLTAGE REGULATOR
OR SWITCH TUBE
POWER TETRODE

The EIMAC 8954 is designed for switch-tube (or modulator) and voltage regulator service, with anode current up to 8 amperes with short pulses (to 2 microseconds) and derated values of anode current at longer pulse lengths.

The tube has an oxide cathode and all electrical connections are made to solder tabs which are integral to the tube elements.

The 8954 is supplied bare-anode and is intended to be cooled by heat sink, or liquid immersion, or a combination, and is nominally rated for 600 watts of anode dissipation.

The tube is rated to operate at 5.5 kVdc in air, at sea level, or 7.5 kVdc in an insulating oil environment. The tube is designed to withstand brief fault conditions which may raise the instantaneous anode voltage to 12 kv.



GENERAL CHARACTERISTICS[1]

ELECTRICAL

Cathode: Oxide Coated, Unipotential	
Heater	6.0 V
Current	5.6 A
Cathode Heating Time (Minimum)	2.0 Min.
Direct Interelectrode Capacitance (Grounded Cathode)[2]	
Cin	50 pF
Cout	6.2 pF
Cgp	0.14 pF

1. Characteristics and operating values are based upon performance tests. These figures may change without notice as the result of additional data or product refinement. EIMAC Division of Varian should be consulted before using this information for final equipment design.

2. Capacitance values are for a cold tube as measured in a special shielded fixture in accordance with Electronic Industries Association Standard RS-191.

MECHANICAL

Base	Special, With Solder-Tab Terminals
Operating Position	Any
Maximum Operating Temperatures: Anode Core & Ceramic/Metal Seals	250°C
Cooling	Heat Sink/Liquid Immersion

(Effective 6-1-74) © 1974 by Varian Printed in U.S.A.

Maximum Overall Dimensions:

Length	2.52 In; 64.01 mm
Diameter	1.77 In; 44.96 mm
Net Weight	6.0 Oz; 170 gms

RANGE VALUES FOR EQUIPMENT DESIGN

	Min.	Max.	
Heater: Current at 6.0 Volts	5.0	6.3	A
Cathode Warmup Time	120	---	Sec
Interelectrode Capacitances (grounded cathode circuit) [1]			
Cin	40.0	60.0	pF
Cout	5.2	7.2	pF
Cgp	----	0.15	pF

1. Capacitance values are for a cold tube as measured in a special shielded fixture in accordance with Electronic Industries Association Standard RS-191.

PULSE MODULATOR OR SWITCH TUBE SERVICE

ABSOLUTE MAXIMUM RATINGS:

	In Air	In Oil	
HEATER VOLTAGE	6.0±5%	6.0±5%	VOLTS
DC PLATE VOLTAGE	5.5	7.5	KILOVOLTS
PEAK POSITIVE PLATE VOLTAGE	12	12	KILOVOLTS
DC SCREEN VOLTAGE	800	800	VOLTS
DC GRID VOLTAGE	-200	-200	VOLTS

	In Air	In Oil	
PEAK PLATE CURRENT [1]	8.0	8.0	AMPERES
PULSE LENGTH AND DUTY [1]	See Derating Chart		
PLATE DISSIPATION [2]	600	600	WATTS
SCREEN DISSIPATION	15	15	WATTS
GRID DISSIPATION	4	4	WATTS

1. Pulse length, peak current, and duty are inter-related. See DERATING CHART.
2. 600 W nominal; capability is dependent on cooling technique and design.

APPLICATION

MECHANICAL

MOUNTING - The 8954 may be operated in any position, with mounting normally controlled by the anode heat-sink configuration and location. No socket is required since all electrical connections are made to solder tabs which are integral to the tube elements.

COOLING - The tube is designed for use in a conduction-cooled or liquid-immersion-cooled system, where tube anode heat is transferred to a heat sink or the liquid dielectric coolant. Anode dissipation is normally limited only by the allowable temperature rise for the anode ceramic/metal seal and the anode core. In all cases, however, the cooling system must maintain the anode and ceramic/metal seal temperatures below 250°C, and in cases where long life and consistent performance are factors, cooling in excess of minimum requirements is normally beneficial.

In an air mounted heat-sink system, intimacy of contact between the anode surface and the sink is a factor which will effect heat transfer, and the designer is encouraged to use temperature-sensitive paint or other temperature-sensing devices in connection with any equipment design before the layout is finalized. In such a system, some air circulation around the base of the tube may also be required to maintain these ceramic/metal seals and the connection points at the solder tabs within the allowable temperature range.

ELECTRICAL

HEATER/CATHODE OPERATION - The rated heater voltage for the 8954 is 6.0 volts, as measured at the base of the tube, and variations should be restricted to plus or minus 0.3 volt for long life and consistent performance. One side of the heater is internally connected to the cathode. Heater voltage should be applied for a minimum of two minutes before high voltage is applied to the other tube elements, to allow the cathode to reach operating temperature.

ANODE CURRENT - For pulse service, either as a switch tube or modulator, or for voltage regulator applications, an anode current (during the

pulse) of 8 amperes is available with short pulses (up to 2 μs). Peak current capability, pulse length, and duty factor are inter-related and for pulse durations longer than 2 μs the DERATING CHART should be consulted. For very long pulses (1 millisecond or longer) or pure dc service, the anode current should be limited to 0.6 ampere.

HIGH VOLTAGE - For air operation, anode voltage should not exceed 5.5 kVdc at sea level. This value allows some safety factor, but at higher altitudes a reduction in voltage may be required to preclude the possibility of external tube flash-over, and the external insulating surfaces of the tube must be kept clean and free of dirt or any accumulation of grime to minimize the possibility of external breakdown. When the tube is immersed in a liquid dielectric coolant with suitable insulating properties, the allowable anode voltage is 7.5 kVdc at any altitude.

The operating voltages for this tube must be considered as potentially lethal and the equipment must be designed properly and operating precautions must be followed. The equipment must include safety enclosures for the high-voltage circuits and terminals, with interlock switches to open the primary circuits of the power supplies and to discharge high voltage condensers whenever access doors or covers are opened. Interlock switches must not be bypassed or "cheated" to allow operation with access doors open. Always remember that HIGH VOLTAGE CAN KILL .

PLATE SURGE-LIMITING IMPEDANCE - Beam-power tetrodes, such as the 8954, are built with closely spaced electrodes. This results in high voltage gradients even at normal operating voltages. A high-energy arcover between electrodes may be destructive, and therefore a series impedance in the anode lead is recommended, or the anode supply should be designed so that it has sufficient self impedance, to limit the short-circuit current to 10 times the maximum pulse-current rating. Normal overload protection techniques should also be used, not only in the anode circuit but also in the screen grid circuit, to prevent tube damage in the event of a fault condition.

GRID OPERATION - The maximum rated dc grid bias voltage is -200 Vdc and the maximum grid dissipation rating is 4 watts. In normal applications the grid dissipation will not approach the maximum rating.

SCREEN OPERATION - The maximum rated power dissipation for the screen grid is 15 watts, and the average screen input power should be kept below this level.

It is a normal characteristic of most tetrodes for the screen current to instantaneously reverse with some combinations of element voltages and currents. The screen power supply should be designed with this in mind so that the correct operating voltage will be maintained on the screen under all conditions. A current path from screen to cathode must be provided by a bleeder resistor or shunt regulator connected between screen and cathode. A series regulator circuit can be used only when an adequate bleeder resistor is provided.

Over-current protection should be provided for the screen and it may be desirable to interlock the screen power supply so that plate voltage must be on before screen voltage can be applied.

PLATE OPERATION - The anode of the 8954 is nominally rated for 600 watts of dissipation capability. This capability is dependent on a properly designed heat sink, or the use of liquid-immersion cooling with a dielectric fluid of suitable characteristics, or a combination of both. Average anode dissipation may be calculated as the product of pulse anode current, pulse tube-voltage drop during conduction, and the duty factor. Actual dissipation may often exceed the calculated value if pulse rise and fall times are appreciable compared to pulse duration. This occurs because long rise and fall times slow down the plate voltage swing and allow plate current to flow for longer periods in the high tube-voltage-drop region.

SPECIAL APPLICATION - If it is desired to operate this tube under conditions widely different from those listed here, write to: Power Grid Tube Division, EIMAC Division of Varian, 301 Industrial Way, San Carlos, California 94070, for information and recommendations.

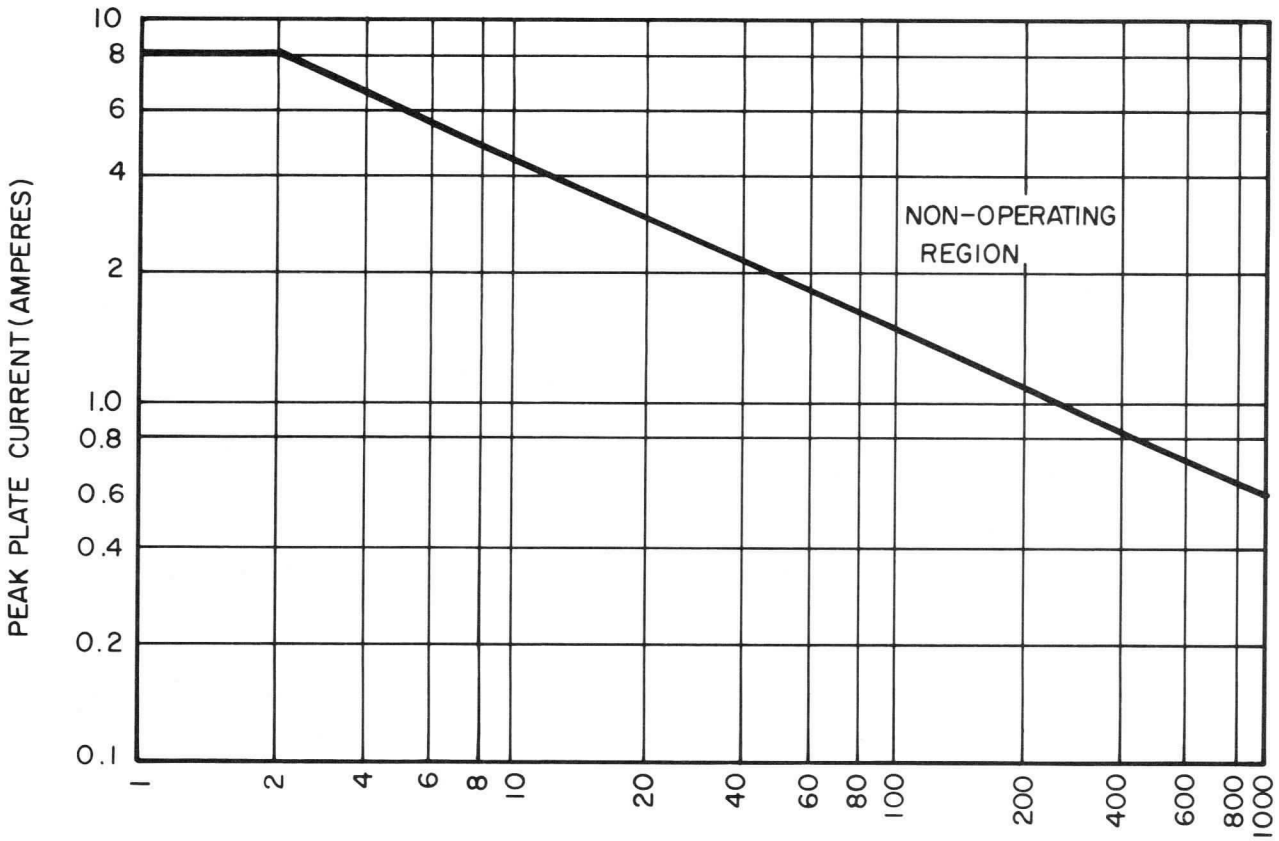

PEAK (PULSE) PLATE CURRENT CAPABILITY IS DEPENDENT ON PULSE DURATION (tp) AND DUTY FACTOR (Du). MAXIMUM PEAK PLATE CURRENT FOR A GIVEN PULSE DURATION IS SHOWN. MAXIMUM DUTY MAY THEN BE DERIVED FROM THE RELATIONSHIP:

$$0.6 = ib\sqrt{Du}$$

PULSE DE-RATING DATA, TYPE 8954

DIM	DIMENSIONAL DATA					
	INCHES			MILLIMETERS		
	MIN.	MAX.	REF.	MIN.	MAX.	REF.
A	- -	- -	2.500	- -	- -	63.50
B	1.298	1.302	- -	32.96	33.07	- -
C	0.559	0.573	- -	14.19	14.55	- -
D	- -	0.485	- -	- -	12.31	- -
E	- -	2.120	- -	- -	53.84	- -
F	- -	- -	0.887	- -	- -	22.52
G	0.355	0.395	- -	9.01	10.03	- -
H	0.230	0.270	- -	5.84	6.85	- -
J	1.305	1.325	- -	33.14	33.65	- -
K	1.540	1.580	- -	39.11	40.13	- -
L	1.720	1.770	- -	43.68	44.95	- -
M	10°	20°	- -	10°	20°	- -
N	40°	50°	- -	40°	50°	- -
P	0.700	- -	- -	17.78	- -	- -
R	0.030R	0.050R	- -	0.76R	1.27R	- -
S	0.090	0.110	- -	2.28	2.79	- -
T	- -	1.130	- -	- -	28.70	- -
U	0.230	0.270	- -	5.84	6.85	- -

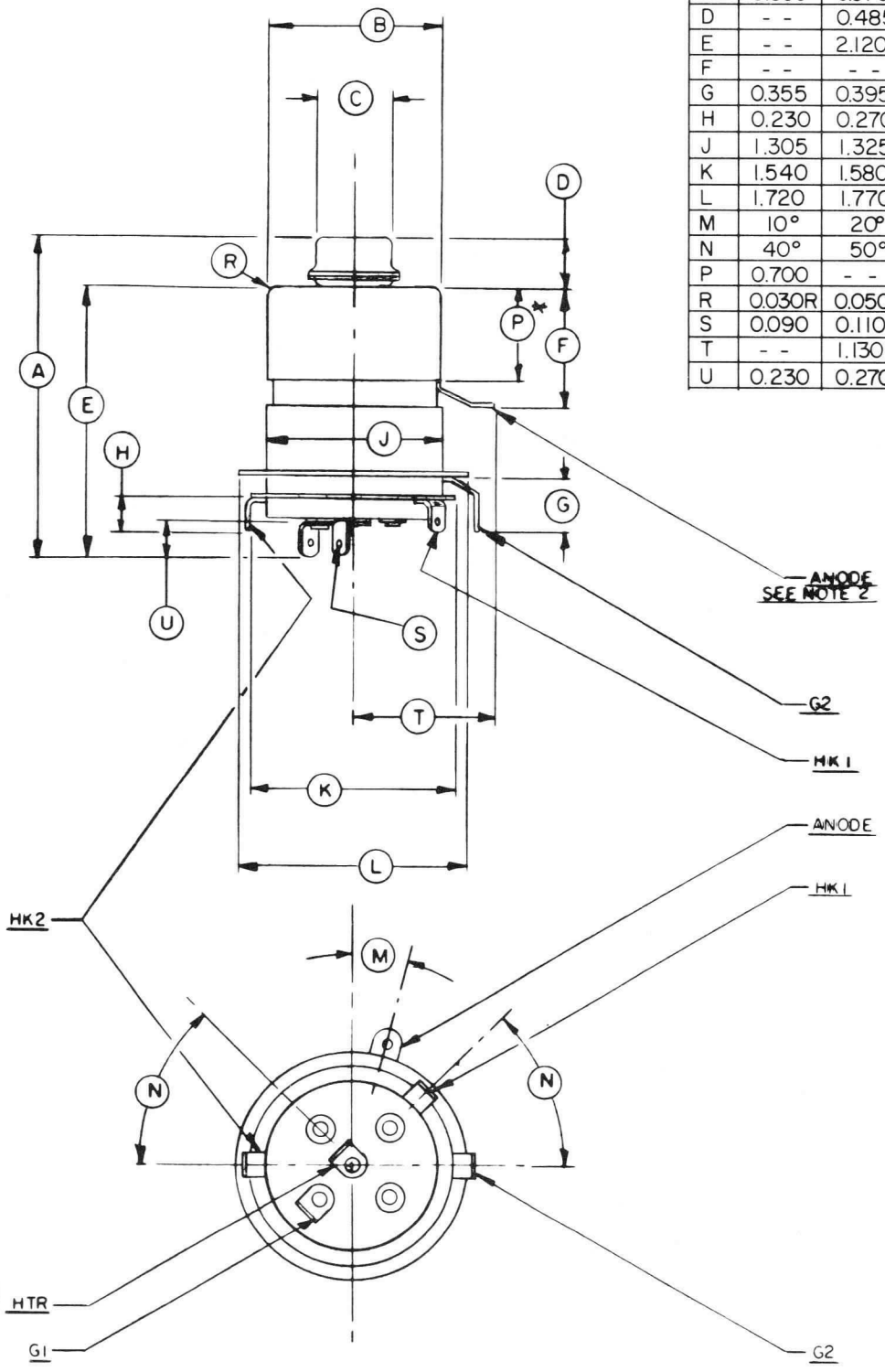

NOTES:

1. REF DIMENSIONS ARE FOR INFO ONLY & ARE NOT REQUIRED FOR INSPECTION PURPOSES.
2. ANODE TAB IS ROTATED 75°. SEE BOTTOM VIEW FOR TAB ORIENTATION.
3. (*) CONTACT SURFACE.

TYPICAL CONSTANT CURRENT CHARACTERISTICS

GROUNDED CATHODE E_f = 6.0V SCREEN VOLTAGE = 600V

——— PLATE CURRENT – AMPERES -·-·- SCREEN CURRENT – AMPERES – – – – GRID CURRENT – AMPERES

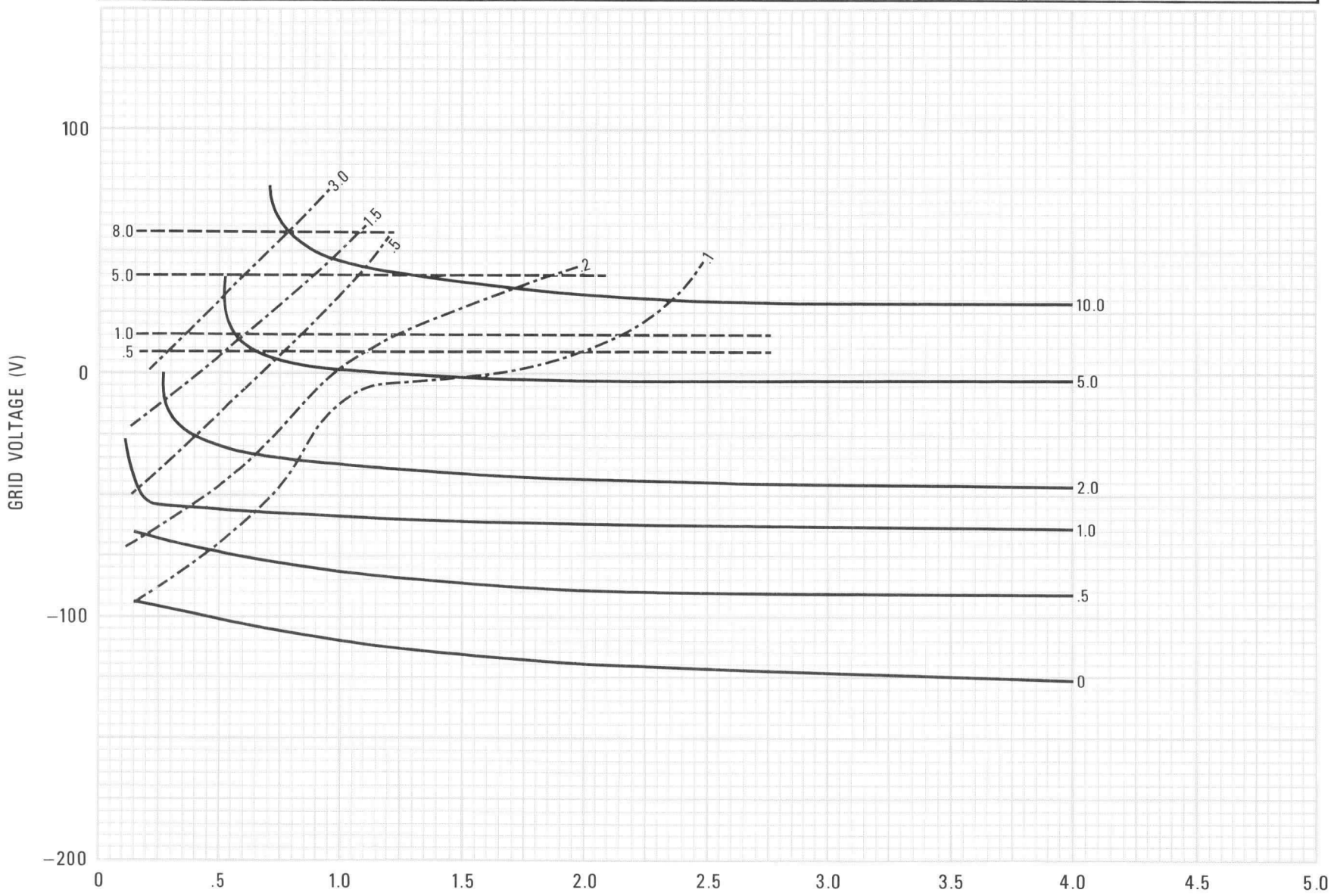

CURVE #4516

TYPICAL CONSTANT CURRENT CHARACTERISTICS

GROUNDED CATHODE E_f = 6.0V SCREEN VOLTAGE = 400V

PLATE CURRENT – AMPERES — SCREEN CURRENT – AMPERES — GRID CURRENT – AMPERES

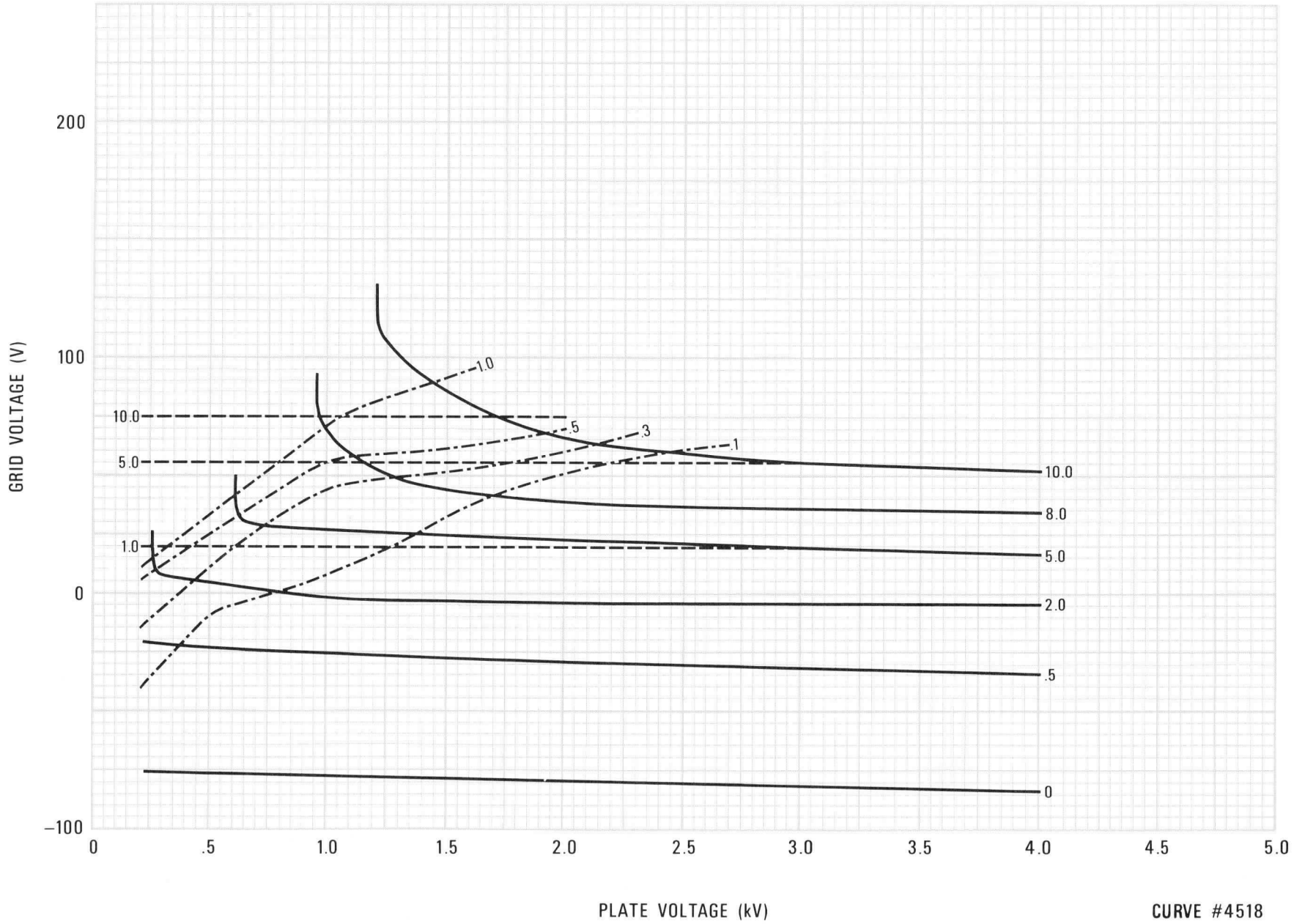

CURVE #4518

8954

TYPICAL CONSTANT CURRENT CHARACTERISTICS

GROUNDED CATHODE E_f = 6.0V SCREEN VOLTAGE = 800V

PLATE CURRENT – AMPERES — SCREEN CURRENT – AMPERES - - - GRID CURRENT – AMPERES

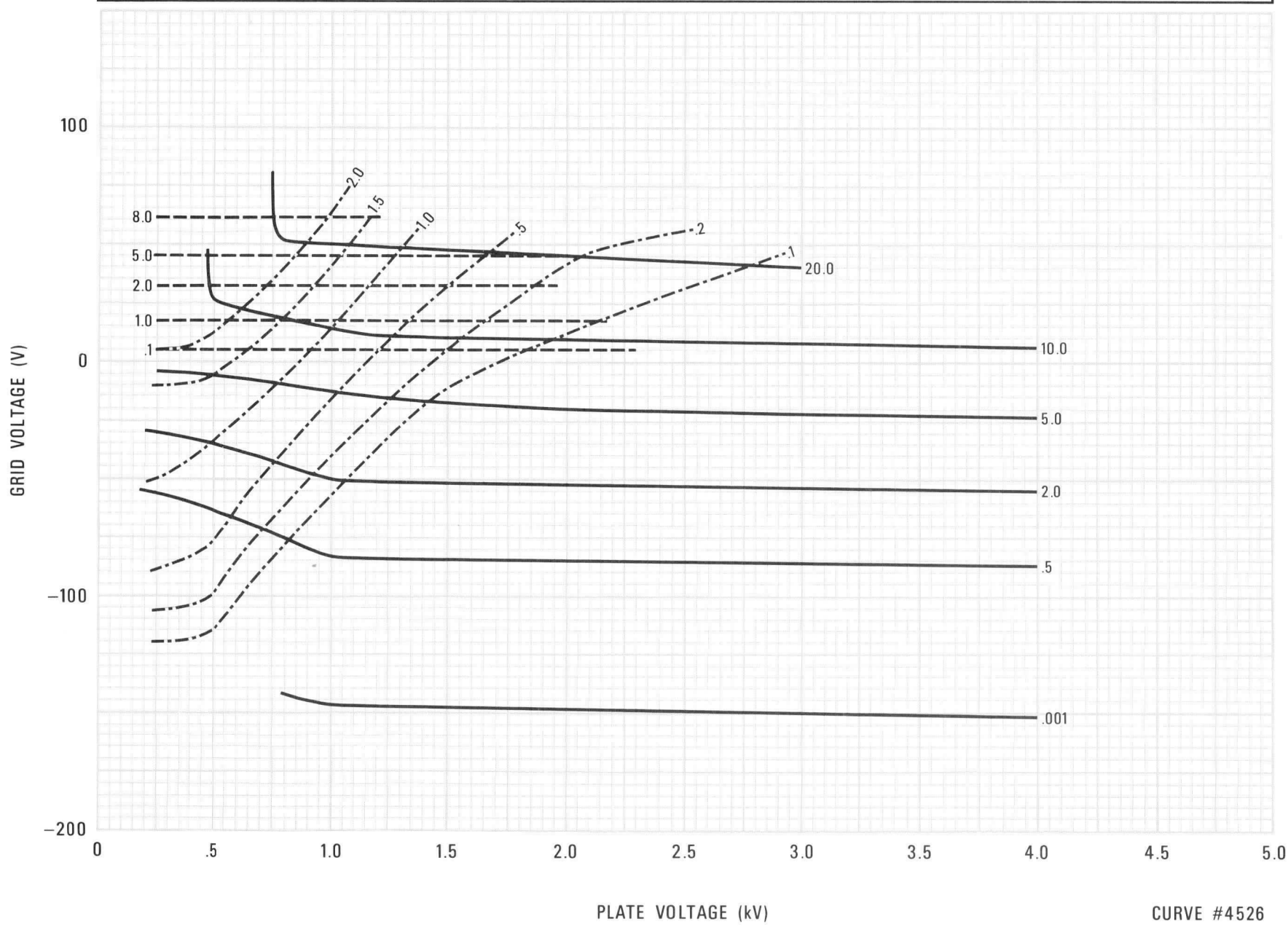

CURVE #4526

8959

HIGH-POWER
WATER-COOLED
TETRODE

TECHNICAL DATA



The EIMAC 8959 is a ceramic/metal high power tetrode for applications requiring tube outputs from 100 to 250 kilowatts. It is ideal for use as a Class C rf amplifier or oscillator, a Class AB rf linear amplifier, or a Class AB push-pull audio amplifier or modulator, as well as a plate and screen modulated Class C rf amplifier.

In pulse modulator service it can deliver a peak output of 4 megawatts.

The tube is characterized by low input and feedback capacitances and low internal lead inductances. Its rugged mesh thoriated tungsten filament provides ample emission for long operating life.

The water-cooled anode dissipates 100 kilowatts when used with an EIMAC SK-2100 series water jacket.

GENERAL CHARACTERISTICS[1]

ELECTRICAL

Filament: Thoriated Tungsten Mesh	
Voltage	15.5 ± 0.75 V
Current, @ 15.5 V	215 A
Direct Interelectrode Capacitances (Grounded Cathode)	
Cin	370 pF
Cout	60 pF
Cgp	1.0 pF
Direct Interelectrode Capacitances (Grounded Grid)	
Cin	175 pF
Cout	60 pF
Cpk	0.35 pF
Frequency of Maximum Rating, CW	108 MHz

1. Characteristics and operating values are based on performance tests. These figures may change without notice as the result of additional data or product refinement. EIMAC Division of Varian should be consulted before using this information for final equipment design.

MECHANICAL

Maximum Overall Dimensions	See Outline Drawing
Net Weight (approximate): Tube Only	38.5 lb; 17.5 kg
Tube and Water Jacket SK-2110	47.0 lb; 21.4 kg
Operating Position	Vertical, base up or down
Anode Cooling (EIMAC SK-2100 series water jacket required, to be ordered separately)	Water
Base Cooling	Forced Air

(Effective 11-1-74) © 1974 Varian

Printed in U.S.A.

Maximum Operating Temperature: Ceramic/Metal Seals and Envelope . . . . . 250°C
Recommended Air-System Socket . . . . . EIMAC SK-2000 Series
Base . . . . . Special Coaxial

RADIO FREQUENCY LINEAR AMPLIFIER

Class AB, Grid Driven

ABSOLUTE MAXIMUM RATINGS

DC PLATE VOLTAGE	20 KILOVOLTS
DC SCREEN VOLTAGE	2.5 KILOVOLTS
DC PLATE CURRENT	16 AMPERES
PLATE DISSIPATION	100 KILOWATTS
SCREEN DISSIPATION	1750 WATTS
GRID DISSIPATION	500 WATTS

1. Adjust for specified zero-signal plate current.
2. Approximate value.

TYPICAL OPERATION
Class AB_1, Grid Driven
Peak Envelope or Modulation Crest Conditions

Plate Voltage	18 kVdc
Screen Voltage	1.5 kVdc
Grid Voltage [1]	-320 Vdc
Zero-Signal Plate Current	4.0 Adc
Single-Tone Plate Current	13.5 Adc
Peak rf Grid Voltage [2]	300 v
Plate Dissipation [2]	75 kW
Plate Output Power [2]	168 kW
Resonant Load Impedance	697 Ω

RADIO FREQUENCY POWER AMPLIFIER OR OSCILLATOR - Class C Telegraphy or FM

(Key-down Conditions)

ABSOLUTE MAXIMUM RATINGS

DC PLATE VOLTAGE	20 KILOVOLTS
DC SCREEN VOLTAGE	2.5 KILOVOLTS
DC PLATE CURRENT	16 AMPERES
PLATE DISSIPATION	100 KILOWATTS
SCREEN DISSIPATION	1750 WATTS
GRID DISSIPATION	500 WATTS

1. Approximate value

TYPICAL OPERATION

Plate Voltage	20 kVdc
Screen Voltage	1.5 kVdc
Grid Voltage	-800 Vdc
Plate Current	15.2 Adc
Screen Current [1]	570 mAdc
Grid Current [1]	125 mAdc
Peak rf Grid Voltage [1]	900 v
Driving Power (calculated)	120 W
Plate Dissipation [1]	54 kW
Plate Output Power [1]	220 kW
Resonant Load Impedance	575 Ω

PLATE MODULATED RADIO FREQUENCY AMPLIFIER, GRID DRIVEN

Class C Telephony - Carrier Conditions

ABSOLUTE MAXIMUM RATINGS

DC PLATE VOLTAGE	17.5 KILOVOLTS
DC SCREEN VOLTAGE	2.0 KILOVOLTS
DC PLATE CURRENT	16 AMPERES
PLATE DISSIPATION [2]	67 KILOWATTS
SCREEN DISSIPATION	1750 WATTS
GRID DISSIPATION	500 WATTS

1. Approximate value.
2. Corresponds to 100 kW at 100% sine-wave modulation.

TYPICAL OPERATION

Plate Voltage	15 kVdc
Screen Voltage	750 Vdc
Grid Voltage	-600 Vdc
Plate Current	11.7 Adc
Screen Current [1]	875 mAdc
Grid Current [1]	660 mAdc
Peak Audio Screen Voltage for 100% Modulation	750 v
Peak rf Grid Voltage [1]	800 v
Driving Power (calculated)	530 W
Plate Dissipation [1]	35 kW
Plate Output Power [1]	140 kW
Resonant Load Impedance	620 Ω

AUDIO FREQUENCY POWER AMPLIFIER OR MODULATOR, GRID DRIVEN

Class AB_1, Sinusoidal Wave

ABSOLUTE MAXIMUM RATINGS

DC PLATE VOLTAGE	20 KILOVOLTS
DC SCREEN VOLTAGE	2.5 KILOVOLTS
DC PLATE CURRENT	16 AMPERES
PLATE DISSIPATION	100 KILOWATTS
SCREEN DISSIPATION	1750 WATTS
GRID DISSIPATION	500 WATTS

1. Adjust for specified zero-signal plate current.
2. Approximate value.

TYPICAL OPERATION (2 Tubes)

Plate Voltage	15 kVdc
Screen Voltage	1.5 kVdc
Grid Voltage [1]	-345 Vdc
Zero-Signal Plate Current	6.0 Adc
Max. Signal Plate Current	19.5 Adc
Max. Signal Screen Current [2]	830 mAdc
Peak Audio Grid Voltage/Tube [2]	275 v
Max. Signal Plate Diss./Tube [2]	46 kW
Plate Output Power [2]	200 kW
Load Resistance, plate/plate	1825 Ω

PULSE MODULATOR SERVICE

ABSOLUTE MAXIMUM RATINGS

DC PLATE VOLTAGE	40	KILOVOLTS
DC SCREEN VOLTAGE	2.5	KILOVOLTS
DC GRID VOLTAGE	-2.0	KILOVOLTS
PEAK CATHODE CURRENT	200	AMPERES
PLATE DISSIPATION [1] (DURING PULSE)	1.0	MEGAWATT
PLATE DISSIPATION (AVERAGE)	100	KILOWATTS
SCREEN DISSIPATION (AVERAGE)	1750	WATTS
GRID DISSIPATION (AVERAGE)	500	WATTS
PULSE LENGTH	10	MILLISECONDS

TYPICAL OPERATION

Plate Voltage	40	kVdc
Plate Current, pulse	110	a
Screen Voltage	2.5	kVdc
Screen Current, pulse [2]	12	a
Grid Voltage	-1.2	kVdc
Grid Current, pulse [2]	400	ma
Positive Grid Voltage, pulse [2]	110	v
Duty Factor	6	%
Output Voltage, pulse [2]	37	kv
Input Power, pulse	4.4	Mw
Output Power, pulse [2]	4.1	Mw
Cathode Current, pulse [2]	122	a

1. Power dissipated during rise and fall time neglected.
2. Approximate value.

TYPICAL OPERATION values are obtained by calculations from published characteristic curves. To obtain the specified plate current at the specified bias, screen, and plate voltages, adjustment of the rf grid voltage is assumed. If this procedure is followed, there will be little variation in output power when the tube is replaced, even though there may be some variation in grid and screen currents. The grid and screen currents which occur when the desired plate current is obtained are incidental and vary from tube to tube. These current variations cause no performance degradation providing the circuit maintains the correct voltage in the presence of the current variations. If grid bias is obtained principally by means of a grid resistor, the resistor must be adjustable to produce the required bias voltage when the correct rf grid voltage is applied.

RANGE VALUES FOR EQUIPMENT DESIGN

	Min.	Max.	
Filament Current, at 15.5 volts	200	230	A
Cutoff Bias, at E_b = 25 kVdc, E_{c2} = 1500 Vdc, I_b = 10 mAdc	---	-625	Vdc
Interelectrode Capacitances (measurement without shielded fixture)			
Grounded Cathode Connection:			
Cin	350	390	pF
Cout	55	65	pF
Cgp	---	1.2	pF
Grounded Grid Connection:			
Cin	160	190	pF
Cout	55	65	pF
Cpk	---	0.5	pF

APPLICATION

MOUNTING - The 8959 must be mounted with its major axis vertical. The tube base may be either up or down, at the discretion of the circuit designer.

SOCKETING - An EIMAC SK-2000 Series Socket, or equivalent, is recommended.

ANODE WATER JACKET - An EIMAC SK-2100 or SK-2110 Water Jacket must be used to provide anode cooling. To achieve an anode dissipation of 100 kilowatts, the water jacket must be installed over the tube anode and adequate water flow provided.

COOLING - Anode cooling is accomplished by circulating water through an SK-2100 series Water Jacket. Insufficient water flow will cause the anode temperature to rise to levels which will shorten tube life. Also, if the coolant lines become clogged, enough steam pressure may be generated to rupture the water jacket and destroy the tube. The following table lists the minimum cooling water requirements at various dissipation levels with a maximum inlet water temperature of 50°C.

Anode Dissipation (kW)	Minimum Water Flow (gpm)	Approximate Pressure Drop (psi)
20	5.0	2.8
40	9.0	5.8
60	12.5	9.3
80	16.5	14.2
100	20.0	19.2

Note: Since the filament dissipates about 3500 watts, and the grid-plus-screen can, under some conditions, dissipate another 2250 watts, the table allows for an additional dissipation of 5750 watts.

Outlet water temperature must never exceed 70°C and inlet water pressure should be limited to 80 psi. Direction of water flow is optional.

Tube life can be seriously affected by the condition of the cooling water. If it becomes ionized, copper-oxide deposits form on the inside of the water jacket causing localized anode heating and eventual tube failure.

To insure minimum electrolysis, and power loss, the water resistance at 20°C should be greater than 50,000 ohms/cm^3, preferably 250,000 ohms/cm^3 or higher. The relative water resistance can be continuously monitored by measuring the leakage current through a short section of the insulating hose, using metal nipples or fittings as electrodes.

Auxiliary forced-air cooling, of the tube base is required to maintain filament- and grid-seal temperatures below 250°C. An air flow of approximately 120 ft^3/min at 50°C maximum and sea level should be directed, through an EIMAC SK-2000 Series Socket or equivalent, toward the filament- and grid-seal areas.

Both anode and base cooling should be applied before or simultaneously with the application of electrode voltages, including the filament. Base cooling should continue for about three minutes after the removal of electrode voltages to allow the tube to cool properly.

FILAMENT OPERATION - At rated filament voltage, the peak emission of the 8959 is many times greater than the amount needed for communication service. Reducing the filament voltage decreases the filament temperature. A small decrease in filament temperature substantially increases filament life. The correct value of filament-voltage should be determined for the particular applications. First, gradually reduce the filament voltage to the point where there is a noticeable reduction in plate current or power output, or an increase in distortion. Then increase the voltage several tenths of a volt above the value where performance degradation occurred; this is the proper operating voltage. Filament voltage should always be measured at the tube base or socket using an rms responding meter. The above procedure should be performed periodically to assure optimum tube life.

GRID OPERATION - The maximum control-grid dissipation is 500 watts, determined approximately by the product of grid current and peak positive grid voltage.

Under some operating conditions, the control grid may exhibit a negative-resistance characteristic. This may occur when, with high screen-grid voltage, increasing the drive voltage decreases the grid current. As a result, large values of instantaneous negative grid current can be produced, causing the amplifier to become regenerative. Because this may happen, the driver stage must be designed to tolerate this condition. One technique is to swamp the driver so that the change in load, due to secondary grid emission, is a small percentage of the total driver load.

SCREEN OPERATION - The maximum screen-grid dissipation is 1750 watts. With no ac applied to the screen, dissipation is simply the product of dc screen voltage and dc screen current. With screen modulation, dissipation is dependent on rms screen voltage and rms screen current.

Plate voltage, plate loading, or bias voltage must never be removed while filament and screen voltages are present, since the screen dissipation rating will be exceeded. Suitable protective circuitry should be provided.

The 8959 may exhibit reverse screen current to a greater or lesser degree depending on operating conditions. The screen supply voltage must be maintained constant for any values of negative and positive screen current which may be encountered. Dangerously high plate current may flow if the screen power supply exhibits a rising voltage characteristic with negative screen current. Stabilization may be accomplished with a bleeder resistor connected from screen to cathode, or an electron-tube regulator circuit may be employed in the screen supply. A bleeder resistor must be used if a series electron-tube regulator is employed.

PLATE DISSIPATION - The rated plate dissipation of 100 kilowatts, attainable with water cooling, provides a large margin of safety in most applications. This rating may be exceeded briefly during tuning. When the 8959 is used as a plate-modulated rf amplifier, plate dissipation under carrier conditions should be limited to 67 kilowatts.

FAULT PROTECTION - In addition to the normal plate-overcurrent interlock, screen-current interlock, and coolant-flow interlock, it is good practice to protect the tube from internal damage caused by an internal plate arc which may occur at high plate voltages.

A protective resistance of 5 to 25 ohms should always be connected in series with each tube anode, to absorb power-supply stored energy if a plate arc should occur. An electronic crowbar, which will discharge power-supply capacitors in a few microseconds after the start of a plate arc, is recommended.

OPERATING HAZARDS

Read the following and take all necessary precautions to safeguard personnel. Safe operating conditions are the responsibility of the equipment designer and the user.

HIGH VOLTAGE - This tube operates at voltages which can be deadly. Equipment must be designed so personnel cannot come in contact with operating voltages. Enclose high-voltage circuits and terminals and provide fail-safe interlocking switch circuits to open the primary circuits of the power supply and to discharge high-voltage condensers whenever access into the enclosure is required.

X-RAY RADIATION - The EIMAC 8959, operating at its rated voltages and currents, is a potential X-ray hazard. Moreover, the X-ray radiation level can increase significantly with aging and gradual deterioration, due to changes in leakage paths or emission characteristics as they are affected by high voltage. Only limited shielding is afforded by the tube envelope. Additional X-ray shielding must be provided on all sides of the tube to provide adequate protection to operating personnel throughout the tube's life. When this tube is used as a pulse modulator, shielding of the pulse transformer may also be necessary. X-ray caution signs or labels must be permanently attached to equipment using this tube directing operating personnel never to operate this device without X-ray shielding in place.

RADIO FREQUENCY RADIATION - Exposure of the human body to rf radiation becomes increasingly more hazardous as the power level and/or frequency are increased. Exposure to high-power rf radiation must be strictly prevented at any frequency.

Equipment must be designed to fully safeguard all personnel from these hazards. Labels and caution notices must be provided on equipment and in manuals clearly warning of these hazards.

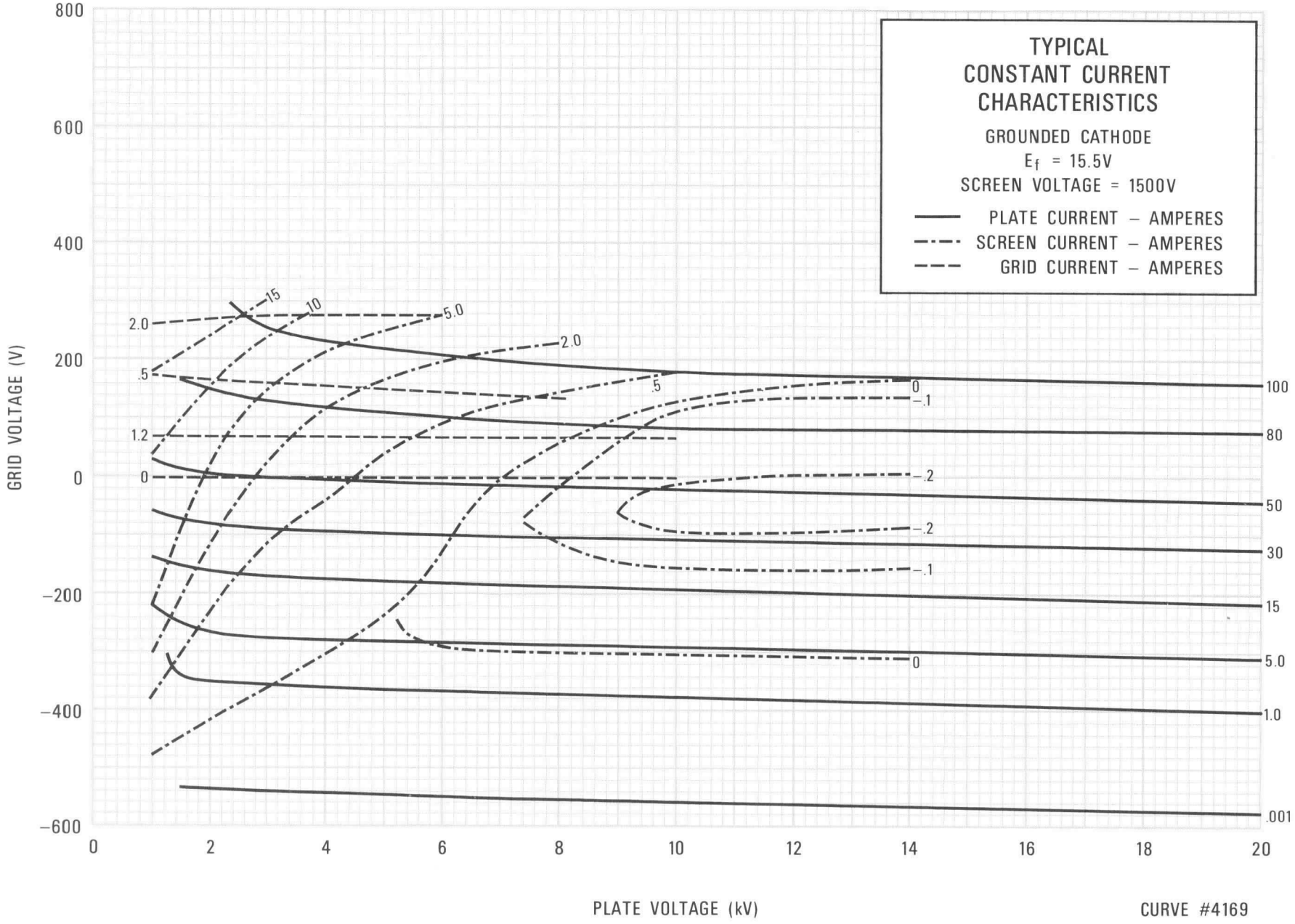
TYPICAL
CONSTANT CURRENT
CHARACTERISTICS
GROUNDED CATHODE
E_f = 15.5V
SCREEN VOLTAGE = 1500V
PLATE CURRENT – AMPERES
SCREEN CURRENT – AMPERES
GRID CURRENT – AMPERES
GRID VOLTAGE (V)
800
600
400
200
0
−200
−400
−600
0
2
4
6
8
10
12
14
16
18
20
PLATE VOLTAGE (kV)
CURVE #4169
15
10
5.0
2.0
.5
1.2
0
100
80
50
30
15
5.0
1.0
.001
−.1
−.2

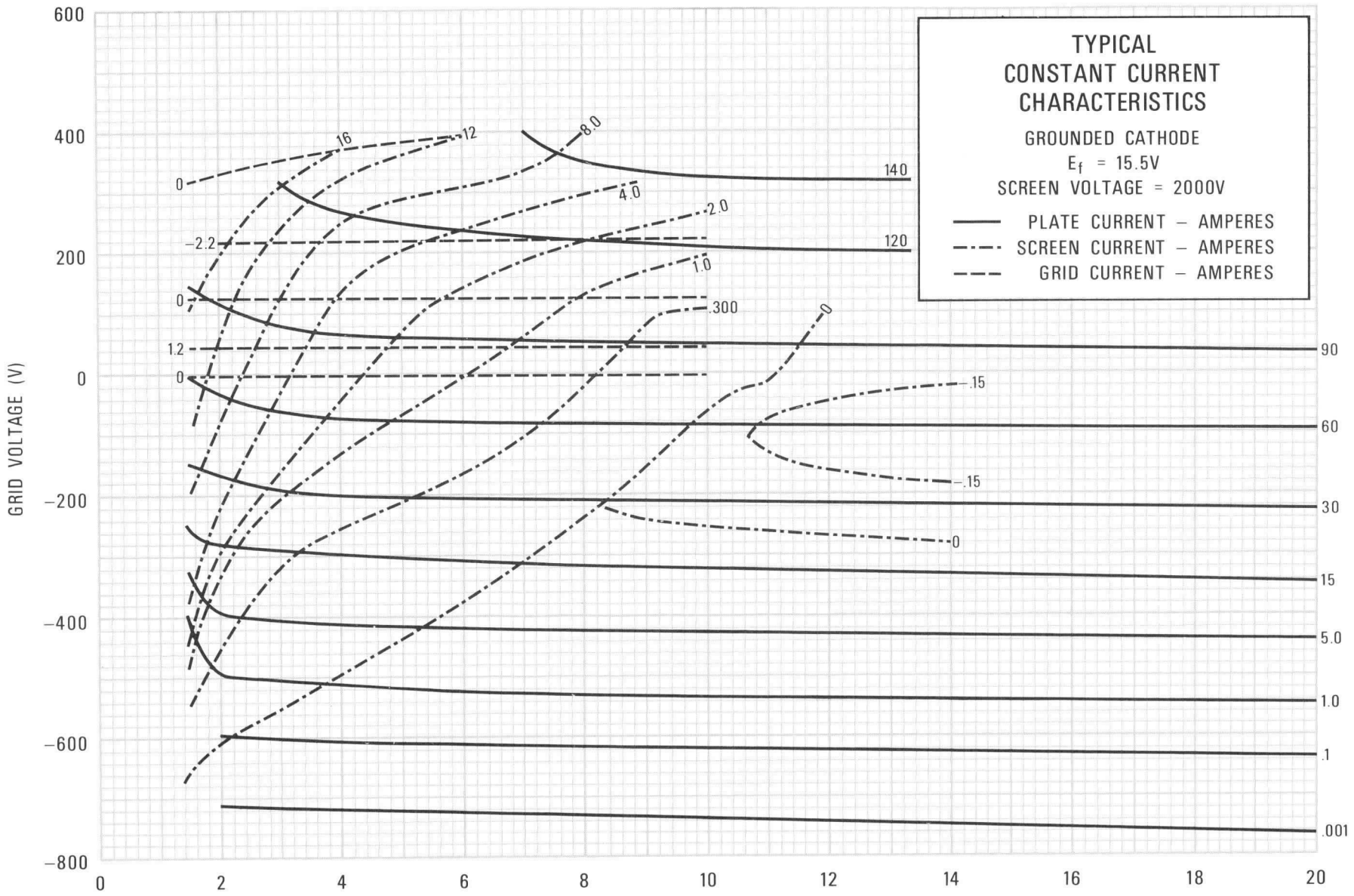

CURVE #4171

8959

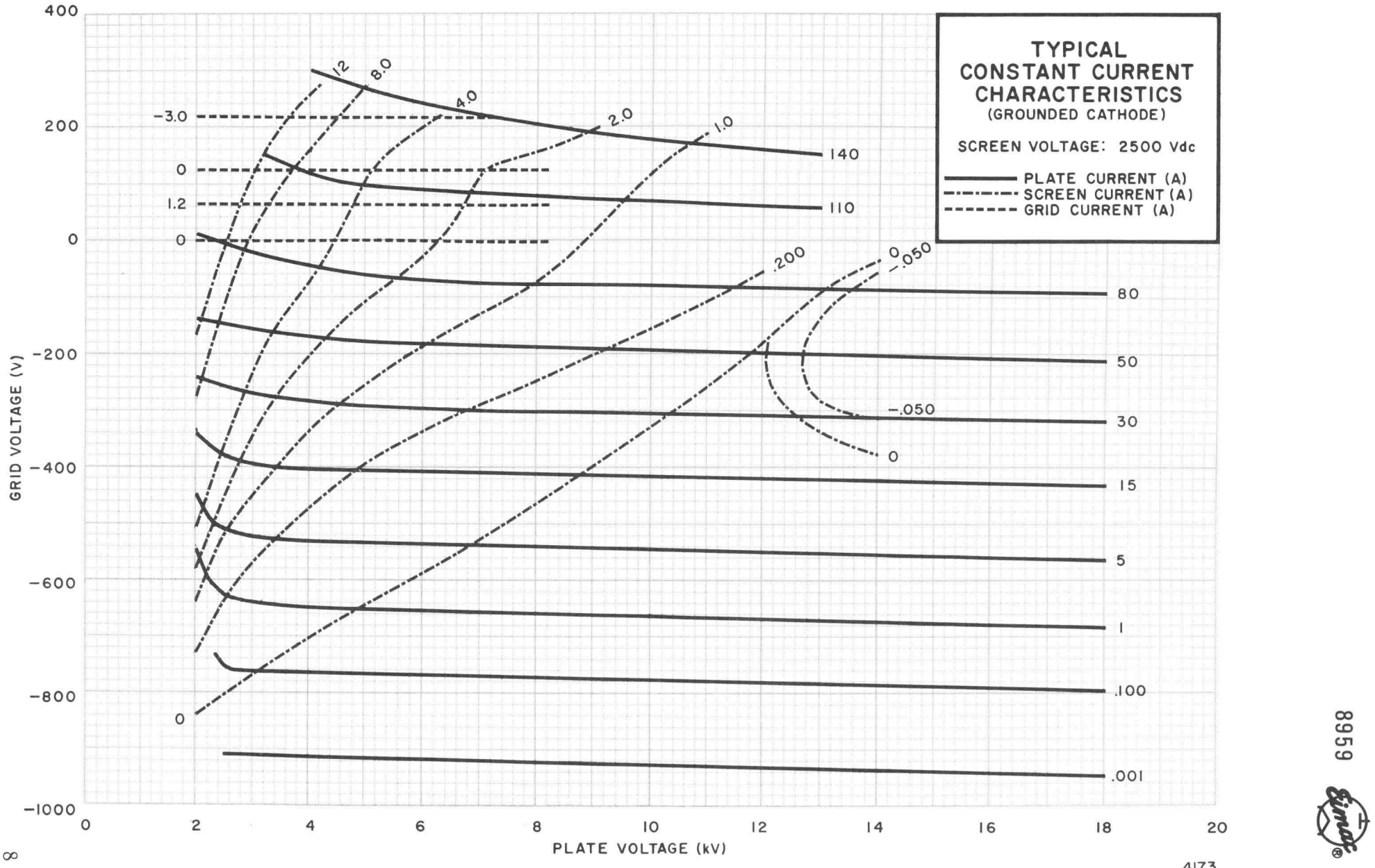
TYPICAL
CONSTANT CURRENT
CHARACTERISTICS
(GROUNDED CATHODE)
SCREEN VOLTAGE: 2500 Vdc
PLATE CURRENT (A)
SCREEN CURRENT (A)
GRID CURRENT (A)
GRID VOLTAGE (V)
PLATE VOLTAGE (kV)
400
200
0
-200
-400
-600
-800
-1000
0
2
4
6
8
10
12
14
16
18
20
12
8.0
4.0
2.0
1.0
-3.0
0
1.2
0
140
110
80
50
30
15
5
1
.100
.001
.200
0
-.050
-.050
0
0

8959

4173

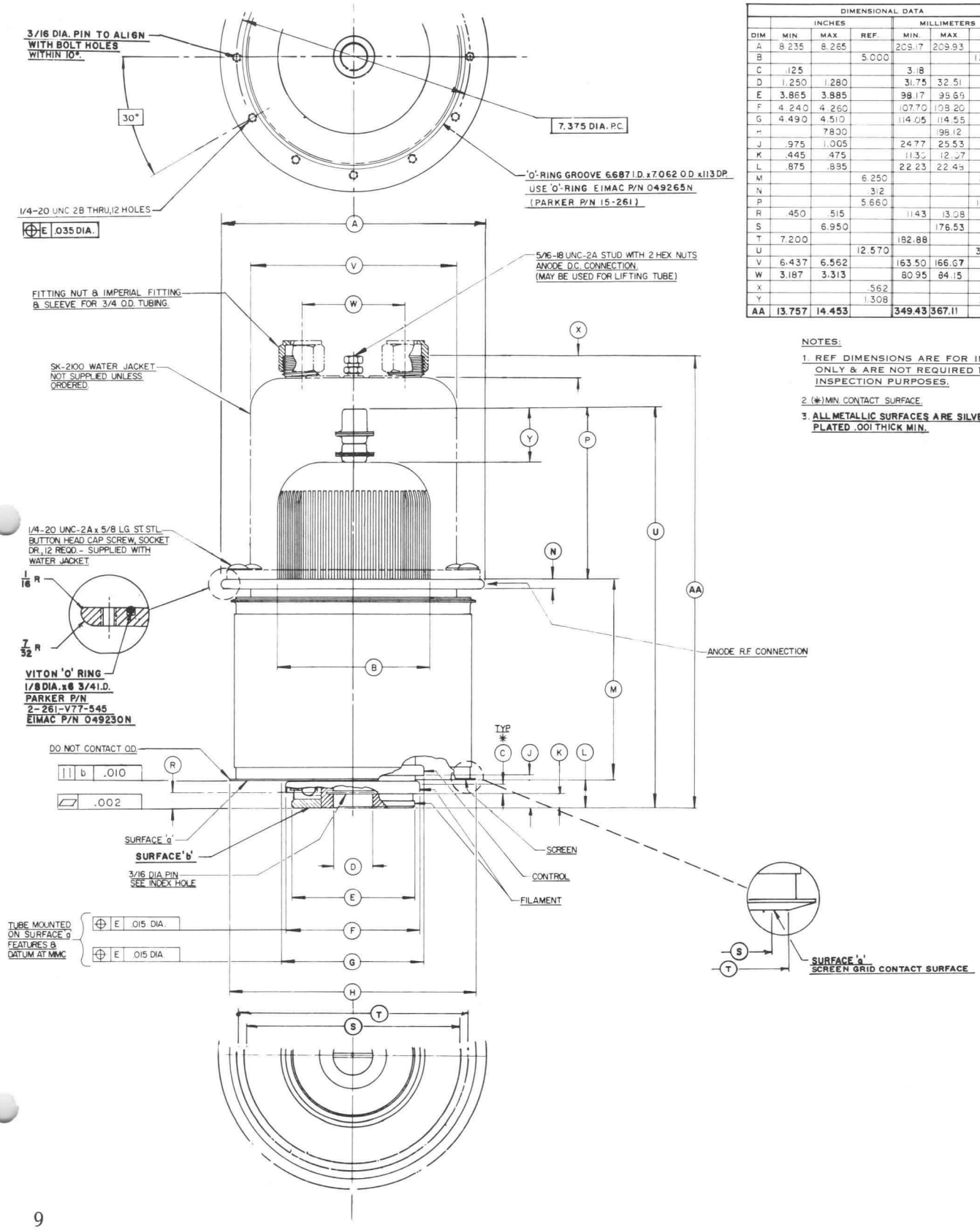

DIMENSIONAL DATA						
	INCHES			MILLIMETERS		
DIM	MIN.	MAX.	REF.	MIN.	MAX.	REF.
A	8.235	8.265		209.17	209.93	
B			5.000			127.00
C	.125			3.18		
D	1.250	1.280		31.75	32.51	
E	3.865	3.885		98.17	98.68	
F	4.240	4.260		107.70	108.20	
G	4.490	4.510		114.05	114.55	
H		7.800			198.12	
J	.975	1.005		24.77	25.53	
K	.445	.475		11.30	12.07	
L	.875	.885		22.23	22.48	
M			6.250			58.75
N			.312			7.92
P			5.660			143.76
R	.450	.515		11.43	13.08	
S		6.950			176.53	
T	7.200			182.88		
U			12.570			319.28
V	6.437	6.562		163.50	166.67	
W	3.187	3.313		80.95	84.15	
X			.562			14.27
Y			1.308			33.22
AA	13.757	14.453		349.43	367.11	

NOTES:

1. REF DIMENSIONS ARE FOR INFO ONLY & ARE NOT REQUIRED FOR INSPECTION PURPOSES.
2. (✱) MIN. CONTACT SURFACE.
3. **ALL METALLIC SURFACES ARE SILVER PLATED .001 THICK MIN.**

TECHNICAL DATA

X-2159

WATER-COOLED
POWER TETRODE

The EIMAC X-2159 is a ceramic/metal, water-cooled power tetrode designed for very-high-powered medium-frequency or high-frequency broadcast service and very-low-frequency communication in the megawatt power range.

The X-2159 has a two-section thoriated-tungsten filament mounted on water-cooled supports. The two sections may be fed in quadrature to reduce hum contributed by an ac power source. The maximum anode dissipation rating is 1250 kilowatts steady state.

Large-diameter coaxial terminals are used for the control grid and the three rf filament terminals. Filament power and filament support cooling-water connections are made through three special couplings with knurled and threaded clamping rings.



GENERAL CHARACTERISTICS[1]

ELECTRICAL

Filament: Thoriated-tungsten, two-section	
Voltage per section	18.5 ± 0.9 V
Current at 18.5 V per section	700 A
Amplification Factor (Average), Grid to Screen	4.5
Direct Interelectrode Capacitance (grounded cathode)[2]:	
Cin	1650 pF
Cout	260 pF
Cgp	10 pF
Direct Interelectrode Capacitance (grounded grid)[2]:	
Cin	675 pF
Cout	260 pF
Cpk	1.0 pF

Frequency of Operation: for use above 30 MHz, contact:
Product Manager, Power Grid Division, EIMAC Div. of Varian.

1. The design of this tube is subject to change. The data supplied is for guidance only. Before establishing a final equipment design with this tube, contact: Product Manager, Power Grid Division, EIMAC Division of Varian.

2. Capacitance values shown are nominal, measured with no special shielding.

(Effective 7-1-73) © 1973 by Varian Printed in U.S.A.

MECHANICAL

Maximum Overall Dimensions:	
Length	23.75 in; 60.32 cm
Diameter	17.03 in; 43.26 cm
Net Weight	175 lbs; 80 kg
Operating Position	Vertical, base down
Cooling	Water and Forced Air
Base Terminals	Special
Recommended Filament Connectors (not supplied with tube):	
Filament Power/Water Connector (3 required)	EIMAC X-2175
Filament rf Connector (1 required)	EIMAC X-2181
Maximum Operating Temperature:	
Envelope, and Ceramic/Metal Seals	200°C

RADIO FREQUENCY LINEAR AMPLIFIER GRID DRIVEN

Class AB

ABSOLUTE MAXIMUM RATINGS:

DC PLATE VOLTAGE	22.5	KILOVOLTS
DC SCREEN VOLTAGE	2.5	KILOVOLTS
DC PLATE CURRENT	125	AMPERES
PLATE DISSIPATION	1250	KILOWATTS
SCREEN DISSIPATION	15	KILOWATTS
GRID DISSIPATION	4.0	KILOWATTS

TYPICAL OPERATION (Frequencies to 30 MHz)
Class AB1, Peak Envelope Conditions

Plate Voltage	20.0	kVdc
Screen Voltage	1500	Vdc
Grid Voltage [1]	-380	Vdc
Zero Signal Plate Current	20.0	Adc
Single Tone Plate Current	86.5	Adc
Single Tone Screen Current [2]	3.8	Adc
Peak rf Grid Voltage [2]	380	v
Plate Dissipation	505	kW
Plate Load Resistance	132.2	Ω
Plate Power Output	1225	kW
Efficiency	70.8	%

1. Adjust to specified zero-signal plate current.
2. Approximate value.

RADIO FREQUENCY POWER AMPLIFIER OR OSCILLATOR Class C Telegraphy or FM

(Key-down Conditions)

ABSOLUTE MAXIMUM RATINGS:

DC PLATE VOLTAGE	22.5	KILOVOLTS
DC SCREEN VOLTAGE	2.5	KILOVOLTS
DC PLATE CURRENT	125	AMPERES
PLATE DISSIPATION	1250	KILOWATTS
SCREEN DISSIPATION	15	KILOWATTS
GRID DISSIPATION	4.0	KILOWATTS

TYPICAL OPERATION (Frequencies to 30 MHz)

Plate Voltage	21.5	kVdc
Screen Voltage	1000	Vdc
Grid Voltage	-700	Vdc
Plate Current	125	Adc
Screen Current [1]	12	Adc
Grid Current [1]	7.2	Adc
Calculated Driving Power	7.0	kW
Plate Dissipation [1]	530	kW
Screen Dissipation [1]	12	kW
Grid Dissipation [1]	1.9	kW
Plate Load Resistance	85.5	Ω
Plate Power Output	2158	kW
Efficiency	80.1	%

1. Approximate value.

PLATE MODULATED RADIO FREQUENCY POWER AMPLIFIER Class C Telephony

(Carrier Conditions)

ABSOLUTE MAXIMUM RATINGS:

DC PLATE VOLTAGE	17.5	KILOVOLTS
DC SCREEN VOLTAGE	2.0	KILOVOLTS
DC PLATE CURRENT	100	AMPERES
PLATE DISSIPATION	800	KILOWATTS
SCREEN DISSIPATION	15	KILOWATTS
GRID DISSIPATION	4.0	KILOWATTS

TYPICAL OPERATION (Frequencies to 30 MHz)

Plate Voltage	17.5	kVdc
Screen Voltage	1000	Vdc
Grid Voltage	-1000	Vdc
Plate Current	95.0	Adc
Screen Current [1]	8.0	Adc
Grid Current [1]	4.4	Adc
Pk. Screen Voltage (100% Mod)	1000	v
Pk. rf Grid Voltage	1280	v
Calculated Driving Power	6465	W
Plate Dissipation	279	kW
Screen Dissipation [1]	8.0	kW
Grid Dissipation [1]	2.05	kW
Plate Load Resistance	85.6	Ω
Plate Output Power	1384	kW
Efficiency	83.3	%

1. Approximate value.

AUDIO FREQUENCY POWER AMPLIFIER OR MODULATOR

Class AB

ABSOLUTE MAXIMUM RATINGS (per tube):

DC PLATE VOLTAGE	22.5	KILOVOLTS
DC SCREEN VOLTAGE	2.5	KILOVOLTS
DC PLATE CURRENT	125	AMPERES
PLATE DISSIPATION	1250	KILOWATTS
SCREEN DISSIPATION	15	KILOWATTS
GRID DISSIPATION	4.0	KILOWATTS

TYPICAL OPERATION Two Tubes - Sinusoidal Wave

Plate Voltage	17.5	kVdc
Screen Voltage	1500	Vdc
Grid Voltage [1]	-455	Vdc
Zero Signal Plate Current	10	Adc
Max. Signal Plate Current	146.2	Adc
Max. Signal Screen Current [2]	7.8	Adc
Pk. Audio Freq. Grid Voltage [3]	455	v
Max. Signal Plate Dissipation [3]	275	kW
Plate/Plate Load Resistance	238.5	Ω
Plate Output Power	2015	kW

1. Adjust for stated zero-signal plate current.
2. Approximate value.
3. Per Tube.

NOTE: TYPICAL OPERATION data are obtained by calculation from the published characteristic curves. Adjustment of the rf grid voltage to obtain the specified plate current at the specified bias, screen, and plate voltages is assumed. If this procedure is followed, there will be little variation in output power then the tube is changed, even though there may be some variation in grid and screen current. The grid and screen currents which result when the desired plate current is obtained are incidental and vary from tube to tube. These current variations cause no difficulty so long as the circuit maintains the correct voltage in the presence of the variations in current.

APPLICATION

MECHANICAL

MOUNTING - The X-2159 must be mounted vertically, base down. The full weight of the tube should rest on the main screen-grid contact flange at the base of the tube, and all lifting of the tube should be done with the lifting eye which is attached to the top of the anode cooling jacket.

COOLING - It is essential that high purity water be used for anode cooling to minimize power loss and corrosion of metal fittings. Good distilled or de-ionized water will have a resistance of 1 to 2 megohms per cm^3. Water should be discarded if resistivity falls to 50,000 ohms/cm^3. Since the anode is normally

at high potential to ground, water connections to the anode are made through insulating tubing. These insulating sections should be long enough so that column resistance is above 100,000 ohms per 1000 plate supply volts. The table shows minimum anode cooling water requirements for several plate dissipation levels.

Plate Dissipation (Kilowatts)	Water Flow (GPM)	Pressure Drop (PSI)
500	130	15
800	205	30
1000	250	45
1250	310	66

This data is based on an inlet water temperature of 40°C and an outlet temperature of 70°C. In no case should the outlet water temperature be allowed to exceed 70°C, and system pressure should be limited to 85 PSI maximum.

Water cooling is also required for the screen grid, with a minimum flow of 2.0 GPM, at an approximate pressure drop of 25 PSI. The tube outline drawing shows which of the two connections should be used for inlet water.

Water cooling of the filament supports is required. Each of the three water connections includes both an inlet and outlet line, with the proper section for the inlet water shown on the outline drawing. Minimum flow for the F1 and F3 connectors should be 2.0 GPM, with an approximate pressure drop of 10 PSI for each connector; minimum flow for the F2 connector should be 4.0 GPM, with an approximate pressure drop of 55 PSI.

Base water cooling requirements can sometimes be simplified if the screen grid and filament connectors F1 and F3 are all cooled in series, with suitable insulation between terminals.

In addition to the water-cooling requirements, cooling air should be directed against the lower envelope surface, in the area of the ceramic/metal seals, and particularly from below, up into the recesses involving the control grid and screen grid contact surfaces. Under normal circumstances, a general purpose blower capable of supplying a minimum of one hundred CFM (at zero head), properly directed, will provide adequate cooling in the recessed base area. Temperatures of the ceramic/metal seals and the lower envelope areas are the controlling and final limiting factor. Temperature-sensitive paints are available for use in checking temperatures in these areas before equipment design and air-cooling arrangements are finalized.

All base cooling, air and water, *must* be applied before power is applied to the filaments. For standby operation, with no direct anode dissipation, a minimum flow of 5 GPM of anode cooling water is still required to prevent anode overheating, in addition to base cooling.

In all cases, both air-flow and water-flow interlocks should be used to remove all power from the tube in case of a cooling failure. However, cooling normally should be maintained for a brief period after all power is removed to allow for tube cool-down.

ELECTRICAL

FILAMENT OPERATION - Special procedures must be used in the application and removal of filament power. Cooling water flow *must* be on and at the correct level before any voltage is applied. Then a voltage of (approximately) 4 volts should be applied (per section), and held for a minimum of 30 seconds. Voltage can then be gradually increased until the full operating filament voltage level is achieved, but at no time should surge current be allowed to exceed 1600 amperes per section. To remove filament power, the voltage should be reduced gradually to (approximately) 4 volts and held at this level for a minimum of 30 seconds before all voltage is removed.

The peak emission capability at the rated, or nominal, filament voltage is normally many times that required for communication service. A small decrease in filament temperature due to a reduction of filament voltage can increase tube life by a substantial percentage. It is good practice to determine the nominal filament voltage for a particular application that will not affect the operation of the equipment. This is done by measuring some important parameter of performance, such as plate current, power output, or an increase in distortion, while filament voltage is reduced in small steps. At some value of filament voltage there will be a noticeable reduction in plate current or power output, or an increase in distortion. Operation should then be at a filament voltage slightly higher than the point at which performance degradation was

noted. The voltage should be measured at the tube base terminals with a 1% accuracy rms responding meter and periodically checked.

GRID OPERATION - The X-2159 grid is rated at 4000 watts of dissipation. Protective measures should be included in the circuitry to insure that this rating is not exceeded. Grid dissipation is the approximate product of dc grid current and peak positive grid voltage.

SCREEN OPERATION - Base cooling (air and water) must be on and at the correct level before tube operation is started. The power applied to the screen grid must not exceed 15 kilowatts. Where no ac is applied to the screen, dissipation is the product of dc screen voltage and dc screen current. With screen modulation the dissipation is the product of rms screen current and rms screen voltage.

Plate voltage, plate load, or grid bias voltage must never be removed while filament and screen voltages are present since the screen dissipation rating will be exceeded. Suitable protective circuitry must be provided to remove screen power in case of such a fault condition. Tetrode tubes may exhibit reversed screen current to a greater or lesser degree depending on individual tube design and operating conditions. The screen supply voltage must be maintained constant for any values of negative and positive screen currents that may be encountered. Dangerously high plate currents may flow if the screen power supply exhibits a rising voltage characteristic with negative screen current. Stabilization may be accomplished by use of a shunt regulator circuit in the screen voltage supply, or other suitable techniques.

PLATE OPERATION - The maximum dissipation rating of the X-2159 is 1250 kilowatts with water cooling. When used as a plate-modulated rf amplifier, plate dissipation under carrier conditions is limited to 800 kilowatts.

FAULT PROTECTION - In addition to the normal plate-overcurrent interlock, screen-current interlock, and coolant (both air and water) interlocks, it is good practice to protect the tube from internal damage caused by an internal plate arc which may occur at high plate voltages. An electronic crowbar, which will discharge power-supply capacitors in a few microseconds after the start of a plate arc, is recommended.

HIGH VOLTAGE - Normal operating voltages used with the X-2159 are deadly, and the equipment must be designed properly and operating precautions must be followed. Design all equipment so that no one can come in contact with high voltages. All equipment must include safety enclosures for high-voltage circuits and terminals, with interlock switches to open primary circuits of the power supply and to discharge high-voltage condensers whenever access doors are opened. Interlock switches must not be bypassed or "cheated" to allow operation with access doors open. Always remember that HIGH VOLTAGE CAN KILL.

X-RADIATION - High-vacuum tubes operating at voltages higher than 10 kilovolts produce progressively more dangerous X-ray radiation as the voltage is increased. The X-2159, operating at its rated voltages and currents, is a potential X-ray hazard. Only limited shielding is afforded by the tube envelope. Moreover, the X-ray radiation level can increase significantly with aging and gradual deterioration, due to leakage paths or emission characteristics as they are affected by the high voltage. X-ray shielding must be provided on all sides of tubes operating at these voltages to provide adequate protection throughout the tube's life. Periodic checks on the X-ray level should be made, and the tube should never be operated without adequate shielding in place when voltages above 10 kilovolts are in use. Lead glass, which attenuates X-rays, is available for viewing windows. If there is any doubt as to the requirement for or the adequacy of shielding, an expert in this field should be contacted to perform an X-ray survey of the equipment.

Operation of high-voltage equipment with interlock switches "cheated" and cabinet doors open in order to be better able to locate an equipment malfunction can result in serious X-ray exposure.

RADIO FREQUENCY RADIATION - Avoid exposure to strong rf fields even at relatively low frequency. Absorption of rf energy by human tissue is dependent on frequency. Under 30 MHz, most of the energy will pass completely through the human body with little attenuation or heating effect. Public health agencies are concerned with the hazard, however, even at these frequencies, and it is worth noting that some commercial dielectric heating units actually operate at frequencies as low as the 13 and 27 MHz bands.

SPECIAL APPLICATION - Where it is desired to operate this tube under conditions widely different from those listed here, write to Power Grid Tube Product Manager, EIMAC Division of Varian, 301 Industrial Way, San Carlos, Ca. 94070, for information and recommendations.

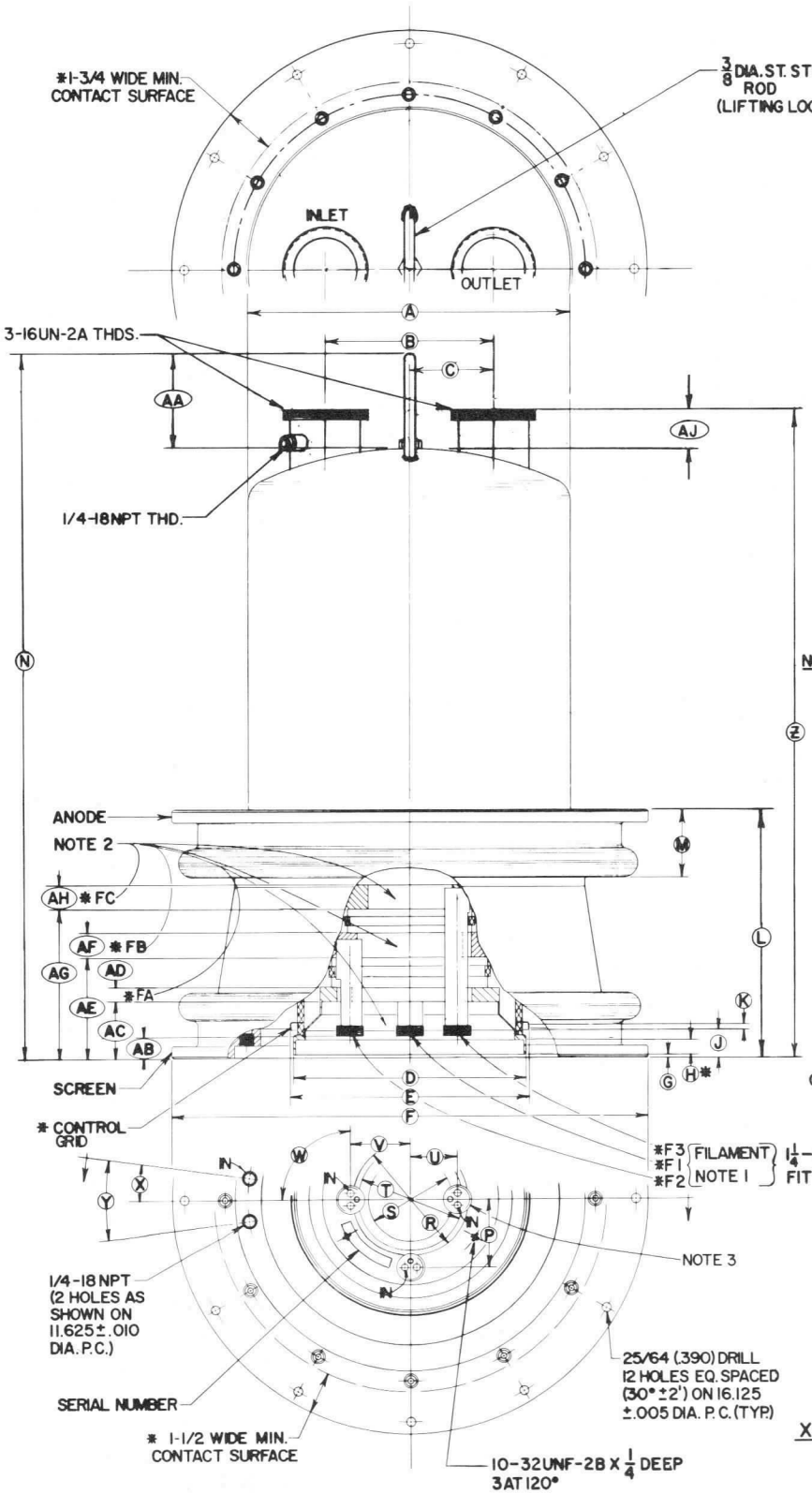

DIM	DIMENSIONAL DATA					
	INCHES			CENTIMETERS		
	MIN.	MAX.	REF.	MIN.	MAX.	REF.
A	11.440	11.560	- -	28.96	29.36	- -
B	- -	- -	6.000	- -	- -	15.24
C	- -	- -	3.000	- -	- -	7.62
D	8.235	8.265	- -	20.92	20.99	- -
E	8.485	8.525	- -	21.55	21.65	- -
F	16.970	17.030	- -	43.10	43.26	- -
G	- -	- -	0.025	- -	- -	0.063
H	0.310	- -	- -	0.79	- -	- -
J	0.900	1.000	- -	2.29	2.54	- -
K	0.180	- -	- -	0.46	- -	- -
L	8.700	8.900	- -	22.10	- -	- -
M	- -	- -	2.375	- -	- -	6.03
N	- -	- -	25.312	- -	- -	64.30
P	- -	- -	2.500	- -	- -	6.35
R	4.113	4.137	- -	10.45	10.51	- -
S	2.988	3.012	- -	7.59	7.65	- -
T	3.675	3.699	- -	9.33	9.40	- -
U	- -	- -	1.687	- -	- -	4.28
V	- -	- -	2.156	- -	- -	5.48
W	- -	- -	90°	- -	- -	90°
X	- -	- -	7-1/2°	- -	- -	7-1/2°
Y	- -	- -	15°	- -	- -	15°
Z	22.857	23.305	- -	58.06	59.19	- -
AA	- -	- -	3.575	- -	- -	9.08
AB	- -	- -	0.720	- -	- -	1.83
AC	1.950	2.100	- -	4.95	5.33	- -
AD	0.450	- -	- -	1.14	- -	- -
AE	3.560	3.680	- -	9.04	9.35	- -
AF	0.725	- -	- -	1.84	- -	- -
AG	5.300	5.450	- -	13.46	13.84	- -
AH	0.725	- -	- -	1.84	- -	- -
AJ	- -	- -	1.375	- -	- -	3.49

NOTES:
1. CIRCUIT RETURNS MAY BE MADE TO FA, FB, AND FC WHICH ARE IN COMMON WITH F_1, F_2, AND F_3, RESPECTIVELY.
2. FB AND FC CONTACT RINGS, IF USED, MUST HAVE CUT-OUTS FOR F_2 AND F_3.
3. MATE WITH EIMAC CONNECTOR X2175
4. DC RETURN SHOULD BE MADE TO F_2 OR FB.
5. REF. DIMENSIONS ARE FOR INFO. ONLY & ARE NOT REQUIRED FOR INSPECTION PURPOSES.
6. (*) CONTACT SURFACES

X2159 POWER TETRODE

TYPICAL CONSTANT CURRENT CHARACTERISTICS

GROUNDED CATHODE — E_f = 36V (18V/SECTION) — SCREEN VOLTAGE = 1000V

——— PLATE CURRENT – AMPERES -·-·- SCREEN CURRENT – AMPERES – – – – GRID CURRENT – AMPERES

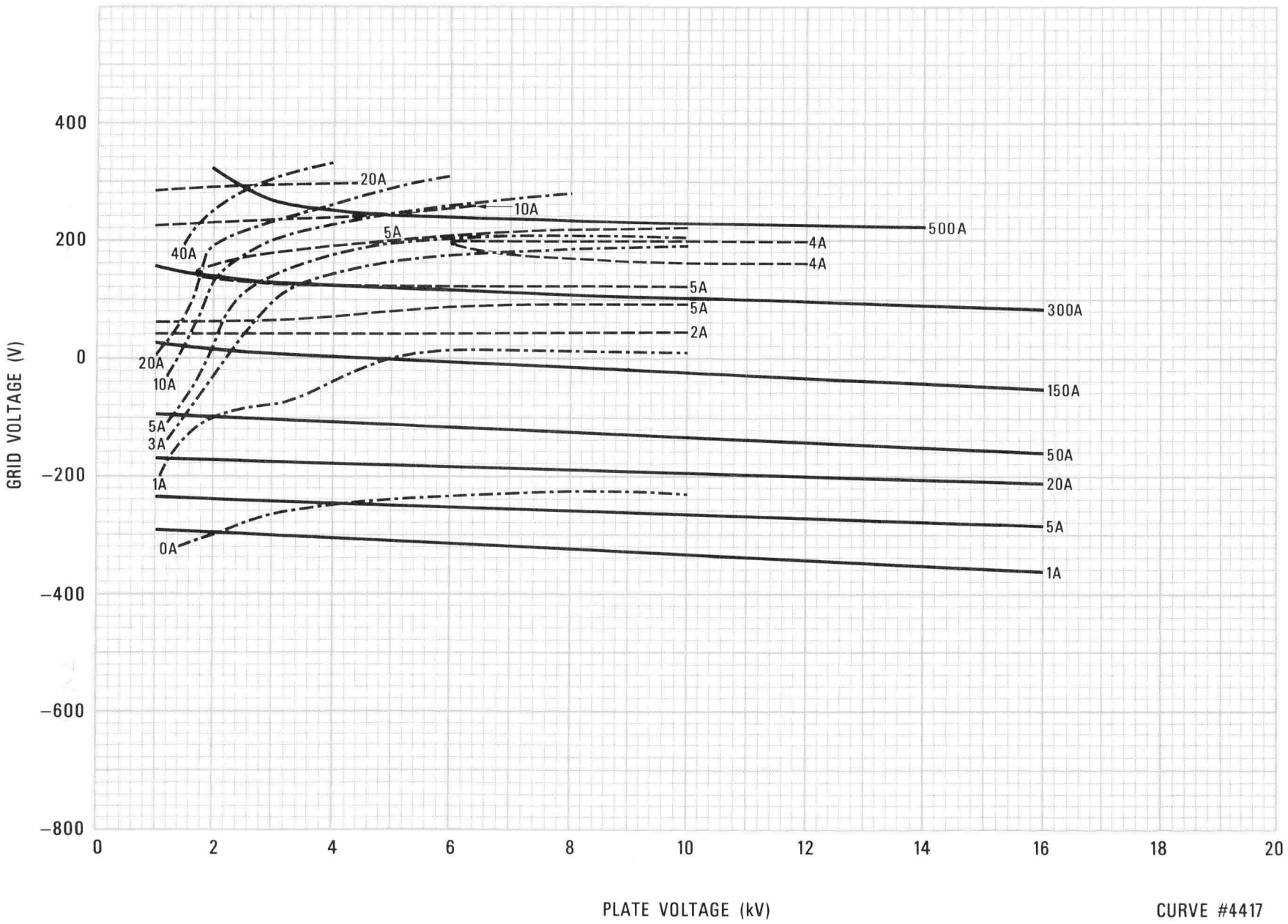

CURVE #4417

TYPICAL CONSTANT CURRENT CHARACTERISTICS

GROUNDED CATHODE — E_f = 36V (18V/SECTION) — SCREEN VOLTAGE = 1500V

——— PLATE CURRENT – AMPERES -·-·- SCREEN CURRENT – AMPERES – – – – GRID CURRENT – AMPERES

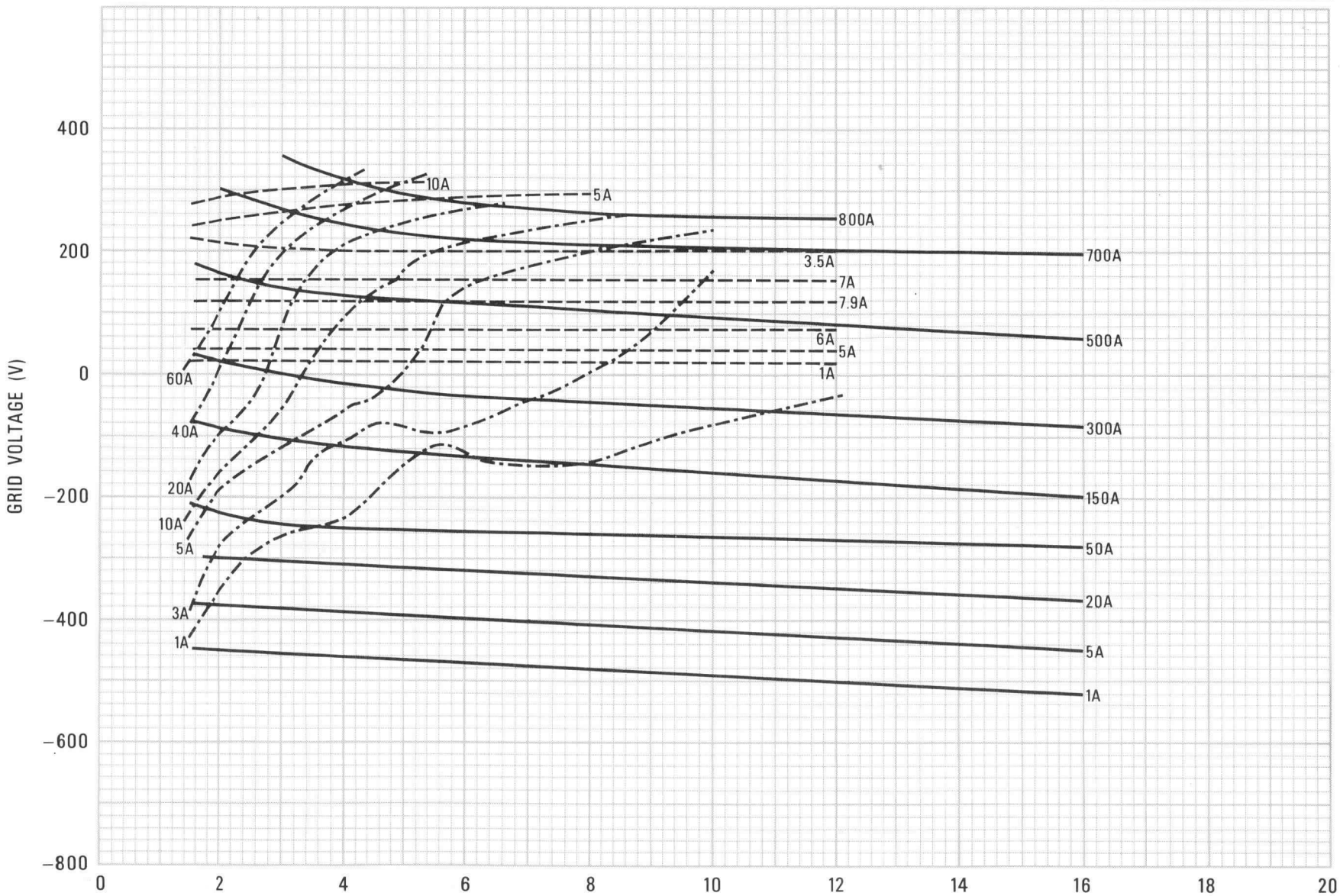

CURVE #4432

PHF.

TECHNICAL DATA

Y-834

TETRODE

THIS IS EIMAC'S EQUIV TO TH 3467

The EIMAC Y834 is a ceramic/metal, forced-air cooled, radial-beam tetrode with a rated maximum plate dissipation of 4.5 kW. It is especially designed for UHF LPTV, TV translator and linear amplifier operation requiring low intermodulation distortion up to 1000 MHz. IMD level is better than -52dB.



GENERAL CHARACTERISTICS

ELECTRICAL

Type of Cathode	Thoriated Tungsten
Heating	Direct
Filament Voltage[1]	6.0 ± 2% volts
Filament Current, approximately	34 amps
Peak Cathode Current	6 amps
Interelectrode Capacitances, approximately:	
Input (g2 tied to g1)	40 pF
Output (g2 tied to g1)	8.2 pF
Cathode/Anode	0.02 pF
Amplification Factor (g1 - g2 average)	7
Transconductance, average	40 mmhos

MECHANICAL

Mounting Position	Vertical
Anode Cooling	Forced Air
Minimum Airflow[2]	70 cfm
Corresponding Pressure Drop	0.8" H_2O
Maximum Inlet Air Temperature	45°C
Maximum Outlet Air Temperature	100°C
Maximum Temperature[3]	250°C
Net Weight	5 lbs/2.3Kg
Dimensions	See Drawing

[1] In the high frequency operation the cathode is subjected to considerable back bombardment which raises its temperature. After the circuit has been adjusted for proper tube operation, the filament voltage must be reduced to prevent overheating of the cathode with resulting short life.

[2] For 30°C inlet air temperature and 2 kW anode dissipation.

[3] At any point on the ceramic insulators. For maximum tube life, this temperature must not exceed 200°C. The cooling air flow must be established before application of any voltage and maintained for at least one minute after filament voltage has been removed.

20April84; Revised April 86

OPERATING CONDITIONS

MAXIMUM RATINGS (all potentials refer to cathode)

DC Anode Voltage	5 kV
DC Grid g2 Voltage	650 V
DC Grid g1 Voltage	-200 V
Peak Cathode Current	6 A
DC Anode Current	2 A
Anode Dissipation	4.5 kW
Grid g2 Dissipation	25 W
Grid g1 Dissipation	5 W
Frequency	1000 MHz

CLASS A — LINEAR AMPLIFIER FOR TELEVISION TRANSLATOR

Aural and Video Signals Simultaneously

TYPICAL OPERATION

Operating Frequency	474-850 MHz
Bandwidth	10 MHz
Filament Voltage	6 V
DC Anode Voltage	4 kV
DC Grid g2 Voltage	400 V
DC Anode Current (no signal)	0.4 A
Peak Video Power	1.1 kW
Anode Current (black level + audio)	0.8 A
Gain	15.0dB
Intermodulation Products	-54 dB (*)
Distance Between Audio and Video Carriers	4.5 MHz

(*) Under video level (3-tone test) typical; depending on the cavity/circuit used and adjustments made.

ABSOLUTE MAXIMUM RATINGS: Values shown for each type of service are based on the "absolute system" and are not to be exceeded under any service conditions. These ratings are limiting values outside which the serviceability of the tube may be impaired. In order not to exceed absolute ratings, the equipment designer has the responsibility of determining an average design value for each rating below the absolute value of that rating by a safety factor so that the absolute values will never be exceeded under any usual conditions of supply voltage variation in the equipment itself. It does not necessarily follow that combinations of absolute maximum ratings can be attained simultaneously.

HIGH VOLTAGE: Normal operating voltages used with this tube are deadly. Equipment must be designed properly and operating precautions must be followed. Design all equipment so that no one can come in contact with high voltages. All equipment must include safety enclosures for high-voltage circuits and terminals, with interlock switches to open primary circuits of the power supply and to discharge high-voltage capacitors whenever access doors are opened. Interlock switches must not be bypassed or "cheated" to allow operation with access doors open. Always remember that **HIGH VOLTAGE CAN KILL.**

INTERELECTRODE CAPACITANCE: The actual internal interelectrode capacitance of a tube is influenced by many variables in most applications such as stray capacitance to the chassis, capacitance added by the socket used, stray capacitance between the tube terminals, and wiring effects. To control the actual capacitance values within the tube as the key component involved, the industry and military services use a standard test procedure as described in Electronic Industries Association Standard RS-191. This requires the use of specially constructed test fixtures which effectively shield all external tube leads from each other and eliminate any capacitance reading to "ground." The test is performed on a cold tube. Other factors being equal, controlling internal tube capacitance in this way normally assures good interchangeability of tubes over a period of time, even if the tube is made by different manufacturers. The capacitance values shown in the manufacturer's technical data, or test specifications, normally are taken in accordance with Standard RS-191.

The equipment designer is, therefore, cautioned to make allowance for the actual capacitance values which will exist in any normal application. Measurements should be taken with the socket and mounting which represent approximate final layout if capacitance values are highly significant in the design.

GRID OPERATION: Maximum control grid dissipation is 5 watts, determined approximately by the product of the dc grid current and the peak positive grid voltage.

SCREEN GRID OPERATION: Maximum screen grid dissipation is 25 watts. With no ac applied to the screen grid, dissipation is simply the product of dc screen voltage and the dc screen current. With screen modulation, dissipation is dependent on rms screen voltage and rms screen current. Plate voltage, plate loading, or bias voltage must never be removed while filament and screen voltages are present, since screen dissipation ratings will be exceeded. A protective spark-gap device should be connected between the screen grid and the cathode to guard against excessive voltage.

ABSOLUT
ystem'
values
absolut
value
absolut
the eq
ratings

HIGH V
designe
one ca
high-vo
power s
switche
remembe

INTEREL
influen
capacit
effects
the in
Industr
fixture
capacit
control
tubes c
values
accorda

The equ
values
and mou
cant in

GRID O
product

SCREEN
screen
With sc
Plate v
voltage
device
voltage

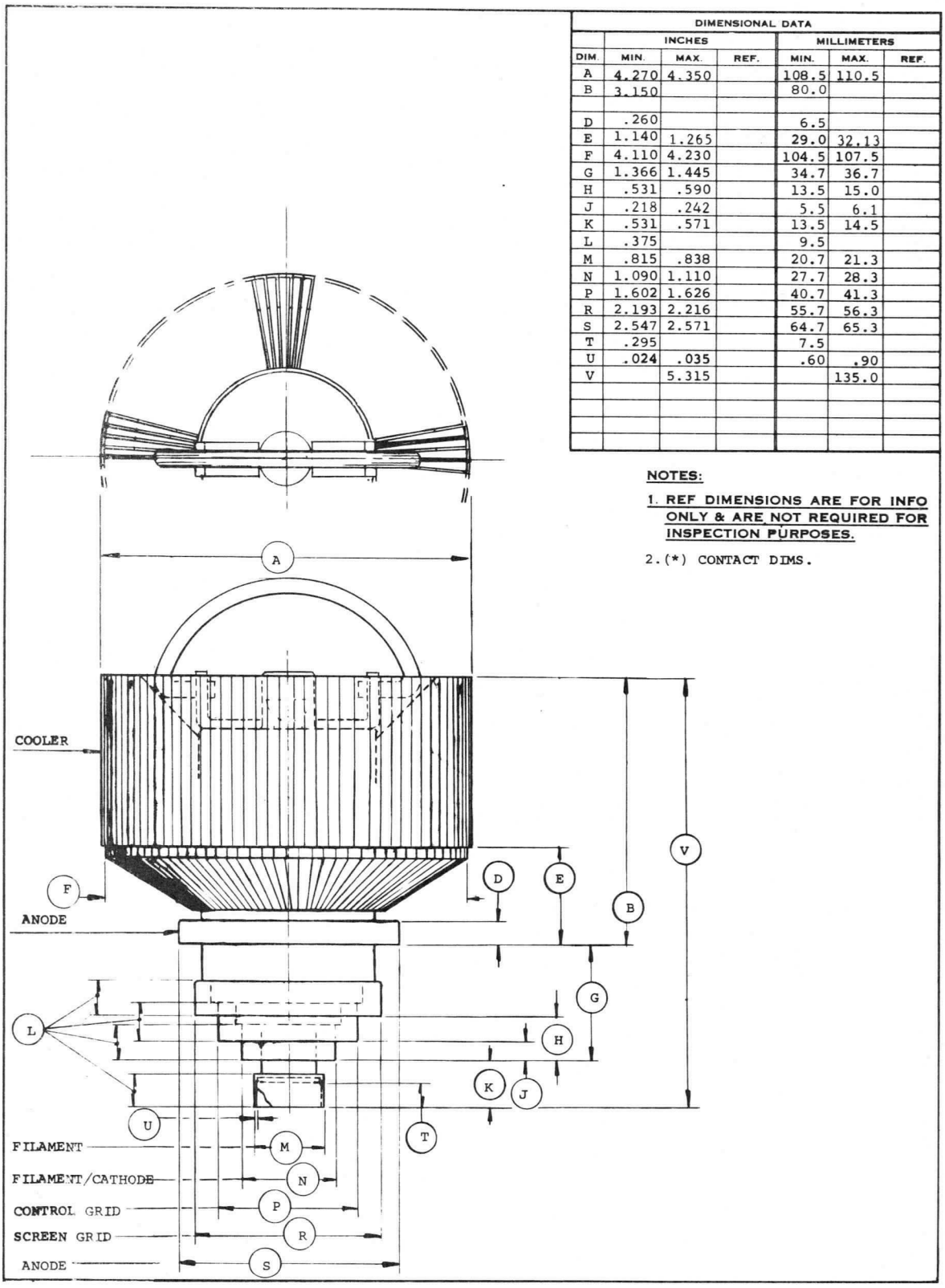

DIMENSIONAL DATA						
	INCHES			MILLIMETERS		
DIM.	MIN.	MAX.	REF.	MIN.	MAX.	REF.
A	4.270	4.350		108.5	110.5	
B	3.150			80.0		
D	.260			6.5		
E	1.140	1.265		29.0	32.13	
F	4.110	4.230		104.5	107.5	
G	1.366	1.445		34.7	36.7	
H	.531	.590		13.5	15.0	
J	.218	.242		5.5	6.1	
K	.531	.571		13.5	14.5	
L	.375			9.5		
M	.815	.838		20.7	21.3	
N	1.090	1.110		27.7	28.3	
P	1.602	1.626		40.7	41.3	
R	2.193	2.216		55.7	56.3	
S	2.547	2.571		64.7	65.3	
T	.295			7.5		
U	.024	.035		.60	.90	
V		5.315			135.0	

NOTES:

1. REF DIMENSIONS ARE FOR INFO ONLY & ARE NOT REQUIRED FOR INSPECTION PURPOSES.
2. (*) CONTACT DIMS.

TECHNICAL DATA

PmS **Y863**
VHF - TETRODE
TO REPLACE
8F76R
DATA INCLUDES
YC112
RETROFIT KIT

The EIMAC Y863 is a ceramic/metal VHF power tetrode intended for use as a retrofit for the 8F76R in VHF-TV amplifier service. A retrofit kit is available which allows use of the Y863 in NEC 10-15 kW visual TV cavities. No other changes are required. The Y863 features an electro-mechanical structure which provides high rf operating efficiency. Low losses in the structure permit operation at full ratings to 250 MHz in TV linear amplifier service.

Improved electron optics provide higher gain than the 8F76R, particularly in the high channels, easing exciter problems. Improved grid construction reduces tube-to-tube differences and contributes to extended life.

The anode is rated for 15 kilowatts dissipation with forced air cooling.

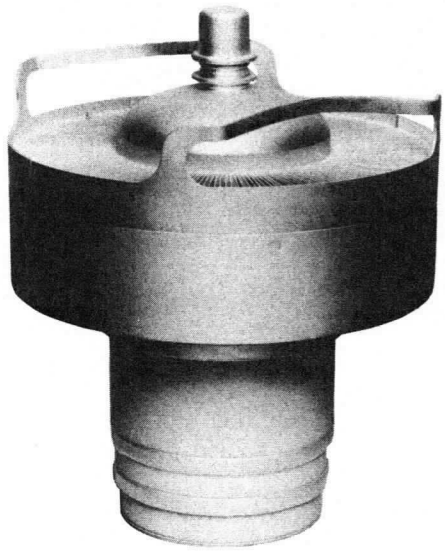

GENERAL CHARACTERISTICS [1]

ELECTRICAL

Filament: Thoriated Tungsten Mesh		
Voltage	7.5 ± 0.4	V
Current, at 7.5 volts	120	A
Amplification Factor, average		
Grid to Screen	8.5	
Direct Interelectrode Capacitances (cath. grounded) [2]		
Cin	170	pF
Cout	16	pF
Cgp	0.5	pF
Direct Interelectrode Capacitances (grids grounded) [2]		
Cin	72.5	pF
Cout	17.5	pF
Cpk	0.08	pF
Maximum frequency for Full Ratings (TV)	250	MHz

1. Characteristics and operating values are based on performance tests. These figures may change without notice as a result of additional data or product refinement.
2. Capacitance values are for a cold tube, as measured with no special shielding, in accordance with Electronic Industries Association Standard RS-191.

MECHANICAL

Maximum Overall Dimensions:	
Length	9.3 In; 23.6 cm
Diameter	7.4 In; 18.8 cm
Net Weight (approximate)	14 Lbs; 6.4 kg
Operating Position	Axis Vertical, Base Up or Down
Cooling	Forced Air
Operating Temperature, Absolute Maximum	
Ceramic/Metal Seals and Anode Core	250°C
Base	Special, Coaxial
EIMAC Retrofit Kit, for Installation in NEC PCN-1200 VHF-TV Visual Cavity (See Page 2)	EIMAC YC112

Effective August 86
VA4928

Printed in U.S.A.

ADVANCE PRODUCT ANNOUNCEMENT

9019
YC130
VHF RADIAL BEAM POWER TETRODE



The EIMAC 9019/YC130 is a ceramic/metal VHF power tetrode. It is rated for full power input to 110 MHz and is recommended for use as a Class C power amplifier or plate modulated amplifier.

Air-system sockets and matching air chimneys are available from EIMAC. A connector clip is available for making the dc connection to the anode.

GENERAL CHARACTERISTICS [1]

ELECTRICAL

Filament: Thoriated Tungsten Mesh	
Voltage	7.5 ± 0.37 V
Current, at 7.5 volts	160 A
Amplification Factor (average), Grid to Screen	4.5
Direct Interelectrode Capacitance (cathode grounded) [2]	
Cin	160 pF
Cout	26.5 pF
Cgp	1.5 pF
Direct Interelectrode Capacitance (grids grounded) [2]	
Cin	67 pF
Cout	27.5 pF
Cpk	0.2 pF
Maximum Frequency for Full Ratings (CW)	110 MHz

1. Characteristics and operating values are based on performance tests. These figures may change without notice as the result of additional data or product refinement. Varian EIMAC should be consulted before using this information for final equipment design.
2. Capacitance values are for a cold tube as measured in a special shielded fixture in accordance with Electronic Industries Association Standard RS-191.

MECHANICAL

Maximum Overall Dimensions:	
Length	9.375 In; 23.81 cm
Diameter	7.580 In; 19.25 cm
Net Weight	12.8 Lb; 5.8 kg
Operating Position	Axis Vertical, Base Up or Down
Maximum Operating Temperature, Ceramic/Metal Seals or Envelope	250°C
Cooling	Forced Air
Base	Special Concentric
Recommended Air-System Socket: For LF or HF Service	EIMAC SK-300A
For VHF Service	EIMAC SK-360
Recommended Air-System Chimney: For Either the SK-300A or SK-360 Socket	EIMAC SK-316
Recommended Screen Grid Bypass Capacitor Kit for the SK-360 Socket	EIMAC SK-355
Available Anode Connector Clip	EIMAC ACC-3

RADIO FREQUENCY POWER AMPLIFIER
Class C FM
(Key-down conditions)

ABSOLUTE MAXIMUM RATINGS

DC PLATE VOLTAGE	10,000 VOLTS
DC SCREEN VOLTAGE	2000 VOLTS
DC GRID VOLTAGE	-750 VOLTS
DC PLATE CURRENT	5.0 AMPERES
PLATE DISSIPATION	18 KILOWATTS
SCREEN DISSIPATION	450 WATTS
GRID DISSIPATION	200 WATTS

TYPICAL OPERATION (Frequencies to 110 MHz)

DC Plate Voltage	7.5	10.0	kVdc
DC Screen Voltage	750	750	Vdc
DC Grid Voltage	-510	-550	Vdc
DC Plate Current	4.65	4.55	Adc
DC Screen Current *	0.59	0.54	Adc
DC Grid Current *	0.30	0.27	Adc
Peak rf Grid Voltage *	730	790	v
Calculated Driving Power	220	220	W
Plate Dissipation	8.1	9.0	kW
Plate Output Power	26.7	36.5	kW

* Approximate value; will vary with circuit and tube

395035(Effective March 1986)
VA4889

Printed in U.S.A.

PLATE MODULATED RF POWER AMPLIFIER
Grid Driven
Class C Telephony - Carrier Conditions

ABSOLUTE MAXIMUM RATINGS

DC PLATE VOLTAGE	8000 VOLTS
DC SCREEN VOLTAGE	2000 VOLTS
DC GRID VOLTAGE	-750 VOLTS
DC PLATE CURRENT	4.0 AMPERES
PLATE DISSIPATION #	12 KILOWATTS
SCREEN DISSIPATION ##	450 WATTS
GRID DISSIPATION ##	200 WATTS

\# Corresponds to 18 kW at 100% sine-wave modulation.

TYPICAL OPERATION

DC Plate Voltage	6.0	8.0	kVdc
DC Screen Voltage	750	750	Vdc
Peak AF Screen Voltage (100% Mod)	740	710	v
DC Grid Bias Voltage	-600	-640	Vdc
DC Plate Current	3.75	3.65	Adc
DC Screen Current *	0.45	0.43	Adc
DC Grid Current *	0.18	0.18	Adc
Peak rf Grid Voltage *	800	840	v
Grid Driving Power (calculated) *	150	150	W
Plate Dissipation *	5.1	5.8	kW
Plate Output Power *	17.4	23.5	kW

* Approximate value.
Average, with or without modulation.

AUDIO FREQUENCY AMPLIFIER OR MODULATOR
Grid Driven, Class AB1, Sinusoidal Wave

ABSOLUTE MAXIMUM RATINGS

DC PLATE VOLTAGE	10.0 KILOVOLTS
DC SCREEN VOLTAGE	2000 VOLTS
DC PLATE CURRENT	6.0 AMPERES
PLATE DISSIPATION	18.0 KILOWATTS
SCREEN DISSIPATION	450 WATTS
GRID DISSIPATION	200 WATTS

* Approximate value. # Per tube.
Adjust for specified zero-signal plate current.

TYPICAL OPERATION (two tubes)

DC Plate Voltage	7.5	10.0	kVdc
DC Screen Voltage	1500	1500	Vdc
DC Grid Voltage ##	-350	-370	Vdc
Zero-Signal Plate Current	1.0	1.0	Adc
Maximum Signal Plate Current	8.8	8.5	Adc
Maximum Signal Screen Current *	0.34	0.30	Adc
Peak AF Grid Voltage * #	330	340	v
Driving Power *	0	0	W
Load Resistance Plate-to-Plate	1730	2520	Ohms
Maximum Signal Plate Dissipation * #	12.2	14.0	kW
Plate Output Power *	41.6	57.0	kW

TYPICAL OPERATION values are obtained by measurement or by calculation from published characteristic curves. To obtain the specified plate current at the specified bias, screen, and plate voltages, adjustment of the rf grid voltage is assumed. If this procedure is followed, there will be little variation in output power when the tube is replaced, even though there may be some variation in grid and screen currents. The grid and screen currents which occur when the desired plate current is obtained are incidental and vary from tube to tube. These current variations cause no performance degradation providing the circuit maintains the correct voltage in the presence of the current variations.

RANGE VALUES FOR EQUIPMENT DESIGN	Min.	Max.	
Filament: Current at 7.5 volts	148	168	A
Interelectrode Capacitance (grounded filament connection) [1]			
Cin	154	167	pF
Cout	24	29	pF
Cgp	---	2.0	pF

1 Capacitance values are for a cold tube as measured in a special shielded fixture in accordance with Electronic Industries Standard RS-191.

APPLICATION

MECHANICAL

MOUNTING - The tube must be mounted vertically, base up or down at the designer's convenience, and should be protected from vibration and shock.

STORAGE - If a tube is to be stored as a spare it should be kept in its original shipping carton, with the original packing material, to minimize the possibility of handling damage.

Before storage a new tube should be operated in the equipment for 100 to 200 hours to establish it has not been damaged and operates properly (See FILAMENT OPERATION for recommendations on initial value of filament voltage during this operation period). If the tube is still in storage 6 months later it again should be operated in the equipment for 100 to 200 hours to make sure there has been no degradation. If operation is satisfactory the tube can again be stored with great assurance of being a known-good spare.

SOCKETING - An air-system socket should be used in all applications to assure cooling of the tube base seals. The EIMAC SK-300A is recommended for audio or LF/HF rf operation; the SK-360 is recommended for VHF operation. The SK-360 incorporates low-inductance filament bypassing in the form of three 5000 pF copper-clad Kapton®capacitors. A screen grid bypass capacitor kit (the SK-355) is also available for the SK-360 socket, and includes eight 1000 pF 5000 DCWV capacitors (EIMAC P/N 050706), 16 mounting clips (EIMAC P/N 242859), and an assembly drawing (EIMAC P/N 243135) which shows how the parts are attached to the socket.

COOLING - The tube requires forced-air cooling in all applications. An air-system socket is recommended, with a matching air chimney. Normally the tube socket is mounted in a pressurized compartment so the cooling air passes through the socket and is then guided to the anode cooling fins by an air chimney. A chimney is available from EIMAC, the SK-316, for use with the SK-300A socket at frequencies below 30 MHz and with the SK-360 at VHF. If all cooling air is not passed around the base of the tube and through the socket, then arrangements must be made to assure adequate cooling of the tube base and the socket contacts themselves.

In this regard it should be noted the contact fingers used in the four contact collet assemblies (inner and outer filament, control grid and screen grid) are made of beryllium copper. If operated above 150°C for any appreciable length of time this material will lose its temper (or springy characteristic) and then will no longer make good contact to the base rings of the tube. This can lead to arcing which, in an extreme case, can burn through the metal of the tube base ring and the tube's vacuum integrity is then destroyed.

Thus adequate movement of cooling air around the base of the tube accomplishes a double purpose in keeping the tube base and the socket contact fingers at a safe operating temperature.

Though the maximum temperature rating for seals and the anode core is 250°C, it is considered good engineering practice to allow some safety factor and the table shown is for sea level with cooling air at 50°C and maximum tube anode temperature of 225 °C. Such a safety factor makes some allowance for variables such as dirty air filters, dirty tube anode cooling fins which will effect cooling efficiency, duct losses, etc. The figures shown are for the tube in an air-system socket with an air chimney in place, with air passing in a base-to-anode direction. Pressure drop values shown are approximate and are for the tube/socket/chimney combination.

Plate Diss. (Watts)	Air Flow (cfm)	Press.Drop Inches Water
7,500	230	0.7
12,500	490	2.7
15,000	645	4.6
18,000	970	8.2

At altitudes significantly above sea level flow rate must be increased for equivalent cooling. At 5000 feet both the flow rate and the pressure drop should be increased by a factor of 1.20, while at 10,000 feet both flow rate and pressure drop must be increased by 1.46.

Anode and base cooling should be applied before or simultaneously with filament voltage turnon and should normally continue for a brief period after shutdown to allow the tube to cool down properly.

IMPACT AND VIBRATION - The 9019/YC130 has a thoriated tungsten mesh filament and is intended for regular commercial service. Any tube with a thoriated tungsten filament should be protected from undue shock and vibration and if not installed in equipment should always be stored in its protective packing material in its shipping container.

ELECTRICAL

ABSOLUTE MAXIMUM RATINGS - Values shown for each type of service are based on the "absolute system" and are not to be exceeded under any service conditions. These ratings are limiting values outside which the serviceability of the tube may be impaired. In order not to exceed absolute ratings the equipment designer has the responsibility of determining an average design value for each rating below the absolute value of that rating by a safety factor so the absolute values will never be exceeded under any usual conditions of supply-voltage variation, load variation, or manufacturing variation in the equipment itself. It does not necessarily follow that combinations of absolute maximum ratings can be attained simultaneously.

HIGH VOLTAGE - Normal operating voltages used with this tube are deadly, and the equipment must be designed properly and operating precautions must be followed. Design all equipment so that no one can come in contact with high voltages. All equipment must include safety enclosures for high-voltage circuits and terminals, with interlock switches to open primary circuits of the power supply and to discharge high-voltage capacitors whenever access doors are opened. Interlock switches must not be bypassed or "cheated" to allow operation with access doors open. Always remember that HIGH VOLTAGE CAN KILL.

FILAMENT OPERATION - With a new tube, or one which has been in storage for some period of time, operation with filament voltage only applied for a period of 30 to 60 minutes is recommended before full operation begins. This allows the active getter material mounted within the filament structure to absorb any residual gas molecules which have accumulated during storage. Once normal operation has been established a minimum filament warmup time of four to five seconds is normally sufficient.

At rated (nominal) filament voltage the peak emission capability of the tube is many times that needed for communication service. A reduction in filament voltage will lower the filament temperature, which will substantially increase life expectancy. The correct value of filament voltage should be determined for the particular application. It is recommended the tube be operated at full nominal voltage for an initial stabilization period of 100 to 200 hours before any action is taken to operate at reduced voltage. The voltage should gradually be reduced until there is a slight degradation in performance (such as power output or distortion). The voltage should then be increased a few tenths of a volt above the value where performance degradation was noted for operation. The operating point should be rechecked after 24 hours.

Filament voltage should be closely regulated when voltage is to be reduced below nominal in this manner, to avoid any adverse influence by normal line voltage variations.

Filament voltage should be measured at the tube base or socket, using an accurate rms-responding meter. Periodically throughout the life of the tube the procedure outlined above for reduction of voltage should be repeated, with voltage reset as required, to assure best tube life.

EIMAC Application Bulletin #18 titled "EXTENDING TRANSMITTER TUBE LIFE" contains valuable information and is available on request.

GRID OPERATION - Maximum control grid dissipation is 200 watts, determined approximately by the product of the dc grid current and the peak positive grid voltage. A protective spark-gap device should be connected between control grid and cathode to guard against excessive voltage.

SCREEN OPERATION - The maximum screen grid dissipation is 450 watts. With no ac applied to the screen grid, dissipation is simply the product of dc screen voltage and the dc screen current. With screen modulation, dissipation is dependent on rms screen voltage and rms screen current. Plate voltage, plate loading, or bias voltage must never be removed while filament and screen voltages are present, since screen dissipation ratings will be exceeded. A protective spark-gap device should be connected between the screen grid and the cathode to guard against excessive voltage.

PLATE DISSIPATION - The rated maximum plate dissipation of the tube is 18 kilowatts, which may be safely sustained with adequate air cooling. When the tube is used as a plate-modulated rf amplifier the dissipation under carrier conditions should be limited to 12 kilowatts.

FAULT PROTECTION - In addition to the normal plate over-current interlock, screen current interlock, and cooling air interlock, the tube must be protected from internal damage caused by an internal plate arc which may occur at high plate voltage. A protective resistance should always be connected in series with each tube anode, to help absorb power supply stored energy if an internal arc should occur. An electronic crowbar, which will discharge power supply capacitors in a few microseconds after the start of an arc, is recommended. The protection criteria for each electrode supply is to short each electrode to ground, one at a time, through a vacuum relay switch and a 6-inch length of #30 AWG copper wire. The wire will remain intact if protection is adequate.

EIMAC Application Bulletin #17 titled FAULT PROTECTION contains considerable detail and is available from EIMAC on request.

RADIO-FREQUENCY RADIATION - Avoid exposure to strong rf fields even at relatively low frequency. Absorption of rf energy by human tissue is dependent on frequency. Under 300 MHz most of the energy will pass completely through the human body with little attenuation or heating affect. Public health agencies are concerned with the hazard even at these frequencies. OSHA (Occupational Safety and Health Administration) recommends that prolonged exposure to rf radiation should be limited to 10 milliwatts per square centimeter.

INTERELECTRODE CAPACITANCE - The actual internal interelectrode capacitance of a tube is influenced by many variables in most applications, such as stray capacitance to the chassis, capacitance added by the socket used, stray capacitance between tube terminals, and wiring effects. To control the actual capacitance values within the tube, as the key component involved, the industry and Military Services use a standard test procedure as described in Electronic Industries Association Standard RS-191. This requires the use of a specially constructed test fixture which shields all external tube leads or contacts from each other and eliminates any capacitance reading to "ground". The test is performed on a cold tube. Other factors being equal, controlling internal tube capacitance in this way normally assures good interchangeability of tubes over a period of time. The capacitance values shown in the technical data are taken in accordance with Standard RS-191.

The equipment designer is therefore cautioned to make allowance for the actual capacitance values which will exist in the appliction. Measurements should be taken with the mounting which represents approximate final layout if capacitance values are highly significant in the design.

SPECIAL APPLICATIONS - When it is desired to operate this tube under conditions widely different from those listed here, write to Varian EIMAC; attn: Product Manager; 301 Industrial Way; San Carlos, CA 94070 U.S.A.

OPERATING HAZARDS

PROPER USE AND SAFE OPERATING PRACTICES WITH RESPECT TO POWER TUBES ARE THE RESPONSIBILITY OF EQUIPMENT MANUFACTURERS AND USERS OF SUCH TUBES. ALL PERSONS WHO WORK WITH OR ARE EXPOSED TO POWER TUBES OR EQUIPMENT WHICH UTILIZES SUCH TUBES MUST TAKE PRECAUTIONS TO PROTECT THEMSELVES AGAINST POSSIBLE SERIOUS BODILY INJURY. DO NOT BE CARELESS AROUND SUCH PRODUCTS.

The operation of this tube may involve the following hazards, any one of which, in the absence of safe operating practices and precautions, could result in serious harm to personnel:

a. HIGH VOLTAGE - Normal operating voltages can be deadly. Remember that HIGH VOLTAGE CAN KILL.

b. LOW-VOLTAGE HIGH-CURRENT CIRCUITS - Personal jewelry, such as rings, should not be worn when working with filament contacts or connectors as a short circuit can produce very high current and melting, resulting in severe burns.

c. RF RADIATION - Exposure to strong rf fields should be avoided, even at relatively low frequencies. The dangers of rf radiation are more severe at UHF and microwave frequencies and can cause serious bodily and eye injuries. CARDIAC PACEMAKERS MAY BE EFFECTED.

d. HOT SURFACES - Surfaces of tubes can reach temperatures of several hundred °C and cause serious burns if touched for several minutes after all power is removed.

Please review the detailed operating hazards sheet enclosed with each tube, or request a copy from: Varian EIMAC, Power Grid Application Engineering, 301 Industrial Way, San Carlos CA 94070.

DIMENSIONAL DATA

DIM.	INCHES			MILLIMETERS		
	MIN.	MAX.	REF.	MIN.	MAX.	REF.
A	7.460	7.580	- -	189.48	192.53	- -
B	0.855	0.895	- -	21.72	22.73	- -
C	0.720	0.760	- -	18.29	19.30	- -
D	1.896	1.936	- -	46.63	49.17	- -
E	3.133	3.173	- -	79.58	80.59	- -
F	3.792	3.832	- -	96.32	97.33	- -
G	3.980	4.020	- -	101.09	102.11	- -
H	0.188	- -	- -	4.78	- -	- -
J	0.188	- -	- -	4.78	- -	- -
K	0.188	- -	- -	4.78	- -	- -
L	1.764	1.826	- -	44.81	46.38	- -
M	4.659	4.783	- -	118.34	121.49	- -
N	2.412	2.788	- -	61.26	70.82	- -
P	9.000	9.375	- -	228.60	238.13	- -
R	0.986	1.050	- -	25.04	26.67	- -
S	3.560	3.684	- -	90.42	93.57	- -
T	0.375	- -	- -	9.53	- -	- -
U	4.406	4.468	- -	111.91	113.49	- -
V	3.718	3.781	- -	94.44	96.04	- -
W	0.219	- -	- -	5.56	- -	- -

NOTES:
1. REF. DIMENSIONS ARE FOR INFO. ONLY & ARE NOT REQUIRED FOR INSPECTION PURPOSES.

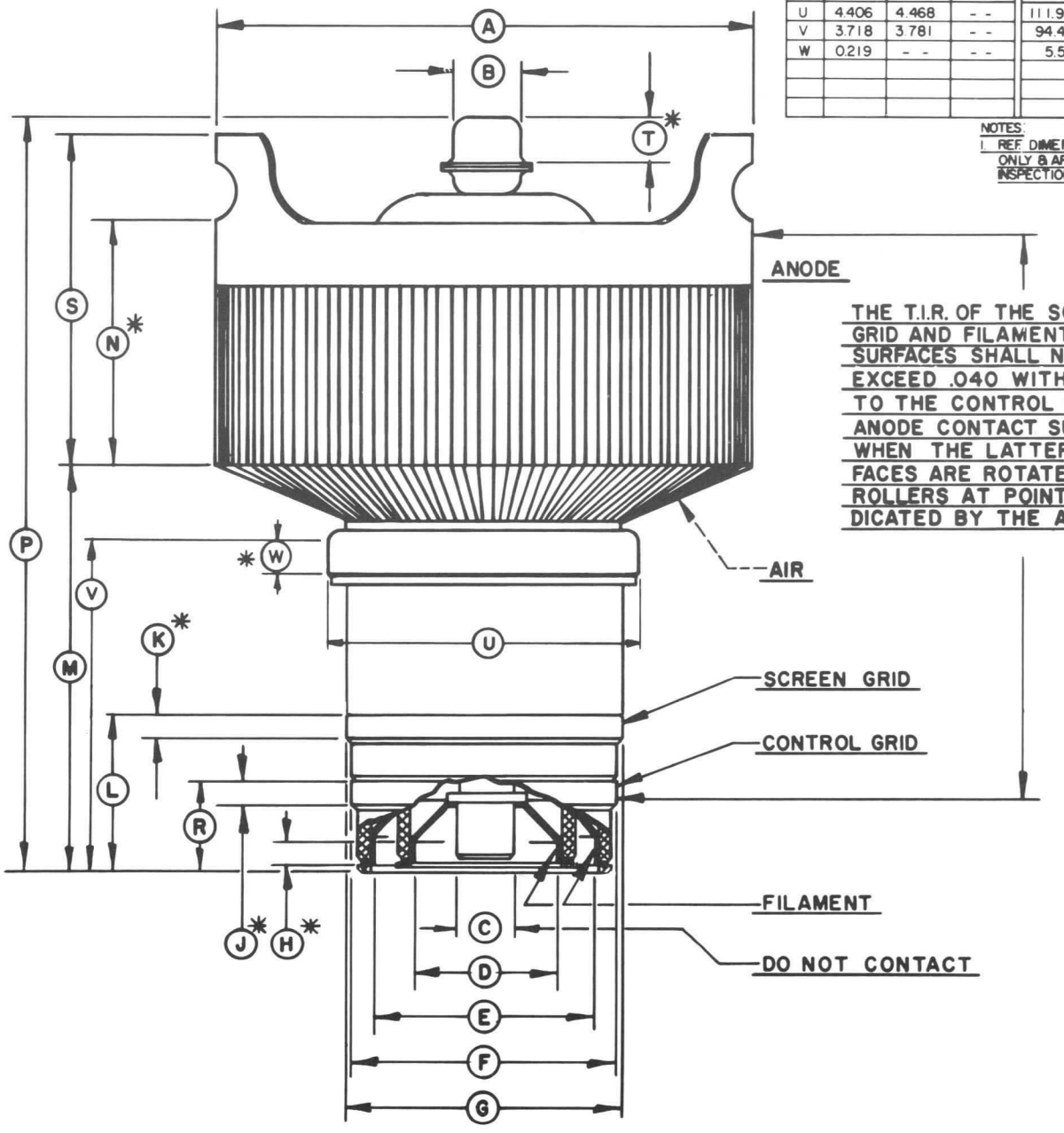

* CONTACT SURFACE

ADVANCE PRODUCT ANNOUNCEMENT

PMS 9019
YC130

VHF RADIAL BEAM POWER TETRODE

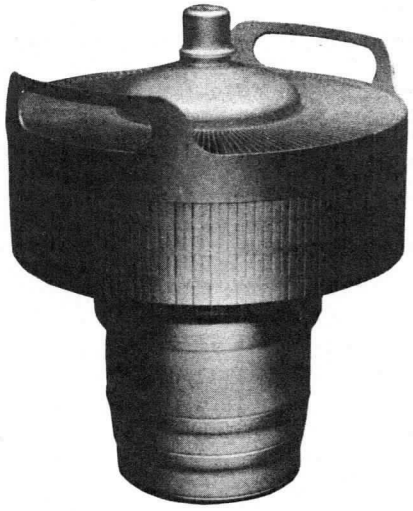

The EIMAC 9019/YC130 is a ceramic/metal VHF power tetrode. It is rated for full power input to 110 MHz and is recommended for use as a Class C power amplifier or plate modulated amplifier.

Air-system sockets and matching air chimneys are available from EIMAC. A connector clip is available for making the dc connection to the anode.

GENERAL CHARACTERISTICS [1]

ELECTRICAL

Filament: Thoriated Tungsten Mesh	
Voltage	7.5 ± 0.37 V
Current, at 7.5 volts	160 A
Amplification Factor (average), Grid to Screen	4.5
Direct Interelectrode Capacitance (cathode grounded) [2]	
Cin	160 pF
Cout	26.5 pF
Cgp	1.5 pF
Direct Interelectrode Capacitance (grids grounded) [2]	
Cin	67 pF
Cout	27.5 pF
Cpk	0.2 pF
Maximum Frequency for Full Ratings (CW)	110 MHz

1. Characteristics and operating values are based on performance tests. These figures may change without notice as the result of additional data or product refinement. Varian EIMAC should be consulted before using this information for final equipment design.
2. Capacitance values are for a cold tube as measured in a special shielded fixture in accordance with Electronic Industries Association Standard RS-191.

MECHANICAL

Maximum Overall Dimensions:	
Length	9.375 In; 23.81 cm
Diameter	7.580 In; 19.25 cm
Net Weight	12.8 Lb; 5.8 kg
Operating Position	Axis Vertical, Base Up or Down
Maximum Operating Temperature, Ceramic/Metal Seals or Envelope	250°C
Cooling	Forced Air
Base	Special Concentric
Recommended Air-System Socket: For LF or HF Service	EIMAC SK-300A
For VHF Service	EIMAC SK-360
Recommended Air-System Chimney: For Either the SK-300A or SK-360 Socket	EIMAC SK-316
Recommended Screen Grid Bypass Capacitor Kit for the SK-360 Socket	EIMAC SK-355
Available Anode Connector Clip	EIMAC ACC-3

RADIO FREQUENCY POWER AMPLIFIER
Class C FM
(Key-down conditions)

ABSOLUTE MAXIMUM RATINGS

DC PLATE VOLTAGE	10,000 VOLTS
DC SCREEN VOLTAGE	2000 VOLTS
DC GRID VOLTAGE	-750 VOLTS
DC PLATE CURRENT	5.0 AMPERES
PLATE DISSIPATION	18 KILOWATTS
SCREEN DISSIPATION	450 WATTS
GRID DISSIPATION	200 WATTS

TYPICAL OPERATION (Frequencies to 110 MHz)

DC Plate Voltage	7.5	10.0	kVdc
DC Screen Voltage	750	750	Vdc
DC Grid Voltage	-510	-550	Vdc
DC Plate Current	4.65	4.55	Adc
DC Screen Current *	0.59	0.54	Adc
DC Grid Current *	0.30	0.27	Adc
Peak rf Grid Voltage *	730	790	v
Calculated Driving Power	220	220	W
Plate Dissipation	8.1	9.0	kW
Plate Output Power	26.7	36.5	kW

* Approximate value; will vary with circuit and tube

395035(Effective March 1986)
VA4889

Printed in U.S.A.

TECHNICAL DATA

* 8973

WATER-COOLED POWER TETRODE

* Previous designation was X-2170

The EIMAC 8973 is a ceramic/metal, water-cooled power tetrode designed for very-high-powered medium-frequency or high-frequency broadcast service and very-low-frequency communication in the half-megawatt power range.

The 8973 has a thoriated-tungsten mesh filament mounted on water-cooled supports. The maximum anode dissipation rating is 650 kilowatts steady state.

Large-diameter coaxial terminals are used for the control grid and the rf filament terminals. Filament power and filament support cooling-water connections are made through special couplings.



GENERAL CHARACTERISTICS[1]

ELECTRICAL

Filament: Thoriated-tungsten Mesh		
Voltage	18.5 ± 0.9	V
Current at 18.5 V	650	A
Amplification Factor (Average), Grid to Screen	4.5	
Direct Interelectrode Capacitance (grounded cathode):[2]		
Cin	1000	pF
Cout	165	pF
Cgp	5	pF

Frequency of Operation: useful to 100 MHz.

1. Characteristics and operating values are based upon performance tests. These figures may change without notice as the result of additional data or product refinement. EIMAC Division of Varian should be consulted before using this information for final equipment design.

2. Capacitance values shown are nominal, measured with no special shielding.

MECHANICAL

Maximum Overall Dimensions:	
Length	18.75 in; 47.62 cm
Diameter	17.03 in; 43.26 cm
Net Weight	153 lbs; 69.5 kg
Operating Position	Vertical, base down
Cooling	Water and Forced Air
Base Terminals	Special

(Effective 7-1-78) © 1978 by Varian Printed in U.S.A.

Recommended Filament Connectors (not supplied with tube):

Filament Power/Water Connector (2 required)	EIMAC SK-2310
Filament rf Connector (1 required)	EIMAC SK-2315

Recommended Anode Cooling Water Connectors (not supplied with tube):

Note: 2 SK-2320 or SK-2321 connectors are required per tube.

Complete fitting, with knurled nut, replaceable electrolytic target, 20-inch length canvas hose, corona shield, and 2-1/2-inch female pipe fitting to mate to rigid pipe	EIMAC SK-2320
Fitting similar to SK-2320 but does not include the 20-inch length of canvas hose and pipe fitting	EIMAC SK-2321

Maximum Operating Temperature: Envelope, and Ceramic/Metal Seals	200 °C

RADIO FREQUENCY LINEAR AMPLIFIER GRID DRIVEN

Class AB

ABSOLUTE MAXIMUM RATINGS:

DC PLATE VOLTAGE	22.5 KILOVOLTS
DC SCREEN VOLTAGE	2.5 KILOVOLTS
DC PLATE CURRENT	65 AMPERES
PLATE DISSIPATION	650 KILOWATTS
SCREEN DISSIPATION	7.5 KILOWATTS
GRID DISSIPATION	2.0 KILOWATTS

TYPICAL OPERATION (Frequencies to 30 MHz)
Class AB_1, Peak Envelope Conditions

Plate Voltage	20.0 kVdc
Screen Voltage	1500 Vdc
Grid Voltage [1]	-360 Vdc
Zero Signal Plate Current	10 Adc
Single Tone Plate Current	45 Adc
Single Tone Screen Current [2]	2.0 Adc
Peak rf Grid Voltage [2]	360 v
Plate Dissipation	250 kW
Plate Load Resistance	264 Ω
Plate Power Output	610 kW

1. Adjust to specified zero-signal plate current.
2. Approximate value.

RADIO FREQUENCY POWER AMPLIFIER OR OSCILLATOR Class C Telegraphy or FM

(Key-down Conditions)

ABSOLUTE MAXIMUM RATINGS:

DC PLATE VOLTAGE	22.5 KILOVOLTS
DC SCREEN VOLTAGE	2.5 KILOVOLTS
DC PLATE CURRENT	65 AMPERES
PLATE DISSIPATION	650 KILOWATTS
SCREEN DISSIPATION	7.5 KILOWATTS
GRID DISSIPATION	2.0 KILOWATTS

TYPICAL OPERATION (Frequencies to 30 MHz)

Plate Voltage	21.0 kVdc
Screen Voltage	2.5 Vdc
Grid Voltage	-600 Vdc
Plate Current	63 Adc
Screen Current [1]	9 Adc
Grid Current [1]	3.5 Adc
Calculated Driving Power	3.5 kW
Plate Dissipation [1]	273 kW
Plate Load Resistance	166 Ω
Plate Power Output	1050 kW

1. Approximate value.

PLATE MODULATED RADIO FREQUENCY POWER AMPLIFIER Class C Telephony
(Carrier Conditions)

ABSOLUTE MAXIMUM RATINGS

DC PLATE VOLTAGE	17.5	KILOVOLTS
DC SCREEN VOLTAGE	2.0	KILOVOLTS
DC PLATE CURRENT	50	AMPERES
PLATE DISSIPATION	400	KILOWATTS
SCREEN DISSIPATION	7.5	KILOWATTS
GRID DISSIPATION	2.0	KILOWATTS

TYPICAL OPERATION (Frequencies to 30 MHz)

Plate Voltage	17.5	kVdc
Screen Voltage	800	Vdc
Grid Voltage	-800	Vdc
Plate Current	50	Adc
Screen Current [1]	4	Adc
Grid Current [1]	2.2	Adc
Pk. Screen Voltage (100% Mod)	800	v
Pk. rf Grid Voltage	1060	v
Calculated Driving Power	2400	W
Plate Dissipation	175	kW
Plate Load Resistance	165	Ω
Plate Output Power	700	kW

1. Approximate value.

AUDIO FREQUENCY POWER AMPLIFIER OR MODULATOR
Class AB

ABSOLUTE MAXIMUM RATINGS (per tube):

DC PLATE VOLTAGE	22.5	KILOVOLTS
DC SCREEN VOLTAGE	2.5	KILOVOLTS
DC PLATE CURRENT	65	AMPERES
PLATE DISSIPATION	650	KILOWATTS
SCREEN DISSIPATION	7.5	KILOWATTS
GRID DISSIPATION	2.0	KILOWATTS

1. Adjust for stated zero-signal plate current.
2. Approximate value.

TYPICAL OPERATION Two Tubes - Sinusoidal Wave

Plate Voltage	17.5	kVdc
Screen Voltage	1500	Vdc
Grid Voltage [1]	-400	Vdc
Zero Signal Plate Current	5	Adc
Max. Signal Plate Current	78	Adc
Max Signal Screen Current [2]	2.8	Adc
Pk. Audio Freq. Grid Voltage [3]	370	v
Max. Signal Plate Dissipation [3]	550	kW
Plate-Plate Load Resistance	444	Ω
Plate Output Power [4]	950	kW

3. Per Tube.
4. Suitable to modulate a carrier power of 1.25 Megawatts.

NOTE: TYPICAL OPERATION data are obtained by calculation from the published characteristic curves. Adjustment of the rf grid voltage to obtain the specified plate current at the specified bias, screen, and plate voltages is assumed. If this procedure is followed, there will be little variation in output power then the tube is changed, even though there may be some variation in grid and screen current. The grid and screen currents which result when the desired plate current is obtained are incidental and vary from tube to tube. These current variations cause no difficulty so long as the circuit maintains the correct voltage in the presence of the variations in current.

APPLICATION

MECHANICAL

MOUNTING - The 8973 must be mounted vertically, base down. The full weight of the tube should rest on the main screen-grid contact flange at the base of the tube, and all lifting of the tube should be done with the lifting eye which is attached to the top of the anode cooling jacket.

COOLING - Minimum cooling water requirements for the anode are shown in the table, for an outlet water temperature not to exceed 70° C and an inlet water temperature of 50° C. System pressure should not exceed 100 psi. High-purity water must be used to minimize power loss, corrosion of metal fittings, and loss of anode dissipation capability. Water resistivity must be maintained at 1 megohm/cm (at 25° C) or better for long-term operation. EIMAC Application Bulletin #16 should be consulted for details on maintenance of water quality standards and use of a water purification loop in the installation. Since the anode is normally at high potential to ground, water connections to the anode are made through insulating tubing, with long enough sections that column resistance is above 4 megohms per 1000 plate supply volts, or 10 megohms total, whichever is less.

Anode Dissipation (kW)	Water Flow (gpm)	Apprx. Jacket Press. Drop (psi)
250	120	20
450	165	30
650	200	40

The tube base requires air cooling, with a minimum of 50 cfm of air at 50° C maximum at sea level, directed toward the base seal areas from a general purpose fan.

Water cooling of the filament and screen grid supports is also required, with inlet water temperature not to exceed 50° C. Each of the 2 filament connectors includes both an inlet and outlet line, with the proper section for the inlet water shown on the outline drawing. Minimum flow for the F1 connector is 2.0 gpm, at an approximate pressure drop of 12 psi. Minimum flow for the F2 connector is 4.0 gpm, at an approximate pressure drop of 50 psi. The screen grid cooling water is fed by means of 1/4-18 NPT tapped holes shown on the outline drawing, with a minimum flow of 2.0 gpm required, at an approximate pressure drop of 12 psi.

All cooling must be applied before or simultaneously with the application of electrode voltages, including the filament, and should be maintained for at least two minutes after all voltages are removed to allow for tube cooldown.

As regards base air cooling, temperatures of the ceramic/metal seals and the lower envelope areas are the controlling and final limiting factor. Temperature-sensitive paints are available for use in checking temperatures in these areas before equipment design and air-cooling arrangements are finalized.

ELECTRICAL

FILAMENT OPERATION - Filament turn-on and turn-off should be programmed in accordance with a special procedure. Filament voltage should be smoothly increased from zero to the operating level over a period of two minutes, and a motor-driven VARIAC or POWERSTAT is suggested. Inrush current must never be allowed to exceed twice the normal operating current. Turnoff procedure should be a smooth decrease from the operating voltage to zero over a period of two minutes, such as would be provided by a motor-driven VARIAC, POWERSTAT or solid-state regulator circuit.

Filament voltage should be measured at the tube base with an accurate meter. When operating at the nominal voltage, variations of ±5% are tolerable and should have little effect on the electrical performance of the tube. When very long life and consistent performance are factors, the filament voltage can often be reduced to a lower value than the nominal, but should be regulated and held to ±1% when this is done. To achieve a regulated voltage and still have it adjustable a typical procedure would involve a one-to-one regulating transformer feeding a variable-ratio transformer, which in turn feeds the filament transformer. The equipment is first operated with nominal filament voltage, and when stable operation is achieved the voltage is then reduced in small steps, until a point is reached where performance of the tube is clearly affected. The voltage is then raised a few tenths of a volt above this level for operation. Periodically the procedure should be repeated and the operating value of filament voltage readjusted if necessary. This value is normally 16.5 to 17.0 volts rms (initially).

Where hum is an important system consideration it may be necessary to operate the filaments with dc rather than ac power, or provide suitable hum-bucking circuits.

Care should be exercised to keep any rf power out of the filament of the tube, as this can cause excessive operating temperatures. A HEWLETT-PACKARD Vector Impedance meter is useful in detecting the presence of impedance that will support rf buildups in the filament "backcavity" circuit.

VACION PUMP OPERATION - The tube is supplied with an ion pump and magnet, mounted inside the filament structure at the base (stem). A power supply (Varian Part #921-0015) and 8-foot cable (Varian Part #924-0020) are required for operation.

It is reommended that the VACION pump be operated continuously if possible; otherwise it should be operated at least once a year until the indicator meter shows 1.0 μA or less of current.

ABSOLUTE MAXIMUM RATINGS - The values shown for each type of service are based on the "absolute system" and are not to be exceeded under any service conditions. These ratings are limiting values outside which the serviceability of the tube may be impaired. In order not to exceed absolute ratings, the equipment designer has the responsibility of determining an average design value for each rating below the absolute value of that rating by a safety factor so that the absolute values will never be exceeded under any usual conditions of supply voltage variation, load variation, or manufacturing variations in the equipment itself. It does not necessarily follow that combinations of absolute maximum ratings can be attained simultaneously.

GRID OPERATION - The 8973 control grid is rated at 2000 watts of dissipation. Protective measures should be included in the circuitry to insure that this rating is not exceeded. Control grid

dissipation is the approximate product of the dc grid current and peak positive grid voltage.

SCREEN GRID OPERATION - Base cooling (air and water) must be on and at the correct level before tube operation is started. The power applied to the screen grid must not exceed 7500 watts. Where no ac is applied to the screen, dissipation is the product of dc screen voltage and dc screen current. With screen modulation the dissipation is the product of rms screen current and rms screen voltage.

Plate voltage, plate load, or grid bias voltage must never be removed while filament and screen voltages are present since the screen dissipation rating will be exceeded. Suitable protective circuitry must be provided to remove screen power in case of such a fault condition. Tetrode tubes may exhibit reversed screen current to a greater or lesser degree depending on individual tube design and operating conditions. The screen supply voltage must be maintained constant for any values of negative or positive screen currents that may be encountered. Dangerously high plate currents may flow if the screen power supply exhibits a rising voltage characteristic with negative screen current. Stabilization may be accomplished by use of a shunt regulator circuit in the screen voltage supply, bleeder resistors, or other suitable techniques.

PLATE OPERATION - The maximum dissipation rating of the 8973 is 650 kilowatts with water cooling. When used as a plate-modulated rf amplifier, plate dissipation under carrier conditions is limited to 400 kilowatts.

Specified anode dissipation ratings assume 10 kilovolts maximum anode voltage during conduction. If full rated dissipation at a tube drop greater than this value for periods greater than 200 milliseconds is desired, contact EIMAC's Power Grid Tube Application Engineering Office.

FAULT PROTECTION - To assure nondestruction of tube elements from high-energy power supplies, during a fault condition, all supplies must be checked for proper operation of their protective circuits. An approved method to meet the tube protection criteria would be the use of foil, solder wire, or small diameter wire to produce a controlled short on the power supply. The simplest technique is to short the plate to cathode, screen grid to cathode, control grid to cathode, and screen grid to anode (individually, one at a time) using a vacuum relay through a section of #30 AWG copper wire, which should be approximately inches long. The wire will remain intact if the power supply protective circuitry is operating properly. An electronic crowbar will be required on the anode supply, and may be required on the other electrode supplies if the test outlined above is not passed. See EIMAC Application Bulletin #17 for further details.

Properly rated spark gaps should be located between the screen grid and cathode, and between the control grid and cathode, to meet over-voltage protection criteria. A series resistance of 10 to 50 ohms is recommended in the screen and control grid power supply leads.

HIGH VOLTAGE - Normal operating voltages used with the 8973 are deadly, and the equipment must be designed properly and operating precautions must be followed. Design all equipment so that no one can come in contact with high voltages. All equipment must include safety enclosures for high-voltage circuits and terminals, with interlock switches to open primary circuits of the power supplies and to discharge high-voltage condensers whenever access doors are opened. Interlock switches must not be bypassed or "cheated" to allow operation with access doors open. Always remember that HIGH VOLTAGE CAN KILL.

LOAD VSWR - The load VSWR should be monitored and the detected signal used to operate the interlock system to remove the plate voltage within 20 milliseconds after a fault occurs. In the case of high stored energy in the load system, care must be taken to avoid excessive return energy from damaging the tube and associated circuit components.

X-RADIATION - High-vacuum tubes operating at voltages in excess of 15 kilovolts produce progressively more dangerous X-Radiation as the voltage is increased. The 8973, operating at its rated voltages and currents, is a potential X-Ray hazard. Only limited shielding is afforded by the tube envelope. Moreover, the X-Radiation level can increase significantly with aging and gradual deterioration, due to leakage paths or emission characteristics as they are affected by the high voltage. X-Ray shielding must be provided on all sides of tubes operating at these voltages to provide adequate protection throughout the tube's life. Periodic checks on the X-Radiation level should be made, and the tube should never be operated without adequate shielding in place when voltages above 15 kilovolts are in use. Lead glass, which attenuates X-Radiation, is available for viewing windows. If there is any doubt as to the requirements for or the adequacy of shielding, an expert in this field should be contacted to perform an X-Radiation survey of

the equipment.

Operation of high-voltage equipment with interlock switches "cheated" and cabinet doors open in order to be better able to locate an equipment malfunction can result in serious X-Radiation exposure.

RADIO FREQUENCY RADIATION - Avoid exposure to strong rf fields even at relatively low frequency. Absorption of rf energy by human tissue is dependent on frequency. Under 300 MHz most of the energy will pass completely through the human body with little attenuation or heating effect. Public health agencies are concerned with the hazard, however, even at these frequencies, and it is worth noting that some commercial dielectric heating units actually operate at frequencies as low as the 13 and 27 MHz bands.

ELECTRODE RF TUNING CHARACTERISTICS - Typical electrode tuning characteristics may be obtained by contacting the EIMAC Power Grid Tube Application Engineering Office.

SPECIAL APPLICATIONS - Where it is desired to operate this tube under conditions widely different from those listed here, write to: Product Line Manager, High Power Tubes, Varian EIMAC Division, 301 Industrial Way, San Carlos, CA 94070.

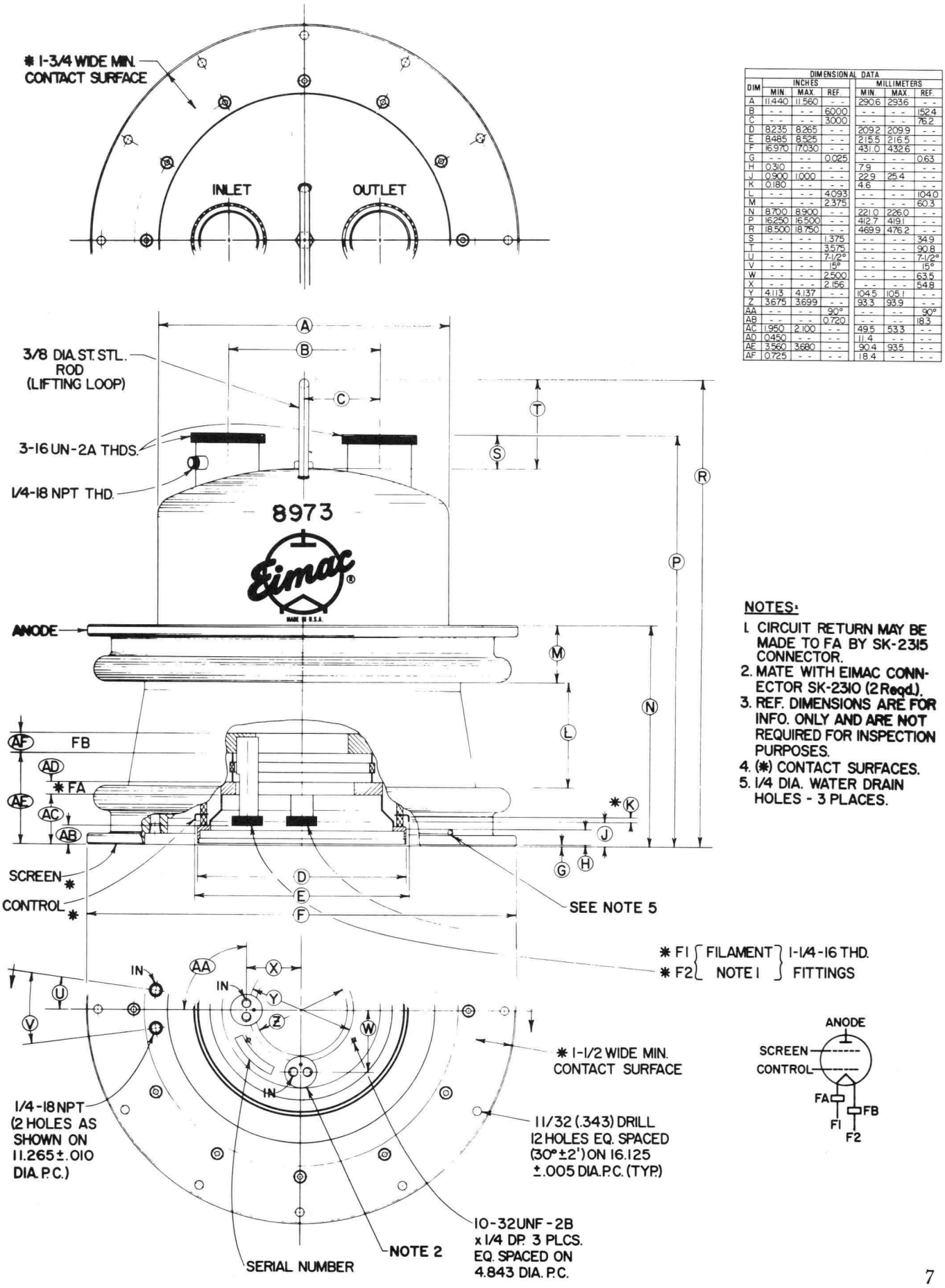

DIMENSIONAL DATA						
DIM	INCHES			MILLIMETERS		
	MIN.	MAX.	REF.	MIN.	MAX.	REF.
A	11.440	11.560	- -	290.6	293.6	- -
B	- -	- -	6.000	- -	- -	152.4
C	- -	- -	3.000	- -	- -	76.2
D	8.235	8.265	- -	209.2	209.9	- -
E	8.485	8.525	- -	215.5	216.5	- -
F	16.970	17.030	- -	431.0	432.6	- -
G	- -	- -	0.025	- -	- -	0.63
H	0.310	- -	- -	7.9	- -	- -
J	0.900	1.000	- -	22.9	25.4	- -
K	0.180	- -	- -	4.6	- -	- -
L	- -	- -	4.093	- -	- -	104.0
M	- -	- -	2.375	- -	- -	60.3
N	8.700	8.900	- -	221.0	226.0	- -
P	16.250	16.500	- -	412.7	419.1	- -
R	18.500	18.750	- -	469.9	476.2	- -
S	- -	- -	1.375	- -	- -	34.9
T	- -	- -	3.575	- -	- -	90.8
U	- -	- -	7-1/2°	- -	- -	7-1/2°
V	- -	- -	15°	- -	- -	15°
W	- -	- -	2.500	- -	- -	63.5
X	- -	- -	2.156	- -	- -	54.8
Y	4.113	4.137	- -	104.5	105.1	- -
Z	3.675	3.699	- -	93.3	93.9	- -
AA	- -	- -	90°	- -	- -	90°
AB	- -	- -	0.720	- -	- -	18.3
AC	1.950	2.100	- -	49.5	53.3	- -
AD	0.450	- -	- -	11.4	- -	- -
AE	3.560	3.680	- -	90.4	93.5	- -
AF	0.725	- -	- -	18.4	- -	- -

NOTES:

1. CIRCUIT RETURN MAY BE MADE TO FA BY SK-2315 CONNECTOR.
2. MATE WITH EIMAC CONNECTOR SK-2310 (2 Reqd.).
3. REF. DIMENSIONS ARE FOR INFO. ONLY AND ARE NOT REQUIRED FOR INSPECTION PURPOSES.
4. (*) CONTACT SURFACES.
5. 1/4 DIA. WATER DRAIN HOLES - 3 PLACES.

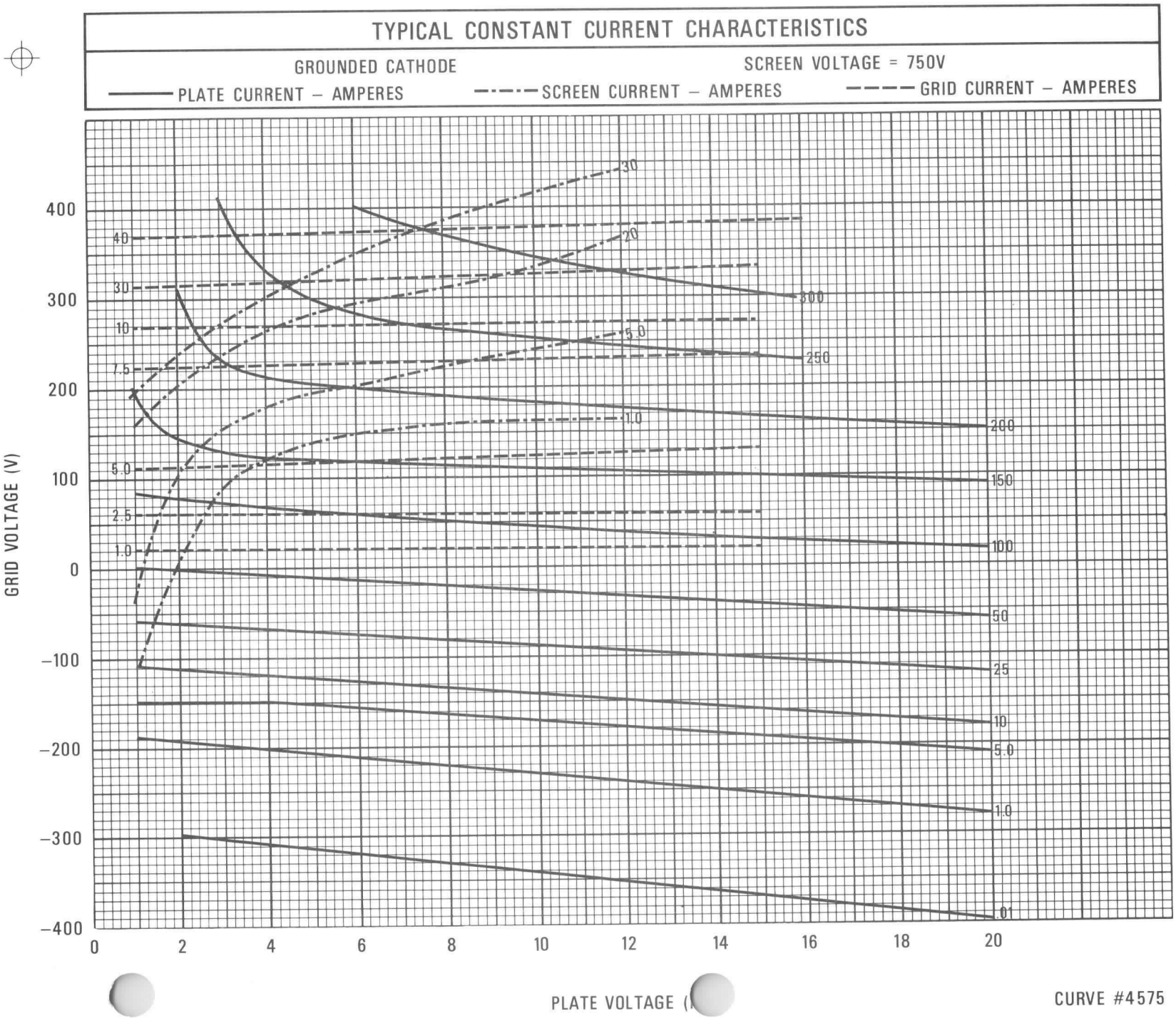
TYPICAL CONSTANT CURRENT CHARACTERISTICS
GROUNDED CATHODE
SCREEN VOLTAGE = 750V
PLATE CURRENT – AMPERES
SCREEN CURRENT – AMPERES
GRID CURRENT – AMPERES
GRID VOLTAGE (V)
400
300
200
100
0
–100
–200
–300
–400
0
2
4
6
8
10
12
14
16
18
20
PLATE VOLTAGE (
40
30
10
7.5
5.0
2.5
1.0
30
20
15.0
10.0
5.0
1.0
.5
.25
.1
300
250
200
150
100
50
25
10
5.0
1.0
.01
CURVE #4575

TYPICAL CONSTANT CURRENT CHARACTERISTICS

GROUNDED CATHODE — SCREEN VOLTAGE = 1000V

——— PLATE CURRENT – AMPERES -·-·- SCREEN CURRENT – AMPERES – – – GRID CURRENT – AMPERES

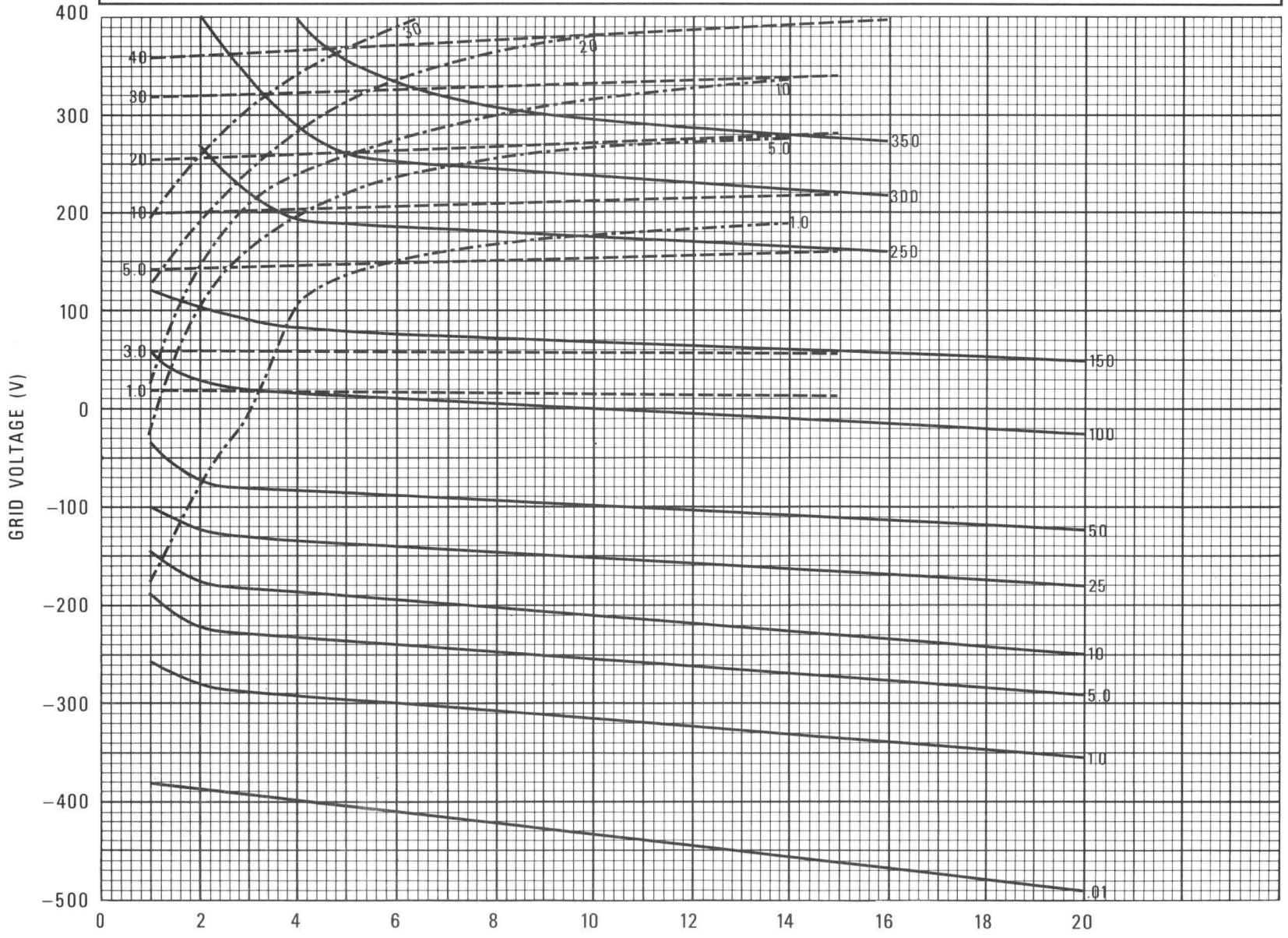

CURVE #4573

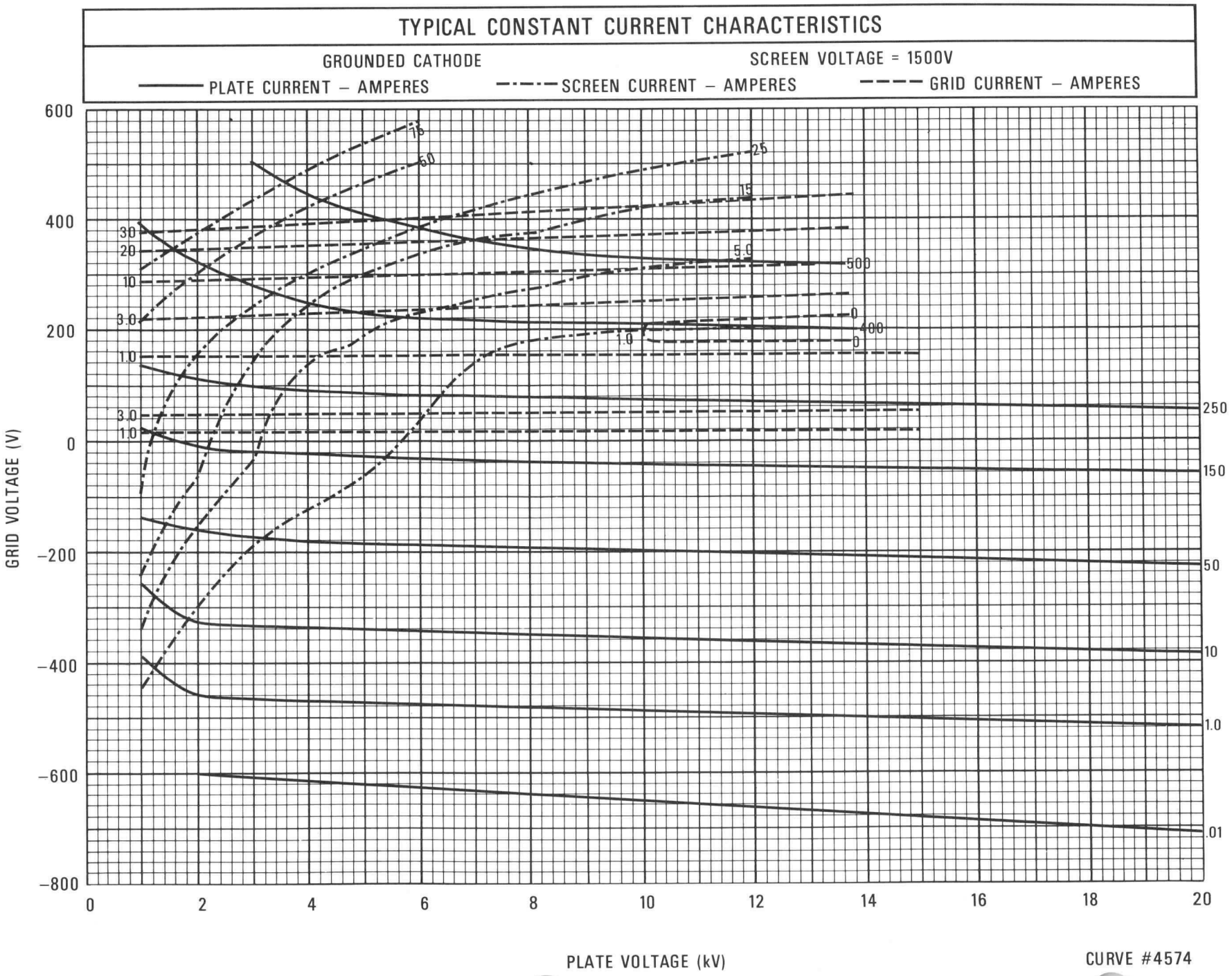
TYPICAL CONSTANT CURRENT CHARACTERISTICS
GROUNDED CATHODE
SCREEN VOLTAGE = 1500V
PLATE CURRENT – AMPERES
SCREEN CURRENT – AMPERES
GRID CURRENT – AMPERES
GRID VOLTAGE (V)
600
400
200
0
–200
–400
–600
–800
0
2
4
6
8
10
12
14
16
18
20
PLATE VOLTAGE (kV)
75
50
25
15
30
20
10
5.0
500
3.0
0
400
1.0
0
1.0
3.0
1.0
250
150
50
10
1.0
.01
CURVE #4574

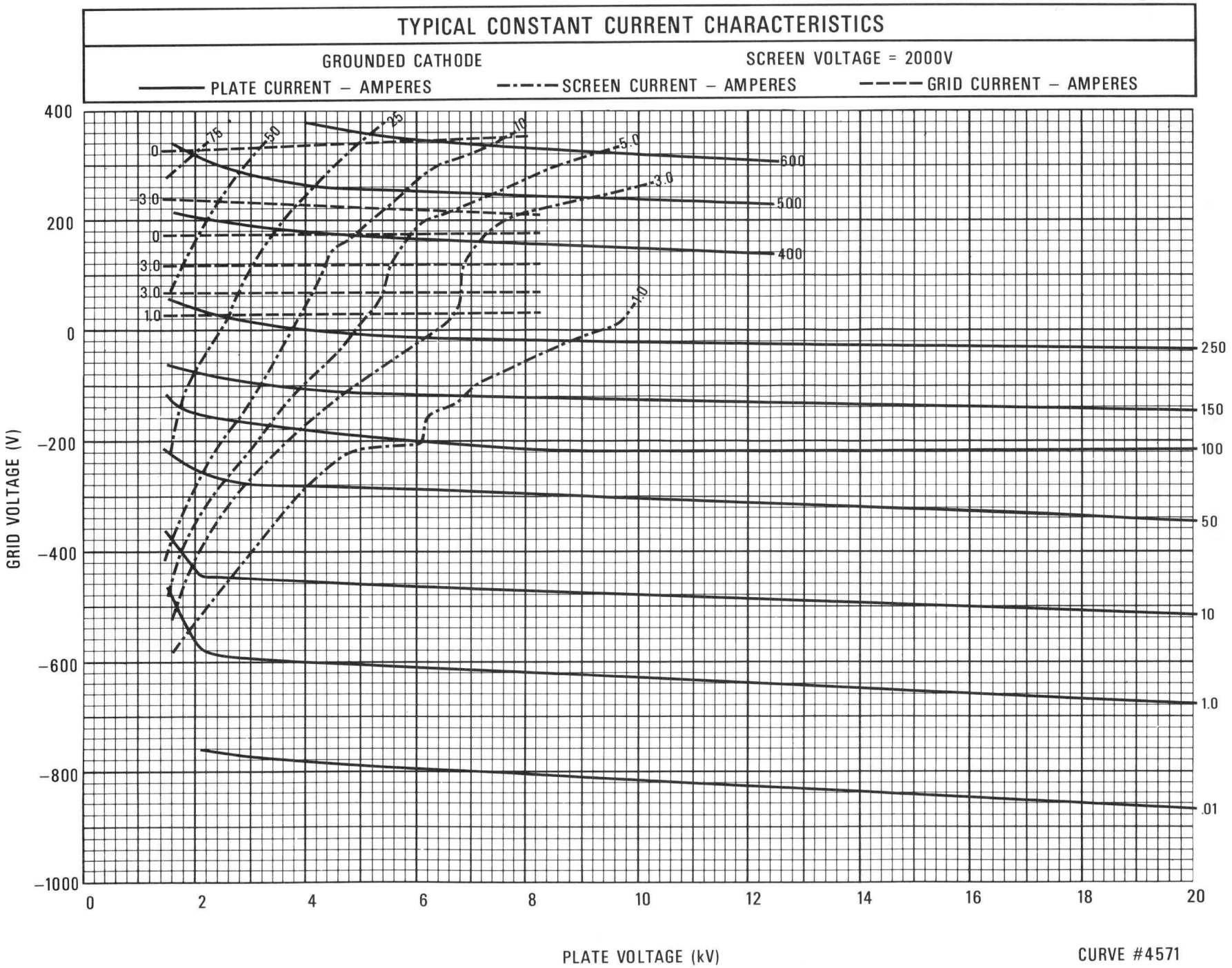
TYPICAL CONSTANT CURRENT CHARACTERISTICS
GROUNDED CATHODE
SCREEN VOLTAGE = 2000V
PLATE CURRENT – AMPERES
SCREEN CURRENT – AMPERES
GRID CURRENT – AMPERES
GRID VOLTAGE (V)
PLATE VOLTAGE (kV)
CURVE #4571
400
200
0
-200
-400
-600
-800
-1000
0
2
4
6
8
10
12
14
16
18
20
75
50
25
10
5.0
3.0
1.0
0
-3.0
0
3.0
3.0
1.0
600
500
400
250
150
100
50
10
1.0
.01

TECHNICAL DATA

8974
WATER COOLED
POWER TETRODE

The EIMAC 8974 is a ceramic/metal, water-cooled power tetrode designed for very-high-power medium and high frequency broadcast service in the megawatt power range.

The 8974 has a two-section thoriated-tungsten mesh filament mounted on water-cooled supports. The two sections may be fed from an ac or dc power source. The maximum anode dissipation rating is 1500 kilowatts steady state.

Large-diameter coaxial terminals are used for the control grid and the rf filament terminals. Filament power and filament support cooling-water connections are made through three special connectors. Anode cooling water connections are made with available hand-tightened fittings with O-ring seals.



GENERAL CHARACTERISTICS[1]

ELECTRICAL

Filament: Thoriated-tungsten Mesh, two-section	
Voltage, per section (See FILAMENT OPERATION note)	18.5 ± 0.9 V
Current @ 18.5 volts, per section (nominal)	650 A
Maximum Frequency for Full Ratings (CW)	30 MHz
Amplification Factor, Average, Grid to Screen	4.5
Direct Interelectrode Capacitances (grounded cathode)[2]	
Cin	1600 pF
Cout	260 pF
Cgp	7.5 pF
Direct Interelectrode Capacitances (grounded grid)[2]	
Cin	690 pF
Cout	265 pF
Cpk	1.5 pF

1. Characteristics and operating values are based on performance tests. These figures may change without notice as the result of additional data or product refinement. VARIAN EIMAC should be consulted before using this information for final equipment design.
2. Capacitance values shown are nominal, measured with no special shielding, in accordance with Electronic Industries Association Standard RS-191.

MECHANICAL

Net Weight	175 lb; 80 kg
Operating Position	Vertical, Base Down
Cooling	Water and Forced Air
Maximum Overall Dimensions:	
Length	25.50 in; 64.78 cm
Diameter	17.03 in; 43.26 cm
Maximum Operating Temperature, Envelope and Ceramic/Metal Seals	200 °C
Recommended Filament Power Connector (not supplied with tube):	
Filament Power/Water Connector (3 required)	EIMAC SK-2310
Filament rf Connector (1 required)	EIMAC SK-2315
Recommended Anode Cooling Water Connectors (not supplied with tube)	EIMAC SK-2320, SK-2321
Note: 2 connectors are required per tube	SK-2322 or SK-2323

396300 (Effective March 1986 - supersedes March 1984)
VA4896

Printed in U.S.A.

RADIO FREQUENCY LINEAR AMPLIFIER
GRID DRIVEN

Class AB

ABSOLUTE MAXIMUM RATINGS:

DC PLATE VOLTAGE	22.5	KILOVOLTS
DC SCREEN VOLTAGE	2.5	KILOVOLTS
DC GRID VOLTAGE	-2.0	KILOVOLTS
DC PLATE CURRENT	125	AMPERES
PLATE DISSIPATION	1500	KILOWATTS
SCREEN DISSIPATION	15	KILOWATTS
GRID DISSIPATION	4.0	KILOWATTS

TYPICAL OPERATION (Frequencies to 30 MHz)
CLASS AB1, Peak Envelope Conditions

Plate Voltage	20.0	kVdc
Screen Voltage	1500	Vdc
Grid Voltage **	-380	Vdc
Zero Signal Plate Current	20	Adc
Single Tone Plate Current	86.5	Adc
Single Tone Screen Current *	3.8	Adc
Peak rf Grid Voltage *	380	v
Plate Dissipation *	505	kW
Plate Load Resistance	132.2	Ohms
Plate Power Output *	1225	kW
Efficiency *	70.8	%

* Approximate value.
** Adjust for specified value of zero-signal plate current.

RADIO FREQUENCY POWER AMPLIFIER
Class C Telegraphy or FM
(Key-down Conditions)

ABSOLUTE MAXIMUM RATINGS:

DC PLATE VOLTAGE	22.5	KILOVOLTS
DC SCREEN VOLTAGE	2.5	KILOVOLTS
DC GRID VOLTAGE	-2.0	KILOVOLTS
DC PLATE CURRENT	125	AMPERES
PLATE DISSIPATION	1500	KILOWATTS
SCREEN DISSIPATION	15	KILOWATTS
GRID DISSIPATION	4.0	KILOWATTS

* Approximate Value

TYPICAL OPERATION (Frequencies to 30 MHz)

Plate Voltage	21.5	kVdc
Screen Voltage	1000	Vdc
Grid Voltage	-700	Vdc
Plate Current	125	Adc
Screen Current *	12	Adc
Grid Current *	7.2	Adc
Calculated Driving Power	7.0	kW
Plate Dissipation *	530	kW
Screen Dissipation *	12	kW
Grid Dissipation *	1.9	kW
Plate Load Resistance	85.5	Ohms
Plate Power Output *	2158	kW
Efficiency *	80.1	%

PLATE MODULATED RADIO FREQUENCY POWER
AMPLIFIER Class C Telephony
(Carrier Conditions)

ABSOLUTE MAXIMUM RATINGS:

DC PLATE VOLTAGE	17.5	KILOVOLTS
DC SCREEN VOLTAGE	2.0	KILOVOLTS
DC GRID VOLTAGE	-2.0	KILOVOLTS
DC PLATE CURRENT	100	AMPERES
PLATE DISSIPATION	1000	KILOWATTS
SCREEN DISSIPATION	15	KILOWATTS
GRID DISSIPATION	4.0	KILOWATTS

* Approximate value
\# 1500 kW at 100% sine-wave modulation

TYPICAL OPERATION (Frequencies to 30 MHz)

Plate Voltage	17.5	kVdc
Screen Voltage	1000	Vdc
Grid Voltage	-1000	Vdc
Plate Current	95	Adc
Screen Current *	8	Adc
Grid Current *	4.4	Adc
Peak Screen Voltage (100% modulation)	1000	v
Peak rf Grid Driving Voltage *	1280	v
Calculated Driving Power	6465	W
Plate Dissipation *	279	kW
Screen Dissipation *	8.0	kW
Grid Dissipation *	2.05	kW
Plate Load Resistance	85.6	Ohms
Plate Output Power *	1384	kW
Efficiency *	83.3	%

AUDIO FREQUENCY POWER AMPLIFIER OR
MODULATOR Class AB

ABSOLUTE MAXIMUM RATINGS (per tube):

DC PLATE VOLTAGE	22.5	KILOVOLTS
DC SCREEN VOLTAGE	2.5	KILOVOLTS
DC GRID VOLTAGE	-2.0	KILOVOLTS
DC PLATE CURRENT	125	AMPERES
PLATE DISSIPATION	1500	KILOWATTS
SCREEN DISSIPATION	15	KILOWATTS
GRID DISSIPATION	4.0	KILOWATTS

* Approximate value.
** Adjust for stated zero-signal plate current.

TYPICAL OPERATION (Two Tubes - Sinusoidal wave)

Plate Voltage	17.5	kVdc
Screen Voltage	1500	Vdc
Grid Voltage **	-455	Vdc
Zero-Signal Plate Current	10	Adc
Max.Signal Plate Current	146.2	Adc
Max.Signal Screen Current *	7.8	Adc
Peak Audio Freq.Grid Voltage #	455	v
Max.Signal Plate Dissipation #	272	kW
Plate/Plate Load Resistance	238.5	Ohms
Plate Output Power *	2015	kW

\# Per tube.

RADIO FREQUENCY POWER AMPLIFIER
Doherty Amplifier Service

ABSOLUTE MAXIMUM RATINGS:

DC PLATE VOLTAGE	22.5	KILOVOLTS
DC SCREEN VOLTAGE	2.5	KILOVOLTS
DC GRID VOLTAGE	-2.0	KILOVOLTS
DC PLATE CURRENT	125	AMPERES
PLATE DISSIPATION	1500	KILOWATTS
SCREEN DISSIPATION	15	KILOWATTS
GRID DISSIPATION	4	KILOWATTS

TYPICAL OPERATION (Frequencies to 30 MHz)

Peak Tube - Peak of Modulation

Plate Voltage	19.0	kVdc
Screen Voltage	1600	Vdc
Grid Voltage *	-1.8	kVdc
Peak Grid Drive Voltage *	2220	v
Peak Grid Drive Power *	10	kw
Peak Plate Power Out *	2750	kw
Plate Load Resistance	51.5	Ohms

* Approximate value.

Carrier Tube - Carrier Conditions

Plate Voltage	19.0	kVdc
Screen Voltage	1600	Vdc
Grid Voltage *	-400	Vdc
Grid Current *	0.14	Adc
Screen Current *	7.3	Adc
Plate Current	101	Adc
Peak Grid Driving Voltage *	443	v
Grid Driving Power *	65	W
Plate Power Output *	1380	kW
Plate Dissipation *	510	kW
Plate Efficiency *	71	%
Plate Load Resistance	102	Ohms

Carrier Tube - Peak of Modulation

Peak Grid Drive Voltage *	668	v
Peak Grid Driving Power *	1090	w
Plate Power Output *	2750	kW
Plate Load Resistance	51.5	Ohms

Actual Load Resistance at Combining Point = 25.7 Ohms
Screen dissipation averaged over a sinusoidal modulation cycle - Modulation Index 1

Carrier Tube	14.0	kW
Peak Tube	8.5	kW

TYPICAL OPERATION values are obtained by calculation from published characteristic curves. To obtain the specified plate current at the specified bias, screen, and plate voltages, adjustment of the rf grid voltage is assumed. If this procedure is followed, there will be little variation in output power when the tube is replaced, even though there may be some variation in grid and screen currents. The grid and screen currents which occur when the desired plate current is obtained are incidental and vary from tube to tube. These current variations cause no performance degradation providing the circuit maintains the correct voltages in the presence of the current variations.

RANGE VALUES FOR EQUIPMENT DESIGN	Min.	Max.	Unit
Filament Current, Per Section, at 18.5 Volts ac	600	700	Aac
Interelectrode Capacitance (grounded cathode) [1]			
Cin	1525	1675	pF
Cout	230	290	pF
Cgp	---	10	pF
Interelectrode Capacitance (grounded grid) [1]			
Cin	650	730	pF
Cout	235	295	pF
Cpk	---	2.5	pF

1 Measured with no special shielding, in accordance with Electronic Industries Association Standard RS-191.

APPLICATION

MECHANICAL

INITIAL UNPACKING - To insure the safety of the tube, the following unpacking instructions should be followed:

1. The shippping crate is opened by removing the four hex-head bolts just above the carrying handles.
2. Attach a lifting hoist to the lifting loop and raise slightly to support the weight of the tube.
3. Remove 8 bolts securing the mounting brackets to the corner flanges.
4. Lift the tube and place on blocks or on a stand so that its weight is supported by the lower flange.
5. Remove the mounting brackets from the tube by removing the eight hex bolts and nuts.

MOUNTING - The 8974 must be mounted vertically, base down. The full weight of the tube should rest on the screen-grid contact flange at the base of the tube, and all lifting of the tube should be done with the lifting eye which is attached to the top of the anode cooling jacket.

ANODE COOLING - Tube life can be seriously compromised by cooling water condition. If it becomes contaminated, deposits will form on the inside of the water jacket, causing localized anode heating and eventual tube failure. To insure minimum electrolysis and power loss, the water resistance at 25 Deg C should always be one megohm per cubic centimeter or higher. Relative water resistance can be continuously monitored in the reservoir by readily available instruments.

Minimum water flow requirements for the anode are shown in the table for an outlet water temperature not to exceed 70°C and with an inlet water temperature of 50°C. System pressure should not exceed 100 psi.

Anode Dissipation (kW)	Water Flow (gpm)	Approx.Jacket Press. Drop (psi)
Fil.Only	35	5
500	130	25
1000	250	75
1500	300	100

High velocity water flow is required to maintain high thermal efficiency. Cooling water must be well filtered, with effectivness the equivalent of a 100-mesh screen, to eliminate any solid material and avoid the possibility of blockage of any cooling passages, as this would immediately affect cooling efficiency and could produce localized anode overheating and failure of the tube.

EIMAC Application Bulletin #16, WATER PURITY REQUIREMENTS IN LIQUID COOLING SYSTEMS, is available on request, and contains considerable detail on purity requirements and maintenance systems.

BASE COOLING - The tube base requires air cooling with a minimum of 50 cfm of air at 50°C maximum at sea level, directed toward the base seal areas from a general purpose fan. At higher frequencies considerably greater flow may be required. It should be noted that temperatures of the ceramic/metal seals and the lower envelope areas are the controlling and final limiting factor.

Temperature-sensitive paints are available for use in checking temperatures in these areas before equipment design and air-cooling arrangements are finalized. Additional detail is given in EIMAC Application Bulletin #20, available on request.

Water cooling of the filament and screen grid supports is also required, with inlet water temperature not to exceed 50°C. Each of the three filament connectors includes both an inlet and an outlet line, with the proper connector for the inlet water shown on the tube outline drawing. Minimum flow for the F1 and F3 connectors is 1.0 gpm, at an approximate pressure drop of 15 psi. Minimum flow for the F2 connector is 4.0 gpm, at an approximate pressure drop of 55 psi. The screen grid cooling water is fed by means of 1/4-18 NPT tapped holes shown on the tube outline drawing, with a minimum flow of 2.0 gpm required, at an approximate pressure drop of 25 psi.

ALL COOLING MUST BE APPLIED BEFORE OR SIMULTANEOUSLY WITH THE APPLICATION OF ELECTRODE VOLTAGES, INCLUDING THE FILAMENT, AND SHOULD NORMALLY BE MAINTAINED FOR SEVERAL MINUTES AFTER ALL VOLTAGES ARE REMOVED TO ALLOW FOR TUBE COOLDOWN.

ELECTRICAL

ABSOLUTE MAXIMUM RATINGS - Values shown for each type of service are based on the "absolute system" and are not to be exceeded under any service conditions. These ratings are limiting values outside which serviceability of the tube may be impaired. In order not to exceed absolute ratings the equipment designer has the responsibility of determining an average design value for each rating below the absolute value of that rating by a safety factor so that the absolute values will never be exceeded under any usual conditions of supply-voltage variation, load variation, or manufacturing variation in the equipment itself. It does not necessarily follow that combinations of absolute maximum ratings can be attained simultaneously.

FILAMENT OPERATION - Filament turn-on and turn-off should be programmed. Filament voltage should be smoothly increased from zero to the operating level over a period of two minutes, and a motor-driven continuously variable autotransformer (such as a VARIAC® or a POWERSTAT®) is suggested. Inrush current must never be allowed to exceed twice normal operating current. Normal turnoff procedure should be a smooth decrease from the operating voltage to zero over a period of two minutes.

Filament life will be substantially improved if the filament is maintained at a standby voltage of 3.5 to 4.0 volts per section when the tube is not in use. It is recommended the filament be cycled up from and down to this standby level (rather than to 0 volts) in the manner indicated above in order to maximize filament life. A minimum cooling water flow of at least 1.0 gpm is required through all cooling circuits (including the anode) during standby operation.

At rated (nominal) filament voltage the peak emission capability of the tube is many times that needed for communication service. A reduction in

filament voltage will lower the filament temperature, which will substantially increase life expectancy. The correct value of filament voltage should be determined for the particular application. It is recommended the tube be operated at full nominal voltage for an initial stabilization period of 100 to 200 hours before any action is taken to operate at reduced voltage. The voltage should gradually be reduced until there is a slight degradation in performance (such as power output or distortion). The filament voltage should then be increased several tenths of a volt above the value where performance degradation was noted for operation. The operating point should be rechecked after 24 hours. Filament voltage should be closely regulated when voltage is to be reduced below nominal in this manner, to avoid any adverse influence by normal line voltage variations. A filament voltage of 17.5 volts per section is adequate for most applications.

Filament voltage should be measured at the tube base, using an accurate rms-responding meter. Periodically throughout the life of the tube the procedure outlined above for voltage reduction should be repeated, resetting voltage as required, to assure best tube life.

EIMAC Application Bulletin #18, titled "EXTENDING TRANSMITTER TUBE LIFE", contains detailed information and is available on request.

Where hum is an important system consideration it is permissible to operate the filaments with dc rather than ac power. Contact Varian EIMAC Application Engineering for special precautions when using a dc filament supply.

Care should be exercised to keep any rf power out of the filament of the tube, as this can cause excessive operating temperatures. Both sides of the filament must be bypassed to assure monopotential operation. It should be ascertained that no resonance exists in the filament circuit which could be excited during operation.

This tube is designed for commercial service, with one off/on filament cycle per day. If additional cycling is anticipated it is recommended the user contact Application Engineering at VARIAN EIMAC for additional information.

VACION® PUMP OPERATION - The tube is supplied with an ion pump and magnet, mounted on the filament structure at the base (stem). A power supply (Varian Part #921-0015) and an 8-foot cable (Varian Part #924-0020) are required for operation. The primary function of this device is to allow monitoring of the condition of the tube vacuum, as shown by an ion current meter.

With an operational tube it is recommended the VACION pump be operated full time so tube vacuum may be monitored on a continuous basis. A reading of less than 10 uAdc should be considered as normal, indicating excellent tube vacuum. In addition to other interlock circuitry it is recommended that full advantage be taken of the VACION pump readout by providing circuitry which will shut down all power to the tube in the event the readout current exceeds 50 uAdc. In the event of such a shutdown, the VACION pump should be operated alone until vacuum recovery is indicated by a reading of 10 uAdc or less, at which point the tube may again be made operational. If the vacuum current rises again it should be considered as indicating a circuit problem such that some tube element may be over-dissipating and outgassing.

In the case of a spare tube (non-operational) it is recommended the VACION pump be operated continuously if possible. Otherwise it should be operated periodically to check the condition of tube vacuum, and operated as long as necessary to achieve a reading of 10 uAdc or better.

Figure 1 shows the relationship between tube vacuum and the ion current reading. Electrode voltages should never be applied if a reading of 50 uAdc or higher is obtained. Filament voltage should never be applied with a VacIon pump current of 1.0 mA or higher. In the event poor vacuum cannot be improved by operation of the VACION pump the user should contact EIMAC and review the case with an Applications Engineering specialist.

PLATE OPERATION - The plate dissipation maximum rating of 1500 kilowatts provides a large margin of safety for most applications. The rating may be exceeded for very brief periods during setup or tuning. When used as a plate-modulated rf amplifier, plate dissipation under carrier conditions is limited to 1000 kilowatts.

Operation with significant plate current under some conditions of high instantaneous anode voltage (such as regulator service or low power and low impedance "tuning" conditions) can, as a result of the screen and grid voltages chosen, lead to anode damage and subsequent failure. If operation under such conditions is necessary EIMAC Application Engineering should be contacted for assistance in selection of operating parameters.

GRID OPERATION - The maximum grid dissipation is 4000 watts and protective measures should be taken to insure that this rating is not exceeded. Grid dissipation is approximately equal to the product of dc grid current and peak positive grid voltage. A protective spark gap device should be connected between the control grid and the cathode to guard against excessive voltage.

SCREEN OPERATION - The maximum screen grid dissipation is 15,000 watts. With no ac applied to the screen grid, dissipation is simply the product of dc screen voltage and the dc screen current. With screen modulation, dissipation is dependent on rms screen voltage and rms screen current. Plate voltage, plate loading, or bias voltage must never be removed while filament and screen voltages are present, since screen dissipation ratings will be exceeded. Suitable protective circuitry must be provided to remove screen power in case of a fault condition. A protective spark-gap device should be connected between the screen grid and the cathode to guard against excessive voltage.

Tetrode tubes may exhibit reversed screen current to a greater or lesser degree depending on individual tube design and operating conditions. The screen supply voltage must be maintained constant for any values of negative or positive screen currents which may be encountered. Dangerously high plate currents may flow if the screen power supply exhibits a rising voltage characteristic with negative screen current. Stabilization may be accomplished by use of a shunt regulator circuit in the screen voltage supply, bleeder resistors, or other suitable techniques.

PULSE OPERATION - The thermal time constants of the internal tube elements vary from a few milliseconds in the case of the grids to about 200 milliseconds for the anode. In many applications the meaning of duty as applied to a pulse chain is lost because the interpulse period is very long. For pulse lengths greater than 10 milliseconds, where the interpulse period is more than 10 times the pulse duration, the element dissipations and required cooling are governed by the watt-seconds during the pulse. Provided the watt-seconds are less than the listed maximum dissipation rating and sufficient cooling is supplied, tube life will be protected. To maintain high cooling efficiency the anode water flow must be sufficient to insure turbulent flow. EIMAC has determined that a minimum flow of 35 gpm (130 lpm) is required.

FAULT PROTECTION - In addition to the normal plate over-current interlock and coolant interlock, the tube must be protected from internal damage caused by any arc which may occur. A protective resistance should always be connected in series with the grid and anode to help absorb power supply stored energy if an arc should occur. An electronic crowbar, which will discharge power supply capacitors in a few microseconds after the start of an arc, is recommended. The protection test for each supply is to short each electrode to ground, one at a time, through a vacuum relay switch and a 6-inch length of #30 AWG copper wire. The wire will remain intact if protection is adequate. As noted in GRID OPERATION and SCREEN OPERATION a protective spark gap should be connected from grid to ground and from screen grid to ground.

EIMAC Application Bulletin #17 titled FAULT PROTECTION contains considerable detail, and is available on request.

LOAD VSWR - The load VSWR should be monitored and the detected signal used to operate the interlock system to remove plate voltage within 20 milliseconds after a fault occurs. In the case of high stored energy in the load system, care must be taken to avoid excessive return energy from damaging the tube and associated circuit components.

X-RADIATION HAZARD - High-vacuum tubes operating at voltages higher than 15 kilovolts produce progressively more dangerous X-ray radiation as the voltage is increased. This tube, operating at its rated voltages and currents, is a potential X-ray source. Only limited shielding is afforded by the tube envelope. Moreover, the X-radiation level may increase significantly with tube aging and gradual deterioration, due to leakage paths or emission characteristics as they are effected by the high voltage. X-ray shielding may be required on all sides of tubes operating at these voltages to provide adequate protection throughout the life of the tube. Periodic checks on the X-ray level should be made, and the tube should never be operated without required shielding in place. If there is any question as to the need for or the adequacy of shielding, an expert in this field should be contacted to perform an equipment X-ray survey.

In cases where shielding has been found to be required operation of the equipment with interlock switches "cheated" and cabinet doors open in order to be better able to locate an equipment malfunction can result in serious X-ray exposure.

HIGH VOLTAGE - Normal operating voltages used with this tube are deadly, and the equipment must be designed properly and operating precautions must be followed. Design all equipment so that no one can come in contact with high voltages. All equipment must include safety enclosures for high-voltage circuits and terminals, with interlock switches to open primary circuits of the power supply and to discharge high-voltage capacitors whenever access doors are opened. Interlock switches must not be bypassed or "cheated" to allow operation with access doors open. Always remember that HIGH VOLTAGE CAN KILL.

RADIO-FREQUENCY RADIATION - Avoid exposure to strong rf fields even at relatively low frequency. Absorption of rf energy by human tissue is dependent on frequency. Under 300 MHz most of the energy will pass completely through the human body with little attenuation or heating affect. Public health agencies are concerned with the hazard even at these frequencies. OSHA (Occupational Safety and Health Administration) recommends that prolonged exposure to rf radiation should be limited to 10 milliwatts per square centimeter.

INTERELECTRODE RF TUNING CHARACTERISTICS - Typical interelectrode tuning characteristics may be obtained by contacting VARIAN EIMAC Power Grid Tube Application Engineering.

INTERELECTRODE CAPACITANCE - The actual internal interelectrode capacitance of a tube is influenced by many variables in most applications, such as stray capacitance to the chassis from the tube terminals and associated wiring. To control the actual capacitance values within the tube, as the key component involved, the industry and Military Services use a standard test procedure as described in Electronic Industries Association Standard RS-191. The test is performed on a cold tube, and in the case of the 8974, with no special shielding. Other factors being equal, controlling internal tube capacitance in this way normally assures good interchangeability of tubes over a period of time. The capacitance values shown in the test specification or technical data are taken in accordance with Standard RS-191.

The equipment designer is cautioned to make allowance for the capacitance values, including tube-to-tube variation and strays, which will exist in any normal application. Measurements should be taken with mounting which represent approximate final layout if capacitance values are highly significant in the design.

SPECIAL APPLICATIONS - When it is desired to operate this tube under conditions widely different from those listed here, write to VARIAN EIMAC; attn: Applications Engineering; 301 Industrial Way; San Carlos, CA 94070 U.S.A.

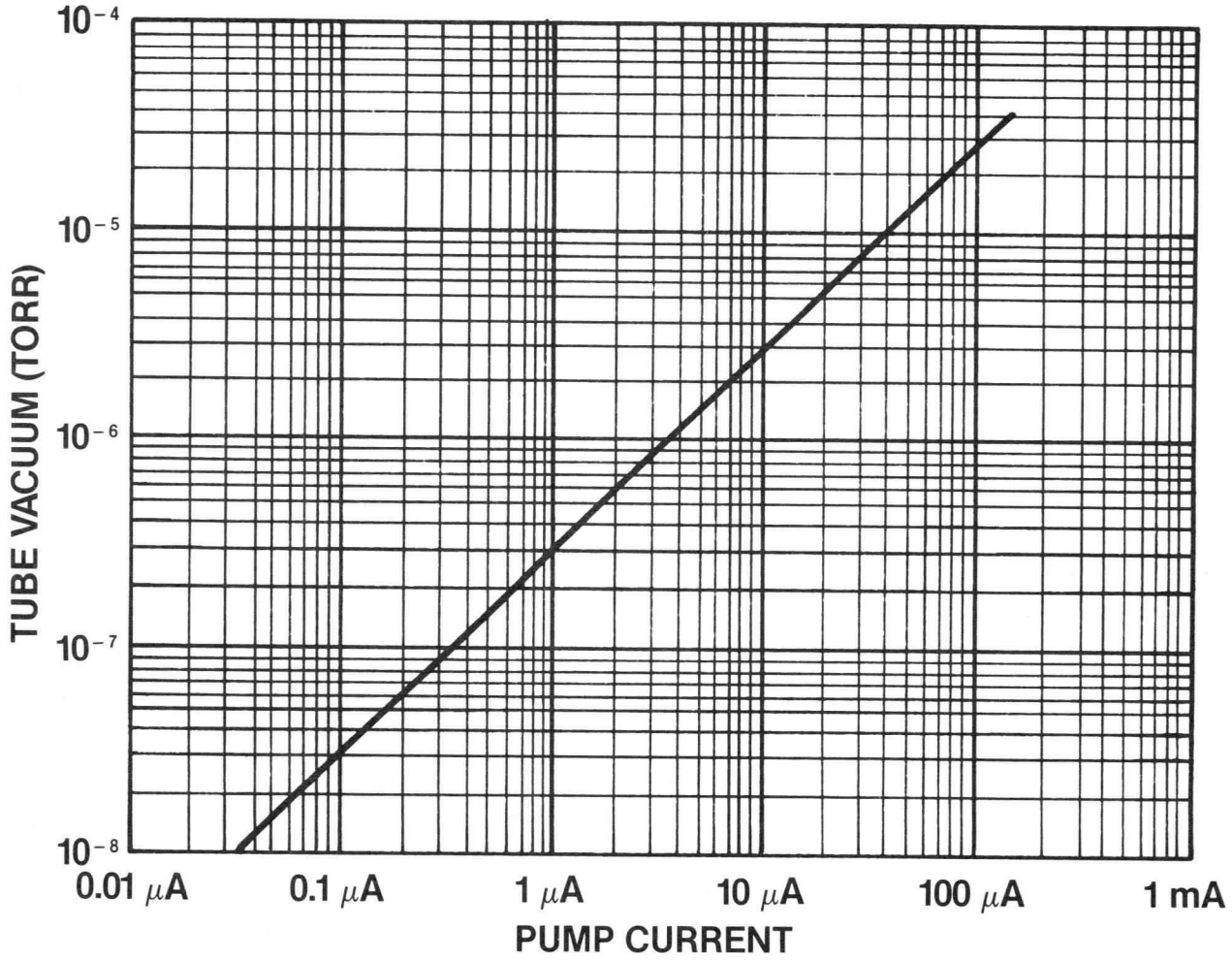

Figure 1 - Tube Vacuum VS Ion Current

OPERATING HAZARDS

PROPER USE AND SAFE OPERATING PRACTICES WITH RESPECT TO POWER TUBES ARE THE RESPONSIBILITY OF EQUIPMENT MANUFACTURERS AND USERS OF SUCH TUBES. ALL PERSONS WHO WORK WITH OR ARE EXPOSED TO POWER TUBES OR EQUIPMENT WHICH UTILIZES SUCH TUBES MUST TAKE PRECAUTIONS TO PROTECT THEMSELVES AGAINST POSSIBLE SERIOUS BODILY INJURY. DO NOT BE CARELESS AROUND SUCH PRODUCTS.

The operation of this tube may involve the following hazards, any one of which, in the absence of safe operating practices and precautions, could result in serious harm to personnel:

a. HIGH VOLTAGE - Normal operating voltages can be deadly. Remember that HIGH VOLTAGE CAN KILL.

b. RF RADIATION - Exposure to strong rf fields should be avoided, even at relatively low frequencies. CARDIAC PACEMAKERS MAY BE EFFECTED.

c. X-RADIATION - High voltage tubes can produce dangerous and possibly fatal X-Rays.

d. LOW-VOLTAGE HIGH-CURRENT CIRCUITS - Personal jewelry, such as rings, should not be worn when working with filament contacts or connectors as a short circuit can produce very high current and melting, resulting in severe burns.

e. HOT WATER - Water used to cool tubes may reach scalding temperatures. Touching or rupture of the cooling system can cause serious burns.

f. HOT SURFACES - Surfaces of tubes can reach temperatures of several hundred Degrees C and cause serious burns if touched for several minutes after all power is removed.

Please review the detailed operating hazards sheet enclosed with each tube, or request a copy from: VARIAN EIMAC, Power Grid Tube Division, 301 Industrial Way, San Carlos CA 94070.

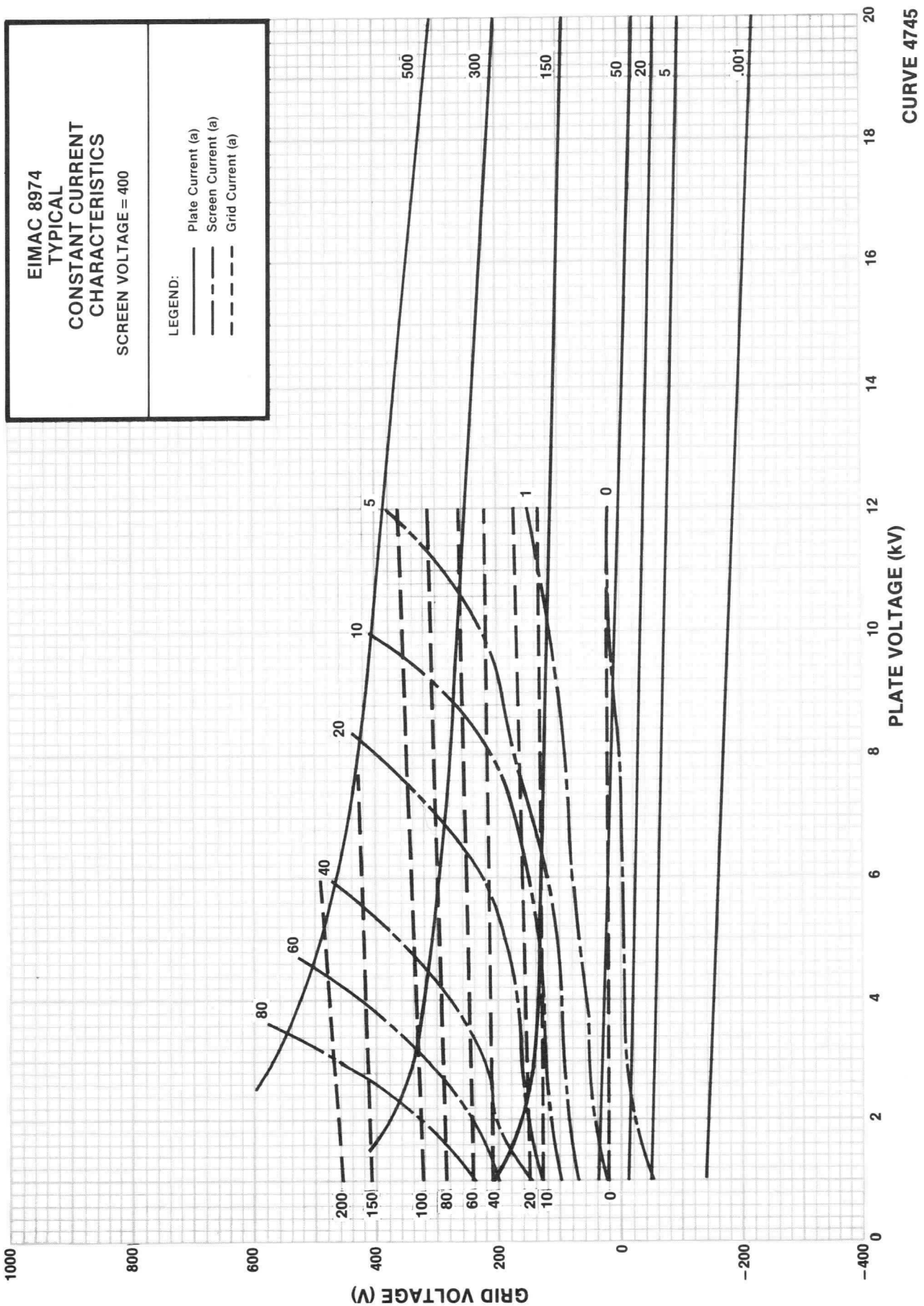
EIMAC 8974
TYPICAL
CONSTANT CURRENT
CHARACTERISTICS
SCREEN VOLTAGE = 400
LEGEND:
Plate Current (a)
Screen Current (a)
Grid Current (a)
CURVE 4745
PLATE VOLTAGE (kV)
GRID VOLTAGE (V)
0
2
4
6
8
10
12
14
16
18
20
1000
800
600
400
200
0
−200
−400
500
300
150
50
20
5
.001
1
0
5
10
20
40
60
80
200
150
100
80
60
40
20
10
0

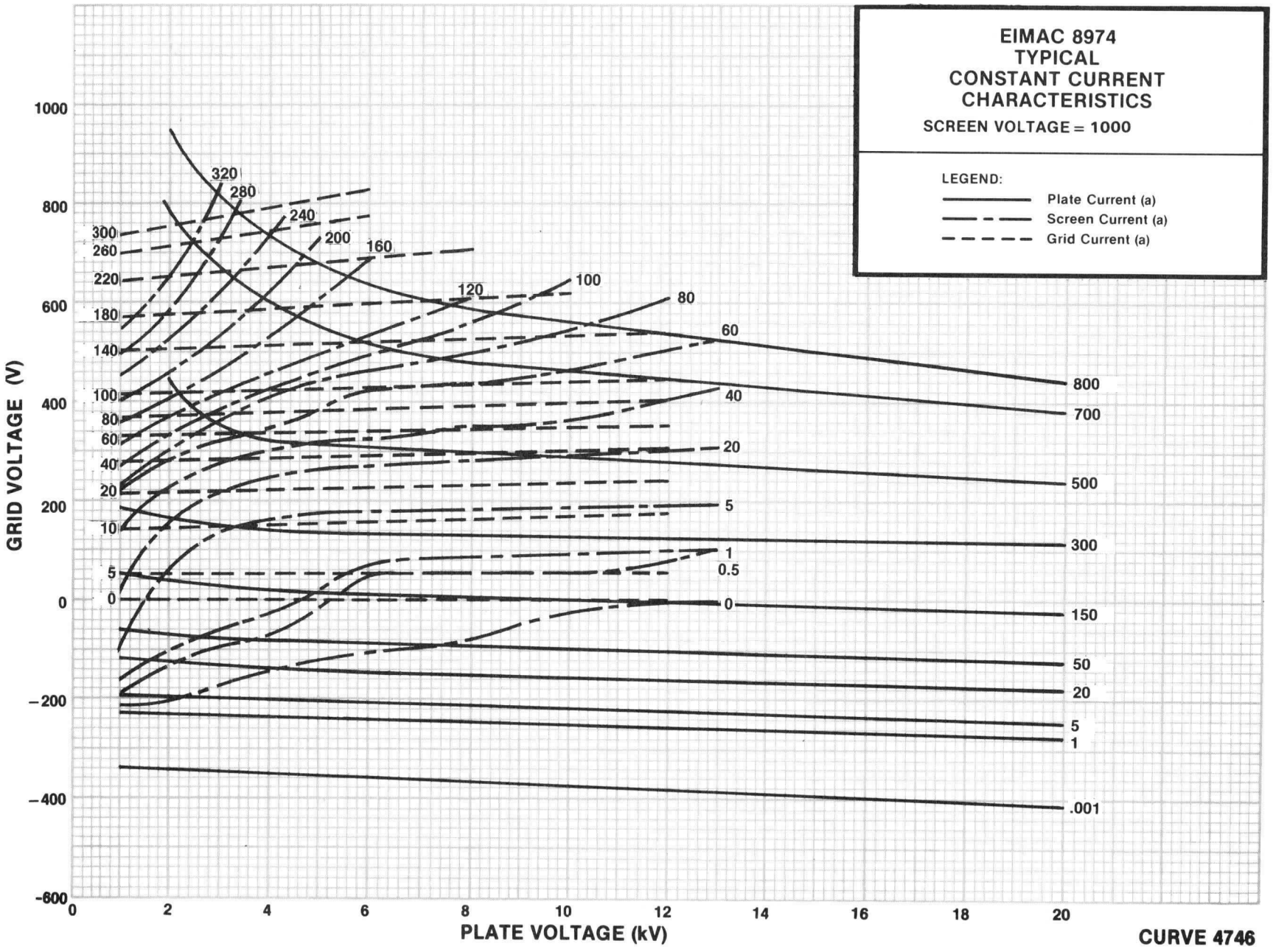
EIMAC 8974
TYPICAL
CONSTANT CURRENT
CHARACTERISTICS
SCREEN VOLTAGE = 1000
LEGEND:
Plate Current (a)
Screen Current (a)
Grid Current (a)
GRID VOLTAGE (V)
1000
800
600
400
200
0
-200
-400
-600
0
2
4
6
8
10
12
14
16
18
20
PLATE VOLTAGE (kV)
320
280
240
200
160
120
100
80
60
40
20
10
5
0
300
260
220
180
140
100
80
60
40
20
5
0
800
700
500
300
150
50
20
5
1
.001
40
20
5
1
0.5
0
CURVE 4746

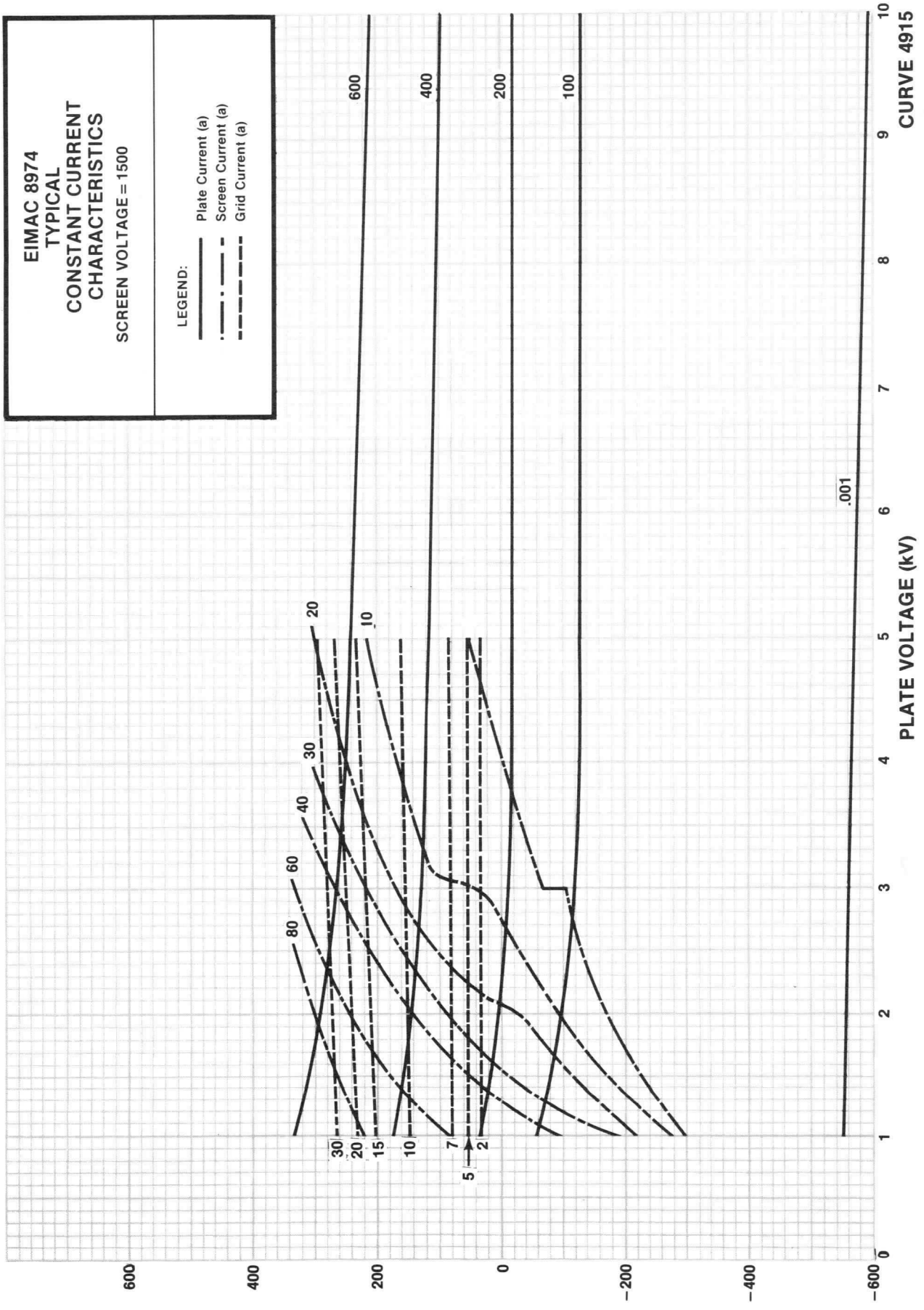
EIMAC 8974
TYPICAL
CONSTANT CURRENT
CHARACTERISTICS
SCREEN VOLTAGE = 1500
LEGEND:
Plate Current (a)
Screen Current (a)
Grid Current (a)
600
400
200
100
.001
80
60
40
30
20
10
30
20
15
10
7
5
2
GRID VOLTAGE (V)
600
400
200
0
−200
−400
−600
0
1
2
3
4
5
6
7
8
9
10
PLATE VOLTAGE (kV)
CURVE 4915

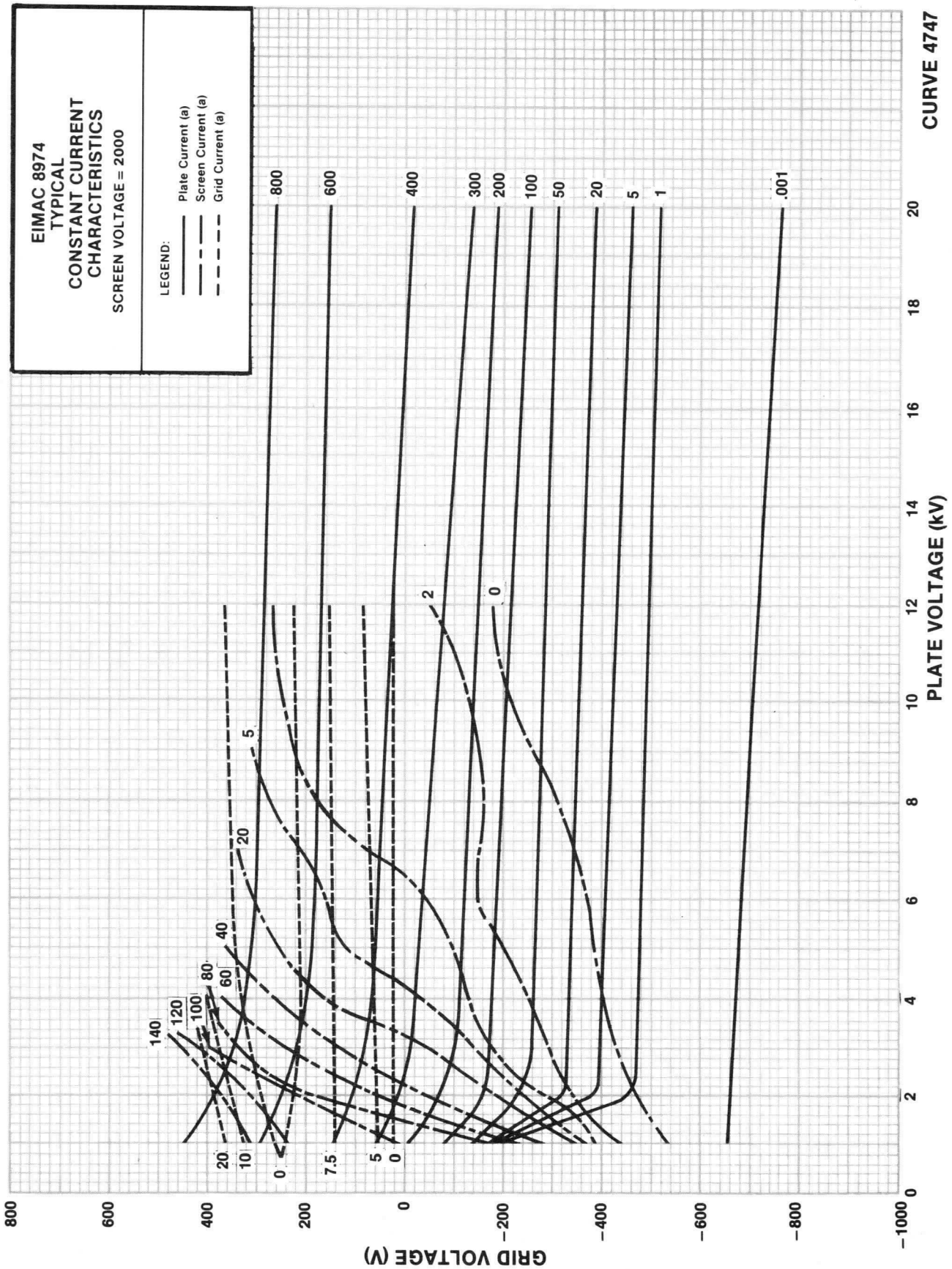
EIMAC 8974
TYPICAL
CONSTANT CURRENT
CHARACTERISTICS
SCREEN VOLTAGE = 2000
LEGEND:
Plate Current (a)
Screen Current (a)
Grid Current (a)
CURVE 4747
PLATE VOLTAGE (kV)
GRID VOLTAGE (V)
800
600
400
300
200
100
50
20
5
1
.001
2
0
140
120
100
80
60
40
20
10
0
7.5
5
0
800
600
400
200
0
−200
−400
−600
−800
−1000
0
2
4
6
8
10
12
14
16
18
20

8974

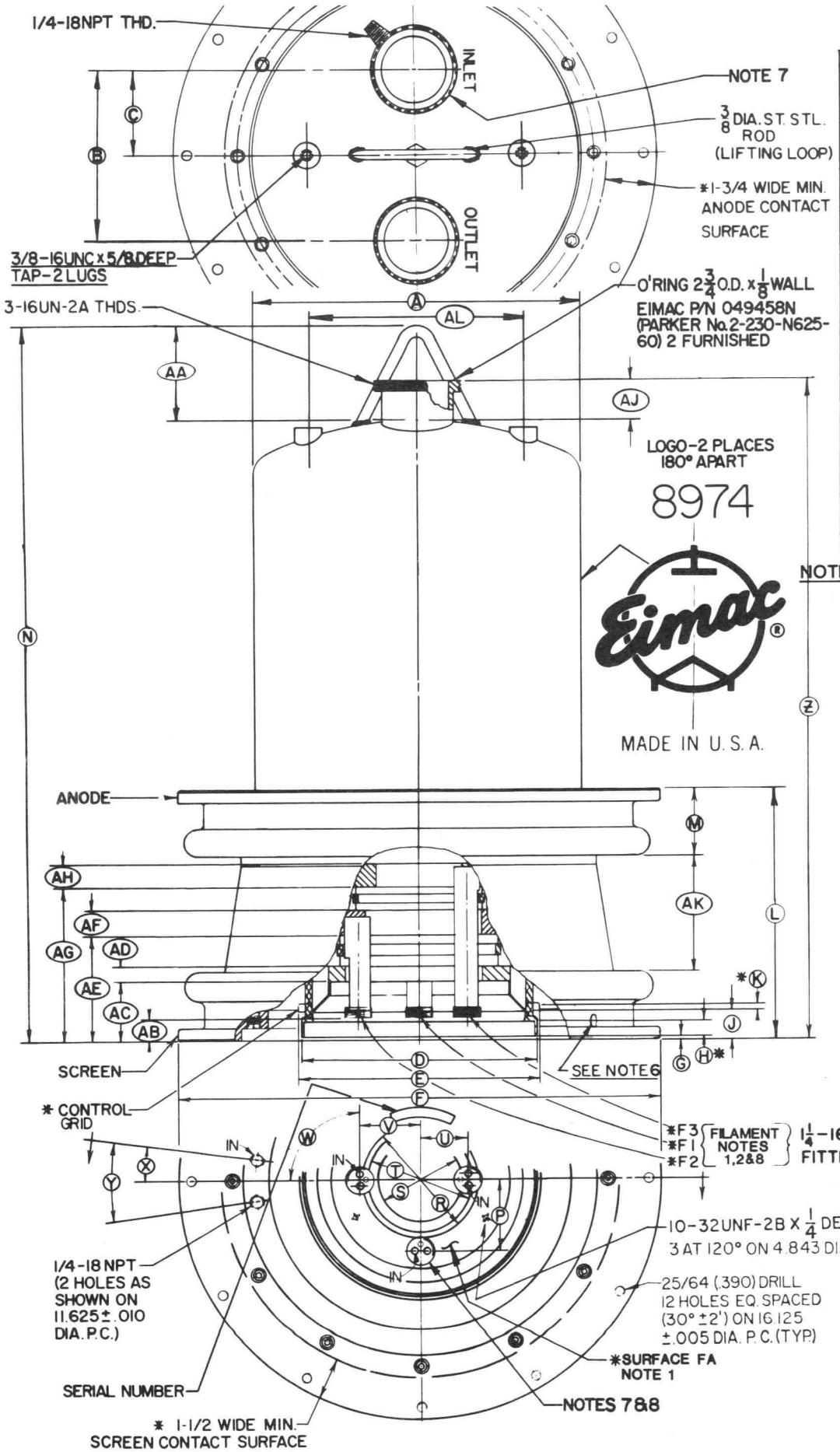

DIMENSIONAL DATA

DIM	INCHES MIN	INCHES MAX	INCHES REF	MILLIMETERS MIN	MILLIMETERS MAX	MILLIMETERS REF
A	11.440	11.560		290.58	293.62	
B			6.000			152.40
C			3.000			76.20
D	8.235	8.265		209.17	209.93	
E	8.485	8.525		215.52	216.54	
F	16.970	17.030		431.04	432.56	
G			.025			.635
H	.310			7.87		
J	.900	1.000		22.86	25.40	
K	.180			4.57		
L	8.700	8.900		220.98	226.06	
M			2.375			60.32
N			25.312			642.92
P			2.500			63.50
R	4.113	4.137		104.47	105.08	
S	2.988	3.012		75.89	76.50	
T	3.675	3.699		93.34	93.95	
U			1.687			42.85
V			2.156			54.76
W			90°			
X			7-1/2°			
Y			15°			
Z	22.857	23.305		580.57	591.95	
AA			3.575			90.80
AB			.720			18.29
AC	1.950	2.100		49.53	53.34	
AD	.450			11.43		
AE	3.560	3.680		90.42	93.47	
AF	.725			18.42		
AG	5.300	5.450		134.62	138.43	
AH	.725			18.42		
AJ			1.375			34.92
AK			4.093			103.96
AL			8.000			203.20

NOTES:

1. CIRCUIT RETURN MAY BE MADE TO FA BY SK-2315 CONNECTOR.
2. MATE WITH EIMAC CONNECTOR SK-2310
3. D.C. RETURN SHOULD BE MADE TO F2
4. REF. DIMENSIONS ARE FOR INFO. ONLY & ARE NOT REQUIRED FOR INSPECTION PURPOSES.
5. (*) CONTACT SURFACES
6. 1/4 DIA. WATER DRAIN HOLE - 3 PLACES.
7. WATER INLET ON JACKET & WATER FITTING F1, ARE TO BE IN LINE & ON SAME SIDE OF TUBE.
8. A TUBE OF ANTI-SEIZE THREAD LUBRICANT IS PROVIDED WITH TUBE TO PREVENT GALLING OF FILAMENT CONNECTOR THREADS, SEE INSTR. SHEET E14-1.2 ATTACHED TO TUBE.

TECHNICAL DATA

9000

4CM300,000G HIGH POWER MULTIPHASE COOLED TETRODE



The EIMAC 4CM300,000G is a ceramic/metal, multiphase-cooled (water/vapor) power tetrode designed for high-power broadcast service. Pyrolytic graphite grids are used to provide high dissipation capability in combination with low secondary emission characteristics.

The 4CM300,000G has a thoriated-tungsten mesh filament mounted on water-cooled supports. The maximum anode dissipation rating is 300 kilowatts steady state.

Large-diameter coaxial terminals are used for the screen grid, control grid and filament connections.

GENERAL CHARACTERISTICS[1]

ELECTRICAL

Filament: Thoriated-tungsten Mesh		
Voltage	15.0 ± 0.75	V
Current @ 15.0 volts (nominal)	480	A
Frequency of Maximum Ratings (CW)[3]	50	MHz
Amplification Factor, Average, Grid to Screen	4.5	
Direct Interelectrode Capacitances (grounded cathode)[2]		
Cin	750	pF
Cout	79	pF
Cgp	5.6	pF
Direct Interelectrode Capacitances (grounded grid)[2]		
Cin	284	pF
Cout	83	pF
Cpk	0.9	pF

1. Characteristics and operating values are based on tests and calculations. These figures may change without notice as the result of additional data or product refinement. VARIAN EIMAC should be consulted before using this information for final equipment design.
2. Capacitance values shown are nominal measured in accordance with Electronic Industries Association Standard RS-191.
3. The tube is projected to have excellent rf characteristics up to 150 MHz.

MECHANICAL

Net Weight	121 lb; 55 kg
Operating Position	Vertical, Base Down
Cooling	Water and Forced Air
Maximum Overall Dimensions:	
Length	22.5 in; 57.1 cm
Diameter	13.3 in; 33.8 cm
Maximum Operating Temperature, Envelope and Ceramic/Metal Seals	200°C
Base	Special Coaxial
Recommended Socket	EIMAC SK-2450

390850(Effective April 1985)
VA4816

Printed in U.S.A.

RADIO FREQUENCY LINEAR AMPLIFIER
GRID DRIVEN

Class AB

ABSOLUTE MAXIMUM RATINGS:

DC PLATE VOLTAGE . . .	20.0	KILOVOLTS
DC SCREEN VOLTAGE . . .	2.0	KILOVOLTS
DC PLATE CURRENT . . .	50	AMPERES
PLATE DISSIPATION . . .	300	KILOWATTTS
SCREEN DISSIPATION . .	6.0	KILOWATTS
GRID DISSIPATION . . .	2.0	KILOWATTS

* Approximate value.

TYPICAL OPERATION (Frequencies to 30 MHz)
CLASS AB1, Single Sideband Peak Envelope Conditions

Plate Voltage	18.0	kVdc
Screen Voltage	2000	Vdc
Grid Voltage **	-460	Vdc
Zero Signal Plate Current	3.0	Adc
Single Tone Plate Current	30.5	Adc
Single Tone Screen Current *	1.4	Adc
Peak rf Grid Voltage *	460	v
Plate Dissipation *	145	kW
Plate Load Resistance	340	Ohms
Plate Power Output *	400	kW

* Approximate value. ** Adjust for specified value of zero-signal plate current.

RADIO FREQUENCY POWER AMPLIFIER OR
OSCILLATOR Class C Telegraphy or FM
(Key-down Conditions)

ABSOLUTE MAXIMUM RATINGS:

DC PLATE VOLTAGE . . .	20.0	KILOVOLTS
DC SCREEN VOLTAGE . . .	2.0	KILOVOLTS
DC PLATE CURRENT . . .	50	AMPERES
PLATE DISSIPATION . . .	300	KILOWATTS
SCREEN DISSIPATION . .	6.0	KILOWATTS
GRID DISSIPATION . . .	2.0	KILOWATTS

TYPICAL OPERATION (Frequencies to 30 MHz)

Plate Voltage	18.0	18.0	kVdc
Screen Voltage	1000	1500	Vdc
Grid Voltage	-800	-900	Vdc
Plate Current	44	45	Adc
Screen Current *	4.7	3.5	Adc
Grid Current *	5.5	1.7	Adc
Calculated Driving Power	5.7	1.8	kW
Plate Dissipation *	140	154	kW
Plate Load Resistance	205	202	Ohms
Plate Power Output *	650	650	kW

* Approximate value.

PLATE MODULATED RADIO FREQUENCY POWER
AMPLIFIER Class C Telephony
(Carrier Conditions)

ABSOLUTE MAXIMUM RATINGS:

DC PLATE VOLTAGE . . .	13.0	KILOVOLTS
DC SCREEN VOLTAGE . . .	1.5	KILOVOLTS
DC PLATE CURRENT . . .	39	AMPERES
PLATE DISSIPATION # . .	195	KILOWATTS
SCREEN DISSIPATION . .	6.0	KILOWATT
GRID DISSIPATION . . .	2.0	KILOWATTS

* Approximate value
\# 300 kW at 100% sine-wave modulation

TYPICAL OPERATION (Frequencies to 30 MHz)

Plate Voltage	11.0	kVdc
Screen Voltage	1000	Vdc
Grid Voltage	-450	Vdc
Plate Current	35	Adc
Screen Current *	1.75	Adc
Grid Current *	2.25	Adc
Peak Screen Voltage (100% modulation) . .	2000	v
Calculated Driving Power	1440	W
Plate Dissipation *	85	kW
Plate Load Resistance	155	Ohms
Plate Power Output *	300	kW

AUDIO FREQUENCY POWER AMPLIFIER OR
MODULATOR Class AB

ABSOLUTE MAXIMUM RATINGS (per tube):

DC PLATE VOLTAGE . . .	20.0	KILOVOLTS
DC SCREEN VOLTAGE . . .	2.0	KILOVOLTS
DC PLATE CURRENT . . .	50	AMPERES
PLATE DISSIPATION . . .	300	KILOWATTS
SCREEN DISSIPATION . .	6.0	KILOWATTS
GRID DISSIPATION . . .	2.0	KILOWATTS

TYPICAL OPERATION (Two Tubes - Sinusoidal wave)

Plate Voltage	11.8	8.0	kVdc
Screen Voltage	1500	2000	Vdc
Grid Voltage **	-420	-460	Vdc
Zero-Signal Plate Current	6.0	6.0	Adc
Max.Signal Plate Current	53	29	Adc
Max.Signal Screen Current *	1.0	1.0	Adc
Peak Audio Freq.Grid Voltage * # . .	400	455	v
Max.Signal Plate Dissipation * # . .	106	148	kW
Plate/Plate Load Resistance	440	680	Ohms
Plate Power Output *	420	760	kW

\# Per tube.
* Approximate value.
** Adjust for stated zero-sig. plate current.

TYPICAL OPERATION values are obtained by measurement or by calculation from published characteristic curves. To obtain the specified plate current at the specified bias, screen, and plate voltages, adjustment of the rf grid voltage is assumed. Following this procedure, there will be little variation in ouput power when the tube is replaced, even though there may be some variation in grid and screen currents. The grid and screen currents which occur when the desired plate current is obtained are incidental and vary from tube to tube. These current variations cause no performance degradation providing the circuit maintains the correct voltage in the presence of the current variations.

APPLICATION

MECHANICAL

MOUNTING - The 4CM300,000G must be mounted vertically, base down. The full weight of the tube should rest on the screen-grid contact flange at the base of the tube, and all lifting of the tube should be done with the lifting eye which is attached to the top of the anode cooling jacket.

ANODE COOLING - The anode is cooled by circulating water through the structure. Water/vapor cooling provides efficient anode heat removal and allows extra capacity for temporary overloads.

Tube life can be seriously compromised by water condition. With contaminated water deposits will form on the inside of the water jacket, causing localized anode heating and eventual tube failure. To minimize electrolysis and power loss, water resistivity at 25°C should always be one megohm per cubic centimeter or higher. Water resistivity can be continuously monitored in the reservoir by readily available instruments.

Minimum water flow requirements for the anode are shown in the table for an outlet water temperature not to exceed 100°C and inlet water temperature at 60°C. System pressure should not exceed 100 psi.

Anode Dissipation (kW)	Water Flow (gpm)	Approx.Jacket Press. Drop (psi)
Fil.Only	1	1
100	15	7.5
200	25	15
300	29	17

Cooling water must be well filtered, with effectiveness the equivalent of a 100-mesh screen, to eliminate any solid material and avoid the possibility of blockage of cooling passages, as this would immediately affect cooling efficiency and could produce localized anode overheating and failure of the tube.

EIMAC Application Bulletin #16, WATER PURITY REQUIREMENTS IN LIQUID COOLING SYSTEMS, is available on request, and contains considerable detail on purity requirements and maintenance systems.

BASE COOLING - The tube base requires air cooling with a minimum of 100 cfm of air at 50°C maximum at sea level, directed through the SK-2450 series socket toward the base seal areas. It should be noted that temperatures of the ceramic/metal seals and the lower envelope areas are the controlling and final limiting factor and that the maximum allowable temperature is 200°C. In addition, the socket contact finger temperature should not exceed 150°C. Temperature-sensitive paint is available for use in checking temperatures in these areas before equipment design and air cooling arrangements are finalized.

EIMAC Application Bulletin #20 titled TEMPERATURE MEASUREMENTS WITH EIMAC POWER TUBES contains considerable information and is available on request.

ALL COOLING MUST BE APPLIED BEFORE OR SIMULTANEOUSLY WITH THE APPLICATION OF ELECTRODE VOLTAGES, INCLUDING THE FILAMENT, AND SHOULD NORMALLY BE MAINTAINED FOR SEVERAL MINUTES AFTER ALL VOLTAGES ARE REMOVED TO ALLOW FOR TUBE COOLDOWN.

ELECTRICAL

FILAMENT OPERATION - Filament turn-on and turn-off should be programmed. Filament voltage should be smoothly increased from zero to the operating level over a period of two minutes. A motor-driven continuously variable autotransformer (such as a VARIAC® or a POWERSTAT®) is suggested. Inrush current must never be allowed to exceed twice normal operating current. Normal turnoff procedure should be a smooth decrease from the operating voltage to zero over a period of two minutes.

At rated (nominal) filament voltage the peak emission capability of the tube is many times that needed for communication service. A reduction in filament voltage will lower the filament temperature, which will substantially increase life expectancy. The correct value of filament voltage should be determined for the particular application. It is recommended the tube be operated at full nominal voltage for an initial stabilization period of 100 to 200 hours before any action is taken to operate at reduced voltage. The voltage should gradually be reduced until there is a slight degradation in performance (such as power output or distortion). For operation The voltage should then be increased several tenths of a volt above the value where performance degradation was noted. The operating point should be rechecked after 24 hours. Filament voltage should be closely regulated when voltage is to be reduced below nominal in this manner, to avoid any adverse influence caused by normal line voltage variations.

Filament voltage should be measured at the tube base or socket, using an accurate rms-responding meter. Periodically throughout the life of the tube the procedure outlined above for reduction of voltage should be repeated, with voltage reset as required, to assure best tube life. EIMAC Application Bulletin #18, titled "EXTENDING TRANSMITTER TUBE LIFE", contains detailed information and is available on request.

Where hum is an important system consideration it is permissible to operate the filament with dc rather than ac power.

Care should be exercised to keep any rf power out of the filament of the tube, as this can cause excessive operating temperatures. Proper bypassing of the filament must be used to assure monopotential operation. It should be ascertained that no resonance exists in the filament circuit which could be excited during operation.

This tube is designed for commercial service, with no more than one normal off/on filament cycle per day. If additional cycling is anticipated it is recommended the user contact Application Engineering at Varian EIMAC for additional information.

ABSOLUTE MAXIMUM RATINGS - Values shown for each type of service are based on the "absolute system" and are not to be exceeded under any service conditions. These ratings are limiting values outside which the serviceability of the tube may be impaired. In order not to exceed these ratings the equipment designer has the responsibility of determining an average design value for each rating below the absolute value of the rating by a safety factor so that the absolute values will never be

exceeded under any usual conditions of supply-voltage variation, load variation, or manufacturing variation in the equipment itself. It does not necessarily follow that combinations of absolute maximum ratings can be attained simultaneously.

PLATE OPERATION - The 300 KW plate dissipation maximum rating may be exceeded for very brief periods during setup or tuning. When used as a plate-modulated rf amplifier, dissipation under carrier conditions is limited to 195 kilowatts.

GRID OPERATION - The maximum grid dissipation is 2000 watts and protective measures should be taken to insure that this rating is not exceeded. Grid dissipation is approximately equal to the product of dc grid current and peak positive grid voltage. A protective spark gap device should be connected between the control grid and the cathode to guard against excessive voltage.

SCREEN OPERATION - The maximum screen grid dissipation is 6000 watts. With no ac applied to the screen grid, dissipation is simply the product of dc screen voltage and the dc screen current. With screen modulation, dissipation is dependent on rms screen voltage and rms screen current. Plate voltage, plate loading, or bias voltage must never be removed while filament and screen voltages are present, since screen dissipation ratings will be exceeded. Suitable protective circuitry must be provided to remove screen power in case of a fault condition. A protective spark-gap device should be connected between the screen grid and the cathode to guard against excessive voltage.

PULSE OPERATION - The thermal time constants of the internal tube elements vary from a few milliseconds in the case of the grids to about 200 milliseconds for the anode. In many applications the meaning of duty as applied to a pulse chain is lost because the interpulse period is very long. For pulse lengths greater than 10 milliseconds, where the interpulse period is more than 10 times the pulse duration, the element dissipations and required cooling are governed by the watt-seconds during the pulse. Provided the watt-seconds are less than the listed maximum dissipation rating and sufficient cooling is supplied, tube life will be protected. EIMAC has determined that a minimum flow of 2 gpm (7.6 lpm) is required.

FAULT PROTECTION - In addition to the normal plate over-current interlock and coolant interlock, the tube must be protected from internal damage caused by any arc which may occur. A protective resistance should always be connected in series with the grid and anode to help absorb power supply stored energy if an arc should occur. An electronic crowbar, which will discharge power supply capacitors in a few microseconds after the start of an arc, is recommended. The protection criteria for each supply is to short each electrode to ground, one at a time, through a vacuum relay switch and a 6-inch length of #30 AWG copper wire. The wire will remain intact if criteria is met.

As noted under GRID OPERATION and SCREEN OPERATION a protective spark gap should be connected from the control grid to ground and from the screen grid to ground. EIMAC Application Bulletin #17 titled FAULT PROTECTION contains considerable detail and is available on request.

LOAD VSWR - The load VSWR should be monitored and the detected signal used to operate the interlock system to remove plate voltage within 20 milliseconds after a fault occurs. In the case of high stored energy in the load system, care must be taken to avoid excessive return energy from damaging the tube and associated circuit components.

X-RADIATION HAZARD - High-vacuum tubes operating at voltages higher than 15 kilovolts produce progressively more dangerous X-ray radiation as the voltage is increased. This tube, operating at its rated voltages and currents, is a potential X-ray source. Only limited shielding is afforded by the tube envelope. Moreover, the X-radiation level may increase significantly with tube aging and gradual deterioration, due to leakage paths or emission characteristics as they are effected by the high voltage. X-ray shielding may be required on all sides of tubes operating at these voltages to provide adequate protection throughout the life of the tube. Periodic checks on the X-ray level should be made, and the tube should never be operated without required shielding in place. If there is any question as to the need for or the adequacy of shielding, an expert in this field should be contacted to perform an equipment X-ray survey.

In cases where shielding has been found to be required operation of the equipment with interlock switches "cheated" and cabinet doors open in order to be better able to locate an equipment malfunction can result in serious X-ray exposure.

HIGH VOLTAGE - Normal operating voltages used with this tube are deadly, and the equipment must be designed properly and operating precautions must be followed. Design all equipment so that no one can come in contact with high voltages. All equipment must include safety enclosures for high-voltage circuits and terminals, with interlock switches to open primary circuits of the power supply and to discharge high-voltage capacitors whenever access doors are opened. Interlock switches must not be bypassed or "cheated" to allow operation with access doors open. Always remember that HIGH VOLTAGE CAN KILL.

RADIO-FREQUENCY RADIATION - Avoid exposure to strong rf fields even at relatively low frequency. Absorption of rf energy by human tissue is dependent on frequency. Under 300 MHz most of the energy will pass completely through the human body with little attenuation or heating affect. Public health agencies are concerned with the hazard even at these frequencies. OSHA (Occupational Safety and Health Administration) recommends that prolonged exposure to rf radiation should be limited to 10 milliwatts per square centimeter.

INTERELECTRODE RF TUNING CHARACTERISTICS - Typical interelectrode tuning characteristics may be obtained by contacting Varian EIMAC Power Grid Tube Application Engineering.

INTERELECTRODE CAPACITANCE - The actual internal interelectrode capacitance of a tube is influenced by many variables in most applications, such as stray capacitance to the chassis from the tube terminals and associated wiring. To control actual capacitance values within the tube, as the key component involved, the industry and Military

Services use a standard test procedure described in Electronic Industries Association Standard RS-191. The test is performed on a cold tube which is mounted in a shielded fixture.

Other factors being equal, controlling internal tube capacitance in this way normally assures good interchangeability of tubes over a period of time. The capacitance values shown in the technical data are taken in accordance with Standard RS-191 but with no special shielding.

The equipment designer is cautioned to make allowance for the capacitance values, including tube-to-tube variation and strays, which will exist in any normal application. Measurements should be taken with mounting which represent approximate final layout if capacitance values are highly significant in the design.

SPECIAL APPLICATIONS - When it is desired to operate this tube under conditions widely different from those listed here, write to Varian EIMAC; attn: Product Manager High Power Tubes, 301 Industrial Way; San Carlos, CA 94070 U.S.A.

OPERATING HAZARDS

PROPER USE AND SAFE OPERATING PRACTICES WITH RESPECT TO POWER TUBES ARE THE RESPONSIBILITY OF EQUIPMENT MANUFACTURERS AND USERS OF SUCH TUBES. ALL PERSONS WHO WORK WITH OR ARE EXPOSED TO POWER TUBES OR EQUIPMENT WHICH UTILIZES SUCH TUBES MUST TAKE PRECAUTIONS TO PROTECT THEMSELVES AGAINST POSSIBLE SERIOUS BODILY INJURY. DO NOT BE CARELESS AROUND SUCH PRODUCTS.

The operation of this tube may involve the following hazards, any one of which, in the absence of safe operating practices and precautions, could result in serious harm to personnel:

a. HIGH VOLTAGE - Normal operating voltages can be deadly. Remember that HIGH VOLTAGE CAN KILL.

b. LOW-VOLTAGE HIGH-CURRENT CIRCUITS - personal jewelry, such as rings, should not be worn when working with filament contacts or connectors as a short circuit can produce very high current and melting, resulting in severe burns.

c. RF RADIATION - Exposure to strong rf fields should be avoided, even at relatively low frequencies. The dangers of rf radiation are more severe at UHF and microwave frequencies and can cause serious bodily and eye injuries. CARDIAC PACEMAKERS MAY BE EFFECTED.

d. HOT WATER - Water used to cool tubes may reach scalding temperatures. Touching or rupture of the cooling system can cause serious burns.

e. HOT SURFACES - Surfaces of tubes can reach temperatures of several hundred °C and cause serious burns if touched for several minutes after all power is removed.

f. X-RAY RADIATION - High-voltage tubes can produce dangerous and possibly fatal X-rays and comprehensive shielding may be required. If shielding is provided, equipment should never be operated without all such shielding in place.

Please review the detailed operating hazards sheet enclosed with each tube, or request a copy from: Varian EIMAC, Power Grid Application Engineering, 301 Industrial Way, San Carlos CA 94070.

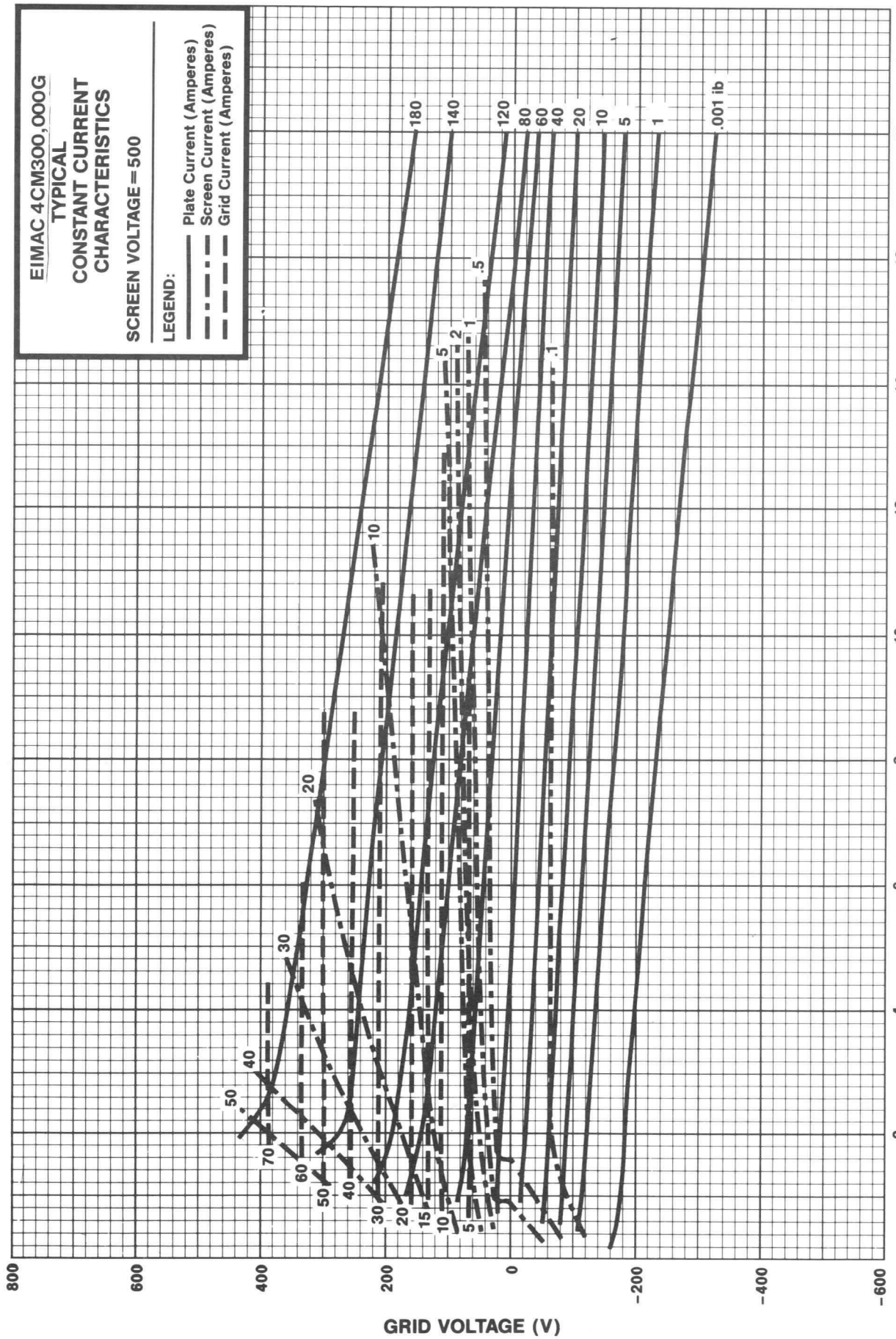
EIMAC 4CM300,000G
TYPICAL
CONSTANT CURRENT
CHARACTERISTICS
SCREEN VOLTAGE = 500
LEGEND:
Plate Current (Amperes)
Screen Current (Amperes)
Grid Current (Amperes)
180
140
120
80
60
40
20
10
5
1
.001 ib
.5
.1
70
50
40
30
20
15
10
5
800
600
400
200
0
-200
-400
-600
2
4
6
8
10
12
14
16
18
GRID VOLTAGE (V)
PLATE VOLTAGE (kV)
CURVE #005158

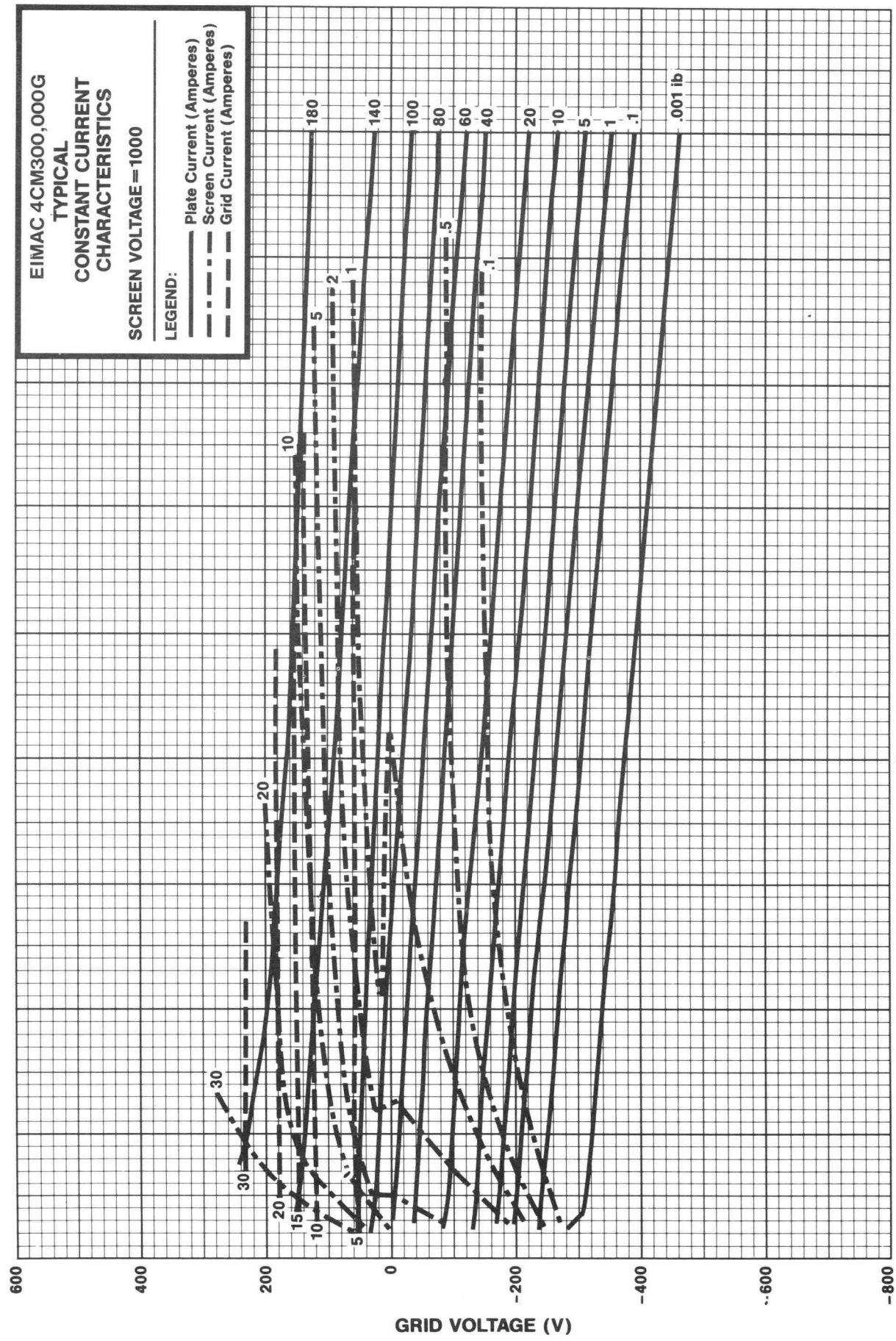
EIMAC 4CM300,000G
TYPICAL
CONSTANT CURRENT
CHARACTERISTICS
SCREEN VOLTAGE=1000
LEGEND:
Plate Current (Amperes)
Screen Current (Amperes)
Grid Current (Amperes)
180
140
100
80
60
40
20
10
5
1
.1
.001 ib
.5
.1
2
1
5
10
20
30
30
20
15
10
5
600
400
200
0
-200
-400
-600
-800
2
4
6
8
10
12
14
16
18
GRID VOLTAGE (V)
PLATE VOLTAGE (kV)
CURVE #005157

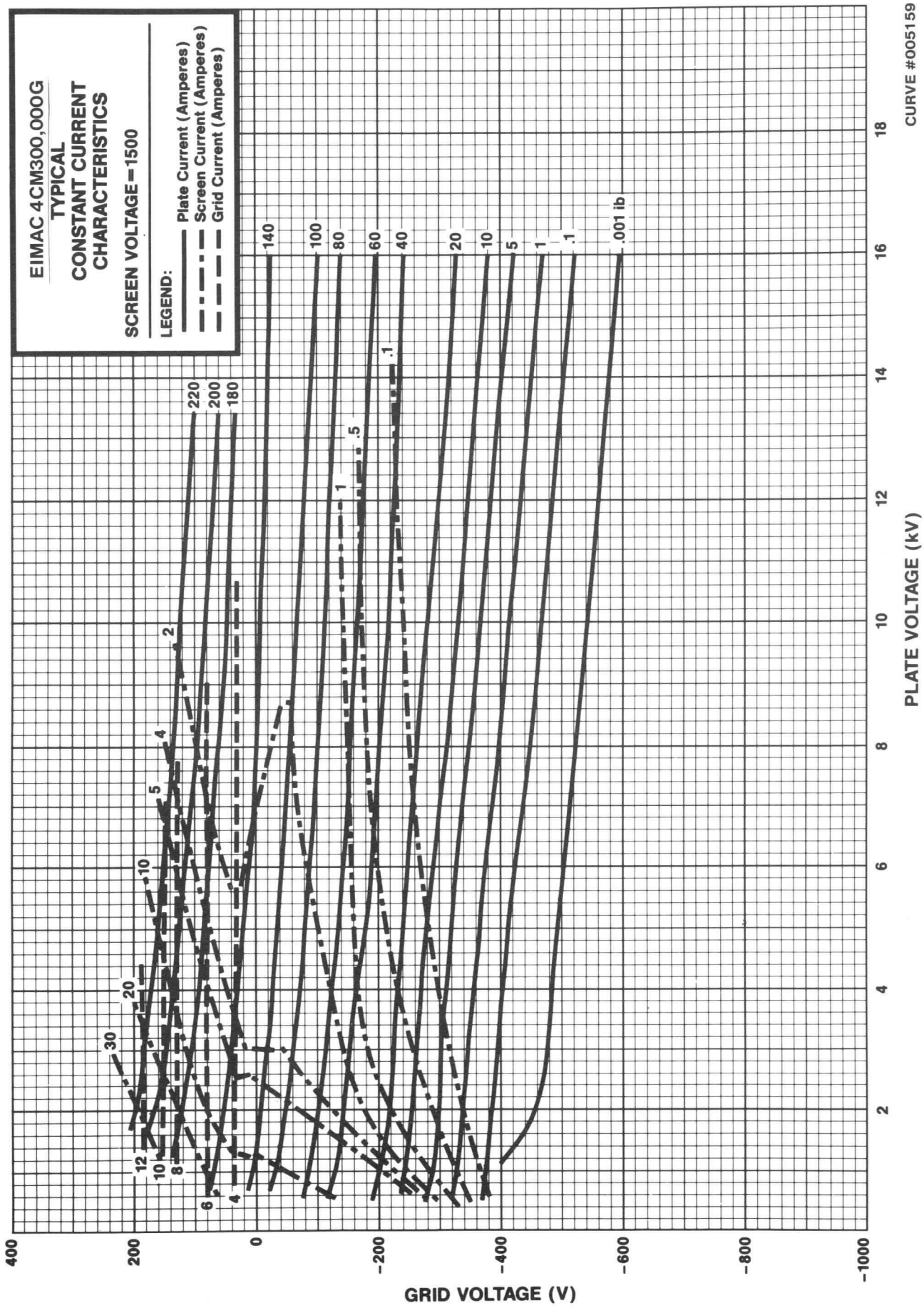
EIMAC 4CM300,000G
TYPICAL
CONSTANT CURRENT
CHARACTERISTICS
SCREEN VOLTAGE=1500
LEGEND:
Plate Current (Amperes)
Screen Current (Amperes)
Grid Current (Amperes)
140
100
80
60
40
20
10
5
1
.1
.001 ib
220
200
180
30
20
12
10
8
6
5
4
2
1
.5
.1
400
200
0
-200
-400
-600
-800
-1000
2
4
6
8
10
12
14
16
18
GRID VOLTAGE (V)
PLATE VOLTAGE (kV)
CURVE #005159

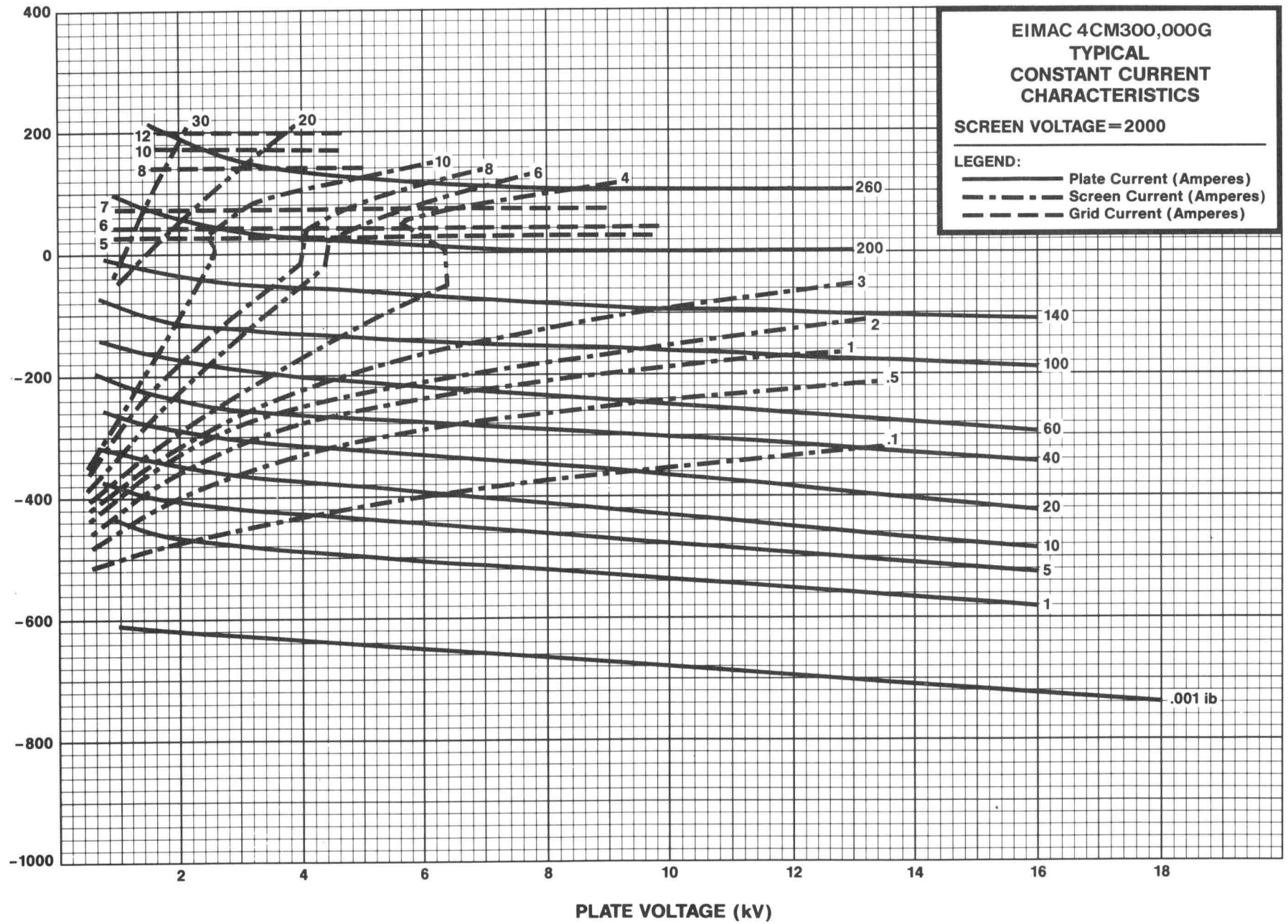

CURVE # 005160

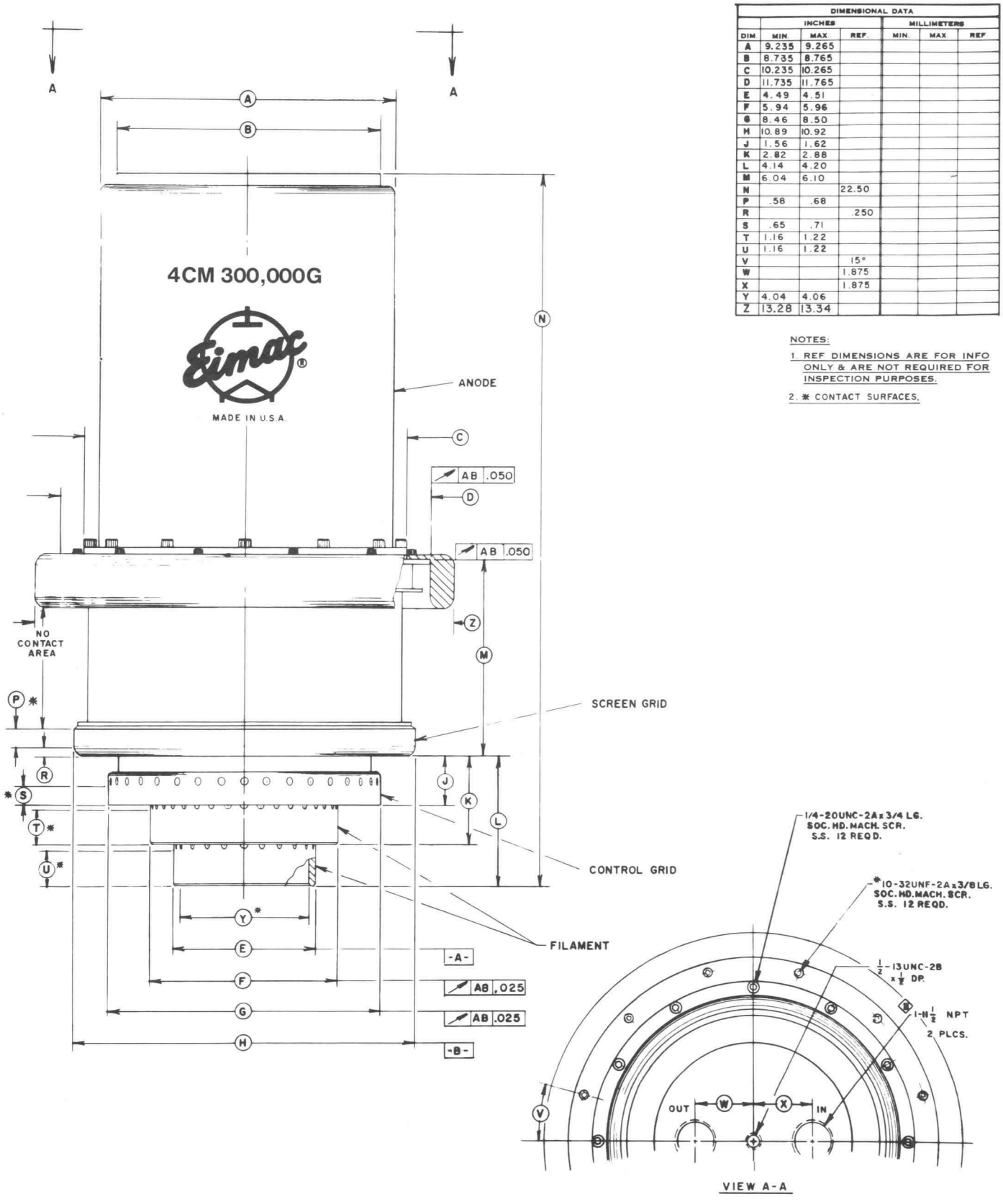

VIEW A-A

DIMENSIONAL DATA						
	INCHES			MILLIMETERS		
DIM	MIN.	MAX.	REF.	MIN.	MAX.	REF.
A	9.235	9.265				
B	8.735	8.765				
C	10.235	10.265				
D	11.735	11.765				
E	4.49	4.51				
F	5.94	5.96				
G	8.46	8.50				
H	10.89	10.92				
J	1.56	1.62				
K	2.82	2.88				
L	4.14	4.20				
M	6.04	6.10				
N			22.50			
P	.58	.68				
R			.250			
S	.65	.71				
T	1.16	1.22				
U	1.16	1.22				
V			15°			
W			1.875			
X			1.875			
Y	4.04	4.06				
Z	13.28	13.34				

NOTES:

1. REF DIMENSIONS ARE FOR INFO ONLY & ARE NOT REQUIRED FOR INSPECTION PURPOSES.
2. * CONTACT SURFACES.

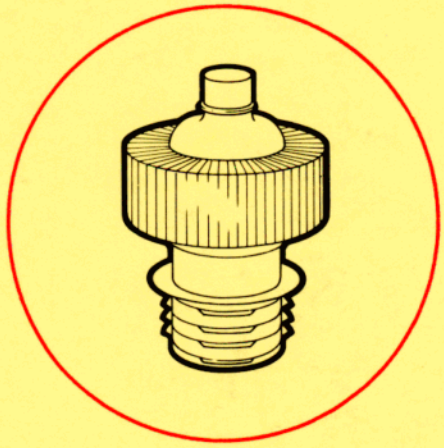

pentodes

EIMAC division of Varian

Main office: 301 Industrial Way, San Carlos, CA 94070

Look in the general section for–

A quick guide to EIMAC products and services offered in this catalog.

Including . . .

- Your nearest distributor of modern, fully guaranteed EIMAC electron tubes and accessories.
- Your nearest Varian/EIMAC Field Engineer, who stands ready to give you immediate engineering assistance, information on deliveries and prices, or to provide other information not found in this catalog.
- EIMAC tube type numbering system.
- EIMAC/JEDEC cross-reference list.

Important EIMAC extras...

APPLICATION ENGINEERING. The EIMAC Application Engineering Department is available at all times for consultation. New tube operating techniques are continually being explored, tested and proven by EIMAC engineers, whose combined knowledge and experience are at your service. EIMAC Application Bulletins covering various uses of EIMAC products are available upon request.

FIELD ENGINEERING. Serving as an extension of the Varian/EIMAC Application Engineering Department outside the EIMAC Division plant, the Field Engineers cover the United States, and numerous foreign countries, operating out of offices in major cities. They will help you personally with experimental work, circuits, technique, etc. Engineers from the EIMAC plant are available, too, for field consultation. As EIMAC tubes are world renowned, the same services extend to countries overseas through the Varian/EIMAC export operations and overseas offices.

4E27A/5-125B

RADIAL-BEAM POWER PENTODE

•

MODULATOR OSCILLATOR AMPLIFIER

EIMAC
Division of Varian
SAN CARLOS
CALIFORNIA

The Eimac 4E27A/5-125B is a power pentode intended for use as a modulator, oscillator or amplifier. The driving-power requirement is very low, and neutralization problems are simplified or eliminated entirely. The tube has a maximum plate-dissipation rating of 125 watts and a maximum plate voltage rating of 4000 volts at frequencies up to 75 Mc. Cooling is by convection and radiation. Type 4E27A/5-125B unilaterally replaces type 4E27.

The 4E27A/5-125B in class-C r-f service will deliver up to 375 watts plate power output with less than 2 watts driving power. It will deliver up to 75 watts of carrier for suppressor modulation.

Two 4E27A/5-125B's will deliver up to 300 watts maximum-signal plate power output in class AB_1 modulator service, 400 watts in class AB_2 with less than 1 watt driving power.



GENERAL CHARACTERISTICS

ELECTRICAL

Filament: Thoriated tungsten	
Voltage	5.0 volts
Current	7.5 amperes
Grid-Screen Amplification Factor (Average)	5.0
Direct Interelectrode Capacitances (Average)	
Grid-Plate	0.08 $\mu\mu$fd
Input	10.5 $\mu\mu$fd
Output	4.7 $\mu\mu$fd
Transconductance (I_b=50ma., E_b=2500v., E_{c2}=500v., E_{c3}= 0v.)	2150 μmhos
Highest Frequencies for Maximum Ratings	75 Mc.

MECHANICAL

Base	7-pin, metal shell
Connections	See drawing
Socket*	E. F. Johnson Co. No. 122-237, or equivalent
Mounting Position	Vertical, base down or up
Cooling	Convection and radiation
Recommended Heat Dissipating Plate Connector	Eimac HR-5
Maximum Over-All Dimensions:	
Length	6.19 inches
Diameter	2.75 inches
Net Weight (Average)	6.0 ounces
Shipping Weight	2.0 pounds

*See "Cooling" under Application Notes.

Note: Typical operation data are based on conditions of adjusting the r-f grid drive to specified plate current, maintaining fixed conditions of grid bias, screen voltage and suppressor voltage. It will be found that if this procedure is followed, there will be little variation in power output between tubes even though there may be some variation in grid, screen and suppressor currents. Where grid bias is obtained principally by means of a grid resistor, to control plate current it is necessary to make the resistor adjustable.

RADIO-FREQUENCY POWER AMPLIFIER OR OSCILLATOR

Class-C Telegraphy or FM Telephony, Frequencies up to 75 Mc.
(Key-down conditions, per tube)

MAXIMUM RATINGS

D-C PLATE VOLTAGE	4000 MAX. VOLTS
D-C SCREEN VOLTAGE	750 MAX. VOLTS
D-C GRID VOLTAGE	−500 MAX. VOLTS
D-C PLATE CURRENT	200 MAX. MA
PLATE DISSIPATION	125 MAX. WATTS
SUPPRESSOR DISSIPATION	20 MAX. WATTS
SCREEN DISSIPATION	20 MAX. WATTS
GRID DISSIPATION	5 MAX. WATTS

TYPICAL OPERATION
60 Suppressor Volts, 500 Screen Volts

D-C Plate Voltage	1000	1500	2000	2500	3000	volts
D-C Grid Voltage	−120	−130	−150	−170	−200	volts
D-C Plate Current	167	200	200	186	167	ma
D-C Suppressor Current*	6	5	4	3	3	ma
D-C Screen Current*	11	11	11	7	5	ma
D-C Grid Current*	6	8	8	7	6	ma
Peak R-F Grid Input Voltage	170	200	222	240	260	volts
Driving Power*	1.0	1.6	1.8	1.7	1.6	watts
Grid Dissipation*	.3	.6	.6	.5	.6	watts
Screen Dissipation*	5.5	5.5	5.5	3.5	2.5	watts
Plate Dissipation	47	85	100	115	125	watts
Plate Power Input	167	300	400	465	500	watts
Plate Power Output	120	215	300	350	375	watts

TYPICAL OPERATION
Zero Suppressor Volts, 500 Screen Volts

D-C Plate Voltage	1000	1500	2000	2500	3000	volts
D-C Grid Voltage	−120	−130	−150	−170	−200	volts
D-C Plate Current	145	180	200	184	167	ma
D-C Screen Current*	17	20	23	18	12	ma
D-C Grid Current*	6	8	11	9	7	ma
Peak R-F Grid Input Voltage	170	200	240	250	270	volts
Driving Power*	1.0	1.6	2.6	2.3	1.9	watts
Grid Dissipation*	.3	.6	1.0	.8	.5	watts
Screen Dissipation*	8.5	10	12	9	6	watts
Plate Dissipation	55	95	125	125	125	watts
Plate Power Input	145	270	400	460	500	watts
Plate Power Output	90	175	275	335	375	watts

TYPICAL OPERATION
Zero Suppressor Volts, 750 Screen Volts

D-C Plate Voltage	1000	1500	2000	2500	3000	volts
D-C Grid Voltage	−170	−180	−200	−225	−250	volts
D-C Plate Current	160	200	200	186	167	ma
D-C Screen Current*	21	24	22	12	9	ma
D-C Grid Current*	3	6	6	4	3	ma
Peak R-F Grid Input Voltage	205	235	257	270	290	volts
Driving Power*	.6	1.4	1.5	1.1	.9	watts
Grid Dissipation*	.1	.4	.3	.2	.2	watts
Screen Dissipation*	16	18	17	9	7	watts
Plate Dissipation	45	85	100	115	125	watts
Plate Power Input	160	300	400	465	500	watts
Plate Power Output	115	215	300	350	375	watts

*Approximate Values

(Effective 8-15-52) c 1968 by Varian

Printed in U.S.A.

PLATE-MODULATED RADIO-FREQUENCY AMPLIFIER

Class-C Telephony, Frequencies up to 75 Mc.
(Carrier conditions, per tube, unless otherwise specified)

MAXIMUM RATINGS

D-C PLATE VOLTAGE	3200 MAX. VOLTS
D-C SCREEN VOLTAGE	750 MAX. VOLTS
D-C GRID VOLTAGE	−500 MAX. VOLTS
D-C PLATE CURRENT	160 MAX. MA
PLATE DISSIPATION	85 MAX. WATTS
SUPPRESSOR DISSIPATION	20 MAX. WATTS
SCREEN DISSIPATION	20 MAX. WATTS
GRID DISSIPATION	5 MAX. WATTS

TYPICAL OPERATION
Zero Suppressor Volts, 500 Screen Volts

D-C Plate Voltage	1000	1500	2000	2500	volts
D-C Grid Voltage	−190	−195	−200	−205	volts
D-C Plate Current	149	150	151	152	ma
D-C Screen Current*	20	18	17	16	ma
D-C Grid Current*	7	7	8	8	ma
Peak A-F Screen Voltage (100% Modulation)	350	350	350	350	volts
Peak R-F Grid Input Voltage	260	265	270	275	volts
Driving Power*	2	2	2	2	watts
Grid Dissipation*	0.5	0.5	0.5	0.5	watts
Screen Dissipation*	10	9	8.5	8	watts
Plate Dissipation	64	72	80	85	watts
Plate Power Input	149	225	300	380	watts
Plate Power Output	85	153	220	295	watts

SUPPRESSOR-MODULATED RADIO-FREQUENCY AMPLIFIER

Class-C Telephony, Frequencies up to 75 Mc.
(Carrier conditions, per tube, unless otherwise specified)

MAXIMUM RATINGS

D-C PLATE VOLTAGE	4000 MAX. VOLTS
D-C SCREEN VOLTAGE	750 MAX. VOLTS
D-C GRID VOLTAGE	−500 MAX. VOLTS
D-C PLATE CURRENT	200 MAX. MA
PLATE DISSIPATION	125 MAX. WATTS
SUPPRESSOR DISSIPATION	20 MAX. WATTS
SCREEN DISSIPATION	20 MAX. WATTS
GRID DISSIPATION	5 MAX. WATTS

TYPICAL OPERATION

D-C Plate Voltage	1500	2000	2500	3000	volts
D-C Suppressor Voltage	−220	−260	−305	−350	volts
Peak A-F Suppressor Voltage (100% Modulation)	220	260	305	350	volts
D-C Screen Voltage	400	400	400	400	volts
Fixed D-C Screen Voltage	610	645	650	610	volts
Screen Dropping Resistor[1]	5500	9100	10,000	8300	ohms
D-C Grid Voltage	−170	−180	−190	−200	volts
D-C Plate Current	59	59	59	60	ma
D-C Screen Current*	38	27	25	25	ma
D-C Grid Current*	6	5	5	4	ma
Peak R-F Grid Input Voltage	230	235	245	250	volts
Driving Power*	1.4	1.3	1.2	1.2	watts
Grid Dissipation*	.35	.25	.25	.20	watts
Screen Dissipation*	15	11	10	10	watts
Plate Dissipation	54	68	87	105	watts
Plate Power Input	89	118	148	180	watts
Plate Power Output	35	50	61	75	watts

[1]Adjust to stated d-c screen voltage.

AUDIO-FREQUENCY POWER AMPLIFIER OR MODULATOR

Class-AB, Sinusoidal Wave

MAXIMUM RATINGS (Per Tube)

D-C PLATE VOLTAGE	4000 MAX. VOLTS
D-C SCREEN VOLTAGE	750 MAX. VOLTS
D-C GRID VOLTAGE	−500 MAX. VOLTS
D-C PLATE CURRENT	200 MAX. MA
PLATE DISSIPATION	125 MAX. WATTS
SUPPRESSOR DISSIPATION	20 MAX. WATTS
SCREEN DISSIPATION	20 MAX. WATTS
GRID DISSIPATION	5 MAX. WATTS

TYPICAL OPERATION (Two tubes unless otherwise specified)
Class-AB_1

D-C Plate Voltage	1500	2000	2500	volts
D-C Suppressor Voltage	0	0	0	volts
D-C Screen Voltage	500	500	500	volts
D-C Grid Voltage[1]	−70	−80	−85	volts
Zero-Signal D-C Plate Current	110	85	65	ma
Max-Signal D-C Plate Current	205	210	220	ma
Zero-Signal D-C Screen Current*	0	0	0	ma
Max-Signal D-C Screen Current*	15	13	8	ma
Effective Plate-to-Plate Load	13,700	18,000	20,000	ohms
Peak A-F Grid Voltage (per tube)	70	80	85	volts
Max-Signal Driving Power*	0	0	0	watts
Max-Signal Plate Power Input	310	420	550	watts
Max-Signal Plate Power Output	200	250	300	watts

[1]Adjust to stated zero-signal d-c plate current. The effective grid circuit resistance for each tube must not exceed 250,000 ohms.

TYPICAL OPERATION (Two tubes unless otherwise specified)
Class-AB_2

D-C Plate Voltage	1500	2000	2500	volts
D-C Suppressor Voltage	60	0	0	volts
D-C Screen Voltage	500	500	500	volts
D-C Grid Voltage[1]	−70	−80	−85	volts
Zero-Signal D-C Plate Current	110	85	65	ma
Max-Signal D-C Plate Current	365	295	250	ma
Zero-Signal D-C Screen Current*	0	0	0	ma
Max-Signal D-C Screen Current*	11	16	13	ma
Effective Plate-to-Plate Load	7300	13,000	20,000	ohms
Peak A-F Grid Input Voltage (per tube)	100	100	95	volts
Max-Signal Driving Power*	0.5	0.3	0.2	watts
Max-Signal Plate Power Input	550	590	625	watts
Max-Signal Plate Power Output	300	350	400	watts

[1]Adjust to stated zero-signal d-c plate current.
*Approximate values.

IF IT IS DESIRED TO OPERATE THIS TUBE UNDER CONDITIONS WIDELY DIFFERENT FROM THOSE GIVEN UNDER "TYPICAL OPERATION" POSSIBLY EXCEEDING THE MAXIMUM RATINGS GIVEN FOR CW SERVICE, WRITE EIMAC, DIVISION OF VARIAN, FOR INFORMATION AND RECOMMENDATIONS.

APPLICATION

MECHANICAL

Mounting—The 4E27A/5-125B must be mounted vertically, base down or up. The plate lead should be flexible, and the tube must be protected from vibration and shock.

Cooling—A heat dissipating connector (Eimac HR-5 or equivalent) is required at the plate terminal, and provision must be made for the free circulation of air through the socket and through the holes in the base. If the E. F Johnson Co. 122-237 socket recommended under "General Characteristics" is to be used, the model incorporating a ventilating hole should be specified.

At high ambient temperatures, at frequencies above 75 Mc., or when the flow of air is restricted, it may become necessary to provide forced air circulation in sufficient quantity to prevent the temperature of the plate and base seals from exceeding 225°C. Forced movement of air across the tube seals and envelope is always beneficial, though not necessarily required.

Tube temperatures may be measured with the aid of "Tempilaq," a temperature-sensitive lacquer manufactured by the Tempil Corporation, 132 West 22nd Street, New York 11, N. Y.

ELECTRICAL

Filament Voltage—For maximum tube life the filament voltage, as measured directly at the base pins, should be the rated value of 5.0 volts. Variations should be held within the range of 4.75 to 5.25 volts.

Grid Voltage—Although a maximum of —500 volts bias may be applied to the grid, there is little advantage in using bias voltages in excess of those listed under "Typical Operation," except in certain specialized applications.

When grid-leak bias is used, suitable protective means must be provided to prevent excessive plate dissipation in the event of loss of excitation, and the grid-leak resistor should be made adjustable to facilitate maintaining the bias voltage and plate current at the desired value from tube to tube.

In class-C operation, particularly at high frequency, both grid bias and grid drive should be only great enough to provide satisfactory operation at good plate efficiency.

Screen Dissipation—Decrease or removal of plate load, plate voltage or bias voltage may result in screen dissipation in excess of the 20 watt maximum rating. The tube may be protected by an overload relay in the screen circuit set to remove the screen voltage when the dissipation exceeds 20 watts.

Resistors placed in the screen circuit for the purpose of developing an audio modulating voltage on the screen in modulated radio-frequency amplifiers should be made variable to permit adjustment when replacing tubes.

Plate Dissipation—Plate dissipation in excess of the 125-watt maximum rating is permissible for short periods of time, such as during tuning procedures.

Operation—If reasonable precautions are taken to prevent coupling between the input and output circuits, the 4E27A/5-125B may usually be operated at frequencies up to 75 Mc. without neutralization. A conventional method of obtaining the necessary shielding between the grid and plate circuits is to use a suitable metal chassis with the grid circuit mounted below the deck and the plate circuit above. The tube socket should be mounted flush with the under side of the chassis deck, and spring fingers mounted around the socket opening should make contact between the chassis and the metal base shell of the tube. Power-supply leads entering the amplifier should be by-passed to ground and properly shielded. The output circuit and antenna feeders should be arranged so as to preclude any possibility of feedback to other circuits.

Feedback at high frequencies may be due to the inductance of leads, particularly those of the screen and suppressor-grids. By-passing methods and means of placing these grids at r-f ground potential are discussed in Application Bulletin Number Eight, "The Care and Feeding of Power Tetrodes," available from Eimac, Division of Varian. Much of the material contained in this bulletin may be applied to pentodes.

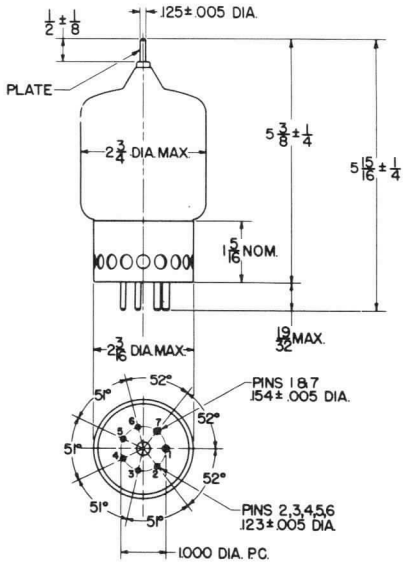

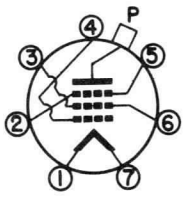

7BM

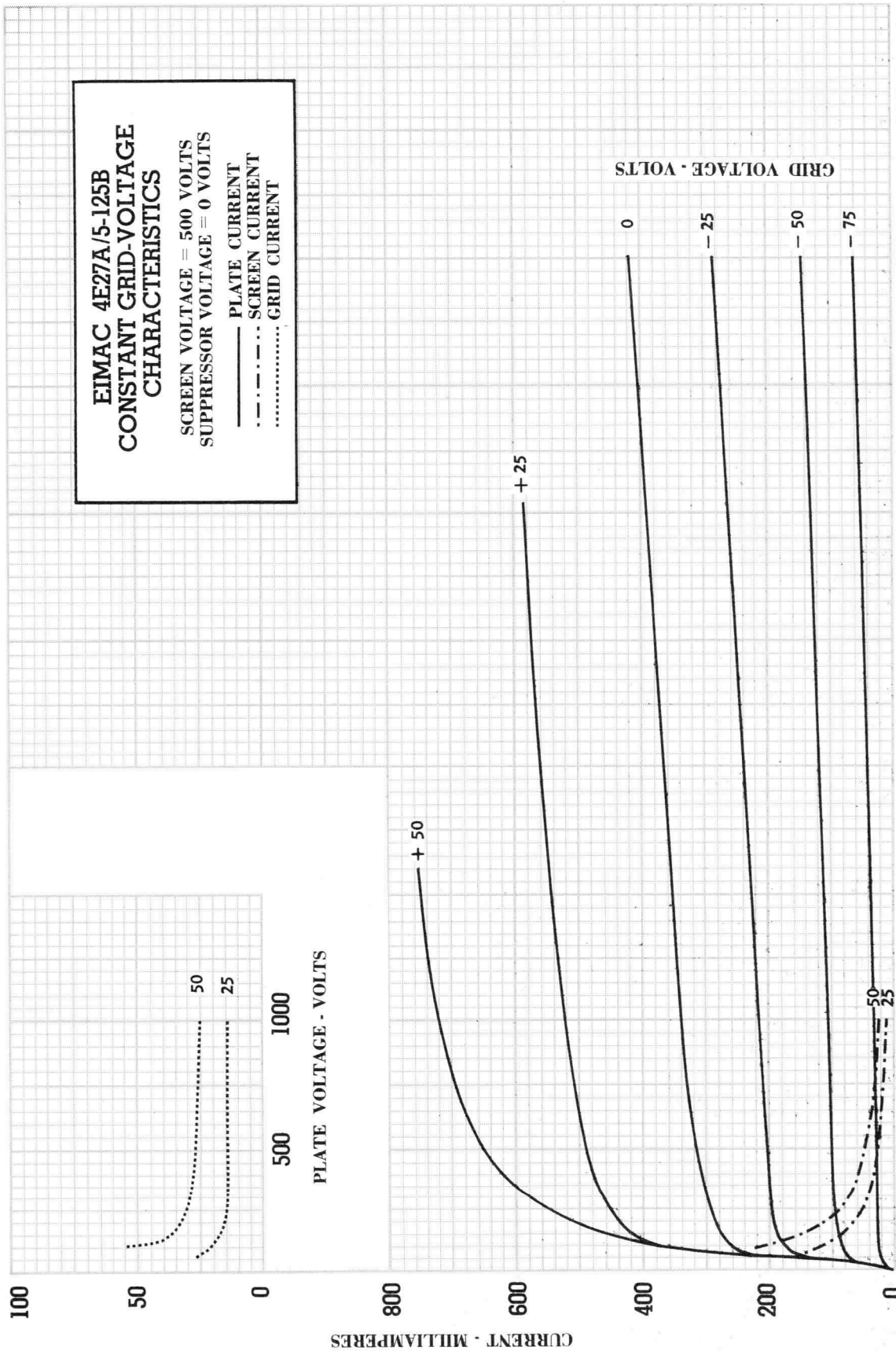
EIMAC 4E27A/5-125B
CONSTANT GRID-VOLTAGE
CHARACTERISTICS
SCREEN VOLTAGE = 500 VOLTS
SUPPRESSOR VOLTAGE = 0 VOLTS
PLATE CURRENT
SCREEN CURRENT
GRID CURRENT
CURRENT - MILLIAMPERES
PLATE VOLTAGE - VOLTS
GRID VOLTAGE - VOLTS
+ 50
+ 25
0
– 25
– 50
– 75
50
25

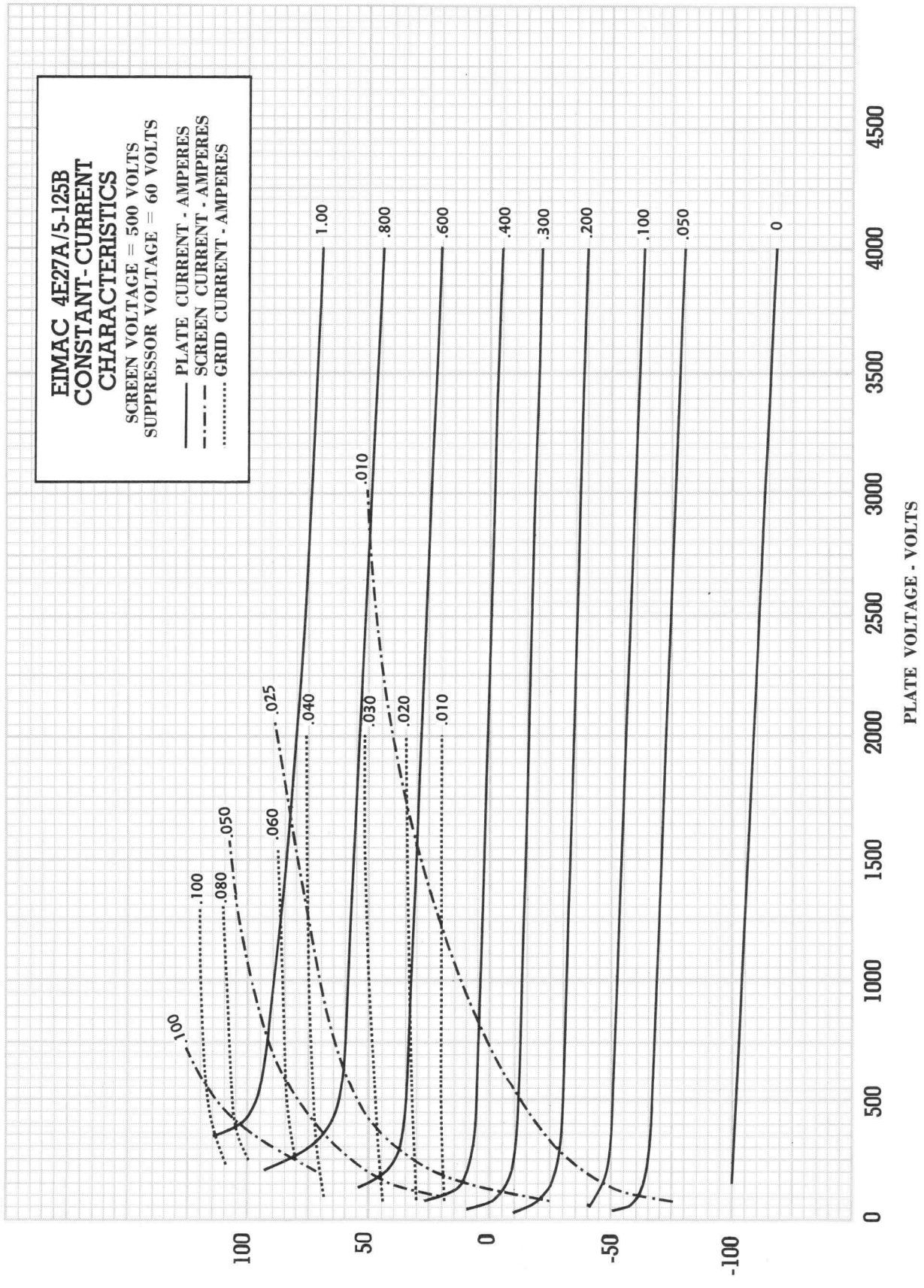
EIMAC 4E27A/5-125B
CONSTANT-CURRENT
CHARACTERISTICS
SCREEN VOLTAGE = 500 VOLTS
SUPPRESSOR VOLTAGE = 60 VOLTS
PLATE CURRENT - AMPERES
SCREEN CURRENT - AMPERES
GRID CURRENT - AMPERES
1.00
.800
.600
.400
.300
.200
.100
.050
0
.010
.025
.040
.030
.020
.010
.060
.050
.080
.100
.100
100
50
0
-50
-100
0
500
1000
1500
2000
2500
3000
3500
4000
4500
GRID VOLTAGE - VOLTS
PLATE VOLTAGE - VOLTS

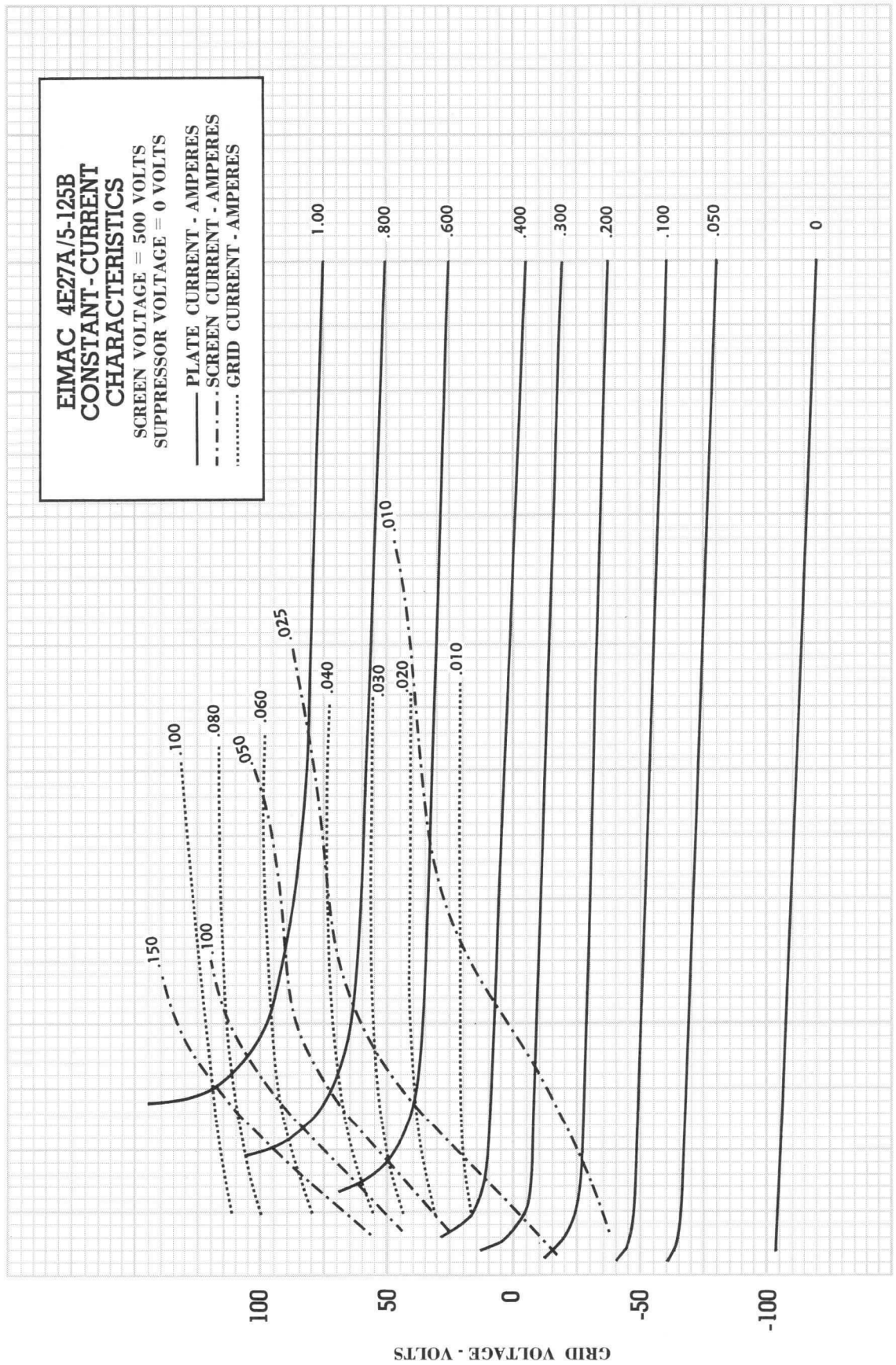
EIMAC 4E27A/5-125B
CONSTANT-CURRENT
CHARACTERISTICS
SCREEN VOLTAGE = 500 VOLTS
SUPPRESSOR VOLTAGE = 0 VOLTS
PLATE CURRENT - AMPERES
SCREEN CURRENT - AMPERES
GRID CURRENT - AMPERES
1.00
.800
.600
.400
.300
.200
.100
.050
0
.150
.100
.080
.050
.060
.025
.040
.030
.020
.010
.010
100
50
0
-50
-100
0
500
1000
1500
2000
2500
3000
3500
4000
4500
GRID VOLTAGE - VOLTS
PLATE VOLTAGE - VOLTS

EIMAC
Division of Varian
SAN CARLOS
CALIFORNIA

5-500A

RADIAL-BEAM POWER PENTODE

•

MODULATOR OSCILLATOR AMPLIFIER

The Eimac 5-500A is a compact, ruggedly constructed radial-beam power pentode having a maximum plate dissipation rating of 500 watts. It is intended for use as an amplifier, oscillator or modulator. The high plate current rating, low grid-plate capacitance and low driving power requirements permit maximum power capability to be combined with circuit simplicity and economic driver requirements.



The Eimac 5-500A is cooled by radiation from the plate and by circulation of forced-air through the base, around the envelope and over the plate seal. Cooling may be greatly simplified by the use of the Eimac SK-400 or SK-410 Air System Socket and the accompanying Eimac SK-426 glass chimney. These sockets are designed to maintain the correct balance of cooling air between the component parts of the tube.

The suppressor element of the 5-500A terminates at the tube base shell, and is designed to be operated at ground (zero) potential. The base shell must be grounded by means of suitable spring clips.

GENERAL CHARACTERISTICS

ELECTRICAL

Filament: Thoriated Tungsten, balanced			
Voltage		10.0	volts
Current		10.2	amperes
Grid-Screen Amplification Factor (Average)		5.5	
Direct Interelectrode Capacitances, Grounded Cathode	*Min.*	*Max.*	
Grid-Plate	—	.10	pf
Input	15.0	19.0	pf
Output	9.5	12.0	pf

MECHANICAL

Base	see drawing
Basing	see drawing
Mounting Position	Vertical, base up or down
Cooling	Radiation and forced air
Recommended Heat Dissipating Connector	Eimac HR-6
Recommended Socket	Eimac SK-400 or SK-410 Air System Socket
Recommended Chimney	Eimac SK-426
Maximum Overall Dimensions	
Length	7.00 inches
Diameter	3.56 inches
Net Weight	11 ounces
Shipping Weight	2.5 pounds

NOTE: Typical operation data are based on conditions of adjusting the r-f grid drive to a specified plate current, maintaining fixed conditions of grid bias and screen voltage. It will be found that if this procedure is followed there will be little variation in power output between tubes even though there may be some variation in grid and screen currents. Where grid bias is obtained principally by means of a grid resistor, to control plate current it is necessary to make the resistor adjustable.

(Effective 5-1-68) © 1965, 1968 by Varian

Printed in U.S.A.

RADIO FREQUENCY POWER AMPLIFIER AND OSCILLATOR

Class-C Telegraphy or FM Telephony

MAXIMUM RATINGS

D-C PLATE VOLTAGE	4000 Max. Volts
D-C SCREEN VOLTAGE	600 Max. Volts
D-C SUPPRESSOR VOLTAGE	100 Max. Volts
D-C PLATE CURRENT	450 Max. ma
PLATE DISSIPATION	500 Max. Watts
SCREEN DISSIPATION	35 Max. Watts
GRID DISSIPATION	12 Max. Watts

TYPICAL OPERATION

D-C Plate Voltage	2500	3000	4000 Volts
D-C Screen Voltage	500	500	500 Volts
D-C Grid Voltage	—210	—220	—240 Volts
D-C Suppressor Voltage	0	0	0 Volts
D-C Plate Current	405	432	450 ma
D-C Screen Current	55	65	65 ma
D-C Grid Current	28	35	38 ma
Screen Dissipation	27.5	32.5	33 Watts
Grid Dissipation	2.8	3.8	5.0 Watts
Peak R-F Grid Input Voltage	310	330	365 Volts
MF Driving Power*	8.7	12	14 Watts
Plate Power Input	1015	1300	1800 Watts
Plate Dissipation	265	495	500 Watts
Plate Power Output	750	805	1300 Watts

*Driving Power increases as frequency is increased.

RADIO-FREQUENCY LINEAR AMPLIFIER

Class AB_1, Grounded Cathode, one tube

MAXIMUM RATINGS

DC PLATE VOLTAGE	4000 Max. Volts
DC SCREEN VOLTAGE	1000 Max. Volts
DC SUPPRESSOR VOLTAGE	100 Max. Volts
DC PLATE CURRENT	450 Max. ma
PLATE DISSIPATION	500 Max. Watts
SCREEN DISSIPATION	35 Max. Watts

TYPICAL OPERATION (Frequencies below 30 Mc.)
Peak-Envelope or Modulation-Crest Conditions.
Adjusted for minimum distortion.

DC Plate Voltage	2000	3000	4000 Volts
DC Screen Voltage	750	750	750 Volts
DC Suppressor Voltage	0	0	0 Volts
DC Control Grid Voltage*	—100	—112	—121 Volts
Zero-Signal DC Plate Current	150	100	80 mA
Single-Tone DC Plate Current	338	320	322 mA
Two-Tone DC Plate Current	252	221	212 mA
Single-Tone DC Screen Current	31	26	24 mA
Two-Tone DC Screen Current	15	12	10 mA
Peak RF Grid Voltage	100	112	121 Volts
Useful Output Power	395	612	832 Watts
Resonant Load Impedance	3600	5800	7700 Ohms
Third Order Intermodulation Products**	—52	—33	—28 db
Fifth Order Intermodulation Products**	—49	—41	—37 db

*1. Adjust to the specified zero-signal plate current.

**2. Equal or better than stated for all signal levels up to indicated useful output power. Reference to one tone of a two-tone test signal.

PLATE MODULATED RADIO FREQUENCY AMPLIFIER

Class-C Telephony
(Carrier conditions unless otherwise specified.)

MAXIMUM RATINGS

DC PLATE VOLTAGE	4000 Volts
DC SCREEN VOLTAGE	600 Volts
DC SUPPRESSOR VOLTAGE	100 Volts
DC GRID VOLTAGE	—500 Volts
DC PLATE CURRENT	340 ma
PLATE DISSIPATION	330 Watts
SCREEN DISSIPATION	35 Watts
GRID DISSIPATION	12 Watts

TYPICAL OPERATION

DC Plate Voltage	2700	3100	3500 Volts
DC Screen Voltage	450	470	500 Volts
DC Grid Voltage	—270	—310	—300 Volts
DC Suppressor Voltage	0	0	0 Volts
DC Plate Current	285	260	305 ma
DC Screen Current	68	50	55 ma
DC Grid Current	20	15	18 ma
Screen Dissipation	31	23	27 Watts
Peak A-F Screen Voltage Approx. (100% Modulation)	350	330	350 Volts
Peak R-F Grid Voltage	355	385	375 Volts
MF Grid Driving Power	7	6	7 Watts
Plate Dissipation	160	220	280 Watts
Plate Power Output	580	580	780 Watts

AUDIO FREQUENCY POWER AMPLIFIER AND MODULATOR

Class AB

MAXIMUM RATINGS (Per Tube)

D-C PLATE VOLTAGE	4000 Max. Volts
D-C SCREEN VOLTAGE	1000 Max. Volts
D-C SUPPRESSOR VOLTAGE	100 Max. Volts
MAX-SIGNAL D-C PLATE CURRENT	450 ma
PLATE DISSIPATION	500 Max. Watts
SCREEN DISSIPATION	35 Max. Watts
GRID DISSIPATION	12 Max. Watts

TYPICAL OPERATION CLASS AB_1
(Sinusoidal wave, two tubes unless otherwise specified)

D-C Plate Voltage	3000	4000 Volts
D-C Screen Voltage	750	750 Volts
D-C Suppressor Voltage	0	0 Volts
D-C Grid Voltage (approx.)*	—112	—121 Volts
Zero-Signal D-C Plate Current	200	160 ma
Max-Signal D-C Plate Current	640	645 ma
Zero-Signal D-C Screen Current	0	0 ma
Max-Signal D-C Screen Current	52	48 ma
Effective Load, Plate-to-plate	11,600	15,400 Ohms
Peak A-F Grid Input Voltage (per tube)	112	121 Volts
Driving Power	0	0 Watts
Max-Signal Plate Power Output	1224	1664 Watts

*Adjust to give stated zero-signal plate current. The D-C resistance in series with the control grid of each tube should not exceed 250,000 ohms.

If it is desired to operate this tube under conditions widely different from those given under "Typical Operation," possibly exceeding the maximum ratings given for CW service, write Eimac, A Division of Varian Associates, for information and recommendations.

APPLICATION

MECHANICAL

MOUNTING—The 5-500A must be mounted vertically, base up or base down. The socket must be constructed so as to allow an unimpeded flow of air through the holes in the base of the tube and must also provide clearance for the glass tip-off which extends from the center of the base. The metal tube-base shell should be grounded by means of suitable spring fingers. The above requirements are met by the Eimac SK-400 and SK-410 Air-System Sockets. A flexible connecting strap should be provided between the Eimac HR-6 cooler on the plate terminal and the external plate circuit. The tube must be protected from severe vibration and shock.

COOLING—Adequate forced-air cooling must be provided to maintain the base seals at a temperature below 200°C., and the plate seal at a temperature below 225°C.

When the Eimac SK-400 or SK-410 Air-System Sockets and SK-426 chimney are used, a minimum air flow of 14 cubic feet per minute at a static pressure of 0.25 inches of water, as measured in the socket at sea level, is required to provide adequate cooling under all conditions of operation. Seal temperature limitations require that cooling air be supplied to the tube even when the filament alone is on during standby periods.

In the event an Air-System socket is not used, provision must be made to supply equivalent cooling of the base, the envelope, and the plate lead.

Tube temperatures may be measured with the aid of "Tempilaq," a temperature-sensitive laquer manufactured by the Tempil Corporation, 132 West 22nd Street, New York 11, N.Y.

ELECTRICAL

FILAMENT VOLTAGE—For maximum tube life the filament voltage, as measured directly at the filament pins, should be the rated voltage of 10.0 volts. Variations in filament voltage must be kept within the range of 9.5 to 10.5 volts.

The 5-500A features a balanced filament structure to help the designer meet FCC hum and noise specifications in AM service.

BIAS VOLTAGE — The d-c bias voltage for the 5-500A should not exceed 500 volts. If grid leak bias is used, suitable means must be provided to prevent excessive plate or screen dissipation in the event of loss of excitation, and the grid-leak resistor should be made adjustable to facilitate maintaining the bias voltage and plate current at the desired values from tube to tube. In operation above 50 Mc., it is advisable to keep the bias voltage as low as is practicable.

SCREEN VOLTAGE—The d-c screen voltage for the 5-500A should not exceed 800 volts in r-f applications. In audio applications a maximum d-c screen voltage of 1,000 volts may be used. The screen voltages shown under "Typical Operation" are representative voltages for the type of operation involved.

PLATE VOLTAGE—The plate-supply voltage for the 5-500A should not exceed 4000 volts in CW and audio applications. In plate-modulated telephony service the d-c plate-supply voltage should not exceed 3200 volts, except below 30 Mc., intermittent service, where 4000 volts may be used.

GRID DISSIPATION — Grid dissipation for the 5-500A should not be allowed to exceed 12 watts. Grid dissipation may be calculated from the following expression,

$$Pg = \varepsilon cmp Ic$$

where Pg = Grid Dissipation

εcmp = Peak positive grid to cathode voltage, and

Ic = D-C grid current

εcmp may be measured by means of a suitable peak voltmeter connected between filament and grid.

SCREEN DISSIPATION — The power dissipated by the screen of the 5-500A must not exceed 35 watts. Screen dissipation is likely to rise to excessive values when the plate voltage, bias voltage or plate load are removed with filament and screen voltages applied. Suitable protective means must be provided to limit screen dissipation to 35 watts in event of circuit failure.

PLATE DISSIPATION—Under normal operating conditions, the plate dissipation of the 5-500A should not be allowed to exceed 500 watts.

In plate modulated amplifier applications, the maximum allowable carrier-condition plate dissipation is 330 watts. The plate dissipation may rise to 500 watts under 100% sinusoidal modulation.

Plate dissipation in excess of the maximum rating is permissible for short periods of time, such as during tuning procedures.

General information pertaining to the operation of the 5-500A may be found in Application Bulletin No. 8, "The Care and Feeding of Power Tetrodes." This Bulletin is available upon request.

REFERENCE DIMENSIONS ARE FOR INFORMATION ONLY AND ARE NOT REQ'D. FOR INSPECTION PURPOSES.

DIMENSIONS IN INCHES			
DIMENSIONAL DATA			
DIM.	MIN	MAX.	REF.
A	6.500	7.000	
B		3-9/16 D.	
D	5.750	6.250	
E	.350 D.	.365 D.	
F	21/64		
H			7/16
J			31/32
K		1.1/4	
L			3/4
M			1/4 D.
N		2-3/4 D.	
P			5/16 D.
Q			1/2 D.
R			1-5/8 D.
S			1-1/4 D.P.C.
T	.185 D.	.191 D.	
U			30°
V			60°
W			45°

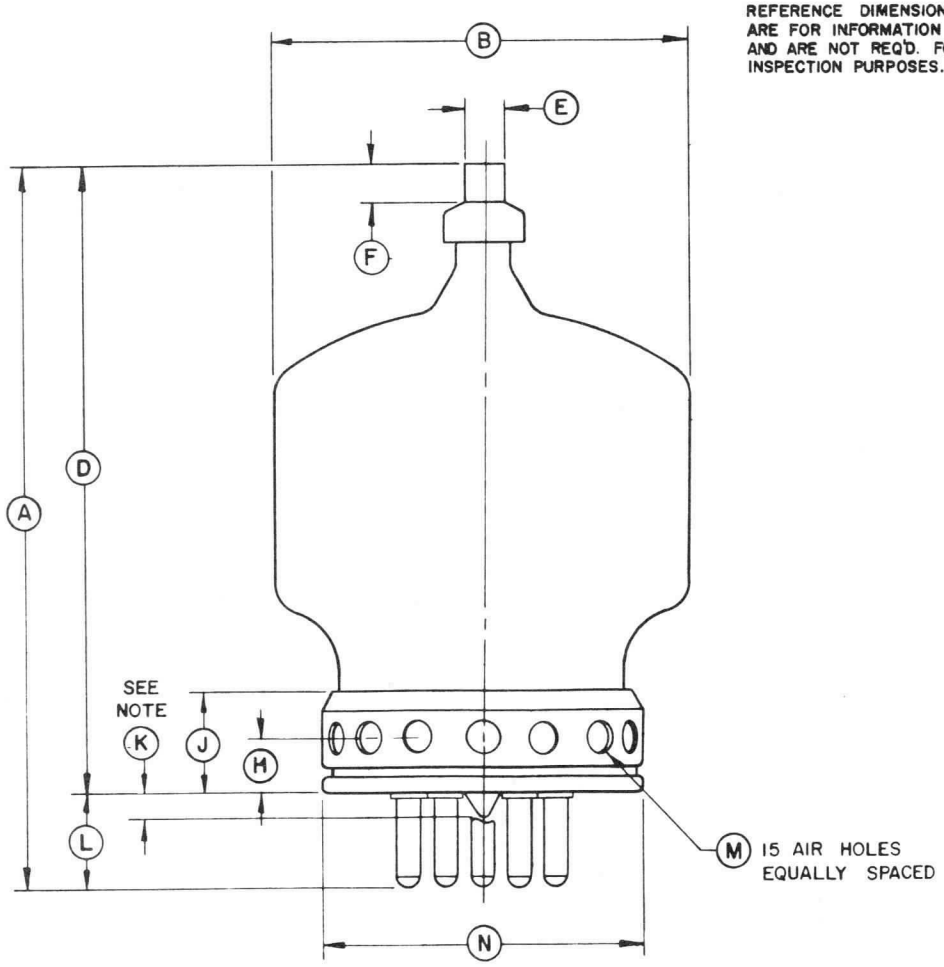

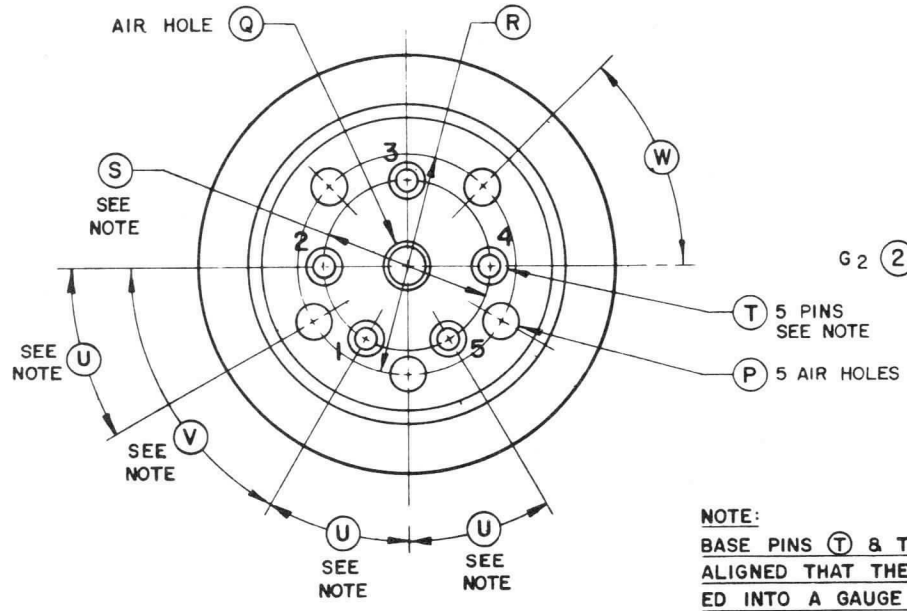

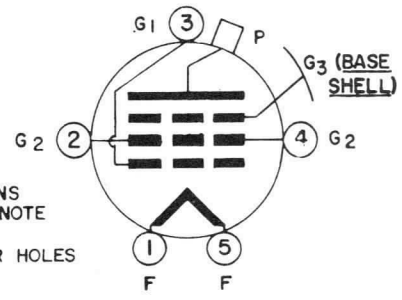

NOTE:
BASE PINS (T) & TUBULATION (K) ARE SO ALIGNED THAT THEY CAN BE FREELY INSERTED INTO A GAUGE 1/4" THICK WITH HOLE DIAMETERS OF .204 & .500 RESPECTIVELY LOCATED ON THE TRUE CENTERS BY THE GIVEN DIMENSIONS (V), (U), (S).

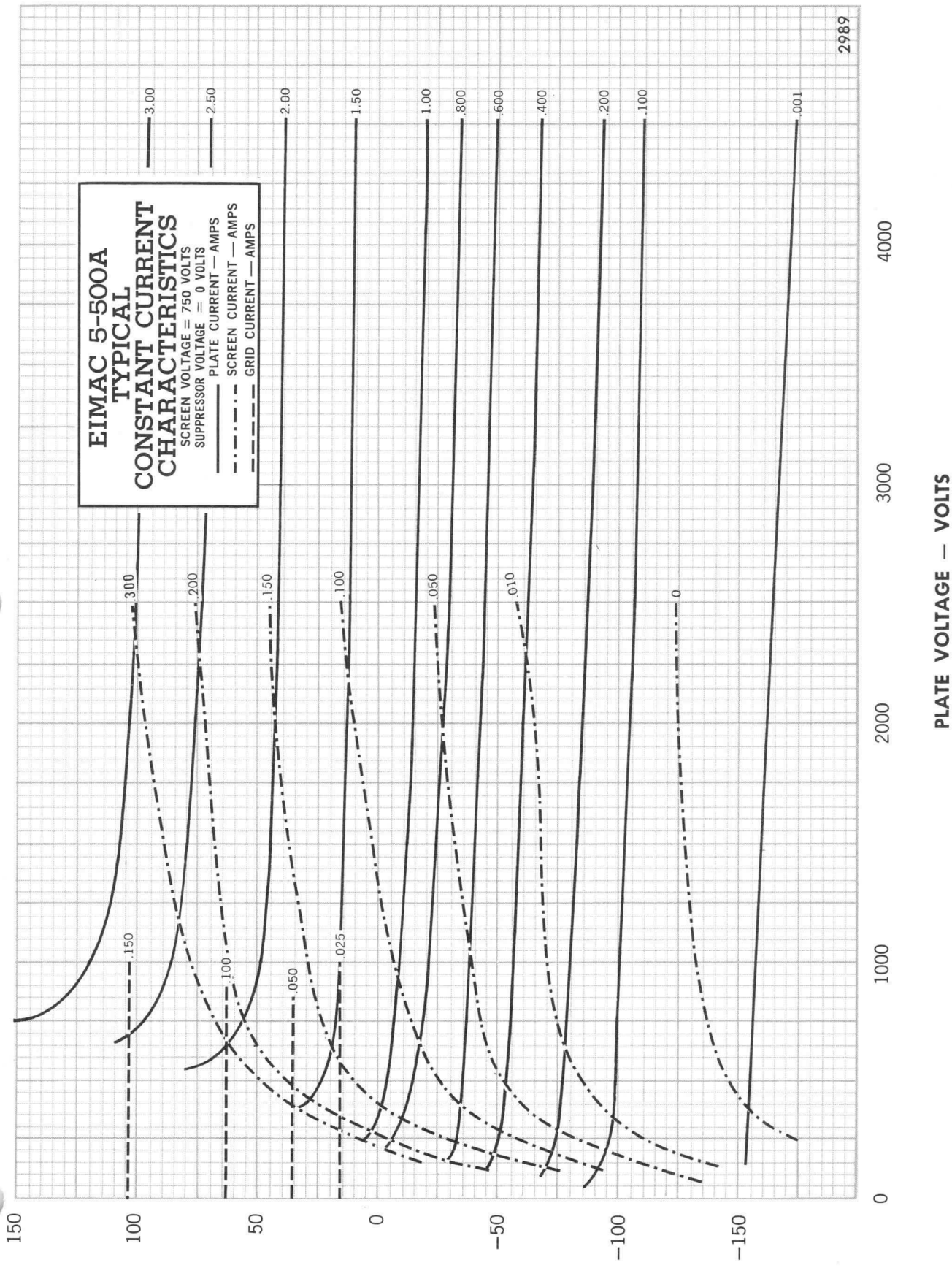
EIMAC 5-500A
TYPICAL
CONSTANT CURRENT
CHARACTERISTICS
SCREEN VOLTAGE = 750 VOLTS
SUPPRESSOR VOLTAGE = 0 VOLTS
PLATE CURRENT — AMPS
SCREEN CURRENT — AMPS
GRID CURRENT — AMPS
3.00
2.50
2.00
1.50
1.00
.800
.600
.400
.200
.100
.001
.300
.200
.150
.100
.050
.010
0
.150
.100
.050
.025
2989
150
100
50
0
−50
−100
−150
0
1000
2000
3000
4000
GRID VOLTAGE — VOLTS
PLATE VOLTAGE — VOLTS

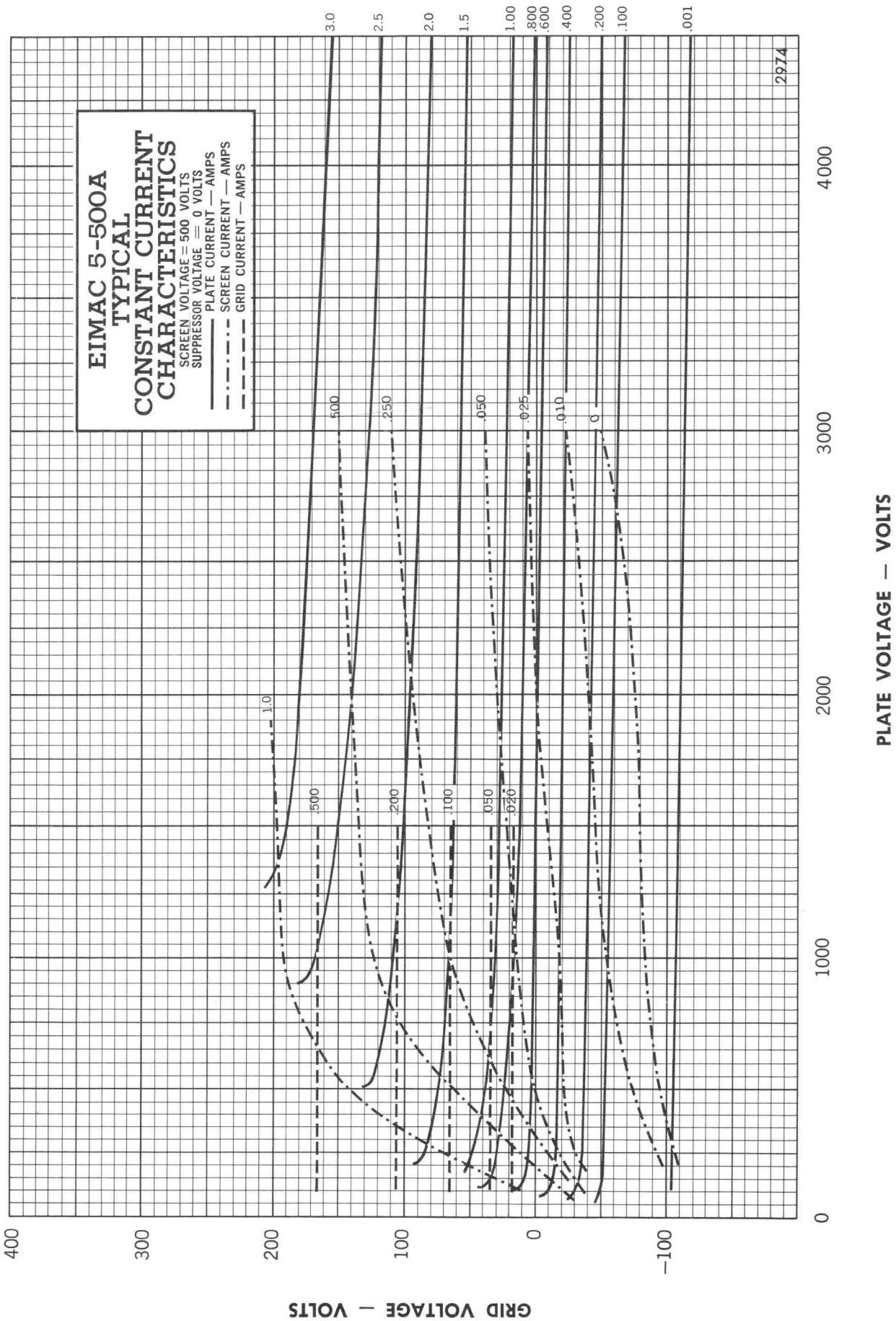
EIMAC 5-500A
TYPICAL
CONSTANT CURRENT
CHARACTERISTICS
SCREEN VOLTAGE = 500 VOLTS
SUPPRESSOR VOLTAGE = 0 VOLTS
PLATE CURRENT — AMPS
SCREEN CURRENT — AMPS
GRID CURRENT — AMPS
2974
3.0
2.5
2.0
1.5
1.00
.800
.600
.400
.200
.100
.001
500
250
050
025
010
0
1.0
.500
.200
.100
.050
.020
0
1000
2000
3000
4000
PLATE VOLTAGE — VOLTS
400
300
200
100
0
−100
GRID VOLTAGE — VOLTS

5CX1500A

TECHNICAL DATA

RADIAL BEAM
POWER PENTODE

The EIMAC 5CX1500A is a ceramic/metal power pentode designed for use as a Class AB_1 linear amplifier in audio or radio frequency applications. Its characteristic low intermodulation distortion makes it especially suitable for single sideband service. The filament is a rugged mesh type.

The tube is also recommended for use as a Class C rf power amplifier in CW, FM and AM service.



GENERAL CHARACTERISTICS[1]

ELECTRICAL

Filament: Thoriated Tungsten		
Voltage	5.0 ± 0.25	V
Current, at 5.0 volts	40	A
Transconductance (Average):		
I_b = 1.0 Adc, E_{c2} = 500 Vdc	24,000	μmhos
Amplification Factor (Average):		
Grid to Screen	5.5	
Direct Interelectrode Capacitance (grounded cathode)[2]		
Input	75	pF
Output	16.5	pF
Feedback	0.20	pF
Frequency of Maximum Rating:		
CW	110	MHz

1. Characteristics and operating values are based upon performance tests. These figures may change without notice as the result of additional data or product refinement. EIMAC Division of Varian should be consulted before using this information for final equipment design.

2. Capacitance values are for a cold tube as measured in a special shielded fixture.

MECHANICAL

Maximum Overall Dimensions:	
Length	4.950 in; 125.73 mm
Diameter	3.370 in; 85.60 mm
Net Weight	30 oz; 850.5 gm
Operating Position	Axis vertical, base down or up
Maximum Operating Temperature:	
Ceramic/Metal Seals	250°C
Anode Core	250°C

(Effective 6-6-70) © 1965,1967,1970 Varian

Printed in U.S.A.

Cooling	Forced Air
Base	Special ring and breechblock terminal surfaces
Recommended Air System Socket	EIMAC SK-840 series
Recommended (Air) Chimney	EIMAC SK-806

RADIO FREQUENCY LINEAR AMPLIFIER GRID DRIVEN

Class AB_1

ABSOLUTE MAXIMUM RATINGS:

DC PLATE VOLTAGE	4000 VOLTS
DC SCREEN VOLTAGE	750 VOLTS
DC PLATE CURRENT	1.0 AMPERE
PLATE DISSIPATION	1500 WATTS
SUPPRESSOR DISSIPATION	25 WATTS
SCREEN DISSIPATION	75 WATTS
GRID DISSIPATION	25 WATTS

1. Adjust to specified zero-signal dc plate current.
2. The intermodulation distortion products are referenced against one tone of a two equal tone signal.
3. Approximate values.

TYPICAL OPERATION (Frequencies to 30 MHz)
Class AB_1, Grid Driven, Peak Envelope or Modulation Crest Conditions

Plate Voltage	2500	3000	4000	Vdc
Suppressor Voltage	0	0	0	Vdc
Screen Voltage	500	500	500	Vdc
Grid Voltage[1]	-87	-89	-90	Vdc
Zero-Signal Plate Current	250	250	250	mAdc
Single-Tone Plate Current	660	690	690	mAdc
Two-Tone Plate Current	470	480	485	mAdc
Single-Tone Screen Current[3]	79	71	59	mAdc
Two-Tone Screen Current[3]	36	32	25	mAdc
Peak rf Grid Voltage[3]	87	89	90	v
Peak Driving Power[3]	0	0	0	w
Single-Tone Useful Output Power	1090	1330	1785	W
Resonant Load Impedance	2340	2680	3500	Ω
Intermodulation Distortion Products[2]				
3rd Order	-38	-36	-33	db
5th Order	-39	-41	-42	db

RADIO FREQUENCY POWER AMPLIFIER OR OSCILLATOR

Class C Telegraphy or FM Telephony (Key-Down Conditions)

ABSOLUTE MAXIMUM RATINGS

DC PLATE VOLTAGE	5000 VOLTS
DC SCREEN VOLTAGE	750 VOLTS
DC PLATE CURRENT	1.0 AMPERE
PLATE DISSIPATION	1500 WATTS
SUPPRESSOR DISSIPATION	25 WATTS
SCREEN DISSIPATION	75 WATTS
GRID DISSIPATION	25 WATTS

TYPICAL OPERATION (Frequencies to 30 MHz)

Plate Voltage	3000	4000	4500	Vdc
Suppressor Voltage	0	0	0	Vdc
Screen Voltage	500	500	500	Vdc
Grid Voltage	-200	-200	-200	Vdc
Plate Current	900	800	900	mAdc
Screen Current[1]	94	66	88	mAdc
Grid Current[1]	35	25	34	mAdc
Peak rf Grid Voltage[1]	255	245	255	v
Calculated Driving Power	9.0	6.5	9.0	W
Plate Input Power	2700	3200	4050	W
Plate Dissipation	720	850	870	W
Plate Output Power	1980	2350	3180	W
Resonant Load Impedance	1570	2240	2520	Ω

1. Approximate value.

PLATE MODULATED RADIO FREQUENCY POWER AMPLIFIER-GRID DRIVEN

Class C Telephony (Carrier Conditions)

ABSOLUTE MAXIMUM RATINGS

DC PLATE VOLTAGE	3500 VOLTS
DC SCREEN VOLTAGE	550 VOLTS
DC PLATE CURRENT	0.8 AMPERE
PLATE DISSIPATION[1]	1000 WATTS
SUPPRESSOR DISSIPATION	25 WATTS
SCREEN DISSIPATION[2]	75 WATTS
GRID DISSIPATION[2]	25 WATTS

1. Corresponds to 1500 watts at 100% sine-wave modulation.
2. Average, with or without modulation.

TYPICAL OPERATION (Frequencies to 30 MHz)

Plate Voltage	2500	3200	Vdc
Suppressor Voltage	0	0	Vdc
Screen Voltage	500	500	Vdc
Grid Voltage	-260	-260	Vdc
Plate Current	800	800	mAdc
Screen Current[1]	90	86	mAdc
Grid Current[1]	32	32	mAdc
Peak af Screen Voltage[1] (100% modulation)	500	500	v
Peak rf Grid Voltage[1]	315	315	v
Calculated Driving Power	10	10	W
Plate Input Power	2000	2560	W
Plate Dissipation	530	576	W
Plate Output Power	1470	1958	W
Resonant Load Impedance	1360	1863	Ω

1. Approximate value.

AUDIO FREQUENCY POWER AMPLIFIER OR MODULATOR Class AB, Grid Driven (Sinusoidal Wave)

ABSOLUTE MAXIMUM RATINGS (per tube)

DC PLATE VOLTAGE	4000	VOLTS
DC SCREEN VOLTAGE	750	VOLTS
DC PLATE CURRENT	1.0	AMPERE
PLATE DISSIPATION	1500	WATTS
SUPPRESSOR DISSIPATION	25	WATTS
SCREEN DISSIPATION	75	WATTS
GRID DISSIPATION	25	WATTS

TYPICAL OPERATION (Two Tubes)

Plate Voltage	2800	3800	Vdc
Suppressor Voltage	0	0	Vdc
Screen Voltage	500	500	Vdc
Grid Voltage	-81	-83	Vdc
Zero-Signal Plate Current	0.50	1.50	Adc
Max. Signal Plate Current	1.30	1.33	Adc
Zero-Signal Plate Current	20	20	mAdc
Max. Signal Screen Current	110	106	mAdc
Peak af Grid Voltage	81	83	v
Peak Driving Power	0	0	w
Max. Signal Plate Dissipation	720	1130	W
Plate Output Power	2200	3220	W
Load Resistance(plate to plate)	4800	6720	Ω

1. Approximate value.
2. Per tube .
3. Nominal drive power is one-half peak power.
4. Adjust to give stated zero-signal plate current.

NOTE: TYPICAL OPERATION data are obtained from direct measurement or by calculation from published characteristic curves. Adjustment of the rf grid voltage to obtain the specified plate current at the specified bias, screen and plate voltages is assumed. If this procedure is followed, there will be little variation in output power when the tube is changed, even though there may be some variation in grid and screen current. The grid and screen currents which result when the desired plate current is obtained are incidental and vary from tube to tube. These current variations cause no difficulty so long as the circuit maintains the correct voltage in the presence of the variations in current. In the case of Class C Service, if grid bias is obtained principally by means of a grid resistor, the resistor must be adjustable to obtain the required bias voltage when the correct rf grid voltage is applied.

RANGE VALUES FOR EQUIPMENT DESIGN	Min.	Max.	
Filament: Current at 5.0 volts	38	43	A
Interelectrode Capacitances[1] (grounded cathode connection)			
Input	70	80	pF
Output	14.5	18.5	pF
Feedback	---	0.25	pF
Interelectrode Capacitances[1] (grounded grid connection)			
Input	32	37	pF
Output	14.5	18.5	pF
Feedback	---	0.05	pF

APPLICATION

MECHANICAL

MOUNTING - The 5CX1500A must be operated with its axis vertical. The base of the tube may be down or up at the convenience of the circuit designer.

SOCKET - The EIMAC SK-840 socket and SK-806 chimney have been designed especially for the 5CX1500A. The use of recommended air-flow rates through these sockets provides effective forced-air cooling of the tube. Air forced into the bottom of the socket passes over the tube terminals through the Air Chimney, and exits through the anode cooling fins.

COOLING - The maximum temperature rating for the anode core of the 5CX1500A is 250°C. Sufficient forced-air circulation must be provided to keep the temperature of the anode at the base of the cooling fins and the temperature of the ceramic/metal seals below 250°C. Air-flow requirements to maintain seal temperature at 225°C in 50°C ambient air are tabulated below (for operation below 30 MHz).

	SEA LEVEL		6000 FEET	
PLATE DISSIPATION (WATTS)	AIR FLOW (CFM)	PRESSURE DROP (INCHES of WATER)	AIR FLOW (CFM)	PRESSURE DROP (INCHES of WATER)
1000	27	.33	33	.40
1500	47	.76	58	.95

* Since the power dissipated by the filament represents about 200 watts and since grid-plus-screen-plus-suppressor dissipation can, under some conditions, represent another 125 watts, allowance has been made in preparing this tabulation for an additional 325 watts dissipation.

The blower selected in a given application must be capable of supplying the desired air flow at a back pressure equal to the pressure drop shown above plus any drop encountered in ducts and filters.

At other altitudes and ambient temperatures the flow rate must be modified to obtain equivalent cooling. The flow rate and corresponding pressure differential must be determined individually in such cases, using rated maximum temperatures as the criteria for satisfactory cooling.

ELECTRICAL

FILAMENT OPERATION - The rated filament voltage for the 5CX1500A is 5.0 volts. Filament voltage, as measured at the socket, should be maintained within ±5% of this value or below to obtain maximum tube life.

INTERMODULATION DISTORTION - The Radio Frequency Linear Amplifier operating conditions including distortion data are the results of operation in a neutralized, grid-driven amplifier. Plots of IM distortion versus power output under two-tone condition for a typical tube are shown on next page.

GRID OPERATION - The rated dissipation of the grid is 25 watts. This is approximately the product of dc grid current and peak positive grid voltage. Operation at bias and drive levels near those listed will insure safe operation.

SCREEN OPERATION - The power dissipated by the screen of the 5CX1500A must not exceed 75 watts.

Screen dissipation, in cases where there is no ac applied to the screen, is the simple product of the screen voltage and the screen current. If the screen voltage is modulated, the screen dissipation will depend upon rms screen current and voltage.

Screen dissipation is likely to rise to excessive values when the plate voltage, bias voltage, or plate load are removed with filament and screen voltages applied. Suitable protective means must be provided to limit the screen dissipation to 75 watts in the event of circuit failure.

SUPPRESSOR OPERATION - The rated dissipation of the suppressor is 25 watts. Suppressor current will be zero or very nearly zero for all typical operating conditions specified. The 5CX1500A has been designed for zero voltage operation of the suppressor grid for most applications.

PLATE DISSIPATION - The plate-dissipation ratings for the 5CX1500A is 1000 watts for Class-C plate-modulated service and 1500 watts for Class-C telegraphy. In Class-AB service the plate dissipation rating is 1500 watts.

HIGH VOLTAGE - The 5CX1500A operates at voltages which can be deadly, and the equipment must be designed properly and operating precautions must be followed. Equipment must be designed so that no one can come in contact with high voltages. All equipment must include safety enclosures for high-voltage circuits and terminals, with interlock switches to open the primary circuits of the power supplies and to discharge high voltage condensers whenever access doors are opened. Interlock switches must not be bypassed or "cheated" to allow operation with access doors open. Always remember that HIGH VOLTAGE CAN KILL.

SPECIAL APPLICATIONS - If it is desired to operate this tube under conditions widely different from those given here write to the Power Grid Tube Division, EIMAC Division of Varian, 301 Industrial Way, San Carlos, California 94070, for information and recommendations.

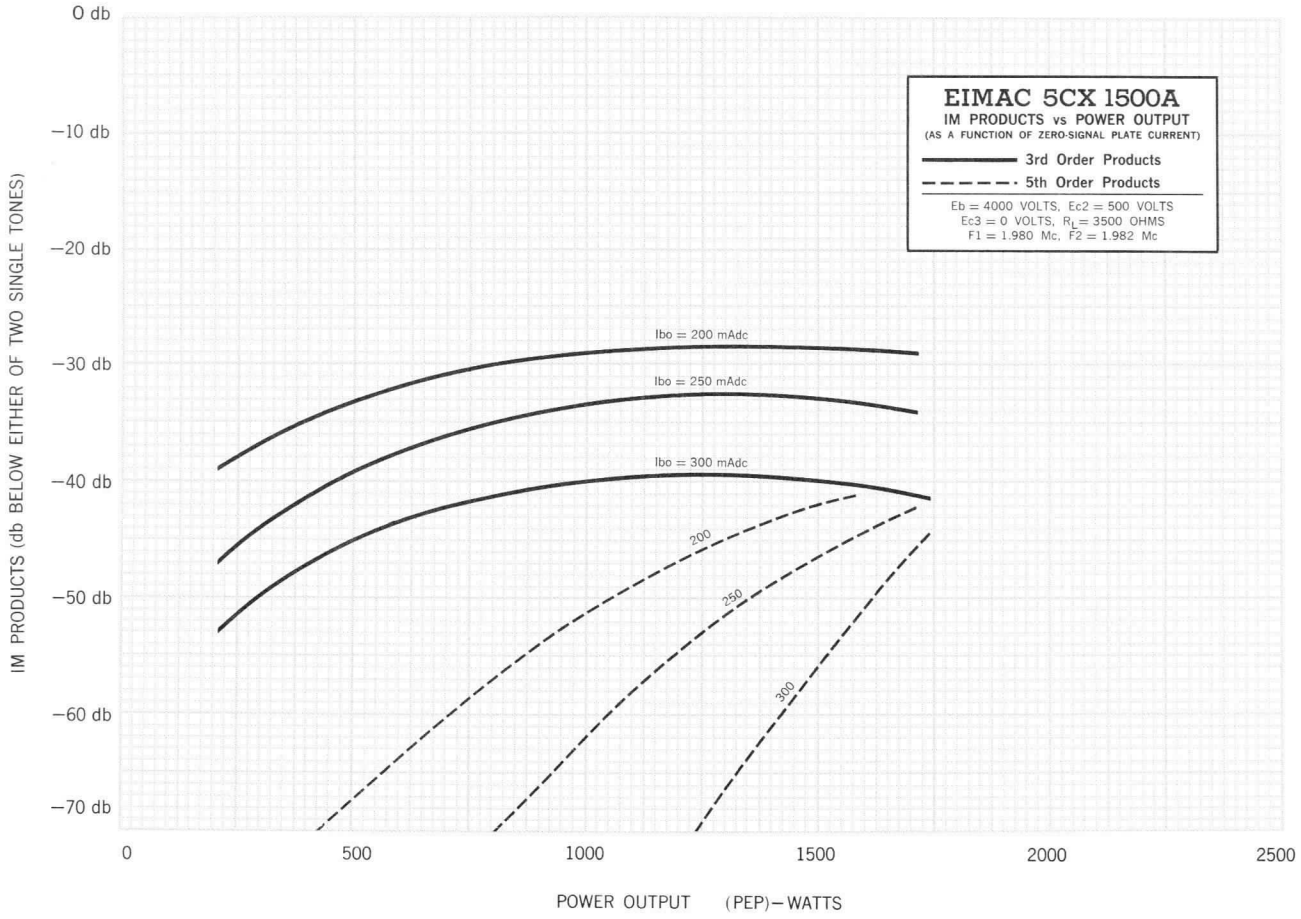
EIMAC 5CX 1500A
IM PRODUCTS vs POWER OUTPUT
(AS A FUNCTION OF ZERO-SIGNAL PLATE CURRENT)
3rd Order Products
5th Order Products
Eb = 4000 VOLTS, Ec2 = 500 VOLTS
Ec3 = 0 VOLTS, RL = 3500 OHMS
F1 = 1.980 Mc, F2 = 1.982 Mc
Ibo = 200 mAdc
Ibo = 250 mAdc
Ibo = 300 mAdc
200
250
300
0 db
−10 db
−20 db
−30 db
−40 db
−50 db
−60 db
−70 db
0
500
1000
1500
2000
2500
IM PRODUCTS (db BELOW EITHER OF TWO SINGLE TONES)
POWER OUTPUT (PEP)—WATTS

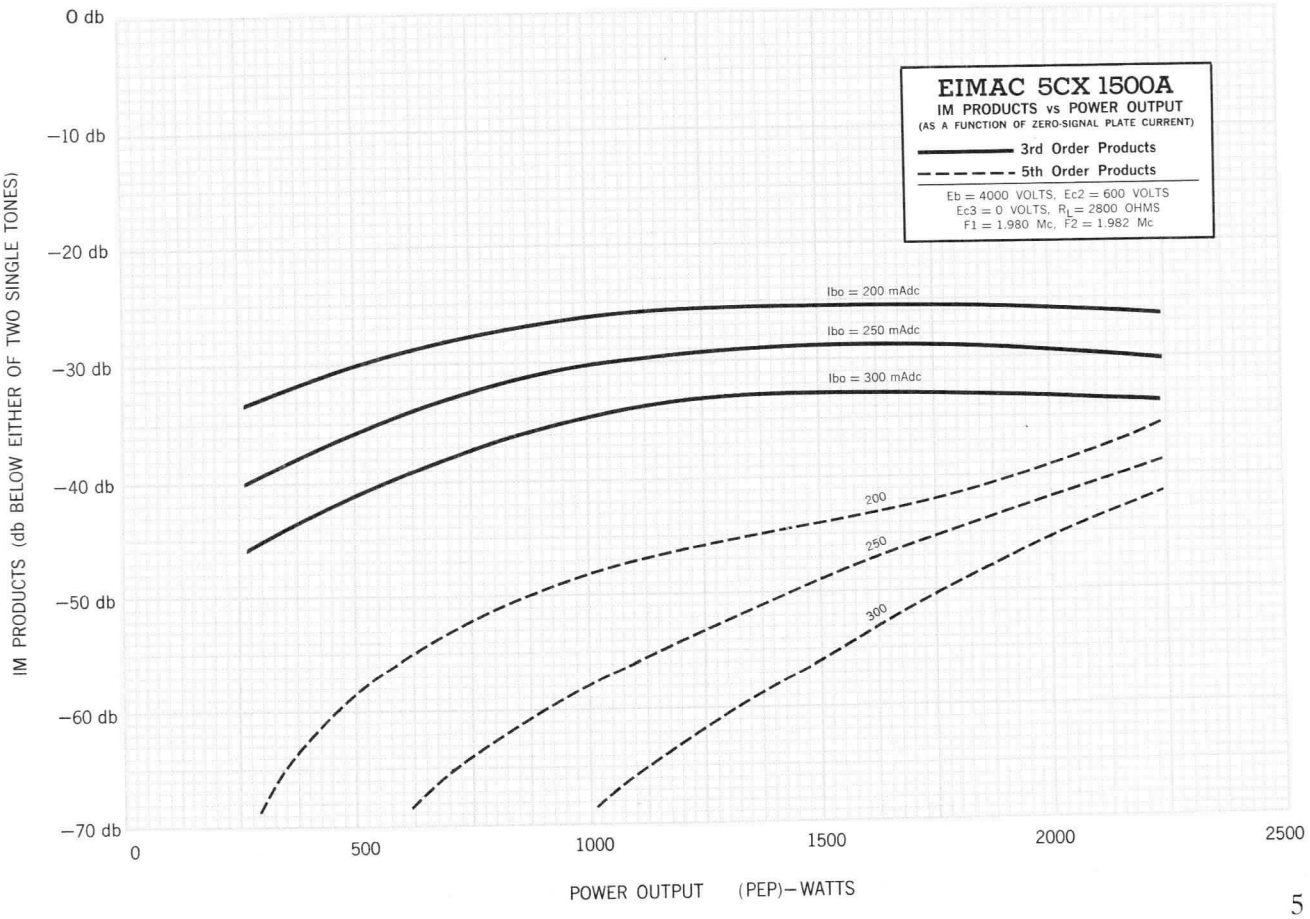
EIMAC 5CX 1500A
IM PRODUCTS vs POWER OUTPUT
(AS A FUNCTION OF ZERO-SIGNAL PLATE CURRENT)
3rd Order Products
5th Order Products
Eb = 4000 VOLTS, Ec2 = 600 VOLTS
Ec3 = 0 VOLTS, RL = 2800 OHMS
F1 = 1.980 Mc, F2 = 1.982 Mc
Ibo = 200 mAdc
Ibo = 250 mAdc
Ibo = 300 mAdc
200
250
300
0 db
−10 db
−20 db
−30 db
−40 db
−50 db
−60 db
−70 db
0
500
1000
1500
2000
2500
IM PRODUCTS (db BELOW EITHER OF TWO SINGLE TONES)
POWER OUTPUT (PEP)—WATTS

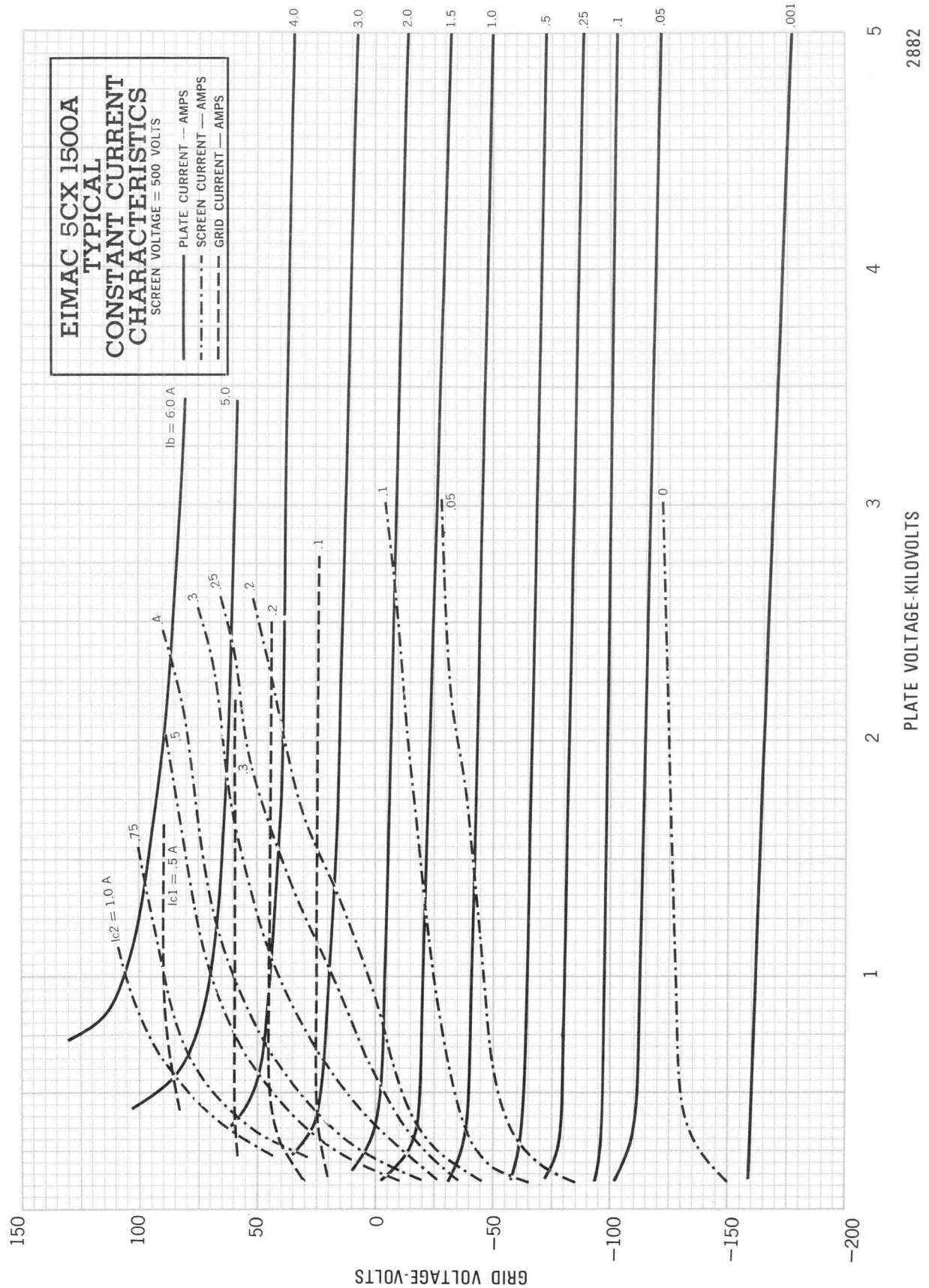
EIMAC 5CX 1500A
TYPICAL
CONSTANT CURRENT
CHARACTERISTICS
SCREEN VOLTAGE = 500 VOLTS
PLATE CURRENT — AMPS
SCREEN CURRENT — AMPS
GRID CURRENT — AMPS
Ib = 6.0 A
Ic2 = 1.0 A
Ic1 = .5 A
GRID VOLTAGE-VOLTS
PLATE VOLTAGE-KILOVOLTS
2882


EIMAC 5CX 1500A
TYPICAL
CONSTANT CURRENT
CHARACTERISTICS
SCREEN VOLTAGE = 600 VOLTS
PLATE CURRENT — AMPS
SCREEN CURRENT — AMPS
GRID CURRENT — AMPS
Ib = 6.0 A
Ic1 = .4 A
3.0
2.0
1.5
1.0
.5
.25
.1
.05
.001
5.0
4.0
.3
.2
.1
.6
.5
.4
.3
.2
.1
.05
0
100
50
0
−50
−100
−150
−200
−250
1
2
3
4
5
GRID VOLTAGE-VOLTS
PLATE VOLTAGE-KILOVOLTS
2883

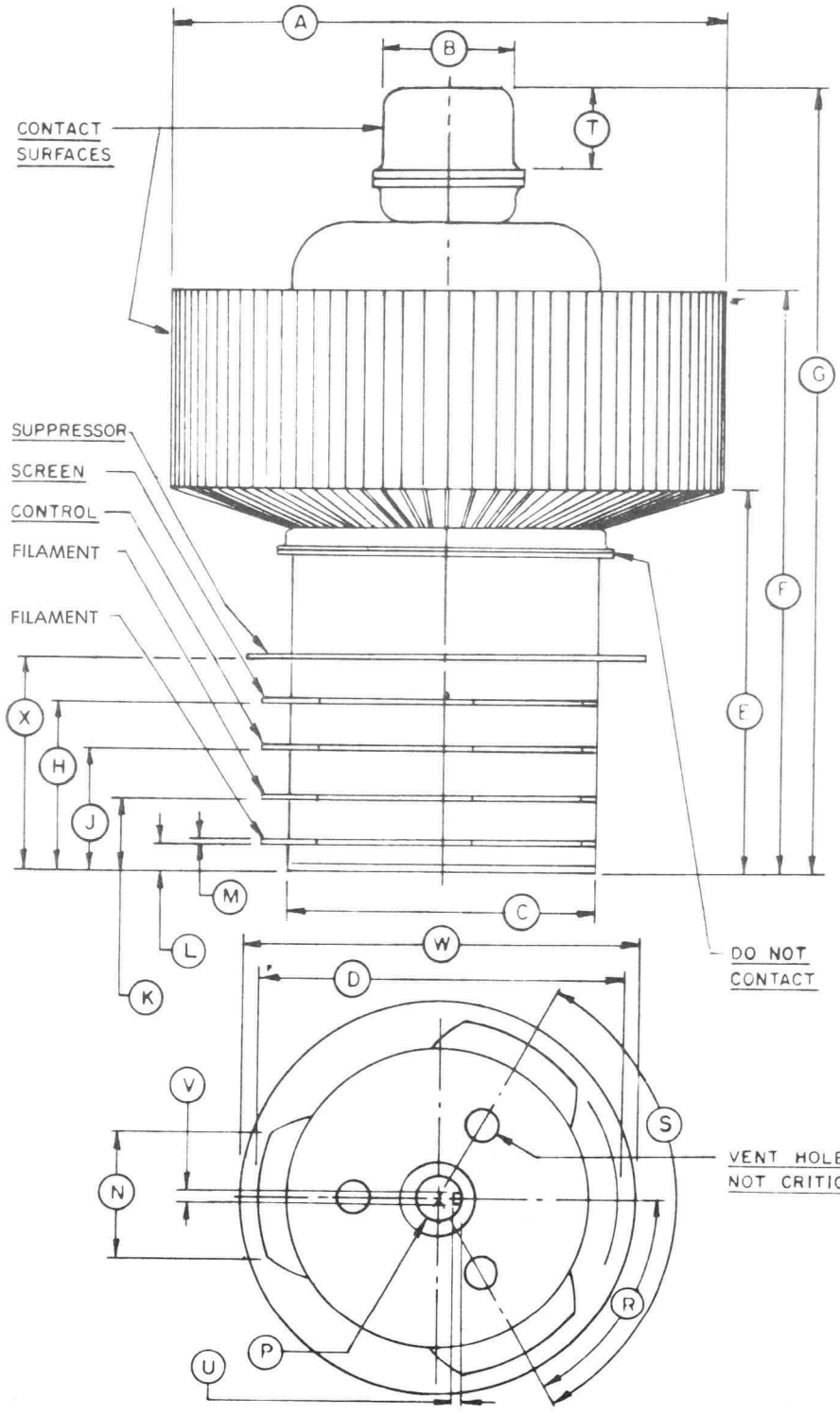

DIM.	DIMENSIONAL DATA			
	INCHES		MILLIMETERS	
	MIN.	MAX.	MIN.	MAX.
A	3.335	3.370	84.71	85.60
B	0.807	0.820	20.50	20.83
C	1.870	1.900	47.50	48.26
D	2.250D	2.300D	57.15D	58.42D
E	2.335	2.535	59.31	64.39
F	3.530	3.730	89.66	94.74
G	4.800	4.950	121.92	125.73
H	0.950	1.000	24.13	25.40
J	0.675	0.725	17.15	18.42
K	0.400	0.450	10.16	11.43
L	0.140	0.170	3.56	4.32
M	0.020	0.030	0.51	0.76
N	0.700	0.800	17.78	20.32
P	0.314D	0.326D	7.98D	8.28D
R	55°	65°	55°	65°
S	115°	125°	115°	125°
T	0.470	0.530	11.94	13.46
U	0.025	0.048	0.63	1.22
V	0.045D	0.070D	1.14D	1.78D
W	2.468	2.531	62.69	64.29
X	1.225	1.275	31.12	32.39

NOTE:
REFERENCE DIMENSIONS ARE FOR INFORMATION ONLY & ARE NOT REQUIRED FOR INSPECTION PURPOSES

EIMAC
Division of Varian
SAN CARLOS
CALIFORNIA

5CX3000A

RADIAL-BEAM POWER PENTODE

The EIMAC 5CX3000A is a ceramic and metal power pentode designed to be used as a Class-AB_1 linear amplifier in audio or radio-frequency applications. Its characteristics of low intermodulation distortion make it especially suitable for single side-band service.



GENERAL CHARACTERISTICS

ELECTRICAL

	Min.	Nom.	Max.	
Filament: Thoriated Tungsten				
Voltage		9.0		volts
Current	39.5		43.5	amps
Amplification Factor (Grid Screen)		5.5		
Frequency for Maximum Ratings			150	MHz
Direct Interelectrode Capacitances, Grounded Cathode:				
Input	125		145	pF
Output	18		24	pF
Feedback			.60	pF
Direct Interelectrode Capacitances, Grounded Grid and Screen:				
Input	55		67	pF
Output	18		24	pF

MECHANICAL

Base	Special ring and breechblock terminal surfaces
Maximum Seal Temperature	250°C
Maximum Anode Core Temperature	250°C
Recommended Socket	EIMAC SK-1420 series
Recommended Air Chimney	EIMAC SK-1426
Operating Position	Axis vertical, base up or down
Maximum Dimensions:	
Height	6.8 inches
Diameter	4.6 inches
Cooling	Forced air
Net Weight	5.5 pounds
Shipping Weight (Approximate)	10 pounds

RADIO-FREQUENCY POWER AMPLIFIER OR OSCILLATOR

Class-C Telegraphy or FM Telephony
(Key-down conditions)

MAXIMUM RATINGS

DC PLATE VOLTAGE	7000 VOLTS
DC SCREEN VOLTAGE	1000 VOLTS
DC PLATE CURRENT	2.0 AMPS
PLATE DISSIPATION	4000 WATTS
SCREEN DISSIPATION	175 WATTS
GRID DISSIPATION	50 WATTS
SUPPRESSOR DISSIPATION	100 WATTS

TYPICAL OPERATION

DC Plate Voltage	6800 volts
DC Screen Voltage	500 volts
DC Grid Voltage	–200 volts
Suppressor Grid	0 volts
DC Plate Current	1.64 amps
DC Screen Current	276 mA
DC Grid Current	72 mA
Peak RF Grid Voltage	300 volts
Driving Power	52 watts
Plate Dissipation	2600 watts
Plate Output Power	8500 watts

(Effective 8-1-67) © 1967 by Varian

Printed in U.S.A.

AUDIO-FREQUENCY AMPLIFIER OR MODULATOR

Class-AB

MAXIMUM RATINGS (Per Tube)

DC PLATE VOLTAGE	7000 VOLTS
DC SCREEN VOLTAGE	1000 VOLTS
DC PLATE CURRENT	2.0 AMPS
PLATE DISSIPATION	4000 WATTS
SCREEN DISSIPATION	175 WATTS
GRID DISSIPATION	50 WATTS
SUPPRESSOR GRID	100 WATTS

*Per Tube
**Approximate Values

TYPICAL OPERATION (Two Tubes), Class AB_1

DC Plate Voltage	6000 volts
DC Screen Voltage	850 volts
DC Grid Voltage*	−147 volts
DC Suppressor Grid Voltage	0 volts
Max-Signal Plate Current	2.9 amps
Zero-Signal Plate Current	1.0 amp
Max-Signal Screen Current**	200 mA
Zero-Signal Screen Current	0 mA
Peak AF Driving Voltage*	138 volts
Driving Power	0 watts
Load Resistance, Plate-to-Plate	4700 ohms
Max-Signal Plate Dissipation*	3000 watts
Max-Signal Plate Output Power	11,000 watts

Note: In Class AB operation, maximum plate voltage and plate current must not be applied simultaneously, as plate dissipation will be exceeded.

RADIO-FREQUENCY LINEAR AMPLIFIER

Class-AB

MAXIMUM RATINGS

DC PLATE VOLTAGE	7000 VOLTS
DC SCREEN VOLTAGE	1000 VOLTS
DC PLATE CURRENT	2.0 AMPS
PLATE DISSIPATION	4000 WATTS
SCREEN DISSIPATION	175 WATTS
GRID DISSIPATION	50 WATTS
SUPPRESSOR DISSIPATION	100 WATTS

*Adjust to the specified Zero-Signal Ib
**The intermodultaion distortion products will be as specified or better for all levels from zero-signal to maximum output power and are referenced against one tone of a two equal tone signal.

TYPICAL OPERATION Class AB_1 Grid Driven

DC Plate Voltage	3800	6000	volts
DC Screen Voltage	800	850	volts
DC Grid Voltage*	−128	−147	volts
DC Suppressor Voltage	0	0	volts
Zero-Signal DC Plate Current	.600	.500	amps
Single-Tone DC Plate Current	1.510	1.445	amps
Single-Tone DC Screen Current	.136	.092	mA
Two-Tone DC Plate Current	1.770	1.010	amps
Two-Tone DC Screen Current	.072	.041	mA
Peak RF Grid Voltage	116	128	volts
Peak Envelope Useful Output Power	3300	5500	watts
Resonant Load Impedance	1300	2350	ohms
Intermodulation Distortion Products** (no negative feedback)			
3rd Order	−46	−41	dB
5th Order	−50	−53	dB

Note: "TYPICAL OPERATION" data are obtained by calculation from published characteristic curves and confirmed by direct tests. No allowance is made for circuit losses. Adjustment of the rf grid drive to obtain the specified plate current at the specified grid bias, screen voltage, and plate voltage is assumed.

APPLICATION

MECHANICAL

Mounting — The 5CX3000A must be operated with its axis vertical. The base of the tube may be down or up at the convenience of the circuit designer.

Socket — The EIMAC SK-1420 socket and SK-1426 chimney have been designed especially for the 5CX3000A. The use of recommended air-flow rates through this socket provides effective forced-air cooling of the tube. Air forced into the bottom of the socket passes over the tube terminals through an Air Chimney, the SK-1426, and through the anode cooling fins.

Cooling — The maximum temperature rating for the 5CX3000A is 250°C. Sufficient forced-air circulation must be provided to keep the temperature of the anode at the base of the cooling fins and the temperature of the ceramic-metal seals below 250°C. Air-flow requirements to maintain seal temperature at 200°C in 50°C ambient air are tabulated below (for operation below 30 MHz).

Plate Dissipation* (Watts)	SEA LEVEL		5,000 FEET	
	Air Flow (CFM)	Pressure Drop (Inches of Water)	Air Flow (CFM)	Pressure Drop (Inches of Water)
2500	67	1.24	80	1.5
3500	100	2.4	121	3.2
4000	117	3.1	140	4.3

*Since the power dissipated by the filament represents about 450 watts and since grid-plus-screen dissipation can, under some conditions, represent another 225 watts, allowance has been made in preparing this tabulation for an additional 675 watts dissipation.

The blower selected in a given application must be capable of supplying the desired air flow at a back pressure equal to the pressure drop shown above plus any drop encountered in ducts and filters.

At other altitudes and ambient temperatures the flow rate must be modified to obtain equivalent cooling. The flow rate and corresponding pressure differential must be determined individually in such cases, using rated maximum temperatures as the criteria for satisfactory cooling.

ELECTRICAL

Filament Operation — The rated filament voltage for the 5CX3000A is 9 volts. Filament voltage, as measured at the socket, should be maintained at this value to obtain maximum tube life. In no case should it be allowed to deviate by more than plus or minus five percent from the rated value.

Intermodulation Distortion — The operating conditions including distortion data are the results of actual operation in a neutralized, grid-driven amplifier. A plot of IM distortion versus power output under two-tone condition for a typical tube is shown on the next page.

Control Grid Operation—The rated dissipation of the grid is 50 watts. This is approximately the product of dc grid current and peak positive grid voltage. Operation at bias and drive levels near those listed will insure safe operation.

Screen-Grid Operation—The power dissipated by the screen of the 5CX3000A must not exceed 175 watts.

Screen dissipation, in cases where there is no ac applied to the screen, is the simple product of the screen voltage and the screen current. If the screen voltage is modulated, the screen dissipation will depend upon loading, driving power, and carrier screen voltage.

Screen dissipation is likely to rise to excessive values when the plate voltage, bias voltage, or plate load are removed with filament and screen voltages applied. Suitable protective means must be provided to limit the screen dissipation to 175 watts in the event of circuit failure.

Suppressor Grid — The rated dissipation of the suppressor grid is 100 watts. Suppressor current will be zero or very nearly zero for all typical operating conditions specified. The 5CX-3000A has been designed for zero voltage operation of the suppressor grid for most applications.

Plate Dissipation — The plate-dissipation ratings for the 5CX3000A are 2650 watts for Class-C plate-modulated service and 4000 watts for Class-C telegraphy and Class-AB operation. In any Class-AB application maximum plate current and maximum plate voltage should not be applied simultaneously as the plate-dissipation rating would be exceeded.

Special Applications—If it is desired to operate this tube under conditions widely different from those given here, write to the Power Grid Tube Division, EIMAC Division of Varian, 301 Industrial Way, San Carlos, California, for information and recommendations.

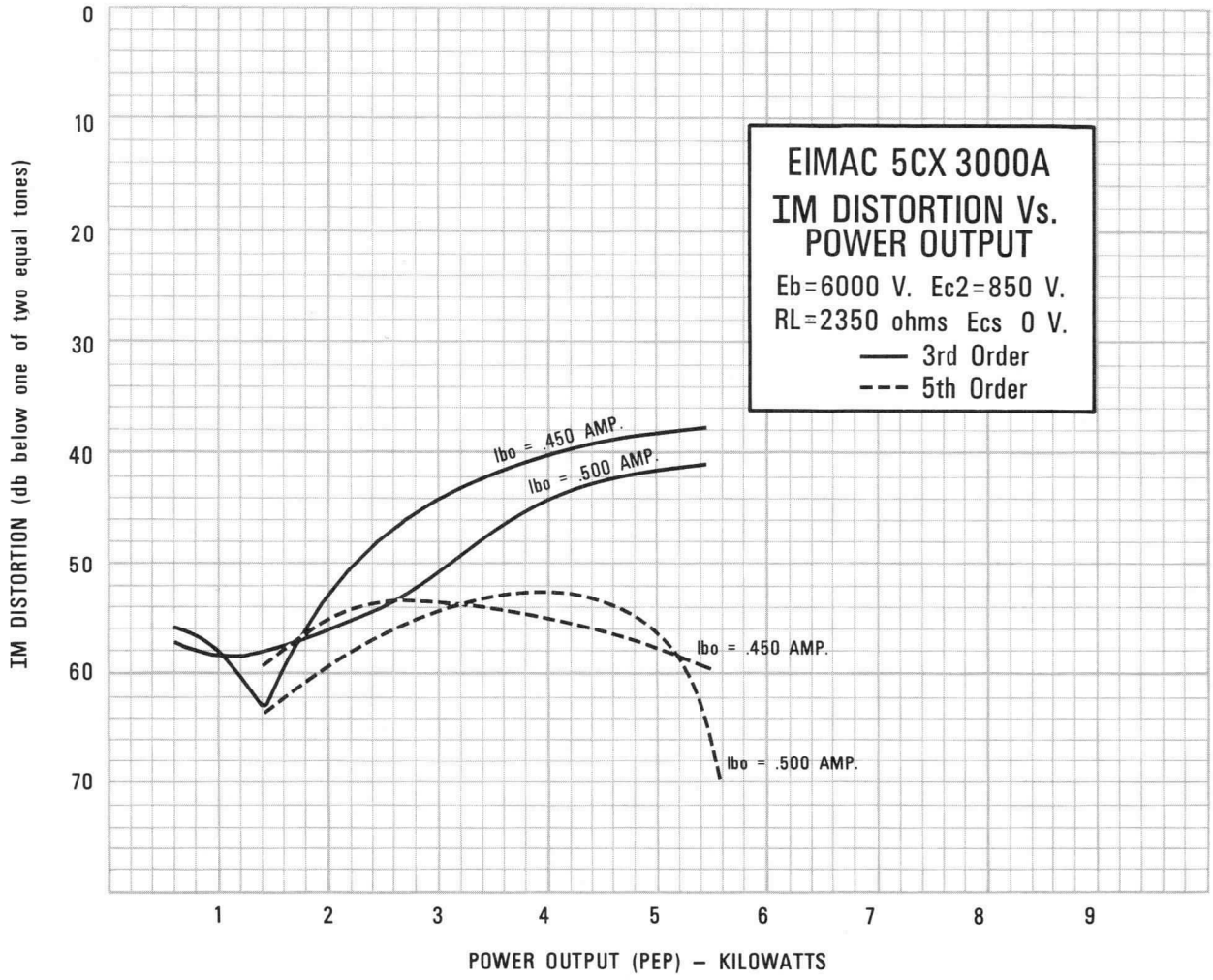

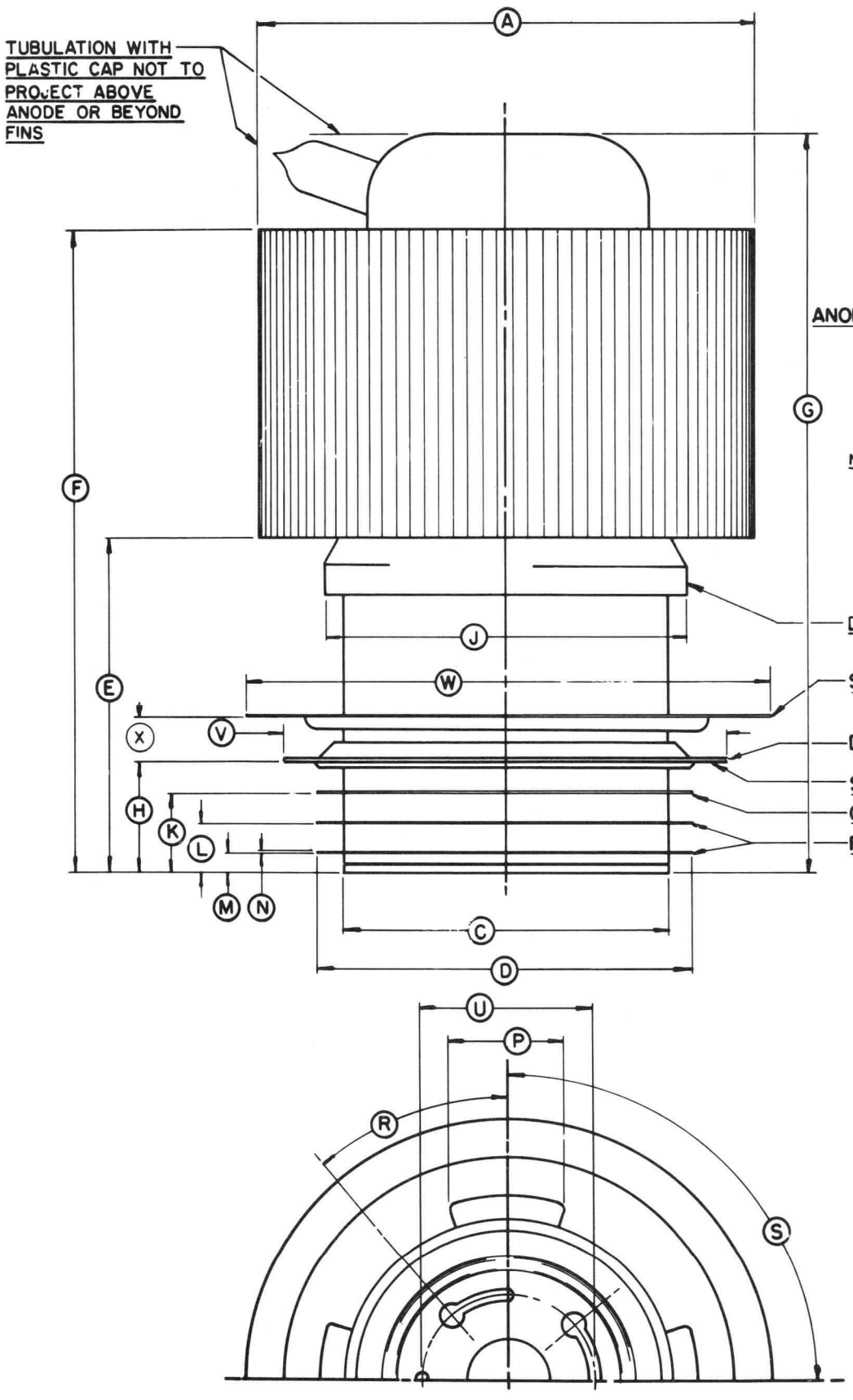

DIMENSIONS IN INCHES

DIMENSIONAL DATA			
DIM.	MIN.	MAX.	REF.
A	4.585	4.625	
C	2.985	3.025	
D	3.490	3.525	
E	3.050	3.150	
F	5.900	6.100	
G	6.638	6.838	
H	.965	1.005	
J	3.380	3.450	
K	.700	.730	
L	.430	.460	
M	.160	.180	
N	.018	.025	
P	1.050	1.100	
R	39°	41°	
S	89°	91°	
U	1.557	1.567	
V	4.000	4.175	
W	4.615	4.635	
X			.375

NOTE 1. REFERENCE DIMENSIONS ARE FOR INFORMATION ONLY AND ARE NOT REQUIRED FOR INSPECTION PURPOSES.


EIMAC 5CX 3000A
TYPICAL
CONSTANT CURRENT
CHARACTERISTICS
Ef = 9.0 Ec2 = 800 Ecs = 0
---- GRID CURRENT - AMPERES
—— PLATE CURRENT - AMPERES
·-·-· SCREEN CURRENT - AMPERES
Ip
5.0
4.0
3.0
2.0
1.0
.500
.100
.01
.001
Ic1
1.0
.320
.300
.200
.100
.01
Ic2
.500
.400
.300
.200
.150
.100
.05
.01
0
10.0
9.0
8.0
7.0
6.0
100
50
0
-50
-100
-150
-200
0
1
2
3
4
5
6
7
8
9
GRID VOLTS
PLATE KILOVOLTS
CURVE #3210

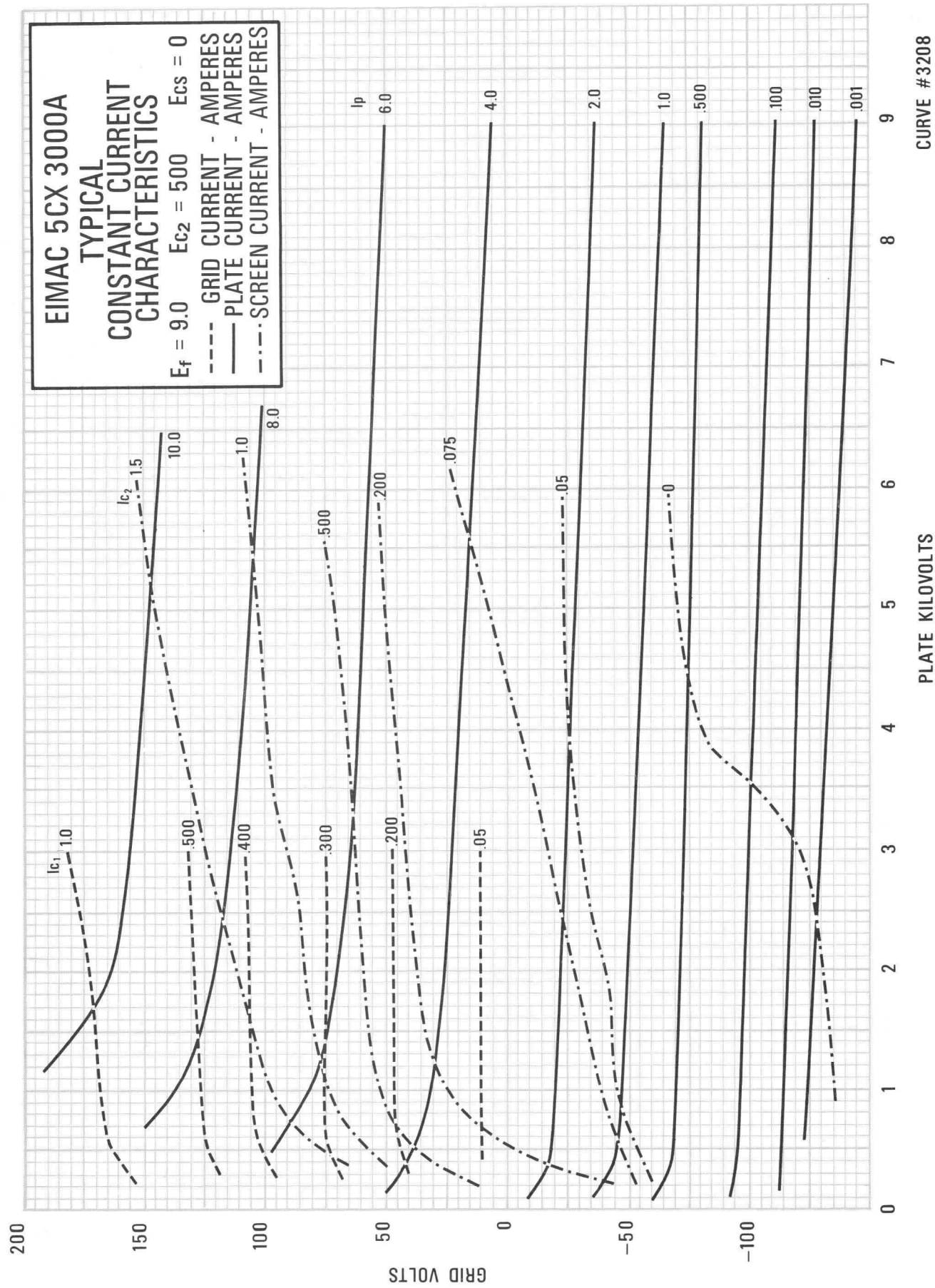
EIMAC 5CX 3000A
TYPICAL
CONSTANT CURRENT
CHARACTERISTICS
Ef = 9.0 Ec2 = 500 Ecs = 0
---- GRID CURRENT - AMPERES
—— PLATE CURRENT - AMPERES
-·-·- SCREEN CURRENT - AMPERES
Ip
6.0
4.0
2.0
1.0
.500
.100
.010
.001
Ic1
1.0
.500
.400
.300
.200
.05
Ic2
1.5
10.0
1.0
8.0
.500
.200
.075
.05
0
GRID VOLTS
200
150
100
50
0
−50
−100
PLATE KILOVOLTS
0
1
2
3
4
5
6
7
8
9
CURVE #3208

TECHNICAL DATA

264/8576

RADIAL BEAM POWER PENTODE

The EIMAC 264/8576 is a ceramic/metal, forced-air cooled, radial beam pentode with a rated maximum plate dissipation of 3000 watts. The tube has very low input capacitance for its power-handling capability. It is well suited for use in broad-band linear amplifiers or in other high-performance Class AB_1 amplifier applications.



GENERAL CHARACTERISTICS[1]

ELECTRICAL

Cathode: Oxide Coated, Unipotential		
Heater: Voltage	6.0 ± 0.3	V
Current, at 6.0 volts	17	A
Transconductance (Average):		
I_b = 2.0 Adc, E_{c_2} = 750 Vdc	37,000	μmhos
Direct Interelectrode Capacitances (grounded cathode)[2]		
Input	55	pF
Output	18	pF
Feedback	0.13	pF
Frequency of Maximum Rating:		
CW	30	MHz

1. Characteristics and operating values are based upon performance tests. These figures may change without notice as the result of additional data or product refinement. EIMAC Division of Varian should be consulted before using this information for final equipment design.

2. Capacitance values are for a cold tube as measured in a special shielded fixture.

MECHANICAL

Maximum Overall Dimensions:	
Length	6.188 in; 157.18 mm
Diameter	4.438 in; 112.73 mm
Net Weight	3.9 lb;1.77 kg
Operating Position	Any
Maximum Operating Temperature:	
Ceramic/Metal Seals	250 °C
Anode Core	250 °C
Cooling	Forced Air
Base	7-Pin Special
Recommended Air-System Socket	EIMAC SK-265A
Recommended Air Chimney (included with SK-265A)	EIMAC C-265

Effective 6-5-70 © Varian Printed in U.S.A.

RADIO FREQUENCY LINEAR AMPLIFIER
GRID DRIVEN
Class AB_1

MAXIMUM RATINGS:

DC PLATE VOLTAGE	5000	VOLTS
DC SUPPRESSOR VOLTAGE	100	VOLTS
DC SCREEN VOLTAGE	1000	VOLTS
DC GRID VOLTAGE	-250	VOLTS
DC PLATE CURRENT	2.0	AMPERES
PLATE DISSIPATION	3000	WATTS
SCREEN DISSIPATION	50	WATTS
GRID DISSIPATION	2	WATTS

TYPICAL OPERATION (Frequencies to 30 MHz)
Class AB_1, Grid Driven, Peak Envelope or Modulation Crest Conditions

Plate Voltage	4000	5000	5000	Vdc
Suppressor Voltage	0	0	0	Vdc
Screen Voltage	650	650	750	Vdc
Grid Voltage[1]	-92	-93	-109	Vdc
Zero-Signal Plate Current	400	400	400	mAdc
Single-Tone Plate Current	1.43	1.36	1.69	Adc
Two-Tone Plate Current	0.95	0.91	1.09	Adc
Zero-Signal Screen Current[4]	7	6	7	mAdc
Single-Tone Screen Current[2,4]	58	55	80	mAdc
Two-Tone Screen Current[4]	26	23	32	mAdc
Peak rf Grid Voltage[4]	92	90	108	v
Useful Output Power[5]	3300	4400	5500	W
Resonant Load Impedance	1350	1950	1550	Ω
Intermodulation Distortion Products[3]				
3rd Order	-28	-29	-26	db
5th Order	-45	-45	-40	db

1. Adjust to specified zero-signal dc plate current.
2. Except for brief tuneup periods, operation under single tone conditions may not be possible due to excessive screen current.
3. The intermodulation distortion products will be as specified or better for all levels from zero-signal to maximum output power and are referenced against one tone of a two equal tone signal. No degenerative feedback.
4. Approximate values.
5. Actual power output delivered to the load from a typical amplifier.

APPLICATION

MOUNTING - The 264/8576 may be operated in any position, and should normally be mounted in the air-system socket EIMAC type SK-265A, with a C-265 chimney. The SK-265A has a built-in bypass capacitor for the screen grid, and the suppressor grid contacts are grounded.

AIR SYSTEM SOCKET AND CHIMNEY - The SK-265A socket makes all electrical contacts to the 264/8576 except to the anode. The suppressor grid contact is grounded to the socket shell. An integral screen grid bypass capacitor is included, with a capacitance of 2000 pF and rated for 1000 Vdc maximum.
The C-265 air chimney is designed to mate with the SK-265A socket and guide the cooling air through the anode cooling fins of the tube.

COOLING - Forced-air cooling is required in all applications, and the use of an air-system socket, such as the EIMAC SK-265A, with a C-265 chimney, is recommended. Cooling is simplified if air is directed in a base-to-anode direction; when so directed, with full rated anode dissipation and with air at 50°C at sea level, an air flow of 110 cubic feet per minute, with a resultant pressure drop of approximately 0.95 inch of water for the tube/socket/chimney combination, is sufficient to limit the maximum tube temperature to 225°C. If air is not directed in the base-to-anode direction, additional cooling may be required for the base section of the tube. Cooling air should be supplied before or simultaneously with the application of electrode voltages, including heater, and should normally be maintained for a brief period after electrode voltages are removed to allow for tube cooldown.

HEATER - The rated heater voltage for the 264/8576 is 6.0 volts, as measured at the socket or tube base pins. Variations should be restricted to plus or minus 0.3 volts for long tube life and consistent performance.

GRID OPERATION - Grid-bias voltage must be obtained from a fixed bias supply in Class AB applications. The internal resistance of the bias source should not exceed 2500 ohms.

SCREEN OPERATION - In linear amplifier service, the screen voltage must be obtained from a well regulated source, to prevent excessive screen voltage variations due to changes in screen current which occur between zero-signal and full-signal conditions. The circuit should be arranged so that it is impossible to apply screen voltage without plate voltage. The use of a screen grid over-current relay is recommended, to remove screen voltage immediately in case of excessive screen current due to circuit problems, grid bias failure, or accidental removal of plate circuit loading. The relay should not break the screen-cathode d-c ground return path.

PLATE OPERATION - The maximum rated plate dissipation power for the 264/8576 is 3000 watts. Except for brief periods during circuit adjustment, this maximum value should not be exceeded. Contact to the plate may be made either at the top cap or by means of a circular clamp or spring-finger collet around the outer surface of the anode cooler itself. Points of electrical contact with the anode should be kept clean and free of oxide to minimize rf loss. The anode cooler should be inspected periodically and cleaned when necessary to remove any dirt which might interfere with effective cooling.

NEUTRALIZATION FOR RF OPERATION - For minimum-distortion Class AB1 linear amplifier service, where reaction on the driver circuit should be eliminated completely, it will usually be found advisable to neutralize the small feedback capacitance of the tube.

GENERAL OPERATION NOTES - A metal chassis or equivalent means should be provided to separate the input and output circuits of an rf amplifier employing the 264/8576. Reasonable precautions should be observed in regard to bypassing and shielding of supply leads to prevent coupling between input and output through external circuits. The use of the EIMAC SK-265A air-system socket, with its integral screen grid bypass capacitance built in, is helpful in these respects.

SPECIAL APPLICATION - If it is desired to operate this tube under conditions widely different from those listed here, write to Power Grid Tube Division, EIMAC Division of Varian, 301 Industrial Way, San Carlos, California 94070, for information and recommendations.

NOTE: TYPICAL OPERATION data are obtained from direct measurement or by calculation from published characteristic curves. Adjustment of the rf grid voltage to obtain the specified plate current at the specified bias, screen and plate voltages is assumed. If this procedure is followed, there will be little variation in output power when the tube is changed, even though there may be some variation in grid and screen current. The grid and screen currents which result when the desired plate current is obtained are incidental and vary from tube to tube. These current variations cause no difficulty so long as the circuit maintains the correct voltage in the presence of the variations in current.

RANGE VALUES FOR EQUIPMENT DESIGN

	Min.	Max.	
Heater: Current at 6.0 volts	15.5	18.5	A
Cathode Warmup Time[1]	5	---	minutes
Interelectrode Capacitances[2] (grounded cathode connection)			
Input	51.0	61.0	pF
Output	14.0	22.0	pF
Feedback	---	0.16	pF

1. Heater voltage should normally be applied for the stated time before voltages are applied to the other tube elements.

2. Capacitance values are for a cold tube as measured in a special shielded fixture.

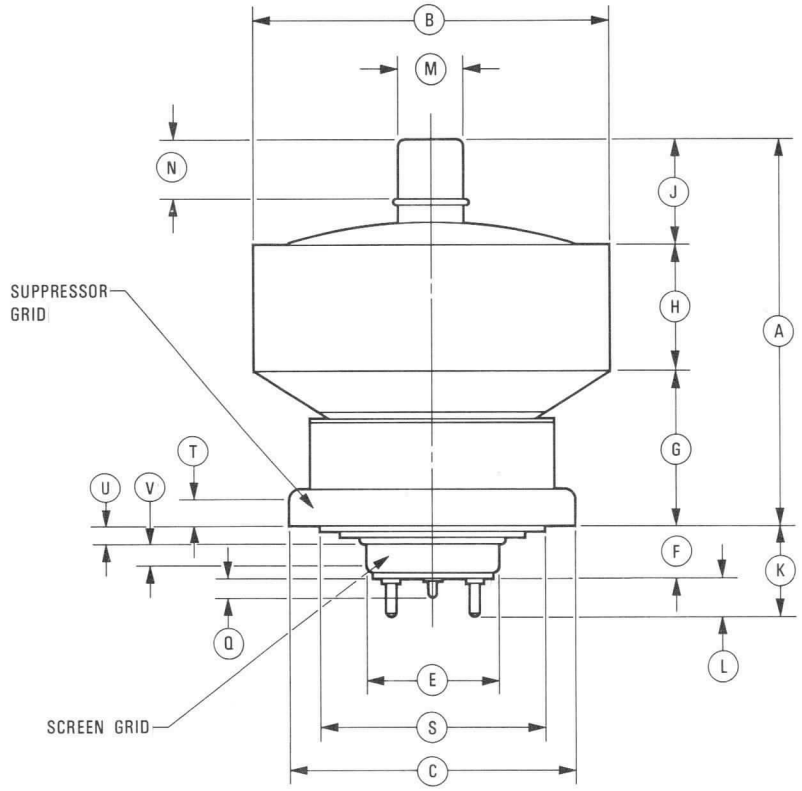

DIMENSIONAL DATA				
DIM.	INCHES		MILLIMETERS	
	MIN.	MAX.	MIN.	MAX.
A	— —	4.828	— —	122.63
B	4.374	4.438	111.09	112.72
C	3.484	3.516	88.49	89.31
E	1.615	1.630	41.02	41.40
F	0.625	0.750	15.87	19.05
G	1.813	1.937	46.05	49.20
H	1.530	1.560	38.86	39.62
J	1.219	1.343	30.96	34.11
K	1.160	1.360	29.46	34.54
L	0.540	0.600	13.72	15.24
M	0.805	0.819	20.45	20.80
N	0.688	— —	17.47	— —
S	— —	2.812	— —	71.42
T	0.350	— —	8.89	— —
V	0.220	— —	5.60	— —
W	0.122	0.128	3.10	3.25
X	0.149	0.159	3.78	4.04
REFERENCE DIMENSIONS				
D	51°		51°	
Q	0.205		5.21	
R	52°		52°	
U	0.250		6.35	
Y	1.000 DIA. P. C.		25.40 DIA. P. C.	

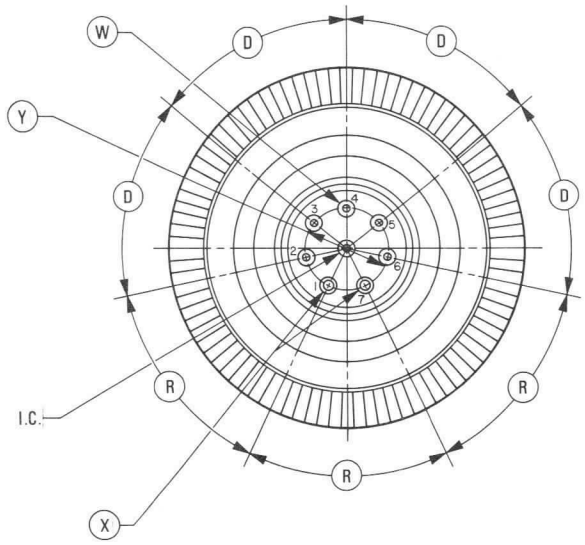

PIN CONNECTIONS	
PIN NO.	ELEMENT
1	k
2	g1
3	h
4	k
5	h
6	g1
7	k
CENTER PIN	INT. CON.
LOWER RING	g2
UPPER RING	g3
CAP	p

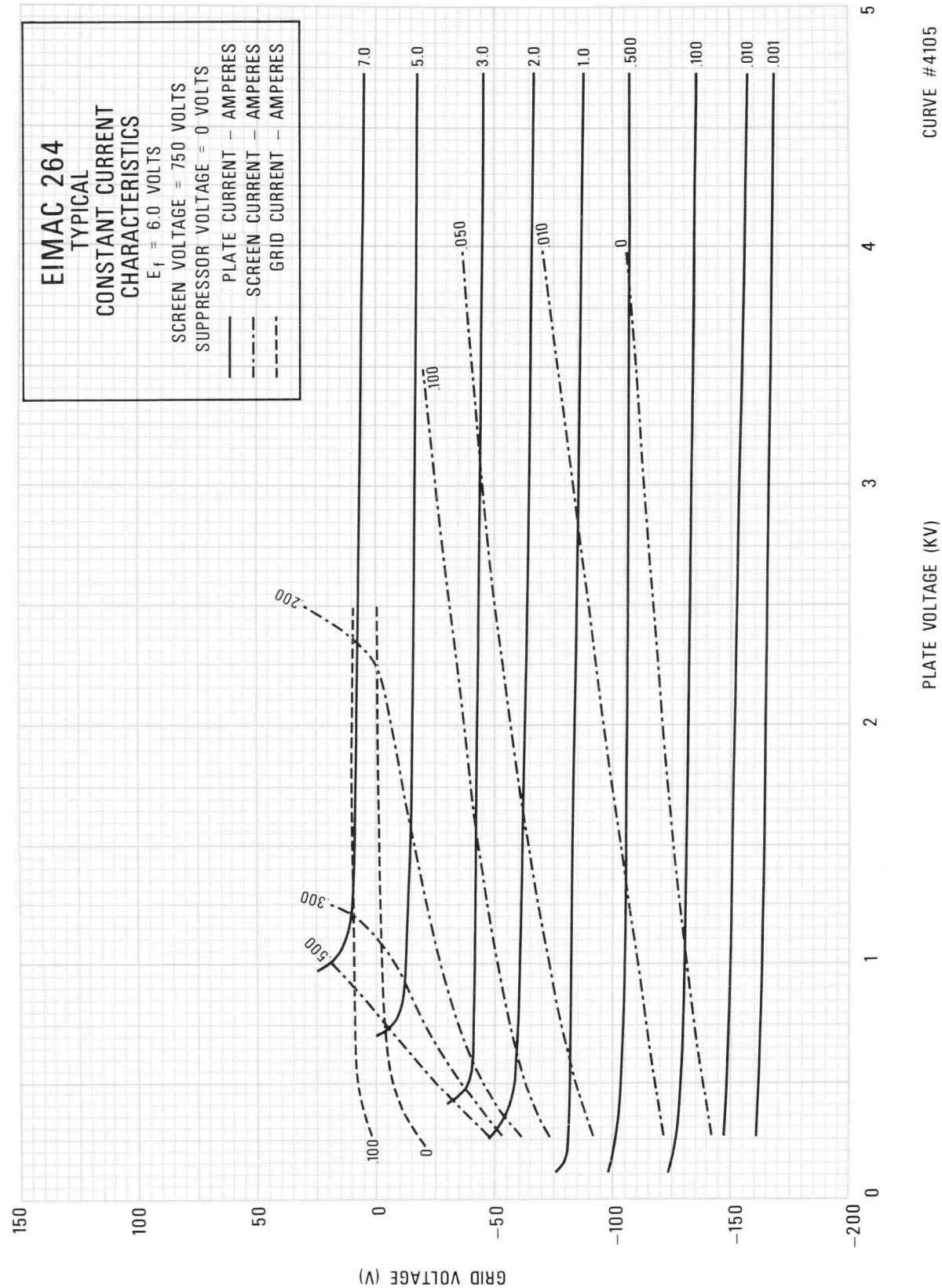
EIMAC 264
TYPICAL
CONSTANT CURRENT
CHARACTERISTICS
E_f = 6.0 VOLTS
SCREEN VOLTAGE = 750 VOLTS
SUPPRESSOR VOLTAGE = 0 VOLTS
PLATE CURRENT – AMPERES
SCREEN CURRENT – AMPERES
GRID CURRENT – AMPERES
7.0
5.0
3.0
2.0
1.0
.500
.100
.010
.001
.050
.010
0
100
200
300
500
150
100
50
0
−50
−100
−150
−200
0
1
2
3
4
5
GRID VOLTAGE (V)
PLATE VOLTAGE (KV)
CURVE #4105

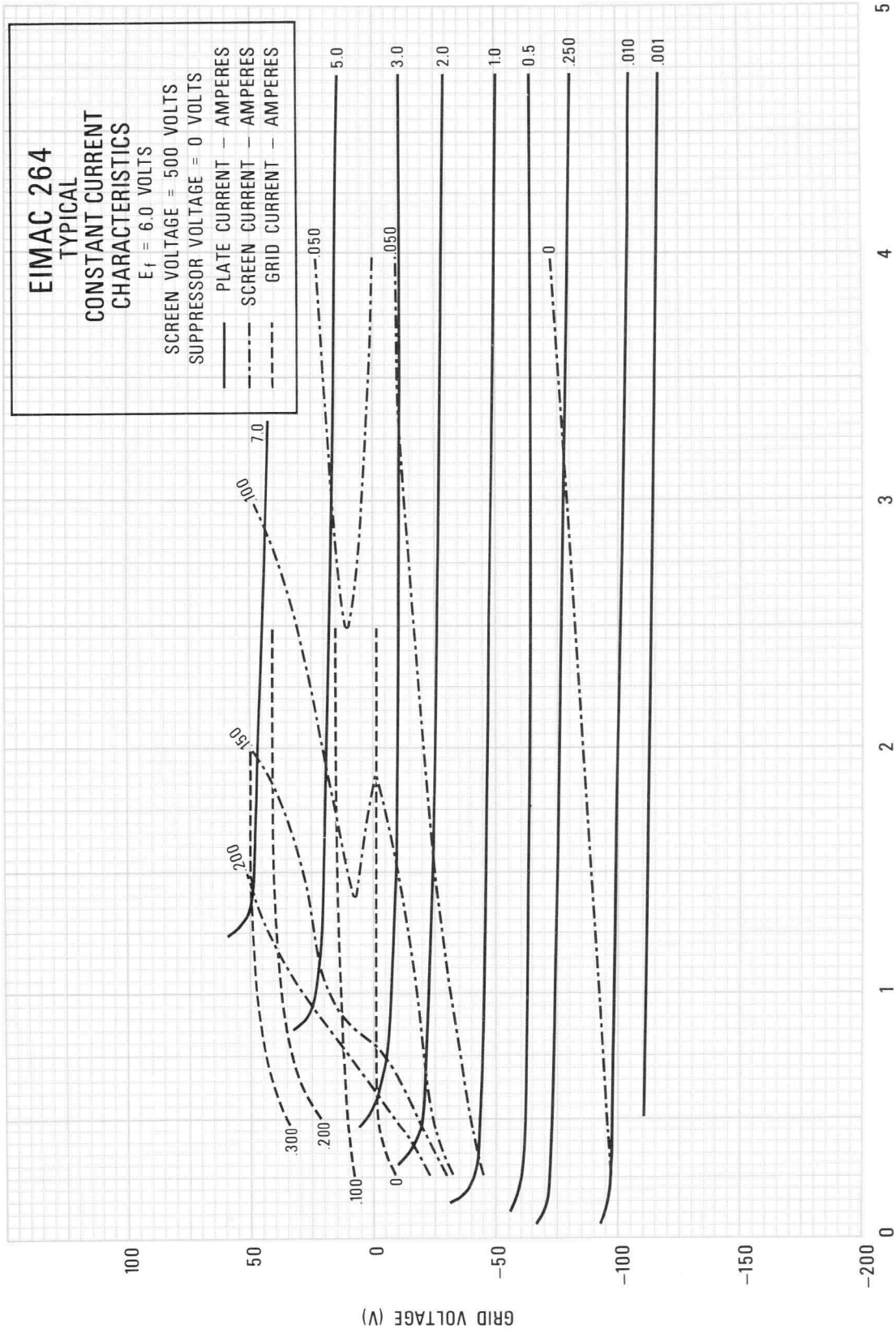
EIMAC 264
TYPICAL
CONSTANT CURRENT
CHARACTERISTICS
E_f = 6.0 VOLTS
SCREEN VOLTAGE = 500 VOLTS
SUPPRESSOR VOLTAGE = 0 VOLTS
PLATE CURRENT – AMPERES
SCREEN CURRENT – AMPERES
GRID CURRENT – AMPERES
7.0
5.0
3.0
2.0
1.0
0.5
.250
.010
.001
.050
.050
0
300
200
100
0
100
150
200
100
50
0
−50
−100
−150
−200
0
1
2
3
4
5
GRID VOLTAGE (V)
PLATE VOLTAGE (KV)
CURVE #4106

EIMAC
Division of Varian
SAN CARLOS
CALIFORNIA

290

RADIAL BEAM POWER PENTODE

The EIMAC 290 is a ceramic/metal, forced-air cooled, radial beam pentode with a rated maximum plate dissipation of 5000 watts. The tube has very low input capacitance for its power-handling capability. It is well suited for use in broad-band linear amplifiers or other high-performance Class AB1 amplifier applications.



GENERAL CHARACTERISTICS [1]

ELECTRICAL

Cathode: Oxide Coated, Unipotential

Heater: Voltage	6.0 ± 0.3 V
Current, at 6.0 volts	17 A
Transconductance (Average):	
I_b = 2.0 Adc, E_{c2} = 750 Vdc	37,000 μmhos
Direct Interelectrode Capacitances (grounded cathode)[2]	
Input	56 pF
Output	18 pF
Feedback	0.13 pF
Frequency of Maximum Rating:	
CW	30 MHz

1. Characteristics and operating values are based upon performance tests. These figures may change without notice as the results of additional data or product refinement. EIMAC Division of Varian should be consulted before using this information for final equipment design.
2. Capacitance values are for a cold tube as measured in a special shielded fixture.

MECHANICAL

Maximum Overall Dimensions:	
Length	7.250 in; 184.15 mm
Diameter	5.532 in; 140.51 mm
Net Weight	9 lbs 2½ oz; 4.154 kg
Operating Position	Any
Maximum Operating Temperature:	
Ceramic/Metal Seals	250 °C
Anode Core	250 °C
Cooling	Forced Air
Base	7-Pin Special
Recommended Air System Socket	EIMAC SK-291A
Recommended Air Chimney (included with SK-291A)	EIMAC C-290

(Effective 5-5-70) © Varian

Printed in U.S.A.

RADIO FREQUENCY LINEAR AMPLIFIER
GRID DRIVEN
Class AB_1

MAXIMUM RATINGS:

DC PLATE VOLTAGE	6000	VOLTS
DC SUPPRESSOR VOLTAGE	100	VOLTS
DC SCREEN VOLTAGE	1000	VOLTS
DC GRID VOLTAGE	-250	VOLTS
DC PLATE CURRENT	2.0	AMPERES
PLATE DISSIPATION	5000	WATTS
SCREEN DISSIPATION	50	WATTS
GRID DISSIPATION	2	WATTS

1. Adjust to specified zero-signal dc plate current.
2. The intermodulation distortion products will be as specified or better for all levels from zero-signal to maximum output power and are referenced against one tone of a two equal tone signal.
3. Approximate values.

TYPICAL OPERATION (Frequencies to 30 MHz)
Class AB_1, Grid Driven, Peak Envelope or Modulation Crest Conditions

Plate Voltage	5000	5000	6000	Vdc
Suppressor Voltage	0	0	0	Vdc
Screen Voltage	650	750	750	Vdc
Grid Voltage [1]	-93	-109	-111	Vdc
Zero-Signal Plate Current	400	400	400	mAdc
Single Tone Plate Current	1.36	1.69	1.74	Adc
Two-Tone Plate Current	0.91	1.09	1.11	Adc
Zero-Signal Screen Current [3]	6	7	6	mAdc
Single-Tone Screen Current [3/5]	55	80	60	mAdc
Two-Tone Screen Current [3]	23	32	25	mAdc
Peak rf Grid Voltage [3]	90	108	111	v
Useful Output Power [4]	4400	5500	6275	W
Resonant Load Impedance	1950	1550	1600	Ω
Intermodulation Distortion Products [2]				
3rd Order	-29	-26	-25	db
5th Order	-45	-40	-40	db

4. Actual power output delivered to the load from a typical amplifier.
5. Except for brief tuneup periods, operation under single tone conditions may not be possible due to excessive screen dissipation.

NOTE: TYPICAL OPERATION data are obtained by calculation from published characteristic curves. Adjustment of the rf grid voltage to obtain the specified plate current at the specified bias, screen and plate voltages is assumed. If this procedure is followed, there will be little variation in output power when the tube is changed, even though there may be some variation in grid and screen current. The grid and screen currents which result when the desired plate current is obtained are incidental and vary from tube to tube. These current variations cause no difficulty so long as the circuit maintains the correct voltage in the presence of the variations in current. If grid bias is obtained principally by means of a grid resistor, the resistor must be adjustable to obtain the required bias voltage when the correct rf grid voltage is applied.

RANGE VALUES FOR EQUIPMENT DESIGN

	Min.	Max.	
Heater: Current at 6.0 volts	15.5	18.5	A
Cathode Warmup Time	5	---	minutes
Interelectrode Capacitances [1] (grounded cathode connection)			
Input	51.0	61.0	pF
Output	14.0	22.0	pF
Feedback	---	0.16	pF

1. Capacitance values are for a cold tube as measured in a special shielded fixture.

APPLICATION

MOUNTING - The EIMAC Type 290 may be operated in any position, and should normally be mounted in the air-system socket EIMAC type SK-291A, with a C-290 chimney. The SK-291A has a built-in bypass capacitor for the screen grid, and the suppressor grid contact is grounded.

AIR SYSTEM SOCKET AND CHIMNEY - The SK-291A socket makes all electrical contacts to the Type 290 except to the anode. The suppressor grid contact is grounded to the socket shell. An integral screen grid bypass capacitor is included, with a capacitance of 2000 pF and rated for 1000 Vdc maximum.

The C-290 chimney is designed to mate with the SK-291A socket and guide the cooling air through the anode cooling fins of the tube. The chimney is included with the socket and only when required as a replacement unit would separate procurement be necessary.

COOLING - Forced-air cooling is required in all applications, and the use of an air-system socket, such as the EIMAC SK-291A, with a C-290 chimney, is recommended. Cooling is simplified if air is directed, in a base-to-anode direction; when so directed, with air at 50°C at sea level, minimum air

flow requirements are shown, with approximate pressure drop values for the tube/socket/chimney combination, to limit the maximum anode core temperature to 200°C. If air is not directed in a base-to-anode direction, additional cooling may be required for the base section of the tube. Cooling air should be applied before or simultaneously with the application of electrode voltages, including the heater, and should normally be maintained for a brief period after electrode voltages are removed to allow for tube cooldown.

Anode Diss.	Air Flow	Press. Drop
3000 W	78 cfm	0.32 In. H_2O
4000	124	0.50
5000	166	0.72

HEATER - The rated heater voltage for the Type 290 is 6.0 volts, as measured at the socket or tube base pins. Variations should be restricted to plus or minus 0.3 volt for long tube life and consistent performance.

GRID OPERATION - Grid-bias voltage must be obtained from a fixed bias supply in Class AB applications. The internal resistance of the source should not exceed 2500 ohms.

SCREEN OPERATION - In linear amplifier service, the screen voltage must be obtained from a well regulated source, to prevent excessive screen voltage variations due to changes in screen current which occur between zero-signal and full-signal conditions. The circuit should be arranged so that it is impossible to apply screen voltage without plate voltage. The use of a screen grid over-current relay is recommended, to remove screen voltage immediately in case of excessive screen current due to circuit problems, grid bias failure, or accidental removal of plate circuit loading.

PLATE OPERATION - The maximum rated plate dissipation power for the Type 290 is 5000 watts. Except for brief periods during circuit adjustment, this maximum value should not be exceeded. Contact to the plate may be made either at the top cap or by means of a circular clamp or spring-finger collet around the outer surface of the anode cooler itself. Points of electrical contact with the anode should be kept clean and free of oxide to minimize rf loss. The anode cooler should be inspected periodically and cleaned when necessary to remove any dirt which might interfere with effective cooling.

NEUTRALIZATION FOR RF OPERATION - For minimum-distortion Class AB_1 linear amplifier service, where reaction on the driver circuit should be eliminated completely, it will usually be found advisable to neutralize the small feedback capacitance of the tube.

GENERAL OPERATION NOTES - A metal chassis or equivalent means should be provided to separate the input and output circuits of an rf amplifier employing the Type 290. Reasonable precautions should be observed in regard to bypassing and shielding of supply leads to prevent coupling between input and output through external circuits. The use of the EIMAC SK-291A air-system socket, with its integral screen grid bypass capacitance built in, is helpful in these respects.

SPECIAL APPLICATION - If it is desired to operate this tube under conditions widely different from those listed here, write to Power Grid Tube Division, EIMAC Division of Varian, 301 Industrial Way, San Carlos, California 94070, for information and recommendations.

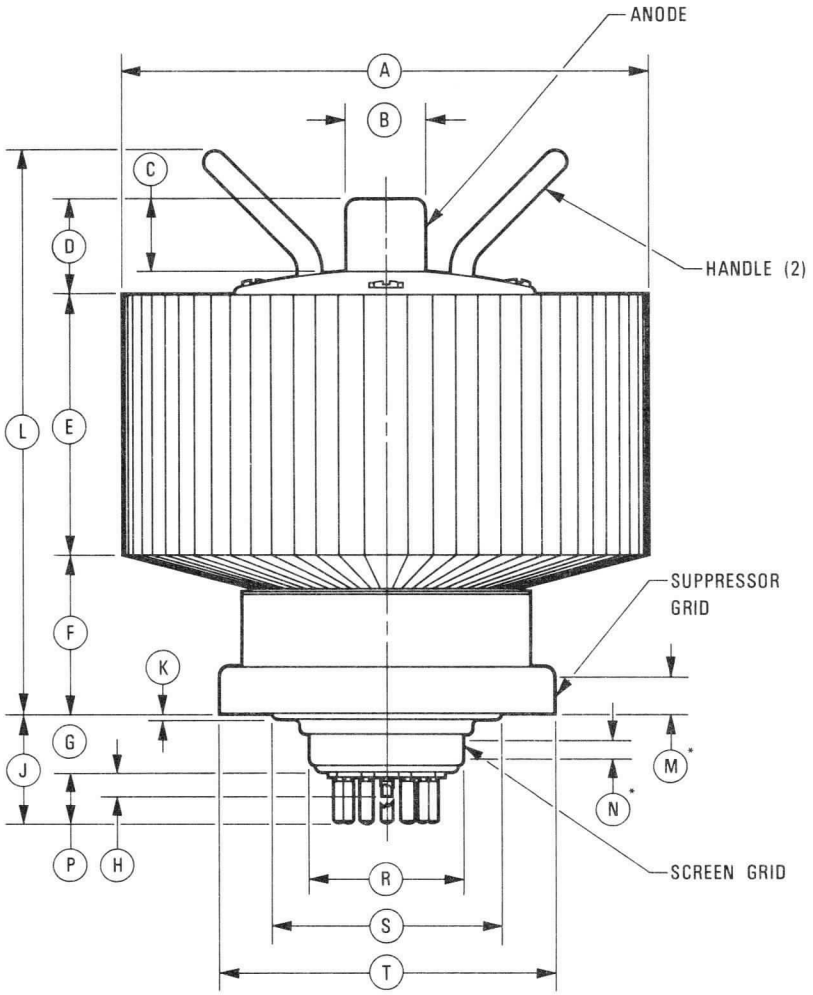

DIMENSIONAL DATA						
DIM.	INCHES			MILLIMETERS		
	MIN.	MAX.	REF.	MIN.	MAX.	REF.
A	5.468	5.532		138.89	140.51	
B	.805	.819		20.45	20.80	
C	.688	--		17.48	--	
D	.937	1.062		23.80	26.98	
E	2.624	2.688		66.65	68.28	
F	1.625	1.750		41.28	44.45	
G	.624	.688		15.85	17.48	
H	--	--	.187	--	--	4.75
J	1.062	1.250		26.97	31.75	
K	--	.125		--	3.18	
L	--	6.000		--	152.40	
M	.375	--		9.53	--	
N	.220	--		5.59	--	
P	.437	.562		11.10	14.27	
R	1.615	1.629		41.02	41.38	
S	--	2.812		--	46.02	
T	3.484	3.516		88.49	89.31	
U	--	--	51°	--	--	51°
V	--	--	52°	--	--	52°
W	.122	.128		3.10	3.25	
X	--	--	1.000	--	--	25.40
Y	.149	.159		3.78	4.04	

NOTES:

1. (*) CONTACT SURFACE
2. REFERENCE DIMENSIONS ARE FOR INFORMATION ONLY & ARE NOT REQUIRED FOR INSPECTION PURPOSES.

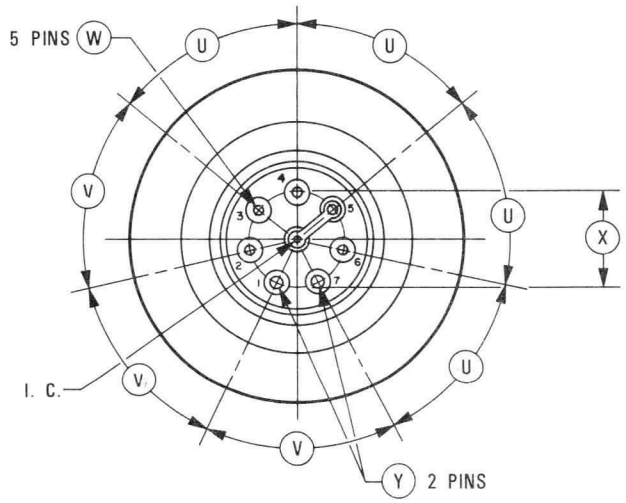

PIN CONNECTIONS

PIN NO.	ELEMENT
1	k
2	g1
3	h
4	k
5	h
6	g1
7	k
CENTER PIN	int. con.
LOWER RING	g2
UPPER RING	g3
CAP	p

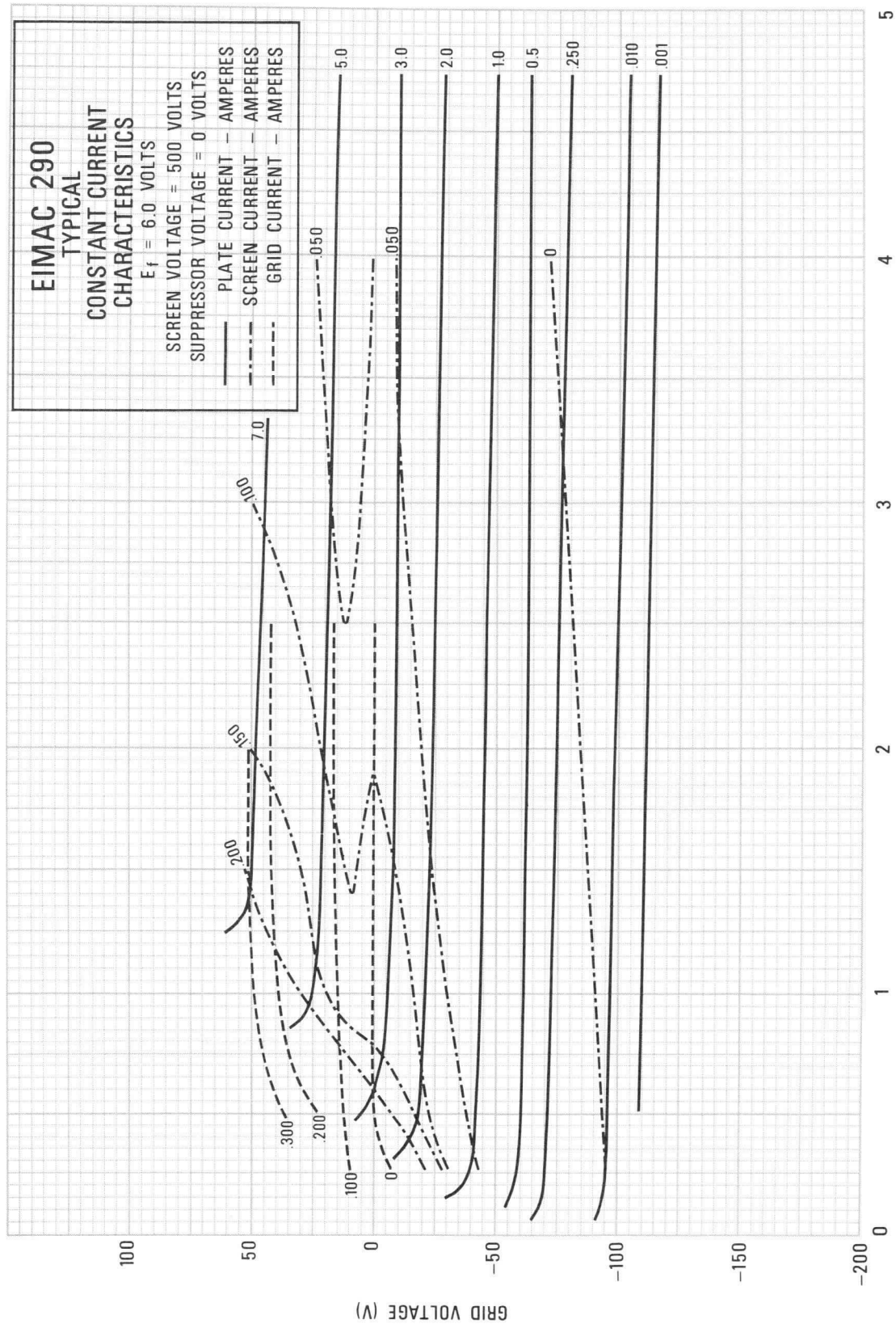
EIMAC 290
TYPICAL
CONSTANT CURRENT
CHARACTERISTICS
E_f = 6.0 VOLTS
SCREEN VOLTAGE = 500 VOLTS
SUPPRESSOR VOLTAGE = 0 VOLTS
PLATE CURRENT – AMPERES
SCREEN CURRENT – AMPERES
GRID CURRENT – AMPERES
7.0
.100
.150
.200
.300
.100
.200
0
.050
5.0
.050
3.0
2.0
1.0
0.5
0
.250
.010
.001
100
50
0
−50
−100
−150
−200
0
1
2
3
4
5
GRID VOLTAGE (V)
PLATE VOLTAGE (KV)
CURVE #4106

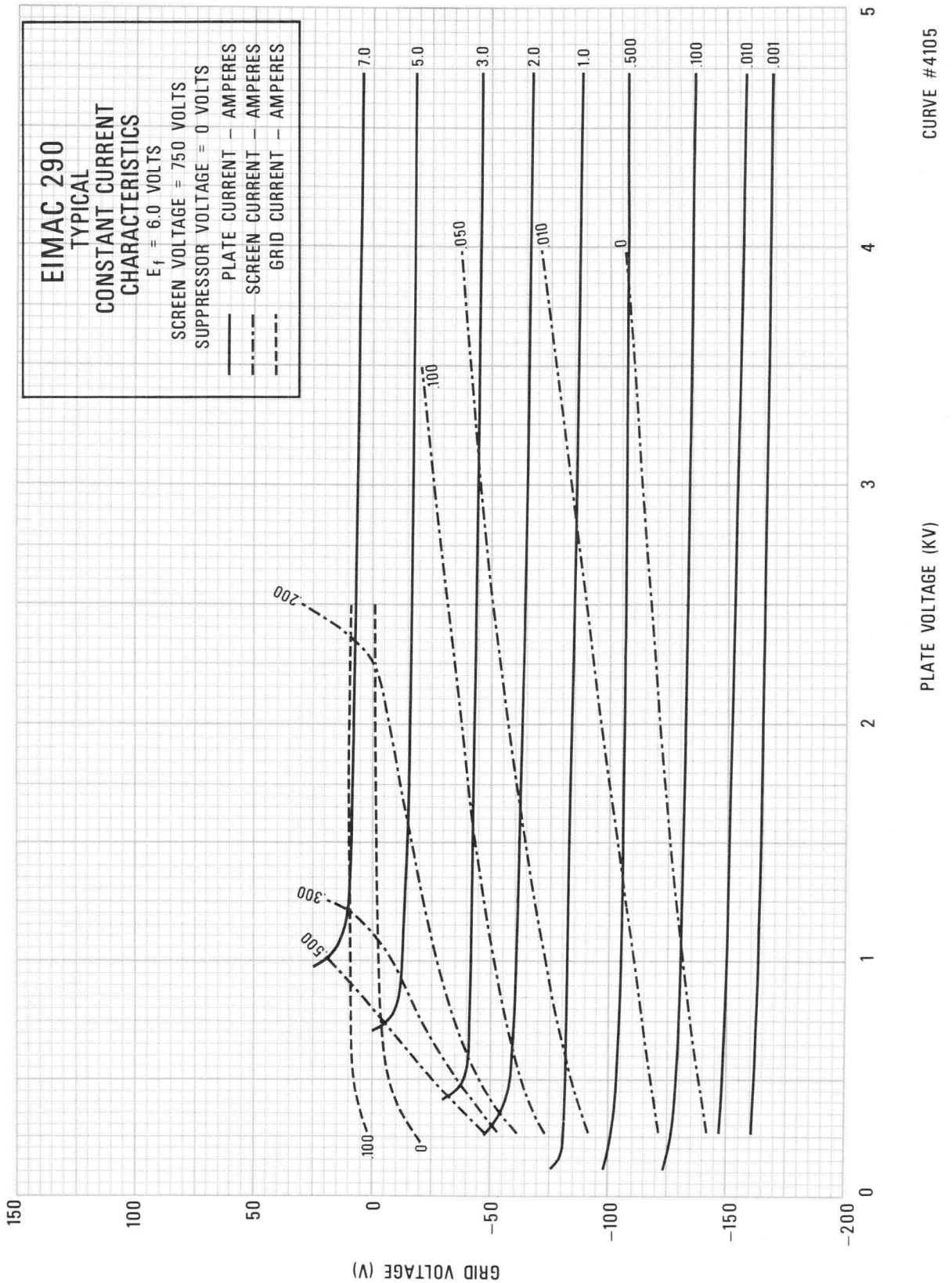
EIMAC 290
TYPICAL
CONSTANT CURRENT
CHARACTERISTICS
E_f = 6.0 VOLTS
SCREEN VOLTAGE = 750 VOLTS
SUPPRESSOR VOLTAGE = 0 VOLTS
PLATE CURRENT – AMPERES
SCREEN CURRENT – AMPERES
GRID CURRENT – AMPERES
7.0
5.0
3.0
2.0
1.0
.500
.100
.010
.001
.100
.050
.010
0
200
300
500
100
0
150
100
50
0
−50
−100
−150
−200
0
1
2
3
4
5
GRID VOLTAGE (V)
PLATE VOLTAGE (KV)
CURVE #4105

TECHNICAL DATA

8295A

RADIAL BEAM
POWER PENTODE

The EIMAC 8295A is a ceramic/metal, forced-air cooled, radial beam pentode with a rated maximum plate dissipation of 1000 watts. It is capable of high power gain and excellent efficiency at relatively low plate voltage. The 8295A is a direct replacement for the 8295.

This external-anode tube is especially suited for Class AB_1 linear rf amplifier service, but will also provide excellent performance in Class AB_2, Class B, and Class C service.



GENERAL CHARACTERISTICS [1]

ELECTRICAL

Cathode: Oxide Coated, Unipotential	
Heater: Voltage	6.0 ± 0.3 V
Current, at 6.0 volts	8.2 A
Amplification Factor (Average):	
Grid to Screen	3.4
Direct Interelectrode Capacitances (grounded cathode)[2]	
Input	40 pF
Output	18.5 pF
Feedback	0.09 pF
Frequency of Maximum Rating:	
CW	30 MHz

1. Characteristics and operating values are based upon performance tests. These figures may change without notice as the result of additional data or product refinement. EIMAC Division of Varian should be consulted before using this information for final equipment design.

2. Capacitance values are for a cold tube as measured in a shielded fixture in accordance with Electronic Industries Association Standard RS-191.

MECHANICAL

Maximum Overall Dimensions:	
Length	5.05 in; 128 mm
Diameter	4.03 in; 102 mm
Net Weight	2.8 lb; 1.27 kg
Operating Position	Any

(Revised 1-15-73) © 1970 Varian

Printed in U.S.A.

Maximum Operating Temperature	
Ceramic/Metal Seals	250 °C
Anode Core	250 °C
Cooling	Forced Air
Base	7-Pin Special
Recommended Socket (includes integral chimney)	EIMAC SK-184 or EIMAC SK-184A

RADIO FREQUENCY LINEAR AMPLIFIER
GRID DRIVEN, Class AB_1

MAXIMUM RATINGS:

DC PLATE VOLTAGE	3000	VOLTS
DC SUPPRESSOR VOLTAGE	100	VOLTS
DC SCREEN VOLTAGE	600	VOLTS
DC PLATE CURRENT	0.8	AMPERE
PLATE DISSIPATION	1000	WATTS
SCREEN DISSIPATION	30	WATTS

TYPICAL OPERATION (Frequencies to 30 MHz)
Class AB_1, Grid Driven, Peak Envelope or Modulation Crest Conditions

Plate Voltage	2000	2500	3000	Vdc
Suppressor Voltage	35	0	35	Vdc
Screen Voltage	500	500	500	Vdc
Grid Voltage [1]	-116	-119	-120	Vdc
Zero-Signal Plate Current	200	200	200	mAdc
Single Tone Plate Current [4]	800	800	800	mAdc
Zero-Signal Screen Current	5	5	4	mAdc
Single-Tone Screen Current [3/4]	75	43	54	mAdc
Peak rf Grid Voltage [3]	116	119	120	v
Single Tone Useful Output Power	1100	1250	1700	W
Resonant Load Impedance	1400	1500	2100	Ω
Intermodulation Distortion Products [2] - 3rd Order	-24	-22	-23	db
5th Order	-37	-50	-40	db

1. Adjust to specified zero-signal dc plate current.

2. The intermodulation distortion products are referenced against one tone of a two equal tone signal.

3. Approximate value

4. For peak conditions, or for single-tone modulation at full signal. Except for brief tuneup periods, operation under single-tone conditions may not be possible because of excessive screen dissipation.

RADIO FREQUENCY POWER AMPLIFIER OR OSCILLATOR

Class C Telegraphy or FM Telephony
(Key-Down Conditions)

MAXIMUM RATINGS:

DC PLATE VOLTAGE	3000	VOLTS
DC SUPPRESSOR VOLTAGE	75	VOLTS
DC SCREEN VOLTAGE	500	VOLTS
DC GRID VOLTAGE	-200	VOLTS
DC PLATE CURRENT	1.0	AMPERE
PLATE DISSIPATION	1000	WATTS
SCREEN DISSIPATION	30	WATTS

TYPICAL OPERATION (Frequencies to 30 MHz)

Plate Voltage	2000	2500	3000	Vdc
Suppressor Voltage	35	35	35	Vdc
Screen Voltage	500	500	500	Vdc
Grid Voltage	-175	-200	-200	Vdc
Plate Current	850	840	820	mAdc
Screen Current [1]	42	40	42	mAdc
Grid Current [1]	10	10	10	mAdc
Peak rf Grid Voltage [1]	188	210	210	v
Calculated Driving Power [1]	1.9	2.1	2.1	W
Plate Input Power	1700	2100	2460	W
Useful Output Power	1155	1440	1770	W

1. Approximate value.

NOTE: TYPICAL OPERATION data are obtained by calculation from published characteristic curves. Adjustment of the rf grid voltage to obtain the specified plate current at the specified bias, screen and plate voltages is assumed. If this procedure is followed, there will be little variation in output power when the tube is changed, even though there may be some variation in grid and screen current. The grid and screen currents which result when the desired plate current is obtained are incidental and vary from tube to tube. These current variations cause no difficulty so long as the circuit maintains the correct voltage in the presence of the variations in current. If grid bias is obtained principally by means of a grid resistor, the resistor must be adjustable to obtain the required bias voltage when the correct rf grid voltage is applied.

RANGE VALUES FOR EQUIPMENT DESIGN

	Min.	Max.	
Heater: Current at 6.0 volts	7.7	8.7	A
Cathode Warmup Time	3	---	minutes
Interelectrode Capacitances [1] (grounded cathode connection)			
Input	36.0	44.0	pF
Output	16.5	20.5	pF
Feedback	---	0.12	pF
Amplification Factor			
Grid to Screen	3.0	3.8	

1. Capacitance values are for a cold tube as measured in a shielded fixture in accordance with Electronic Industries Association Standard RS-191.

APPLICATION

MOUNTING - The 8295A may be operated in any position, and should normally be mounted in the EIMAC air-system socket SK-184 or SK-184A, or equivalent. The SK-184 socket has built-in bypass capacitors for the screen grid and suppressor grid. The SK-184A socket has a built-in bypass capacitor for the screen grid and has grounded suppressor grid contacts.

HEATER - The rated heater voltage for the 8295A is 6.0 volts, as measured at the socket or tube base pins. Variations should be restricted to plus or minus 0.3 volts for long tube life and consistent performance.

COOLING - Forced-air cooling is required in all applications, and the use of an air-system socket, such as the EIMAC SK-184 or EIMAC SK-184A, is recommended. Each of these sockets includes an integral chimney to direct air through the anode cooling fins. Cooling is simplified if air is directed in a base-to-anode direction. At full rated dissipation, with air at 50°C at sea level, an air flow of 25 cubic feet per minute, with a resulting pressure drop of approximately 0.15 inches of water, is sufficient to limit maximum tube temperature to 225°C. If air is not directed in the base-to-anode direction, additional cooling may be required for the base section of the tube. Cooling air should be applied before or simultaneously with the application of electrode voltages, including heater, and may be removed simultaneously with them.

CATHODE WARMUP TIME - Heater voltage should be applied for a minimum of three minutes before the application of other electrode voltages to allow proper conditioning of the cathode surface.

GRID OPERATION - In Class AB applications, grid bias voltage must be obtained from a fixed bias supply. The internal resistance of the bias source should not exceed 5000 ohms in Class AB_1 applications or 2000 ohms in Class AB_2 applications. Either fixed bias or cathode bias, or a combination of the two, is recommended for Class C applications. Partial grid leak bias, in combination with fixed or cathode bias, or both, may be used in Class C application provided the total resistance of the grid leak plus the bias source does not exceed 5000 ohms.

SCREEN OPERATION - If the screen voltage is obtained from a power supply separate from the plate voltage supply, the circuit should be arranged so that it is impossible to apply screen voltage without plate voltage. The use of a screen over-current relay is recommended, to remove screen voltage immediately in case of excessive screen current due to circuit problems, grid bias failure, or accidental removal of plate circuit loading. In linear amplifier service, the screen voltage must be obtained from a well regulated source, to prevent excessive screen voltage variation due to changes in screen current which occur between zero-signal and full-signal conditions.

SUPPRESSOR OPERATION - The 8295A performs well with the suppressor operated at cathode potential. For maximum efficiency at high power input and low plate voltages, a positive voltage of about 35 volts should be applied to the suppressor. However, the actual value is not critical, and voltages between 25 and 45 volts may be used with only minor differences in performance. The internal resistance of the suppressor grid voltage supply should not exceed 3000 ohms.

PLATE OPERATION - The maximum rated plate dissipation power for the 8295A is 1000 watts. Except for brief periods during circuit adjustment, this maximum value should not be exceeded. Contact to the plate may be made either at the top cap or by means of a circular clamp or spring-finger collet around the outer surface of the anode cooler itself. Points of electrical contact with the anode should be kept clean and free of oxide to minimize rf loss. The anode cooler should be inspected periodically and cleaned when necessary to remove any dirt which might interfere with effective cooling.

GENERAL OPERATION NOTES - A metal chassis or equivalent means should be provided to separate the input and output circuits of an amplifier employing the 8295A. Reasonable precautions should be observed in regard to bypassing and shielding of the supply leads to prevent coupling between input and output through external circuits. The use of the EIMAC SK-184 or SK-184A air-system sockets, with integral bypass capacitance built in, is helpful in these respects. When it is desired to apply voltage to the suppressor of the tube, it is recommended that any suppressor bypass capacitance be located on the anode side of a chassis. Total suppressor bypass capacitance should be sufficient to result in a reactance of 3 ohms or less at the operating frequency. The dc supply lead to the suppressor should either be located entirely on the anode side of the shielding (chassis), or fed through an effective rf choke located well out of the field of the plate tank circuit and again bypassed before passing through the shielding into any compartment exposed to the control grid circuit.

NEUTRALIZATION FOR RF OPERATION - In most Class C applications, the 8295A may be operated without neutralization provided the suppressor grid and screen grid are effectively grounded for radio frequencies. The use of the EIMAC air-system sockets is helpful in this respect. For minimum-distortion Class AB1 linear amplifier service, where reaction on the driver circuit should be eliminated completely, it will usually be found advisable to neutralize the small feedback capacitance of the tube.

INTERELECTRODE CAPACITANCE - The actual internal interelectrode capacitance of a tube is influenced by many variables in most applications, such as stray capacitance to the chassis, capacitance added by the socket used, stray capacitance between tube terminals, and wiring effects. To control the actual capacitance values within the tube, as the key component involved, the industry and the Military Services use a standard test procedure as described in Electronic Industries Association Standard RS-191. This requires the use of specially constructed test fixtures which effectively shield all external tube leads from each other and eliminates any capacitance reading to "ground". The test is performed on a cold tube. Other factors being equal, controlling internal tube capacitance in this way normally assures good interchangeability of tubes over a period of time, even when the tube may be made by different manufacturers. The capacitance values shown in the manufacturer's technical data, or test specifications, normally are taken in accordance with Standard RS-191.

The equipment designer is therefore cautioned to make allowance for the actual capacitance values which will exist in any normal application. Measurements should be taken with the socket and mounting which represent approximate final layout if capacitance values are highly significant in the design.

HIGH VOLTAGE - The 8295A operates at voltages which can be deadly, and the equipment must be designed properly and operating precautions must be followed. Equipment must be designed so that no one can come in contact with high voltages. All equipment must include safety enclosures for high-voltage circuits and terminals, with interlock switches to open the primary circuits of the power supplies and to discharge high-voltage condensers whenever access doors are opened. Interlock switches must not be bypassed or "cheated" to allow operation with access doors open. Always remember that HIGH VOLTAGE CAN KILL.

AIR-SYSTEM SOCKETS

Two air-system sockets are available for the 8295A, each of which makes all electrical contacts to the tube except to the anode. The characteristics of these sockets are as follows:

	EIMAC SK-184	EIMAC SK-184A
Screen Grid Bypass Capacitor	2000 pF, 1000 Vdc	2000 pF, 1000 Vdc
Suppressor Grid Bypass Capacitor	2500 pF, 500 Vdc	none
Grounded Contacts (to socket frame)	none	Suppressor Grid
Anode Air Chimney	Integral	Integral

SPECIAL APPLICATION

If it is desired to operate this tube under conditions widely different from those listed here, write to Power Grid Tube Division, EIMAC Division of Varian, 301 Industrial Way, San Carlos, California 94070, for information and recommendations.

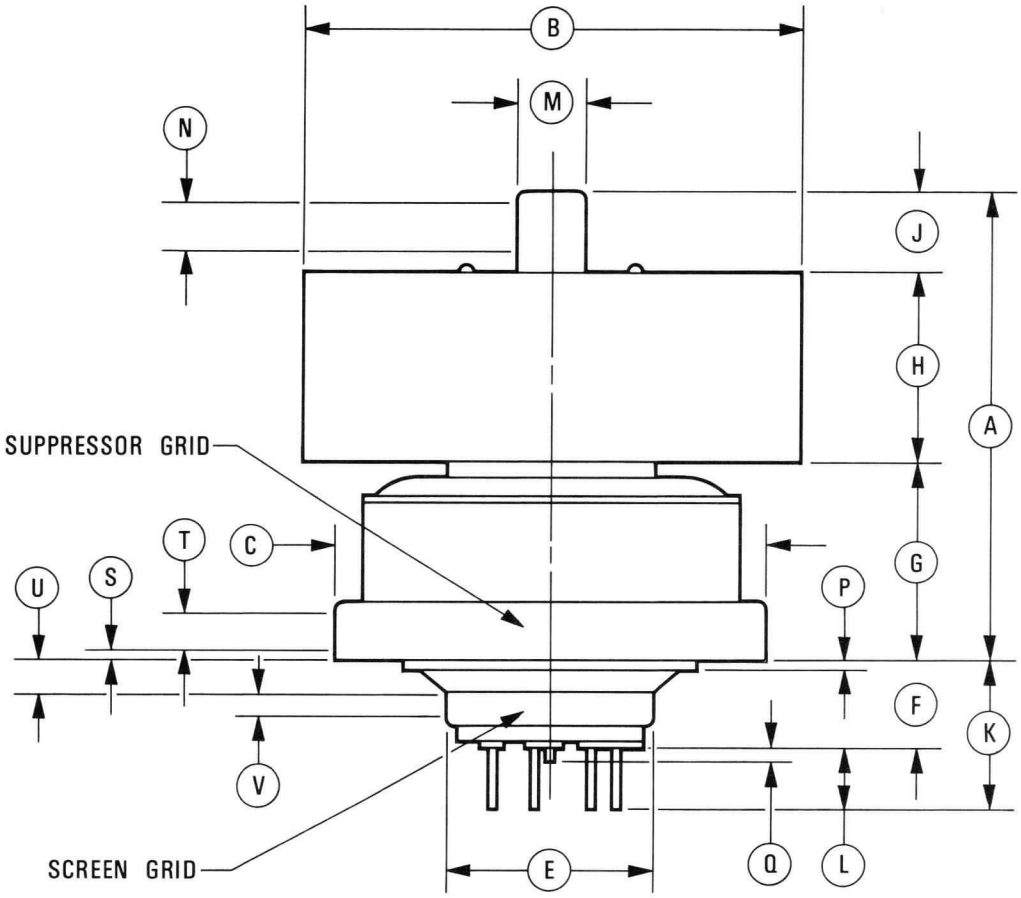

DIMENSIONAL DATA				
DIM.	INCHES		MILLIMETERS	
	MIN.	MAX.	MIN.	MAX.
A	3.458	3.832	87.83	97.33
B	3.968	4.032	100.79	102.41
C	3.485	3.515	88.52	89.28
E	1.615	1.630	41.02	41.40
F	.655	.719	16.64	18.26
G	1.395	1.645	35.43	41.78
H	1.468	1.532	37.29	38.91
J	.593	.657	15.06	16.69
K	1.056	1.219	26.82	30.96
L	.438	.562	11.13	14.27
M	.559	.573	14.20	14.55
N	.400	— —	10.16	— —
P	— —	.125	— —	3.18
T	.250	— —	6.35	— —
V	.220	— —	5.59	— —
W	.056	.062	1.42	1.57
X	.120	.127	3.05	3.23
REFERENCE DIMENSIONS				
D	51°			
Q	.125		3.18	
R	52°			
S	.125		3.18	
U	.250		6.35	
Y	1.000		25.40	

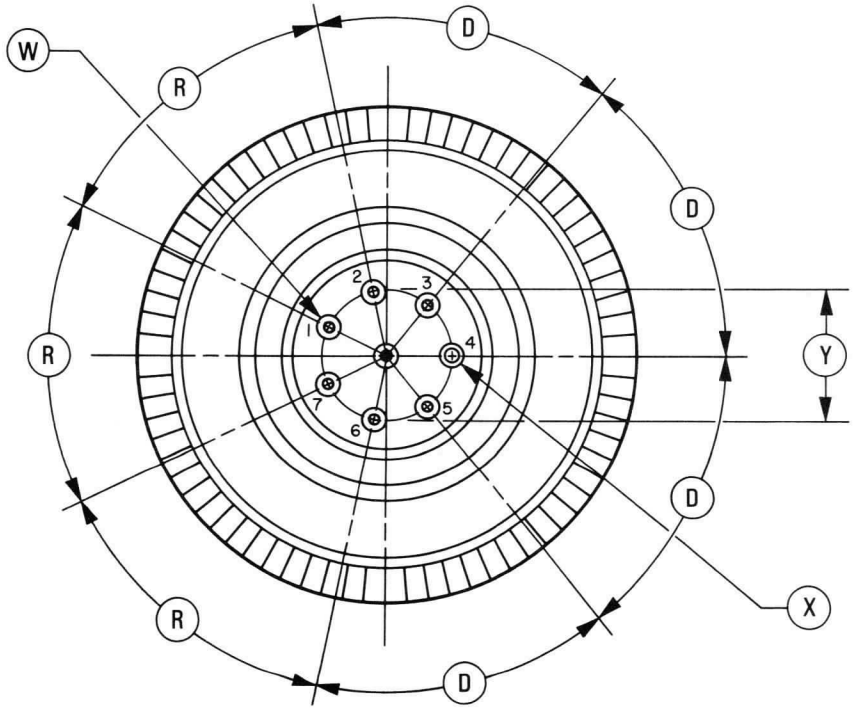

PIN CONNECTIONS	
PIN NO.	ELEMENT
1	k
2	g1
3	h
4	k
5	h
6	g1
7	k
CENTER PIN	INT. CON.
LOWER RING	g2
UPPER RING	g3
CAP	a

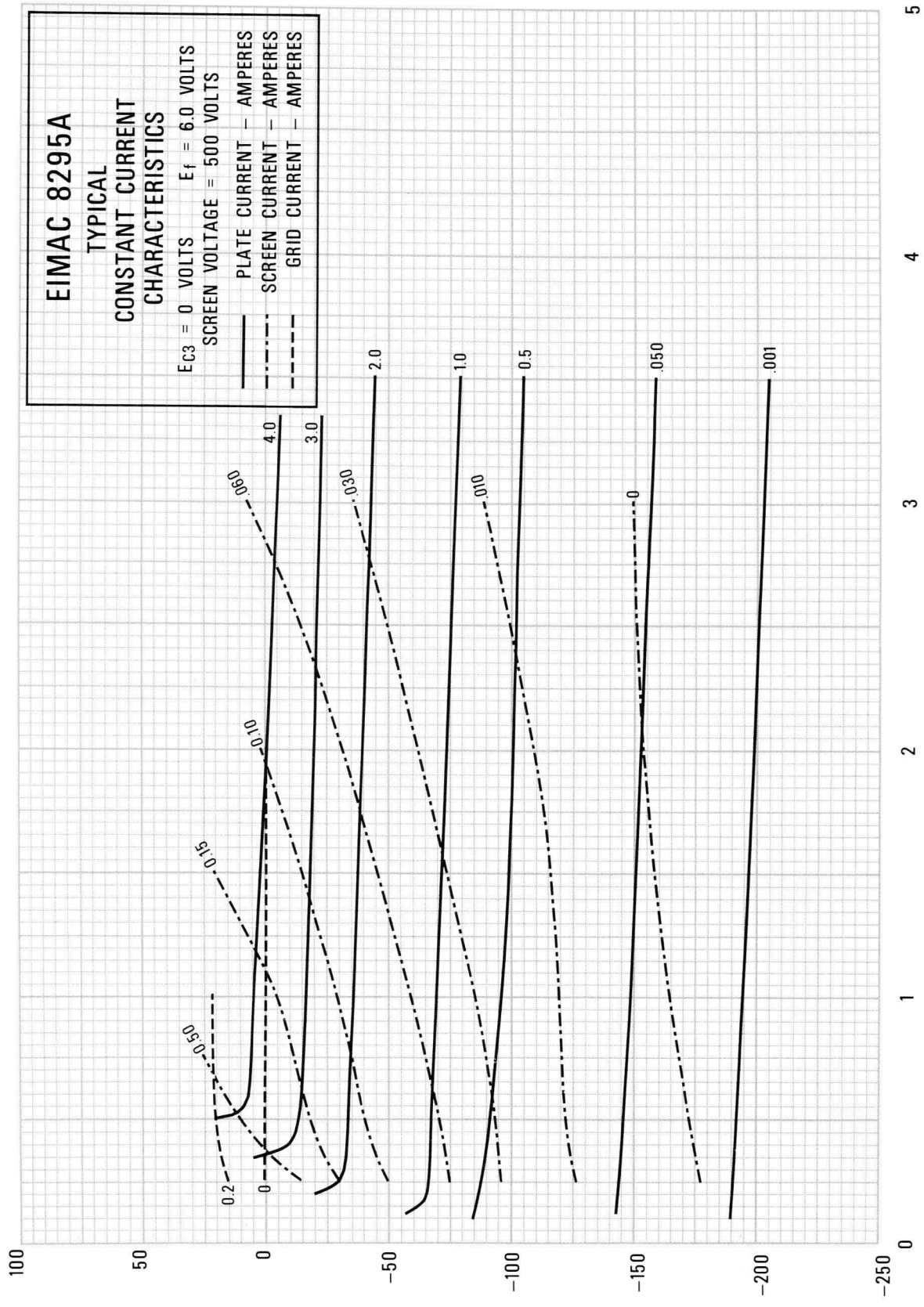
EIMAC 8295A
TYPICAL
CONSTANT CURRENT
CHARACTERISTICS
E_{C3} = 0 VOLTS E_f = 6.0 VOLTS
SCREEN VOLTAGE = 500 VOLTS
PLATE CURRENT – AMPERES
SCREEN CURRENT – AMPERES
GRID CURRENT – AMPERES
4.0
3.0
2.0
1.0
0.5
0
.050
.001
.060
.030
.010
0.10
0.15
0.50
0.2
0
100
50
0
−50
−100
−150
−200
−250
0
1
2
3
4
5
GRID VOLTAGE (V)
PLATE VOLTAGE – (KV)

CURVE #3767

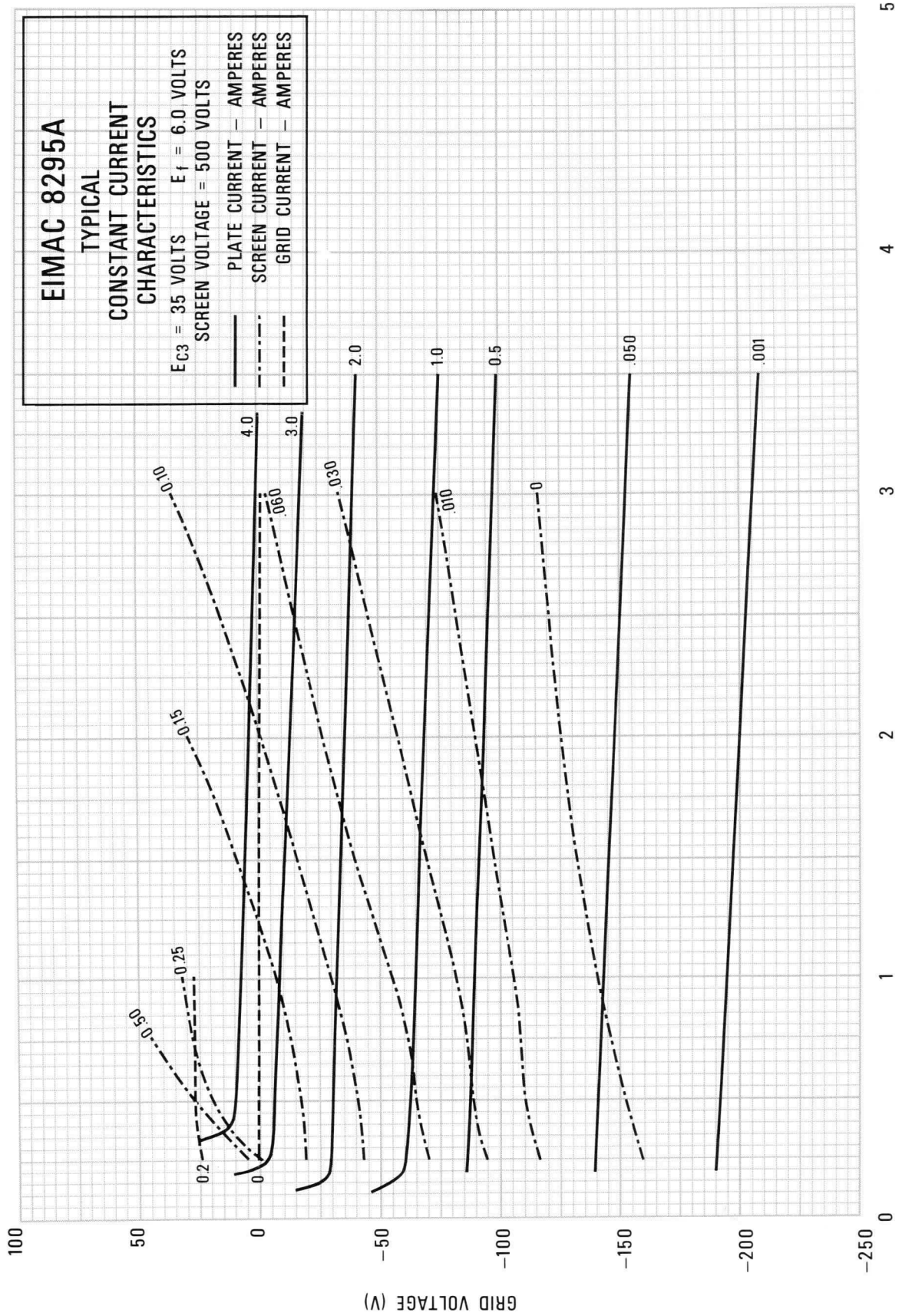
EIMAC 8295A
TYPICAL
CONSTANT CURRENT
CHARACTERISTICS
E_{C3} = 35 VOLTS E_f = 6.0 VOLTS
SCREEN VOLTAGE = 500 VOLTS
PLATE CURRENT – AMPERES
SCREEN CURRENT – AMPERES
GRID CURRENT – AMPERES
GRID VOLTAGE (V)
100
50
0
−50
−100
−150
−200
−250
0
1
2
3
4
5
PLATE VOLTAGE (KV)
CURVE #3770
0.2
0.50
0.25
0.15
0.10
0
4.0
.060
3.0
.030
2.0
.010
1.0
0
0.5
.050
.001

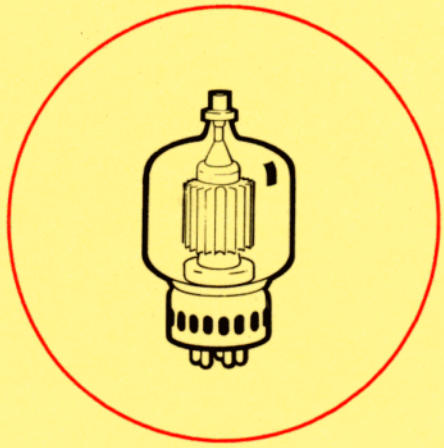

pulse modulators

EIMAC division of Varian

Main office: 301 Industrial Way, San Carlos, CA 94070

Look in the general section for–

A quick guide to EIMAC products and services offered in this catalog.

Including . . .

- Your nearest distributor of modern, fully guaranteed EIMAC electron tubes and accessories.
- Your nearest Varian/EIMAC Field Engineer, who stands ready to give you immediate engineering assistance, information on deliveries and prices, or to provide other information not found in this catalog.
- EIMAC tube type numbering system.
- EIMAC/JEDEC cross-reference list.

Important EIMAC extras...

APPLICATION ENGINEERING. The EIMAC Application Engineering Department is available at all times for consultation. New tube operating techniques are continually being explored, tested and proven by EIMAC engineers, whose combined knowledge and experience are at your service. EIMAC Application Bulletins covering various uses of EIMAC products are available upon request.

FIELD ENGINEERING. Serving as an extension of the Varian/EIMAC Application Engineering Department outside the EIMAC Division plant, the Field Engineers cover the United States, and numerous foreign countries, operating out of offices in major cities. They will help you personally with experimental work, circuits, technique, etc. Engineers from the EIMAC plant are available, too, for field consultation. As EIMAC tubes are world renowned, the same services extend to countries overseas through the Varian/EIMAC export operations and overseas offices.

8252W / 4PR60C

TECHNICAL DATA

PULSE MODULATOR TETRODE

The EIMAC 8252W/4PR60C is a high-vacuum tetrode intended for pulse-modulator service in circuits employing inductive or resistive loads. This tube unilaterally replaces the 715C and the 5D21 and supersedes the 8252/4PR60B. The internal structure of the tube has been strengthened to minimize the effects of shock and vibration.

The 8252W/4PR60C has a maximum plate dissipation rating of 60 watts, is cooled by radiation and convection, and delivers pulse output power in the region of 300 kilowatts with less than one kilowatt of pulse driving power.



GENERAL CHARACTERISTICS[1]

ELECTRICAL

Cathode: Oxide-coated, Unipotential	
Heater Voltage	26.0 V
Heater Current	2.1 A
Cathode Heating Time	3 Min.
Direct Interelectrode Capacitances[2]	
Cin	43 pF
Cout	8.5 pF
Cgp	1.5 pF

1. Characteristics and operating values are based upon performance tests. These figures may change without notice as the result of additional data or product refinement. EIMAC Division of Varian should be consulted before using this information for final equipment design.
2. Capacitance values are for a cold tube as measured in a special shielded fixture in accordance with Electronic Industries Association Standard RS-191A.

MECHANICAL

Environmental Capability	See Application Note
Base	Fits E.F. Johnson Co. Socket Number 122-234 or equivalent
Mounting Position	Any
Cooling	Radiation and Convection
Recommended Heat Dissipating Plate Connector	EIMAC HR-8
Maximum Seal and Envelope Temperatures	200°C
Maximum Over-All Dimensions	
Length	6.000 in; 152.4 mm
Diameter	3.063 in; 77.9 mm
Net Weight	12 oz; 0.34 kg
Shipping Weight	2.5 lb; 1.14 kg

(Revised 6-30-71) © 1962, 1966, 1971 Varian

Printed in U.S.A.

PULSE MODULATOR OR SWITCH TUBE SERVICE

ABSOLUTE MAXIMUM RATINGS

DC PLATE VOLTAGE	20 KILOVOLTS
DC SCREEN VOLTAGE	1.5 KILOVOLTS
DC GRID VOLTAGE[2]	-1.0 KILOVOLT
PEAK POSITIVE GRID VOLTAGE	300 VOLTS
PEAK PLATE CURRENT	18 AMPERES
PEAK POSITIVE PLATE VOLTAGE	25 KILOVOLTS
PLATE DISSIPATION(Average)	60 WATTS
SCREEN DISSIPATION (Average)	8 WATTS
GRID DISSIPATION(Average)	1 WATT
DUTY	See chart page 6

1. Approximate value.

TYPICAL OPERATION

Pulse Modulator (Per Tube)			
DC Plate Voltage	16.0	20.0	kVdc
Pulse Plate Current	10.0	18.0	a
DC Screen Voltage	1.25	1.25	kVdc
Pulse Screen Current[1]	1.8	2.7	a
DC Grid Voltage	-550	-600	Vdc
Pulse Grid Current[1]	0.20	0.75	a
Pulse Positive Grid Voltage	30	150	v
Duty	0.0025	.001	
Pulse Duration	5	2	μs
Peak Positive Plate Voltage	25	25	kv
Pulse Input Power	160	360	kw
Pulse Output Power	150	337	kw
Pulse Output Voltage	15.0	18.75	kv

2. The effective grid-circuit resistance must not exceed 100,000 ohms.

RANGE VALUES FOR EQUIPMENT DESIGN

	Min.	Max.	
Heater Current at E_f = 27.0 volts	1.95	2.35	A
Interelectrode Capacitances[1] (grounded cathode connection)			
Cin	35	50	pF
Cout	6.0	11	pF
Cgp	---	2.0	pF

1. Capacitance values are for a cold tube as measured in a special shielded fixture in accordance with Electronic Industries Association Standard RS-191.

APPLICATION

MECHANICAL

MOUNTING - The 4PR60C may be mounted and operated in any position. A flexible connecting strap should be provided between the plate terminal and the external plate circuit.

If environmental stress, such as shock or vibration is expected, the tube must be clamped into position by means of clamps on the metal skirt. Such clamps must be shaped to fit the contour of the skirt and must be fastened to the tube before being tightened to the chassis in order that no distorting force will be applied. No lateral pressure or clamping action should be applied to the base pins or to any part of the tube other than the skirt. The skirt is internally connected to the cathode.

COOLING - Adequate ventilation must be provided so that seal and/or envelope temperatures do not exceed 200°C under any operating or standby condition. When the 4PR60C is operated where air circulation is restricted, these temperatures can easily reach 225°C or more which will accelerate seal deterioration and cause early tube failure.

Adequate control of the base temperature, in particular, is necessary. Envelope and plate-seal temperatures do not ordinarily require special attention provided that an HR-8 heat dissipating plate connector is used. However, each individual application of the 4PR60C should be carefully evaluated to assure safe operating temperatures. A blower is usually required only when normal air circulation is restricted, when the ambient temperature exceeds 25°C, when the altitude is other than sea level, or when a combination of these factors exists.

ELECTRICAL

HEATER OPERATION - The heater voltage, as measured directly at the heater pins, should be maintained at the rated value of 26.0 volts. Maximum variations in heater voltage must be kept within the range of 23.4 to 28.6 volts. Where consistent performance and long tube life are factors, the heater voltage must be kept within range of 24.7 to 27.3 volts. The peak pulse-emission capability of the cathode may be impaired at low

heater voltages, and high heater voltages contribute to short tube life.

A heater noise test is conducted periodically on 4PR60C samples. This test insures that the heater/cathode assembly will not generate excessive rf noise during vibration over the frequency range of 10 to 50 cps.

A 500-hour heater cycling test is also conducted periodically on 4PR60C samples. This test consists of at least 1000 complete on-off cycles and insures that grid-to-cathode shorts will not occur as a result of cumulative hysteresis effects upon mechanical joints in the cathode assembly.

CATHODE OPERATION - It is essential that the minimum cathode heating time of three minutes be observed prior to the flow of cathode current. Conservative design for reliable tube operation in pulse circuits dictates the use of five minutes minimum heating time.

The "Cathode Current Derating Chart" depicts the current capabilities of the 4PR60C cathode at various pulse durations and duty factors. To use this chart, enter with pulse duration and note the intersection with desired pulse *cathode* current (the total of plate, screen, and grid currents during particular pulse condition). At this intersection read off values of maximum duty and/or pulse repetition rate.

Under a given set of operating conditions, element dissipations may limit the maximum permissible duty to a value less than that which cathode considerations would dictate. When this occurs, it will usually be found that screen dissipation is the limiting factor under low tube-voltage-drop conditions and that plate dissipation limits the maximum duty under high tube-voltage-drop conditions.

CONTROL-GRID OPERATION - The average power dissipated by the control grid of the 4PR-60C must not exceed one watt. Control-grid dissipation is not usually a limiting factor with this tube, but can be computed as the product of pulse grid current, pulse positive grid voltage, and duty factor. Similarly, pulse driving power is pulse grid current times pulse grid voltage swing (bias voltage plus positive grid voltage).

SCREEN-GRID OPERATION - The average power dissipated by the screen of the 4PR60C must not exceed eight watts. Screen dissipation is the product of dc screen voltage, pulse screen current, and duty factor. Excessive screen dissipation is likely to occur under conditions of low tube-voltage drop during conduction. This condition can be relieved by using a lower plate load resistance which will cause higher tube-voltage drop during conduction.

A bleeder resistance designed to draw at least 10 milliamperes of current should be connected directly from screen to cathode of the 4PR60C. This bleeder resistance will insure that only a positive current load is presented to the screen supply.

PLATE OPERATION - The plate of the 4PR60C is radiation cooled and is rated at 60 watts maximum dissipation. Average plate dissipation must not exceed 60 watts. The 4PR60C should not be operated without a heat-dissipating plate connector such as the recommended EIMAC HR-8.

Average plate dissipation may be calculated as the product of pulse plate current, pulse tube-voltage drop, and duty factor. Excessive average plate dissipation is likely to occur at high values of pulse tube-voltage drop. The calculated value of plate dissipation may be well below 60 watts in a given case, but excessive dissipation may result if pulse rise and fall times are appreciable compared to pulse duration. This excessive plate dissipation occurs because long rise and fall times slow down the plate voltage swing and allow plate current to flow for longer periods in the high voltage-drop region.

The plate-supply voltage for the 4PR60C should not exceed 20 kilovolts. In circuits employing inductive loading, the peak instantaneous plate voltage should not exceed 25 kilovolts.

CAUTION-HIGH VOLTAGE - Operating voltage for the 4PR60C can be deadly, so the equipment must be designed properly and operating precautions must be followed. Design equipment so that no one can come in contact with high voltages. All equipment must include safety enclosures for high voltage circuits and terminals, with interlock switches to open the primary circuits of the power supply and to discharge high voltage capacitors whenever access doors are opened. Interlock switches must not be bypassed or "cheated" to allow operation with access doors open. Always remember that HIGH VOLTAGE CAN KILL.

SHOCK/VIBRATION - The internal structure of the 4PR60C has been reinforced to minimize the effects of shock and vibration in the grid-cathode section of the tube. When environmental stress is expected, proper mounting is extremely important (see MOUNTING).

Production samples are periodically tested for ability to survive 50 G, 11 millisecond shock im-

pact, and vibration at a fixed double-amplitude of 0.08 inch over the range of 10 to 50 Hz and 10 G of acceleration over the range of 50 to 200 Hz.

X-RADIATION - High-vacuum tubes operating at voltages higher than 10 kilovolts produce progressively more dangerous X-ray radiation as the voltage is increased. The 4PR60C, operating at its rated voltages and currents, is a potential X-ray hazard. Only limited shielding is afforded by the tube envelope. Moreover, the X-ray radiation level can increase significantly with aging and gradual deterioration, due to leakage paths or emission characteristics as they are affected by the high voltage. X-ray shielding must be provided on all sides of tubes operating at these voltages to provide adequate protection throughout the tube's life. Periodic checks on the X-ray level should be made, and the tube should never be operated without adequate shielding in place when voltages above 10 kilovolts are in use. Lead glass, which attenuates X-rays, is available for viewing windows. If there is any doubt as to the requirement for or the adequacy of shielding, an expert in this field should be contacted to perform an X-ray survey of the equipment.

Operation of high-voltage equipment with interlock switches "cheated" and cabinet doors open in order to be better able to locate an equipment malfunction can result in serious X-ray exposure.

CAUTION-GLASS IMPLOSION - The EIMAC 4PR60C is pumped to a very high vacuum, which is contained by a glass envelope. When handling a glass tube, remember that glass is a relatively fragile material, and accidental breakage can result at any time. Breakage will result in flying glass fragments, so safety glasses, heavy clothing, and leather gloves are recommended for protection.

SPECIAL APPLICATION - If it is desired to operate this tube under conditions widely different from those listed here, write to Power Grid Tube Division, EIMAC Division of Varian, 301 Industrial Way, San Carlos, California 94070, for information and recommendations.

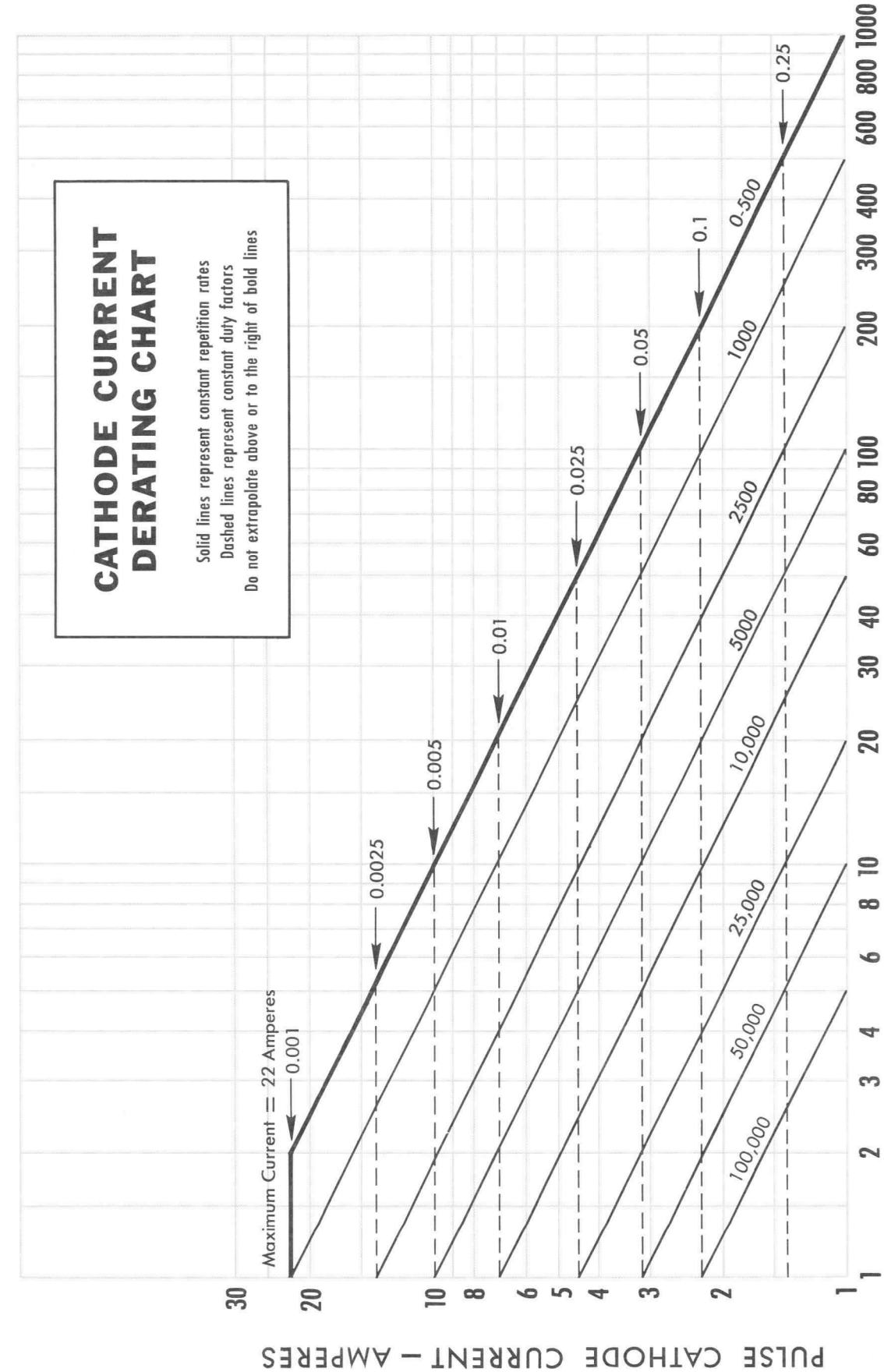
CATHODE CURRENT
DERATING CHART
Solid lines represent constant repetition rates
Dashed lines represent constant duty factors
Do not extrapolate above or to the right of bold lines
Maximum Current = 22 Amperes
0.001
0.0025
0.005
0.01
0.025
0.05
0.1
0.25
0.500
1000
2500
5000
10,000
25,000
50,000
100,000
PULSE CATHODE CURRENT – AMPERES
30
20
10
8
6
5
4
3
2
1
1
2
3
4
6
8
10
20
30
40
60
80
100
200
300
400
600
800
1000
PULSE DURATION – MICROSECONDS

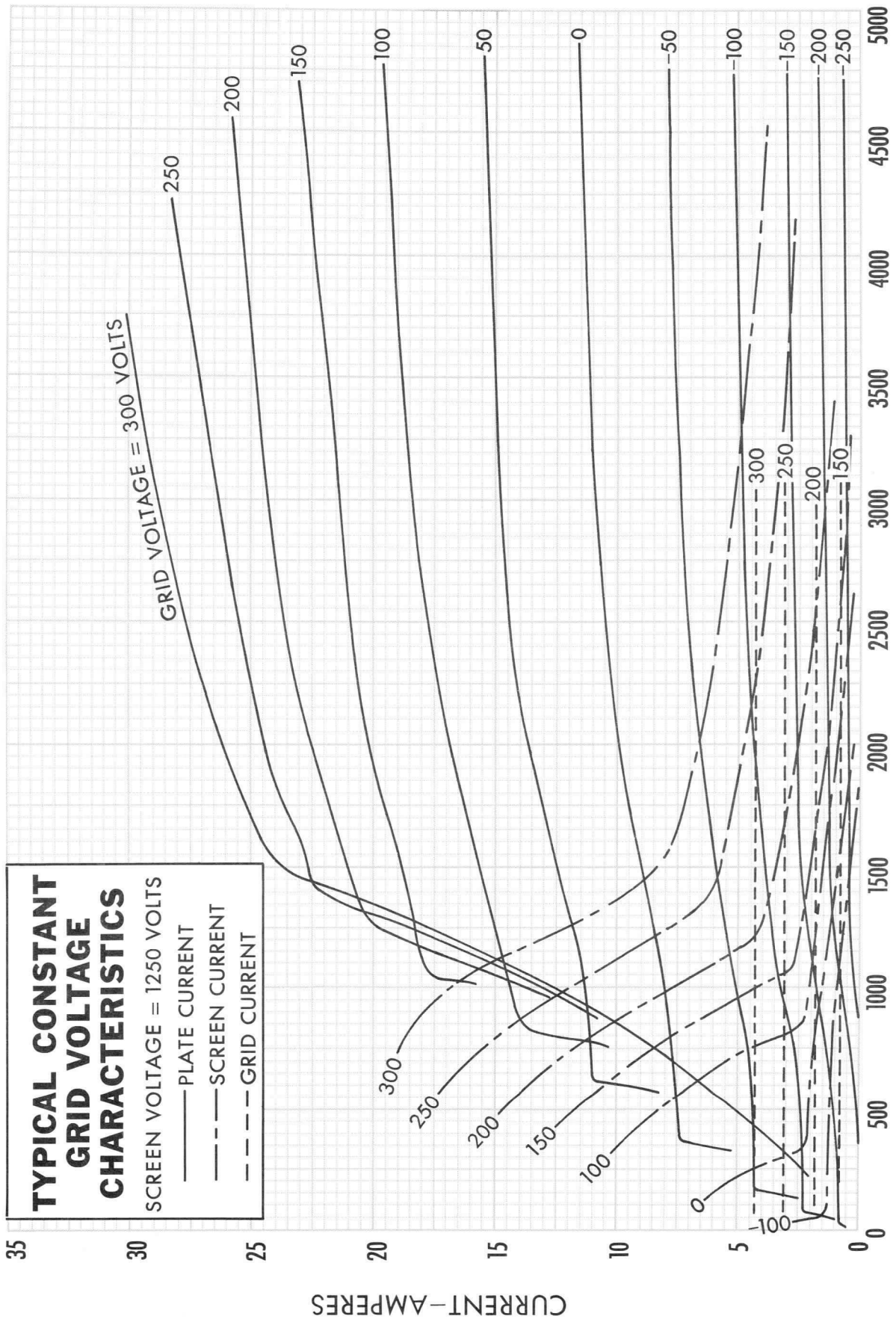
TYPICAL CONSTANT GRID VOLTAGE CHARACTERISTICS
SCREEN VOLTAGE = 1250 VOLTS
PLATE CURRENT
SCREEN CURRENT
GRID CURRENT
GRID VOLTAGE = 300 VOLTS
250
200
150
100
50
0
-50
-100
-150
-200
-250
300
CURRENT—AMPERES
PLATE VOLTAGE—VOLTS
0
5
10
15
20
25
30
35
500
1000
1500
2000
2500
3000
3500
4000
4500
5000

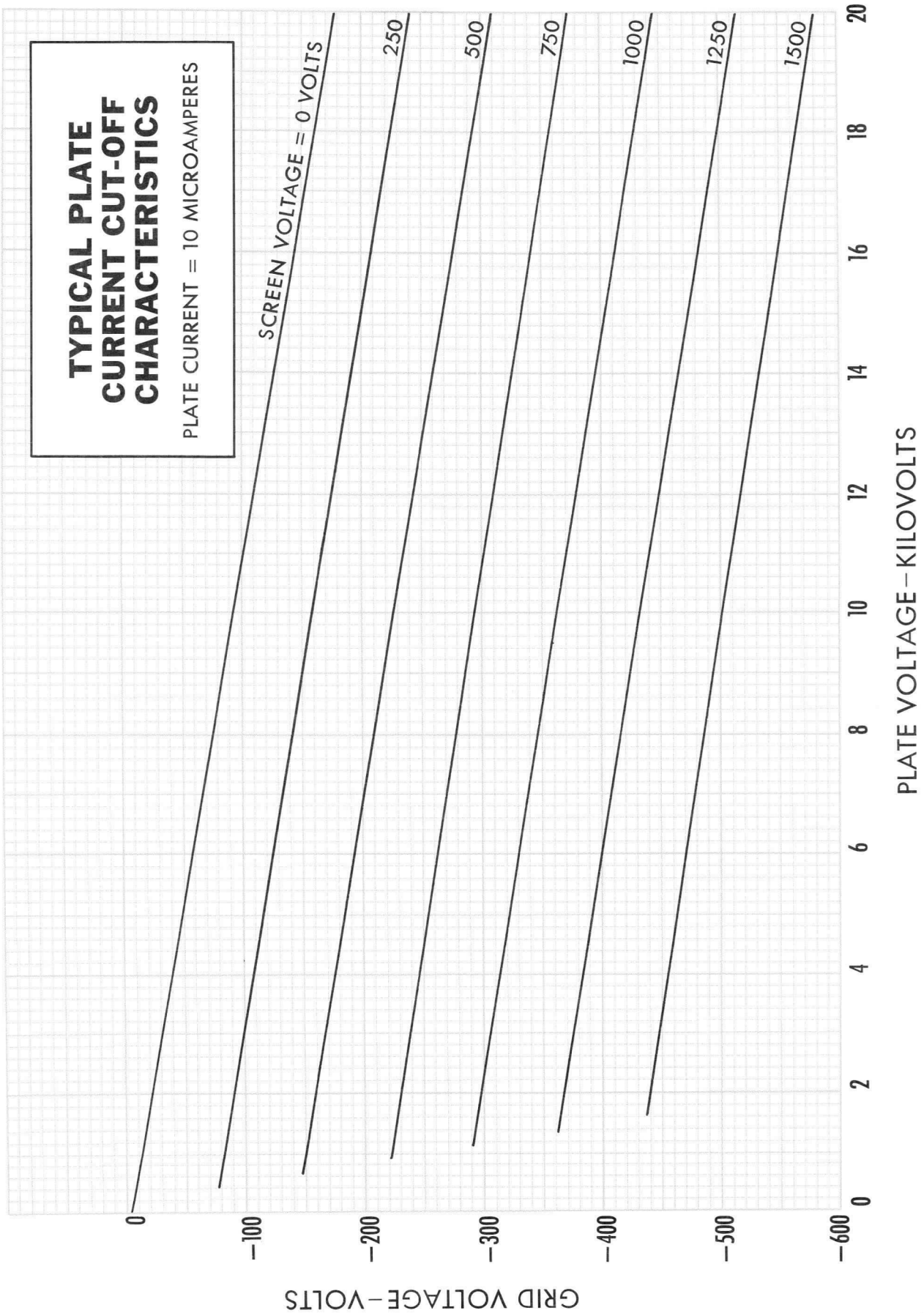
TYPICAL PLATE CURRENT CUT-OFF CHARACTERISTICS
PLATE CURRENT = 10 MICROAMPERES
SCREEN VOLTAGE = 0 VOLTS
250
500
750
1000
1250
1500
0
−100
−200
−300
−400
−500
−600
GRID VOLTAGE−VOLTS
0
2
4
6
8
10
12
14
16
18
20
PLATE VOLTAGE−KILOVOLTS

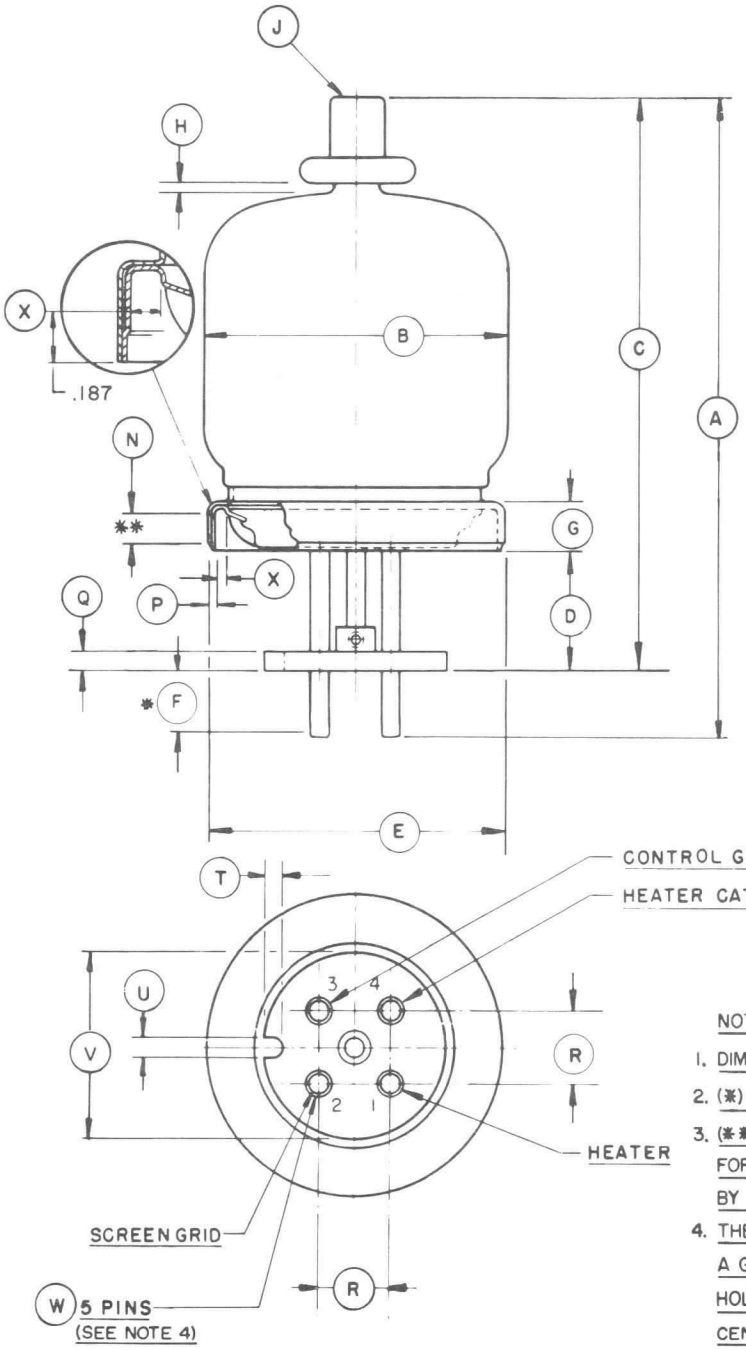

DIMENSIONAL DATA						
DIM.	INCHES			MILLIMETERS		
	MIN.	MAX.	REF.	MIN.	MAX.	REF.
A	5.750	6.000	--	146.10	152.40	--
B	--	3.063	--	--	77.80	--
C	5.344	5.594	--	135.7	142.1	--
D	1.125	1.250	--	28.57	31.75	--
E	2.885	2.905	--	73.28	73.79	--
F	0.328	--	--	8.33	--	--
G	0.438	0.500	--	11.13	12.70	--
H	0.016	--	--	0.41	--	--
J	CAP: C1-41 (JEDEC DESIGNATION)					
N	0.250	--	--	6.35	--	--
P	0.043	0.057	--	1.09	1.45	--
Q	--	--	0.188	--	4.77	--
R	--	--	0.687	--	17.45	--
T	0.171	0.203	--	4.34	5.16	--
U	0.171	0.203	--	4.34	5.16	--
V	1.788	1.813	--	45.42	46.05	--
W	0.183	0.191	--	4.65	4.85	--
X	0.157	--	--	3.99	--	--

NOTES:

1. DIMENSIONS IN INCHES.
2. (*) CONTACT AREA.
3. (**) DEFINES CYLINDRICAL AREA AVAILABLE FOR CLAMPING WHICH MUST NOT BE DISTORTED BY CLAMPING ACTION.
4. THE BASE PINS SHALL BE CAPABLE OF ENTERING A GAUGE 1/4 INCH THICK HAVING FOUR .214" DIA. HOLES LOCATED ON 11/16 CENTERS AND A CENTER HOLE .250 DIA

EIMAC
Division of Varian
SAN CARLOS
CALIFORNIA

8187
4PR65A

RADIAL-BEAM PULSE TETRODE

●

MODULATOR OSCILLATOR AMPLIFIER

The Eimac 8187/4PR65A is a pulse tetrode intended for use in pulse-modulator, pulsed-amplifier, and pulsed-oscillator service. This compact, high vacuum, radial-beam tetrode, incorporating a Pyrovac plate and non-emitting grids, is recommended for use in new equipments where high voltage, high current, or high duty factor is encountered.

Cooling of the tube is accomplished by radiation from the plate and by circulation of forced-air through the base and around the envelope.



GENERAL CHARACTERISTICS

ELECTRICAL

	Min.	Nom.	Max.	
Filament: Thoriated tungsten				
Voltage	-	6.0		volts
Current	3.2		3.8	amperes
Amplification Factor (Grid to Screen)	-	6.0		
Direct Interelectrode Capacitances, Grounded Cathode:†				
Grid-Plate	-	-	0.12	uuf
Input	6.0		8.3	uuf
Output	1.9		2.6	uuf
Highest Frequency for Maximum Ratings	-	-	150	mc

MECHANICAL

Base	5-pin
Basing	See drawing
Recommend Socket	National HX-29 or Johnson 122-101
Operating Position	Vertical, base down or up
Maximum Operating Temperatures:	
Base Seals	200°C
Plate Seal	225°C
Cooling	Radiation and forced-air
Recommended Heat-Dissipating Plate Connector	Eimac HR-6
Maximum Over-all Dimensions:	
Length	4.19 inches
Diameter	2.38 inches
Net Weight (tube only)	3 ounces
Shipping Weight	1.5 pounds

†In Shielded Fixture

PULSE MODULATOR SERVICE

MAXIMUM RATINGS

DC PLATE VOLTAGE	15 MAX. KILOVOLTS
DC SCREEN VOLTAGE	2.0 MAX. KILOVOLTS
DC GRID VOLTAGE	—1.0 MAX. KILOVOLT
PEAK PLATE CURRENT	1.0 MAX. AMPERES
PLATE DISSIPATION (AVG.)	65 MAX. WATTS
SCREEN DISSIPATION (AVG.)	10 MAX. WATTS
GRID DISSIPATION (AVG.)	5 MAX. WATTS

TYPICAL OPERATION

DC Plate Voltage	5	10	15 kilovolts
DC Screen Voltage	500	500	500 volts
DC Grid Voltage	—180	—225	—270 volts
Pulse Plate Voltage	4.35	9.35	14.35 kilovolts
Peak Plate Current	0.95	0.95	0.95 amperes
Pulse Screen Current	0.20	0.20	0.20 ampere
Pulse Grid Current	0.12	0.12	0.12 ampere
Pulse Pos. Grid Voltage	100	100	100 volts
Pulse Drive Power	33.6	39.0	44.5 watts
Pulse Plate Input Power	4.75	9.50	14.25 kilowatts
Pulse Plate Output Power	4.10	8.85	13.60 kilowatts
Duty	10	10	10 percent

(Effective 2-15-63) c 1968 by Varian

Printed in U.S.A.

RADIO-FREQUENCY PLATE AND SCREEN-PULSED AMPLIFIER AND OSCILLATOR*

MAXIMUM RATINGS

PEAK DC PLATE VOLTAGE	10 MAX. KILOVOLTS
DC SCREEN VOLTAGE	2.0 MAX. KILOVOLTS
D-C GRID VOLTAGE	—1.0 MAX. KOLOVOLT
PEAK CATHODE CURRENT (Note 1)	1.5 MAX. AMPERES
PLATE DISSIPATION (AVG.)	65 MAX. WATTS
SCREEN DISSIPATION (AVG.)	10 MAX. WATTS
GRID DISSIPATION (AVG.)	5 MAX. WATTS

*When used as a RF Plate-and Screen-Pulsed Amplifier, the grid drive must also be pulsed to avoid overheating this element during the inter-pulse periods.

TYPICAL OPERATION

Pulse Plate Voltage	5	7.5	10 kilovolts
Pulse Screen Voltage	500	500	500 volts
DC Grid Voltage	—265	—300	—335 volts
Pulse Plate Current (Note 1)	200	200	200 mA
Pulse Screen Current	20	20	20 mA
Pulse Grid Current	12	12	12 mA
Peak RF Grid Voltage	370	405	440 volts
Pulse Drive Power	4.5	4.85	5.3 watts
Pulse Plate Input Power	1000	1500	2000 watts
Pulse Plate Output Power	815	1270	1720 watts
Duty	35	28	23 percent

RADIO-FREQUENCY GRID-PULSED AMPLIFIER AND OSCILLATOR

MAXIMUM RATINGS

DC PLATE VOLTAGE	7.5 MAX. KILOVOLTS
DC SCREEN VOLTAGE	2.0 MAX. KILOVOLTS
DC GRID VOLTAGE	—1.0 MAX. KILOVOLT
PEAK CATHODE CURRENT (Note 1)	1.5 MAX. AMPERES
PLATE DISSIPATION (AVG.)	65 MAX. WATTS
SCREEN DISSIPATION (AVG.)	10 MAX. WATTS
GRID DISSIPATION (AVG.)	25 MAX. WATTS

TYPICAL OPERATION

DC Plate Voltage	4.5	6.0	7.5 kilovolts
DC Screen Voltage	500	500	500 volts
DC Grid Voltage	—260	—280	—300 volts
Pulse Plate Current (Note 1)	200	200	200 mA
Pulse Screen Current	20	20	20 mA
Pulse Grid Current	12	12	12 mA
Peak RF Grid Voltage	365	385	405 volts
Pulse Drive Power	4.4	4.6	4.9 watts
Pulse Plate Input Power	900	1200	1500 watts
Pulse Plate Output Power	725	1000	1265 watts
Duty	37	32	27 percent

Note 1: The maximum peak cathode current rating refers to the instantaneous peak cathode current available. This rating is based on available emission throughout life of 80 milliamperes per watt of filament power. The pulse plate current data shown under the Typical Operation section refers to the dc plate current component during the pulse.

APPLICATION

MECHANICAL

Mounting—The 8187/4PR65A must be operated vertically, base up or down. The socket must provide clearance for the glass tip-off which extends from the center of the base. A flexible connecting strap should be provided between the plate terminal and the external plate circuit, and the Eimac HR-6 connector (or equivalent) used on the tube plate lead. The socket must not apply lateral pressure against the base pins. The tube must be protected from severe vibration and shock.

Cooling—When the inlet air temperature does not exceed 30° C it will not ordinarily be necessary to provide forced-air cooling of the envelope or the plate seal at frequencies below 30 Mc. provided the HR-6 Heat-Radiating plate connector is used and the tube is so located that normal circulation of air past the envelope is not impeded.

In the event the inlet air temperature is expected to be greater than 30° C, adequate forced-air cooling must be provided to maintain base-seal and plate-seal temperatures below 200° C and 225° C, respectively. In all classes of operation it is recommended that a heat radiating connector, the Eimac HR-6 or equivalent, be installed on the anode terminal, and that a socket be employed which provides for proper seal cooling. When the Eimac 8187/4PR65A, utilizing an HR-6 heat radiator, is operated at dc or low frequencies in a Johnson 122-101 socket, the minimum airflow requirements to maintain seal temperatures at 200° C in 50° C inlet air are tabulated below:

	Sea Level		10,000 Feet	
Avg. Plate Dissipation (watts)	Air Flow (CFM)	Plenum Pressure Drop. (Inches of Water)	Air Flow (CFM)	Plenum Pressure Drop. (Inches of Water)
40	1.7	0.013	2.5	0.02
50	2.4	0.024	3.5	0.04
65	3.3	0.036	4.8	0.06

When the Eimac 8187/4PR65A is used as a pulsed-amplifier or oscillator at frequencies above 30 Mc, additional cooling may be required to compensate for the effects of plate and base-seal heating caused by rf charging currents and dielectric losses. Since the amount of seal heating varies with the particular application, it is suggested that the user monitor the seal temperatures to determine the adequacy of the cooling air.

Cooling air should be applied before or simultaneously with the application of filament voltage and may be removed simultaneously with filament voltage. In any questionable situation, the only criterion for adequate cooling is temperature. Tube temperature may be measured conveniently by using a temperature-sensitive paint.

ELECTRICAL

Filament Voltage—For maximum tube life the filament voltage, as measured directly at the filament pins, should be 6.0 volts. Variations in filament voltage must

be kept within the range of 5.7 to 6.3 volts.

When the 8187/4PR65A is utilized in pulse applications where high peak currents are demanded, filament voltage must be maintained at the rated value; the normally allowable five-percent variation in this voltage cannot be tolerated if the tube's peak-current capabilities are to be realized.

Element Dissipation—Under normal operating conditions, the average plate dissipation of the 8187/4PR65A should not be allowed to exceed 65 watts. Dissipation in excess of this maximum rating is permissable for short periods of time, such as during tuning procedures.

The average power dissipated by the screen-grid and the control-grid must not exceed 10 watts and 5 watts, respectively.

Cut-Off Characteristics—The Plate Current Cut-Off Characteristics of the 8187/4PR65A are shown in the graph below. These curves indicate the value of negative grid voltage required to maintain a plate-current flow of 50 microamperes or less at the various plate and screen voltages noted. These curves were plotted from a "typical" tube whose electrical characteristics closely approximate the mean value in the tube test specification.

Each 8187/4PR65A is tested to insure proper cut-off characteristics at maximum ratings. This cut-off test is made with a plate voltage of 15 KV, a screen voltage of 1.5 KV with the grid voltage adjusted to maintain a plate current of 10 microamperes. Under these test conditions the negative grid bias must not exceed 575 volts. Due to tube-to-tube variations this cut-off point will vary and the typical range can be expected to be between 350 volts and 500 volts.

Pulse-Modulator Service—The data shown in the "Typical Operating" section of Pulse-Modulator Service was calculated assuming a rectangular plate voltage wave-form, ignoring the effects of shunt capacity. In reality, the total shunt capacitance (including the output capacity of the tube, stray capacitance, etc.) affects the output wave form and can have considerable effect on plate dissipation. Since the actual plate waveform is not rectangular, even though the grid pulse is, additional power will be dissipated during the rise time and can, under some circumstances, be much greater than that dissipated during the remainder of the pulse. The total power dissipated is then the sum of the power dissipated during the rise time and the power dissipated during the remainder of the pulse.

Special Applications—If it is desired to operate this tube under conditions widely different from those given here, please write to Power Grid Tube Marketing, Eimac, Division of Varian, 301 Industrial Way, San Carlos, California, for information and recommendations.

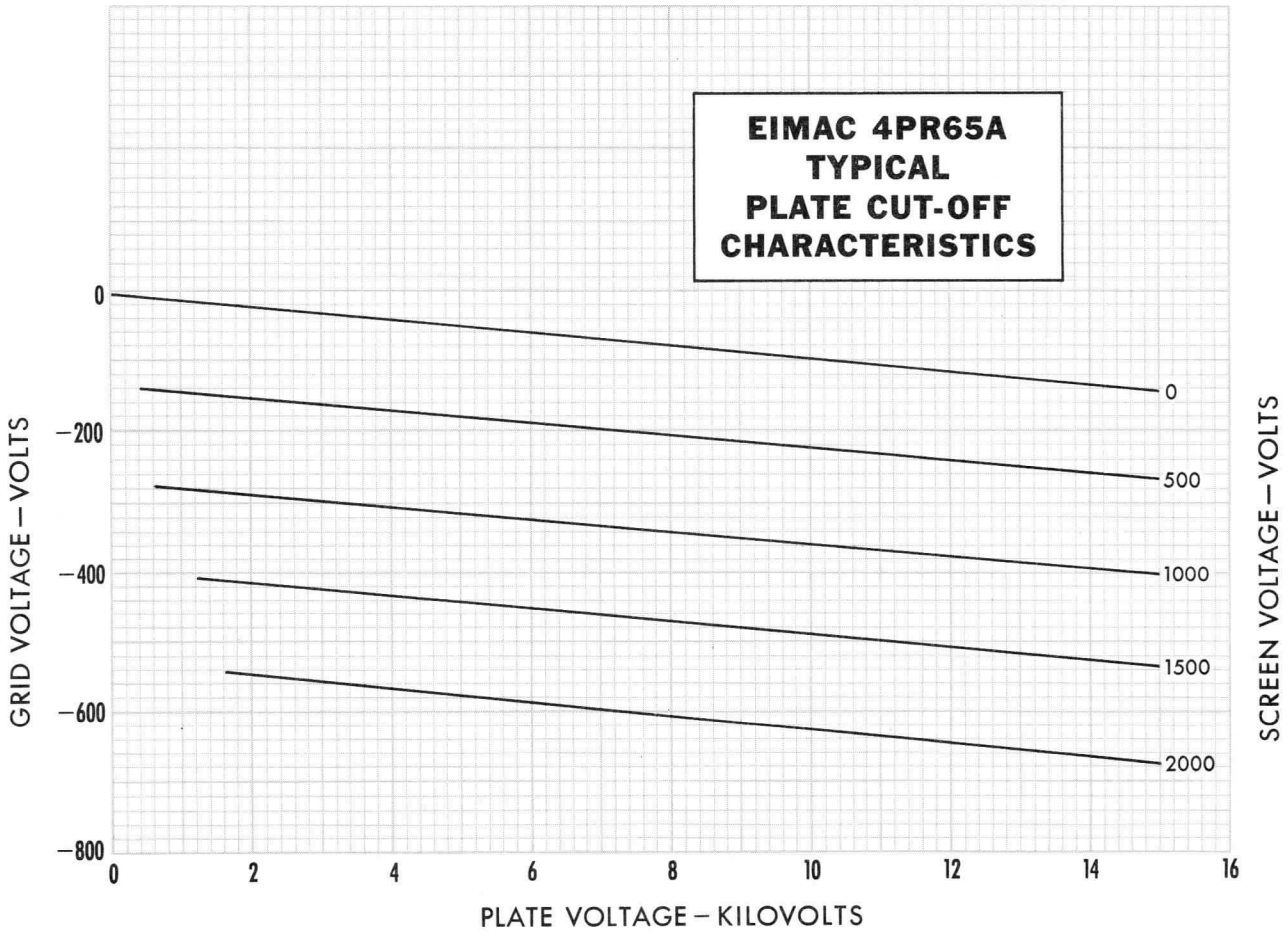

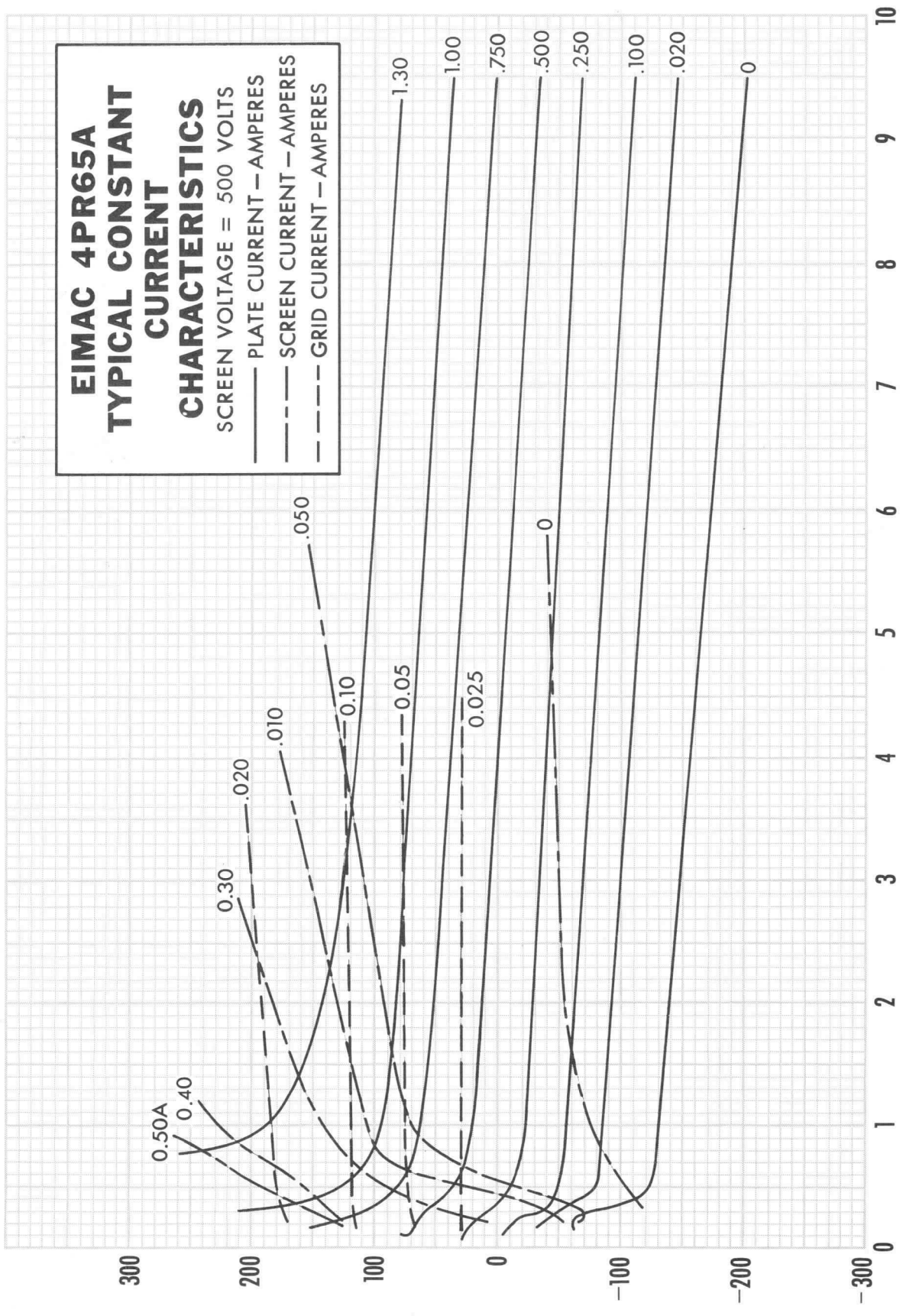
EIMAC 4PR65A
TYPICAL CONSTANT CURRENT CHARACTERISTICS
SCREEN VOLTAGE = 500 VOLTS
PLATE CURRENT – AMPERES
SCREEN CURRENT – AMPERES
GRID CURRENT – AMPERES
0.50A
0.40
0.30
.020
.010
.050
0.10
0.05
0.025
1.30
1.00
.750
.500
.250
0
.100
.020
0
300
200
100
0
−100
−200
−300
0
1
2
3
4
5
6
7
8
9
10
GRID VOLTAGE – VOLTS
PLATE VOLTAGE – KILOVOLTS

DIMENSIONS IN INCHES			
DIMENSIONAL DATA			
REF.	MIN.	MAX.	NOM.
A	4	4-3/16	
B		2-3/8	
C	.350	.365	
D	7/16	9/16	
E	21/64		
F	2-15/16	3-5/16	
G		2-1/8	
H	3/8	1/2	
K	.000		
L	5/16		
M		3/8	
N			1.000
P			102°
R			52°
S	.122 DIA.	.128 DIA.	
T	.055 DIA.	.061 DIA.	

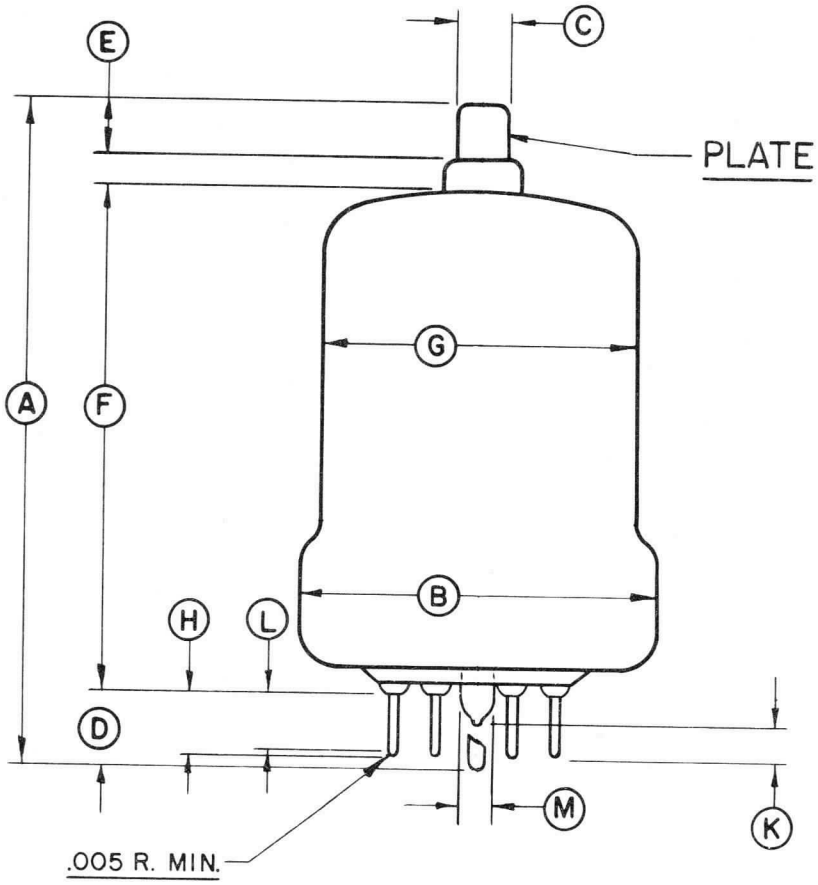

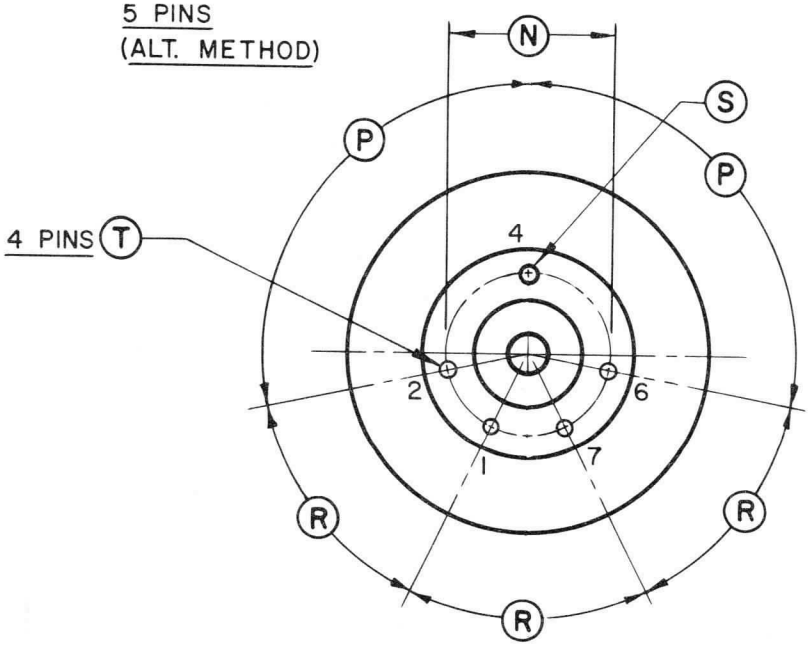

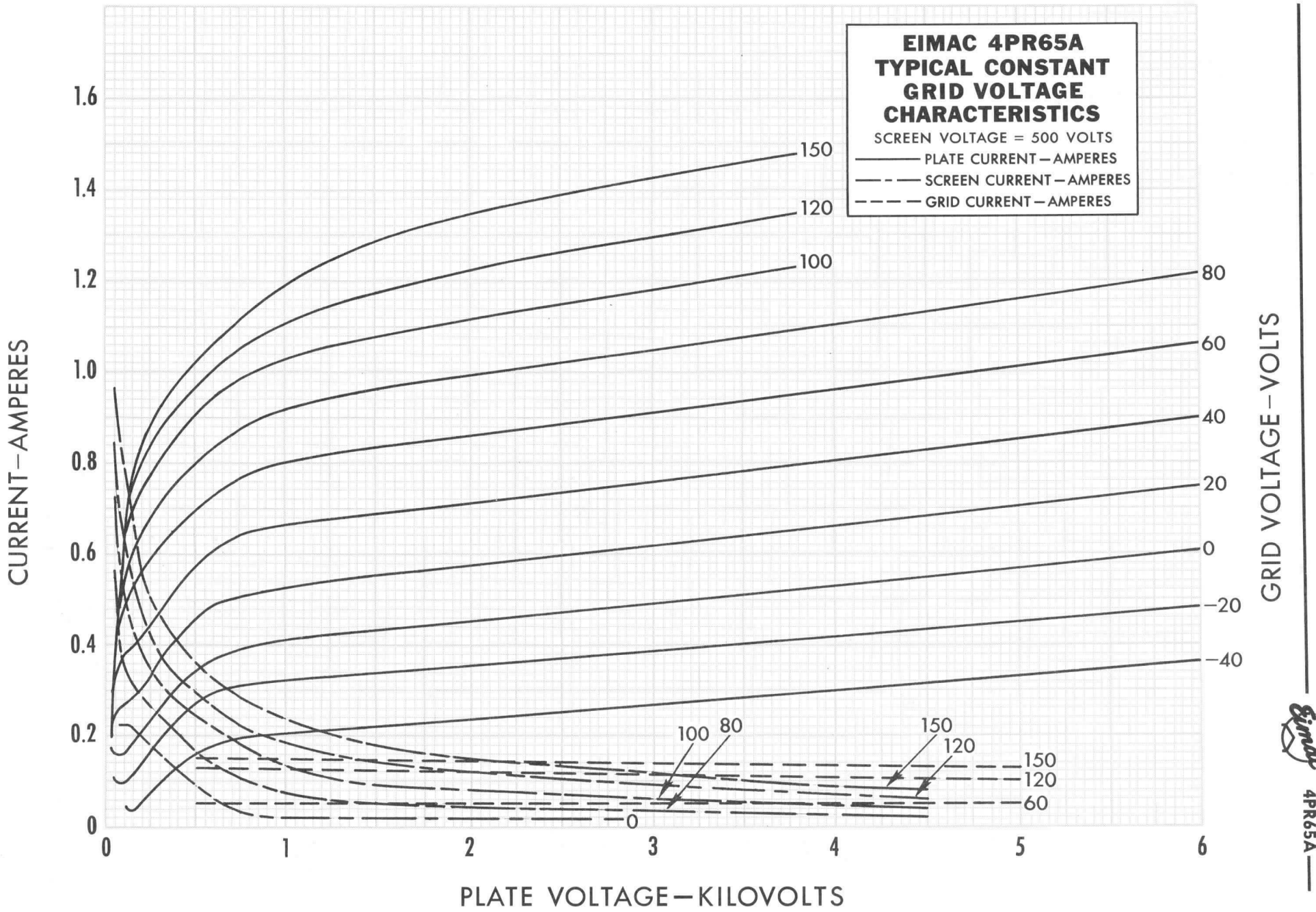
EIMAC 4PR65A
TYPICAL CONSTANT
GRID VOLTAGE
CHARACTERISTICS
SCREEN VOLTAGE = 500 VOLTS
PLATE CURRENT – AMPERES
SCREEN CURRENT – AMPERES
GRID CURRENT – AMPERES
CURRENT – AMPERES
PLATE VOLTAGE – KILOVOLTS
GRID VOLTAGE – VOLTS
0
0.2
0.4
0.6
0.8
1.0
1.2
1.4
1.6
1
2
3
4
5
6
150
120
100
80
60
40
20
0
−20
−40

8247
4PR125A

RADIAL-BEAM PULSE TETRODE MODULATOR OSCILLATOR AMPLIFIER

TECHNICAL DATA

The Eimac 8247/4PR125A is a pulse tetrode intended for use in pulse-modulator, pulsed-amplifier, and pulsed-oscillator service. This compact, high vacuum, radial-beam tetrode, incorporating a Pyrovac plate and non-emitting grids, is recommended for use in new equipments where high voltage, high current, or high duty factor is encountered.

Cooling of the tube is accomplished by radiation from the plate and by circulation of forced-air through the base and around the envelope. Cooling can be simplified by the use of the Eimac SK-410 Air-System Socket and the SK-406 Air Chimney.



GENERAL CHARACTERISTICS

ELECTRICAL

	Min.	Nom.	Max.	
Filament: Thoriated tungsten				
Voltage	-	5.0		volts
Current	6.0		7.0	amperes
Amplification Factor (Grid to Screen)	-	5.9		
Direct Interelectrode Capacitances, Grounded Cathode: †				
Grid-Plate	-	-	0.07	uuf
Input	9.2	-	12.4	uuf
Output	2.5	-	3.5	uuf
Transconductance (1_b = 50 ma)	-	2,450		umhos
Highest Frequency for Maximum Ratings	-	-	120	mc

MECHANICAL

Base	5-pin metal shell
Basing	See drawing
Recommend Socket	Eimac SK-410 Air-System Socket
Operating Position	Vertical, base down or up
Maximum Operating Temperatures:	
Base Seals	200°C
Plate Seal	170°C
Cooling	Radiation and forced-air
Recommended Heat-Dissipating Plate Connector	Eimac HR-6
Maximum Over-all Dimensions:	
Length	5.69 inches
Diameter	2.81 inches
Net Weight (tube only)	6.5 ounces
Shipping Weight	1.5 pounds

† in Shielded Fixture

PULSE MODULATOR SERVICE

MAXIMUM RATINGS	
DC PLATE VOLTAGE	18 MAX. KILOVOLTS
DC SCREEN VOLTAGE	2.0 MAX. KILOVOLTS
DC GRID VOLTAGE	-1.0 MAX. KILOVOLT
PEAK PLATE CURRENT	1.5 MAX. AMPERES
PLATE DISSIPATION (AVG.)	125 MAX. WATTS
SCREEN DISSIPATION (AVG.)	20 MAX. WATTS
GRID DISSIPATION (AVG.)	5 MAX. WATTS

TYPICAL OPERATION				
DC Plate Voltage	10	14	18	kilovolts
DC Screen Voltage	1.0	1.0	1.0	kilovolts
DC Grid Voltage	-245	-260	-275	volts
Pulse Plate Voltage	9.0	13.0	17.0	kilovolts
Peak Plate Current	1.0	1.0	1.0	ampere
Pulse Screen Current	0.2	0.2	0.2	ampere
Pulse Grid Current	25	25	25	ma
Pulse Pos. Grid Voltage	30	30	30	volts
Pulse Drive Power	6.9	7.3	7.7	watts
Pulse Plate Input Power	10	14	18	kilowatts
Pulse Plate Output Power	9	13	17	kilowatts
Duty	10	10	10	percent

(Effective 3-15-64) © Copyright 1962, 1964 by Eitel-McCullough, Inc.

RADIO-FREQUENCY PLATE AND SCREEN-PULSED AMPLIFIER AND OSCILLATOR*

MAXIMUM RATINGS	
PEAK DC PLATE VOLTAGE	12 MAX. KILOVOLTS
DC SCREEN VOLTAGE	2.0 MAX. KILOVOLTS
DC GRID VOLTAGE	-1.0 MAX. KILOVOLT
PEAK CATHODE CURRENT**	2.5 MAX. AMPERES
PLATE DISSIPATION (AVG.)	125 MAX. WATTS
SCREEN DISSIPATION (AVG.)	20 MAX. WATTS
GRID DISSIPATION (AVG.)	5 MAX. WATTS

TYPICAL OPERATION				
Pulse Plate Voltage	8	10	12	kilovolts
Pulse Screen Voltage	1.0	1.0	1.0	kilovolt
DC Grid Voltage	-380	-390	-400	volts
Pulse Plate Current **	416	416	416	ma
Pulse Screen Current	36	36	36	ma
Pulse Grid Current	6	6	6	ma
Peak RF Grid Voltage	520	530	540	volts
Pulse Drive Power	3.12	3.18	3.25	watts
Pulse Plate Input Power	3.33	4.16	5.0	kilowatts
Pulse Plate Output Power	2.52	3.24	4.0	kilowatts
Duty	15	13	12	percent

*When used as a rf Plate-and Screen-Pulsed Amplifier the grid drive must also be pulsed to avoid overheating this element during the inter-pulse periods.

▶RADIO-FREQUENCY GRID-PULSED AMPLIFIER AND OSCILLATOR

MAXIMUM RATINGS	
DC PLATE VOLTAGE	9.0 MAX. KILOVOLTS
DC SCREEN VOLTAGE	2.0 MAX. KILOVOLTS
DC GRID VOLTAGE	-1.0 MAX. KILOVOLT.
PEAK CATHODE CURRENT**	2.5 MAX. AMPERES
PLATE DISSIPATION (AVG.)	125 MAX. WATTS
SCREEN DISSIPATION (AVG.)	20 MAX. WATTS
GRID DISSIPATION (AVG.)	5 MAX. WATTS

TYPICAL OPERATION				
DC Plate Voltage	5	7	9	kilovolts
DC Screen Voltage	1.0	1.0	1.0	kilovolts
DC Grid Voltage	-365	-375	-385	volts
Pulse Plate Current **	416	416	416	ma
Pulse Screen Current	36	36	36	ma
Pulse Grid Current	6	6	6	ma
Peak RF Grid Voltage	505	515	525	volts
Pulse Drive Power	3.0	3.1	3.2	watts
Pulse Plate Input Power	2.08	2.92	3.75	kilowatts
Pulse Plate Output Power	1.44	2.16	2.88	kilowatts
Duty	19	16	14	percent

**

The maximum peak cathode current rating refers to the instantaneous peak cathode current available. This rating is based on available emission throughout life of 80 milliamperes per watt of filament power. The pulse plate current data shown under the Typical Operation section refers to the dc plate current component during the pulse.

APPLICATION

MECHANICAL

Mounting— The 4PR125A must be operated vertically, base up or down. When the SK-410 Air-System Socket is used in conjunction with the SK-406 Air Chimney, the socket must be mounted to the under surface of the chassis to maintain proper air space between the plate seal and the chimney opening, otherwise plate seal cooling will be seriously impaired.

In the event the SK-410 Air-System Socket is not used, the socket must provide clearance for the glass tip-off which extends from the center of the tube. The metal tube-base shell should be grounded by means of suitable spring fingers.

Cooling— Adequate forced-air cooling must be provided to maintain base-seal and plate-seal temperatures below 200° C and 170° C, respectively. In all classes of operation it is recommended that a heat-radiating connector, the Eimac HR-6 or equivalent, be installed on the anode terminal, and that a socket and chimney be employed which provides for proper seal cooling. When the Eimac 4PR125A is operated at d-c or low frequencies in an Eimac SK-410 Air-System Socket, complete with SK-406 Air Chimney and HR-6 Heat Radiator, the minimum airflow requirements to maintain seal temperatures at 170° C in 50° C inlet air are tabulated:

	Sea Level		10,000 Feet	
Ave. Plate Dissipation (watts)	Air Flow (CFM)	Plenum Pressure Drop. (Inches of Water)	Air Flow (CFM)	Plenum Pressure Drop. (Inches of Water)
50	5.0	0.014	7.2	0.020
100	8.0	0.016	10.2	0.023
125	10.0	0.018	14.2	0.026

When the Eimac 4PR125A is used as a pulsed-amplifier or oscillator at frequencies above 30 Mc, additional cooling may be required to compensate for the effects of plate and base-seal heating caused by r-f charging currents and dielectric losses. Since the amount of seal heating varies with the particular application, it is suggested that the user monitor the seal temperatures to determine the adequacy of the cooling air.

Cooling air should be applied before or simultaneously with the application of filament voltage and may be removed simultaneously with filament voltage. In any questionable situation, the only criterion for adequate cooling is temperature. Tube temperature may be measured conveniently by using a temperature-sensitive paint.

▶ Indicates change from data sheet dated 7-15-62

ELECTRICAL

Filament Voltage— For maximum tube life the filament voltage, as measured directly at the filament pins, should be 5.0 volts. Variations in filament voltage must be kept within the range of 4.75 to 5.25 volts.

When the 4PR125A is utilized in pulse applications where high peak currents are demanded, filament voltage must be maintained at the rated value; the normally allowable five-percent variation in this voltage cannot be tolerated if the tube's peak-current capabilities are to be realized.

Element Dissipation—Under normal operating conditions, the average plate dissipation of the 4PR125A should not be allowed to exceed 125 watts. Dissipation in excess of this maximum rating is permissable for short periods of time, such as during tuning procedures.

The average power dissipated by the screen-grid and the control-grid must not exceed 20 watts and 5 watts, respectively.

Cut-Off Characteristics— The Plate Current Cut-Off Characteristics of the 4PR125A are shown in the graph below. These curves indicate the value of negative grid voltage required to maintain a plate-current flow of 50 microamperes or less at the various plate and screen voltages noted. These curves were plotted from a "typical" tube whose electrical characteristics closely approximate the mean value in the tube test specification.

Each 4PR125A is tested to insure proper cut-off characteristics at maximum ratings. This cut-off test is made with a plate voltage of 18 KV, a screen voltage of 1.5 KV with the grid voltage adjusted to maintain a plate current of 10 microamperes. Under these test conditions the negative grid bias must not exceed 450 volts. Due to tube-to-tube variation this cut-off point will vary and the typical range can be expected to be between -370 volts and -445 volts.

Pulse-Modulator Service— The data shown in the "Typical Operating" section of Pulse-Modulator Service was calculated assuming a rectangular plate voltage waveform, ignoring the effects of shunt capacity. In reality, the total shunt capacitance (including the output capacity of the tube, stray capacitance, etc.) affects the output wave form and can have considerable effect on plate dissipation. Since the actual plate waveform is not rectangular, even though the grid pulse is, additional power will be dissipated during the rise time and can, under some circumstances, be much greater than that dissipated during the remainder of the pulse. The total power dissipated is then the sum of the power dissipated during the rise time and the power dissipated during the remainder of the pulse.

Special Applications— If it is desired to operate this tube under conditions widely different from those given here write to Power Grid Tube Marketing, Eitel-McCullough, Inc., 301 Industrial Way, San Carlos, California, for information and recommendations.

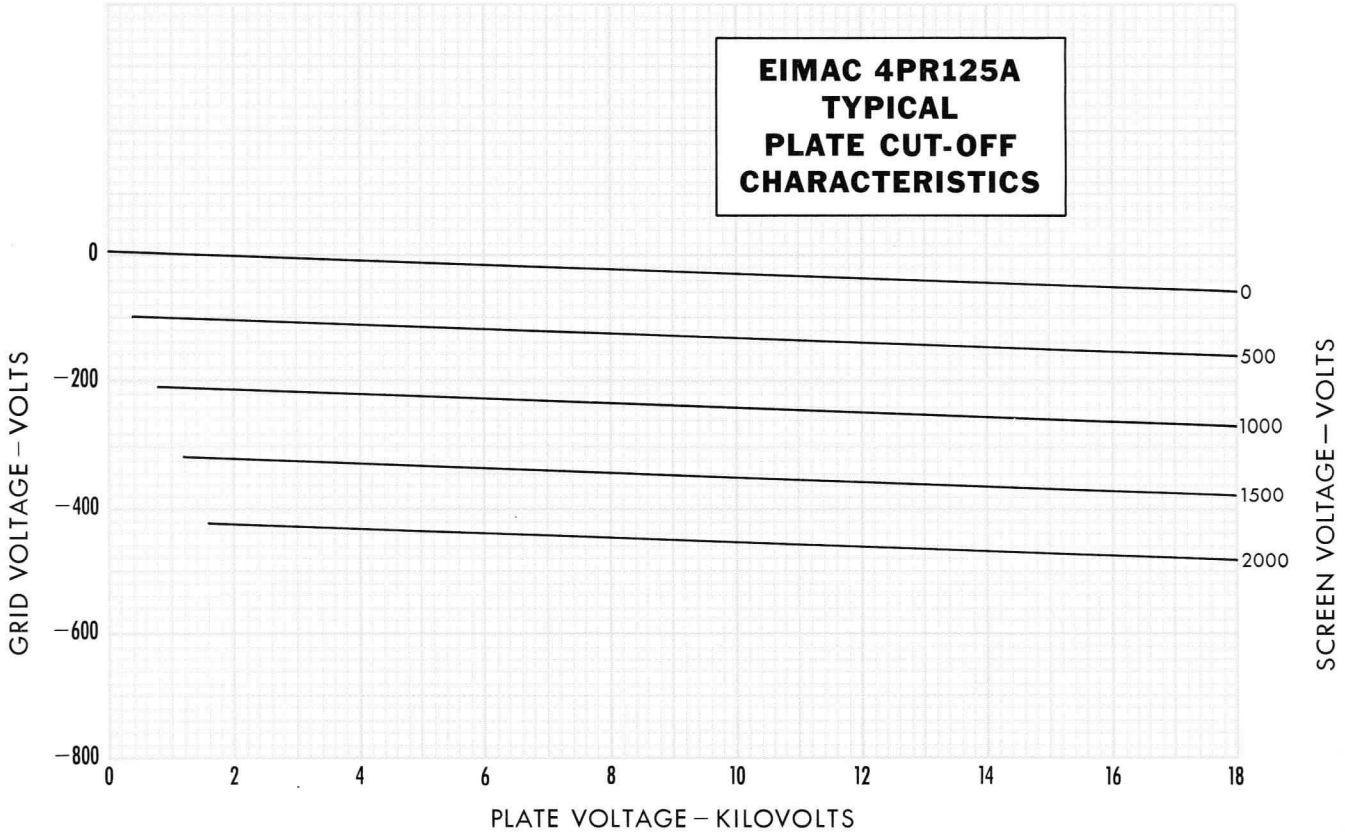

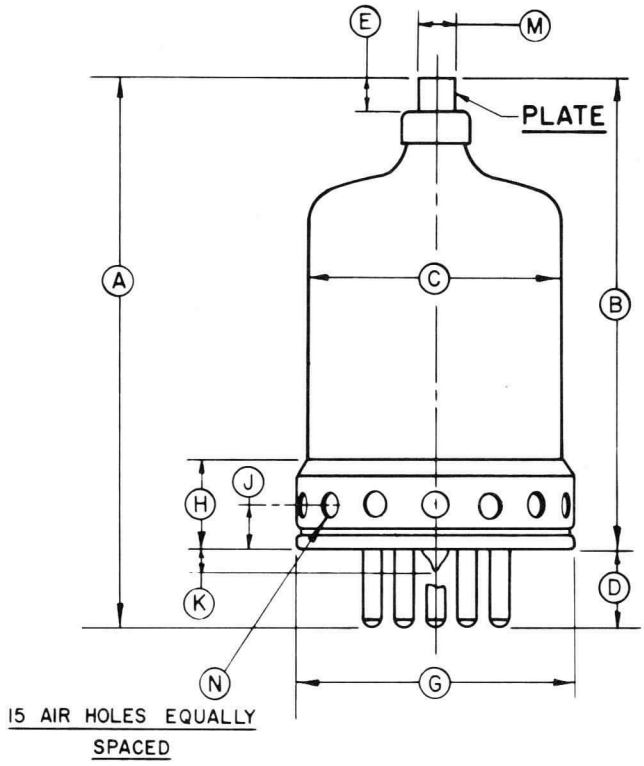

DIMENSIONS IN INCHES			
DIMENSIONAL DATA			
REF.	MIN.	MAX.	NOM.
A	5-3/16	5-11/16	5-7/16
B	4-7/16	4-15/16	4-11/16
C		2-5/8 D.	
D			3/4
E	21/64		
F		2-13/16D.	
G		2-3/4 D.	
H		31/32	
J			7/16
K		1/4	
L			7/16
M	.350 D.	.365 D.	.360 D.
N			1/4 D.
P			1 5/8 D.
Q			1/2 D.
R			5/16 D.
S	.185 D.	.191 D.	.188 D.
T			1 1/4 D.
U			45°
V			30°
W			30°
X			60°

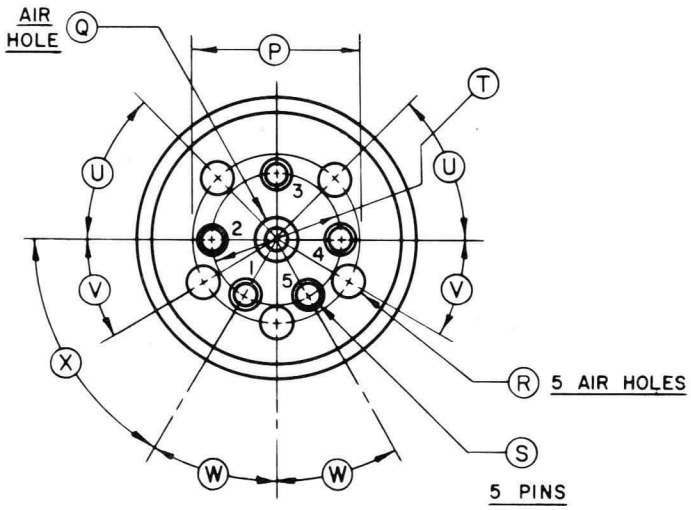

BOTTOM VIEW

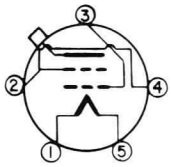

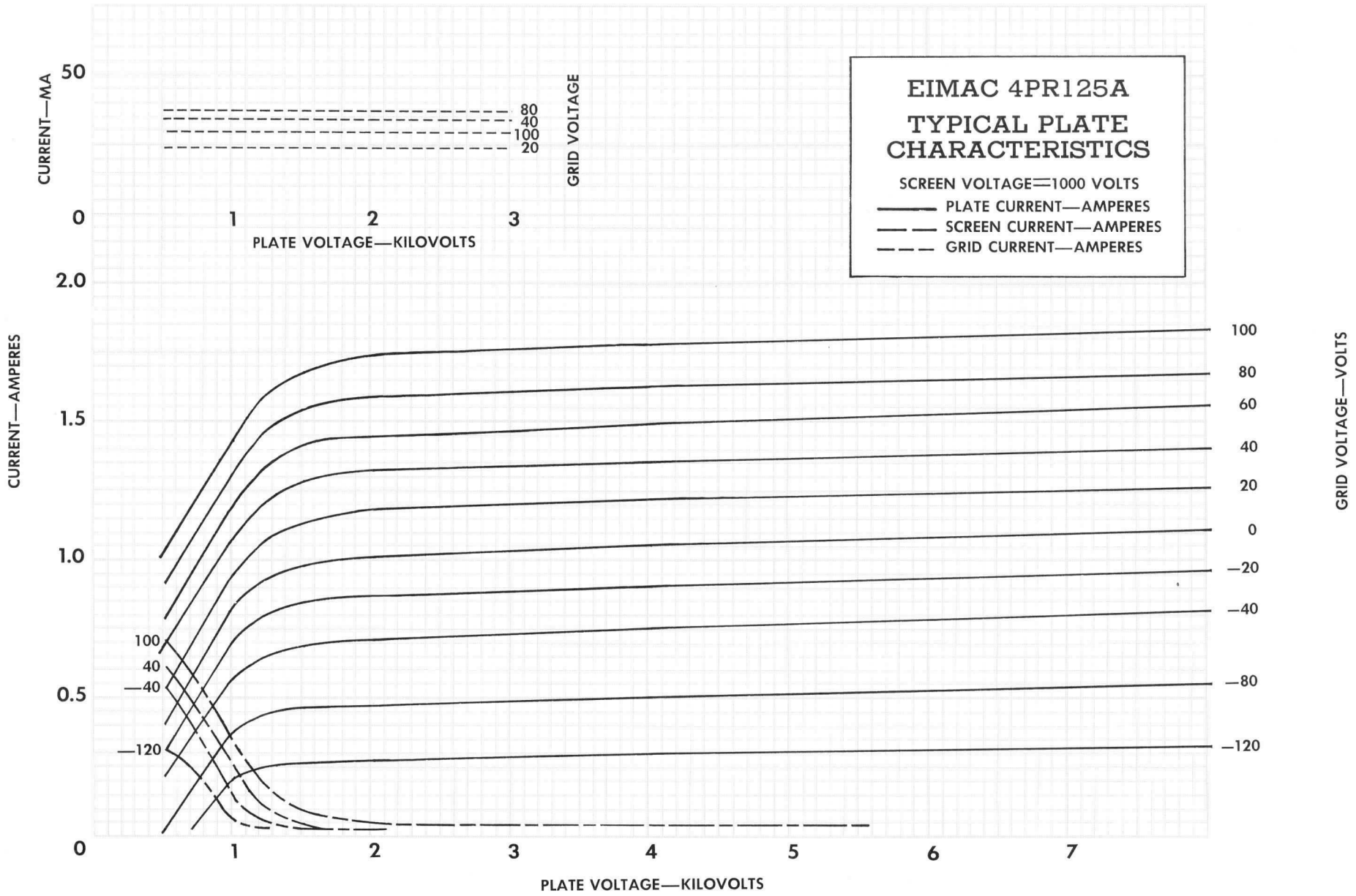
EIMAC 4PR125A
TYPICAL PLATE CHARACTERISTICS
SCREEN VOLTAGE=1000 VOLTS
PLATE CURRENT—AMPERES
SCREEN CURRENT—AMPERES
GRID CURRENT—AMPERES
CURRENT—MA
50
0
1
2
3
PLATE VOLTAGE—KILOVOLTS
GRID VOLTAGE
80
40
100
20
CURRENT—AMPERES
2.0
1.5
1.0
0.5
0
100
40
—40
—120
1
2
3
4
5
6
7
PLATE VOLTAGE—KILOVOLTS
GRID VOLTAGE—VOLTS
100
80
60
40
20
0
—20
—40
—80
—120

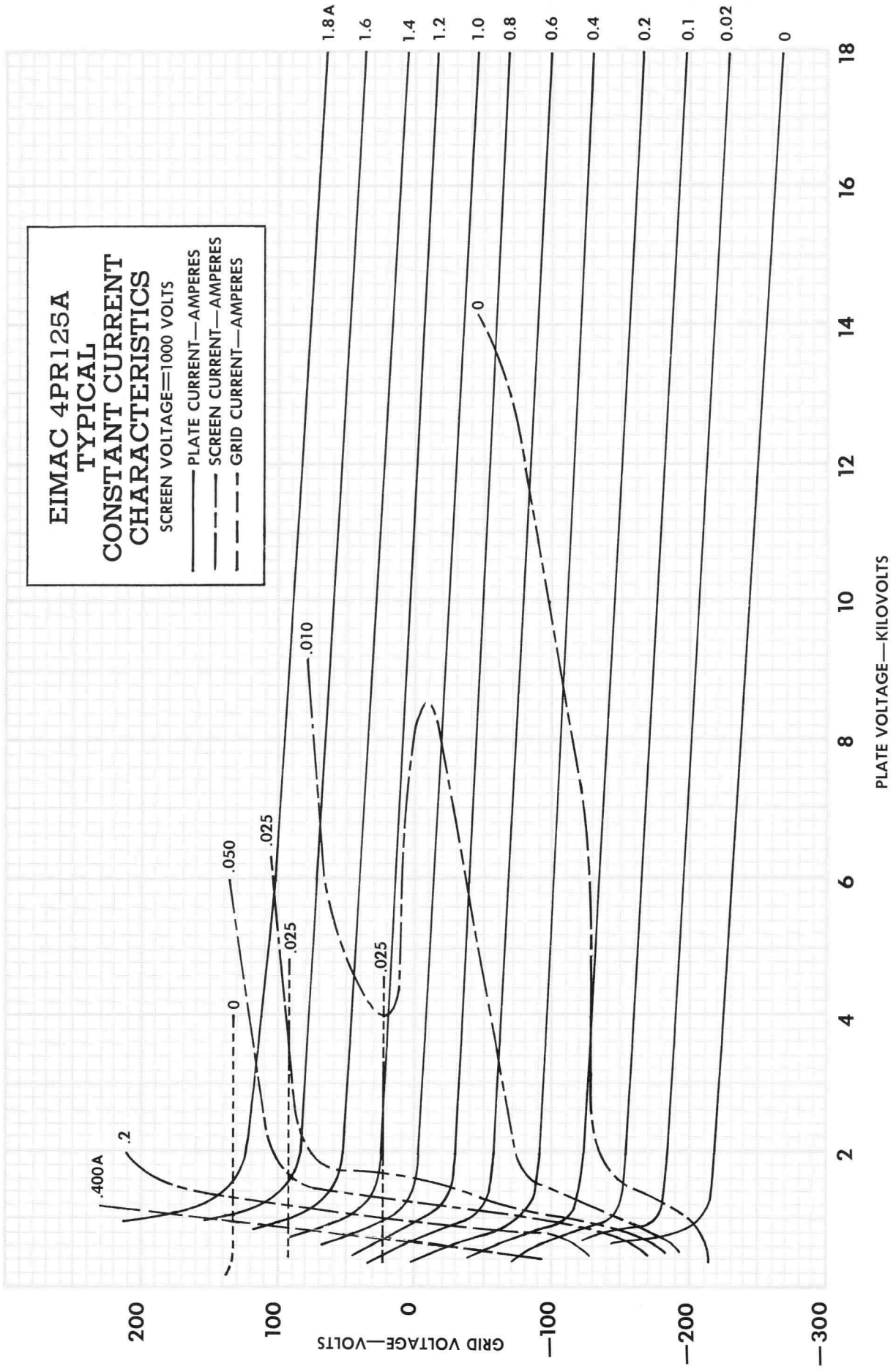
EIMAC 4PR125A
TYPICAL
CONSTANT CURRENT
CHARACTERISTICS
SCREEN VOLTAGE=1000 VOLTS
PLATE CURRENT—AMPERES
SCREEN CURRENT—AMPERES
GRID CURRENT—AMPERES
1.8 A
1.6
1.4
1.2
1.0
0.8
0.6
0.4
0.2
0.1
0.02
0
.400A
.2
.050
.025
.025
0
.010
.025
0
200
100
0
—100
—200
—300
GRID VOLTAGE—VOLTS
2
4
6
8
10
12
14
16
18
PLATE VOLTAGE—KILOVOLTS

Vol 2.

EIMAC
Division of Varian
SAN CARLOS
CALIFORNIA

8248
4PR250C

RADIAL-BEAM
PULSE TETRODE

The EIMAC 8248/4PR250C is a pulse tetrode intended for use in pulse-modulator, switch tube, pulsed-amplifier, and pulsed-oscillator service. This compact, high vacuum, radial-beam tetrode, incorporating a tantalum plate and non-emitting grids, is recommended for use in new equipments where voltages to 50 kilovolts are required.

Cooling of the tube is accomplished by radiation from the plate and by circulation of forced-air through the base and around the envelope. Cooling can be simplified by the use of the EIMAC SK-410 Air-System Socket.



GENERAL CHARACTERISTICS [1]

ELECTRICAL

Filament: Thoriated Tungsten

Voltage	5.0 ± 0.25 V
Current, at 5.0 volts	14 A
Amplification Factor (Average):	
Grid to Screen	5.2
Direct Interelectrode Capacitances (grounded cathode)[2]	
Input	13.0 pF
Output	3.3 pF
Feedback	0.10 pF

1. Characteristics and operating values are based upon performance tests. These figures may change without notice as the result of additional data or product refinement. EIMAC Division of Varian should be consulted before using this information for final equipment design.

2. In Shielded Fixture.

MECHANICAL

Maximum Overall Dimensions:	
Length	7.63 in; 191.8 mm
Diameter	3.60 in; 91.3 mm
Net Weight	12.5 oz; 355 gm
Operating Position	Vertical, base down or up
Maximum Operating Temperature:	
Plate and Base Seals	200 °C
Cooling	Radiation and forced-air
Base	5-pin metal shell
Recommended Socket	EIMAC SK-410
Recommended Heat-Dissipating Connector :	
Plate	EIMAC HR-8

(Revised 9-1-70) © 1963, 1966 Varian

Printed in U.S.A.

PULSE MODULATOR SERVICE

MAXIMUM RATINGS:

DC PLATE VOLTAGE	50	KILOVOLTS
DC SCREEN VOLTAGE	2.0	KILOVOLTS
DC GRID VOLTAGE	-1.0	KILOVOLT
PEAK PLATE CURRENT [1]	4.0	AMPERES
PLATE DISSIPATION [2]	250	WATTS
SCREEN DISSIPATION [2]	25	WATTS
GRID DISSIPATION [2]	5	WATTS

1. In switch tube applications with capacitive loads, plate current may be increased to 6.0 amperes.
2. Average value.

TYPICAL OPERATION

Plate Voltage	30	40	50	kVdc
Screen Voltage	1.5	1.5	1.5	kVdc
Grid Voltage	-600	-650	-700	Vdc
Pulse Plate Voltage	28	38	48	kv
Peak Pulse Current	4.0	4.0	4.0	a
Pulse Screen Current	0.5	0.5	0.5	a
Pulse Grid Current	0.03	0.03	0.03	a
Pulse Input Power	120	160	200	kw
Pulse Output Power	112	152	192	kw
Pulse Drive Power	25	25	25	w
Pulse Positive Grid Voltage	130	130	130	v
Duty	3	3	3	%

RF POWER AMPLIFIER AND OSCILLATOR

Plate and Screen Pulsed

MAXIMUM RATINGS:

PEAK DC PLATE VOLTAGE	35	KILOVOLTS
DC SCREEN VOLTAGE	2.0	KILOVOLTS
DC GRID VOLTAGE	-1.0	KILOVOLT
PEAK CATHODE CURRENT [1]	5.5	AMPERES
PLATE DISSIPATION [2]	250	WATTS
SCREEN DISSIPATION [2]	25	WATTS
GRID DISSIPATION [2]	5	WATTS

1. The maximum peak cathode current rating refers to the instantaneous peak cathode current available. This rating is based on available emission throughout life of 80 milliamperes per watt of filament power. The pulse plate current data shown under the Typical Operation section refers to the dc plate current component during the pulse.

TYPICAL OPERATION
Class C, Grounded filament

Plate Voltage (Pulsed)	25	30	35	kv
Screen Voltage (Pulsed)	1.5	1.5	1.5	kv
Grid Voltage	-650	-675	-700	Vdc
Pulse Plate Current [1]	940	925	900	ma
Pulse Screen Current	30	30	30	ma
Pulse Grid Current	6	6	6	ma
Peak Grid Voltage [3]	780	805	830	v
Pulse Driving Power [3]	4.7	5.0	4.5	w
Pulse Input Power	23.5	27.7	31.5	kw
Pulse Output Power	19.0	23.0	26.5	kw
Duty	5.5	5	5	%

2. Average value.
3. When used as a rf plate and screen-pulsed amplifier, the grid drive must also be pulsed to avoid overheating this element during the interpulse period.

RF POWER AMPLIFIER AND OSCILLATOR

Grid Pulsed

MAXIMUM RATINGS:

DC PLATE VOLTAGE	25	KILOVOLTS
DC SCREEN VOLTAGE	2.0	KILOVOLTS
DC GRID VOLTAGE	-1.0	KILOVOLTS
PEAK CATHODE CURRENT [1]	5.5	AMPERES
PLATE DISSIPATION [2]	250	WATTS
SCREEN DISSIPATION [2]	25	WATTS
GRID DISSIPATION [2]	10	WATTS

1. The maximum peak cathode current rating refers to the instantaneous peak cathode current available. This rating is based on available emission throughout life of 80 milliamperes per watt of filament power. The pulse plate current data shown under the Typical Operation section refers to the dc plate current component during the pulse.

TYPICAL OPERATION

Plate Voltage	20	25	kVdc
Screen Voltage	1.5	1.5	kVdc
Grid Voltage	-600	-650	Vdc
Peak Grid Voltage (Pulsed)	730	780	v
Pulse Plate Current [1]	940	940	ma
Pulse Screen Current	30	30	ma
Pulse Grid Current	6	6	ma
Pulse Driving Power	4.4	4.7	w
Pulse Input Power	18.8	23.5	kw
Pulse Output Power	15.0	19.0	kw
Duty	6	5.5	%

2. Average Value.
3. When used as a rf plate and screen-pulsed amplifier, the grid drive must also be pulsed to avoid overheating this element during the interpulse period.

NOTE: TYPICAL OPERATION data are obtained by calculation from published characteristic curves. Adjustment of the grid voltage to obtain the specified plate current at the specified bias, screen and plate voltages is assumed. If this procedure is followed, there will be little variation in output power when the tube is changed, even though there may be some variation in grid and screen current. The grid and screen currents which result when the desired plate current is obtained are incidental and vary from tube to tube. These current variations cause no difficulty so long as the circuit maintains the correct voltage in the presence of the variations in current.

RANGE VALUES FOR EQUIPMENT DESIGN	Min.	Max.	
Filament: Current at 5.0 volts	13.5	14.7	A
Interelectrode Capacitances [1] (grounded filament connection)			
Input	11.0	15.0	pF
Output	2.5	4.0	pF
Feedback		0.15	pF

1. In shielded fixture.

APPLICATION

MECHANICAL

MOUNTING - The 4PR250C must be operated vertically base up or down. The SK-410 Air-System Socket may be used to aid in directing air to the metal base shell.

In the event the SK-410 Air-System Socket is not used, the socket must provide clearance for the glass tip-off which extends from the center of the tube. The metal tube-base shell should be grounded by means of suitable spring fingers. The tube must be protected from severe shock and vibration.

COOLING - Adequate forced-air cooling must be provided to maintain base-seal and plate-seal temperatures below 200°C. In all classes of operation it is recommended that a heat-radiating connector, the EIMAC HR-8 or equivalent, be installed on the anode terminal, and that a socket be employed which provides for proper base seal cooling. When the EIMAC 4PR250C is operated at dc or low frequencies in an EIMAC SK-410 Air System Socket, the minimum airflow requirements to maintain seal temperatures at 200°C in 25°C inlet air are approximately 2 to 5 cfm.

When the EIMAC 4PR250C is used as a pulsed-amplifier or oscillator at frequencies above 30 MHz, additional cooling may be required to compensate for the effects of plate and base-seal heating caused by rf charging currents and dielectric losses. Since the amount of seal heating varies with the particular application, it is suggested that the user monitor the seal temperatures to determine the adequacy of the cooling air.

Cooling air should be applied before or simultaneously with the application of filament voltage and may be removed simultaneously with filament voltage. In any questionable situation, the only criterion for adequate cooling is temperature. Tube temperature may be measured by using a temperature-sensitive paint.

ELECTRICAL

FILAMENT VOLTAGE - For maximum tube life the filament voltage, as measured directly at the filament pins, should be 5.0 volts. Variations in filament voltage must be kept within the range of 4.75 to 5.25 volts.

When the 4PR250C is used in pulse applications where high peak currents are demanded, filament voltage must be maintained at the rated value; the normally allowable five-percent variation in this voltage cannot be tolerated if the tube's peak-current capabilities are to be realized.

ELEMENT DISSIPATION - Under normal operating conditions, the average plate dissipation of the 4PR250C should not be allowed to exceed 250 watts. Dissipation in excess of this maximum rating is permissible for short periods of time, such as during tuning procedures.

The average power dissipated by the screen-grid and the control-grid must not exceed 25 watts and 5 watts, respectively.

CUT-OFF CHARACTERISTICS - The plate current cut-off characteristics of the 4PR250C are shown in the following graph. These curves indicate the value of negative grid voltage required to maintain a plate-current flow of 50 microamperes or less at the various plate and screen voltages noted. These curves were plotted from a "typical" tube whose electrical characteristic closely approximate the mean value in the tube test specification.

Each 4PR250C is tested to insure proper cut-off characteristics at maximum ratings. This cut-off test is made with a plate voltage of 50 kV, a screen voltage of 1.5 kV, with the grid voltage adjusted to maintain a plate current of

10 microamperes. Under these test conditions the negative grid bias must not exceed 675 volts. Due to tube-to-tube variation this cut-off point will vary and the typical range can be expected to be between –500 volts and –650 volts.

PULSE-MODULATOR SERVICE-The data shown in the "Typical Operating" section of Pulse-Modulator Service was calculated assuming a rectangular plate voltage wave-form, ignoring the effects of shunt capacity. In reality, the total shunt capacitance (including the output capacity of the tube, stray capacitance, etc.) affects the output wave form and can have considerable effect on plate dissipation. Since the actual plate wave form is not rectangular, even though the grid pulse is, additional power will be dissipated during the rise time and can, under some circumstances, be much greater than that dissipated during the remainder of the pulse. The total power dissipated is then the sum of the power dissipated during the rise time and the power dissipated during the remainder of the pulse.

As a switch tube with capacitive loading, as in a floating deck modulator, the peak plate current during the pulse may reach 6.0 amperes. This can be tolerated since under capacitive load conditions the plate voltage at the beginning of the pulse is equal to applied dc voltage, with high plate current and low screen grid current. As the load is charged, plate current falls while screen current rises. Protection for the screen must be provided to limit dissipation at the end of the pulse.

X-RADIATION - High-vacuum tubes operating at voltages higher than 10 kilovolts produce progressively more dangerous X-ray radiation as the voltage is increased, and are therefore potential X-ray hazards. Very little shielding is afforded by the tube envelope. Moreover, the X-ray radiation level can increase significantly on older tubes with aging and gradual deterioration, due to leakage paths or emission characteristics as they are effected by the high voltage. X-ray shielding must be provided on all sides of tubes operating at these voltages to provide adequate protection throughout the tube's life. When pulse transformers are involved, shielding may also be required for these. Periodic checks on the X-ray level should be made, and such tubes must never be operated without shielding in place. Lead glass which attenuates X-rays is available for viewing windows. If there is any doubt as to the adequacy of shielding, an expert in this field should be contacted to perform an X-ray survey of the equipment. Operation of high-voltage equipment with interlock switches "cheated" and cabinet doors open in order to be better able to locate an equipment malfunction can result in serious X-ray exposure.

Reference: MEDICAL X-RAY PROTECTION UP TO THREE MILLION VOLTS, National Bureau of Standards Handbook 76. Available from Superintendent of Documents, Washington, DC 20402. Price: 25 cents.
NCRP REPORT #33-MEDICAL X-RAY AND GAMMA RAY PROTECTION FOR ENERGIES UP TO 10 MEV. Available from N.C.R.P. Publications, P.O. Box 4867, Washington, DC 20008. Price: 75 cents.

HIGH VOLTAGE - The 4PR250C operates at voltages which can be deadly, and the equipment must be designed properly and operating precautions must be followed. Equipment must be designed so that no one can come in contact with high voltages. All equipment must include safety enclosures for high-voltage circuits and terminals, with interlock switches to open the primary circuits of the power supplies and to discharge high voltage condensers whenever access doors are opened. Interlock switches must not be bypassed or "cheated" to allow operation with access doors open. Always remember that HIGH VOLTAGE CAN KILL.

SPECIAL APPLICATIONS-If it is desired to operate this tube under conditions widely different from those given here, write to Power Grid Tube Marketing, EIMAC Division of Varian, 301 Industrial Way, San Carlos, California 94070 for information and recommendations.

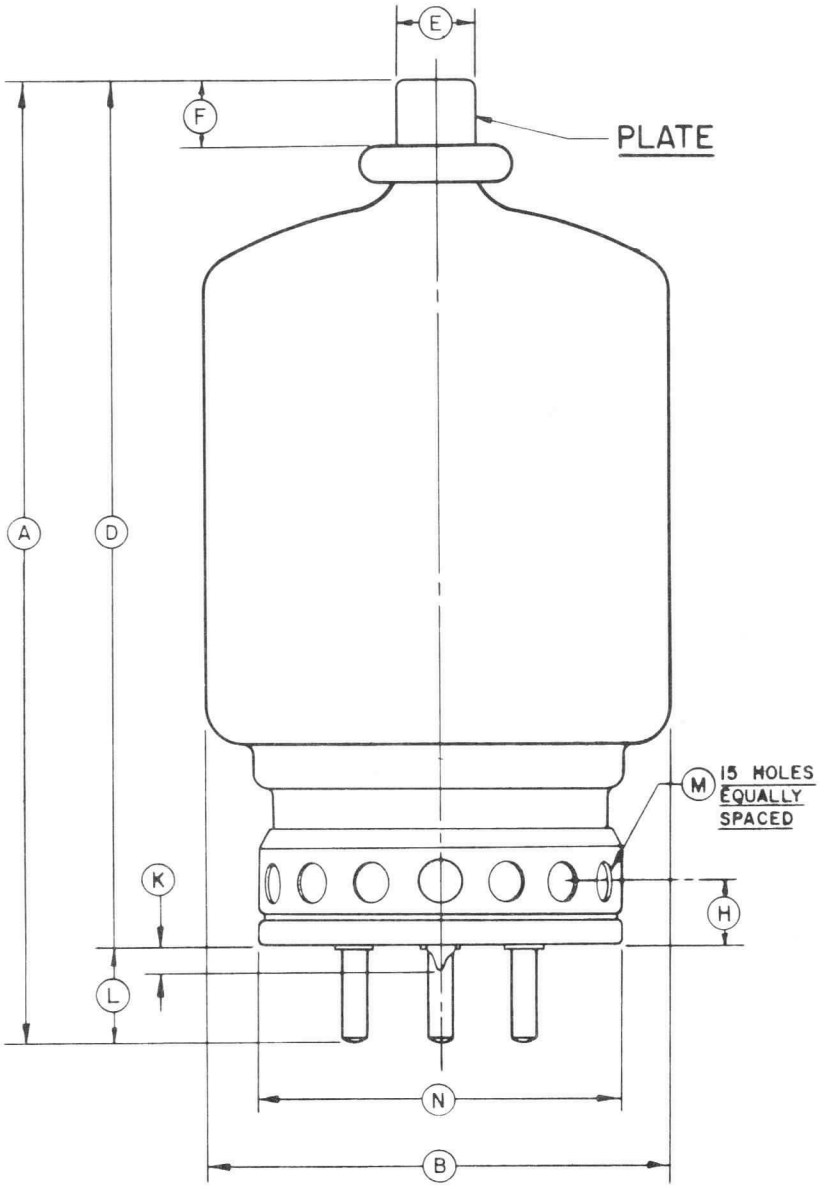

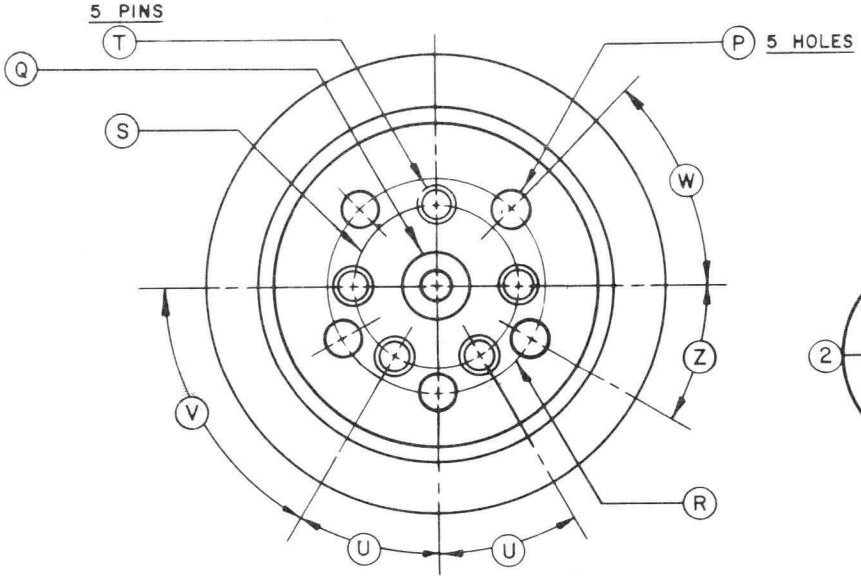

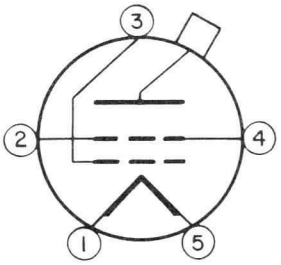

DIMENSIONAL DATA				
DIM.	INCHES		MILLIMETERS	
	MIN.	MAX.	MIN.	MAX.
A	7.062	7.625	179.37	193.68
B	3.406	3.594	86.51	91.29
D	6.313	6.813	160.35	173.05
E	0.557D	0.567D	14.15	14.40
F	0.469	0.531	11.91	13.49
H	0.375	0.500	9.53	12.70
K	0.250 (NOTE 1)		6.35 (NOTE 1)	
L	0.688	0.875	17.48	22.23
M	0.219D	0.281D	5.57	7.14
N	--	2.750	--	69.86
P	0.281	0.344	7.14	8.74
Q	0.469	0.531	12.60	13.49
R	1.594	1.656	40.49	42.06
S	0.250 (NOTE 1)		6.35 (NOTE 1)	
T	0.185D	0.191D(1)	4.70D	4.85(1)
U	30° (NOTE 1)		30° (NOTE 1)	
V	60° (NOTE 1)		60° (NOTE 1)	
W	45° (NOTE 1)		45° (NOTE 1)	
Z	30° (NOTE 1)		30° (NOTE 1)	

NOTES:
BASE PINS (T) AND TUBULATION (K) MUST BE ALIGNED SO THAT THEY CAN BE FREELY INSERTED IN A GAUGE 1/4" THICK WITH HOLE DIAMETERS OF .204 & .500 FOR PINS AND TUBULATION RESPECTIVELY LOCATED ON TRUE CENTERS DEFINED BY (S) (U) (V).

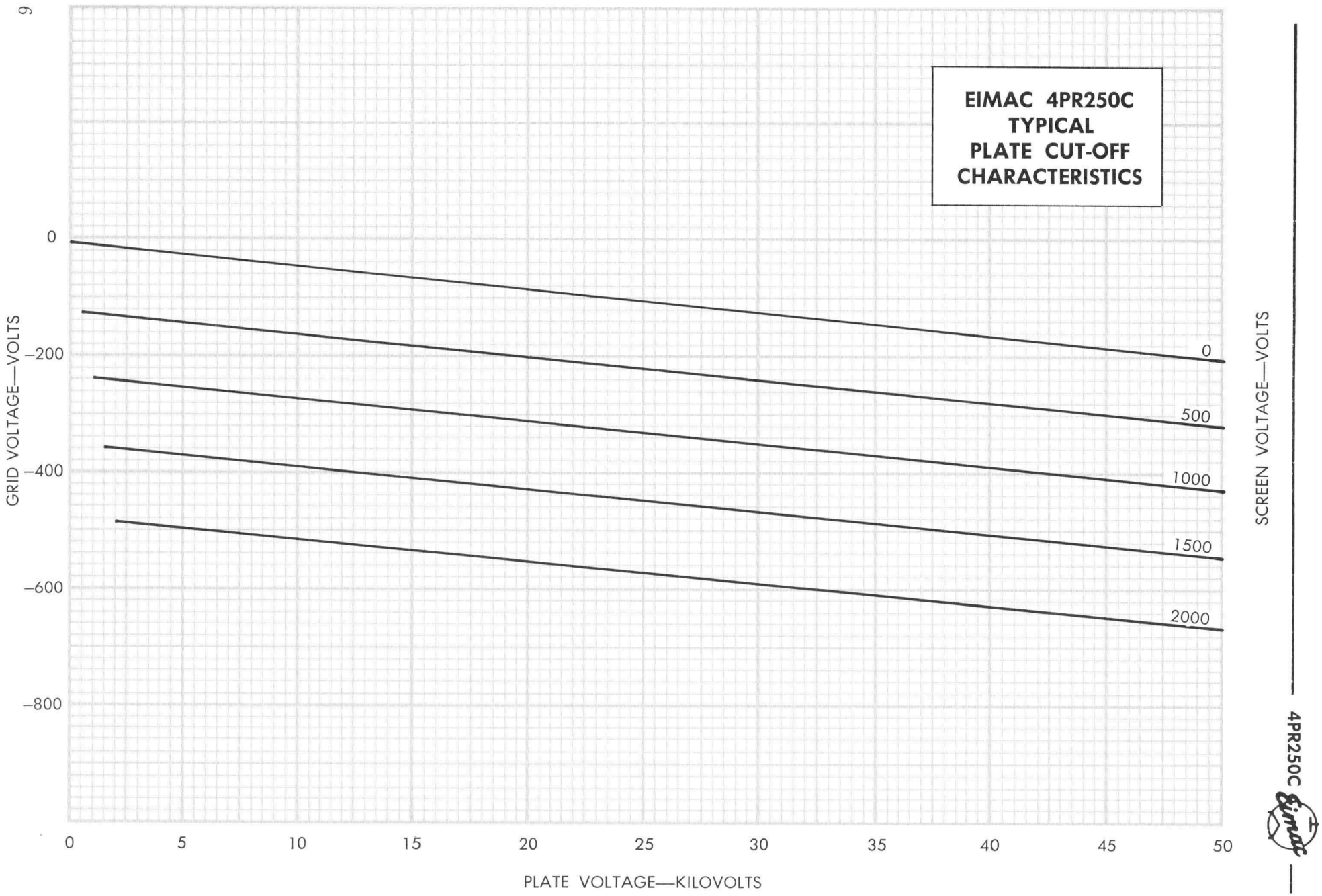
EIMAC 4PR250C
TYPICAL
PLATE CUT-OFF
CHARACTERISTICS
GRID VOLTAGE—VOLTS
0
−200
−400
−600
−800
0
5
10
15
20
25
30
35
40
45
50
PLATE VOLTAGE—KILOVOLTS
0
500
1000
1500
2000
SCREEN VOLTAGE—VOLTS

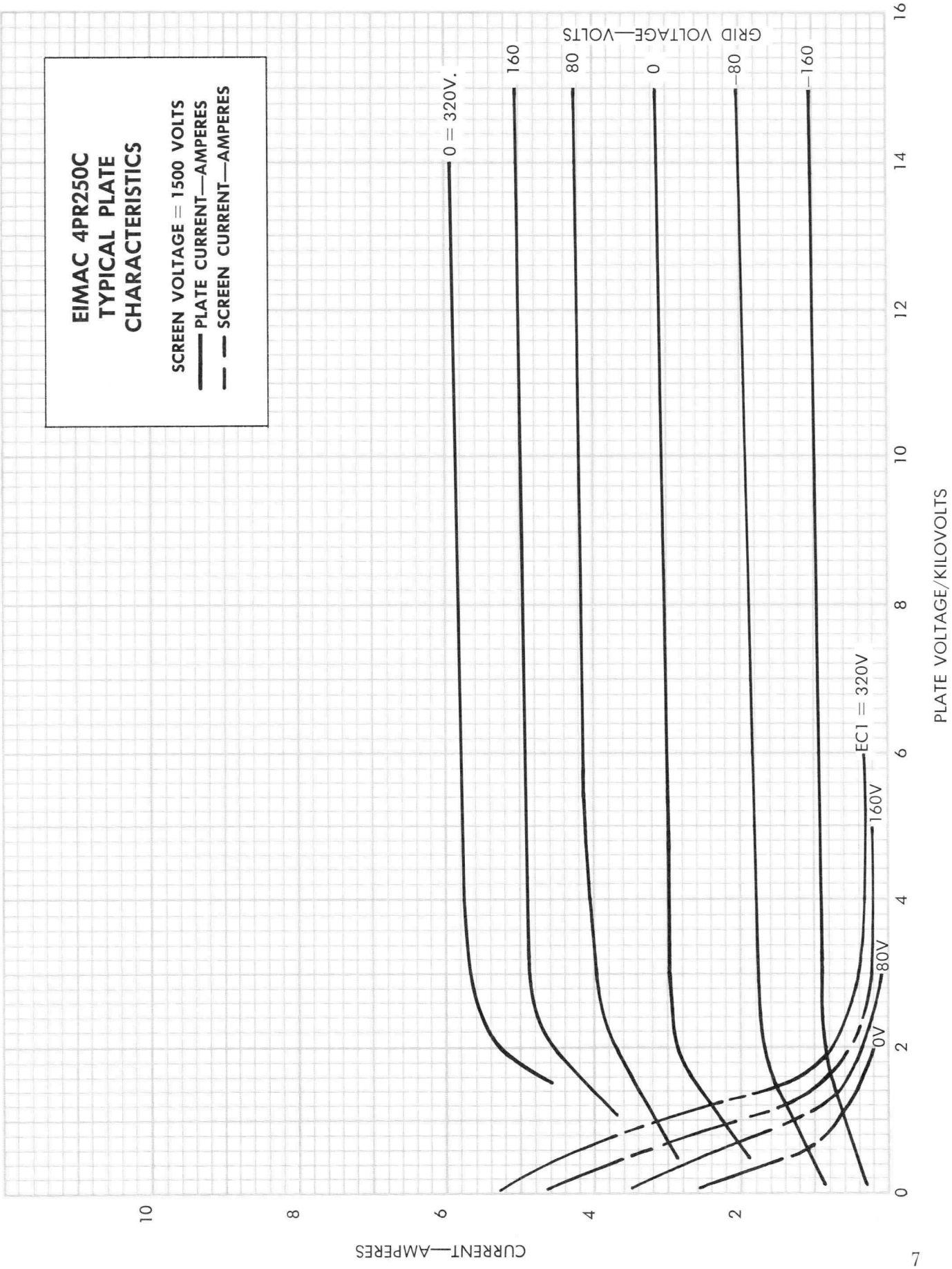
EIMAC 4PR250C
TYPICAL PLATE
CHARACTERISTICS
SCREEN VOLTAGE = 1500 VOLTS
PLATE CURRENT—AMPERES
SCREEN CURRENT—AMPERES
GRID VOLTAGE—VOLTS
0 = 320V.
160
80
0
-80
-160
EC1 = 320V
160V
80V
0V
CURRENT—AMPERES
PLATE VOLTAGE/KILOVOLTS
0
2
4
6
8
10
12
14
16

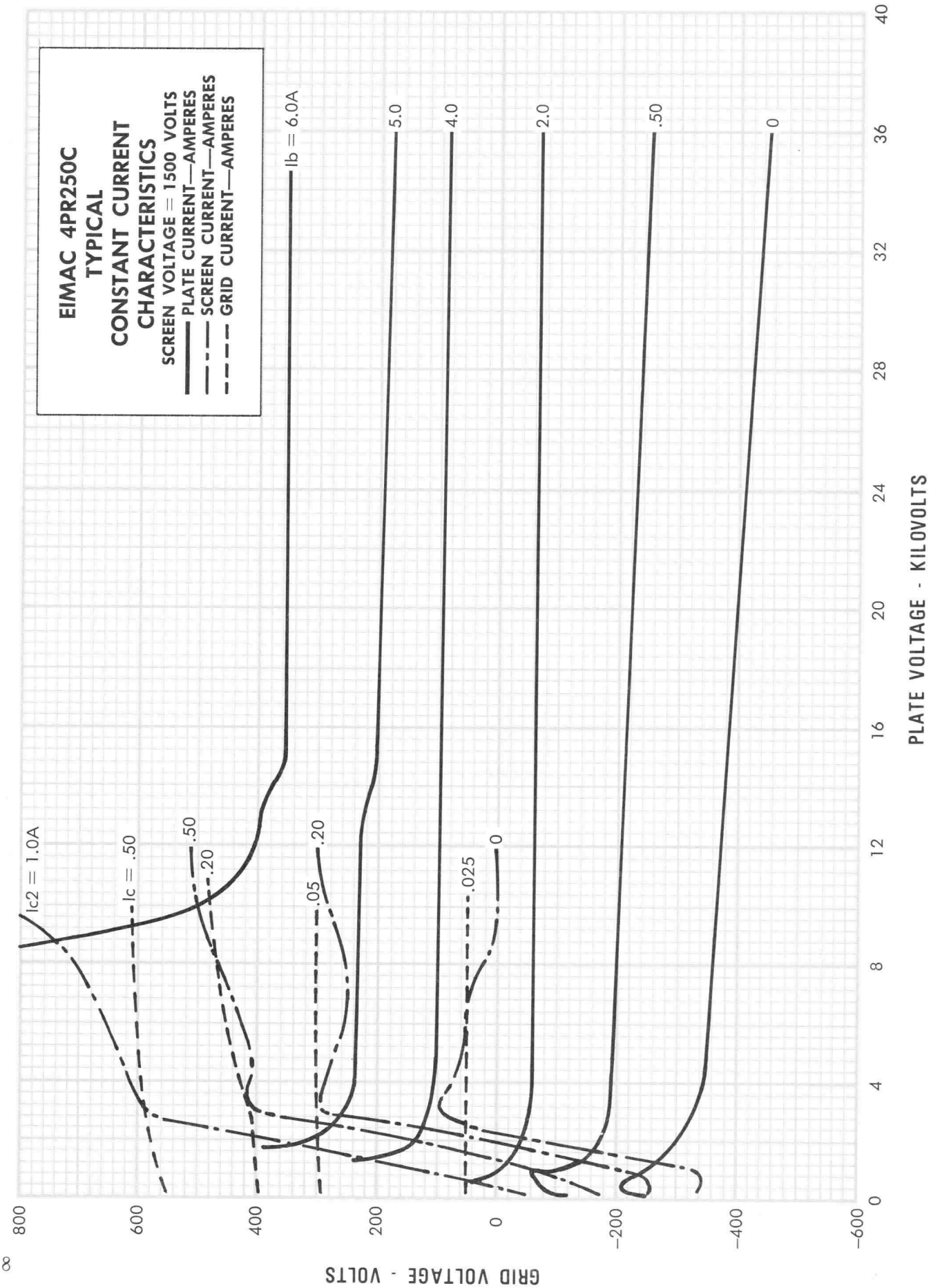
EIMAC 4PR250C
TYPICAL
CONSTANT CURRENT
CHARACTERISTICS
SCREEN VOLTAGE = 1500 VOLTS
PLATE CURRENT—AMPERES
SCREEN CURRENT—AMPERES
GRID CURRENT—AMPERES
Ib = 6.0A
5.0
4.0
2.0
.50
0
Ic2 = 1.0A
Ic = .50
.50
.20
.05
.20
.025
0
800
600
400
200
0
-200
-400
-600
0
4
8
12
16
20
24
28
32
36
40
GRID VOLTAGE - VOLTS
PLATE VOLTAGE - KILOVOLTS

EIMAC

A Division of Varian Associates

SAN CARLOS, CALIFORNIA

8188
4PR400A

RADIAL-BEAM PULSE TETRODE MODULATOR OSCILLATOR AMPLIFIER

The Eimac 8188/4PR400A is a pulse tetrode intended for use in pulse-modulator, pulsed-amplifier, and pulsed-oscillator service. This compact, high vacuum, radial-beam tetrode, incorporating a Pyrovac plate and non-emitting grids, is recommended for use in new equipments where high voltage, high current, or high duty factor is encountered.

Cooling of the tube is accomplished by radiation from the plate and by circulation of forced-air through the base and around the envelope. Cooling can be simplified by the use of the Eimac SK-410 Air-System Socket and the SK-406 Air Chimney.

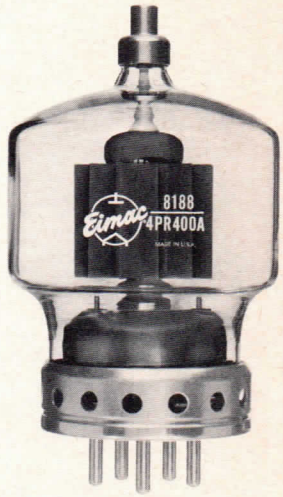

GENERAL CHARACTERISTICS

ELECTRICAL

	Min.	Nom.	Max.	
Filament: Thoriated Tungsten				
Voltage	-	5.0		volts
Current	13.5		14.7	amperes
Amplification Factor (Grid to Screen)	-	5.1		
Direct Interelectrode Capacitances, Grounded Cathode:*				
Grid-Plate	-	-	0.17	uuf
Input	10.7		14.5	uuf
Output	4.2		5.6	uuf
Transconductance (1_b = 100 ma)	-	4,000		umhos
Highest Frequency for Maximum Ratings	-	-	110	mc

MECHANICAL

Base	5-pin metal shell
Basing	See drawing
Recommend Socket	Eimac SK-410 Air-System Socket
Operating Position	Vertical, base down or up
Maximum Operating Temperatures:	
Base Seals	200° C
Plate Seal	225° C
Cooling	Radiation and forced-air
Recommended Heat-Dissipating Plate Connector	Eimac HR-6
Maximum Over-all Dimensions	
Length	6.38 inches
Diameter	3.56 inches
Net Weight (tube only)	9 ounces
Shipping Weight	2.5 pounds

*In Shielded Fixture

PULSE MODULATOR SERVICE

MAXIMUM RATINGS	
DC PLATE VOLTAGE	20 MAX. KILOVOLTS
DC SCREEN VOLTAGE	2.5 MAX. KILOVOLTS
DC GRID VOLTAGE	-1.0 MAX. KILOVOLT
PEAK PLATE CURRENT	4.0 MAX. AMPERES
PLATE DISSIPATION (AVG.)	400 MAX. WATTS
SCREEN DISSIPATION (AVG.)	35 MAX. WATTS
GRID DISSIPATION (AVG.)	10 MAX. WATTS

TYPICAL OPERATION			
DC Plate Voltage	10	15	20 kilovolts
DC Screen Voltage	1.5	1.5	1.5 kilovolts
DC Grid Voltage	-450	-490	-525 volts
Pulse Plate Voltage	8.25	13.25	18.25 kilovolts
Peak Pulse Current	3.5	3.5	3.5 amperes
Pulse Screen Current	0.40	0.40	0.40 ampere
Pulse Grid Current	0.06	0.06	0.06 ampere
Pulse Pos. Grid Voltage	60	60	60 volts
Pulse Drive Power	31.0	33.0	35.0 watts
Pulse Plate Input Power	35.0	52.5	70.0 kilowatts
Pulse Plate Output Power	29.0	46.5	64.0 kilowatts
Duty	5.5	5.5	5.5 percent

(Revised 9-15-65) © Copyright 1962, 1964 by Varian Associates

RADIO-FREQUENCY PLATE AND SCREEN-PULSED AMPLIFIER AND OSCILLATOR*

MAXIMUM RATINGS	
PEAK DC PLATE VOLTAGE	15 MAX. KILOVOLTS
DC SCREEN VOLTAGE	2.5 MAX. KILOVOLTS
DC GRID VOLTAGE	-1.0 MAX. KILOVOLT
PEAK CATHODE CURRENT**	5.4 MAX. AMPERES
PLATE DISSIPATION (AVG.)	400 MAX. WATTS
SCREEN DISSIPATION (AVG.)	35 MAX. WATTS
GRID DISSIPATION (AVG.)	10 MAX. WATTS

*When used as a rf Plate-and Screen-Pulsed Amplifier, the grid drive must also be pulsed to avoid over-heating this element during the inter-pulse periods.

TYPICAL OPERATION			
Pulse Plate Voltage	10	12.5	15 kilovolts
Pulse Screen Voltage	1.5	1.5	1.5 kilovolt
DC Grid Voltage	-725	-750	-785 volts
Pulse Plate Current**	0.87	0.87	0.87 ampere
Pulse Screen Current	70	70	70 ma
Pulse Grid Current	10	10	10 ma
Peak RF Grid Voltage	845	870	905 volts
Pulse Drive Power	8.5	8.7	9.0 watts
Pulse Plate Input Power	8.7	11.0	13.0 kilowatts
Pulse Plate Output Power	6.8	8.8	10.5 kilowatts
Duty	20	18	16 percent

RADIO-FREQUENCY GRID-PULSED AMPLIFIER AND OSCILLATOR

MAXIMUM RATINGS	
DC PLATE VOLTAGE	10 MAX. KILOVOLTS
DC SCREEN VOLTAGE	2.5 MAX. KILOVOLTS
DC GRID VOLTAGE	-1.0 MAX. KILOVOLT
PEAK CATHODE CURRENT**	5.4 MAX. AMPERES
PLATE DISSIPATION (AVG.)	400 MAX. WATTS
SCREEN DISSIPATION (AVG.)	35 MAX. WATTS
GRID DISSIPATION (AVG.)	10 MAX. WATTS

TYPICAL OPERATION			
DC Plate Voltage	5	7.5	10 kilovolts
DC Screen Voltage	1.5	1.5	1.5 kilovolts
DC Grid Voltage	-680	-700	-725 volts
Pulse Plate Current**	0.87	0.87	0.87 ampere
Pulse Screen Current	70	70	70 ma
Pulse Grid Current	10	10	10 ma
Peak RF Grid Voltage	800	820	845 volts
Pulse Drive Power	8.0	8.2	8.5 watts
Pulse Plate Input Power	4.3	6.5	8.7 kilowatts
Pulse Plate Output Power	2.7	4.7	6.6 kilowatts
Duty	25	22	19 percent

** The maximum peak cathode current rating refers to the instantaneous peak cathode current available. This rating is based on available emission throughout life of 80 milliamperes per watt of filament power. The pulse plate current data shown under the Typical Operation section refers to the dc plate current component during the pulse.

APPLICATION

MECHANICAL

Mounting— The 4PR400A must be operated vertically, base up or down. When the SK-410 Air-System Socket is used in conjunction with the SK-406 Air Chimney, the socket must be mounted to the under surface of the chassis to maintain proper air space between the plate seal and the chimney opening, otherwise plate seal cooling will be seriously impaired.

In the event the SK-410 Air-System Socket is not used, the socket must provide clearance for the glass tip-off which extends from the center of the tube. The metal tube-base shell should be grounded by means of suitable spring fingers.

Cooling— Adequate forced-air cooling must be provided to maintain base-seal and plate-seal temperatures below 200° C and 225° C, respectively. In all classes of operation it is recommended that a heat-radiating connector, the Eimac HR-6 or equivalent, be installed on the anode terminal, and that a socket and chimney be employed which provides for proper seal cooling. When the Eimac 4PR400A is operated at d-c or low frequencies in an Eimac SK-410 Air System Socket, complete with SK-406 Air Chimney and HR-6 Heat Radiator, the minimum airflow requirements to maintain seal temperatures at 200° C in 50° C inlet air are tabulated:

	Sea Level		10,000 Feet	
Ave. Plate Dissipation (watts)	Air Flow (CFM)	Plenum Pressure Drop. (Inches of Water)	Air Flow (CFM)	Plenum Pressure Drop. (Inches of Water)
200	6.5	0.045	9.5	0.063
300	8.5	0.076	12.5	0.110
400	10.5	0.125	15.5	0.180

When the Eimac 4PR400A is used as a pulsed-amplifier or oscillator at frequencies above 30 Mc, additional cooling may be required to compensate for the effects of plate and base-seal heating caused by r-f charging currents and dielectric losses. Since the amount of seal heating varies with the particular application, it is suggested that the user monitor the seal temperatures to determine the adequacy of the cooling air.

Cooling air should be applied before or simultaneously with the application of filament voltage and may be removed simultaneously with filament voltage. In any questionable situation, the only criterion for adequate cooling is temperature. Tube temperature may be measured conveniently by using a temperature-sensitive paint.

ELECTRICAL

Filament Voltage— For maximum tube life the filament voltage, as measured directly at the filament pins, should be 5.0 volts. Variations in filament voltage must be kept within the range of 4.75 to 5.25 volts.

When the 4PR400A is utilized in pulse applications where high peak currents are demanded, filament voltage must be maintained at the rated value; the normally allowable five-percent variation in this voltage cannot be tolerated if the tube's peak-current capabilities are to be realized.

Element Dissipation— Under normal operating conditions, the average plate dissipation of the 4PR400A should not be allowed to exceed 400 watts. Dissipation in excess of this maximum rating is permissable for short periods of time, such as during tuning procedures.

The average power dissipated by the screen-grid and the control-grid must not exceed 35 watts and 10 watts, respectively.

Cut-Off Characteristics— The Plate Current Cut-Off Characteristics of the 4PR400A are shown in the graph below. These curves indicate the value of negative grid voltage required to maintain a plate-current flow of 50 microamperes or less at the various plate and screen voltages noted. These curves were plotted from a "typical" tube whose electrical characteristics closely approximate the mean value in the tube test specification.

Each 4PR400A is tested to insure proper cut-off characteristics at maximum ratings. This cut-off test is made with a plate voltage of 20 KV, a screen voltage of 1.5 KV, with the grid voltage adjusted to maintain a plate current of 10 microamperes. Under these test conditions the negative grid bias must not exceed 675 volts. Due to tube-to-tube variation this cut-off point will vary and the typical range can be expected to be between -500 volts and -650 volts.

Pulse-Modulator Service— The data shown in the "Typical Operating" section of Pulse-Modulator Service was calculated assuming a rectangular plate voltage waveform, ignoring the effects of shunt capacity. In reality, the total shunt capacitance (including the output capacity of the tube, stray capacitance, etc.) affects the output wave form and can have considerable effect on plate dissipation. Since the actual plate wave form is not rectangular, even though the grid pulse is, additional power will be dissipated during the rise time and can, under some circumstances, be much greater than that dissipated during the remainder of the pulse. The total power dissipated is then the sum of the power dissipated during the rise time and the power dissipated during the remainder of the pulse.

Special Applications

If it is desired to operate this tube under conditions widely different from those given here, write to Power Grid Tube Marketing, Eimac Division of Varian Associates, 301 Industrial Way, San Carlos, California, for information and recommendations.

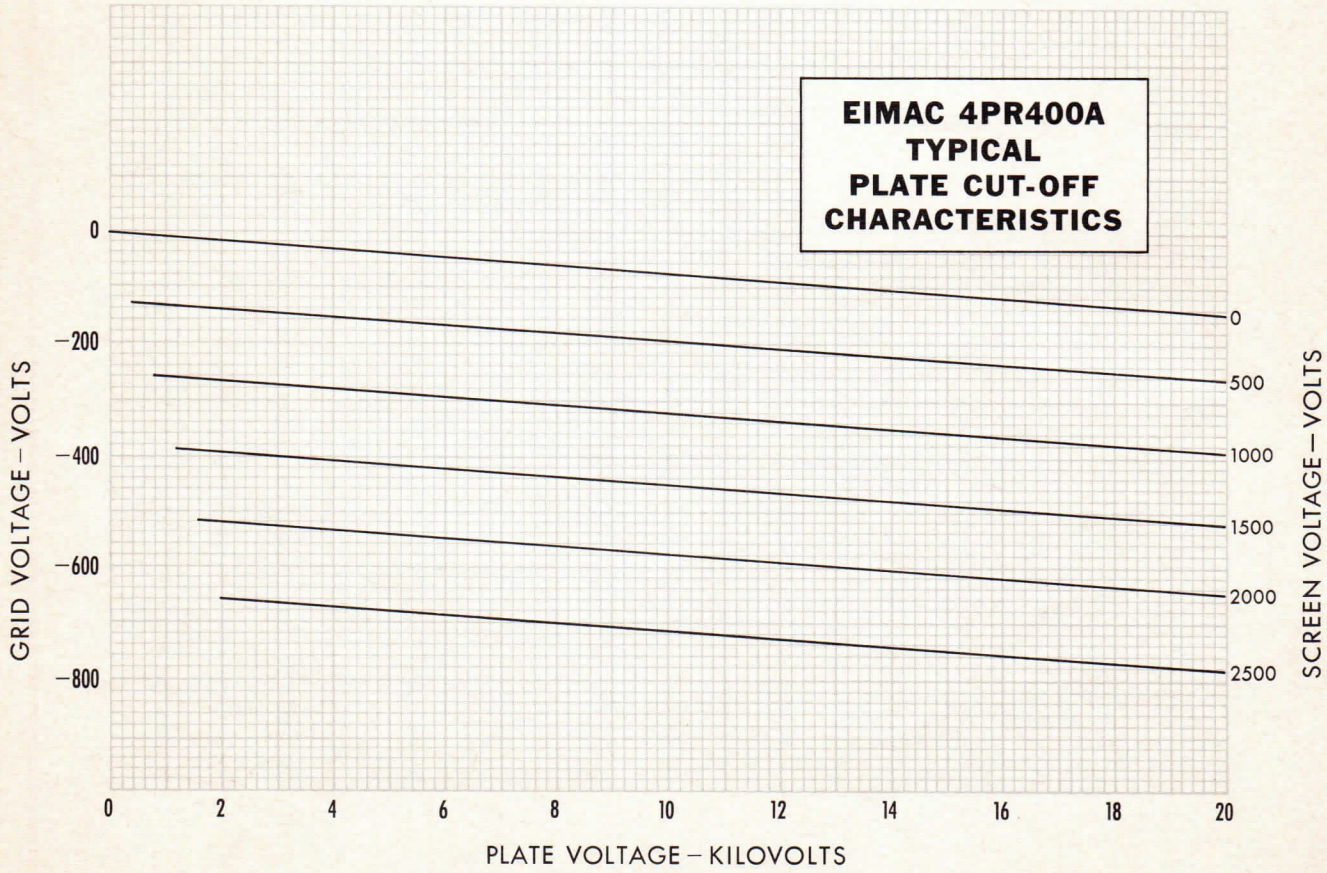

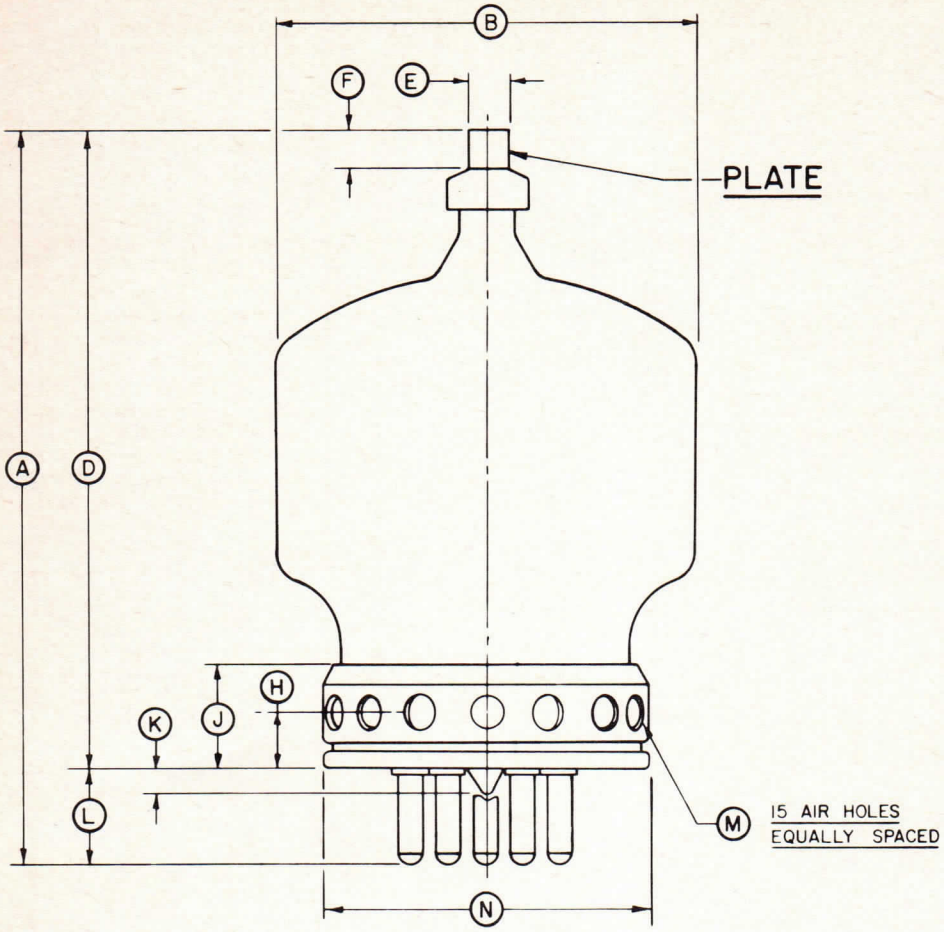

DIMENSIONS IN INCHES

DIMENSIONAL DATA			
REF.	MIN.	MAX.	NOM.
A	5-7/8	6-3/8	
B		3-9/16 D.	
D	5-1/8	5-5/8	
E	.350 DIA.	.365 DIA.	
F	21/64		
H			7/16
J		31/32	
K		1/4	
L			3/4
M			1/4 D.
N		2-3/4 D.	
P			5/16 D.
Q			1/2 D.
R			1-5/8 D.
S			1-1/4 D. P.C.
T	.185 DIA.	.191 DIA.	
U			30°
V			60°
W			45°

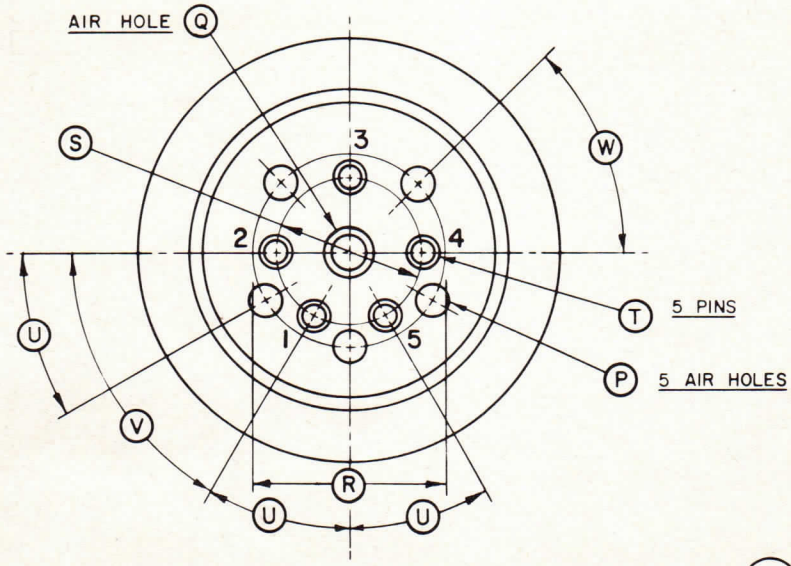

BOTTOM VIEW

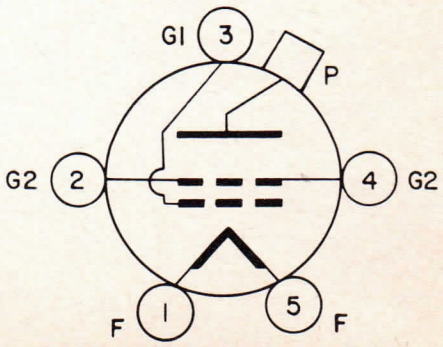

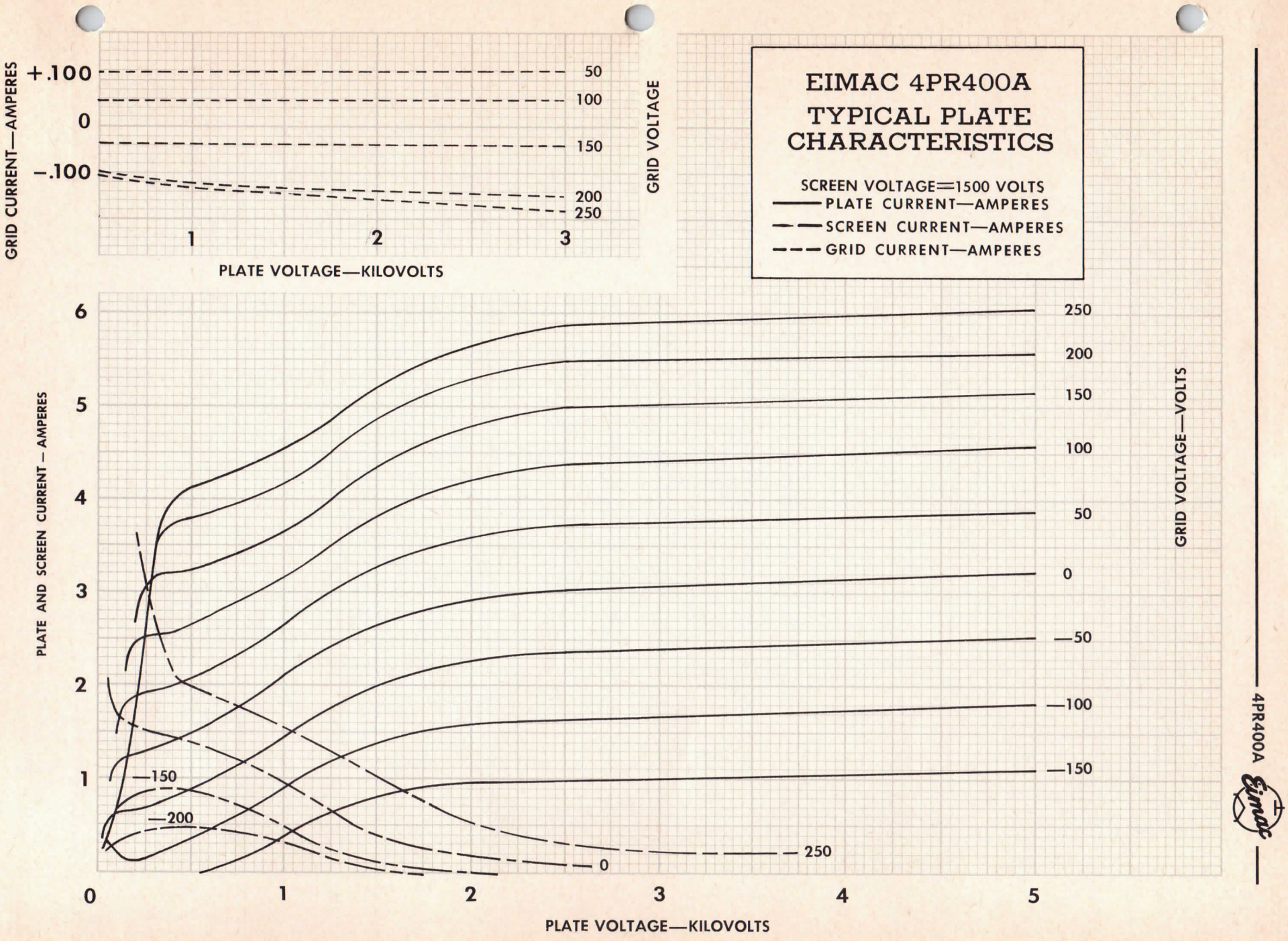
EIMAC 4PR400A
TYPICAL PLATE CHARACTERISTICS
SCREEN VOLTAGE=1500 VOLTS
PLATE CURRENT—AMPERES
SCREEN CURRENT—AMPERES
GRID CURRENT—AMPERES
GRID CURRENT—AMPERES
+.100
0
-.100
50
100
150
200
250
1
2
3
PLATE VOLTAGE—KILOVOLTS
GRID VOLTAGE
PLATE AND SCREEN CURRENT—AMPERES
6
5
4
3
2
1
0
250
200
150
100
50
0
—50
—100
—150
—150
—200
250
0
1
2
3
4
5
PLATE VOLTAGE—KILOVOLTS
GRID VOLTAGE—VOLTS
4PR400A
Eimac

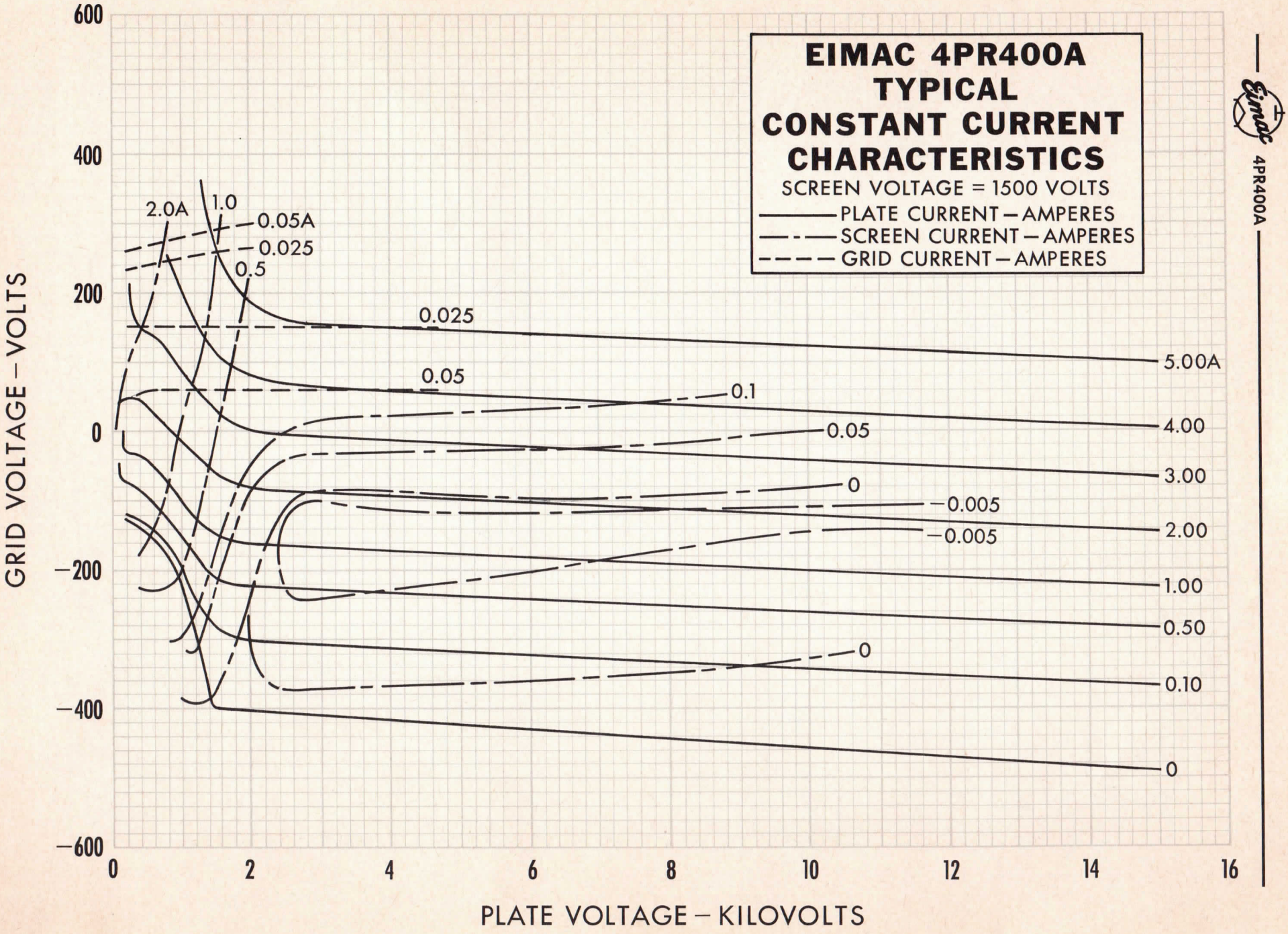
EIMAC 4PR400A
TYPICAL
CONSTANT CURRENT
CHARACTERISTICS
SCREEN VOLTAGE = 1500 VOLTS
PLATE CURRENT – AMPERES
SCREEN CURRENT – AMPERES
GRID CURRENT – AMPERES
GRID VOLTAGE – VOLTS
600
400
200
0
−200
−400
−600
0
2
4
6
8
10
12
14
16
PLATE VOLTAGE – KILOVOLTS
2.0A
1.0
0.05A
0.025
0.5
0.025
0.05
0.1
0.05
0
0.005
0.005
0
5.00A
4.00
3.00
2.00
1.00
0.50
0.10
0

EIMAC
Division of Varian
SAN CARLOS
CALIFORNIA

8189
4PR1000A
RADIAL-BEAM PULSE TETRODE
•
MODULATOR OSCILLATOR AMPLIFIER

The Eimac 8189/4PR1000A is a pulse tetrode intended for use in pulse-modulator, pulsed-amplifier, and pulsed-oscillator service. This compact, high vacuum, radial-beam tetrode, incorporating a Pyrovac plate and non-emitting grids, is recommended for use in new equipments where high voltage, high current, or high duty factor is encountered.

Cooling of the tube is accomplished by radiation from the plate and by circulation of forced-air through the base and around the envelope. Cooling can be simplified by the use of the Eimac SK-510 Air-System Socket and the SK-506 Air Chimney.



GENERAL CHARACTERISTICS

ELECTRICAL

	Min.	Nom.	Max.	
Filament: Thoriated tungsten				
Voltage	-	7.5		volts
Current	20.0		22.7	amperes
Amplification Factor (Grid to Screen)	-	6.9		
Direct Interelectrode Capacitances, Grounded Cathode:†				
Grid-Plate	-	-	0.35	uuf
Input	23.8		32.4	uuf
Output	6.8		9.4	uuf
Transconductance (I_b=300 ma)	-	10,000		umhos
Highest Frequency for Maximum Ratings	-	-	110	mc

MECHANICAL

Base	5-pin metal shell
Basing	See drawing
Recommend Socket	Eimac SK-510 Air-System Socket
Operating Position	Vertcial, base down or up
Maximum Operating Temperatures:	
Base Seals	150°C
Plate Seal	200°C
Cooling	Radiation and forced-air
Recommended Heat-Dissipating Plate Connector	Eimac HR-8
Maximum Over-all Dimensions:	
Length	9.63 inches
Diameter	5.25 inches
Net Weight (tube only)	1.5 pounds
Shipping Weight	12 pounds

†In Shielded Fixture

PULSE MODULATOR SERVICE

MAXIMUM RATINGS

D-C PLATE VOLTAGE	30 MAX. KILOVOLTS
D-C SCREEN VOLTAGE	2.5 MAX. KILOVOLTS
D-C GRID VOLTAGE	—1.0 MAX. KILOVOLTS
PEAK PLATE CURRENT	8.0 MAX. AMPERES
PLATE DISSIPATION (AVE.)	1000 MAX. WATTS
SCREEN DISSIPATION (AVE.)	75 MAX. WATTS
GRID DISSIPATION (AVE.)	25 MAX. WATTS

TYPICAL OPERATION

D-C Plate Voltage	20	25	30 Kilovolts
D-C Screen Voltage	1.5	1.5	1.5 Kilovolts
D-C Grid Voltage	—335	—360	—380 Volts
Pulse Plate Voltage	17.7	22.7	27.7 Kilovolts
Peak Plate Current	8.0	8.0	8.0 Amperes
Pulse Screen Current	1.25	1.25	1.25 Amperes
Pulse Grid Current	0.2	0.2	0.2 Ampere
Pulse Pos. Grid Voltage	200	200	200 Volts
Pulse Drive Power	107	112	116 Watts
Pulse Plate Input Power	160	200	240 Kilowatts
Pulse Plate Output Power	140	180	220 Kilowatts
Duty	4.0	4.0	4.0 Percent

(Effective 12-15-65) Copyright 1962, 1965 by Varian Associates

RADIO-FREQUENCY PLATE AND SCREEN-PULSED AMPLIFIER AND OSCILLATOR*

MAXIMUM RATINGS	
PEAK D-C PLATE VOLTAGE	20 MAX. KILOVOLTS
D-C SCREEN VOLTAGE	2.5 MAX. KILOVOLTS
D-C GRID VOLTAGE	—1.0 MAX. KILOVOLTS
PEAK CATHODE CURRENT (Note 1)	12.0 MAX. AMPERES
PLATE DISSIPATION (AVE.)	1000 MAX. WATTS
SCREEN DISSIPATION (AVE.)	75 MAX. WATTS
GRID DISSIPATION (AVE.)	25 MAX. WATTS

*When used as a R-F Plate and Screen-Pulsed Amplifier, the grid drive must also be pulsed to avoid overheating this element during the inter-pulse periods.

TYPICAL OPERATION			
Pulse Plate Voltage	10	15	20 Kilovolts
Pulse Screen Voltage	1.5	1.5	1.5 Kilovolts
D-C Grid Voltage	—480	—510	—535 Volts
Pulse Plate Current (Note 1)	1.95	1.95	1.95 Amperes
Pulse Screen Current	0.32	0.32	0.32 Ampere
Pulse Grid Current	0.02	0.02	0.02 Ampere
Peak R-F Grid Voltage	735	760	785 Volts
Pulse Drive Power	14.7	15.2	15.7 Watts
Pulse Plate Input Power	19.5	29.3	39.0 Kilowatts
Pulse Plate Output Power	17.0	23.0	31.5 Kilowatts
Duty	15.0	15.0	12.0 Percent

RADIO-FREQUENCY GRID-PULSED AMPLIFIER AND OSCILLATOR

MAXIMUM RATINGS	
D-C PLATE VOLTAGE	15 MAX. KILOVOLTS
D-C SCREEN VOLTAGE	2.5 MAX. KILOVOLTS
D-C GRID VOLTAGE	—1.0 MAX. KILOVOLTS
PEAK CATHODE CURRENT (Note 1)	12.0 MAX. AMPERES
PLATE DISSIPATION (AVE.)	1000 MAX. WATTS
SCREEN DISSIPATION (AVE.)	75 MAX. WATTS
GRID DISSIPATION (AVE.)	25 MAX. WATTS

TYPICAL OPERATION			
D-C Plate Voltage	10	12.5	15 Kilovolts
D-C Screen Voltage	1.5	1.5	1.5 Kilovolts
D-C Grid Voltage	—480	—495	—510 Volts
Pulse Plate Current (Note 1)	1.95	1.95	1.95 Amperes
Pulse Screen Current	0.32	0.32	0.32 Ampere
Pulse Grid Current	0.02	0.02	0.02 Ampere
Peak R-F Grid Voltage	735	745	760 Volts
Pulse Drive Power	14.7	15.0	15.2 Watts
Pulse Plate Input Power	19.5	24.4	29.3 Kilowatts
Pulse Plate Output Power	17.0	18.6	23.0 Kilowatts
Duty	15.0	15.0	15.0 Percent

Note 1: The maximum peak cathode current rating refers to the instantaneous peak cathode current available. This rating is based on an available emission throughout life of 80 milliamperes per watt of filament power. The pulse plate current data shown under the Typical Operation sections refers to the d-c plate current component during the pulse.

APPLICATION

MECHANICAL

Mounting—The 4PR1000A must be operated vertically, base up or down. When the SK-510 Air-System Socket is used in conjunction with the SK-506 Air Chimney, the socket must be mounted to the under surface of the chassis to maintain proper air space between the plate seal and the chimney opening, otherwise plate seal cooling will be seriously impaired.

In the event the SK-510 Air-System Socket is not used, the socket must provide clearance for the glass tip-off which extends from the center of the tube. The metal tube-base shell should be grounded by means of suitable spring fingers.

COOLING—Adequate forced-air cooling must be provided to maintain base-seal and plate-seal temperatures below 150° C and 200° C, respectively. In all classes of operation it is recommended that a heat-radiating connector, the Eimac HR-8 or equivalent, be installed on the anode terminal, and that a socket and chimney be employed which provides for proper seal cooling. When the Eimac 4PR1000A is operated at d-c or low frequencies in an Eimac SK-510 Air System Socket, complete with SK-506 Air Chimney and HR-8 Heat Radiator, the minimum airflow requirements to maintain seal temperatures at 150° C in 50° C inlet air are tabulated below:

	Sea Level		10,000 Feet	
Ave. Plate Dissipation (watts)	Air Flow (CFM)	Plenum Pressure Drop. (Inches of Water)	Air Flow (CFM)	Plenum Pressure Drop. (Inches of Water)
600	17.0	0.30	24.0	0.45
800	20.0	0.40	28.0	0.56
1000	25.0	0.55	36.0	0.80

When the Eimac 4PR1000A is used as a pulsed-amplifier or oscillator at frequencies above 30 Mc, additional cooling may be required to compensate for the effects of plate and base-seal heating caused by r-f charging currents and dielectric losses. Since the amount of seal heating varies with the particular application, it is suggested that the user monitor the seal temperatures to determine the adequacy of the cooling air.

Cooling air should be applied before or simultaneously with the application of filament voltage and may be removed simultaneously with filament voltage. In any questionable situation, the only criterion for adequate cooling is temperature. Tube temperature may be measured conveniently by using a temperature-sensitive paint.

ELECTRICAL

Filament Voltage—For maximum tube life the filament voltage, as measured directly at the filament pins,

should be 7.5 volts. Variations in filament voltage must be kept within the range of 7.13 to 7.87 volts.

When the 4PR1000A is utilized in pulse applications where high peak currents are demanded, filament voltage must be maintained at the rated value; the normally allowable five-percent variation in this voltage cannot be tolerated if the tube's peak-current capabilities are to be realized.

Element Dissipation—Under normal operating conditions, the average plate dissipation of the 4PR1000A should not be allowed to exceed 1000 watts. Dissipation in excess of this maximum rating is permissable for short periods of time, such as during tuning procedures.

The average power dissipated by the screen-grid and the control-grid must not exceed 75 watts and 25 watts, respectively.

Cut-Off Characteristics—The Plate Current Cut-Off Characteristics of the 4PR1000A are shown in the graph below. These curves indicate the value of negative grid voltage required to maintain a plate-current flow of 50 microamperes or less at the various plate and screen voltages noted. These curves were plotted from a "typical" tube whose electrical characteristics closely approximate the mean value in the tube test specification.

Each 4PR1000A is tested to insure proper cut-off characteristics at maximum ratings. This cut-off test is made with a plate voltage of 30 KV, a screen voltage of 2.5 KV with the grid voltage adjusted to maintain a plate current of 10 microamperes. Under these test conditions the negative grid bias must not exceed 600 volts. Due to tube-to-tube variation this cut-off point will vary and the typical range can be expected to be between –470 volts and –585 volts.

Pulse-Modulator Service—The data shown in the "Typical Operating" section of Pulse-Modulator Service was calculated assuming a rectangular plate voltage wave-form, ignoring the effects of shunt capacity. In reality, the total shunt capacitance (including the output capacity of the tube, stray capacitance, etc.) affects the output wave form and can have considerable effect on plate dissipation. Since the actual plate waveform is not rectangular, even though the grid pulse is, additional power will be dissipated during the rise time and can, under some circumstances, be much greater than that dissipated during the remainder of the pulse. The total power dissipated is then the sum of the power dissipated during the rise time and the power dissipated during the remainder of the pulse.

Special Applications – If it is desired to operate this tube under conditions widely different from those given here, please write to Power Grid Tube Marketing, Eimac, a division of Varian Associates, 301 Industrial way, San Carlos, California, for information and recommendations.

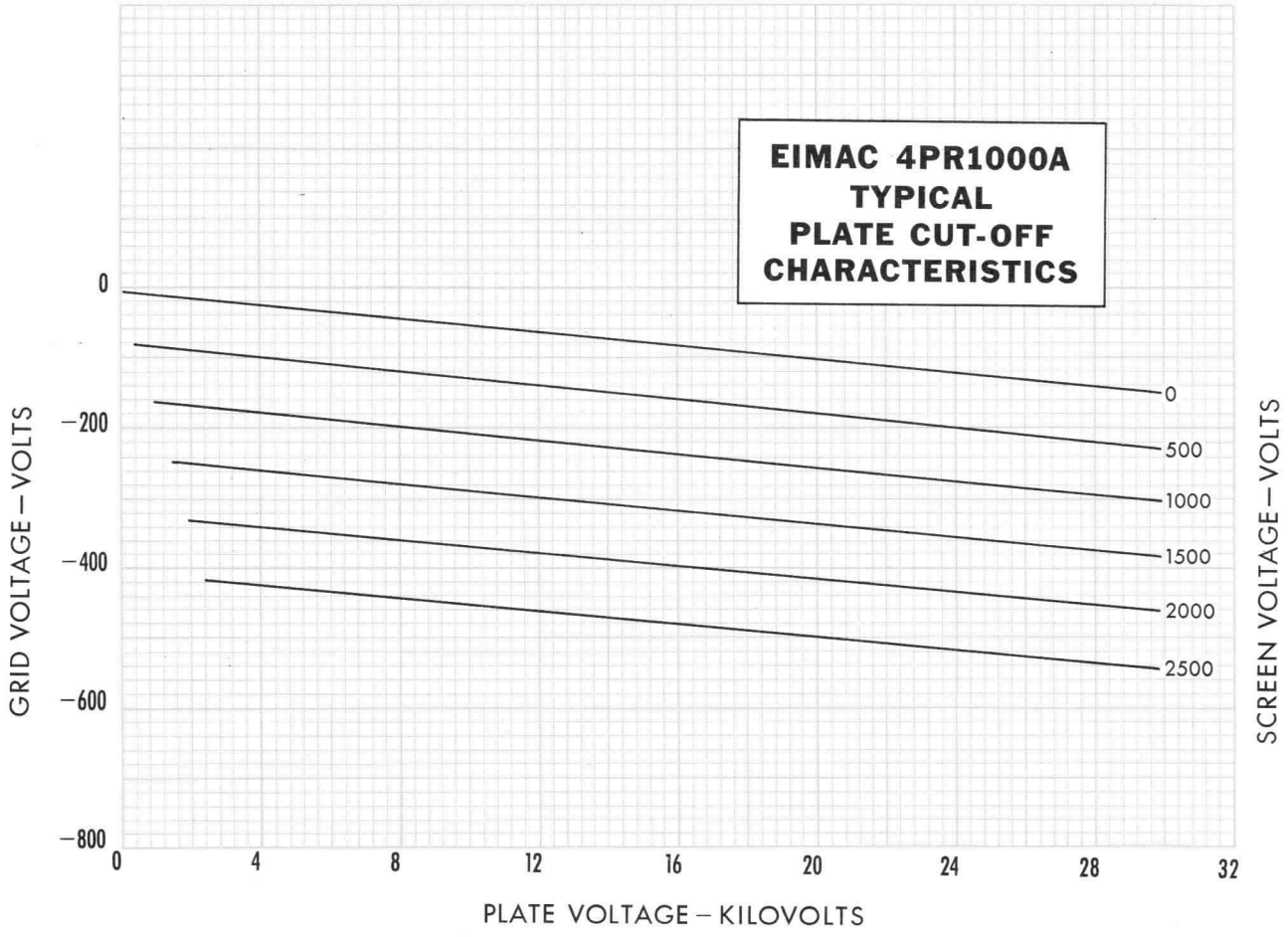

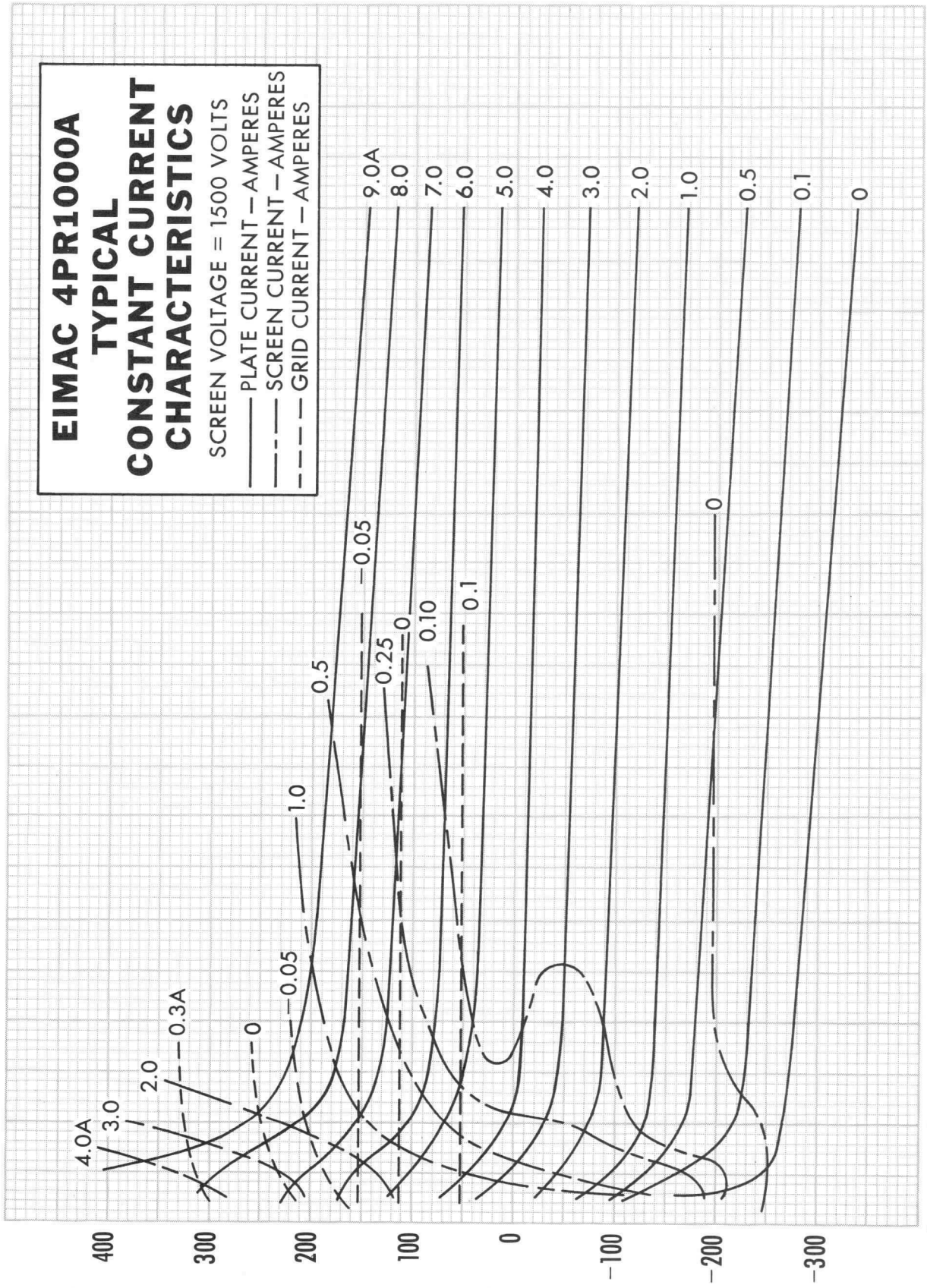
EIMAC 4PR1000A
TYPICAL
CONSTANT CURRENT
CHARACTERISTICS
SCREEN VOLTAGE = 1500 VOLTS
PLATE CURRENT – AMPERES
SCREEN CURRENT – AMPERES
GRID CURRENT – AMPERES
9.0A
8.0
7.0
6.0
5.0
4.0
3.0
2.0
1.0
0.5
0.1
0
4.0A
3.0
2.0
0.3A
0
0.05
1.0
0.5
0.05
0.25
0
0.10
0.1
0
400
300
200
100
0
−100
−200
−300
0
2
4
6
8
10
12
14
16
18
20
GRID VOLTAGE – VOLTS
PLATE VOLTAGE – KILOVOLTS

DIMENSIONS IN INCHES

DIMENSIONAL DATA			
REF.	MIN.	MAX.	NOM.
A	8.875	9.625	9.250
B	8.000	8.750	8.375
C		5.250	
D		3.625	
E		.313	
F	.825	.925	.875
G	1.110	1.140	1.250
H	.559	.573	.566
J	.484		
K			60°
L			30°
M			30°
N	1.495	1.505	1.500
P	.371	.377	.374

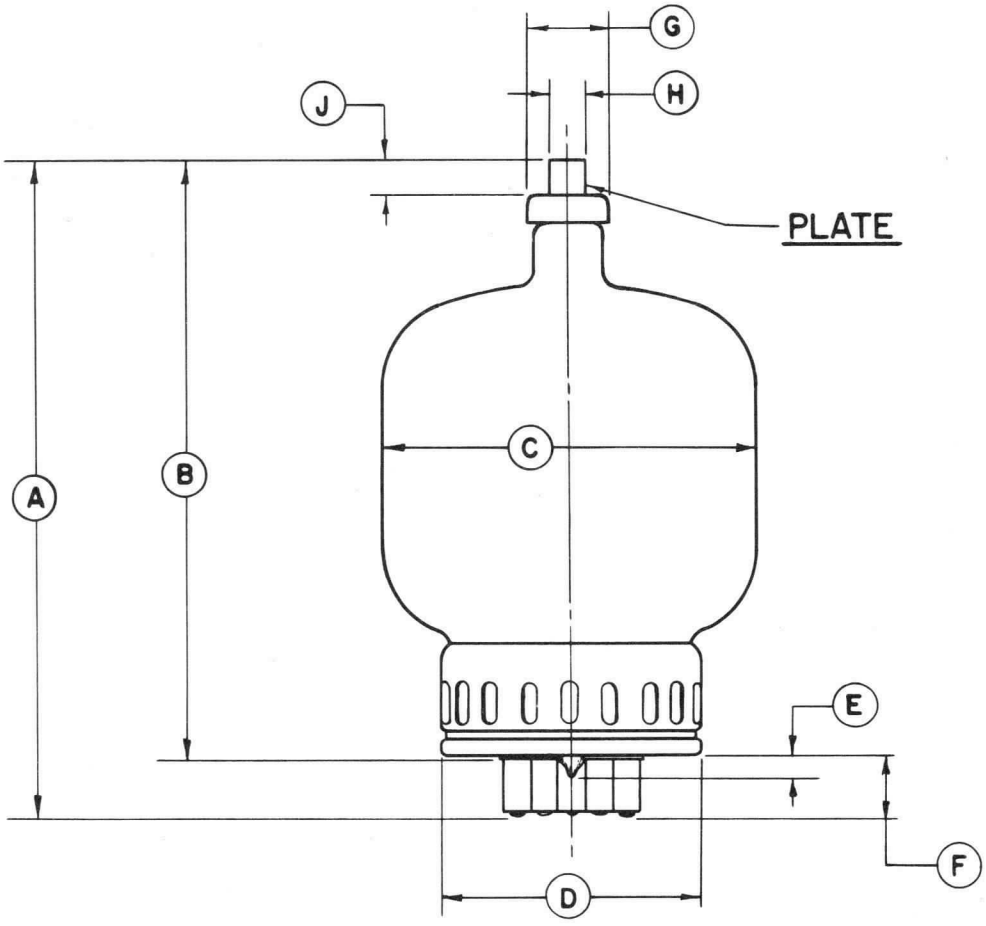

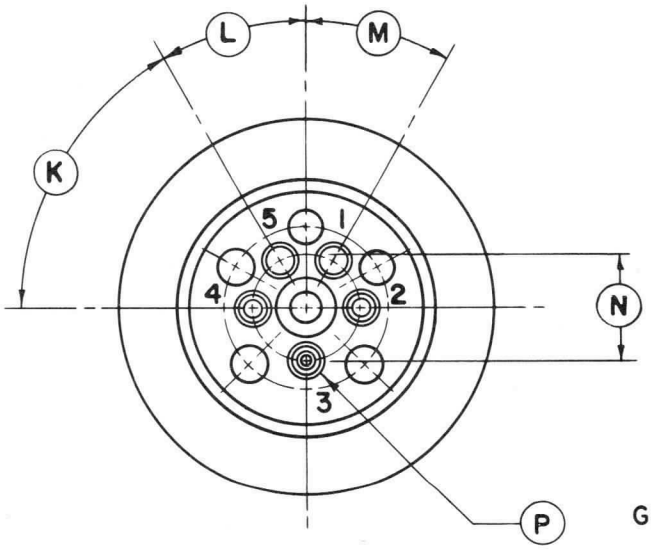

BOTTOM VIEW

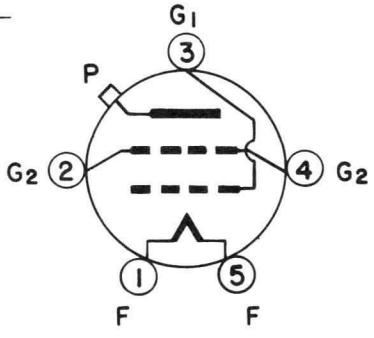

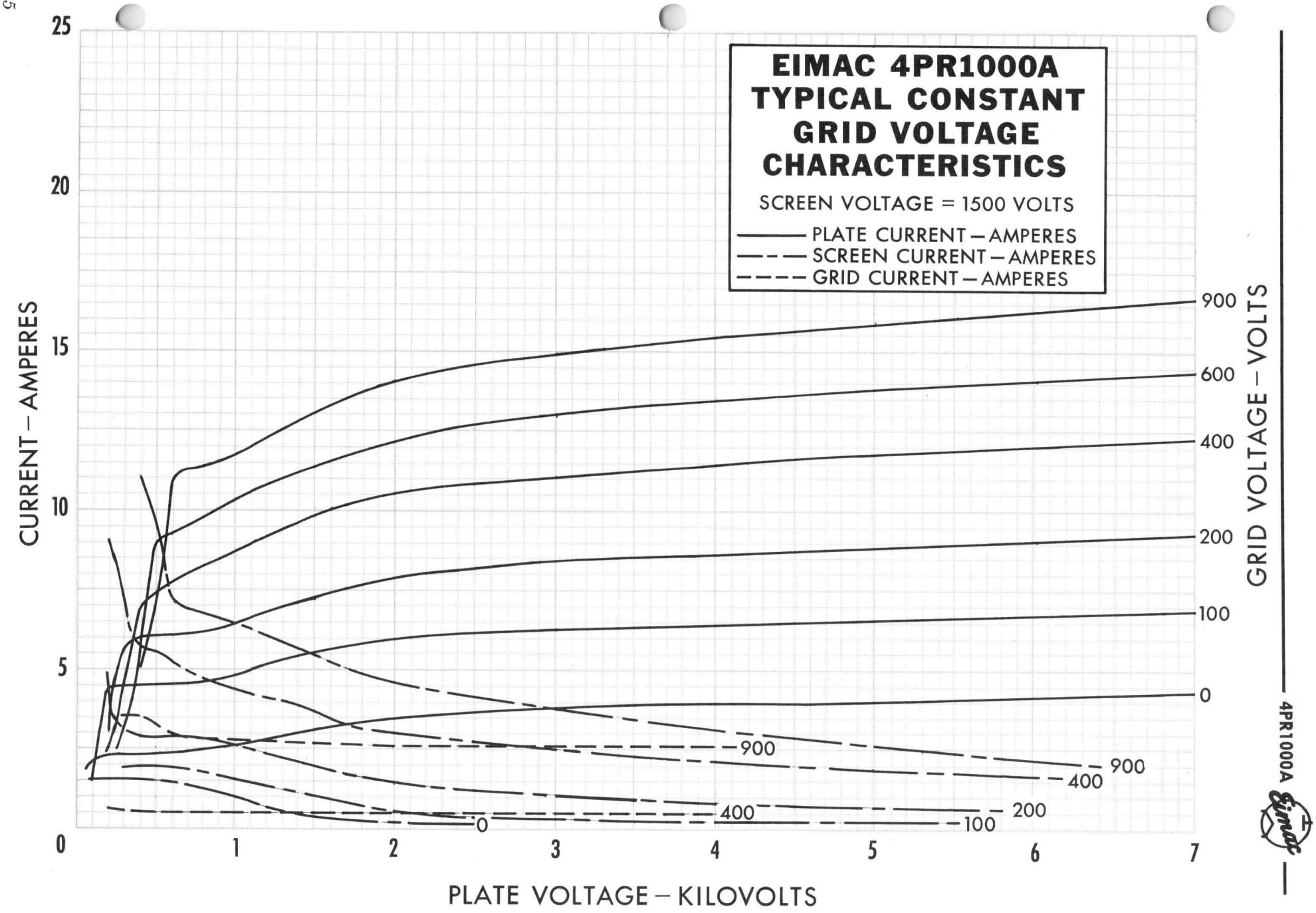
EIMAC 4PR1000A
TYPICAL CONSTANT
GRID VOLTAGE
CHARACTERISTICS
SCREEN VOLTAGE = 1500 VOLTS
PLATE CURRENT – AMPERES
SCREEN CURRENT – AMPERES
GRID CURRENT – AMPERES
CURRENT – AMPERES
PLATE VOLTAGE – KILOVOLTS
GRID VOLTAGE – VOLTS
4PR1000A
Eimac
0
5
10
15
20
25
1
2
3
4
5
6
7
900
600
400
200
100
0
900
400
900
400
200
100
0

EIMAC

A Division of Varian Associates

SAN CARLOS, CALIFORNIA

6C21

PULSE TRIODE

•

MODULATOR AMPLIFIER

The Eimac 6C21 is a high-vacuum power triode designed for pulse-modulator service at d-c plate voltages up to 30 kilovolts and peak plate currents as high as 15 amperes.

The 6C21 is forced-air and radiation cooled, has a maximum plate-dissipation rating of 300 watts, and, in pulse modulator service, will deliver up to 375 kilowatts to a resistive load with 7.5 kilowatts of driving power.

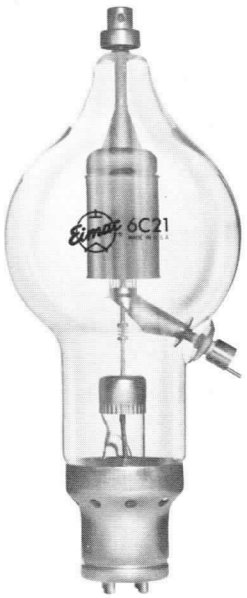

GENERAL CHARACTERISTICS

ELECTRICAL

Filament: Thoriated Tungsten		
Voltage	8.2	volts
Current	17.0	amperes
Amplification Factor (Average)	30	
Direct Interelectrode Capacitances (Average)		
Grid-Plate	4.3	$\mu\mu$f
Input	9.5	$\mu\mu$f
Output	0.7	$\mu\mu$f
Transconductance (I_b=100 ma., E_b=2000v.)	6100	μmhos

MECHANICAL

Base	50-watt jumbo 4-pin
Connections	See drawing
Socket	E. F. Johnson Co. 123-211, National Co. XM-50 or equivalent.
Mounting Position	Vertical, base down or up
Cooling	Forced Air and Radiation
Maximum Temperature of Grid & Plate Seals	225° C.
Recommended Heat Dissipating Plate and Grid Connectors	Eimac HR-8
Maximum Overall Dimensions:	
Length	12-5/8 inches
Diameter	5-1/8 inches
Net Weight	1.3 pounds
Shipping Weight	5.8 pounds

MAXIMUM RATINGS

Pulse Modulator Service (Per Tube)

D-C PLATE VOLTAGE	30 MAX. KILOVOLTS
D-C GRID VOLTAGE	-2.0 MAX. KILOVOLTS
PEAK POSITIVE PLATE VOLTAGE	35 MAX. KILOVOLTS
PEAK POSITIVE GRID VOLTAGE	1.6 MAX. KILOVOLTS
PEAK PLATE CURRENT	15 MAX. AMPERES
AVERAGE GRID DISSIPATION	50 MAX. WATTS
AVERAGE PLATE DISSIPATON	300 MAX. WATTS

TYPICAL OPERATION

D-C Plate Voltage	28 kilovolts
D-C Grid Voltage	-1.5 kilovolts
Pulse Plate Current	15 amperes
Pulse Grid Current*	3.0 amperes
Pulse Positive Grid Voltage	1000 volts
Pulse Grid Driving Power*	7.5 kilowatts
Load: Resistive	1650 ohms
Duty	.002
Pulse Voltage Output	25 kilovolts
Pulse Power Input	420 kilowatts
Pulse Plate Dissipation	45 kilowatts
Pulse Power Output	375 kilowatts

*Approximate values.

(Revised 12-15-65) Copyright 1954, 1965 by Varian Associates

APPLICATION

Mounting—The 6C21 must be mounted vertically, base down or up. The leads to the plate and grid terminals should be flexible, and the tube must be protected from vibration and shock.

Cooling—Forced-air cooling of the filament stem structure is required. Base cooling requires a minimum air flow of 2½ cubic feet per minute directed through the tube base toward the filament press. If the hole in the socket is at least 1 inch in diameter and the manifold is the same diameter, a static pressure of ¼ inch of water is required at the manifold to provide the 2½ cubic feet per minute. Heat Dissipating Connectors (Eimac HR-8 or equivalent) must be used at the plate and grid terminals and unobstructed circulation of air around the tube is required in sufficient quantity to prevent the temperatures of grid and plate seals from exceeding 225°C. Forced ventilation of compartments or equipment in which the tube is located is always beneficial, though not necessarily required.

Tube temperatures may be measured with the aid of "Tempilaq", a temperature-sensitive lacquer manufactured by the Tempil Corporation, 132 West 22nd Street, New York 11, N. Y. For satisfactory results, Tempilaq must be sprayed on the surface to be measured in a thin coat, covering as small an area as will serve the purpose.

ELECTRICAL

Filament Voltage—For optimum tube life the filament voltage, as measured directly at the base pins, should be the rated value of 8.2 volts. Variations should be kept within the range of 7.9 to 8.5 volts. All four socket terminals should be used, with two placed in parallel for each filament connection.

Plate Dissipation—Under normal operating conditions, the plate dissipation should not be allowed to exceed the maximum rating of 300 watts. Plate dissipation in excess of the maximum rating is permissable for short periods of time, such as during adjustment procedures.

Operation—The 6C21 may be operated with inductive or resistive loads, provided only that the maximum ratings are not exceeded. The ratings listed for pulse modulator service are for operation at peak plate currents of 15 amperes and pulse lengths up to 100 milliseconds. Further information on pulse operation, such as tube limitations under long (100 milliseconds or more) pulse conditions, is contained in "Pulse Service Notes" obtainable from Eimac Division of Varian on request. If it is desired to operate the 6C21 under conditions widely different from those given for pulse modulator service, write Eimac Division of Varian for information and recommendations.

Useful information about pulse circuits may be obtained from such publications as "Pulse Generators," volume 5 of the MIT Radiation Laboratory Series, by McGraw-Hill, 1948.

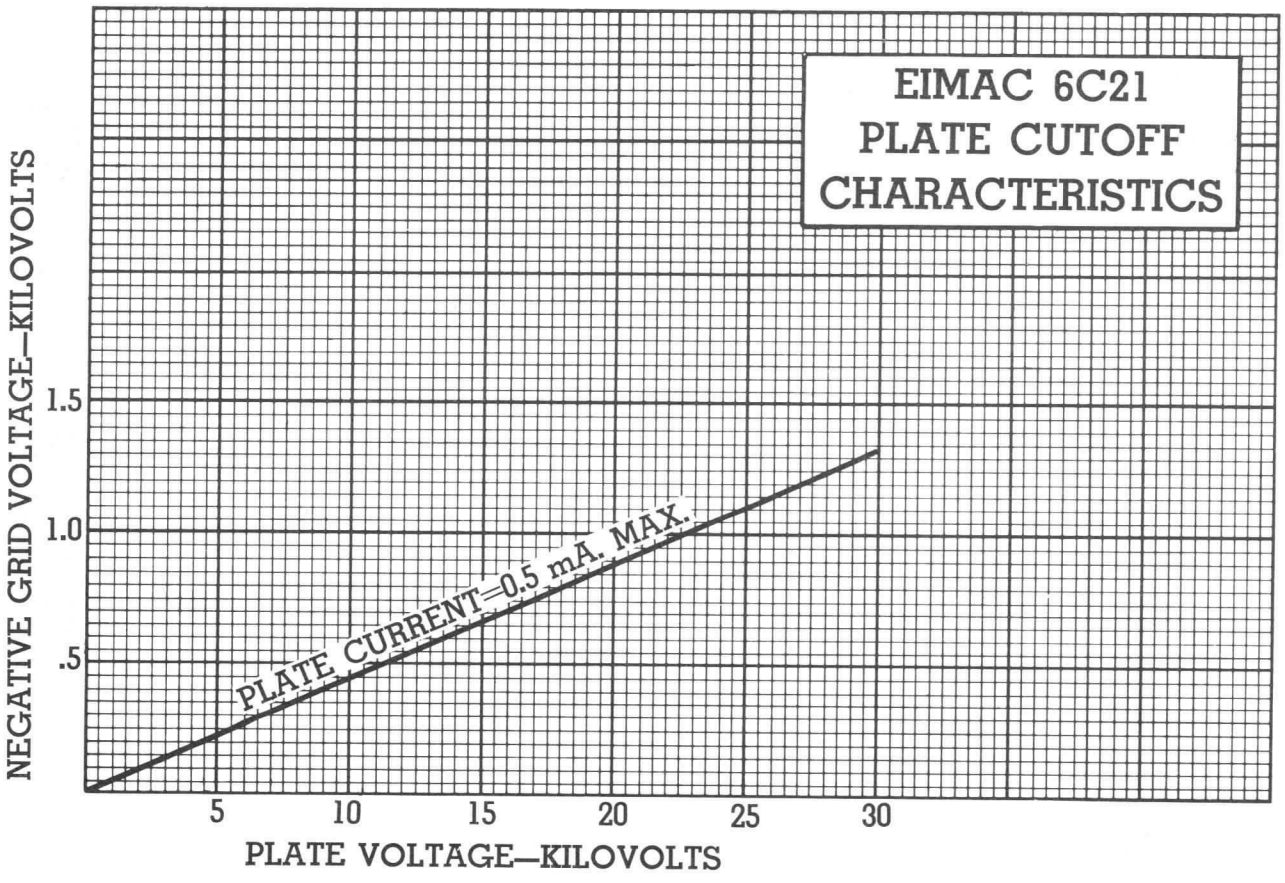

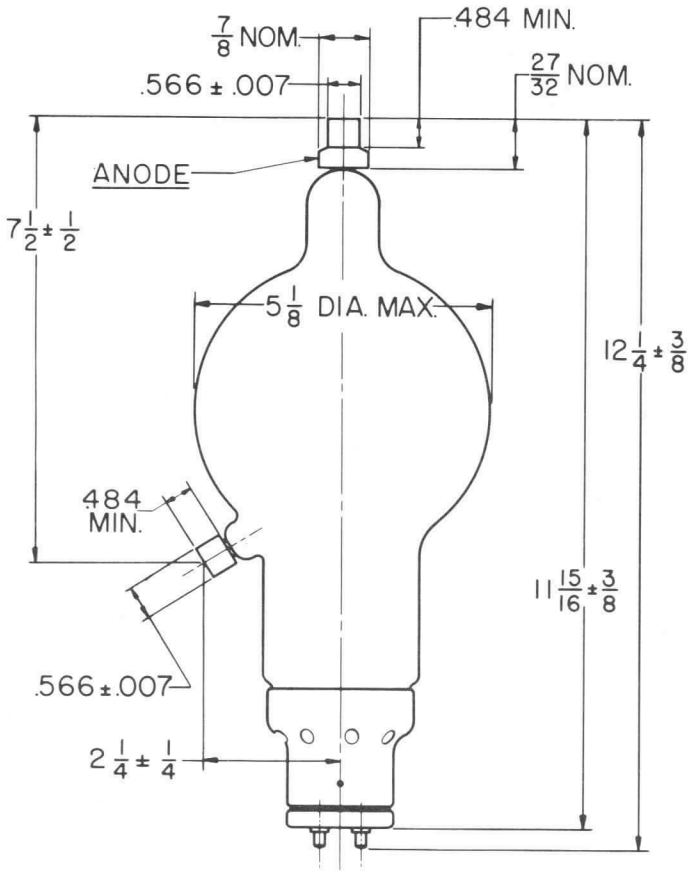

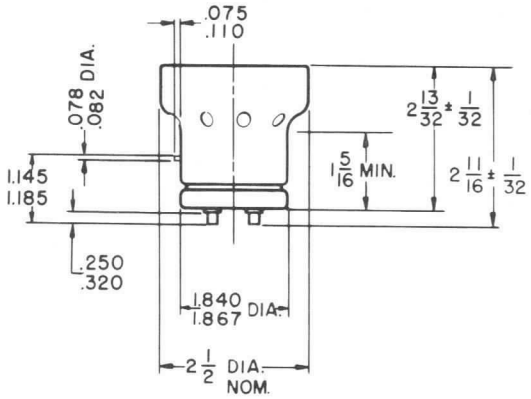

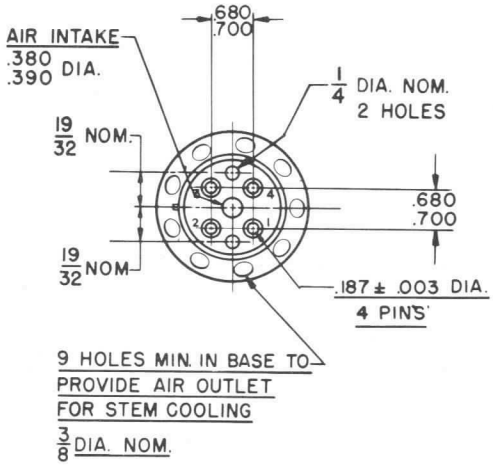

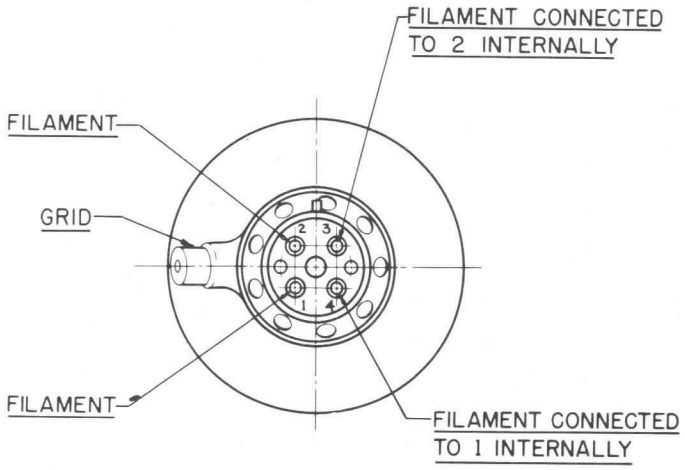

ON FINISHED TUBE ADD .060 MAX. FOR SOLDER

BOTTOM VIEW

BASE DETAIL

DIMENSIONS IN INCHES

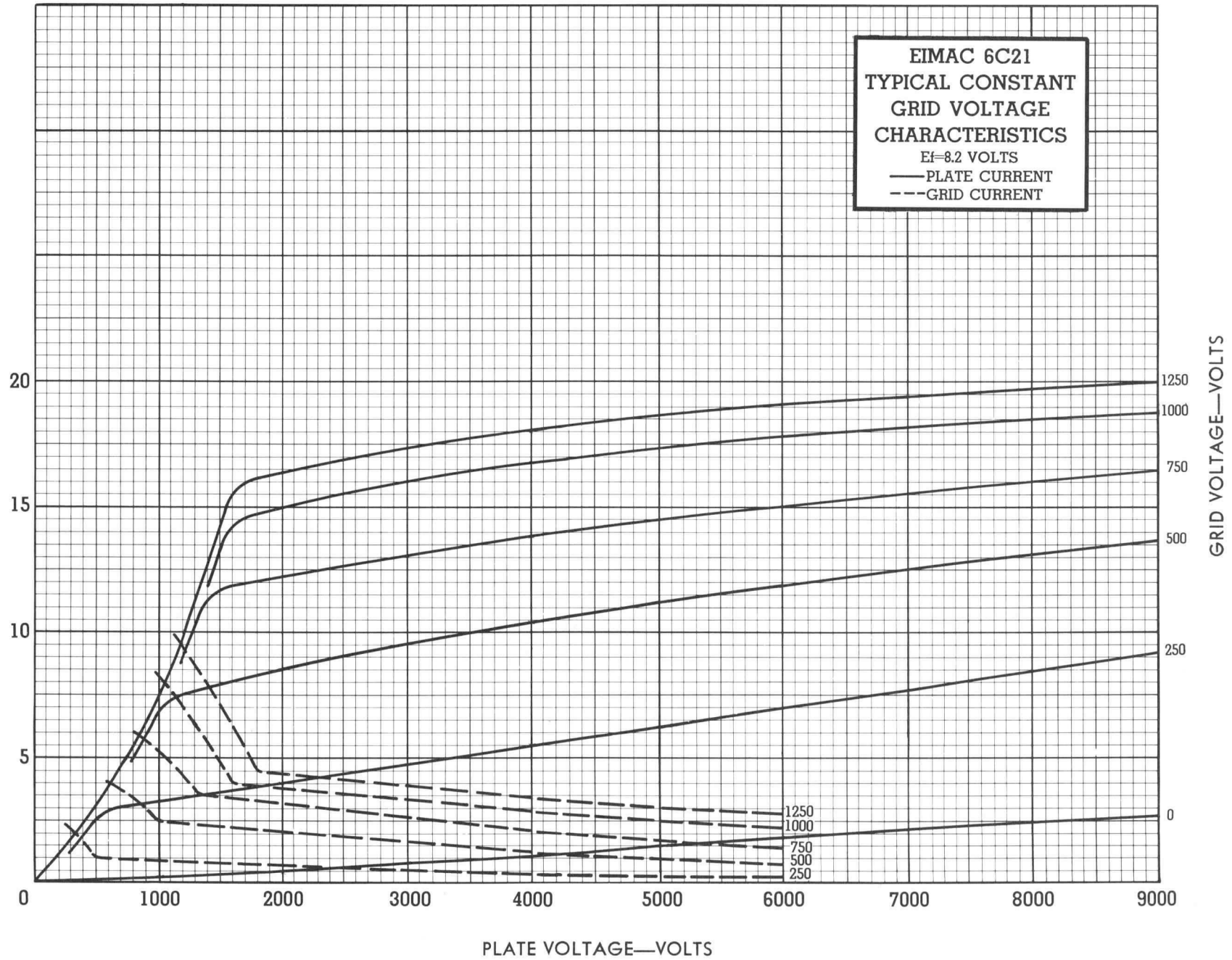

Printed in U.S.A. 7/16



other products

EIMAC division of Varian

Main office: 301 Industrial Way, San Carlos, CA 94070

Look in the general section for–

A quick guide to EIMAC products and services offered in this catalog.

Including . . .

- Your nearest distributor of modern, fully guaranteed EIMAC electron tubes and accessories.
- Your nearest Varian/EIMAC Field Engineer, who stands ready to give you immediate engineering assistance, information on deliveries and prices, or to provide other information not found in this catalog.
- EIMAC tube type numbering system.
- EIMAC/JEDEC cross-reference list.

Important EIMAC extras...

APPLICATION ENGINEERING. The EIMAC Application Engineering Department is available at all times for consultation. New tube operating techniques are continually being explored, tested and proven by EIMAC engineers, whose combined knowledge and experience are at your service. EIMAC Application Bulletins covering various uses of EIMAC products are available upon request.

FIELD ENGINEERING. Serving as an extension of the Varian/EIMAC Application Engineering Department outside the EIMAC Division plant, the Field Engineers cover the United States, and numerous foreign countries, operating out of offices in major cities. They will help you personally with experimental work, circuits, technique, etc. Engineers from the EIMAC plant are available, too, for field consultation. As EIMAC tubes are world renowned, the same services extend to countries overseas through the Varian/EIMAC export operations and overseas offices.

TECHNICAL DATA

VS-2
VS-4
VS-6

VACUUM SWITCH

EIMAC VS-2, VS-4 and VS-6 are single pole, double throw, electromagnetically actuated vacuum switches designed for high voltage applications where a compact, fast-acting vacuum switch is required.

The VS-2 and VS-4 are identical electrically and are intended for switching radio-frequency circuits at moderate values of current. These two switches differ only in physical characteristics, the VS-4 being shorter.

The VS-6 is intended for pulse switching applications where high peak currents are encountered. These switches are designed to be used with EIMAC 12 volts and 24 volts direct-current coils.

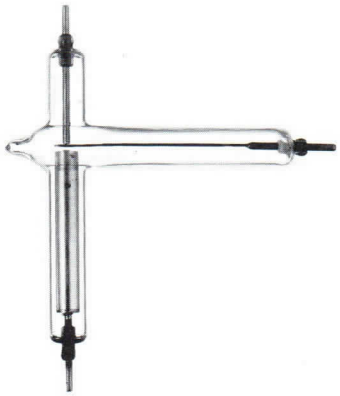

GENERAL CHARACTERISTICS[1]

ELECTRICAL	VS-2	VS-4	VS-6	
Peak rf hold-off voltage	20,000	20,000	22,000	volts
Rf Contact Current (1-15 MHz)	7.5	7.5		amperes
(30 MHz)	5.0	5.0		amperes
Pulse Current (see note)			150	amperes

(Note) Pulse duration less than 2.5 microseconds, pulse repetition rate less than 400 pps. Pulse train = 0.5 seconds.

Maximum Contact Resistance:

Normally closed contact	0.03	0.03	0.03	ohms
Normally open contact	0.05	0.05	0.05	ohms
Maximum Contact closing time	20	20	20	millisec.

MECHANICAL

Dimensions			See drawings	
Weight (Approximate)			2 oz; 56.7	gm

Coil Data:	12 volt coil	24 volt coil	
Part Number	051270	051271	
Resistance (nominal)	30	115	ohms

1. Characteristics and operating values are based upon performance tests. These figures may change without notice as the result of additional data or product refinement. EIMAC Division of Varian should be consulted before using this information for final equipment design.

(Effective 9-1-75) © 1970, 1975 EIMAC division of Varian Printed in U.S.A.

MOUNTING - The operating coil is mounted in rubber grommets over the glass barrel on the arm containing the iron core. The non-magnetic end of the coil is placed toward the contacts.

In order to prevent damage from shock and vibration, the switch should be fastened to the equipment with rubber covered metal strips over the glass tubing.

CONTACTS - The normally open contact is housed in the glass barrel containing the iron core: the normally closed contact being directly oposite this core.

DC RATINGS - While not designed for dc applications, the VS series may be used at reduced ratings in dc service. The following ratings have been established:

	VS-2	VS-4	VS-6	
Voltage -	14,000	14,000	14,000	Vdc
Current -	4	4	6	Adc

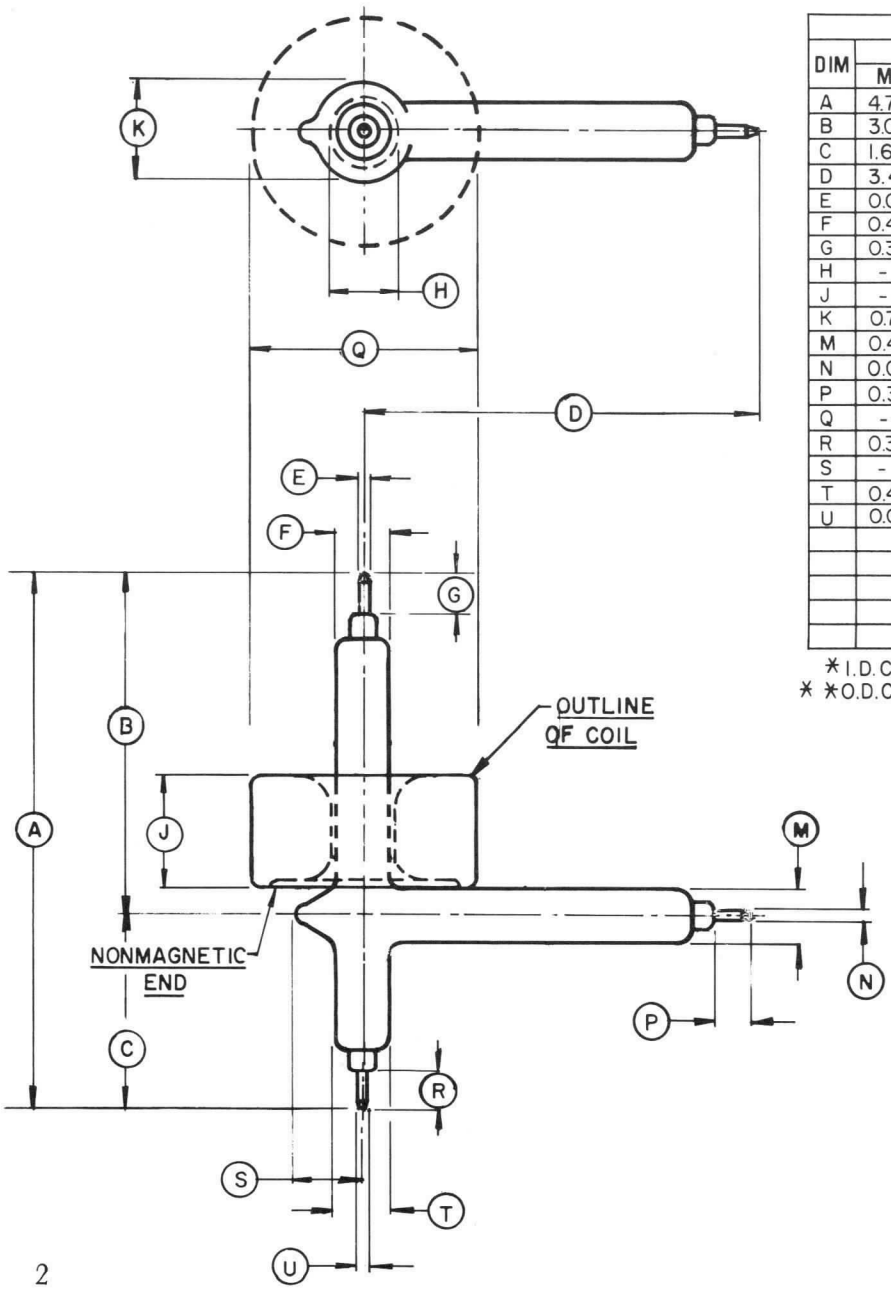

DIM	INCHES			MILLIMETERS		
	MIN.	MAX.	REF.	MIN.	MAX.	REF.
A	4.750	4.875	- -	120.65	123.82	- -
B	3.000	3.125	- -	76.20	79.37	- -
C	1.687	1.812	- -	42.85	46.02	- -
D	3.437	3.562	- -	87.30	90.47	- -
E	0.090	0.103	- -	2.29	2.62	- -
F	0.468	0.531	- -	11.89	13.49	- -
G	0.343	0.406	- -	8.71	10.31	- -
H	- -	- -	9/16 *	- -	- -	4.76 *
J	- -	- -	1.031	- -	- -	26.19
K	0.750	1.000	- -	19.05	25.40	- -
M	0.437	0.562	- -	11.10	14.27	- -
N	0.090	0.103	- -	2.29	2.62	- -
P	0.343	0.406	- -	8.71	10.31	- -
Q	- -	- -	2-1/32 **	- -	- -	51.59 **
R	0.343	0.406	- -	8.71	10.31	- -
S	- -	0.750	- -	- -	19.05	- -
T	0.437	0.562	- -	11.10	14.27	- -
U	0.090	0.103	- -	2.29	2.62	- -

DIMENSIONAL DATA

* I.D. COIL
* * O.D. COIL

VS-2

DIMENSIONAL DATA						
DIM	INCHES			MILLIMETERS		
	MIN.	MAX.	REF.	MIN.	MAX.	REF.
A	4.453	4.577	- -	113.11	116.25	- -
B	2.922	3.046	- -	74.22	77.37	- -
C	1.469	1.593	- -	37.31	40.46	- -
D	3.437	3.562	- -	87.30	90.47	- -
E	0.090	0.103	- -	2.29	2.62	- -
F	0.469	0.531	- -	11.91	13.49	- -
G	0.297	0.359	- -	7.54	9.12	- -
H	- -	- -	*	- -	- -	*
J	- -	- -	1.031	- -	- -	26.19
K	0.750	1.000	- -	19.05	25.40	- -
M	0.438	0.562	- -	11.12	14.27	- -
N	0.090	0.103	- -	2.29	2.62	- -
P	0.343	0.406	- -	8.71	10.31	- -
Q	- -	- -	**	- -	- -	**
R	0.156	0.218	- -	3.96	5.54	- -
S	- -	0.750	- -	- -	19.05	- -
T	0.438	0.562	- -	11.12	14.27	- -
U	0.090	0.103	- -	2.29	2.62	- -

(IN.)	(MM)
* 0.562 I.D. COIL	
** 2.031 O.D. COIL	51.59 O.D. COIL

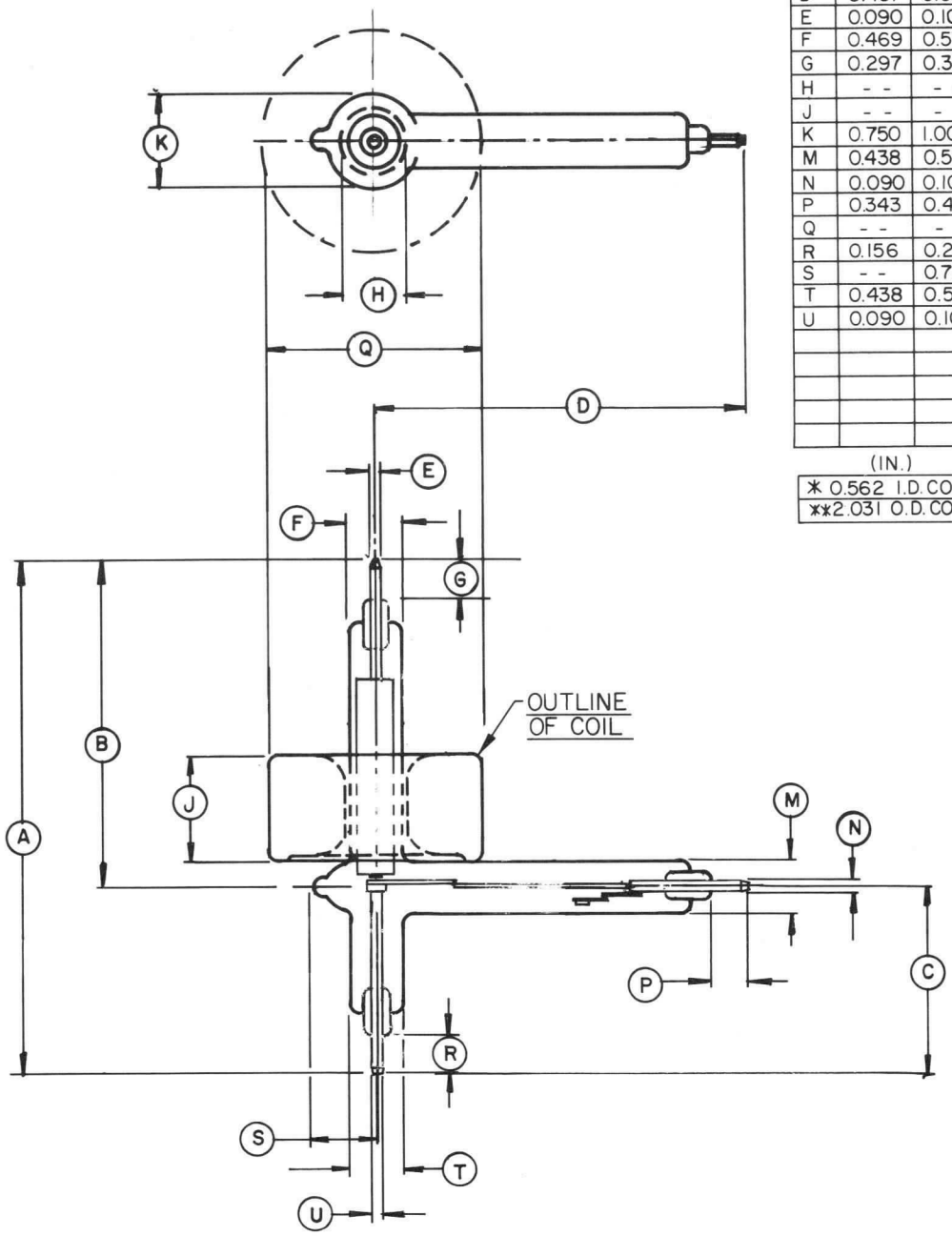

VS-4

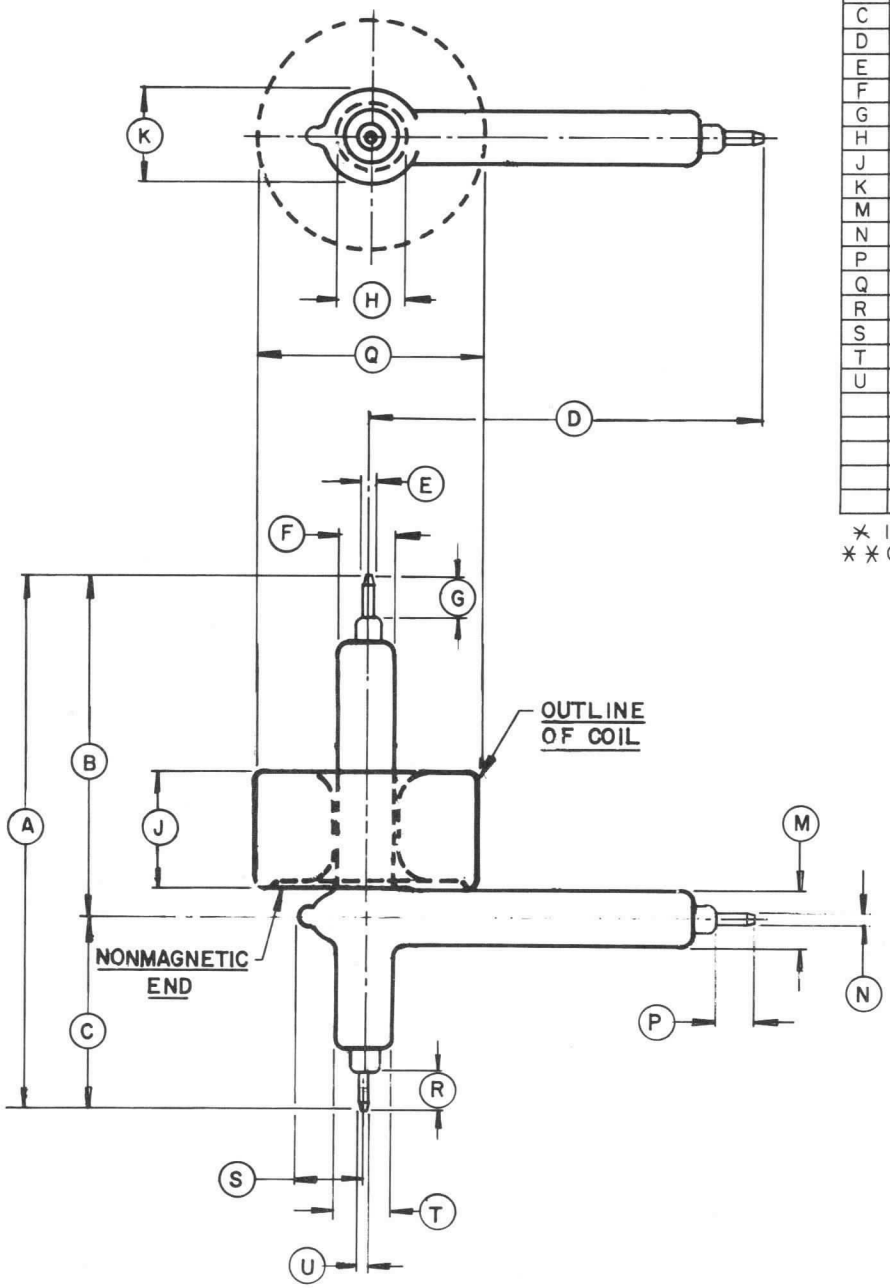

DIMENSIONAL DATA						
DIM	INCHES			MILLIMETERS		
	MIN.	MAX.	REF.	MIN.	MAX.	REF.
A	4.750	4.875	- -	120.65	123.82	- -
B	3.000	3.125	- -	76.20	79.37	- -
C	1.687	1.812	- -	42.85	46.02	- -
D	3.437	3.562	- -	87.30	90.47	- -
E	0.090	0.103	- -	2.29	2.62	- -
F	0.484	0.515	- -	12.29	13.08	- -
G	0.343	0.406	- - *	8.71*	10.31	- -
H	- -	- -	9/16 *	- -	- -	4.76 *
J	- -	- -	1.031	- -	- -	26.19
K	0.750	1.000	- -	19.05	25.40	- -
M	0.468	0.531	- -	11.89	13.49	- -
N	0.090	0.103	- -	2.29	2.62	- -
P	0.343	0.406	- -	8.71	10.31	- -
Q	- -	- -	2-1/32**	- -	- -	51.59**
R	0.343	0.406	- -	8.71	10.31	- -
S	- -	0.750	- -	- -	19.05	- -
T	0.468	0.531	- -	11.89	13.49	- -
U	0.090	0.103	- -	2.29	2.62	- -

* I.D. COIL
** O.D. COIL

VS-6

TECHNICAL DATA

CONTACT FINGER STOCK

CF-100 THROUGH CF-900

CONTACT FINGER STOCK

EIMAC Preformed Finger Stock is a prepared strip of spring material, slotted and formed into a series of fingers, designed to make a sliding contact.

EIMAC Finger Stock provides excellent circuit continuity between components with adjustable or moving contact surfaces. It is especially suitable for making connections to tubes with coaxial terminals or to moving parts, such as long line and cavity circuits. It is also useful as an electrical "weather stripping" around doors in equipment cabinets and "screen" rooms.

The base material is a non-ferrous spring alloy, heat treated for more positive spring action and silver plated for better rf conductivity.

CF-100, CF-700, and CF-800 incorporate "spooned" fingers to prevent scratching the contact surface (see drawings on reverse side of sheet)

EIMAC Contact Finger Stock is supplied in 36-inch lengths (91 cm).

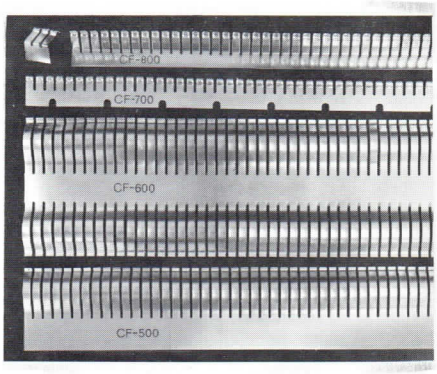

FINGER STOCK CURRENT RATING

	MINIMUM DEFLECTION		MAXIMUM CURRENT		
TYPE	INCH	MM	AMPS. PER FINGER	AMPS. PER INCH OF FINGER STOCK	AMPS. PER CM OF FINGER STOCK
CF-100	.015	(.38)	7.8	47.2	18.7
CF-200	.015	(.38)	7.8	47.2	18.7
CF-300	.025	(.63)	5.7	34.6	13.6
CF-400	.025	(.63)	5.7	34.6	13.6
CF-500	.030	(.76)	7.8	47.2	18.7
CF-600	.030	(.76)	7.8	47.2	18.7
CF-700	.015	(.38)	7.8	47.2	18.7
CF-800	.035	(.89)	6.4	38.7	15.3
CF-900	.015	(.38)	3.9	47.2	18.7

(Revised 6-15-71) © 1962, 1966, 1971 Varian Printed in U.S.A.

EIMAC Contact Finger Stock is heat treated to a minimum tensile strength of 170,000 pounds per square inch.

No further forming of the material should be attempted. The minimum bending radius of curvature for the material is 0.75 inch. It may be secured by any suitable mechanical means or by soft soldering. If torch-soldering is attempted, extreme care must be exercised to prevent overheating which will anneal the material, resulting in loss of its elastic properties.

EIMAC Contact Finger Stock is available in the following semi-finished states:

CF-101 through CF-901: Slotted and formed (Not heat treated or plated)
CF-102 through CF-902: Slotted, formed, and heat treated (Not plated)
CF-103 through CF-903: Slotted, formed, and plated (Not heat treated)

Contact Finger Stock which has not been heat treated can be formed to different shapes by the user, after which it may be heat treated.

A suitable heat treating schedule consists of holding the unplated material at 600°±5°F for 2.5 hours in air, after which it must be cleaned and plated. Heat treating the material in a controlled atmosphere such as cracked natural gas, disassociated ammonia, or forming gas will minimize oxidation. Finger stock should be held in a suitable jig or fixture during heat treating to prevent deformation.

The Finger Stock current rating is based on a temperature rise of 50°C at the point of contact with one piece of finger stock making contact with another identical piece. Contact pressure is controlled by assuring that the deflection at the point of contact is at least as great as indicated in the table on page 1.

For long term operation the finger stock temperature should not exceed 150°C (300°F). The material may be heated to 260°C (500°F) for a short period such as required for soft soldering.

Temperature rise is proportional to current squared. It will be affected by the temperature of the surface to which contact is made and by the amount and temperature of cooling air if used.

Dimensions in Inches

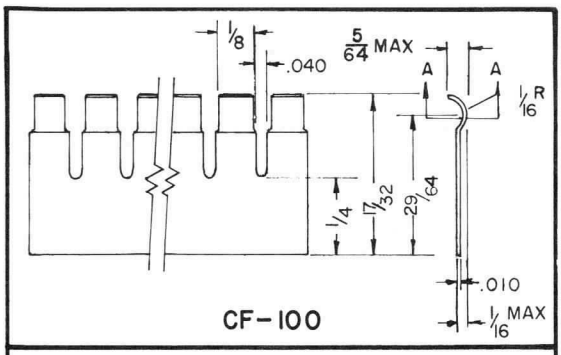

CF-100

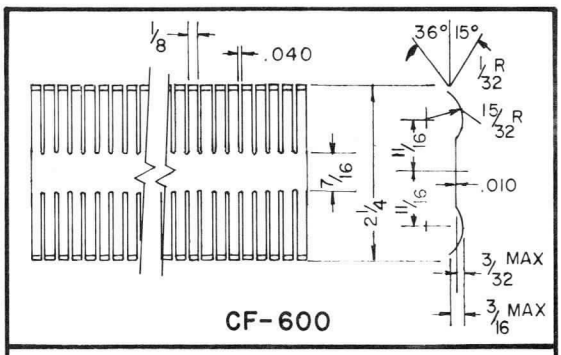

CF-600

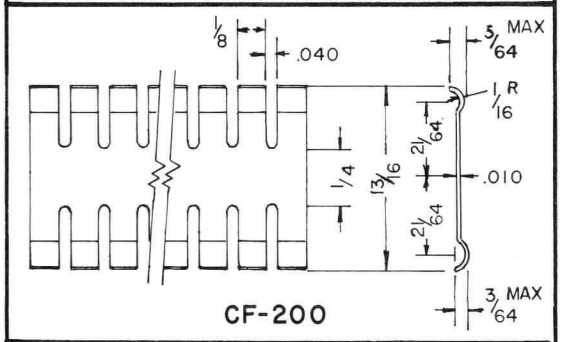

CF-200

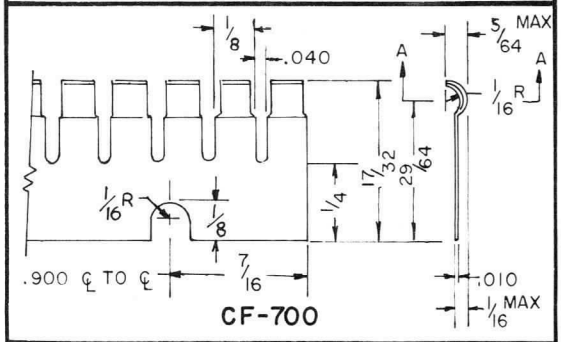

CF-700

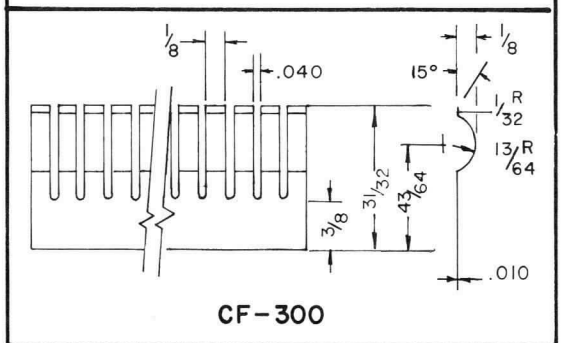

CF-300

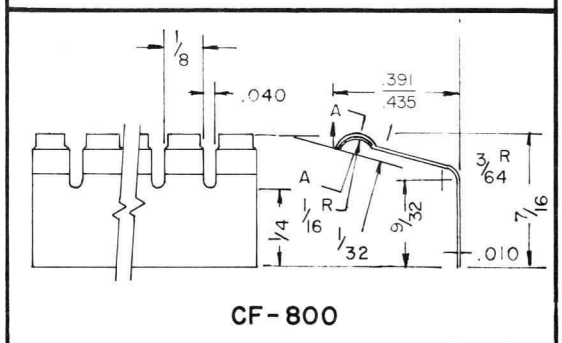

CF-800

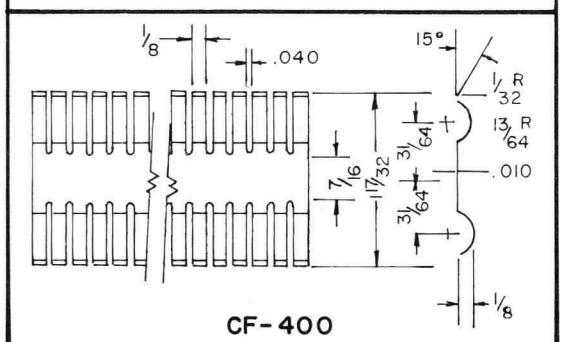

CF-400

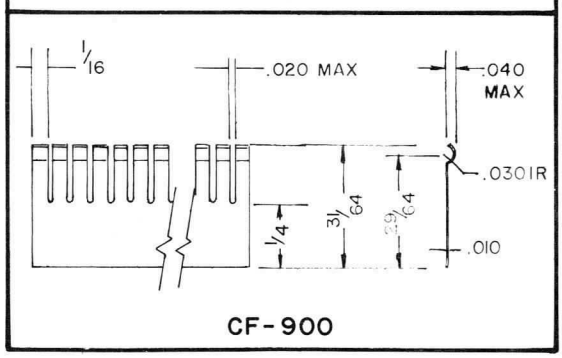

CF-900

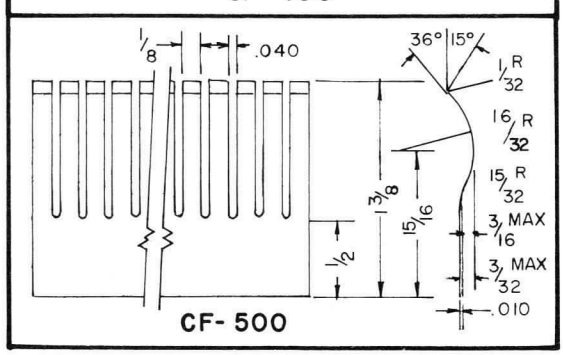

CF-500

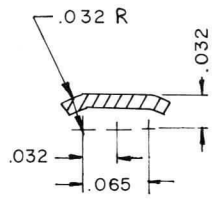

SECTION A-A
(CF 100, 700, 800)

Dimensions in Millimeters

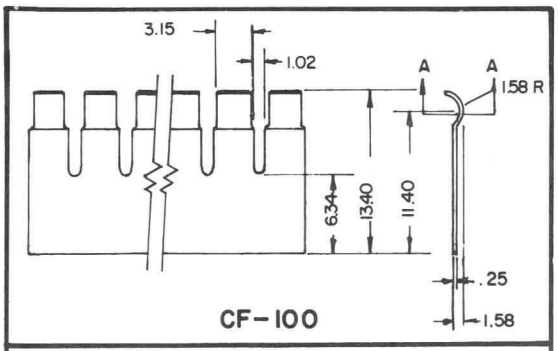

CF-100

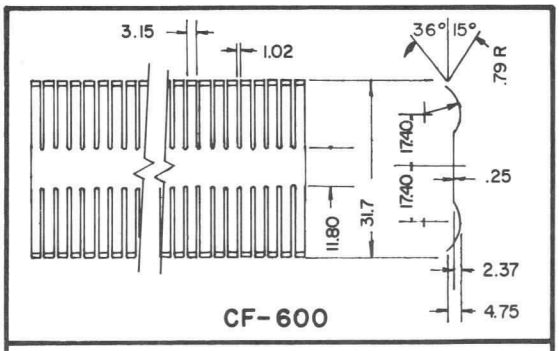

CF-600

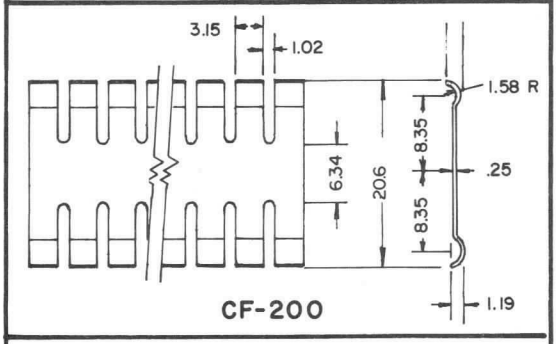

CF-200

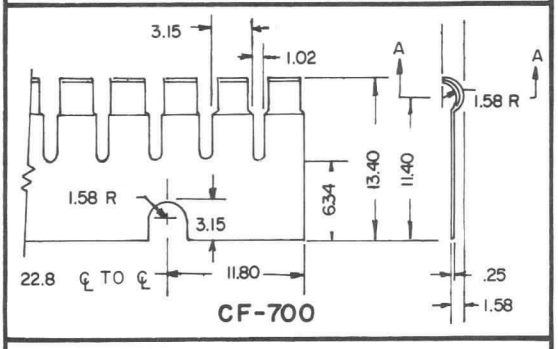

CF-700

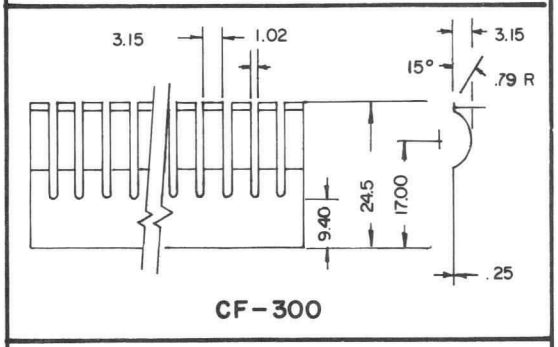

CF-300

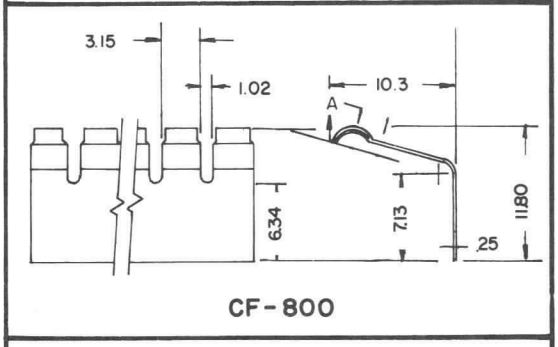

CF-800

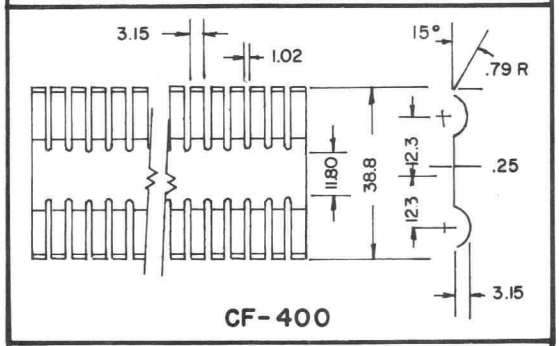

CF-400

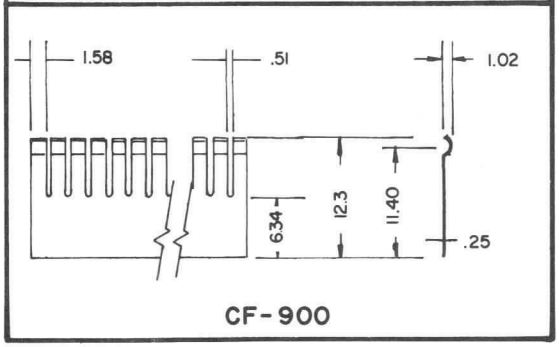

CF-900

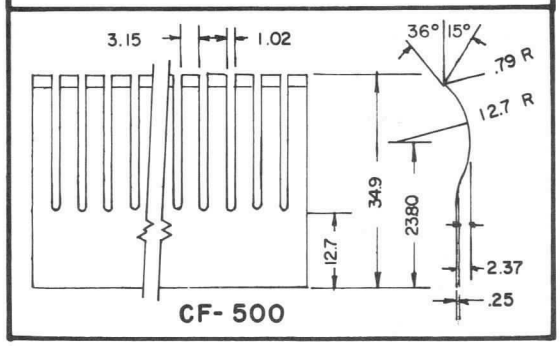

CF-500

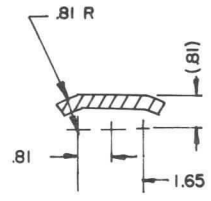

SECTION A-A
(CF 100, 700, 800)

EIMAC

A Division of Varian Associates

SAN CARLOS, CALIFORNIA

HR HEAT DISSIPATING CONNECTORS

Eimac HR Heat-Dissipating Connectors are used to make electrical connections to the plate and grid terminals of Eimac tubes, and, at the same time, provide efficient heat transfer from the tube element and glass seal to the air. The HR connectors aid materially in keeping seal temperatures at safe values. However, it is sometimes necessary to forced-air cool the connector by means of a small fan or blower. In such cases the air flow should be parallel with the fins of the connector. Designed for use on the larger tubes, the HR-9 Heat-Dissipating Connector is provided with an air duct to conduct the cooling air directly to the glass seal.

HR Heat-Dissipating Connectors are machined from solid dural rod, and are supplied with the necessary machine screws. The table below lists the proper connectors for use with each Eimac tube type.

TUBE	PLATE CONNECTOR	GRID CONNECTOR	TUBE	PLATE CONNECTOR	GRID CONNECTOR
2-25A	HR-1	.....	75TH-TL	HR-3	HR-2
2-50A	HR-3	.....	100R	HR-8	.....
2-150D	HR-6	.....	100TH-TL	HR-6	HR-2
2-240A	HR-6	.....	VT127A	HR-3	HR-3
2-2000A	HR-8	.....	152TH-TL	HR-5	HR-6
3C24	HR-1	HR-1	250TH-TL	HR-6	HR-3
4-65A	HR-6	.....	250R	HR-6	.....
4-125A	HR-6	.....	253	HR-8	.....
4-250A	HR-6	.....	304TH-TL	HR-7	HR-6
4-400A	HR-6	.....	327A	HR-4	HR-3
4-1000A	HR-8	.....	450TH-TL	HR-8	HR-8*
4E27A/5-125B	HR-5	.....	592/3-200A3	HR-10	HR-5
4PR60A	HR-8	.....			
6C21	HR-8	HR-8			
KY21A	HR-3	.....	750TL	HR-8	HR-8
RX21A	HR-3	.....	866A	HR-8	.....
25T	HR-1	.....	872A	HR-8	.....
35T	HR-3	.....	1000T	HR-9	HR-9
35TG	HR-3	HR-3	1500T	HR-8	HR-8
UH50	HR-2	HR-2	2000T	HR-8	HR-8

*The grid terminal of the 450TH-TL type tube is now .563" in diameter. To accommodate existing equipment designed for the older style 450TH-TL having .098" diameter grid terminals, an adapter pin is provided with the newer tubes. This adapter pin is threaded so that it may be removed from the grid terminal of the tube. The small grid terminal requires an HR-4 connector.

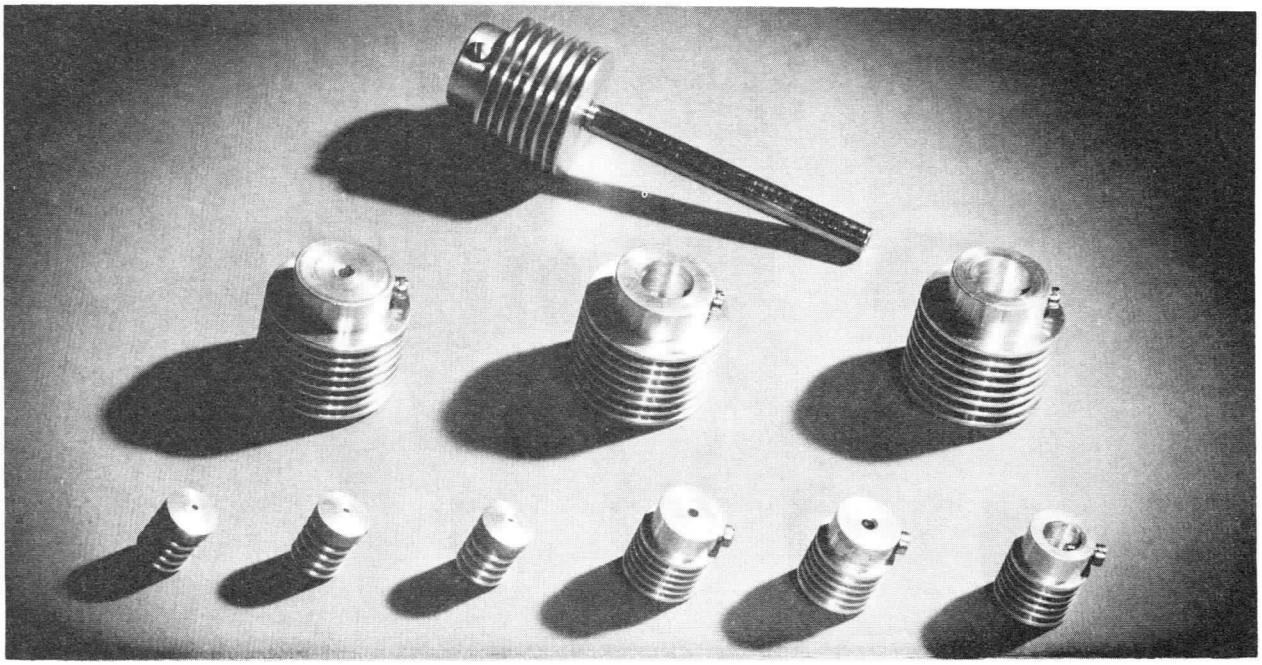

(Effective 12-1-65) © 1954, 1965, 1969 by Varian

Printed in U.S.A.

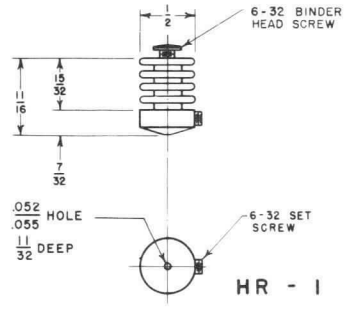

HR - 1

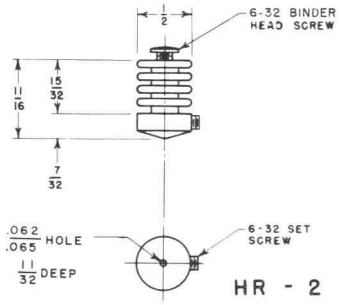

HR - 2

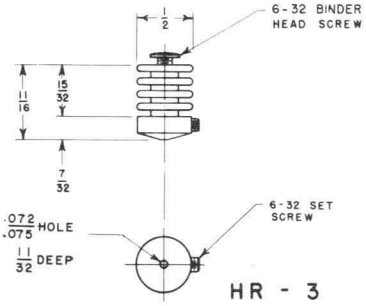

HR - 3

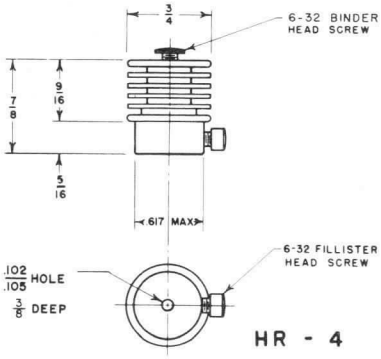

HR - 4

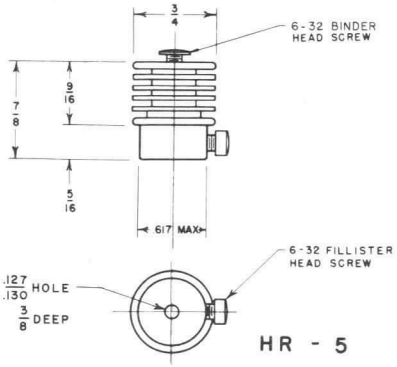

HR - 5

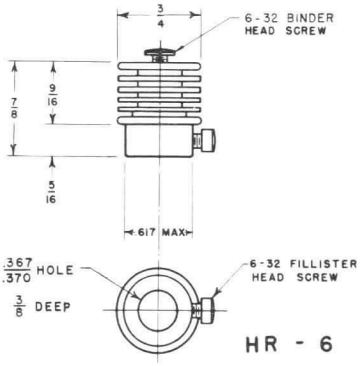

HR - 6

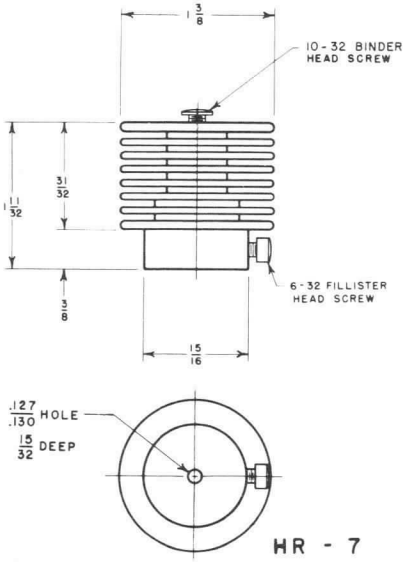

HR - 7

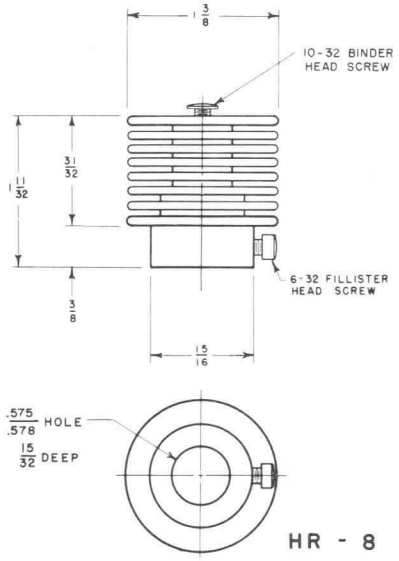

HR - 8

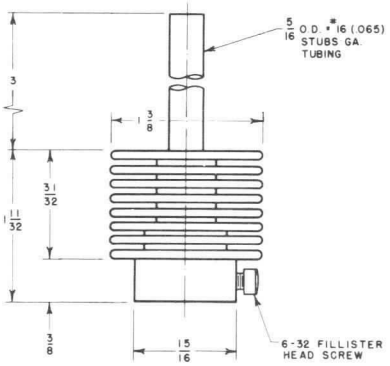

HR - 9

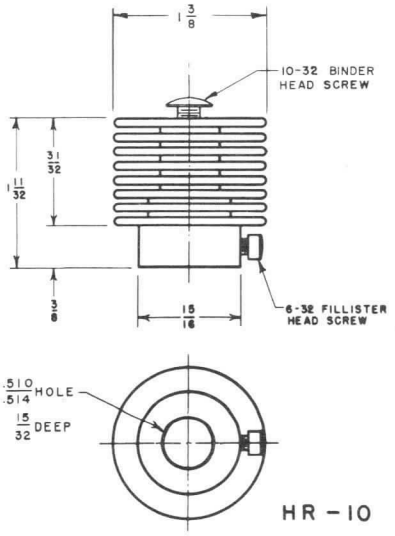

HR - 10

EIMAC
Division of Varian
SAN CARLOS
CALIFORNIA

SK-300A

AIR-SYSTEM SOCKET

The Eimac SK-300A Air-System Socket is recommended for use with those tube types listed at the bottom of the data sheet. The Eimac SK-306, SK-316 and SK-1306 Air Chimneys are available for use with this socket. When this socket is used, connection is made to each of the tube electrodes except the anode, by means of concentric rings of spring-finger contacts. The SK-300A is an improved version of the SK-300 with significantly reduced pressure drop at the air-flow rates used with these tubes. The cooling air horsepower requirements are appreciably lower for these tube types in an SK-300A as compared to the SK-300.

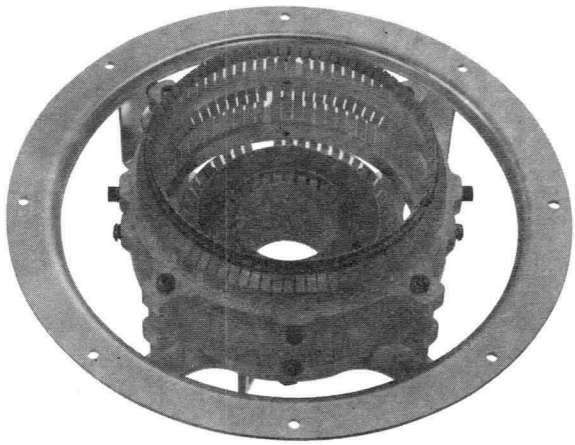

BASE CONNECTION

The SK-300A Air-System Socket consists of four concentric rings of spring-finger contacts. The socket is provided with two filament connectors with a ¼" diameter hole in each connector for making connection to the inner and outer filament contacts, one 6-32 terminal is provided for DC connection to the screen-grid. RF connection to the screen-grid may be made directly to the collet. The SK-300A has four 8-32 terminals for connection to the control-grid. The four contact rings are shown on the outline drawing.

MAXIMUM WORKING VOLTAGE:

Screen-Grid	3000 Vdc
Control-Grid	3000 Vdc

MATERIALS AND FINISHES

The socket body is made from brass silver-plated. The contact material is a non-ferrous spring alloy, Beryllium-copper, per QQ-C-533, heat treated for spring action and silver-plated, per QQ-S-365, for good RF conductivity. The insulation material is Teflon and Alsimag 665 ceramic.

INSTALLATION

The SK-300A Air-System Socket can be mounted on a chassis deck, partition or pressurized compartment. Chassis mounting is accomplished by cutting a 7-3/16" hole in the chassis deck or partition. The socket is then placed in the hole and fastened in place by eight 6-32 machine screws through the eight holes provided for fastening. The SK-300A Air-System Socket is recommended for use with the following tubes:

8170/4CX5000A	8171/4CX10,000D
8170W/4CX5000R	8281/4CX15,000A
4CW10,000A	

NET WEIGHT

SK-300A	3.25 lbs

(Revised 4-15-69) © 1964, 1969 by Varian

Printed in U.S.A.

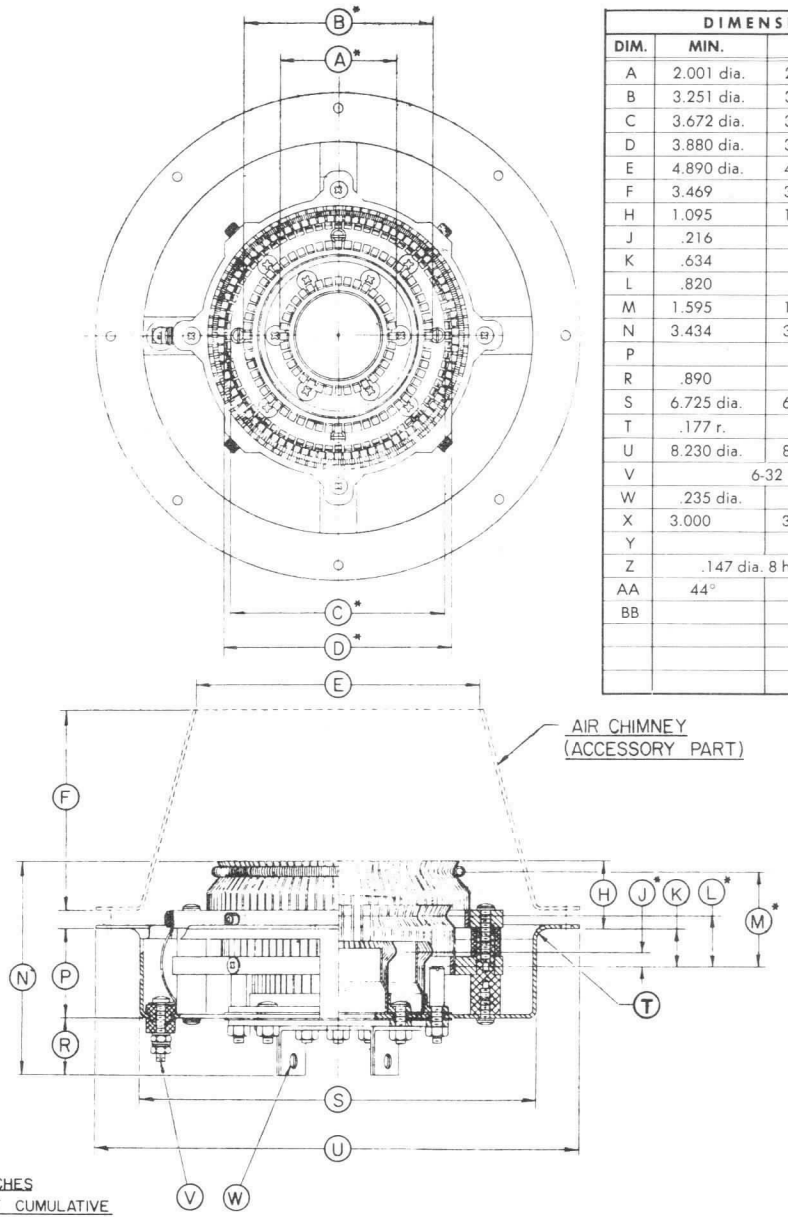

DIMENSION DATA			
DIM.	MIN.	MAX.	REF
A	2.001 dia.	2.061 dia.	
B	3.251 dia.	3.311 dia.	
C	3.672 dia.	3.732 dia.	
D	3.880 dia.	3.940 dia.	
E	4.890 dia.	4.921 dia.	
F	3.469	3.531	
H	1.095	1.140	
J	.216	.240	
K	.634	.689	
L	.820	.856	
M	1.595	1.657	
N	3.434	3.581	
P			1.500
R	.890	.940	
S	6.725 dia.	6.766 dia.	
T	.177 r.	.187 r.	
U	8.230 dia.	8.266 dia.	
V	6-32 NC-2A STUD		
W	.235 dia.	.265 dia.	
X	3.000	3.030	
Y			1.575
Z	.147 dia. 8 holes on 7¾ dia. p.c.		
AA	44°	46°	
BB			.950

NOTES

1. ALL DIMENSIONS IN INCHES
2. TOLERANCES ARE NOT CUMULATIVE
3. * CONTACT SURFACES

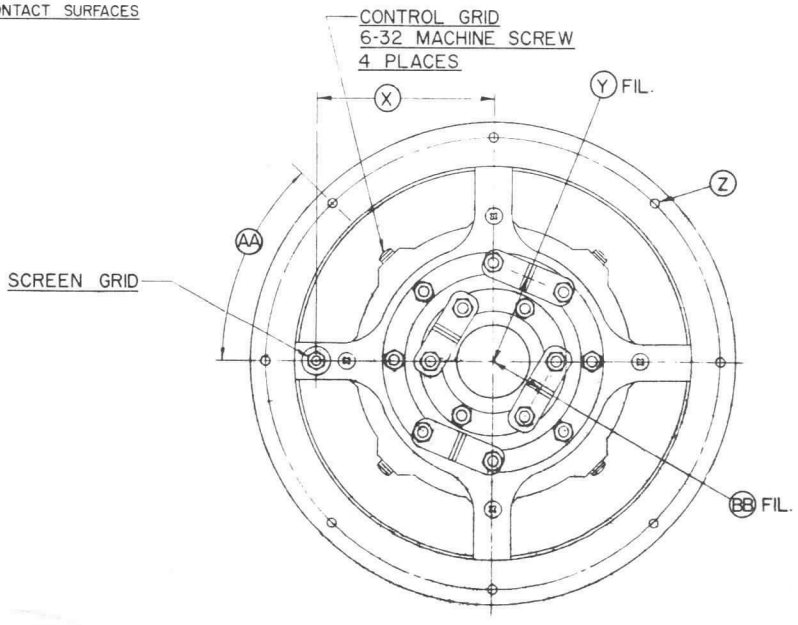

EIMAC
Division of Varian
SAN CARLOS
CALIFORNIA

SK-306
SK-316

AIR-SYSTEM CHIMNEYS

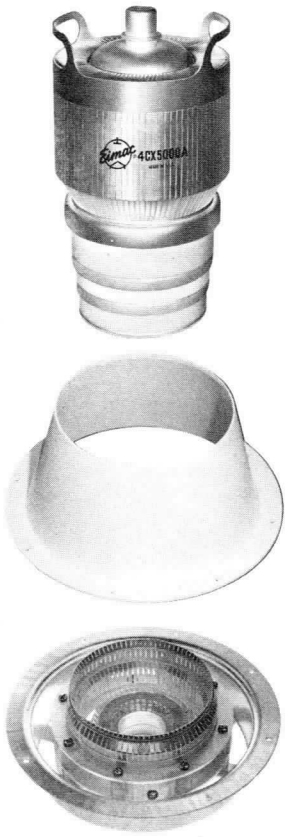

SK-306 Chimney shown with 4CX5000A and SK-300 socket

The SK-306 and SK-316 Air-System Chimneys are intended for use with the tube and socket combinations listed below. They are used to direct cooling air to the tube's anode cooling fins after it has been forced through the companion Air-System Socket.

MATERIALS

These chimneys are molded from a gray thermosetting polyester premix compound.

INSTALLATION

The SK-306 mounts above the chassis or plenum and is secured by the eight mounting screws that secure the SK-300 or SK-300A socket.

The SK-316 mounts above the chassis with four separate mounting screws on 8-15/16" diameter pitch circle.

CHIMNEY/TUBE/SOCKET COMBINATIONS

CHIMNEY	TUBE	SOCKET
SK-306	4CX5000A 4CX5000R	SK-300
SK-316	4CX15,000A	SK-300A

Net Weight . . . . . SK-306 – 5.5 ounces
SK-316 – 11 ounces

(Revised 8-15-66) © 1963, 1966 Varian

Printed in U.S.A.

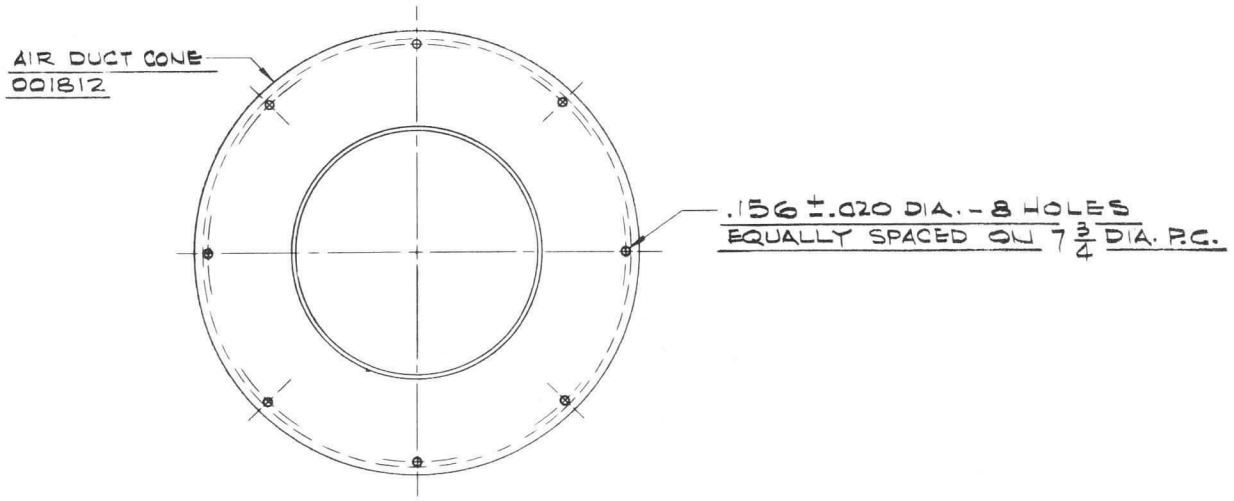

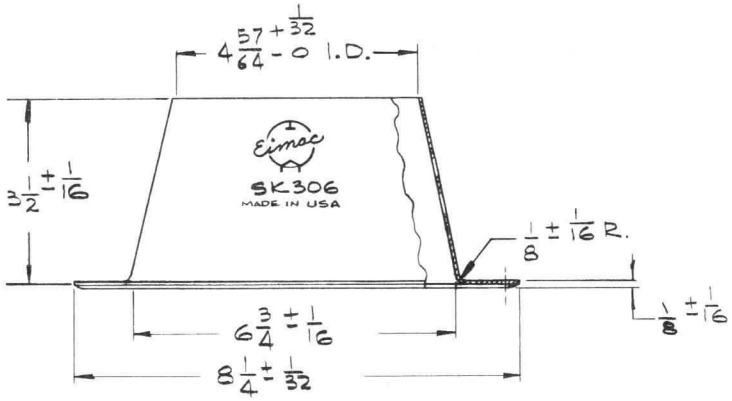

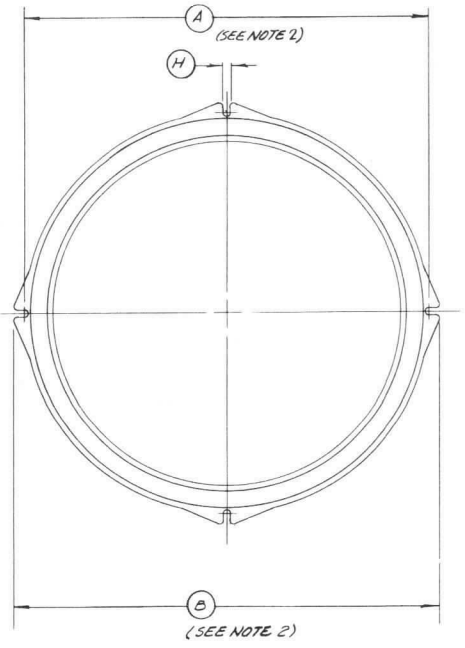

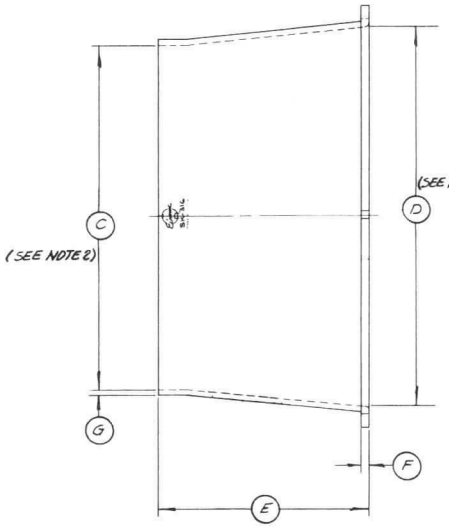

DIM.	MIN	MAX.	REF.
A	8.900	8.985	
B	9.262	9.389	
C	7.590	7.652	
D	8.340	8.440	
E	4.606	4.706	
F	.156	.218	
G	.062	.125	
H	.140	.190	

NOTES:
1. DIMS. IN INCHES
2. DIAS. NOTED ARE AVERAGE OF DIA. MEASUREMENTS TAKEN 90° APART WITH PART UNRESTRAINED
3. MAX. OPERATING TEMP. 125°C
4. MAT'L: POLYESTER PRE-MIX COMP. (GREY) FIBERGLASS PER MIL-R -7675.

SK-316

EIMAC
Division of Varian
SAN CARLOS
CALIFORNIA

SK-400

AIR-SYSTEM SOCKET

The SK-400 Air-System Socket is the recommended socket for use with the 4-400A tetrode, and it may be used as well with 4-250A, 4-125A and other tubes having the same physical dimensions. The SK-400 provides efficient connection between the tube and its external circuits, acts as a firm mechanical support for the tube, and controls the flow of cooling air around the tube envelope.

The SK-400 Air-System Socket consists of a cast aluminum body, which supports the electrical insulation for the terminals and acts as an air-duct to guide the air flow into the base of the tube. The air passes through the base of the tube and is guided past the tube envelope and plate seal by the Air-Chimney SK-406.

Most applications of the SK-400 Air-System Socket require the use of the SK-406 Air Chimney to guide the air over the envelope of the tube and past the plate seal. The SK-406 Air Chimney may be omitted only in the few special cases where other provisions for cooling the tube envelope and plate seal are made.

The electrical insulation for the connecting jacks and their terminals is a disk of low-loss insulating material, resting on a shoulder turned into the bottom of the socket body. The insulating disk is held in place by four machine screws which act as clamps. The design permits the insulation and terminal assembly to be rotated to any convenient direction and clamped firmly in place, so that no compromise with wiring requirements will have to be made when the socket is installed.

An air blower must be connected to the socket air-inlet. This can be done by means of a duct terminating in a cylindrical fitting of 1¼ inches O.D., or the chassis may be enclosed and connected to the blower. In either case, the pressure drops and corresponding flow-rates will depend upon the tube type, power level, operating frequency and ambient conditions, and must be obtained from the data sheet for the tube in use.

Socket air pressure can be measured conveniently by a manometer arranged to indicate the pressure difference between the air in the socket and the air in its surroundings. To facilitate and standardize this measurement, a ¼-28-threaded hole is provided in the wall of the socket opposite the air inlet. A probe or fitting can be screwed into this hole for connection to a manometer; it should be screwed into the socket until its end is flush with the inner wall of the socket base. It should not be permitted to protrude inside the inner wall of the socket.

The SK-400 Air-System Socket is designed for under-chassis mounting and requires a three-inch diameter hole through the chassis deck. The socket is fastened in place by four 10-32 machine screws, running in tapped holes in the cast aluminum socket body. These four screws also hold four small, double clips which serve to hold the SK-406 Air-Chimney in place.

When a tube is inserted in the socket, the five pins on the tube base are engaged by five self-aligning pin jacks in the socket. The connecting leads to the socket must be sufficiently flexible to permit free movement of the pin-jacks, or the self-aligning feature may be impaired.



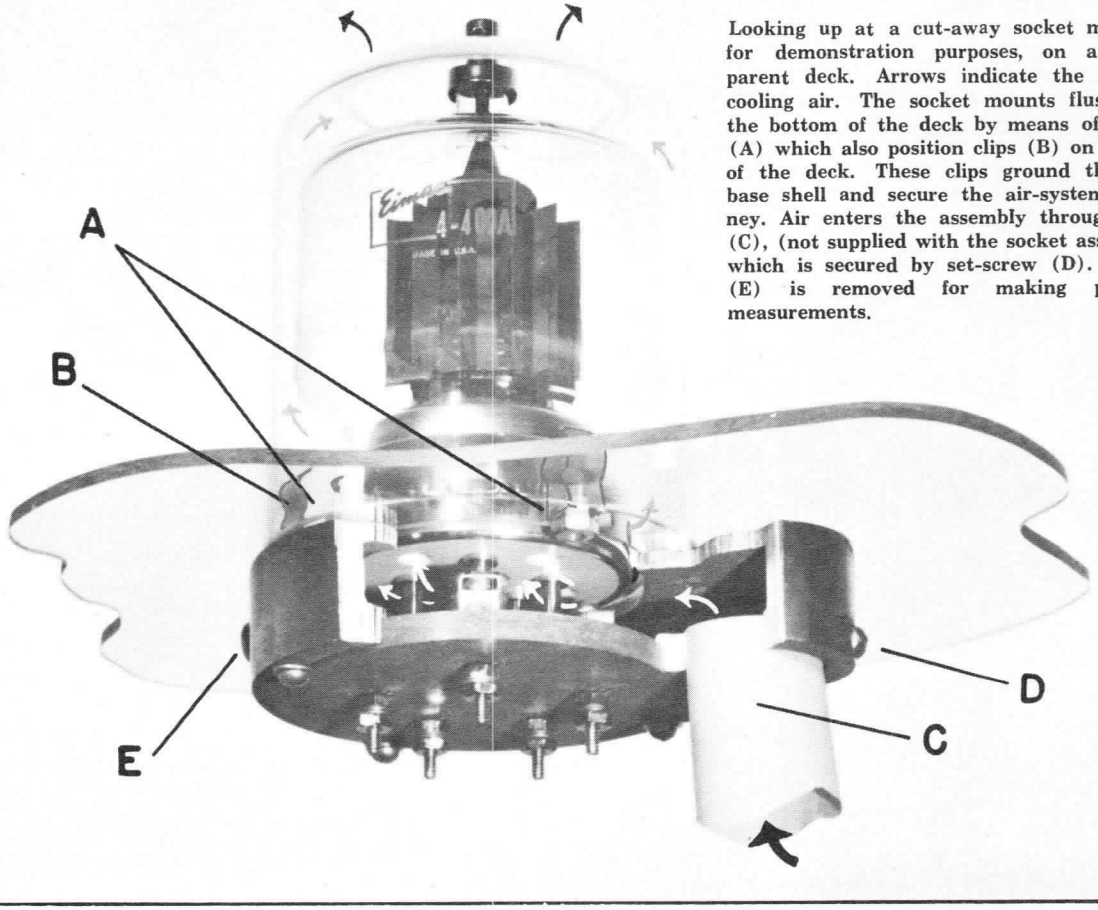

Looking up at a cut-away socket mounted, for demonstration purposes, on a transparent deck. Arrows indicate the flow of cooling air. The socket mounts flush with the bottom of the deck by means of screws (A) which also position clips (B) on the top of the deck. These clips ground the tube base shell and secure the air-system chimney. Air enters the assembly through duct (C), (not supplied with the socket assembly) which is secured by set-screw (D). Screw (E) is removed for making pressure measurements.

(Effective 4-1-56) Copyright 1956 by Eitel-McCullough, Inc.

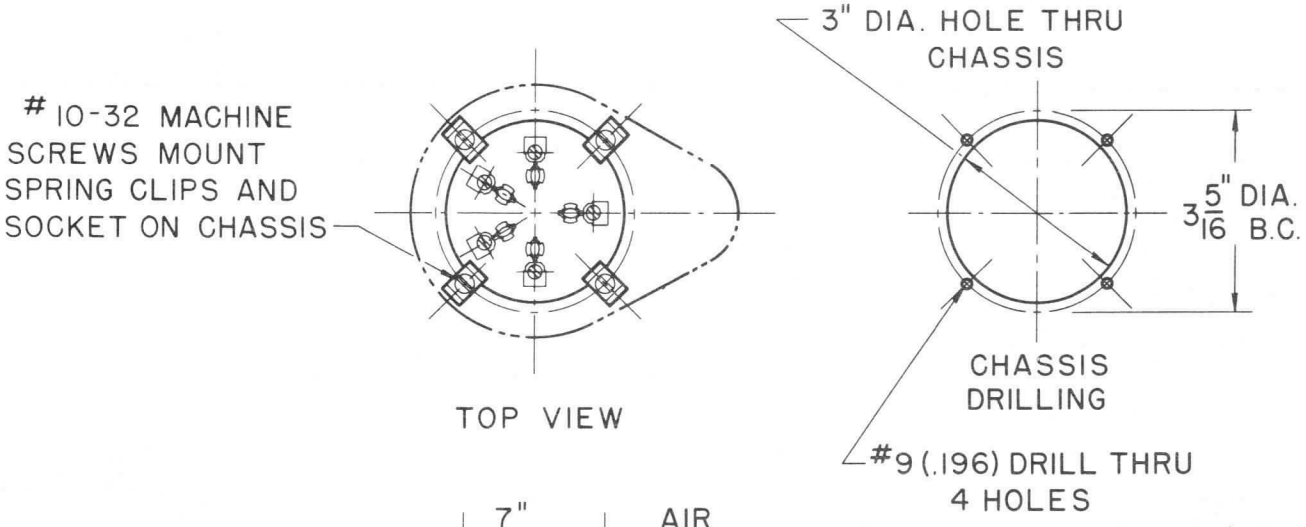

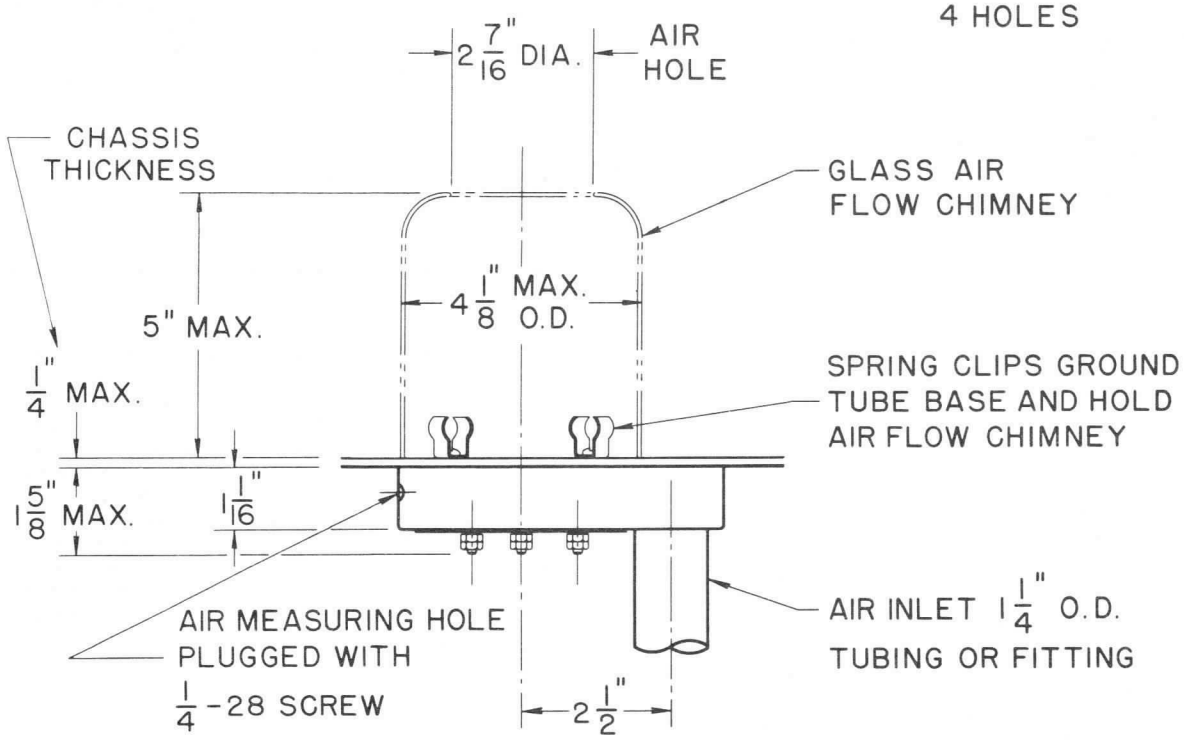

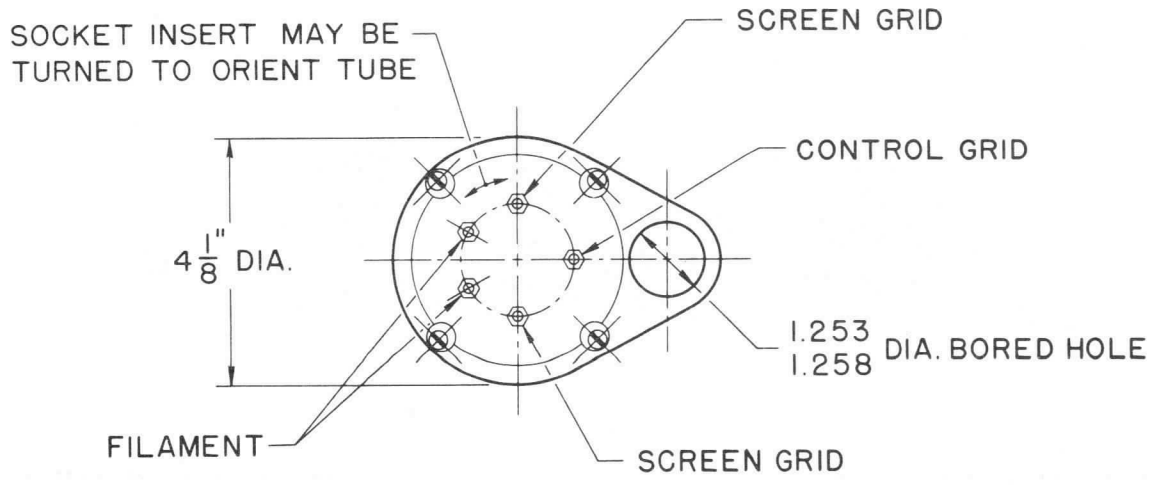

Printed in U.S.A. 92251

TECHNICAL DATA

SK-410

AIR-SYSTEM SOCKET

The EIMAC SK-410 is an Air-System Socket recommended for use with the tube types listed below, or other types having the same special five-pin base. Three different glass Air-Chimneys are available from EIMAC for use with the SK-410, depending on the tube type to be used.

The SK-410 is especially recommended for pressurized-chassis installations. Cooling air then cools the base, envelope, and plate-seal areas of the tube, when directed by the proper Air Chimney.

Contact terminals are provided for all five of the tube base connections, with the anode connection made separately at the top of the tube.

The SK-410 and its contact assemblies are humidity and salt-spray resistant.

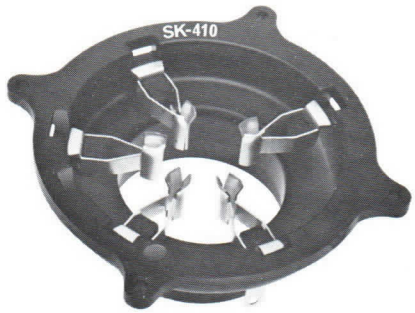



BASE CONNECTIONS, MATERIALS, AND FINISHES

The socket shell or body is of a molded plastic with excellent insulation characteristics to match the tube types for which this unit was designed. The base contact terminals are made of beryllium-copper and are silver plated. A set of four clips are provided, for locating and holding the recommended Air Chimney. These clips are also made of beryllium-copper and are cadmium plated. Additional clips, of the same type, are required to ground the metal base shell of some tube types; see INSTALLATION notes, below.

NET WEIGHT (Approx.) . . . . . 5.5 oz; 156 gms

INSTALLATION

The SK-410 Air-System Socket can be mounted on a chassis deck, partition, or pressurized compartment. Mounting is accomplished by cutting a proper size hole in the mounting surface, placing the socket below the hole, and fastening it into place with four 6-32 maching screws (not supplied), through the four mounting holes in the "ears" of the socket body. The proper chassis hole size required is dependent on the tube type to be used, and is indicated with the tabulation of tubes and recommended Air-Chimneys shown below. The socket has a 2.4 inch O.D. round neck extending 3/4 inch below the main socket body to provide a means for connecting a standard air duct to the base. Four metal clips are provided for retention and positioning of the Air Chimney. Tube types with a metal base shell will require four additional clips (not supplied) to ground the base shell. The EIMAC Part Number for this clip is 115846.

The following listing shows the EIMAC tube types which may be used with the SK-410, and the recommended Air Chimney. The proper mounting hole size is indicated, and the need for the additional clips for grounding of the tube base shell is shown.

(Revised 12-1-73) 1962, 1973 by Varian Printed in U.S.A.

SK-410

TUBE TYPE*	AIR CHIMNEY
4-125A / 4D21	None Available
4D21A	None Available
4PR125A / 8247	None Available
4-250A / 5D22	SK-406
4-400A / 8438	SK-406
4-400C / 6775	SK-406
4PR400A / 8188	SK-406
4PR250C / 8248	None Available
4-500A	SK-426
5-500A	SK-426
175A	SK-406
5867A	SK-406
6569	SK-406
6580	SK-406

TUBE TYPE†	AIR CHIMNEY
6155	None Available
3-400Z / 8163	SK-416
3-500Z	SK-406
6156	SK-406
4-400B / 7627	SK-406

* These types all have a metal base shell. Chassis mounting hole size should be 2-5/8 inch diameter. Four extra base clips should be ordered for shell grounding if Air Chimney is to be used.

† These types have no base shell. Chassis mounting hole size should be 3-5/8 inch diameter. No additional base clips are required.

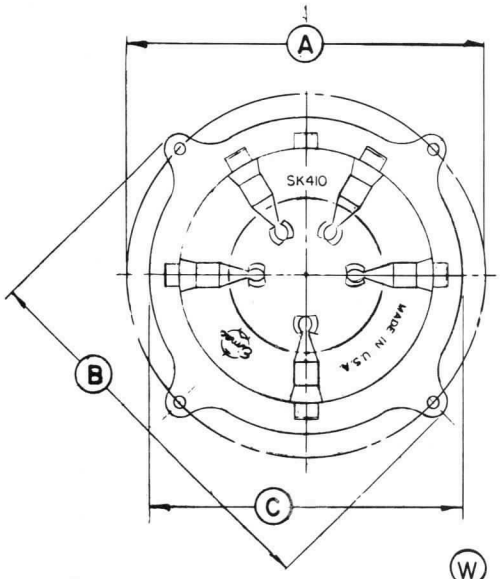

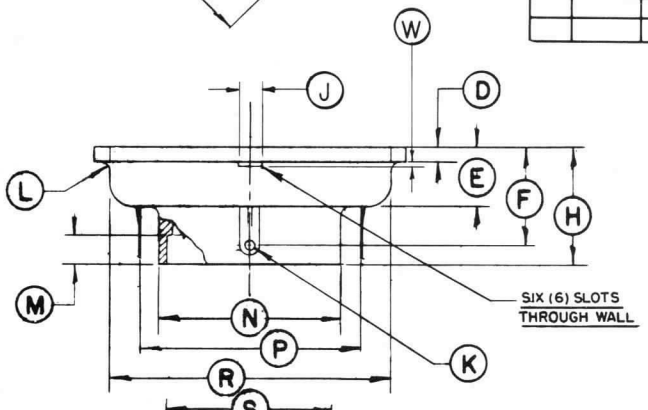

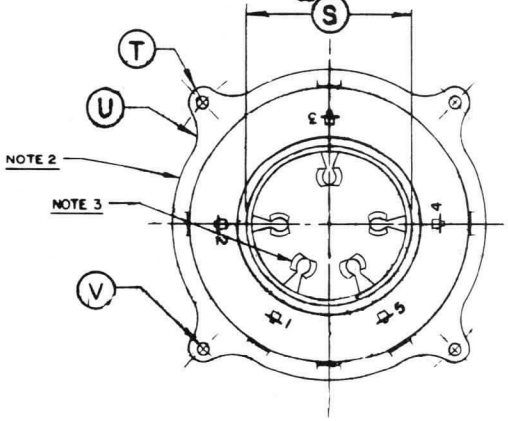

DIMENSIONAL DATA						
DIM	INCHES			MILLIMETERS		
	MIN.	MAX.	REF.	MIN.	MAX.	REF.
A	4.593	4.656	- -	116.66	118.26	- -
B	4.968	5.031	- -	126.19	127.79	- -
C	4.031	4.093	- -	102.39	103.96	- -
D	0.156	0.218	- -	3.96	5.54	- -
E	0.718	0.781	- -	18.24	19.84	- -
F	- -	- -	1.250	- -	31.75	- -
H	1.468	1.531	- -	37.29	38.89	- -
J	0.281	0.343	- -	7.14	8.71	- -
K	0.093	0.156	- -	2.36	3.96	- -
L	0.093R	0.156R	- -	2.36R	3.96R	- -
M	0.343	0.406	- -	8.71	10.31	- -
N	2.343	2.406	- -	59.51	61.11	- -
P	- -	- -	2.890	- -	73.41	- -
R	3.593	3.656	- -	91.27	82.87	- -
S	2.140	2.203	- -	54.36	55.96	- -
T	- -	- -	0.187R	- -	- -	4.75
U	- -	- -	0.500R	- -	- -	12.70
V	0.139	0.152	- -	3.53	3.86	- -
W	0.031	0.093	- -	0.79	2.36	- -

NOTES:
1. REF DIMENSIONS ARE FOR INFO ONLY & ARE NOT REQUIRED FOR INSPECTION PURPOSES.
2. SOCKET AND SHELL:
   MAT'L: DIALLYL PHTHALATE.
3. TUBE PIN CONTACT CLIPS.
   MAT'L: BERYLLIUM COPPER
   FINISH: SILVER PLATED.
4. CHIMNEY/GROUNDING CLIP
   PART No. 115846
   MAT'L: BERYLLIUM COPPER, HEAT TREATED
   FINISH: CADMIUM PLATED.
   (4) SUPPLIED WITH SOCKET FOR SECURING CHIMNEY. WHEN ADDITIONAL CHIMNEY/GROUNDING CLIPS ARE REQ'D TO GROUND THE METAL SHELL OF SOME TUBE TYPES THEY MAY BE ORDERED AS PART No. 115846. IT IS RECOMMENDED THAT (4) BE USED WHEN THE METAL SHELL IS TO BE GROUNDED.

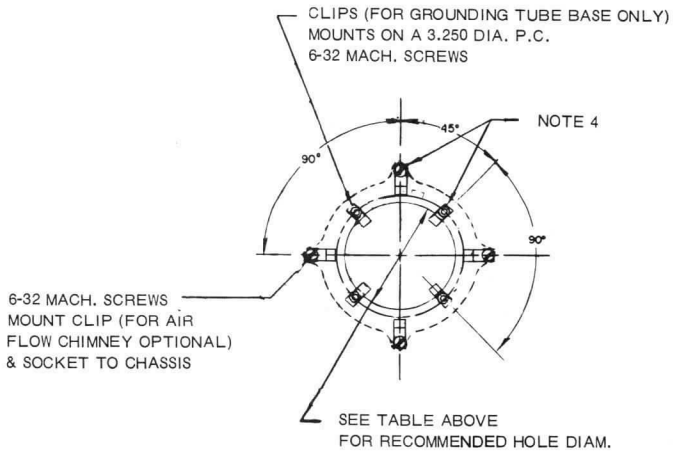

TECHNICAL DATA

SK-406
SK-416
SK-426

AIR-SYSTEM CHIMNEYS



The SK-406, SK-416, and SK-426 Air-System Chimneys are intended for use with those tube and socket combinations listed below. They are used to direct cooling air from the socket across the glass envelope of the tube, past the plate seal and heat-radiating connector.

MATERIALS

The SK-406, SK-416, and SK-426, Air-System Chimneys are made of sturdy, heat resistant Pyrex glass. The bottom edge is flat for a tight seal against the chassis while the top edge has been fired for smoothness.

INSTALLATION

These chimneys are designed for installation above the chassis or plenum that holds the companion Air-System Socket. The four spring clips supplied with the SK-400 and SK-410 sockets act as retaining clips for the chimney. After the socket and spring clips are installed, the chimney is pressed down over the spring clips.

CHIMNEY/TUBE/SOCKET COMBINATIONS

CHIMNEY	TUBE	SOCKET
SK-406	3-500Z 4-250A/5D22 4-400A/8438 4-400B/7527 4-400C/6775 4PR400A/8188 175A 6156 5867A 6569 6580	SK-400 OR SK-410
SK-416	3-400Z/8163	
SK-426	4-500A 5-500A	

Net Weight . . . . . SK-406 - 8 ounces
SK-416 - 7 ounces
SK-426 - 8 ounces

(Revised 12-1-73) 1963, 1965, 1967, 1973 by Varian Printed in U.S.A.

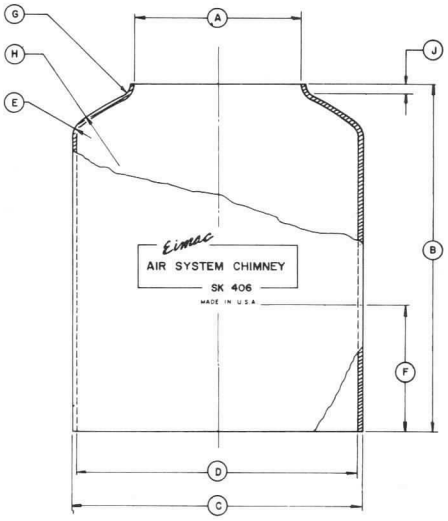

DIMENSIONAL DATA						
DIM	INCHES			MILLIMETERS		
	MIN.	MAX.	REF.	MIN.	MAX.	REF.
A	2.312	2.438	- -	58.72	61.92	- -
B	4.813	5.000	- -	122.25	127.00	- -
C	- -	4.125	- -	- -	104.77	- -
D	3.718	3.906	- -	94.44	99.23	- -
E	- -	- -	0.250	- -	- -	6.35
F	1.625	1.875	- -	41.27	47.62	- -
G	- -	0.188	- -	- -	4.77	- -
H	- -	- -	3.250	- -	-	82.55
J	- -	0.188	- -	- -	4.77	- -

SK-406

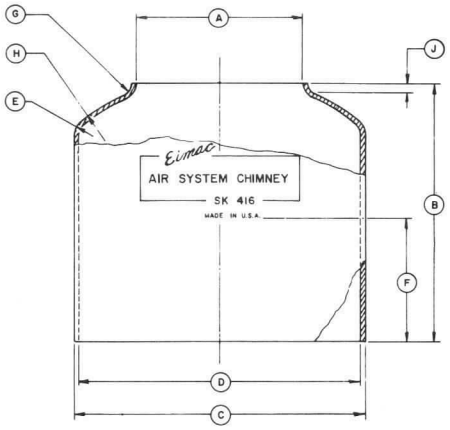

DIMENSIONAL DATA						
DIM	INCHES			MILLIMETERS		
	MIN.	MAX.	REF.	MIN.	MAX.	REF.
A	2.312	2.438	- -	58.72	61.92	- -
B	4.000	4.188	- -	101.60	106.37	- -
C	- -	4.125	- -	- -	104.77	- -
D	3.718	3.906	- -	94.44	99.23	- -
E	- -	- -	0.250	- -	- -	6.35
F	1.187	1.312	- -	30.15	33.32	- -
G	- -	0.188	- -	- -	4.77	- -
H	- -	- -	3.250	- -	- -	82.55
J	- -	0.188	- -	- -	4.77	- -

SK-416

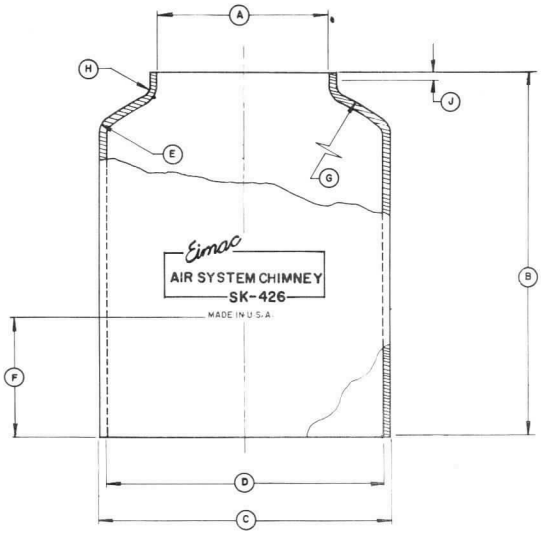

DIMENSIONAL DATA						
DIM	INCHES			MILLIMETERS		
	MIN.	MAX.	REF.	MIN.	MAX.	REF.
A	2.312	2.438	- -	58.72	61.92	- -
B	5.063	5.250	- -	128.60	133.35	- -
C	- -	4.125	- -	- -	104.77	- -
D	3.718	3.906	- -	94.44	99.23	- -
E	- -	- -	0.250	- -	- -	6.35
F	1.625	1.875	- -	41.27	47.62	- -
G	- -	- -	3.250	- -	- -	82.55
H	- -	- -	0.188	- -	- -	4.77
J	- -	- -	0.125	- -	- -	3.17

SK-426

EIMAC
Division of Varian
SAN CARLOS
CALIFORNIA

SK-500

AIR-SYSTEM SOCKET AND CHIMNEY



The SK-500 Air-System Socket is the recommended socket for use with the 4-1000A tetrode, and it may be used as well with any other tubes having the same physical dimensions. The SK-500 provides efficient connection between the tube and its external circuits, acts as a firm mechanical support for the tube, and controls the flow of cooling air around the tube envelope.

The SK-500 Air-System Socket consists of a cast aluminum body which supports the electrical insulation for the terminals and acts as an air-duct to guide the air flow into the base of the tube. The air passes through the base of the tube and is guided past the tube envelope and plate seal by the glass Air Chimney, SK-506.

Most applications of the SK-500 Air-System Socket require the use of the SK-506 Air Chimney to guide the air over the envelope of the tube and past the plate seal. The SK-506 Air Chimney may be omitted only in the few special cases where other definite provisions for cooling the tube envelope and plate seal have been made.

The electrical insulation for the connecting jacks and their terminals is a disk of low-loss insulating material, resting on a shoulder turned into the bottom of the socket body. The insulating disk is held in place by four machine screws which act as clamps. The design permits the insulation and terminal assembly to be rotated to any convenient direction and clamped firmly in place, so no compromise with wiring requirements will have to be made when the socket is installed.

An air blower must be connected to the socket air-inlet. This can be done by means of a duct terminating in a cylindrical fitting of two inches O.D., or the chassis may be enclosed and connected to the blower. In either case the pressure drops and corresponding flow-rates will depend upon the tube type, power level, operating frequency and ambient conditions, and must be obtained from the data sheet for the specific tube type being used.

Socket air pressure can be measured conveniently by a manometer arranged to indicate the pressure difference between the air in the socket and the air in its surroundings. To facilitate and standardize this measurement, ¼-28-threaded hole is provided in the wall of the socket body opposite the air inlet. A probe or fitting can be screwed into this hole for connection to a manometer; it should be screwed into the socket until its end is flush with the inner wall of the socket base. It should not be permitted to protrude inside the inner surface of the socket wall.

The SK-500 Air-System Socket is designed for under-chassis mounting and requires a 3-¾-inch diameter hole through the chassis deck. The socket is fastened in place by four No. 10 32 machine screws, running in tapped holes in the cast aluminum body. These four screws also hold four small, double clips, which serve to ground the metal base of the tube and to hold the SK-506 Air Chimney in place.

When a tube is inserted in the socket, the five pins on the tube are engaged by five self-aligning pin-jacks in the socket. The connecting leads to the socket must be sufficiently flexible to permit free movement of the pin-jacks, or the self-aligning feature may be impaired.

(Revised 3-15-67) © 1961, 1967 by Varian

Printed in U.S.A.

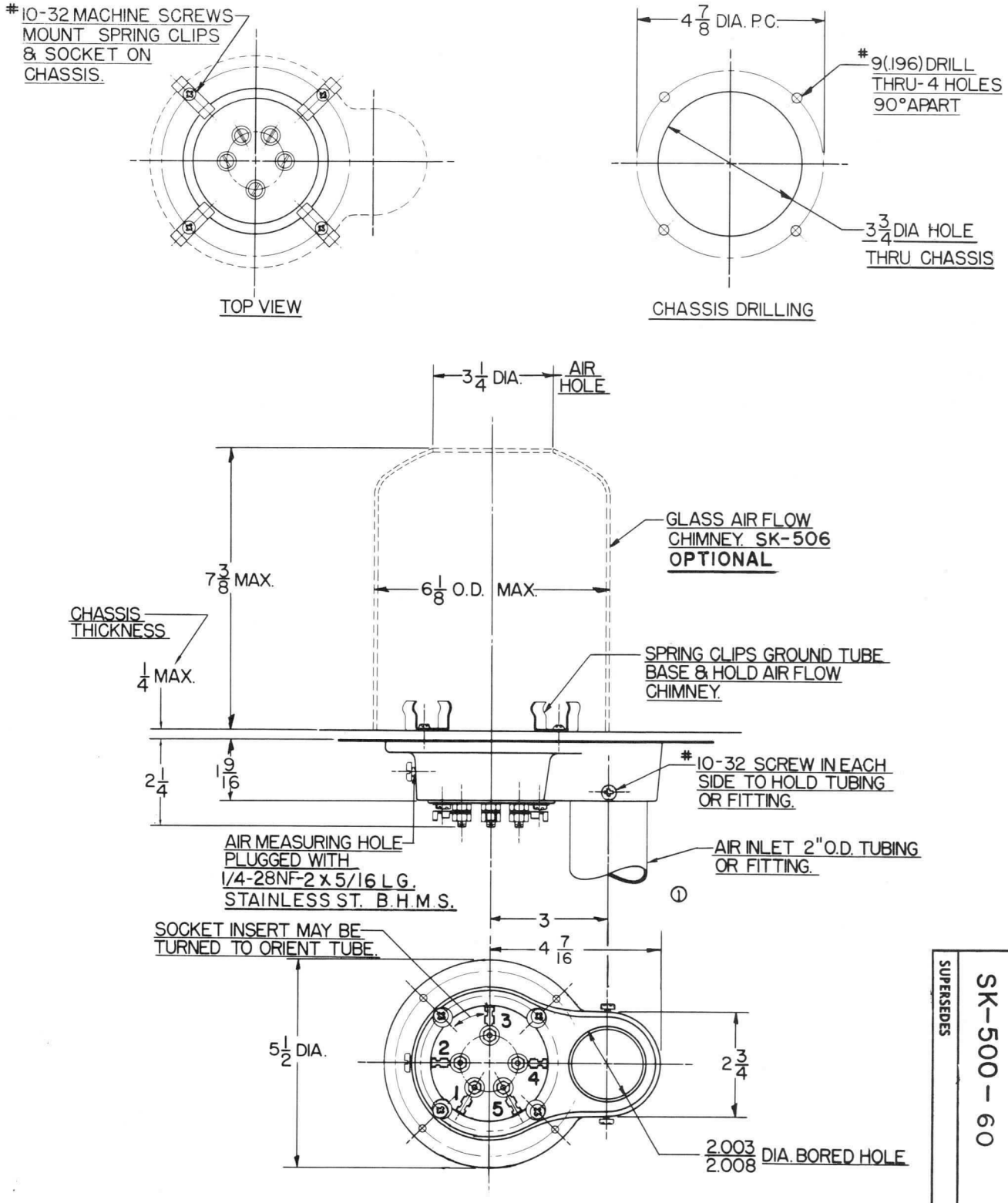

REFER TO TUBE DATA SHEET FOR TERMINAL DESIGNATIONS

CODE IDENT.	PART NO.
06980	SK-500

SUPERSEDES

DRWG. No. SK-500-60

CHANGE 6

EIMAC
Division of Varian
SAN CARLOS
CALIFORNIA

SK-506
SK-516

AIR-SYSTEM CHIMNEY

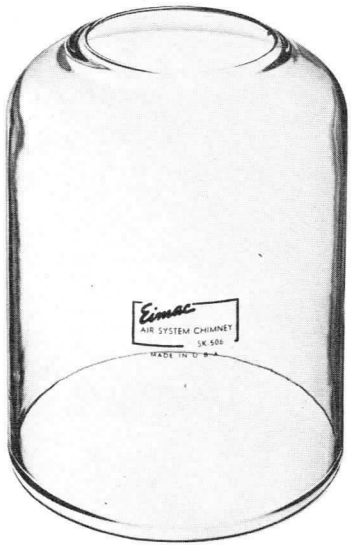

The SK-506 and SK-516 Air-System Chimneys are intended for use with those tube and socket combinations listed below. They are used to direct cooling air from the socket across the glass envelope of the tube, past the plate seal and heat radiating connector.

MATERIALS

The SK-506 and SK-516 Air-System Chimneys are made of heat resistant Pyrex glass. The bottom edge is ground flat for a tight air seal against the chassis while the top edge has been fired for smoothness.

INSTALLATION

These chimneys are designed for above-chassis installation over the companion Air-System Socket. Four Spring Clips supplied with the SK-500 and SK-510 sockets ground the metal tube base and act as retaining clips for the chimney.

CHIMNEY/TUBE/SOCKET COMBINATIONS

CHIMNEY	TUBE	SOCKET
SK-506	4-1000A 4PR1000A 4PR1000B	SK-500
SK-516	3-1000Z	SK-510

Net Weight

SK-506 . . . . . 10 ounces

SK-516 . . . . . 8 ounces

(Revised 4-15-69) © 1963, 1964, 1969 by Varian

Printed in U.S.A.

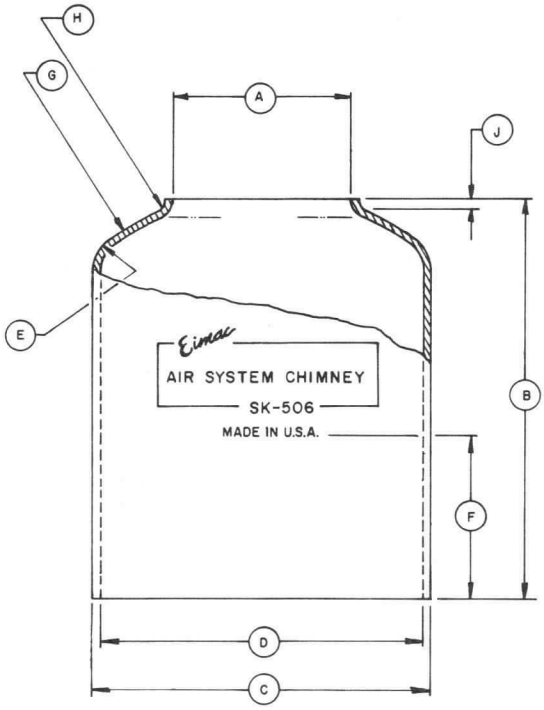

DIMENSIONS IN INCHES			
DIMENSIONAL DATA			
REF.	MIN.	MAX.	NOM.
A	3.188	3.313	
B	7.187	7.375	
C		6.125	
D	5.625	5.875	
E			.750
F	2.937	3.062	
G			4.625
H			.188
J			.188

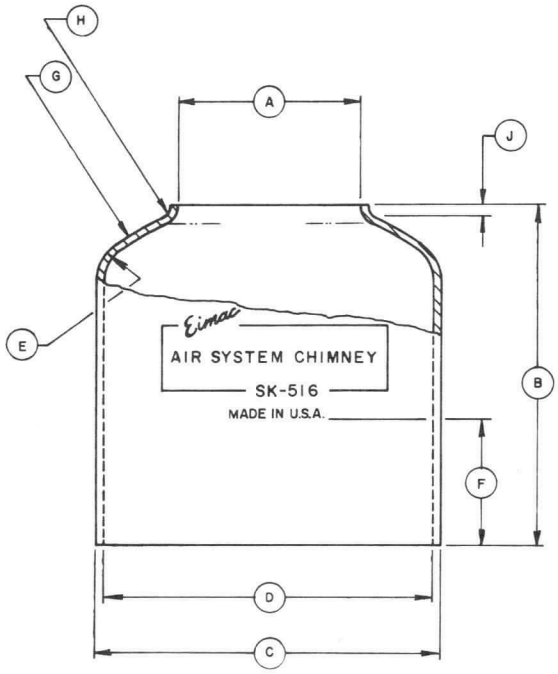

DIMENSIONS IN INCHES			
DIMENSIONAL DATA			
REF.	MIN.	MAX.	NOM.
A	3.188	3.313	
B	6.437	6.625	
C		6.125	
D	5.625	5.875	
E			.750
F	2.187	2.312	
G			4.625
H			.188
J			.188

TECHNICAL DATA

SK-510

AIR-SYSTEM SOCKET

The EIMAC SK-510 is an Air-System Socket recommended for use with the tube types listed below, or other types having the same special five-pin base. Two different glass Air-Chimneys are available from EIMAC for use with the SK-510, depending on the tube type used.

The SK-510 is especially recommended for pressurized-chassis installations. Cooling air then cools the base, envelope, and plate-seal areas of the tube, when directed by the proper Air-Chimney.

Contact terminals are provided for all five of the tube base connections, with the anode connection made separately at the top of the tube.

The SK-510 and its contact assemblies are humidity and salt-spray resistant.

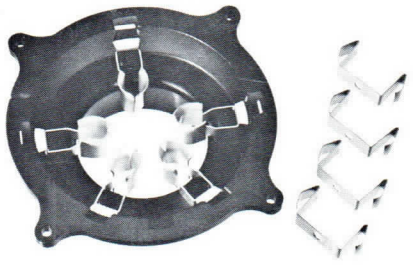

BASE CONNECTIONS, MATERIALS, AND FINISHES

The socket shell or body is of a molded plastic with excellent insulation characteristics to match the tube types for which this unit was designed. The base contact terminals are made of beryllium-copper and are silver plated. A set of four clips are provided, for locating and holding the recommended Air-Chimney concentric with the tube. These clips are double-ended so they will ground the metal base shell of some tube types which require this. The clips are also made of beryllium copper but are cadmium plated.

NET WEIGHT (Approximate) . . . . . 6.5 oz; 184 gms

INSTALLATION

The SK-510 Air-System Socket can be mounted on a chassis deck, partition, or pressurized compartment. Mounting is accomplished by cutting a 3-3/4 inch hole in the mounting surface, placing the socket below the hole, and fastening it into place with four 6-32 machine screws (not supplied) through the four mounting holes in the "ears" of the socket body.

The socket also has a 2-3/8 inch O.D. round neck extending 3/4 inch below the main socket body which provides a means for connecting a standard air duct to the base.

The following listing shows the EIMAC tube types which may be used with the SK-510 and the recommended Air-Chimney.

TUBE TYPE	AIR CHIMNEY
3-1000Z (8164)	SK-516
4-1000A (8166)	SK-506
4PR1000A (8189)	SK-506
4PR1000B (8189W)	SK-506
TYPE 279	SK-506
TYPE 284	SK-506
TYPE 8960	SK-506

(Revised 3-15-75) © 1963, 1966, 1975 by Varian

Printed in U.S.A.

DIMENSIONAL DATA						
DIM	INCHES			MILLIMETERS		
	MIN.	MAX.	REF.	MIN.	MAX.	REF.
A	4.593*	4.656*	- -	116.7	118.3	- -
B	4.968	5.031	- -	126.2	127.8	- -
C	4.031*	4.093*	- -	102.4	104.0	- -
D	0.156	0.218	- -	3.96	5.54	- -
E	0.718	0.781	- -	18.24	19.83	- -
F	- -	- -	1.250	- -	- -	31.75
H	1.468	1.531	- -	37.29	38.89	- -
J**			- -			- -
K	0.093*	0.156*	- -	2.36*	3.96*	- -
L	0.093R	0.156R	- -	2.36R	3.96R	- -
M	0.343	0.406	- -	8.71	10.31	- -
N	2.343*	2.406*	- -	59.51*	61.11*	- -
P	- -	- -	2.890	- -	- -	73.41
R	3.593*	3.656*	- -	91.26*	92.86*	- -
S	2.140*	2.203*	- -	54.36*	55.96*	- -
T	- -	- -	0.187R	- -	- -	4.75R
U	- -	- -	0.500R	- -	- -	12.70R
V	0.139*	0.152*	- -	3.53*	3.86*	- -

* DIAMETER

** 0.031 x 0.281, 0.093 x 0.343 (IN.)
0.79 x 7.14, 2.36 x 8.71 (MIL.)

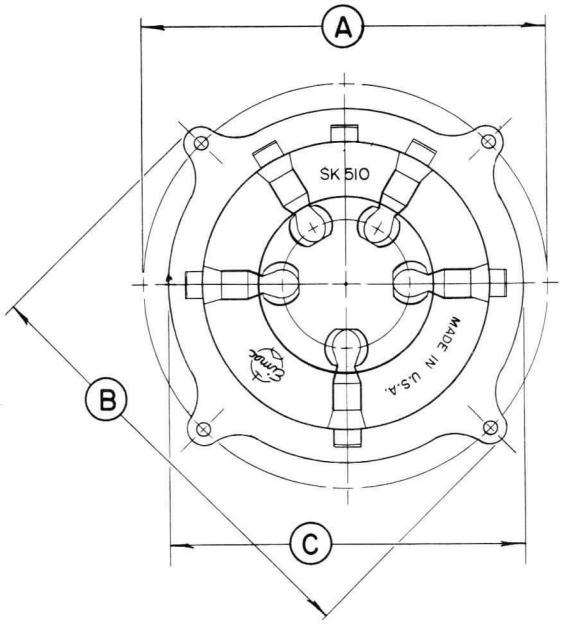

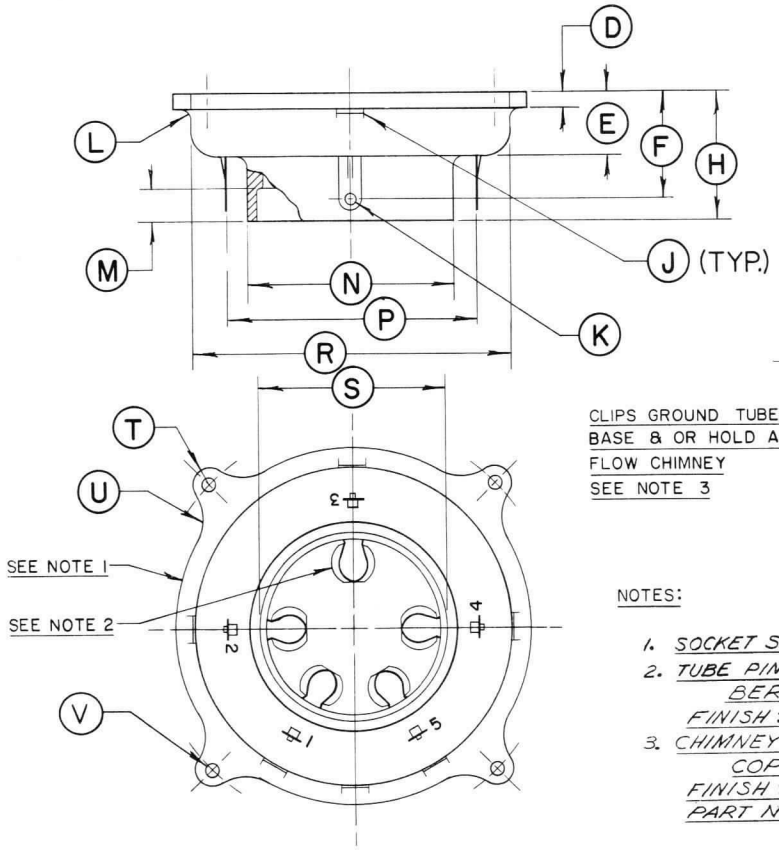

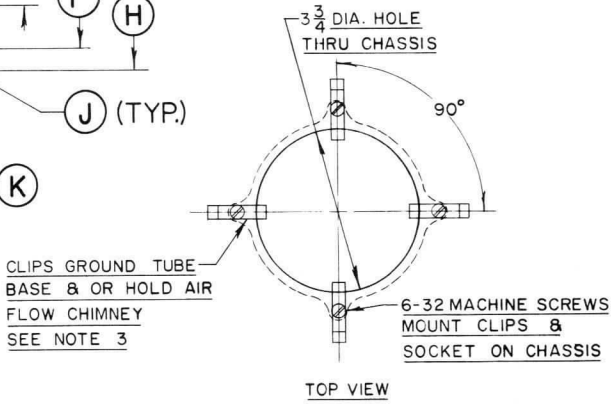

NOTES:

1. SOCKET SHELL - MAT'L : DIALLYL PHTHALATE.
2. TUBE PIN CONTACT CLIPS - MAT'L : BERYLLIUM COPPER. HEAT TREATED. FINISH : SILVER PLATED.
3. CHIMNEY CLIPS - MAT'L : BERYLLIUM COPPER, HEAT TREATED. FINISH : CADMIUM PLATED. PART NO. : 115844N PER EIMAC DWG 115842.

TECHNICAL DATA

SK-600A
SK-610A

AIR-SYSTEM SOCKETS



This series of sockets provide terminal connection, cooling air direction, and a low inductance screen bypass capacitor for the power tubes listed below. The SK-600 series sockets may be used with other tube types having similar basing.

These Air-System Sockets are recommended for use with the following tubes:

7034/4X150A	8249/4W300B	8904/4CX350FJ
7203/4CX250B	8321/4CX350A	8930
7580W/4CX250R	8322/4CX350F	8957/4CX250BC
7609	8621/4CX250FG	

Normally the ceramic chimney SK-606 is used with these two sockets to direct the cooling air past the body of the tube as it flows from pressurized chassis through the socket, then through the tube anode fins. Reverse air direction may be used. (Type 8930 uses Chimney SK-646).

The base contact fingers and the screen terminal fingers are heat treated beryllium copper. The base contact fingers are supported and insulated by polytrifluoroethylene, an excellent insulating material even at ultra high frequencies. All contact fingers, and the brass shell are silver plated to insure good contact and to resist corrosion.

These sockets have hermetically sealed screen bypass capacitors to protect against moisture and dirt.

The SK-600A socket has all base terminals brought out separately. The SK-610A has cathode terminals 2, 4, 6 and 8 connected to the shell.

INSTALLATION

These Air-System Sockets can be mounted on chassis decks or partitions or in coaxial tuning devices with no modification to the socket. Chassis mounting is accomplished by cutting a 2¼" diameter hole in the chassis deck or partition. The socket is then placed in the hole and held securely by the three toe clamps provided.

If the socket is to be used in a coaxial line, it may be mounted directly on the end of the input line outer conductor. The socket skirt fits snugly on a 1⅝" diameter cylinder and four screw holes are provided for fastening as shown in the outline drawing.

CHARACTERISTICS

	SK-600A	SK-610A
SCREEN BYPASS CAPACITOR WORKING VOLTAGE DC	1000	1000
SCREEN BYPASS CAPACITANCE(pF)	2700 ± 500	2700 ± 500
CATHODE TERMINALS CONNECT TO SHELL	No	Yes
SCREEN BYPASS CAPACITOR HERMETICALLY ENCAPSULATED	Yes	Yes
NET WEIGHT	3.5 oz. (99 gms)	3.5 oz. (99 gms)

(Revised 11-1-74)
© 1961, 1965, 1971, 1974 Varian
Printed in U.S.A.

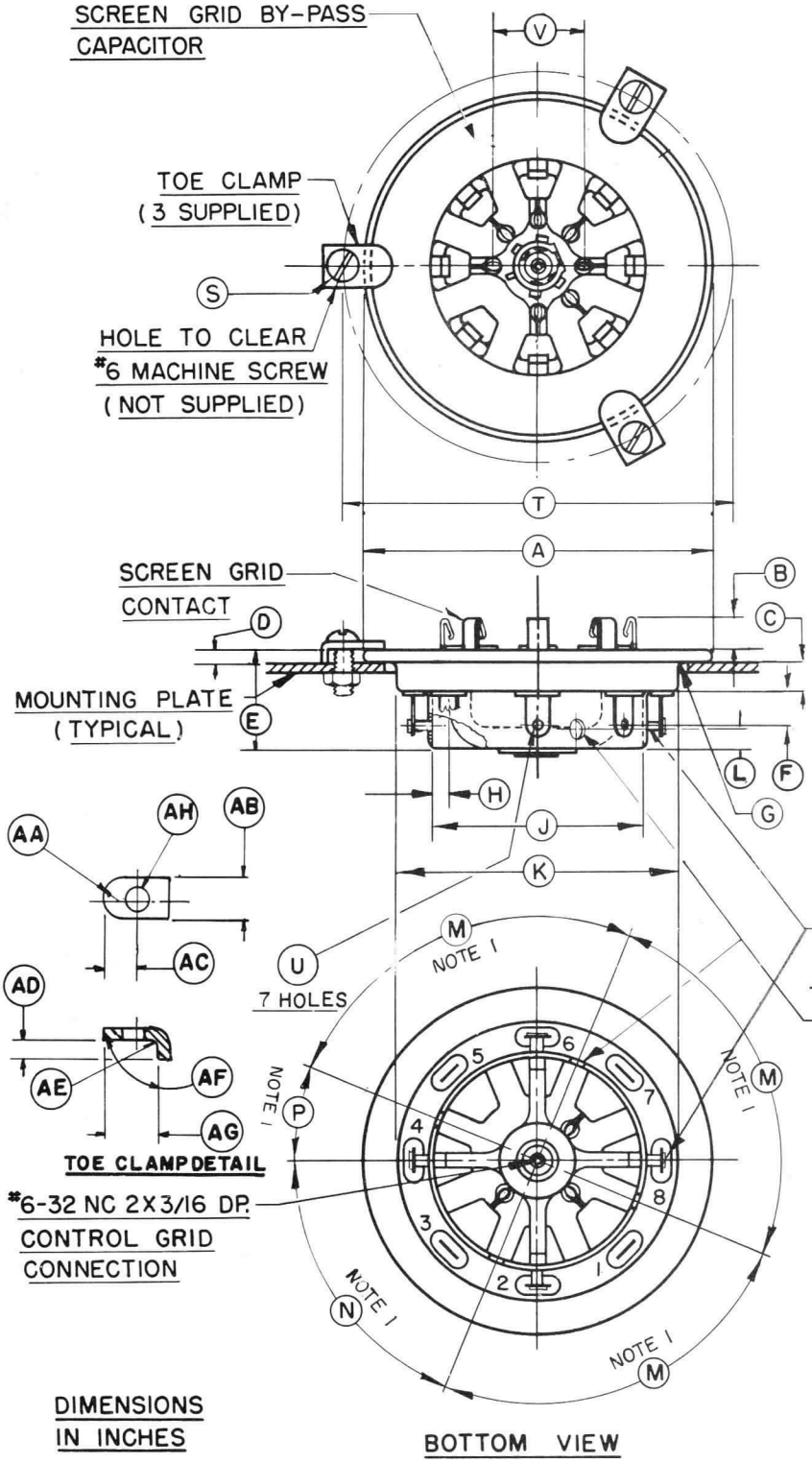

DIMENSIONAL DATA						
DIM	INCHES			MILLIMETERS		
	MIN.	MAX.	REF.	MIN.	MAX.	REF.
A	2.688	2.750	- -	68.27	69.85	- -
B	0.234	0.266	- -	5.94	6.76	- -
C	0.203	0.235	- -	5.16	5.97	- -
D	0.125	0.157	- -	3.17	3.99	- -
E	0.844	0.906	- -	21.44	23.01	- -
F	- -	- -	0.250	- -	- -	6.35
G	- -	0.031R	- -	- -	0.79R	- -
H	- -	- -	0.078	- -	- -	1.98
J	1.633	1.643	- -	41.48	41.73	- -
K	2.188	2.208	- -	55.57	56.08	- -
L	0.172	0.204	- -	4.37	5.18	- -
M	89° *	91° *	- -	89° *	91° *	- -
N	66.5° *	68.5° *	- -	66.5° *	68.5° *	- -
P	21.5° *	23.5° *	- -	21.5° *	23.5° *	- -
R	- -	- -	0.144	- -	- -	3.66
S	0.142	- -	- -	3.61	- -	- -
T	- -	- -	3.000	- -	- -	76.20
U	- -	- -	0.090	- -	- -	2.29
V	- -	- -	0.687	- -	- -	17.45
AA	0.125R	0.187R	- -	3.17R	4.75R	- -
AB	0.292	0.332	- -	7.42	8.43	- -
AC	0.292	0.332	- -	7.42	8.43	- -
AD	0.105	0.145	- -	2.69	3.68	- -
AE	- -	0.062R	- -	- -	1.57R	- -
AF	80°	100°	- -	80°	100°	- -
AG	0.417	0.457	- -	10.59	11.61	- -
AH	0.142	0.146	- -	3.61	3.71	- -

*SEE NOTE 1.

CONNECTIONS

NO. 1 SCREEN GRID
" 2 CATHODE
" 3 HEATER
" 4 CATHODE
" 5 NO CONNECTION
" 6 CATHODE
" 7 HEATER
" 8 CATHODE

NOTES:
1 – TOLERANCES ARE NOT CUMULATIVE

TECHNICAL DATA

SK-606
SK-626
SK-636B
SK-646
AIR-SYSTEM CHIMNEYS



The EIMAC SK-606, SK-626, SK-636B, and SK-646 Air-System Chimneys are intended for use with those tube and socket combinations listed below.

They are used to direct cooling air into the anode radiator on the tube types listed.

The SK-636B is also designed to hold the tube in use in place by means of a clamping band around the tube's radiator.

MATERIALS

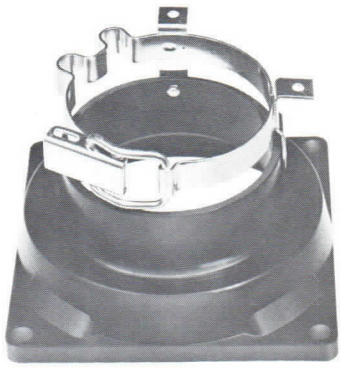

The SK-606 and SK-626 are made of high-temperature ceramic. The SK-636B is molded of diallyl meta-phthalate, and the clamping band is of beryllium copper. A neoprene "O" ring is furnished in a recess at the bottom of the chimney to more effectively seal the chimney to the socket. The SK-646 is molded of silicone resin glass fiber.

INSTALLATION

The SK-606 and SK-626 ceramic chimneys are installed by slipping them over the tube's radiator. They are held in place by their own weight or by a suitable clamping means.

The SK-646 also slips over the tube's radiator, and four clips are provided to secure the chimney in position.

The SK-636B is secured to the chassis over the companion Air-System Socket by means of four #6 screws (not provided). The clamping band includes two solder lugs to facilitate making electrical contact to the tube anode.



CHIMNEY/TUBE/SOCKET COMBINATIONS

Chimney	Socket	Tube
SK-606	SK-600 SK-600A SK-610 SK-610A SK-640	7203/4CX250B 8957/4CX250BC 8621/4CX250FG 7580W/4CX250R 8321/4CX350A
SK-626 SK-636B	SK-620 SK-620A SK-630 SK-630A	8322/4CX350F 8904/4CX350FJ 7034/4X150A 7609

Chimney	Socket	Tube
SK-646	SK-607	8809/4CX600J
SK-646	SK-600 SK-600A SK-610 SK-610A SK-640	8930
SK-606	SK-700 SK-710 SK-710A SK-711 SK-711A	8167/4CX300A 8561/4CX300Y

Net Weight (approximate) . . . . . SK-606, SK-626, SK-636B 1.4 oz; 49.5 gms
SK-646 2.7 oz; 76.5 gms

(Effective 11-1-74) © 1963, 1966, 1974 Varian Printed in U.S.A.

SK-606, SK-626, SK-636B, SK-646

DIM	INCHES		MILLIMETERS	
	MIN	MAX	MIN	MAX
A	1.635	1.700	41.53	43.18
B	1.781	1.881	45.24	47.78
C	0.812	0.875	20.62	22.23
D	0.156	0.218	3.96	5.54

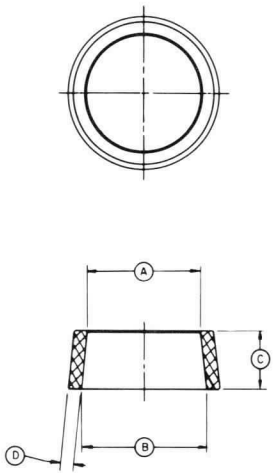

SK-606

DIM	INCHES		MILLIMETERS	
	MIN.	MAX.	MIN	MAX
A	1.650	1.720	41.91	43.69
B	2.300	2.362	58.42	60.00
C	0.698	0.738	17.73	18.75
D	0.156	0.218	3.96	5.54
E	0.573	0.613	14.55	15.57
F	- -	2.560	- -	65.02

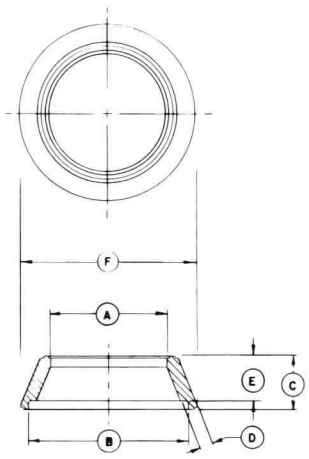

SK-626

DIMENSIONAL DATA						
DIM	INCHES			MILLIMETERS		
	MIN	MAX	REF	MIN	MAX	REF
A	2.609	2.641	- -	66.27	67.08	- -
B	1.607	1.677	- -	40.82	42.60	- -
C	1.109	1.141	- -	28.17	28.98	- -
D	0.560	0.600	- -	14.22	15.24	- -
E	0.155	0.187	- -	3.94	4.75	- -
F	0.219	0.281	- -	5.56	7.14	- -
G	2.335	2.365	- -	59.31	60.07	- -
H	1.580	1.620	- -	40.13	41.15	- -
J	0.083	0.103	- -	2.11	2.62	- -
K	0.281	0.343	- -	7.14	8.71	- -
L	- -	- -	1/8 R	- -	- -	3.18R
M	- -	- -	90°	- -	- -	90°
N	1.651	1.661	- -	41.94	42.19	- -
P	2.306	2.340	- -	58.57	59.44	- -
R	2.480	2.510	- -	63.00	63.75	- -
S	0.111	0.121	- -	2.82	3.07	- -
T	0.151	0.161	- -	3.84	4.09	- -

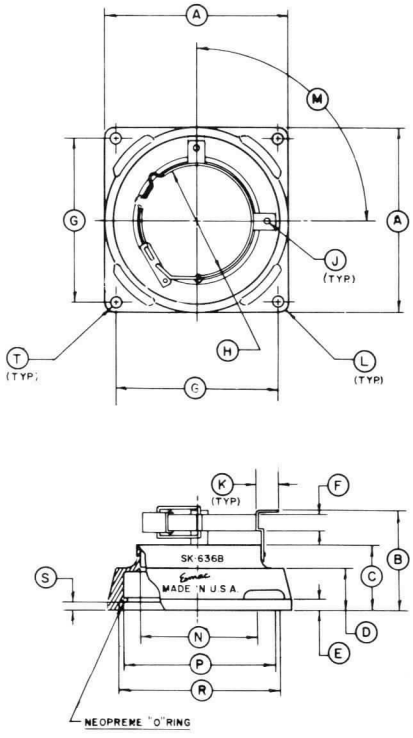

NOTES
1 STRAP & BRACKETS OF CLAMP - MATL BE CU SILVER PLATED
2 CHIMNEY-MATL DIALLYL META-PHTHALATE
3 CLAMP PROVIDES A MIN. 3 LBS. RETENTION ON A 1.625 DIA. TUBE

SK-636B

DIM	INCHES		MILLIMETERS	
	MIN	MAX	MIN	MAX
A	3.720	3.785	94.49	96.14
B	2.087	2.100	53.00	53.34
C	1.703	1.735	43.26	44.07

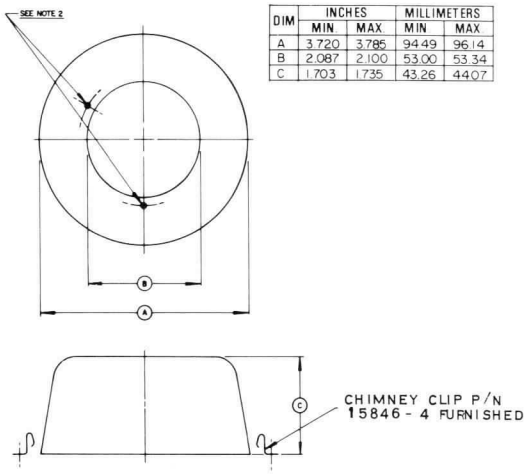

NOTES
1 MATL. CHIMNEY, GLASS FIBER, REINFORCED SILICONE RESIN. (MAX. TEMP. 370°C)
CHIMNEY CLIP, BE.-CU ALLOY NO. 172, (CADMIUM PLTD.)
2 THE TWO HOLES NOTED HAVE NO FUNCTION WITH THIS CHIMNEY.

SK-646

TECHNICAL DATA

SK-607

AIR-SYSTEM SOCKET

The SK-607 socket provides terminal connections and a low-inductance screen bypass capacitor for the power tubes listed below. The SK-607 may be used with other tube types having similar basing which require a full complement of base-pin contacts.

This air-system socket is recommended for use with the following tubes:

8809/4CX600J 8921/4CX600JA



Normal installation is on a pressurized chassis or plenum, with the recommended chassis cutout for adequate air flow, and the proper chimney to match the anode of the tube involved and direct the air flow through the tube anode cooling fins.

The base contact fingers and the screen terminal fingers are heat-treated beryllium copper. The base contact fingers are supported and insulated by polytrifluoroethylene, an excellent insulating material even at ultra-high frequencies. All contact fingers and the brass shell are silver plated to insure good contact and to resist corrosion.

All base terminals are brought out separately. The screen bypass capacitor is hermetically sealed to protect against moisture and dirt.

The bypass capacitor has a capacitance of 2700 ± 500 pF and is rated for a working voltage of 1000 Vdc.

INSTALLATION

The socket can be mounted on a chassis deck or partition with no modification to the socket. Chassis mounting is accomplished by cutting a 2-17/64 inch diameter hole in the chassis, and additional air-flow slots as shown with the outline drawing and marked CHASSIS CUTOUT PATTERN REQUIRED. The socket is held securely by the four toe clamps provided. The provision of the additional air-flow slots is important in order to keep system pressure drop at a low level for the required cooling air for the tube anode cooling fins.

If the socket is to be used in a coaxial line, it may be mounted directly on the end of the input line outer conductor. The socket skirt fits snugly on a 1-5/8 inch diameter cylinder and four screw holes are provided for fastening as shown in the outline drawing. The designer is cautioned to allow for additional air passage around the socket in order to keep required system pressure at a low level.

CHIMNEY

The SK-646 chimney is available for use with the 8809/4CX600J. The SK-656 chimney is designed for use with the 8921/4CX600JA. The chimney is mounted above the chassis deck and is held in place with four chimney clips, which are supplied with the chimney. The required mounting holes for the chimney clips are shown on the CHASSIS CUTOUT PATTERN drawing.

NET WEIGHT FOR SK-607 SOCKET (Approximate) . . . . . 3.5 oz; 99.3 gm

(Effective 8-15-71) © by Varian Printed in U.S.A.

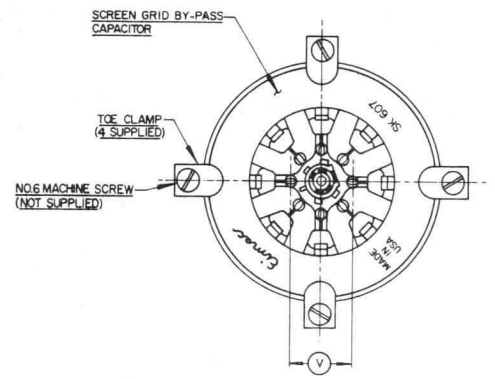

CONNECTIONS

NO.1	SCREEN GRID
NO.2	CONTROL GRID
NO.3	CATHODE
NO.4	CONTROL GRID
NO.5	HEATER
NO.6	CATHODE
NO.7	CONTROL GRID
NO.8	CATHODE

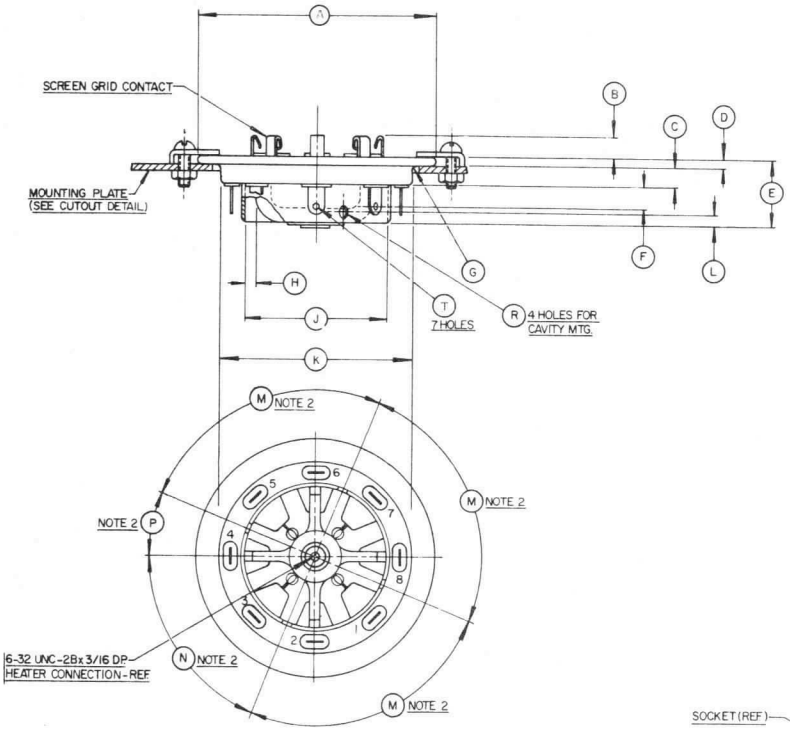

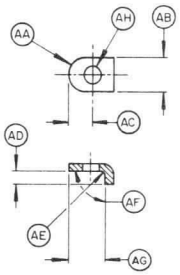

TOE CLAMP DETAIL

DIM.	INCHES			MILLIMETERS		
	MIN.	MAX.	REF.	MIN.	MAX.	REF.
A	2.688	2.750	- -	68.27	69.85	- -
B	.234	.266	- -	5.94	6.76	- -
C	.203	.235	- -	5.16	5.97	- -
D	.125	.157	- -	3.17	3.99	- -
E	.844	.906	- -	21.44	23.01	- -
F	- -	- -	.250	- -	- -	.635
G	- -	.031R	- -	- -	0.79R	- -
H	- -	- -	.078	- -	- -	1.98
J	1.633 I.D.	1.643 I.D.	- -	41.48	41.73	- -
K	2.188	2.208	- -	55.57	56.08	- -
L	.172	.204	- -	4.37	5.18	- -
M	89°	91°	- -	89°	91°	- -
N	66.5°	68.5°	- -	66.5°	68.5°	- -
P	21.5°	23.5°	- -	21.5°	23.5°	- -
R	- -	- -	.144 DIA.	- -	- -	3.66 DIA
T	- -	- -	.090 DIA.	- -	- -	2.29 DIA
V	- -	- -	.687 DIA.	- -	- -	17.45 DIA
AA	.125R	.187R	- -	3.17R	4.75R	- -
AB	.292	.332	- -	7.42	8.43	- -
AC	.292	.332	- -	7.42	8.43	- -
AD	.105	.145	- -	2.67	3.68	- -
AE	- -	.062R	- -	- -	1.57	- -
AF	80°	100°	- -	80°	100°	- -
AG	.417	.457	- -	10.59	11.61	- -
AH	.142	.146	- -	3.61	3.71	- -

NOTES:
1. REF. DIMENSIONS ARE FOR INFO. ONLY & ARE NOT REQUIRED FOR INSPECTION PURPOSES.

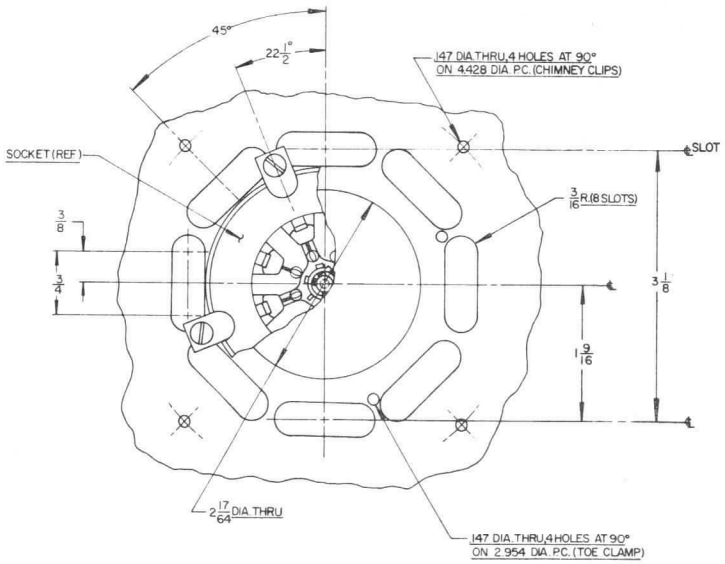

CHASSIS CUTOUT PATERN REQ'D. FOR ADEQUATE COOLING. USE SK 646 CHIMNEY WITH THIS SOCKET.

TECHNICAL DATA

SK-620
SK-620A
AIR-SYSTEM SOCKET

The EIMAC SK-620 is one of the Air-System Sockets recommended for use with those tubes listed at the bottom of this data sheet or other tube types having the same special nine-pin base. A ceramic SK-626 Air Chimney or a fiberglass-reinforced EIMAC resin SK-636 Air Chimney are also available and are recommended for use with the socket when air-cooled tubes are to be employed, except the 8930.

When this socket is used, connection is made to each of the tube electrodes except the anode, and to one side of the integral screen-grid by-pass capacitor. The SK-620 Air-System Socket is humidity and salt-spray resistant. The SK-620A is an improved SK-620 which includes a slightly modified screen by-pass capacitor sealed with an improved encapsulating material to insure reliable performance under high humidity or moisture conditions.



BASE CONNECTIONS

The SK-620 Air-System Socket consists of eight screen-grid contact fingers, seven pin contacting terminals (no contact is made to pin No. 5), a center control-grid terminal, and an integral screen by-pass capacitor. The cathode of the tube is connected to its external circuits by the four even-numbered base pins which are connected in parallel to minimize the effects of lead inductance; these terminal lugs are insulated from the socket body.

SCREEN-GRID BY-PASS CAPACITOR

Incorporated in the socket structure is a low-inductance screen by-pass capacitor, 1100 pF ±20%, which provides a short radio-frequency path to ground. The silvered-mica dielectric, encapsulated in epoxy resin, is humidity and salt-spray resistant. The sockets are hi-voltage tested at 2000 volts dc and are rated for use at 1000 volts dc.

When this socket is mounted on a grounded chassis, one side of the screen-grid by-pass capacitor will automatically be grounded.

MATERIALS AND FINISHES

The metal shell, or body, of the socket is silver-plated brass. The screen-grid contact fingers and base pin terminals are fabricated of beryllium-copper, heat-treated after forming, then silver-plated. The center control-grid terminal is silver-plated brass as are the toe clamps which are supplied for mounting purposes.

The socket insulating material, polytrifluorochloroethylene, is chemically inert, non-flammable, will not absorb water or water vapors, and is not affected by acids or alkalies. It will not react to normal solvents, except in the case of halogenated compounds which will induce minor dimensional changes. Its physical characteristics are stable over a temperature range of −196°C to +199°C and it is resistant to embrittlement and thermal shock.

NET WEIGHT (Approximate) . . . . . 4 oz.; 114 gms

INSTALLATION

The SK-620 and SK-620A Air-System Sockets can be mounted on chassis decks or partitions or in coaxial tuning devices with no modification to the socket. Chassis mounting is accomplished by cutting a 2-¼" diameter hole in the chassis deck or partition. The socket is then placed in the hole and held securely by the three toe clamps provided.

If the socket is to be used in a coaxial line, it may be mounted directly on the end of the input line outer conductor. The socket skirt fits snugly on a 1-⅝" diameter cylinder and four screw holes are provided for fastening as shown in the outline drawing.

TUBE EXTRACTOR

The SK-604 is a spring-steel device useful for inserting and extracting tubes of the type used in the SK-620 Air-System Socket. It is recommended for use where the construction of the equipment makes it difficult or impossible to grasp the tube by hand or when it is necessary to handle the tubes while they are still hot from recent use.

THE SK-620 AND SK620A AIR-SYSTEM SOCKETS ARE RECOMMENDED FOR USE WITH THE FOLLOWING TUBES:

7034/4X150A	8249/4W300B	8904/4CX350FJ
7203/4CX250B	8321/4CX350A	8930
7580W/4CX250R	8322/4CX350F	8957/4CX250BC
7609	8621/4CX250FG	

(Revised 7-1-75) © 1961, 1967, 1975 by Varian

Printed in U.S.A.

SK-620/620A

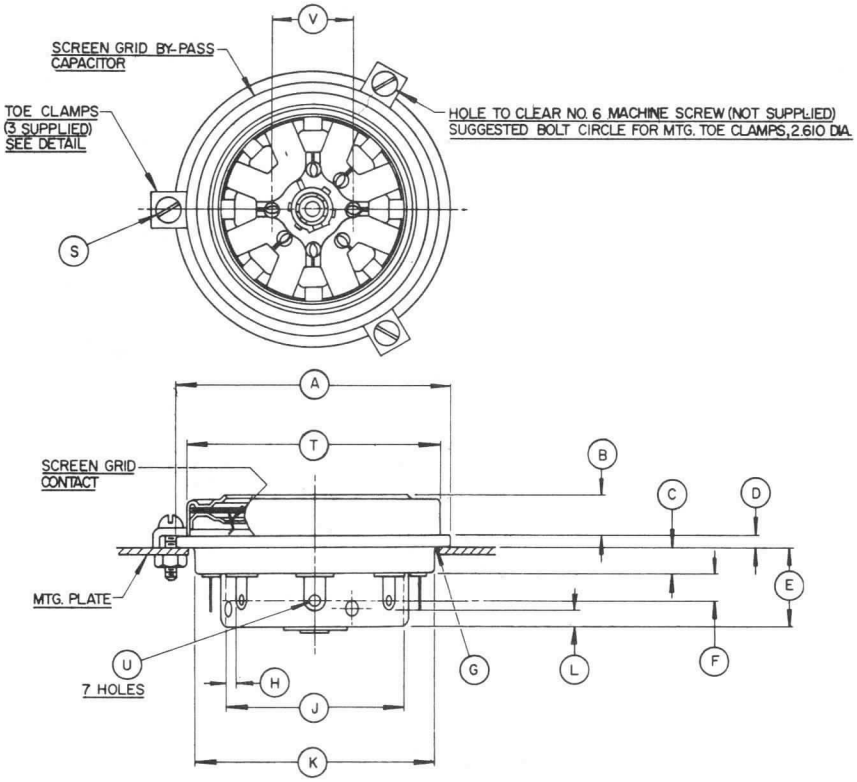

DIM	DIMENSIONAL DATA					
	INCHES			MILLIMETERS		
	MIN.	MAX.	REF.	MIN.	MAX.	REF.
A	2.438	2.478	- -	61.92	62.94	- -
B	0.348	0.378	- -	8.84	9.60	- -
C	0.203	0.235	- -	5.16	5.97	- -
D	0.105	0.145	- -	2.67	3.68	- -
E	0.700	0.740		17.78	18.80	- -
F	- -	- -	0.250	- -	- -	6.35
G	- -	0.031R	- -	- -	0.79R	- -
H	- -	- -	0.078	- -	- -	1.98
J	1.633	1.643	- -	41.48	41.73	- -
K	2.188	2.208	- -	55.57	56.08	- -
L	0.172	0.204	- -	4.37	5.18	- -
M	89°	91°	- -	89°	91°	- -
N	66.5°	68.5°	- -	66.5°	68.5°	- -
P	21.5°	23.5°	- -	21.5°	23.5°	- -
R	- -	- -	0.144*	- -	- -	3.66*
S	0.142*	- -	- -	3.61*	- -	- -
T	2.285	2.305	- -	58.04	58.55	- -
U	- -	- -	0.090*	- -	- -	2.29*
V	- -	- -	0.687	- -	- -	17.45
AA	1.230R	1.270R	- -	31.24	32.26	- -
AB	0.292	0.332	- -	7.42	8.43	- -
AC	0.142*	0.146*	- -	3.61*	3.71*	- -
AD	0.136	0.176	- -	3.45	4.47	- -
AE	0.105	0.145	- -	2.67	3.68	- -
AF	- -	0.062R	- -	- -	1.57R	- -
AG	0.261	0.301	- -	6.63	7.64	- -

* DIAMETER

NOTES:
1. REF. DIMS. ARE FOR INFO. ONLY AND ARE NOT REQ'D. FOR INSPECTION PURPOSES.
2. CAPACITANCE, 1100 MMFD ±20% VOLTAGE, 2000 VDC TEST, 1000 WVDC.
3. TOLERANCES ARE NOT CUMULATIVE.
4. WORD EIMAC IN SOCKET IDENTIFICATION LABEL IS LOCATED (APPROX.) NEXT TO PIN 5.

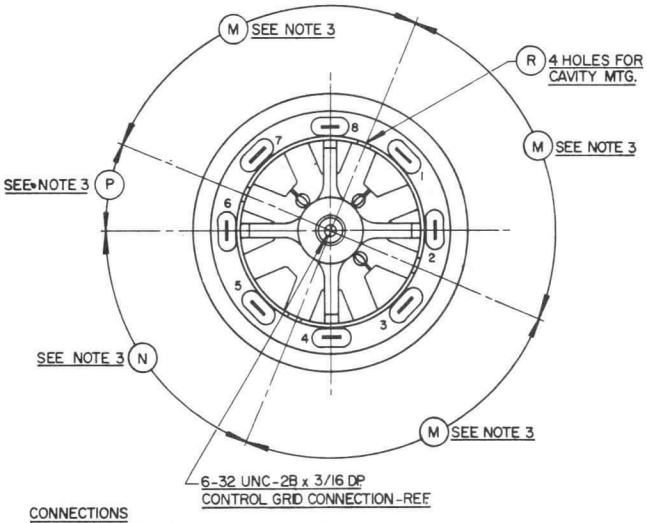

CONNECTIONS
NO. 1 SCREEN GRID
NO. 2 CATHODE
NO. 3 HEATER
NO. 4 CATHODE
NO. 5 NO CONNECTION
NO. 6 CATHODE
NO. 7 HEATER
NO. 8 CATHODE

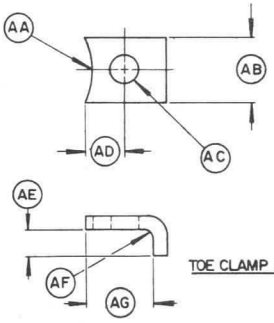

TOE CLAMP DETAIL

EIMAC
Division of Varian
SAN CARLOS
CALIFORNIA

SK-630
SK-630A
AIR-SYSTEM SOCKET

The EIMAC SK-630 is one of the Air-System Sockets recommended for use with those tubes listed at the bottom of this data sheet or other tube types having the same special nine-pin base. A ceramic SK-626 Air Chimney or a fiberglass-reinforced silicone resin SK-636 Air Chimney are also available and are recommended for use with the socket when air-cooled tubes are to be employed.

When this socket is used, connection is made to each of the tube electrodes except the anode, and to one side of the integral screen-grid by-pass capacitor. The SK-630 Air-System Socket is humidity and salt-spray resistant. The SK-630A is an improved SK-630 which includes a slightly modified screen by-pass capacitor sealed with an improved encapsulating material to insure reliable performance under high humidity or moisture conditions.



BASE CONNECTIONS

The SK-630 Air-System Socket consists of eight screen-grid contact fingers, seven pin contacting terminals (no contact is made to pin No. 5), a center control-grid terminal, and an integral screen by-pass capacitor. The cathode of the tube is connected to its external circuits by the four even-numbered base pins which are connected in parallel to minimize the effects of lead inductance. These terminal lugs are connected directly to the metal shell of the socket and will automatically be grounded when the socket is mounted to a metal chassis.

SCREEN-GRID BY-PASS CAPACITOR

Incorporated in the socket structure is a low-inductance screen by-pass capacitor, 1100 pF ±20%, which provides a short radio-frequency path to ground. The silvered-mica dielectric, encapsulated in epoxy resin, is humidity and salt-spray resistant. The sockets are hi-voltage breakdown tested at 2000 volts dc and are rated for use at 1000 volts dc.

When this socket is mounted on a grounded chassis, one side of the screen-grid by-pass capacitor will automatically be grounded.

MATERIALS AND FINISHES

The metal shell, or body, of the socket is silver-plated brass. The screen-grid contact fingers and base pin terminals are fabricated of beryllium-copper, heat-treated after forming, then silver-plated. The center control-grid terminal is silver-plated brass as are the toe clamps which are supplied for mounting purposes.

The socket insulating material, polytrifluorochloroethylene, is chemically inert, non-flammable, will not absorb water or water vapors, and is not affected by acids or alkalies. It will not react to normal solvents, except in the case of halogenated compounds which will induce minor dimensional changes. Its physical characteristics are stable over a temperature range of −196°C to +199°C and it is resistant to embrittlement and thermal shock.

NET WEIGHT . . . . . 4 Ounces

INSTALLATION

The SK-630 and SK-630A Air-System Socket can be mounted on chassis decks or partitions or in coaxial tuning devices with no modification to the socket. Chassis mounting is accomplished by cutting a 2-¼″ diameter hole in the chassis deck or partition. The socket is then placed in the hole and held securely by the three toe clamps provided.

If the socket is to be used in a coaxial line, it may be mounted directly on the end of the input line outer conductor. The socket skirt fits snugly on a 1-⅝″ diameter cylinder and four screw holes are provided for fastening as shown in the outline drawing.

TUBE EXTRACTOR

The SK-604 is a spring-steel device useful for inserting and extracting tubes of the type used in the SK-630 Air-System Socket. It is recommended for use where the construction of the equipment makes it difficult or impossible to grasp the tube by hand or when it is necessary to handle the tubes while they are still hot from recent use.

THE SK-630 AND SK-630A AIR-SYSTEM SOCKETS ARE RECOMMENDED FOR USE WITH THE FOLLOWING TUBES:

7034/4X150A	7204/4CX250F	8321/4CX350A
7035/4X150D	7580W/4CX250R	8322/4CX350F
7203/4CX250B	8249/4W300B	7580

(Revised 3-15-67) © 1961, 1967 by Varian

Printed in U.S.A.

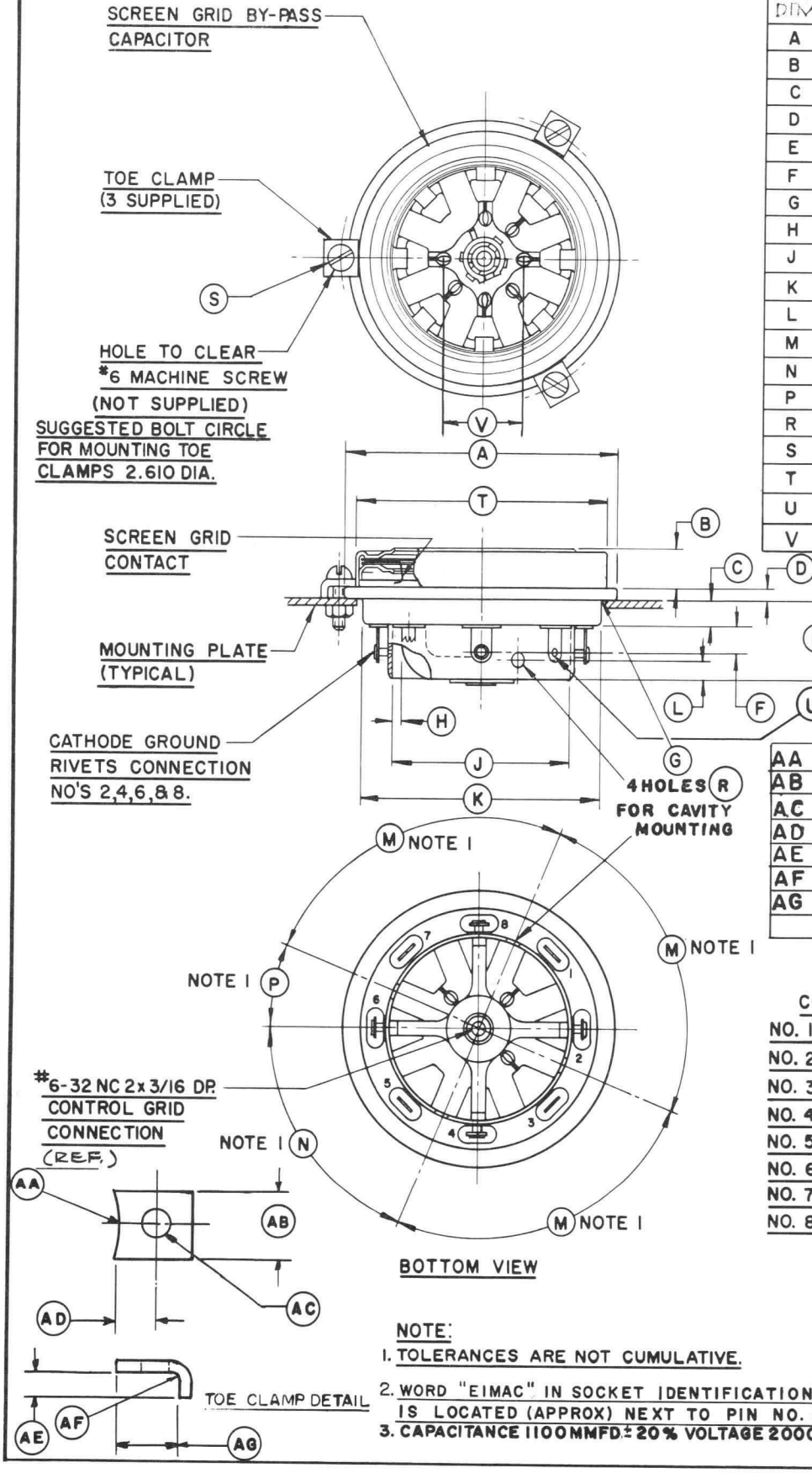

DIMENSION DATA			
DIM.	MIN.	MAX.	REF.
A	2.438 O.D.	2.498 O.D.	
B	.348	.388	
C	.203	.235	
D	.105	.145	
E	.700	.740	
F			.250
G		.031 R.	
H			.078
J	1.633 I.D.	1.643 I.D.	
K	2.188 O.D.	2.208 O.D.	
L	.172	.204	
M	89° NOTE 1	91° NOTE 1	
N	66.5° "	68.5° "	
P	21.5° "	23.5° "	
R			.144 DIA.
S	.142 DIA.		
T	2.285 O.D.	2.305 O.D.	
U			.090 DIA
V			.687 DIA.

NOTE 4: REF. DIMS ARE FOR INFO. ONLY & ARE NOT REQ'D FOR INSP. PURPOSES.

AA	1.230R	1.270R	
AB	.292	.332	
AC	.142DIA.	.146 DIA.	
AD	.136	.176	
AE	.105	.145	
AF		.062R	
AG	.261	.301	

CONNECTIONS
NO. 1 SCREEN GRID
NO. 2 CATHODE
NO. 3 HEATER
NO. 4 CATHODE
NO. 5 NO CONNECTION
NO. 6 CATHODE
NO. 7 HEATER
NO. 8 CATHODE

NOTE:
1. TOLERANCES ARE NOT CUMULATIVE.
2. WORD "EIMAC" IN SOCKET IDENTIFICATION LABEL IS LOCATED (APPROX) NEXT TO PIN NO. 5.
3. CAPACITANCE 1100 MMFD. ± 20% VOLTAGE 2000VDC TEST, 1000 WVDC

SUPERSEDES

DRWG. No. SK-630-60

CHANGE 10

TECHNICAL DATA

SK-640

AIR-SYSTEM SOCKET

The EIMAC SK-640 is one of the air system sockets recommended for use with those tubes listed at bottom of the page, or other tube types having the same special nine-pin base, when an integral screen by-pass capacitor is either not required or desired. When this socket is used, connection is made to each of the tube electrodes except the anode. The SK-640 Air-System Socket is humidity and salt-spray resistant. SK-606 Air Chimney is used with most air cooled tubes.

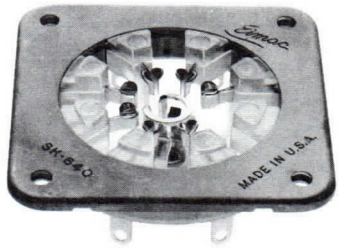

BASE CONNECTIONS

The SK-640 Air-System Socket consists of seven base pin contacting terminals (no contact is made to Pin #5) and a center control-grid terminal. The cathode of the tube is connected to its external circuits by the four even-numbered base pins which are connected in parallel to minimize the effects of lead inductance. These terminal lugs are insulated from the socket body. Connection to the screen-grid is made via Pin #1 while control-grid contact is accomplished by the use of a 6/32'' screw at the center terminal.

MATERIALS AND FINISHES

The metal shell, or body, of the socket is nickel-plated brass and the base pin contact terminals are fabricated from beryllium-copper, heat treated after forming, then silver-plated. The center control-grid terminal is silver-plated brass.

The socket insulating material, polytriflourochloroethylene, is chemically inert, non-flammable, will not absorb water or water-vapors and is not affected by acids or alkalies. It will not react to normal solvents except in the case of halogenated compounds which will induce minor dimensional changes. Its physical characteristics are stable over a temperature range of -196°C to +199°C and it is resistant to embrittlement and thermal shock.

NET WEIGHT (Approximate) . . . . . 2.0 Oz. 57 gms

INSTALLATION

The SK-640 Air-System Socket can be mounted on a chassis decks or partitions by the four 0.150 inch diameter holes provided in the socket body. These holes are 90° apart and are drilled on a 2-9/16'' diameter pitch circle. A 2-1/4'' hole is required to accept the socket body.

TUBE EXTRACTOR

The SK-640A is a spring-steel device useful for inserting and extracting tubes of the type used in the SK-640 Air-System Socket. It is recommended for use where the construction of the equipment makes it difficult or impossible to grasp the tube by hand or when it is necessary to handle the tubes while they are still hot from recent use.

THE SK-640 AIR-SYSTEM SOCKET IS RECOMMENDED FOR USE WITH THE FOLLOWING TUBES:

7034/4X150A	8249/4W300B	8904/4CX350FJ
7203/4CX250B	8321/4CX350A	8930
7580W/4CX250R	8322/4CX350F	8957/4CX250BC
7609	8621/4CX250FG	

(Revised 7-1-75) © 1961, 1966, 1975 by Varian

Printed in U.S.A.

SK-640 Air-System Socket

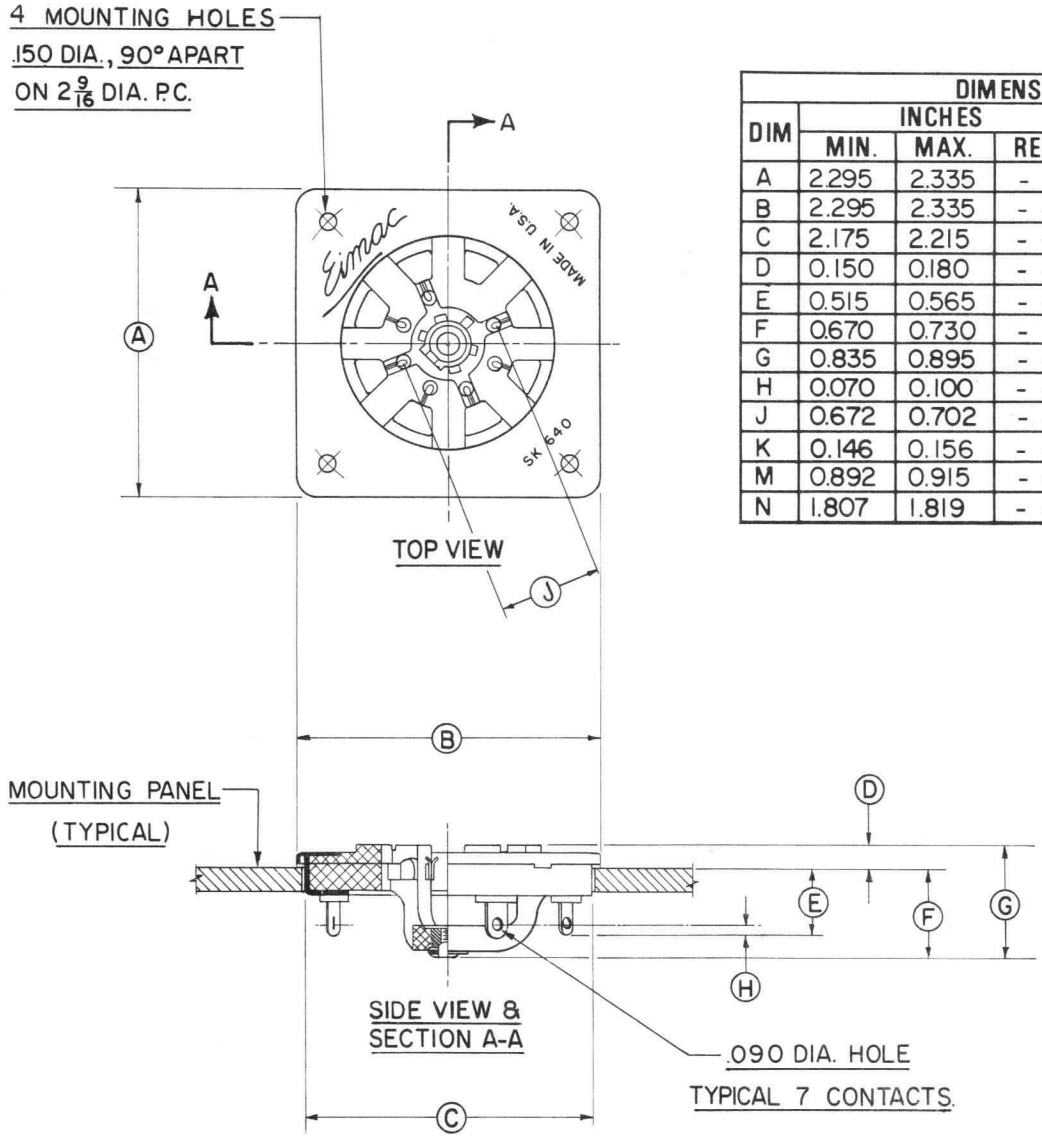

DIMENSIONAL DATA						
DIM	INCHES			MILLIMETERS		
	MIN.	MAX.	REF.	MIN.	MAX.	REF.
A	2.295	2.335	- -	58.29	59.31	- -
B	2.295	2.335	- -	58.29	59.31	- -
C	2.175	2.215	- -	55.24	56.26	- -
D	0.150	0.180	- -	3.81	4.57	- -
E	0.515	0.565	- -	13.08	14.35	- -
F	0.670	0.730	- -	17.02	18.54	- -
G	0.835	0.895	- -	21.21	22.73	- -
H	0.070	0.100	- -	1.78	2.54	- -
J	0.672	0.702	- -	17.07	17.83	- -
K	0.146	0.156	- -	3.71	3.96	- -
M	0.892	0.915	- -	22.66	23.24	- -
N	1.807	1.819	- -	45.90	46.20	- -

CONNECTIONS	
1.	SCREEN GRID
2.	CATHODE
3.	HEATER
4.	CATHODE
5.	NO CONNECTION
6.	CATHODE
7.	HEATER
8.	CATHODE

Printed in U.S.A. 990

EIMAC

A Division of Varian Associates

SAN CARLOS, CALIFORNIA

SK-650
SK-655

AIR-SYSTEM SOCKET

The Eimac SK-650 is one of the Air-System Sockets recommended for use with those tubes listed at the bottom of the page, or other tube types having the same special nine-pin base, when a compact, low-cost, special purpose socket is required. When this socket is used, connection is made to each of the tube electrodes except the anode.

The SK-655 Screen By-Pass Capacitor is a separate encapsulated capacitor designed for use with the SK-650 Air-System Socket. When this combination is used, the screen by-pass capacitor can be replaced without troublesome or costly repairs.

Both the SK-650 and the SK-655 are humidity and salt-spray resistant.

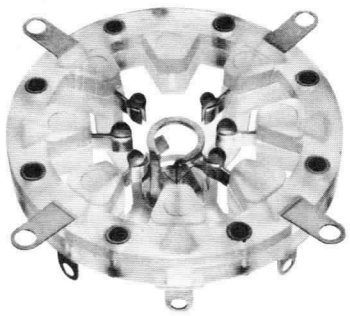

SK-650
Air-System Socket



SK-655 Screen
By-Pass Capacitor

BASE CONNECTIONS

The SK-650 Air-System Socket consists of seven base pin contacting terminals (no contact is made to Pin #5) and a center control-grid terminal. The cathode of the tube is connected to its external circuits by the four even-numbered base pins which, in turn, are connected to the four socket mounting tabs. Connections are made in this manner to minimize the effects of lead inductance. When the SK-650 Air-System Socket is used alone, connection is made to the screen-grid via Pin #1. Control grid contact is accomplished by means of a 6/32″ screw at the center terminal.

THE SK-655 SCREEN-GRID BY-PASS CAPACITOR

The SK-655 Screen-Grid By-Pass Capacitor is an independent encapsulated capacitor which is mounted to the SK-650 Air-System Socket by the same four socket mounting screws. This is a low-inductance capacitor, 1100 uuf $\pm$ 20%, which provides a short radio-frequency path to ground. The capacitor is hi-voltage breakdown tested at 2000 volts d-c and rated at 1000 volts d-c. When the SK-655 is mounted on a grounded chassis, one side of the screen by-pass capacitor is automatically grounded.

MATERIALS AND FINISHES

In the SK-650 Air-System Socket, the base pin terminals and the four mounting lugs are fabricated of beryllium-copper, heat treated after forming, then silver-plated. The center control-grid terminal is silver-plated brass.

The insulating material, polytrifluorochloroethylene, is chemically inert, non-flammable, will not absorb water or water-vapors and is not affected by acids or alkalies. It will not react to normal solvents except in the case of halogenated compounds which will induce minor dimensional changes. Its physical characteristics are stable over a temperature range of $-196°C$ to $+199°C$ and it is resistant to embrittlement and thermal shock.

The SK-655 Screen By-Pass Capacitor has a body, or shell, constructed of silver-plated brass while the eight screen-grid contacting fingers are heat treated, silver-plated beryllium-copper. The capacitor dielectric is silvered-mica and is encapsulated in epoxy resin.

Net Weight of the SK-650 Air-System Socket ..... 1.2 ounces

Net Weight of the SK-655 Screen-Grid By-Pass Capacitor ..... 1.5 ounces

INSTALLATION

Both the SK-650 Air-System Socket and the SK-655 Screen-Grid By-Pass Capacitor can be mounted to a chassis deck or partition by the four 0.130″ diameter holes provided in each of the assemblies. Both units have holes which are 90° apart and are drilled on 2-17/32″ diameter pitch circle.

The SK-650 Air-System Socket requires a 2-1/8″ diameter hole to accept the socket body.

TUBE EXTRACTOR

The SK-604A is a spring-steel device useful for inserting and extracting tubes of the type used in the SK-650 Air-System Socket. It is recommended for use where the construction of the equipment makes it difficult or impossible to grasp the tube by hand or when it is necessary to handle the tubes while they are still hot from recent use.

THE SK-650 AIR-SYSTEM SOCKET IS RECOMMENDED FOR USE WITH THE FOLLOWING TUBES:

7034/4X150A	7204/4CX250F	8321/4CX350A
7035/4X150D	7580W/4CX250R	8322/4CX350F
7203/4CX250B	8249/4W300B	7580

(Revised 1-15-66) Copyright 1961, 1966 by Varian Associates

SK-650 Air-System Socket
SK-655 Screen By-Pass Capacitor

DIMENSION DATA			
REF.	NOM.	MIN.	MAX.
A		.125	.135
B		1.330	1.390
C		1.680	1.725
D		2.520	2.560
E		2.858	2.891
F		.380	.410
G		.025	.037
H		2.280	2.310
J		.400	.430

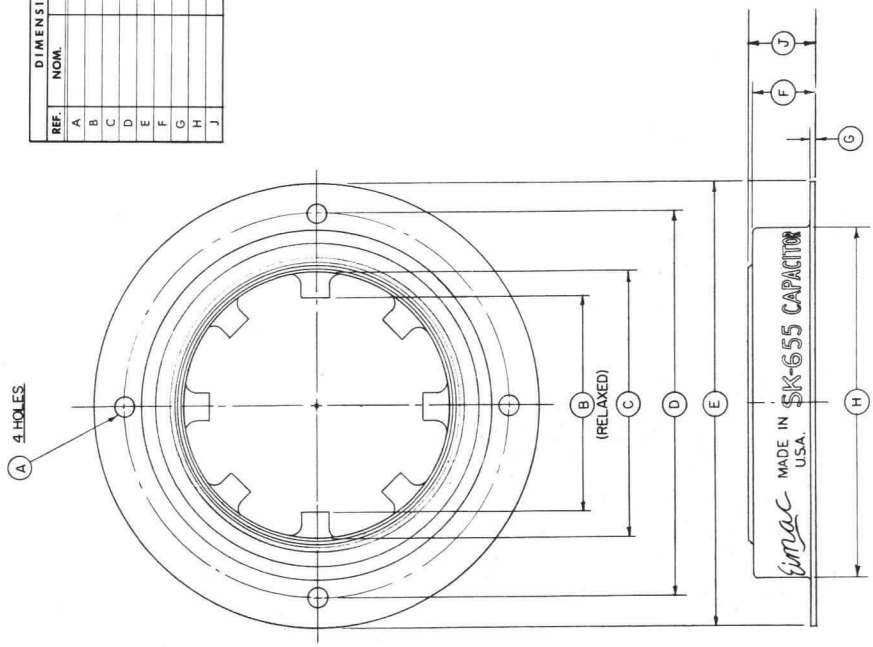

SK-655 OUTLINE DRAWING

CONNECTIONS
NO.1. SCREEN GRID
2. CATHODE
3. HEATER
4. CATHODE
5. NO CONNECTION
6. CATHODE
7. HEATER
8. CATHODE

DIMENSION DATA (IN INCHES)			
DIM.	REF.	MIN.	MAX.
A	.090 Dia.		
B		1.610 Dia.	1.645 Dia.
C	.020	.023	.052
D			
E	.287		
F	.573		
G	.827		
H		.825	.875
J		2.092	2.119
K		2.700	2.792
L		2.510 Dia. P.C.	2.551 Dia. P.C.
M		.110 Dia.	.120 Dia.

Note: Ref. Dims. are for info. only and are not Req'd for Insp. Purposes.

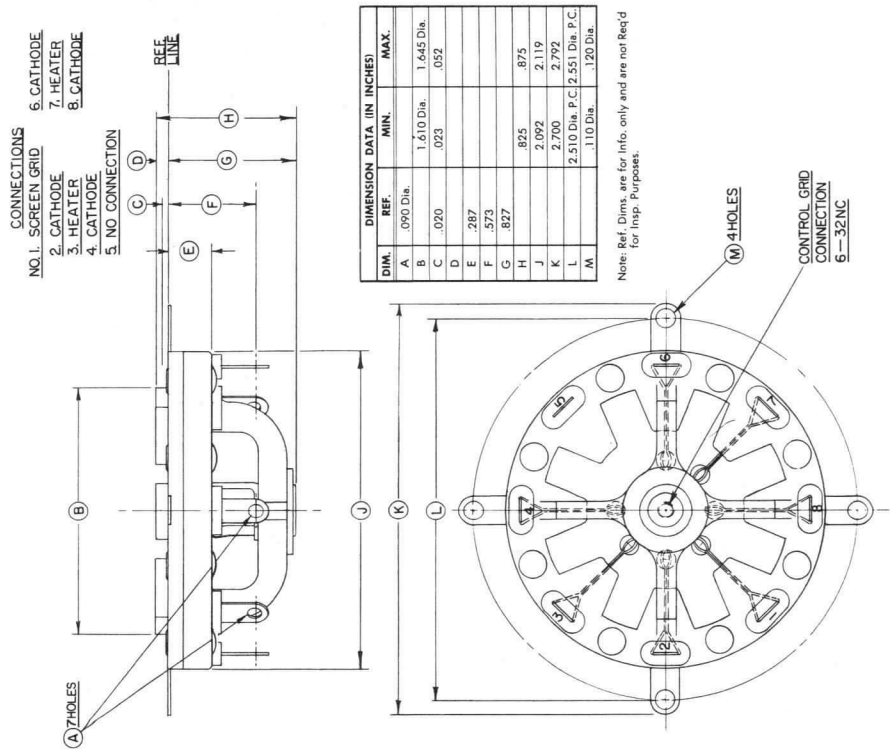

SK-650 OUTLINE DRAWING

Printed in U.S.A. 991

EIMAC
Division of Varian
SAN CARLOS
CALIFORNIA

SK-700 AND SK-710

AIR-SYSTEM SOCKETS

The EIMAC SK-700 and SK-710 Air-System Sockets are designed to socket the EIMAC 4CX300A. Connections are made to each of the tube electrodes except the anode. An integral screen-grid by-pass capacitor is built into the socket.

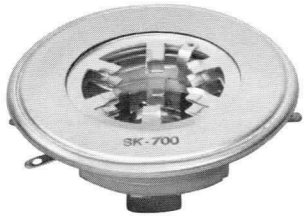

SK-700

SK-700

The cathode contacts are insulated from ground.

SK-710

All six of the cathode contacts are connected directly to the metal body.



SK-700 WITH SK-606

HEATER CONNECTIONS

In both socket types, one heater contact is connected directly to the metal body.

SCREEN-GRID BY-PASS CAPACITOR

The capacitor is built into the socket and provides a low-impedance path to ground for screen-grid rf currents. It is tested at 1000 volts dc and rated at 400 volts dc. Capacitance is 1100 picofarads ±20%.

MATERIALS AND FINISHES

The metal shell, or body, of the socket is made of silver-plated brass. The non-ferrous alloy contacts are heat treated after forming and then silver-plated. Three silver-plated brass toe clamps are supplied for mounting purposes.

The socket insulating material is chemically inert, non-flammable, and will not absorb water or water vapor. It is not affected by strong or weak acids or alkalies. It will not react to normal solvents except in the case of halogenated compounds, which will induce minor dimensional changes. Its physical characteristics are stable over a temperature range of —150°C to +275°C and it is resistant to embrittlement and thermal shock.

A silvered-mica dielectric is used in the screen-grid by-pass capacitor.



SOCKET, TUBE, AND CHIMNEY

AIR CHIMNEY

The SK-606 is intended to be used with the 4CX300A mounted vertically with the anode up. If horizontal mounting or vertical mounting with the anode down is required, means should be provided to retain the chimney. The air chimney is made of high-temperature ceramic and serves to direct the flow of air emerging from the socket into the anode cooling fins. It is recommended that the SK-606 chimney, or its equivalent, be used with each SK-700 or SK-710 socket.

(Revised 10-15-66) © 1958, 1966 Varian

Printed in U.S.A.

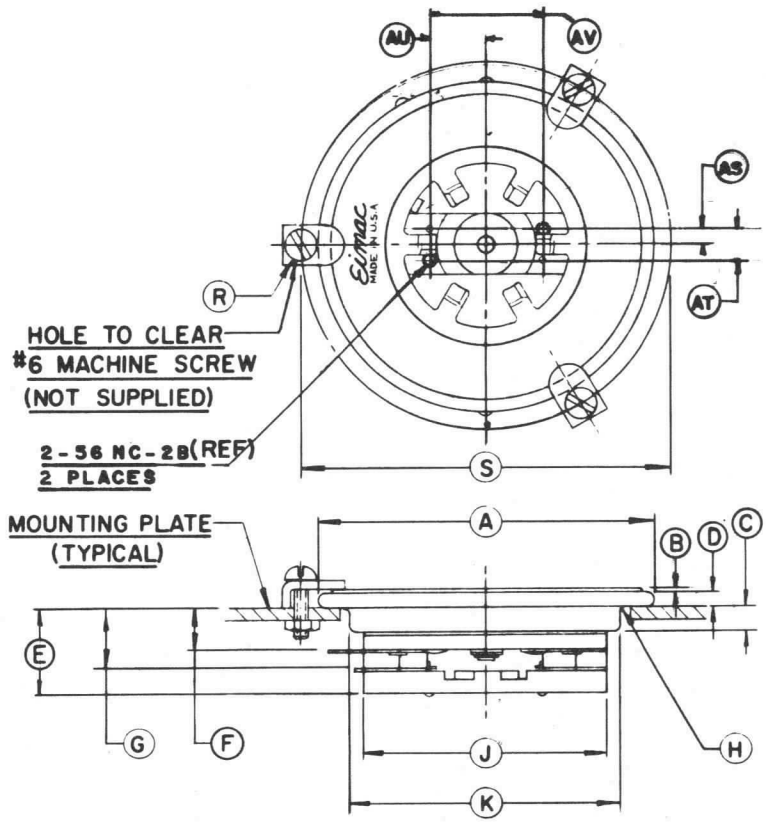

DIMENSION DATA			
DIM.	MIN.	MAX.	REF.
A	2.688 O.D.	2.750 O.D.	
B	.014	.046	
C	.175	.207	
D	.107	.147	
E	.650	.690	
F	.312	.352	
G	.453	.493	
H		.031 R.	
J			2 DIA.
K	2.184 O.D.	2.204 O.D.	
L	29°	31°	
M	34°	36°	
N	54°	56°	
P	.080 DIA.	.085 DIA.	
R	.142 DIA.		
S			3 DIA.
T			1 9/32 R
U			1 7/16 R
V	7/64	9/64	
W	.020 THK.	.030 THK.	
X			1 13/64 R
Y			1 5/16 R
Z	3/64 DIA.	5/64 DIA.	
AB	11/64	13/64	
AC	.005 THK.	.015 THK.	
AD	7/64	9/64	
AE	.015 THK.	.025 THK.	
AF	1 19/64 R.	1 21/64 R.	
AH	.065 DIA.	.075 DIA.	

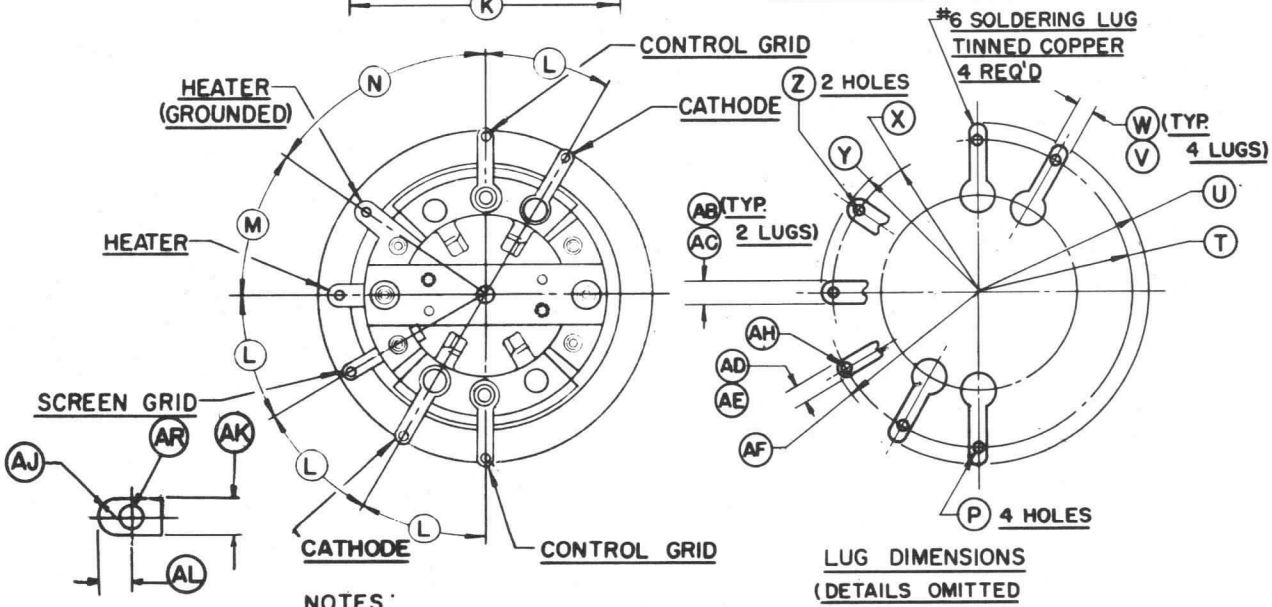

LUG DIMENSIONS
(DETAILS OMITTED
FOR CLARITY)

NOTES:
1. TOLERANCES ARE NOT CUMULATIVE.
2. DIMENSIONS IN INCHES.
3. CAPACITANCE 1100MMFD ± 20%, VOLTAGE 1000 VDC TEST 400WVDC.
4. REF. DIM. ARE FOR INFO. ONLY & ARE NOT REQ'D FOR INSP. PURPOSES

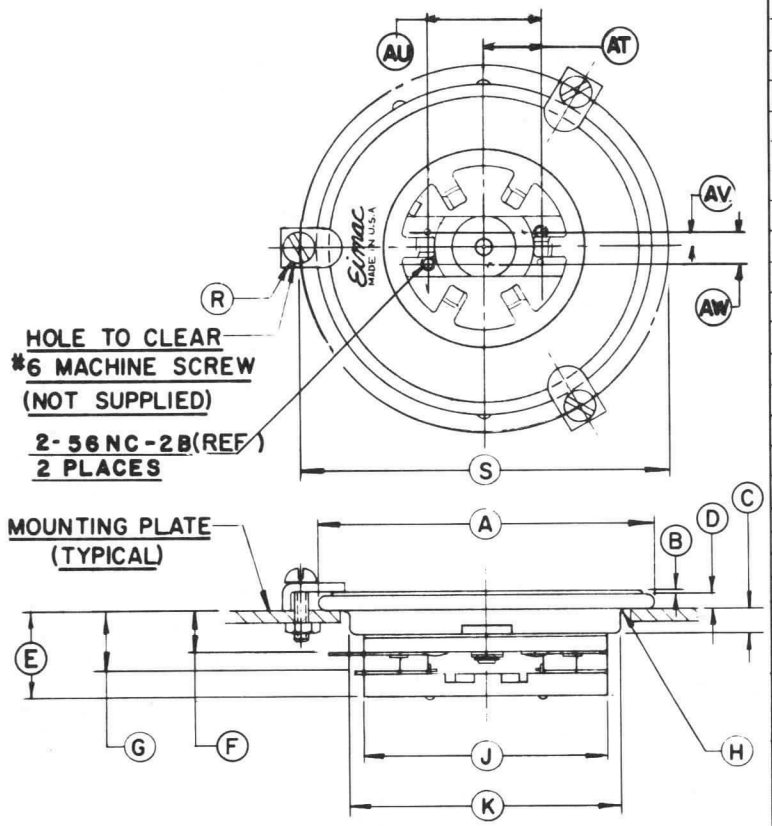

DIMENSION DATA			
DIM.	MIN.	MAX.	REF.
A	2.688 O.D.	2.750 O.D.	
B	.014	.046	
C	.175	.207	
D	.107	.147	
E	.650	.690	
F	.312	.352	
G	.453	.493	
H		.031 R.	
J			2 DIA.
K	2.184 O.D.	2.204 O.D.	
L	29°	31°	
M	34°	36°	
N	54°	56°	
P	.080 DIA.	.085 DIA.	
R	.142 DIA.		
S			3 DIA.
T	59°	61°	
U			1 9/32 R
V			1 7/16 R
W	7/64	9/64	
X	.020 THK.	.030 THK.	
Y			1 13/64 R
Z			1 5/16 R
AB	3/64 DIA.	5/64 DIA.	
AC	11/64	13/64	
AD	.005 THK.	.015 THK.	
AE	7/64	9/64	
AF	.015 THK.	.025 THK.	
AG	1 19/64 R.	1 21/64 R.	
AJ	.065 DIA.	.075 DIA.	

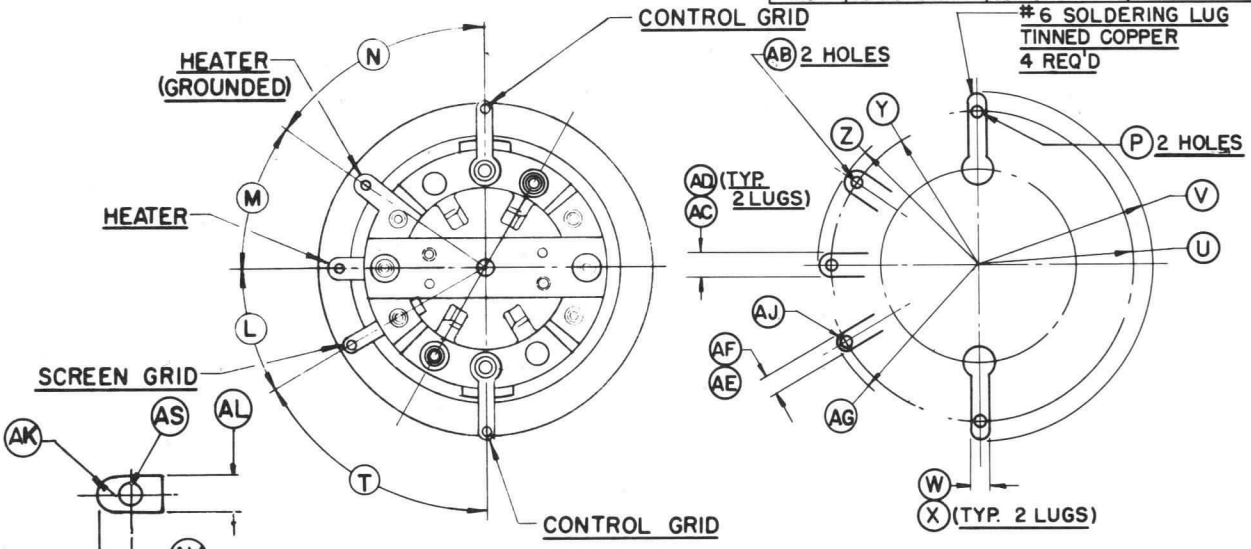

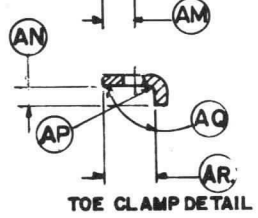

NOTES:
1. TOLERANCES ARE NOT CUMULATIVE.
2. DIMENSIONS IN INCHES.
3. CAPACITANCE 1100 MMFD ± 20% - VOLTAGE 1000VDC - TEST 400WVDC
4. REF. DIM. ARE FOR INFO. ONLY & ARE NOT REQ'D FOR INSP. PURPOSES

LUG DIMENSIONS
(DETAILS OMITTED
FOR CLARITY)

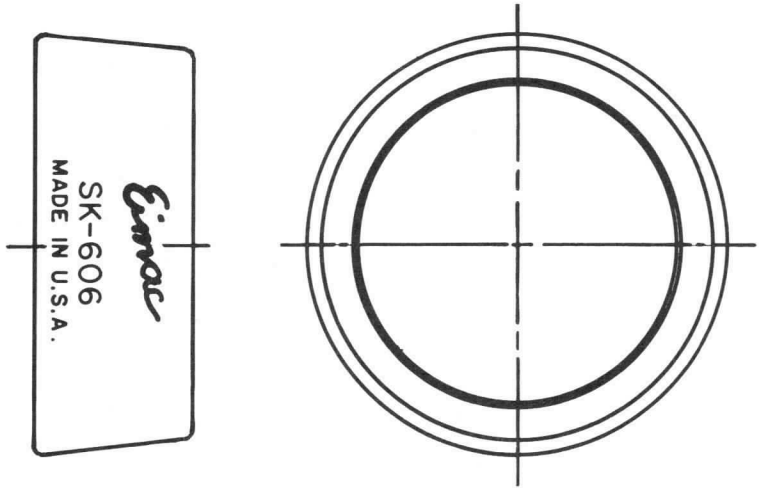

DIMENSIONS IN INCHES

DIMENSIONAL DATA			
DIM.	MIN.	MAX.	REF.
A	1.635	1.700	
B	1.781	1.881	
C	.812	.875	
D	.156	.218	

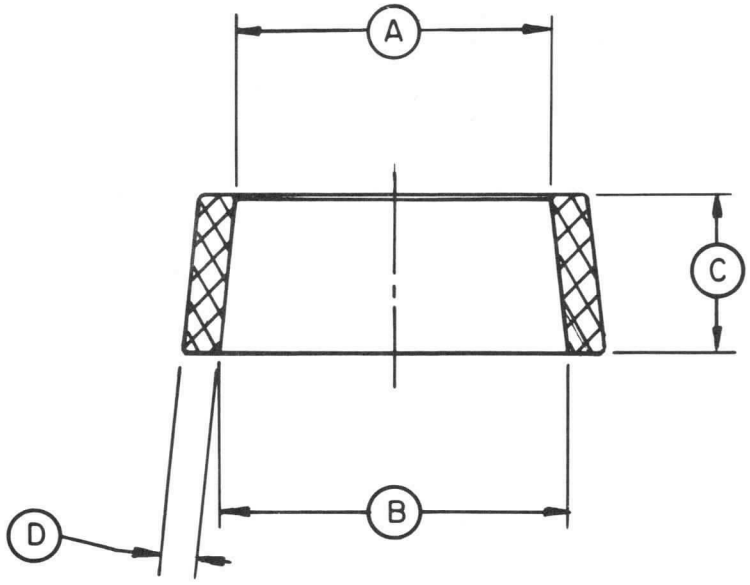

TECHNICAL DATA

SK-711A
SK-712A

AIR SYSTEM SOCKETS

The EIMAC SK-711A Air System Socket is designed to socket the EIMAC 4CX300A and other members of this family listed below. Connections are made to each of the tube electrodes except the anode. An integral screen bypass capacitor is built into the socket.

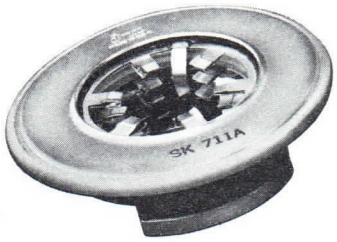

CONTACTS

SK-711A: The cathode and one heater contact are connected directly to the metal body.

SK-712A: One heater contact is connected directly to the metal body.

SCREEN BYPASS CAPACITOR

The capacitor is built into the socket and provides a low-impedance path to ground for screen grid rf currents. It is tested at 1000 volts dc and rated at 400 volts dc. Capacitance is 900 pF to 1500 pF. The screen bypass capacitor is sealed with epoxy. The sealing provides a longer voltage breakdown path and prevents contamination. It is usable in high humidity environments. It may be used with 350 volts dc at an altitude of 60,000 feet.

MATERIALS AND FINISHES

The metal shell, or body, of the socket is made of silver plated brass. The non-ferrous alloy contacts are heat treated after forming and then silver plated. Three silver plated brass toe clamps are supplied for mounting purposes.

The socket insulating material is Diallyl Phthalate. Its physical characteristics are stable over a temperature range of -65°C to +185°C and it is resistant to embrittlement and thermal shock.

A silver mica dielectric is used in the screen bypass capacitor.

AIR CHIMNEY

The SK-606 is intended to be used with the 4CX300A mounted vertically with the anode up. If horizontal mounting or vertical mounting with the anode down is required, means should be provided to retain the chimney. The air chimney is made of high temperature ceramic and serves to direct the flow of air emerging from the socket into the anode cooling fins. It is recommended that the SK-606 chimney, or its equivalent, be used with each SK-711A socket.

THE SK-711A IS RECOMMENDED FOR USE WITH THE FOLLOWING TUBES:

4CX300A 4CX300Y 4CX125C 4CX125F 4CN15A

(Revised 3-15-71) © by Varian Printed in U.S.A.

SK-711A

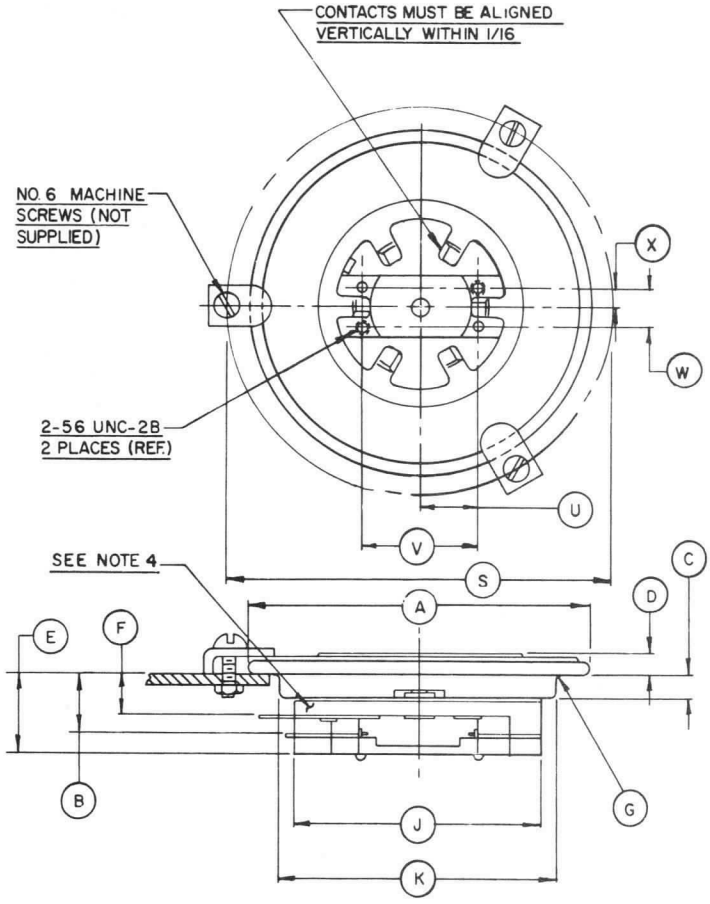

DIMENSIONAL DATA						
DIM.	INCHES			MILLIMETERS		
	MIN.	MAX.	REF.	MIN.	MAX.	REF.
A	2.688	2.750	--	68.28	69.85	--
C	0.175	0.207	--	4.45	5.26	--
D	0.156	0.218	--	3.96	5.54	--
E	0.600	0.650	--	15.24	16.51	--
F	0.312	0.352	--	7.92	8.94	--
G	0.453	0.493	--	11.51	12.52	--
H	--	--	0.031	--	--	0.79
J	--	--	2.000	--	--	50.80
K	2.184	2.210	--	55.47	56.13	--
L	--	--	30°	--	--	30°
M	--	--	35°	--	--	35°
N	--	--	55°	--	--	55°
P	0.109	0.161	--	2.77	3.58	--
R	0.234	0.266	--	5.94	6.76	--
T	--	--	60°	--	--	60°
U	0.437	0.469	--	11.10	11.91	--
V	0.890	0.922	--	22.61	23.42	--
Y	--	--	1.203	--	--	30.56
Z	--	--	1.312	--	--	33.32
AB	--	--	0.062	--	--	1.57
AC	--	--	0.188	--	--	4.78
AD	--	--	0.031	--	--	0.79
AE	--	--	0.125	--	--	3.18
AF	--	--	0.020	--	--	0.51
AJ	--	--	0.062	--	--	1.57

NOTES:

1. REF DIMS. ARE FOR INFO. ONLY AND ARE NOT REQD. FOR INSP. PURPOSES.
2. TOLERANCES ARE NOT CUMULATIVE.
3. BYPASS CAPACITOR RATINGS:
   CAPACITANCE--900/1500 P.f
   VOLTAGE BREAKDOWN- 350 VDC AT 60,000 FT.
4. INSULATING BODY RING MADE OF DIALLYL ISOPHTHALATE PER MIL-M-19833
5. THE CAPACITOR IS A SEALED UNIT SOCKET CAPABLE OF OPERATING AT 350 VDC IN AN AMBIENT TEMP OF-65°C TO 185°C.
6. BODY OF THE SOCKET & CONTACTS ARE SILVER PLATED

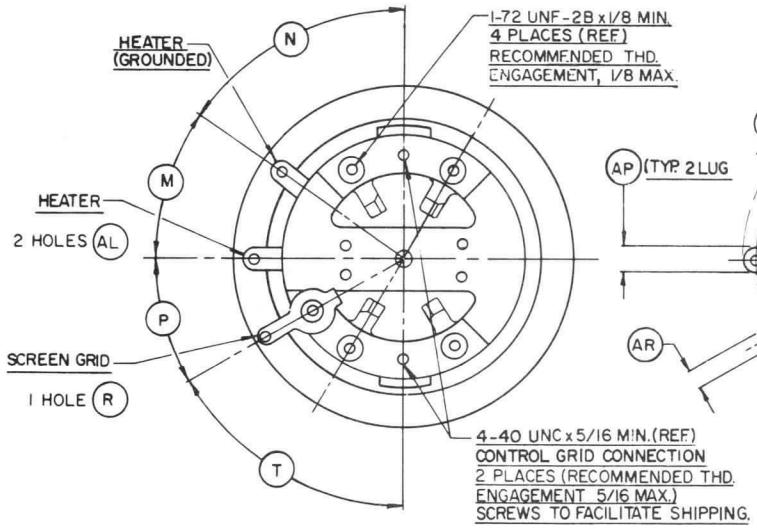

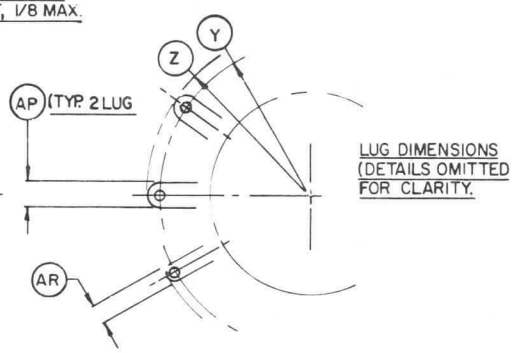

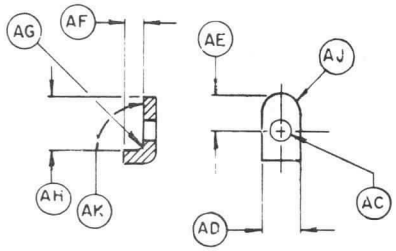

TOE CLAMP DETAIL

TECHNICAL DATA

SK-740

AIR-SYSTEM SOCKET

The EIMAC SK-740 Air-System Socket is recommended for use with those tubes listed at the bottom of the page or other tube types having this special breech-block base. This socket is not intended for use with an Air-Chimney, but is particularly useful in applications where transverse air cooling, heat-sink or immersion cooling is intended. When this socket is used, connection is made to each of the tube electrodes except the anode.

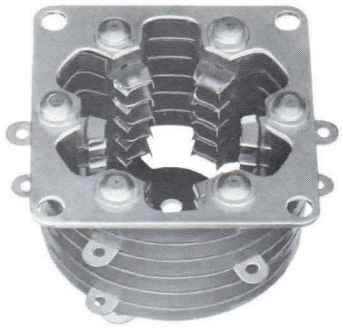

BASE CONNECTIONS

The SK-740 socket consists of five sets of ring contacts: they are from top to bottom: 1.screen-grid, 2.control-grid, 3.cathode, 4.heater, 5.heater. Each set of contacts consist of six separate contacting tabs. The tube elements are connected to their external circuits by two diametrically-opposed solder tabs. The SK-740 has no grounded contacts.

MATERIALS AND FINISHES

The mounting plate of the socket is fabricated of nickel-plated brass. The contact rings and tabs are of beryllium copper, heat-treated after forming, then silver-plated. The rivets and washers are of brass, silver and nickel-plated respectively. The ten contact terminals are solder-dipped to insure firm, dependable solder contact. The insulating wafers and the stop yoke of the socket are molded of a flameproof diallyl meta-phthalate.

INSTALLATION

The SK-740 Air-System Socket is designed for under-chassis mounting and requires a 1.593 inches diameter hole through the chassis deck. Four screw holes are provided for fastening as shown in the outline drawing.

THE SK-740 AIR-SYSTEM SOCKET IS RECOMMENDED FOR USE WITH THE FOLLOWING TUBE TYPES:

4N15A	4CX300A/8167
4CX125C	4CX300Y/8561
4CX125F	

Note: A separate means of directing air is required when using the SK-740 with the 4CX300A and 4CX300Y. For applications using these two tubes, the SK-760 and SK-770 Air-System Sockets are recommended. These contain an integral chimney.

NET WEIGHT (Approximate) . . . . . 1.5 Oz.; (42.5 gm)

(Revised 7-15-75) © 1963, 1966, 1975 by Varian

Printed in U.S.A.

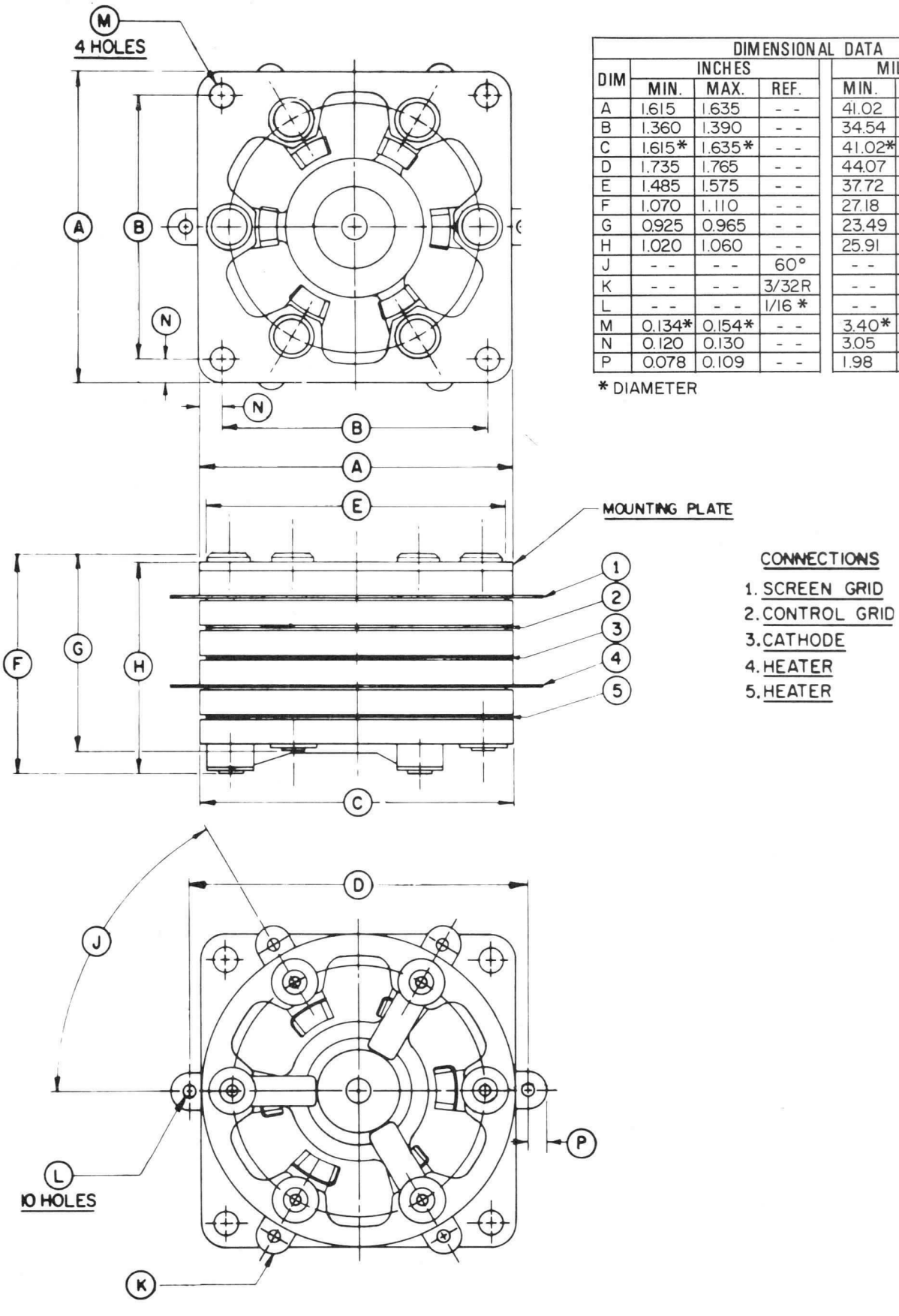

DIMENSIONAL DATA						
DIM	INCHES			MILLIMETERS		
	MIN.	MAX.	REF.	MIN.	MAX.	REF.
A	1.615	1.635	- -	41.02	41.53	- -
B	1.360	1.390	- -	34.54	35.31	- -
C	1.615*	1.635*	- -	41.02*	41.53*	- -
D	1.735	1.765	- -	44.07	44.83	- -
E	1.485	1.575	- -	37.72	40.00	- -
F	1.070	1.110	- -	27.18	28.19	- -
G	0.925	0.965	- -	23.49	24.51	- -
H	1.020	1.060	- -	25.91	26.92	- -
J	- -	- -	60°	- -	- -	60°
K	- -	- -	3/32R	- -	- -	2.34R
L	- -	- -	1/16 *	- -	- -	1.57*
M	0.134*	0.154*	- -	3.40*	3.91 *	- -
N	0.120	0.130	- -	3.05	3.30	- -
P	0.078	0.109	- -	1.98	2.77	- -

* DIAMETER

CONNECTIONS

1. SCREEN GRID
2. CONTROL GRID
3. CATHODE
4. HEATER
5. HEATER

TECHNICAL DATA

SK-760
SK-770

AIR-SYSTEM SOCKETS

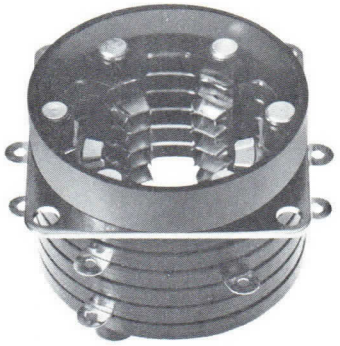

The EIMAC SK-760 and SK-770 Air-System Sockets are recommended for use with those tubes listed at the bottom of the page or other tube types having this special breech-block base. These sockets incorporate a built-in integral chimney. When these sockets are used, connection is made to each of the tube electrodes except the anode. The screen contacts on the SK-760 are not connected to the metal mounting plate, while the screen contacts on the SK-770 are connected to the metal mounting plate. The SK-760 has no grounded contacts.

BASE CONNECTIONS

The SK-760 and SK-770 Air-System Sockets consist of five sets of ring contacts. They are (from top to bottom): 1)-screen-grid, 2)-control-grid, 3)-cathode, 4)-heater, 5)-heater. Each set of contacts consist of six separate contact tabs. The tube elements are connected to their external circuits by two diametrically opposed solder terminals.

MATERIALS AND FINISHES

The mounting plates of these sockets are fabricated of nickel-plated brass. Contact rings and tabs are made of beryllium copper, heat-treated after forming, then silver-plated. The rivets and washers are of brass, silver and nickel-plated respectively. The ten contact terminals are solder-dipped to insure firm, dependable solder contact. The insulating wafers and the stop yoke of the sockets are molded of a flameproof diallyl meta-phthalate.

INSTALLATION

The SK-760 and SK-770 Air-System Sockets were designed for under-chassis mounting and require a 1.593 inches diameter hole through the chassis deck. Four screw holes are provided for fastening as shown on the outline drawing.

THE SK-760 AND SK-770 AIR-SYSTEM SOCKETS ARE RECOMMENDED FOR USE WITH THE FOLLOWING TUBE TYPES:

4CN15A 4CX300A/8167 4CX300Y/8561

NET WEIGHT (Approximate) . . . . . 1.5 oz; (42.5 gm)

(Revised 7-15-75) © 1963, 1966, 1970, 1975 by Varian Printed in U.S.A.

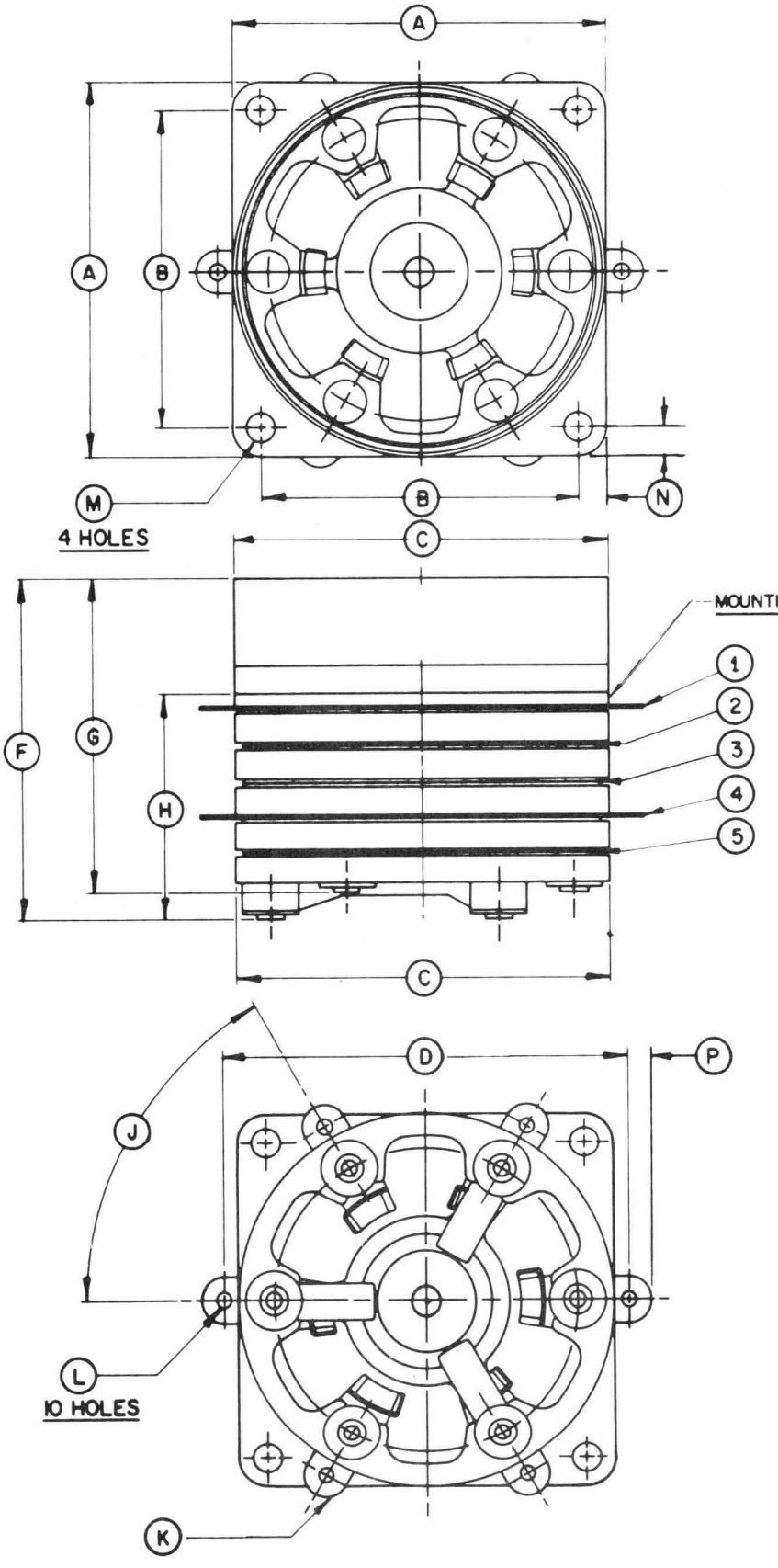

DIMENSIONAL DATA						
DIM.	INCHES			MILLIMETERS		
	MIN.	MAX.	REF.	MIN.	MAX.	REF.
A	1.615	1.635	- -	41.00	41.40	- -
B	1.360	1.390	- -	34.57	35.25	- -
C	1.615 D.	1.635 D.	- -	41.00 D.	41.40 D.	- -
D	1.735	1.765	- -	43.90	44.83	- -
F	1.330	1.370	- -	33.75	34.80	- -
G	1.205	1.245	- -	30.60	31.66	- -
H SK760	1.020	1.060	- -	25.91	26.92	- -
H SK770	.931	.971	- -	23.70	24.70	- -
J	- -	- -	60°	- -	- -	60°
K	- -	- -	3/32 R.	- -	- -	2.38R.
L	- -	- -	1/16 D.	- -	- -	1.59 D.
M	.134 D.	.154 D.	- -	3.40 D.	3.92 D.	- -
N	.120	.130	- -	3.05	3.30	- -
P	.078	.109	- -	1.98	2.77	- -

NOTES:
1. REF. DIMENSIONS ARE FOR INFO. ONLY & ARE NOT REQUIRED FOR INSPECTION PURPOSES.

CONNECTIONS
1. SCREEN GRID
2. CONTROL GRID
3. CATHODE
4. HEATER
5. HEATER

EIMAC
Division of Varian
SAN CARLOS
CALIFORNIA

SK-800B
AIR-SYSTEM SOCKET UNGROUNDED CATHODE TERMINALS

SK-806
AIR CHIMNEY

The Eimac SK-800B is one of the air-system sockets recommended for use with the Eimac 4CX1000A or 4CW2000A tetrodes. A companion SK-806 Air Chimney is also available and is recommended for use with the socket when the air-cooled 4CX1000A is to be employed.

When this socket is used, connection is made to each of the tube electrodes, except the anode, and to one side of the integral screen-grid by-pass capacitor. The SK-800B is humidity and salt-spray resistant.

The SK-800B is an improved version of the SK-800A and directly replaces the SK-800A in any equipment. The SK-800B features a stronger, one piece base and improved contact tabs.

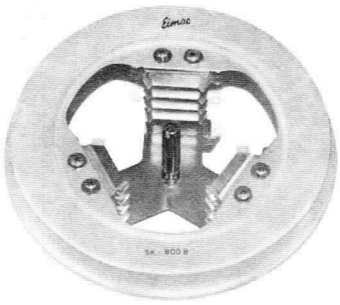

SK-800B

BASE CONNECTIONS

The SK-800B socket consists of three sets of spring-finger contact tabs for each tube electrode (to assure low-inductance contact), a center guide pin to facilitate tube installation, and an integral screen by-pass capacitor. The terminals are shown on the outline drawing.

When the socket is mounted on a grounded chassis, no tube electrodes are automatically grounded. Connection to the cathode and one side of the heater is made via the second set of spring-finger contacts from the bottom of the socket.

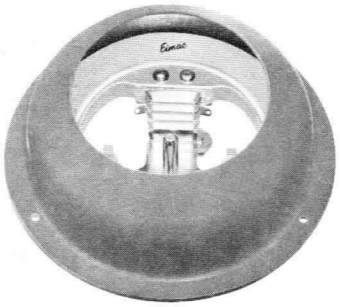

SK-800B WITH CHIMNEY

SCREEN-GRID BY-PASS CAPACITOR

This capacitor utilizes Mylar film as a dielectric and is encapsulated in silicone resin. Its capacitance is 1500 uufds $\pm$20 percent and it is rated at 400 dc working volts. One side connects to the three screen-grid tabs on the tube and the other side is connected directly to the socket body.

MATERIALS AND FINISHES

The metal shell, or body, of the socket is fabricated of silver-plated brass, while the mounting base and centering pin are a one-piece, nickel-plated die casting. All contacts are formed of a non-ferrous alloy, heat-treated and silver-plated. Contact insulating material is high-temperature ceramic.

INSTALLATION

The SK-800B Air-System Socket is designed for under-chassis mounting and requires a 5-1/16-inch hole through the chassis deck. The socket is held in place by the three toe clamps provided. One side of the screen-grid by-pass capacitor is automatically grounded to the chassis when this mounting method is used.

AIR CHIMNEY

The SK-806 Air Chimney is moulded of fiberglass-reinforced silicone resin. It effectively directs the flow of air to the anode cooling fins with minimum pressure drop and is recommended for use with each SK-800B when the air-cooled 4CX1000A is to be socketed.

SK-800B:

Net Weight - 18 ounces

SK-806:

Net Weight - 3-1/4 ounces
Maximum Height - 1-7/8 inches
Maximum Diameter - 6-1/8 inches

(Effective 4-9-64) © 1964, 1968 by Varian

Printed in U.S.A.

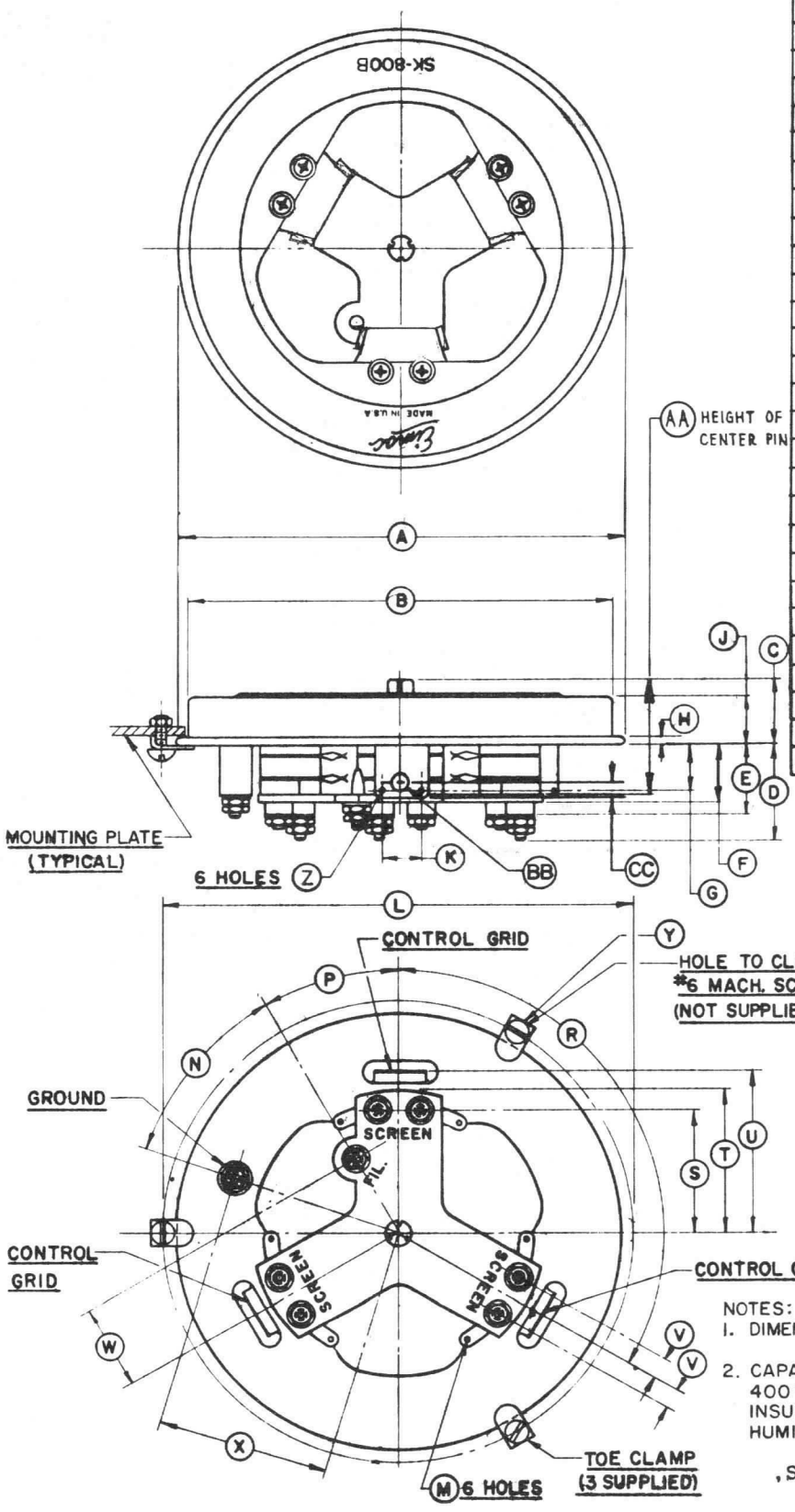

DIMENSION DATA			
	MIN.	MAX.	
A	5.290	5.330	
B	5.010	5.047	
C	.690	.730	
D	1.100	1.170	
E			.760 REF
F	.641	.681	
G	.500	.540	
H	.110	.140	
J	.510	.540	
K	.422	.452	
L			5.595 REF
M	.057 DIA.	.077 DIA.	
N	40°	42°	
P	29°	31°	
R	119°	121°	
S	1.490	1.530	
T	1.699	1.739	
U	1.917	1.957	
V	.245	.255	
W	1.052	1.072	
X	2.052	2.072	
Y	.142 DIA.		
Z	.078 DIA.	.108 DIA.	
AA	1.246	1.286	
BB	.156 DIA.	.186 DIA.	
CC			.234 REF
AB	.125 R	.187 R	
AC	.292	.332	
AD	.292	.332	
AE	.105	.145	
AF		.062 R	
AG	80°	100°	
AH	.417	.457	
AJ	.142	.146	

NOTES:
1. DIMENSIONS IN INCHES.
2. CAPACITOR: 1500 MMFD ± 20% 400 WVDC, 1000 VDC TEST INSULATED TO WITHSTAND HUMIDITY
, SALT SPRAY

EIMAC
Division of Varian
SAN CARLOS
CALIFORNIA

SK-810B
AIR-SYSTEM SOCKET GROUNDED CATHODE TERMINALS
SK-806
AIR CHIMNEY

The EIMAC SK-810B is one of the air-system sockets recommended for use with the EIMAC 4CX1000A or 4CW2000A tetrodes. A companion SK-806 Air Chimney is also available and is recommended for use with the socket when the air-cooled 4CX1000A is to be employed.

When this socket is used, connection is made to each of the tube electrodes except the anode, and to one side of the integral screen-grid by-pass capacitor. The SK-810B is humidity and salt-spray resistant.

The SK-810B is an improved version of the SK-810 and directly replaces the SK-810 in any equipment. The SK-810B features a stronger, one-piece base and improved contact tabs.

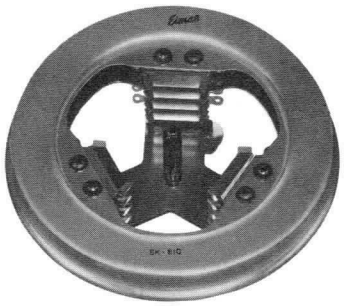

SK-810B

BASE CONNECTIONS

The SK-810B socket consists of three sets of spring-finger contact tabs for each tube electrode (to assure low-inductance contact), a center guide pin to facilitate tube installation, and an integral screen by-pass capacitor. The terminals are shown on the outline drawing.

When this socket is mounted on a grounded chassis, the cathode and one side of the heater will be automatically grounded. A grounding terminal is provided and may be used for positive connection if desired.

SCREEN GRID BY-PASS CAPACITOR

This capacitor utilizes Mylar film as a dielectric and is encapsulated in silicone resin. Its capacitance is 1500 pF ±20 percent and it is rated at 400 dc working volts. One side connects to the three screen-grid tabs on the tube and the other side is connected directly to the socket body.

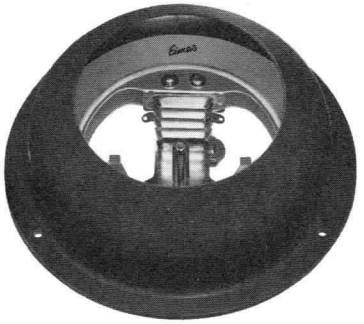

SK-810B WITH CHIMNEY

MATERIALS AND FINISHES

The metal shell, or body, of the socket is fabricated of silver-plated brass, while the mounting base and centering pin are a one-piece, nickel-plated die casting. All contacts are formed on a non-ferrous alloy, heat-treated and silver-plated. Contact insulating material is high-temperature ceramic.

INSTALLATION

The SK-810B Air-System Socket is designed for under-chassis mounting and requires a 5-1/16 inch hole through the chassis deck. The socket is held in place by the three toe clamps provided. One side of the screen-grid by-pass capacitor is automatically grounded to the chassis when this mounting method is used.

AIR CHIMNEY

The SK-806 Air Chimney is molded of fiberglass-reinforced silicone resin. It effectively directs the flow of air to the anode cooling fins with minimum pressure drop and is recommended for use with each SK-810B when the air-cooled 4CX1000A is to be socketed.

SK-810B

Net Weight	18 ounces

SK-806

Net Weight	3-¼ ounces
Maximum Height	1-⅞ inches
Maximum Diameter	6-⅛ inches

(Revised 6-1-67) © 1964, 1967 by Varian

Printed in U.S.A.

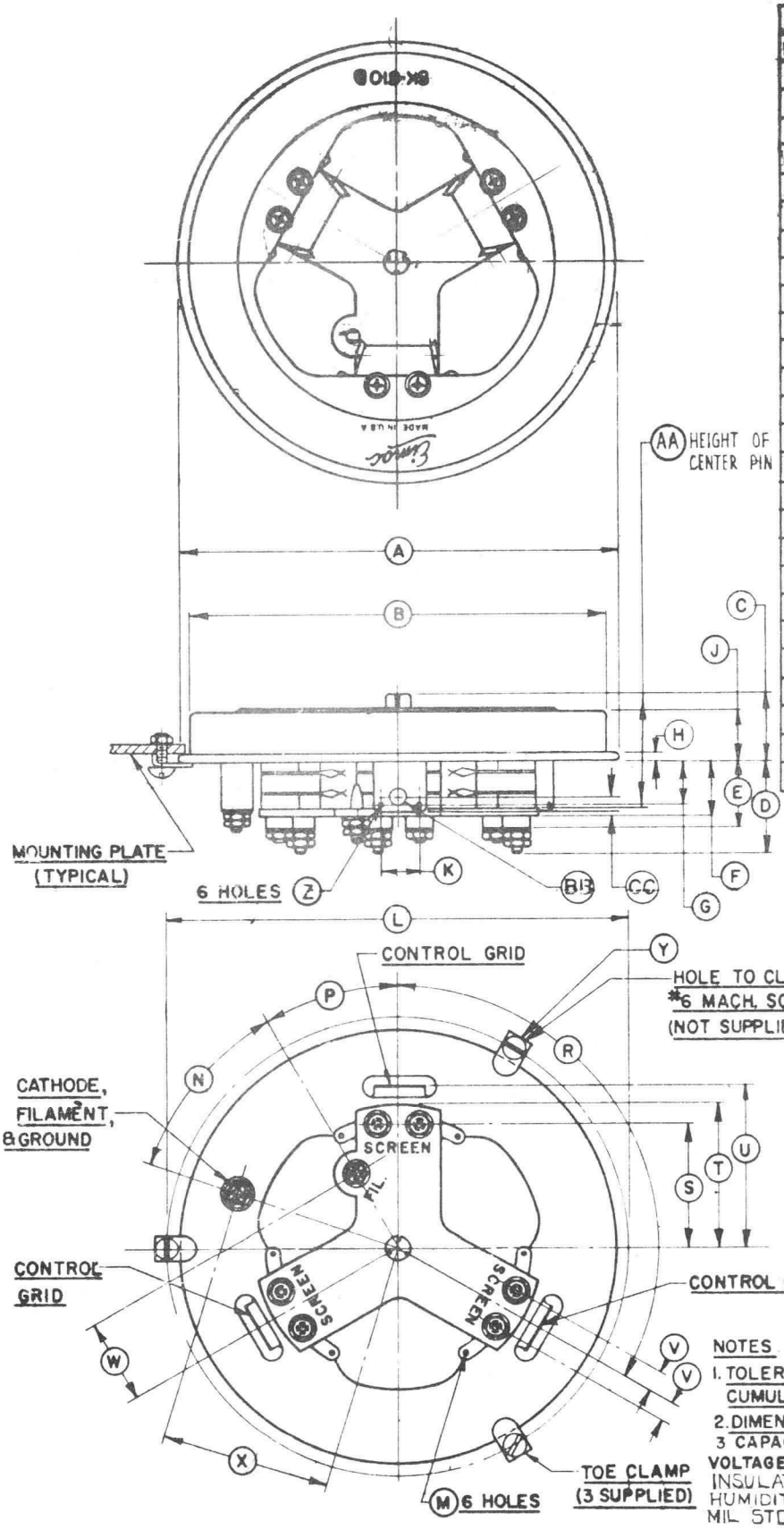

DIMENSION DATA			
DIM.	MIN.	MAX.	REF.
A	5.290	5.330	
B	5.010	5.047	
C	.690	.730	
D	1.100	1.170	
E			.760
F	.641	.681	
G	.500	.540	
H	.110	.140	
J	.510	.540	
K	.422	.452	
L			5.595
M	.057 DIA.	.077 DIA.	
N	40°	42°	
P	29°	31°	
R	119°	121°	
S	1.490	1.530	
T	1.699	1.739	
U	1.917	1.957	
V	.245	.255	
W	1.052	1.072	
X	2.052	2.072	
Y	.142 DIA.		
Z	.078 DIA.	.108 DIA.	
AA	1.246	1.286	
BB	.156 DIA.	.186 DIA.	
CC			.234
DD	.125R	.187R	
EE	.292	.332	
FF	.292	.332	
GG	.105	.145	
HH		.062R	
JJ	80°	100°	
KK	.417	.457	
LL	.142	.146	

NOTES

1. TOLERANCES ARE NOT CUMULATIVE.
2. DIMENSIONS IN INCHES.
3. CAPACITANCE 1500MMFD ± 20% VOLTAGE 1000VDC TEST, 400WVDC INSULATED TO WITHSTAND HUMIDITY & SALT SPRAY MIL STD-202B.

TECHNICAL DATA

SK-816
SK-860
SK-870

AIR-SYSTEM SOCKET and CHIMNEY

The EIMAC SK-860 and SK-870 are air-system sockets recommended for use with the EIMAC 3CX1000A7 triode. A companion SK-816 Air Chimney is also available and is recommended for use with the socket.

When this socket is used, connection is made to each of the tube electrodes except the anode. The SK-860 and SK-870 are humidity and salt-spray resistant.



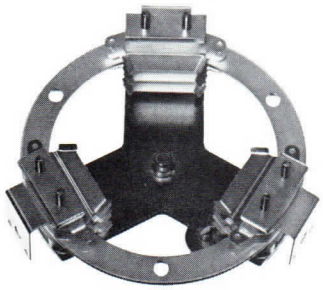

BASE CONNECTIONS

The SK-860 and SK-870 sockets consist of three sets of spring-finger contacts for each tube electrode (to assure low-inductance contact) and a center guide to facilitate tube installation. The terminals are shown on the outline drawing.

No contacts are grounded on the SK-860, while the SK-870 has the grid contacts grounded to the equipment chassis when installed.

MATERIALS and FINISHES

The metal shell, or body, of the socket is fabricated of silver-plated brass, while the mounting base is a one-piece nickle-plated die casting. All contacts are formed of a non-ferrous alloy, heat treated and silver-plated. Contact insulating material is high-temperature ceramic.

INSTALLATION

The SK-860 and SK-870 are designed for under-chassis mounting and require a 2-3/4'' diameter hole through the chassis deck. The socket is held in place by the six 4-40 studs provided on the socket. The grid of the SK-870 is automatically grounded to the chassis when this mounting method is used.

AIR CHIMNEY

The SK-816 Air Chimney is molded of fiberglass-reinforced silicone resin. It effectively directs the flow of air to the anode cooling fins with minimum pressure drop and is recommended for use with each SK-860 and SK-870.

NET WEIGHT ..... 12 oz; 340 gms

(Revised 3-25-75) © 1963, 1967, 1975 by Varian

Printed in U.S.A.

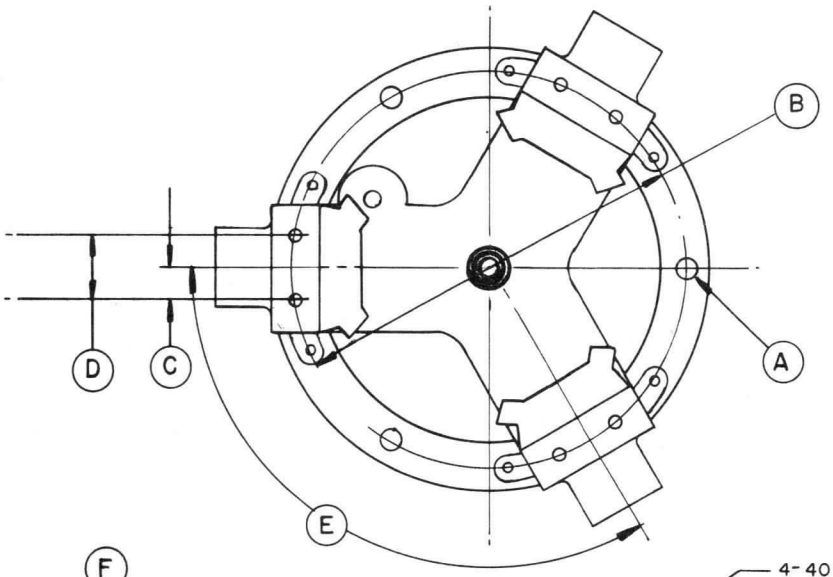

DIM	DIMENSIONAL DATA					
	INCHES			MILLIMETERS		
	MIN.	MAX.	REF.	MIN.	MAX.	REF.
A	0.160	0.180	- -	4.06	4.57	- -
B	3.040	3.085	- -	77.22	78.36	- -
C	0.234	0.266	- -	5.94	6.76	- -
D	0.484	0.516	- -	12.29	13.11	- -
E	119°	121°	- -	119°	121°	- -
F	- -	- -	0.270	- -	- -	6.86
G	1.215	1.295	- -	30.86	32.89	- -
H	- -	- -	0.170	- -	- -	4.32
J	- -	- -	0.092	- -	- -	2.34
K	0.160	0.180	- -	4.06	4.57	- -
L	0.430	0.460	- -	10.92	11.68	- -
M	0.690	0.735	- -	17.53	18.67	- -
N	- -	- -	1.985	- -	- -	50.42
P	29°	31°	- -	29°	31°	- -
R	- -	- -	1.062	- -	- -	26.97
S	- -	- -	0.066	- -	- -	1.68

NOTE: REFERENCE DIMENSIONS ARE FOR INFORMATION ONLY & ARE NOT REQUIRED FOR INSPECTION PURPOSES.

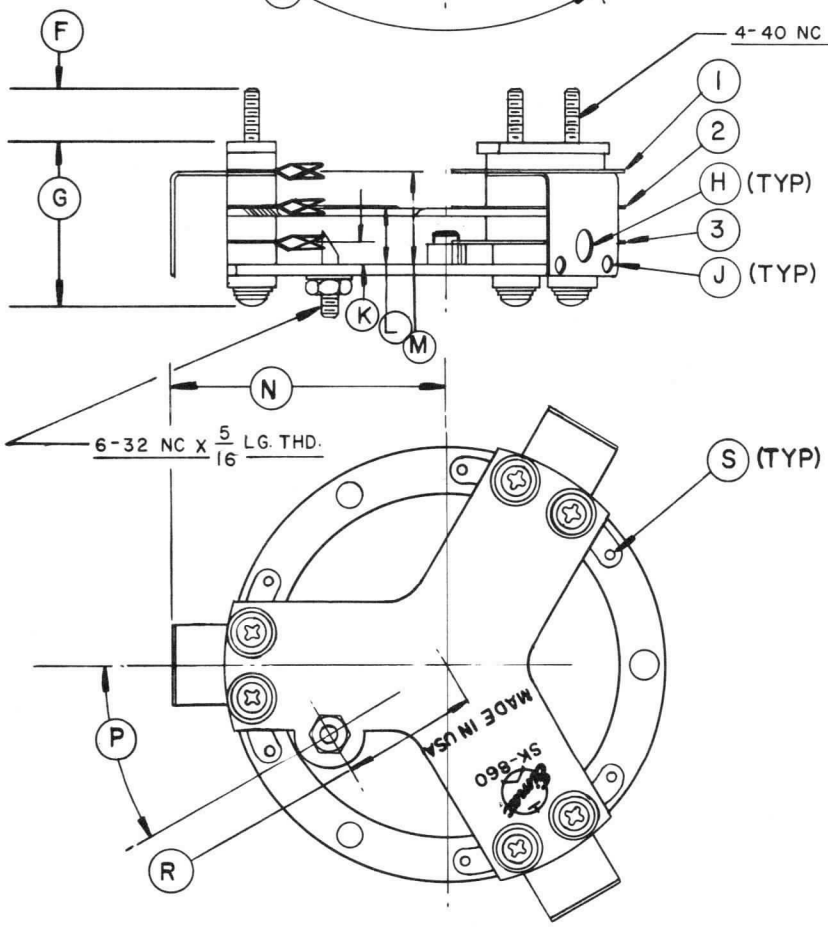

NOTE

1. GRID
2. CATHODE HEATER
3. HEATER

EIMAC
Division of Varian
SAN CARLOS
CALIFORNIA

SK-890B
AIR-SYSTEM SOCKET GROUNDED CATHODE TERMINALS
SK-806
AIR CHIMNEY

The EIMAC SK-890B is one of the air-system sockets recommended for use with the EIMAC 4CX1000A or 4CW2000A tetrodes. The SK-890B is especially designed for use at frequencies where series screen neutralization is employed and is so constructed that the screen-grid can be series tuned to ground through the screen by-pass capacitor. A companion SK-806 Air Chimney is also available and is recommended for use with the socket when the air-cooled 4CX1000A is to be employed.

When this socket is used, connection is made to each of the tube electrodes except the anode. The SK-890B is humidity and salt-spray resistant.

The SK-890B is an improved version of the SK-890 and directly replaces the SK-890 in any equipment. The SK-890B features a stronger, one-piece base and improved contact tabs.

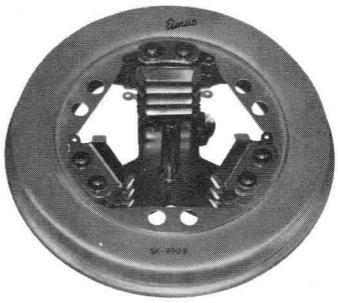

SK-890B

BASE CONNECTIONS

The SK-890B socket consists of three sets of spring-finger contact tabs for each tube electrode (to assure low-inductance contact), a center guide pin to facilitate tube installation, and an integral screen by-pass capacitor. The terminals are shown on the outline drawing.

When this socket is mounted on a grounded chassis, the cathode and one side of the heater will be automatically grounded. A grounding terminal is provided and may be used for positive connection if desired.

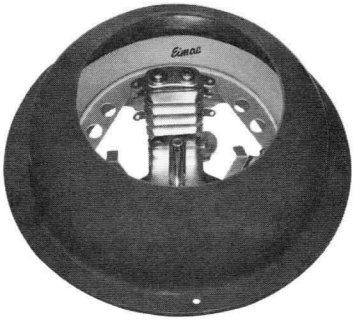

SK-890B WITH CHIMNEY

SCREEN-GRID BY-PASS CAPACITOR

This capacitor utilizes Mylar film as a dielectric and is encapsulated in silicone resin. Its capacitance is 1500 pF ±20 percent and it is rated at 400 dc working volts. The socket is so orientated that the three sets of spring finger contacts which connect to the screen-grid tabs of the tube are not connected to the upper, ungrounded side of the screen-grid capacitor. A series of six holes are provided to the upper capacitor deck to allow the installation of the screen neutralizing device; this device is connected between each of the solder terminals provided in the screen spring finger contacts and the upper capacitor deck. The lower capacitor deck is connected directly to the socket body.

MATERIALS AND FINISHES

The metal shell, or body, of the socket is fabricated of silver-plated brass, while the mounting base and centering pin are a one-piece, nickel-plated die-casting. All contacts are formed of a non-ferrous alloy, heat-treated and silver-plated. Contact insulating material is high-temperature ceramic.

INSTALLATION

The SK-890B Air-System Socket is designed for under-chassis mounting and requires a 5-1/16 inch hole through the chassis deck. The socket is held in place by the three toe clamps provided. One side of the screen-grid by-pass capacitor is automatically grounded to the chassis when this mounting method is used.

AIR CHIMNEY

The SK-806 Air Chimney is moulded of fiberglass-reinforced silicone resin. It effectively directs the flow of air to the anode cooling fins with minimum pressure drop and is recommended for use with each SK-890B when the air-cooled 4CX1000A is to be socketed.

SK-890B

Net Weight	18 ounces

SK-806

Net Weight	3-¼ ounces
Maximum Height	1-⅞ inches
Maximum Diameter	6-⅛ inches

(Revised 6-1-67) © 1964, 1967 by Varian

Printed in U.S.A.

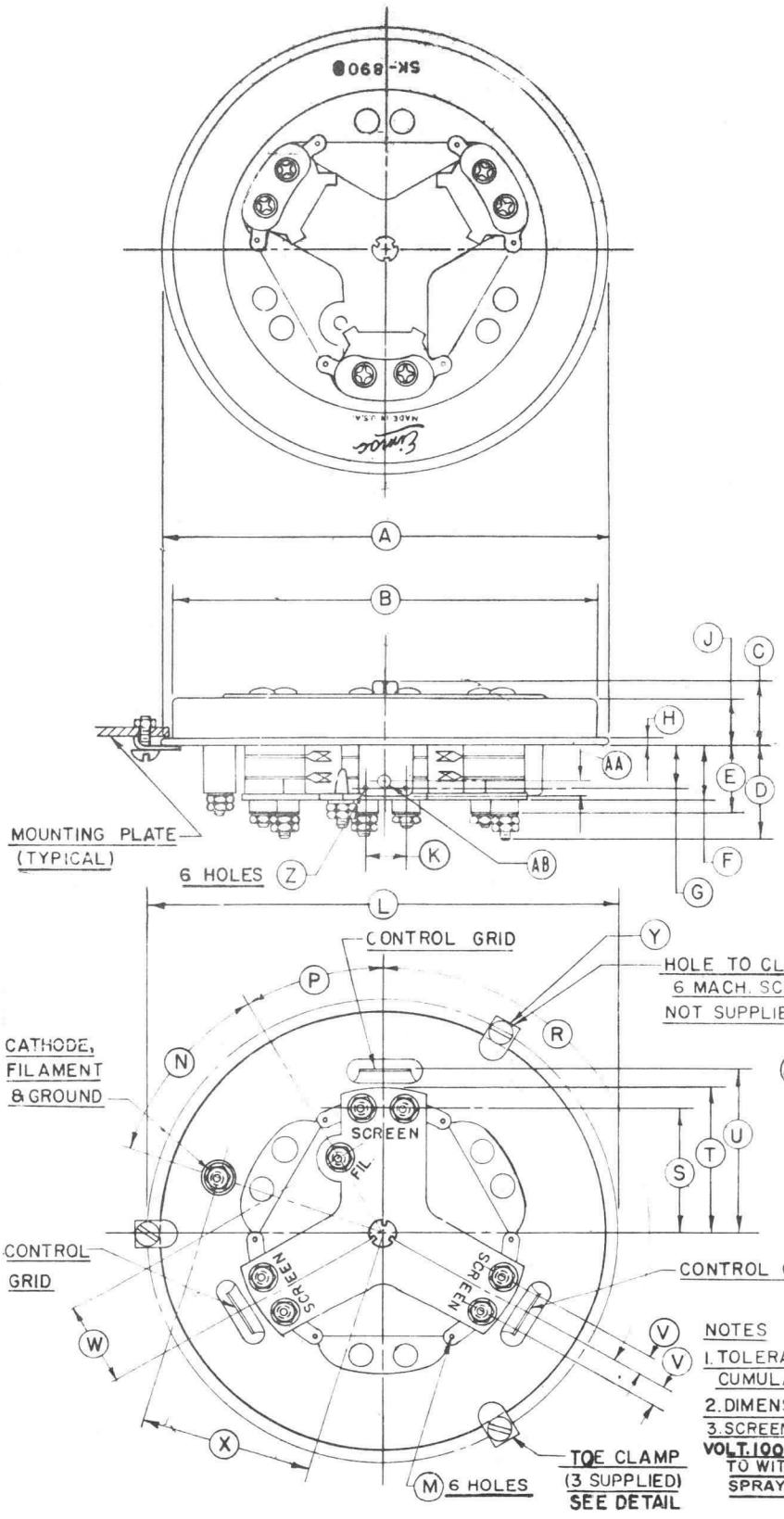

DIMENSION DATA			
DIM.	MIN.	MAX.	REF.
A	5.290	5.330	
B	5.010	5.047	
C	.790	.860	
D	.990	1.130	
E			.660
F	.550	.590	
G	.420	.500	
H	.110	.140	
J	.500	.540	
K	.422	.452	
L			5.595
M	.057 DIA.	.077 DIA.	
N	40°	42°	
P	29°	31°	
R	119°	112°	
S	1.485	1.530	
T	1.699	1.739	
U	1.917	1.957	
V	.245	.255	
W	1.052	1.072	
X	2.052	2.072	
Y	.142 DIA.		
Z	.078 DIA.	.108 DIA.	
AA			.234
AB	.156 DIA.	.186 DIA.	
AC	.125 R.	.187 R.	
AD	.142	.146	
AE	.292	.332	
AF	.292	.332	
AG	.105	.145	
AH	.417	.457	
AJ	80°	100°	
AK		.062 R.	

NOTE:
REF. DIMS ARE FOR INFO. ONLY & ARE NOT REQ'D FOR INSP. PURPOSES.

NOTES
1. TOLERANCES ARE NOT CUMULATIVE.
2. DIMENSIONS IN INCHES
3. SCREEN GRID CAP. 1500 ±20% mmfd
VOLT. 1000VDC TEST, 400WVDC. INSUL., TO WITHSTAND HUMIDITY & SALT SPRAY PER MIL-STD-202B

EIMAC
Division of Varian
SAN CARLOS
CALIFORNIA

SK-900
SOCKET
and
SK-906
CHIMNEY

The EIMAC SK-900 Air-System Socket and companion SK-906 Air Chimney are intended for use with the EIMAC 4X500A. The socket makes connection to each of the tube electrodes except the anode. A screen-grid by-pass capacitor is incorporated as an integral part of the socket.

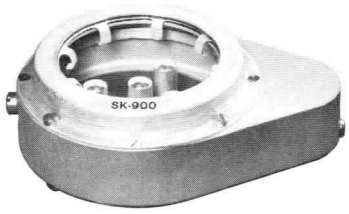

BASE CONNECTIONS

Filament, control-grid, and screen-grid pins of the tube are engaged by four self-aligning pin-jacks supported in a disk of low-loss material and terminating in 10-32 studs. The connecting leads to these studs must be sufficiently flexible to allow free movement of the pin-jacks or the self-aligning feature will be impaired. The supporting insulating disk rests on a shoulder turned into the bottom of the socket body and is held in place by four machine screws which act as clamps. This design permits the insulation and terminal assembly to be rotated to any convenient position and clamped firmly in place.

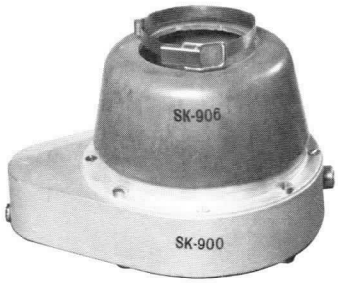

SCREEN-GRID BY-PASS CAPACITOR

This capacitor utilizes polyester film as the dielectric and is encapsulated in epoxy resin. The capacitance is 650 $\mu\mu$f$\pm$20% and is rated at 700 working volts. One side of the by-pass capacitor contacts the screen-grid flange of the tube through eight spring fingers and the other side is directly connected to the socket body.

INSTALLATION

The SK-900 Air-System Socket is designed for under-chassis mounting and requires a 3⅝-inch hole through the chassis deck. The socket is held in place by four 8-32 machine screws running through the chassis and into tapped holes in the cast aluminum socket body. One side of the screen-grid by-pass capacitor is automatically grounded to the chassis when this mounting method is used.

An air blower may be connected to the socket air-inlet by means of a duct terminating in a cylindrical fitting of 1¼-inch OD or the entire chassis may be pressurized.

Pressure drop across the socket and tube (with SK-906 installed may be measured by a manometer arranged to indicate the pressure difference between the air in the socket (or pressurized chassis) and the surrounding air. A ¼-28 tapped hole is provided in the socket body to facilitate the installation of a fitting. A suitable fitting will have a hole diameter of approximately 1/64-inch and when installed, must be flush with the inner wall of the socket to avoid inaccurate pressure measurements.

SK-906 AIR CHIMNEY

The air chimney is molded of fiber-glass reinforced silicone resin and fitted with an anode clamp. It effectively directs the flow of air to the anode cooling fins with minimum pressure drop and is recommended for use with each SK-900 Air-System Socket.

(Revised 8-15-66) © 1963, 1966 Varian

Printed in U.S.A.

DIMENSION DATA			
REF.	MIN.	MAX.	NOM.
A	3.720 DIA.	3.785 DIA.	
B	1.990 I.D.	2.010 I.D.	
C	3/8	7/16	
D	1.715	1.735	
E	.510	.530	
F			13/32 R.
G	9°	11°	

NOTE:
1. DIMENSIONS ARE IN INCHES.

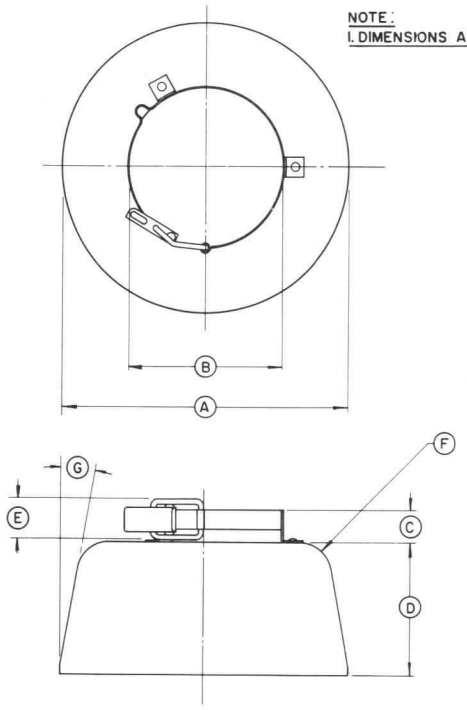

SK-906 CHIMNEY

DIMENSION DATA			
REF.	MIN.	MAX.	NOM.
A	5 3/8	5 1/2	
B	3.595 DIA.	3.605 DIA.	
C	3.864 DIA.	3.884 DIA.	
D	4 1/16 DIA.	4 3/16 DIA.	
E	1.490 DIA.	1.510 DIA.	
F	1.248 DIA.	1.263 DIA.	
G	.512	.532	
H	.040	.060	
J	1 3/64	1 5/64	
K	1 33/64	1 37/64	
L	2 15/32 DIA.	2 17/32 DIA.	
M	44°	46°	
N	19/32	21/32	
P	27/32 R.	29/32 R.	
R			.031 R

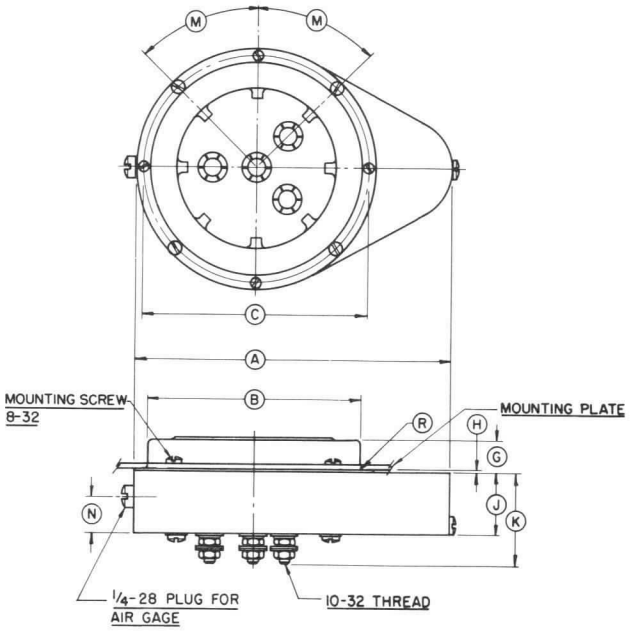

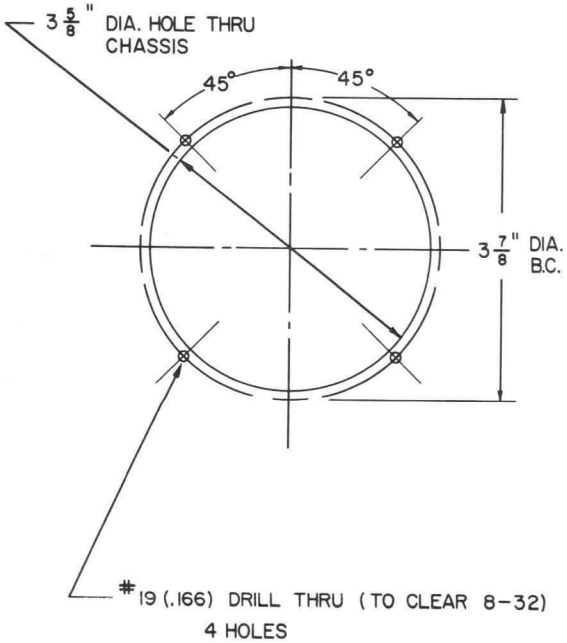

SK-900 CHASSIS DRILLING

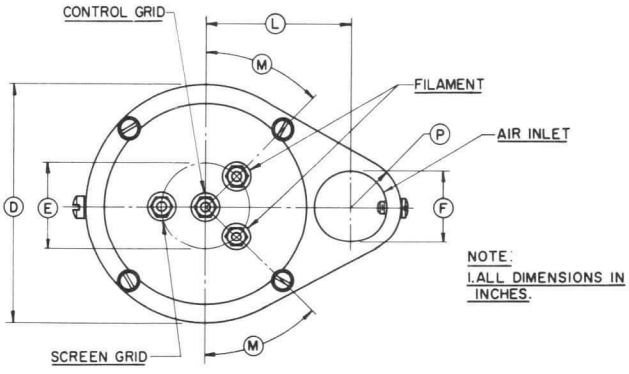

NOTE:
1. ALL DIMENSIONS IN INCHES.

SK-900 SOCKET

TECHNICAL DATA

SK-650
SK-655

AIR-SYSTEM SOCKET

The Eimac SK-650 is one of the Air-System Sockets recommended for use with those tubes listed at the bottom of the page, or other tube types having the same special nine-pin base, when a compact, low-cost, special purpose socket is required. When this socket is used, connection is made to each of the tube electrodes except the anode.

The SK-655 Screen By-Pass Capacitor is a separate encapsulated capacitor designed for use with the SK-650 Air-System Socket. When this combination is used, the screen by-pass capacitor can be replaced without troublesome or costly repairs.

Both the SK-650 and the SK-655 are humidity and salt-spray resistant.



SK-650
Air-System Socket

BASE CONNECTIONS

The SK-650 Air-System Socket consists of seven base pin contacting terminals (no contact is made to Pin #5) and a center control-grid terminal. The cathode of the tube is connected to its external circuits by the four even-numbered base pins which, in turn, are connected to the four socket mounting tabs. Connections are made in this manner to minimize the effects of lead inductance. When the SK-650 Air-System Socket is used alone, connection is made to the screen-grid via Pin #1. Control grid contact is accomplished by means of a 6/32″ screw at the center terminal.

THE SK-655 SCREEN-GRID BY-PASS CAPACITOR

The SK-655 Screen-Grid By-Pass Capacitor is an independent encapsulated capacitor which is mounted to the SK-650 Air-System Socket by the same four socket mounting screws. This is a low-inductance capacitor, 1100 uuf ± 20%, which provides a short radio-frequency path to ground. The capacitor is hi-voltage breakdown tested at 2000 volts d-c and rated at 1000 volts d-c. When the SK-655 is mounted on a grounded chassis, one side of the screen by-pass capacitor is automatically grounded.



SK-655 Screen
By-Pass Capacitor

MATERIALS AND FINISHES

In the SK-650 Air-System Socket, the base pin terminals and the four mounting lugs are fabricated of beryllium-copper, heat treated after forming, then silver-plated. The center control-grid terminal is silver-plated brass.

The insulating material, polytrifluorochloroethylene, is chemically inert, non-flammable, will not absorb water or water-vapors and is not affected by acids or alkalies. It will not react to normal solvents except in the case of halogenated compounds which will induce minor dimensional changes. Its physical characteristics are stable over a temperature range of −196°C to +199°C and it is resistant to embrittlement and thermal shock.

The SK-655 Screen By-Pass Capacitor has a body, or shell, constructed of silver-plated brass while the eight screen-grid contacting fingers are heat treated, silver-plated beryllium-copper. The capacitor dielectric is silvered-mica and is encapsulated in epoxy resin.

Net Weight of the SK-650 Air-System Socket ..... 1.2 ounces
Net Weight of the SK-655 Screen-Grid By-Pass Capacitor ..... 1.5 ounces

INSTALLATION

Both the SK-650 Air-System Socket and the SK-655 Screen-Grid By-Pass Capacitor can be mounted to a chassis deck or partition by the four 0.130″ diameter holes provided in each of the assemblies. Both units have holes which are 90° apart and are drilled on 2-17/32″ diameter pitch circle.

The SK-650 Air-System Socket requires a 2-1/8″ diameter hole to accept the socket body.

TUBE EXTRACTOR

The SK-604 is a spring-steel device useful for inserting and extracting tubes of the type used in the SK-650 Air-System Socket. It is recommended for use where the construction of the equipment makes it difficult or impossible to grasp the tube by hand or when it is necessary to handle the tubes while they are still hot from recent use.

THE SK-650 AIR-SYSTEM SOCKET IS RECOMMENDED FOR USE WITH THE FOLLOWING TUBES:

7034/4CX150A
7609
7203/4CX250B
8957/4CX250BC
8621/4CX250FG
7580W/4CX250R
8249/4W300B
8321/4CX350A
8322/4CX350F
8904/4CX350FJ

(Revised 5-1-76) 1961, 1966, 1976 by Varian

SK-650 Air-System Socket
SK-655 Screen By-Pass Capacitor

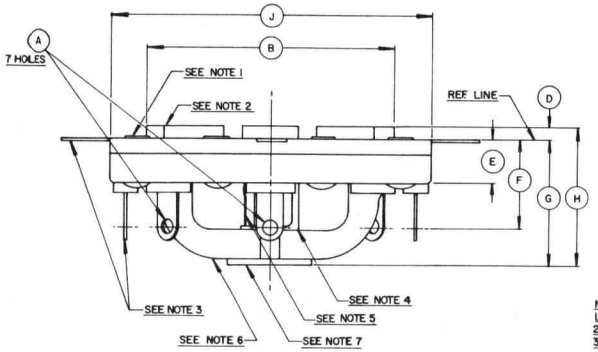

DIMENSIONAL DATA						
DIM	INCHES			MILLIMETERS		
	MIN.	MAX.	REF.	MIN.	MAX.	REF.
A			.090 D			2.29
B	1.610 D	1.645 D		40.9	41.8	
D	.012	.048		0.30	1.22	
E			.287			7.29
F			.573			14.5
G			.827			21.0
H	.825	.875		20.9	22.2	
J	2.092	2.119		53.1	53.8	
K	2.700	2.792		68.6	70.9	
L	2.510 D	2.551 D		63.7	64.8	
M	.1100	.1200		2.79	3.05	

NOTES:
1. RIVET, 70-30, BRASS
2. RETAINER, KEL-F No. 300
3. BASE PIN CONTACT SPRING, HEAT TREATABLE NON-FERROUS ALLOY.
4. CONTROL GRID LEAD KEYWAY, HEAT TREATABLE NON-FERROUS ALLOY.
5. CONTROL GRID LEAD CONTACT, HEAT TREATABLE NON-FERROUS ALLOY.
6. BODY, KEL-F No. 300
7. KEYWAY RIVET, 70-30 BRASS.
8. REF DIMS. ARE FOR INFO. ONLY AND ARE NOT REQD FOR INSP. PURPOSES.

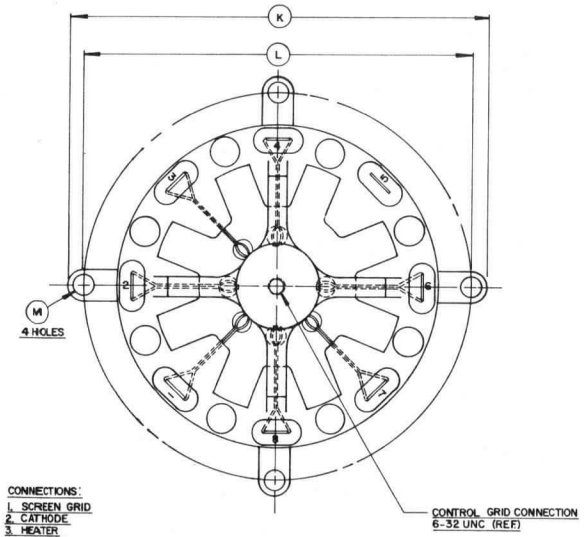

CONNECTIONS:
1. SCREEN GRID
2. CATHODE
3. HEATER
4. CATHODE
5. NO CONNECTION
6. CATHODE
7. HEATER
8. CATHODE

SK-650 OUTLINE DRAWING

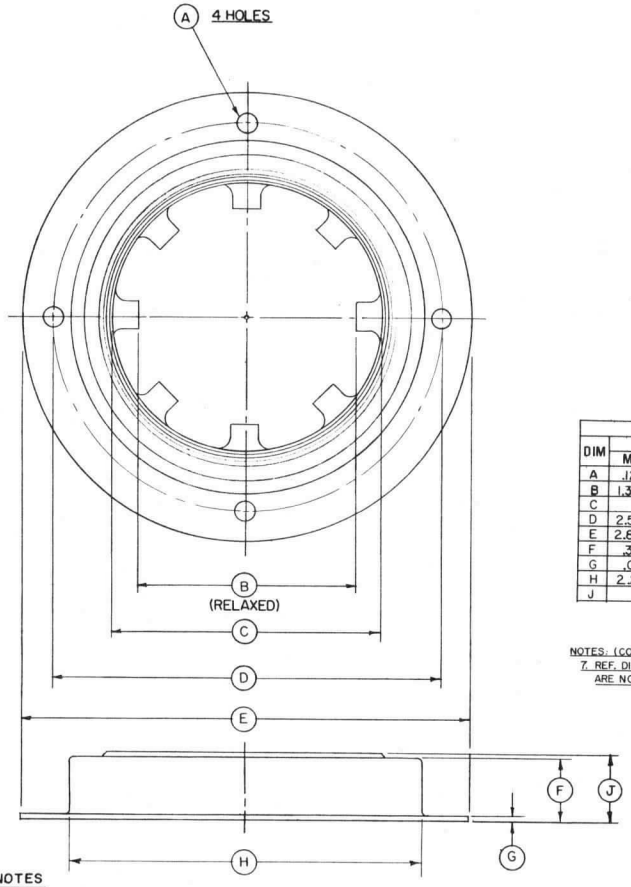

DIMENSIONAL DATA						
DIM	INCHES			MILLIMETERS		
	MIN.	MAX.	REF.	MIN.	MAX.	REF.
A	.125	.135		3.17	3.43	
B	1.330	1.390		33.8	35.3	
C			1.702			43.2
D	2.520	2.560		64.0	65.0	
E	2.858	2.891		72.6	73.4	
F	.380	.410		9.65	10.41	
G	.025	.037		0.63	0.94	
H	2.280	2.310		57.9	58.7	
J			.415			10.5

NOTES: (CONT.)
7. REF. DIMS. ARE FOR INFO. ONLY & ARE NOT REQ'D FOR INSP. PURPOSES

NOTES
1. CAPACITY – 1100 MMFD. ± 20%.
2. VOLTAGE – 2000VDC TEST, 1000 VDC WORKING.
3. DIAMETERS TO BE CONCENTRIC WITHIN .025.
4. CAPACITOR SEALED WITH EPOXY RESIN.
5. SILVER PLATE

SK-655 OUTLINE DRAWING

TECHNICAL DATA

SK-1300
SK-1310
SK-1320

AIR-SYSTEM SOCKETS

These sockets have been designed for use with the tube types listed below. The SK-1300 and the SK-1320 are intended for mounting on a pressurized chassis or plenum, allowing air-cooling of the tube base and terminals.



SK-1300

BASE CONNECTIONS

All these sockets are provided with three concentric rings of spring contact fingers for making contact to the filament and the grid of the coaxial triodes listed below.

The filament contact fingers are terminated on two bus connections to insure good high frequency current distribution. Each of these two bus rings is provided with two lugs for making external connections.

The grid spring-finger contacts are terminated on a heavy support assembly. The grid contact assembly is insulated from the socket mounting cup in the SK-1300; it is grounded to the cup in the SK-1320, for grounded-grid operation. The SK-1310 is a version intended for use with vapor-cooled versions of these coaxial triodes and has no grounded contacts.

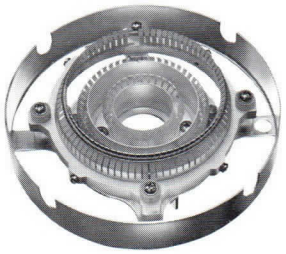

SK-1310

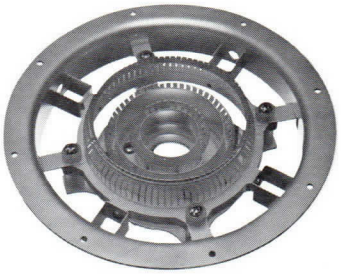

SK-1320

MATERIALS AND FINISHES

The contact fingers are non-ferrous spring alloy, heat-treated for positive spring action and silver-plated for good rf conductivity. The main socket body and cup assemblies are made of brass and are also silver plated.

INSTALLATION

The SK-1300 and SK-1320 are supported by the socket cup on a pressurized compartment or chassis. A 7-1/8 inch diameter hole is required in the supporting chassis or plenum and the socket is secured by eight #6 machine screws on a 7-3/4 inch pitch circle. The socket cup on both these sockets is open so that air may be directed through them for cooling of the tube base terminals.

The SK-1310, which is designed for use on vapor-cooled versions of these tubes, has no mounting/support cup; it is held into place on the base of the tube only by its contact finger assemblies for the grid and filament.

(Revised 3-1-72) © 1963, 1966, 1972 Varian Printed in U.S.A.

CHIMNEY

A companion Air-Chimney, the SK-1306, is available for use with the SK-1300 and SK-1320 and some of the air-cooled triode types, as listed below. The chimney is mounted above the chassis deck and is installed using the same eight mounting screws used for securing the socket to the chassis or deck.

Use of an Air-Chimney allows simplified cooling of the tube; air forced through the socket is directed through the chimney and then through the tube's anode cooling fins.

SOCKET/CHIMNEY/TUBE TYPE GUIDE

SOCKET	TUBE TYPE NUMBER	RECOMMENDED AIR CHIMNEY
SK-1300 and SK-1320	3CW10,000A3	none - water cooled tube
	3CW20,000A1	none - water cooled tube
	3CW20,000A3	none - water cooled tube
	3CW20,000A7	none - water cooled tube
	3CW25,000A3	none - water cooled tube
	3CX5000A3	special - EIMAC Y-463
	3CX10,000A1/8158	SK-1306
	3CX10,000A3/8159	SK-1306
	3CX10,000A7/8160	SK-1306
	3CX15,000A3	SK-1306
	3CX20,000A3	none available
SK-1310	3CV30,000A1	none - vapor cooled tube
	3CV30,000A3	none - vapor cooled tube

NET WEIGHTS

SK-1300, SK-1310, SK-1320 . . . . . 2.3 lbs; 1.04 kg

DIM.	INCHES			MILLIMETERS		
	MIN.	MAX.	REF.	MIN.	MAX.	REF.
A	1.990	2.070	- -	50.55	52.58	- -
B	3.240	3.320	- -	82.30	84.33	- -
C	3.700	3.770	- -	93.98	95.76	- -
E	7.030	7.125	- -	178.56	180.97	- -
F	3.590	3.690	- -	91.19	93.73	- -
G	2.710	2.835	- -	68.83	72.01	- -
H	1.440	1.530	- -	36.58	38.86	- -
J	0.890	0.960	- -	22.61	24.38	- -
L	0.235	0.265	- -	5.97	6.73	- -
M	6.720	6.780	- -	170.69	172.21	- -
N	8.220	8.280	- -	208.79	210.31	- -
P	7.060	7.190	- -	179.32	182.63	- -
S	0.270	0.395	- -	6.86	10.03	- -
T	0.185	0.285	- -	4.70	7.24	- -
U	0.580	0.700	- -	14.73	17.78	- -
V	0.760	0.865	- -	19.30	21.97	- -
X	1.500	1.620	- -	38.10	41.15	- -
Y	4.970	5.030	- -	126.24	127.76	- -
Z	43°	47°	- -	43°	47°	- -
AA	7.730	7.770	- -	196.34	197.36	- -
AB	0.860	0.980	- -	21.84	24.89	- -
AC	0.140	0.154	- -	3.56	3.91	- -

NOTES:
1. REF. DIMS. ARE FOR INFO. ONLY AND ARE NOT REQD. FOR INSP. PURPOSES.
2. (✱) CONTACT SURFACES.
3. TOLERANCES ARE NOT CUMLATIVE.

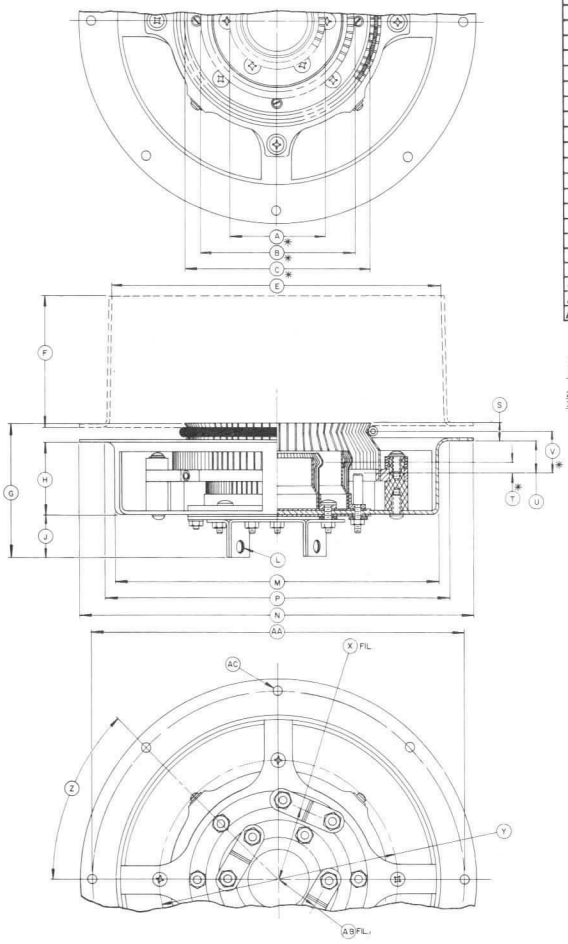

SK-1300

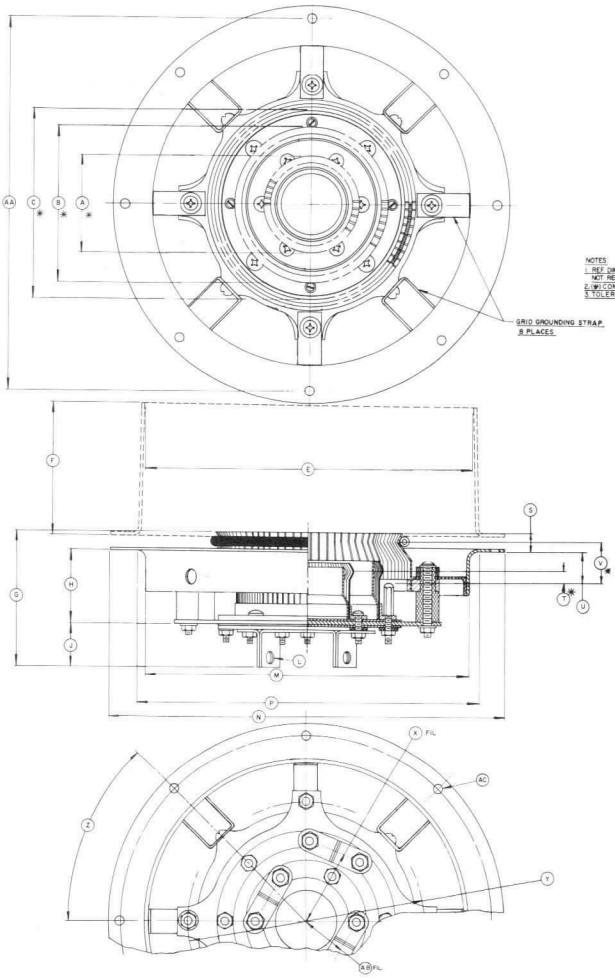

NOTES:
1. REF. DIMENSIONS ARE FOR INFO. ONLY & ARE NOT REQUIRED FOR INSPECTION PURPOSES.
2. (✱) CONTACT SURFACES.
3. TOLERANCES ARE NOT CUMLATIVE.

GRID GROUNDING STRAP, 8 PLACES.

DIM.	INCHES			MILLIMETERS		
	MIN.	MAX.	REF.	MIN.	MAX.	REF.
A	1.990	2.070	- -	50.55	52.58	- -
B	3.240	3.320	- -	82.30	84.33	- -
C	3.700	3.770	- -	93.98	95.76	- -
E	7.030	7.125	- -	178.56	180.97	- -
F	3.590	3.690	- -	91.19	93.73	- -
G	2.710	2.835	- -	68.83	72.01	- -
H	1.440	1.530	- -	36.58	38.86	- -
J	0.890	0.960	- -	22.61	24.38	- -
L	0.235	0.265	- -	5.97	6.73	- -
M	6.720	6.780	- -	170.69	172.21	- -
N	8.220	8.280	- -	208.79	210.31	- -
P	7.060	7.190	- -	179.32	182.63	- -
S	0.270	0.395	- -	6.86	10.03	- -
T	0.185	0.285	- -	4.70	7.24	- -
U	0.580	0.700	- -	14.73	17.78	- -
V	0.760	0.865	- -	19.30	21.97	- -
X	1.500	1.620	- -	38.10	41.15	- -
Y	4.970	5.030	- -	126.24	127.76	- -
Z	43°	47°	- -	43°	47°	- -
AA	7.730	7.770	- -	196.34	197.36	- -
AB	0.860	0.980	- -	21.84	24.89	- -
AC	0.140	0.154	- -	3.56	3.91	- -

SK-1320

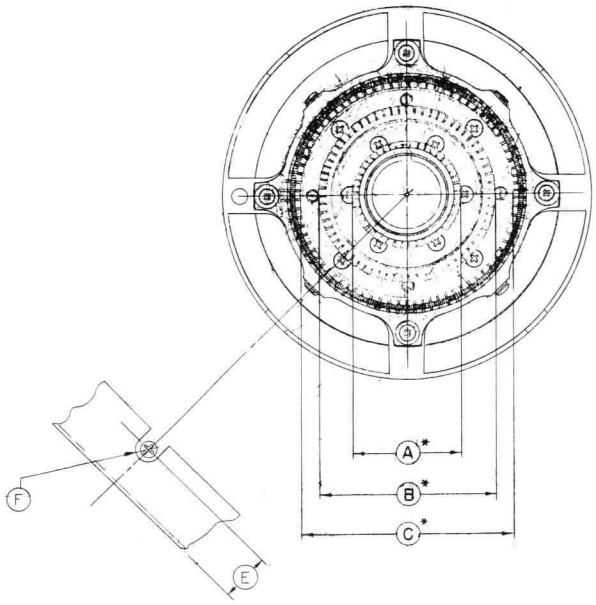

DIM.	DIMENSIONAL DATA					
	INCHES			MILLIMETERS		
	MAX.	MIN.	REF.	MIN.	MAX.	REF.
A	2.061	2.001	- -	50.82	52.35	- -
B	3.311	3.251	- -	82.57	84.10	- -
C	3.732	3.672	- -	93.27	94.79	- -
D	5.030	4.970	- -	126.24	127.76	- -
E	0.890	0.860	- -	21.84	22.61	- -
F	0.267	0.233	- -	5.92	6.78	- -
G	2.835	2.710	- -	68.83	72.01	- -
H	1.187	1.156	- -	29.36	30.15	- -
J	0.960	0.890	- -	22.61	24.38	- -
K	6-32 NC					
L	1/4 DIA HOLE			6.35 DIA HOLE		
M	6.780	6.720	- -	170.69	172.21	- -
N	0.980	0.860	- -	21.84	24.89	- -
P	4.690	4.620	- -	117.35	119.13	- -
S	1.620	1.500	- -	38.10	41.15	- -
T	0.285	0.185	- -	4.70	7.24	- -
U	0.314	0.280	- -	7.11	7.97	- -
V	0.856	0.826	- -	20.98	21.74	- -
W	47°	43°	- -	43°	47°	- -

SK-1310

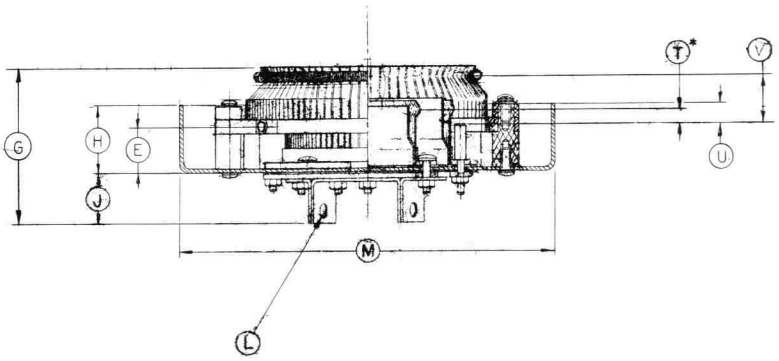

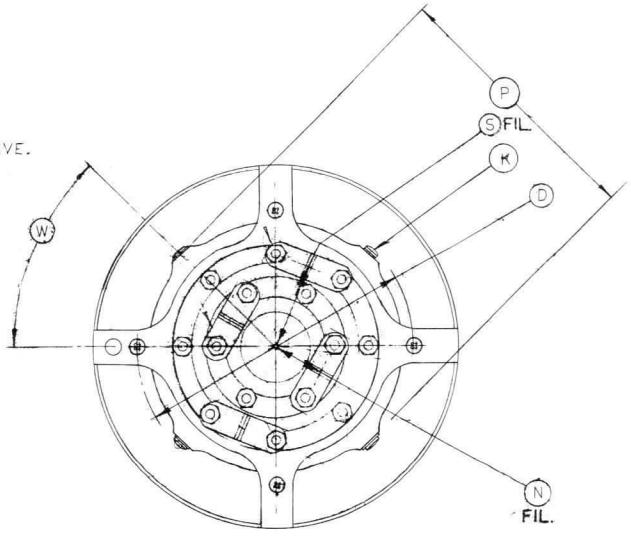

NOTES:
1. ALL DIMENSIONS ARE IN INCHES.
2. TOLERANCES ARE NOT CUMULATIVE.
* 3. CONTACT SURFACES.

EIMAC
Division of Varian
SAN CARLOS
CALIFORNIA

SK-1306
SK-1406

AIR-SYSTEM CHIMNEYS

The SK-1306 and SK-1406 Air-System Chimneys are intended for use with the tube and socket combinations listed below. They are used to direct cooling air to the tube's anode cooling fins after it has been forced through the companion Air-System Socket.

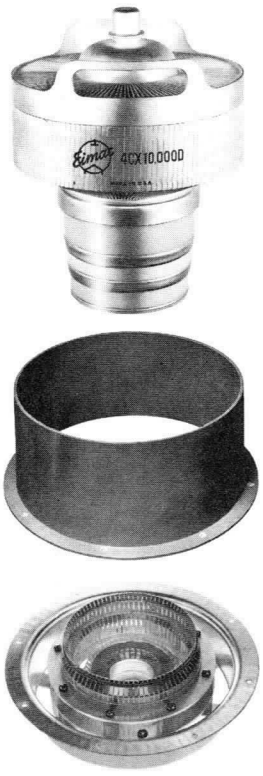

SK-1306 Chimney shown with 4CX10,000 and SK-300 socket

MATERIALS

These chimneys are molded from a grey, thermosetting polyester premix compound .

INSTALLATION

The SK-1306 and SK-1406 Air-System Chimneys are mounted above the chassis or pressurized compartment, directly over the companion socket. The chimneys are secured by the eight equally spaced machine screws on a a 7¾" P.C. that are used to install the socket.

CHIMNEY/TUBE/SOCKET COMBINATIONS

CHIMNEY	TUBE	SOCKET
SK-1306	3CX10,000A1 3CX10,000A3 3CX10,000A7	SK-1300
	4CX10,000D	SK-300 SK300A
SK-1406	4CX3000A	SK-1400A SK-1470A

Net Weight - - - - - - - - - - - - - - - - SK-1306 — 8 ounces
SK-1406 — 7 ounces

(Revised 8-15-66) © 1963, 1966 Varian

Printed in U.S.A.

DIMENSIONS IN INCHES			
DIMENSIONAL DATA			
REF.	MIN.	MAX.	NOM.
A	7.062	7.125	
B	7.734	7.766	
C	8.230	8.265	
D	3.609	3.656	
E	.093	.125	
F	44°	46°	
H	.140	.172	
J	.062	.109	

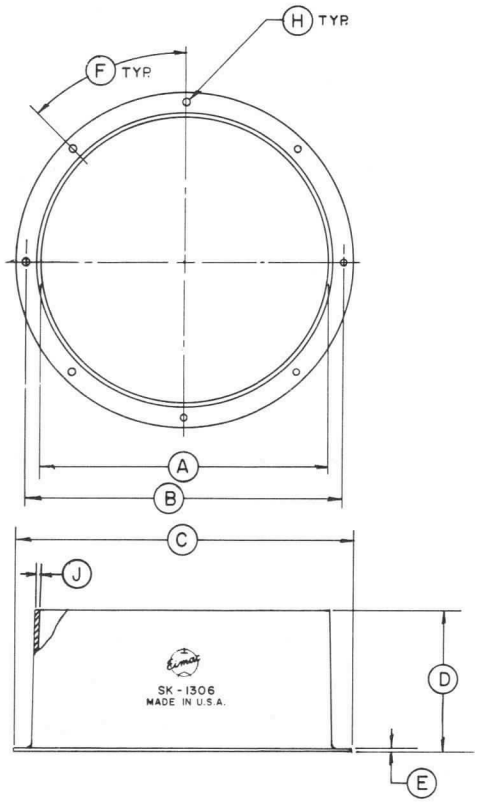

SK-1306

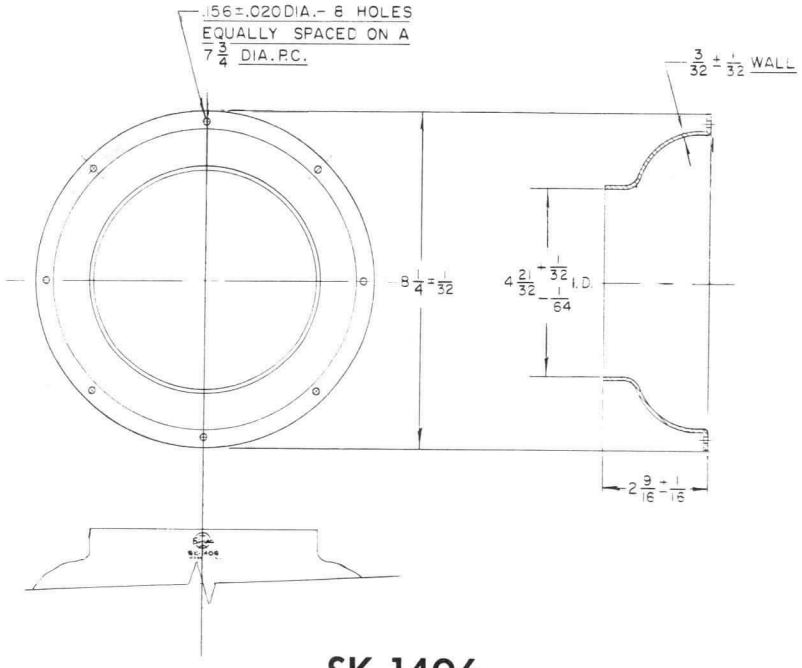

SK-1406

EIMAC
Division of Varian
SAN CARLOS
CALIFORNIA

SK-1400A
SK-1470A

AIR-SYSTEM SOCKETS

The EIMAC SK-1400A and SK-1470A Air-System Sockets are intended for use with the 4CX3000A and the 4CV8000A. The SK-1400A incorporates an integral screen by-pass capacitor and has no grounded contacts. The SK-1470A does not include a by-pass capacitor but does have the screen contacts grounded to the socket mounting plate.

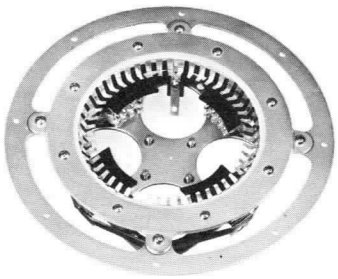

BASE CONNECTIONS

A continuous screen grid contact finger assembly is provided for making contact with the solid screen ring flange on the 4CX3000A or 4CV8000A. Grid and filament connections to the tube are made by four rows of contact tab assemblies that provide for breech-block electrical and mechanical contact.

Each grid contact is terminated in two machine screws at the bottom of the socket base. Filament connections are to a terminal strap and to the socket base.

BY-PASS CAPACITOR

The SK-1400A is provided with an integral 1800 picofarad screen by-pass capacitor rated at 1000 volts dc. The screen contact fingers are attached to one side of this capacitor. The SK-1470A does not contain this capacitor; instead the screen contacts are grounded directly to the socket shell.

INSTALLATION

When mounted on a chassis or pressurized compartment, a 7¼" diameter hole is required for the socket. The socket is secured by eight #6 screws on a 7¾" bolt circle. These same screws are used to install the companion SK-1406 chimney used with the air-cooled 4CX3000A.

MATERIALS

The contact fingers and tabs are non-ferrous spring alloy, heat-treated and silver-plated. The socket body is made of silver-plated brass.

CHIMNEY

The SK-1406 chimney is available for use with the SK-1400A or SK-1470A and the air-cooled 4CX3000A. It effectively directs air that has passed through the socket into the anode cooling fins.

Note: Where a "floating" socket is desired — especially for the 4CV8000A—the SK-1490 is available. This is a SK-1470 without the mounting ring and is intended for use where the tube is fixed and the socket is to be removable.

Net Weight - - - - - - - - - - - - - - - - - - 30 ounces

(Revised 10-15-66) © 1963, 1966 Varian

Printed in U.S.A.

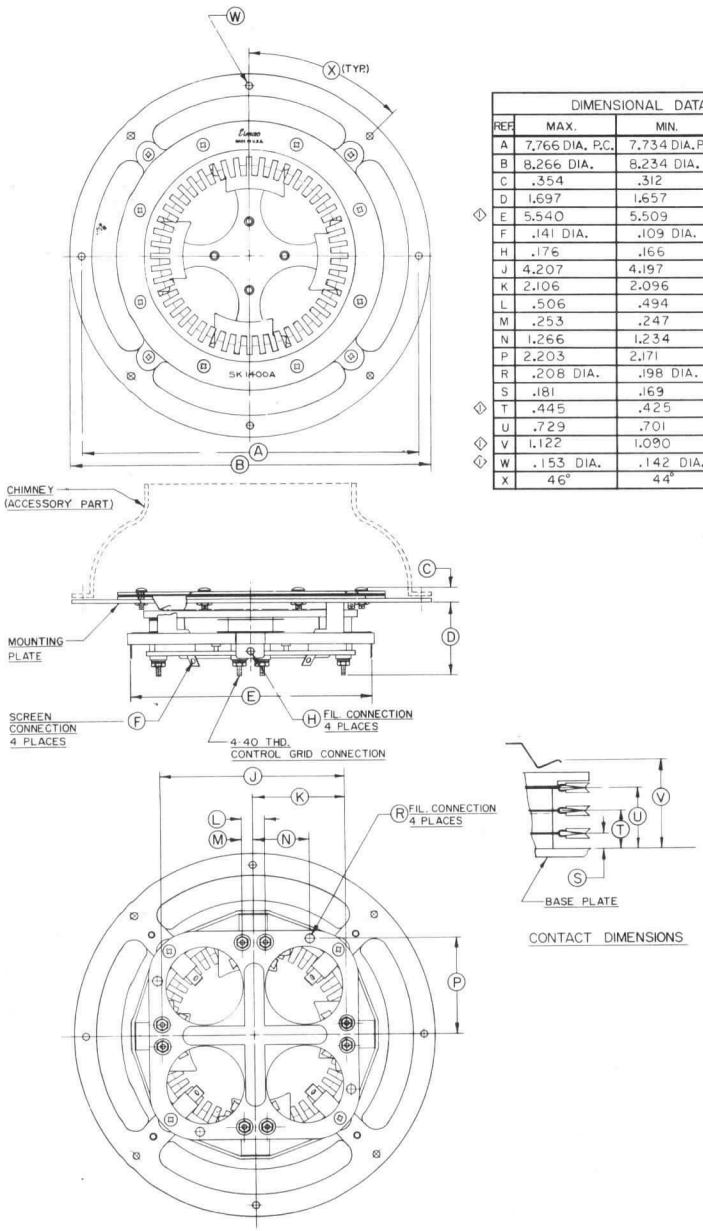

DIMENSIONAL DATA			
REF	MAX.	MIN.	NOM.
A	7.766 DIA. P.C.	7.734 DIA. P.C.	
B	8.266 DIA.	8.234 DIA.	
C	.354	.312	
D	1.697	1.657	
◇1 E	5.540	5.509	
F	.141 DIA.	.109 DIA.	
H	.176	.166	
J	4.207	4.197	
K	2.106	2.096	
L	.506	.494	
M	.253	.247	
N	1.266	1.234	
P	2.203	2.171	
R	.208 DIA.	.198 DIA.	
S	.181	.169	
◇1 T	.445	.425	
U	.729	.701	
◇1 V	1.122	1.090	
◇1 W	.153 DIA.	.142 DIA.	
X	46°	44°	

CONTACT DIMENSIONS

SK-1400A

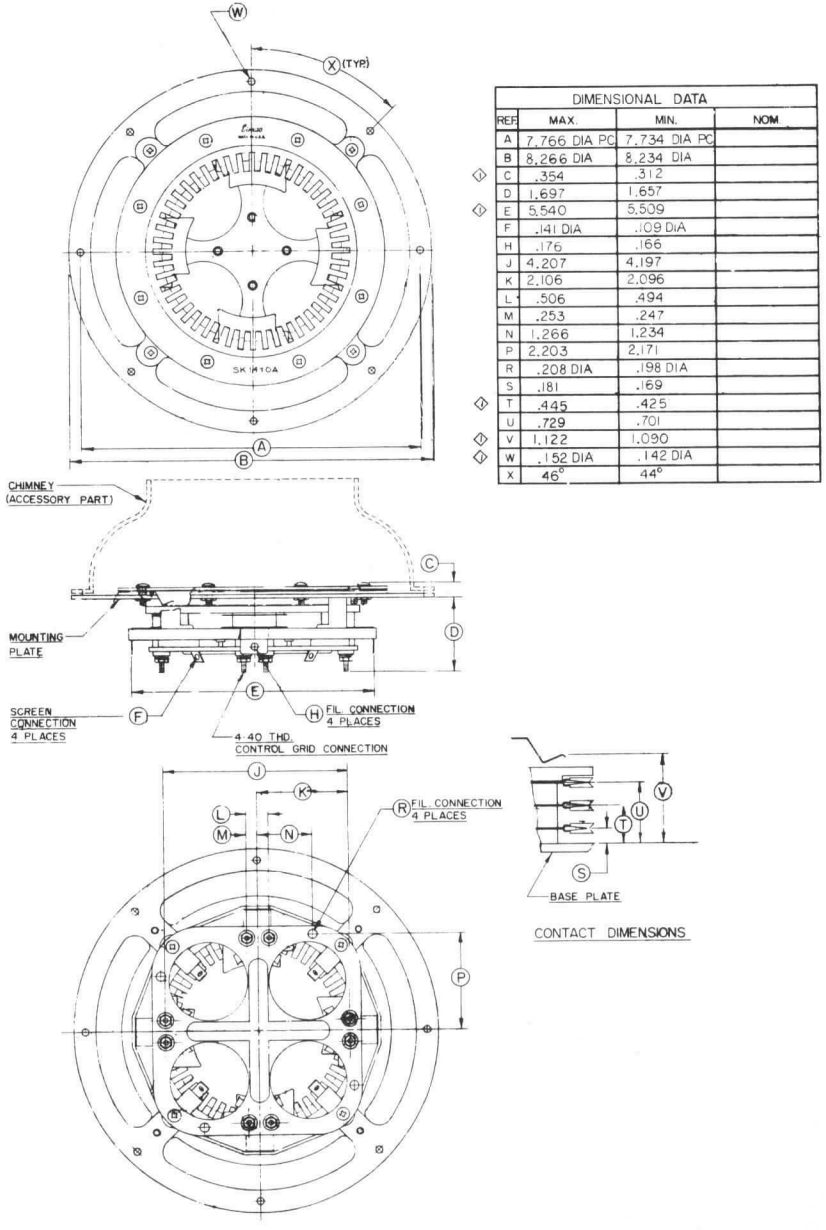

DIMENSIONAL DATA			
REF	MAX.	MIN.	NOM.
A	7.766 DIA PC	7.734 DIA PC	
B	8.266 DIA	8.234 DIA	
◇1 C	.354	.312	
◇1 D	1.697	1.657	
◇1 E	5.540	5.509	
F	.141 DIA	.109 DIA	
H	.176	.166	
J	4.207	4.197	
K	2.106	2.096	
L	.506	.494	
M	.253	.247	
N	1.266	1.234	
P	2.203	2.171	
R	.208 DIA	.198 DIA	
S	.181	.169	
◇1 T	.445	.425	
U	.729	.701	
◇1 V	1.122	1.090	
◇1 W	.152 DIA	.142 DIA	
X	46°	44°	

CONTACT DIMENSIONS

SK-1470A

TECHNICAL DATA

SK-1500A
SK-1510A
TUBE SOCKETS

SK-1511
TUBE POSITIONER

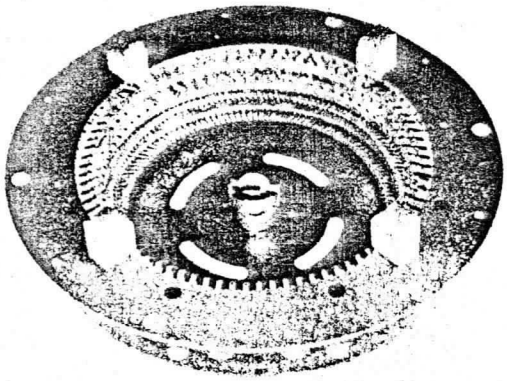

SK-1500A

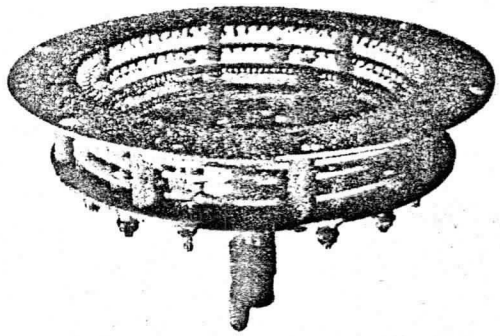

SK-1510A

These sockets are designed to be used with EIMAC tube types 8349/4CX35,000C, 8351/4CV100,000C, and 4CW100,000D, providing contact to the filament, control grid, and screen grid of the socketed tube.

Screen grid bypass capacitor components are available but must be ordered separately:

2300 pF Dielectric	- EIMAC P/N 149089	(one supplied)
Set of Insulator Bushings	- EIMAC P/N 149088	(six supplied)
1100 pF Dielectric	- EIMAC P/N 149090	(one supplied)
Set of Insulator Bushings	- EIMAC P/N 149088	(six supplied)

For a grounded-screen application the screen flange of the socket is mounted directly to the equipment chassis, using the eight 3/16-inch holes provided in the flange.

The SK-1500 has four guides mounted to the screen flange for proper centering of the tube. When in place, the tube is turned to engage a bayonet retainer in the base of the socket.

The SK-1510 has the four locating guides removed and includes a base tube positioner. With the tube set into place in the socket, this positioner engages the base of the tube and the positioner handle is then turned to pull the tube securely into the socket and retain it.

The special positioner is available separately as the SK-1511, and the SK-1500 socket, which does not include it, may be modified to include the positioner.

The SK-1500 and SK-1510 are not air-system sockets, since the anode-cooling air for a forced-air cooled tube, such as the 4CX35,000C, does not pass through the socket on its way to the anode. Base cooling of the tube in use is therefore accomplished by directing air across the socket, and both also include a central connection for an air hose for tube base cooling.

Tube contacts in both sockets are of heat-treated beryllium-copper alloy attached to brass support flanges. All metal parts are silver plated. The contact insulating material is high-temperature ceramic.

4090 (Effective 3-15-79) © 1979 by Varian

Printed in U.S.A.

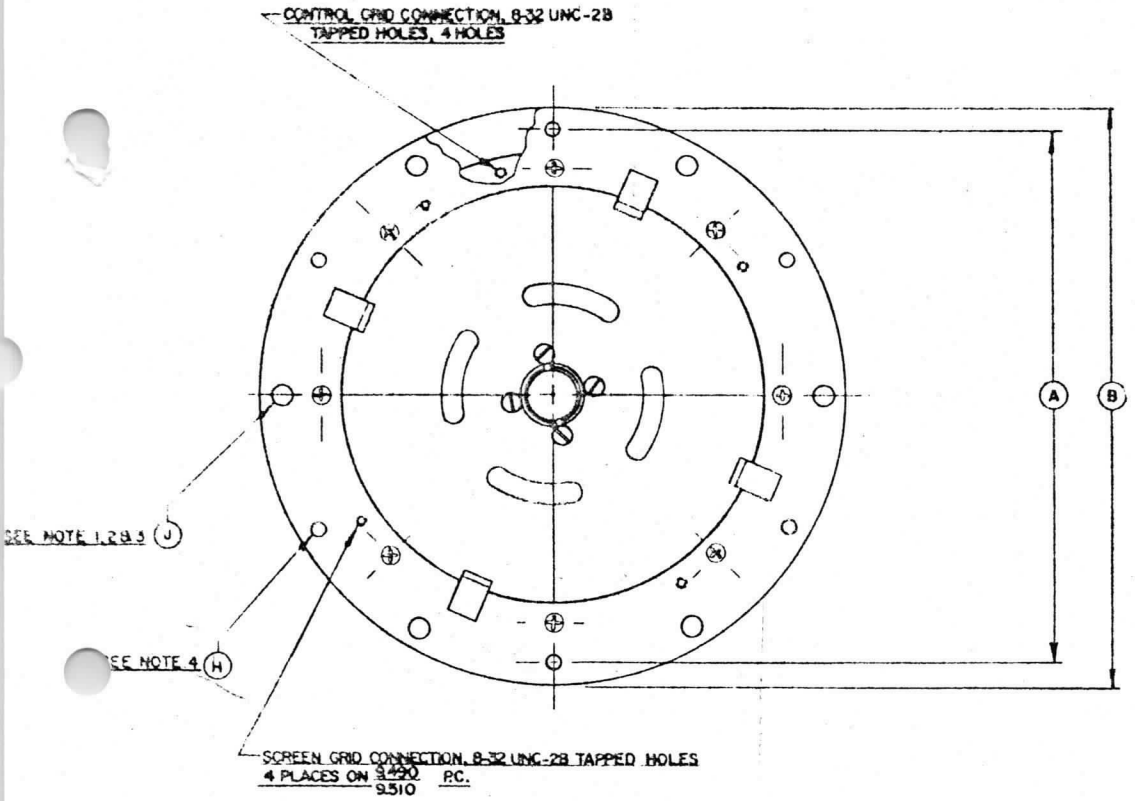

DIMENSIONAL DATA

REF	INCHES MIN.	INCHES MAX	MILLIMETERS MIN.	MILLIMETERS MAX
A	11.240	11.260	285.50	286.00
B	11.960	12.040	303.78	305.82
C	10.094	10.156	256.39	257.96
D	8.470	8.590	215.14	218.19
L	1.214	1.286	30.83	32.66
F	1.956	2.040	49.68	51.82
G	2.823	3.110	71.70	78.99
H	0.171	0.203	4.23	5.18
J	0.422	0.453	10.72	11.51
K	1.210	1.290	30.73	32.77
M	0.725	0.775	18.41	19.68
N	1.230	1.240	31.24	31.50

NOTES:
1. SCREEN BYPASS CAPACITOR COMPONENTS LISTED BELOW ARE OPTIONAL PARTS & MUST BE ORDERED SEPARATELY.
2. DIELECTRIC .005 THK. FOR APPROX. 2300 PFD. PART NO. H99089. ONE REQ'D. INSULATOR BUSHING PART NO. H99088 SIX REQ'D.
3. DIELECTRIC .010 THK. FOR APPROX. 1100 PFD. PART NO. H99090 ONE REQ'D. INSULATOR BUSHING PART NO. H99088 SIX REQ'D.
4. FOR GROUNDED SCREEN APPLICATION 8 SCREW IN 3/8 DIA. HOLES TO MOUNT SCREEN DIRECTLY TO CHASSIS.

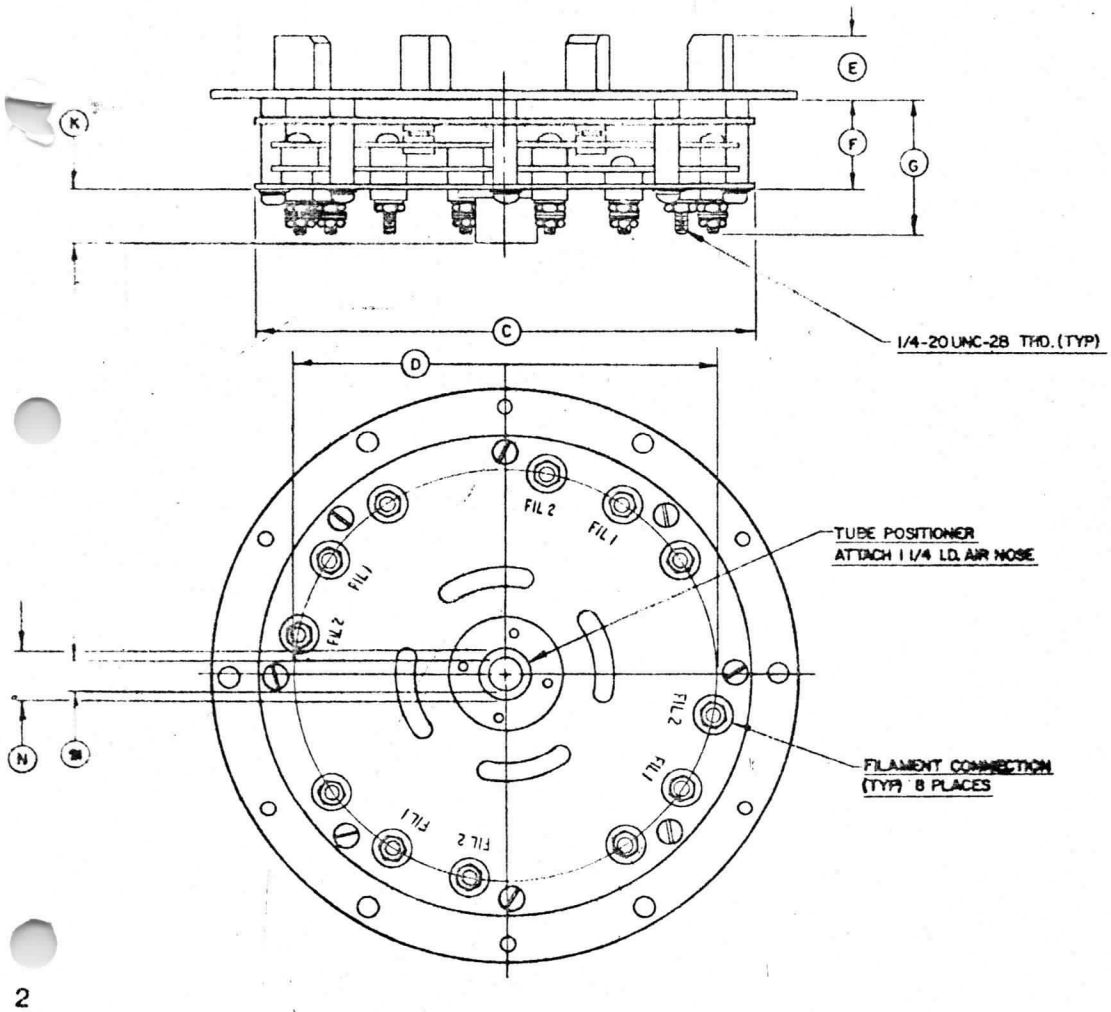

SK-1500A

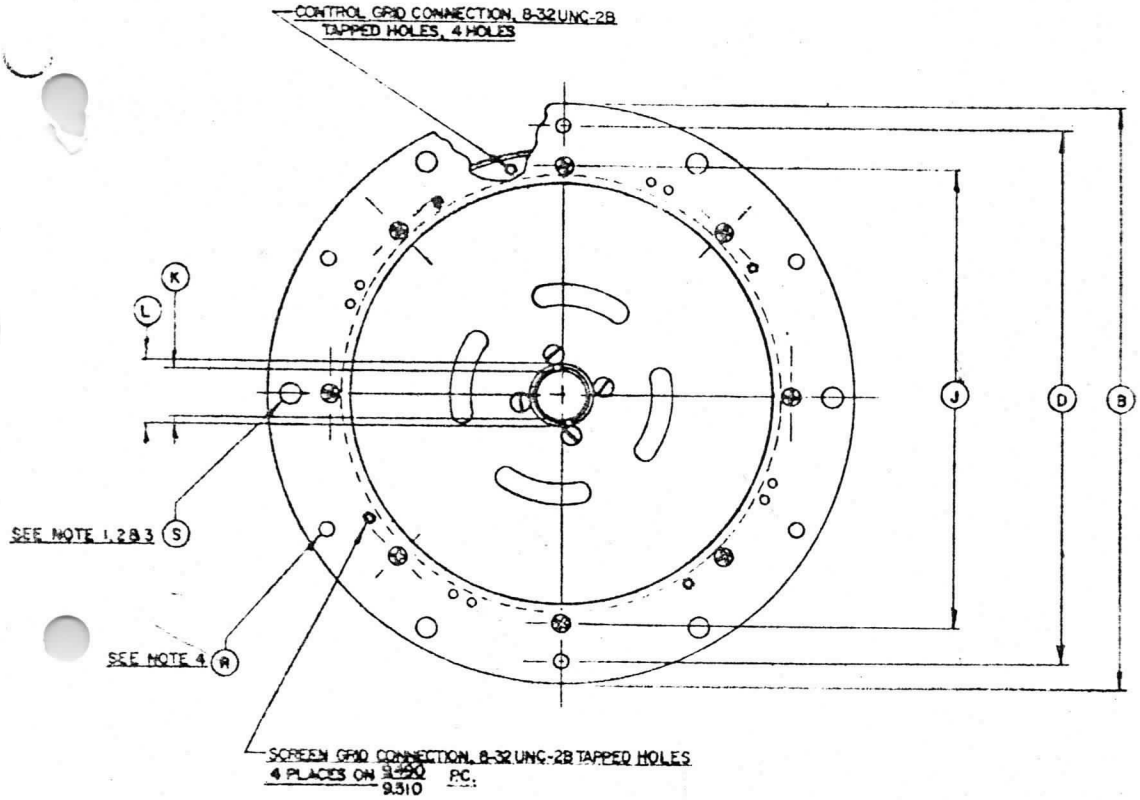

DIMENSIONAL DATA

	INCHES		MILLIMETERS	
REF.	MIN.	MAX.	MIN.	MAX.
A	0.725	0.775	18.41	19.68
B	11.960	12.040	303.78	305.82
C	2.941	3.241	74.70	82.32
D	11.240	11.260	285.50	286.00
F	10.094	10.156	256.39	257.96
G	2.799	2.946	71.09	74.83
H	4.500	6.312	114.30	160.32
J	9.400	9.410	238.76	239.01
K	0.912	0.962	23.16	24.43
L	1.230	1.240	31.24	31.50
M	4.875	5.125	123.82	130.17
N	8.470	8.590	215.14	218.19
P	0.984	1.016	24.99	25.81
R	0.171	0.203	4.34	5.16
S	0.422	0.453	10.72	11.51

NOTES:
1. SCREEN BYPASS CAPACITOR COMPONENTS LISTED BELOW ARE OPTIONAL PARTS AND MUST BE ORDERED SEPARATELY.
2. DIELECTRIC .005 THICK FOR APPROX. 2300 PFD, PART NO. 149088, ONE REQD., INSULATOR BUSHING, PART NO. 149089, SIX REQD.
3. DIELECTRIC .010 THICK FOR APPROX. 1100 PFD, PART NO. 149090, ONE REQD. INSULATOR BUSHING, PART NO. 149088, SIX REQD.
4. FOR GROUNDED SCREEN APPLICATION, 8 SCREWS IN 3/16 DIA. HOLES, TO MOUNT SCREEN DIRECTLY TO CHASSIS.
5. REF. DIMENSIONS ARE FOR INFO. ONLY & ARE NOT REQUIRED FOR INSPECTION PURPOSES.

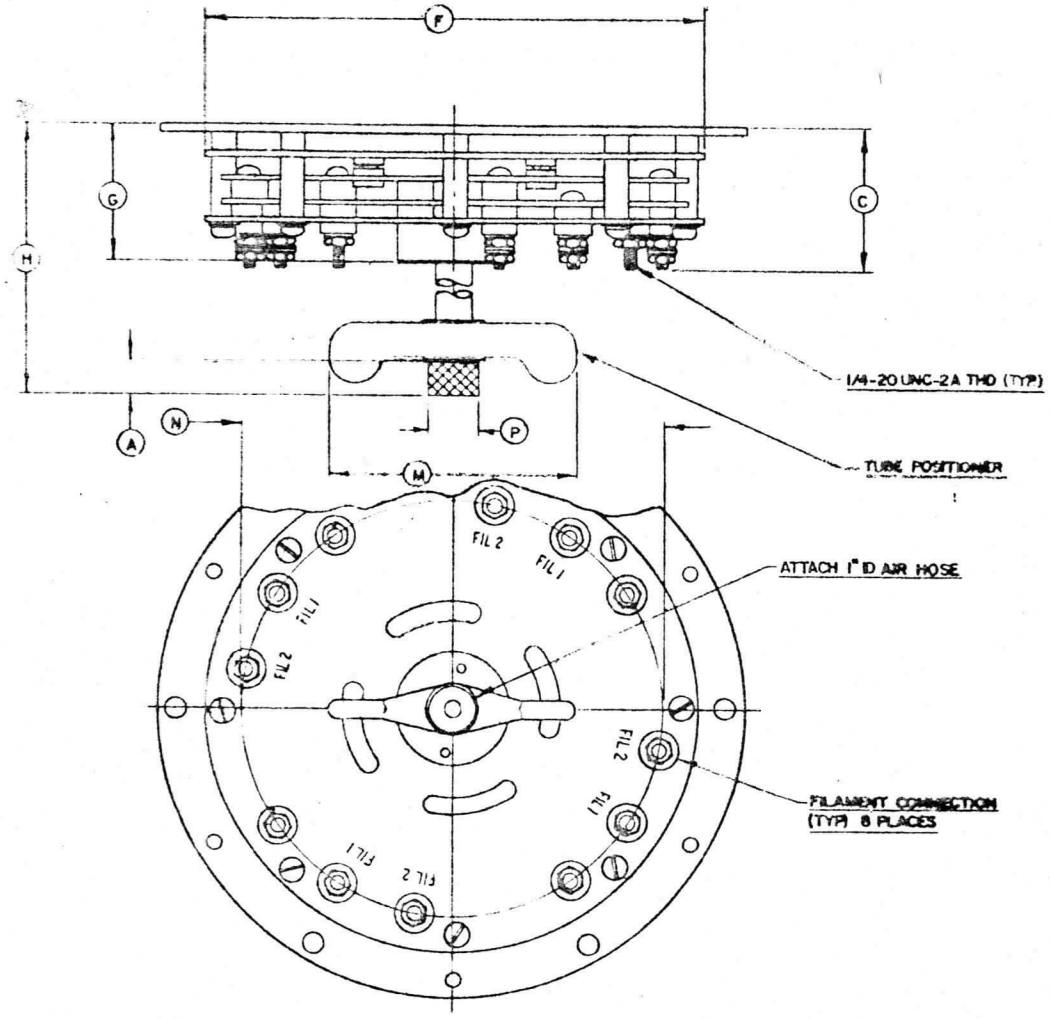

SK-1510A

DIMENSIONAL DATA

REF.	INCHES MIN.	INCHES MAX.	MILLIMETERS MIN.	MILLIMETERS MAX.
A	.807	.817	20.50	20.75
B	.807	.817	20.50	20.75
C	2.234	2.266	56.74	57.56
D	.370	.380	9.40	9.65
E	1.230	1.240	31.24	31.50
F	.698	.739	17.73	18.77
H	1.109	1.141	28.17	28.98
J	1.745	1.815	44.32	46.10
K	.734	.766	18.64	19.46
L	.787	.837	19.99	21.26
M	.984	1.016	24.99	25.81
N	4.953	5.047	125.81	128.19
P	1.598	1.648	40.54	41.86

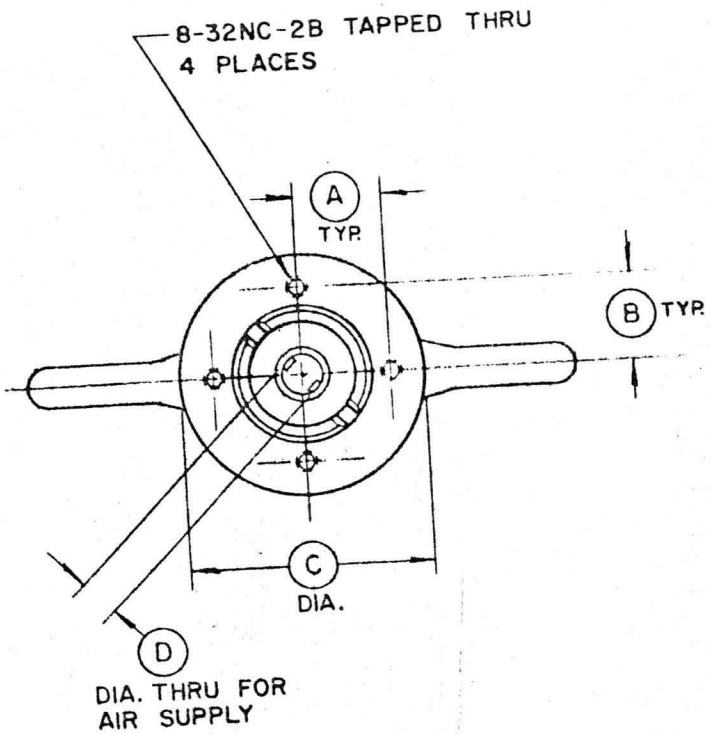

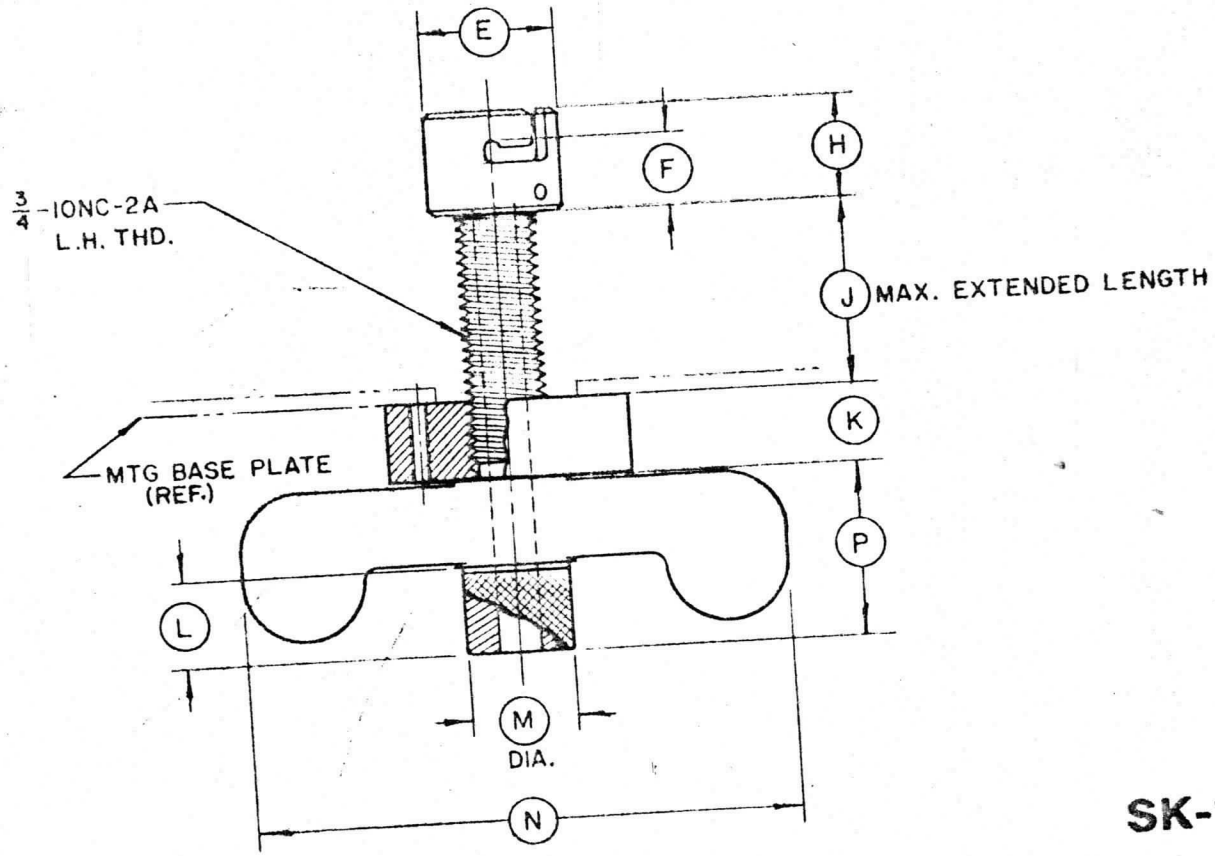

SK-1511

NOTES:

1. CONNECT AIR SUPPLY TUBING OVER (M) DIA.

TECHNICAL DATA

SK-2200
SK-2210
AIR SYSTEM SOCKET

The EIMAC SK-2200 and SK-2210 are air-system sockets recommended for use with the EIMAC 8877/3CX1500A7 triode. Two companion chimneys are available, either of which will operate with either socket.

With these sockets, connection is made to each tube element except the anode.

No contacts are grounded on the SK-2200, while the SK-2210 has the grid contacts grounded to the equipment chassis when installed.

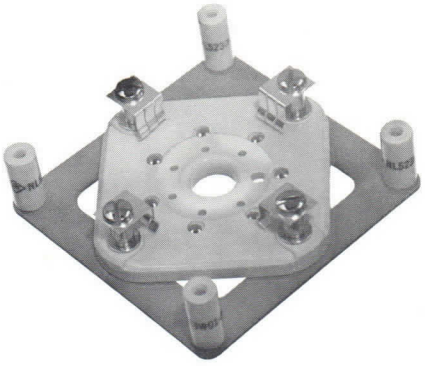

SK-2200

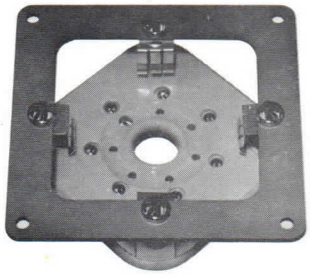

SK-2210

INSTALLATION

The SK-2200 and SK-2210 are designed for under-chassis mounting, and require a 3¼ inch hole through the chassis deck. Each socket is held in place by four 6-32 screws.

AIR CHIMNEYS

Two chimneys are available. The SK-2206 is made of fiber glass and is recommended for general purpose use at low and medium frequencies. For high frequency applications where losses must be held to a minimum, the SK-2216 chimney should be used as it is made of low-loss teflon. The SK-2206 is held in place with four clips (supplied with the chimney). The SK-2216 is held in place with four toe clamps (supplied with the chimney).



SK-2206



SK-2216

NET WEIGHTS

SK-2200 Socket	4.5 oz; 128 gm
SK-2210 Socket	4.0 oz; 113 gm
SK-2206 Chimney	1.5 oz; 42.5 gm
SK-2216 Chimney	2.0 oz; 56.7 gm

(Effective 8-15-71) © by Varian

Printed in U.S.A.

SK-2200/SK-2210

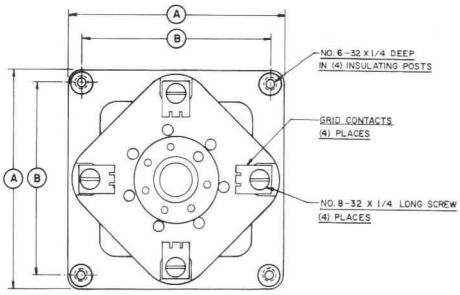

DIM.	INCHES MIN.	INCHES MAX.	INCHES REF.	MILLIMETERS MIN.	MILLIMETERS MAX.	MILLIMETERS REF.
A	3.373	3.413	- -	85.67	86.70	- -
B	2.953	2.983	- -	75.01	75.77	- -
C	0.500	0.550	- -	12.70	13.97	- -
D	- -	0.630	- -	- -	16.00	- -

NOTES:
1. REF. DIMENSIONS ARE FOR INFO. ONLY & ARE NOT REQUIRED FOR INSPECTION PURPOSES.
2. CONNECTIONS:
   1-HEATER
   2-CATHODE
   3-CATHODE
   4-CATHODE
   5-HEATER
   6-CATHODE
   7-CATHODE
3. GRID CONTACTS INSULATED FROM GROUND & OTHER ELEMENTS.

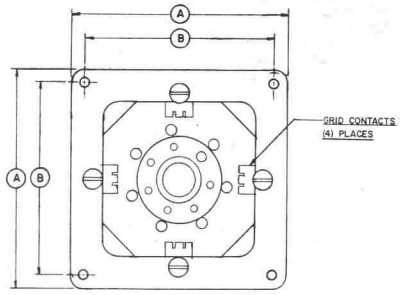

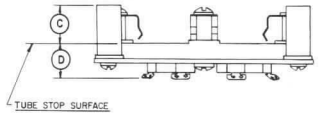

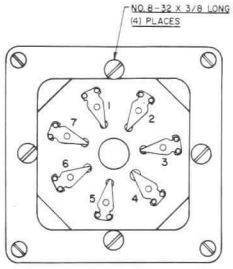

SK-2200 Socket

DIM.	INCHES MIN.	INCHES MAX.	INCHES REF.	MILLIMETERS MIN.	MILLIMETERS MAX.	MILLIMETERS REF.
A	3.373	3.413	- -	85.67	86.70	- -
B	2.953	2.983	- -	75.01	75.77	- -
C	0.474	0.553	- -	12.04	14.05	- -
D	- -	0.630	- -	- -	16.00	- -
E	- -	- -	0.063	- -	- -	1.60
F	0.140	0.149	- -	3.56	3.78	- -

NOTES:
1. REF. DIMENSIONS ARE FOR INFO. ONLY & ARE NOT REQUIRED FOR INSPECTION PURPOSES.
2. CONNECTIONS:
   1-HEATER
   2-CATHODE
   3-CATHODE
   4-CATHODE
   5-HEATER
   6-CATHODE
   7-CATHODE
3. GRID CONTACTS **GROUNDED TO MOUNTING PLATE.**

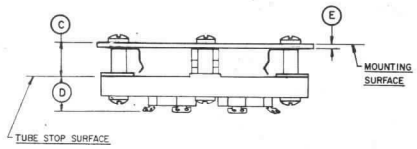

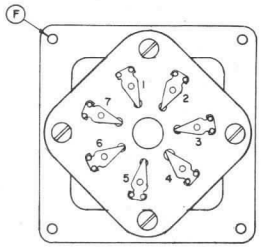

SK-2210 Socket

Typical Chassis Cut out

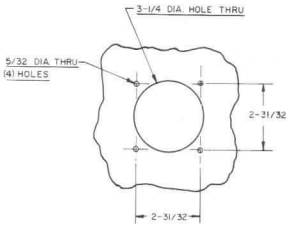

CHASSIS CUT OUT FOR MOUNTING & REQUIRED COOLING AIR FLOW.

DIM.	INCHES MIN.	INCHES MAX.	INCHES REF.	MILLIMETERS MIN.	MILLIMETERS MAX.	MILLIMETERS REF.
A	3.385	3.415	- -	85.98	86.74	- -
B	3.532	3.592	- -	89.71	91.24	- -
C	3.907	3.967	- -	99.24	100.76	- -
D	1.220	1.280	- -	30.99	32.51	- -
E	0.110	0.140	- -	2.79	3.56	- -
F	0.417	0.457	- -	10.59	11.61	- -
G	0.292	0.332	- -	7.42	8.43	- -
H	0.292	0.332	- -	7.42	8.43	- -
J	0.105	0.145	- -	2.67	3.68	- -
K	80°	100°	- -	80°	100°	- -
L	0.142	0.146	- -	3.61	3.71	- -

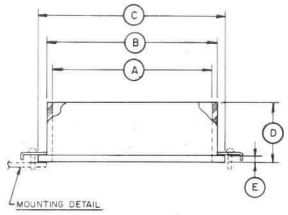

NOTES:
1. REF. DIMENSIONS ARE FOR INFO. ONLY & ARE NOT REQUIRED FOR INSPECTION PURPOSES.
2. MATERIALS:
   a. CHIMNEY:
      TEFLON TFE
   b. TOE CLAMP:
      BRASS-SILVER PLATED

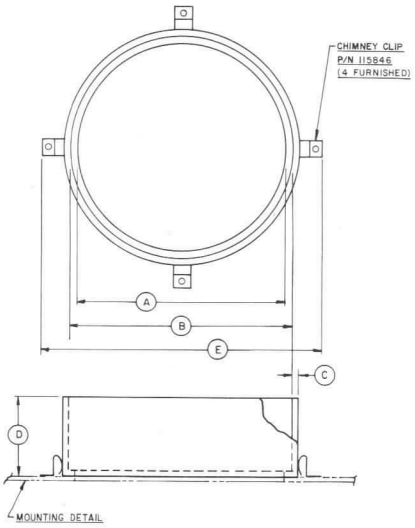

DIM.	INCHES MIN.	INCHES MAX.	INCHES REF.	MILLIMETERS MIN.	MILLIMETERS MAX.	MILLIMETERS REF.
A	3.187	3.281	- -	80.95	83.34	- -
B	3.374	3.445	- -	85.70	87.50	- -
C	0.055	0.135	- -	1.40	3.43	- -
D	1.210	1.290	- -	30.73	32.77	- -
E	- -	- -	4.562	- -	- -	115.9

NOTES:
1. REF. DIMENSIONS ARE FOR INFO. ONLY & ARE NOT REQUIRED FOR INSPECTION PURPOSES.
2. MATERIAL
   a. CHIMNEY: POLYESTER PREMIX COMPOUND. FIBER-GLASS PER MIL-Y-1140, RESIN PER MIL-R-7575. MAX OPERATING TEMP 125° C.
   b. CHIMNEY CLIP: BERYL-LIUM COPPER, HEAT TREATED & CADMIUM PLATED.

SK-2206 Chimney

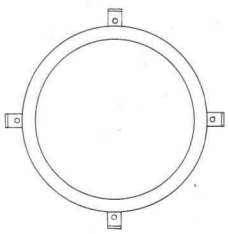

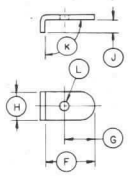

TOE CLAMP DETAIL
(4) SUPPLIED
P/N 88990I

SK-2216 Chimney

TECHNICAL DATA

SK-306
SK-316

AIR-SYSTEM CHIMNEYS





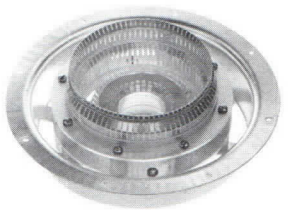

SK-306 Chimney shown with 4CX5000A and SK-300 socket

The SK-306 and SK-316 Air-System Chimneys are intended for use with the tube and socket combinations listed below. They are used to direct cooling air to the tube's anode cooling fins after it has been forced through the companion Air-System Socket.

MATERIALS

These chimneys are molded from a gray thermosetting polyester premix compound.

INSTALLATION

The SK-306 mounts above the chassis or plenum and is secured by the eight mounting screws that secure the SK-300 or SK-300A socket.

The SK-316 mounts above the chassis with four separate mounting screws on 8-15/16'' diameter pitch circle.

CHIMNEY/TUBE/SOCKET COMBINATIONS

CHIMNEY	TUBE	SOCKET
SK-306	8170/4CX5000A 8909/4CX5000J 8170W/4CX5000R	SK-300
SK-316	8910/4CX15,000J 8281/4CX15,000A	SK-300A

Net Weight ..... SK-306 — 5.5 ounces
SK-316 — 11 ounces

(Revised 3-1-76) © 1963, 1966, 1976 by Varian

Printed in U.S.A.

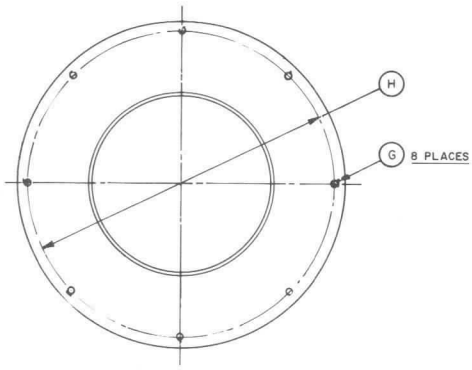

DIM.	INCHES			MILLIMETERS		
	MIN.	MAX.	REF.	MIN.	MAX.	REF.
A	8.218	8.281		208.74	210.34	
B	6.687	6.812		169.85	173.02	
C	3.400	3.562		86.36	90.47	
D	4.890	4.960		124.21	125.98	
E			.125			3.17
F	.062	.187		1.57	4.75	
G	.136	.176		3.45	4.47	
H			7.750			196.85

NOTES:
1. REF DIMS ARE FOR INF ONLY AND ARE NOT REQD FOR INSP PURPOSES.

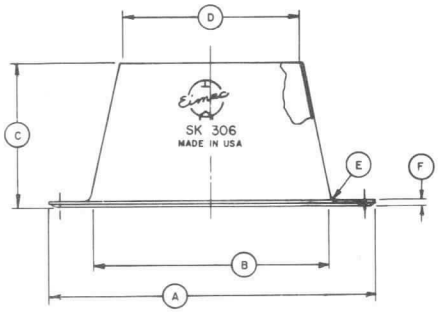

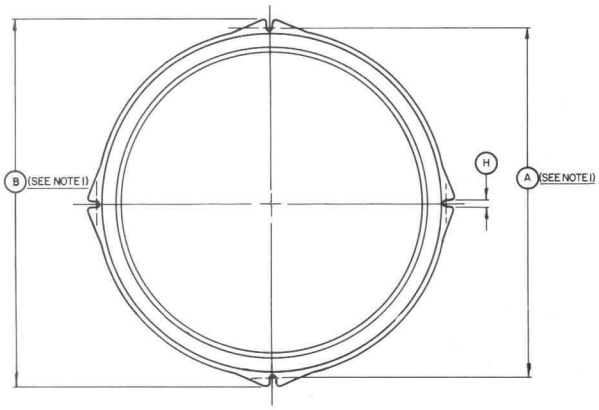

DIM.	INCHES			MILLIMETERS		
	MIN.	MAX.	REF.	MIN.	MAX.	REF.
A	8.900	8.985		226.06	228.22	
B	9.262	9.389		235.25	238.48	
C	7.560	7.652		192.02	194.36	
D	8.340	8.440		211.84	214.38	
E	4.606	4.706		116.99	119.53	
F	.156	.218		3.96	5.54	
G	.062	.125		1.57	3.17	
H	.140	.200		3.56	5.08	

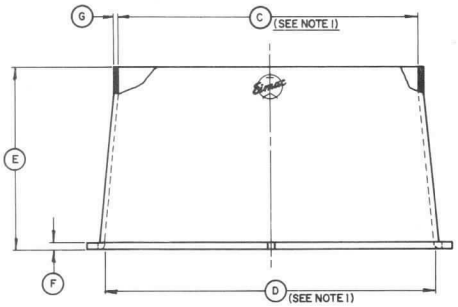

NOTES:
1. DIAMETERS NOTED ARE AVERAGE OF DIA. MEASUREMENTS TAKEN 90 DEGREES APART WITH PART UNRESTRAINED.
2. MAX. OPERATING TEMPERATURE 125 DEGREES C.
3. MATL: POLYESTER PRE-MIX COMP. (GREY) FIBERGLASS.

TECHNICAL DATA

SK-700 AND SK-710

AIR-SYSTEM SOCKETS

The EIMAC SK-700 and SK-710 Air-System Sockets are designed to socket the EIMAC 8167/4CX300A or 8561/4CX300Y. Connections are made to each of the tube electrodes except the anode. An integral screen-grid by-pass capacitor is built into the socket.



SK-700

SK-700

The cathode contacts are insulated from ground.

SK-710

All six of the cathode contacts are connected directly to the metal body.

HEATER CONNECTIONS

In both socket types, one heater contact is connected directly to the metal body.



SK-700 WITH SK-606

SCREEN-GRID BY-PASS CAPACITOR

The capacitor is built into the socket and provides a low-impedance path to ground for screen-grid rf currents. It is tested at 1000 volts dc and rated at 400 volts dc. Capacitance is 1100 picofarads ±20%.

MATERIALS AND FINISHES

The metal shell, or body, of the socket is made of silver-plated brass. The non-ferrous alloy contacts are heat treated after forming and then silver-plated. Three silver-plated brass toe clamps are supplied for mounting purposes.

The socket insulating material is chemically inert, non-flammable, and will not absorb water or water vapor. It is not affected by strong or weak acids or alkalies. It will not react to normal solvents except in the case of halogenated compounds, which will induce minor dimensional changes. Its physical characteristics are stable over a temperature range of —150°C to +275°C and it is resistant to embrittlement and thermal shock.

A silvered-mica dielectric is used in the screen-grid by-pass capacitor.



SOCKET, TUBE, AND CHIMNEY

AIR CHIMNEY

The SK-606 is intended to be used with the tube mounted vertically with the anode up. If horizontal mounting or vertical mounting with the anode down is required, means should be provided to retain the chimney. The air chimney is made of high-temperature ceramic and serves to direct the flow of air emerging from the socket into the anode cooling fins. It is recommended that the SK-606 chimney, or its equivalent, be used with each SK-700 or SK-710 socket.

(Revised 5-1-76) © 1958, 1966, 1976 Varian

Printed in U.S.A.

DIM	DIMENSIONAL DATA					
	INCHES			MILLIMETERS		
	MIN.	MAX.	REF.	MIN.	MAX.	REF.
A	2.688	2.750		68.27	69.85	
B	.453	.493		11.51	12.52	
C	.175	.207		4.44	5.26	
D	.107	.147		2.71	3.73	
E	.650	.690		16.51	17.53	
F	.312	.352		7.92	8.94	
G			.031R			.079R
H	.014	.046		0.35	1.17	
J			2 Dia.			50.4D
K	2.184	2.210		55.47	56.13	
M			35°			35°
N			55°			55°
P			30°			30°
R			.062D			1.57D
S			3.000			76.20
U	.437	.469		11.10	11.91	
V	.890	.922		22.60	23.42	
W	.234	.266		5.94	6.76	
X	.109	.141		2.77	3.58	
Y			1.203R			30.55R
Z			1.313R			33.55R
AA	.080	.085		2.03	2.16	
AC	.142	.146		3.61	3.71	
AD	.292	.332		7.42	8.43	
AE	.292	.332		7.42	8.43	
AF	.105	.145		2.67	3.68	
AG			.062R			1.57R
AH	.417	.457		10.59	11.61	
AJ	.125R	.187R		3.17R	4.75R	
AK	80°	100°		80°	100°	
AL			.062 D			1.57D
AM			1.437 R			36.50R
AN			1.281 R			32.54R
AP			.187			4.75
AR			.125			3.17
AT	.109	.140		2.77	3.55	

NOTES

1. REF DIMS. ARE FOR INFO. ONLY AND ARE NOT REQD. FOR INSP. PURPOSES.
2. TOLERANCES ARE NOT CUMULATIVE.
3. CAPACITANCE - 1100 MMFD ± 20%, VOLTAGE - 1000 VDC, TEST-400 WVDC

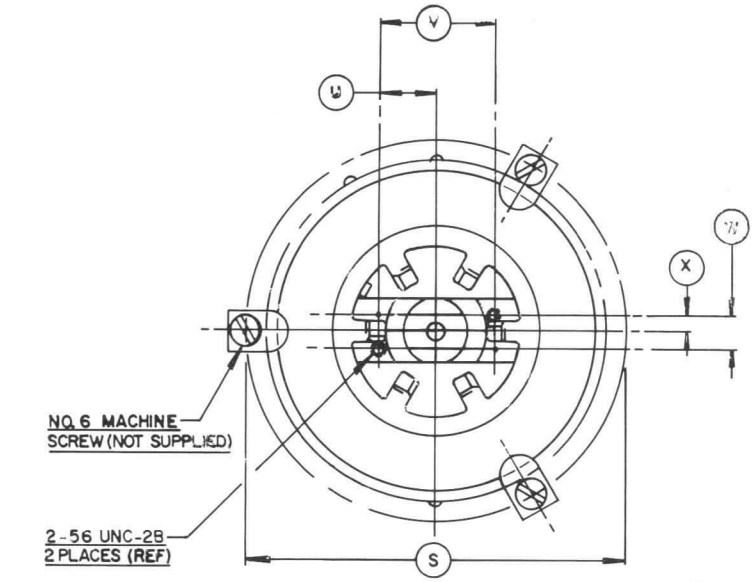

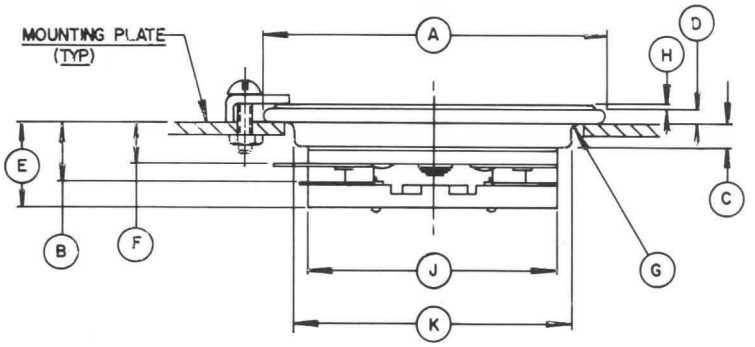

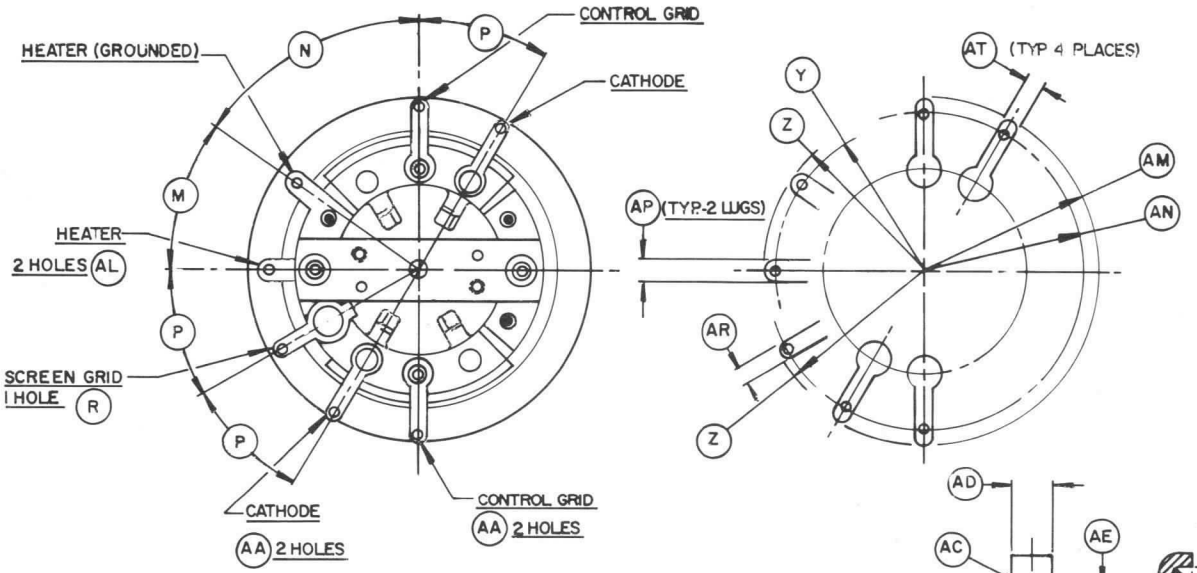

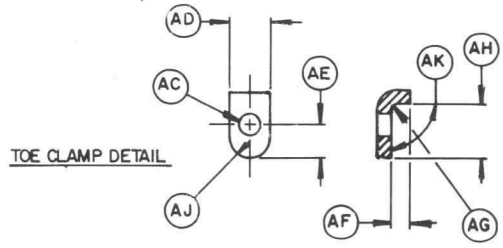

SK-700

DIM	DIMENSIONAL DATA					
	INCHES			MILLIMETERS		
	MIN.	MAX.	REF.	MIN.	MAX.	REF.
A	2.688	2.750		68.27	69.85	
B	.453	.493		11.51	12.52	
C	.175	.207		4.44	5.26	
D	.107	.147		2.71	3.73	
E	.650	.690		16.51	17.53	
F	.312	.352		7.92	8.94	
G			.031R			.079R
H	.014	.046		0.35	1.17	
J			2 Dia.			50.4D
K	2.184	2.204		55.47	55.98	
M			35°			35°
N			55°			55°
P			30°			30°
R			.062D			1.57D
S			3 Dia.			76.20D
T			60°			60°
U	.437	.469		11.10	11.91	
V	.890	.922		22.61	23.42	
W	.234	.266		5.94	6.76	
X	.109	.141		2.77	3.58	
Y			1.203R			30.55R
Z			1.312R			33.55R
AA	.080	.085		2.03	2.16	
AC	.142	.146		3.61	3.71	
AD	.292	.332		7.42	8.43	
AE	.292	.332		7.42	8.43	
AF	.105	.145		2.67	3.68	
AG			.062R			1.57R
AH	.417	.457		10.59	11.61	
AJ	.125R	.187R		3.17R	4.75R	
AK	80°	100°		80°	100°	
AL			.062D			1.57D
AM			1.437R			36.50R
AN			1.281R			32.54R
AP			.187			4.75
AR			.125			3.17
AT	.109	.140		2.77	3.55	

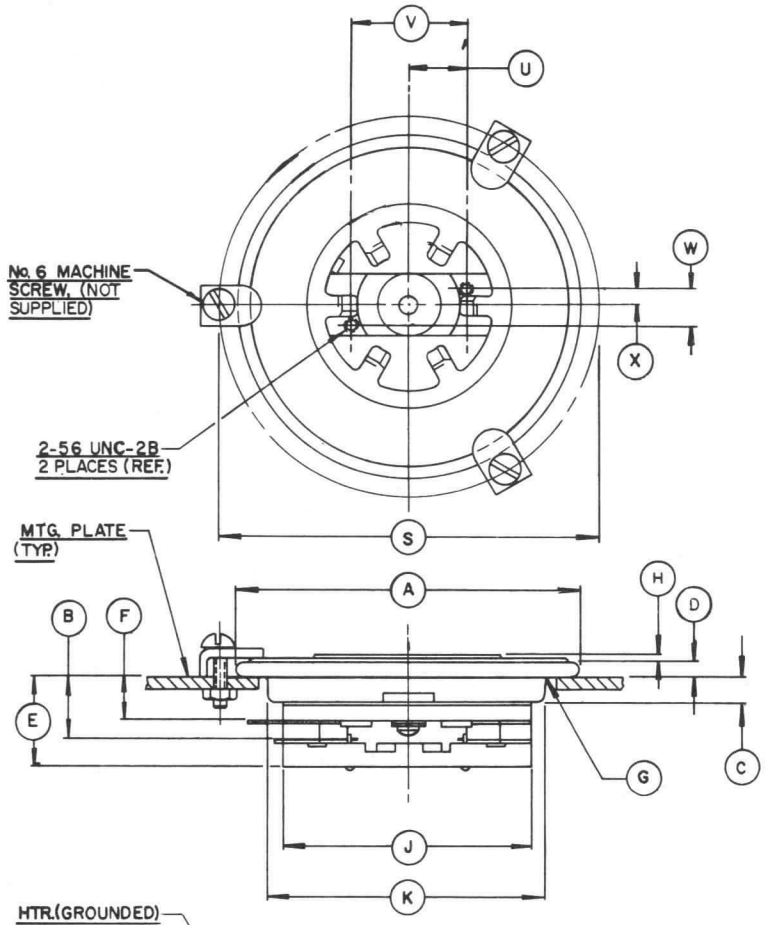

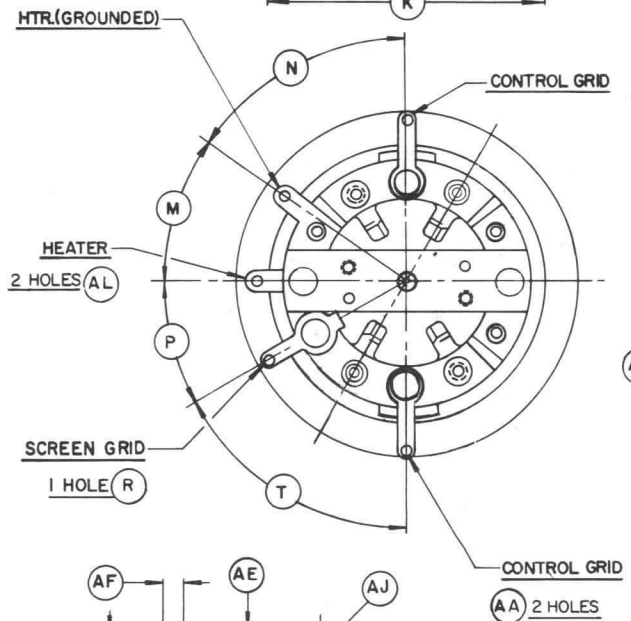

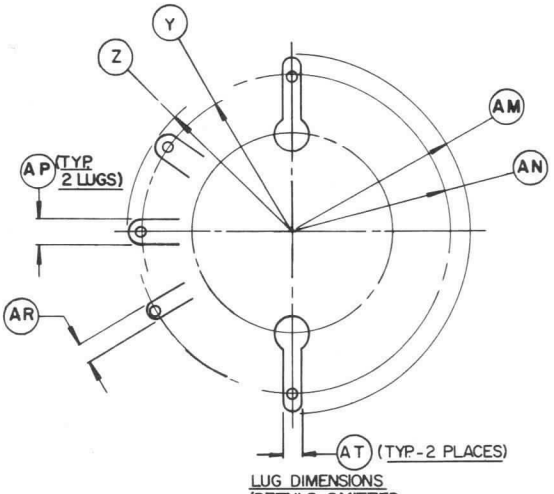

LUG DIMENSIONS (DETAILS OMITTED FOR CLARITY)

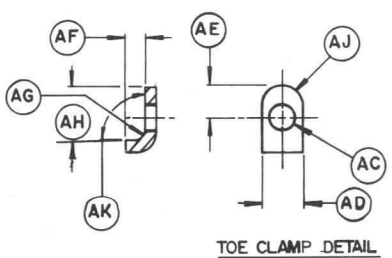

TOE CLAMP DETAIL

NOTES:

1. REF. DIMS. ARE FOR INFO. ONLY AND ARE NOT REQD. FOR INSP. PURPOSES.
2. TOLERANCES ARE NOT CUMULATIVE.
3. CAPACITANCE, 1100 MMFD ±25%, VOLTAGE 1000 VDC TEST, 400 W VDC

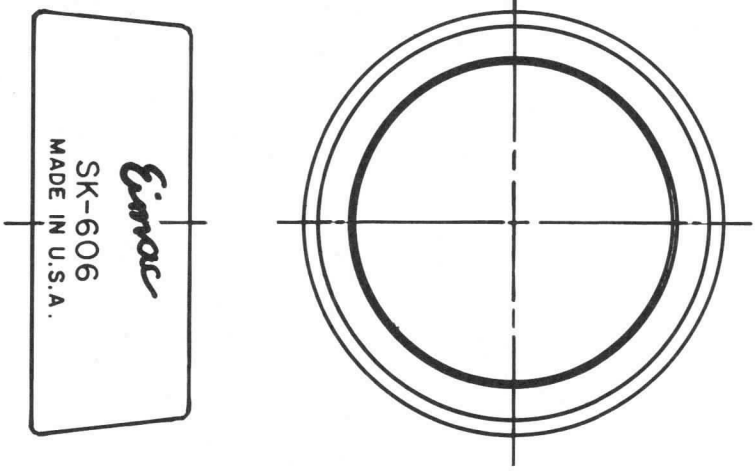

DIMENSIONS IN INCHES

DIMENSIONAL DATA			
DIM.	MIN.	MAX.	REF.
A	1.635	1.700	
B	1.781	1.881	
C	.812	.875	
D	.156	.218	

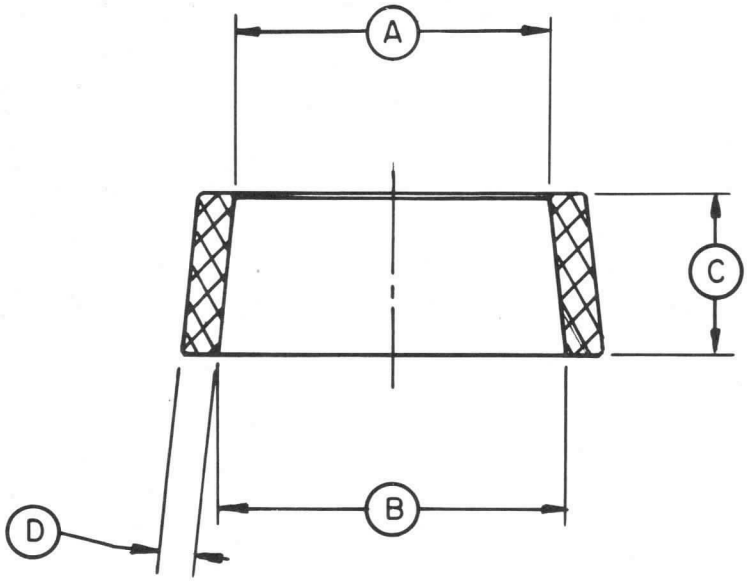

EIMAC CAVITIES FOR FM BROADCAST

Varian EIMAC cavity amplifiers for FM broadcast service cover the international frequency assignment of 86–108 MHz. Stock amplifiers provide power levels of 35 to 0.75 kW. An EIMAC solid-state driver is available for use as an intermediate stage, if desired. Anticipate reduced transmitter down-time and higher revenues with this modern amplifier concept. For full information contact Product Manager, Varian EIMAC, 301 Industrial Way, San Carlos, CA 94070. Telephone (415) 592-1221.

EIMAC CAVITIES FOR FM BROADCAST

OUTPUT POWER	CAVITY TYPE	TUBE TYPE	PLATE VOLTAGE / CURRENT		SCREEN VOLTAGE / CURRENT		DRIVE POWER	SIZE H W D
kW			kV	A	V	A	W	(INCHES)
35	CV-2202	4CX20,000C	10.0	4.65	1000	0.253	375	31.5 19 21
20	CV-2200	4CX20,000A	10.0	3.25	750	0.220	300	36.0 19 21
15	CV-2210	4CX12,000A	8.0	2.60	800	0.120	250	19.8 19 21
10	CV-2228	4CX7500A	6.5	2.2	750	0.128	100	19.8 19 21
5.5	CV-2225	4CX3500A	4.3	1.9	700	0.123	66	6.6 19 16
1.5	CV-2223	3CX800A7(2)	2.2	1.0	—	—	43	6.6 17 12
0.75	CV-2222	3CX800A7	2.2	0.5	—	—	21	6.13 17 12
0.15	AM2215A	Solid State	.028	12	—	—	15	2.63 5.6 8.2

VARIAN EIMAC
301 Industrial Way
San Carlos, CA 94070
415•592-1221

TECHNICAL DATA

AM-2215A VHF AMPLIFIER MODULE

The EIMAC AM-2215A is a solid-state power amplifier module for use in the FM broadcast service.

The broad-band design permits operation over the entire FM band (86 to 108 MHz) without tuning.

These amplifiers are intended for use as drivers for EIMAC cavity amplifiers which deliver power output levels from 1.5 to 60 kilowatts.

The AM-2215A utilizes rugged bipolar transistors with emitter ballasting which provides protection from varying load impedance which may occur during tuneup of following stages. The semiconductor devices employed are well established types available from many sources.

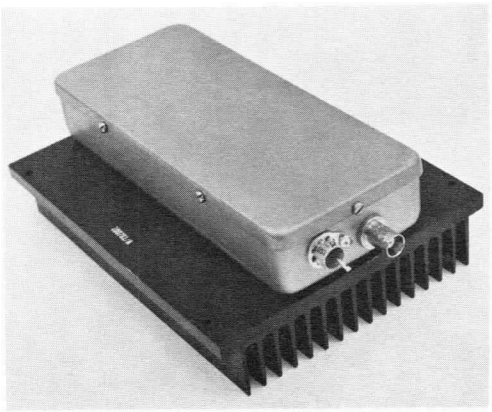

CHARACTERISTICS [1]

ELECTRICAL

Power Output	150 W	(maximum)
Power Gain	10 dB	(minimum)
Frequency of Operation	86-108 MHz	
Nominal Power Supply Voltage	28 Vdc	(Note 2)
Power Supply Current @ 28 Vdc	12 Adc	(maximum)
Nominal Input Impedance	50 Ohms	
Nominal Output Impedance	50 Ohms	
Input VSWR (88-108 MHz)	2.0:1	(maximum)
Load VSWR 150 Watts output	2.0:1	(maximum)

MECHANICAL

Cooling Requirements	Conduction with Forced Air	(Note 3)
Maximum Operating Temperature	85°C	(Note 4)
Input rf Connector	BNC Jack	(female)
Output rf Connector	BNC Jack	(female)
Nominal Overall Dimensions:		
Height	2.62 In	(66.5 mm)
Width	5.56 In	(141.2 mm)
Length	8.19 In	(208 mm)
Weight	42 Oz	(1.19 kg)

Note 1 Characteristics and operating values are based on performance tests. These figures may change without notice as the result of additional data or product refinement. Varian EIMAC should be consulted before using this information for final equipment design.

Note 2 Dc voltage may be varied over the range from 24 to a maximum of 28 volts to vary rf output.

Note 3 Forced-air cooling is required for output power over 25 W. The absolute requirements depend on power output, ambient temperature, and cooling technique used.

Note 4 Measured at the hottest point on the heat sink. This value should not be exceeded.

398099 (Effective February 1984)
VA4666

Printed in U.S.A.

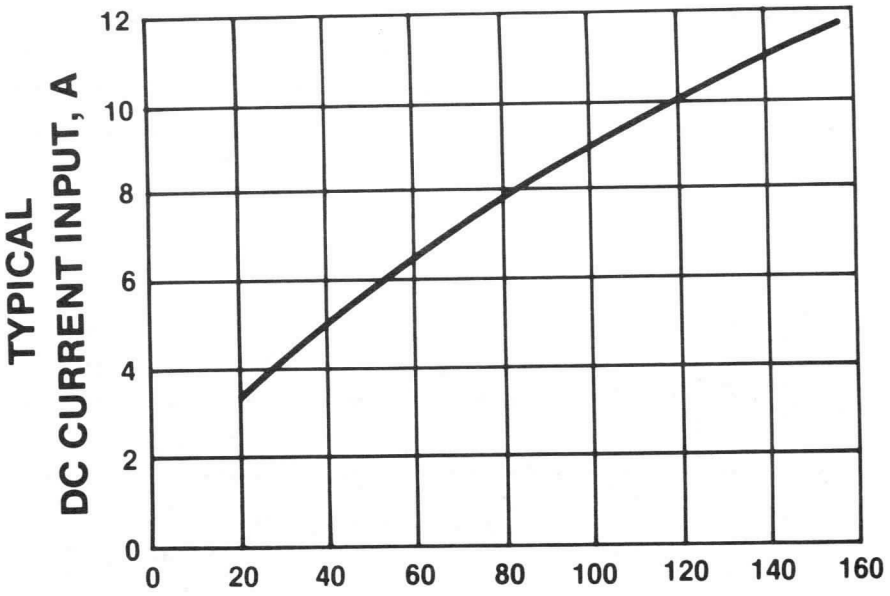
TYPICAL
DC CURRENT INPUT, A
12
10
8
6
4
2
0
0
20
40
60
80
100
120
140
160
OUTPUT POWER (WATTS), DC VOLTAGE
INPUT 28 V

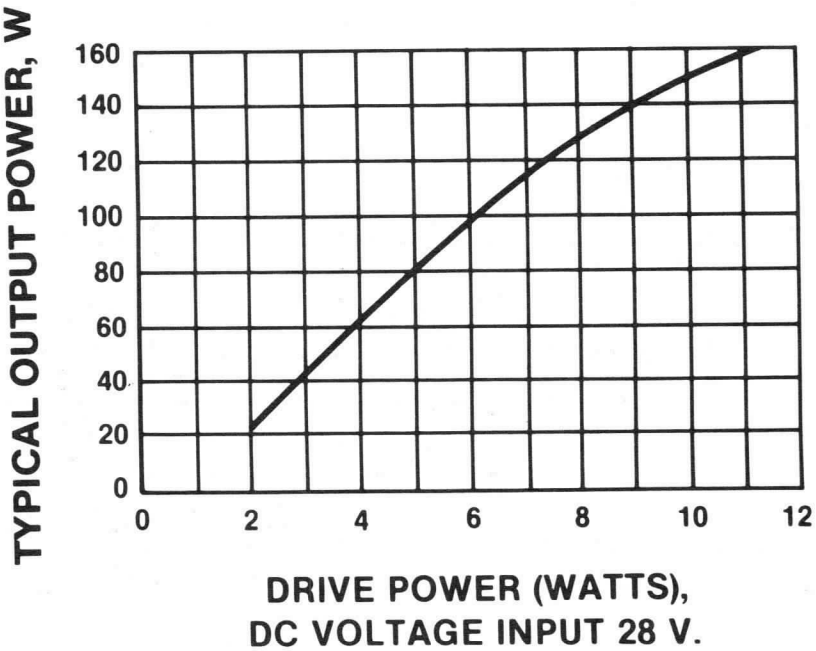
TYPICAL OUTPUT POWER, W
160
140
120
100
80
60
40
20
0
0
2
4
6
8
10
12
DRIVE POWER (WATTS),
DC VOLTAGE INPUT 28 V.

STABILITY - The amplifier, when operated at 100 W output and within the collector voltage range (see Note 2, page 1), will not be damaged when operated into a 3:1 load mismatch at all phase angles. At power over 100 W output, the VSWR should not exceed 2:1. Sensing circuitry for protection is recommended.

The output will contain no spurious non-harmonic related products when operated at any frequency from 86 to 108 MHz. When not driven and with the output terminated in a 50-ohm load, the amplifier is stable while the input is terminated into an impedance representing an infinite VSWR at all phase angles.

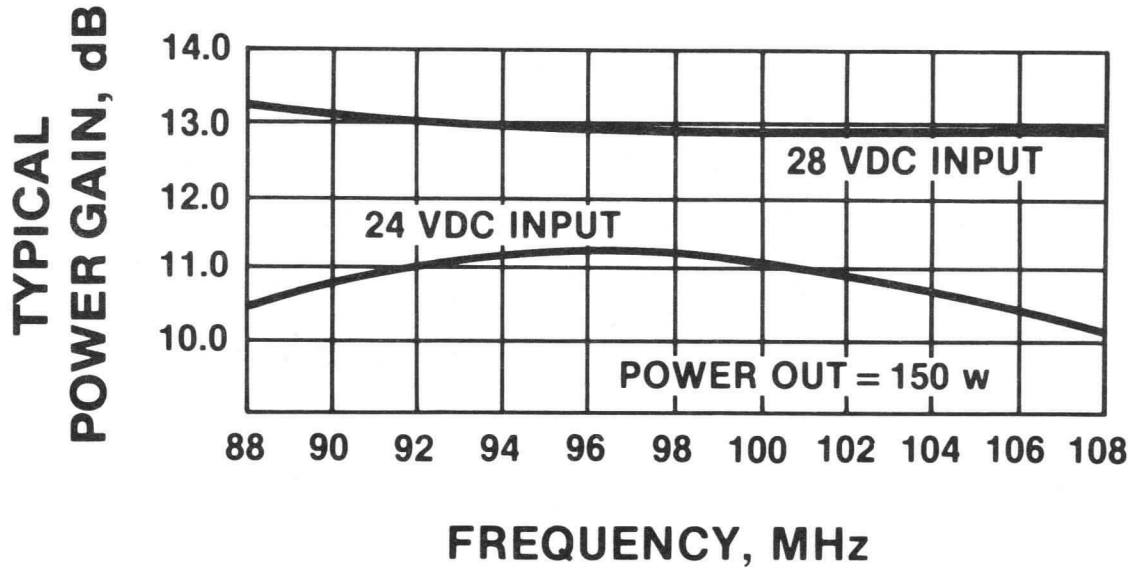

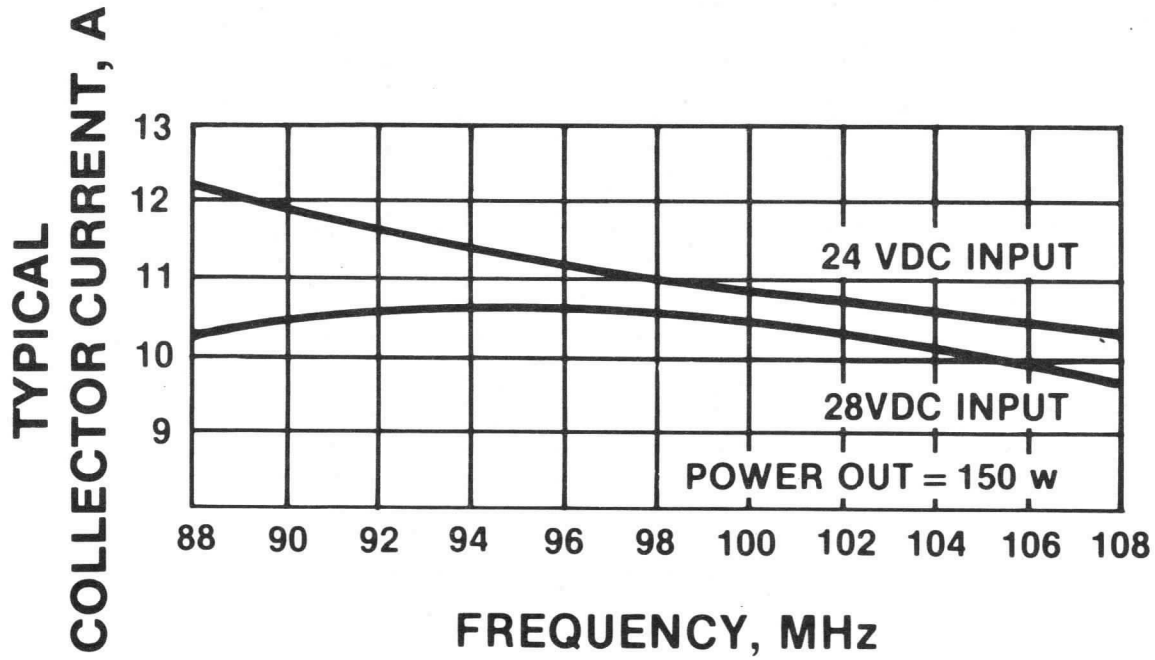

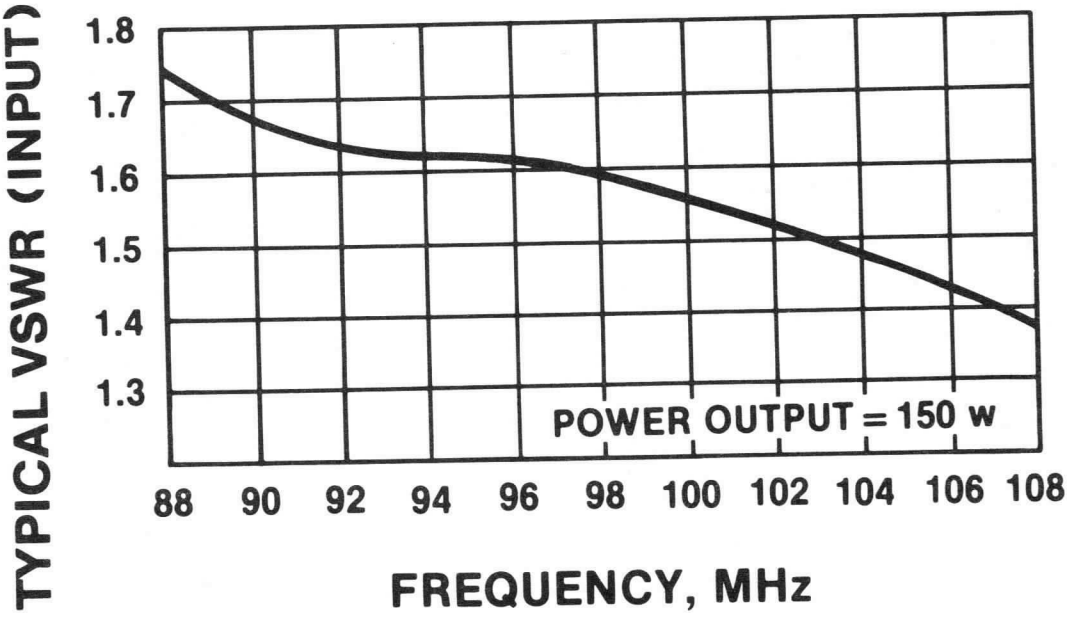
TYPICAL VSWR (INPUT)
1.8
1.7
1.6
1.5
1.4
1.3
POWER OUTPUT = 150 w
88 90 92 94 96 98 100 102 104 106 108
FREQUENCY, MHz

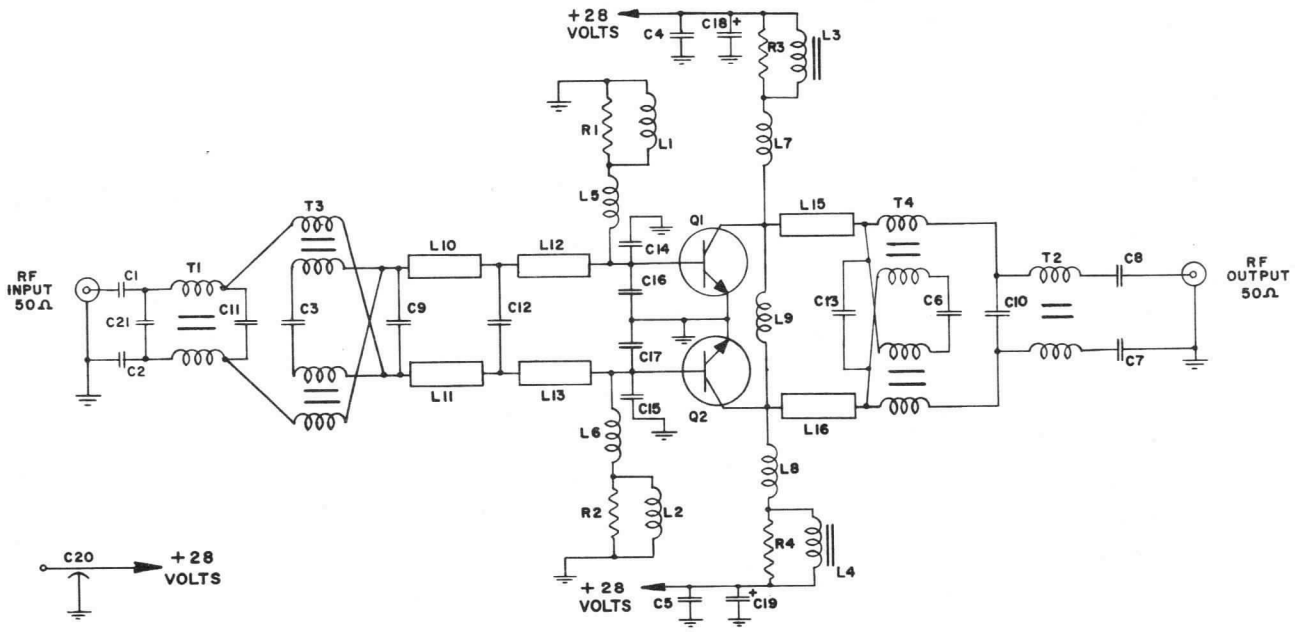
+28 VOLTS
C4
C18
R3
L3
R1
L1
L7
L5
L15
T4
Q1
C14
C16
T3
T1
L10
L12
T2
C8
RF INPUT 50Ω
C1
C21
C2
C11
C3
C9
C12
C13
C6
C10
L9
RF OUTPUT 50Ω
C17
C7
L11
L13
C15
Q2
L16
L6
L8
R2
L2
R4
L4
C20
+28 VOLTS
+28 VOLTS
C5
C19

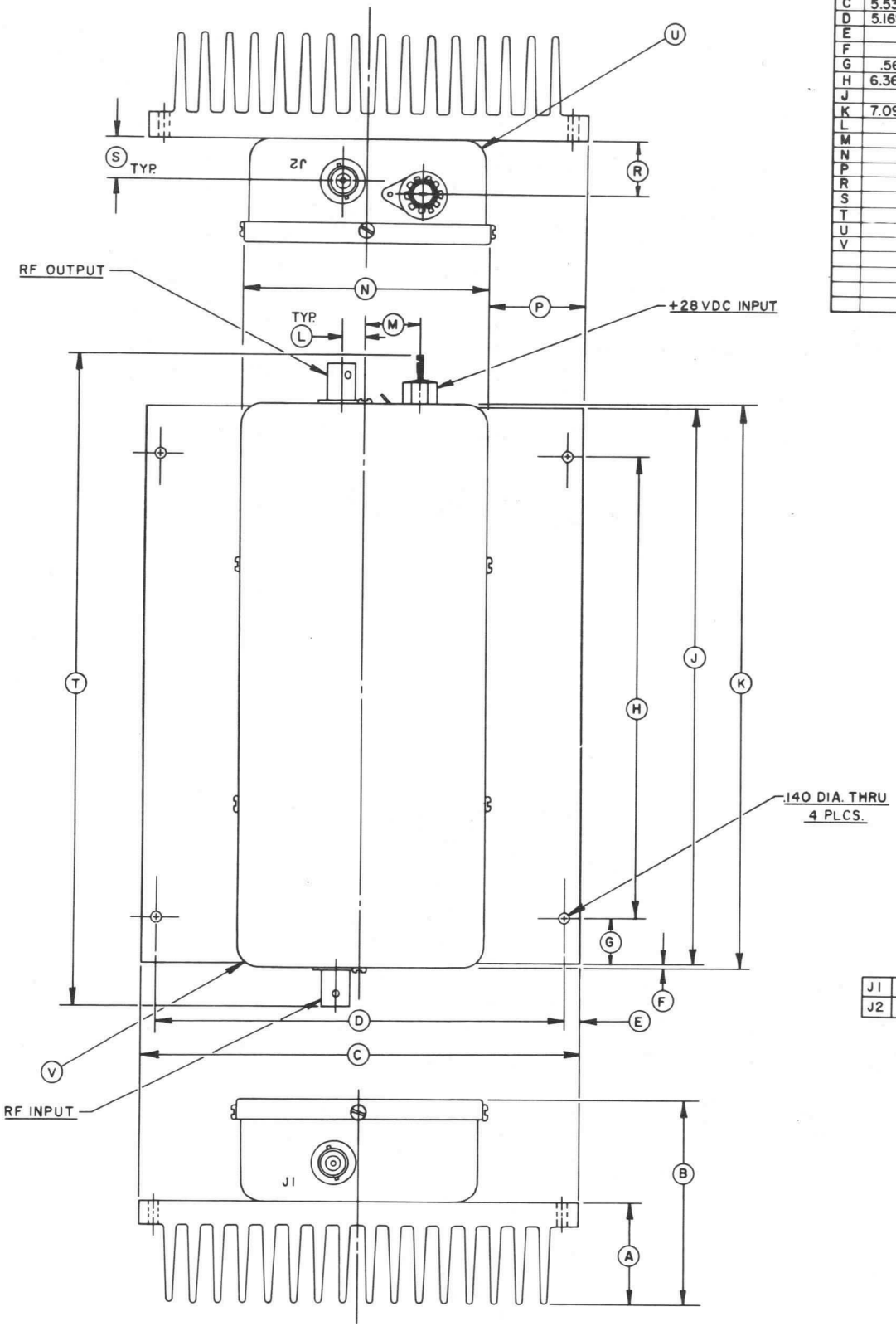

DIMENSIONAL DATA						
	INCHES			MILLIMETERS		
DIM.	MIN.	MAX.	REF.	MIN.	MAX.	REF.
A			1.312			33.32
B	2.594	2.656		65.89	67.46	
C	5.531	5.593		140.49	142.06	
D	5.169	5.231		131.29	132.87	
E			.180			4.57
F			.062			11.57
G	.569	.631		14.45	16.03	
H	6.369	6.431		161.77	163.35	
J			7.000			177.80
K	7.094	7.156		180.19	181.76	
L			.300			7.62
M			.700			17.78
N			3.125			79.38
P			1.219			30.96
R			.700			17.78
S			.505			12.83
T			8.187			207.96
U			.188R			
V			.188R			

NOTES:

1. REF DIMENSIONS ARE FOR INFO ONLY & ARE NOT REQUIRED FOR INSPECTION PURPOSES.

CONNECTOR OPTIONS

	01	02	03	04
J1		BNC		
J2		BNC		

ADVANCE PRODUCT ANNOUNCEMENT

VHF CAVITY CV-2223 FOR FM BROADCAST SERVICE

The EIMAC CV-2223 amplifier cavity is designed for use as a final amplifier stage in an FM transmitter. It is designed for fixed frequency operation within the 88-108 MHz band for broadcast service. It is also useful as a reliable intermediate power amplifier for driving higher power tube amplifiers.

Cavity design is straightforward with reliability and simplicity as major features. Two EIMAC 3CX800A7 high performance focus-cathode triodes are used. They are designed for grounded grid service. Overall stage gain of this cavity assembly is approximately 15 dB with no neutralization required.

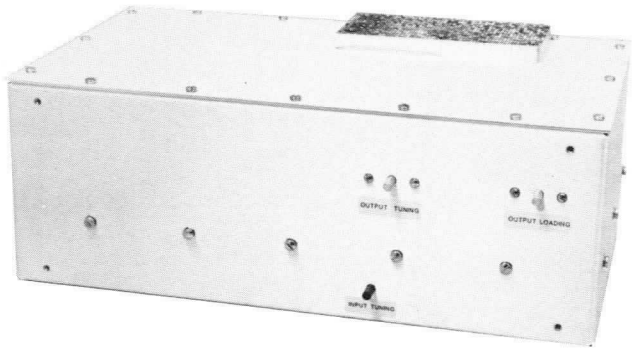

GENERAL CHARACTERISTICS [1]

ELECTRICAL

Tuning Range	88 to 108 MHz
Input Impedance (nominal)	50 Ohms
Output Impedance (nominal)	50 Ohms
Power Tubes (3CX800A7) Heater Voltage	13.5 ± 0.6 V
Power Tubes Heater Current, Approximate	3.0 A

MECHANICAL

Power Tubes Used (not supplied with cavity)	Two EIMAC 3CX800A7
Input rf Connector	Type N
Output rf Connector	Unflanged 7/8" EIA Connector
Cooling	Forced Air
Mounting	Standard 19 In. Rack (Not Supplied)
Overall Dimensions (nominal):	
Height	6.125 In; 15.56 cm
Width	17.00 In; 43.18 cm
Depth	11.59 In; 29.44 cm
Net Weight (Approximate)	7.3 Lbs; 3.3 kg
Shipping Weight (Approximate; Tubes Not Installed)	13 Lbs; 6.0 kg

1 Characteristics and operating values are based on performance tests. These figures may change without notice as a result of additional data or product refinement. EIMAC should be consulted before using this information for final equipment design.

RADIO FREQUENCY POWER AMPLIFIER
FM BROADCAST SERVICE

ABSOLUTE MAXIMUM RATINGS:

DC PLATE VOLTAGE	2250	VOLTS
DC PLATE CURRENT	1.2	AMPERE
PLATE DISSIPATION	1600	WATTS
GRID CURRENT	0.12	AMPERE
GRID DISSIPATION	8	WATTS
LOAD VSWR	1.5:1	

* Approximate value
\# Power delivered to the load

Typical Operation (Measured data at 98.1 MHz)

Plate Voltage	2200	Vdc
Cathode Bias Voltage	+12.0	Vdc
Plate Current	0.8	Adc
Grid Current *	64	mAdc
Useful Power Output #	1100	W
Driving Power	31	W
Efficiency	62.5	%
Power Gain	15.5	dB
Maximum Input VSWR, 88-108 MHz	1.2:1	
Plate Dissipation *	660	W

398026(Effective March 1986)
VA4902

Printed in U.S.A.

APPLICATION

MECHANICAL

COOLING - The maximum temperature limit for external tube surfaces and the anode core is 250°C but tube life is prolonged if these areas are maintained at lower temperatures. An air interlock system should be provided to remove all voltages from the tube in case of failure of or a significant reduction in normal cooling air flow.

Minimum air flow requirements for a maximum (tube) anode core temperature of 225°C are listed for two altitudes and inlet air temperatures, for three power levels. The pressure drop values shown are in inches of water and are for the cavity and tube combination.

Cooling Air at 25°C

	SEA LEVEL		5000 FEET	
Anode Diss. W	Flow Rate cfm	Press. Drop In.Water	Flow Rate cfm	Press. Drop In.Water
400	12	0.20	15	0.30
600	22	0.30	28	0.40
800	38	0.9	46	1.20

Cooling Air at 50°C

	SEA LEVEL		5000 FEET	
Anode Diss. W	Flow Rate cfm	Press. Drop In.Water	Flow Rate cfm	Press. Drop In.Water
400	16	0.40	20	0.50
600	32	1.00	38	1.20
800	54	1.70	65	2.10

Air flow must be applied before or simultaneously with the application of tube electrode voltages, including the heater voltage, and should be maintained for a brief period after all voltages are removed to allow for tube cooldown.

ELECTRICAL

HEATER & CATHODE OPERATION - Rated filament voltage for the 3CX800A7 is 13.5 volts. Voltage should be measured at the cavity heater terminals with an accurate rms-responding meter, and should be maintained at this value to obtain optimum performance and good tube life. In no case should the voltage be allowed to deviate from 13.5 volts by more than plus or minus five percent.

GRID OPERATION - The two 3CX800A7 control grids have a total maximum dissipation rating of 4.0 watts. Care should be taken to avoid exceeding this rating. The cathode bias should be kept near the value shown in the TYPICAL OPERATION section of this data sheet. An interlock circuit should be used so that driving power cannot be applied to the cavity unless plate voltage is on the tube. Drive power should be removed if grid current exceeds 120 milliamperes.

PLATE INDUCTOR - The plate inductor has a movable shorting bar which serves as the plate circuit coarse tuning. The position of the bar is set according to the frequency range selected for operation. Detailed information is supplied with the cavity.

INPUT & OUTPUT TUNING - Both input and output fine tuning are adjustable from the front panel.

OUTPUT LOADING - Output loading is adjustable from the front panel.

FAULT PROTECTION - All power tubes operate at voltages which can cause severe damage in the event of an internal arc, especially in cases where large amounts of stored energy or follow-on current are involved. Some means of protection is advised in all cases, and it is recommended that a series resistor be used in the anode circuit to limit peak current and help dissipate the energy in the event of a tube or circuit arc. A resistance of 25 ohms (50 W) in the positive plate power supply lead will help protect the tube in the event of an internal arc. Additional information is found in EIMAC Application Bulletin #17 "FAULT PROTECTION". Copies are available on request.

ABSOLUTE MAXIMUM RATINGS - Values shown for each type of service are based on the "absolute system" and are not to be exceeded under any service conditions. These ratings are limiting values outside which serviceability of the tube may be impaired. In order not to exceed absolute ratings the equipment designer has the responsibility of determining an average design value for each rating below the absolute value of that rating by a safety factor so that the absolute values will never be exceeded under any usual conditions of supply-voltage variation, load variation, or manufacturing variation in the equipment itself. It does not necessarily follow that combinations of absolute maximum ratings can be attained simultaneously.

HIGH VOLTAGE - Normal operating voltages used with the CV-2223 are deadly, and the equipment must be designed properly and operating precautions must be followed. Design all equipment so that no one can come in contact with high voltages. Equipment must include safety enclosures for high voltage circuits and terminals, with interlock switches to open primary circuits of the power supply and to discharge high-voltage capacitors whenever access doors are opened. Interlock switches must not be bypassed or "cheated" to allow operation with access doors open. Remember: HIGH VOLTAGE CAN KILL.

RADIO-FREQUENCY RADIATION - Avoid exposure to strong rf fields even at relatively low frequency. Absorption of rf energy by human tissue is dependent on frequency. Under 300 MHz most of the energy will pass completely through the human body with little attenuation or heating affect. Public health agencies are concerned with the hazard even at these frequencies. OSHA (Occupational Safety and Health Administration) recommends that prolonged exposure to rf radiation should be limited to 10 milliwatts per square centimeter.

SPECIAL APPLICATIONS - When it is desired to operate this cavity assembly under conditions widely different from those listed here, write to Varian EIMAC; Attn: Product Manager; 301 Industrial Way; San Carlos, CA 94070 U.S.A.

OPERATING HAZARDS

PROPER USE AND SAFE OPERATING PRACTICES WITH RESPECT TO POWER TUBES AND THEIR CIRCUITS ARE THE RESPONSIBILITY OF EQUIPMENT MANUFACTURERS AND USERS OF SUCH TUBES. ALL PERSONS WHO WORK WITH OR ARE EXPOSED TO POWER TUBES OR EQUIPMENT WHICH UTILIZES SUCH TUBES MUST TAKE PRECAUTIONS TO PROTECT THEMSELVES AGAINST POSSIBLE SERIOUS BODILY INJURY. DO NOT BE CARELESS AROUND SUCH PRODUCTS.

The operation of this cavity may involve the following hazards, any one of which, in the absence of safe operating practices and precautions, could result in serious harm to personnel:

a. HIGH VOLTAGE - Normal operating voltages can be deadly. Remember that HIGH VOLTAGE CAN KILL.

b. LOW-VOLTAGE HIGH-CURRENT CIRCUITS - Personal jewelry, such as rings, should not be worn when working with filament contacts or connectors as a short circuit can produce very high current and melting, resulting in severe burns.

c. RF RADIATION - Exposure to strong rf fields should be avoided. The dangers of rf radiation are more severe at UHF and microwave frequencies and can cause serious bodily and eye injuries. CARDIAC PACEMAKERS MAY BE EFFECTED.

d. HOT SURFACES - Surfaces of tubes can reach temperatures of several hundred °C and cause serious burns if touched for several minutes after all power is removed.

Please review the detailed operating hazards sheet enclosed with each device or request a copy from: Varian EIMAC, Power Grid Application Engineering, 301 Industrial Way, San Carlos CA 94070.

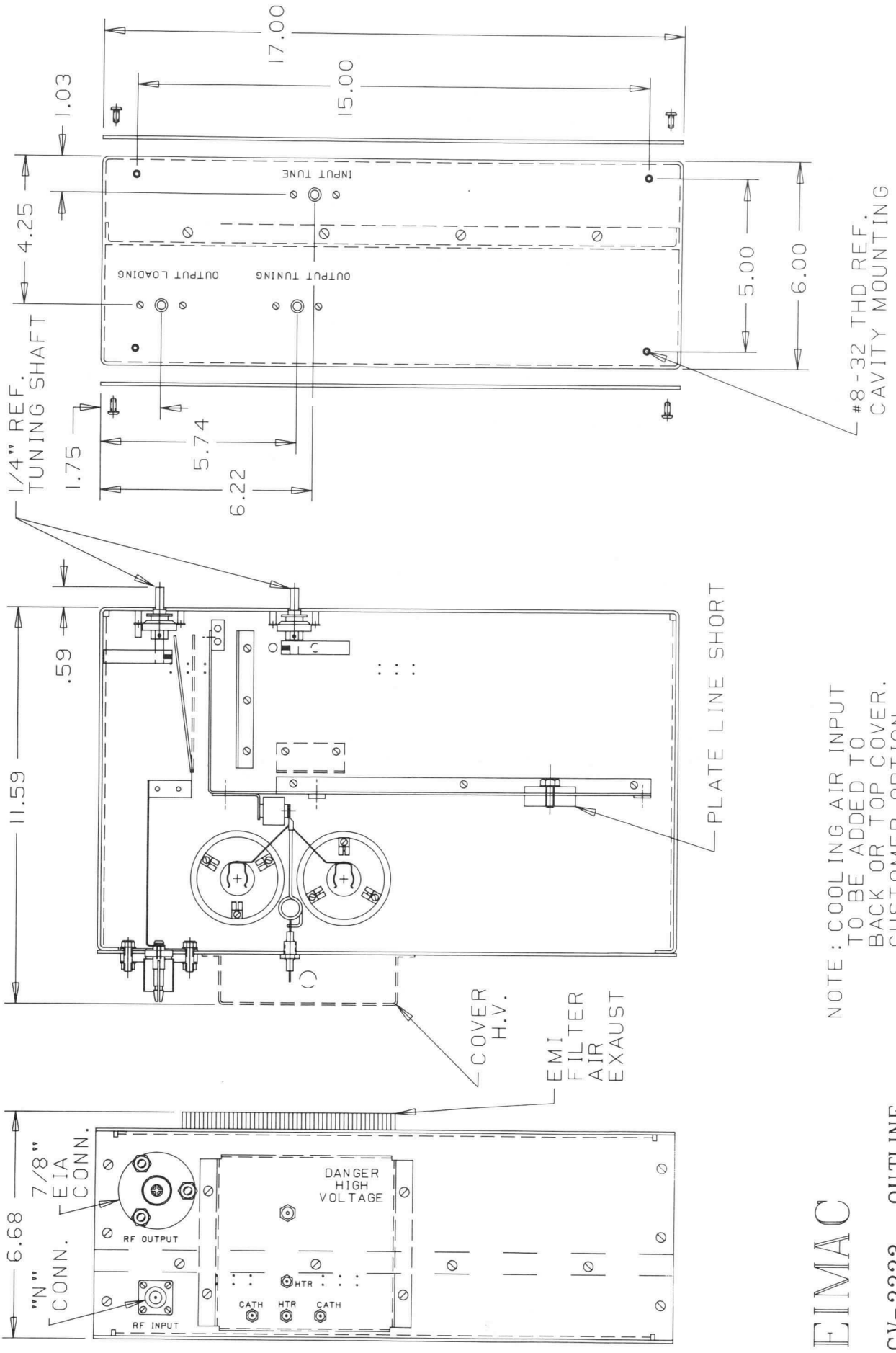

NOTE: COOLING AIR INPUT
TO BE ADDED TO
BACK OR TOP COVER.
CUSTOMER OPTION.

EIMAC

CV-2223 OUTLINE

ADVANCE PRODUCT ANNOUNCEMENT

VHF CAVITY CV-2222 FOR FM BROADCAST SERVICE

The EIMAC CV-2222 amplifier cavity is designed for use as a final amplifier stage in an FM transmitter. It is designed for fixed frequency operation within the 88-108 MHz band for broadcast service. It is also useful as a reliable intermediate power amplifier for driving higher power tube amplifiers.

Cavity design is straightforward with reliability and simplicity as major features. The EIMAC 3CX800A7 high performance focus-cathode triode is used. It is designed for grounded grid service. Overall stage gain of this cavity assembly is approximately 15 dB with no neutralization required.

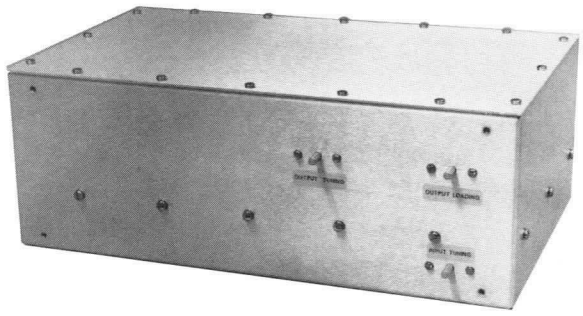

GENERAL CHARACTERISTICS [1]

ELECTRICAL

Tuning Range	88 to 108 MHz
Input Impedance (nominal)	50 Ohms
Output Impedance (nominal)	50 Ohms
Power Tube (3CX800A7) Heater Voltage	13.5 ± 0.6 V
Power Tube Heater Current, Approximate	1.5 A

MECHANICAL

Power Tube Used (not supplied with cavity)	EIMAC 3CX800A7
Input rf Connector	Type BNC
Output rf Connector	Type N
Cooling	Forced Air
Mounting	Standard 19 In. Rack (Not Supplied)
Overall Dimensions (nominal):	
Height	6.125 In; 15.56 cm
Width	17.00 In; 43.18 cm
Depth	11.59 In; 29.44 cm
Net Weight (Approximate)	7.3 Lbs; 3.3 kg
Shipping Weight (Approximate; Tube Not Installed)	13 Lbs; 6.0 kg

1 Characteristics and operating values are based on performance tests. These figures may change without notice as a result of additional data or product refinement. EIMAC should be consulted before using this information for final equipment design.

RADIO FREQUENCY POWER AMPLIFIER
FM BROADCAST SERVICE

ABSOLUTE MAXIMUM RATINGS:

DC PLATE VOLTAGE	2250	VOLTS
DC PLATE CURRENT	0.6	AMPERE
PLATE DISSIPATION	800	WATTS
GRID CURRENT	0.06	AMPERE
GRID DISSIPATION	4	WATTS
LOAD VSWR	1.5:1	

* Approximate value
\# Power delivered to the load

Typical Operation (Measured data at 107.9 MHz)

Plate Voltage	2200	Vdc
Cathode Bias Voltage	+12.0	Vdc
Plate Current	0.5	Adc
Grid Current *	47	mAdc
Useful Power Output #	756	W
Driving Power	21	W
Efficiency	68.7	%
Power Gain	15.5	dB
Maximum Input VSWR, 88-108 MHz	1.2:1	
Plate Dissipation *	330	W

398025(Effective March 1986)
VA4901

Printed in U.S.A.

APPLICATION

MECHANICAL

COOLING - The maximum temperature limit for external tube surfaces and the anode core is 250°C but tube life is prolonged if these areas are maintained at lower temperatures. An air interlock system should be provided to remove all voltages from the tube in case of failure of or a significant reduction in normal cooling air flow.

Minimum air flow requirements for a maximum (tube) anode core temperature of 225°C are listed for two altitudes and inlet air temperatures, for three power levels. The pressure drop values shown are in inches of water and are for the cavity and tube combination.

Cooling Air at 25°C

	SEA LEVEL		5000 FEET	
Anode Diss. W	Flow Rate cfm	Press. Drop In.Water	Flow Rate cfm	Press. Drop In.Water
400	8	0.20	9	0.25
600	15	0.40	19	0.50
800	25	0.80	31	1.00

Cooling Air at 50°C

	SEA LEVEL		5000 FEET	
Anode Diss. W	Flow Rate cfm	Press. Drop In.Water	Flow Rate cfm	Press. Drop In.Water
400	11	0.30	13	0.40
600	21	0.60	25	0.80
800	36	1.20	44	1.70

Air flow must be applied before or simultaneously with the application of tube electrode voltages, including the heater voltage, and should be maintained for a brief period after all voltages are removed to allow for tube cooldown.

ELECTRICAL

HEATER & CATHODE OPERATION - Rated filament voltage for the 3CX800A7 is 13.5 volts. Voltage should be measured at the cavity heater terminals with an accurate rms-responding meter, and should be maintained at this value to obtain optimum performance and good tube life. In no case should the voltage be allowed to deviate from 13.5 volts by more than plus or minus five percent.

GRID OPERATION - The 3CX800A7 control grid has a maximum dissipation rating of 4.0 watts. Care should be taken to avoid exceeding this rating. The cathode bias should be kept near the value shown in the TYPICAL OPERATION section of this data sheet. An interlock circuit should be used so that driving power cannot be applied to the cavity unless plate voltage is on the tube. Drive power should be removed if grid current exceeds 60 milliamperes.

PLATE INDUCTOR - The plate inductor has a movable shorting bar which serves as the plate circuit coarse tuning. The position of the bar is set according to the frequency range selected for operation. Detailed information is supplied with the cavity.

INPUT & OUTPUT TUNING - Both input and output fine tuning are adjustable from the front panel.

OUTPUT LOADING - Output loading is adjustable from the front panel.

FAULT PROTECTION - All power tubes operate at voltages which can cause severe damage in the event of an internal arc, especially in cases where large amounts of stored energy or follow-on current are involved. Some means of protection is advised in all cases, and it is recommended that a series resistor be used in the anode circuit to limit peak current and help dissipate the energy in the event of a tube or circuit arc. A resistance of 50 ohms (50 W) in the positive plate power supply lead will help protect the tube in the event of an internal arc. Additional information is found in EIMAC Application Bulletin #17 "FAULT PROTECTION". Copies are available on request.

ABSOLUTE MAXIMUM RATINGS - Values shown for each type of service are based on the "absolute system" and are not to be exceeded under any service conditions. These ratings are limiting values outside which serviceability of the tube may be impaired. In order not to exceed absolute ratings the equipment designer has the responsibility of determining an average design value for each rating below the absolute value of that rating by a safety factor so that the absolute values will never be exceeded under any usual conditions of supply-voltage variation, load variation, or manufacturing variation in the equipment itself. It does not necessarily follow that combinations of absolute maximum ratings can be attained simultaneously.

HIGH VOLTAGE - Normal operating voltages used with the CV-2222 are deadly, and the equipment must be designed properly and operating precautions must be followed. Design all equipment so that no one can come in contact with high voltages. Equipment must include safety enclosures for high voltage circuits and terminals, with interlock switches to open primary circuits of the power supply and to discharge high-voltage capacitors whenever access doors are opened. Interlock switches must not be bypassed or "cheated" to allow operation with access doors open. Remember: HIGH VOLTAGE CAN KILL.

RADIO-FREQUENCY RADIATION - Avoid exposure to strong rf fields even at relatively low frequency. Absorption of rf energy by human tissue is dependent on frequency. Under 300 MHz most of the energy will pass completely through the human body with little attenuation or heating affect. Public health agencies are concerned with the hazard even at these frequencies. OSHA (Occupational Safety and Health Administration) recommends that prolonged exposure to rf radiation should be limited to 10 milliwatts per square centimeter.

SPECIAL APPLICATIONS - When it is desired to operate this cavity assembly under conditions widely different from those listed here, write to Varian EIMAC; Attn: Product Manager; 301 Industrial Way; San Carlos, CA 94070 U.S.A.

OPERATING HAZARDS

PROPER USE AND SAFE OPERATING PRACTICES WITH RESPECT TO POWER TUBES AND THEIR CIRCUITS ARE THE RESPONSIBILITY OF EQUIPMENT MANUFACTURERS AND USERS OF SUCH TUBES. ALL PERSONS WHO WORK WITH OR ARE EXPOSED TO POWER TUBES OR EQUIPMENT WHICH UTILIZES SUCH TUBES MUST TAKE PRECAUTIONS TO PROTECT THEMSELVES AGAINST POSSIBLE SERIOUS BODILY INJURY. DO NOT BE CARELESS AROUND SUCH PRODUCTS.

The operation of this cavity may involve the following hazards, any one of which, in the absence of safe operating practices and precautions, could result in serious harm to personnel:

a. HIGH VOLTAGE - Normal operating voltages can be deadly. Remember that HIGH VOLTAGE CAN KILL.

b. LOW-VOLTAGE HIGH-CURRENT CIRCUITS - Personal jewelry, such as rings, should not be worn when working with filament contacts or connectors as a short circuit can produce very high current and melting, resulting in severe burns.

c. RF RADIATION - Exposure to strong rf fields should be avoided. The dangers of rf radiation are more severe at UHF and microwave frequencies and can cause serious bodily and eye injuries. CARDIAC PACEMAKERS MAY BE EFFECTED.

d. HOT SURFACES - Surfaces of tubes can reach temperatures of several hundred °C and cause serious burns if touched for several minutes after all power is removed.

Please review the detailed operating hazards sheet enclosed with each device or request a copy from: Varian EIMAC, Power Grid Application Engineering, 301 Industrial Way, San Carlos CA 94070.

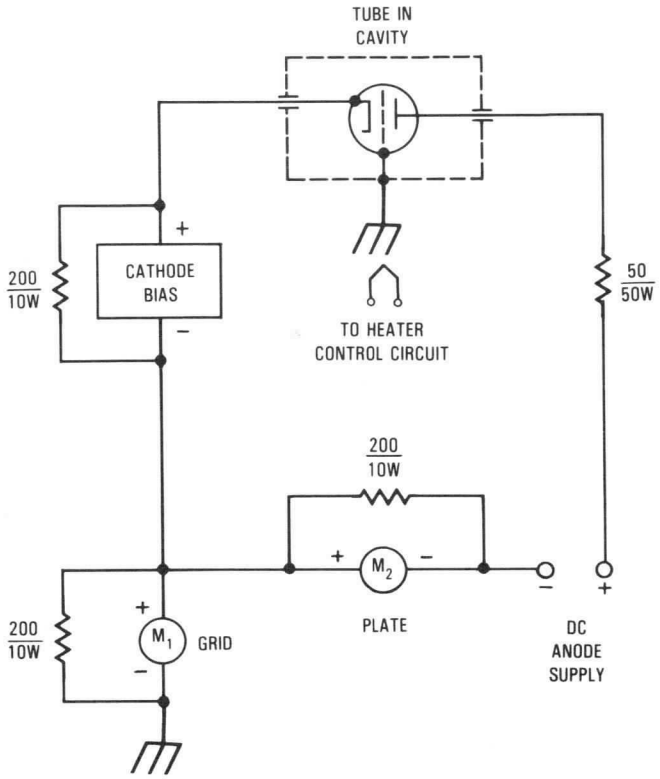

ELECTRICAL CIRCUIT DIAGRAM

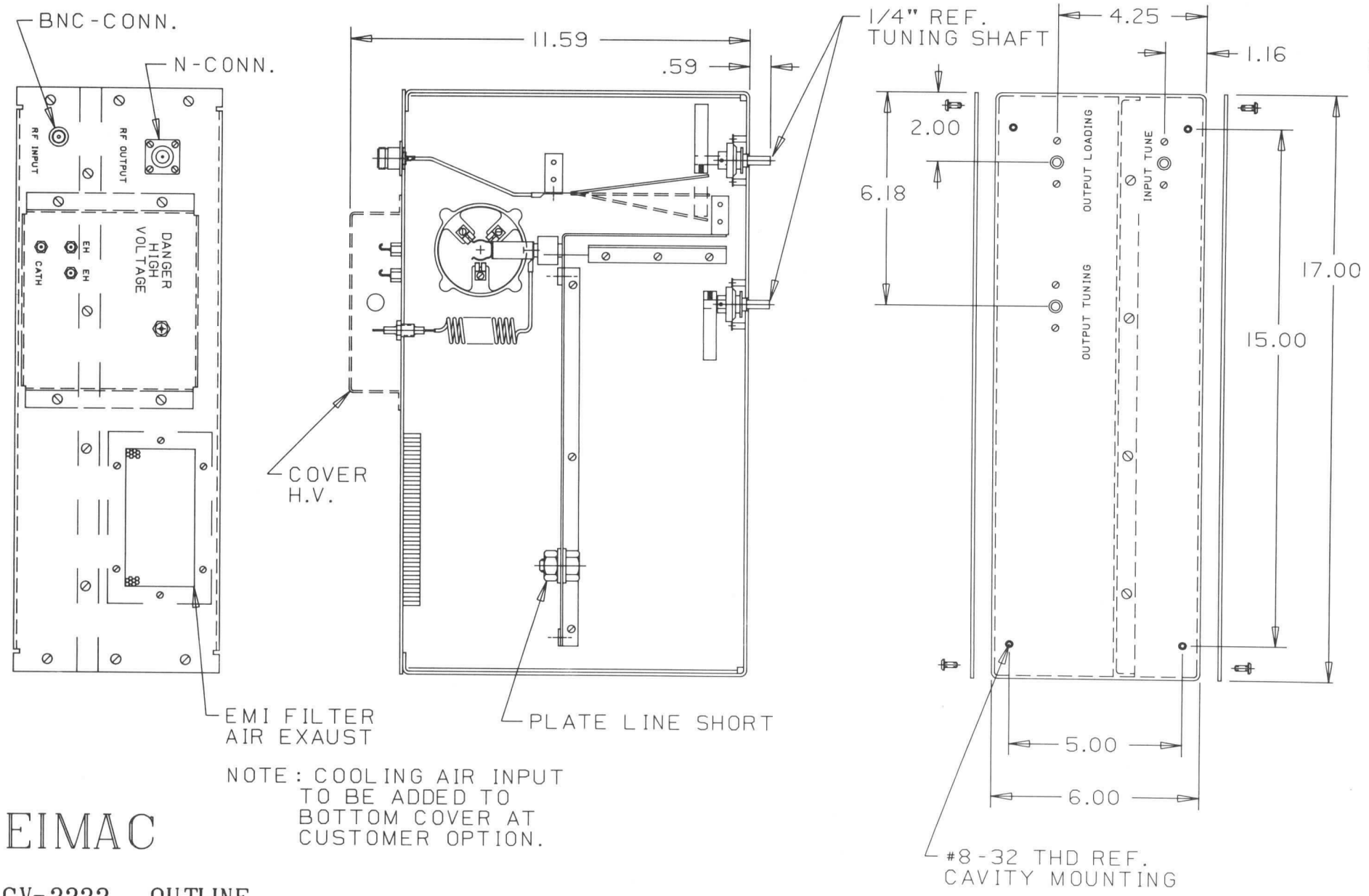

NOTE: COOLING AIR INPUT TO BE ADDED TO BOTTOM COVER AT CUSTOMER OPTION.

EIMAC

CV-2222 OUTLINE

CV-2222

TECHNICAL DATA

VHF CAVITY
CV-2202
FOR FM BROADCAST SERVICE

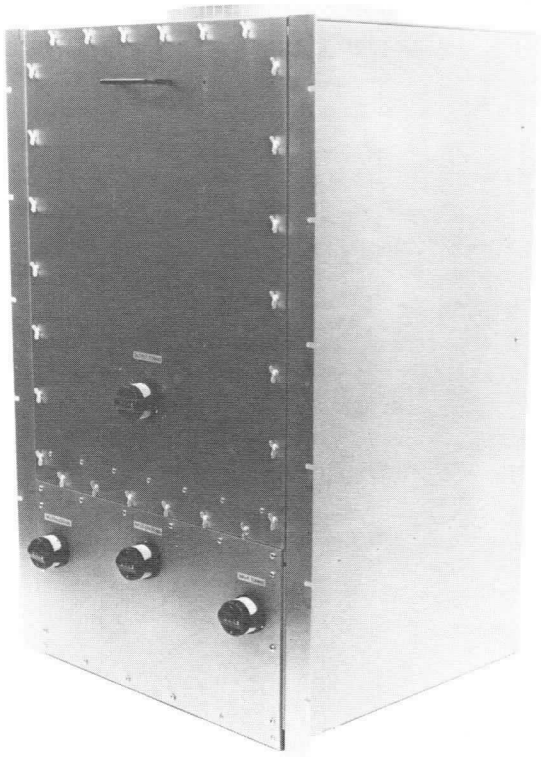

The EIMAC CV-2202 is a power amplifier cavity assembly designed for use as the final amplifier of a 30 kW FM transmitter in the 86-108 MHz band assigned for broadcast service.

The amplifier tube used is the EIMAC 4CX20,000C high-performance tetrode designed especially for VHF applications. In this cavity assembly the tube is grid driven for a stage gain of 18 to 20 dB with a useful power output of 30 kilowatts.

GENERAL CHARACTERISTICS

ELECTRICAL

Tuning Range	86 to 108 MHz
Input Impedance (nominal)	50 Ohms
Output Impedance (nominal)	50 Ohms

MECHANICAL

Power Tube Used (not supplied with cavity)	EIMAC 4CX20,000C
Input rf Connector	Type N
Output rf Connector	3-1/8 Inch EIA Coaxial
Cooling Required	Forced Air
Mounting	Vertical: Standard 19 In. Rack
Overall Dimensions (nominal):	
Height (exclusive of tuning rods)	31.5 In; 80.0 cm
Width	19 In; 48.3 cm
Depth	21 In; 53.3 cm
Net Weight (approximate; tube not installed)	60 lb; 27.3 kg

RADIO FREQUENCY POWER AMPLIFIER
FM Broadcast Service

ABSOLUTE MAXIMUM RATINGS

DC PLATE VOLTAGE	12.5	KILOVOLTS
DC SCREEN VOLTAGE	2000	VOLTS
DC GRID VOLTAGE	-1000	VOLTS
DC PLATE CURRENT	5.0	AMPERES
PLATE DISSIPATION	20	KILOWATTS
SCREEN DISSIPATION	450	WATTS
GRID DISSIPATION	200	WATTS

* Approximate # Delivered to the load

Typical Operation, Measured Data at 100.0 MHz

Plate Voltage	11.6	kVdc
Screen Voltage	800	Vdc
Grid Voltage	-500	Vdc
Plate Current	3.35	Adc
Screen Current *	103	mAdc
Grid Current *	61	mAdc
Driving Power *	249	W
Plate Dissipation	7.7	kW
Useful Power Output * #	31.2	kW
Efficiency *	80.4	%
Gain *	21	dB

398015 (Effective April 1984)
VA4693

Printed in U.S.A.

APPLICATION

MECHANICAL

COOLING - The maximum temperature for the external surfaces of the 4CX20,000C tube used with this cavity is 250°C. Sufficient forced-air cooling must be provided to maintain the anode at the base of the cooling fins, and the ceramic/metal seals, below 250°C. A rectangular air-inlet port with an integral EMI filter is provided for the introduction of the required cooling air to the cavity.
During normal operation of the CV-2202 the plate dissipation of the tube may approach 12 kilowatts. At this dissipation level air flow requirements to maintain anode core temperature at 225°C with 50°C ambient cooling air at sea level and elevations of 5000 feet and 10,000 feet are:

	SEA LEVEL	5000 FT	10,000 FT
Flow rate (cfm)	435	514	613
Pressure Drop	1.2	1.3	1.5

Pressure drop is in inches of water and is approximate, and is for the cavity and tube combination. The blower selected in any given application must be capable of supplying the desired air flow at a back pressure equal to the pressure drop shown above plus any drop(s) encountered in ducts and filters. The designer is reminded that the data shown represent minimum cooling requirements (with some safety factor). Cooling in excess of minimum requirements is normally beneficial to allow for pressure loss due to dirty filters, etc.
Air flow must be applied before, or simultaneously with, the application of power, including the tube filament, and should normally be maintained for a short period of time after power is removed to allow for tube cooldown.
An air interlock switch should be incorporated into the control system to remove all voltages (including the filament) automatically in the event of failure or even partial loss of cooling air flow to the cavity.

ELECTRICAL

FILAMENT OPERATION - Rated filament voltage for the 4CX20,000C is 10.0 volts. The voltage should be measured at the cavity Ef terminals with an accurate rms-responding meter, and should be maintained at this value to obtain optimum performance and good tube life.

GRID OPERATION - The 4CX20,000C control grid has a maximum dissipation rating of 200 watts. Care should be taken to avoid exceeding this rating. The grid bias and driving power should be kept near the values shown in the TYPICAL OPERATION section of the data sheet whenever possible.

SCREEN GRID OPERATION - The maximum screen grid dissipation rating is 450 watts. With no ac applied to the screen grid, dissipation is simply the product of dc screen voltage and the dc screen current. Plate voltage, plate loading, or bias voltage must never be removed while filament and screen voltages are present, since screen dissipation rating will be exceeded. Suitable protective means must be provided to limit screen dissipation in the event of a circuit failure.

FAULT PROTECTION - In addition to the normal plate over-current interlock, screen current interlock, and air-flow interlock, the tube must be protected from damage caused by an internal plate arc which may occur at high plate voltage. A protective resistance (5 to 10 ohms at 225 watts, of suitable design) should always be connected in series with the tube anode to help absorb power supply stored energy if an internal arc should occur. The protection test for each electrode supply is to short each electrode to ground, one at a time, through a vacuum relay switch and a 6-inch length of #30 AWG copper wire. The wire will remain intact if the protection is adequate.
EIMAC Application Bulletin #17 titled FAULT PROTECTION contains considerable detail, and is available on request.

HIGH VOLTAGE - Normal operating voltages used with the CV-2202 are deadly.The equipment must be designed properly and operating precautions must be followed. Design all equipment so that no one can come in contact with high voltages. All equipment must include safety enclosures for high voltage circuits and terminals with interlock switches to open primary circuits of the power supply and to discharge high-voltage capacitors whenever access doors are opened. Interlock switches must not be bypassed or "cheated" to allow operation with access doors open. Always remember that HIGH VOLTAGE CAN KILL.

ABSOLUTE MAXIMUM RATINGS - The values shown for each type of service are based on the "absolute system" and are not to be exceeded under any

service conditions. These ratings are limiting values outside which the serviceability of the tube or cavity assembly may be impaired. In order not to exceed absolute ratings the equipment designer has the responsibility of determining an average design value for each rating below the absolute value of that rating by a safety factor so that the absolute values will never be exceeded under any usual conditions of supply voltage variation in the equipment itself. It does not necessarily follow that combinations of absolute maximum ratings can be attained simultaneously.

RADIO-FREQUENCY RADIATION - Avoid exposure to strong rf fields even at relatively low frequency. Absorption of rf energy by human tissue is dependent on frequency. Under 300 MHz most of the energy will pass completely through the human body with little attenuation or heating affect. Public health agencies are concerned with the hazard even at these frequencies. OSHA (Occupational Safety and Health Administration) recommends that prolonged exposure to rf radiation should be limited to 10 milliwatts per square centimeter.

SPECIAL APPLICATIONS - When it is desired to operate this cavity assembly under conditions widely different from those listed here, write to Varian EIMAC; attn: Product Manager, 301 Industrial Way; San Carlos, CA 94070 U.S.A.

OPERATING HAZARDS

PROPER USE AND SAFE OPERATING PRACTICES WITH RESPECT TO POWER TUBES ARE THE RESPONSIBILITY OF EQUIPMENT MANUFACTURERS AND USERS OF SUCH TUBES. ALL PERSONS WHO WORK WITH OR ARE EXPOSED TO POWER TUBES OR EQUIPMENT WHICH UTILIZES SUCH TUBES MUST TAKE PRECAUTIONS TO PROTECT THEMSELVES AGAINST POSSIBLE SERIOUS BODILY INJURY. DO NOT BE CARELESS AROUND SUCH PRODUCTS.

The operation of this cavity involves one or more of the following hazards, any one of which, in the absence of safe operating practices and precautions, could result in serious harm to personnel:

a. HIGH VOLTAGE - Normal operating voltages can be deadly. Always remember that HIGH VOLTAGE CAN KILL.

b. RF RADIATION - Exposure to strong rf fields should be avoided, even at relatively low frequencies. The dangers of rf radiation are more severe at UHF and microwave frequencies and can cause serious bodily and eye injuries. CARDIAC PACEMAKERS MAY BE EFFECTED.

c. HOT SURFACES - Surfaces of air-cooled radiators and other parts of tubes can reach temperatures of several hundred Degrees C and cause serious burns if touched for several minutes after all power is removed.

Please review the detailed operating hazards sheet enclosed with each tube, or request a copy from: Varian EIMAC, Power Grid Application Engineering, 301 Industrial Way, San Carlos CA 94070.

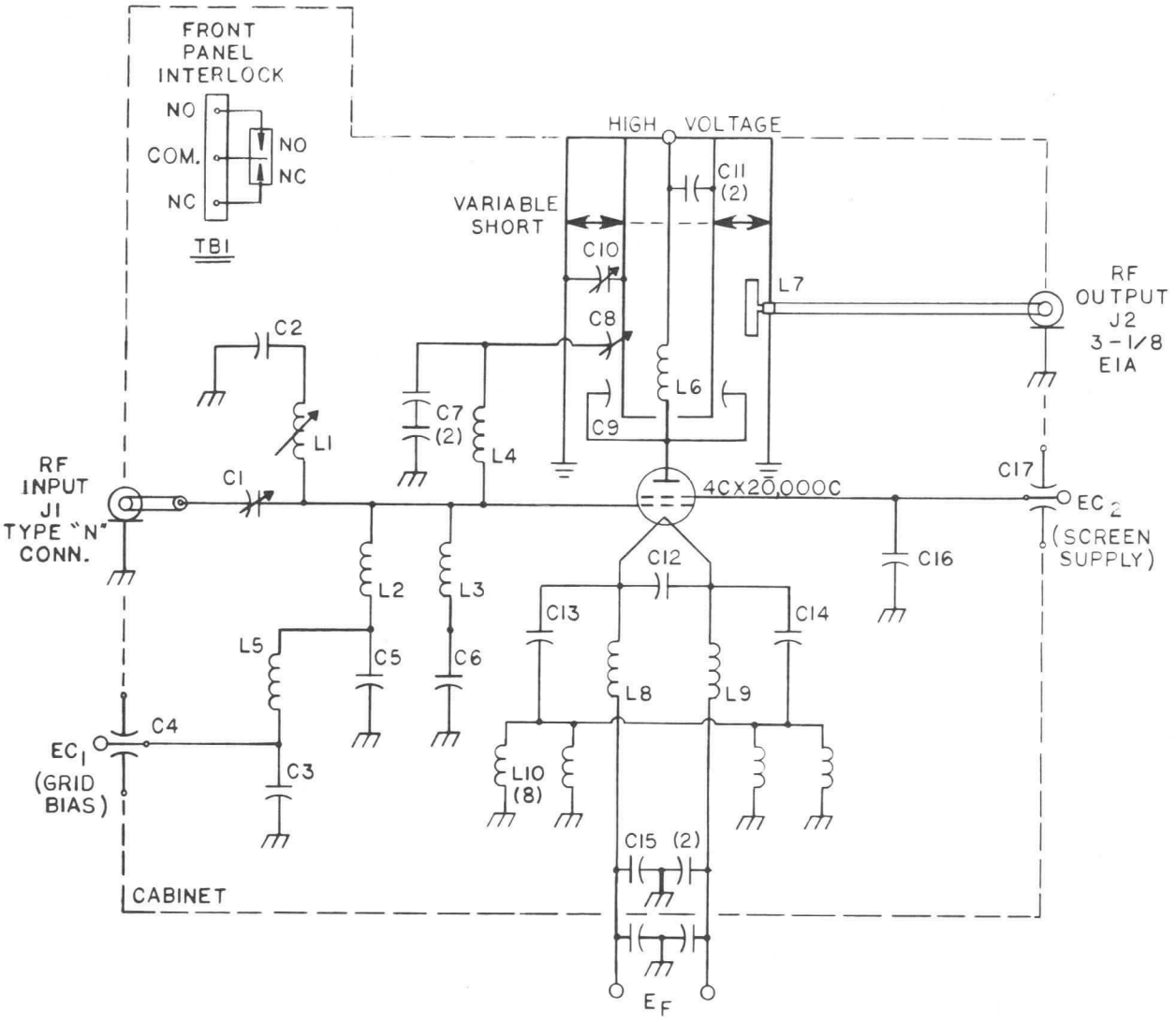

NOTE: CENTER TAP OF FILAMENT TRANSFORMER SECONDARY IS GROUNDED.

NOTE: 4CX20,000C TUBE NOT SUPPLIED WITH CAVITY.

C1 —— INPUT MATCH VARIABLE CAP. 3.8-21.6 PFD 1500 V #48-APL-21 (ALL STAR PRODUCTS)

C2 —— BYPASS, INPUT TUNING SLIDE (A-244920)

C3 —— CAP. 500 PF ± 20% 5KVDC (JENNINGS)

C4,C17 EMI FILTER, PI TYPE, 1250 PF # 1280-060 (ERIE)

C5,C6 CAP. 200 PF 7.5 KV #JIDT03CG201J752 (JENNINGS)

C7 —— CAP. 100 PF ± 5% 15 KV #JIDT02 (JENNINGS)

C8 —— NEUTRALIZER PADDLE ASSY # B-244927

C9 —— ANODE BLOCKER ASSY

C10 —— PLATE TUNING CAP. ASSY # C-241355

C11 —— H.V. FEED THRU CAP. # C-244868

C12,C13,C14 — FILAMENT BYPASS #C-243131

C15 —— FILAMENT FEEDTHRU CAP. # B-241477 (DUAL)

C16 —— SCREEN BLOCKER # C-244103

L1 —— ASSY INPUT TUNER

L2,L3 — INDUCTOR COIL "FREQUENCY DEPENDENT" SEE CHART ON TUNING MATRIX. #D-248032

L4 —— FIXED INDUCTOR # B-244934

L5 —— CHOKE #Z-144 (OHMITE)

L6 —— ANODE RF CHOKE # B-248355

L7 —— OUTPUT COUPLER ASSY # 241366

L8 —— UPPER FILAMENT CHOKE # C-244923

L9 —— LOWER FILAMENT CHOKE # C-244922

L10 —— INDUCTOR POSTS "FREQUENCY DEPENDENT" SEE CHART ON TUNING MATRIX #D-248032

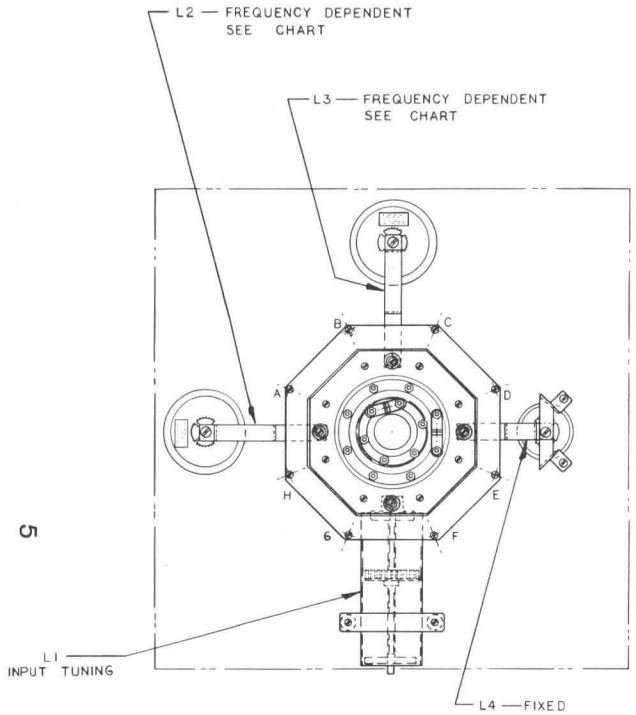

VIEW A-A

BOTTOM COVER REMOVED
1/2 X SIZE
DETAIL OMITTED FOR CLARITY

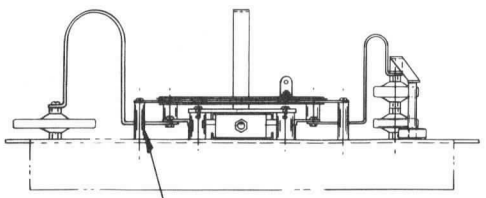

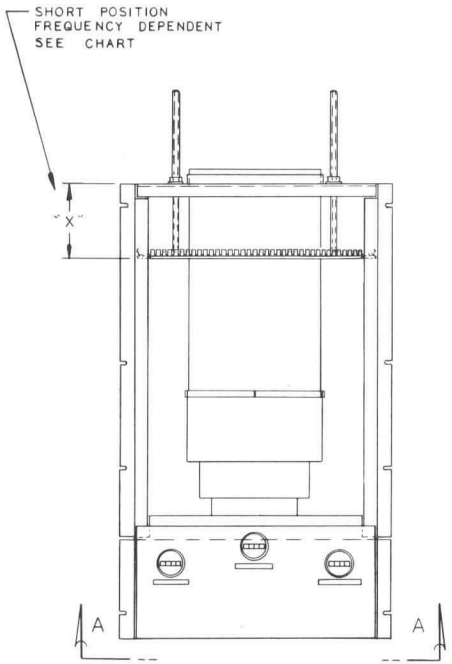

PLAN VIEW
1/4 X SIZE
UPPER FRONT PANEL REMOVED
TO SHOW INITIAL SHORT POSITION

FREQUENCY	SHORT POSITION DIM. "X"	L5 — INDUCTOR POSTS PT. # A-248030	L2 & L3 INDUCTOR COILS
88-89 MHZ	5.25 (133.35)	(4) REQ'D. AT POSITIONS A,C,E, & G	PT. # 244934 88-99 MHZ
90-91 MHZ	5.50 (139.70)	(4) INSULATORS PT. # A-244928 AT POSITIONS B,D,F & H	
92-93 MHZ	6.12 (155.45)		
94-95 MHZ	6.63 (168.40)	(6) REQ'D (A-248030) AT POSITIONS A,B,C,E,F, & G	
96-97 MHZ	7.38 (187.45)	(2) REQ'D (A-244928) AT POSITIONS D & H	
98-99 MHZ	7.88 (200.15)	(7) REQ'D (A-248030) AT POSITIONS A,B,C,D,E,F & G	
100-101 MHZ	8.63 (219.20)	(1) INSULATOR PT. # A-244928 AT POSITION H	PT. # B-248031 100-108 MHZ
102-103 MHZ	9.12 (231.65)		
104-105 MHZ	9.62 (244.35)	(8) REQ'D (A-248030) POST INDUCTORS FULL SET POSITIONS A THRU H	
106-107 MHZ	10.12 (257.05)		
108 MHZ	10.62 (269.75)		

NOTE: DIMENSIONS MARKED THUS ( ) ARE IN MILLIMETERS.
SHORT POSITION DIM. "X" DETERMINES TUNING RANGE OF FRONT PANEL CONTROL. DIMENSIONS SHOWN ARE APPROXIMATE.

INITIAL TUNING MATRIX
CV-2202

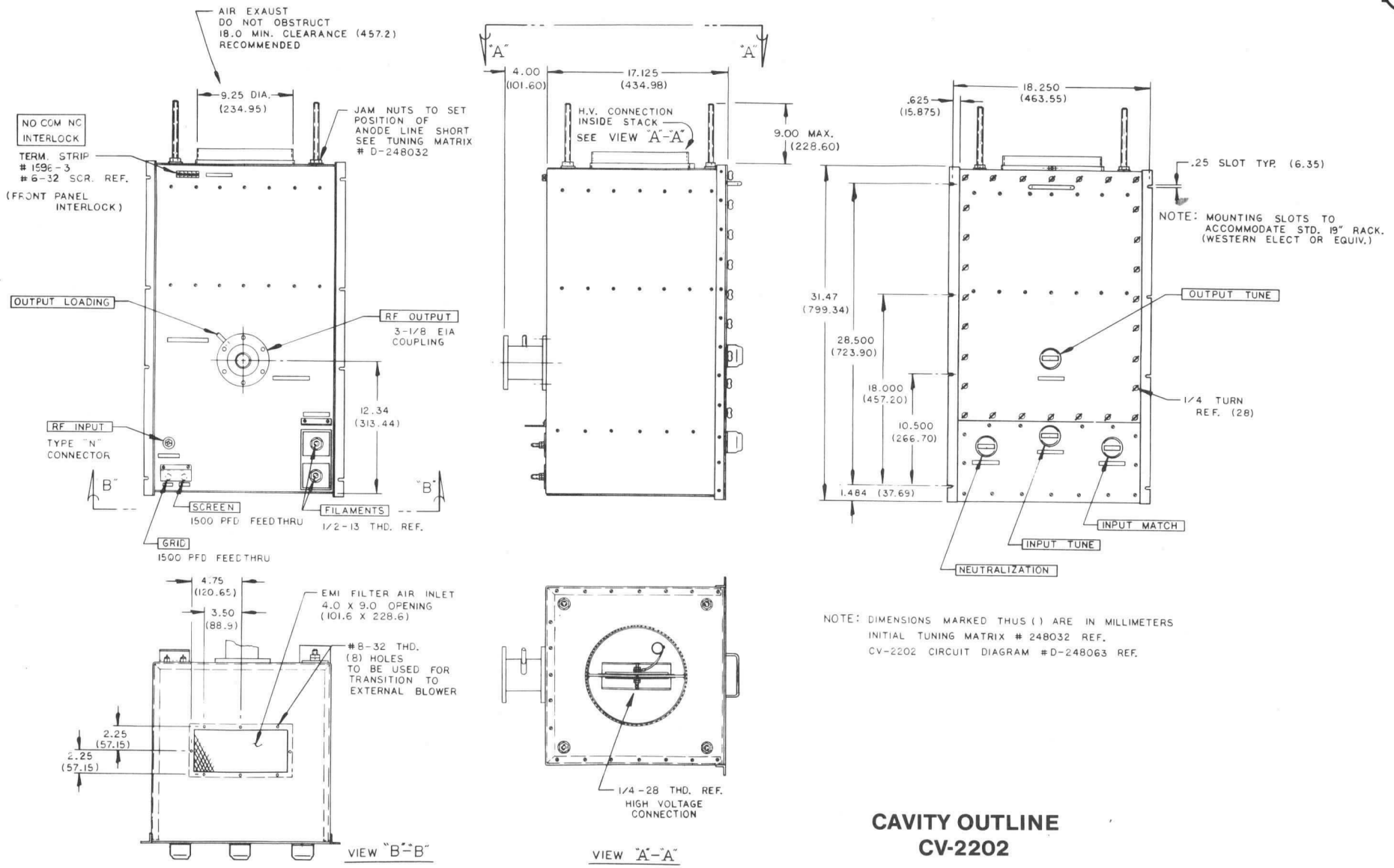

NOTE: DIMENSIONS MARKED THUS ( ) ARE IN MILLIMETERS
INITIAL TUNING MATRIX # 248032 REF.
CV-2202 CIRCUIT DIAGRAM #D-248063 REF.

CAVITY OUTLINE
CV-2202

TECHNICAL DATA

VHF Cavity CV-2250 FOR TV BROADCAST SERVICE

The EIMAC CV-2250 cavity is designed for VHF high-band TV broadcast service. It is designed to utilize the EIMAC 3CX10,000U7 high-mu triode power amplifier tube. The tube and cavity combination is capable of delivering up to 10 kW peak-of-sync in video service, with typical power gain of 12 to 15 dB. In translator service the cavity can be operated at 2.5 kW peak-of-sync output with intermodulation products of -52 dB or better.

The cavity is designed to be mounted behind a 19-inch panel. Operating frequency range is CH-7 through CH-13 Domestic and CH-7 through CH-E2 in Europe. Excellent linearity and efficiency make this tube and cavity combination a good choice for high-band television broadcast service.

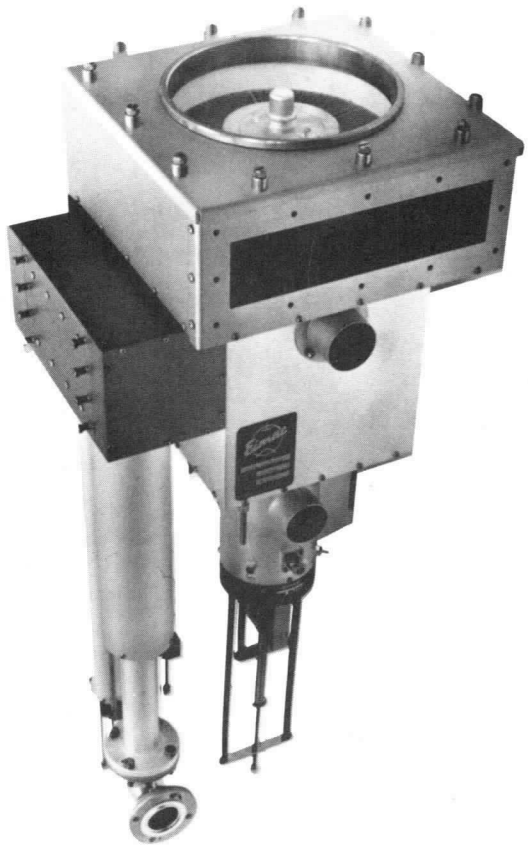

GENERAL CHARACTERISTICS [1]

ELECTRICAL

Tuning Range (USA Channels 7-13)	177 - 228 MHz
(Europe Channels 7 - E2)	
Input Impedance (nominal)	50 Ohms
Output Impedance (nominal)	50 Ohms

MECHANICAL

Power Tube Used (not supplied):	EIMAC 3CX10,000U7
Input rf Connector	Type N
Output rf Connector	1-5/8 in. EIA Coaxial
Cooling Required (see APPLICATION note)	Forced Air
Mounting	Vertical: Designed to fit 19-in. Rack
Overall Dimensions (nominal):	
Height (minimum)	41.75 in; 106 cm
Width (maximum)	15.5 in; 39.37 cm
Depth	12.25 in; 31.1 cm
Net Weight (approximate; tube not installed)	80 lbs; 36.3 kg
Shipping Weight (approximate; tube not installed)	150 lbs; 68 kg

1 Characteristics and operating values are based on performance tests. These figures may change without notice as a result of additional data or product refinement. EIMAC should be consulted before using this information for final equipment design.

398050 (Effective 18 Jan 82)

Printed in U.S.A.

Varian EIMAC / 301 Industrial Way / San Carlos, CA 94070 U.S.A.

RADIO FREQUENCY POWER AMPLIFIER, Television Service

ABSOLUTE MAXIMUM RATINGS:		
HEATER VOLTAGE	15.0 ± 0.5	VOLTS
WARMUP TIME [3]	5	MINUTES
DC PLATE VOLTAGE	6500	VOLTS
DC PLATE CURRENT	4.0	AMPERES
PLATE DISSIPATION	10	KILOWATTS
GRID DISSIPATION	100	WATTS
LOAD VSWR	1.5:1	

Typical Performance:	Visual [1]	Visual [1]	Combined Visual & Aural [2]	
Heater Voltage	15.0	15.0	15.0	Vac
Heater Current	13.5	13.5	13.5	Aac
Plate Voltage	4000	5500	4800	Vdc
Zero Signal Plate Current	0.9	1.0	1.9	Adc
Max.Signal Plate Current	2.5	5.0	2.25	Adc
Cathode Bias Voltage [4]	+22	+31	+15	Vdc
Driving Pwr (peak-of-sync)	200	335	60	W
Useful Pwr Out (peak-of-sync)	5.0	10.5	2.5	kW
Bandwidth (± 1 dB) . . .	6.28	6.28	6.25	MHz

1 Measurements made under CW conditions to reflect peak-of-sync operation.

2 Intermodulation distortion better than -52 dB measured under CCIR loading:
Video -8 dB Sound -7 dB Color -17 dB

3 Heater voltage must be applied to the tube for 5 minutes minimum (to allow for cathode warmup) before high voltage is applied to the tube.

4 Adjust to obtain the specified zero-signal plate current.

APPLICATION

MECHANICAL

MOUNTING - The cavity is designed to mount on a standard 19-inch rack panel. The panel is not supplied by EIMAC. A drawing showing the position of the panel mounting holes and the position of tuning controls is available on request. Order: Panel Layout CV-2250, Drawing #D242148 from EIMAC at the address shown on page 1.

COOLING - Two air inlet ports are provided; a large rectangular port which directs cooling air to the anode fins (plate cavity air inlet), and a smaller circular port which directs air to the cavity proper and cools the 3CX10,000U7 stem (input cavity air inlet). The pressure drop existing at the input cavity air inlet exceeds that at the rectangular port except at the highest anode dissipation levels. Therefore a separate system is necessary for the input cavity air inlet at low anode dissipation levels.

The maximum temperature limit for external tube surfaces and the anode core is 250 Deg.C. Tube life is prolonged if these areas are maintained at lower temperatures. The minimum cooling requirements stated here are for inlet air temperatures not to exceed 50 Deg.C.

Sea Level

Plate Diss. Watts	Flow Rate CFM	Press. Drop In.Water
Plate Cavity Air Inlet:		
2000	117	0.28
4000	117	0.30
6000	190	0.66
8000	318	1.60
10,000	462	3.12
Input cavity Air Inlet:		
All levels:	19	2.98

5000 feet - 1524 meters

Plate Diss. Watts	Flow Rate CFM	Press. Drop In.Water
Plate Cavity Air Inlet:		
2000	141	0.34
4000	141	0.36
6000	229	0.79
8000	393	1.92
10,000	558	3.76
Input cavity Air Inlet:		
All levels:	22	3.59

10,000 feet - 3048 meters

Plate Diss. Watts	Flow Rate CFM	Press. Drop In.Water
Plate Cavity Air Inlet:		
2000	170	0.41
4000	170	0.43
6000	276	0.96
8000	462	2.32
10,000	672	4.53
Input cavity Air Inlet:		
All levels:	27	4.30

ELECTRICAL

CONTROL CIRCUIT - EIMAC recommends the following turn-on sequence:

1. Primary line power
2. Control-circuit power
3. Cooling air
4. Heater power
5. Five-minute time delay
6. Bias voltage
7. Anode voltage
8. Drive power

The shut-down procedure is simply reversed, disregarding the five-minute delay. Cooling air should normally be kept on for 3 minutes to allow for tube cooldown.

HEATER & CATHODE OPERATION - Rated heater voltage for the 3CX10,000U7 is 15.0 volts. Heater voltage should be measured at the socket with an accurate rms-responding meter, and should be maintained at this value to obtain optimum performance and good tube life. In no case should heater voltage be allowed to deviate from 15.0 volts by more than plus or minus five percent.

The required minimum warmup time for a cold cathode is 5 minutes before applying high voltage. In the event of a fault or loss of power during normal operation all voltages must be removed from the tube immediately. When the fault has cleared, voltage should be reapplied according to the recommended control circuit sequence. The heater warmup may be shortened if the power-off time was less than 5 minutes. In such a case, heater warmup time must equal or exceed the power-off time.

TUNING PROCEDURE - Detailed tuning instructions are available on request from EIMAC.

FAULT PROTECTION - All power tubes operate at voltages which can cause severe damage in the event of an internal arc, especially in those cases where large amounts of stored energy or follow-on current are involved. Some means of protection is advised in all cases, and it is recommended that a series resistor be used in the anode circuit to limit peak current and provide a means of dissipating the energy in the event of a tube or circuit arc. A resistance of 10 ohms in the positive plate power supply lead together with the protective spark gap (Siemens #B1-C145) built into the CV2250 cavity will help protect the 3CX10,000U7 in the event of an internal arc. A maximum of four (4) joules total energy may be permitted to dissipate into an internal grid-to-cathode arc. Amounts in excess of this will permanently damage the cathode or the grid structure. Additional information is found in EIMAC's Application Bulletin #17 "FAULT PROTECTION" and a copy is available on request.

HIGH VOLTAGE - Normal operating voltages used with this cavity are deadly, and the equipment must be designed properly and operating precautions must be followed. Design all equipment so that no one can come in contact with high voltages. All equipment must include safety enclosures for high-voltage circuits and terminals, with interlock switches to open primary circuits of the power supply and to discharge high-voltage capacitors whenever access doors are opened. Interlock switches must not be bypassed or "cheated" to allow operation with access doors open. Always remember that HIGH VOLTAGE CAN KILL.

ABSOLUTE MAXIMUM RATINGS - The values shown for each type of service are based on the "absolute system" and are not to be exceeded under any service conditions. These ratings are limiting

values outside which the serviceability of the tube or cavity may be impaired. In order not to exceed absolute ratings the equipment designer has the responsibility of determining an average design value for each rating below the absolute value of that rating by a safety factor so that the absolute values will never be exceeded under any usual conditions of supply voltage variation in the equipment itself. It does not necessarily follow that combinations of absolute maximum ratings can be attained simultaneously.

RADIO-FREQUENCY RADIATION - Avoid exposure to strong rf fields even at relatively low frequency. Absorption of rf energy by human tissue is dependent on frequency. Under 300 MHz most of the energy will pass completely through the human body with little attenuation or heating affect. Public health agencies are concerned with the hazard, however, even at these frequencies, and it is worth noting that some commercial dielectric heating units actually operate at frequencies as low as the 13 MHz and 27 MHz bands.

SPECIAL APPLICATIONS - When it is desired to operate this cavity under conditions widely different from those listed here, write to: Varian EIMAC; attn: Applications Engineering; 301 Industrial Way; San Carlos, CA 94070 U.S.A.

OPERATING HAZARDS

PROPER USE AND SAFE OPERATING PRACTICES WITH RESPECT TO POWER TUBES ARE THE RESPONSIBILITY OF EQUIPMENT MANUFACTURERS AND USERS OF SUCH TUBES. ALL PERSONS WHO WORK WITH OR ARE EXPOSED TO POWER TUBES OR EQUIPMENT WHICH UTILIZES SUCH TUBES MUST TAKE PRECAUTIONS TO PROTECT THEMSELVES AGAINST POSSIBLE SERIOUS BODILY INJURY. DO NOT BE CARELESS AROUND SUCH PRODUCTS.

The operation of this cavity involves one or more of the following hazards, any one of which, in the absence of safe operating practices and precautions, could result in serious harm to personnel:

a. HIGH VOLTAGE - Normal operating voltages can be deadly.

b. RF RADIATION - Exposure to strong rf fields should be avoided, even at relatively low frequencies. The dangers of rf radiation are more severe at UHF and microwave frequencies and can cause serious bodily and eye injuries. **CARDIAC PACEMAKERS MAY BE EFFECTED.**

c. HOT SURFACES - Surfaces of air-cooled radiators and other parts of tubes can reach temperatures of several hundred Degrees C and cause serious burns if touched for several minutes after all power is removed.

Please review the detailed operating hazards sheet enclosed with each tube, or request a copy from: Varian **EIMAC**, Power Grid Tube Division, 301 Industrial Way, San Carlos CA 94070.

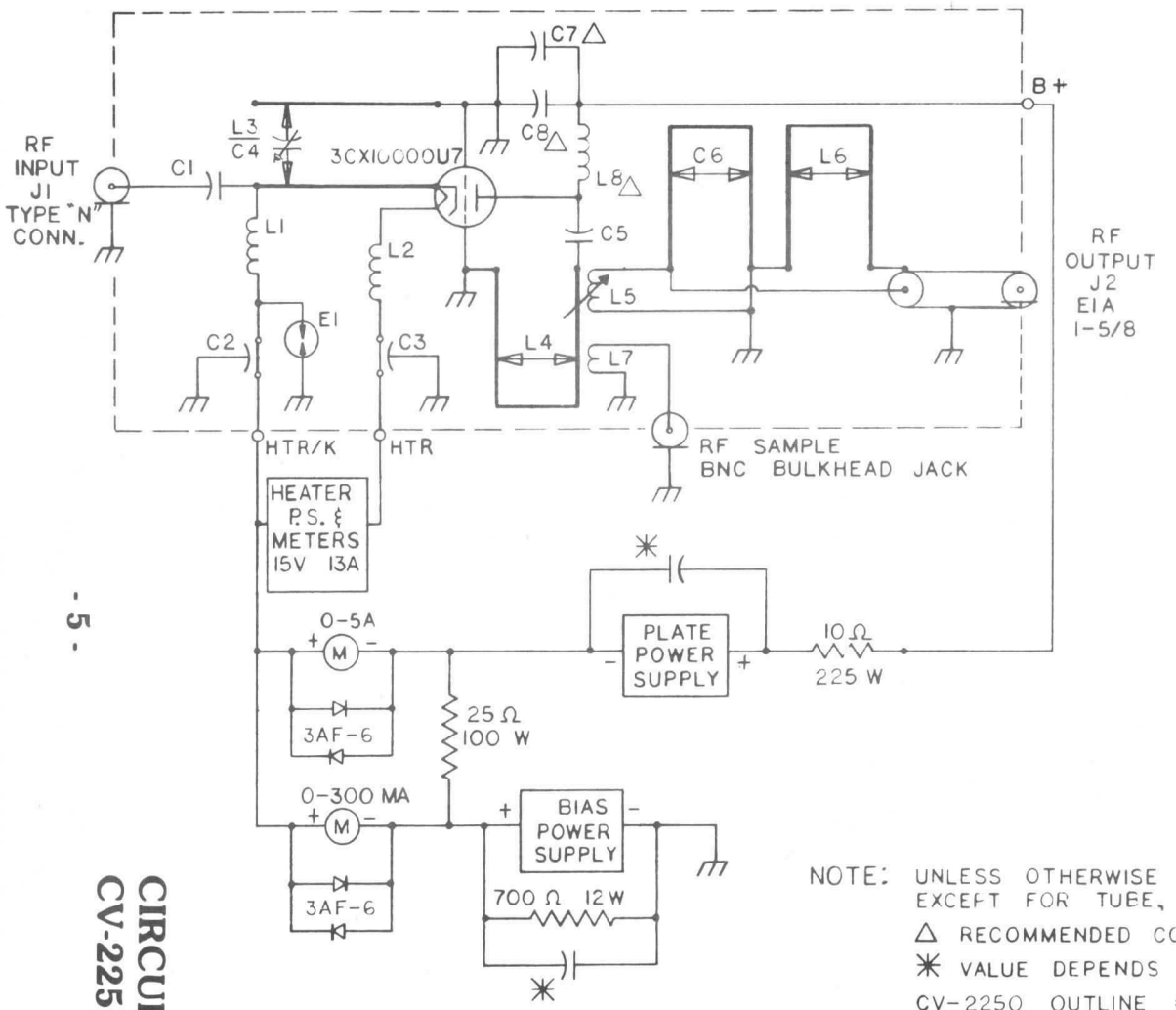

C1 —— KAPTON CATHODE BLOCKER (B-242079)

C2,C3 — EMI FILTER 3000 PF MIN. 500 WVDC
#1202-052 (ERIE)

C4,L3 — INPUT TUNING & MATCHING
SEE OUTLINE #D-243137

C5 —— KAPTON ANODE BLOCKER (B-242023)

C6 —— SECONDARY TUNING #2 —— ASSY (C-720662)
SEE OUTLINE # D-243137

△ C7,C8 — CAP. 200 PF ± 10% 7.5KVDC (JENNINGS)

E1 —— SPARK GAP 145 V # BI-C145 (SIEMENS)

J1 —— PANEL RECEPTACLE UG-58A/U
KN-79-40 (KINGS)

J2 —— EIA 1-5/8 COAXIAL CONN. P.D. #4-158-50

L1 —— RFC HEATER/K ASSY (A-720659)

L2 —— RFC HEATER ASSY (A-720664)

L4 —— OUTPUT TUNING SEE OUTLINE # D-243137

L5 —— VARIABLE OUTPUT COUPLING LOOP (A-242100)

L6 —— SECONDARY TUNING #1, ("LOADING") ASSY (C-720663)
SEE OUTLINE #D-243137

L7 —— COUPLING LOOP ASSY, RF SAMPLE (A-720654)

△ L8 —— ANODE RF CHOKE, 11 TURNS #12 AWG.
FORMVAR COATED COPPER WIRE, CLOSE WOUND
.50 I.D. 1.50 WINDING LGTH., 0.62 μH

NOTE: UNLESS OTHERWISE SPECIFIED, ALL COMPONENTS WITHIN DOTTED LINES, EXCEPT FOR TUBE, SUPPLIED WITH CV-2250 CAVITY.

△ RECOMMENDED COMPONENTS NOT SUPPLIED BY EIMAC

✳ VALUE DEPENDS ON MODULATION FREQUENCY.

CV-2250 OUTLINE # D-243137 REF.

CIRCUIT DIAGRAM CV-2250

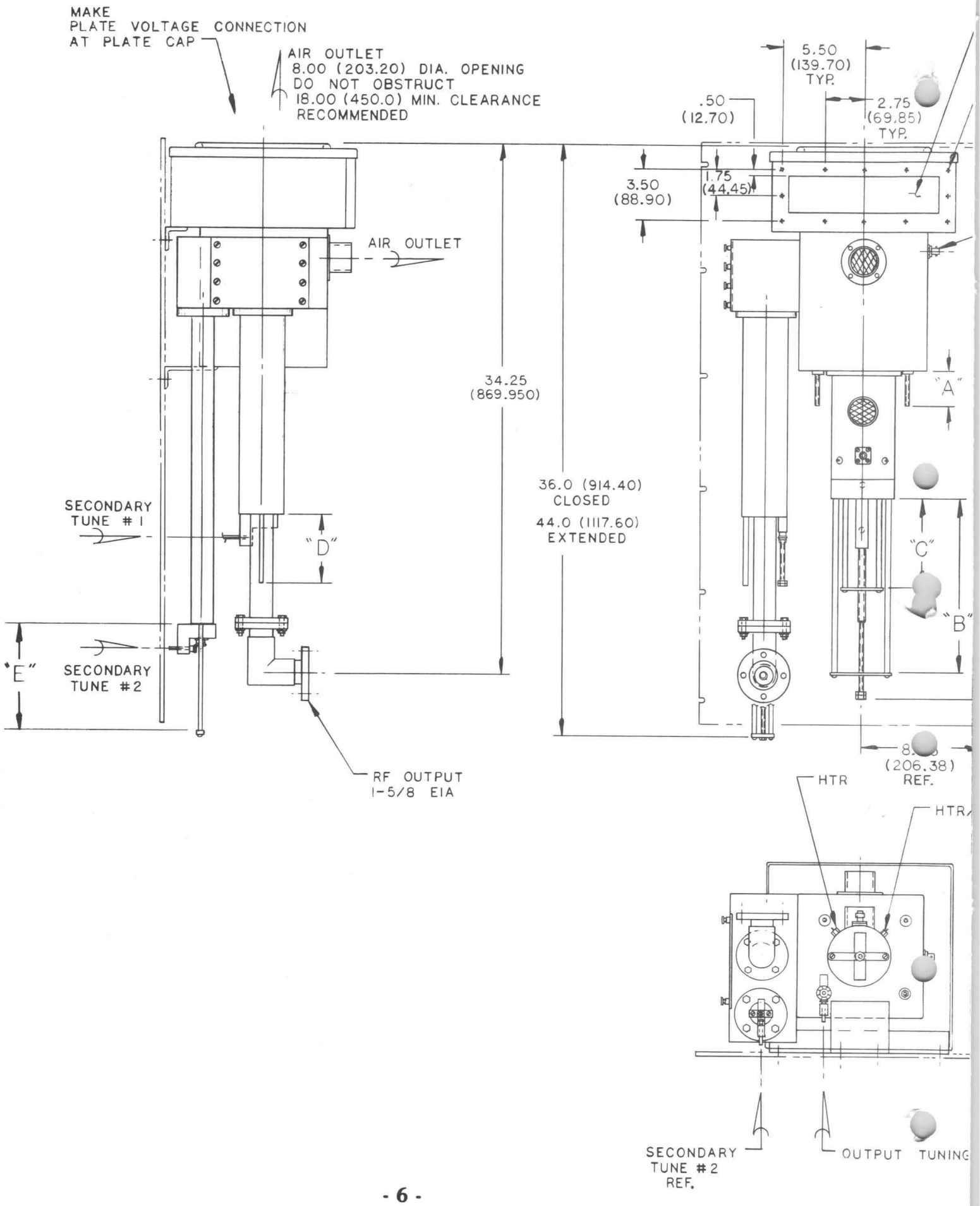
MAKE
PLATE VOLTAGE CONNECTION
AT PLATE CAP
AIR OUTLET
8.00 (203.20) DIA. OPENING
DO NOT OBSTRUCT
18.00 (450.0) MIN. CLEARANCE
RECOMMENDED
5.50
(139.70)
TYP.
.50
(12.70)
2.75
(69.85)
TYP.
3.50
(88.90)
1.75
(44.45)
AIR OUTLET
34.25
(869.950)
"A"
SECONDARY
TUNE # 1
"D"
36.0 (914.40)
CLOSED
44.0 (1117.60)
EXTENDED
"C"
"B"
"E"
SECONDARY
TUNE #2
RF OUTPUT
1-5/8 EIA
(206.38)
REF.
HTR
HTR
SECONDARY
TUNE #2
REF.
OUTPUT TUNING

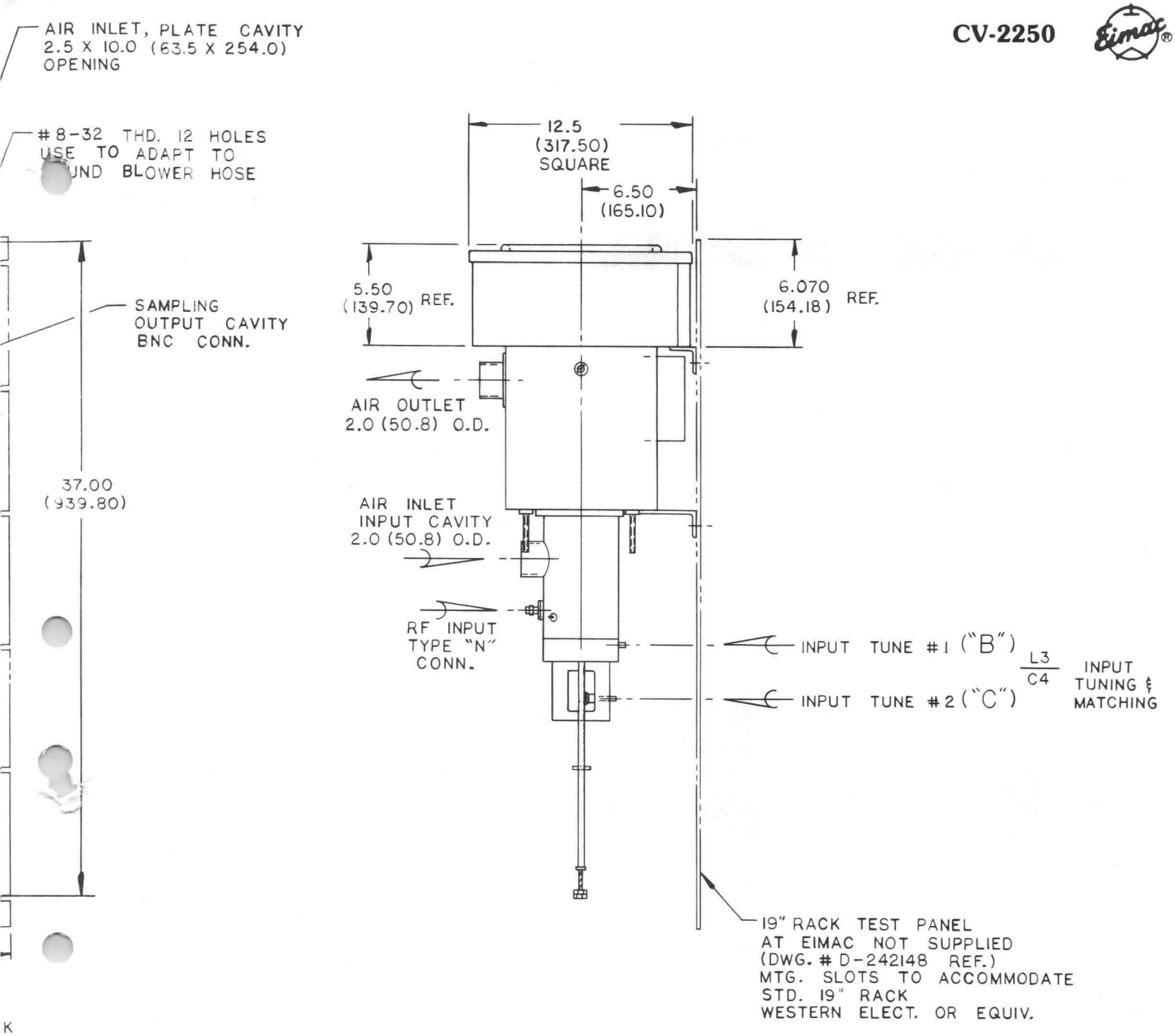

NOTE: DIMENSIONS MARKED THUS ( ) ARE IN MILLIMETERS

FOR TUNING DATA, DIMS. "A","B","C","D" & "E"
REFER TO EIMAC CV-2250 TUNING PROCEDURE

CV-2250 CIRCUIT DIAGRAM # C-243340 REF.

OUTLINE
CV-2250

("A")

TECHNICAL DATA

VHF CAVITY
CV-2225
FOR FM BROADCAST SERVICE

The EIMAC CV-2225 is a power amplifier cavity assembly designed for use as the main component of the final amplifier of an FM transmitter in the 88-108 MHz band assigned for broadcast service.

Cavity design is straightforward and relatively simple. The amplifier tube used is the EIMAC 4CX3500A high performance tetrode designed especially for VHF applications. In this cavity assembly the tube is grid driven for a stage gain of approximately 18 dB with a useful power output of 5000 watts.

An EIMAC solid-state amplifier module is available for use as an intermediate power amplifier for the CV-2225.

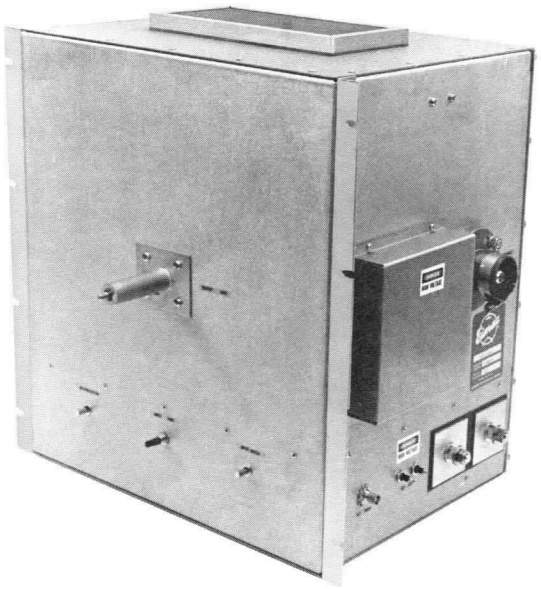

GENERAL CHARACTERISTICS [1]

ELECTRICAL

Tuning Range	88 to 108 MHz
Input Impedance (nominal)	50 Ohms
Output Impedance (nominal)	50 Ohms
Solid-State Intermediate Power Amplifier (if required)	EIMAC AM-2215A

MECHANICAL

Power Tube Used (not supplied with cavity)	EIMAC 4CX3500A
Input rf Connector	Type BNC
Output rf Connector	1-5/8 Inch EIA Coaxial
Cooling Required (see APPLICATIONS)	Forced Air
Mounting	Vertical: Standard 19 In. Rack
Overall Dimensions (nominal):	
Height	19 In; 48.3 cm
Width	19 In; 48.3 cm
Depth	21 In; 53.3 cm
Net Weight (approximate; tube not installed)	38 Lb; 17.3 kg
Shipping Weight (approximate; tube not installed)	84 Lb; 38.1 kg

1 Characteristics and operating values are based on performance tests. These figures may change without notice as a result of additional data or product refinement. EIMAC should be consulted before using this information for final equipment design.

950482 (Effective: 15 Feb 1982 - supersedes 1 Mar 81)
VA4512
Printed in U.S.A.

Varian EIMAC / 301 Industrial Way / San Carlos, CA 94070 / U.S.A.

RADIO FREQUENCY POWER AMPLIFIER, FM BROADCAST SERVICE

ABSOLUTE MAXIMUM RATINGS:

FILAMENT VOLTAGE	5.0 ± 0.25	VOLTS
DC PLATE VOLTAGE	5500	VOLTS
DC SCREEN VOLTAGE	1500	VOLTS
DC GRID VOLTAGE	-500	VOLTS
DC PLATE CURRENT	2.0	AMPERES
PLATE DISSIPATION	3500	WATTS
SCREEN DISSIPATION	165	WATTS
GRID DISSIPATION	50	WATTS
LOAD VSWR	1.5:1	

TYPICAL OPERATION (100.5 MHz)

Plate Voltage	4000	4300	Vdc
Plate Current	1.5	1.9	Adc
Screen Grid Voltage	500	700	Vdc
Screen Current[1]	140	123	mAdc
Grid Bias Voltage	-300	-400	Vdc
Grid Current[1]	84	63	mAdc
Useful Power Out[1,2]	3838	5531	W
Efficiency[1]	64	68	%
Driving Power[1]	56	66	W
Power Gain[1]	18.4	19.2	dB
Filament Voltage	5.0	5.0	Vac
Filament Current[1]	90	90	Aac

1 Approximate value

2 Power delivered to the load

APPLICATION

MECHANICAL

COOLING - The maximum temperature limit for external tube surfaces and the anode core is 250 Deg.C but tube life is prolonged if these areas are maintained at lower temperatures. The minimum cavity cooling requirements stated here are for inlet air temperatures of 35 Deg.C. and 50 Deg.C. Pressure drop is measured at the air inlet port, which is located on the bottom cover of the cavity assembly. The blower selected in a given application must be capable of supplying the desired air flow at a back pressure equal to the pressure drop shown plus any drop encountered in ducts and filters.

Sea Level - 0 Meters

Plate Diss. Watts	Flow Rate CFM	Press. Drop In.Water	Flow Rate M^3/min	Press. Drop Millibars
2500	238	2.20	6.7	5.48
(When inlet air is 50 Deg.C.)				
2500	188	1.48	5.3	3.69
(When inlet air is 35 Deg.C.)				

5000 feet - 1524 meters

Plate Diss. Watts	Flow Rate CFM	Press. Drop In.Water	Flow Rate M^3/min	Press. Drop Millibars
2500	287	2.60	8.1	6.48
(When inlet air is 50 Deg.C.)				
2500	227	1.74	6.4	4.34
(When inlet air is 35 Deg.C.)				

10,000 feet - 3048 meters

Plate Diss. Watts	Flow Rate CFM	Press. Drop In.Water	Flow Rate M^3/min	Press. Drop Millibars
2500	346	3.09	9.8	7.68
(When inlet air is 50 Deg.C.)				
2500	273	2.06	7.7	5.13
(When inlet air is 35 Deg.C.)				

ELECTRICAL

FILAMENT & CATHODE OPERATION - Rated filament voltage for the 4CX3500A is 5.0 volts. Filament voltage should be measured at the cavity Ef terminals with an accurate rms-responding meter, and should be maintained at this value to obtain optimum performance and good tube life. In no case should filament voltage be allowed to deviate from 5.0 volts by more than plus or minus five percent.

GRID OPERATION - The 4CX3500A control grid has a maximum dissipation rating of 50 watts. Care should be taken to avoid exceeding this rating. The grid bias and driving power should be kept near the values shown in the TYPICAL OPERATION section of the data sheet whenever possible.

SCREEN GRID OPERATION - The maximum screen grid dissipation rating is 165 watts. With no ac applied to the screen grid, dissipation is simply the product of dc screen voltage and the dc screen current. Plate voltage, plate loading, or bias voltage must never be removed while filament and screen voltages are present, since screen dissipation ratings will be exceeded. Suitable protective means must be provided to limit screen dissipation in the event of a circuit failure.

FAULT PROTECTION - In addition to normal cooling airflow interlock and plate and screen over current interlocks, it is good practice to protect the tube from internal damage which could result from a plate arc at high plate voltage. In all cases some protective resistance (20 to 50 ohms) should be used in series with the cavity +HV terminal to absorb power supply stored energy in case a plate arc should occur. The resistor should be rated for 50 to 100 watts dissipation to be able to withstand the energy surge.

FREQUENCY DETERMINED PARTS - These parts are supplied with the cavity. The input inductors L3 and L4 are identified for each part of the 88-108 MHz band as follows:

Inductor Ident.	Frequency Range	EIMAC Part No.
A	88-96 MHz	243332
B	95-103 MHz	243333
C	102-108 MHz	243334

The positions of input inductors L3 and L4 are shown in drawing #243134 packed with the CV-2225 cavity assembly.

PLATE INDUCTORS - Plate inductor L7 has a movable shorting bar which serves as coarse plate circuit tuning. The position of this shorting bar is defined by counting the pairs of mounting holes from the bottom. The nominal position of the bar should be as follows:

Frequency Range	L7 Shorting Bar Position
88-90 MHz	N
89-92	7
91-94	6
93-96	5
95-99	4
98-102	3
101-105	2
104-108	1

These shorting bar positions are nominal. Improved performance may be obtained by trying two or three adjacent positions.

OUTPUT COUPLING - Output coupling is adjusted with a movable tap on plate inductor L9. The nominal position for the tap is as follows:

Power Level	Output Coupling Tap Position
3500 W	5
5500 W	7

Tap position is defined by the holes in the straps where the output line connects to L9. The tap position is determined by counting from the bottom hole. Depending on the power level, load, etc., better performance may be obtained by trying several adjacent tap positions.

NEUTRALIZATION - With filament, grid bias, and cooling applied, with a 50 ohm load, set the neutralization control (C19) for minimum signal through the amplifier. With low-level drive at the operating frequency and a sensitive indicator at the output, adjust the input and output tuning controls for maximum and the neutralization control for a null. These adjustments are interactive so the adjustment must be repeated several times for the best null. Final adjustment of neutralization should be made at full power by moving the neutralization control slightly so that maximum screen grid current and maximum power output are coincidental with output (C13) tuning.

Screen grid current should be kept below 150 mAdc during the tuning procedure.

HIGH VOLTAGE - Normal operating voltages used with the CV-2225 are deadly, and the equipment must be designed properly and operating precautions must be followed. Design all equipment so that no one can come in contact with high voltages. All equipment must include safety enclosures for high voltage circuits and terminals, with interlock switches to open primary circuits of the power supply and to discharge high-voltage capacitors whenever access doors are opened. Interlock switches must not be bypassed or "cheated" to allow operation with access doors open. Always remember that **HIGH VOLTAGE CAN KILL.**

ABSOLUTE MAXIMUM RATINGS - The values shown for each type of service are based on the "absolute system" and are not to be exceeded under any service conditions. These ratings are limiting values outside which the serviceability of the tube or cavity assembly may be impaired. In order not to exceed absolute ratings the equipment designer has the responsibility of determining an average design value for each rating below the absolute value of that rating by a safety factor so that the absolute values will never be exceeded under any usual conditions of supply voltage variation in the equipment itself. It does not necessarily follow that combinations of absolute maximum ratings can be attained simultaneously.

RADIO-FREQUENCY RADIATION - Avoid exposure to strong rf fields even at relatively low frequency. Absorption of rf energy by human tissue is dependent on frequency. Under 300 MHz most of the energy will pass completely through the human body with little attenuation or heating affect. Public health agencies are concerned with the hazard, however, even at these frequencies, and it is worth noting that some commercial dielectric heating units actually operate at frequencies as low as the 13 MHz and 27 MHz bands.

SPECIAL APPLICATIONS - When it is desired to operate this cavity assembly under conditions widely different from those listed here, write to Varian EIMAC; attn:Applications Engineering; 301 Industrial Way; San Carlos, CA 94070 U.S.A.

OPERATING HAZARDS

PROPER USE AND SAFE OPERATING PRACTICES WITH RESPECT TO POWER TUBES ARE THE RESPONSIBILITY OF EQUIPMENT MANUFACTURERS AND USERS OF SUCH TUBES. ALL PERSONS WHO WORK WITH OR ARE EXPOSED TO POWER TUBES OR EQUIPMENT WHICH UTILIZES SUCH TUBES MUST TAKE PRECAUTIONS TO PROTECT THEMSELVES AGAINST POSSIBLE SERIOUS BODILY INJURY. DO NOT BE CARELESS AROUND SUCH PRODUCTS.

The operation of this cavity involves one or more of the following hazards, any one of which, in the absence of safe operating practices and precautions, could result in serious harm to personnel:

a. HIGH VOLTAGE - Normal operating voltages can be deadly.

b. RF RADIATION - Exposure to strong rf fields should be avoided, even at relatively low frequencies. The dangers of rf radiation are more severe at UHF and microwave frequencies and can cause serious bodily and eye injuries. **CARDIAC PACEMAKERS MAY BE EFFECTED.**

c. HOT SURFACES - Surfaces of air-cooled radiators and other parts of tubes can reach temperatures of several hundred Degrees C and cause serious burns if touched for several minutes after all power is removed.

Please review the detailed operating hazards sheet enclosed with each tube, or request a copy from: Varian EIMAC, Power Grid Tube Division, 301 Industrial Way, San Carlos CA 94070.

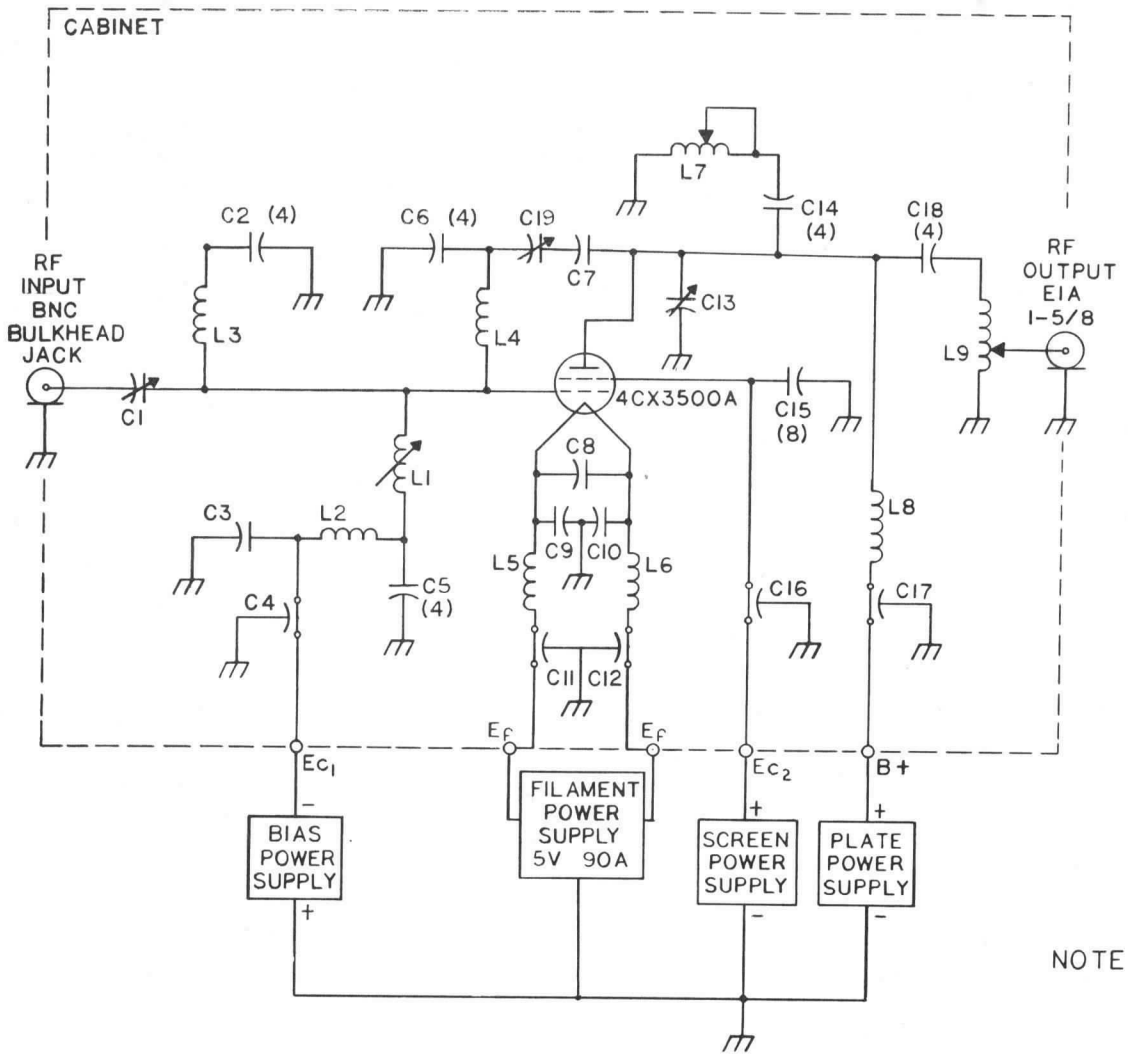

C1,C19 — VARIABLE CAP. 3.8-21.6 PFD 1500 V
48-APL-21 (ALL STAR PRODUCTS)

C2,C5,C6 — CAP. 50 PF ± 10% 7.5 KV DC (JENNINGS)

C3,C15 — CAP. 1000 PF ± 20% 5 KV DC (JENNINGS)

C4,C16 — EMI FILTER, PI TYPE, 1250 PF # 1280-060 (ERIE)

C7 — NEUTRALIZING CAPACITOR PADDLE (C-242867)

C8,C9,C10 — FILAMENT BYPASS (C-243131)

C11,C12 — FILAMENT FEEDTHRU (B-241477)

C13 — PLATE TUNING CAPACITOR (C-242841)

C14,C18 — CAP. 100 PF ± 10% 15 KV DC (JENNINGS)

C17 — PLATE FEEDTHRU (A-242408)

L1 — VARIABLE TUNED CIRCUIT (C-242848)

L2 — CHOKE # Z-50 (OHMITE)

L3,L4 — INPUT INDUCTOR, TYPE A 88-96 MHZ (B-243332)
TYPE B 95-103 MHZ (B-243333)
TYPE C 102-108 MHZ (B-243334)

L5 — FILAMENT CHOKE, INNER (B-242871)

L6 — FILAMENT CHOKE, OUTER (B-242870)

L7 — PLATE INDUCTOR, TUNE SIDE (C-242864)

L8 — PLATE CHOKE (A-242841)

L9 — PLATE INDUCTOR, LOAD SIDE (C-242863)

NOTE: CV-2225 CAVITY OUTLINE # D-242840
EXCEPT FOR TUBE, ALL COMPONENTS WITHIN CABINET SUPPLIED WITH CV-2225 CAVITY.

DIV	EIMAC, Division of Varian

This Document is the Property of EIMAC, Div. of Varian, and Shall Not Be Copied, Reproduced, Used in the Manufacture or Sale of Apparatus or Disclosed to Others Without Permission.

EIMAC LAB
CIRCUIT DIAGRAM
CV-2225

SIZE	CODE IDENT	DWG NO.	REV
C		243086	B

SCALE ——— SHEET ___ OF ___

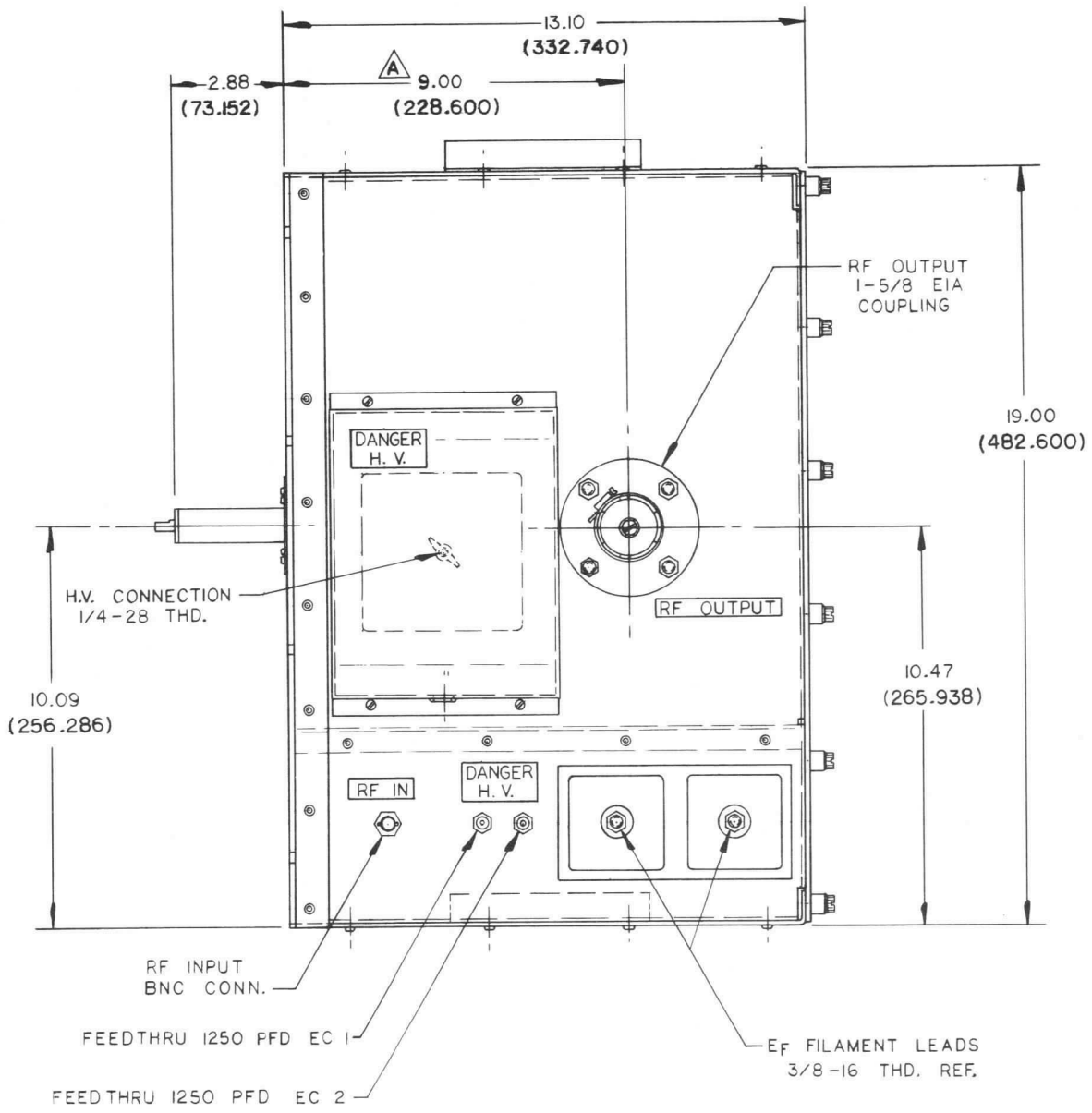

NOTE: DIMENSIONS MARKED THUS ( ) ARE IN MILLIMETERS

CV-2225 CIRCUIT DIAGRAM # C-243086 REF.

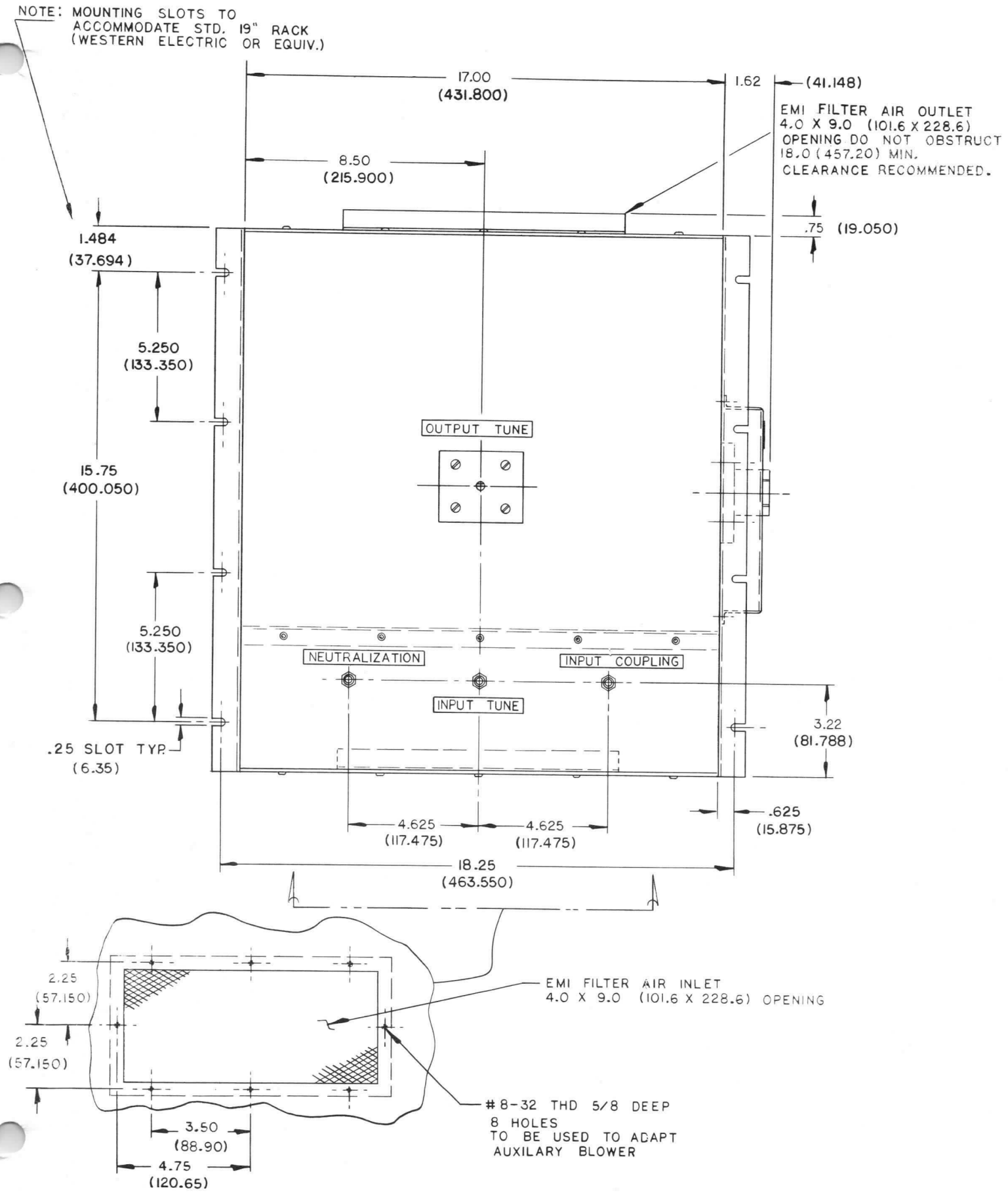
NOTE: MOUNTING SLOTS TO ACCOMMODATE STD. 19" RACK (WESTERN ELECTRIC OR EQUIV.)
17.00
(431.800)
1.62
(41.148)
EMI FILTER AIR OUTLET
4.0 X 9.0 (101.6 X 228.6)
OPENING DO NOT OBSTRUCT
18.0 (457.20) MIN.
CLEARANCE RECOMMENDED.
8.50
(215.900)
.75 (19.050)
1.484
(37.694)
5.250
(133.350)
15.75
(400.050)
OUTPUT TUNE
5.250
(133.350)
NEUTRALIZATION
INPUT COUPLING
INPUT TUNE
3.22
(81.788)
.25 SLOT TYP.
(6.35)
4.625
(117.475)
4.625
(117.475)
.625
(15.875)
18.25
(463.550)
2.25
(57.150)
2.25
(57.150)
EMI FILTER AIR INLET
4.0 X 9.0 (101.6 X 228.6) OPENING
#8-32 THD 5/8 DEEP
8 HOLES
TO BE USED TO ADAPT
AUXILARY BLOWER
3.50
(88.90)
4.75
(120.65)